R50-10 R50-12 R50-15/16

Elektro Gabelstapler
Electric Fork Truck
Chariot élévateur électrique
Carretilla elevadora elettrica

STILL ELECTRONIC DOCUMENTATION SYSTEM

STEDS

Werk-statt-handbuch | **Work-shop manual** | **Manuel d´Atelier** | **Manual de taller**

R5001 - R5034

STILL

STILL GmbH

Contents **Page**

Frame and rear counterweight	1
Inside dimension of battery compartment	2

The rigid electrically welded steel plate chassis frame and body is of unit construction and has a bolted–on type counterweight.

The hydraulic oil tank forms an integral part of the frame, and is situated between the leg and battery compartments.

The removable rear counterweight has fixing holes through which pass the screws with hexagonal recessed hole holding the power unit in place.

The counterweight is bolted to the chassis by means of 3 bolts (see sketch).

All of the 3 counterweight mounting bolts are torqued to 710 Nm.

1 =hex. hd. bolts M 30 x 100, 8.8

2 =C–shaped washer

3 =hex. hd. bolts M 24 x 160, 8.8

4 =washer

5 =spacer tube

6 =cone seat

7 =spherical washer

Weight indication for counterweights:

490 kgs=l.0-tonne capacity units
685 kgs=1.2–tonne capacity units
925 kgs=1.5–tonne capacity units

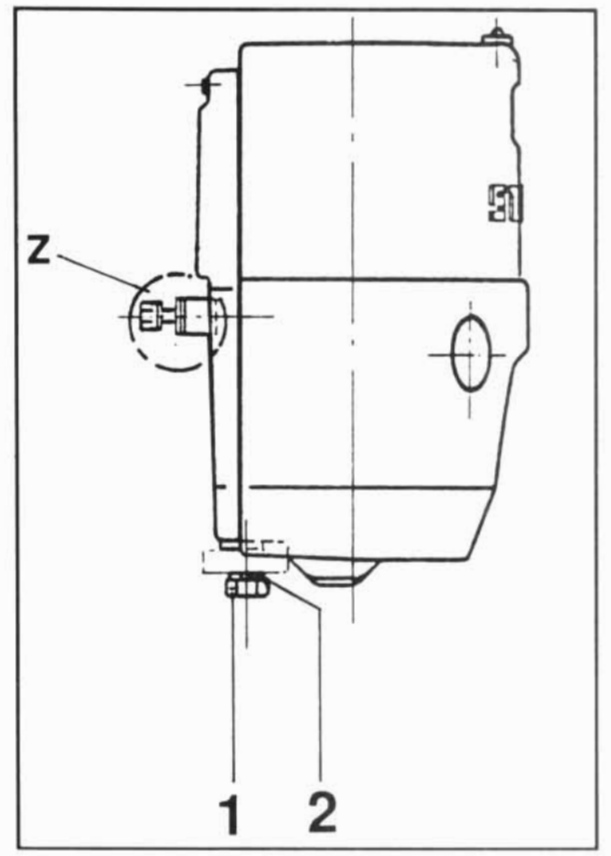

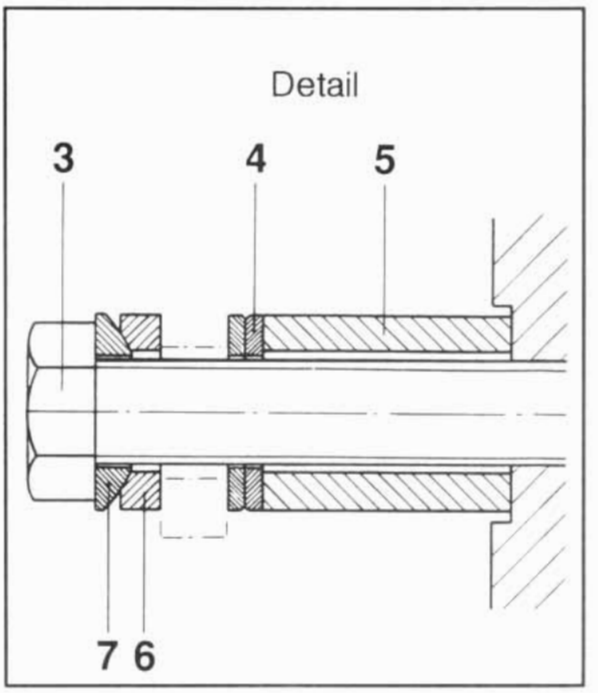

Inside dimensions of Battery Compartment

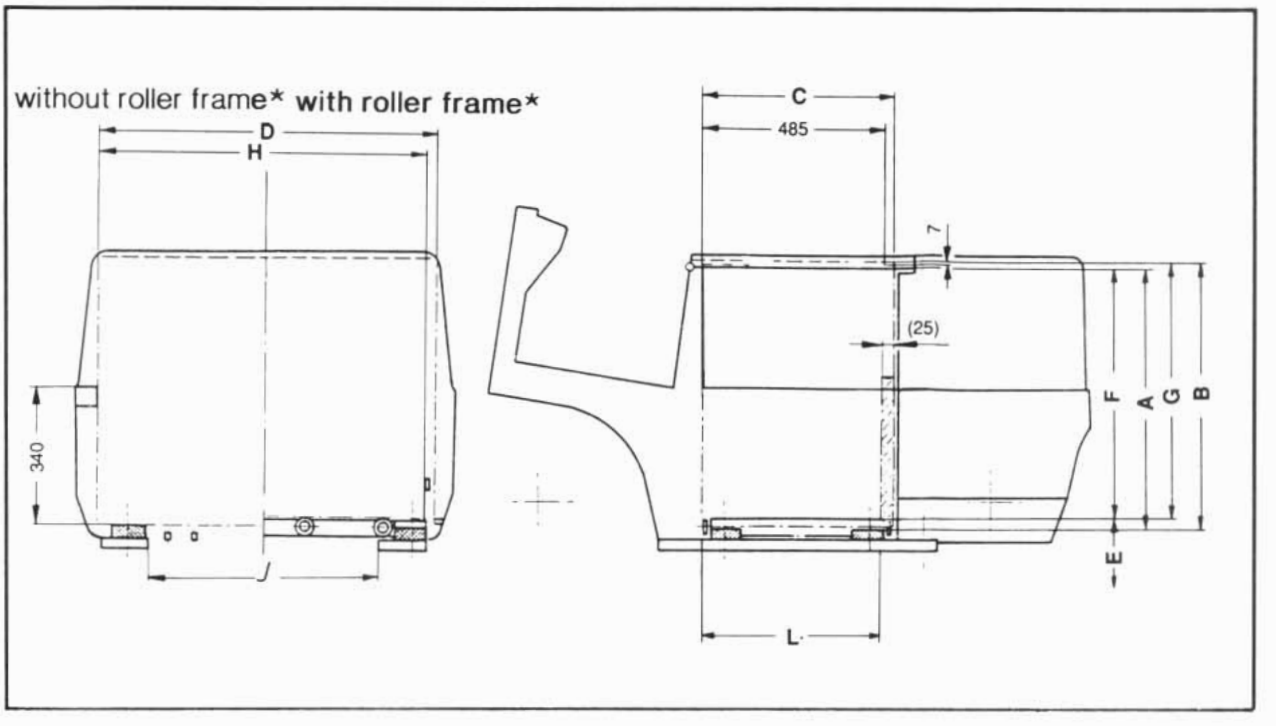

		1.0-tonne unit Cushion tyres superelastic tyres	1.0-tonne unit pneumatic & superelastic tyres	1.2-tonne unit		1.5-tonne unit	
				Cushion tyres	Pneum. + SE	Cushion tyres	Pneum. + SE
A	Top of silent blocks** to top of removable side plate (mm)	640 +4 −3	640 +4 −3	640 +4 −3	640 +4 −3	640 +4 −3	640 +4 −3
B	Top of silent blocks** to underside of hood (mm)	665 +3 −2	665 +3 −2	665 +3 −2	665 +3 −2	665 +3 −2	665 +3 −2
C	Length of battery compartment area (mm)	352 +3 −1	470 +3 −1	470 +3 −1	470 +3 −1	506 +3 −1	506 +3 −1
D	Width of battery compartment (mm)	859 ± 5	859 ± 5	859 ± 5	859 ± 5	859 ± 5	859 ± 5
E	Ground to top of roller frame	177 ± 5	187 ± 3	177 ± 3	187 ± 3	177 ± 3	187 ± 3
F	Top of roller platform to top of removable side plate (mm)	613 +6 −5	613 +6 −5	613 +6 −5	613 +6 −5	613 +6 −5	613 +6 −5
G	Top of roller platform to underside of cover (mm)	638 +5 −4	638 +5 −4	638 +5 −4	638 +5 −4	638 +5 −4	638 +5 −4
H	Distance between LH side frame section and battery latch (mm)	836 +5 −6	836 +5 −6	836 +5 −6	836 +5 −6	836 +5 −6	836 +5 −6
J	Distance between long channel bars of chassis frame (mm)	590 ± 3	590 ± 3	590 ± 3	590 ± 3	590 ± 3	590 ± 3
K	Weight required in battery compartment (kgs)***	451	451	587	587	657	657
L	Length of battery compartment (mm) with extra ballast	----	----	445 +3 −4	445 +3 −4	481 +3 −4	481 +3 −4

* enabling the battery to be slid out sideways
** on which the battery is located
*** Extra ballast weight may be added or removed to compensate for different sized batteries without changing dimensions of the truck

Front axle

The wheel hub is supported on two tapered roller bearings of equal size.

The wheel hub and the axle end are precision engineered, allowing for tolerances that eliminate the need for readjusting the bearing clearance by adding or removing shims.

Max. axial play of bearings = 0.35 mm.

Attention! Watch for correct positioning of disc washer.

The wheel hub is secured in place by means of an M 16 8.8 type haxagon cap screw which should be torqued to 210 Nm.

When installing or removing the wheel hub, special care should be exercised so as to prevent any grease emanating from an exposed tapered roller bearing from contacting the brake drum.

The wheel hub is sealed from the inside by means of a V- shaped grease seal, and is protected from the outside by a hub cap.

When repacking the wheel hub with wheel bearing grease do not refill the bearing housing with grease exceeding 1/3 of its volume otherwise grease may contact the brake shoe linings.

The front wheel rims are secured by means of wheel bolts. In order to forestall damage to the wheel hub or rim, it is necessary from time to time to check the wheel bolts for torque.

Tighten the wheel bolts with a torque spanner to 210 Nm.

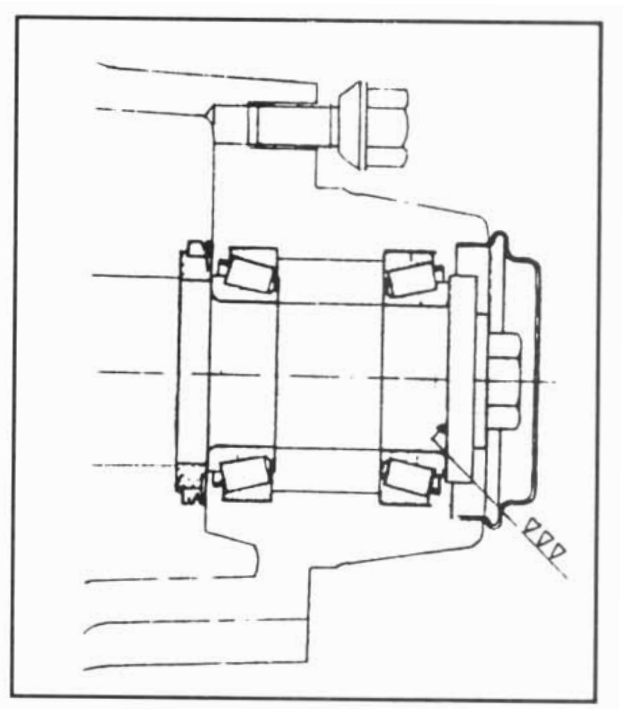

Transmission type:	Spur-type reduction gear
Gearbox capacity:	1.5 litres
Grade of oil:	High-pressure transmission oil (OG to MIL - L 2106) SAE 80

Power from the horizontally arranged D.C. drive motor is transmitted to the drive/steer wheel via a triple reduction precision gear drive operating in an oil bath.

Power unit removal (motor flange-connected to the reduction gear)

1) Disconnect the battery plug

2) Chock front wheels to prevent rolling of the truck

3) Disconnect motor cables from contactor panel

4) Remove retaining bracket from rear cover latch

5) Remove stop (item 1) as well as screw located opposite it. Next, install flat bar as shown on sketch

6) By means of a sling secure power unit to overhead guard

7) Remove steering chain

8) Remove screws with hexagonal recessed hole (item 2) by means of which the power unit is held to the counterweight

9) With the aid of a chain hoist raise rear of truck about 200 mm from floor and place blocks beneath the counterweight

10) By releasing sling lower the power unit, carefully manoeuvring it clear of truck by pulling it towards you

CAUTION: When placing power unit on floor, make sure it is so positioned that oil is prevented from gaining access into the drive motor

Power unit installation

Install the power unit in the reverse order of removal.
Screws with hexagonal recessed hole torqued to 210 Nm

flat bar 30 x 8

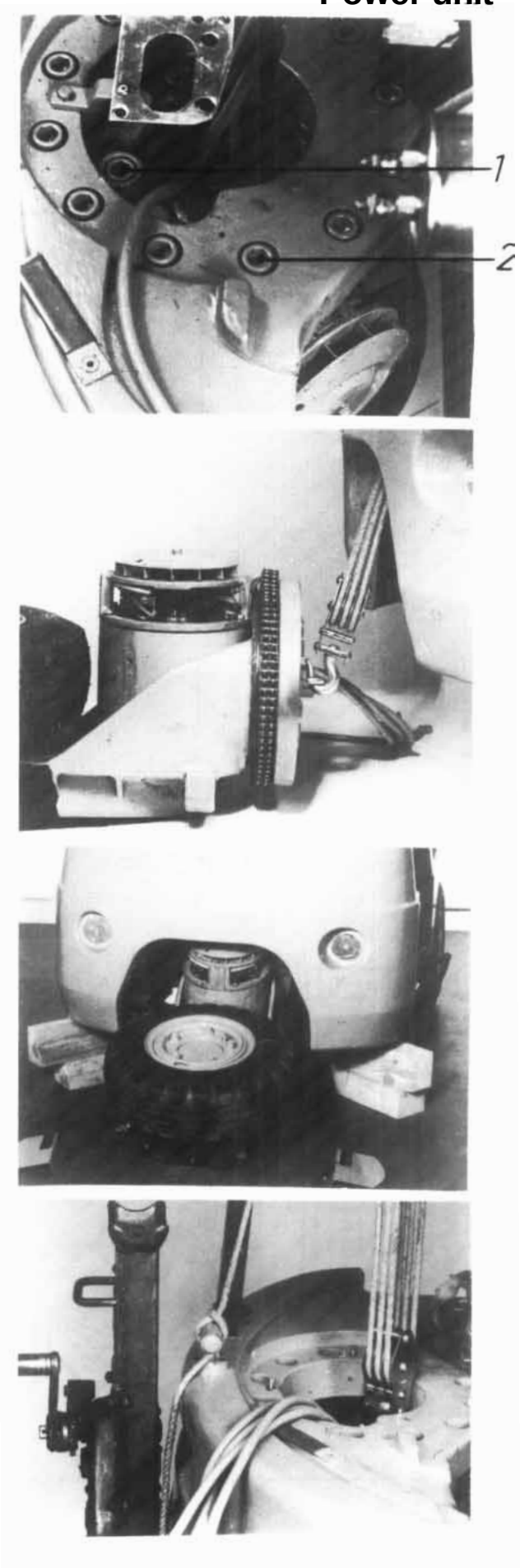

Power unit

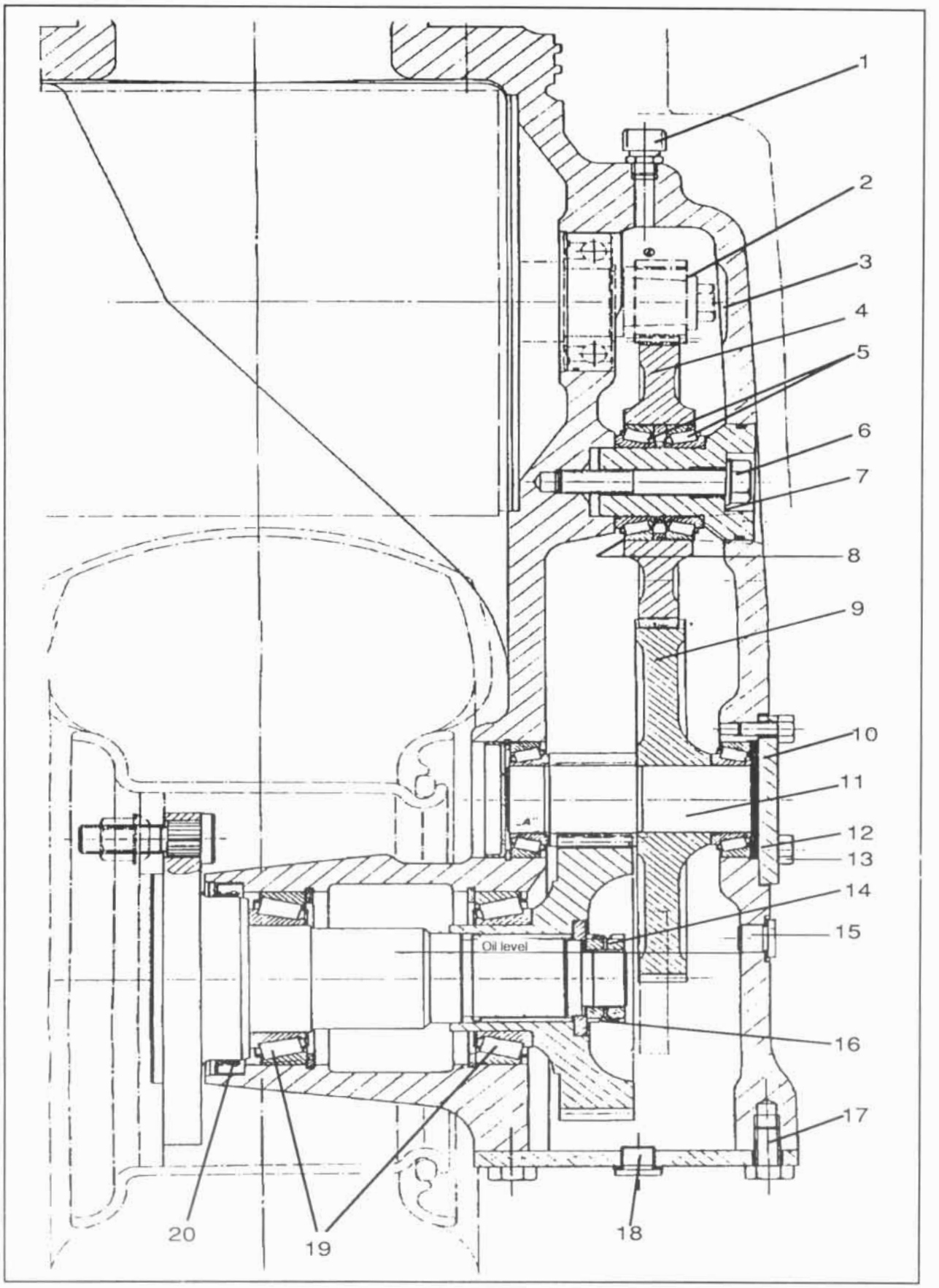

Item	Description
1	Bleeder screw
2	Washer
3	Hex. hd. screw M 12 x 70 8.8 M_A = 50 Nm
4	Pinion 2
5	Outer races of tapered roller bearing fitted by use of a hydraulic press and Loctite grade 601
6	Hex. hd. screw M 12 x 70 8.8 M_A = 80 Nm
7	Face sealed with Loctite 572
8	Outer race of tapered roller outer bearing pressed in flush with gear face
9	Pinion 3 forced in with 135 000 Nm (13 500 kg)
10	Cover sealed with Loctite grade 572
11	Pinion shaft
12	Shims (axial play = 0 – 0.1 mm)
13	Hex. hd. screw M8 x 16 8.8 sealed with Loctite grade 572
14	Washer + slotted nuts
15	Oil filler and oil level plug
16	Nut lock
17	Cover sealed with Loctite grade 572
18	Oil drain plug
19	Tapered roller bearing (adjusted without a notable clearance and secured in place with a lock nut)
20	Radial seal (before installing it, its cavity must be filled up to 50 % with grease)

Superelastic tyred wheels

1 Superelastic tyre
18x7 – 8

2 Rim without rings – rear

3 Spring washer

4 Crown nut

5 Rim without rings – front

6 Superelastic tyre
18 x 7 – 8

7 Wheel bolt (ball seat type)

Torque loadings

Wheel bolts – **front**
M 14 x **24** Grade 10.9
M_A : 195 Nm

Crown nuts – **rear**
M 14 x 1.5
M_A : 170 Nm ± 10 %

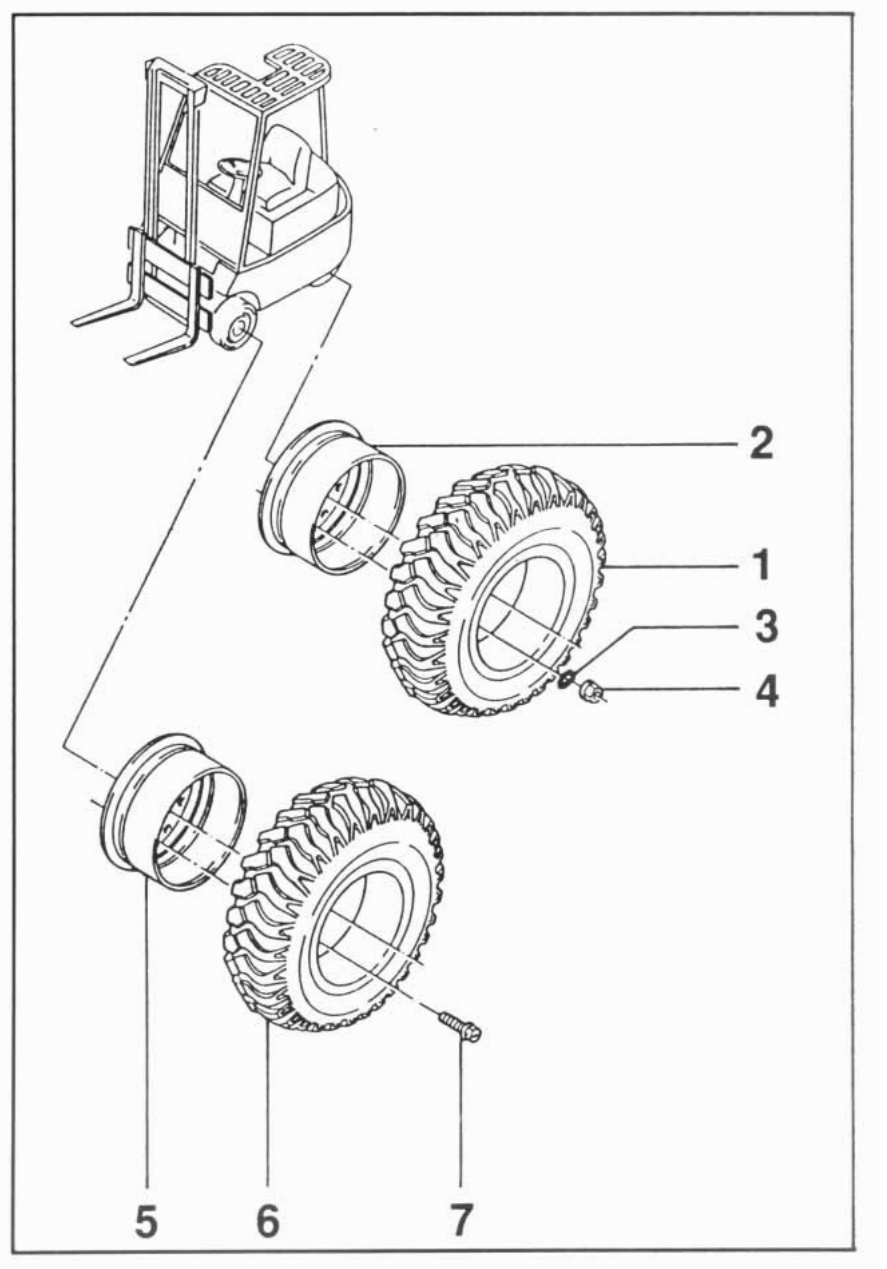

Contents **Page**

Steering system – Operation	1+2
Anti–kickback steering mechanism	3
Removal of anti–kickback steering mechanism	3
Deflecting shaft	3
Removal of deflecting shaft	3
Electrical steering schematic	4
Steering transmitter	5
Control unit	6
Instructions for setting	7

Operation

Power from the front steering chain is transmitted to the rear steering chain via a steering gear (incorporating an anti-kickback device) whence the steering forces are transmitted to the ball race mounted power unit via a deflecting shaft. Power assistance is provided by an electric motor.

Motor speed and direction of rotation are predetermined by a set point adjuster which is situated in the steering column and is designed as a magnetoresistor adjuster. Power supply is via slip rings.

The signals emitted by the set point adjuster are processed by an electronic control unit which with the series power component forms an assembly (**u**100) which is housed in a sealed box attached on the left mudguard under the floor plate.

Control current and motor current are protected by fuses.

The electronic steering control unit is connected directly across the battery and, therefore, cannot be disconnected via the keyswitch.

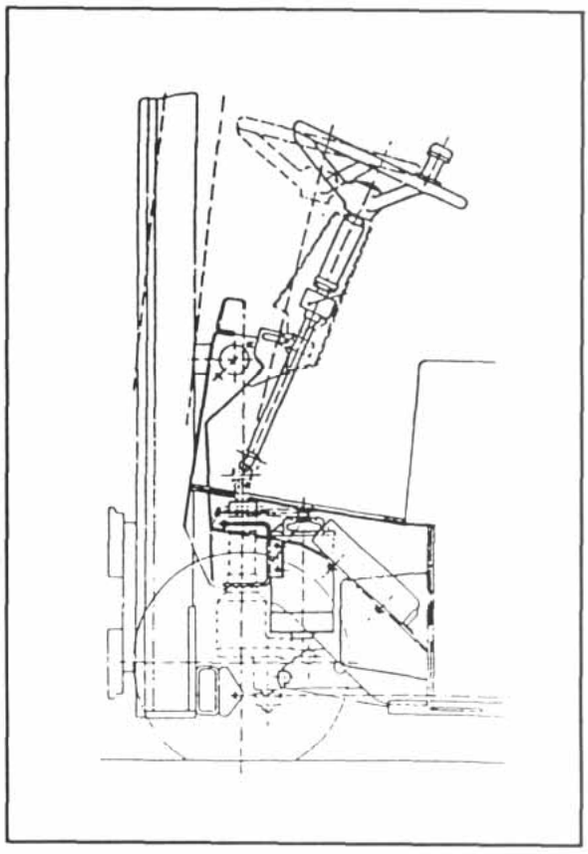

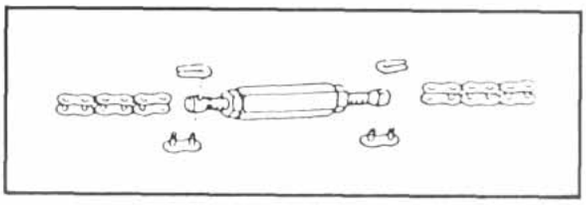

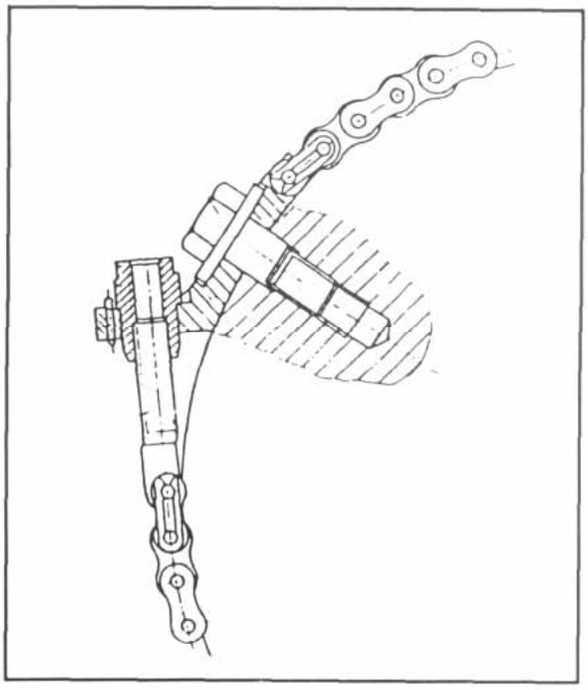

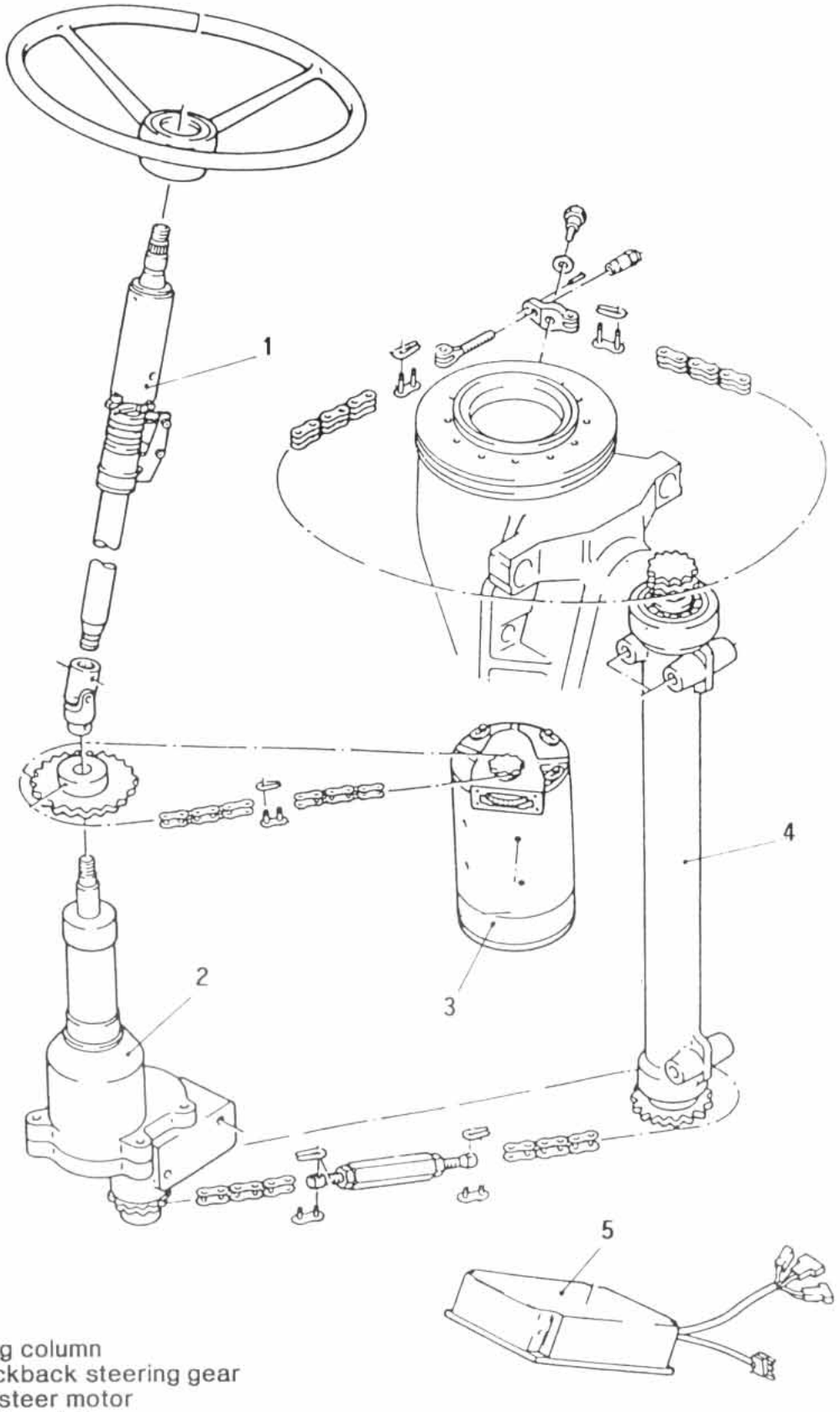

1 = steering column
2 = anti-kickback steering gear
3 = power steer motor
4 = deflecting shaft
5 = electronic steering control unit

Steering

Electrical steering schematic

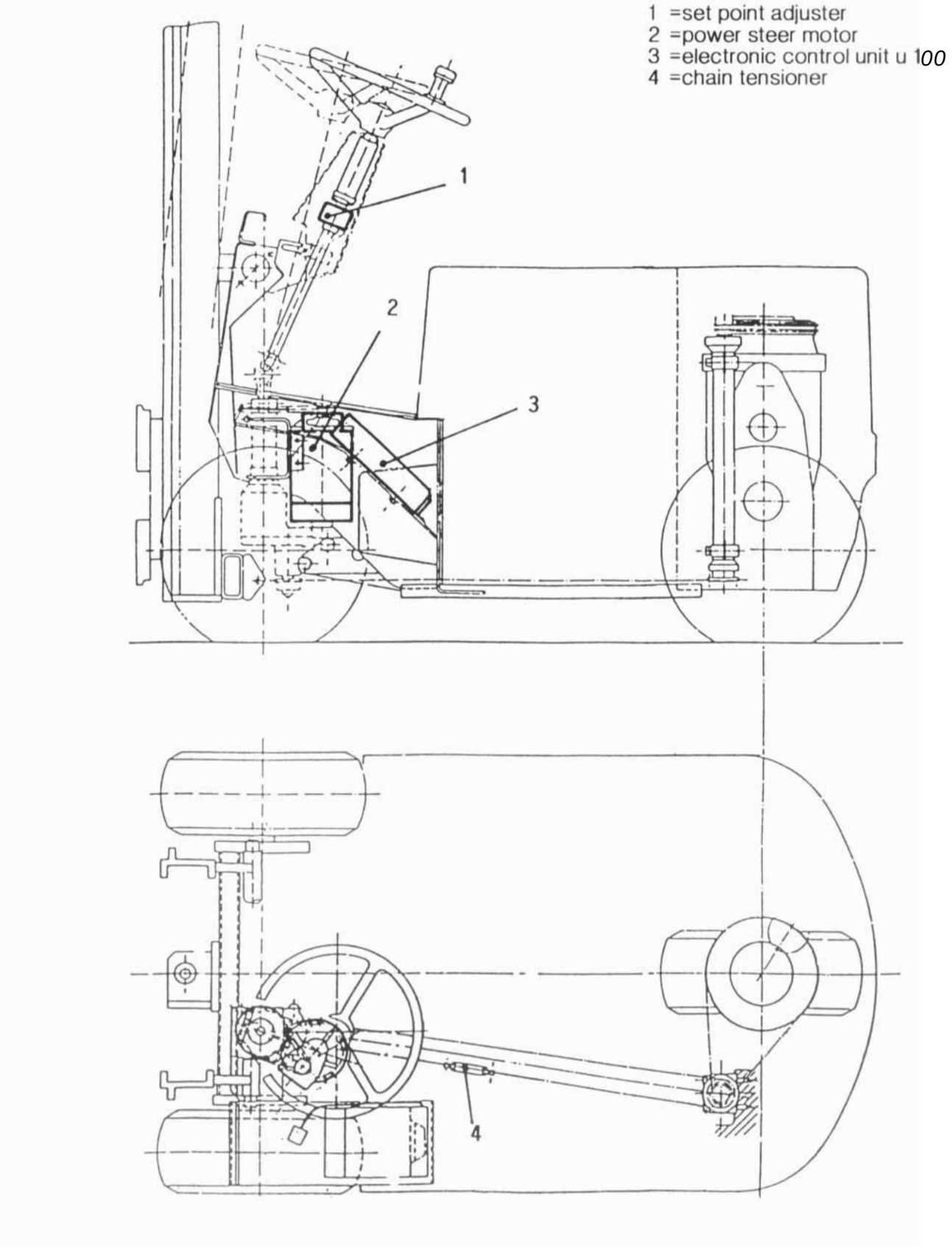

Anti-kickback steering mechanism

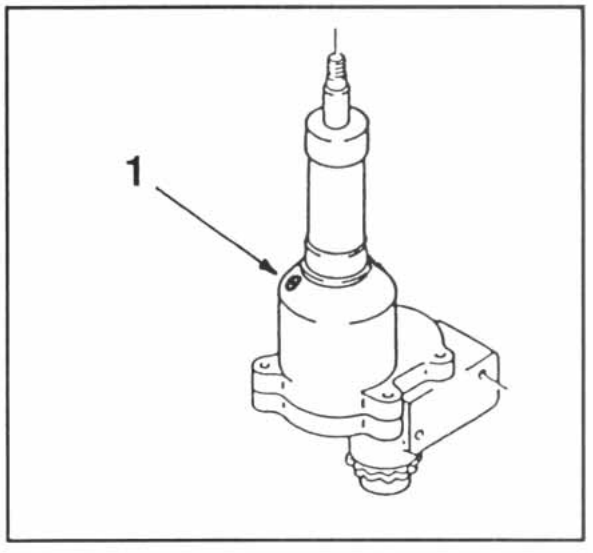

The anti-kickback steering mechanism prevents road shock transfer to the steering wheel.

Should 'kick-back' occur at the steering wheel when encountering shock loads at the rear wheel, the anti-kickback steering device must be replaced with a new one.

Maintenance work on the steering box incorporating the anti- kickback mechanism is restricted to oil level check.
Remove oil level plug (item 1) and check oil for proper level (the steering box housing should be filled with oil up to the lower edge of the oil filler plug opening) - top up as necessary.

Periodic oil change need not be carried out.

Removal:

Remove the screws holding steering box to the chassis. Remove chain. Turn steering box anti-clockwise around its longitudinal axis and clear steering box from below.

Deflecting shaft

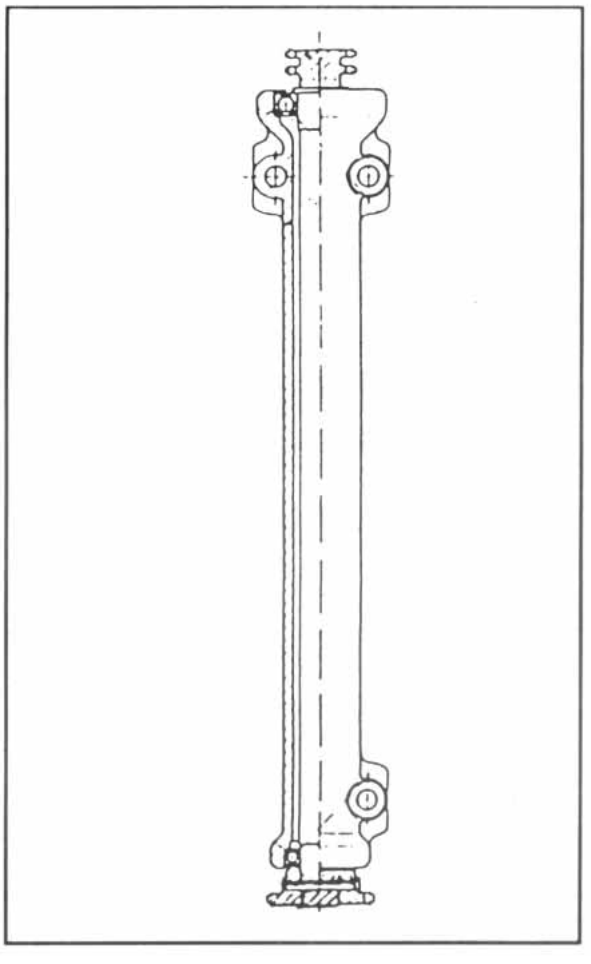

Accessible from the battery compartment, the deflecting shaft is located on the left hand side of the truck at the rear end of the chassis to which it is secured by 3 screws. The steering shaft requires no maintenance. Lubricated-for-life bearings (sealed bearings) are used.

Removal:

Slacken screws and remove lower and upper chains.

Steering column with u29 transmitter

The steering column is divided into two parts. The upper part with the steering wheel can be rotated against a plastic spring by ± 7° out of the central position in relation to the lower part with the universal joint. A differential magneto-resistor and a permanent magnet are used for measuring the angle of rotation, which is proportional to the steering force. The differential magnetoresistor sensor is arranged on the lower part of the steering column, the magnet is on the upper part. When both parts are turned against each other the magnetic flow changes as a function of the angle and therefore so does the output signal of the differential magnetoresistor sensor. The voltage change on the magnetoresistor is ± 2 volts against the reference potential at the centre, depending on the direction of rotation.

Function of the magnetoresistor

The magnetoresistor can be considered to be a resistor which is dependent on the magnetic field.

The magnetoresistors used in the transmitter and current transformer are differential magnetoresistors. They consist of two magnetoresistors connected in series (in one housing) with a central tap. The resistance ratio of the two magnetoresistors to each other changes depending on the position and influence of the magnetic field and therefore when voltage is applied (approx. 10 V) to the external connections (1 + 3) so does the potential at the central tap (2). The changes in potential at the central tap are routed to the control p.c.b.as control signals.

1 = steering wheel
2 = plastic springs
3 = magnet
4 = magnetoresistor u29
5 = slip rings
6 = contact bridge

Slip rings and contact bridges

As the differential magnetoresistor sensor turns with the steering column, the power supply and the control value are guaranteed via slip rings (rotatable) and contact bridges (stationary sliding contacts).

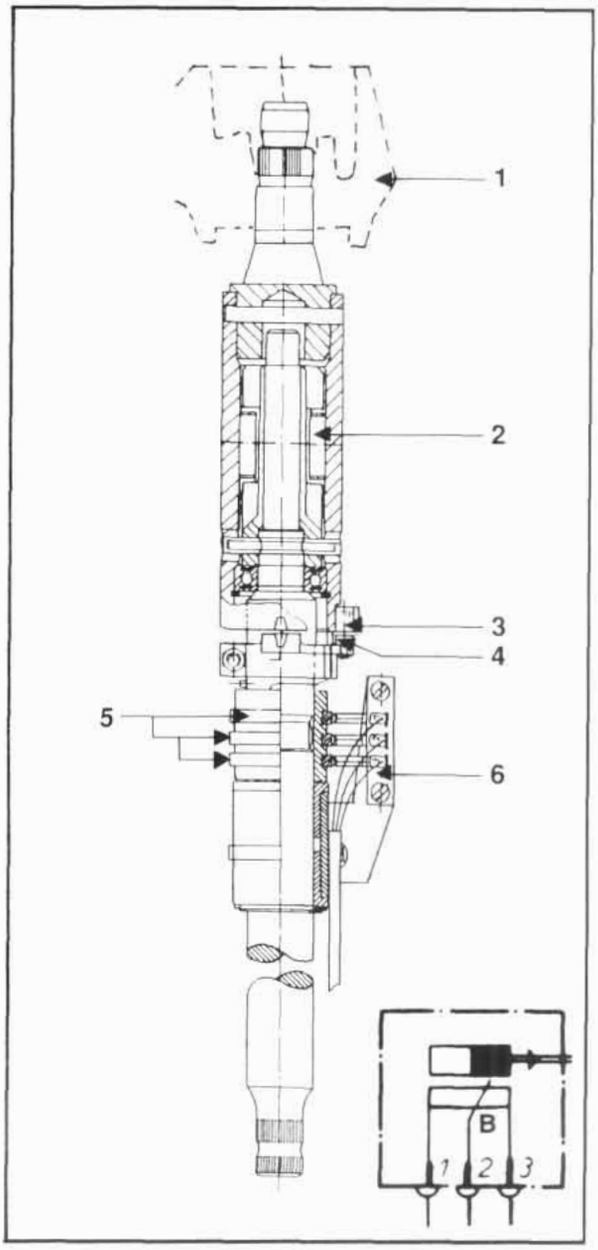

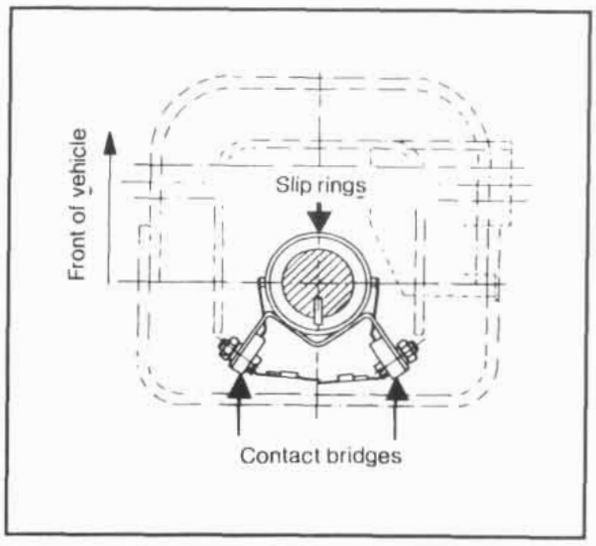

Control unit

u100 Control unit

Control electronics and series power component plus safety circuits are combined in the control device and cannot be exchanged individually. Fuse protection takes place in the negative line with two parallel 20 **A** fuses.
Warning: Only use original fuses!

Input voltage = 24 volts
Max. current = 40 amps

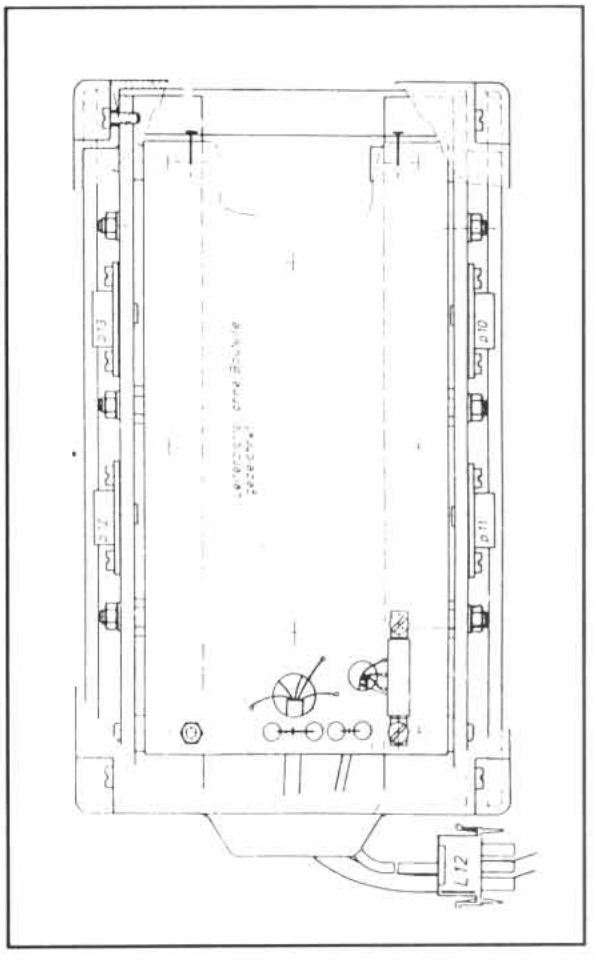

Functions in the u100 control unit

The motor is regulated dependent on the transmitter signal, which is ± 2 volts, between 0 and 100 % relative operating time. The conversion of the transmitter signal into the pulse-width ratio takes place independently of the direction of rotation in the control unit.

If the upper and lower steering column sections are not twisting against each other the transmitter drive is 0 and the motor does not take up any power. If a twist takes place, voltage is applied to the motor in pulses, as recognised by the Stilltronics system. If the twist angle is small the operating period is short, if the twist angle is larger, there is a larger relative operating time and if the twist angle is at its maximum, the relative operating time is almost 100 %. Transistors are used as switches. The switching frequency is approximately 100 Hz.

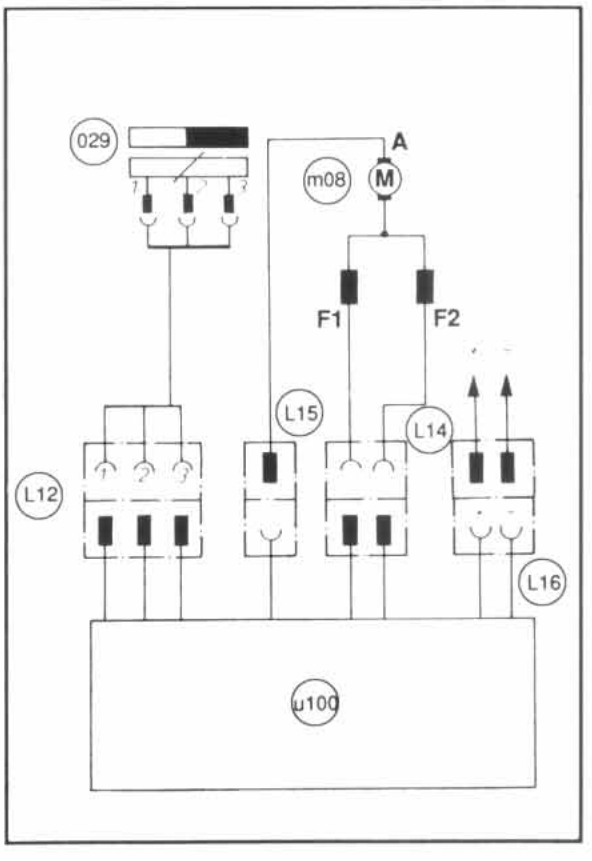

Monitoring device (Fail-safe circuit)

These also include the 20-amp. fuses which burn out out if there are faults in switching functions within the electronics.
The following are monitored:

- u29 transmitter signal
- electronics in the control unit
- temperature
- current limit

WARNING: It is very important that the battery plug should always be pulled when the power circuit to the motor is interrupted e.g. if a shunt is inserted as otherwise the safety circuitry responds and the fuses burn out. Only the specified original fuses may be used as replacements.

WARNING: No servo-system may be used without a correctly set magnetoresistor being connected to the battery as otherwise there is a danger of injury from the steering wheel swinging round.

The steering column is set for electrical servo-assistance. i.e. in the normal situation setting the electrics is not required.

However, if setting is necessary for any reason e.g. replacement of the steering transmitter u29. repair of the steering column, the method below is to be used:

Setting the steering transmitter u29
(magnetoresistor)

1) Take out battery plug
2) Push out central connection 2 on connector (socket half) L12
3) Connect measuring instrument, connect to terminals, plus to 3, minus to 1 of u29
4) Insert battery plug
5) Measure voltage U1 between 3 and 1 of u29 (log approximately 10 volts)
6) Remove battery plug
7) Connect measuring instrument to terminals of u29. plus to 2, minus to 1
8) Position magnetoresistor below magnet with a 2 mm gap so that the voltage at the measuring instrument is:
   * $\frac{U1}{2} \pm < 0.4$ V

   Clamp magnetoresistor mounting.
9) Turn steering column to, right stop. Voltage at measuring instrument:
   * $\frac{U1}{2}$ – 2 V to 2.5 V (if the voltage change is too small reduce the distance away of the magnet mounting)
10) Turn steering column to left stop. Voltage at measuring instrument:
    * $\frac{U1}{2}$ + 2 V to 2.5 V (if the voltage is too small reduce the distance away of the magnet mounting)
11) Turn steering wheel to left or right stop and release. Voltage at the measuring instrument must go back to * $\frac{U1}{2} \pm < 0.4$ V (Otherwise repeat adjustment 9 . . . 11. if not in order then, the friction in the steering column is too great)

* $\frac{U1}{2}$	=HALF the voltage measured between 1 and **3!**
!	= Adjusting screw

Setting the current limit

The control units are set. Setting only needs to take place if they do not function correctly.

Rated values: a) Rotation against the stop right/left = 40 A

b) Steering wheel released = 0A

Setting: a) Connect tong tester (see drawing)

b) Read off values

c) Adjust with potentiometer

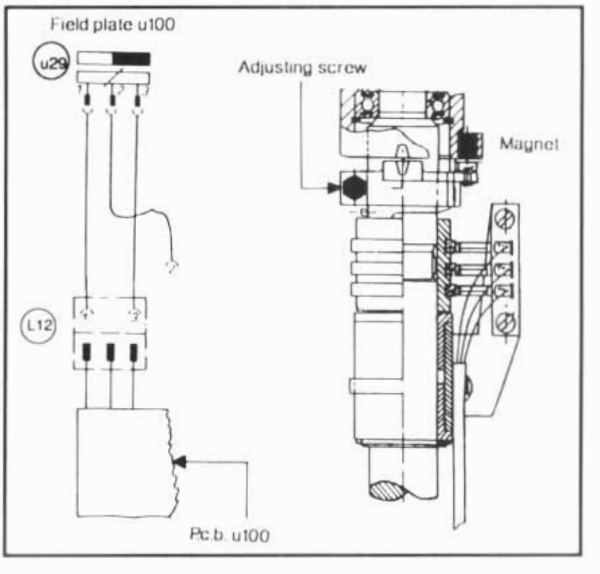

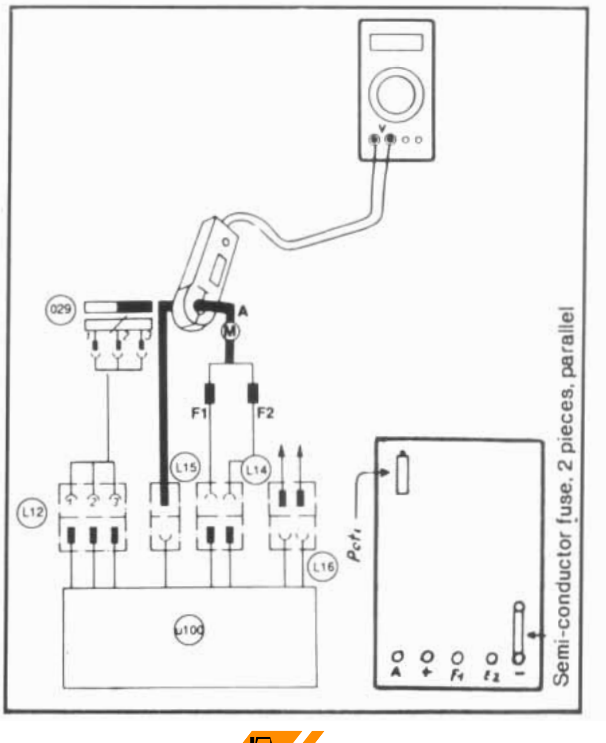

Contents **Page**

Hydraulic service Brake – Disassembly	1
Hydraulic Service Brake – Adjustment	2
Parking brake – Adjustment	3

Hydraulic Service Brake

Hydraulic service brake of Duo-Servo design acting on the internal shoes of the front wheels. The complete capacity range of R50 trucks is fitted with this type of brake.

Wheel brake removal and disassembly

- Jack up truck at front end and securely chock the front axle
- Remove front wheels
- Back off gear of adjuster until the brake shoes are free of the brake drum
- Remove dust cap (1)
- Remove hex hd. screw M 16 x 35 with tension and thrust washers
- Remove brake drum
- Unhook return springs (pull-off springs). Remove cap screw from locking plate and prop the latter with the aid of a screw-driver
- Disengage hand (parking) brake cable
- Unhook springs retaining brake shoes in position.
  (With your thumb exert pressure in order to push the spring sideways towards the wheel centre)

While brake is disassembled inspect all parts for wear or damage. Any brake parts that are damaged just as well as brake linings which are worn or contaminated with grease or oil must be replaced.

Reassemble the brake in reverse order of disassembly.

Note:

Brake shoe retaining springs should be inserted only by applying pressure with your thumb (springs will lock in place automatically).

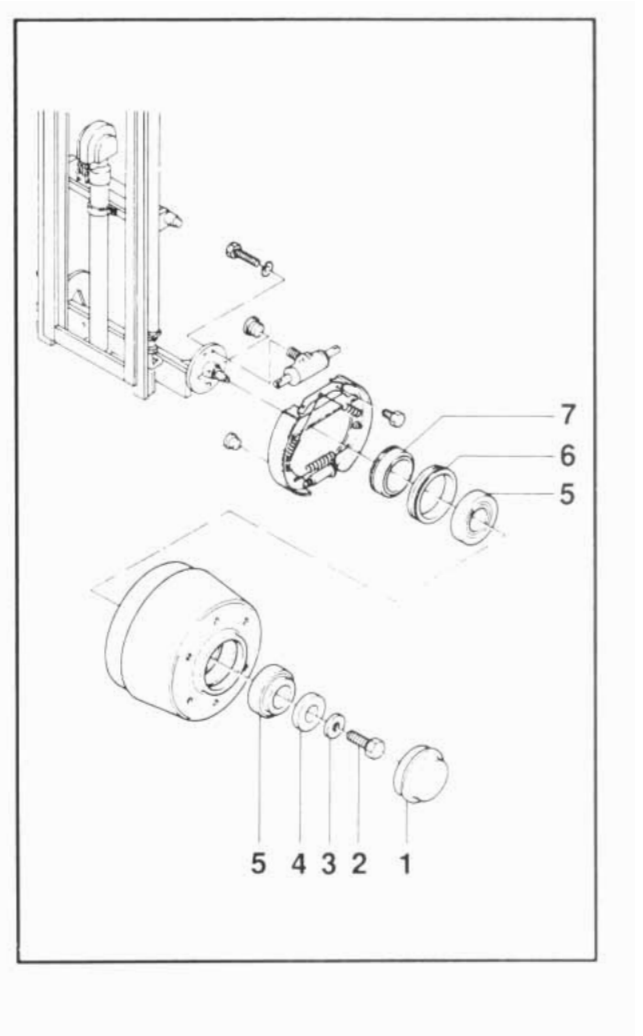

1 =dust cap
2 =hex. hd. screw M 16 x 35 8.8
3 =tension washer
4 =thrust washer
5 =tapered roller bearing
6 =oil seal
7 =back-up ring

Hydraulic Service Brake

Adjustment

Reliablility and operation of a braking system are affected by the adjusting means and correct shoe brake adjustment.

Basic adjustment is necessary

1) when fitting the brakes

2) when re-lining the brake shoes

3) when fitting new handbrake cables

4) If adjustment of the brake had erroneously been carried out merely by operating on the adjusting nuts of the handbrake cables (to compensate for lining wear)

Should handbrake lever travel become excessive, the brake shoes must be readjusted.

Adjustment without drum

Adjustment with drum removed can be performed with the aid of a vernier caliper in which case the correct dimension is 179.4 mm over brake shoes.

After this, refit the brake drum and adjust the parking brake by following the instructions under section 'Hand (parking) brake adjustment' in this manual.

Basic adjustment is carried out as follows:

1) Chock up the truck

2) Remove wheels

3) Release parking brake by pressing button and pushing lever completely forward

4) Loosen both lock nuts of the brake cables at the head of the brake lever

5) Using a screwdriver or similar tool, rotate adjuster – accessible through an opening in the backplate (brake drum adjustment hole) – until shoes make contact with brake drum, this being noted by resistance when turning the drum by hand

6) Next, back off adjuster by around 3 teeth to allow the drum to rotate freely

7) For adjustment of the hand (parking) brake see page 3

Hand (parking) brake adjustment

NOTE:

Before adjusting the hand brake, the foot brake must be adjusted.

1 Release parking brake by pressing button and pushing lever down (lever must rest against dashboard cowling).

2. Check whether cable bushings seat properly into their bearing block, just below the hand brake lever, and the oposite ends of the cables into their respective locating holes on left- and right-hand brake backplates.

3. Adjust the nuts at the cable ends until the cable bushings just make contact with the underside of their bearing block, or there is a perceptible gap of 0.5 mm. (Thus the free play at the brake shoe lever is compensated for).

4. Pull handbrake lever until the 3rd tooth of ratchet is engaged. There must now be a drag on the brake shoes when the wheels are rotated by hand. Should, however, a somewhat higher resistance be felt on one of the wheel brakes, slacken the respective handbrake cable.

5. Braking must take effect the instant 5 to 6 teeth of ratchet are engaged, i.e. it should at this stage no longer be possible to rotate the wheels by hand.

6. Full braking action must be achieved when 8 to 9 teeth of ratchet are engaged.

7. After adjustment as outlined above, check that the brake cable ends protruding at the handbrake lever do not differ in height by more than 10 mm, otherwise it is an indication that the faults listed below exist:

- Cable length wrong.
- Wheel brakes have been adjusted so that they deviate too much in diameter.
- Due to one-side dragging of handbrake, the difference has been compensated for by stretching one of the cables more than the other.

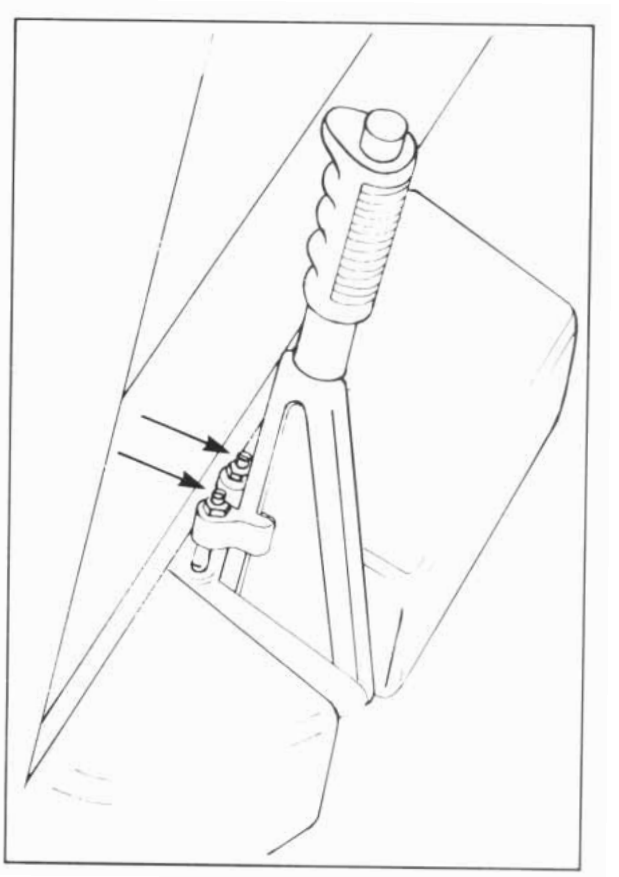

Adjustment **of** handbrake microswitch

It must be so adjusted that it cuts the traction circuit as soon as the 2nd tooth of the ratchet is engaged.

General remarks:

Correct adjustment of the handbrake can be achieved only if service braking on each wheel is balanced. If The footbrake brakes unevenly, the handbrake should display about the same percentage of uneven braking. Never attempt to adjust the handbrake evenly if the footbrake is out of adjustment.

Contents **Page**

Technical Data for Maintenance Service	1
Mechanical configuration	2
Contactor control panel – Maintenance work – Contactor control panel removal	4
Master keyswitch	5
Battery connector	5
Direction selector switch	6
Seat switch	7
Parking brake switch	8
Drive control – Travel sender unit	9
Hydraulic control valve switches	10
Signal horn switch / Signal horn	11
Current sensor	12
STILL contactor	13
Logic unit card u200 – Removal of p.c.b. u200 – Adjustments on the p.c.b. – Fail–safe circuit/Testing operation of fail–safe circuit	15 16
Main power section	17
Measuring plug braking current	20
Operation	21
Battery	27

Annex

Pump Impulse Controller	P1
Maintenance and repair work	P2
Configuration of Pump Impulse Controller	P3
Operation of Pump Impulse Controller – Control valve microswitches – Logic card – Power unit	P4
Logic card u201 – General – Operation – Adjustments on p.c.b. u201	P5
Principles of operation	P6

Technical Data for Maintenance Service

Functional Group 08	24 volts	36 volts	Fork lift truck fitted with a 2.8 kw drive motor
SCR Drive Controller (Pulse control system)	S t i l l t r o n i c		
Operating voltage	24 volts	36 volts	24 volts
Current limit	520 A	310 A	460 A
Accelerator transmitter	Control: contact-free over the full range		
Still contactor - Coil - Contactor tips - Contactor tip material	2-poled 24 volts 4 replaceable tips with silver-cadmium-oxide coating	36 volts	24 volts
Plug braking current	RS 350 A	200 A	270 A
Traction current	FS 520 A	310 A	460 A
"Mark-space" ratio (rate of acceleration)	HZ 1.35-1.45 sec	HZ 1.35-1.45 sec	HZ 1.35-1.45 sec
Fuses			
- Drive motor m 2 - Hydraulic pump motor m 5 - Control circuits	e 2 = 250 A e 5 = 250 A e 1 = 25 A/e 2 -9 = 8 A		
Insulation resistance			
Electrical installation	≥ 24 kΩ	≥ 35 kΩ	≥24 kΩ
Electric motors	≥ 24 kΩ	≥ 36 kΩ	≥ 24 kΩ
Battery	1.000 Ω	1.000 Ω	1.000 Ω

Electrical installation

Mechanical configuration

All the electrical control gear is housed in the rear truck compartment.

Bolted to the rear counterweight, the power SCR's and related equipment for the electronic circuit hydraulics and electronic traction control, as well as the battery monitoring unit (discharge indicator) are all grouped on a common base plate to form one compact assembly.

All additional components belonging to the electrical equipment are positioned in the truck according to their respective function.

1=B.D.I..	g	11
2=pump contactor,	c	5
3=pump motor fuse,	e	5
4=drive motor fuse,	e	2
5=control circuit fuses		
6=main SCR,	n	20
7=turn-off SCR.	n	22
8=charging SCR.	n	36
9=current sensor,	n	
10=p.c.b.. drive pulse controller,	u	200
11=charge current transformer,	m	23
12=turn-off capacitor,	k	22
13=rev. contactor,	c	3
14=fwd. contactor.	c	2
15=plugging diode,	n	25
16=free-wheel diode	n	24
17=delay circuit for c5		

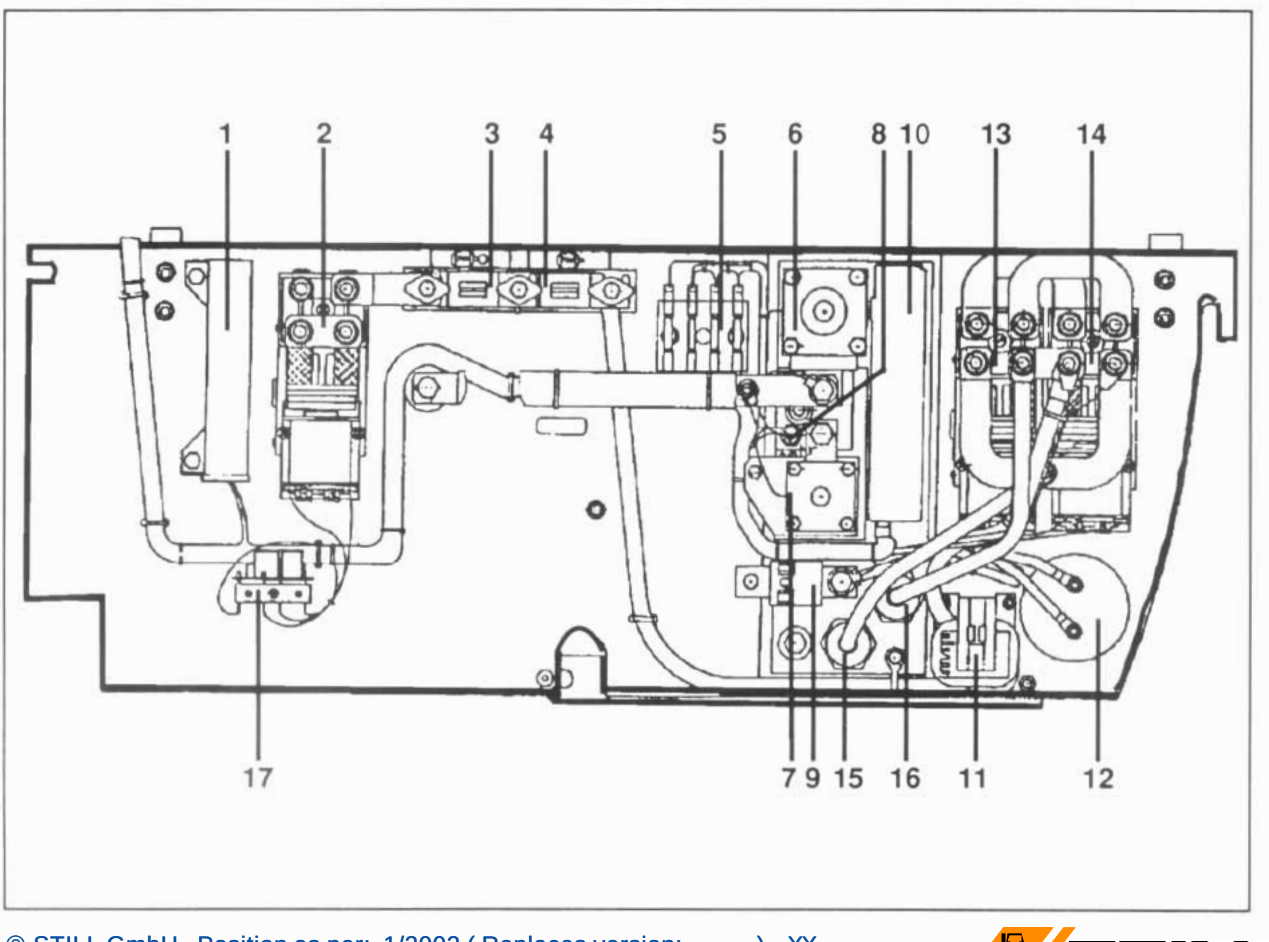

Electrical installation

The Stilltronic designated Electronic Pulse Control system with which the trucks in the R50 range are fitted is an electronic method of controlling battery electric vehicles equipped with single traction motor drive. Designed to operate with a battery voltage of 24 volts and a maximum motor current of 500 amps, this type of control gives extremely smooth starting and stopping of the vehicle, completely eliminating jerky operation. Battery power economy is achieved as no power is lost through resistors at any speed.

In the Stilltronic system, a delayed current regulation is combined with a delayed voltage regulation.

This feature ensures that even an electric motor subjected to a low loading (current of low intensity) starts with a certain delay.

The power unit, the logic unit (p.c.b. u200). the turn-off capacitor k22. the direction contactors c2/c3 as well as the pump contactor c5 are all grouped together on an aluminium base plate (a cast aluminium heat sink or cooling structure which is required to dissipate the heat generated in the semi-conductor devices).

The power unit is mounted on the base plate from which it is electrically insulated by means of an insulating foil and a thin coating of thermal compound.

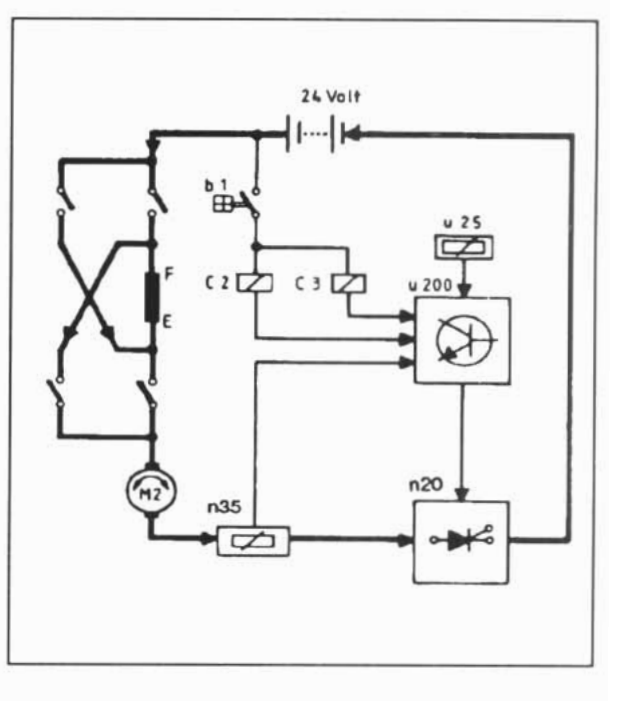

Contactor control panel

Maintenance work

- Disconnect the battery
- Remove RH side panel
- Loosen cable harness retainer (flat bar)
- Slacken fixing screws which hold contactor panel or support to truck frame
- Swing up contactor panel
- With thumb press the stay (fastened to the underside of contactor panel) to free it so it can be pivoted, and engage it with the RH fixing screw of the contactor panel.

WARNING! Jack up the truck before performing any maintenance or repair work on the electrical installation. On the R50 the drive wheel is at the rear!

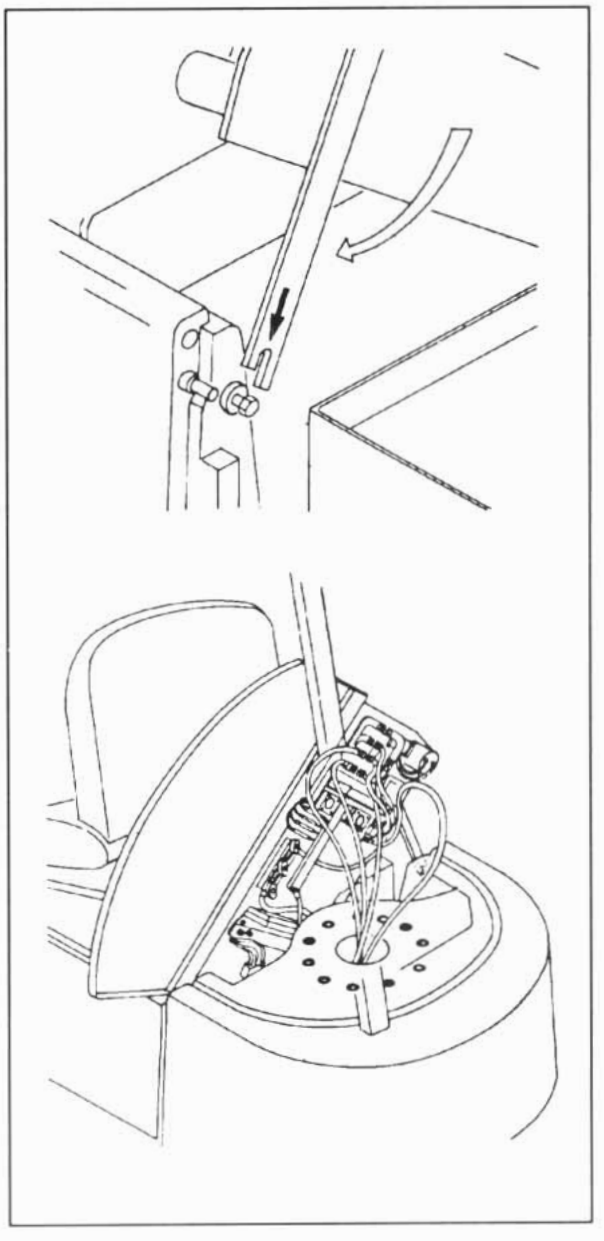

Contactor control panel removal

- Disconnect the battery
- disconnect plug and socket connections (connector L2)
- Remove positive lead cable
- Remove negative lead cable
- Disconnect pump motor lead cable at 1 b (c5) as well as negative cable
- Remove all **4** drive motor lead cables
- Lift contactor panel assembly and withdraw it from LH supporting screw (slotted hole in contactor panel base plate)

Installation

To install the contactor panel reverse the above procedure.

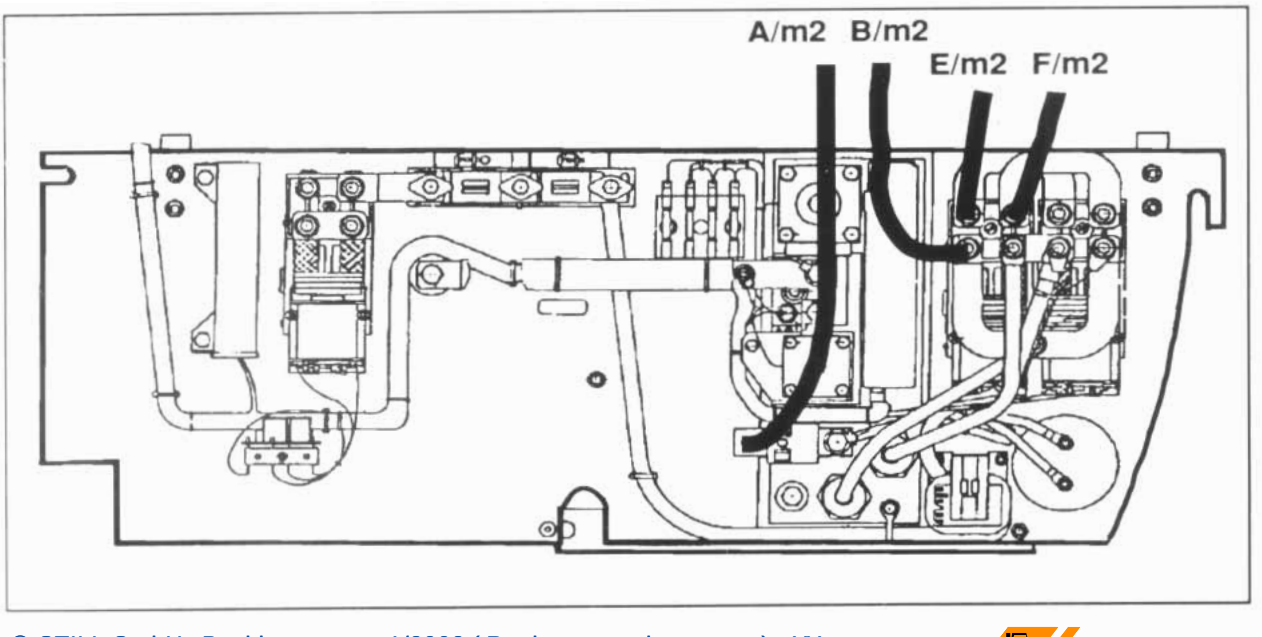

Master keyswitch / battery connector

Master keyswitch **b1**

The flush-type keyswitch is positioned to the right of the steering column. Operation of this switch energises the entire control circuit for the electronic drive and pump controllers as well as for the direction and pump contactors.

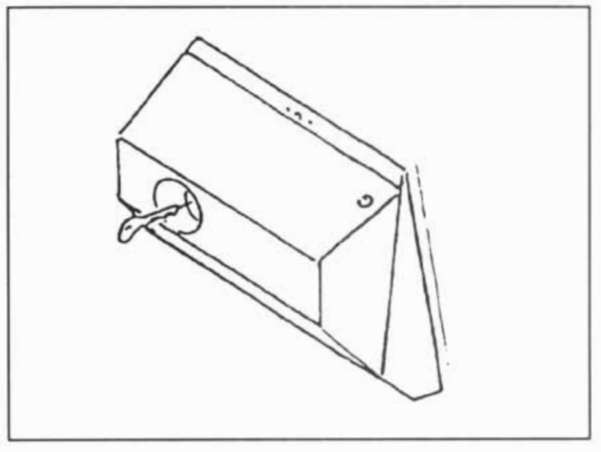

Battery connector **b11/b12**

The battery connector consists of 2 halves:

Battery connector half b11 (pin half)
Battery connector half b12 (socket half)

Type: Schaltbau 160 **A**

Connector half b11 is mounted in the leg compartment at the left-hand side of the bulkhead. The battery cables are guided within the truck frame and are brought to the electrical control panel which is housed in the rear truck compartment.

Provided with a handle, connector half b12 is firmly connected to the battery. It also provides a breaking point for connecting the battery to a charger.

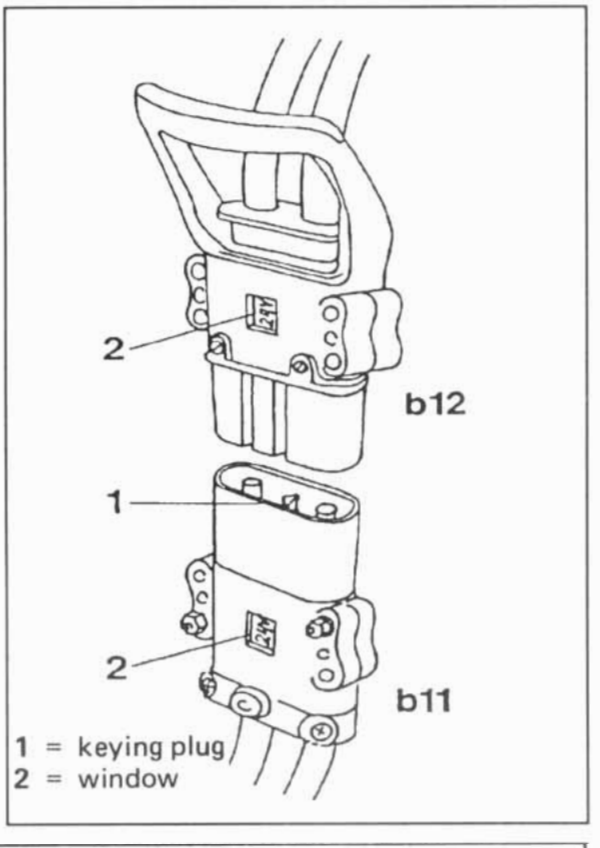

The battery connector also serves as an emergence cut-out.

The truck operator can at any time reach the quick-release connector with his left hand and pull the connector half in an emergency.

Both connector halves are each fitted with a keying plug between contacts to prevent accidental voltage mismatching. When mounting the connector the keying plugs are adjusted to the relevant battery voltage (visible through a window in the connector housing). Connector halves can be mated only provided they are both set to the correct voltage.

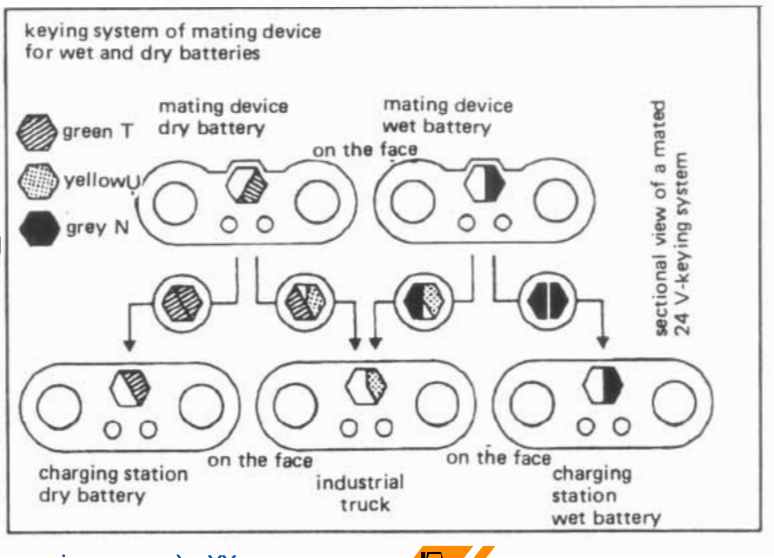

Direction selector

Directional selector switch **b 2**

The directional control switch assembly is located on the steering column.

It consists of a sheet steel frame, a double-type directional control lever with switch cams, a roller guided ratchet with travel limitation, a stop lever and two microswitches.

The direction switch can be switched to 3 positions:

forwards – neutral – reverse

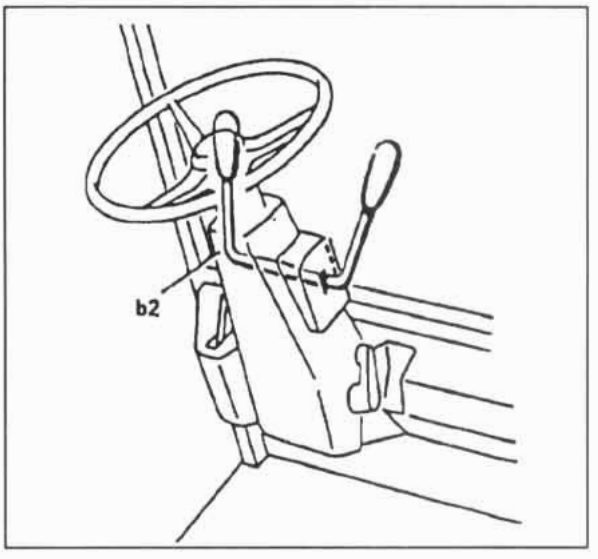

Removal

Remove all the screws which secure the shroud to the steering column and remove shroud. The switch assembly is held to its bracket by four M6 screws.

The two microswitches are secured to the sheet steel frame by allen screws.

Provided with 3 connections the micro-switches are of the normally open type. Microswitch u1controls forward travel whilst microswitch u2 controls reverse travel.

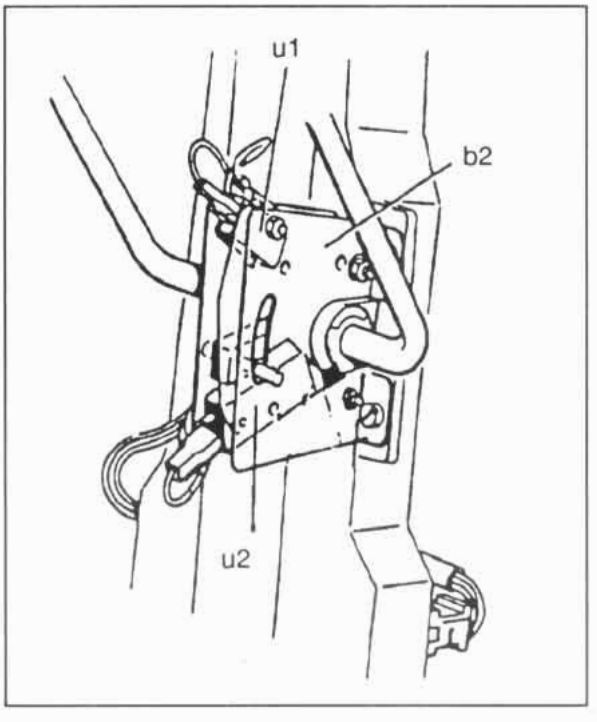

Instructions for installation

The directional control lever must via the roller guided ratchet reach its limit stop within the sheet steel frame. The switch cam in the limit or end positions must not strike against the microswitches.

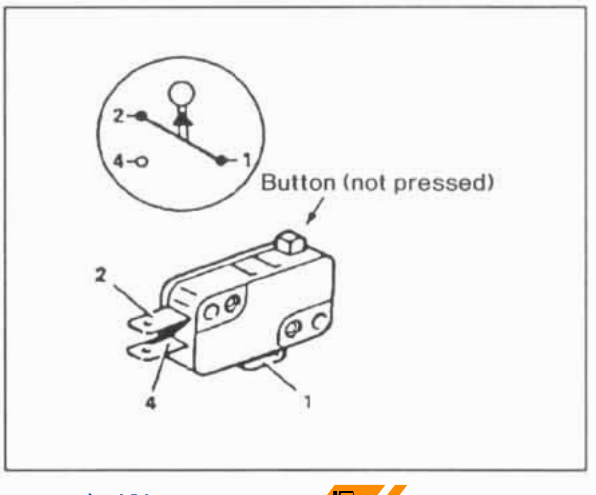

Seat switch

Built-in seat switch b31

The seat switch is constituted by a contact tape incorporated into the seat cushion. The seat switch is a safety interlock device which must function permanently and is therefore not allowed to be short circuited. The contact tape will make contact even if only a light load is placed on the seat. Due to a delay circuit (u40) arranged immediately under the battery cover, the contactors will not drop out immediately the seat is relieved of load, but with a slight delay.

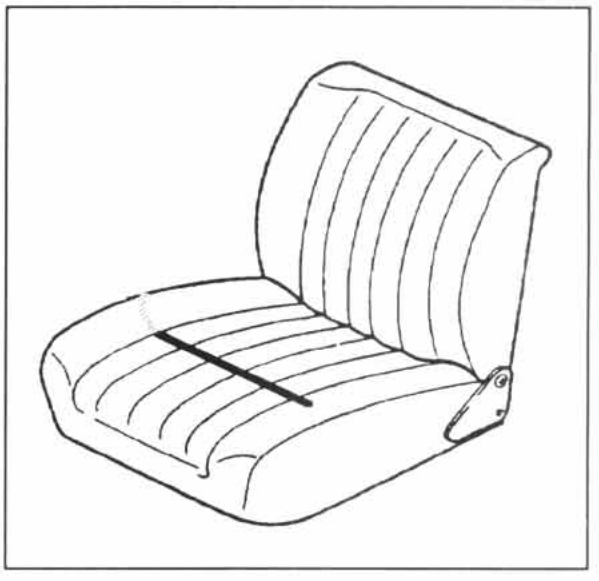

Checking for continuity with Testofon buzzer

Disconnect the connector mounted to the underside of the battery cover and connect the test prods of the Testofon buzzer to 1 and 3 of connector half b31.

Seat unloaded: no continuity

Switch activated by pressure exerted on the seat with hand: continuity

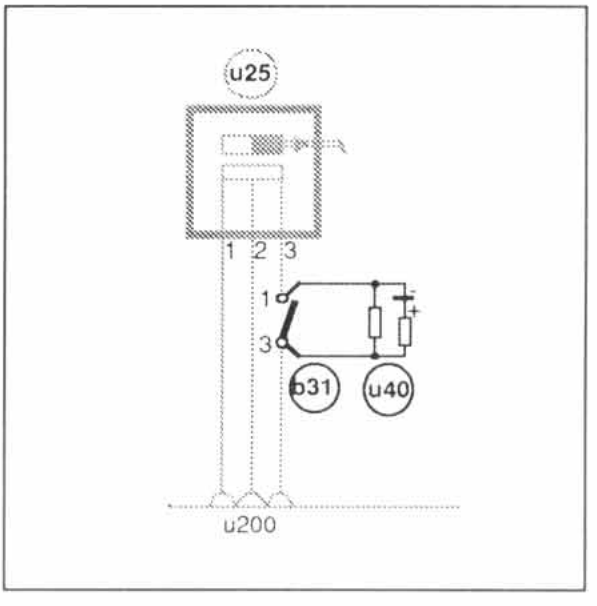

Seat switch replacement

Changing the switch requires the replacement of the complete seat cushion to which end the electrical connection must be disconnected and the cable fixing detached from the hood. **At** this stage the seat can be removed and the seat cushion dismounted.

Delay circuit u40

To prevent the circuit from being opened the instant the vehicle drives over uneven floor surfaces,the delay circuit u40 has been connected in parallel with seat switch b31. Maximum delay amounts to around 2 secs.

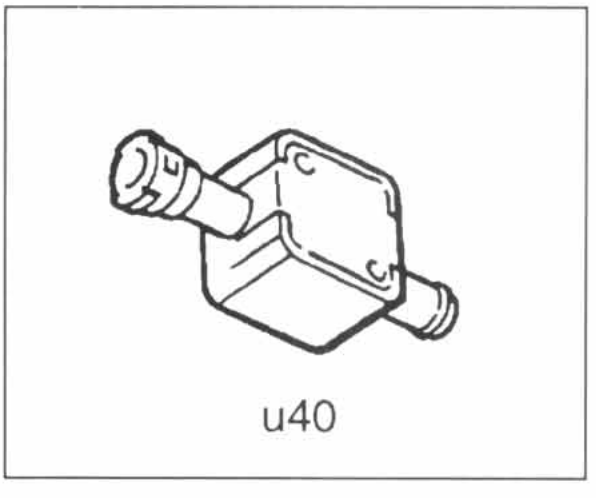

Parking brake

Parking brake switch b21

Engaging the parking brake to the 2nd notch opens parking brake switch b21 which when closed is electrically connected with p.c.b. u200. Power to the electronic drive pulse controller is cut off when switch b21 is opened.

When the parking brake is released switch b21 will close as a result of which the drive pulse controller will become operative again.

If when stopping the vehicle on a gradient the parking brake is applied, the truck can only be started by depressing the brake pedal with the left foot whilst releasing the parking brake at the same time. The operator must then press down the accelerator pedal with his right foot, simultaneously releasing the brake pedal.

Depending on the rate of acceleration set on p.c.b. u200, the vehicle will after the switch has closed climb the gradient at full power.

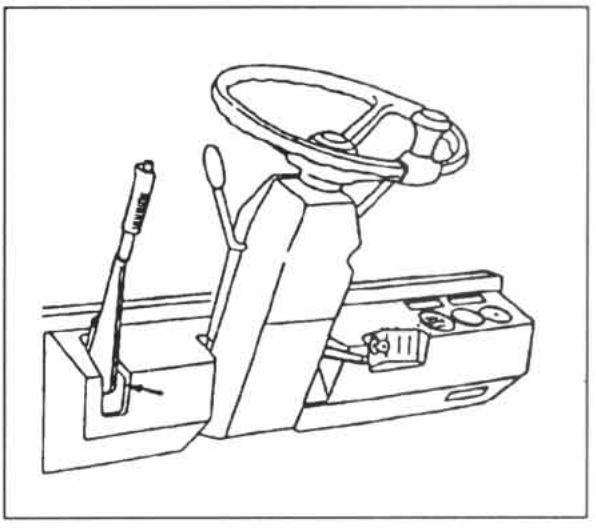

Removal

The parking brake switch is accessible after removal of the LH section of the dashboard shrouding.

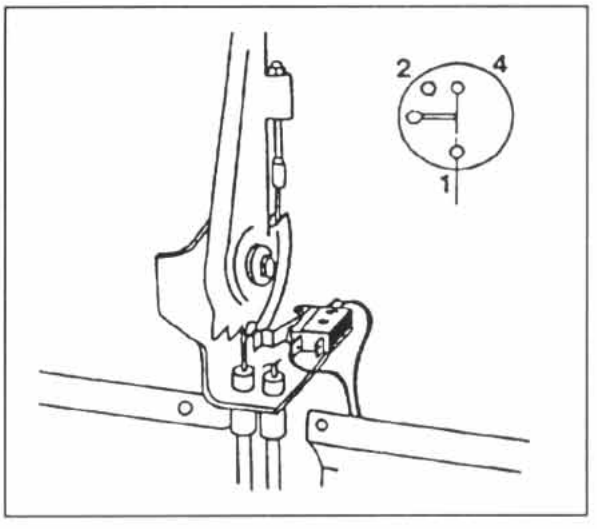

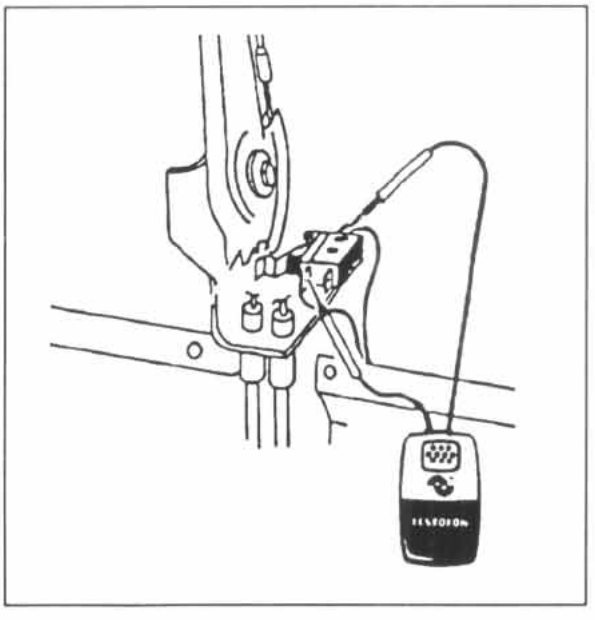

Travel sender unit u25
(accelerator pedal transmitter)

The accelerator pedal with travel sender u25 is fastened to the underside of the floor plate.

The lower end of the pedal contains on the transmitter side a polarized permanent magnet.

As the accelerator pedal is depressed, the magnet is moved past a field plate which is – mounted in the water-proof transmitter housing.

The field plate is electrically connected with the p.c.b. u200 (main logic card) via a **3-**position L25 connector.

A voltage of 10 volts (stabilized voltage) is applied to the external connections 1/u25 (–) and 3/u25 (+) of the field plate. At its central tapping *2/u25* the field plate in the rest position will supply around 4.1 volts.

When the pedal is operated – and the permanent magnet is moved past the field plate – the voltage will increase to approximately 8 volts when maximum output is reached.

This rise in voltage is recorded by the main logic card u200 which will then control the power unit (of the Stilltronic) accordingly.

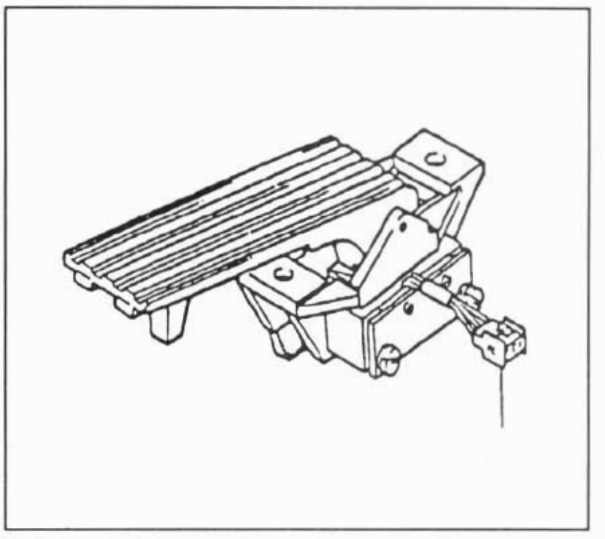

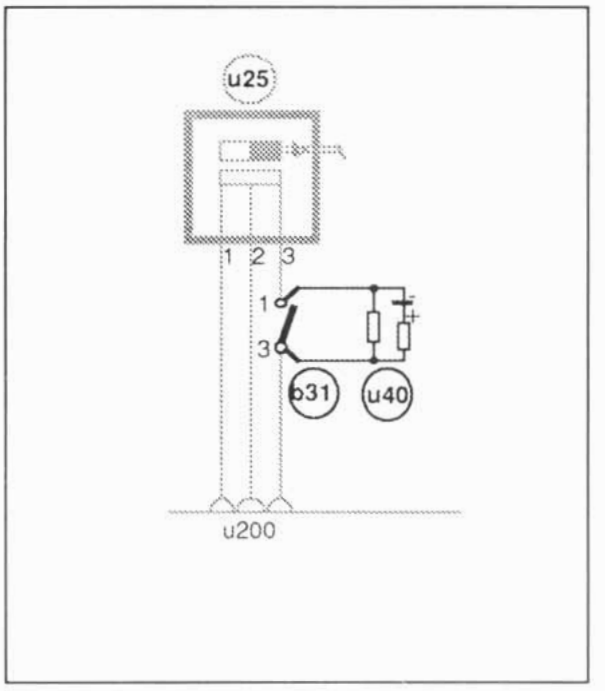

Hydraulic control valve switches

Microswitches b51 - b54

A switch is mounted at the lower end of each valve tie-rod. Due to a detent on the cam rod the switch is not actuated as long as the cam rod is not operated.

All switches are of the normally open type, i.e. the switch is open in its non actuated state. 1

If the cam rod is lifted or lowered by moving one of the control valve levers both forward and back, the valve switch is actuated and thus caused to close. 2

Looking from the driving position the switches/valves are arranged as follows: 3

1	= hoisting	-b51
2	= tilting	-b52
3&4	= 3rd and 4th hydraulic functions (attachments]	-b53/b54

Removal

The switches are directly accessible after removal of the valve shroud which is held in place by 4 crosshead screws.

The microswitch plungers are actuated by the sector via roller fitted brackets.

The microswitches are electrically connected with the coil of pump contactor c5.

Terminals 1 of all switches are inter-connected by bridges and connected to the neg. terminal (-24 V) of the battery.

Upon operation of microswitches b51-54 pump contactor c5 is connected to the neg. battery terminal.

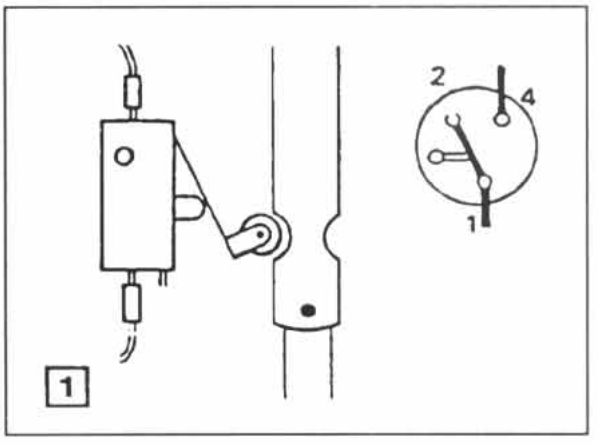

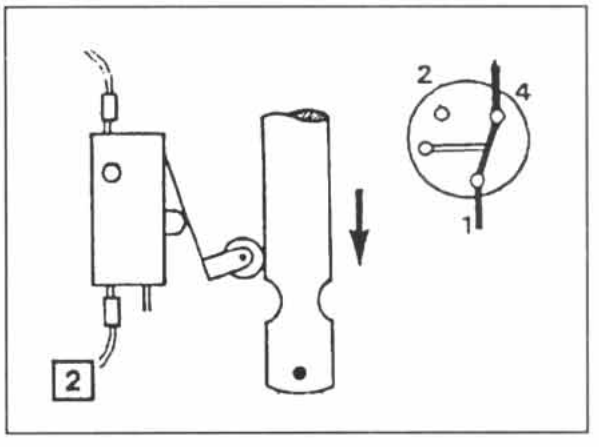

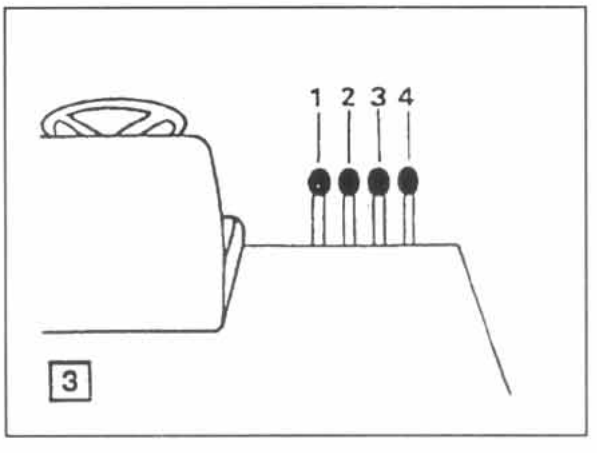

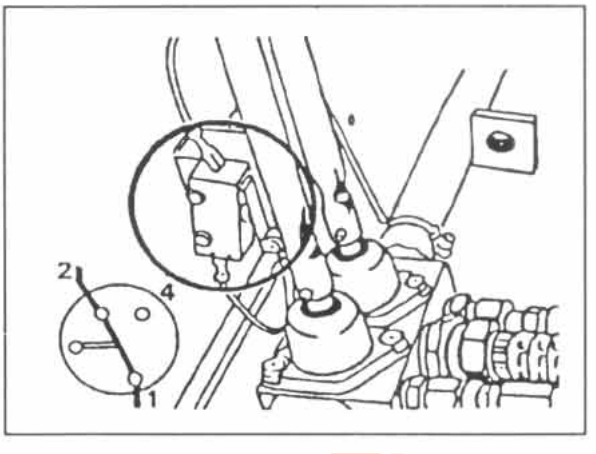

Signal horn switch b89

The foot-operated warning horn switch is mounted with 2 studs to the underside of the LH section of the floor plate.

Only the horn button passing through the floor plate is visible from above the plate.

Operating the horn button actuates a microswitch of the normally open type which is mounted to the housing.

The warning horn is thus connected via this switch with the negative terminal of the battery.

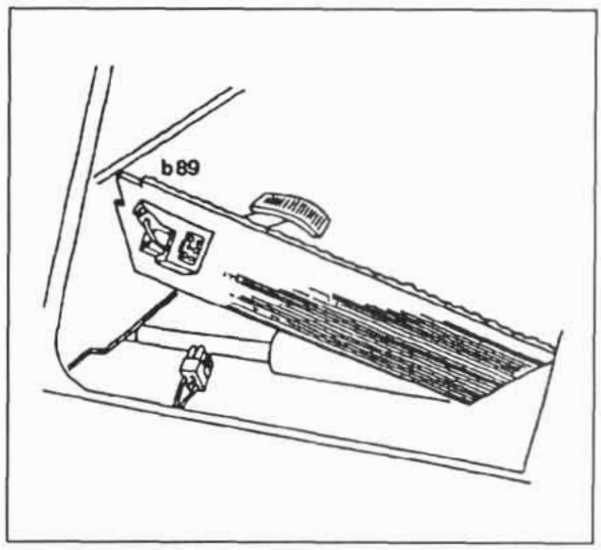

Direction of current flow: Horn switch/horn

+ 24 volts via fuse... e4 - 1/h89
(k89) 2/h89 (k89)-4/b89
1/b89- neg. batt. (K/n20)

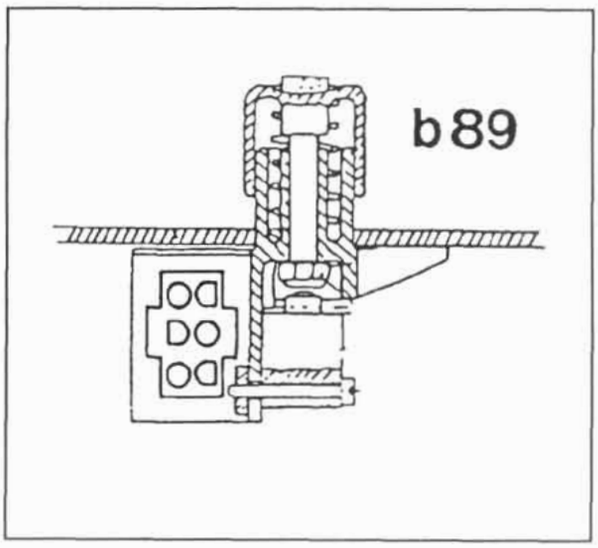

Removal

Raise floor plate, disconnect plug L6 from switch section mounted to the underside of the floor plate. Remove floor plate.

Signal horn h89

The signal horn is an audible warning device giving warning to others of the aproach of the machine, and the operator must sound the horn especially when approaching a blind corner and at all blind intersections.

> **The signal horn is therefore part of the safety requirements and must constantly be in good working order.**

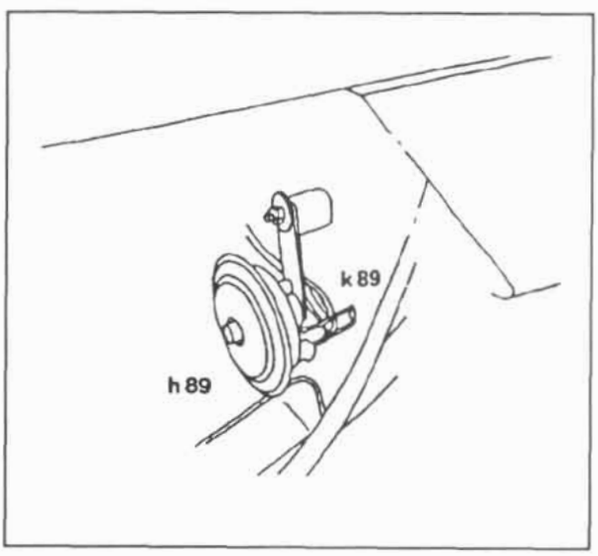

It is mounted with a screw to the inner side of the front cowl.

To avoid disturances to the electronic control circuitry a k89 designated circuit is in addition wired in parallel with the connections for protection. For electrical connection see above.

Current sensor

Current sensor n35

To limit the current flowing through the drive motor to a safe level it must be monitored and sensed.

This is effected by a magnetic-field plate (n35) which, mounted on a busbar, is connected into the main circuit of the drive motor.

Operation

The current flowing through the busbar creates a magnetic field, thereby influencing the field plate.

The field plate is supplied by the p.c.b. with 10 volts (stabilized voltage) via connections 1 and 3.

If zero current is passing through the busbar a voltage of approx. 5 volts is applied to the central tap 2.

As soon as current starts to flow through the busbar the medium voltage at connection 2 will change its value by around 0.4 volts per 100 amps.

As a result, a voltage directly proportional to the rise of current will be supplied to the p.c.b. This feature permits a restriction of the modulation with current intensity being at its maximum.

Each current sensor has accurately been adjusted, measured and sealed at the factory.

No modifications are allowed to be made to the current sensor!

(Faults are diagnosed in accordance with the details of the diagnostic instructions)

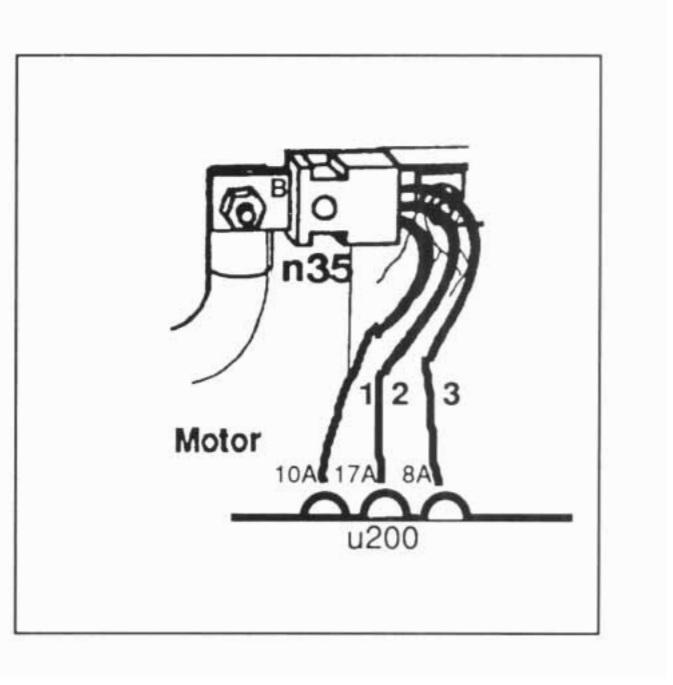

Repair

In the event of failure of the current sensor, replacement current sensors assembled with a busbar are available as complete units.

Merely the 3 control leads must be severed from the defective component, their ends stripped and connected with the repair kit.

To avoid any possible swapping of leads the latter should be marked accordingly before they are severed (connected are: 1/n35 to 10A/u200 – 2/n35 to 17A/u200 – 3/n35 to 8A/u200).

Where a defective current sensor has been replaced with a new one, proceed to check the medium voltage at connection 2. Measuring the medium voltage (against 8A/u200) which is caused to drop cannot be carried out unless current is flowing through the current sensor.

STILL Contactor

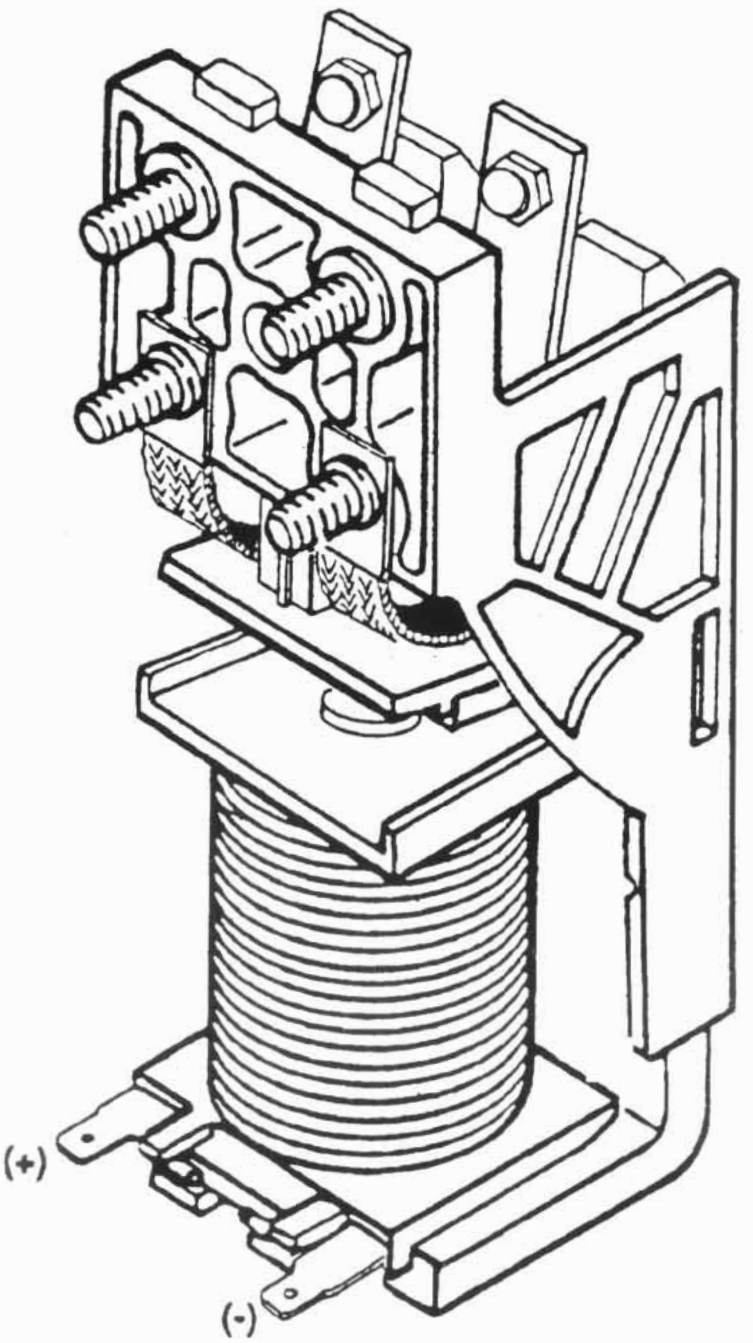

STILL Contactor

Mechanical configuration:

The contactor frame is made of impact resistant plastics. At its upper half the frame comprises four M8 studs imbedded in the plastic material. The lower two studs serve as terminals for connecting the contact bridges of the armature by means of flexible links. The contact screws/tips are screwed from the inside into the upper studs.

The contact screws must be screwed fully home (i.e. up to the thread root) and further tightened with 90° angle of rotation. The contactor is secured to the control panel by three screws. Torque loading for screw A = 2 Nm and for screw B+C = 5.5 – 8 Nm.

Coil assembly (Fig. 2):

The coil assembly comprises;
- Coil
- Magnetic core
- Frame
- Protective circuitry

Connected in parallel with the coil, the protective circuitry consists of a resistor wired in series with a diode with the following data:

24 V: resistor approx. 47 ohms + diode 1N4005

Depending on truck model, the pump contactor may be fitted with a delay circuit for delayed contact opening.

Armature assembly:
The armature assembly is the movable part of the contactor, which is mounted between contactor frame and coil assembly.

Checking the pull-in stroke

A Spacing of 1.3 to 2.7 mm between contact bridge and support finger must be achieved with contactor pulled in and new contacts and contactor installed (see Fig. 3).
From May 1950 the pump motor contacts are wired in series.

Contactor operation
The direction of rotation of the drive motor is controlled by two contactors. Contactor c2 is for forward travel. whereas contactor c3 is for reverse. The total drive motor current flowing across the contactors, contactor tip material has been designed accordingly. Every contactor is fitted with four replaceable main contact tips with silver–cadmium–oxide coating.

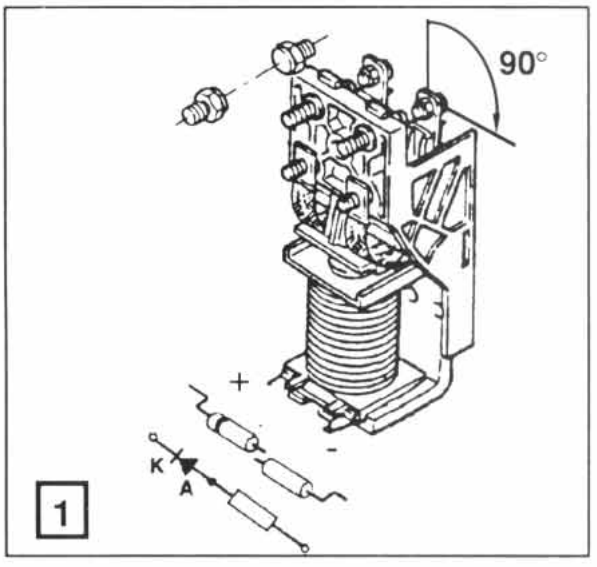

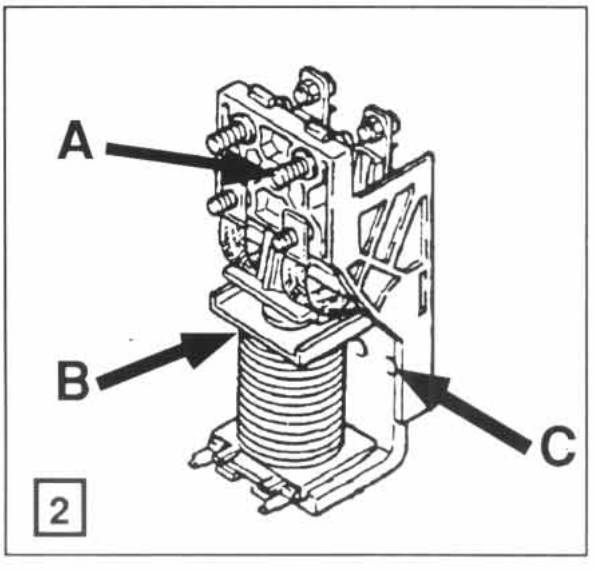

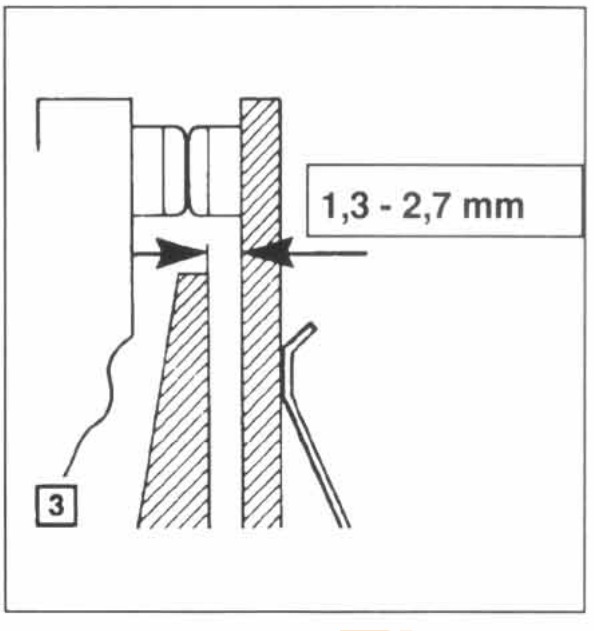

Logic unit card u200

All the electronic functions required for monitoring and controlling the power unit with its externally arranged transmitting devices are accommodated in a single plug– in type module.

The electronic circuit components for monitoring and control functions are all grouped on this printed circuit module the size of which meets European standards. Electrical connections between power unit and electronic controls are made via a 36–way plug and socket.

The printed circuit module controls and monitors the SCRs (thyristors), controls the contactor circuit, processes the signals emitted by the transmitting devices u25 (accelerator pedal transmitter) and n35 (current sensor).

Once tripped by the presence of a fault – the n20, n22 or n36 SCR is ti. defective – (the electronic monitoring system – a fail safe and overload protection circuitry – becomes operative), power to the forward/reverse contactors is cut off. **A** holding circuit prevents the forward/reverse contactors closing again unless the operator resets the circuit. This may be done by switching the dashboard key switch b1 off and on again, or simply by raising the foot from the accelerator pedal and trying again.

Removal of p.c.b.u200

- Disconnect the battery
- Withdraw the cover vertically from the p.c.b. after loosening two self–tapping screws on the p.c.b. housing
- With a firm grip on the handle at the top edge of the p.c.b. pull the latter straight out from the top.

CAUTION: Do not exert a **pull** on the small electronic components mounted on the front of the p.c.b.!

Adjustments on the p.c.b.

What the abbreviations on the drawing mean:

GB = travel speed limitation
HZ = rate of acceleration
RS = plug braking current
FS = current limit

The potentiometers are sealed since all necessary adjustments are made at the factory. In order to meet customer's requirements in connection with changing operating conditions, or in the event of a repair, the settings can be varied by readjusting the potentiometers.

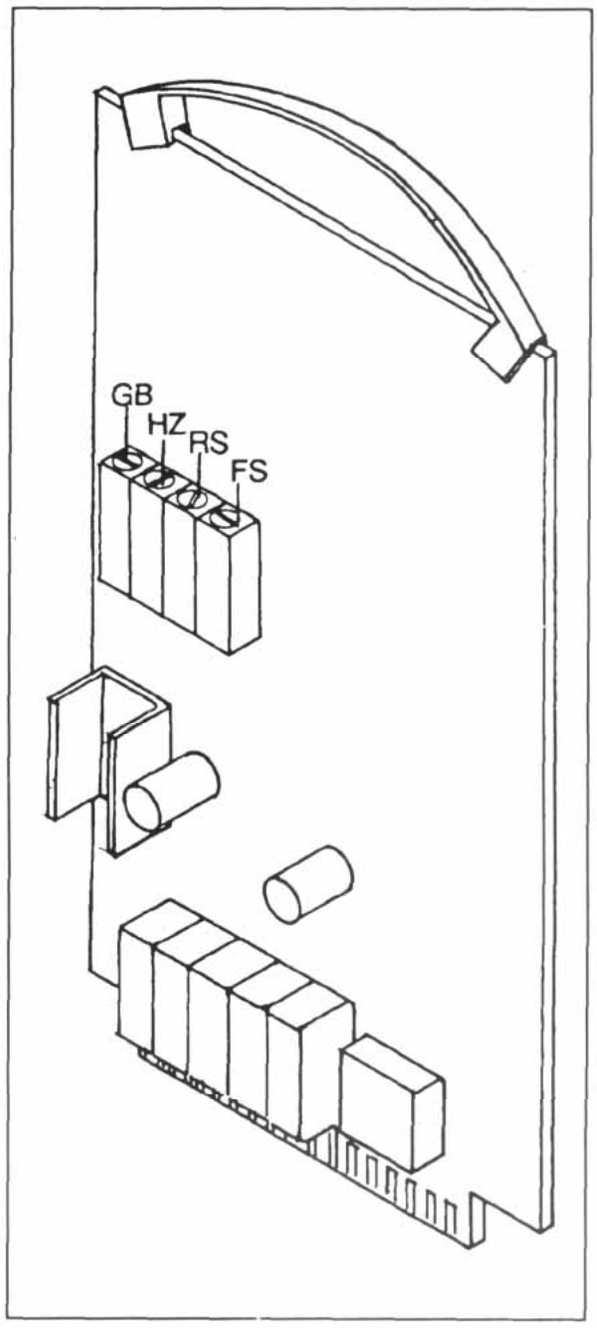

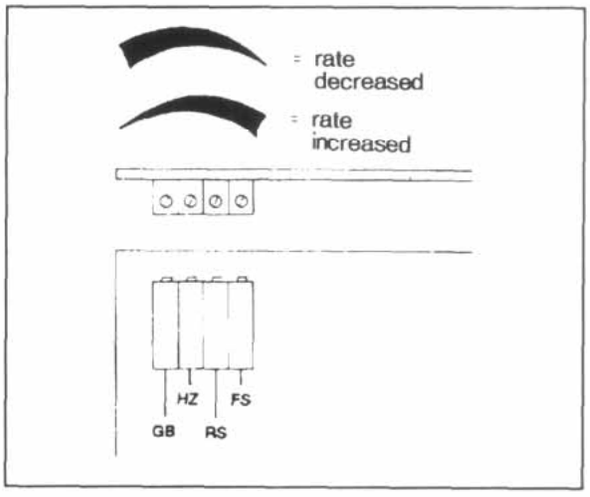

P.c.b. u200 (logic unit card)

Travel speed limitation GB
The travel speed of the truck has been pre-set at the factory at its maximum rate. By means of the potentiometer GB truck speed can be reduced to suit customer's requirements. Should the max. speed of travel, however, be reduced by more than 30 % of max. setting, gradient performance and tractive effort will be reduced in proportion to the amount of speed reduction.

Plug braking current RS
If the direction control switch b2 is shifted while the truck is in motion, the truck will be braked electrically thus slowing down until it stops and then starts in reverse.

Current limit circuit FS
Correct setting of the current limit will permit the control system to emit max. power within the pulse control range without causing any overload in the drive system.

To avoid obtaining incorrect values, the adjustment must be made with battery in a fully charged condition (no setting of speed limitation) and accelerator pedal transmitter or sender fully operated.
(Adjustment should only be made provided the plug braking current had first been adjusted!)

Rate of acceleration HZ
Even if the operator should jam the accelerator pedal *to* the floor, a pre-determined rate of acceleration is automatically achieved by a static timer. The rate of acceleration has been pre-set at the factory at approx. 1.4 secs.

	FS	RS	HZ
24 V	500-520 A	300-350 A	abt. 1.4 *secs*
36 V	290-310 A	170-200 A	abt. 1.4 *secs*
VS*	440-460 A	250-270 A	abt. 1.4 secs

VS* = forklift truck fitted with a 2.8 kW drive motor

Fail-safe circuit
The fail-safe system (which uses different electronic sensing circuits providing a continuous monitoring of the vehicle operation), when becoming operative, will interrupt power to the forward and reverse contactors, causing them to drop out.
The safety circuit can only be reset by switching the dashboard key switch off and on again, or simply by raising the foot from the accelerator pedal and trying again.

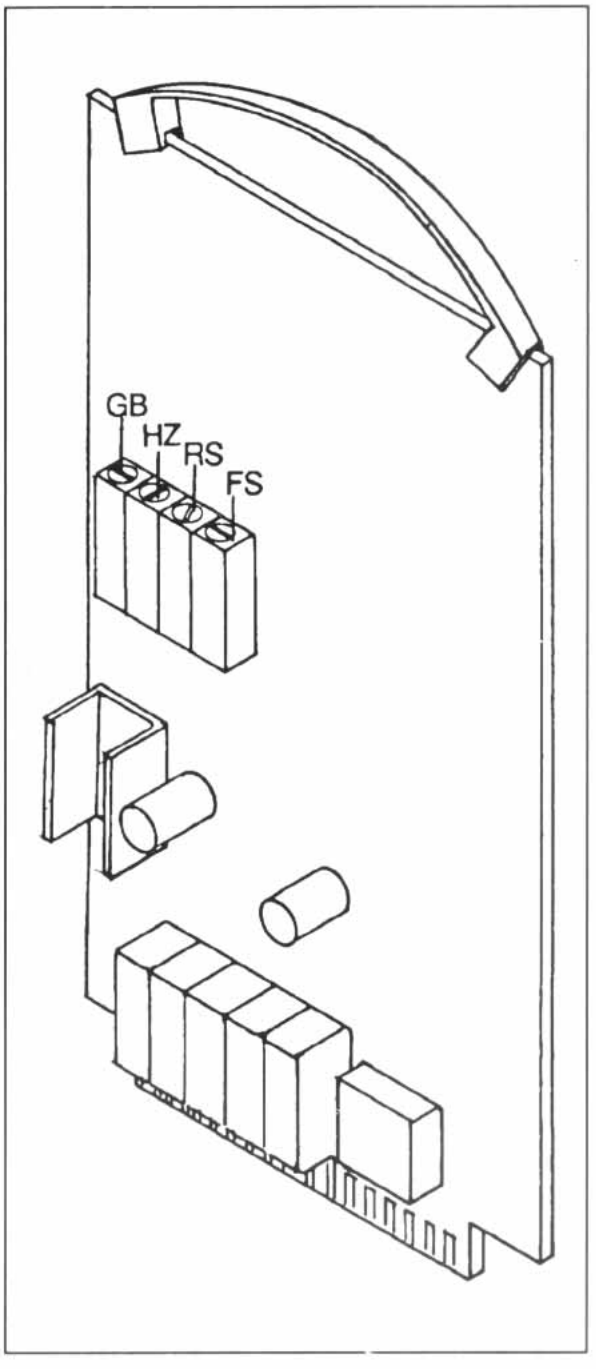

Testing operation of fail-safe circuit
Procedure:
- Jack up the truck
- Disconnect the battery
- Electrically disconnect one lead (no matter which) at capacitor k22
- Reconnect the battery
- Turn keyswitch 'ON'
- Operate accelerator pedal transmitter and seat switch.

The drive motor must not start.

Main power section

The main power section mainly consists of:

- Main thyristor SCR n20
- turn-off thyristor SCR n22
- commutating thyristor SCR n36
- free-wheeling diode n24
- plugging diode n25
- heat sink
- insulating foil

The figure on the right shows the different thyristors which are mounted on the heat sink of the drive impulse controller.

In the event that SCR's n20, n22, n201 and n221 must be replaced, follow the fitting instructions given on the next pages.

The screws of the thyristor compression cap must always be tightened or **loosened in a diagonally opposed sequence, otherwise cracks invisible to the eye may appear on the discoid type thyristor!**

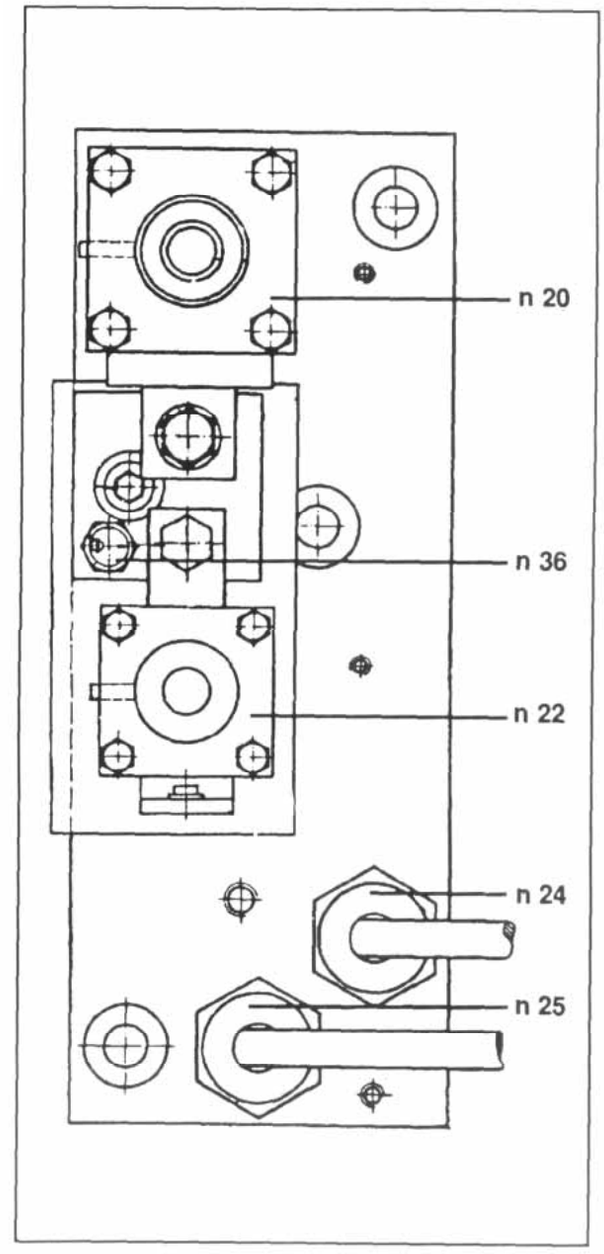

Main power section

Main thyristor / turn-off thyristor
n20, n22, n201, n221

Main and turn-off thyristors are of a disc style.

Thyristors of different make are used:

a)BBC-ceramic housing

b)AEG-ceramic/metal housing

c)AEG-plastic housing

The figure on the right shows the 3 variants that are mainly used.

The fitting instructions apply to all types since the thyristors must be compressed evenly by the cap to function properly under full load.

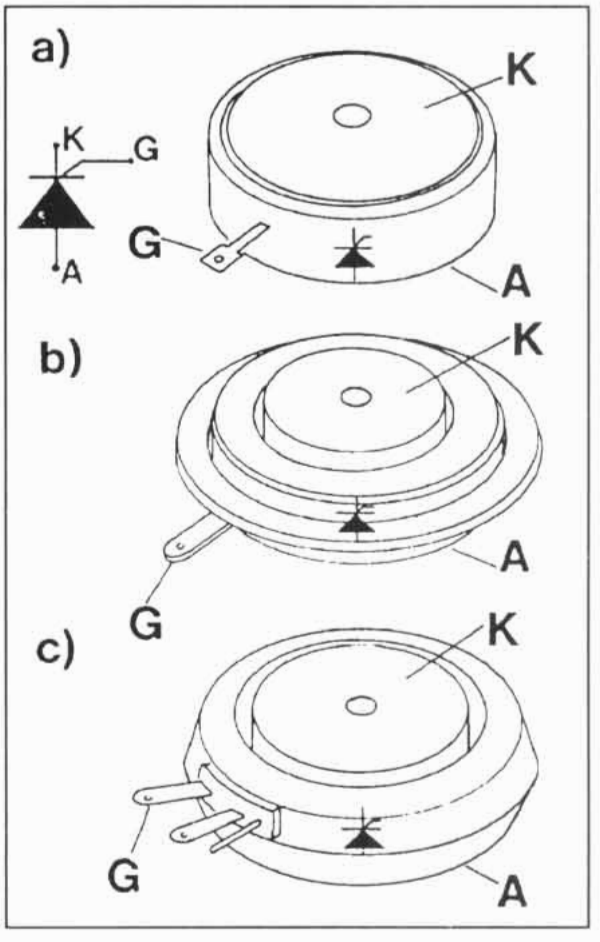

Fitting instructions

- Before mounting SCR's to heat sink, thoroughly clean all surfaces, making sure that the contact areas of the heat sink are smooth and free from foreign objects or dust.
- Spray contact surfaces with “ELEC-TROLUBE”.
- Watch for correct DIRECTION OF ASSEMBLY!
  See wiring symbol on SCR. The ANODE must face the heat sink.
- The bolts must be tightened in a diagonally oposed sequence until cap is properly seat on the heat sink.

Riveted together, bridge, cup spring and cap are supplied with each replacement thyristor.

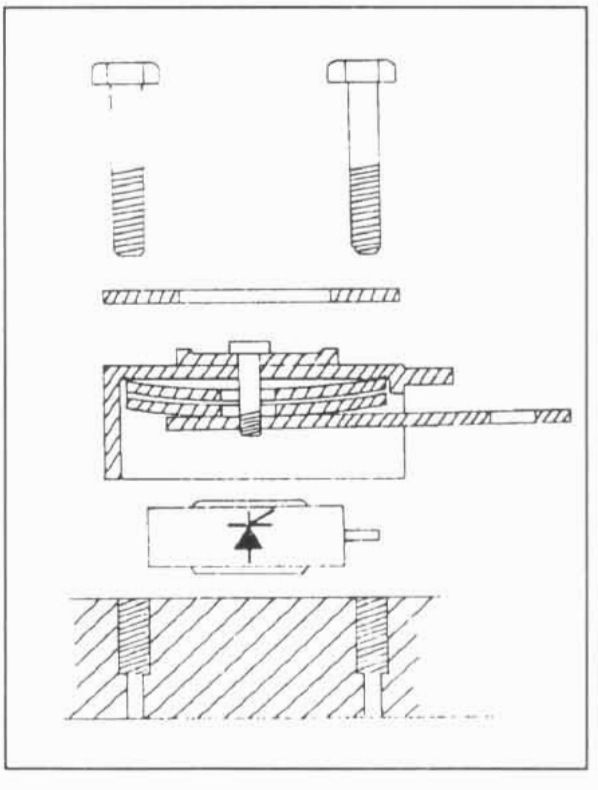

Trouble shooting by "TESTOFON" tests

A. Testing disc type thyristors

The thyristors can be tested for their blocking capability to a certain extent only. In this method of testing thyristors must be in an installed position. Merely the cathode lead and gate must be disconnected from the system.

Disconnect battery!

Testing for continuity with Testofon buzzer n20,n22, **n201**, **n221**, n36, n361 [1] [2]

K (red test prod) –
A(black test prod) = blocked
A (red test prod) –
K(black test prod) = blocked
A (red test prod) –
G(black test prod) = blocked
G (red test prod) –
A(black test prod) = blocked
K (red test prod) –
G(black test prod) = almost full continuity
G (red test prod) –
K(black test prod) = almost full continuity

Shown on the right are commutating SCR's old style B and new style A.

B. Testing diodes

Before testing a diode disconnect at least the cathode lead [3] or unsolder the anode lead.
Testing for continuity with Testofon buzzer **n24**, n25, n241.

A (red test prod) –
K(black test prod) = continuity
K (red test prod) –
A(black test prod) = blocked

C. **Torque** loadings

Tighten commutating thyristors n36, n361
to a torque reading of **4** Nm at the maximum (or tighten by hand)
and
diodes n24, n25, n241
to a torque reading of **15** Nm at the maximum

Spray threads with ELEKTROLUBE compound.

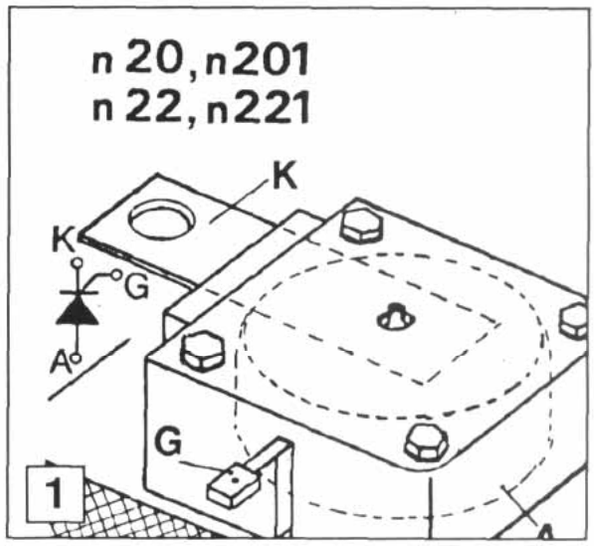

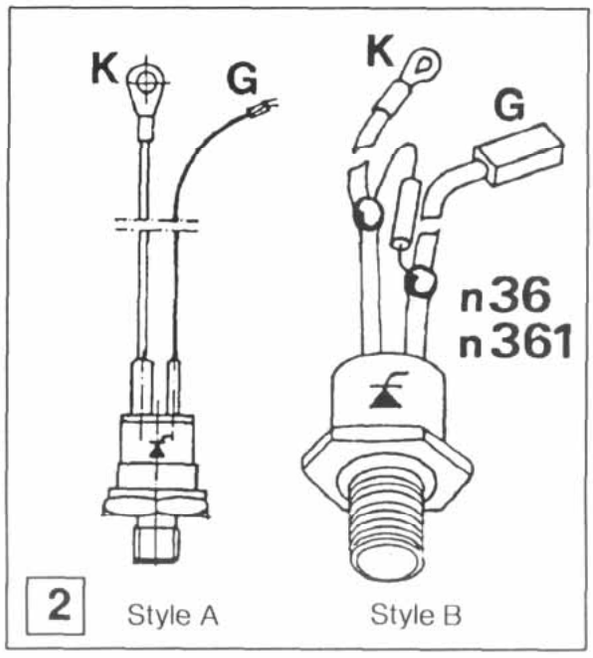

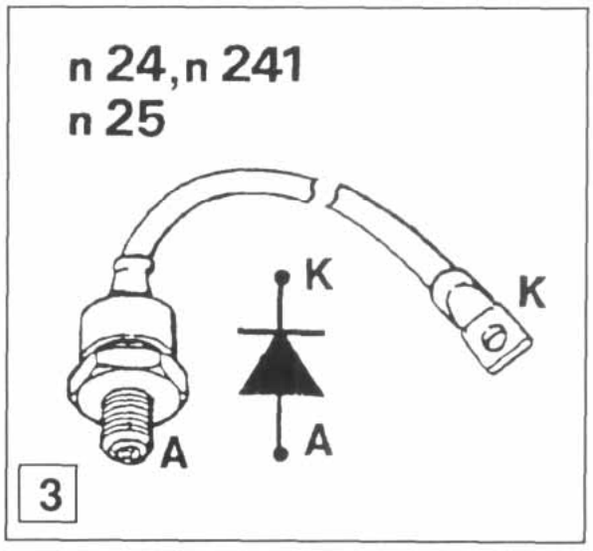

Checking current

Drive impulse controller

Measuring traction motor current and plug braking current, using amp tong tester (Beckman) and digital universal meter or Elavi 15 n.

Measuring traction current

Clamp ammeter tong tester across motor lead B/m2 and connect leads of tester to meter beside driver's seat.

Setting meter to measuring range:
Digital meter: 2 volt range
Reading = current in amps

Elavi 15 n: 1 volt range
Take reading of upper scale
Reading x 100 = current in amps.

Make tong tester and meter ready for operation.

Sit on driver's seat and make truck ready for operation (make sure that there is enough space).

With your left foot depress brake pedal powerfully, then progressively depress accelerator pedal to maximum speed in order to permit the control system to emit maximum power within the pulse control range, at the same time taking reading. (See 'Adjustments on the p.c.b.".)

The reading will be correct only provided the motor is stalled during the measuring operation, the accelerator pedal transmitter (travel sender unit) is adjusted correctly and travel speed is not limited.

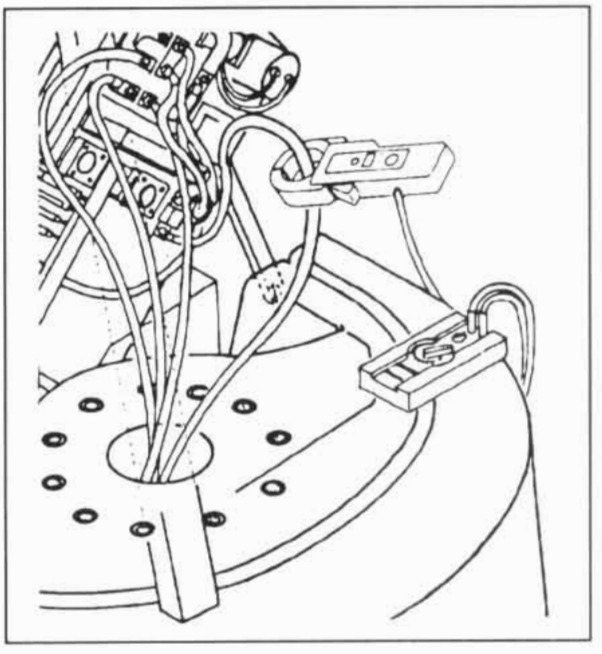

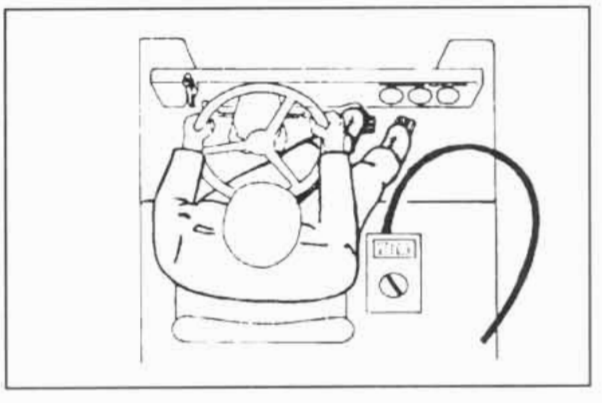

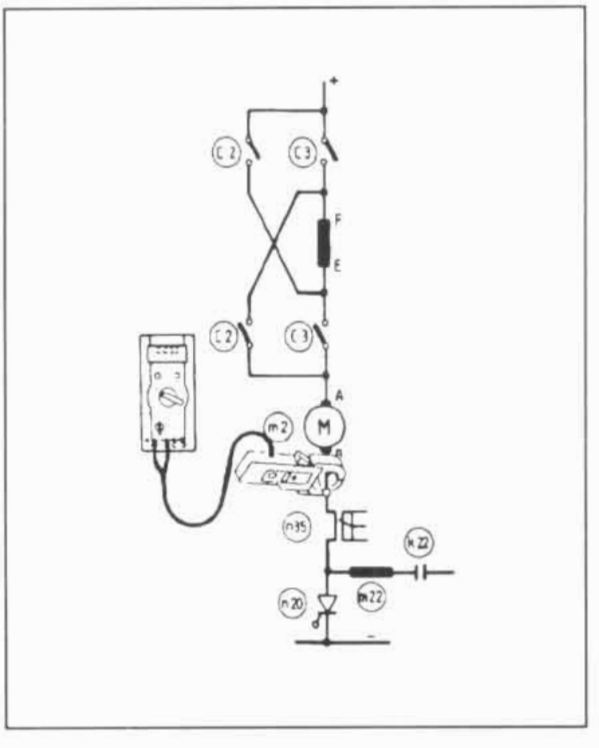

Measuring plug braking current

Accelerate truck by depressing accelerator pedal to maximum speed, select opposite direction, keeping accelerator pedal fully depressed. Take reading of peak value just before truck reverses its direction. (The reading must be taken before the display goes back to zero.)
(See 'Adjustments on the p.c.b.".)

Electrical functions in the Dower unit

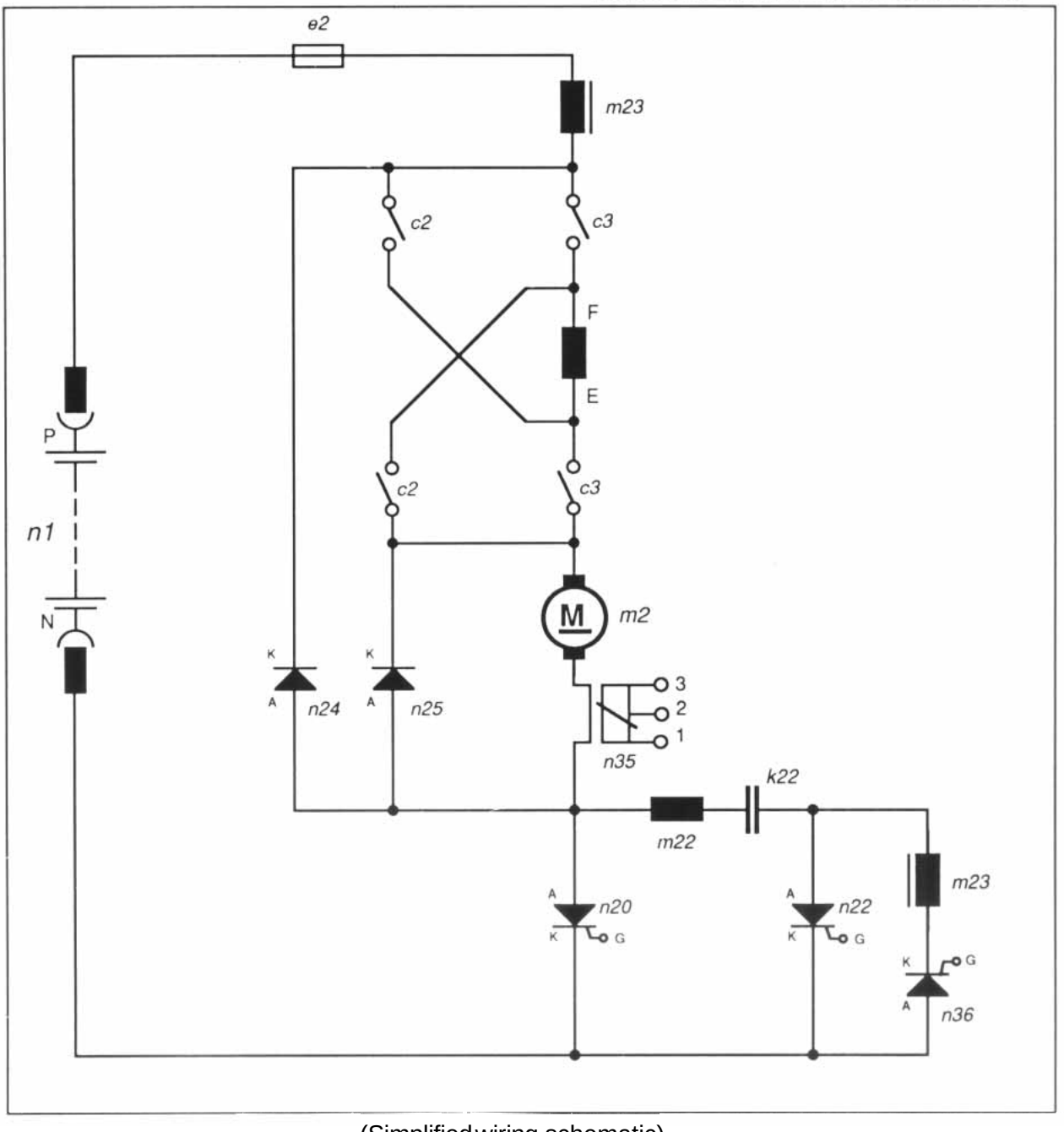

(Simplified wiring schematic)

c 2 – fwd. contactor
c 3 – rev. contactor
e 2 – motor fuse
k 22 – turn-off capacitor
m 2 – drive motor
m 22 – choke
m 23 – charge current transformer
n 1 – battery
n 20 – main SCR
n 22 – turn-off SCR
n 24 – free-wheeling diode
n 25 – plugging diode
n 35 – current sensor
n 36 – commutating SCR

Operation

Electrical functions in the power unit

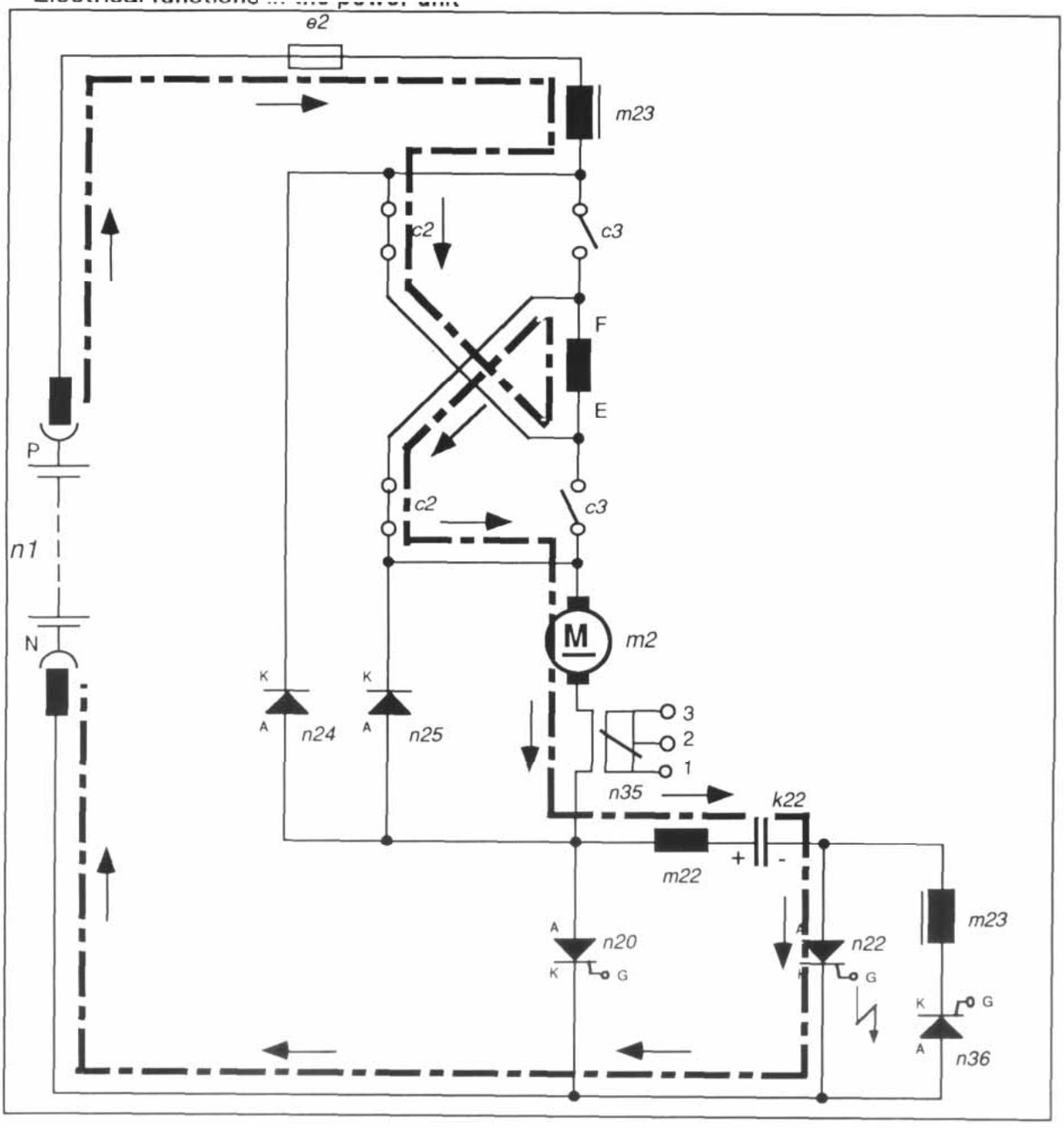

Turn-on **circuit, (forwards)**

Contactor c2 will close immediately the accelerator pedal transmitter u25 is operated.
With the first firing pulse from p.c.b. u200 for turn–off SCR n22 it becomes conducting. In this way capacitor k22 changes to the opposite polarity:
positive pole connected to the anode n20 (m22)
negative pole connected to the anode n22

Battery voltage is at this stage applied to **A/** n20 and (+)/k22.

The main thyristor n20 can now be fired.

Direction of current flow: ———————

Electrical functions in the Dower unit

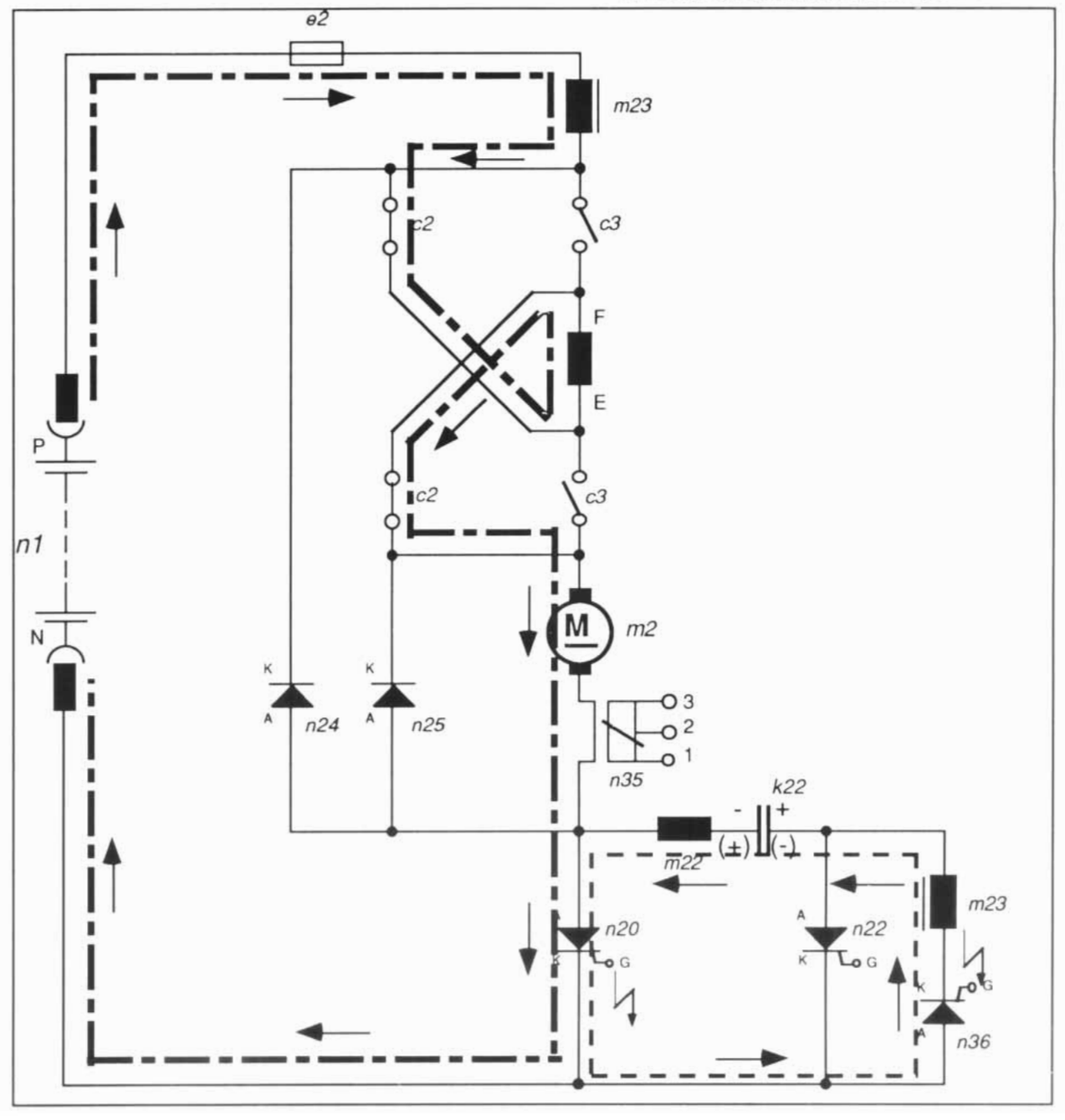

Firing, main thyristor **SCR**

With the second pulse SCR n20 and commutating SCR n36 are fired simultaneously. **At** this stage the circuit to drive motor m2 is closed: The armature rotates, driving the vehicle.
At the same time the main SCR n20, at this stage conducting, discharges capacitor k22 at the positive side.
The positive charge reverses itself via main SCR n20 and commutating SCR n36 to the opposite polarity.
Thus the side of capacitor k22 which is connected to the main SCR is more negative compared to the charged side at turn-off SCR n22.
Once the charging current has decayed, charging SCR n36 will automatically block.

Direction of main current flow:
Direction of commutating current:

Electrical functions in the power unit

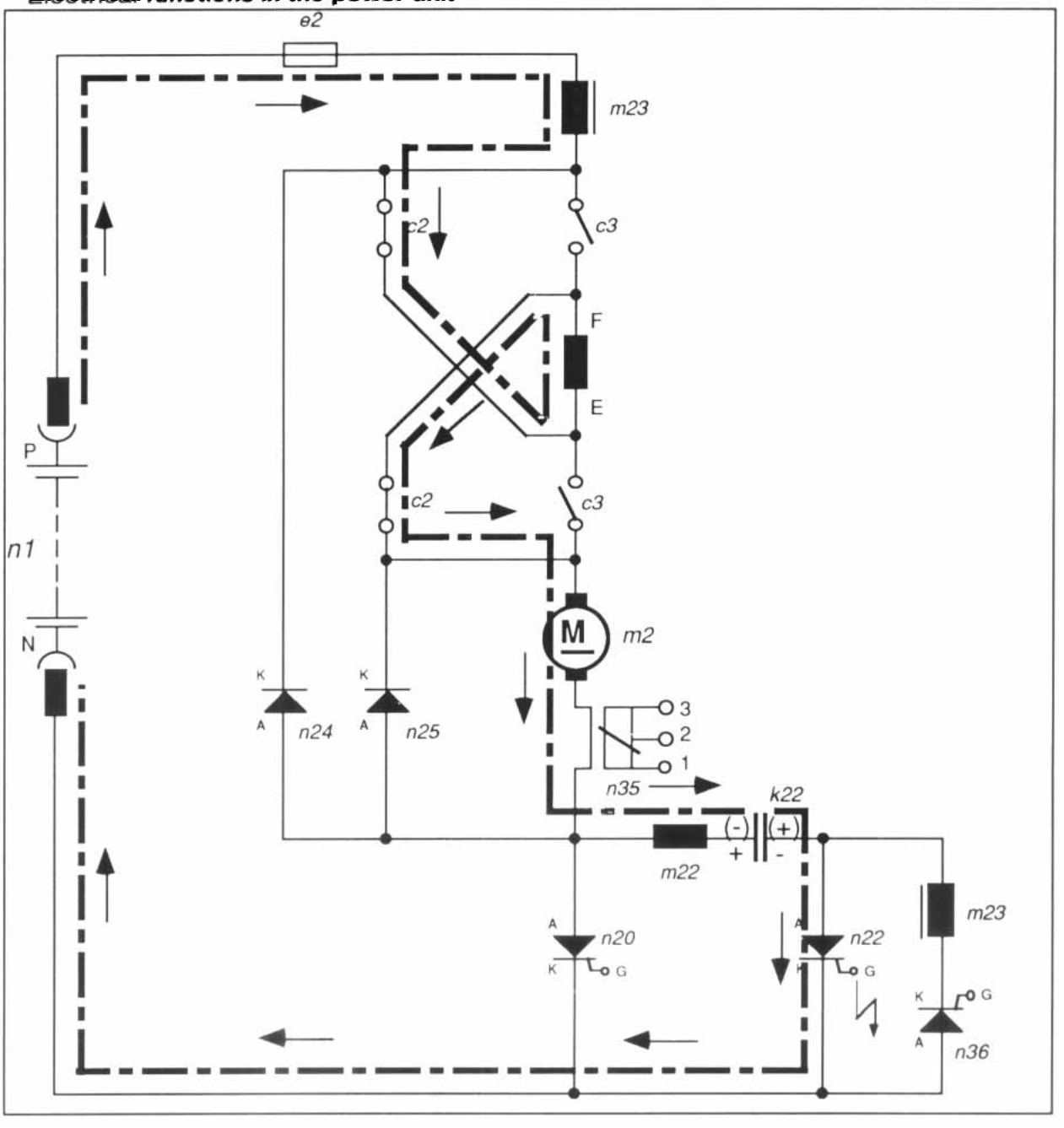

Charging circuit

Capacitor k22 is charged up.
(The anode of n20 (m22) is transformed from positive into negative, whereas the anode of n22 is transformed from negative into positive).

Next, a firing signal switches the turn-off SCR n22 into its conductive state as a result of which the positive of the anode of k22 is applied via n22 to the cathode of n20. Motor current will for a short duration of time flow through k22, causing the latter to commutate (connection A/n20 positive, A/n22 negative), n20 is turned 'OFF', thereby assuming its nonconductive state. At this stage there is no current flowing from the battery to the drive motor m2.

The 'free wheel' diode n24 now conducts the current induced in the motor during intervals between the pulses. The firing of further 'ON' pulses to the main SCR n20 and the charging SCR n36 will be prevented until the freewheel current has decayed, after which n20 and n36 are fired anew.
The cycle is thus resumed.

Current flow:

Electrical functions in the power unit

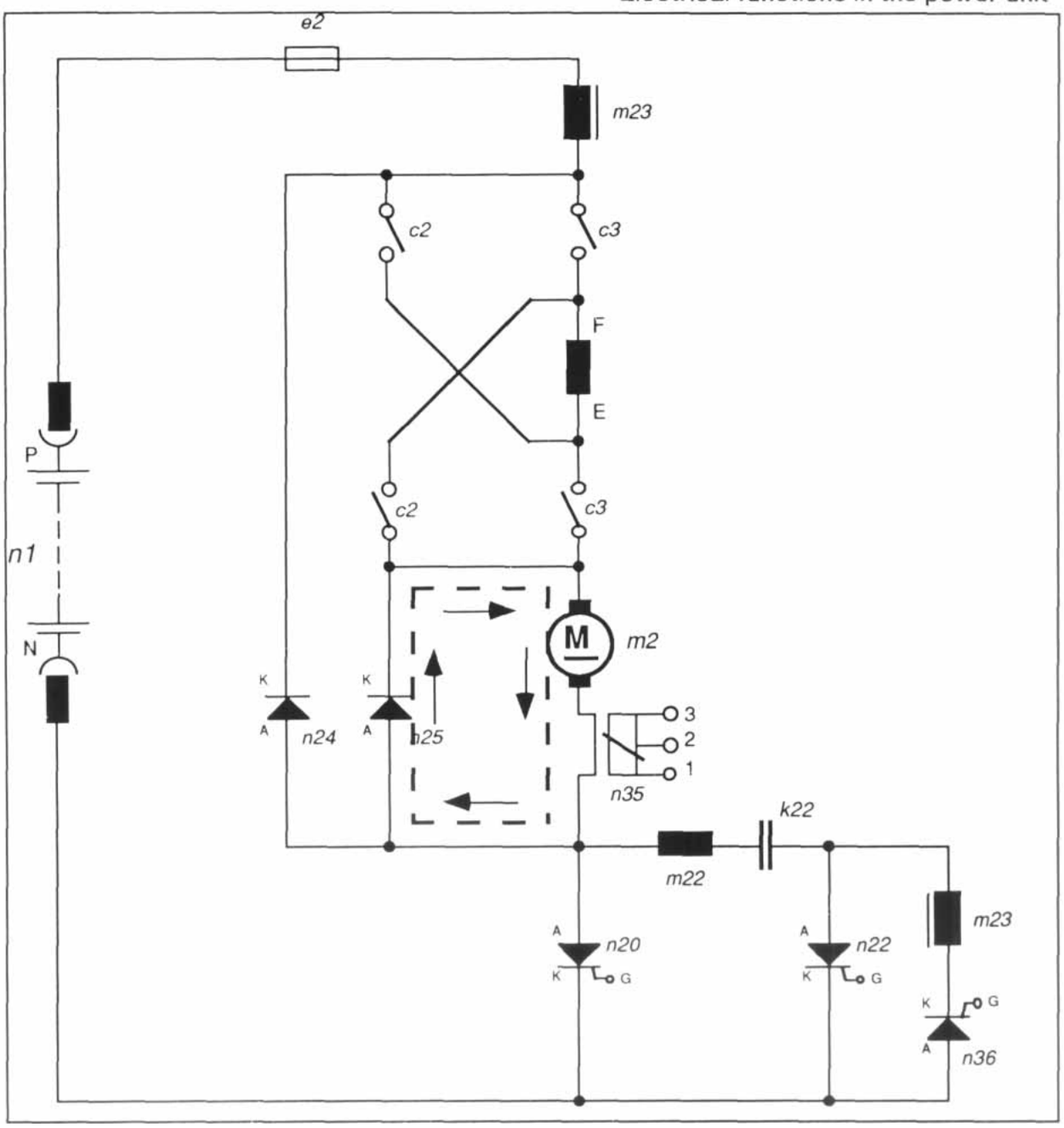

Coasting (zero current)

If during travel the foot is removed from the accelerator pedal, the direction contactor will drop out. Drive motor m2 is no longer supplied with current. The current induced in the motor after power disconnection is conducted through the freewheel diode n24, dropping gradually due to losses in the motor.

There is no current flowing any longer in the field of motor m2 At this stage, all the remaining components are inoperative.

Current flow:

Operation

Electrical functions in the Dower unit

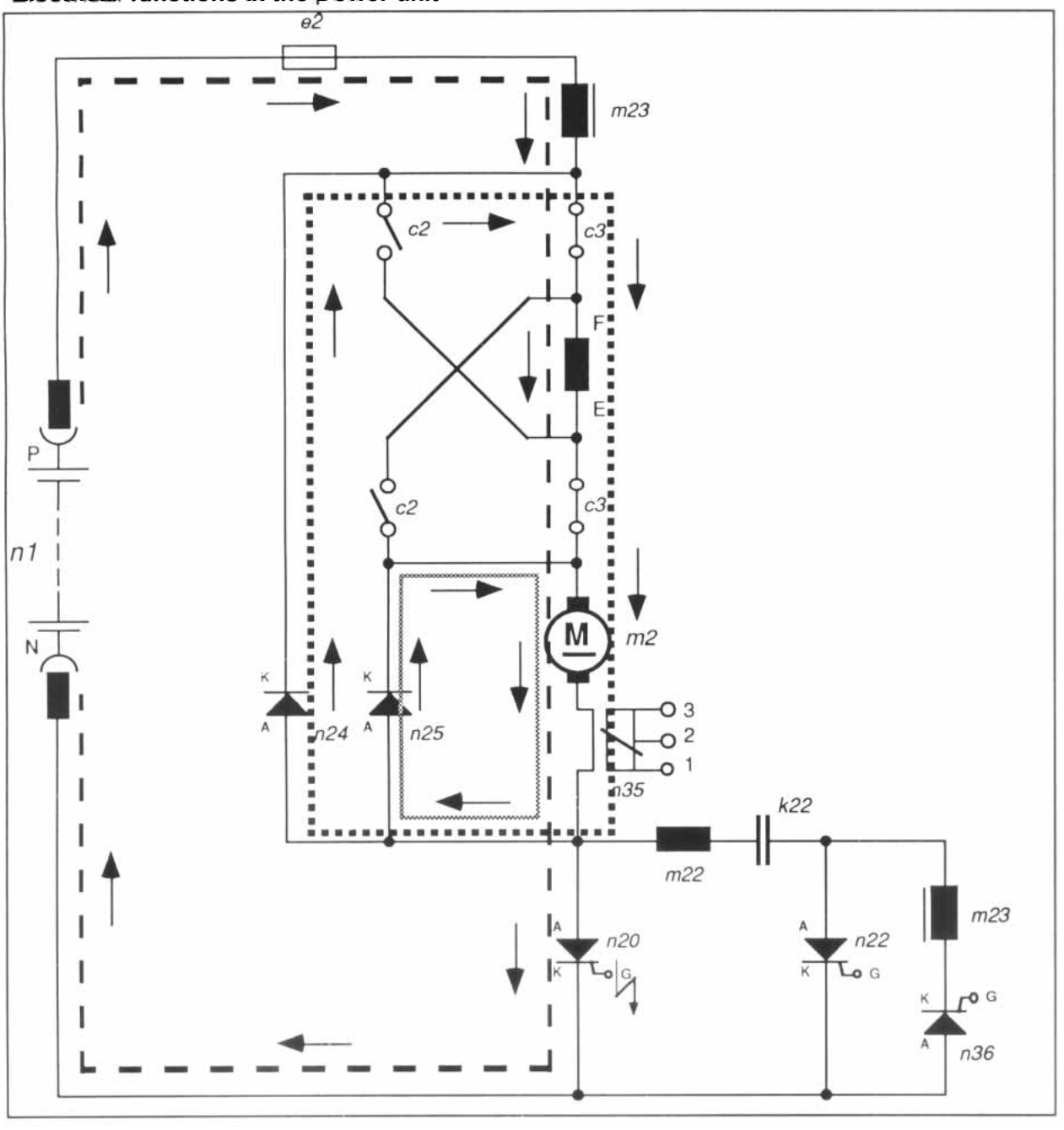

Controlled braking by plugging

If direction of travel is changed f.i. from forward to reverse without releasing the accelerator, contactor c2 will open automatically while contactor c3 will close.
When the main thyristor SCR n20 is fired, i.e. switched to a conductive state, the current flowing from the pos. (+) battery will return to the neg. (–) battery via direction contactor c3, motor field, armature and main SCR n20.
When the main SCR n20 is switched to a nonconducting state, the current will flow through diodes n24/n25.

The truck will come slowly to a stop (motor plugging) and then reaccelerate in the opposite direction.

The cycle of operations is then repeated. See section 'Turn– on circuit'.

I Exciting current flow:
II Current flow (n20 blocked) (freewheel)
III Current flow (armaturecurrent)

Motive power battery (1)
(traction battery)

The motive power battery (1) rests in the vehicle on bent frame halves.

It can be lifted out with the aid of an appropriate overhead lifting gear.

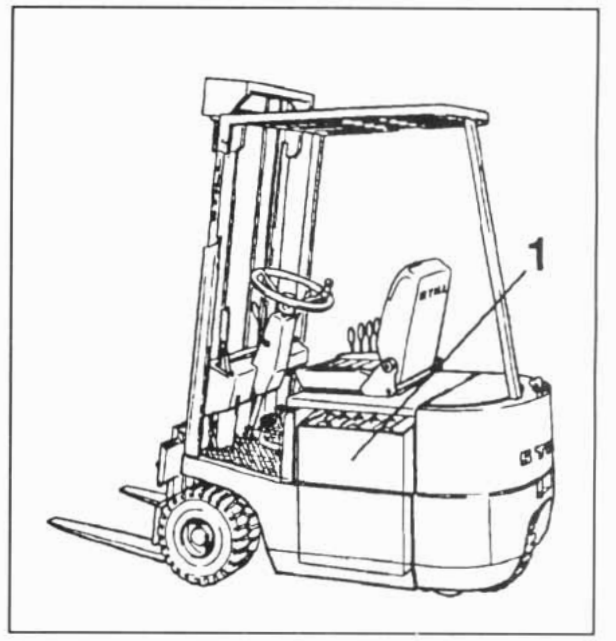

Electrolyte level:
Remove the filling plugs (2). Top up all cells with distilled water to the correct level (the correct level is 10 mm above the separator guard).
Ensure terminal screws (3) and intercell connectors **(4)** are tight.

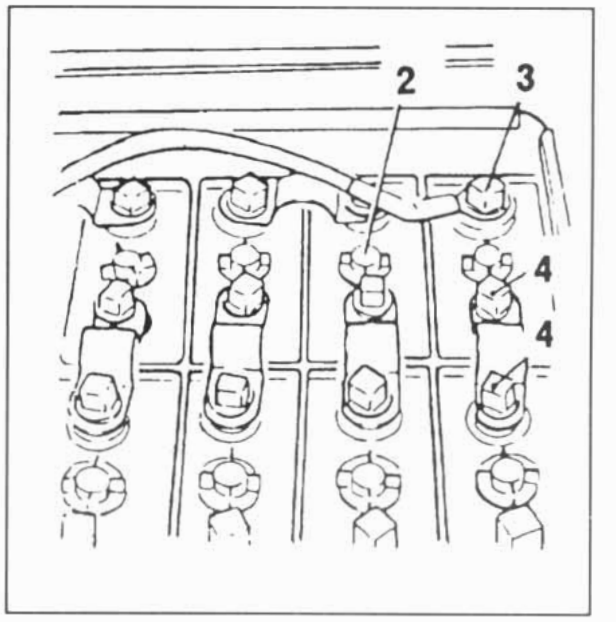

IMPORTANT
The battery (even if charged) should be given an equalising charge every week. This is necessary to increase the service life of the battery.

Connect battery to an appropriate charger and perform equalising charge.

Battery

Specific gravity

The specific gravity (kg/l) varies according to the battery state of charge.

Fully charged battery = 1.28kg/l

Flat battery = 1.14 kg/l
(should never drop below this value)

All specific gravities quoted relate to a temperature of 30°C.

The specific gravity will increase by 0.0007 kg/l for every 1° C fall in temperature and will decrease by the same value for every 1° C rise in temperature.

Example:
A specific gravity of 1.25 kg/l related to a temperature of 15° C has a value of 1.25 – 0.0007 x (30–15) = approx. 1.24 kg/l at 30°C.

A specific gravity of 1.25 kg/l related to a temperature of 40° C has a value of 1.25 + 0.0007 x (40 – 30) = 1.257 kg/l at **30°** C.

Measuring the specific gravity

The specific gravity is measured using an acidimeter.

The acidimeter consists of a glass barrel, a rubber ball for drawing the acid out from a cell, and a hydrometer whose scale permits direct reading of the specific gravity.

During the charging procedure it will last a certain time until proper balance is achieved between the acid above the plates and the acid between and in the plates.

Reading of the specific gravity should therefore not be taken before *30* minutes have elapsed after termination of the charge.

Always make sure that the hydrometer float moves freely in the glass barrel, i.e. does not get stuck or knock against the rubber ball.

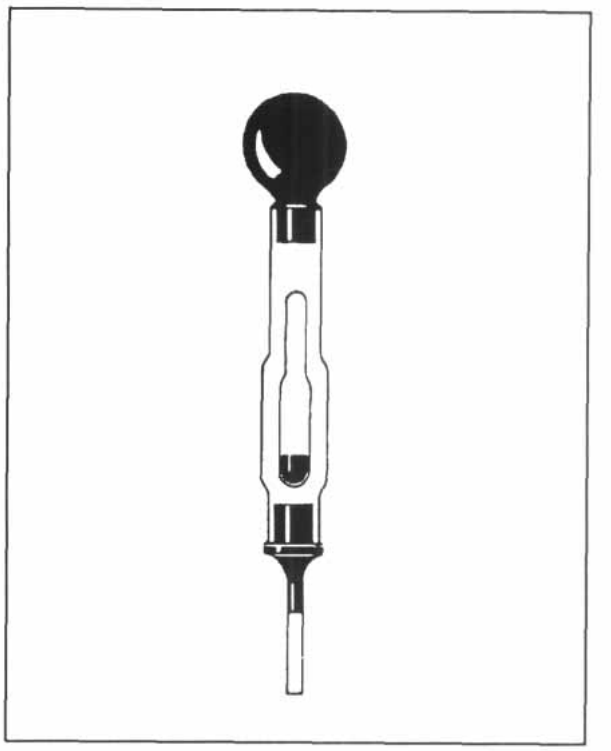

Battery capacity varies with temperature

A fully charged battery reaches full capacity at *27°* C.

For each 1° C of reduction in temperature there is 1 % of loss in capacity, i.e. at 0° C there is already a reduction in capacity of *27* %. In other words, there remain only *73* % of the battery capacity originally available.

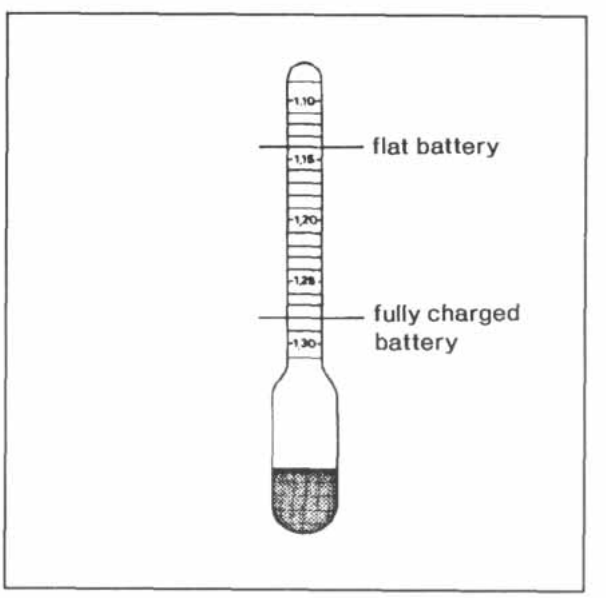

Pump Impulse Controller

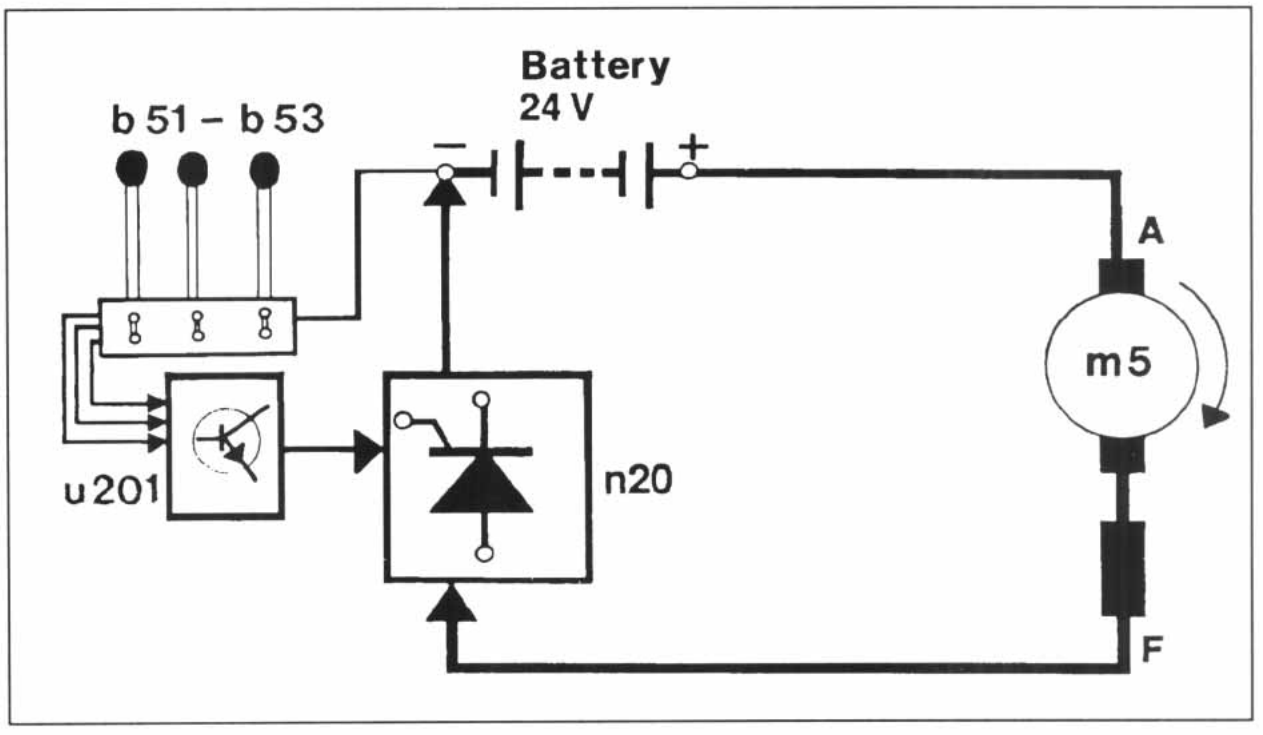

The Stilltronic Pump Impulse Controller permits maximum use to be made of available battery capacity. It cuts current drain up to 30 %, compared with the standard design using contactors for pump motor control. That means the truck can do up to 30 % more work on each battery charge.

The Stilltronic pump impulse controller is inoperative until the keyswitch b1 is turned ON.

Operation of any one of the control valve levers causes one of the microswitches (b51 – b54) to actuate.

Actuation of one of these microswitches generates a signal which is supplied to p.c.b. u201 'pump impulse controller', whence impulses – the frequency of which varies as a function of pump motor speed preset on the p.c.b. – are applied to the power circuit which includes the 'on' thyristor and the 'off' thyristor.

The pump motor now operates at the speed preset on the p.c.b. for each hydraulic function such as hoisting, tilting and attachment operation (where fitted).

Maintenance and repair work

The pump impulse controller is located in the leg compartment in front of the hydraulic control valve block, on the RH side.

Before carrying out any repair or maintenance work on the pump impulse controller, it is necessary to remove the shroud (after undoing the screws retaining it in position).

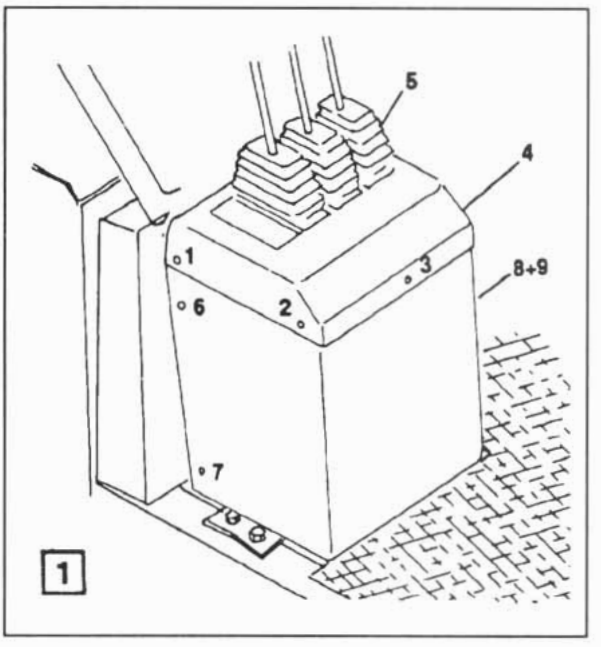

After removal of the bolt retaining the pump impulse controller to its mounting bracket at floor plate level (see arrows in Fig. 2), the pump impulse control unit can be hinged out from the RH side.

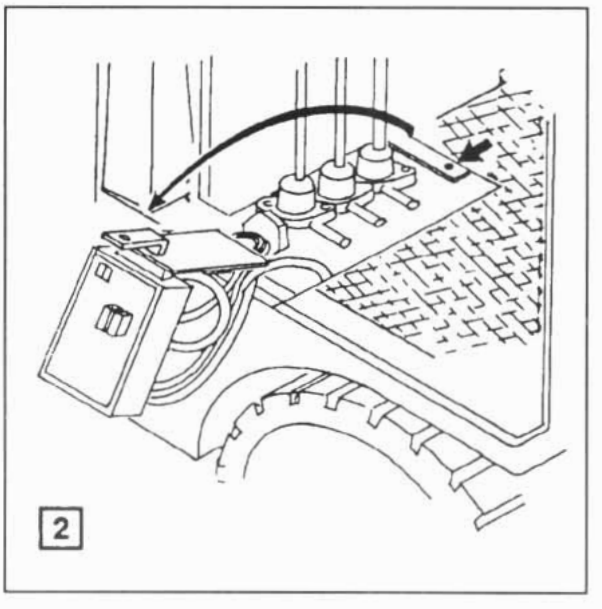

Pump Impulse Controller

The pump impulse controller consists of the following control circuit components all of which are grouped on a common, vertically arranged base plate.

1 = main SCRn201

2 = turn-off SCR n221

3 = commutating SCR n361

4 = reactor m241

5 = capacitor k221

6 = heat sink

7 = p.c.b. u201 (logic unit card)

8 = free-wheel diode n241

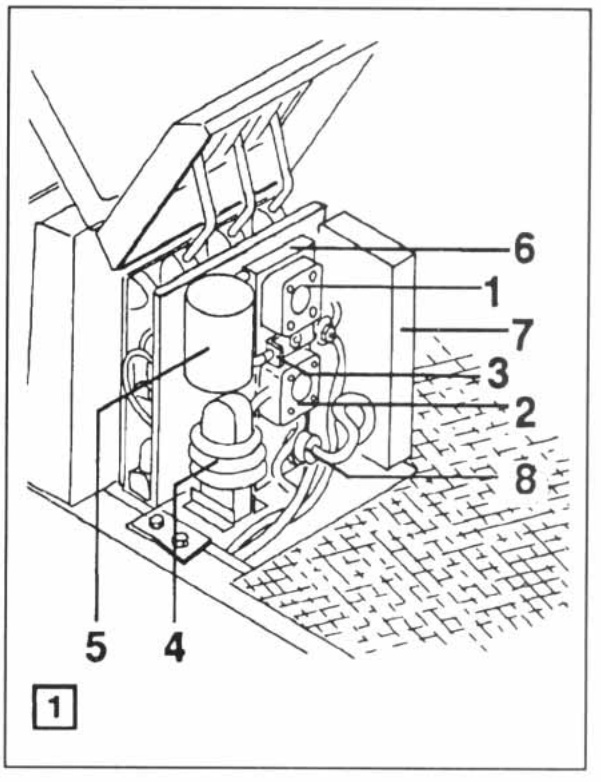

Pump Impulse Controller Operation

Control valve microswitches

Initial movement of any hydraulic control lever will actuate the corresponding hydraulic microswitch for operating the hydraulic pump motor.

The opening of the microswitches is controlled from the logic card (p.c.b.u201).

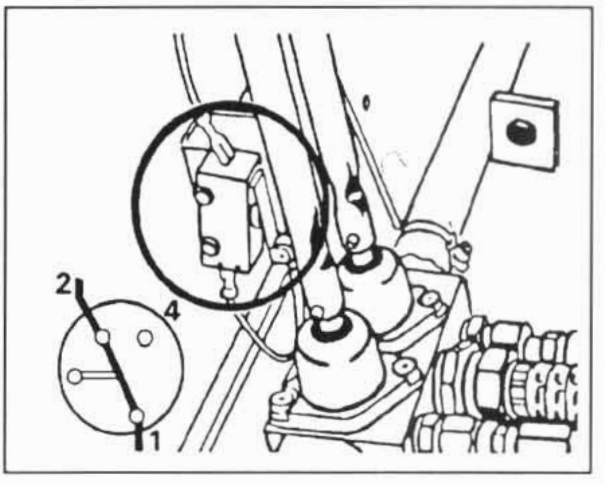

B51 – b54 – hyd. microswitch

L20 – connector between micro-switch and p.c.b. base socket

u201 – base socket into which the p.c.b.is plugged

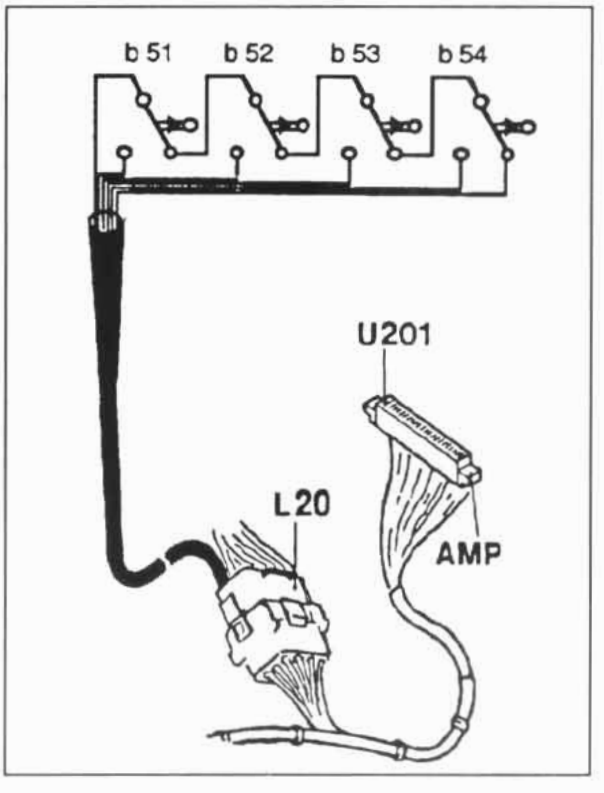

Logic card

P.c.b. u201 controls .the power unit for connecting the m5 pump motor across the battery.

The motor speed is pre-set on the p.c.b. for each function. It can be adjusted from zero to full speed. (Maximum tilting speed is limited by restrictor type valves incorporated in the hydraulic control valve).

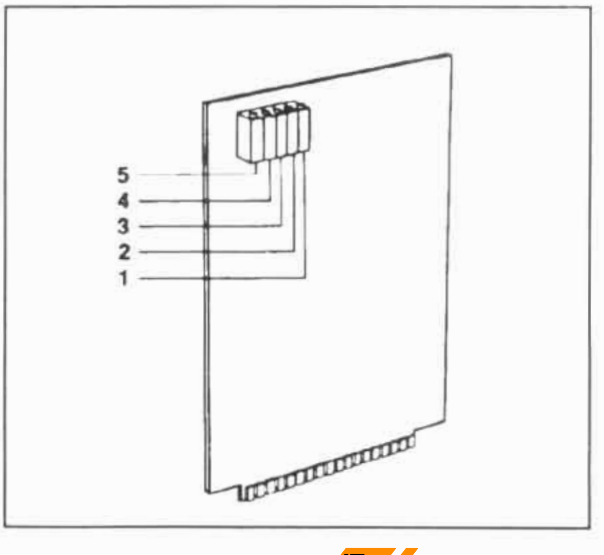

Power unit

The battery voltage fed to the m5 pump motor in a series of pulses is controlled from the power unit. Since only one direction of rotation exists, additional contactors such as are used for the Drive Impulse Controller are eliminated.

Pump Impulse Controller

Logic card **u201**

The plug-in type logic card u201 is located in a housing on the far left side of the base plate.

At its bottom end the logic card is provided with a 36-pole multi-pin connector which establishes the direct contact between truck electrical system and logic card.

Operation

The logic card u201 records the turn-on signals of the corresponding valve microswitches controlling the power unit for operation of the pump motor at pre-set speeds. The power unit can be adjusted to perform at 'ON' times varying from 30 to 100 %, depending on the voltage pre-set by means of the potentiometers in the top left and corner of the p.c.b.(printed circuit board).

Note: The lower the speed, the higher the savings in battery power!

The 24-volt battery voltage is supplied via keyswitch, fuses and L20 plug to connectors 7B/u201 and 10A/u201. Connector 10A/u200 is used as supply connection for the internal power supply. The battery voltage is recorded via connection 7B/u201. If the voltage is absent, the control impulses for the power unit are blocked.

Adjustments on p.c.b. u201
(pre-setting the motor speed for each hydraulic function)

Hoist speed: pot 2 (see Fig.). Actuate valve microswitch b51 by operating the control valve lift lever and adjust potentiometer (item 2) to obtain an 'ON' time of 100 % (max.speed).

Tilting speed: pot 3 (see Fig.) Actuate valve microswitch b52 by operating control valve tilt lever and adjust potentiometer (item 3) to obtain an 'ON' time of 40 - 50 %. 40 - 50 % of 'ON' time are obtained if the voltage at pump motor is something between 9.5 and 12 volts.

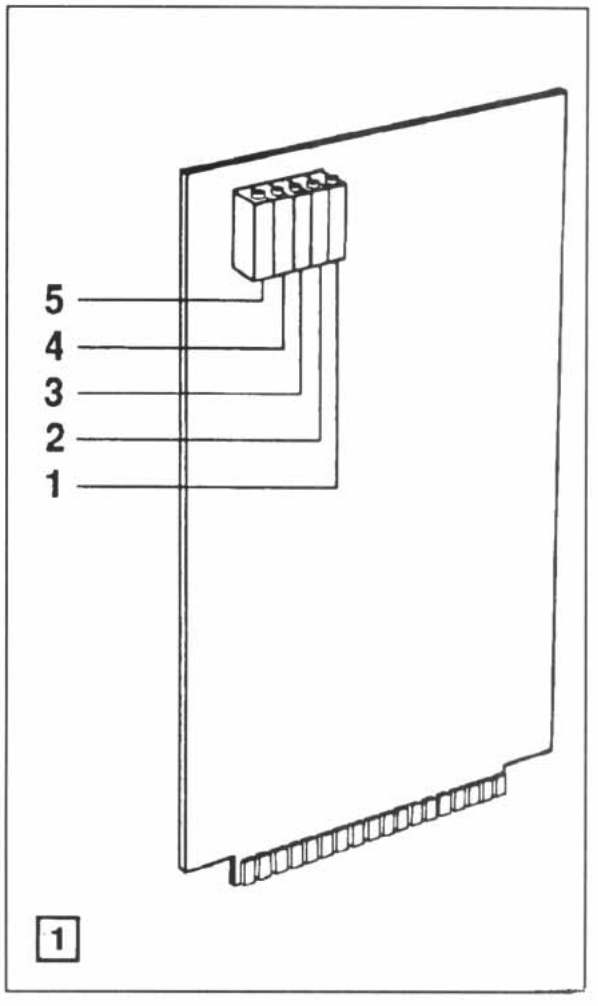

3rd and 4th hyd. functions - Attachments (see Fig. 1). Actuate valve microswitch b53 or b54 by operating the relevant attachment control lever and adjust potentiometer (item 4 or 5) to obtain an 'ON' time of 40 - 50 % (or adjust to customer's requirements).

Zero speed setting: pot 1 (see Fig. 1). If in the case of wet microswitches the motor does not turn with control valve levers in neutral, no adjustment is necessary.

Should in the event of wet microswitches the motor turn slowly, set potentiometer to medium position then turn in a clockwise or anti-clockwise direction until the motor stops turning.

Operation

Electrical functions in the Dower unit

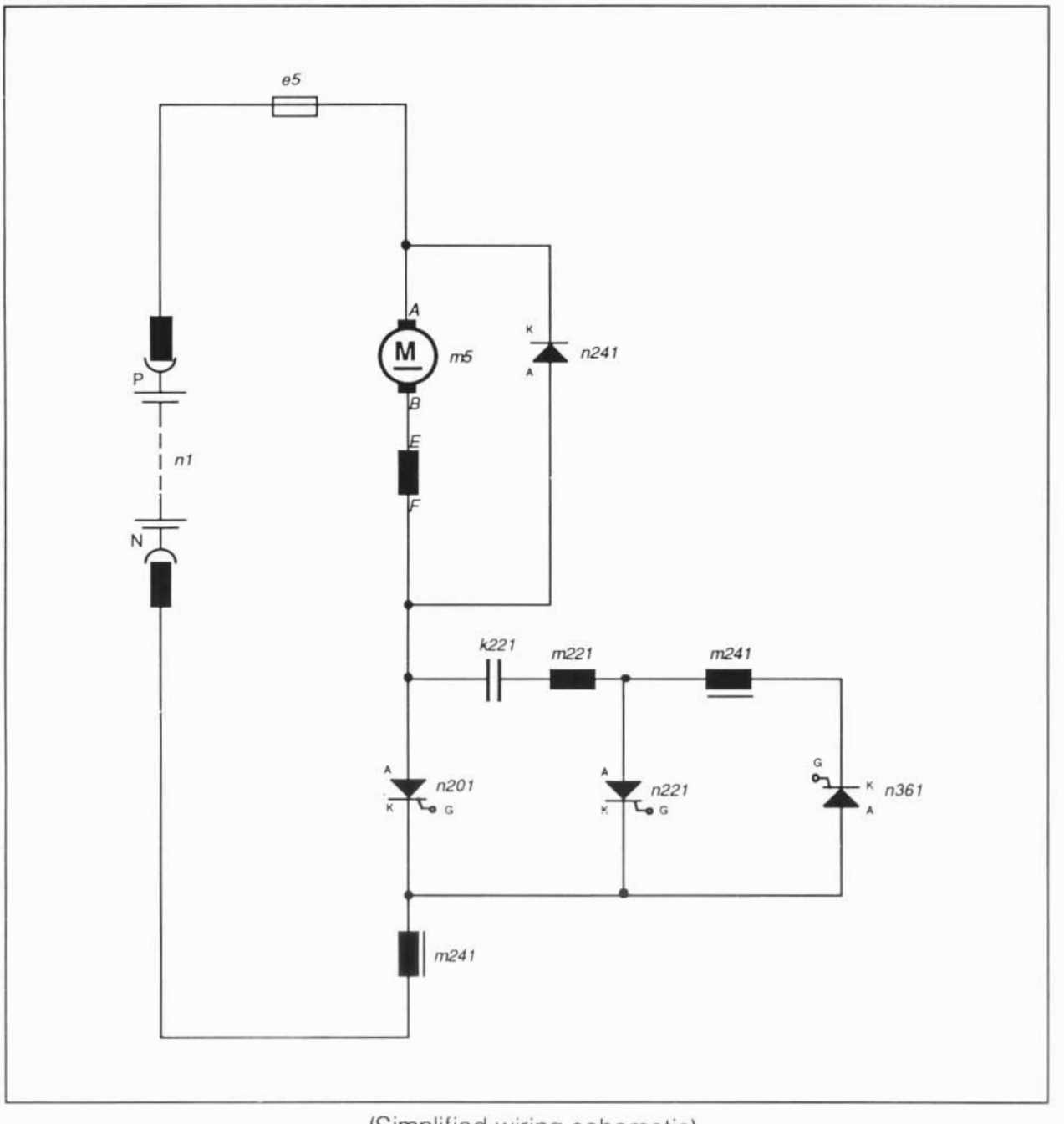

(Simplified wiring schematic)

e 5 – motor fuse

k 221 – turn–off capacitor

m 5 – pump motor

m221 – choke

m241 – commutating choke

n 1 – battery

n201 – main thyristor

n221 – turn–off thyristor

n241 – 'free wheel' diode

Electrical functions in the power unit

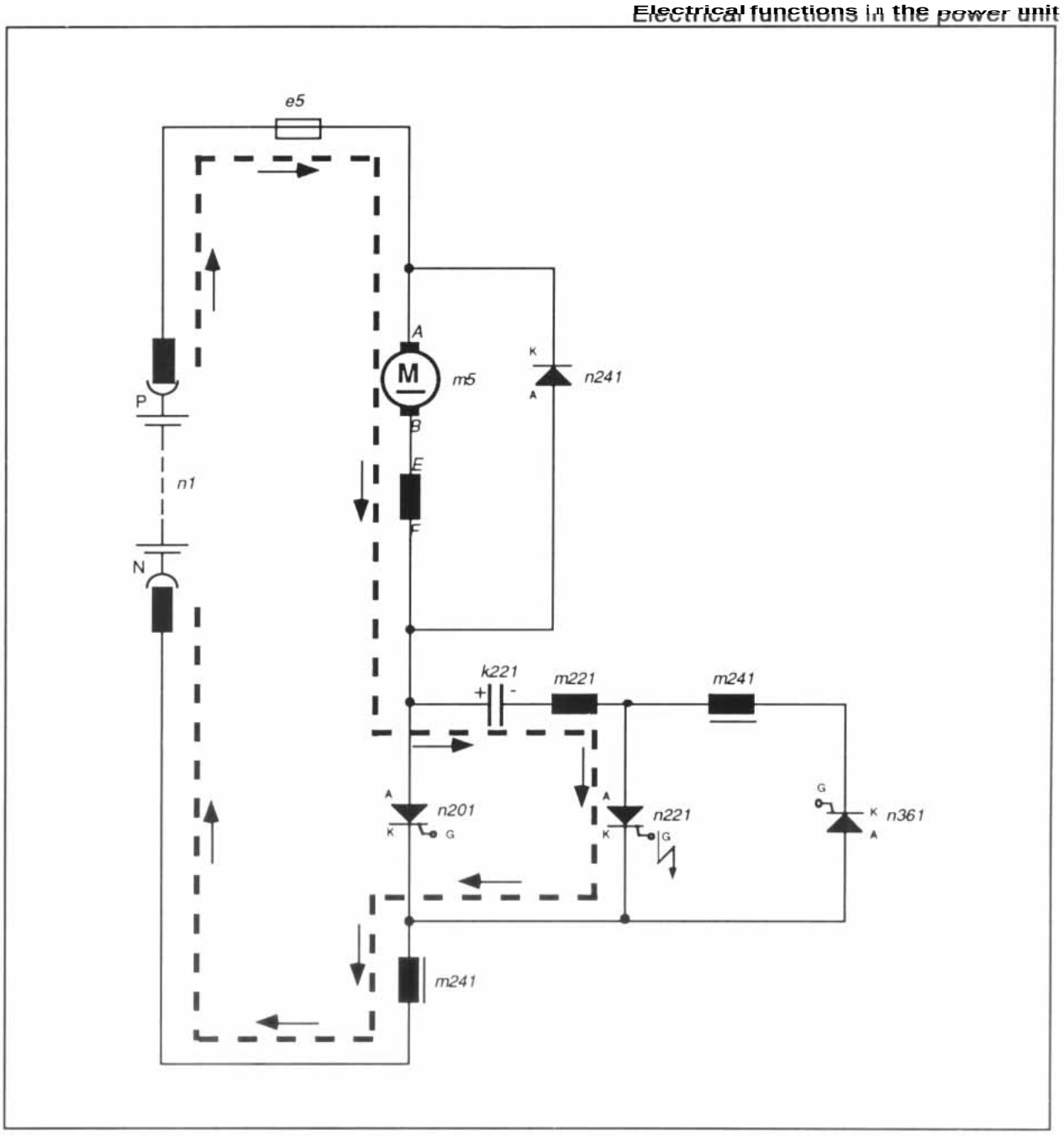

Firing, turn-off thyristor

The instant one of the hydraulic microswitches is actuated by operation of one of the hydraulic control levers, the logic card u201 will first apply a firing pulse to the gate of the turn-off SCR 221. In this way capacitor k221 is charged negatively, changing to the opposite polarity:
positive pole connected to the anode n201
negative pole connected to the anode n221 (m221)
Direction of current flow: – – – – –

Operation

Electrical functions in the power unit

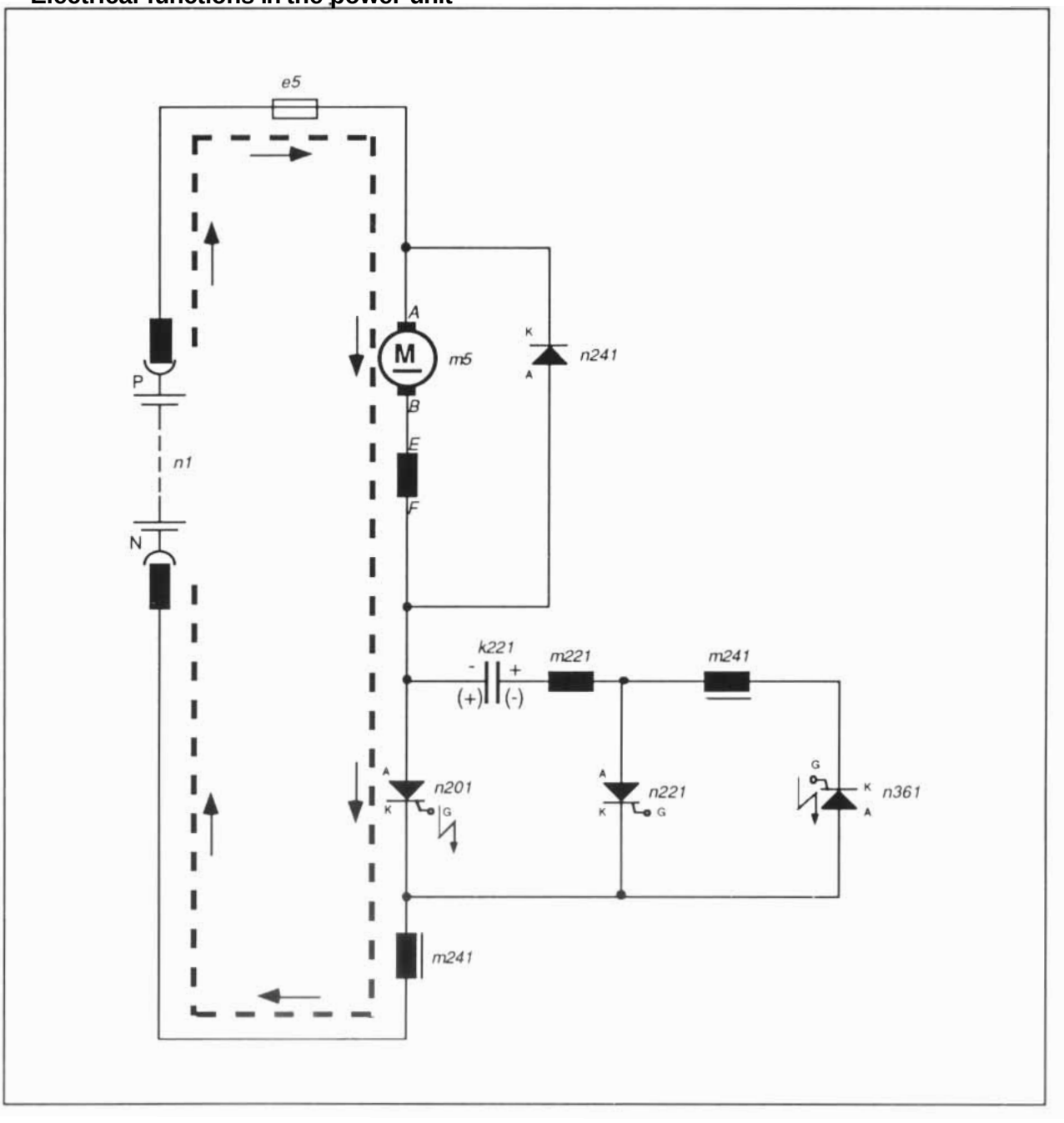

Firing, main thyristor SCR

At this stage main SCR n201 and commutating SCR n361 are fired at the same time.

Pump motor m5 runs.

Direction of current flow: – – – – – –

Electrical functions in the power unit

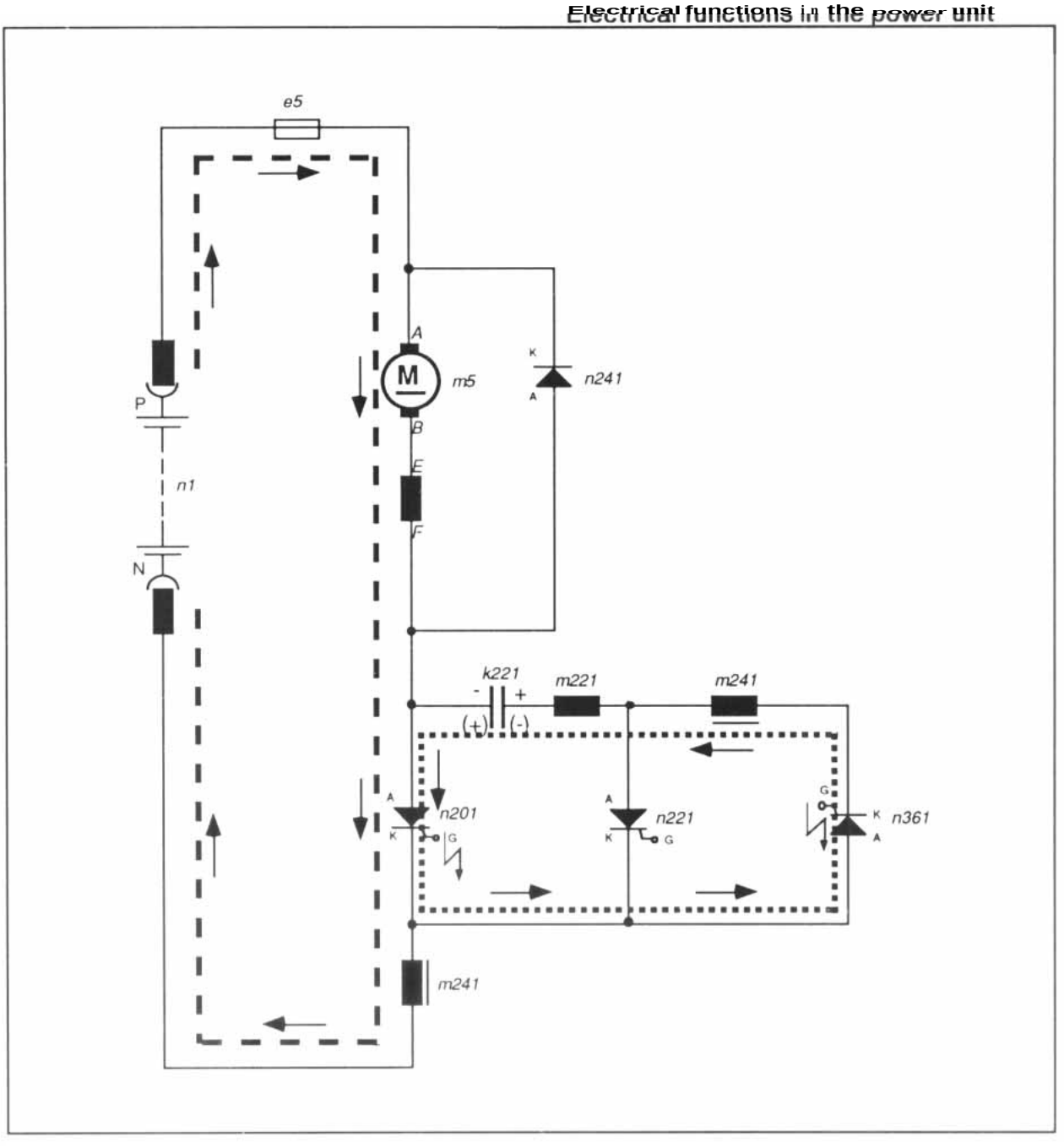

Reversal **of** charge **of** capacitor

On the simultaneous firing of 'ON' pulses to the main SCR and charging (or commutating) SCR, the positive charge on turn-off capacitor k221 reverses via n201 – n361 - m241 - m221 at A/n201 as a result of which the capacitor voltage changes to the opposite polarity:
State of charge of k221:
Polarity at A/n221 (m221) = positive
Polarity at A/n201 = negative

Once the charging procedure is completed, the charging SCR 361 will automatically assume its blocking characteristics as a charging current is no longer flowing.

Direction of main current flow: — — — —

Direction of commutating/charging current flow: - - - - - - - - - - - -

Electrical functions in the power unit

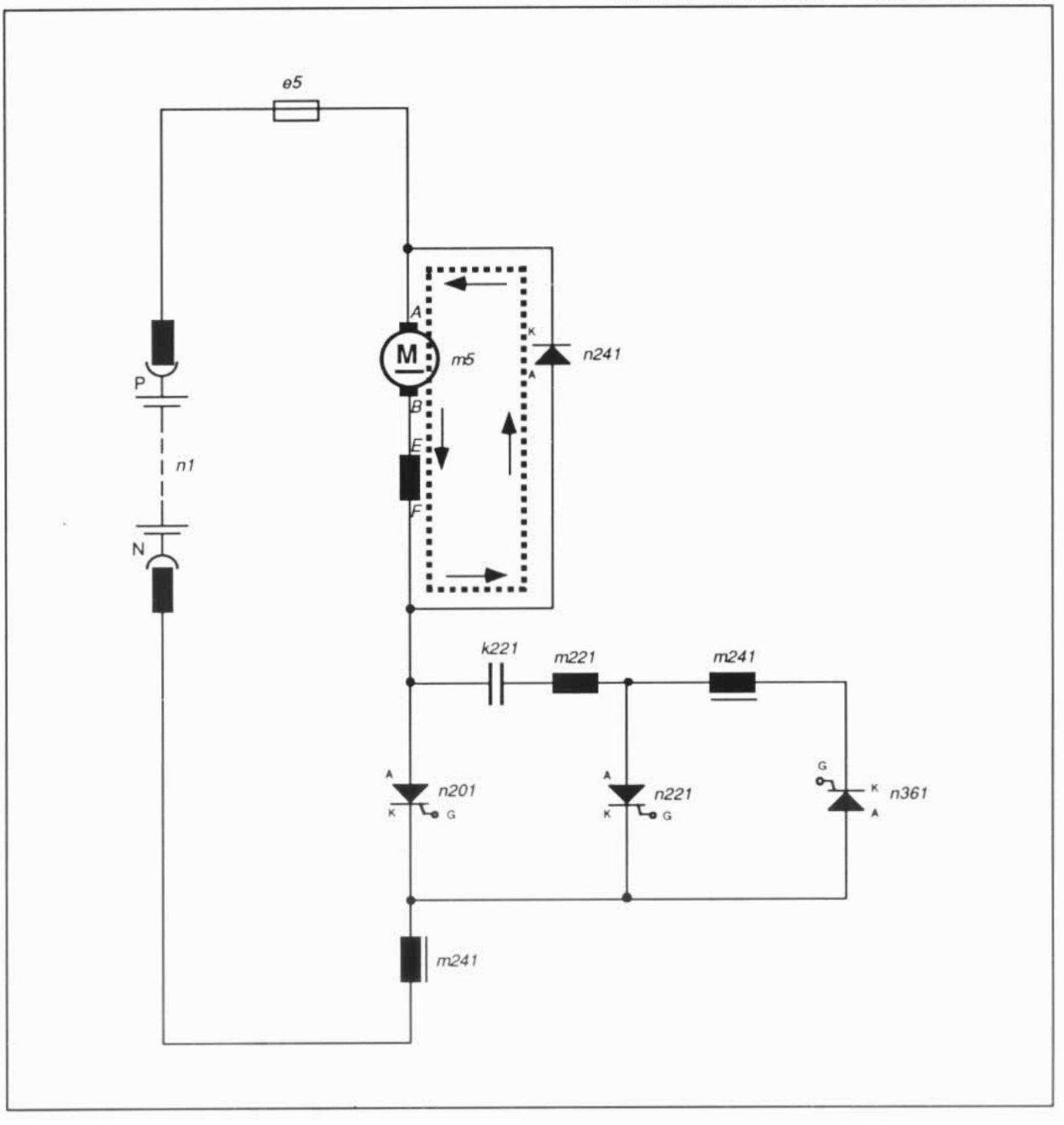

Freewheel current

During the time no current is flowing from the battery to the motor, i.e. between turn-off pulse and firing pulse the pump motor m5 will continue to run due to the inertia forces involved.

The 'free wheel' diode n241 now conducts the current induced in the pump motor m5 during intervals between the pulses. The firing of further 'ON' pulses to the gates of main SCR n201 and charging SCR n361 will be prevented until the freewheel current has decayed.

Direction of current flow: - - - - - - - - - - - -

Contents **Page**

Battery discharge indicator (u35)	1
– Measuring principle	2
– Variants	3
– Checking the indicator instrument	3
– Measuring electronics	4
– Test hint for the measuring electronics	4

Battery Discharge Indicator

Discharge indicator variants:

1) With lift interrupt

Distinctive feature:
Electronic control module fitted with 2 plugs.

— 1 6-pole plug for connection to truck electrical system.
— 1 3-pole plug for cutting out the hy-draulics by interrupting power to the pump contactor *C5*.

When the battery reaches an 80 % discharge level, a relay located on the electronic control module (measuring electronics) will automatically disconnect power to the pump motor supplying hydraulic pressure for the lift and tilt functions.

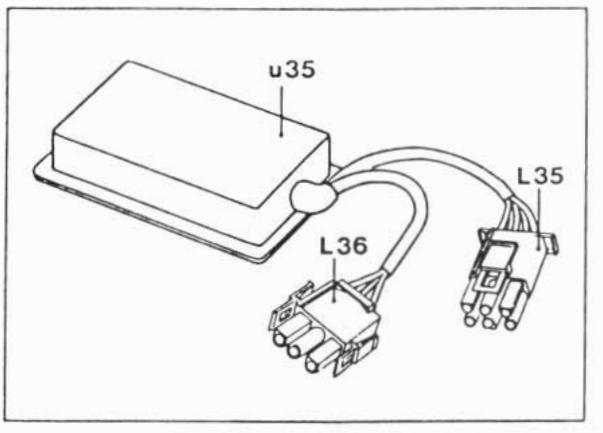

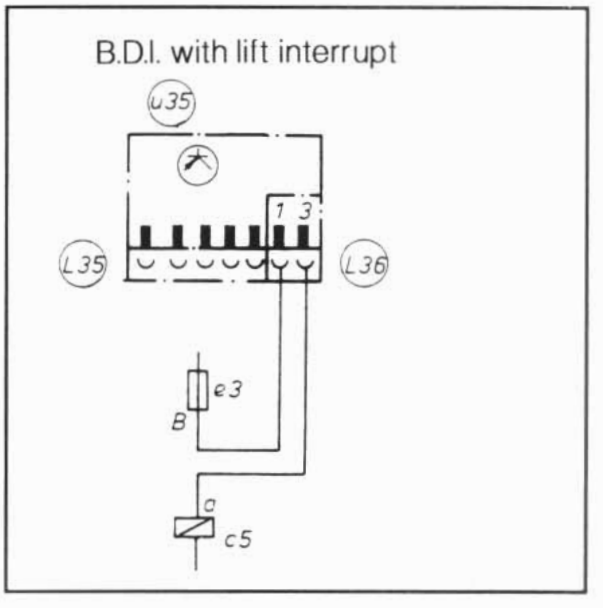

2) Without lift interrupt (standard)

Distinctive feature:
Electronic control module provided with a 6-pole plug for connection to the truck elec-trical system.

The indicator lamp will flash when the battery has 20 % of 'effective' capacity remaining (pointer is in the red indicator range).

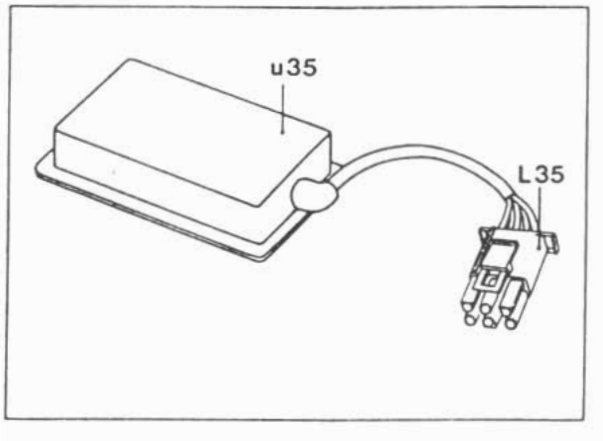

Measuring principle

In the operation of materials handling equipment short pauses are forced upon the load batteries at intervals of a few seconds or minutes. During theses pauses the battery idle voltage is measured for a few seconds. Unaffected by load current, battery internal resistance, and transition resistance of leads, battery plugs, fuses, contactors. terminal connections etc. this voltage is a good measure of the momentary discharge state, since it practically indicates the acid density in the plates of the battery. The measuring time is limited to a few seconds so that long-duration recovery processes (acid exchange), which would signal an apparent increase of the residual capacity, do not enter into the measurement. The result of this measurement is - as discharge state value of the battery - indicated on the instrument. During the loading phases of the battery this value remains fixed or provisionally is reduced slowly to an extent that would correspond to a normal discharge within this time interval. During the next pause corrections are again made immediately to the newly measured value. Thus the indication proceeds downward in fine steps in accordance with the actual discharge. Since in general as an order of magnitude, a thousand short current interruptions occur during a complete battery discharge over a period of 4 - 16 hours, the steps are not noticeable.

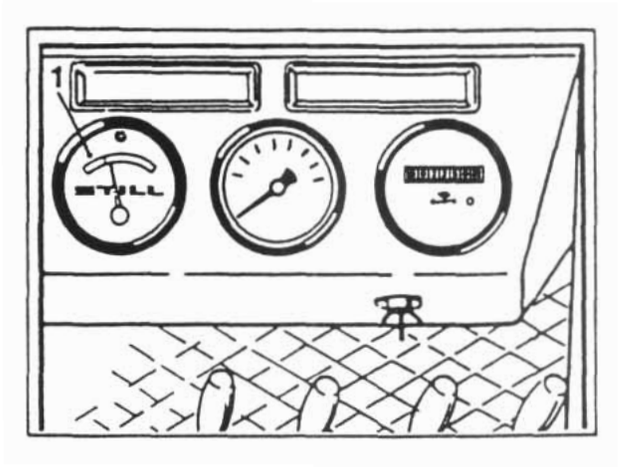

The Still battery discharge indicator consists of:

An easy-to-read. dash-mounted gauge complete with flashing light (1) and electronic control module.

Accomodated in a plastic housing for protection. the control module (2) is mounted on the contactor panel.

Battery Discharge Indicator

I. Indicator instrument (g11)

When the battery is connected and then subjected to a few load cycles, full-scale reading will be reached after about 1 minute.

What the indicator ranges (or zones) and the warning light in the indicator instrument mean:

1 = red indicator range –
Battery voltage has decreased towards the discharge condition of 20 % residual capacity.

2 = warning light will flash when 20 % of residual capacity have been reached.

3 = green indicator range –
Normal battery state-of-charge ranging from 20 % remaining capacity up to full charge.

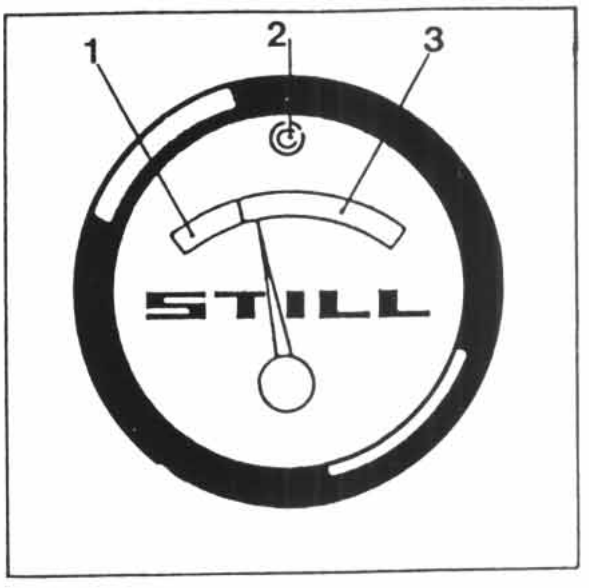

IMPORTANT
When the pointer is in the red indicator range, or if the LED in the indicator instrument starts to flash, this indicates that the battery must be recharged immediately to avoid deep discharge conditions.

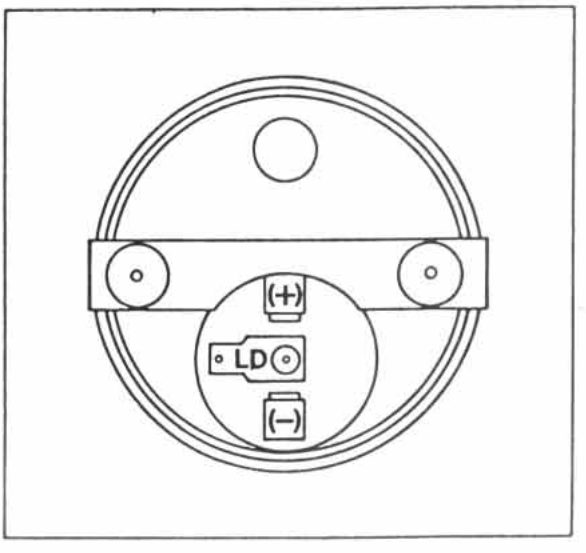

Test hint for indicator instrument

Connections:

(+) Instrument connected to 3L35

(–) Instrument connected to 4L35

(LD) Instrument connected to 5L35

(See wiring diagram)

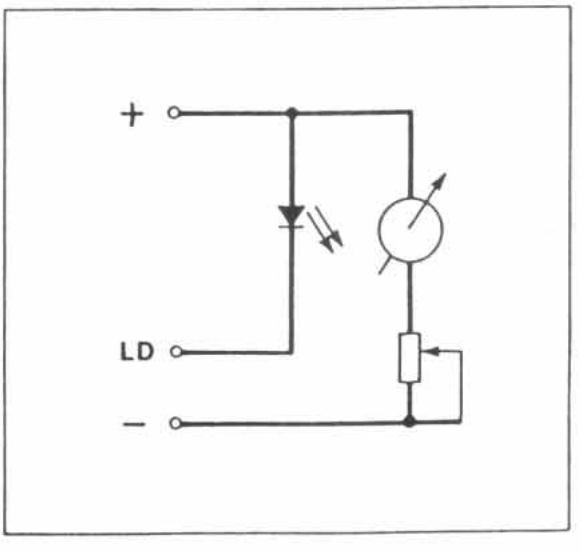

Checking the indicator instrument:

DC test voltage about 4 volt
(+) **At** instrument (+)
(–) **At** instrument (–)
Pointer must show full-scale value.

Checking the warning (flashing) light:

DC test voltage 2 volt
(+) At instrument (+)
(–) At instrument (–)
Light-emitting diode located in the instrument must light.

Battery Discharge Indicator

II. Measuring electronics (u35)

The point at which the blocking of the lift function sets in has been pre-set at the factory, and this setting should not be tampered with.

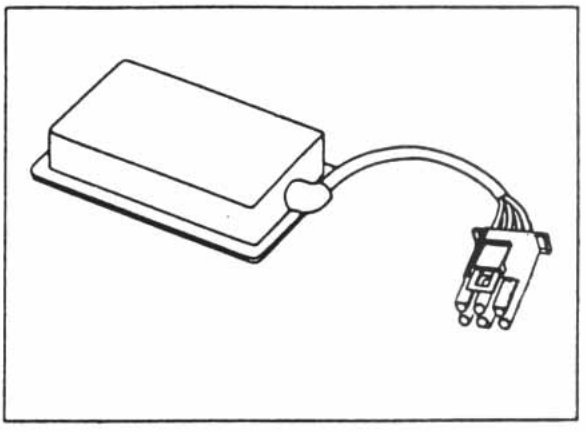

Test hint for the measuring electronics:

The measuring electronics can be tested only provided a voltmeter with digital display is used.

- Load the battery for about 10 secs (tilt against stops).
- Take digital voltmeter reading 8 – 10 secs. after loading.

The reading is in the green zone correctly if the battery voltage within the 8 – 10 secs. climbs above 23.48 V in the case of a 24-volt. 12-cell battery.

If the reading is below the 23.48 V level the pointer (or needle) of the indicator instrument (g11) is in the red indicator zone.

Contents **Page**

Technical Data for Maintenance Service		1
Hydraulic System	– Operation of Lift & Tilt Hydraulics	3
Spool–type control valve complete with operating levers		4
Control valve bank	– Mechanical configuration and Operation	5
Control valve bank	– Pressure limiting valve	6
Control valve bank	– Flow–rate control valve	7
Control valve bank	– Plug – Check valve	8
Control valve bank	– Operating Unit Restrictor disc in connection of tilt cylinder	9
Anti–cavitation valve		10
Return line filter	– Operation – Maintenance	11
Hydraulic Pump	– Removal & Installation	12
Hydraulic tank	– Capacity – Hydraulic oil change	13
Hydraulic fittings and unions	– Assembly – Tilt cylinder fittings	14
Lift and tilt speeds		15
Hydraulic circuit diagram		16

Technical Data for Maintenance Service

Functional Group 10	
Hydraulic system	
Hydraulic pump	
Capacity	8 cm^3/rev.
Direction of rotation	counter-clockwise (arrow on pump)
Torque loading, mounting hex hd screws	50^{-10} Nm
Control valve bank	
Pressure setting pressure limiting valve	230 bar
Torque loading, bolts securing valve sections together	23 Nm
Restrictors (tilting)	up to & incl. 3500 mm of rated lift = 1,9 mm dia. upwards of 3500 mm of rated lift = 1,5 mm dia. up to & incl. 5000 mm of rated lift = 1,5 mm dia. upwards of 5000 mm of rated lift = 1,2 mm dia.
Anti-cavitation valve	
Pre-set pilot pressure	125 bar
Return line filter	
Filtration	25 µ
Pressure of response, by-pass valve	2 ± 0.5 bar
Hydraulic tank	
Filling capacity	depending on mast type
Hydraulic oil (OZ)	grade to DIN 51524 / Part 2 HLP or ISO VG 46 HM
Speeds	
Hoist speed (with rated load) (m/sec)	Carrying capacity Mast type 1.0 1.2 1.5 tonnes Tele/Hi-Lo Triple 0.25 0.23 0.21 Tolerance ± 12 %
Tilt speed (with rated load) (forward tilt)	up to & incl. 3500 mm of rated lift = min.0,22/max.0,32 sec/° upwards of 3500 mm of rated lift = min.0,34/max.0,52 sec/° up to & incl. 5000 mm of rated lift = min.0,34/max.0,52 sec/° upwards of 5000 mm of rated lift = min.0,58/max.0,86 sec/°
Lowering speed	0.45 - 0.60 m/sec

Operation of Lift and Tilt Hydraulics

Drawn from the tank (5) the hydraulic oil is supplied by he gear-type pump (6) to the spool-type hydraulic control valve **(3)**, connector -P-.
With the spools in the neutral position, or with a small actuation of a lever, the oil flows through the control valve from connector -R- almost unpressurised (low pressure fluid circulation) via the return line filter **(4)** to the tank.

With the lever actuated still further, an amount of oil dependent on the degree of lever actuation is directed from *connector* B- *to* the hoist cylinders (7) and from C and D to the tilt cylinder (1). Incorporated in the control valve block, a flow control valve restricts the oil flow to the tilt cylinder to reduce the working speeds (stability!).

An integral pressure limiting valve in the control valve block protects the system against overloading.

The anti-cavitation valve (2) safeguards against mast drift.

The lowering valve (8) limits the lowering speed of the load.

For a description of the function of the lowering valves and pipe/hose failure safety devices see Functional Group 20.

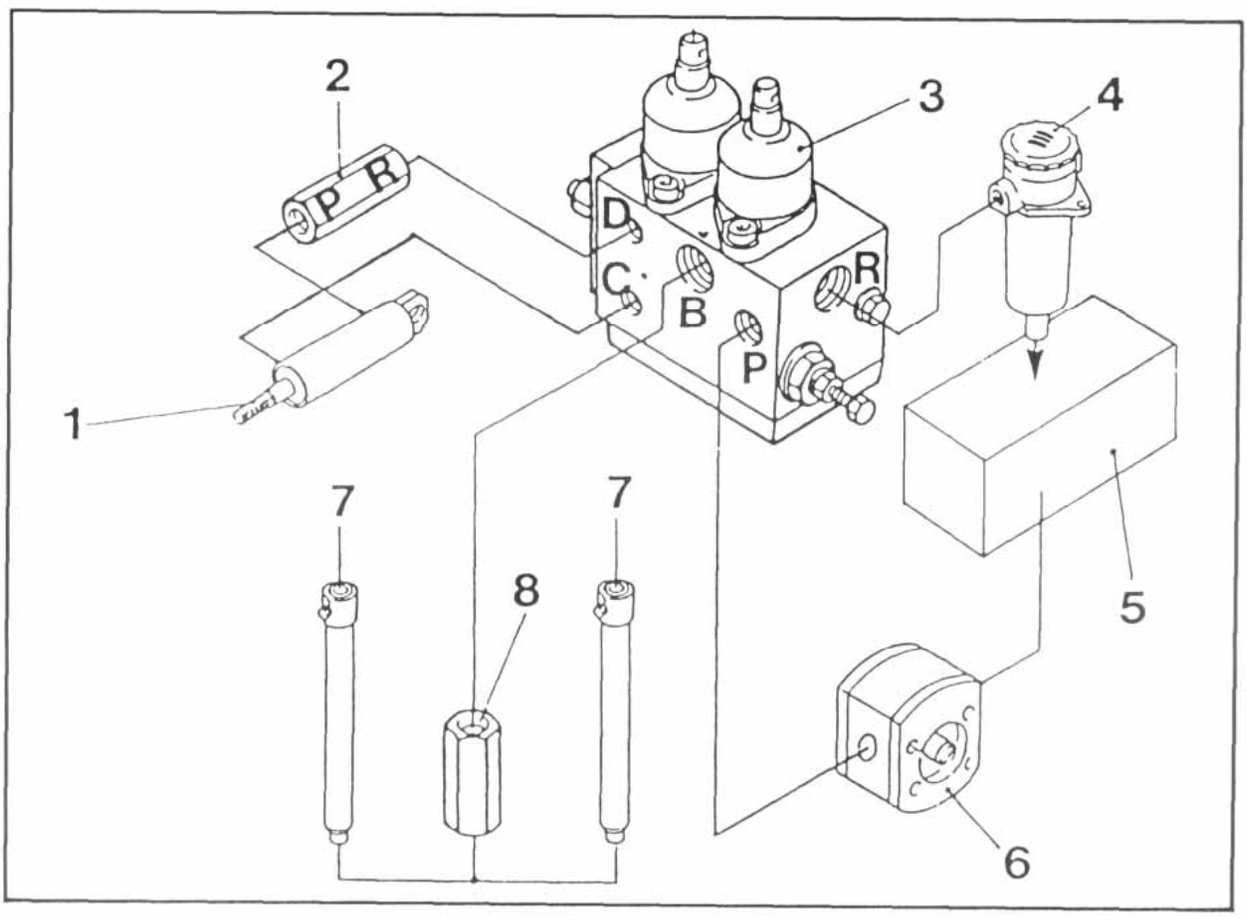

Spool–type control valve complete with operating levers

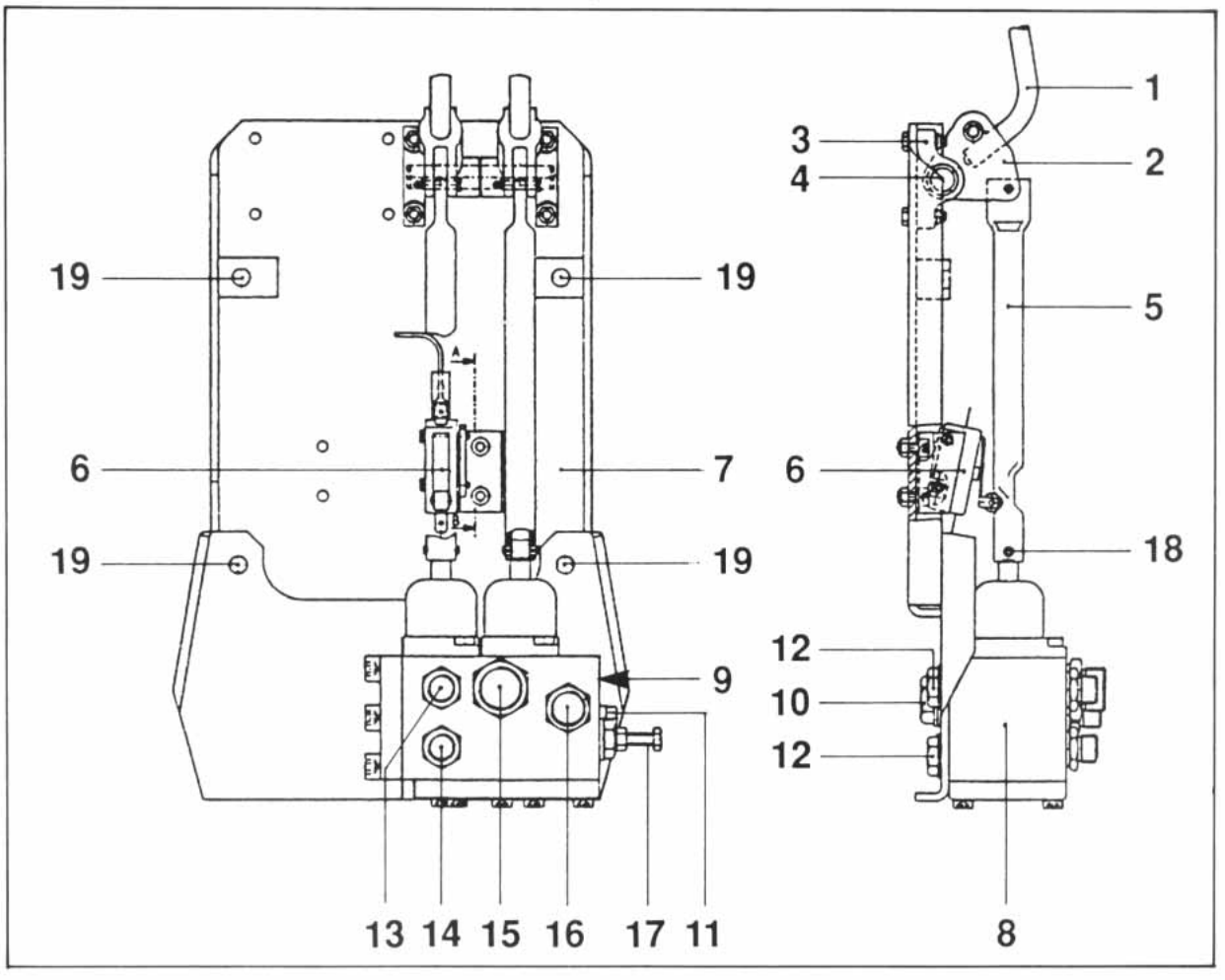

1 = control lever
2 = lever
3 = bracket
4 = shaft
5 = cam stick
6 = control valve microswitch
7 = valve mounting bracket
8 = control valve bank
9 = connector R (return line)
10 = plug – flow control valve
11 = pressure (test) plug M (R 1/8")
12 = fixing screws – control valve bank
13 = connector D (backward tilt)
14 = connector C (forward tilt)
15 = connector B (hoist function)
16 = connector P (pump line)
17 = pressure limiting valve
18 = roll pin
19 = fixing screws – valve mounting bracket

The valve mounting bracket (7) is bolted to the bulkhead via four bolts (19). Space has been provided for extending the existing spool valve bank by adding one section for hydraulic ancillary equipment complete with control levers. The plug for the flow control valve is (with battery removed) accessible (e.g. for exchanging restrictor discs) through apertures in the bulkhead and the valve mounting bracket.

Control valve removal

With battery removed:

- Disconnect hydraulic lines to control valve
- Using a drift drive out the roll pins (18)
- Remove screws (12)

With battery **in situ:**

- Disconnect hydraulic lines to control valve
- Disconnect leads at microswitches (6)
- Remove screws (19) and remove complete valve mounting bracket
- Using drift drive out the roll pins (18)
- Remove screws (12)

Mechanical configuration and Operation

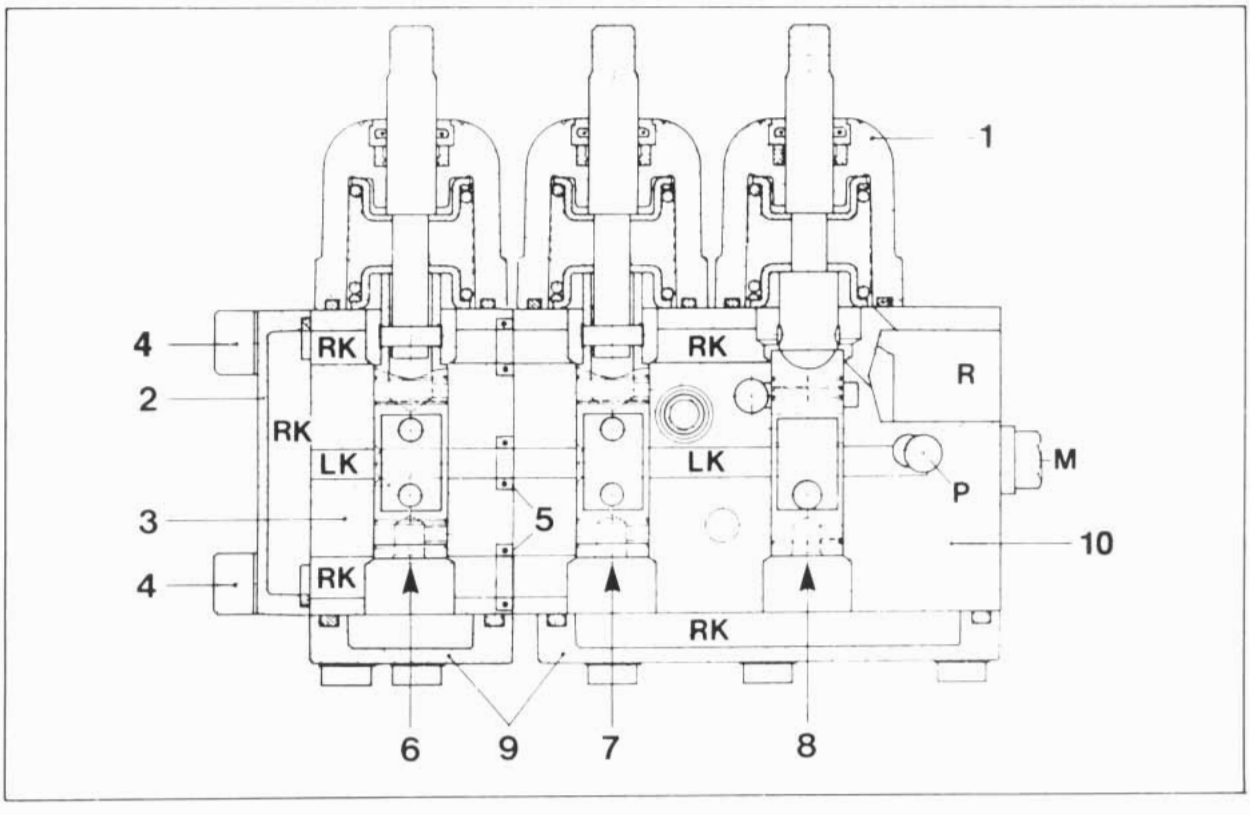

1= Operating unit (manual operation)
2=End plate
3=Auxiliary valve section for supplementary functions (hyd. ancillary equipment)
4= **3** bolts securing the valve sections together
5=Seals between valve section (*'O* rings)
6 =Spool – hyd. acillary equipment
7=Spool – tilt function
8 = Spool – hoist function
9 =Bottom plate
10 = Valve bank – hoist & tilt
LK = Tickover port
RK = return port
R = Connector – return line
M =test plug (pressure gauge connect.)

Operation

With the valve spools in neutral position, or with the spools shifted by a small degree, the oil entering connection (P) flows almost unpressurised via the tickover port through the return line to the oil tank.
As the spools are further moved into the power position, the tickover port is closed and the oil whose quantity is dependant on the degree of lever actuation is directed to the services. Moreover, the maximum quantity of oil for the tilting function is restricted by a flow–rate control valve which incorporates a restrictor.

CAUTION:

Valve spools should be reassembled in the same order. Prior to disassembly mark spool position.

When carrying out assembly operations on the control valve bank extreme care should be taken that no dirt particles enter the system, otherwise this could lead to the destruction of the spool fits, resulting in malfunction.
Torque loading of valve section assembly bolts **(4)** = 23 Nm.

Flow-rate control valve

1=plug
2=seal
3=restrictor
4=piston
5=spring
6=cushion bush
7=cushion plunger
RK=return port
PK=pump port

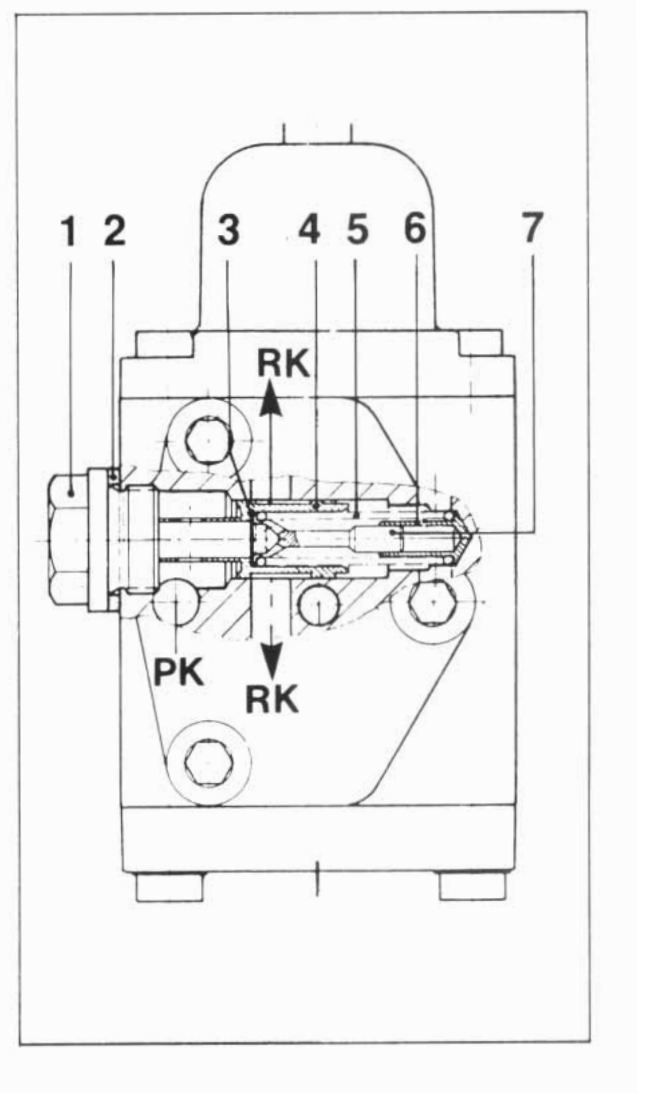

Operation

When the tilt valve spool is operated to a power position, the oil from the pump port (PK) flows via restrictor (3) to the tilt cylinder.

Depending on the degree of actuation of the tilt valve spool., the piston **(4)** is moved against the spring (5). allowing excess oil flow to return unpressurised to the tank via return port (RK).

Tilt speed is a function of restrictor hole diameter.

Depending on the rated lift provided by the elevating mast, the restrictors shown in the table below are fitted.

Rated lift h (mm)			Restrictor dia. (mm)
up to	3500	=	1.9
over	3500	=	1.5
up to	5000		
over	5000	=	1.2

Replacement control valve banks are supplied with a 1.9 mm diameter restrictor.

When exchanging the control valve bank or mast it may therefore be necessary to change the restrictor.

Remarks on installation of flow-rate control valve:

Before screwing plug (1) in place in the flow-rate control valve, push in piston (4) by hand as far as it will go in order to centre the cushion bush (6) in relation to the cushion plunger (7).

Control Valve Bank

1 = end plate
2 = plug
3 = **'O'**ring and Teflon back-up ring
4 = pump port
5 = check valve
M = test plug (pressure gauge connection)
P = pressure connection (pump)

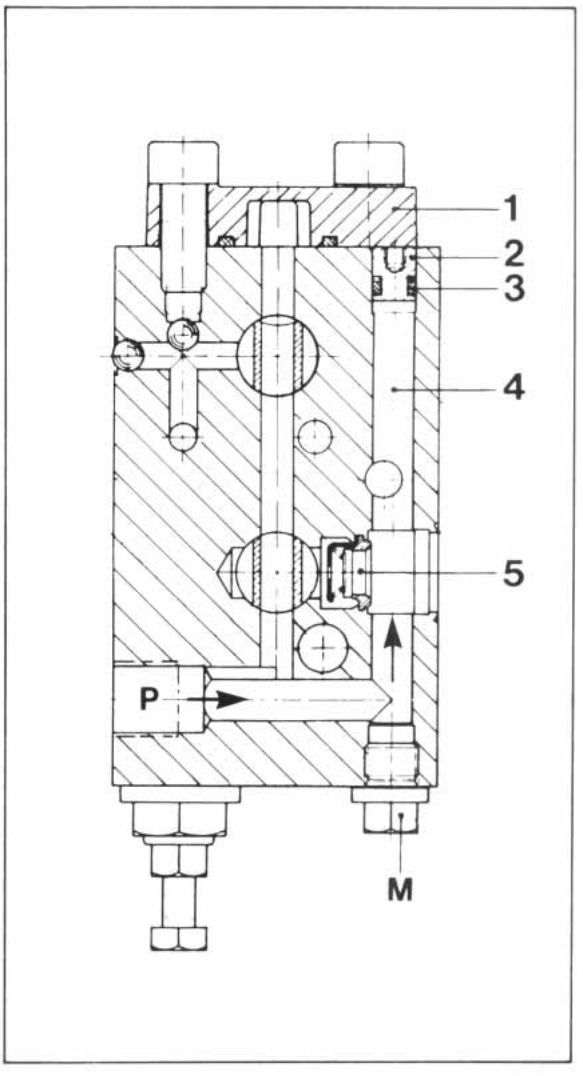

Plug

The pump pressure port **(4)** is sealed at its end with plug (2) which is maintained by the end plate (1).

Note:

When adding accessory valve units for hyd. ancillary equipment pull out plug from valve bank using a screw M4 and push it in pump pressure port of the last valve additionally attached.

Otherwise there will be no oil flow to the attachment.

Check valve

Check valves (5), provided between pump port **(4)** and operating spools for hoist function and attachment functions, prevent back flow from cylinder ports to pump pressure line.

If when operating the hoist lever the load is lowered to some extent before it is raised this is an indication of improper functioning of the check valve in which case the control valve bank must be replaced with a new one since the check valve cannot be repaired.

Operating Unit

1 = valve spool rod
2 = O–ring seal
3 = oil seal
4 = spring washer
5 = pressure spring
6 = housing
7 = O–ring seal
8 = pin
9 = valve spool

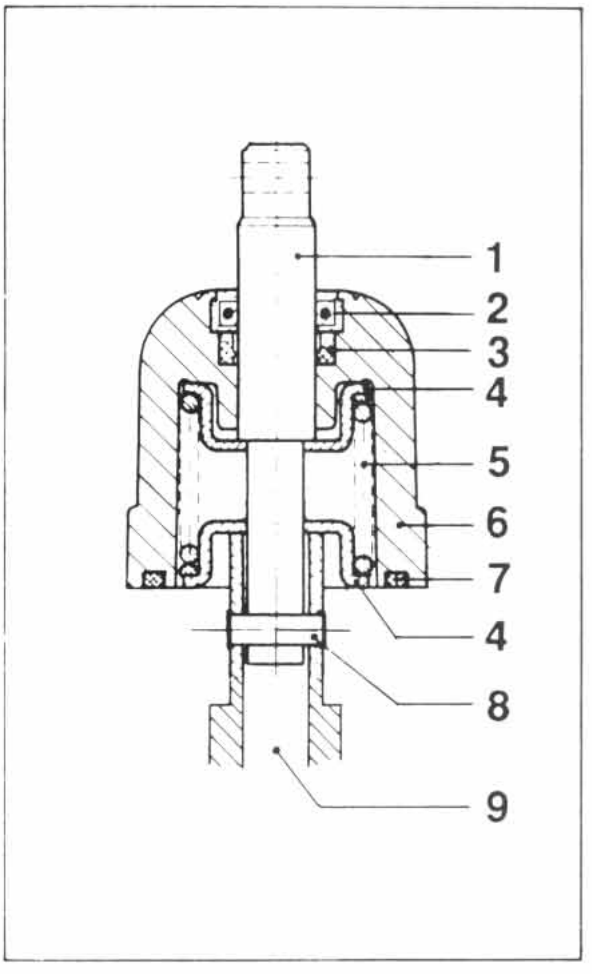

Removal **of** operating unit with valve spool:

Loosen screws on housing (6) and pull out valve spool with operating unit. To change the operating unit remove valve spool (9) from valve spool rod (1) by driving out pin (8). If the valve spool rod shows signs of leaks change O–ring (2) and oil seal (3) or replace the complete operating unit with a new one.

Installation

Pin **(8)** must be riveted.

Restrictor disc in connection **of** tilt cylinder

A 1.5 mm dia. restrictor is used in the lower connection (base) of the tilt cylinder to limit the flow of oil and consequently the speed of the tilt operations. Thus operation is made even safer, eliminating mast swing.

IMPORTANT!

When replacing the control valve block or when fitting a new mast, the restrictor must be reused in the new part or a new restrictor fitted.

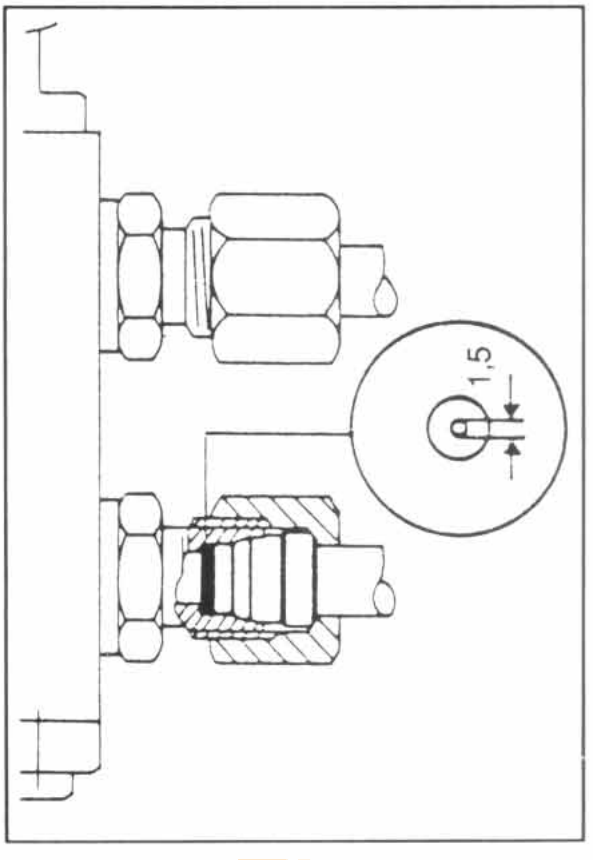

Anti-cavitation valve

Pre-set Pilot pressure: **125** bar

1 = housing
2 = valve seat housing
3 = ball
4 = sealing ring
5 = sealing cone with cushioning effect
6 = spring
7 = adjusting screw

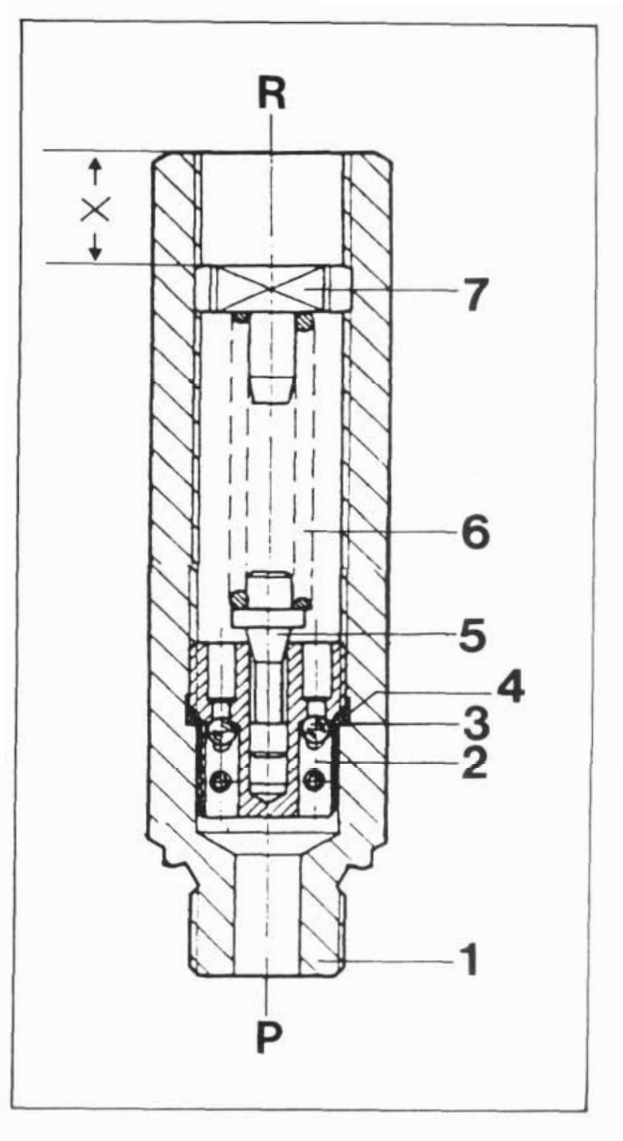

Operation

Fitted between control valve bank and tilt cylinder, the anti-cavitation valve prevents the mast from drifting forward on its own with or without load.
The anti-cavitation valve permits tilting only when pump pressure is present.
The anti-cavitation valve carries the designation ("P") and ("R") on the connector sides.

R ⟶ P = free flow

P ⟶ R = restricted

Fitting position: See Figure on page 3.

Checking anti-cavitation valve

- Pick up rated load
- Place truck on level ground
- Attach an angle-measuring instrument (level) to mast section
- Turn keyswitch 'OFF'

NOTE:
The mast should not move forward by more than 0.5°/min. If the mast drifts forward more rapidly, this is usually evidence that the cone seat (5) is contaminated.

Removal:

- Remove anti-cavitation valve
- Screw out adjusting screw (7)
- Withdraw spring (6) and cone (5)
- Inspect valve seat for dirt; clean if necessary
- Screw in adjusting screw (7) until it has reached its original position (measure -X-)

Return line filter

Operation und Maintenance

Filter assembly: consisting of paper element with by-pass valve and tank ventilation filter.

Paper element
Filtration = 25 μ

By-pass valve:
Minimum pressure of response = 2.0 ± 0.5 bar

1 = cap
2 = gasket
3 = by-pass valve
4 = gasket
5 = paper element
6 = housing
7 = **'O'** ring
8 = extension tube

The flow of oil from the control valve passes through the filter before it takes the return line to the tank. The oil will in that case flow through paper filter element (5) from outside to inside. The by-pass valve (3) opens at 2.0 bar backpressure (if paper element is clogged) and allows oil to run into the tank ulfiltered.

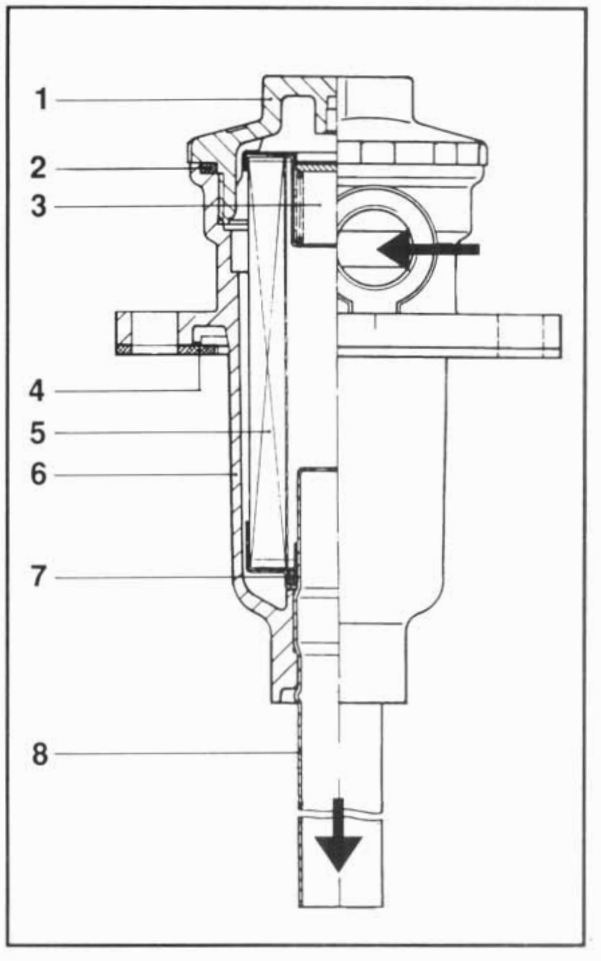

Replace paper element:
- Remove cover (1) from filter housing
- Pull out paper element (5)
- Install new paper element
- Replace cap

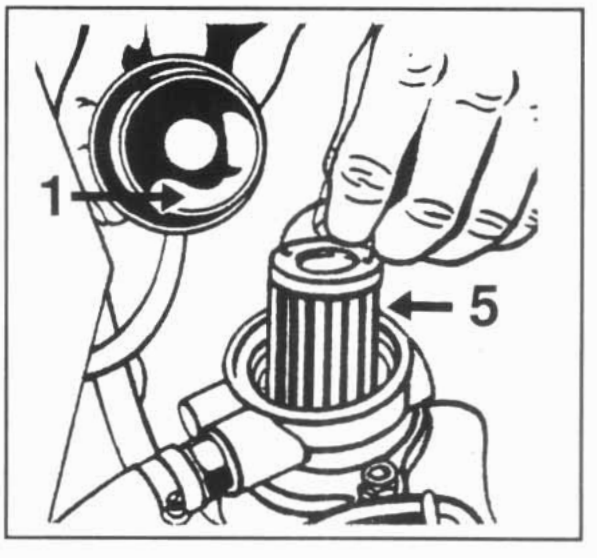

NOTE:

Paper element cannot be cleaned and should therefore be replaced with a new part.

Periodic maintenance:

Replace paper element:
- after 50, 100 then every 800 hours

In the event of heavy dirt deposits on the bottom of the filter housing, remove entire filter assembly and clean housing.

Hydraulic Pump

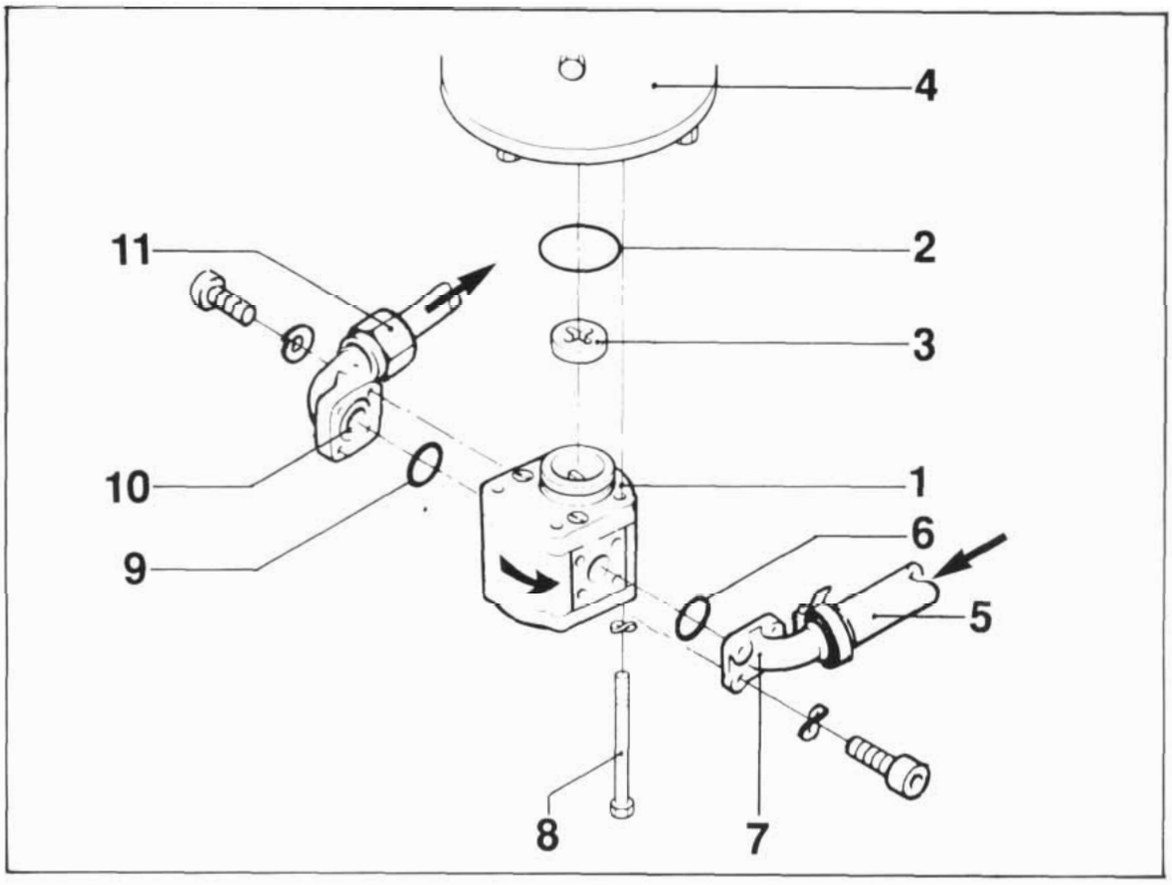

Type	: gear pump
Capacity	: 8 cm³/per rev
Direction of rotation	: counter-clockwise (arrow on pump)
Driven by	: pump motor shaft via coupling (3)
Sealing	: by radial sealing ring in pump motor, and 'O' ring (2)

Removal:

- Lower forks completely
- Detach suction hose (5) from flange (7) and catch oil in pan
- Detach h.p. hose (11) from flange (10)
- Remove the four bolts (8) and pull *off* pump (1) from motor

Installation:

- When fitting a new pump replace 'O' rings (items 6 & 9) underneath the flanges with new ones
- Place drive coupling (3) on pump shaft journal (the coupling should move easily on journal)

  Lubricate 'O' ring (2) with grease before installing it in recess of pump housing
- The pump should be so fitted that the pump motor shaft journal engages with the coupling (3)
- Secure pump with the four hx bolts (8) Torque loading: Ma = 50 + 10 Nm
- Attach h.p. and suction hoses (items 11 & 5)
- Refill tank with fresh oil through filter opening

Note:
In the event of noisy pump operation or foaming up of the oil in the tank inspect radial sealing ring in pump motor, and O-rings (items 2 & 6), or check any of the other connections of the suction pipe for leaks.

Description, capacity

Arranged crosswise in front of the battery compartment, the hydraulic oil tank is an integral part of the frame. The suction pipe is welded to the underside of the tank.

Tank filling capacity is a function of the overall lowered height of the mast. Oil level is checked with oil filter cap and filter element removed, mast tilted fully forward and forks lowered completely: from filter top to oil level = dimension X.

The oil capacities indicated in the table below correspond to the total filling capacity of the hydraulic system.

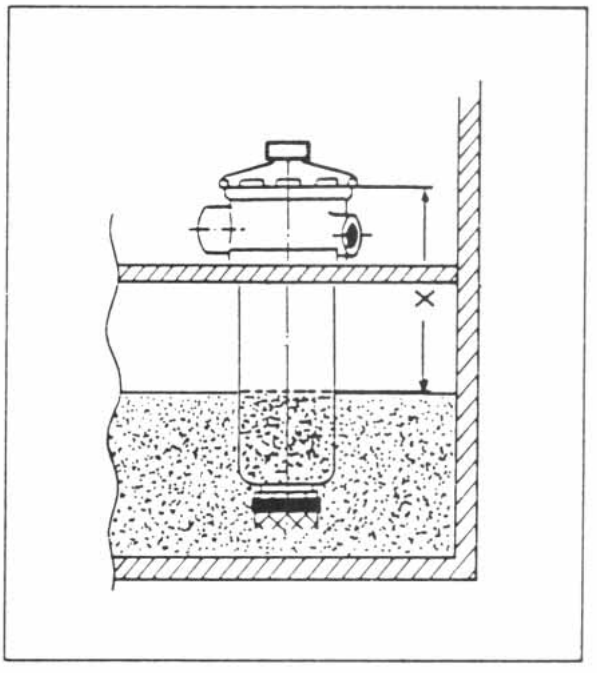

Mast Overall height (mm)	Dimension X (mm)	Capacity (litres)
Telescopic		
up to & incl. **2230**	**205**	**12**
up to & incl. **2730**	**190**	**14**
up to & incl. **3230**	**190**	**14**
Hi-Lo		
up to & incl. **2230**	**200**	**14**
up to & incl. **2730**	**185**	**16**
up to & incl. **3230**	**185**	**16**
Triple stage		
up to & incl. **2230**	**180**	**18**
up to & incl. **2730**	**170**	**20**
up to & incl. **3230**	**160**	**22**

Hydraulic oil change
after 50 hours of operation
every 3000 hours of operation

- Tilt mast fully forward
- Lower forks completely
- Remove oil filter cap
- Diconnect suction hose (betw. hyd. tank and pump) at pump, catch hyd. oil in pan
- Reconnect hose
- Refill tank with fresh oil through filter opening

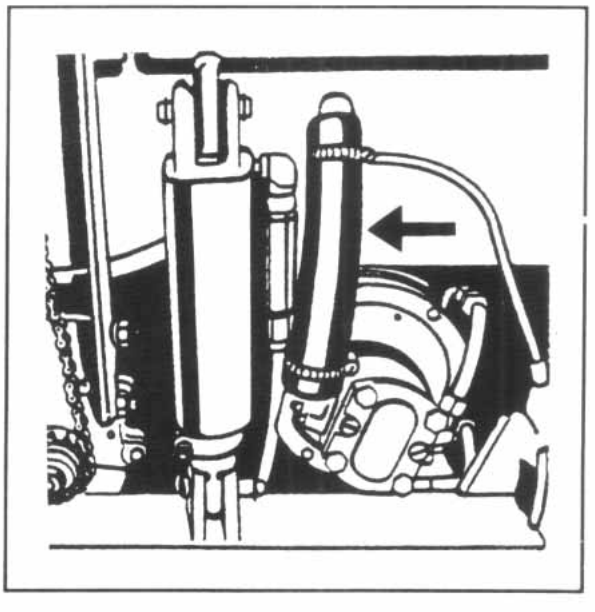

Hydraulic oil **(OZ)**

Grade to:
DIN 51524, Part 2/HLP
ISO VG 46 HM

Hydraulic fittings and unions

Unions

1 = tube
2 = union nut
3 = steel sealing ring
4 = screwed union

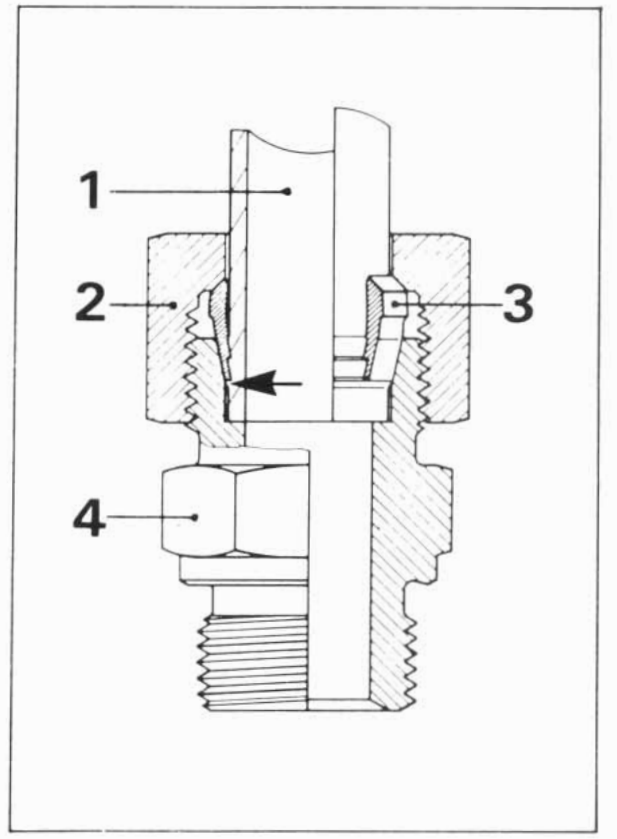

Assembly:

- Using a saw, cut tube (1) to length required and remove burrs from inside and outside
- Place screwed union **(4)** in a soft jawed vise
- Lubricate thread and cone of screwed union, steel sealing ring (3) and thread of union nut (2) with oil
- Slide the union nut and the steel sealing ring over the tube and insert the tube into the inside cone of the screwed union as far as it will go
- Screw on union nut by hand until home
- Using a spanner, tighten union nut by around 1 1/2 turns (tube must not turn)
- Loosen union nut and check whether the bulge that had just been formed (arrow) fills the cavity of the front cutting edge. If not, retighten slightly

Tilt cylinder fittings

The fittings are provided with plastic coated threads (arrow) for better sealing in cylinder tube.
The sealing is preserved only provided the fitting is not loosened by more than 15" or by at the maximum and retightened.

Should the fitting be loosened in excess of this limit, either a new fitting will have to be used or the thread of the fitting provided with a thread sealing tape.

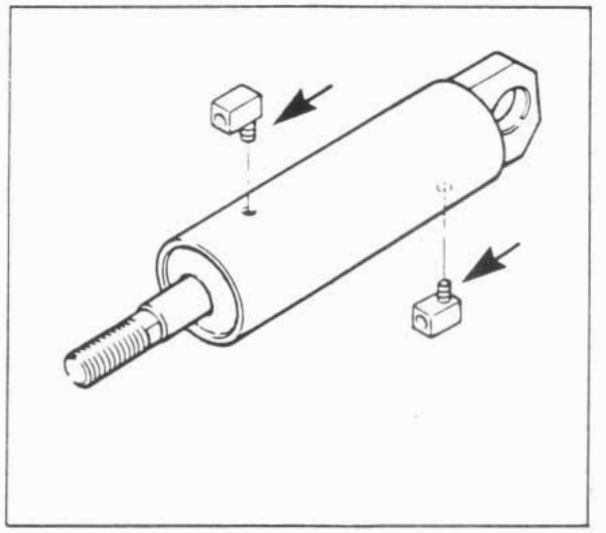

The trucks in this range are supplied with the following operating speeds, measured with the rated load on the forks:

Hoist **speed:**
(applying to Telescopic, Hi–Lo & Triple stage masts)

0.1 tonnes =0.25 m/sec
1.2 tonnes =0.23 m/sec
1.5 tonnes =0.21 m/sec
(tolerance ± 12 %)

Note:
On Hi–Lo and Triple stage masts the average value of the speeds measured in lift I and lift II applies.

Lowering speed:0.45 – 0.60 m/sec

IMPORTANT!

0.60 m/sec. are not allowed to be exceeded.

Tilt **speed** in seconds (**forward** tilt)

Rated lift-h³ (mm) onwards of	up to & incl. 6°	7°	8°	9°	sec./° of tilt angle
3500	min. 1.3	1.5	1.8	2.0	= abt. 0.22
	max. 1.9	2.2	2.6	2.9	= abt. 0.32
3500 5000	min. 2.0	2.4	2.7	3.1	= abt. 0.34
	max. 3.1	3.6	4.2	4.7	= abt. 0.52
5000	min. 3.5	4.1	4.5	5.2	= abt. 0.56
	max. 5.2	6.0	6.9	7.7	= abt. 0.86

The measurement must be carried out over the entire tilting range!

NOTE:

The above values may differ where the truck is fitted with optional equipment.

Hydraulic circuit diagram

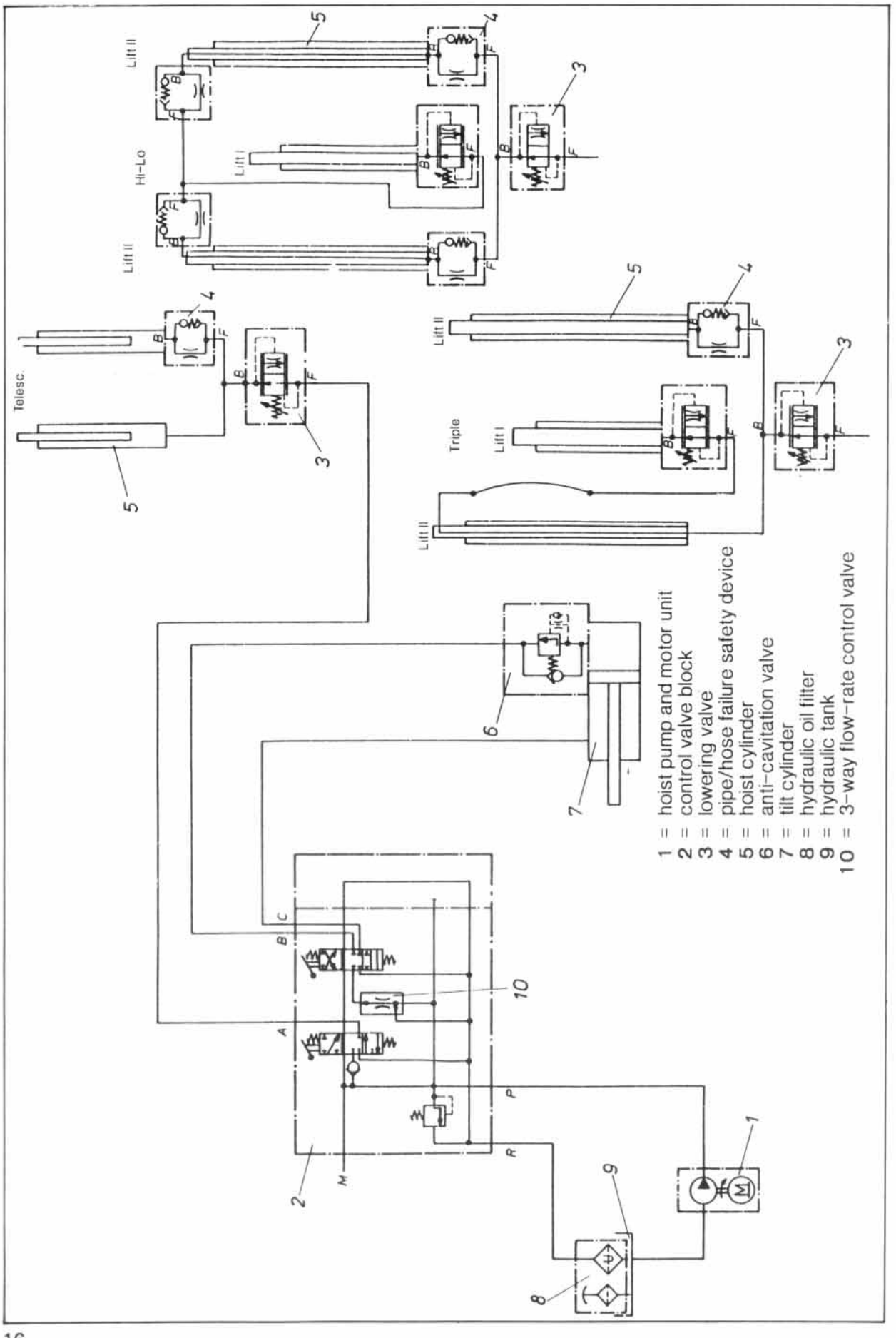

© STILL GmbH Position as per: 1/2002 (Replaces version:) XX

Contents

	Page
Technical Data for Maintenance Service	1- 3
Drive motor	
Drive motor, construction	4
Wiring diagram	4
Neutral zone	4
Changing and inspecting the drive motor brushes	5
Drive motor removal	6
Drive motor installation	6
Drive motor disassembly	7+8
Drive motor – Reassembling	8
Pinion and armature shaft – Reassembling	9
Pump motor	
[illegible]	10
[illegible]	10
[illegible]tment	10
[illegible] the pump motor brushes	11
Hyd. pump motor removal	12
Hyd. pump motor installation	12
Pump motor – Dismantling	13
Pump motor – Reassembling	14
Power steering motor	
Power steering motor, construction	15
Schematic diagram	15
Neutral zone	15
Inspecting and changing the motor brushes	16
Power steer motor removal	16
Power steer motor installation	16

Contents Page

Power steer motor – Dismantling 17
Power steer motor – Reassembling 18
Pinion fitting 18

General hints
Testing the insulation resistance (earthing) 19
Turning down the commutator on a lathe 19
Permissible minimum commutator diameter 19
Undercutting the mica 19

FUNCTIONAL GROUP 11	applicable to		
Drive motor	**R 50**		
Type	GF 146 – 14/5.6		
Maker	STILL		
Construction	series-wound, electric 4-pole motor		
Voltage rating (V)	24 volts		
Amperage rating (A)	215 amps		
rpm	1700		
Power (kW)	4.0		
Service rating	1 hour (S 2)		
Protection	IP 23		
Insulation Class	B		
Fuse protection	250 amps		
Motor brushes a) Grade	KK1		
b) Dimension	16 x 32 x 32		
c) Limit of wear	replace if worn down to a length of 15 mm		
d) Qty	4		
Current draw during cruising (amp) Permissible tolerance = 10 %	Model/Tyres	laden	unladen
	R 50 – 1.0 tonnes/solid-rubber	105	88
	R 50 – 1.0 tonnes/pneum./SE	120	100
	R 50 – 1.2 tonnes/pneum./SE	121	108
	R 50 – 1.2 tonnes/solid-rubber	114	95
	R 50 – 1.5 tonnes/pneum./SE	139	113
	R 50 – 1.5 tonnes/solid rubber	122	99

Technical Data for Maintenance Service

FUNCTIONAL GROUP 11	applicable to		
Pump motor	**R 50**		
Type	GF 116 – 14/5.5		
Maker	STILL		
Construction	series-wound, electric 4-pole motor		
Voltage rating (V)	24 volts		
Amperage rating (A)	260 amps		
rpm	2500 clockwise rotation only		
Power (kW)	5.0		
Service rating	15 min. intermittently rated (S3)		
Protection	IP 21		
Insulation Class	B		
Fuse protection	250 A		
Motor brushes a) Grade	MK 45		
b) Dimension	12.5 x 32 x 32		
c) Limit of wear	replace if worn down to a length of 15 mm		
d) Qty	4		
Current draw during hoisting (A) (applies to Tele 220)	Models/Tyres	laden	unladen
	R 50 – 1.0 tonnes	**262**	**146**
	R 50 – 1.0 tonnes	**262**	**146**
	R 50 – 1.2 tonnes	**299**	**146**
	R 50 – 1.5 tonnes	**327**	**146**

FUNCTIONAL GROUP 11	applicable to
Power steer motor	**R 50**
Type	G 078 - 14/4.4
Maker	STILL
Construction	series-wound, electric 4-pole motor
Voltage rating (V)	24 volts
Amperage rating (A)	40 amps
rpm	1200
Power (kW)	0,48
Service rating	20 min. intermittently rated (S3)
Protection	IP 44
Insulation Class	B
Fuse protection	2 x 20 A with very high breaking capacity
Motor brushes a) Grade	MK 45
b) Dimension	10 x 16 x 25
c) Limit of wear	replace if worn down to a length of 15 mm
d) Qty	2
Current draw during steering motions	45 amps at the maximun, depending on effort exerted on steering wheel

Drive motor

Drive motor, construction

4-pole series-wound motor (1), self-ventilated. Without drive end bearing bracket for flange mounting to gearbox.

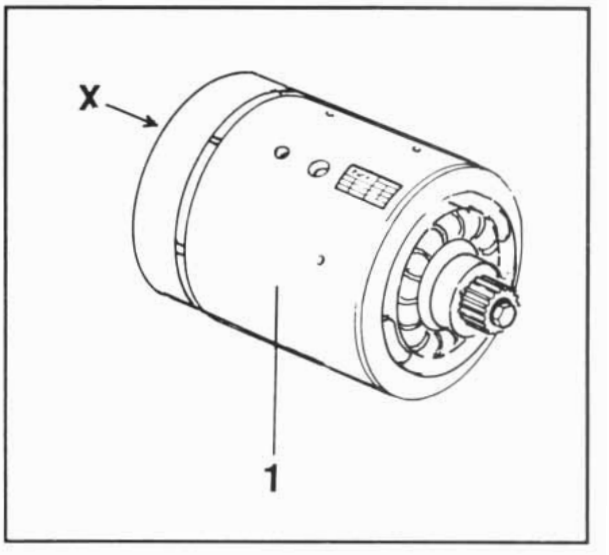

Wiring diagram

A1/A2 = armature
D1/D2 = series winding
The direction of rotation is reversed by reversing the current flow in the armature.

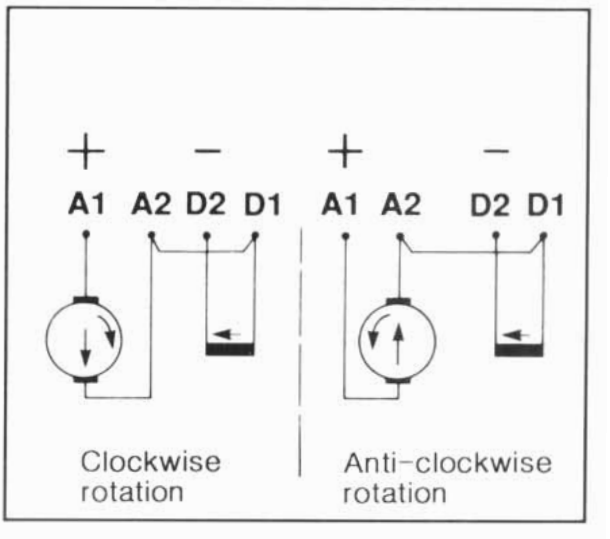

Neutral zone

Is adjusted at the factory on each individual motor. No need, therefore, to readjust the neutral zone. If due to repairs, readjustment of the neutral zone should become necessary, proceed as follows:

Rotate the brush gear clockwise until the centre of the clamping bolt is 1 mm from the estimated centre of the slot. (See view 'X').

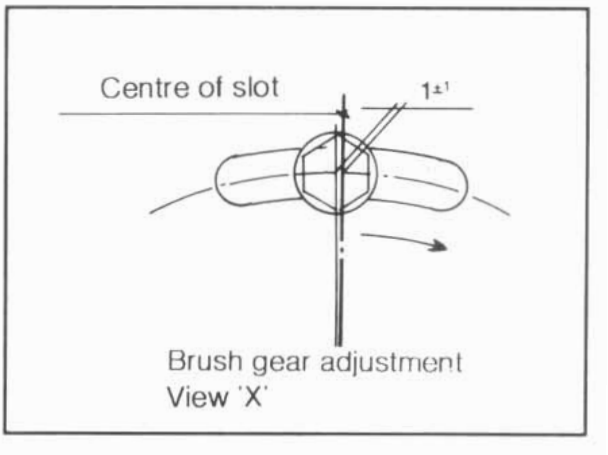

Changing and inspecting the drive motor brushes

Can be done with battery left in position on the truck.

- Swing up contactor control panel
- By turning the steering wheel, bring drive unit into position for access to motor brushes
- Take off inspection plates from around the drive motor bearing bracket
- Lift off brush holder spring and withdraw motor brushes after having first disconnected the brush wires by slackening the hex hd screw

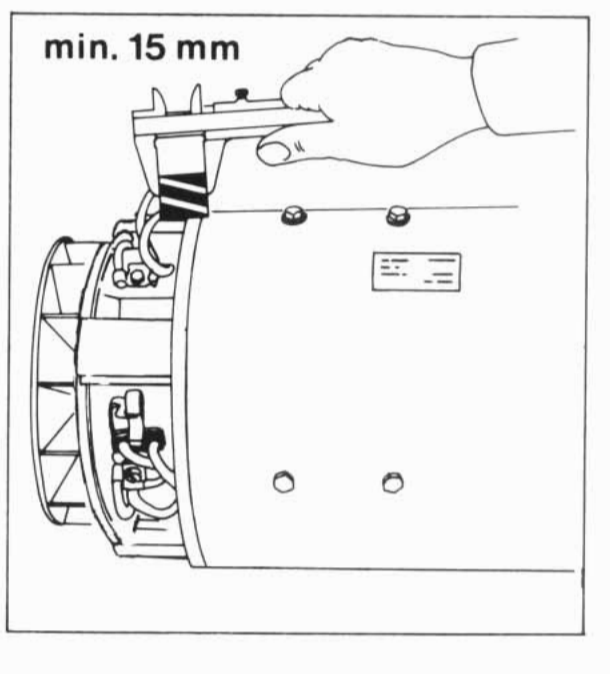

CAUTION:

Minimum brush length 15 mm long. Brushes worn to a length less than 15 mm should be replaced. (Also refer to 'Technical Data for Maintenance Service'. Functional Group 11).

Drive motor

Drive motor removal

This operation requires the removal of the battery.

- Swing contactor panel up and secure in place
- Disconnect leads from contactor panel
- Remove water-deflecting sheet
- Turn drive unit through 90 degrees. Fan must be at the rear. Unscrew **4** screws
- Turn drive unit anti-clockwise through 180 degrees (fan at the front) and withdraw motor by hand or lifting gear. To prevent injury to hands it is advisable to first unscrew the splash-proof guards

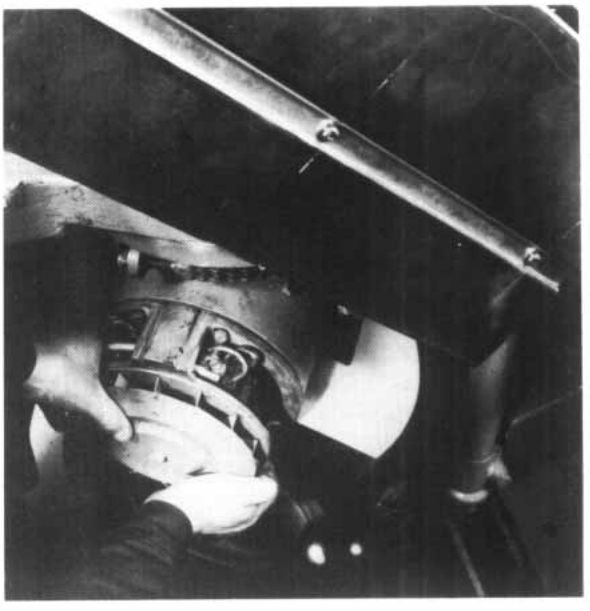

Drive motor installation

Reverse the above procedure to install motor.

NOTE:

Position motor by first adapting the longer screws.

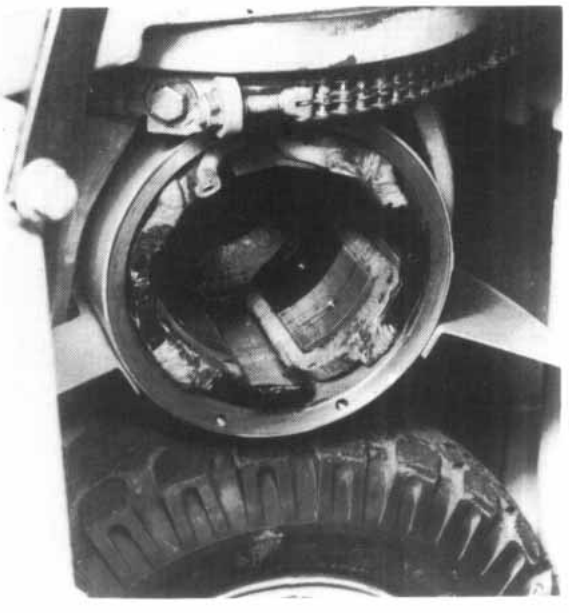

Drive motor disassembly

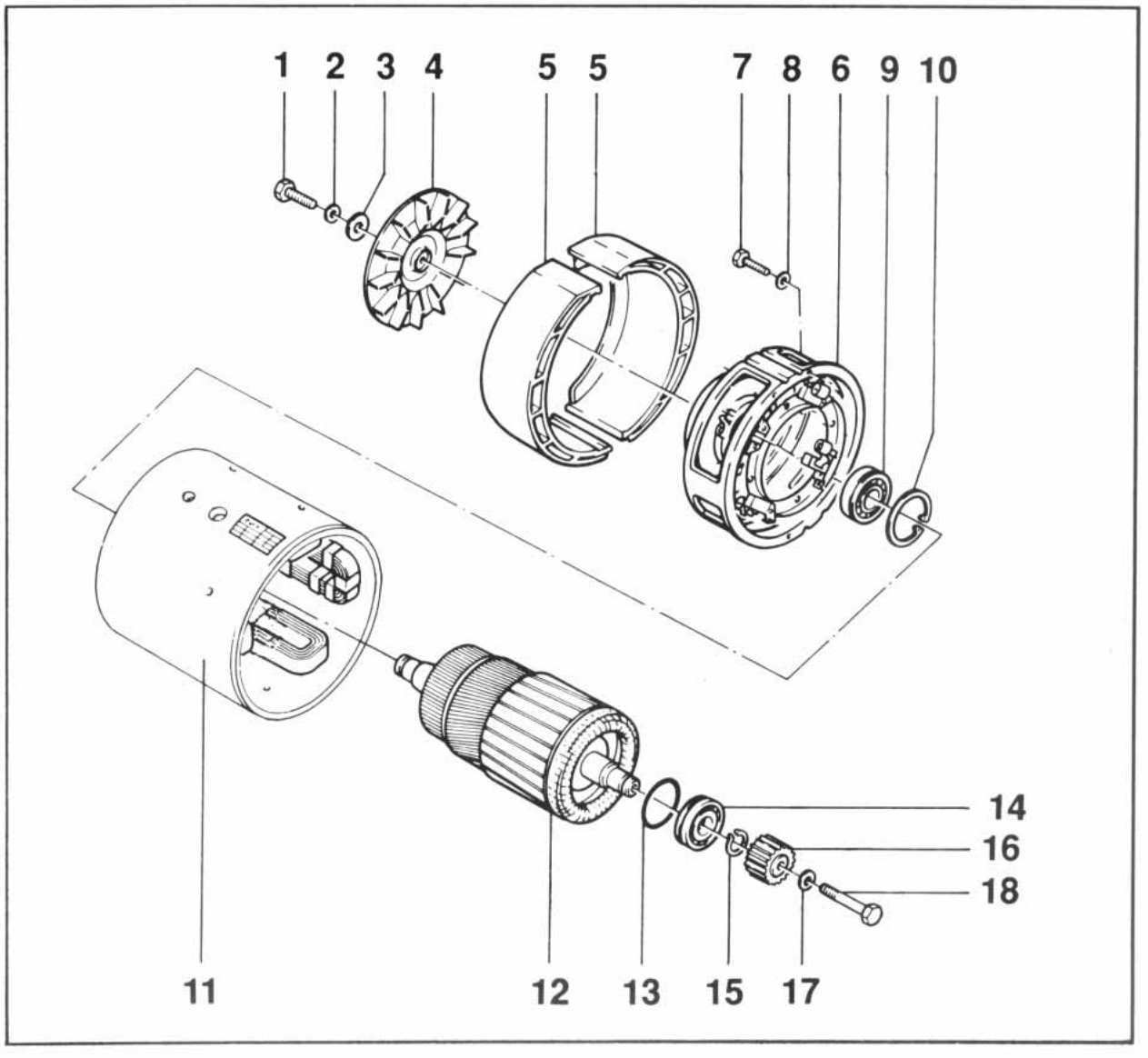

1 =hex. hd. screw M8 x 20 8.8
Torque loading = 18 Nm
2 =spring washer A8
3 =washer
4 =fan
5 =inspection covers – commutator
6 =commutator end bracket
7 =hex. hd. screw M6 x 20 8.8
Torque loading = 9.5 Nm
8 =spring washer A 6
9 =grooved ball bearing
10 =circlip
11 =stator
12 =armature
13 ='O' ring
14 =grooved ball bearing
15 =circlip
16 =gear
17 =plain washer
18 =hex. hd. bolt M10 x *60* 8.8
secured with Loctite 242
Torque loading = 50 Nm

Drive motor disassembly

- Remove inspection covers (5)
- Disconnect the armature cables from the brush gear
- Pull commutator end bracket (6) with armature (12) from stator (11) by removing the four hex. hd. screws (7)

Drive motor

- Remove fan **(4)** by undoing and removing screw
- Clamp armature (12)with end bracket (6)in a bench vice and pull comm. end bracket from armature using a suitable puller
- Once the circlip (10) has been removed, bearing (9) can also be forced out of the comm. end bracket
- Remove hex. hd. bolt (18) (secured with Loctite)
- Using the Kuko extactor 15 – 12 Gr. 1 withdraw the pinion
- If necessary, remove the grooved ball bearing using a puller

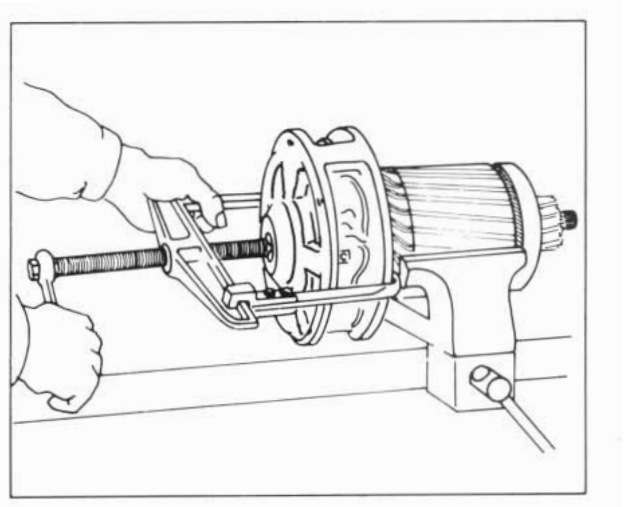

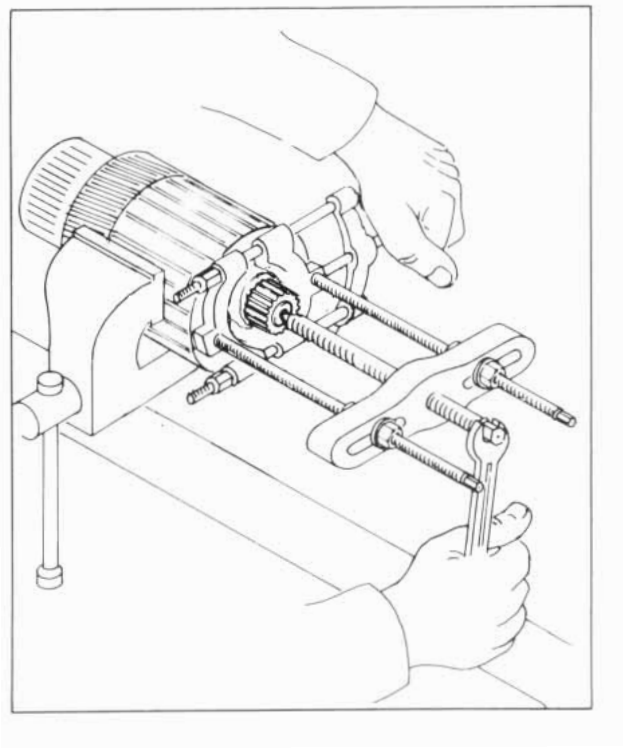

Drive motor - Reassembling

To reassemble the drive motor, reverse the procedure.

Pinion and armature shaft - Reassembling

- Cleanse conical faces of both pinion and armature shaft (1) absolutely free of grease
- Clean threads (2) of armature shaft and hex. hd. bolt free of grease and apply a light smear of Loctite 242 to the threads
- Place the pinion onto the armature shaft and using a suitable press, press the pinion onto the shaft by applying a presure of 28 KN
- Tighten hex. hd. bolt (3) to a torque of 50 Nm

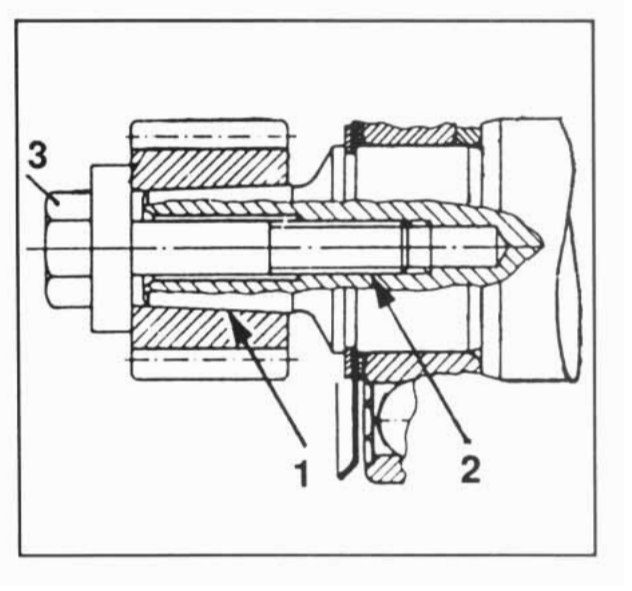

Pump motor

Pump motor, construction

4-pole series-wound motor (1) with flange for connection to pump.

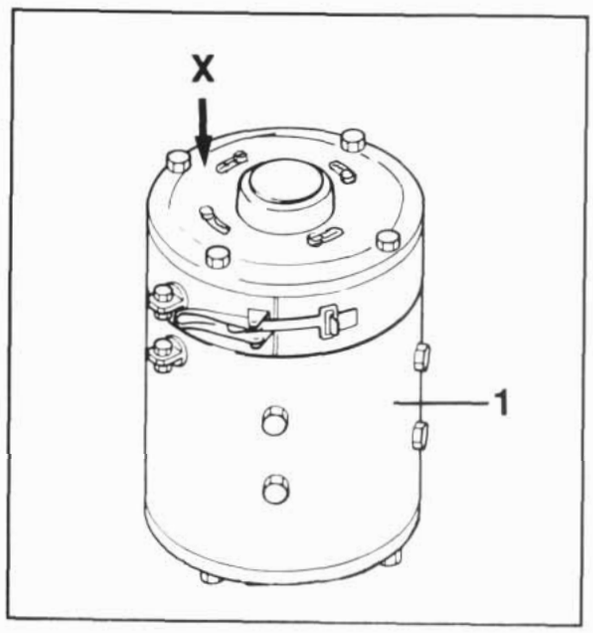

Wiring diagram

A1/A2 = armature
D1/D2 = series winding

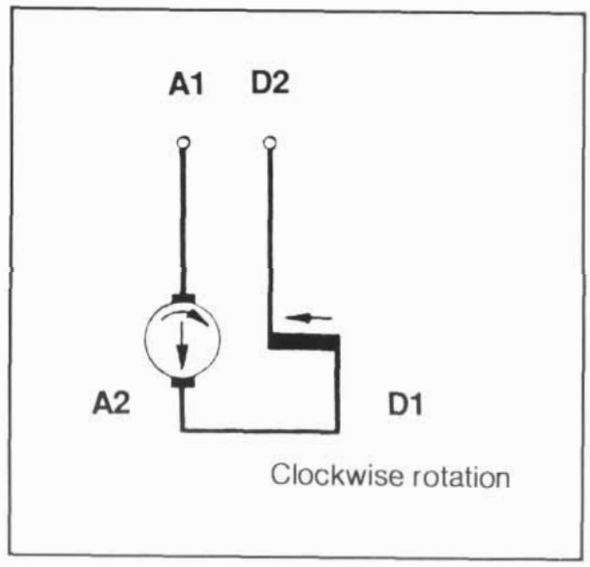

Correct brush gear adjustment

Is effected at the factory on each individual mtor. No need, therefore, to readjust the brushes. If due to repairs, brush gear readjustment should become necessary, the most effective adjustment in respect to the best commutation and running characteristics can be achieved as follows:

Rotate the brush gear clockwise until the centre of the clamping bolt is 7 mm from the estimated centre of the slot. (See view 'X').

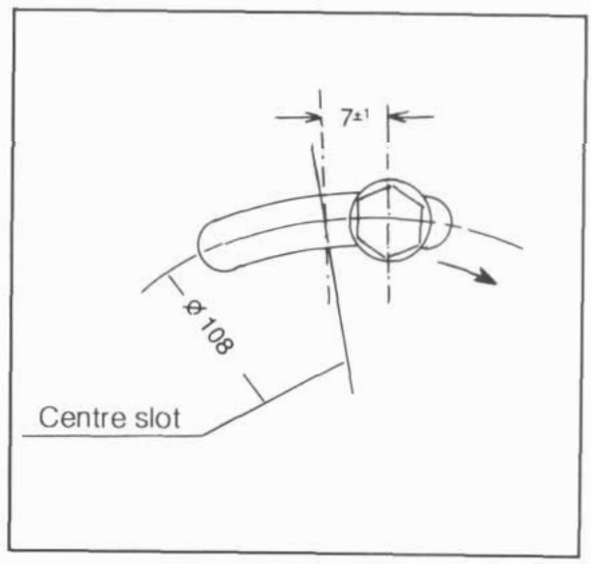

Inspecting and changing the pump motor brushes

- Remove floor plate
- Remove strap
- Lift off brush holder spring and withdraw motor brushes after having first dis-connected the brush leads by slackening the hex. hd. screw

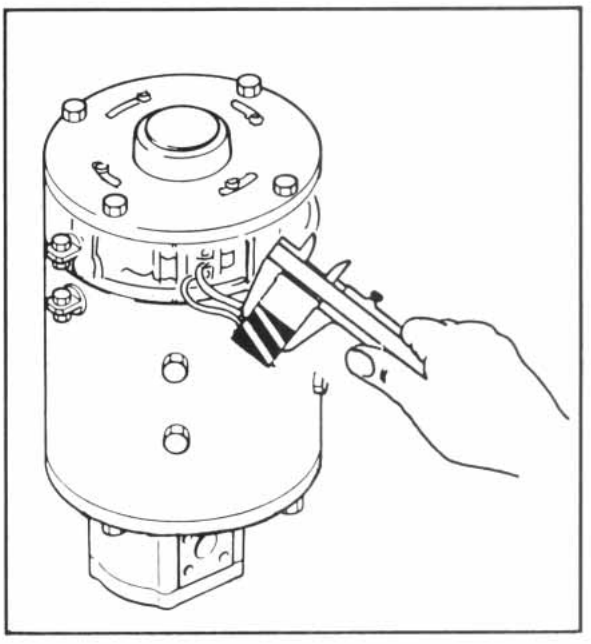

CAUTION:

Minimum brush length 15 mm long. Brushes worn to a length less than 15 mm should be replaced. **(Also** refer to 'Technical Data for Maintenance Service', Functional Group 11).

Pump motor

Hydraulic pump motor removal

- Drain hydraulic oil at drain plug (see Functional Group 10)
- Disconnect the battery
- Disconnect the pressure line at the hydraulic control valve block
- Disconnect the electrical leads at the hydraulic pump motor
- Remove the strap from around the comm. end bracket
- Remove motor mounting bracket from frame by undoing screws
- Attach a hoist of suitable lifting capacity to the hydraulic pump and motor unit. Lift pump and motor out of the lift truck

Hydraulic pump motor installation

Install the pump and motor unit in reverse order of removal.

CAUTION:

After disconnecting motor cables, always replace bolts and nuts to prevent terminals from being pushed into motor housing as this could cause severe damage.

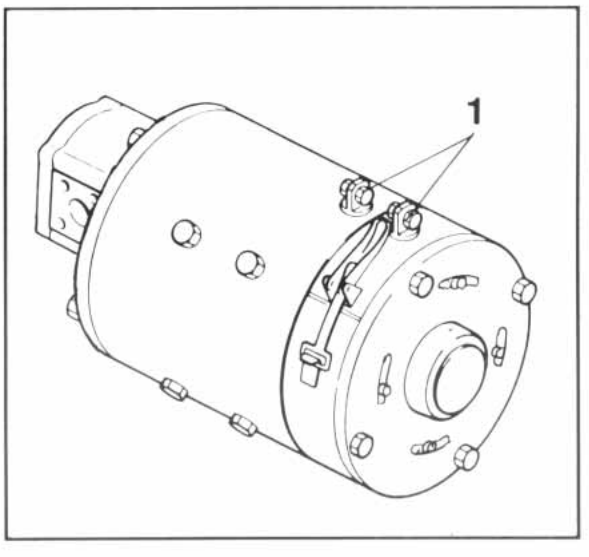

Pump motor - Dismantling

1 = strap
2 = cap
3 = circlip
4 = hex. hd. bolt M6 **x** 80 **8.8**
Torque loading = 9.5 Nm
5 = washer 6.4 St.
6 = comm. end bracket
7 = cup spring
8 = grooved ball bearing
9 = circlip
10 = stator
11 = armature
12 = grooved ball bearing
13 = drive end bracket
14 = spring washer
15 = hex. hd. screw M6 x 20 **8.8**
16 = radial seal

- Remove strap (1) from motor
- Disconnect armature leads from brush gear
- Remove the four hex. hd. screws (15)
- Withdraw the drive end bracket (13) with radial seal (16)
- Drive out radial seal (16) if necessary
- By undoing the four hex. hd. bolts **(4)** separate the commutator end bracket (6) with armature (11) from the stator (10)
- Withdraw the armature (11) and drive end bracket from stator (10) as an assembly
- Remove cap (2)
- Remove circlip (3) from armature shaft
- Clamp the armature in a bench vice and withdraw comm. end bracket (6) from armature (11). using an appropriate extractor
- Once the circlip (9) has been removed, the grooved ball bearing (8) can be driven out of the commutator end bracket (6)

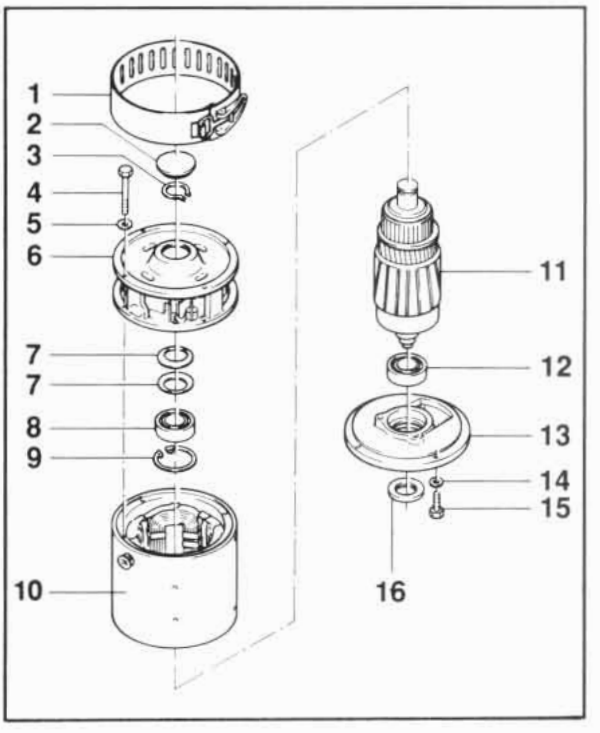

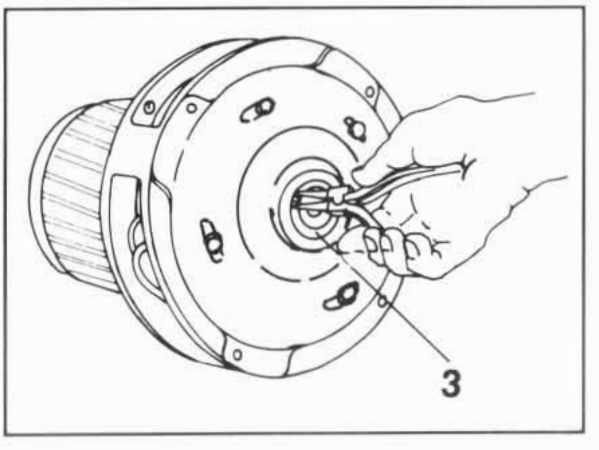

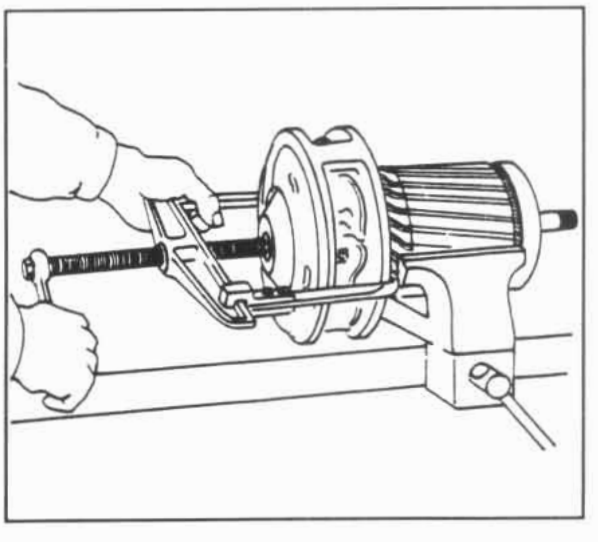

Pump motor

Pump motor - Reassembling

To reassemble the pump motor, reverse the dismantling procedure. Care must be taken to observe the following:

- When fitting a new radial seal (16) ensure the seal is positioned correctly, with the sealing lips facing outwards
- Before installing the armature apply a smear of grease to the sealing lips
- When positioning the cup springs (7) into the bearing bracket, care must be taken to ensure they are positioned correctly, with their convex sides placed against each other (arrangedin)(position)

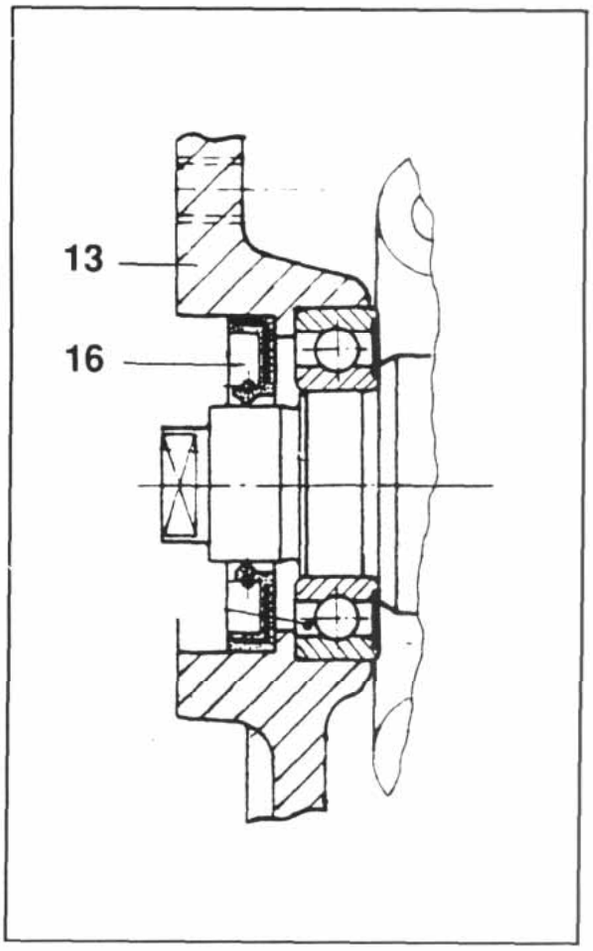

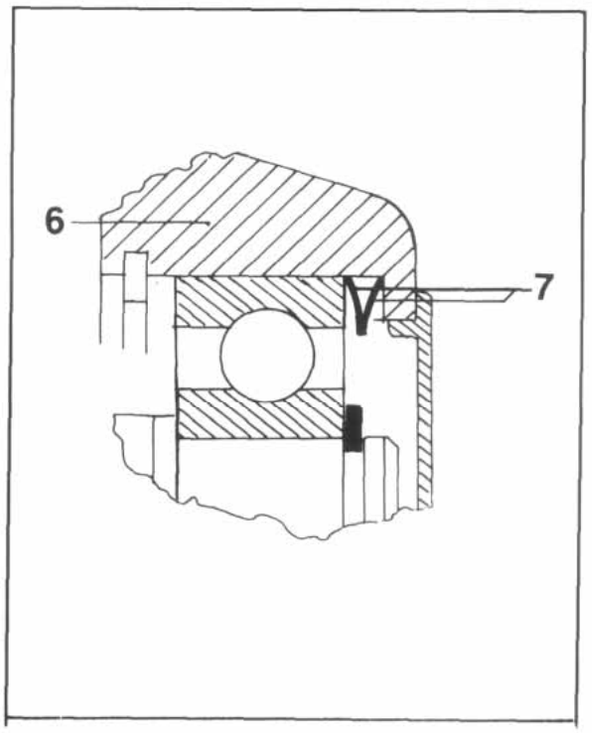

Power steering motor, construction

4-pole series-wound electric motor (1) fitted with two separate series field windings and integral leads. The drive end of the motor consists of a bearing bracket with integrated reduction gear.
Gear ratio is 1 : 2.46.

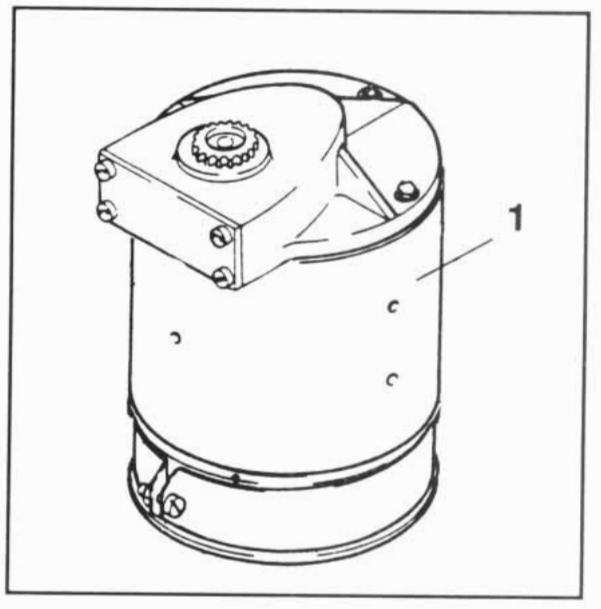

Schematic diagram

A1/A2 = armature
1D1/1D2 = series field winding 1
2D1/2D2 = series field winding 2
(two windings are provided, one for each direction of rotation)

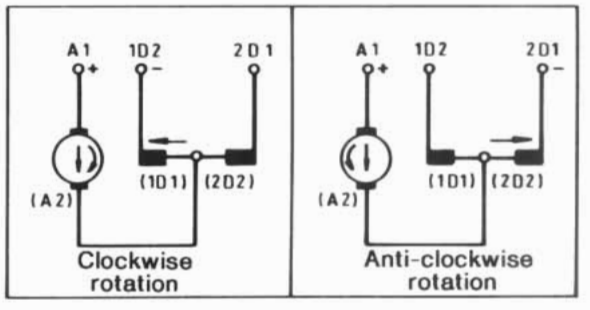

The direction of rotation *of* the motor depends upon whether 1D2 or 2D1 is connected across the negative terminal.

Neutral zone or plane

Is adjusted at the factory on each individual motor. No need, therefore, to readjust the neutral zone. If due to repairs, readjustment of the neutral zone should become necessary, proceed as follows: Rotate the brush gear until the clamping bolt *is* in the centre of brush gear slot.

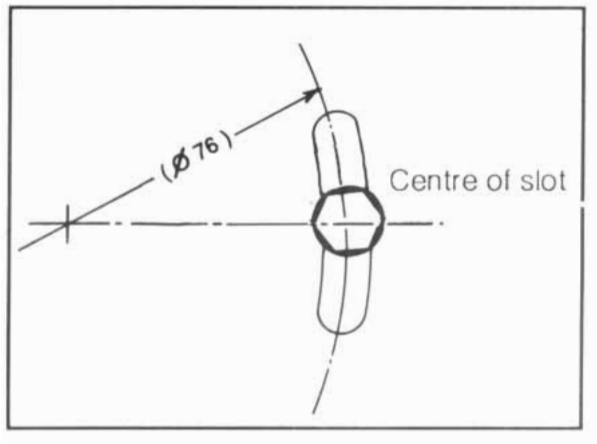

Power steering motor

Inspecting and changing the motor brushes

- Tilt mast fully back
- Using a screwdriver which must be inserted through the LH wheel opening, slacken and remove strap from around motor
- Lift off brush holder spring and pull motor brush out after having first disconnected the brush leads by slackening the allen screw holding brush leads

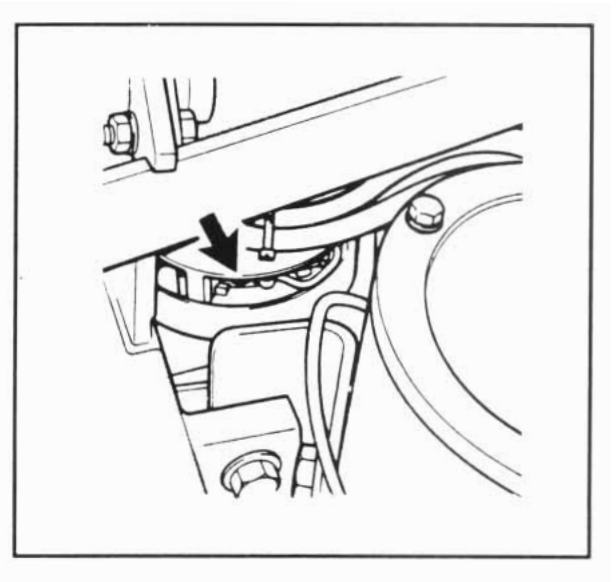

Power steer motor removal:

WARNING!

Disconnect the battery before performing the following steps.

- Remove floor plate
- Slacken screws retaining steering gear (incorporating an anti-kickback device) to the motor and rotate the steering gear
- Remove steering chain
- Disconnect the electrical leads connecting motor to connector
- Remove screws securing motor to mounting bracket and remove motor
- Lift motor out of the lift truck

Installation

To reinstall power steer motor reverse the above procedure.

Power steer motor - Dismantling

1 = bearing bracket with integrated reduction gear
2 = hex. hd. screw M6 x 20 8.8
3 = C-shaped washer
4 = washer **6.4** St.
5 = pinion
6 = grooved ball bearing
7 = stator
8 = armature
9 = circlip
10 = grooved ball bearing
11 = comm. end bracket
12 = circlip
13 = cap
14 = C-shaped washer
15 = hex. hd. bolt M6 x 55 8.8
16 = strap

- Remove strap (16) from motor
- Disconnect armature leads from brush gear
- Remove the four hex. hd. screws (2)
- Withdraw the bearing bracket
- By undoing the four hex. hd. bolts (15) separate the commutator end bracket (11) with armature (8) from the stator (7)
- Withdraw the armature (8) and commutator end bracket (11) from stator as an assembly
- Remove cap (13)
- Remove circlip (12) from armature shaft
- Clamp the armature in a bench vice and withdraw commutator end bracket (11) from armature (8)
- Once the circlip has been removed, the grooved bal bearing (10) can be driven out of the commutator end bracket (11)

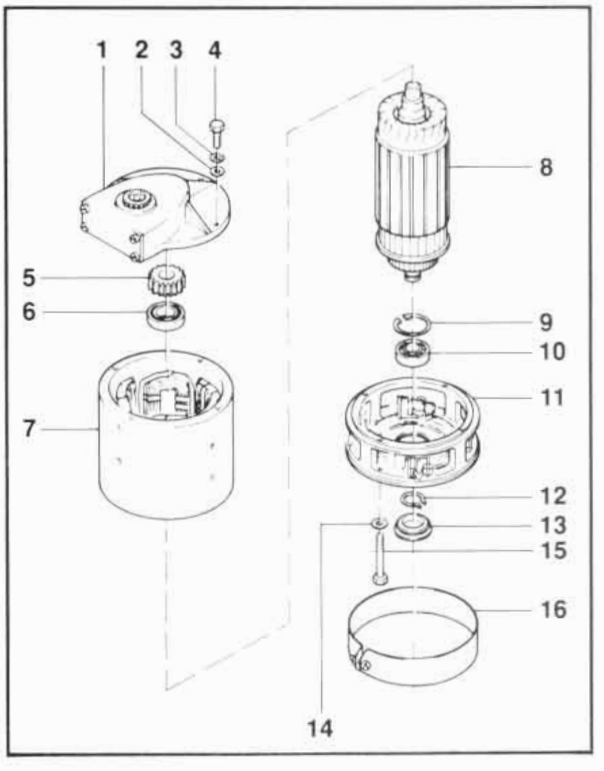

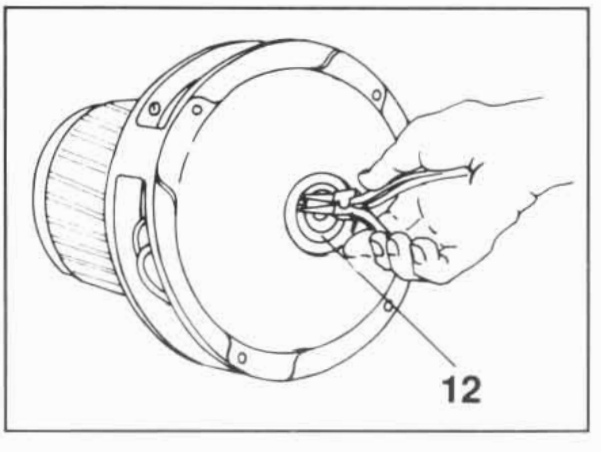

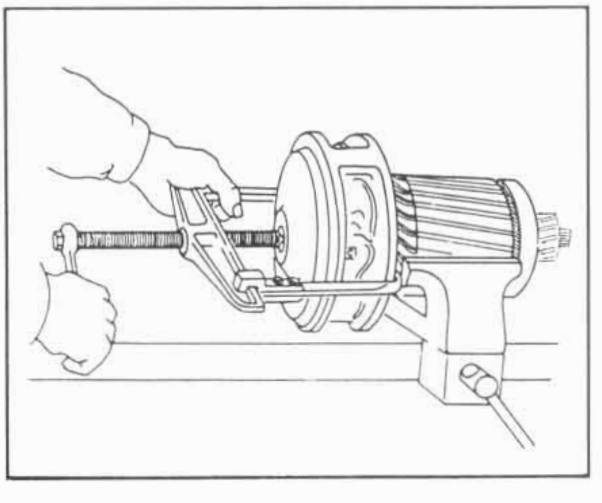

Power steering motor

- If the grooved ball bearing (6) must be replaced it will be necessary to also withdraw the pinion (5) in one operation using the 'Kuko' extractor 15 – 12 Gr. 1.

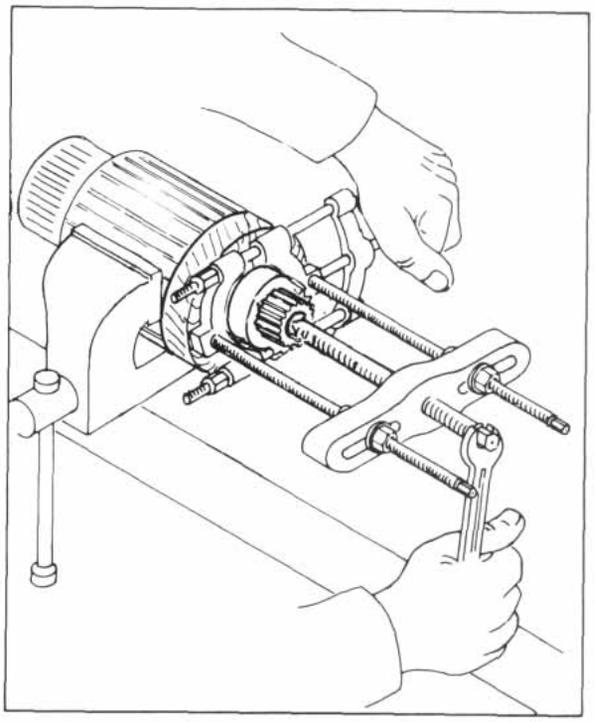

Power steer motor - Reassembling

- To reassemble the power steer motor, reverse the dismantling procedure

Pinion fitting

Attention! – A tight fit of pinion (5) can only be achieved provided the armature shaft seat is in an irreproachable condition. Before assembling the pinion onto the armature shaft it must be heated to 260" *C* and then pressed onto the armature shaft against the grooved ball bearing.

Testing the insulation resistance
(earthing)

The resistance of the insulation of all windings against housing must be at least 1000 ohms/volt. The test should be carried out by applying a d.c. voltage of 500 volts minimum, i.e. 24000 ohms on 24–volt trucks.

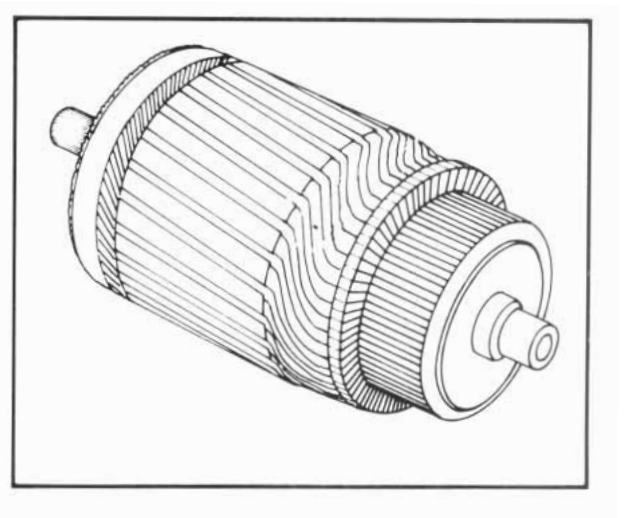

Turning down the commutator on **a** lathe

Permissible untrueness
0.02mm up to a rated armature speed of 3000 rpm
0.01**mm** if rated armature speed exceeds 3000 rpm

If the commutator is out–of–round turn down the armature on a lathe. **A** better surface finish will be produced at high cutting speed combined with a fine feed.

IMPORTANT!
The commutator is allowed to be turned down up to a minimum diameter only.

Drive motor	100 mm dia.
Pump motor	78 mm dia.
Power steer motor	55mm dia.

Undercutting the mica

Carefully undercut the mica with the aid of an appropriate saw blade or a milling machine. Make sure the full width of the mica is completely removed also at the sides of the laminations.

The mica insulation between the com–mutator segments must be recessed to a depth corresponding to the width of the mica.

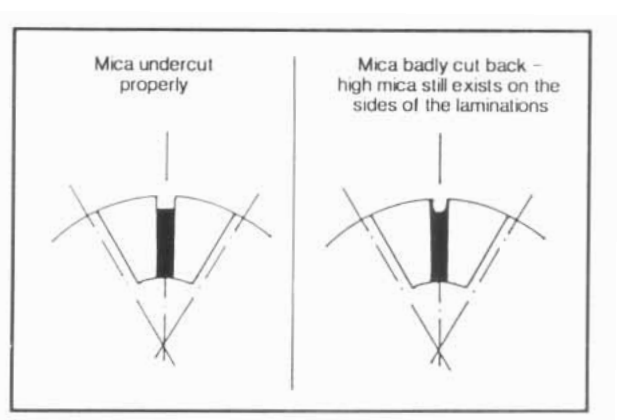

Contents **Page**

Pressure Regulator Unit I and II		1
Pressure Regulator Unit	– Pressure limiting valve	
	– Pressure gauge	2
Pressure limitation for Sideshift Clamp		3

Pressure Regulator Unit I and II

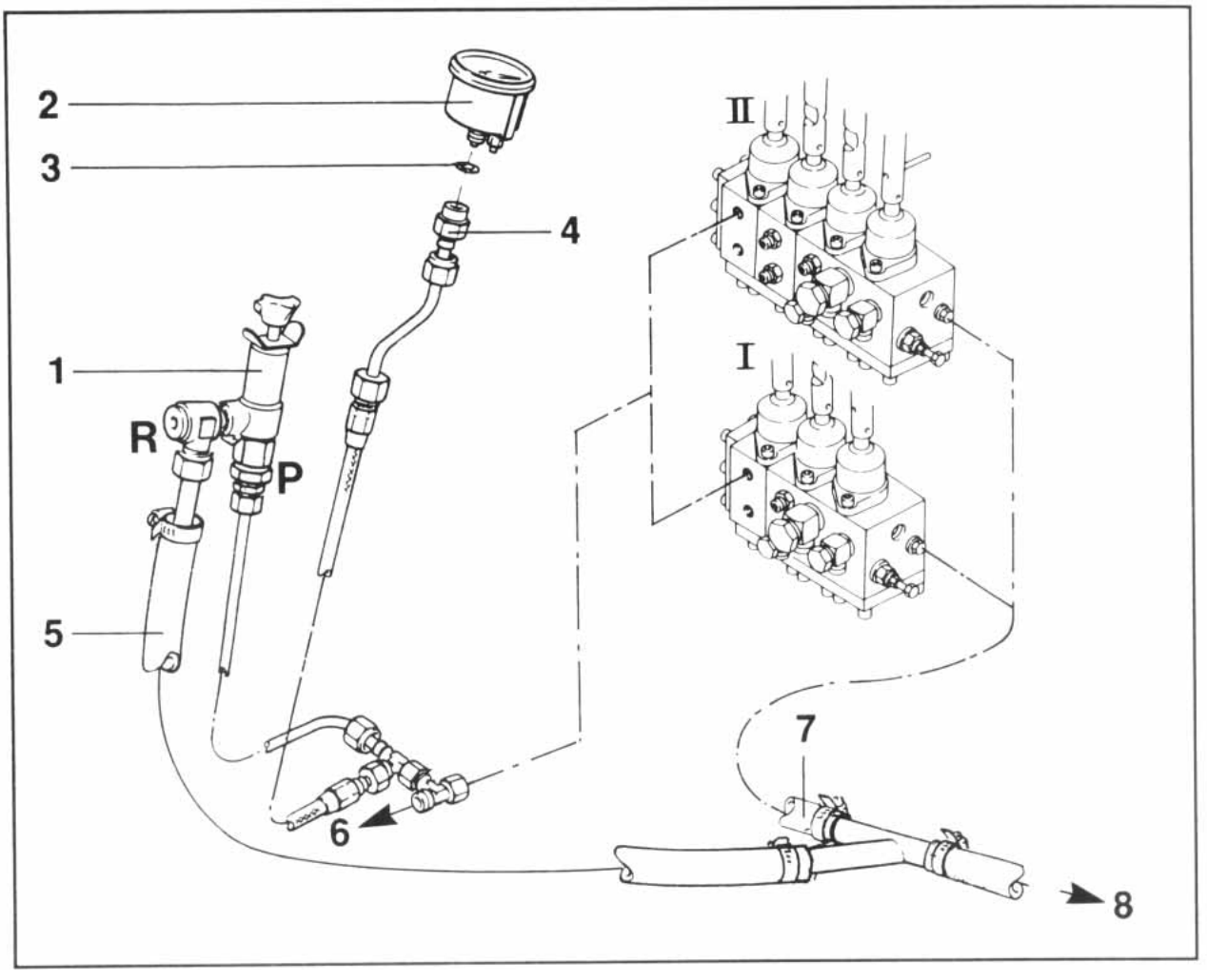

1 = pressure limiting valve
2 = pressure gauge
3 = sealing ring
4 = pressure gauge connection
5 = return hose line
6 = hyd. line to attachment
7 = return hose line–valve bank
8 = return line to tank

Operation

To protect the product being handled and also the attachment, a pressure regulator unit with an adjustable pressure limiting valve (1) is (f.i. when using a clamp) installed in the instrument panel shroud, on the LH side.

The pressure gauge (2) displays the pressure setting.

The pressure regulator unit is connected to the upper connection port of the control valve bank for the function 'Clamp closing on to the load'.

The pressure regulator unit I for the 3rd function is connected to the quick disconnect couplings on the RH side of the fork carriage, whereas the pressure regulator unit II for the 4th function is connected to the quick disconnect couplings on the LH side of the fork carriage.

Pressure Regulator Unit

Pressure limiting valve

Typ MV *53* ER

- Adjusting range: *0* – 160 bar
- Manually adjustable

1 = rotating knob
2 = winged lock nut
3 = shims
4 = housing
5 = spring washer with screw
6 = pressure spring
7 = washer
8 = ball
9 = cushion piston
10 = cushion spring

Oil flow is from P → R. By screwing or unscrewing the knob (1) pressure setting can either be increased or reduced.
The adjusting range and therefore the maximum pressure is limited by shims (3) to a setting of 160 bar.

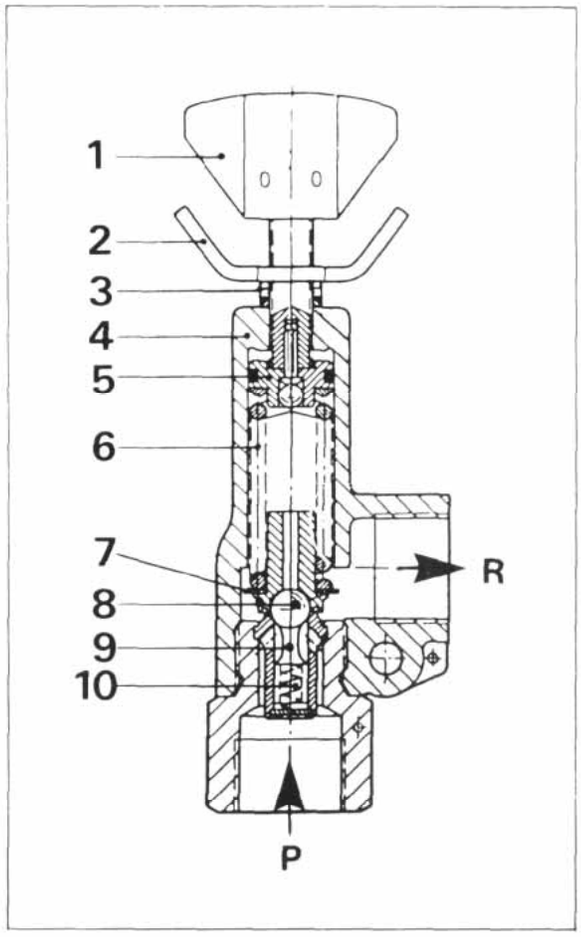

IMPORTANT!

Regarding the maximum pressure to which the attachment can be subjected, follow the instructions of the attachment maker. (Identificationplate on attachment).

Pressure gauge

Installed in the shroud of the instrument panel, LH side.

1 graduation = around 25 bar

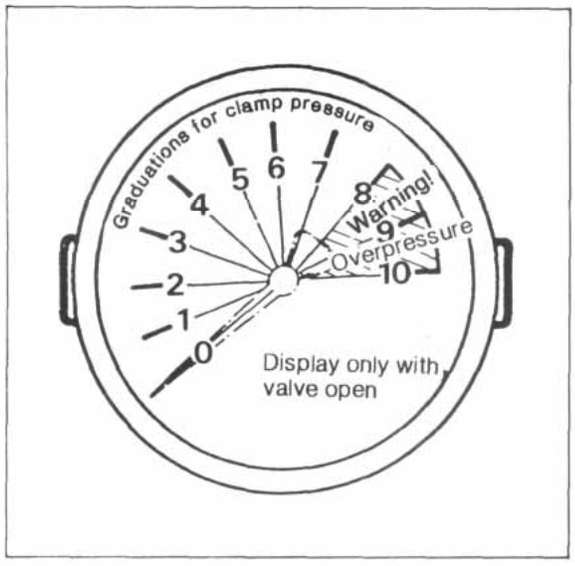

Note:

A drop in the pressure display with valve spool in the neutral position is caused by overflow oil at the spool and does not mean that there is a drop in pressure on the attachment. To assure its holding function the attachment is fitted with a check valve.

Pressure limitation for Sideshift Clamp

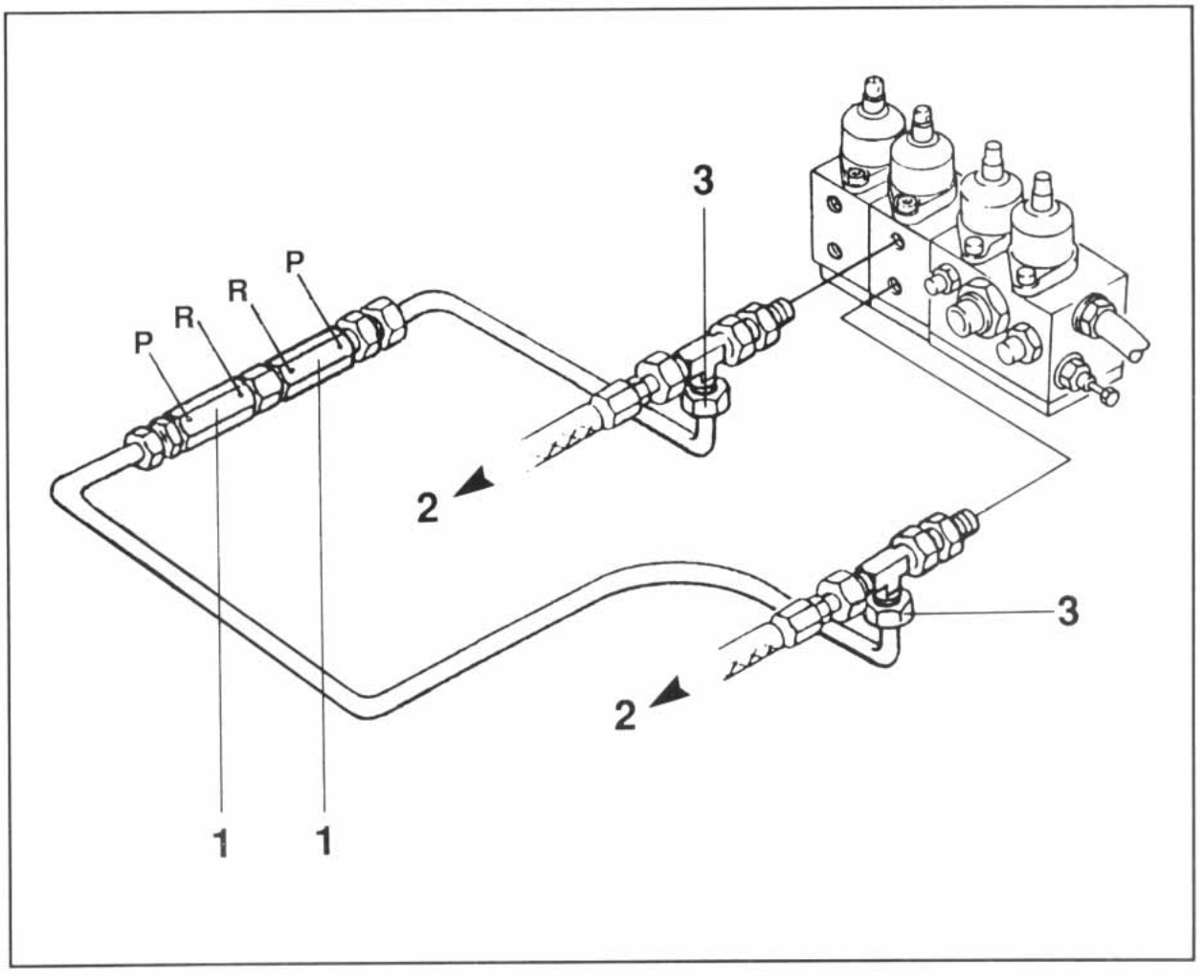

1 = anti-cavitation valve/pre-set pilot pressure 125 bar
2 = pressure line to attachment (via RH hose line on mast)
3 = pressure limitation connection

Operation

When using clamps with integral sideshift, the pressure for the sideshift motion must be limited to a maximum setting of 125 bar in order to prevent the clamp arms from opening automatically when the sideshift motion is against the stop.

When the clamp has moved up to its stop right or left the anti-cavitation valves will open at a pressure of 125 bar, allowing the oil to take the return line to the tank.

Operation of Anti-cavitation valve

R → P = free oil flow
P → R = restricted

For Construction see Functional Group 10

The pressure limitation is built in due to safety reasons when using 3rd and 4th functions. Should an attachment be used on which the pre-set pilot pressure is not sufficient for assuring the function, either the pre-set pilot pressure can by screwing the threaded shim item 7 (see Functional Group 10) be increased up to a maximum of 160 bar, or the function of the anti-cavitation valves can be neutralized by disconnecting/ plugging the pipe connections (3).

CAUTION:
When using a Sideshift Clamp with built-in sideshift the original function must be restored.

Contents

	Page
Technical Data for Maintenance Service	1
Types of mast / Removal - Installation	3
Telescopic mast	4
Hi-Lo mast	7
Triple mast	10
Chain adjustment / Carriage stops	13
Support rollers	14
Hoist cylinder	16
Line failure safety device	19
Lowering valve	20

Technical Data for Maintenance Service

FUNCTIONAL GROUP 20	
Elevating mast	
Support roller bolt	Torque loading 60 +/- 6 Nm
Line failure safety device	Torque loading 20 +/- 2 Nm
Chain	max. permissible stretch = 3 % to be checked to UVV
Lowering speed	max. permissible = 0.6 m/sec

Mast types

All mast types are clear-view masts. The section of the mast is an I beam.
Fork carriage and mast sections are guided by support rollers which also take up side loadings.

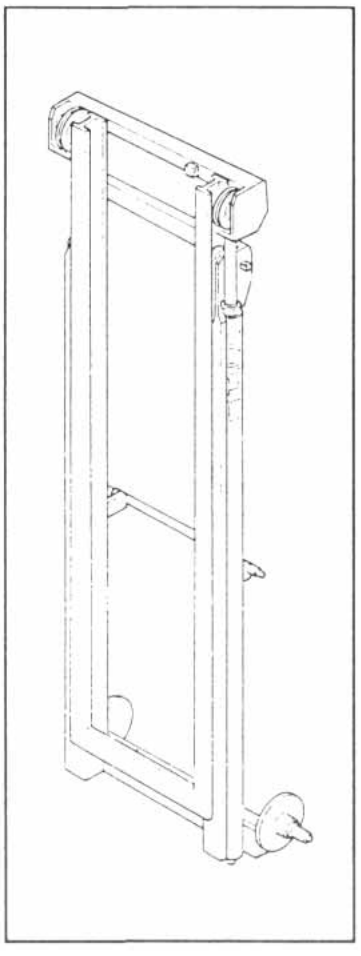

Telescopic

When the mast is raised, the inner section will extend beyond the height of the load. When operating in areas of limited headroom, the lift height of the inner section must be taken into account. (A "free-lift" of 150 mm without 'increasing the overall closed height of the mast).

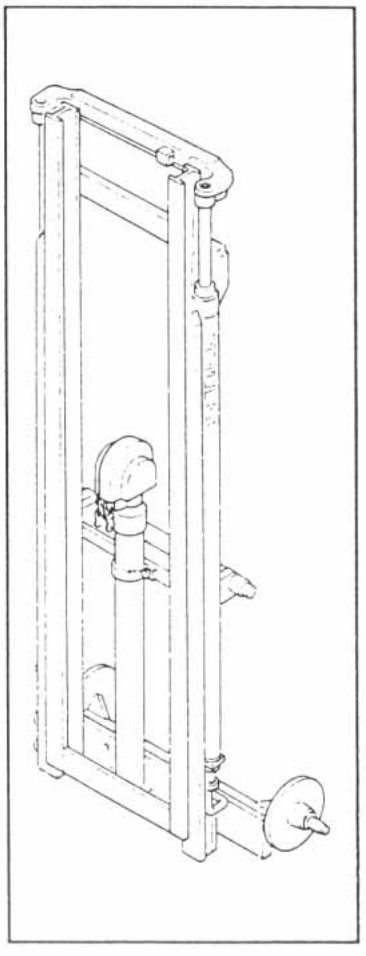

Full free-lift

During the lifting operation, the extending mast section will not exceed the height of the load. When operating in areas of limited headroom, the lift of the inner section need not be taken into account.

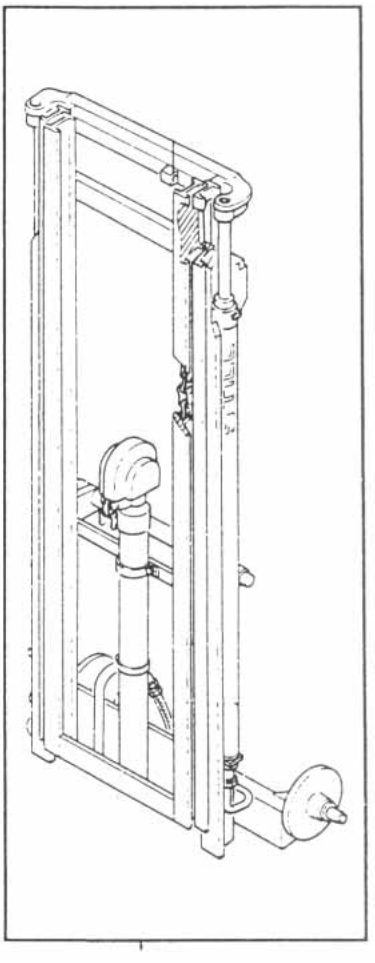

Triple full free-lift

Has similar features to full free-lift mast, but with an extended lift height for the same overall closed height. When operating in areas with limited headroom, the lift of the inner section need not be taken into account.

Removal of mast

1. Secure the truck so that all mast removal work can be done.
   See "Safety instructions for work on mast" - page **40** of "Maintenance instructions for the **work-**shop"
2. With mast vertical, secure above with wire rope or chain.
3. Take off forks or attachment.
4. Loosen hoist cylinder hoses.
5. Pull out tilt cylinder pins from fixings on mast.
6. Screw out mast support fixing bolts.
7. Pull out mast from the front.

Installing the mast

This is done in reverse order.

Note:

To reduce wear the running tracks on which the rollers roll must be greased more or less frequently, depending on operating

Telescopic Mast

Description of Operation

The two external cylinders lie in the profile of the I Beam outer mast.

They are connected hydraulically by one tube.

Both piston rods are connected at the top to the crossmember of the inner mast.

When the cylinders are pressurised both piston rods go out and lift the inner mast.

Travel is limited by cylinder stroke. The lift chains are fixed to the outer mast, run over chain sheaves on the inner mast and are fixed at the other end to the fork carriage. Thus the ratio of inner mast to fork carriage travel is **1** :2.

A lowering valve built into the pipework provides for a maximum lowering speed of 0.6 m/sec.

The r. h. outer cylinder has a line failure safety device.

1 = stop preventing the **fork** carriage coming out and tipping forward (see page **13)**

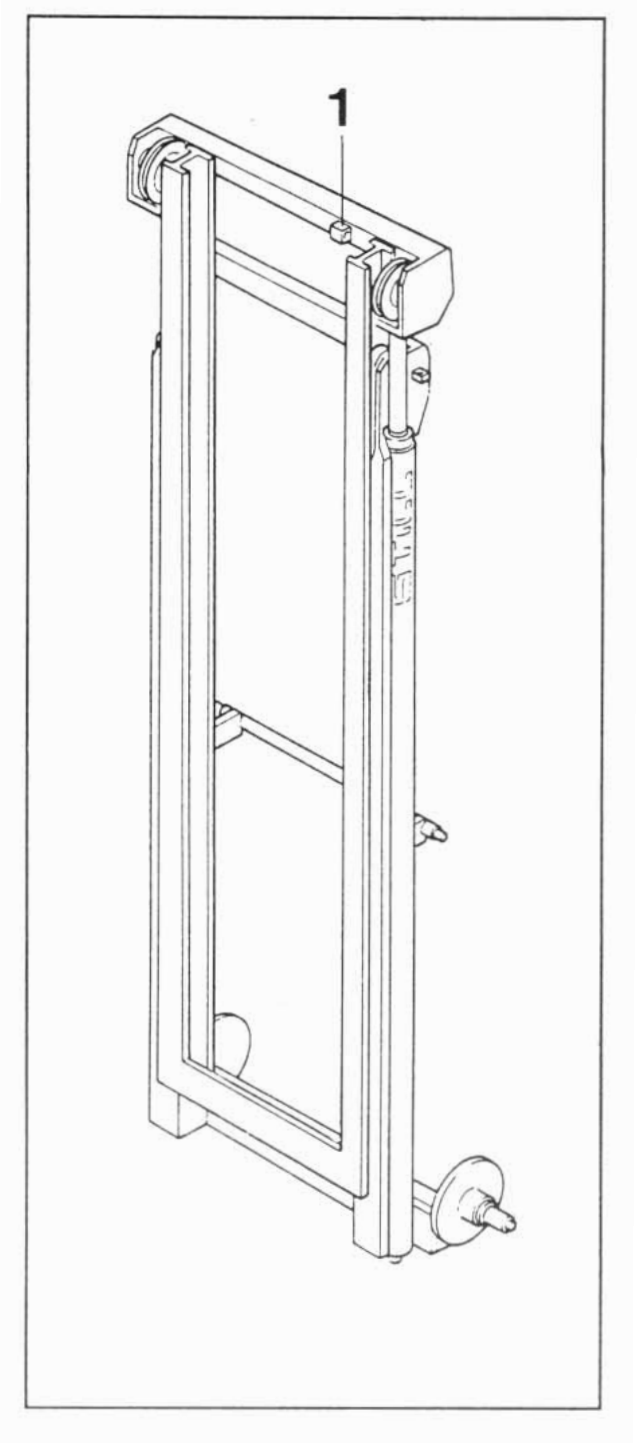

Oil flow in mast

The oil enters at the lowering valve (1) whence it goes to the l.h. and r.h. cylinders.

The line failure safety devices (3) in the outer cylinders prevent the load dropping too quickly if a pipe fractures.

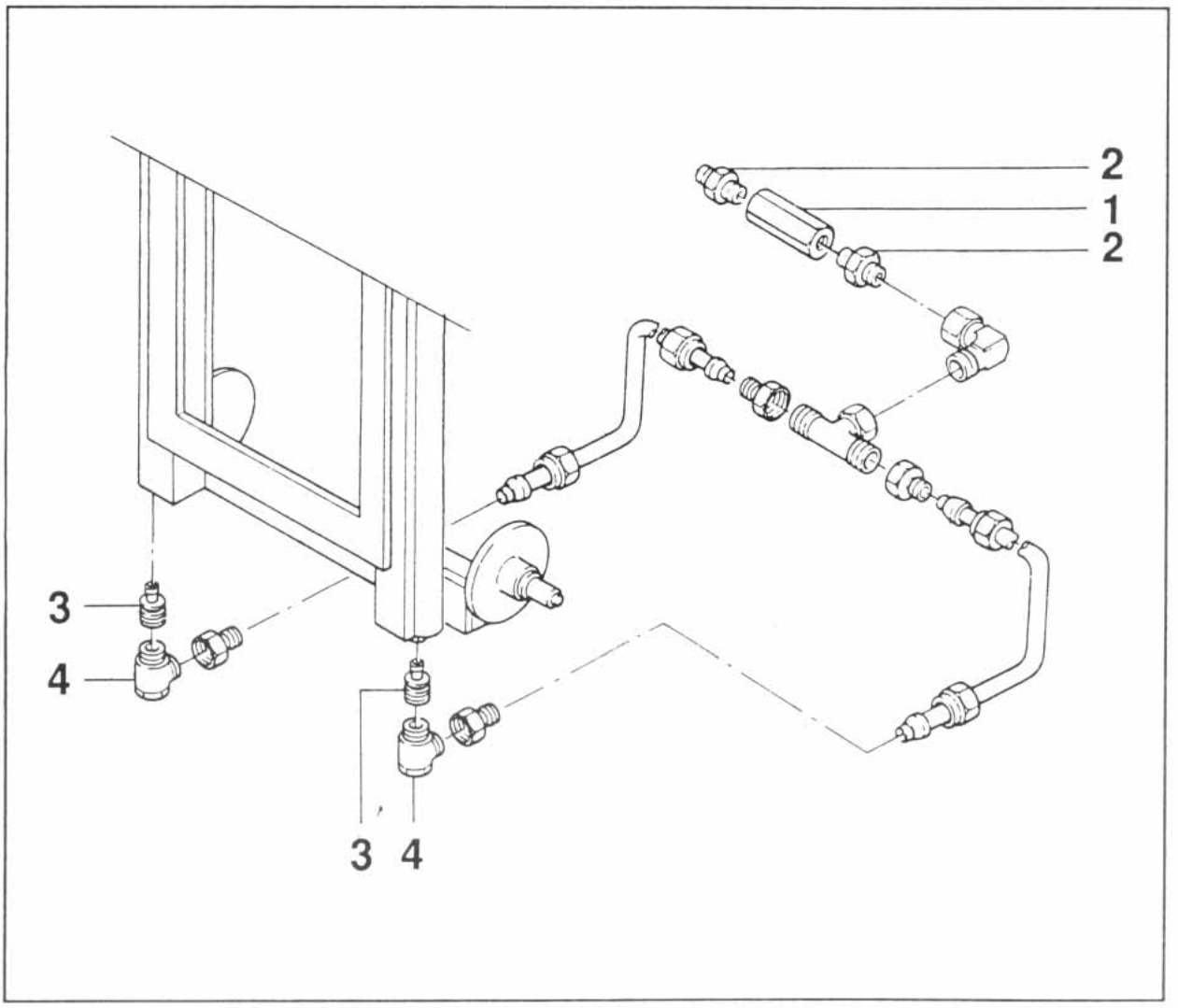

1 = lowering valve SB 25 G-35/170
2 = union male stud
3 = line failure safety device LB 3C 0.5 – 45
4 = union

Note:

On the telescopic mast with up to 2580 of lowered height only the r.h. cylinder incorporates a line failure safety device, whereas both cylinders right and left incorporate such a device from 2630 mm of overall mast height (lowered).

Telescopic Mast

Chain adjustment

The lift chains are tensioned equally by the adjusters (1).

The centre of the central fork carriage rollers must remain 35 mm* inside the inner mast section when piston is fully extended (to cylinder stops).

Under no circumstances must tyre wear be compensated for by adjusting the lift chain tension!

When adjusting the chains, make sure that at least 2 mm clearance is maintained between block on carriage and **stop** on inner mast (see page 13).

Important !

The chains must be inspected for wear, damage and undue stretch (3 **%** at the maximum) in compliance with the regulations of UVV (German Society for the Prevention of Accidents).

* 10 mm for models fitted with pneumatic or superelastic tyres)

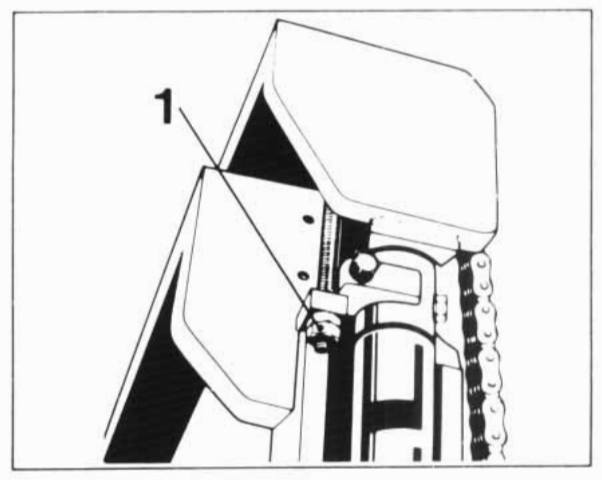

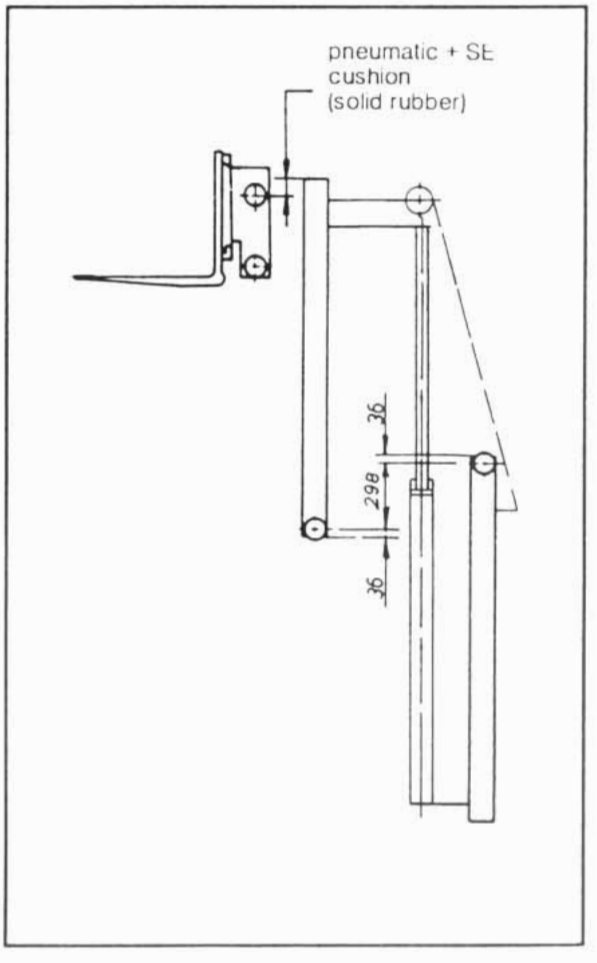

Hi-Lo (full free-lift) mast

Description of operation

The mast has three cylinders.

The short centre cylinder mounts in the inner mast. One end of the centre chains is fixed on the inner mast behind the chain sheave, and the other end to the fork carriage.

This centre cylinder provides the high free lift, extending within the inner mast but not exceeding the overall height of the mast.

The two outer cylinders are tucked into the I beam section of the outer mast.

The piston rods of these cylinders are firmly secured to the inner mast.

When the cylinders are pressurised the centre cylinder first goes out to its stop because of its greater piston area.

Then the two outer cylinders go out and lift the inner mast.

A lowering valve mounted in the pipework provides a max. lowering speed of 0.6 m/sec.

1 = stop preventing the **fork** carriage coming **out** and tipping forward (see page **13)**

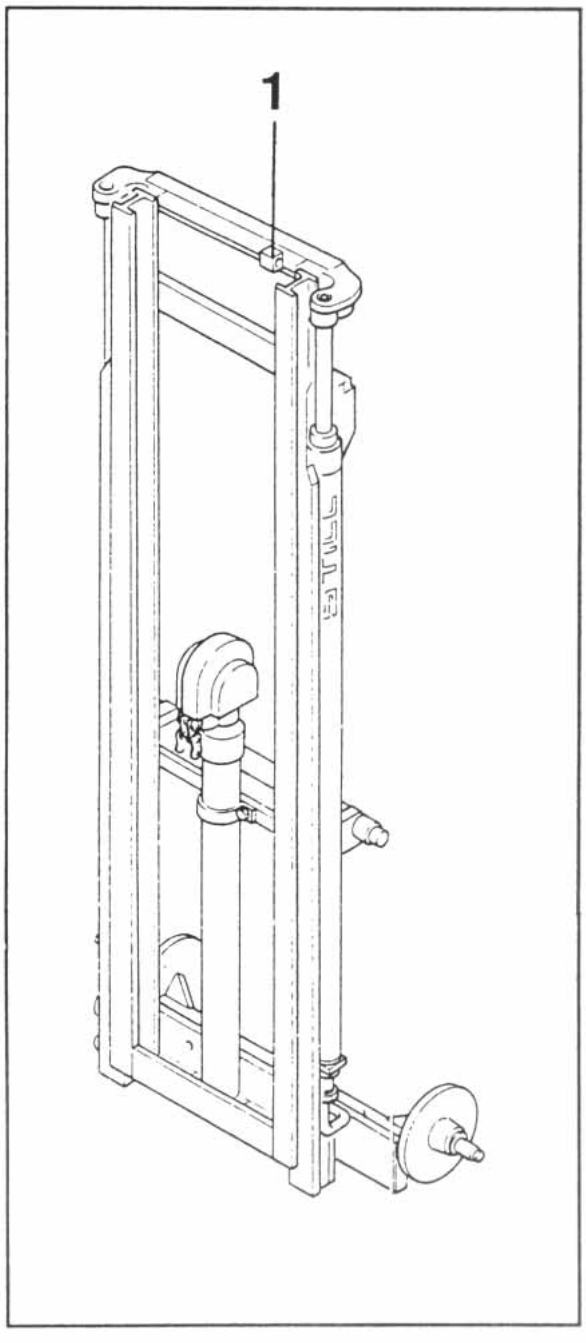

Hi-Lo (full free-lift) mast

Oil flow in mast

The oil enters at the lowering valve. From there through the two outer cylinders. The oil then flows through pipe connections from these two cylinders into the bottom of the central cylinder.

Because of differential piston areas the central cylinder goes out first and when it reaches full stroke the two outer cylinders go out simultaneously.

- Lift I only moves the carriage for Free Lift

  Lift **II** moves the mast section out

The safety devices built into the outer cylinders prevent the load dropping too quickly if a pipe fractures.

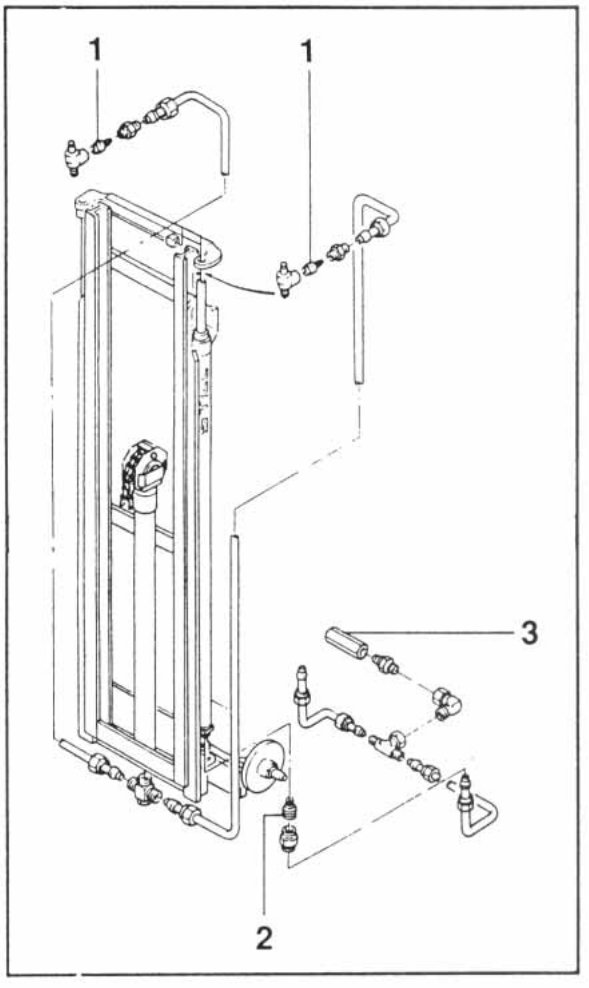

Note:

On the Hi-Lo mast with up to 2180 mm of lowered height only the r.h. outer cylinder incorporates line failure safety devices, whereas the l.h. outer cylinder also incorporates such devices from 2230 mm of overall mast height (lowered).

1 = line failure safety device
LB 3 C 1,0-66

2 = line failure safety device
LB 3 C 0,5-45

3 = lowering valve
SB 25 G-35/170

Chain adjustment

With lift cylinder fully extended, turn the adjuster (2) until the centre of the central fork carriage rollere remains at least 35 mm inside the inner mast section for pneumatic and superelastic tyred models and at least 10 mm for solid rubber tyred models.

Under no circumstances must tyre wear be compensated for by adjusting the lift chain tension.

When adjusting the chains, make sure that at least 2 mm clearance is maintained between block on carriage and stop on inner mast (see page **13).**

important:

The chains must be inspected for wear, damage and undue stretch (3 % at the maximum) in compliance with the regulations of UVV (German Society for the Prevention of Accidents).

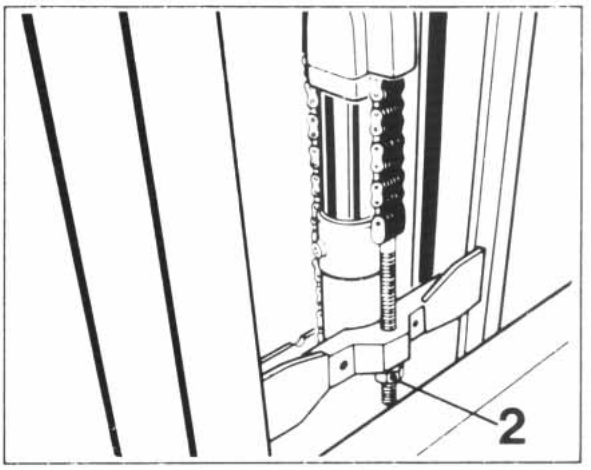

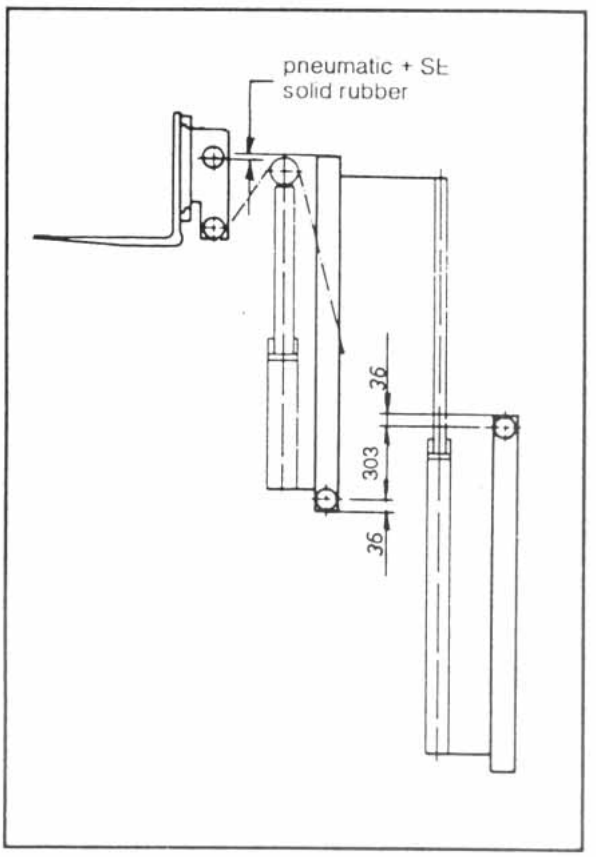

Triple mast

Description of operation

The mast has three cylinders.

The short centre cylinder is in the inner mast. One end of the central chain is fixed to the inner mast behind the chain sheave and the other end to the carriage.

This centre cylinder provides the high free lift, extending within the inner mast but not exceeding the overall height of the mast.

The two outer cylinders are tucked into the I Beam section of the outer mast.

The piston rods of these cylinders are firmly secured to the middle mast.

The chains are arranged on the rear side.

These chains are secured at the top of the outer mast and at the bottom of the inner mast.

When the cylinders are pressurised the centre cylinder first goes out to full stroke because of its greater piston area.

Then the two outer cylinders go out and lift the middle mast. This lifts the inner mast in the ratio of 1 : 2 via the chain connections.

A lowering valve (4) installed in the pipework provides a max. lowering speed of 0.6 m/sec.

1 = stop preventing the fork carriage coming out and tipping forward (see page 13)

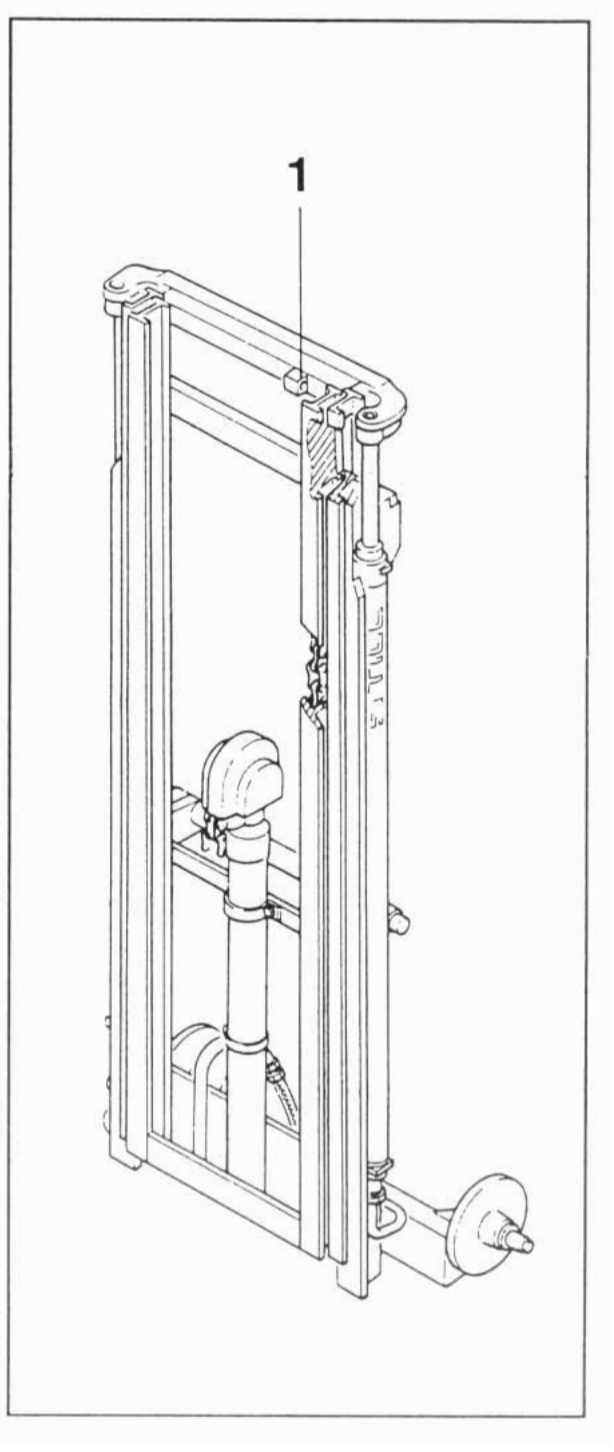

Oil flow in mast

Oil enters at the lowering valve, whence it is directed to the l.h. and r.h. cylinders.

The oil is fed through the l.h. cylinder (plunger barrel) via the hydraulic pipe of the l.h. cylinder down into the central cylinder.

Because of differential piston areas the centre cylinder goes out first. When this has reached full stroke, the two outer cylinders go out simultaneously.

- Lift I moves only the fork carriage for free lift
- Lift II moves the mast section out.

The line failure safety device fitted in the r. h. outer cylinder prevents the load dropping too quickly if a pipe bursts.

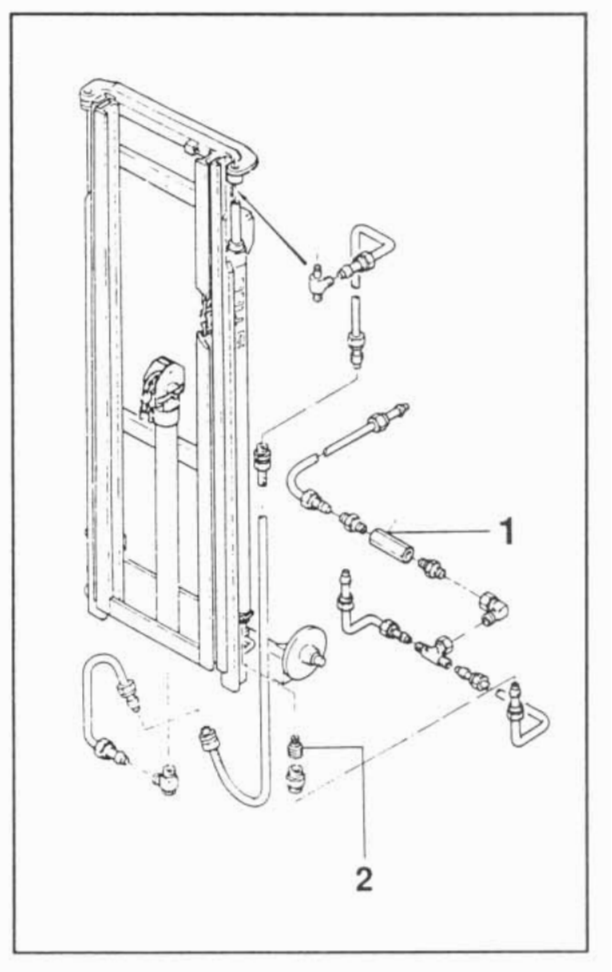

1 = lowering valve
SB 25 C - 35/170

2 = line failure safety device
LB 3 C 0,5 - 45

Triple mast

Chain adjustment

Outer chains:
The outer chains are adjusted equally by the adjusters (3) until the three mast sections are flush.

Central chain:
The chain is tensioned by the tensioner (2) on the centre cylinder.
On pneumatic and superelastic tyred models the centre of the central fork carriage roller must remain at least 35 mm and on solid rubber tyred models at least 10 mm inside the inner mast section when the piston (Lift I) is fully extended (to cylinder stops).
Under no circumstances must tyre wear be compensated for by adjusting the **lift** chain tension!

When adjusting the chains, make sure that at least 2 mm clearance is maintained between block on carriage and stop on inner mast (see page 13)

Important:

Wear, damage and elongation (max. 3 %) are **to** be checked **to** UVV.

Spacing between guide rollers e = 373
up **to** and incl. 2330 mm of o.l.h.
Spacing between guide rollers e = 473
up **to** and incl. 3230 mm **of** o.l.h.

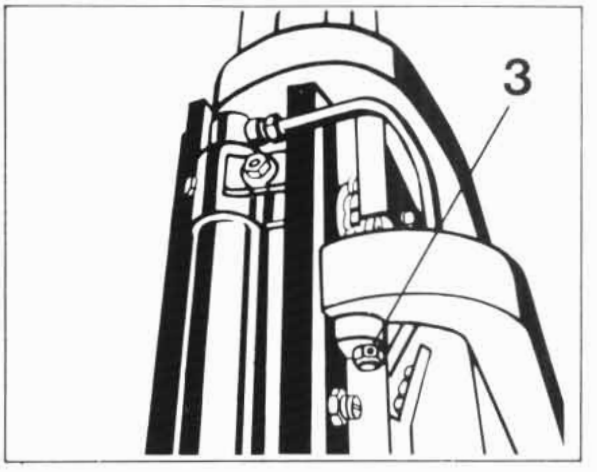

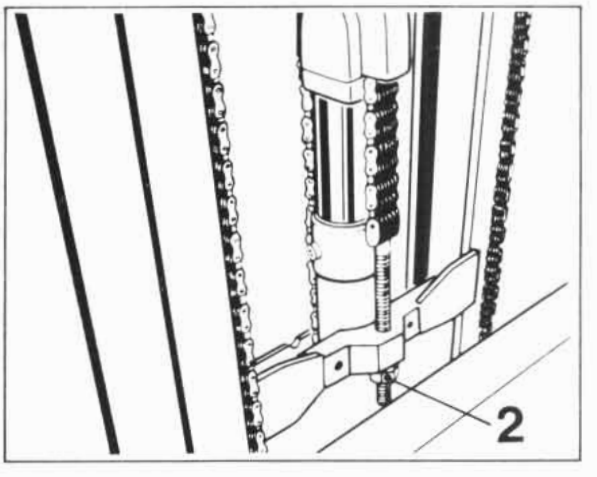

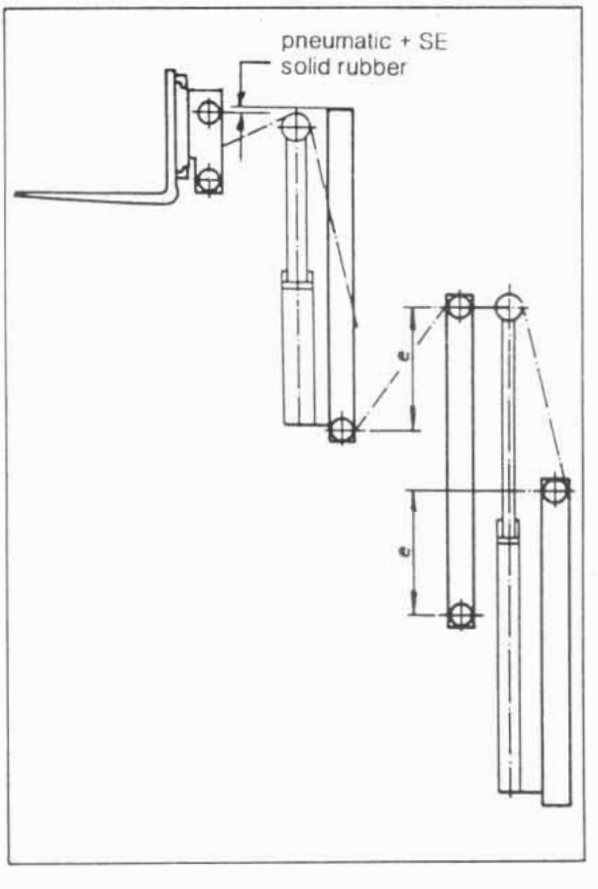

Carriage **stops**

When adjusting the chains, care should be taken that, with mast lifted to maximum height, the piston extends to its full stroke always inside the hoist cylinder.

Important!

At least 2 **mm** clearance should be maintained between block on carriage **(4)** and stop **(5)** on inner mast.

1 = **fork carriage**

2 = **inner mast section**

3 = **support roller**

4 = **block (on carriage)**

5 = **stop (on inner mast cross member)**

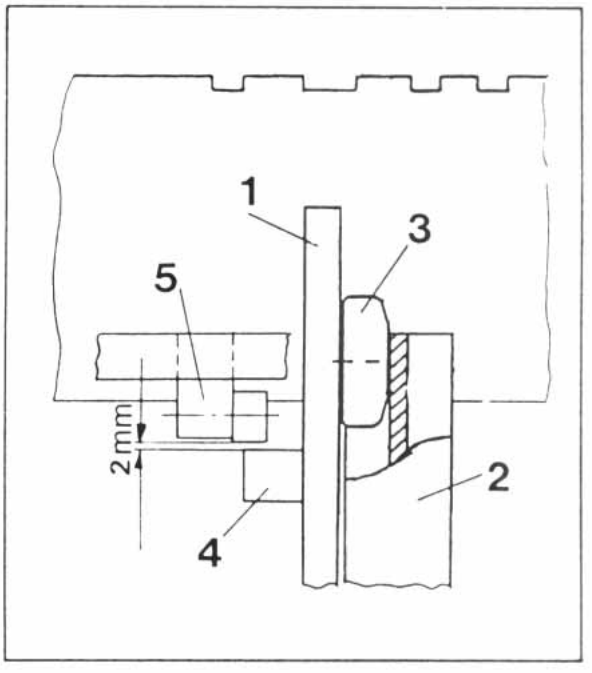

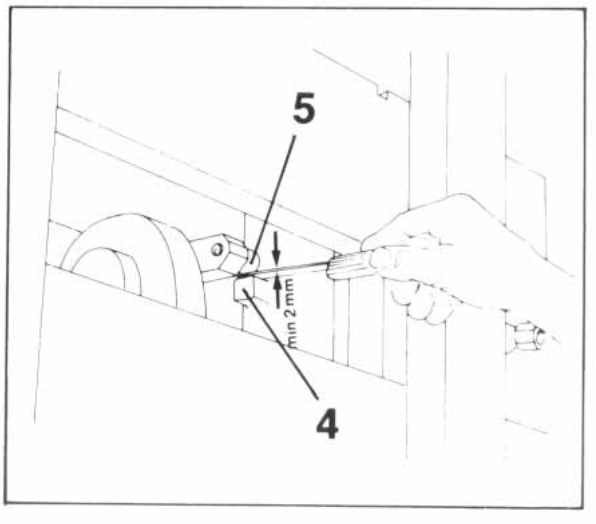

Elevating mast

Assembly of support roller

Roller Ø	Dimension "A" over	up to
75.2	–	75.9
75.7	75.9	76.4
76.2	76.4	

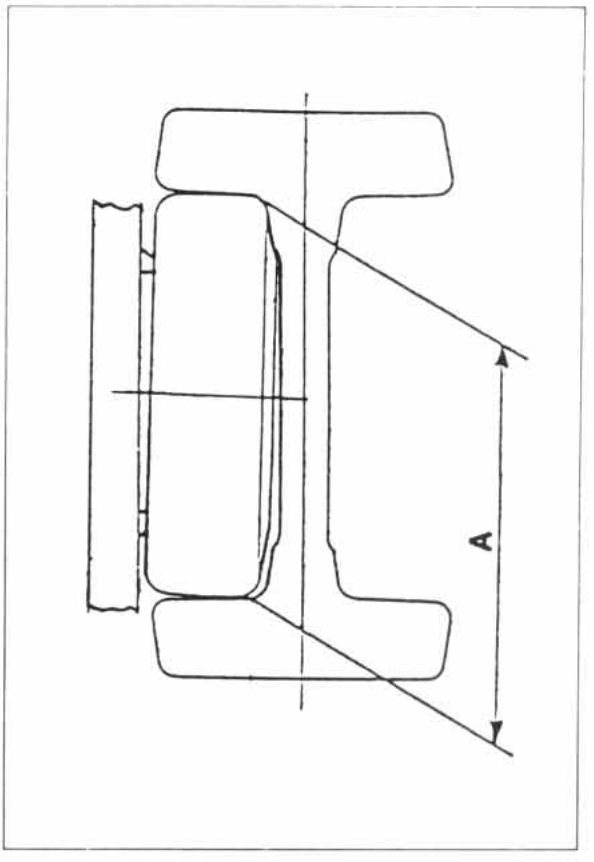

1 = Support roller
(see Parts catalogue)

2 = Shim
(see Parts catalogue)

3 = Countersunk screw secured with liquid plastic compound 519 899 (loctite 242)

Torque loading:
$M_A = 60 \pm 6$ Nm

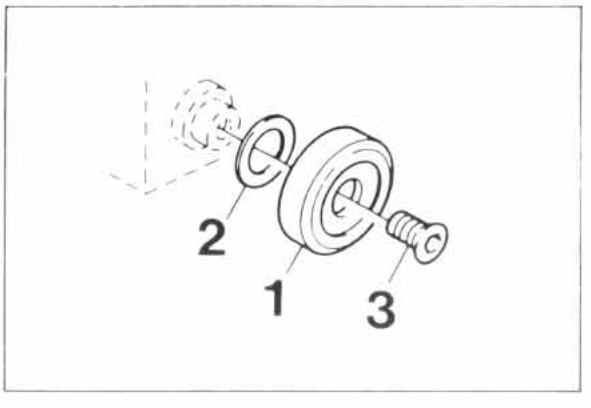

Permissible lateral clearance:

Carriage assy – inner mast
min. *0.2* mm, max. 0.5 mm at the tightmost spot, otherwise 1.3 mm at the max.

Inner mast – central mast – outer mast
Upper roller: min. 0.5 mm, max. 0.8 mm (in assembled position) at the tightmost spot, otherwise 1.3 mm at the max.

Lower roller: min. *0.2* mm, max. 0.5 mm at the tightmost spot, otherwise 1.3 mm

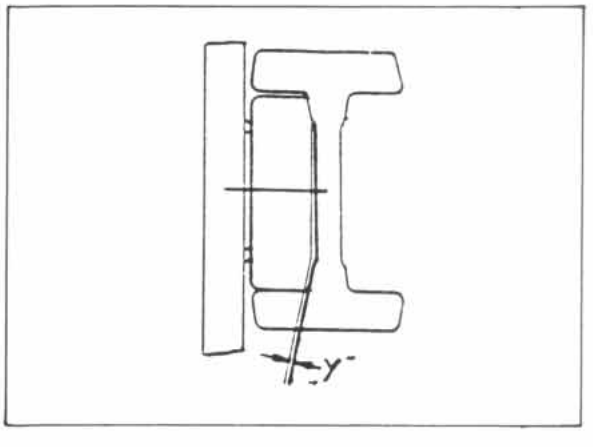

Note:

The support or guide rollers are sealed and lubricated for life with lime soap based grease. Subsequent lubrication is therefore not necessary.

Check

(see figures on the right)

- Raise fork carriage
- Place a square piece of wood under the forks
- Lower carriage. The fork carriage will tilt backwards, whereas the upper rollers will come to rest against the rear running surface.

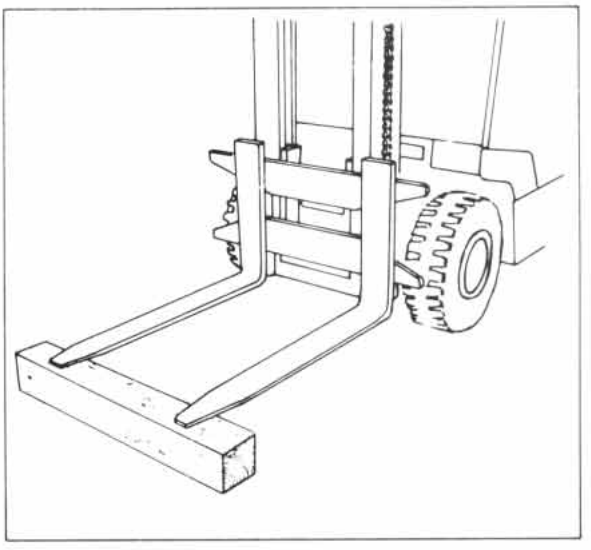

Using a feeler gauge measure gap between support roller and running surface.

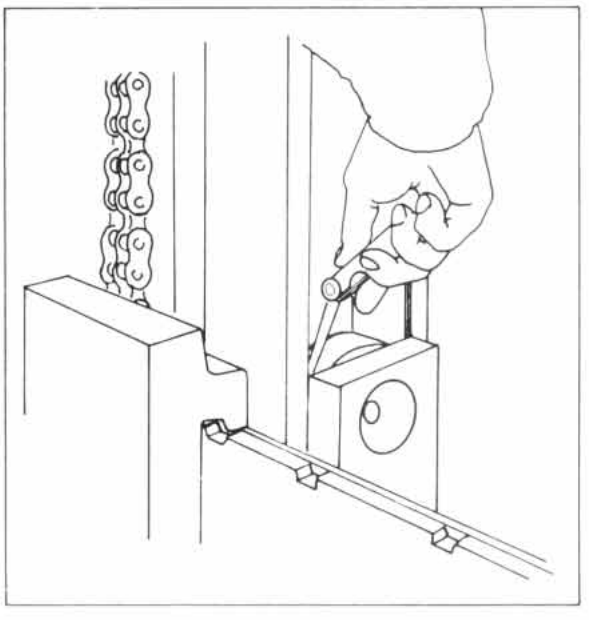

Max. permissible gap 'X' = 0.5 mm.

Note:

Before carrying out this operation check the lateral clearance **"Y"** of the carriage.

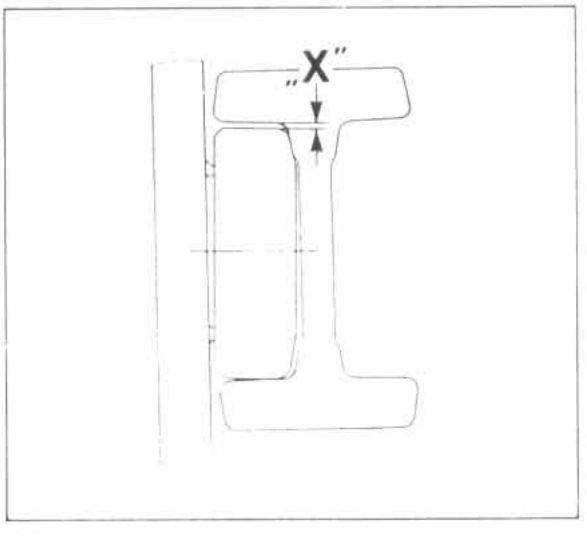

Hoist cylinder

Description

The cylinder is a single acting plunger cylinder (plunger piston).
Cylinder tube and base are welded together. The cylinder head is screwed onto the tube and secured with Loctite 242.
The sealing between tube and head is by **'O'**ring.
The sealing between head and piston is by 'U' seal. **A** piston cover screwed into the piston and fixed with Loctite 275 acts as a lift stop.
A line failure safety device **(11)** screwed into the cylinder base prevents the load dropping too quickly if a pipe fractures.

Dismantling the central cylinder

- Raise the fork carriage, place a chock beneath it, lower the fork carriage, unhook the lift chain at the carriage.
- Disconnect the hydraulic connection at the base of the cylinder
- Take off the clamp from cylinder
- Lift out the hoist cylinder
- Grip cylinder body (tube) in a vice - at the base - otherwise tube may distort
- Screw off cyl. head with 'C' spanner B ***68***- 75 DIN **1810.** If cyl. head will not move, preheat with a flame.
- Withdraw piston rod from cylinder body
- Clamp the piston rod in a bench vice fitted with soft jaws and screw off sheave fork. The sheave fork is secured with Loctite 242 of which **3 spots** are applied around circumference.
- Pull the cylinder head off the piston rod

Note:

When replacing the seals do not remove piston cover.
The piston cover is secured with Loctite 275 on the whole surface and screwed into the piston rod with a torque of
M_A = 500 + 100 Nm

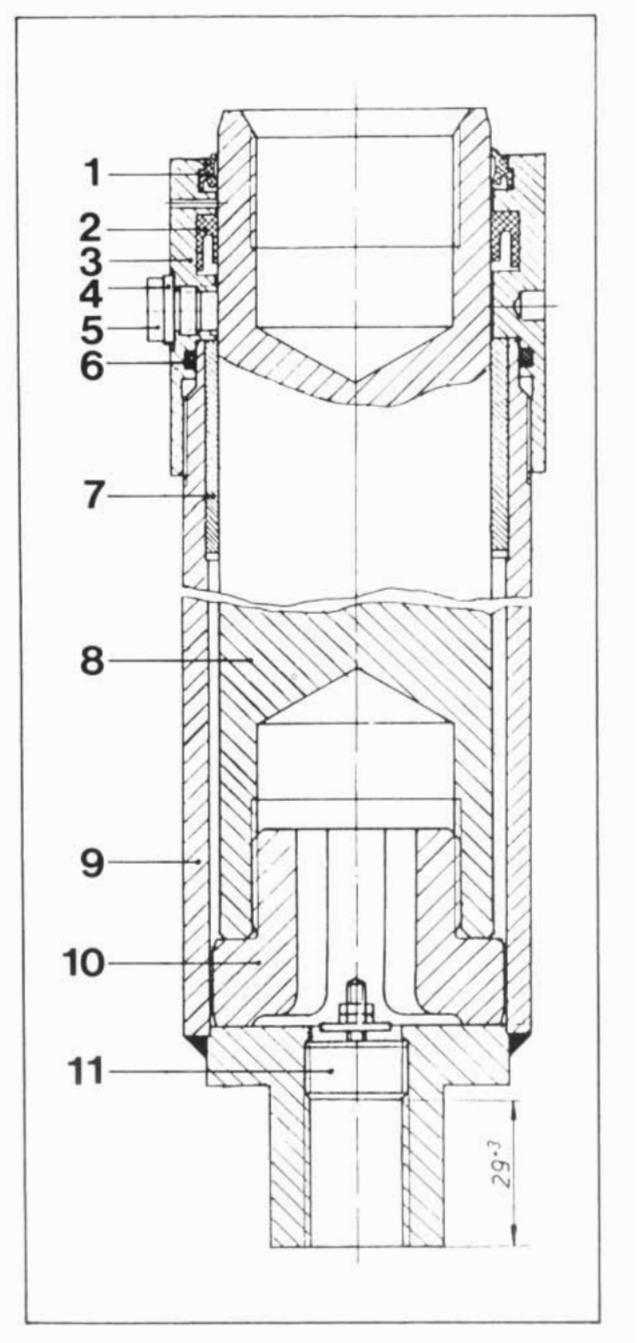

Central cylinder Hi-Lo/Triple

1 = double wiper
2 = 'U' seal
3 = cylinder head
4 = sealing ring **A6** x 10 Cu
5 = hex hd bolt **M6** x **6**
6 = O-ring
7 = guide bush
8 = piston rod
9 = cylinder tube
10 = piston cover
11 = line failure safety device
tightening torque M_A = 20 Nm

Dismantling the outer cylinders

- Raise mast until the pistons of the outer cylinders are extended by approx. 10 cm, and prop securely.
- Remove securing ring (or circlip) from upper piston fixing (cross member).
- Open the hoist valve by moving the hoist lever forward, allowing the system to become non-pressurized.
- On Hi-Lo or triple masts detach upper hydraulic connection.
- Open the hoist valve - piston drops down, if necessary assist with a screw driver.
- Detach lower hydraulic connection
- Remove the fixing clamp
- Lift out the hoist cylinder
- Clamp the cylinder body in a bench vice fitted with soft jaws; do not clamp too firmly to avoid distortion of tube.
- Screw off cylinder head with 'C' spanner **B** 52-55. **If** cylinder head will not move, preheat with a flame.
- Withdraw piston rod or piston tube (depending on model) from cylinder body.
- On Hi-Lo mast screw off adapter fitting.

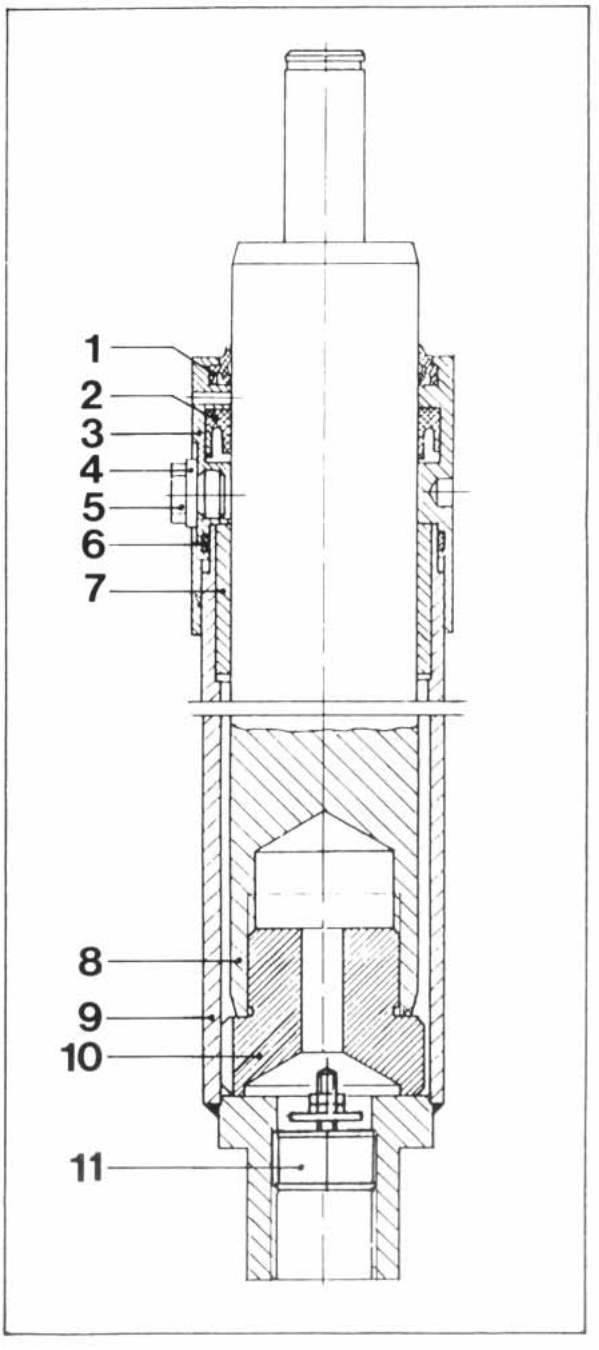

R.h. outer cylinder on triple mast

Hoist cylinders

Dismantling the outer cylinders

1 = double wiper
2 = 'U' seal
3 = cylinder head
4 = sealing ring A6 x 10 Cu
5 = hex hd bolt M6 x 6
6 = O-ring
7 = guide bush
8 = piston or tube (depending on model)
9 = cylinder tube
10 = piston cover secured with Loctite 275 on the whole surface

Torque loadings

Telesc./Triple M = 150 Nm

Hi-Lo M = 50 Nm

11 = line failure safety device torque loading M = 20 Nm
12 = cross member (inner mast)
13 = stop blocks
14 = circlip
15 = washer
16 = allen screw M12 x 35 secured with Loctite 242

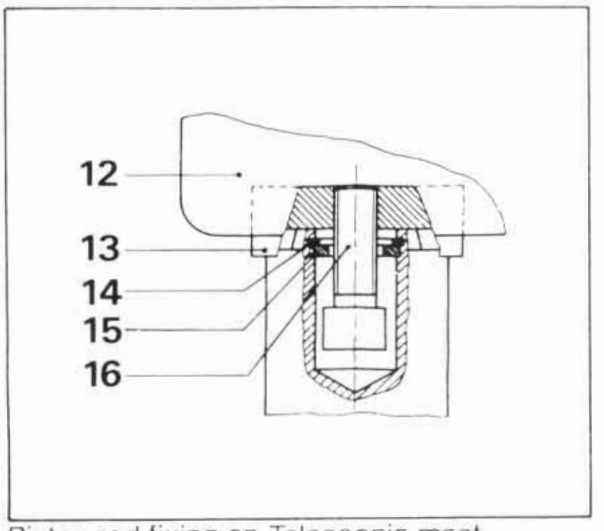

Piston rod fixing on Telescopic mast

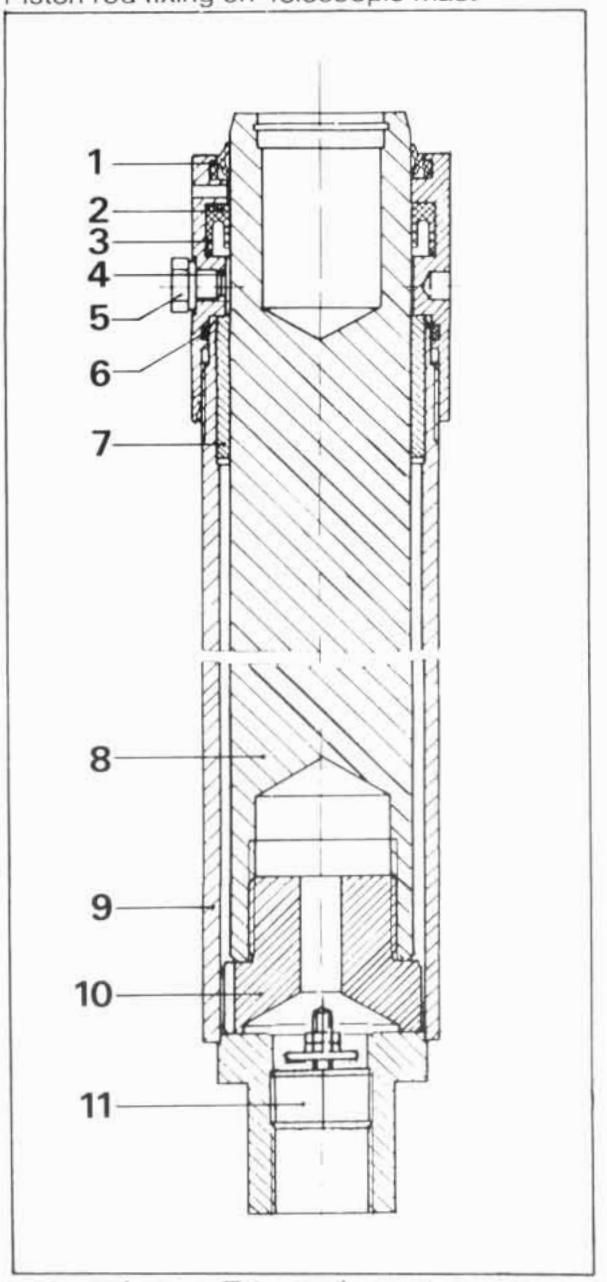

Hoist cylinder – Telescopic mast

Line failure safety device

The illustration shows the position of the hose failure safety device at the lower end of the outside cylinder – it is pulled tight against the stop.

1 = Piston

2 = Piston base

3 = Hose failure safety device

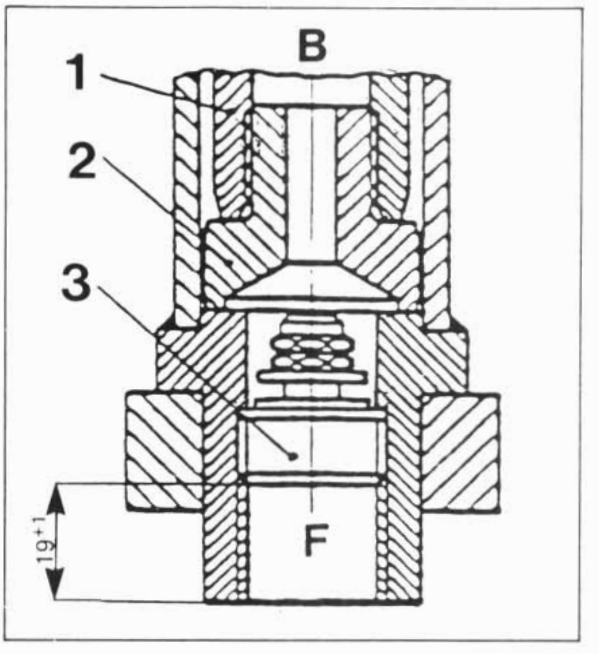

Operation:

The safety device for hose failure, a safety restrictor, prevents uncontrolled and abrupt dropping of the load in the event of hose or pipe failure.
The hose failure safety device is a plate valve whose valve disc is raised off the valve seat by spring action in the neutral state, thereby maintaining an open through-flow cross section of variable width.
The through-flow resistance and the back-pressure action at the valve disc in the through-flow direction B ⟶ F (operating or actuating direction) generate a force which during normal operation does not exceed the spring counterforce: the valve remains open. If in the event of a burst in the hydraulic feed pipe or hose the through-flow increases due to the driving load, the flow forces will exceed the spring force and the valve will close immediately. The valve plate contains an orifice hole through which oil can flow from B *to* F, irrespective of the magnitude of the load, thereby gradually lowering the load to the ground.

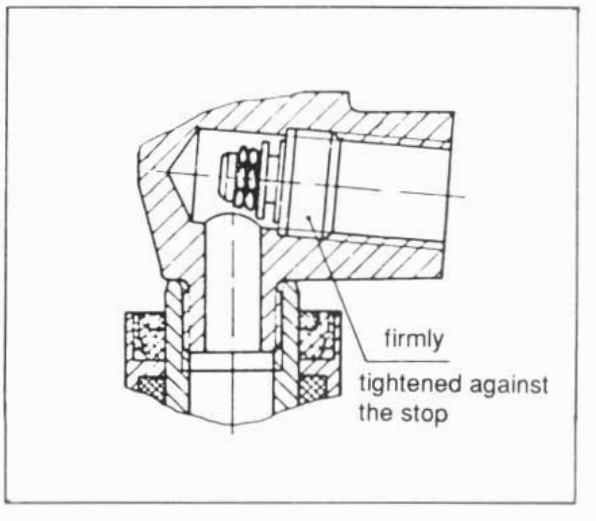

The figure in the middle shows the position of the line failure safety device in the outer cylinder of the Hi-Lo mast.

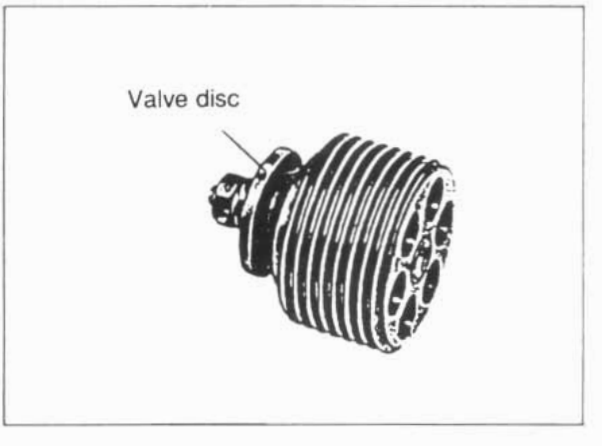

Lowering valve

The lowering valve provides a constant lowering speed, whatever the load – even if a pipe bursts.

Operation:

As the load is lowered, the sliding orifice, due to the medium flowing through it, is moved to the metering position thus forming an annular restrictor inside the control piston, whose resistance against flow in conjunction with the pre-loading of the piston control spring (adjustable) determines the amount of flow.

Note:

Max. permissible lowering speed (with rated load): 0.6 m/sec.

Hoisting, direction of flow **F** ⟶ B

Free unrestricted flow with low resistance is made possible by the sliding orifice at this stage retreating from the metering position (orifice effect inoperative in this direction).

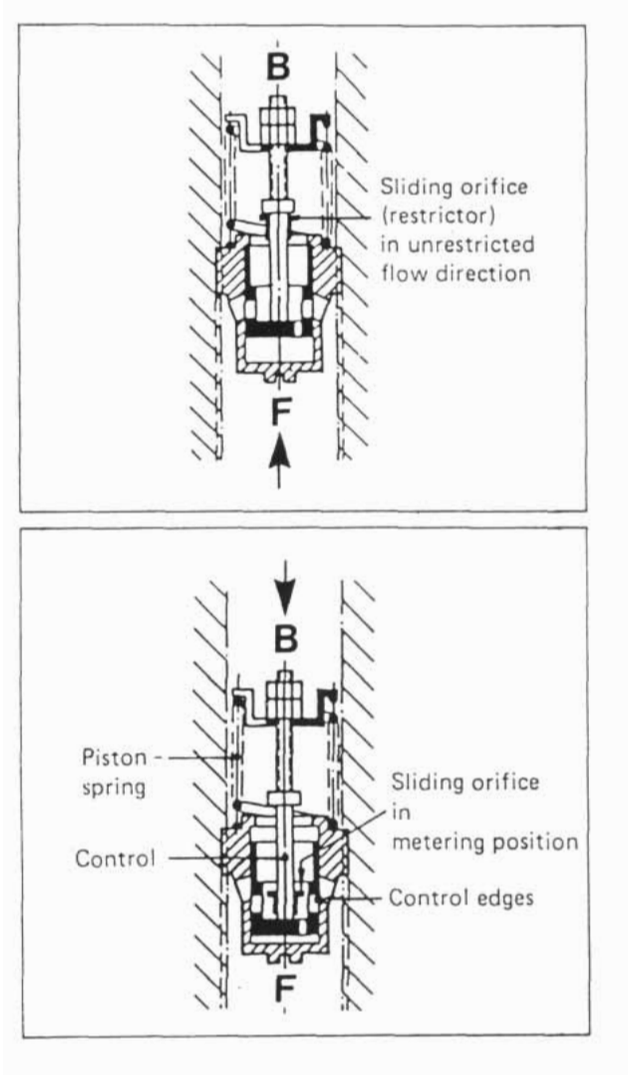

Lowering, direction of flow **B** ⟶ **F**

Flow is constant over a wide range as a result of the self adjusting balance between the internal pressure differential and the pre-load position on the piston control spring.

Contents

Fork carriage	1
Roller retainer	2
Dimension diagram	4

The Fork Carriage - Removal

Tilt mast to vertical

Remove forks or attachment. Raise the fork carriage to a small degree from the ground, enabling the lift chains to be disconnected. Place a suitable sling around the carriage and secure it to a hoist.

By moving the hoist control valve lever into its fully lower position lower the inner mast completely.

Disconnect the lift chains from the fork carriage by removing the anchor screws.

Remove the socket head cap screw from stop on inner mast.

Adjusting the support rollers:

Carriage/inner mast - See Functional Group 20, page **14**

Adjusting the carriage stops:

Refer to Functional Group 20, page **13**

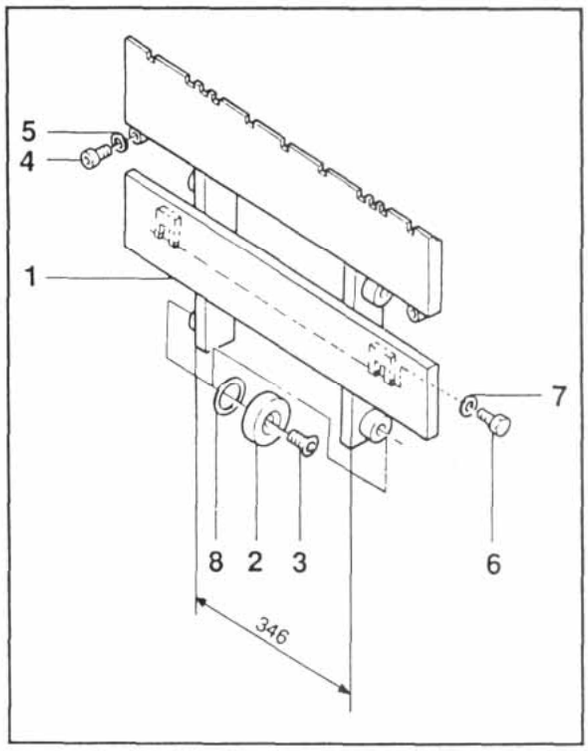

1 = fork carriage
2 = support roller
3 = countersunk head screw
4 = allen screw
5 = lock washer
6 = hex. hd. screw M6 X 45
7 = lock washer
8 = shim

Roller retainer

Changing the support roller shafts

The shafts. are welded to the roller retainer with a 5 mm circumferential flat-lap weld.

The welding operation is performed using a lime-base electrode.

Material of roller retainer and shaft: St 52 – 3

The above figure shows the position of the upper shaft on the LH roller retainer.

The figure **below** shows the position of the lower shaft on the LH roller retainer.

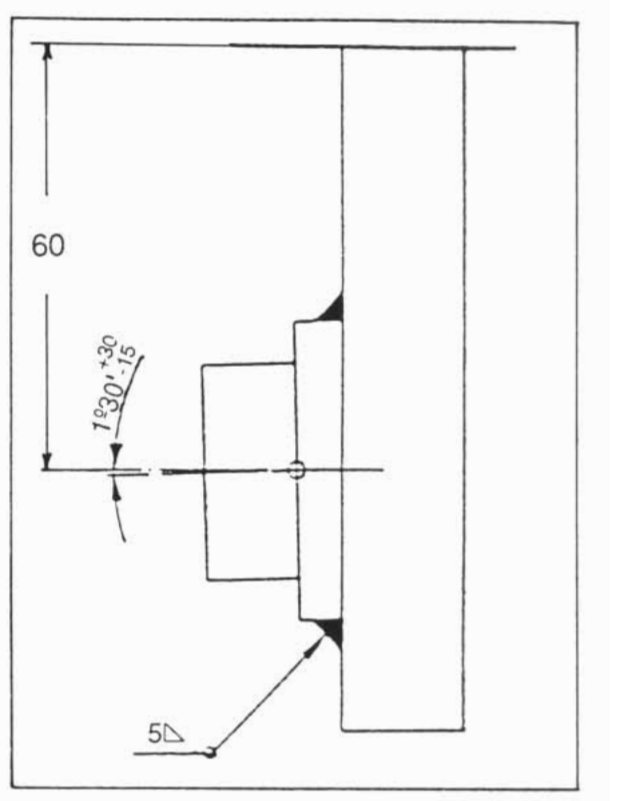

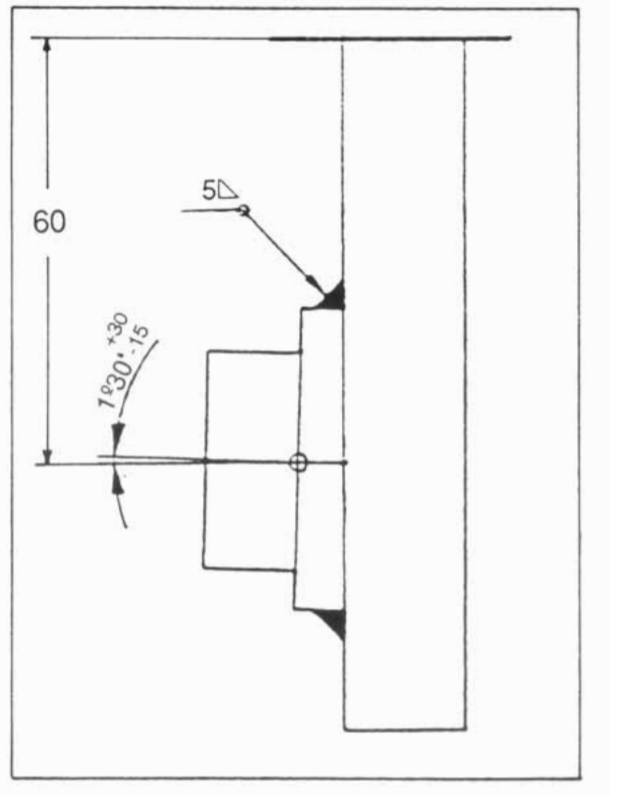

Changing the support roller shafts

Before welding on the shaft note the position of the notch.

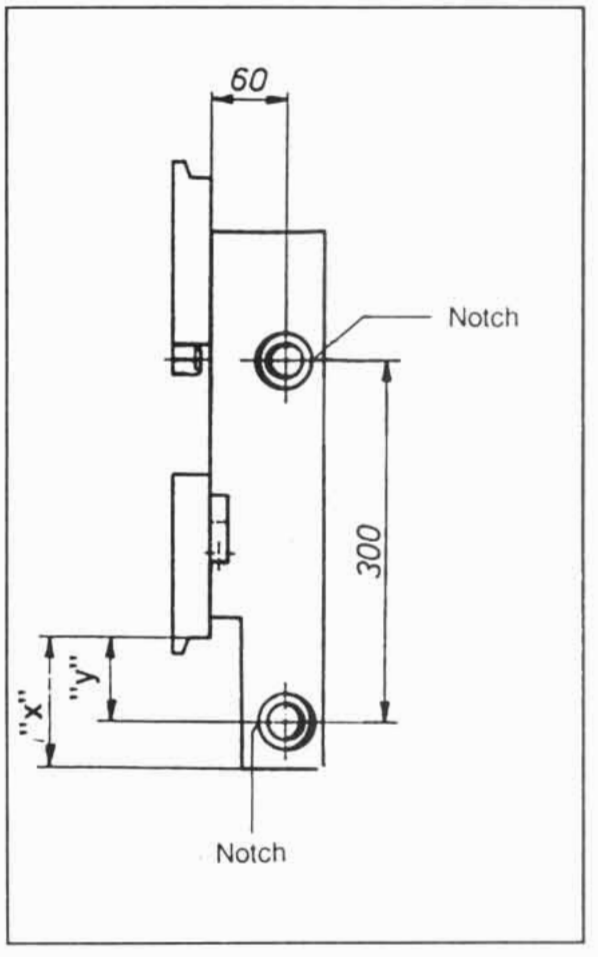

The figure on the right shows the LH roller retainer. The RH roller retainer is illustrated mirror-inverted.

Dimension	"x"	"y"
Telesc.	108	70 ± 0,5
Hi-Lo/ Triplex	83	45 ± 0,5

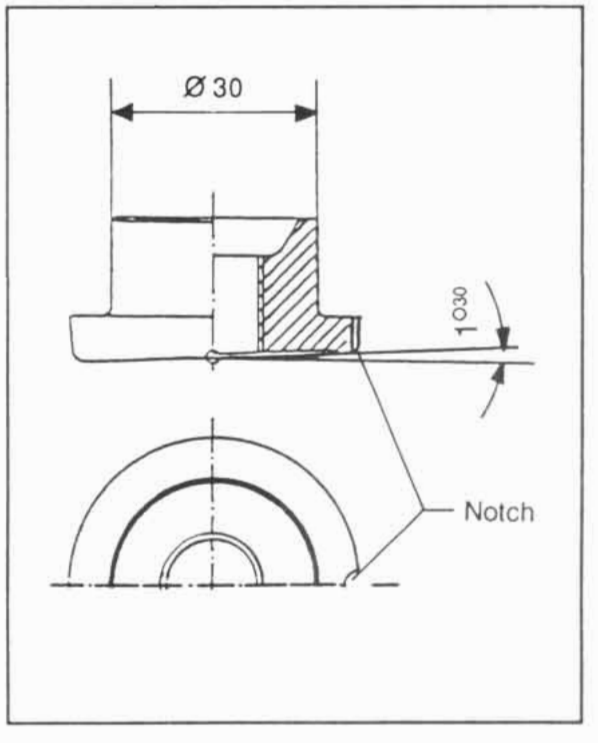

Support roller shaft
Part No. 327 175

Fork carriage

(DIN 15 173)

Dimension diagram

Class	Rated load kg	Rated load centre distance mm	Shape of forks	a ≈	b ≈	c_2 0 / - 1	e ± 0.8	h_3	h_3 permissible deviation	i_2 0 / - 1.5	q + 1 / 0
1	up to 999	400	A	76	331	16	16	305	0 / - 1	13	8
			B	114							
2	1000 to 2500	500	A	76	407	16	16	381		13	8
			B	152							

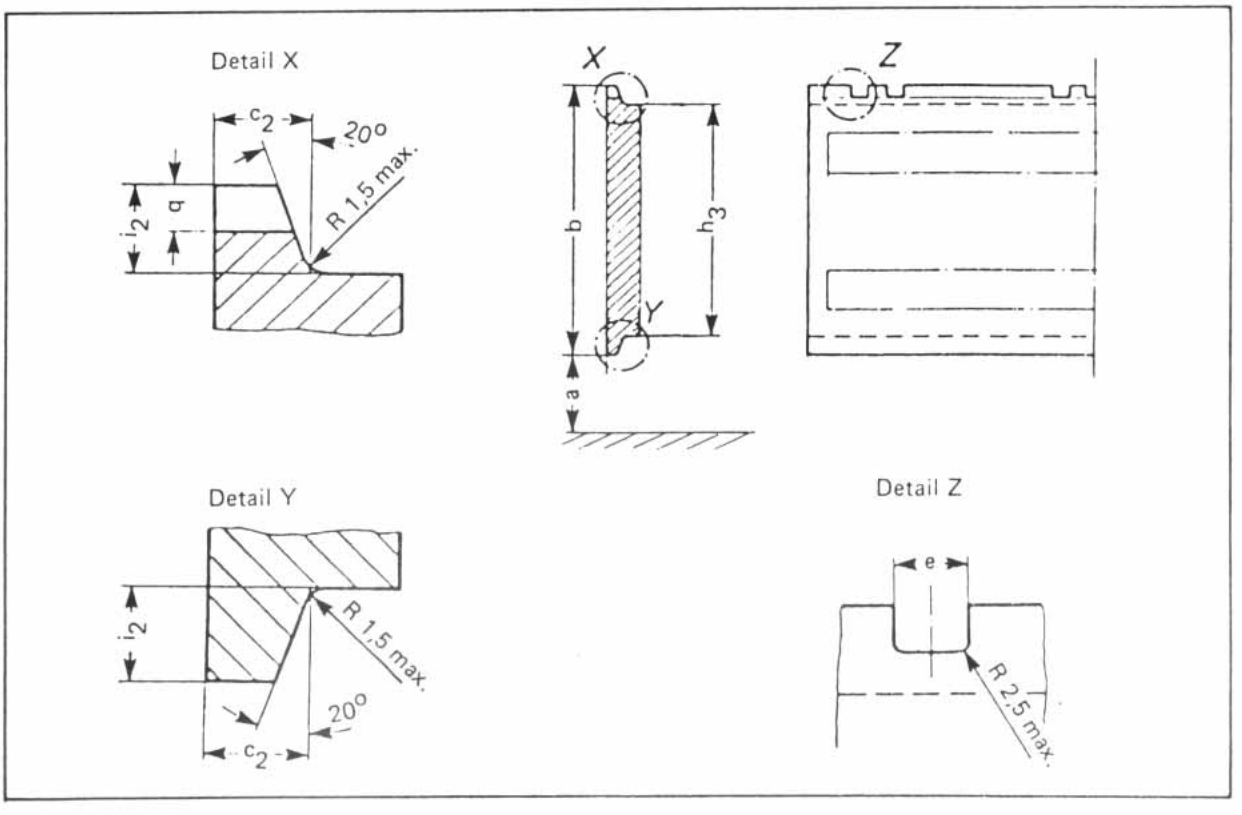

Contents

Fork arm	1
Dimension diagram	2

Design:
to DIN 15 174/151 75

Material:
Heat-treatable steel

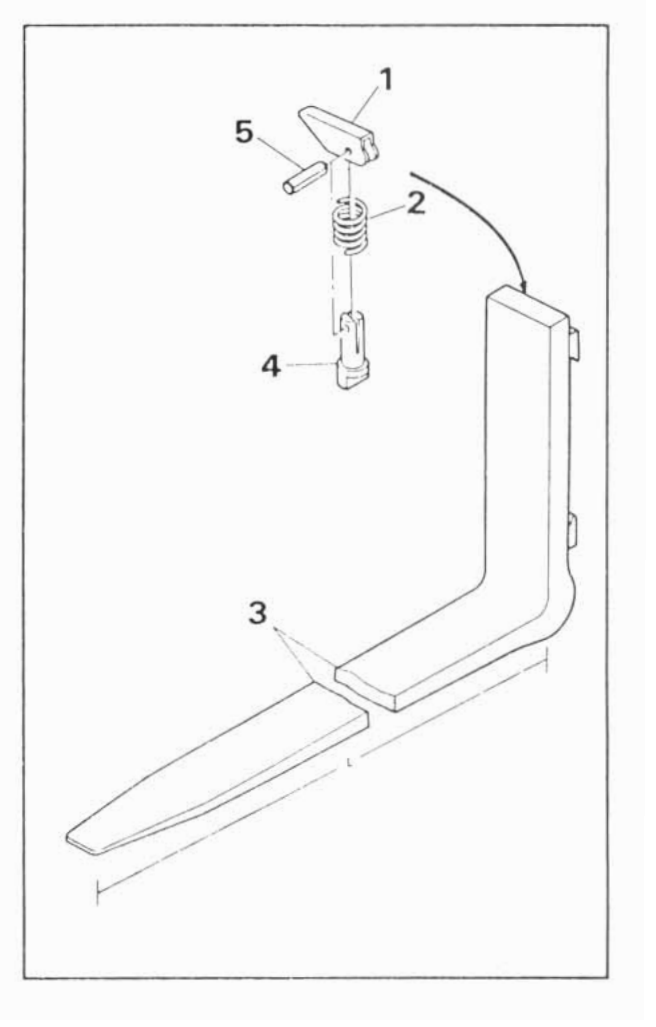

1 = positioning lock

2 = pressure spring

3 = fork arm

4 = spring mounted stop or retaining pin

5 = roll pin

Definition, fork arm dimension diagram

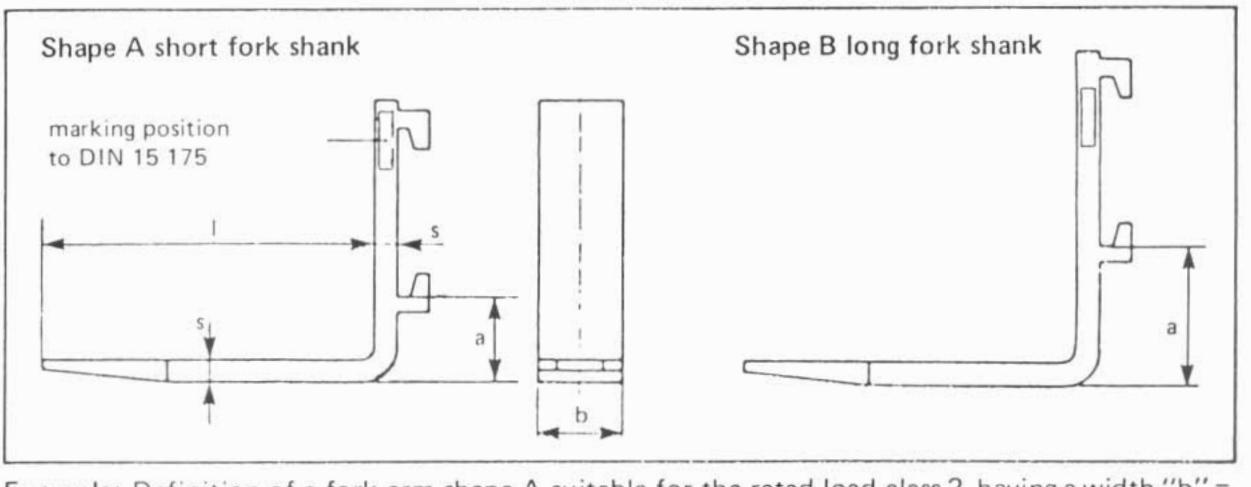

Example: Definition of a fork arm shape A suitable for the rated load class 2, having a width "b" = 130 mm, a thickness "s" = 45 mm and a length "l" = 1150 mm: Fork arm complying with DIN 15 174 – A2 – 130 x 45 x 1150

Fork arm

Fork arm dimension diagram

Rated load Class	Rated load kg	Rated load centre distance mm	Shape of fork arm	a ≈	c_1 +1 0	h_1 ±3	h_2	h_2 permissible deviation	m_1 max.	m_2 max.	i_1 min.
1	up to 999	400	A	76	17.5	394	307	+1 0	28	26	14
			B	114		432					
2	1000 to 2500	500	A	76	17.5	470	383		31	29	14
			B	152		546					

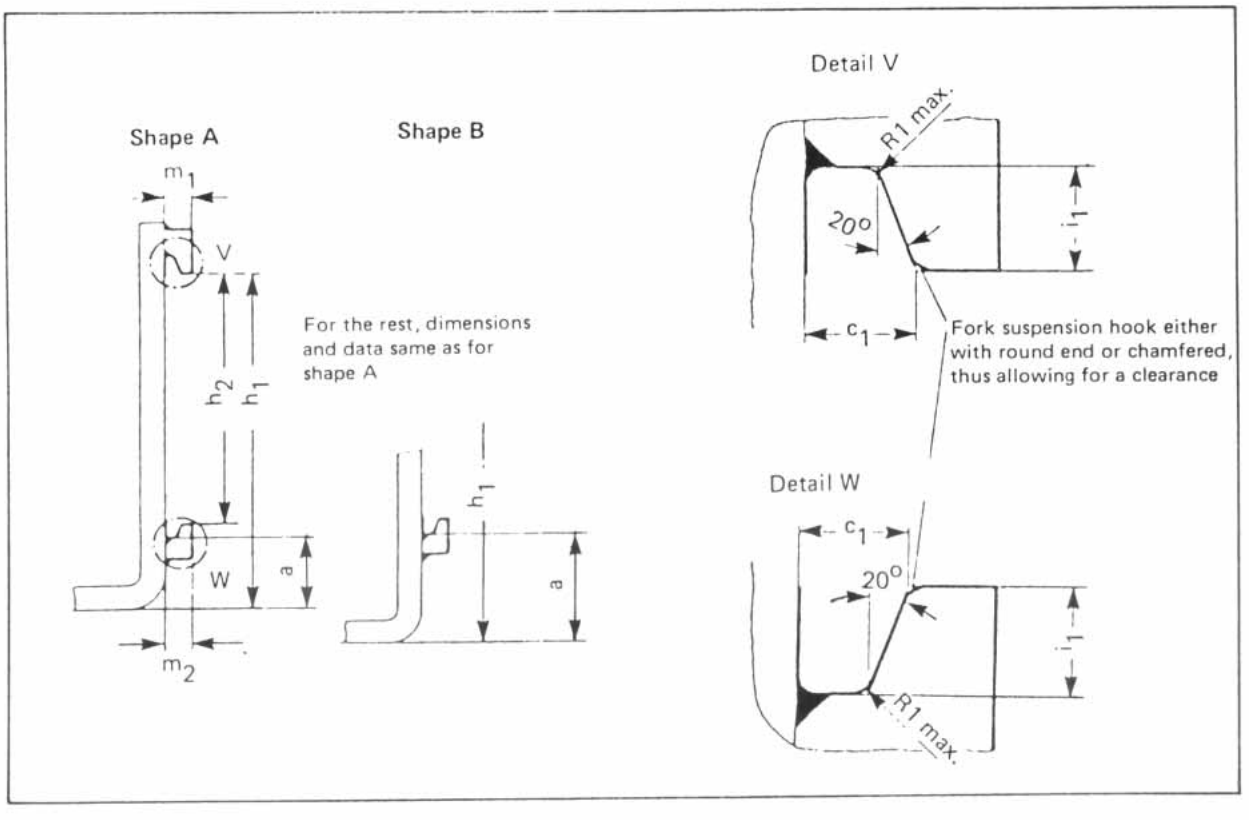

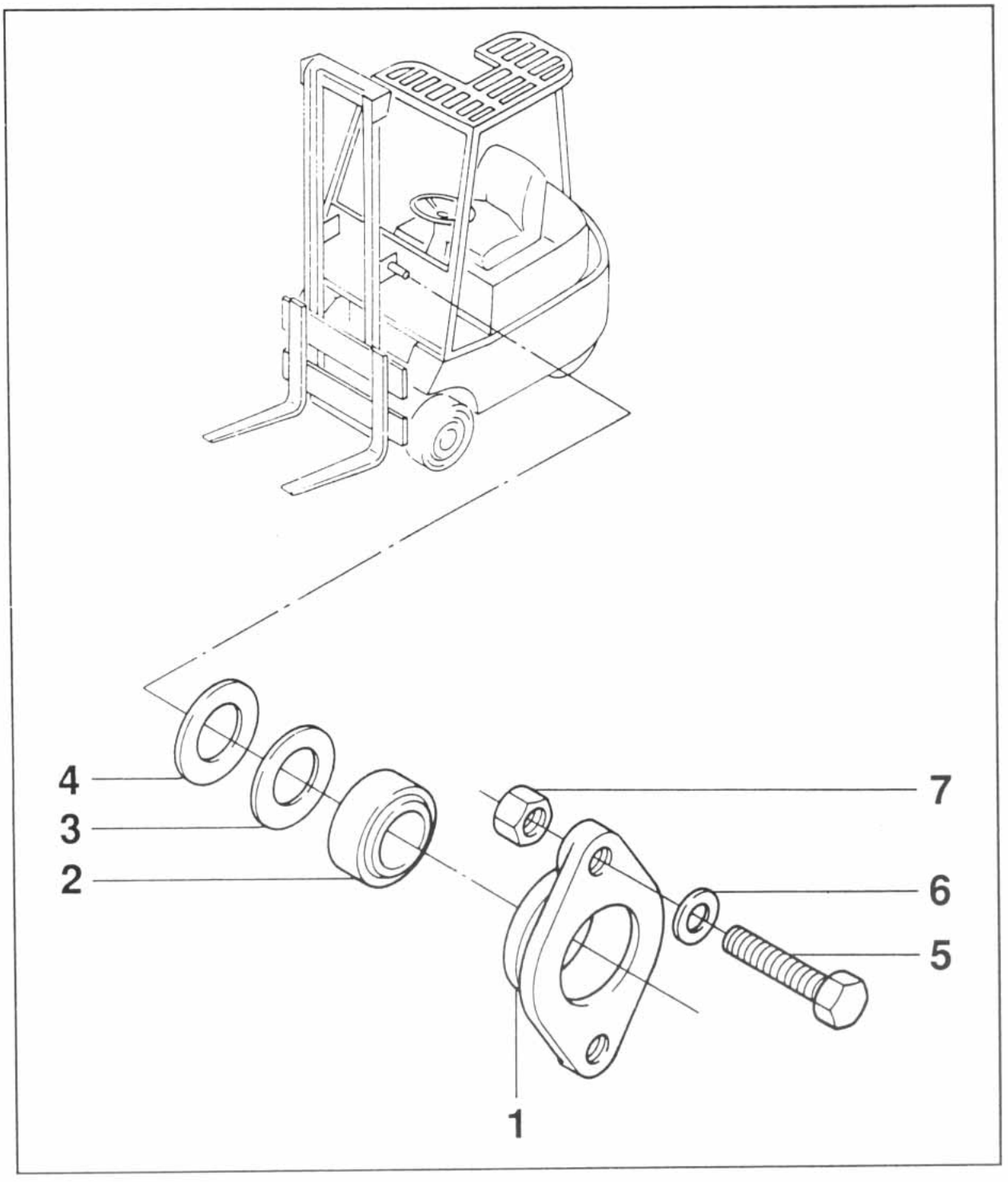

1 = pivot block

2 = ball-and-socket joint GE **35** Do-2RS

3 = shim 30 x 42 x 0.5

4 = shim **30** x 42 x 1

5 = hex. hd. screw M10 x *35* DIN **933**

6 = washer

7 = hex. nut M10

Contents Page

Tilt cylinder – Dismantling 1

Tilt cylinder – Assembling 2

Mast tilt angle 3

Dismantling

Grip the cylinder body in a vice.

Remove screw union from cylinder head (thread protrudes into the bore).

Knock down cylinder head (9) a bit with a plastic punch.

Press in the lockwasher **(11)** with a probe through the small hole in the cylinder and lever out with a screw driver (see figure).

With a strong pull on the cylinder rod pull the head (9) out of the body.

Grip piston rod in vice (with protective jaws).

Remove eyebolt **(13).**

Important !

Note the thread depth and retain this when re-assembling, otherwise the **tilt** angle will change.

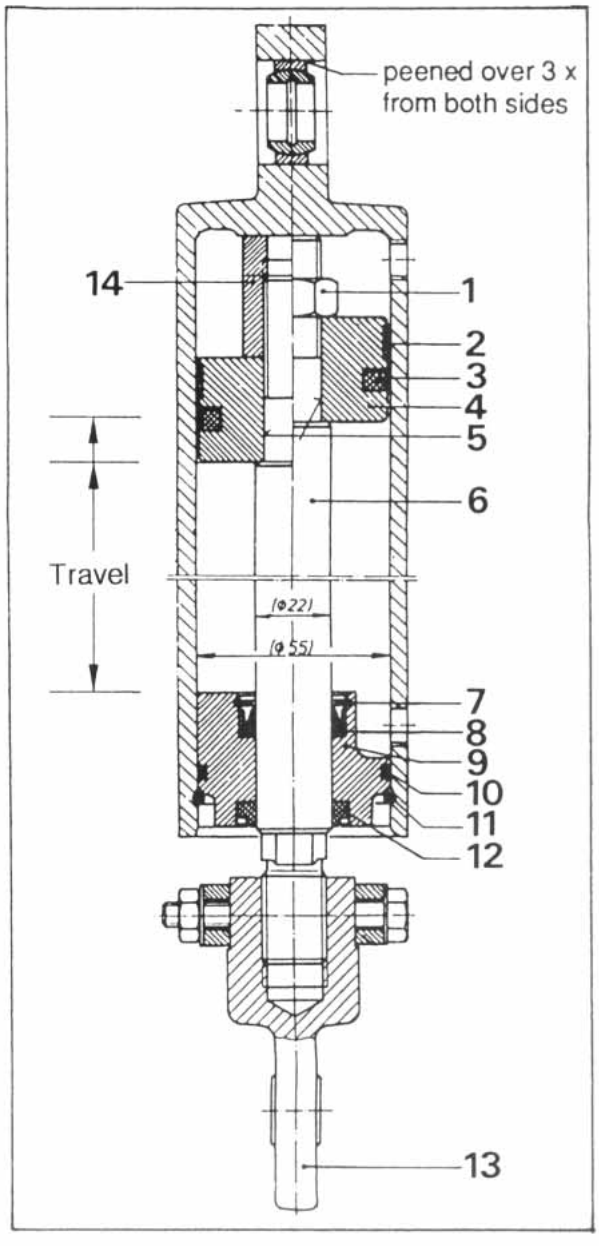

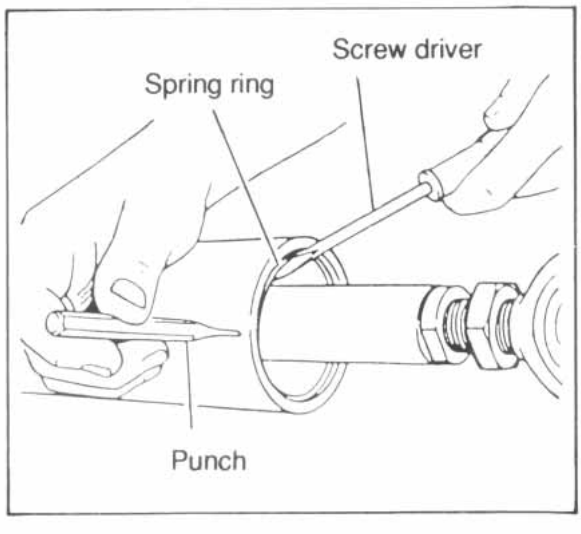

1 = hex nut M_A 130 Nm
2 = piston guide ring
3 = piston seal
4 = piston
5 = sealed with Loctite **242**
6 = piston rod
7 = circlip
8 = grooved seal
9 = cylinder head
10 = O-ring
11 = lockwasher
12 = wiper seal
13 = till cylinder rod
14 = spacer (see Parts catalogue)

Tilt Cylinder

Assembling

Check all parts for wear and clean as a matter of course.

Note:

Piston **(4)** and hex. nut (1) are secured with Loctite **242.**
Torque for nut (1) **M,** = 130 + **10** Nm.

Fit piston guide ring (2) and piston seal (3) onto piston **(4)** and lightly grease.

Insert piston and piston rod into cylinder.

Provide cylinder head (9) with new sealing material and lightly grease.

Insert cylinder head **(9)** into body.

Note:

Cut out in cylinder head must point towards connection hole.

Fit lockwasher **(11).**

Screw on eyebolt and secure.

Important !

Ensure thread depth is as marked on dismantling.

Screw in hydraulic connection (sealed with thread sealing tape).

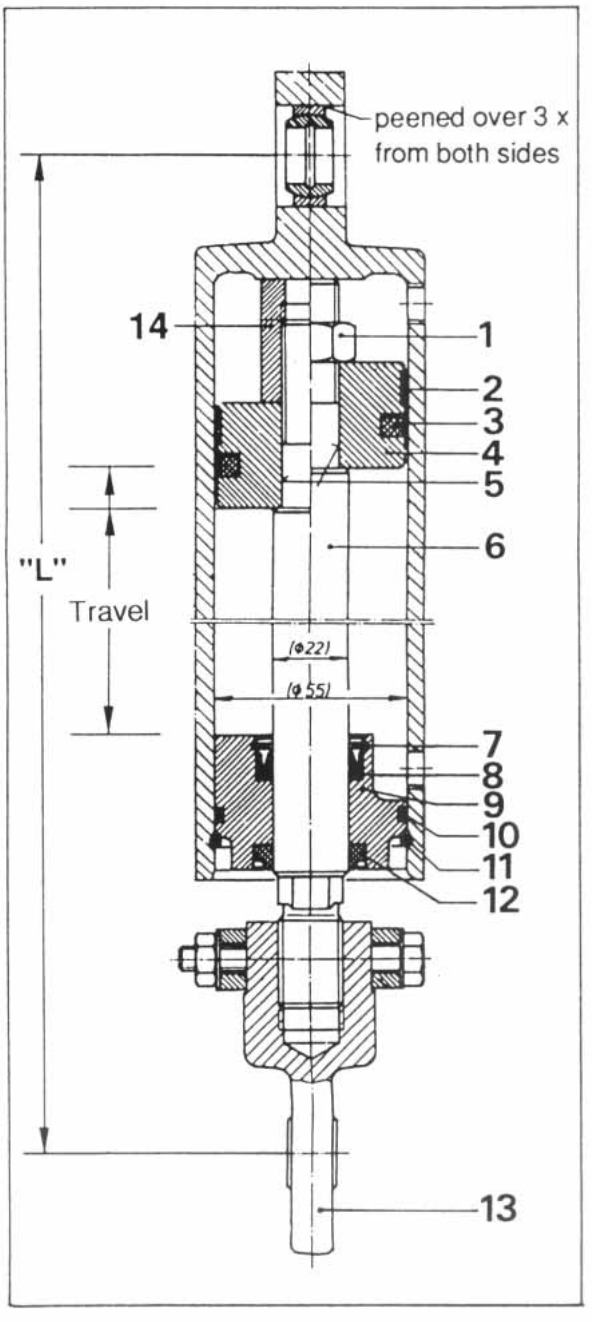

Mast tilt angle

When carrying out repairs on the tilt cylinder be careful not to modify the tilt angle as set at the factory, as otherwise stability will be impaired.

a = forward tilt

ß = backward tilt

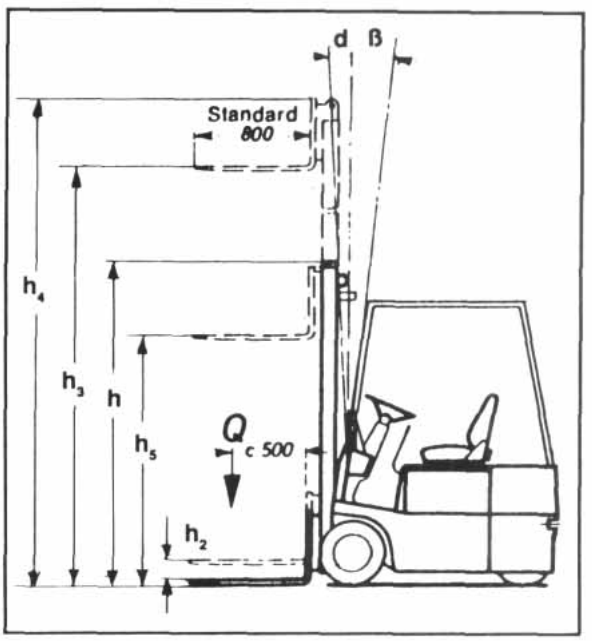

h4 = height, mast extended
h3 = rated lift
h = height, mast lowered
h5 = free lift on Hi-Lo and Triple
h2 = free lift on telescopic (150 mm)

h = overall lowered height on telescopic mast

On the telescopic mast the forks will move 150 mm (free lift) up the inner section before the inner section extends. Therefore the closed height of the mast remains constant in the first stage.

L	Lift	Tilt angle forward	Tilt angle backward	Tyres	Mast type	O.L.H.
332	112	3	6	all all	TELESC. HI-LO	. . . 2230 1755 . . . 2230
344	100	2	6	all SOLID RUBBER	TELESC./HI-LO TRIPLEX	2255 . . . 2530 1805 . . . 2155
344	88	2	5	all SOLID RUBBER PNEUM./SE SOLID R. X SE XX	TELESC./HI-LO TRIPLEX TRIPLEX TRIPLEX 1.2-1.5 tonnes TRIPLEX	2555 . . . 3230 2205 . . . 2705 1830 . . . 2430 1805 . . . 2205 1830 . . . 2180
344	76	2	4	SOLID R. X SE XX	TRIPLEX 1.2-1.5 tonnes TRIPLEX	2255 . . . 2705 2230 . . . 2430

IMPORTANT TESTING HINTS

for checking the electronic power control of the drive

Pages XI to XV

Contents

Page

R50 Test Module (applicationand function)..... IV

Measuring adaptor (use)..... V

Measuring and testing instruments

- Table on measuring and testing instruments..... VI
- Measuring adaptor,
- R50 test module..... VII

- Digital multimeter,
- Current clamp..... VIII

- Insulation tester,
- Continuity tester..... IX

Testing equipment

- Extraction and crim tols.
- Test prods, alligator clips, instrument leads..... X

Preparation

- Preparation for testing XI

- Check fuses..... XII

- Measuring insulation resistance/Checking state of battery charge..... XIII

- Rules which must be observed in connection with the test procedure..... XIV

NOTE:
The present diagnostic instructions are elaborated specifically for forklift truck models in this range. Since the **R06 STILL** tow tractor is fitted with a drive impulse controller employing the same electrical components that are used on the drive impulse controller with which the R50 is fitted, the diagnostic instructions can to some extent also be used for fault finding on the **R06.** It should, however, be noted that there are some minor differences between the two drive impulse control systems in that the drive control unit of the R06 is f.i. additionally fitted with a b25 designated microswitch. whereas the commutating circuitry *of* the R50 comprises a thyristor instead of a commutating diode like the one used on the R06. and that the mechanical configuration of the contactor control panel mounted on the R50 differs from that fitted to the R06 range of tow tractors.

Test Module

Test module
Part No. 263794

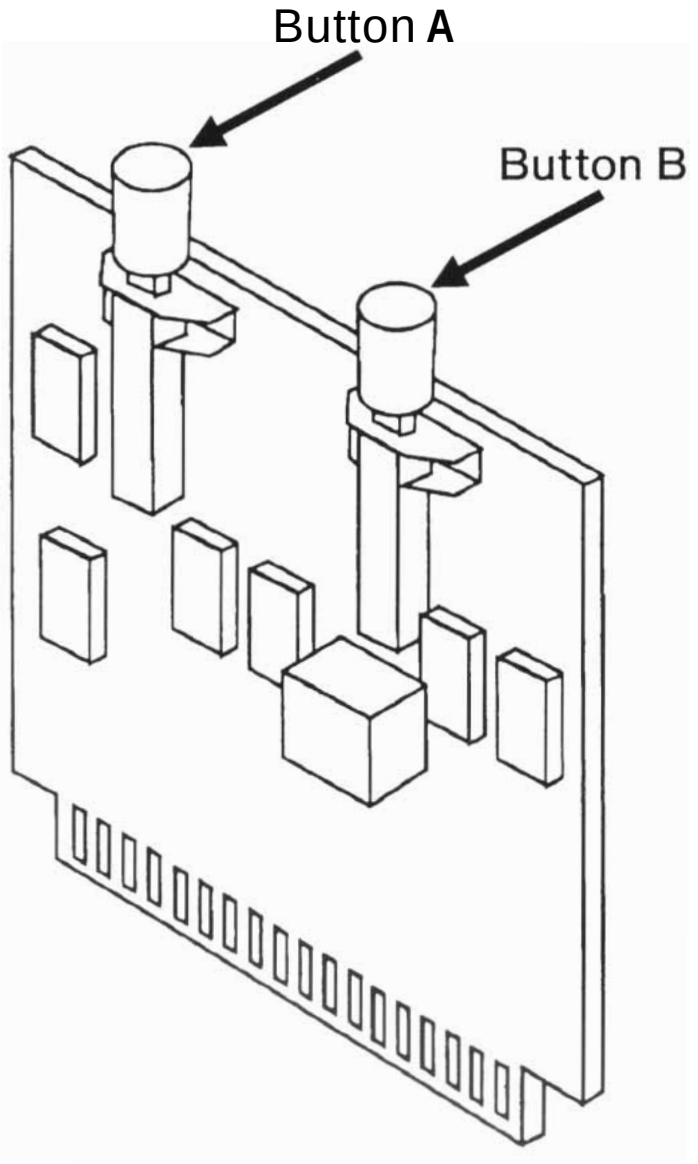

The R50 Test Module is a plug-in system analyser used for diagnosing the electronic circuitry of the R50 STILL-tronic SCR control unit.
It permits simple and speedy pin-pointing of faults in the electrical and electronic installation of truck models in the R50 range.

The R50 test module does not require a power source of its own.

IMPORTANT!The test module should only be used for testing purposes (the truck must be safely chocked up at drive wheel which must be freely turned by hand!)

Button **A** = 'Motor ON' (firing of main SCR)

Button B = 'Motor OFF' (firing of turn-off SCR)

The R50 test module is connected via the measuring adaptor to the electrical installation. It can, however, also be plugged directly into the base socket of the drive impulse controller. The 36-pin connector must be protected against possible damage. Clean the contacts only with a soft cloth or a rubber eraser – **do not grind them!**

Measuring Adaptor

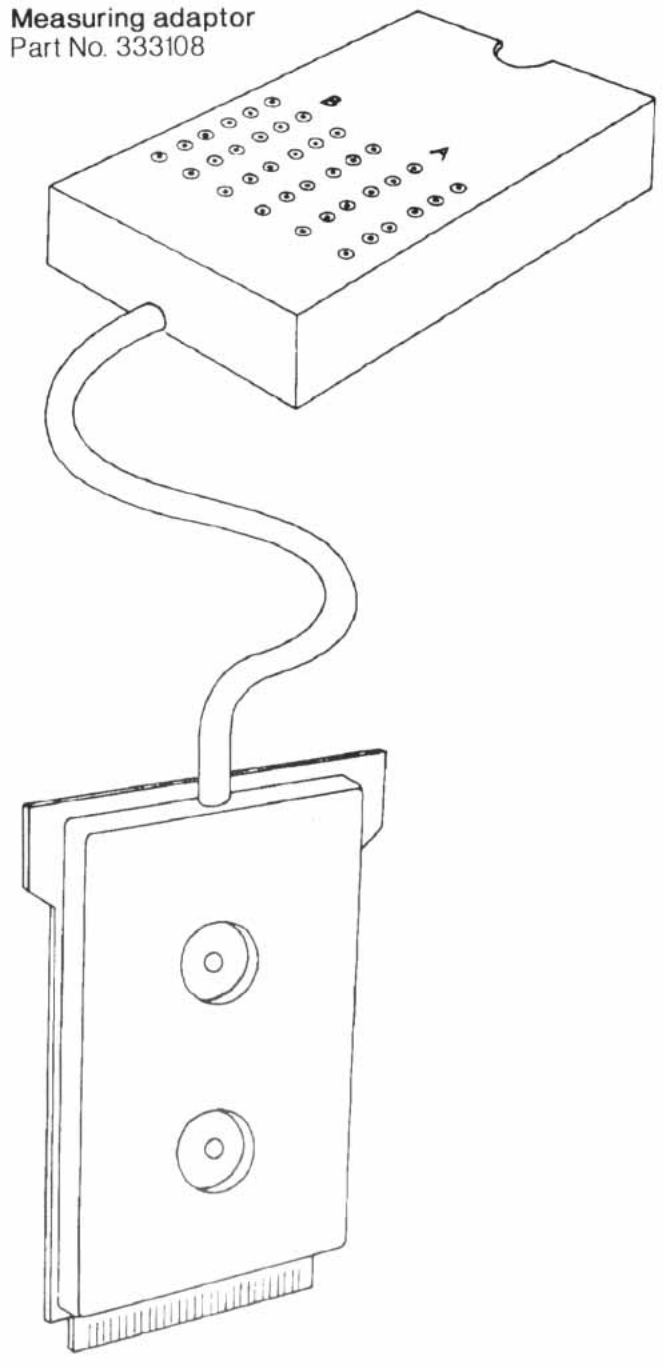

Receptacle for
- p.c.b. u200 or
- test module

Provided with 36 test points, the measuring adaptor is an extension of the truck base socket u200.

Advantage: No need for the test module to be plugged directly into the base socket u.200. Instead it can be inserted into the measuring adaptor at a certain distance from the base socket. It can f.i. be laid down on the truck hood thus providing ease of use and reading. The p.c.b. too can be inserted into the measuring adaptor. An improved adjustment of the potentiometers is thus assured, while measuring operations can be carried out at the same time.

ATTENTION: The p.c.b. pin connector must be protected against damage, clean only with a soft cloth or a rubber eraser, do not grind connector pins!

Measuring and testing instruments

The following test equipment and tools are required to carry out the tests:

Item	Description	Part No.	Manufacturer
1	Measuring adaptor	333108	STILL
2	R50 test module	263794	STILL
3*	Digital multimeter M 2007	146348	ABB
4*	Digital multimeter HD 110	144080	Beckmann
5	Current clamp or tong tester (600 A)	143920	Beckmann
6	Insulation resistance tester Isolavi 8 (STILL version) complete with box and test (jumper) leads	145120	Hartmann & Braun
7	Continuity tester	120644	Testofon
8	Extraction tool for leaf contacts	143431	AMP
9	Extraction tool for multiple-pin plug	120600	AMP
10	Replacement tube	120601	
11	Crimp tool for leaf contacts	144087	AMP

*The ELAVI 15 n meter can likewise be used for all measurements.

It is assumed that the tester is familiar with the proper use of the test equipment and tools. Please follow manufacturer's instructions in each case.

Always check the power supply batteries of the measuring instruments before each test and recharge them if necessary.

Measuring and testing instruments

Measuring adaptor
Part No. **333108**

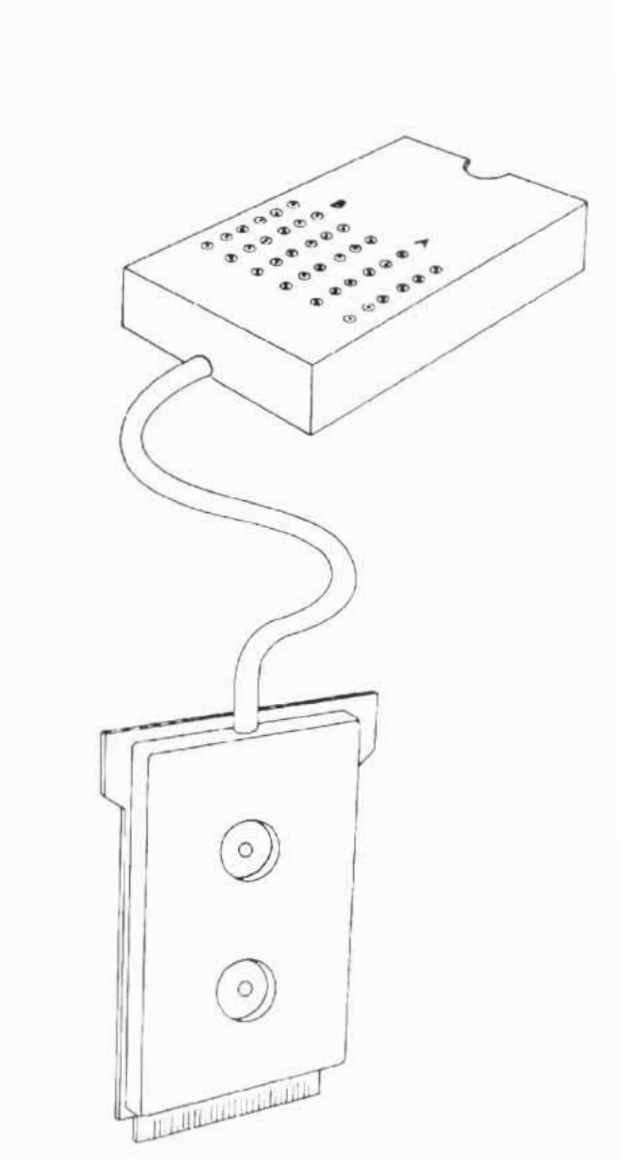

R50 test module
Part No. 263794

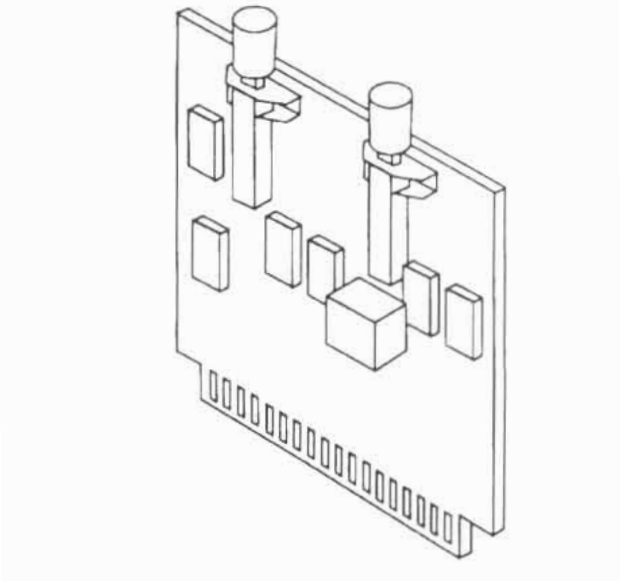

Measuring and testing instruments

Digital multimeter **M 2007**
Part No. 146348

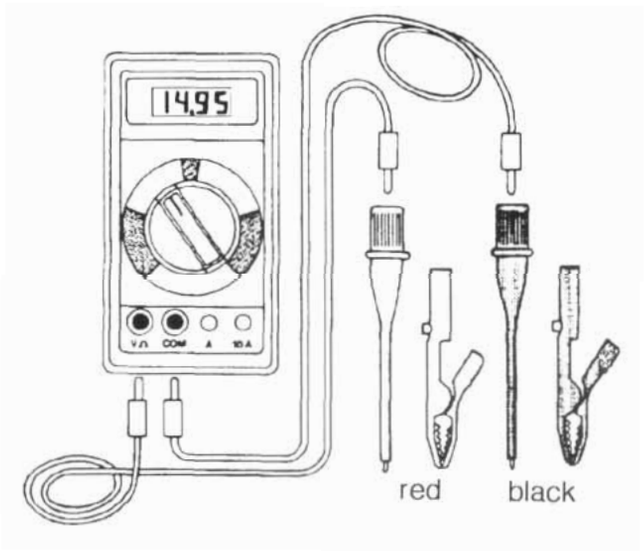

Digital multimeter **HD 110**
Part No. 144080

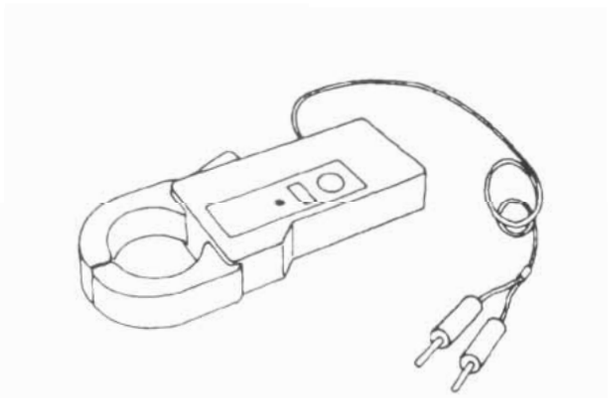

Current clamp
Part No. 143920

It is assumed that the tester is familiar with the proper use of the test equipment and tools. Please follow manufacturer's instructions in each case.
Always check the power supply batteries of the measuring instruments before each *test* and recharge them if necessary.

Measuring and testing instruments

Insulation resistance tester
Part No. 145120

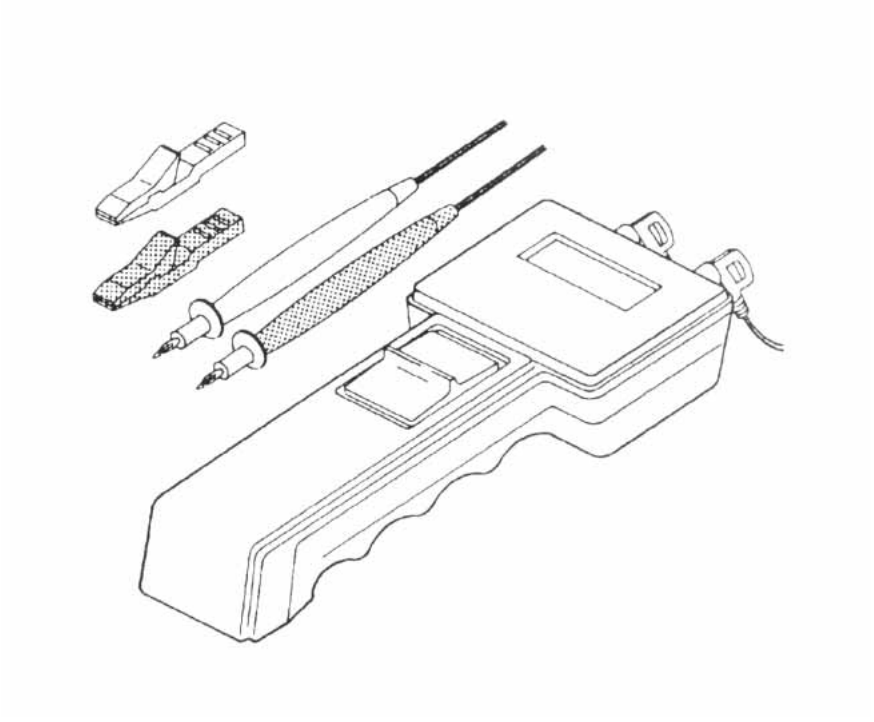

Continuity tester
Part No. 120644

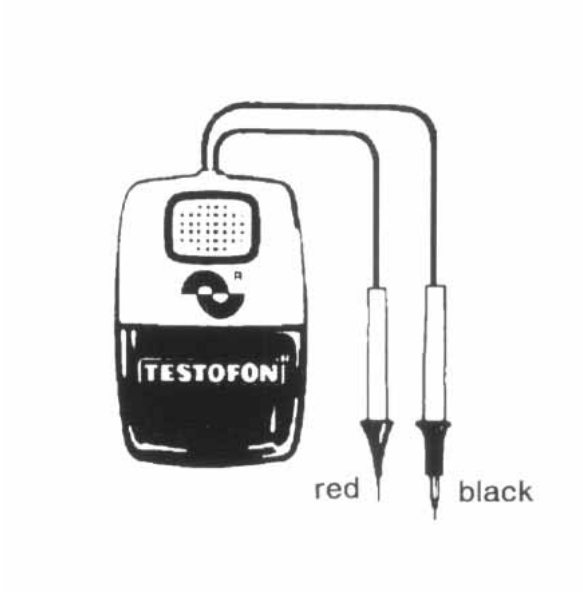

It is assumed that the tester is familiar with the proper use of the test equipment and tools. Please follow manufacturer's instructions in each case.

Always check the power supply batteries of the measuring instruments before each test and recharge them if necessary.

Testing equipment

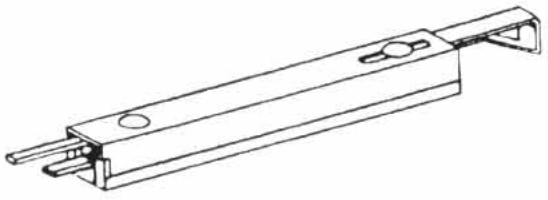

Extraction tool for leaf contacts
Part No. 143 431 (u07.u200)

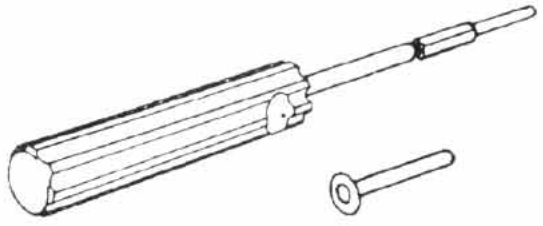

Extraction tool for multi-contact plugs
Part No. 120 *600*

Replacement tube
Part No. 120 601

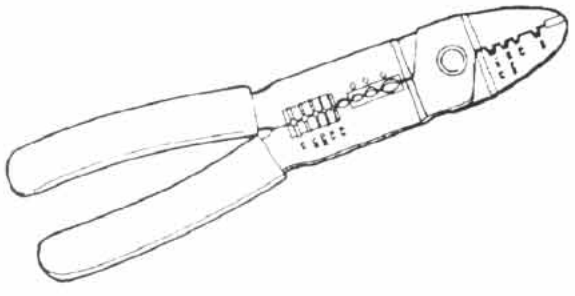

Crimp tool for leaf contacts
Part No. 144 087

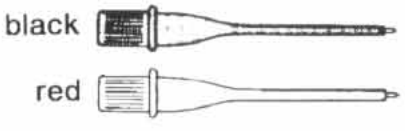

Test prods, pair
Part No. 143 421

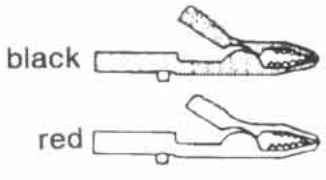

Alligator clips, pair
Part No. 143 4.27

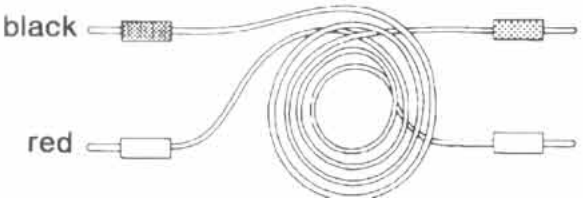

Instrument leads, pair
Part No. 143 425

Preparation for testing

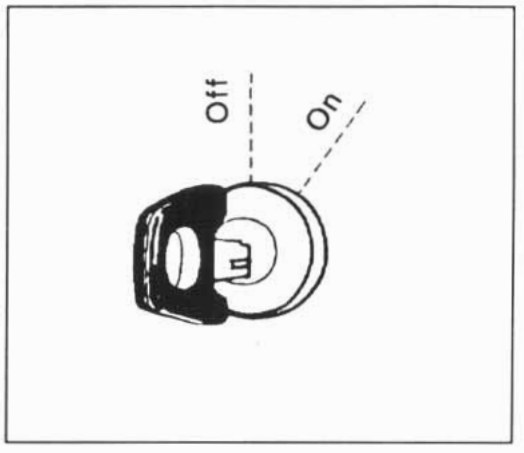

Keyswitch to OFF

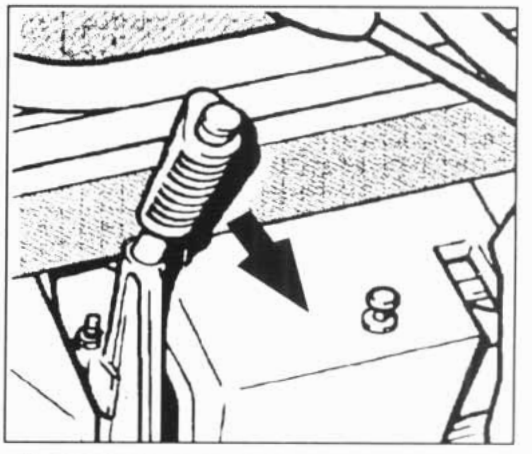

Powerfully apply parking brake

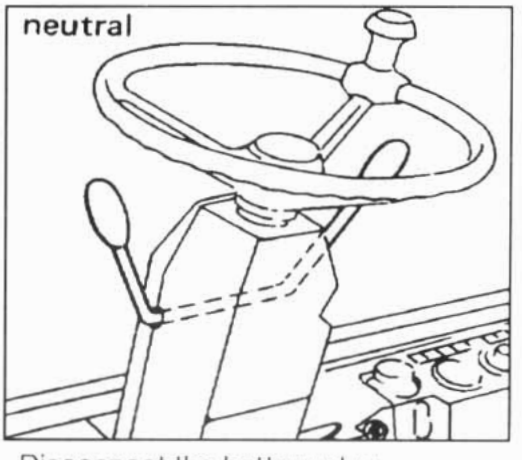

Disconnect the battery plug

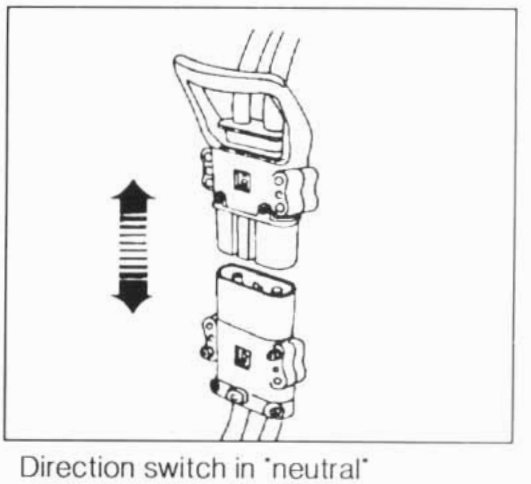

Direction switch in "neutral"

Safely chock up truck

Drive wheel must be turned easily!

Preparation for testing

Check fuses

1 = fuse e4 protecting horn
2 = control circuit fuse e3 protecting pump motor
3 = control circuit fuse e2, traction
4 = main control circuit fuse el

5 = main circuit fuse e2 protecting drive motor
6 = main circuit fuse e5 protecting pump motor
(see Fig. 1)

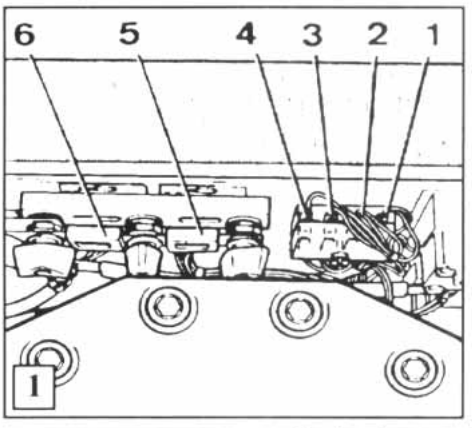

Fuses protecting lighting equipment

1 = fuse protecting LH headlamp and LH tail lamp
2 = fuse protecting RH headlamp and RH tail lamp
3 = fuse protecting flasher lights
4 = fuse protecting stop lights
(see Fig. 2)

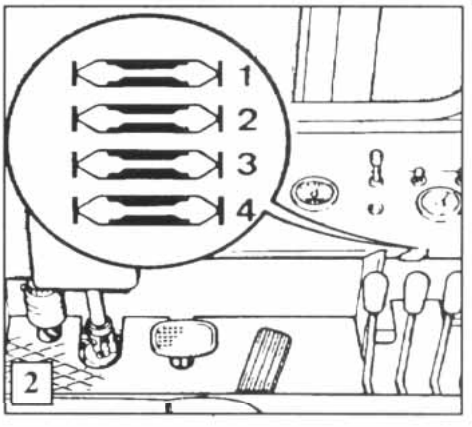

If one of the control circuit fuses blows due to a trouble in the electric circuit or a malfunction of one of the fuse-protected functional groups/components, trace and rectify the cause before renewing the fuse.

Preparation for testing

Measuring insulation resistance (earthing)

Testing the insulation resistance on the electrical machines can become necessary if:

- the main circuit fuse has blown
- the coil is suspected to be shorted to the frame of the machine
- a repair is carried out

The resistance of the insulation of all windings against housing is considered to be sufficient provided it is at least 1000-ohms-per-volt of battery voltage.

Test:

The insulation resistance must first be tested between armature and field (A or B against E or F). After that the armature must be tested against motor housing (A or B against housing) then the field against motor housing (E or F against housing).

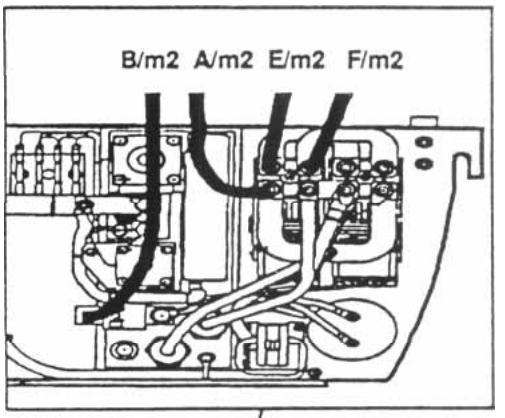

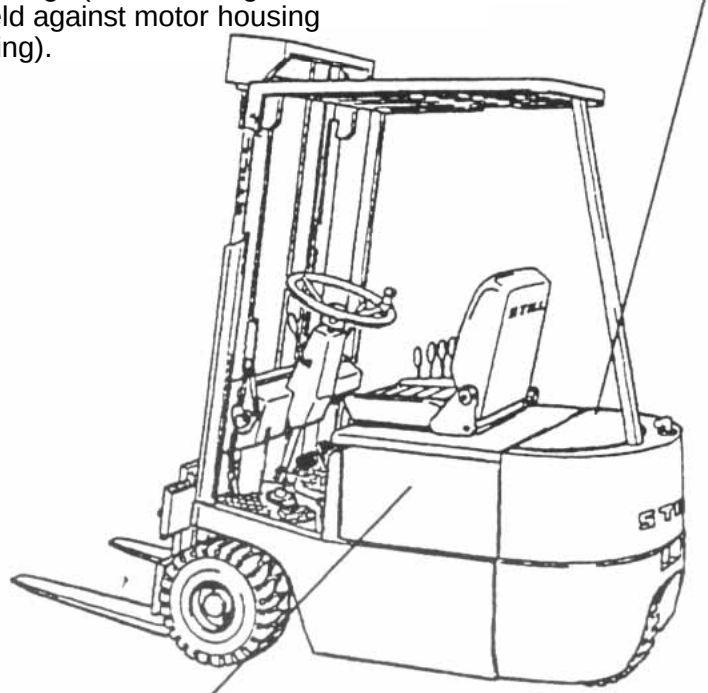

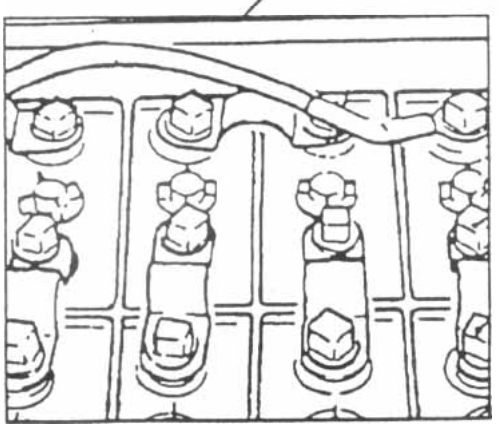

Before testing the insulation resistance check state **of** battery charge:

Battery must be filled and sufficiently charged.

Consult the Operating instructions for the driver.

Preparation for testing

Plug measuring adaptor into base socket for p.c.b. (main control card).
Insert test module (system analyser) into measuring adaptor.

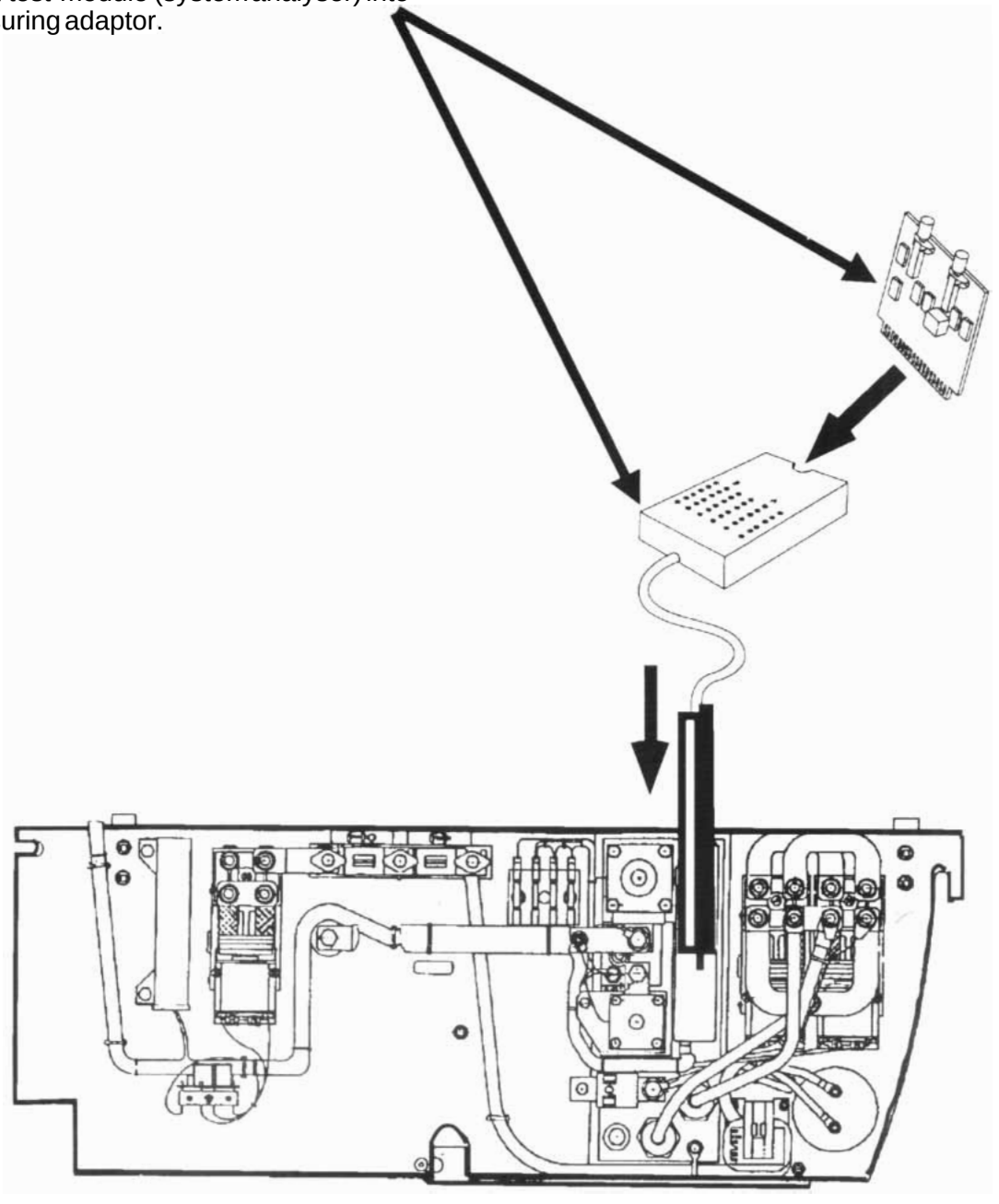

Preparation for testing

Rules which must be observed in connection with the test procedure carried out with the R50 test module.

In the following diagnostic instructions the operational sequence is shown on the left page in the form of a flow chart and the corresponding figurative representation of the test procedure on the right page.

The sequence of the specific operations is represented by figures in a ○, the operations displayed on both left and right pages being identical.

The correlated figure numbers appear in a box □ on both left and right pages.

The abbreviations stated in brackets are to be interpreted as follows:

Bu = socket half
St = pin half

Regarding all test operations this applies:

Disconnect the battery before performing the following work:

- Checking wire connections
- Removal and installation of component parts
- Removal and fitting of bridges
- Replacement of fuses

It is only after termination of the relavant operation that the battery plug can be reconnected.

Prior to checking components for proper insulation, the measuring adaptor or p.c.b. (u200) must be disconnected.

DIAGNOSTIC INSTRUCTIONS

Testing with R50 Test Module

Functional check with p.c.b.u200

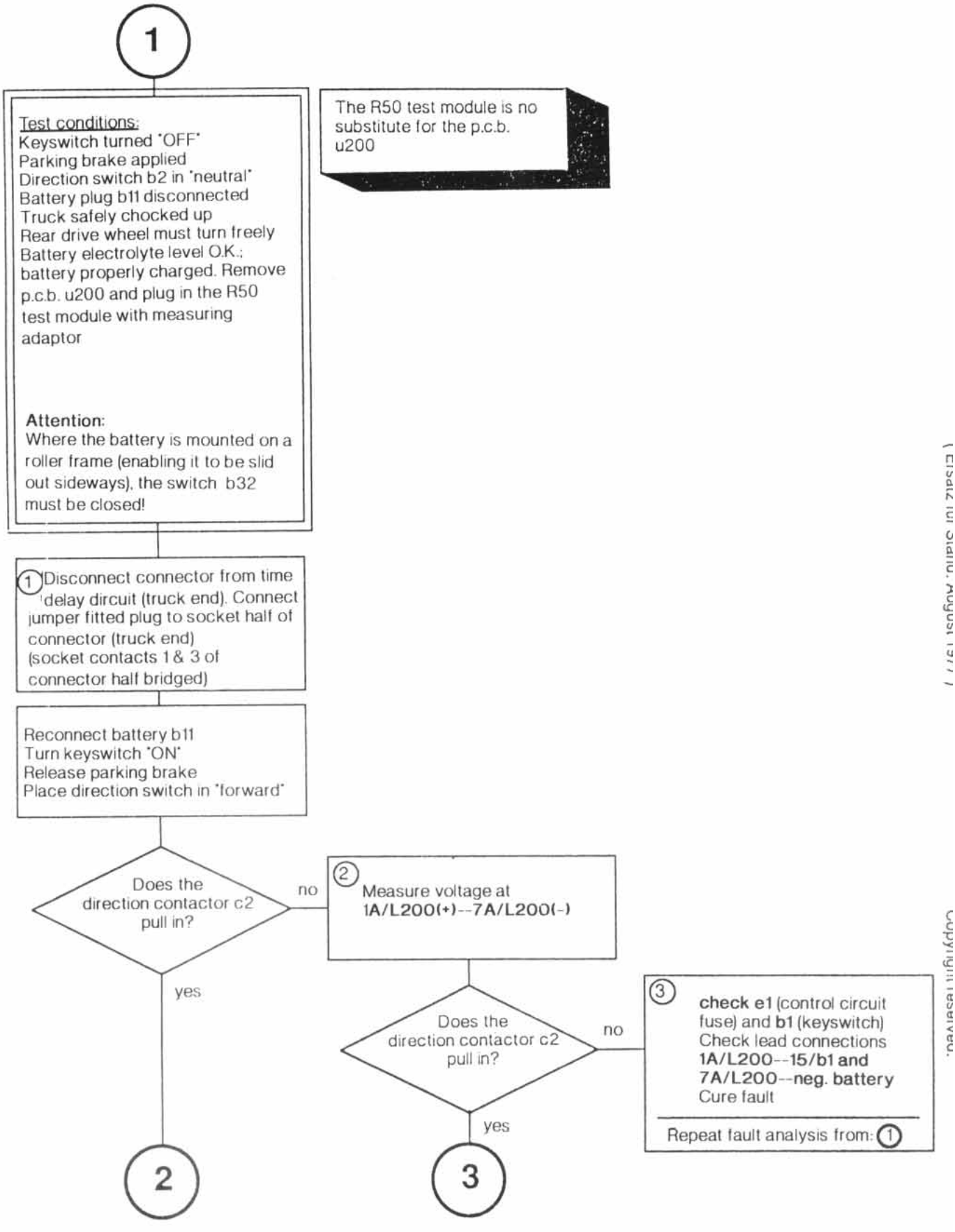

Copyright reserved.

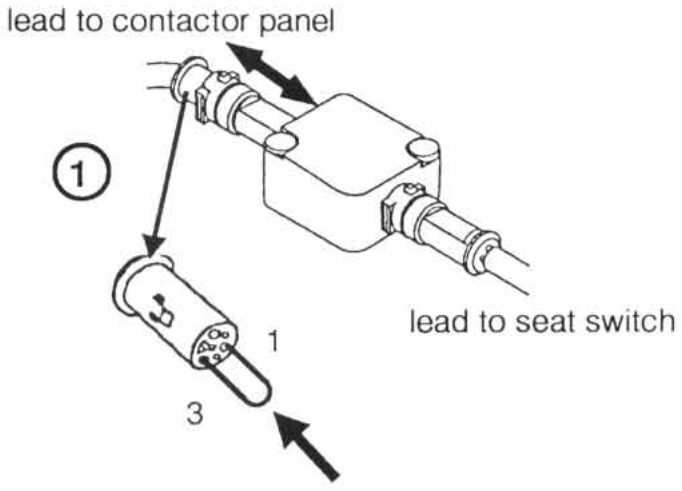
lead to contactor panel
1
1
3
lead to seat switch

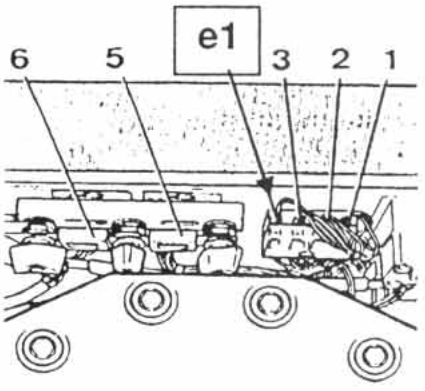
e1
6
5
3
2
1

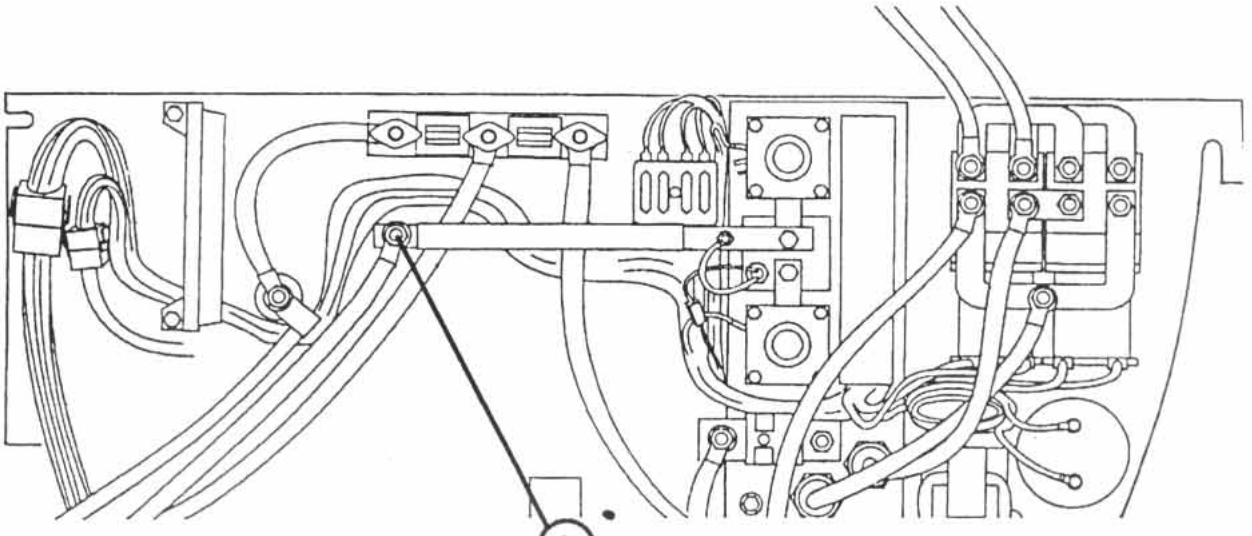

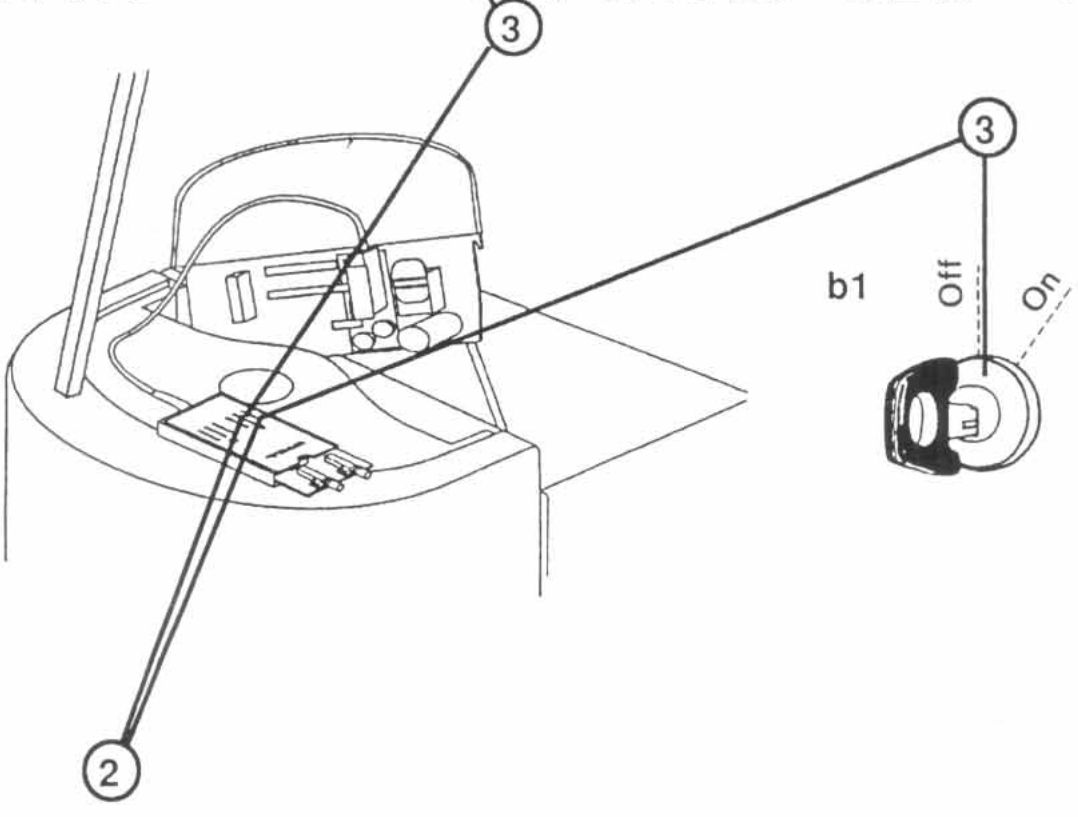
3
3
b1
Off
On
2

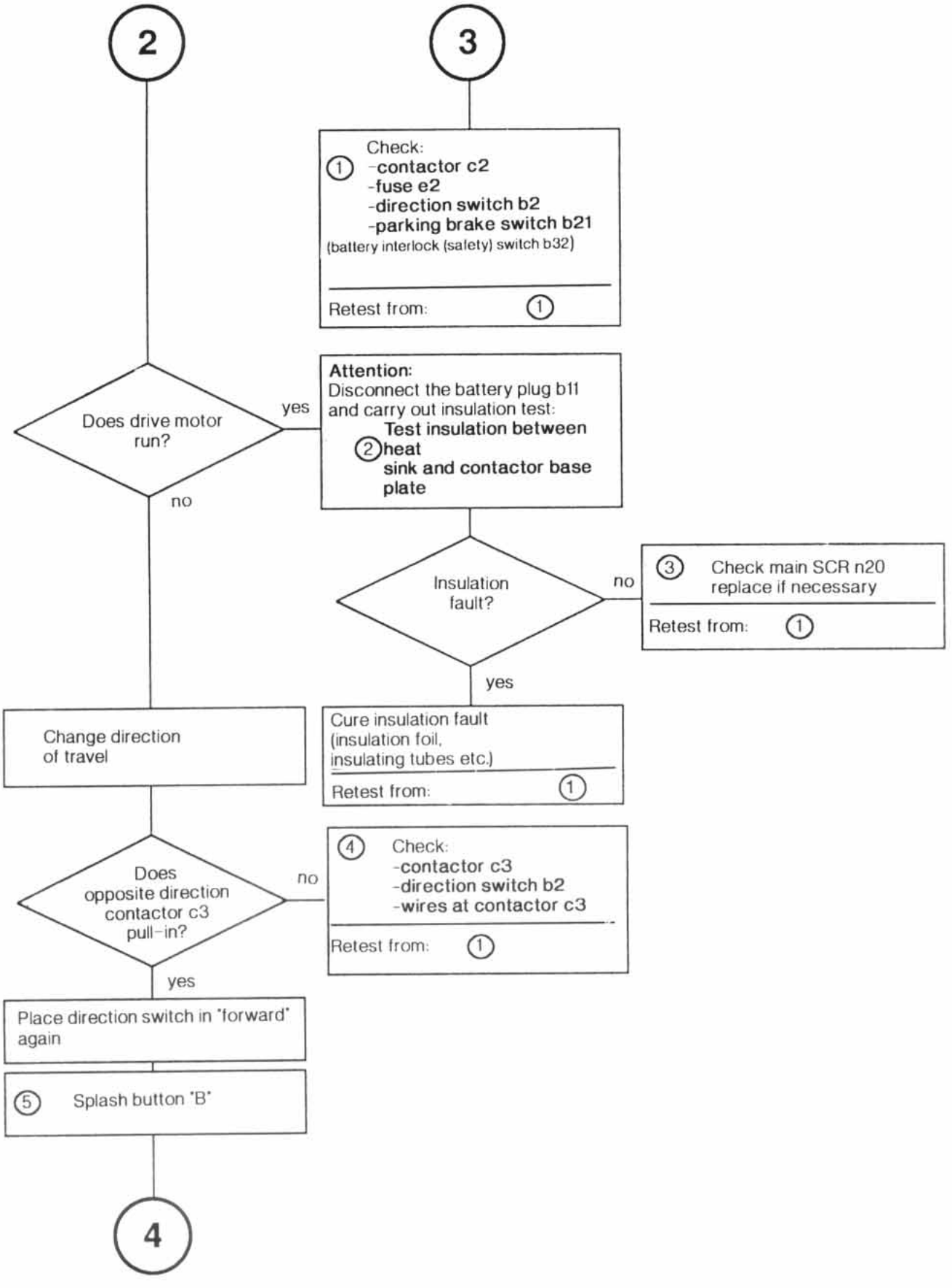
2
3
Check:
1 -contactor c2
-fuse e2
-direction switch b2
-parking brake switch b21
(battery interlock (salety) switch b32)
Retest from: 1
Does drive motor run?
yes
no
Attention:
Disconnect the battery plug b11 and carry out insulation test:
2 Test insulation between heat sink and contactor base plate
Insulation fault?
no
3 Check main SCR n20 replace if necessary
Retest from: 1
yes
Cure insulation fault (insulation foil, insulating tubes etc.)
Retest from: 1
Change direction of travel
Does opposite direction contactor c3 pull-in?
no
4 Check:
-contactor c3
-direction switch b2
-wires at contactor c3
Retest from: 1
yes
Place direction switch in "forward" again
5 Splash button "B"
4

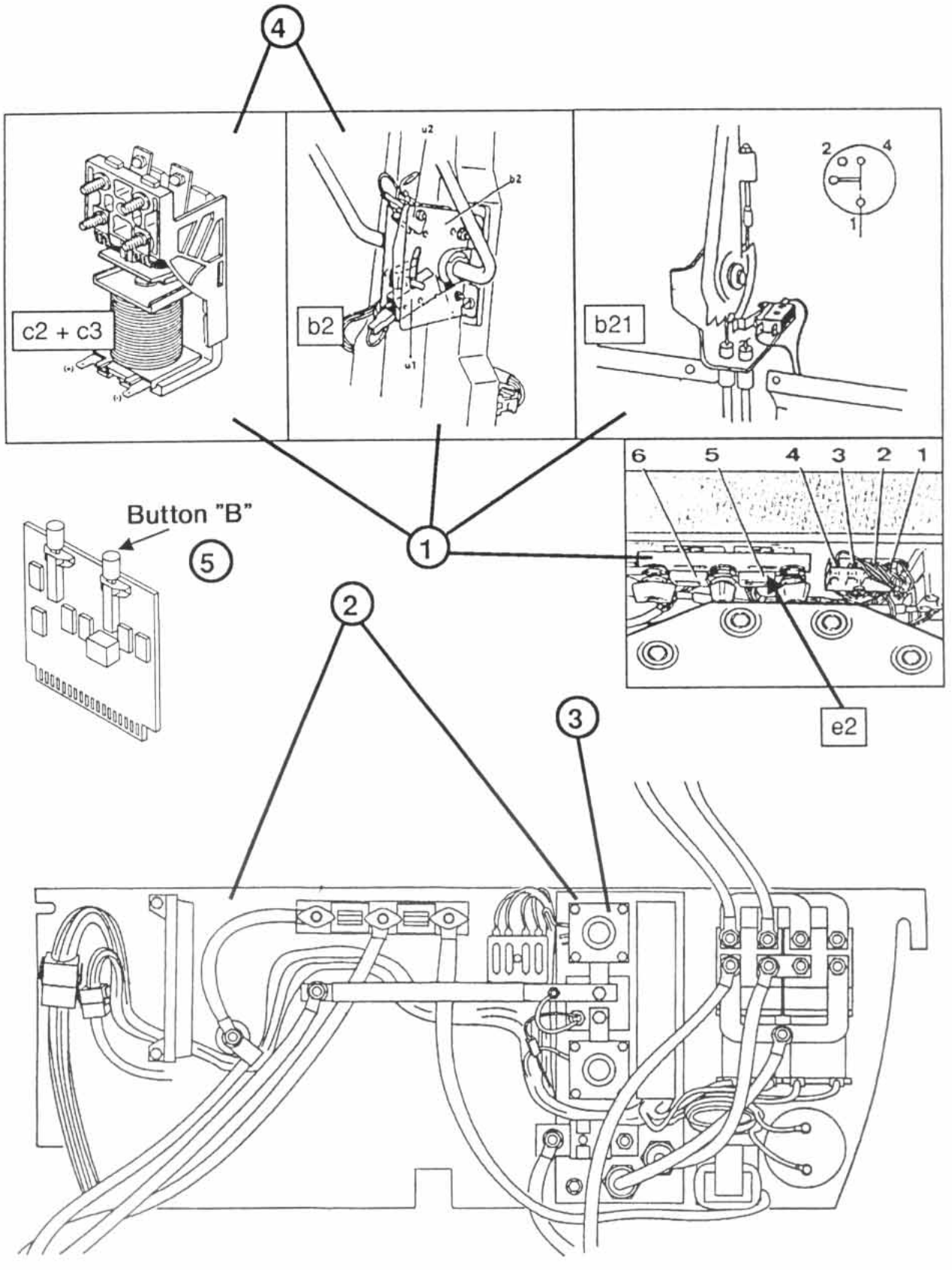
4
c2 + c3
b2
b21
2
4
1
6
5
4
3
2
1
Button "B"
5
1
2
3
e2

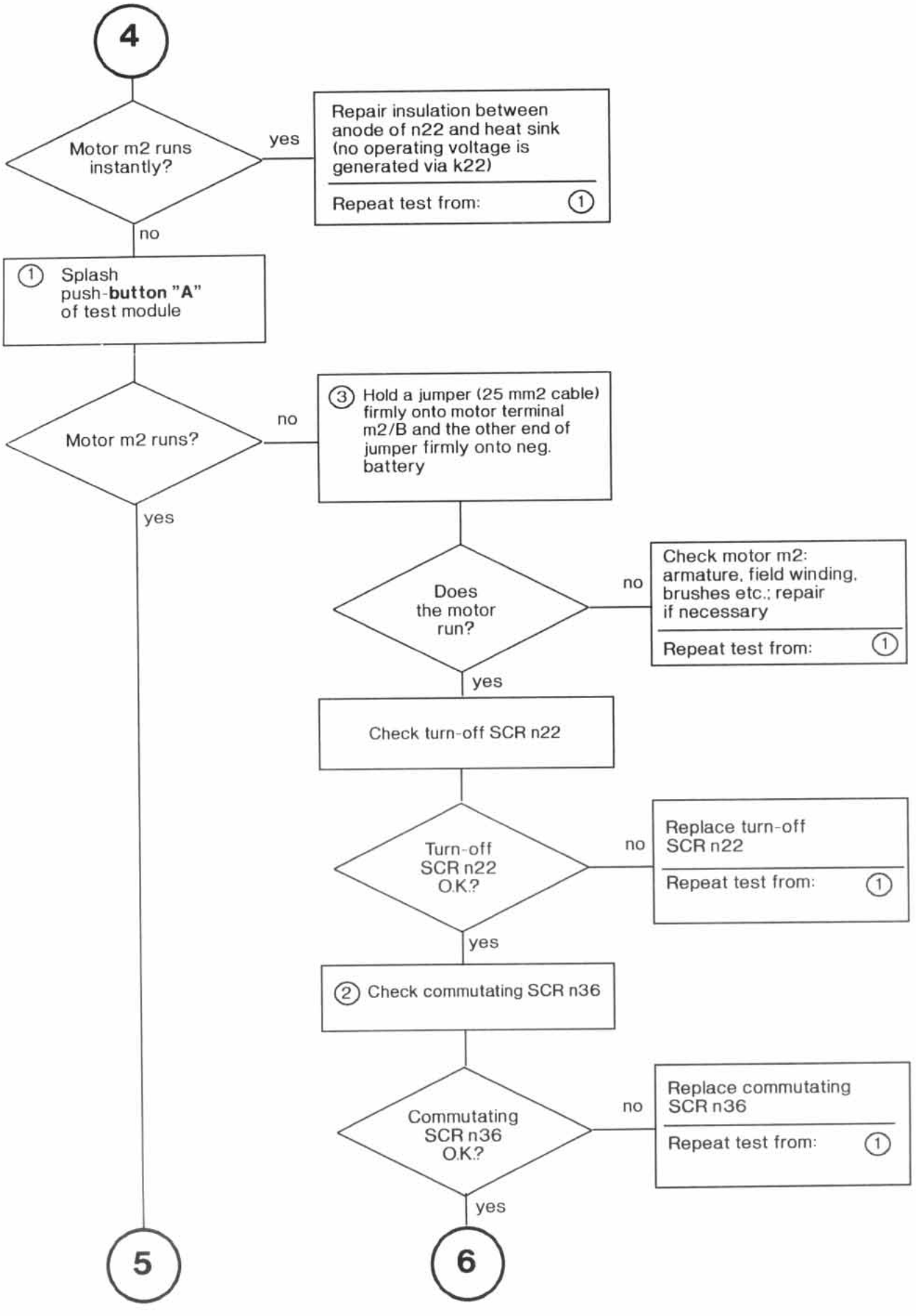
4
Motor m2 runs instantly?
yes
Repair insulation between anode of n22 and heat sink (no operating voltage is generated via k22)
Repeat test from: 1
no
1 Splash push-button "A" of test module
Motor m2 runs?
no
3 Hold a jumper (25 mm2 cable) firmly onto motor terminal m2/B and the other end of jumper firmly onto neg. battery
yes
Does the motor run?
no
Check motor m2: armature, field winding, brushes etc.; repair if necessary
Repeat test from: 1
yes
Check turn-off SCR n22
Turn-off SCR n22 O.K.?
no
Replace turn-off SCR n22
Repeat test from: 1
yes
2 Check commutating SCR n36
Commutating SCR n36 O.K.?
no
Replace commutating SCR n36
Repeat test from: 1
yes
5
6

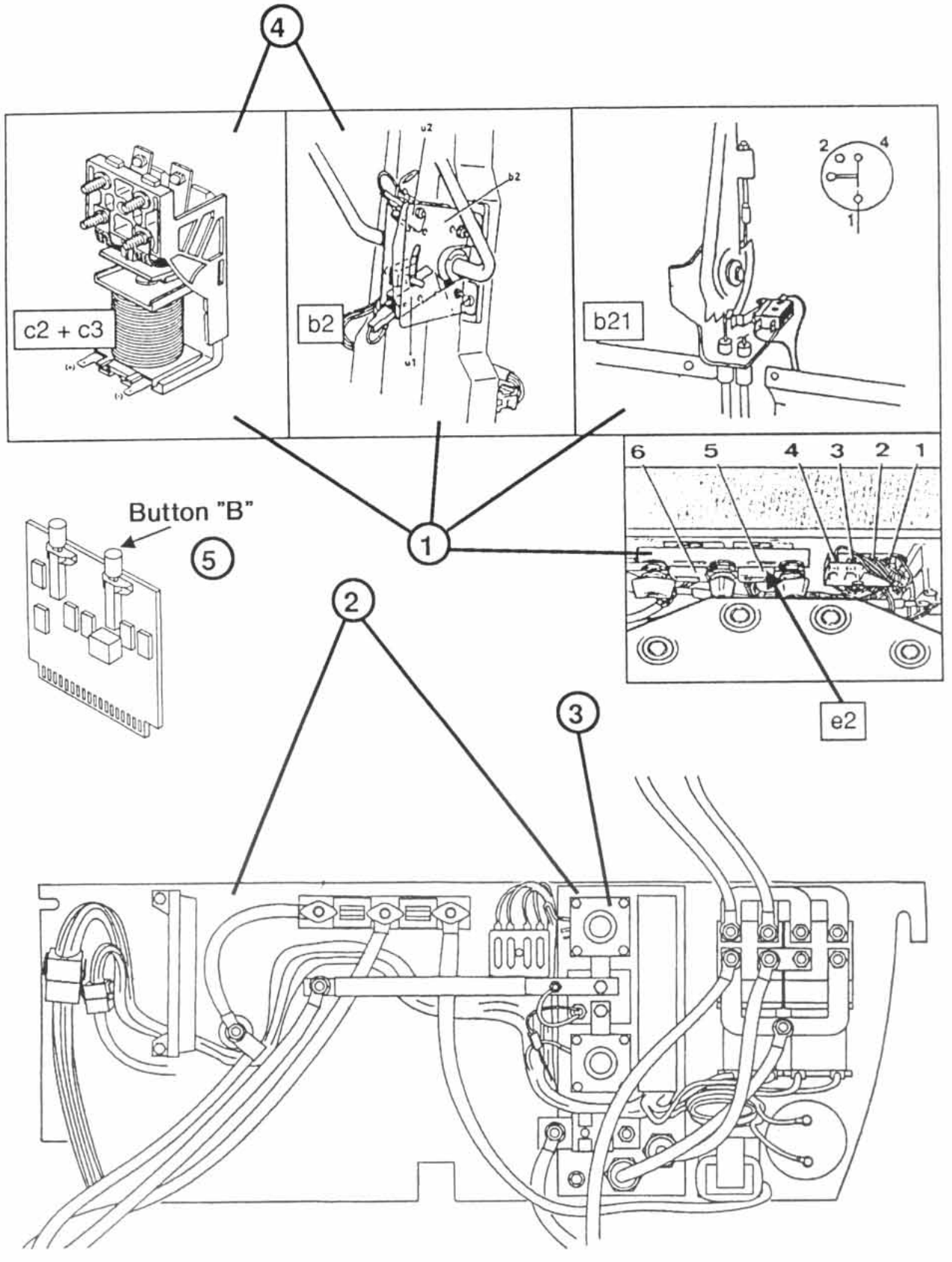
4
c2 + c3
b2
b21
2
4
1
6
5
4
3
2
1
Button "B"
5
1
2
3
e2

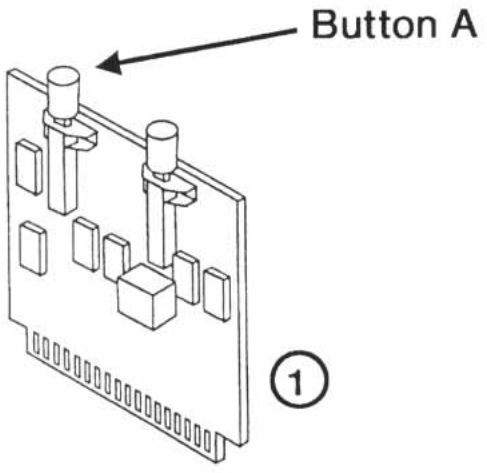
Button A
1

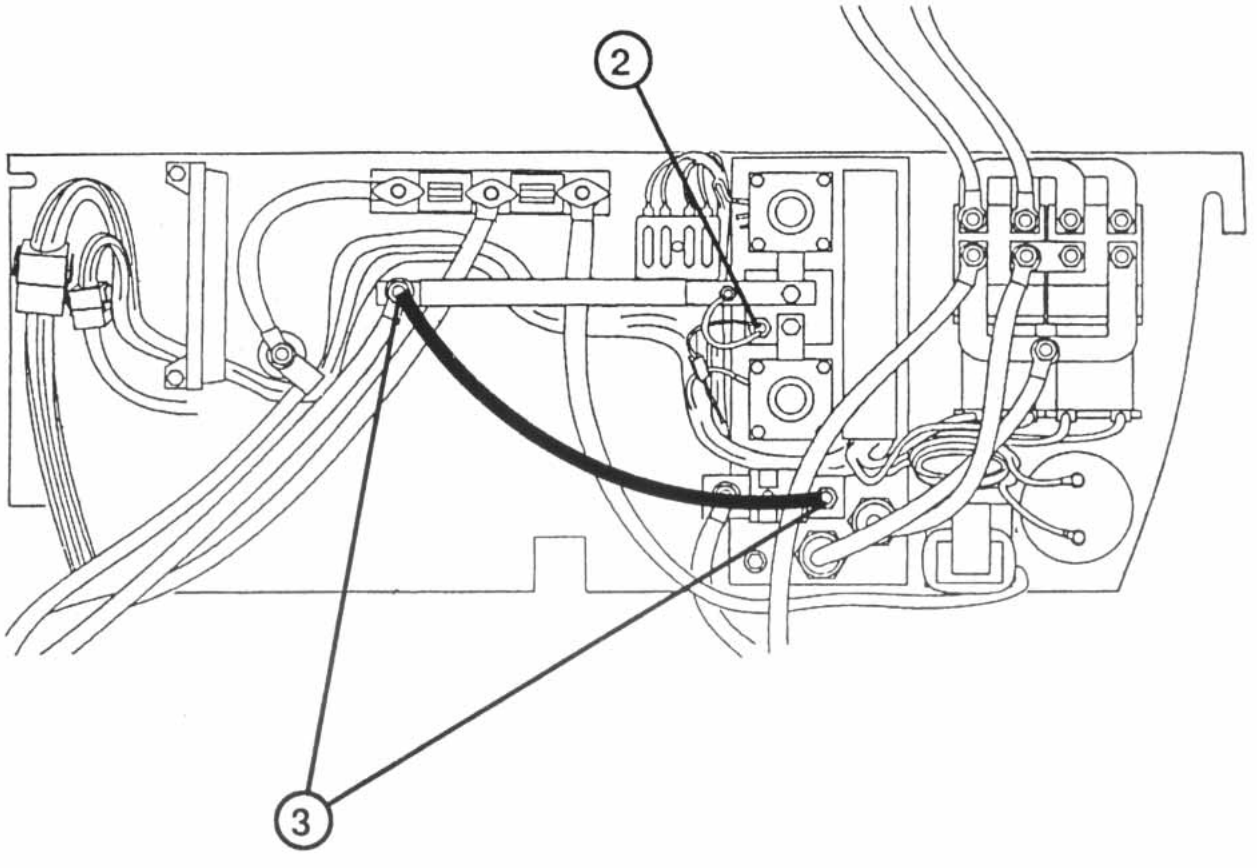
2
3

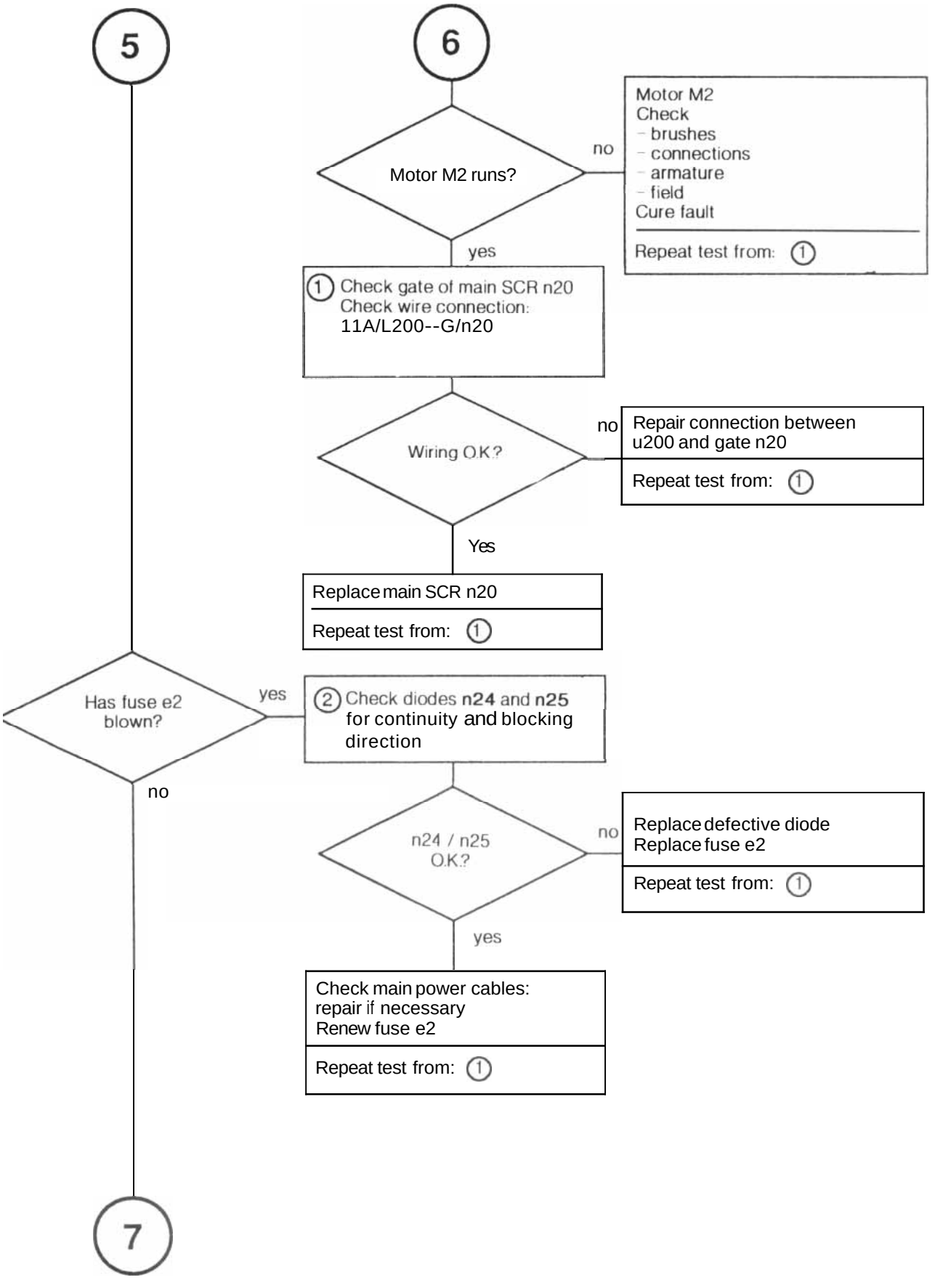
5
6
Motor M2 runs?
no
Motor M2
Check
- brushes
- connections
- armature
- field
Cure fault
Repeat test from: 1
yes
1 Check gate of main SCR n20
Check wire connection:
11A/L200--G/n20
Wiring O.K.?
no
Repair connection between
u200 and gate n20
Repeat test from: 1
Yes
Replace main SCR n20
Repeat test from: 1
Has fuse e2
blown?
yes
2 Check diodes n24 and n25
for continuity and blocking
direction
no
n24 / n25
O.K.?
no
Replace defective diode
Replace fuse e2
Repeat test from: 1
yes
Check main power cables:
repair if necessary
Renew fuse e2
Repeat test from: 1
7

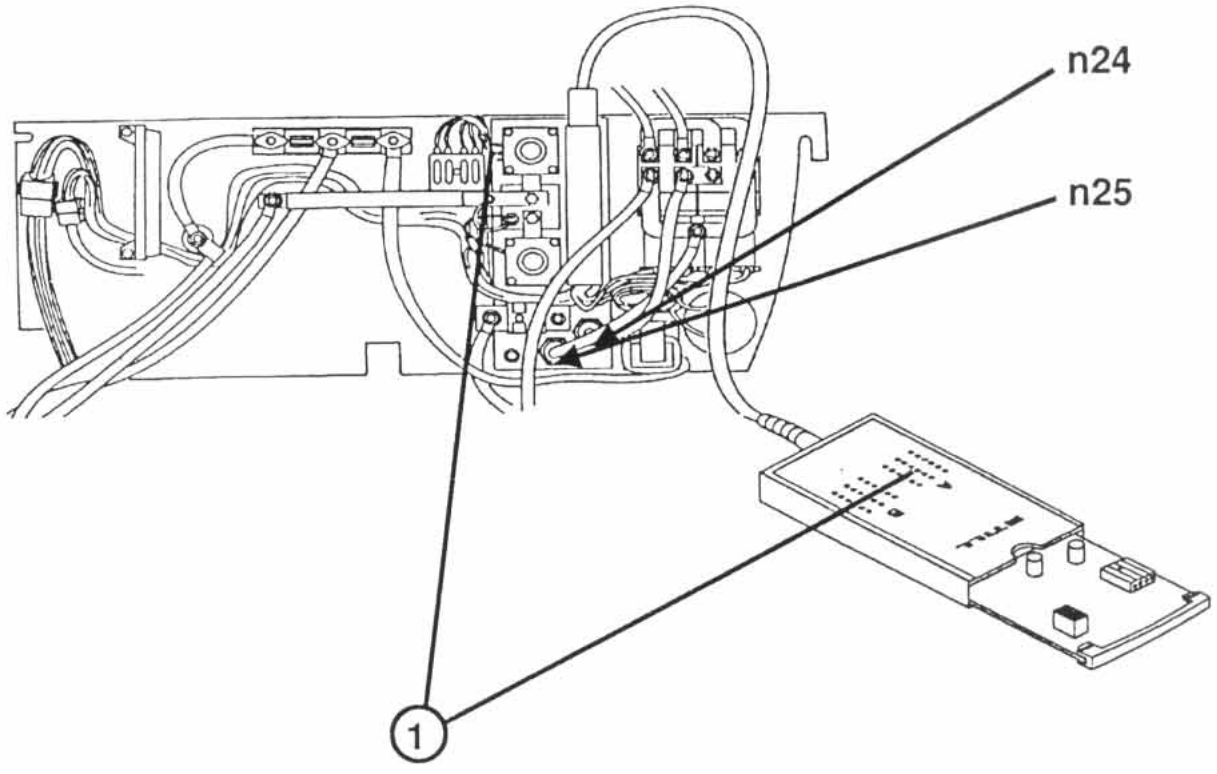

n24

n25

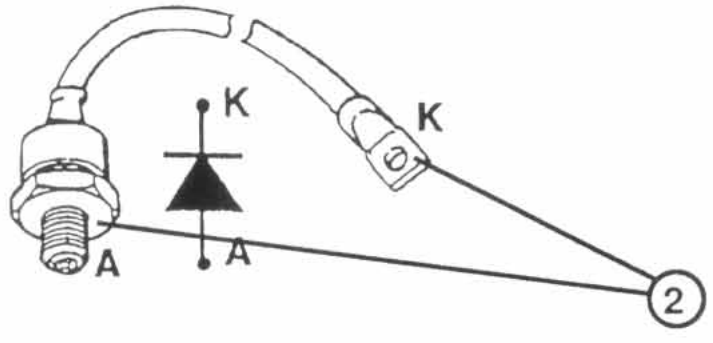

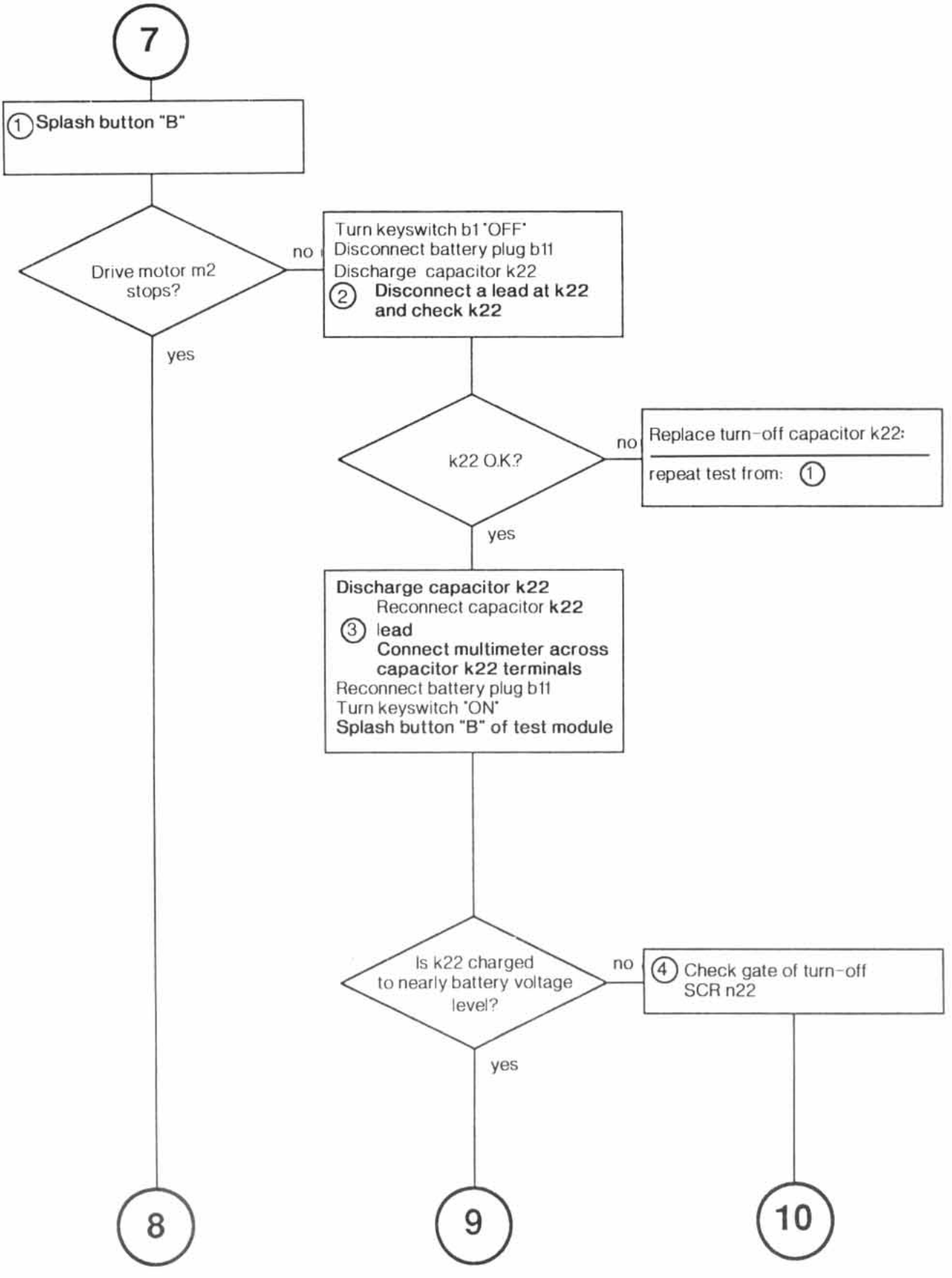
7
1 Splash button "B"
Drive motor m2 stops?
no
Turn keyswitch b1 "OFF"
Disconnect battery plug b11
Discharge capacitor k22
2 Disconnect a lead at k22 and check k22
yes
k22 O.K.?
no
Replace turn-off capacitor k22:
repeat test from: 1
yes
Discharge capacitor k22
Reconnect capacitor k22
3 lead
Connect multimeter across capacitor k22 terminals
Reconnect battery plug b11
Turn keyswitch "ON"
Splash button "B" of test module
Is k22 charged to nearly battery voltage level?
no
4 Check gate of turn-off SCR n22
yes
8
9
10

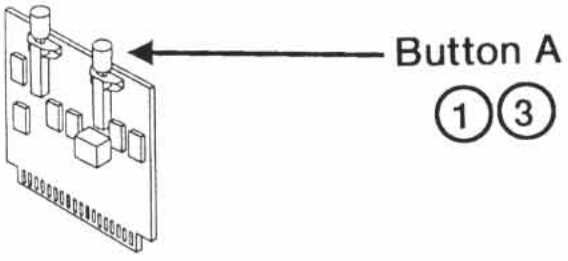
Button A
1 3

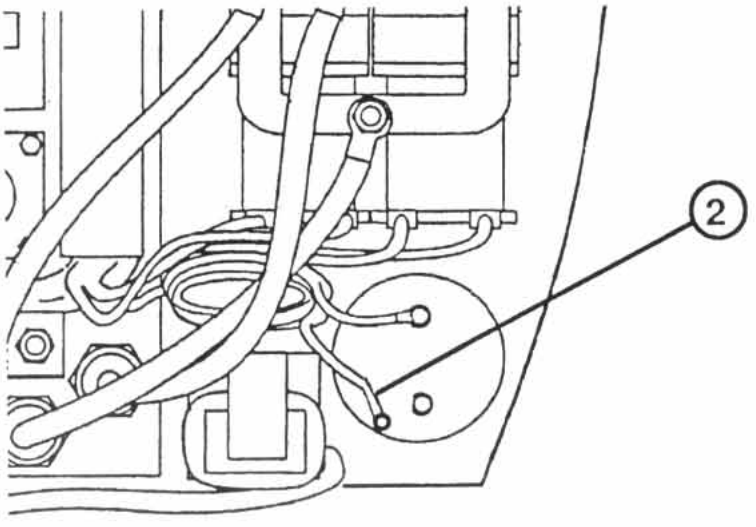
2

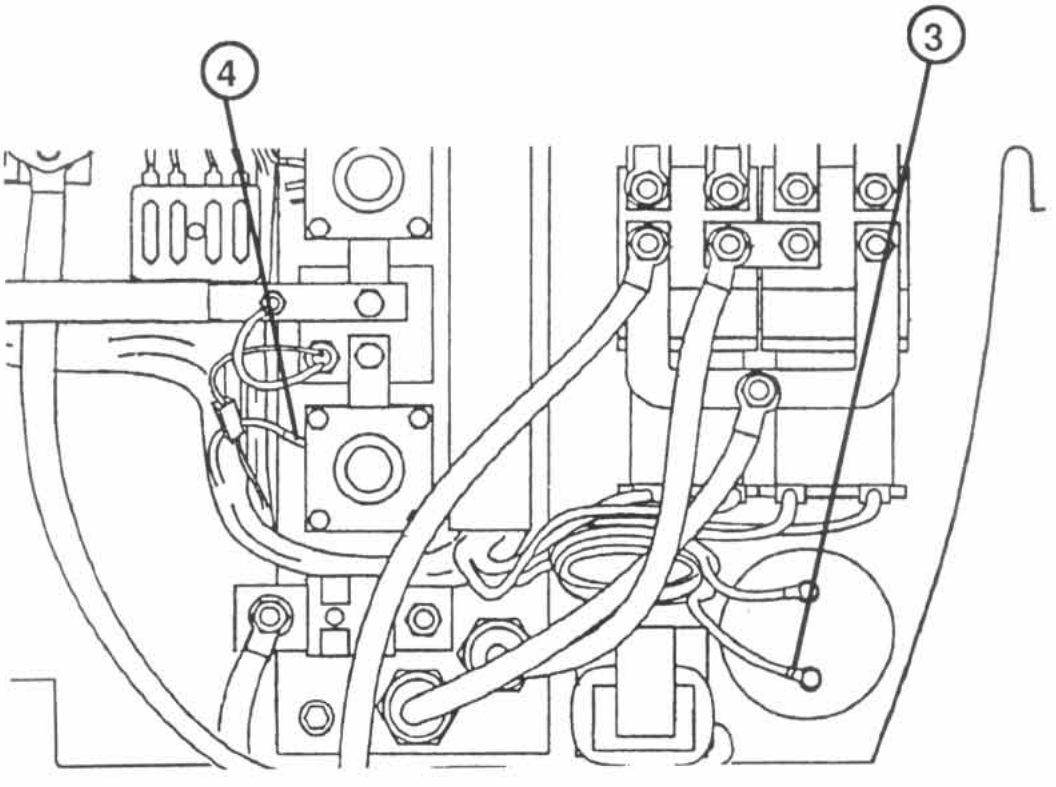
4
3

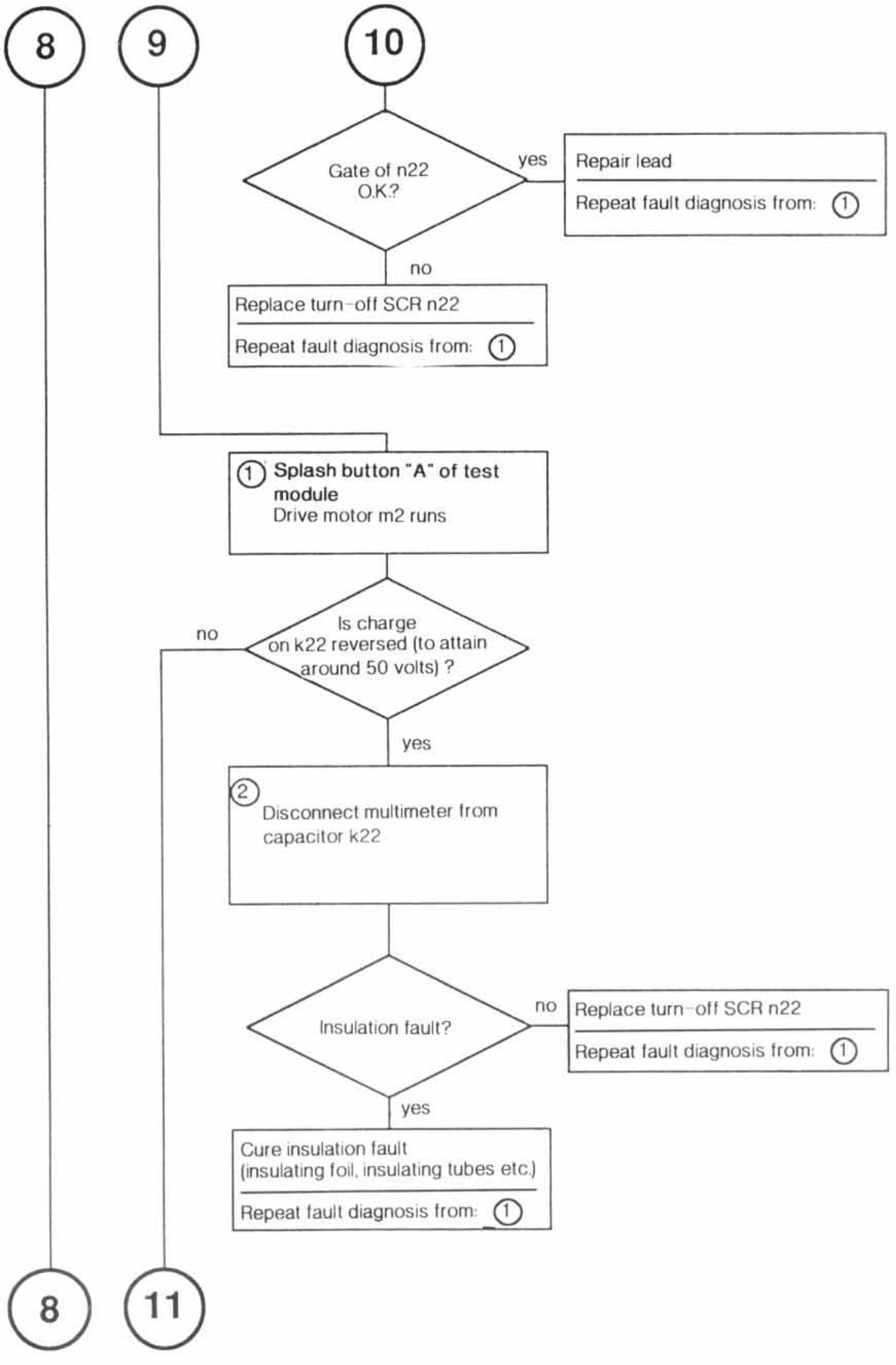
8
9
10
Gate of n22 O.K.?
yes
Repair lead
Repeat fault diagnosis from: 1
no
Replace turn-off SCR n22
Repeat fault diagnosis from: 1
1 Splash button "A" of test module
Drive motor m2 runs
Is charge on k22 reversed (to attain around 50 volts) ?
no
yes
2 Disconnect multimeter from capacitor k22
Insulation fault?
no
Replace turn-off SCR n22
Repeat fault diagnosis from: 1
yes
Cure insulation fault (insulating foil, insulating tubes etc.)
Repeat fault diagnosis from: 1
8
11

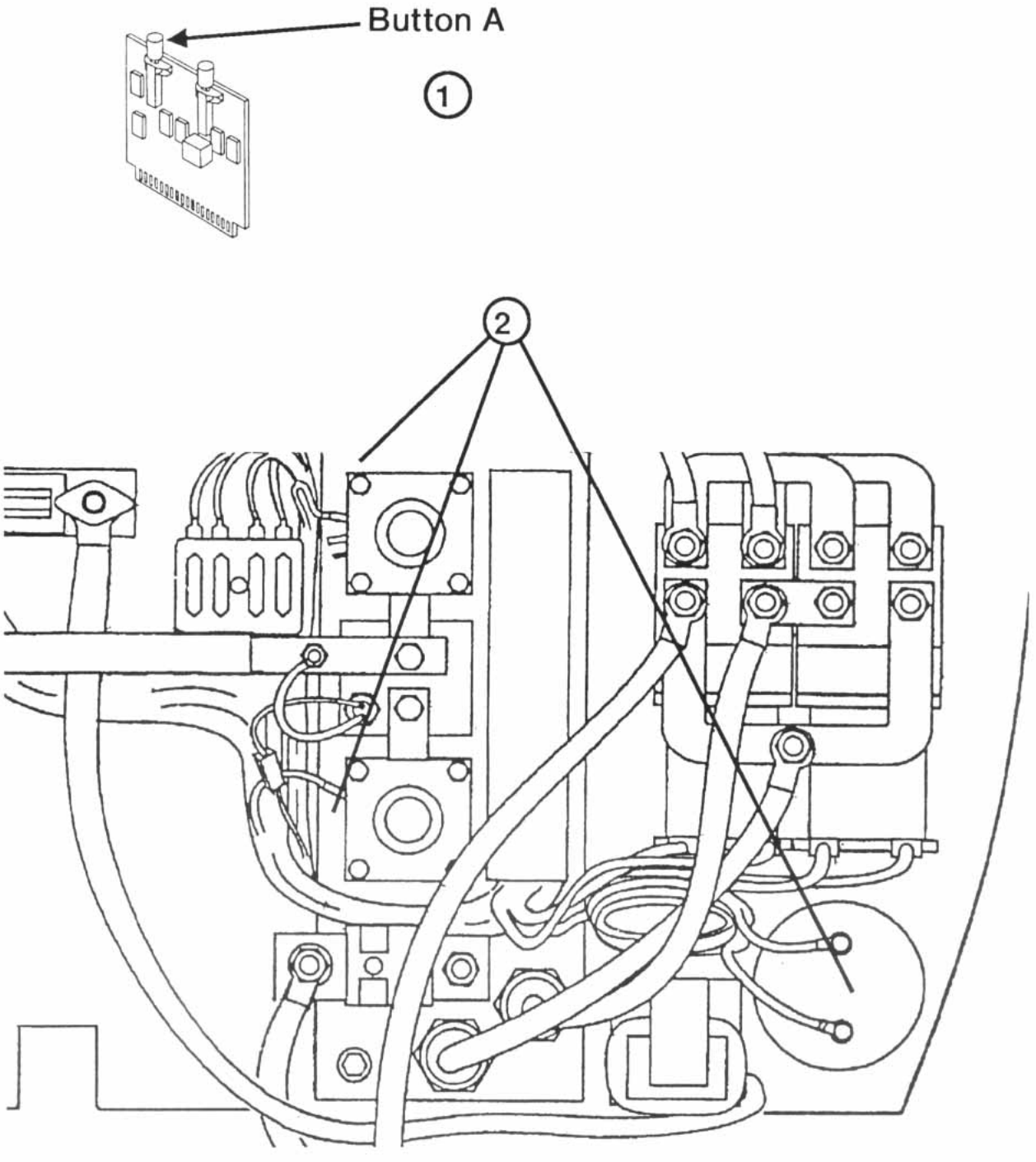
Button A
1
2

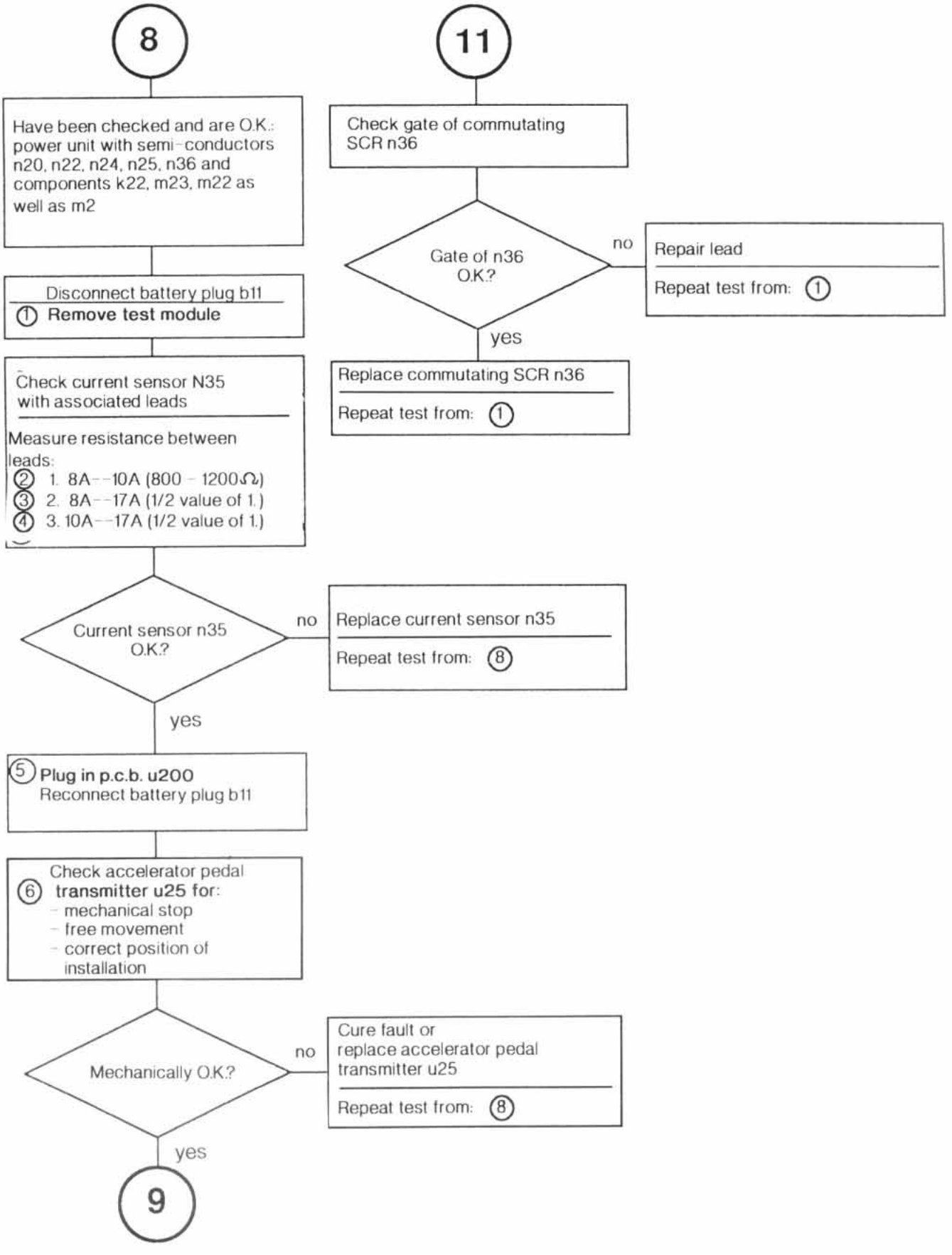
8
Have been checked and are O.K.: power unit with semi-conductors n20, n22, n24, n25, n36 and components k22, m23, m22 as well as m2
Disconnect battery plug b11
1 Remove test module
Check current sensor N35 with associated leads
Measure resistance between leads:
2 1. 8A--10A (800 - 1200Ω)
3 2. 8A--17A (1/2 value of 1.)
4 3. 10A--17A (1/2 value of 1.)
Current sensor n35 O.K.?
no
Replace current sensor n35
Repeat test from: 8
yes
5 Plug in p.c.b. u200
Reconnect battery plug b11
6 Check accelerator pedal transmitter u25 for:
- mechanical stop
- free movement
- correct position of installation
Mechanically O.K.?
no
Cure fault or replace accelerator pedal transmitter u25
Repeat test from: 8
yes
9
11
Check gate of commutating SCR n36
Gate of n36 O.K.?
no
Repair lead
Repeat test from: 1
yes
Replace commutating SCR n36
Repeat test from: 1

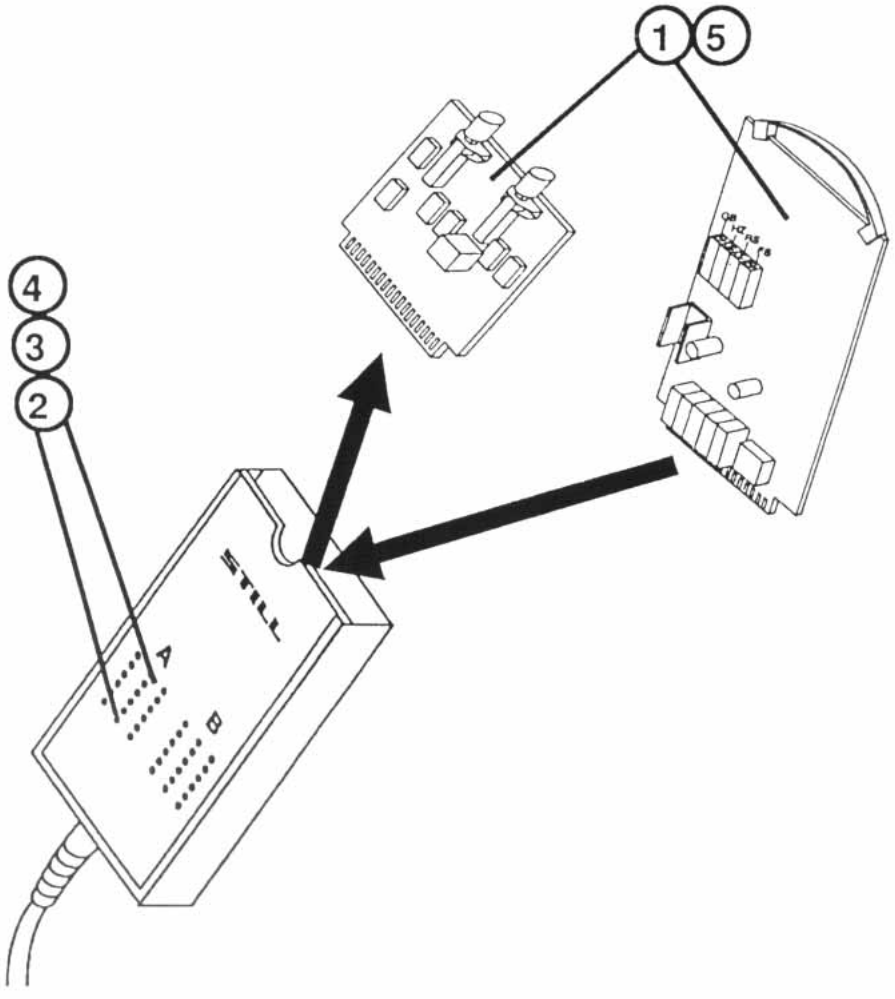
1
5
4
3
2
STILL
A
B

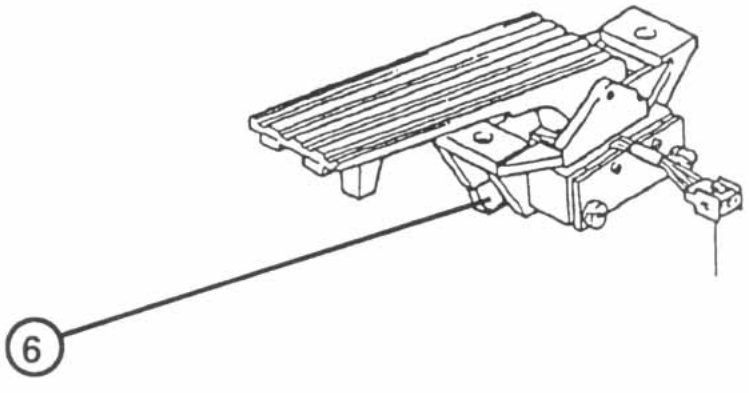
6

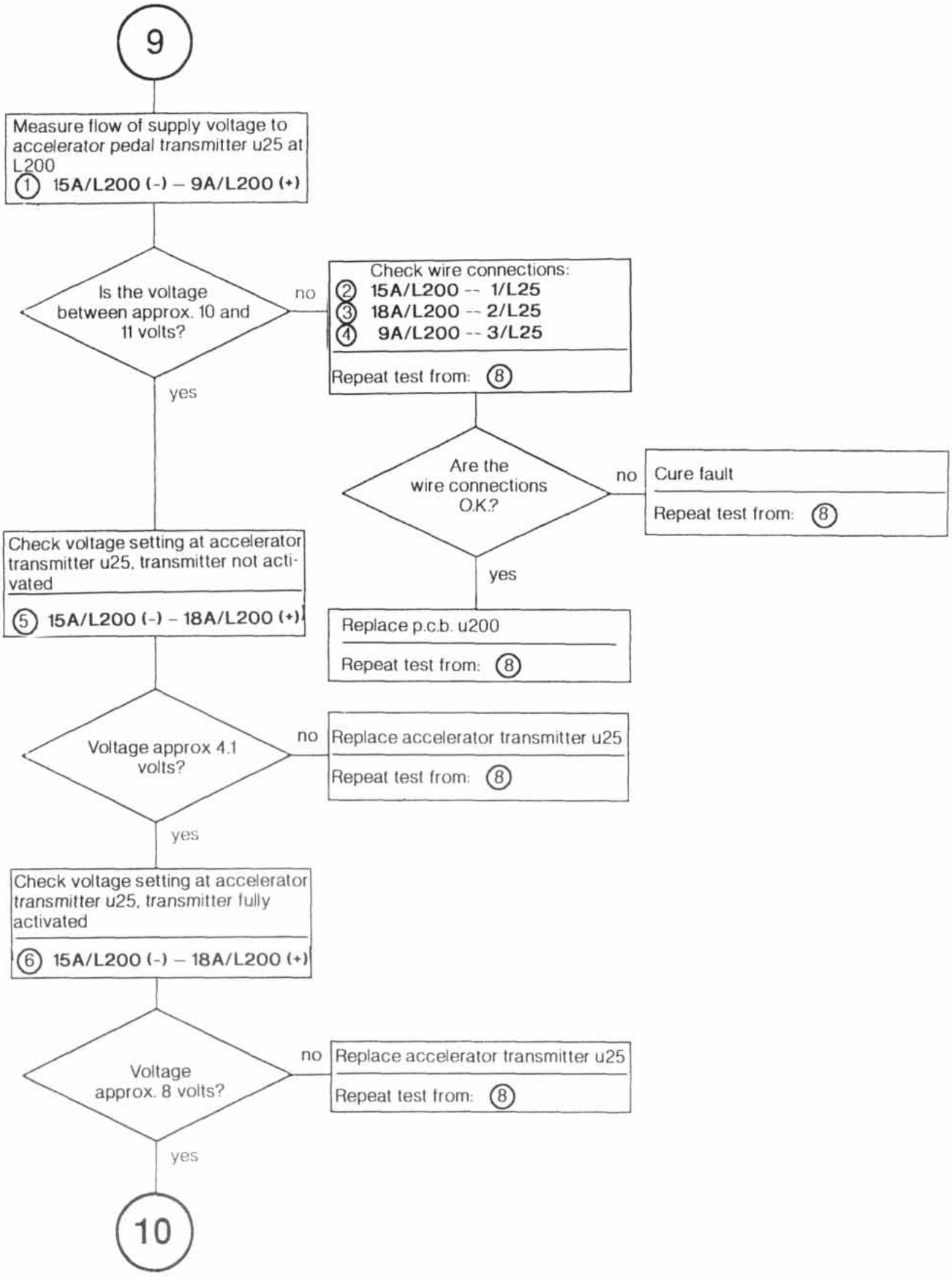
9
Measure flow of supply voltage to accelerator pedal transmitter u25 at L200
1 15A/L200 (-) – 9A/L200 (+)
Is the voltage between approx. 10 and 11 volts?
no
Check wire connections:
2 15A/L200 -- 1/L25
3 18A/L200 -- 2/L25
4 9A/L200 -- 3/L25
Repeat test from: 8
yes
Are the wire connections O.K.?
no
Cure fault
Repeat test from: 8
yes
Replace p.c.b. u200
Repeat test from: 8
Check voltage setting at accelerator transmitter u25, transmitter not activated
5 15A/L200 (-) – 18A/L200 (+)
Voltage approx 4.1 volts?
no
Replace accelerator transmitter u25
Repeat test from: 8
yes
Check voltage setting at accelerator transmitter u25, transmitter fully activated
6 15A/L200 (-) – 18A/L200 (+)
Voltage approx. 8 volts?
no
Replace accelerator transmitter u25
Repeat test from: 8
yes
10

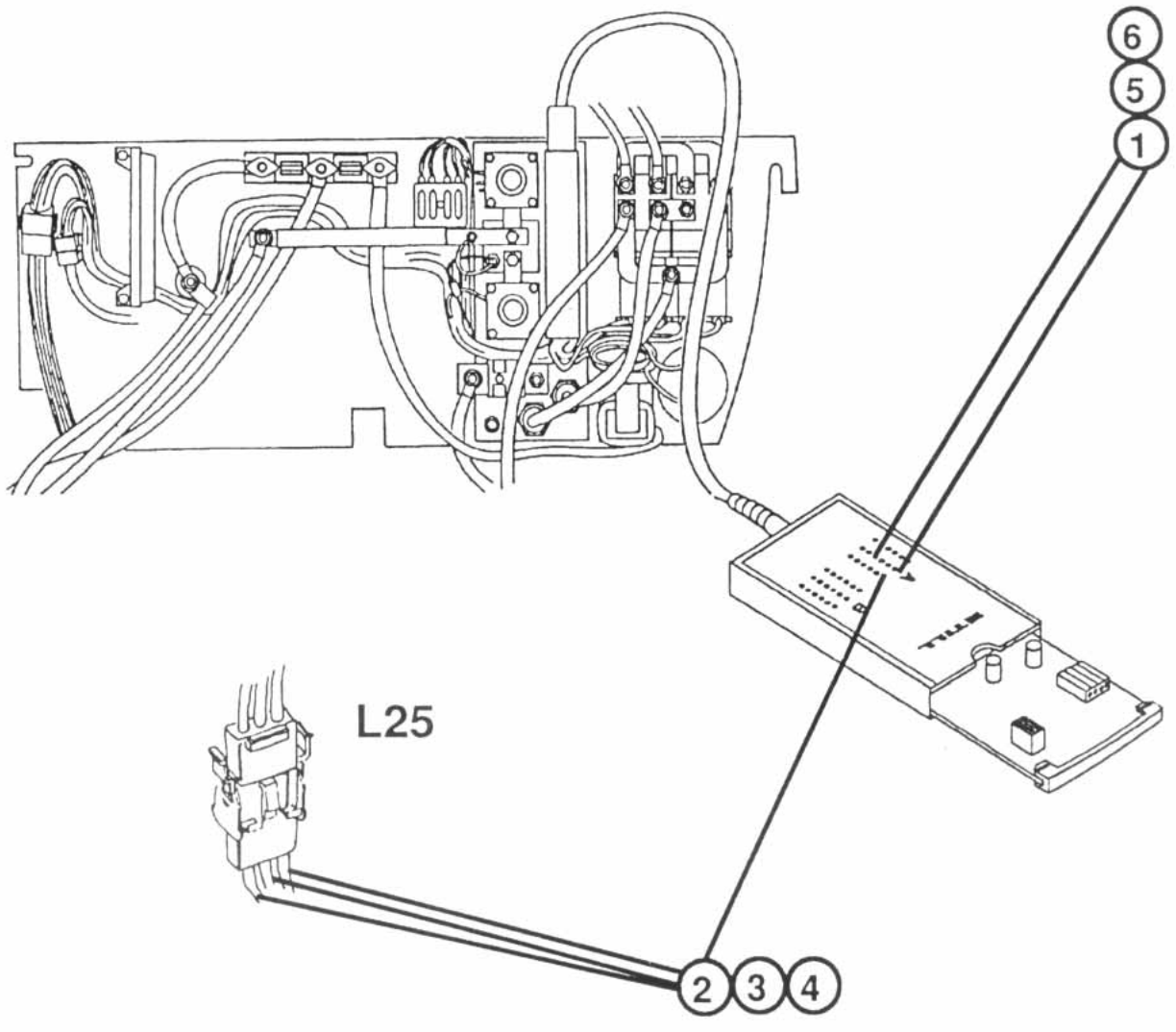
6
5
1
L25
2
3
4

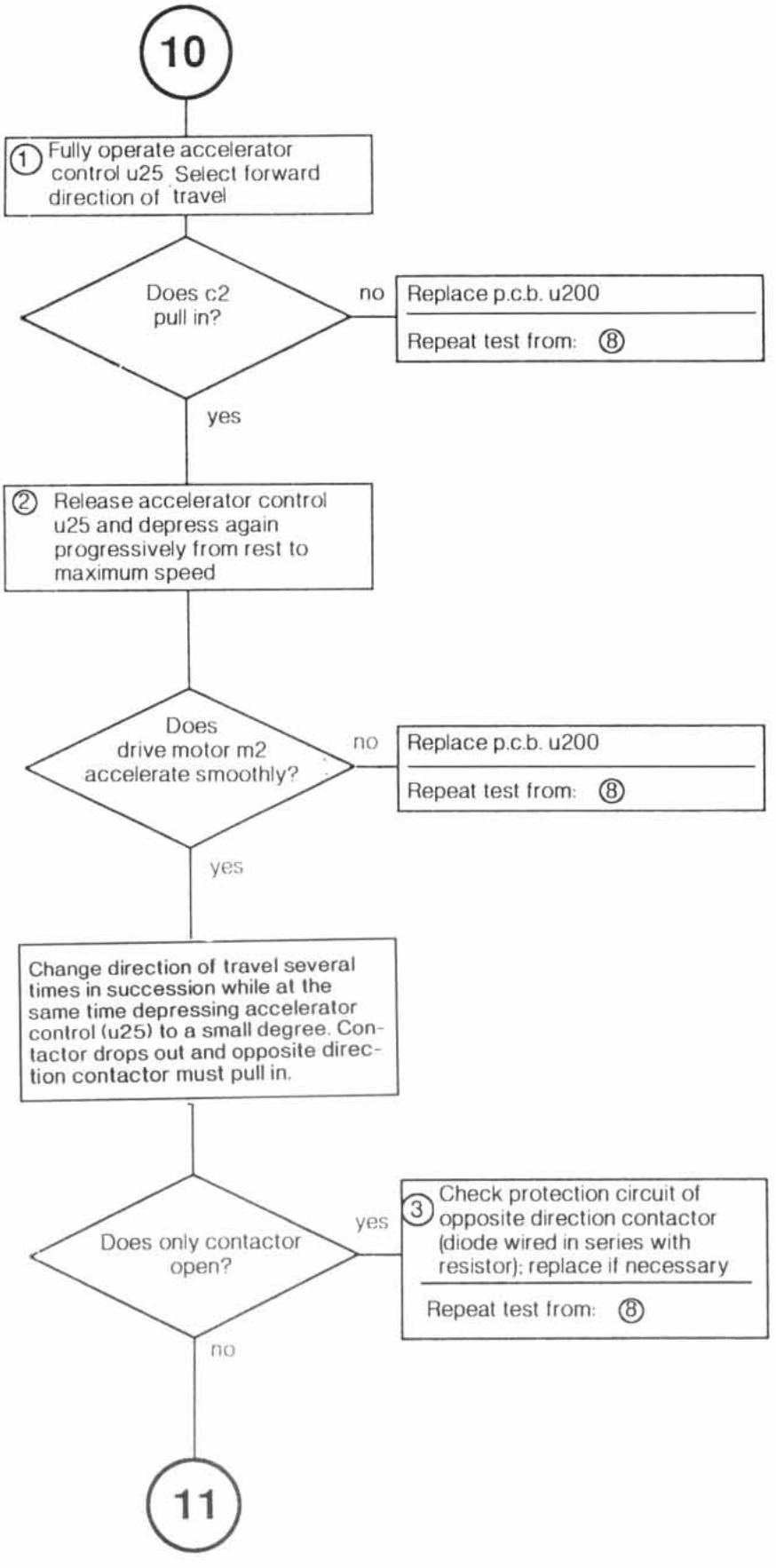
10
1 Fully operate accelerator control u25 Select forward direction of travel
Does c2 pull in?
no
Replace p.c.b. u200
Repeat test from: 8
yes
2 Release accelerator control u25 and depress again progressively from rest to maximum speed
Does drive motor m2 accelerate smoothly?
no
Replace p.c.b. u200
Repeat test from: 8
yes
Change direction of travel several times in succession while at the same time depressing accelerator control (u25) to a small degree. Contactor drops out and opposite direction contactor must pull in.
Does only contactor open?
yes
3 Check protection circuit of opposite direction contactor (diode wired in series with resistor); replace if necessary
Repeat test from: 8
no
11

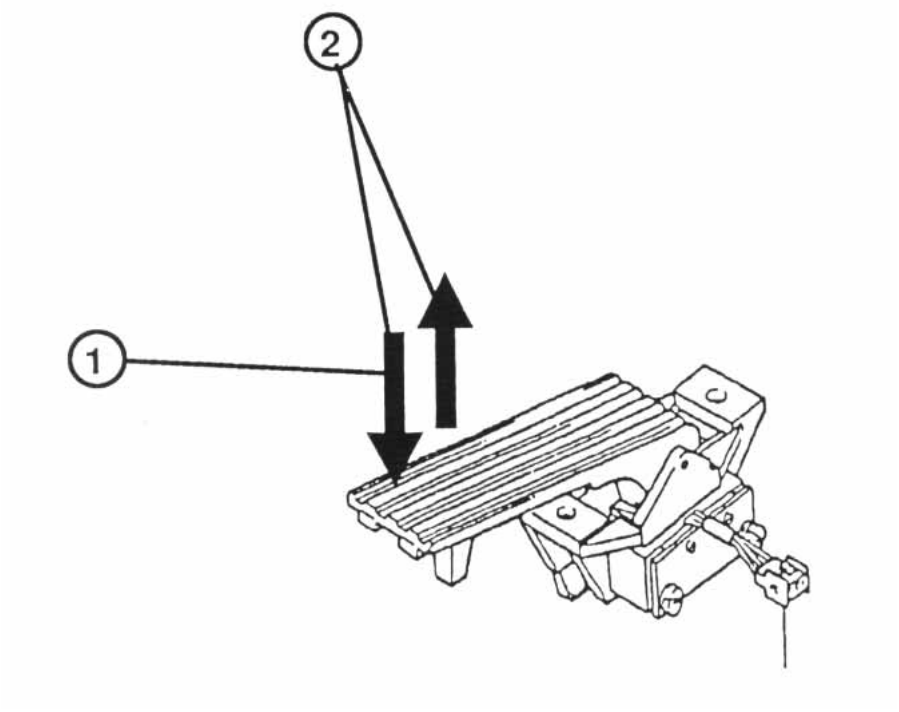
2
1

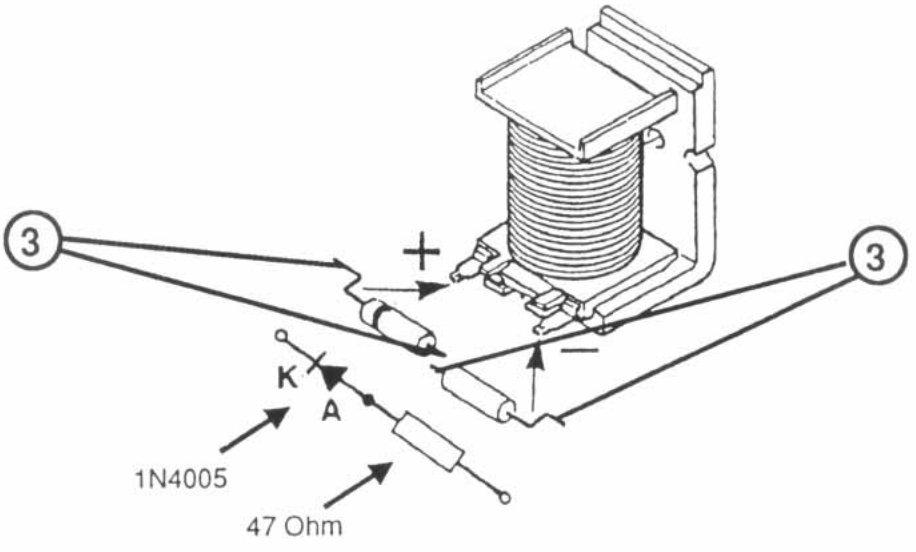
3
+
3
K
A
1N4005
47 Ohm

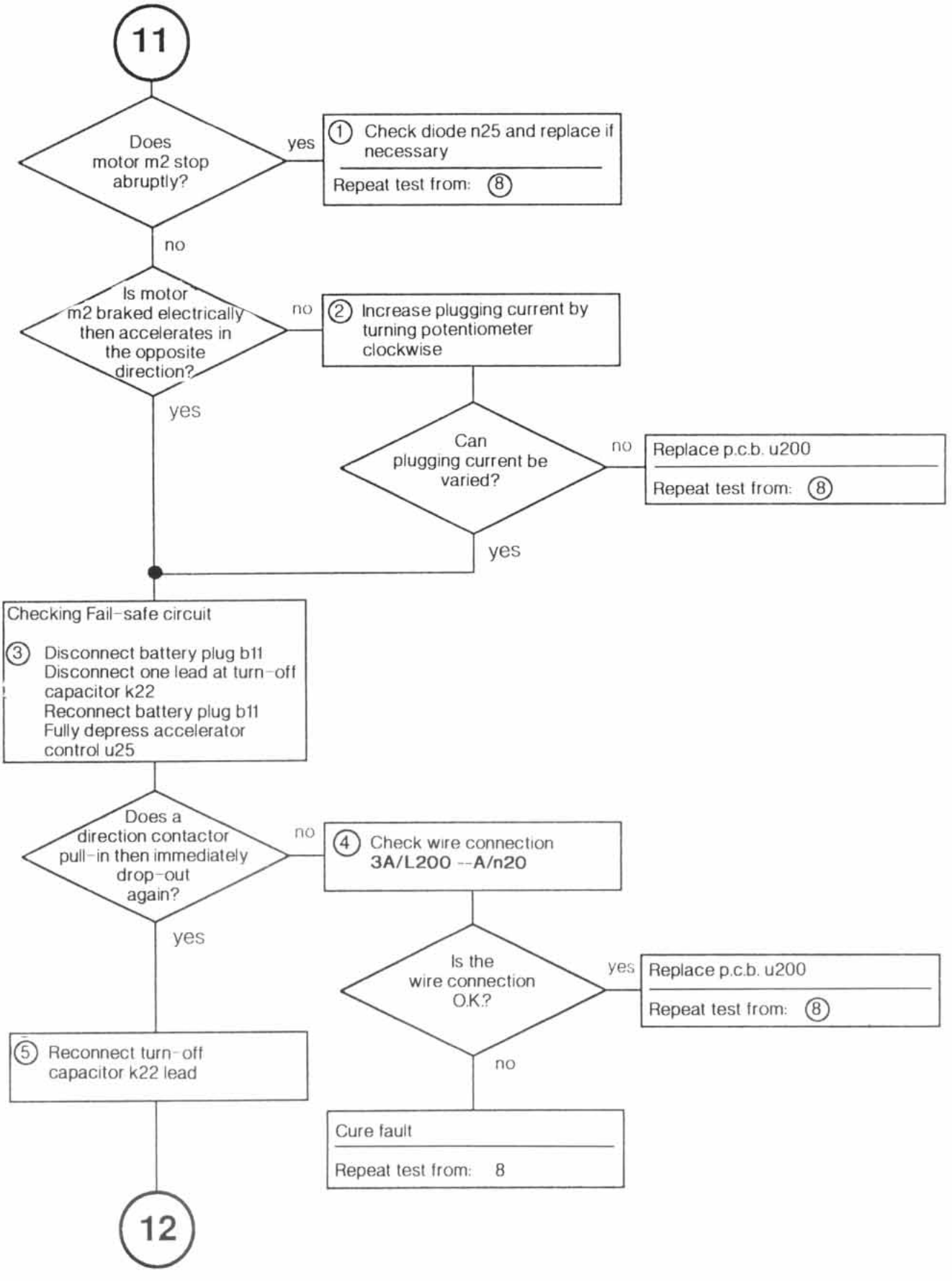
11
Does motor m2 stop abruptly?
yes
1 Check diode n25 and replace if necessary
Repeat test from: 8
no
Is motor m2 braked electrically then accelerates in the opposite direction?
no
2 Increase plugging current by turning potentiometer clockwise
yes
Can plugging current be varied?
no
Replace p.c.b. u200
Repeat test from: 8
yes
Checking Fail-safe circuit
3 Disconnect battery plug b11
Disconnect one lead at turn-off capacitor k22
Reconnect battery plug b11
Fully depress accelerator control u25
Does a direction contactor pull-in then immediately drop-out again?
no
4 Check wire connection 3A/L200 --A/n20
yes
Is the wire connection O.K.?
yes
Replace p.c.b. u200
Repeat test from: 8
no
Cure fault
Repeat test from: 8
5 Reconnect turn-off capacitor k22 lead
12

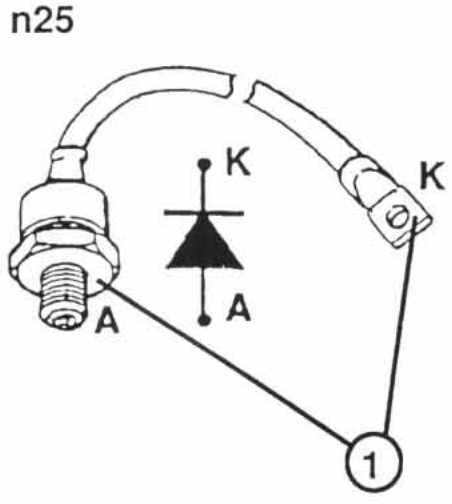
n25
K
K
A
A
1

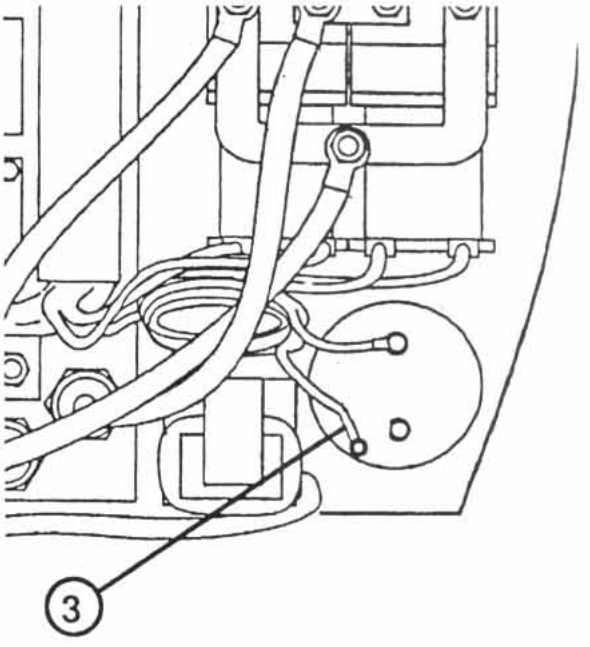
3

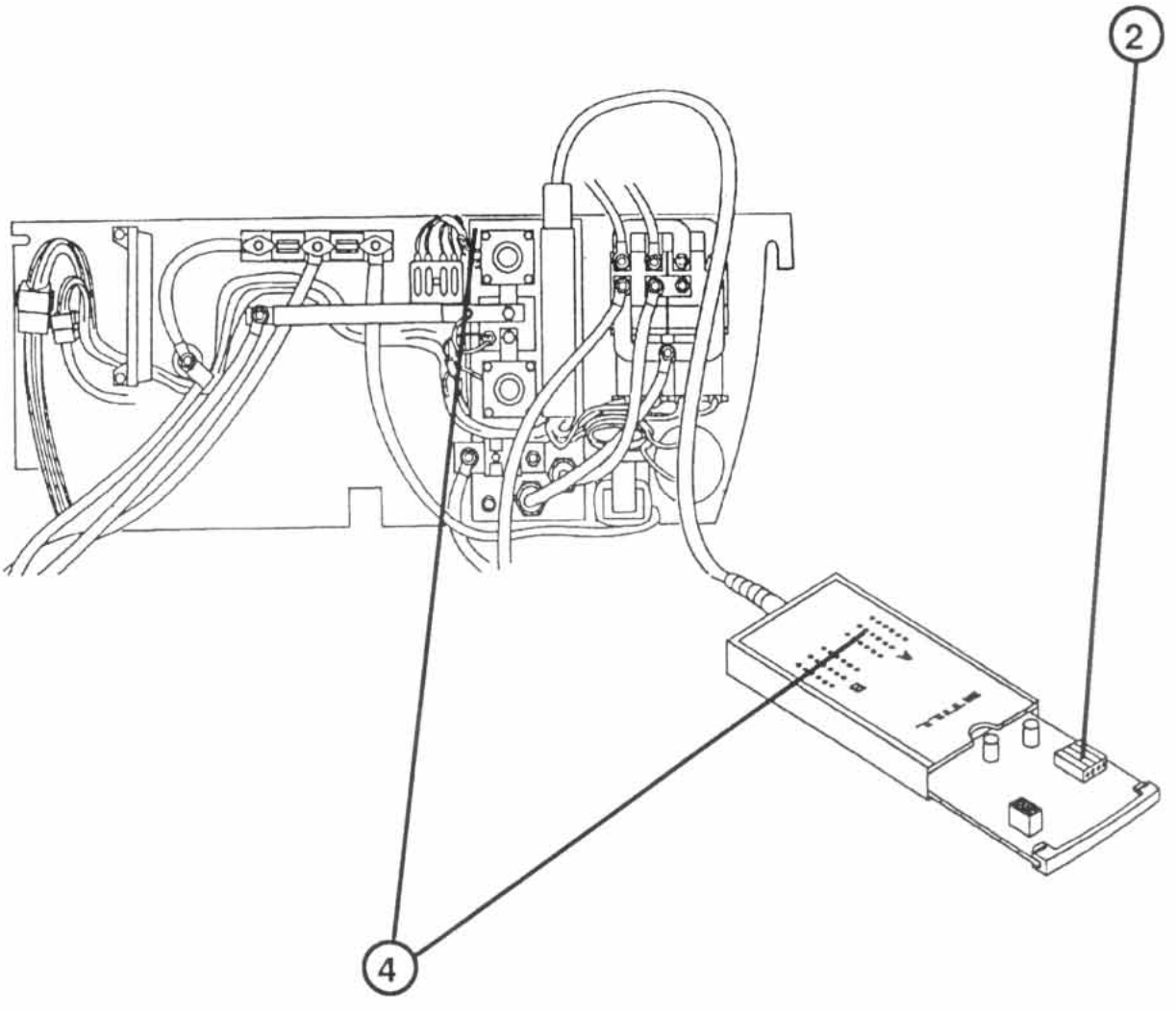
2
4

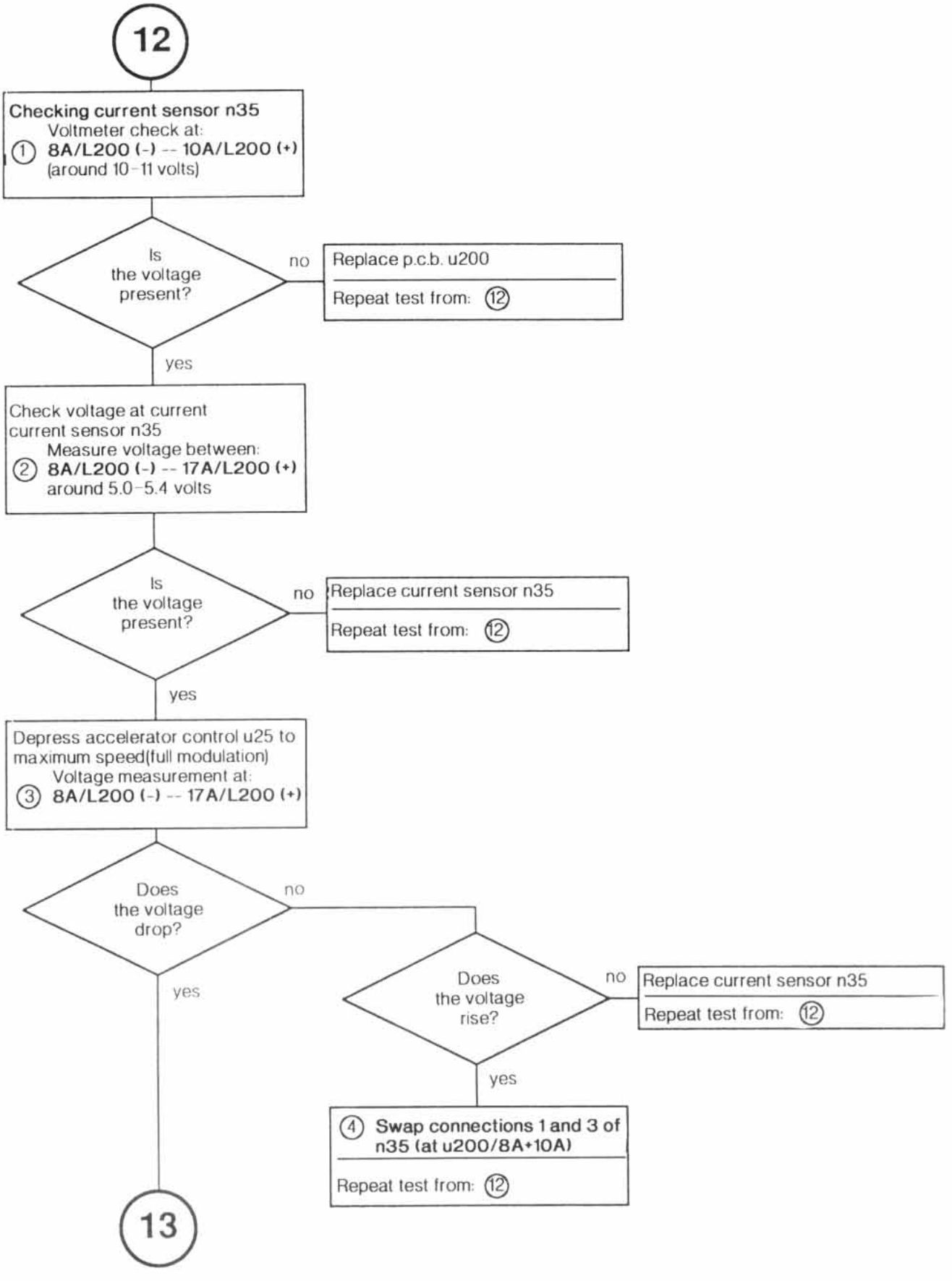
12
Checking current sensor n35
Voltmeter check at:
1 8A/L200 (-) -- 10A/L200 (+)
(around 10-11 volts)
Is the voltage present?
no
Replace p.c.b. u200
Repeat test from: 12
yes
Check voltage at current current sensor n35
Measure voltage between:
2 8A/L200 (-) -- 17A/L200 (+)
around 5.0-5.4 volts
Is the voltage present?
no
Replace current sensor n35
Repeat test from: 12
yes
Depress accelerator control u25 to maximum speed(full modulation)
Voltage measurement at:
3 8A/L200 (-) -- 17A/L200 (+)
Does the voltage drop?
no
Does the voltage rise?
no
Replace current sensor n35
Repeat test from: 12
yes
4 Swap connections 1 and 3 of n35 (at u200/8A+10A)
Repeat test from: 12
yes
13

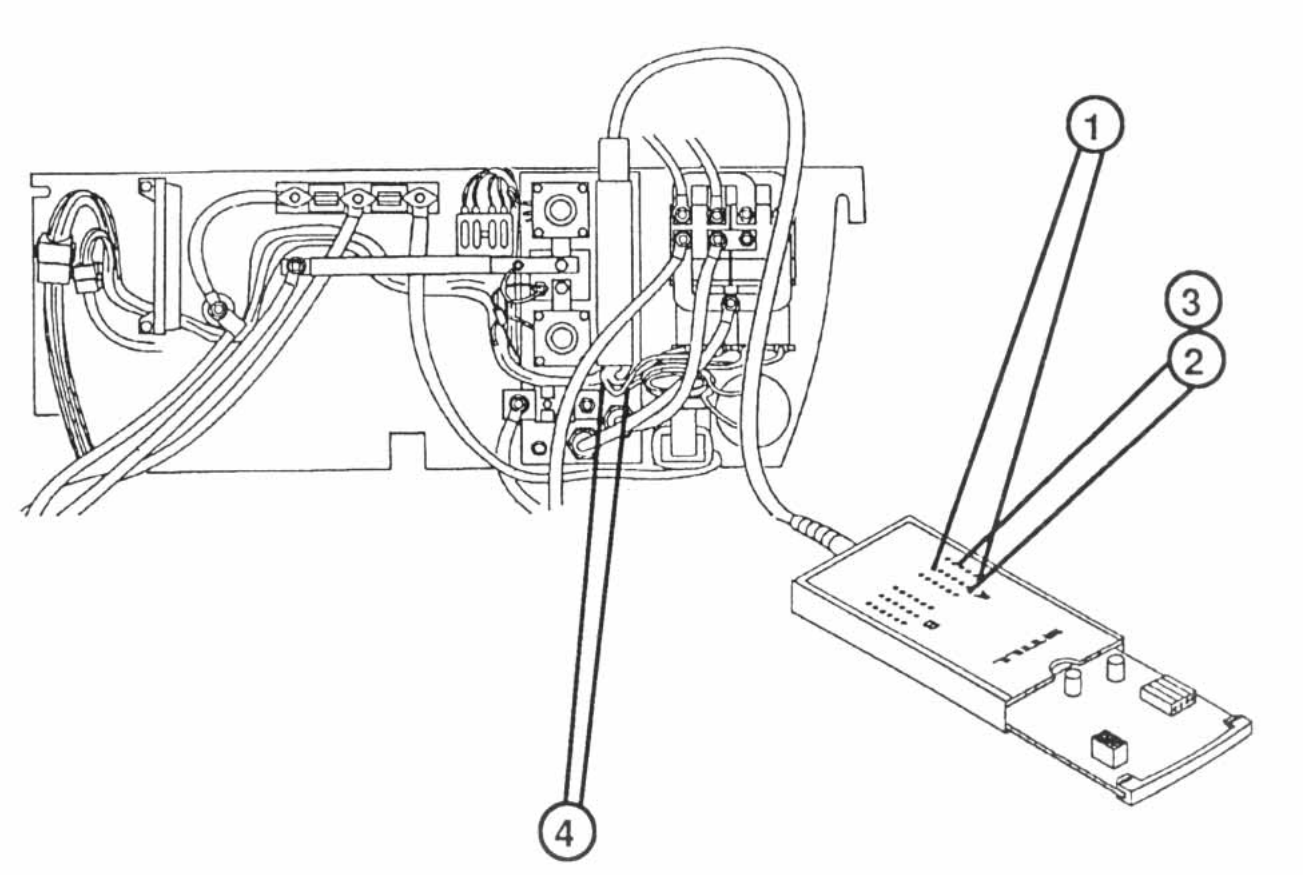

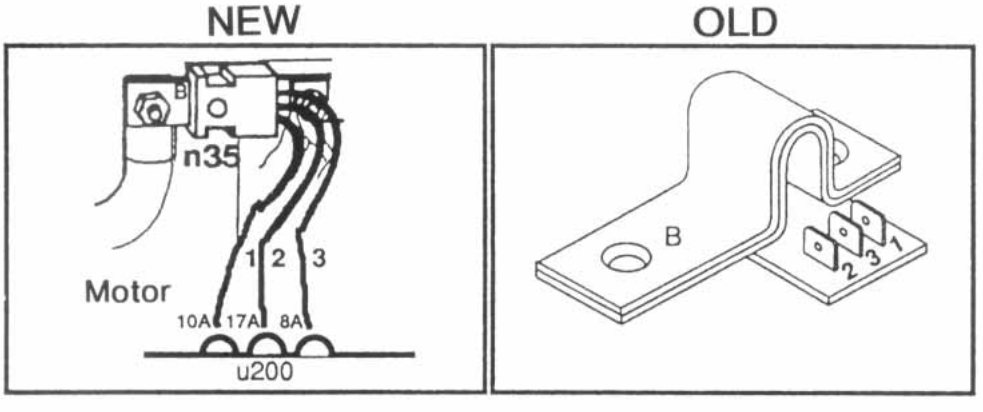

10A = + (Plus) 8A = - (Minus)

3 = + (Plus) 1 = - (Minus)

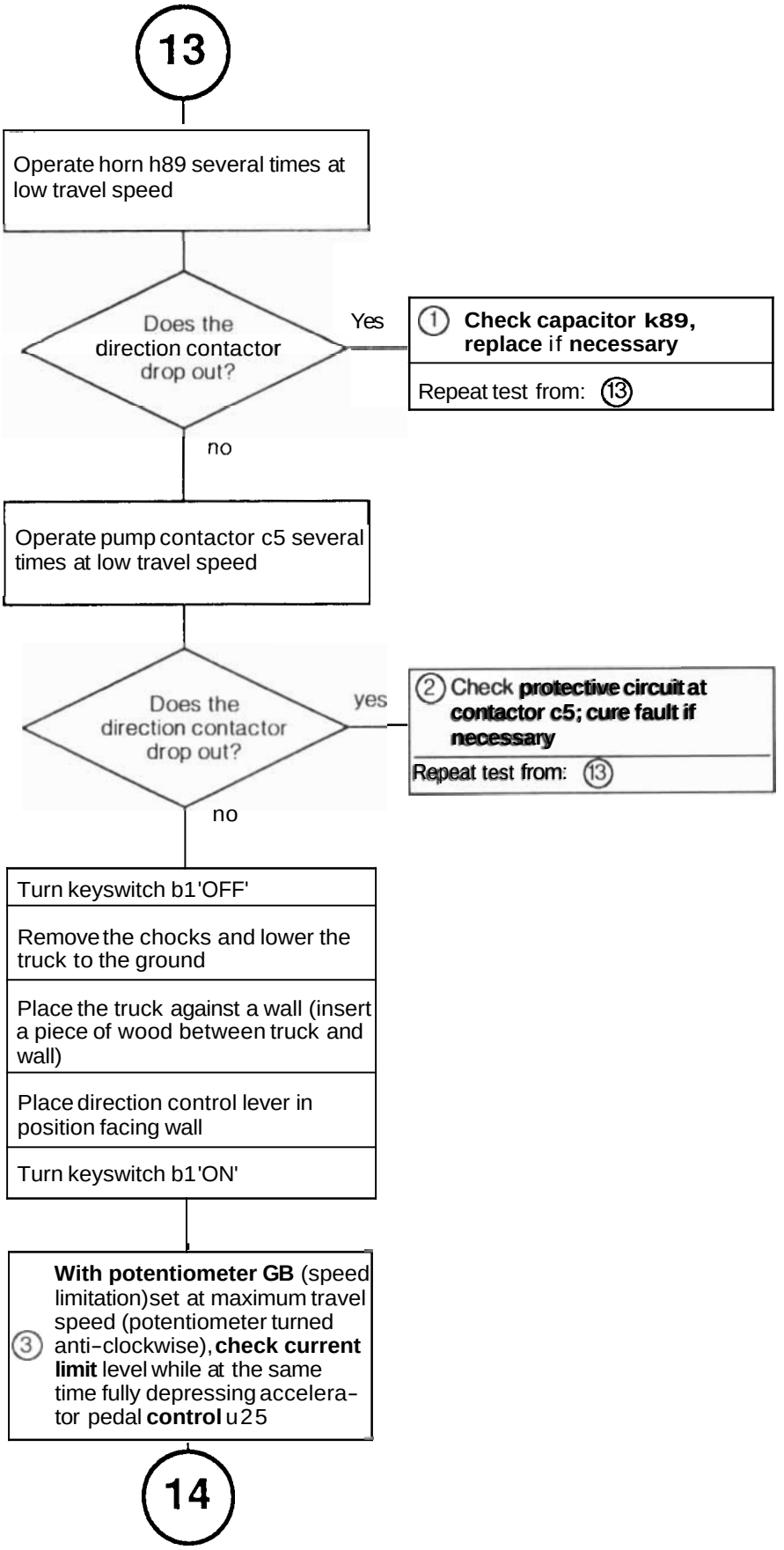
13
Operate horn h89 several times at low travel speed
Does the direction contactor drop out?
Yes
1 Check capacitor k89, replace if necessary
Repeat test from: 13
no
Operate pump contactor c5 several times at low travel speed
Does the direction contactor drop out?
yes
2 Check protective circuit at contactor c5; cure fault if necessary
Repeat test from: 13
no
Turn keyswitch b1 'OFF'
Remove the chocks and lower the truck to the ground
Place the truck against a wall (insert a piece of wood between truck and wall)
Place direction control lever in position facing wall
Turn keyswitch b1 'ON'
3 With potentiometer GB (speed limitation) set at maximum travel speed (potentiometer turned anti-clockwise), check current limit level while at the same time fully depressing accelerator pedal control u25
14

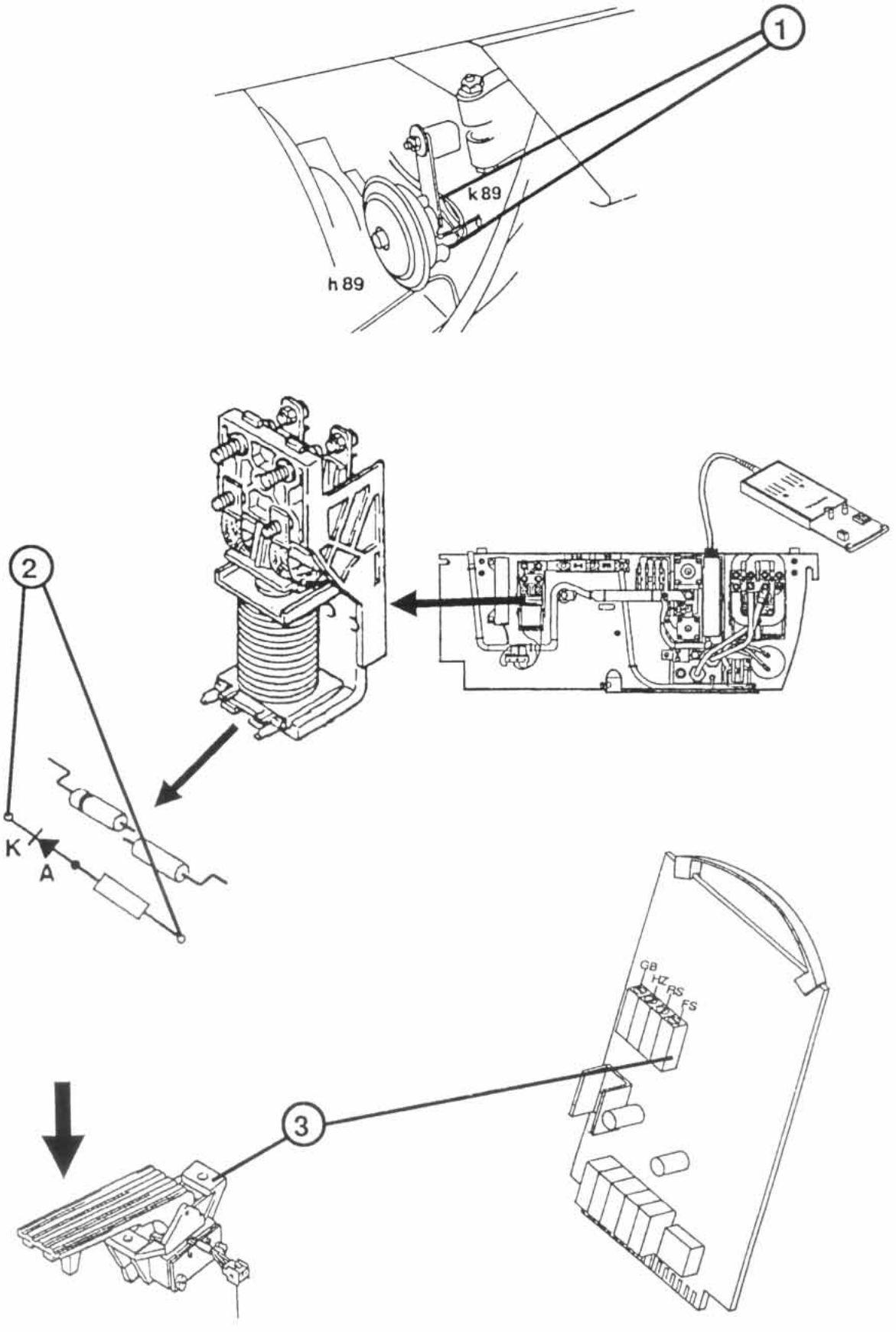
1
k 89
h 89
2
K
A
GB
HZ
RS
FS
3

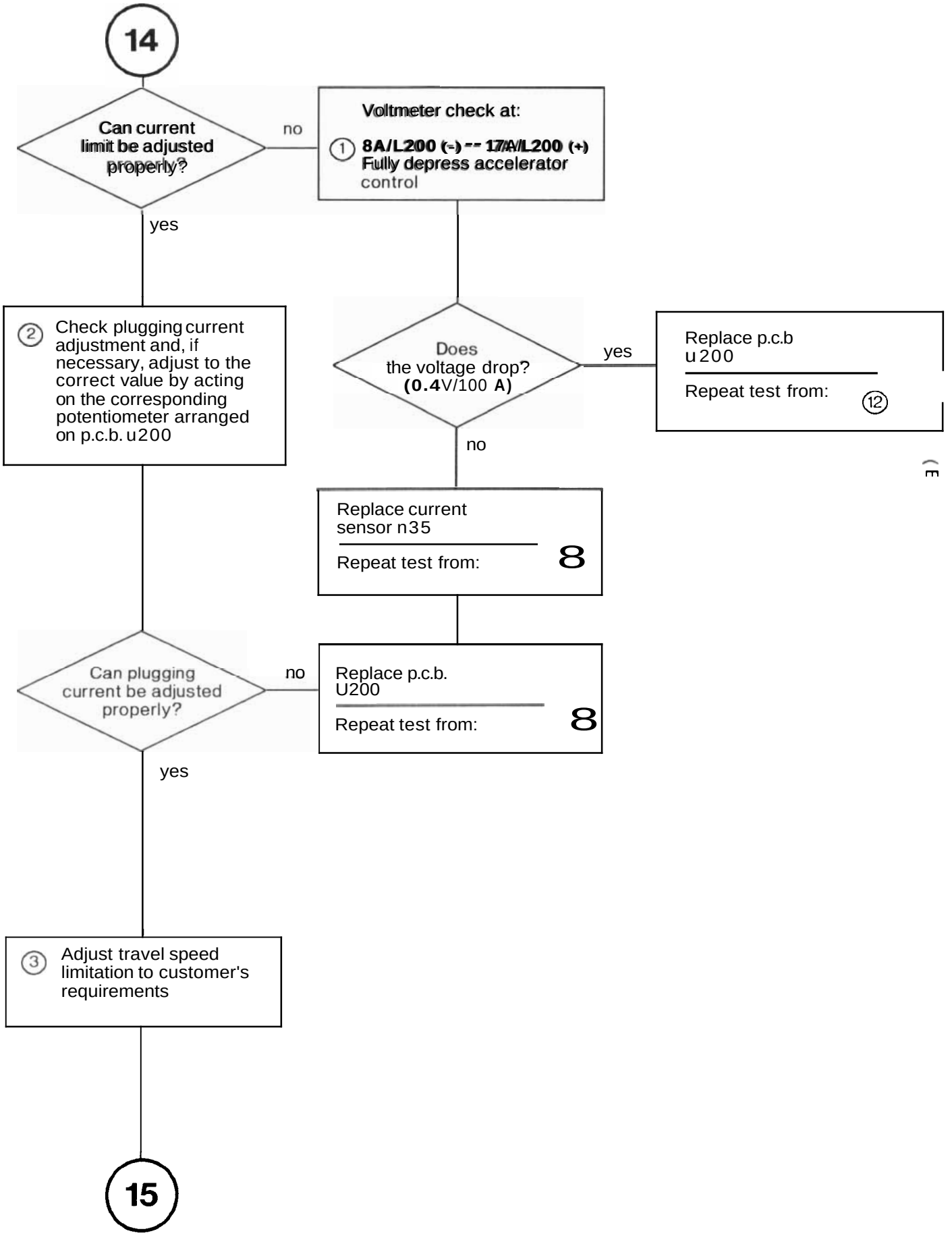
14
Can current limit be adjusted properly?
no
Voltmeter check at:
1 8A/L200 (-) -- 17A/L200 (+)
Fully depress accelerator control
yes
2 Check plugging current adjustment and, if necessary, adjust to the correct value by acting on the corresponding potentiometer arranged on p.c.b. u200
Does the voltage drop? (0.4V/100 A)
yes
Replace p.c.b u200
Repeat test from: 12
no
Replace current sensor n35
Repeat test from: 8
Can plugging current be adjusted properly?
no
Replace p.c.b. U200
Repeat test from: 8
yes
3 Adjust travel speed limitation to customer's requirements
15

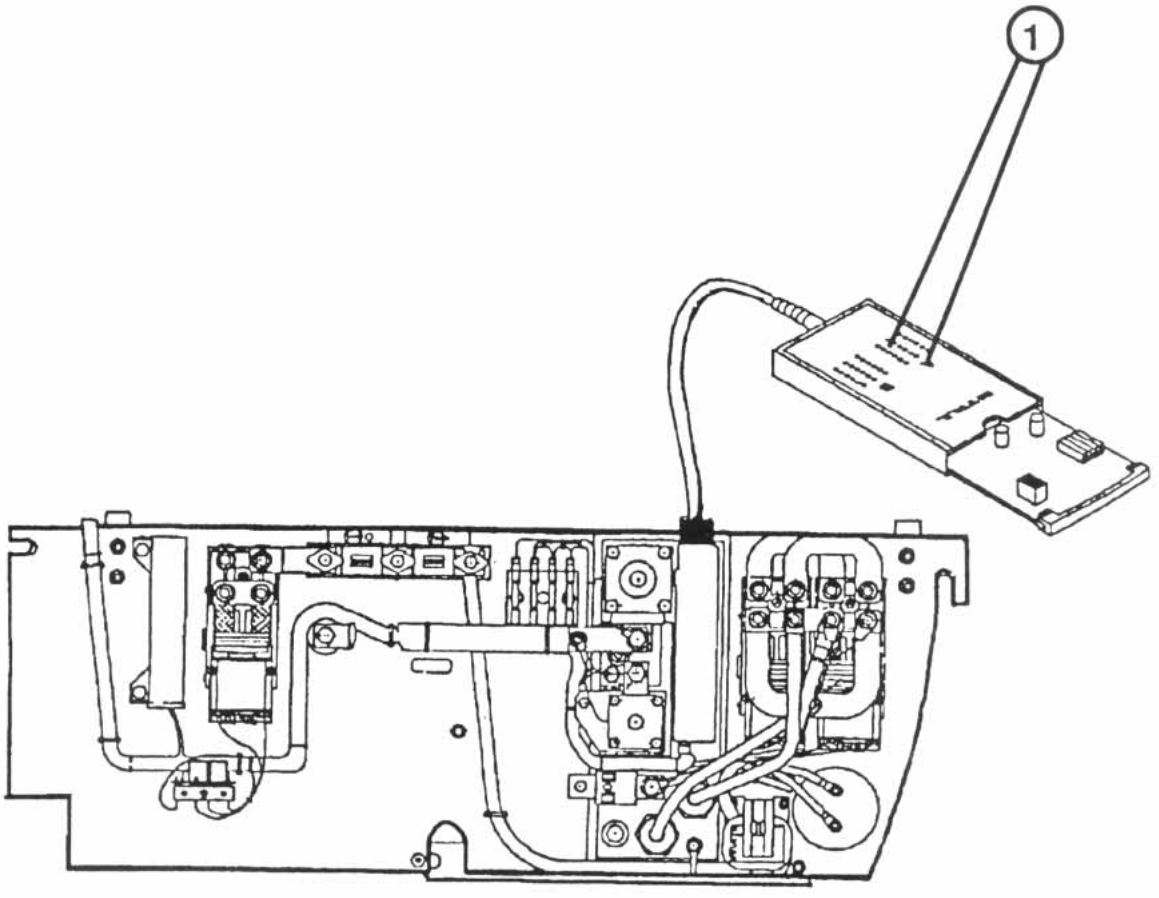
1

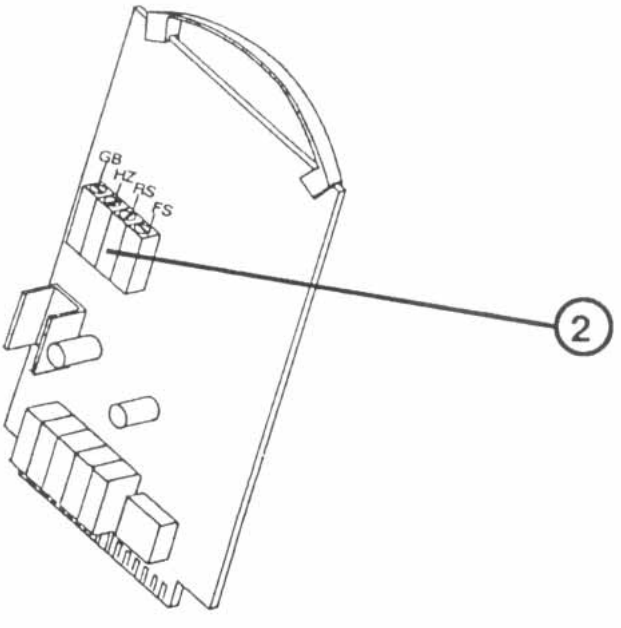
GB
HZ
RS
FS
2

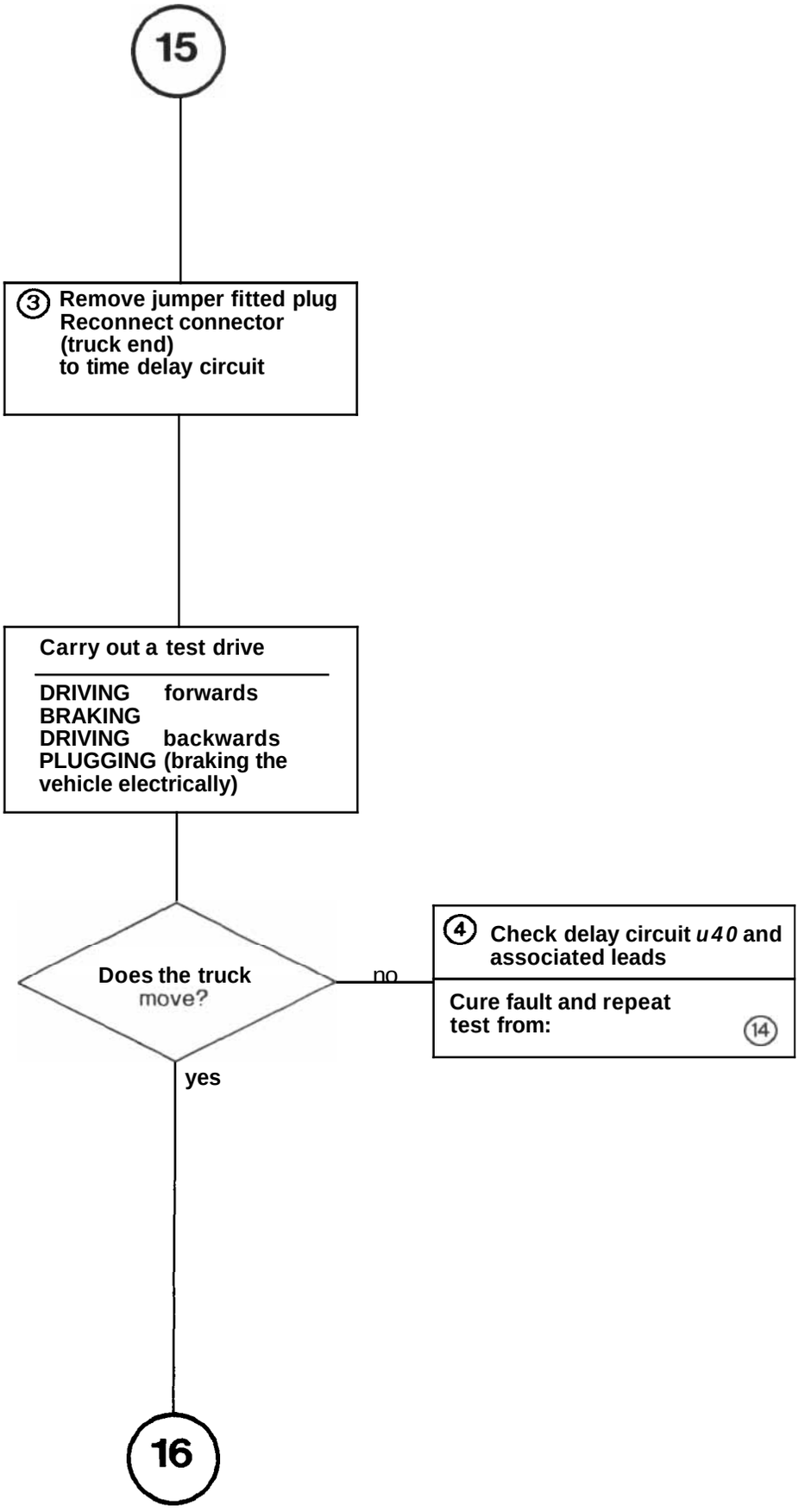
15
3 Remove jumper fitted plug
Reconnect connector
(truck end)
to time delay circuit
Carry out a test drive
DRIVING forwards
BRAKING
DRIVING backwards
PLUGGING (braking the vehicle electrically)
Does the truck move?
no
4 Check delay circuit u40 and associated leads
Cure fault and repeat test from: 14
yes
16

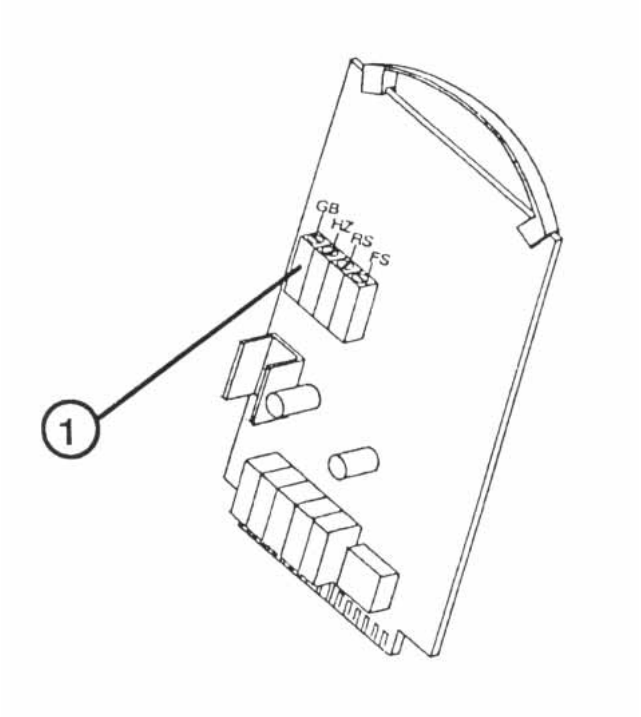
GB
HZ
RS
FS
1

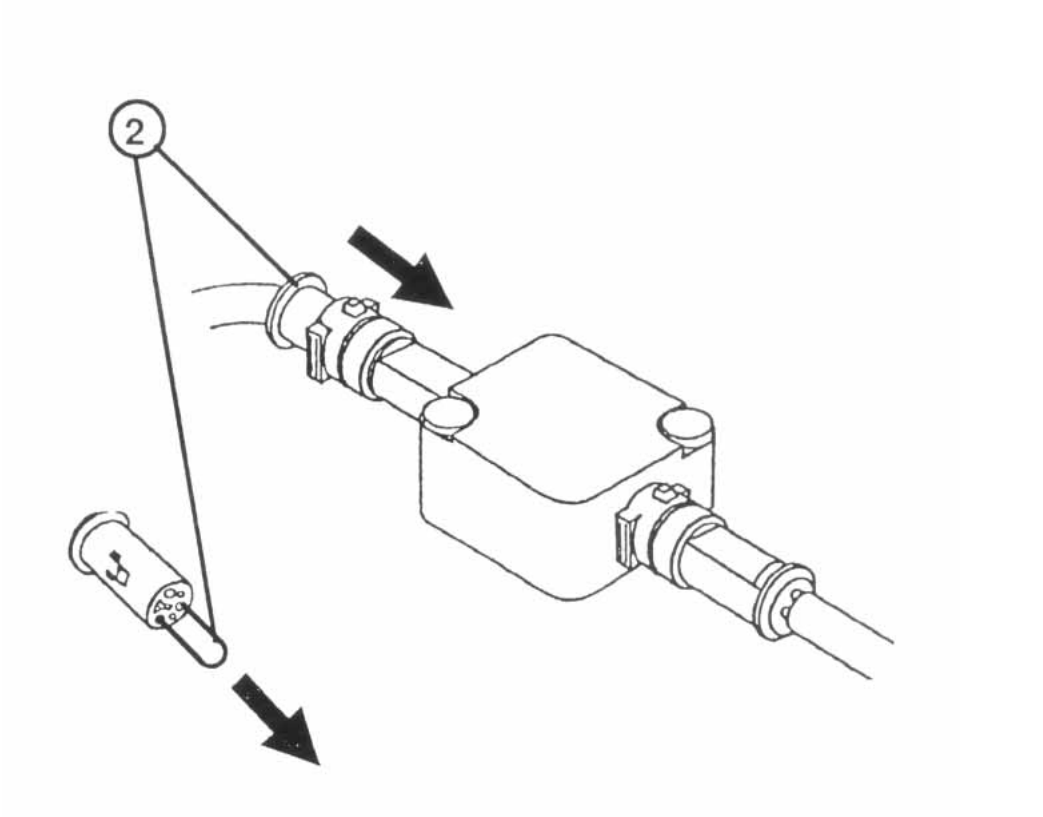
2

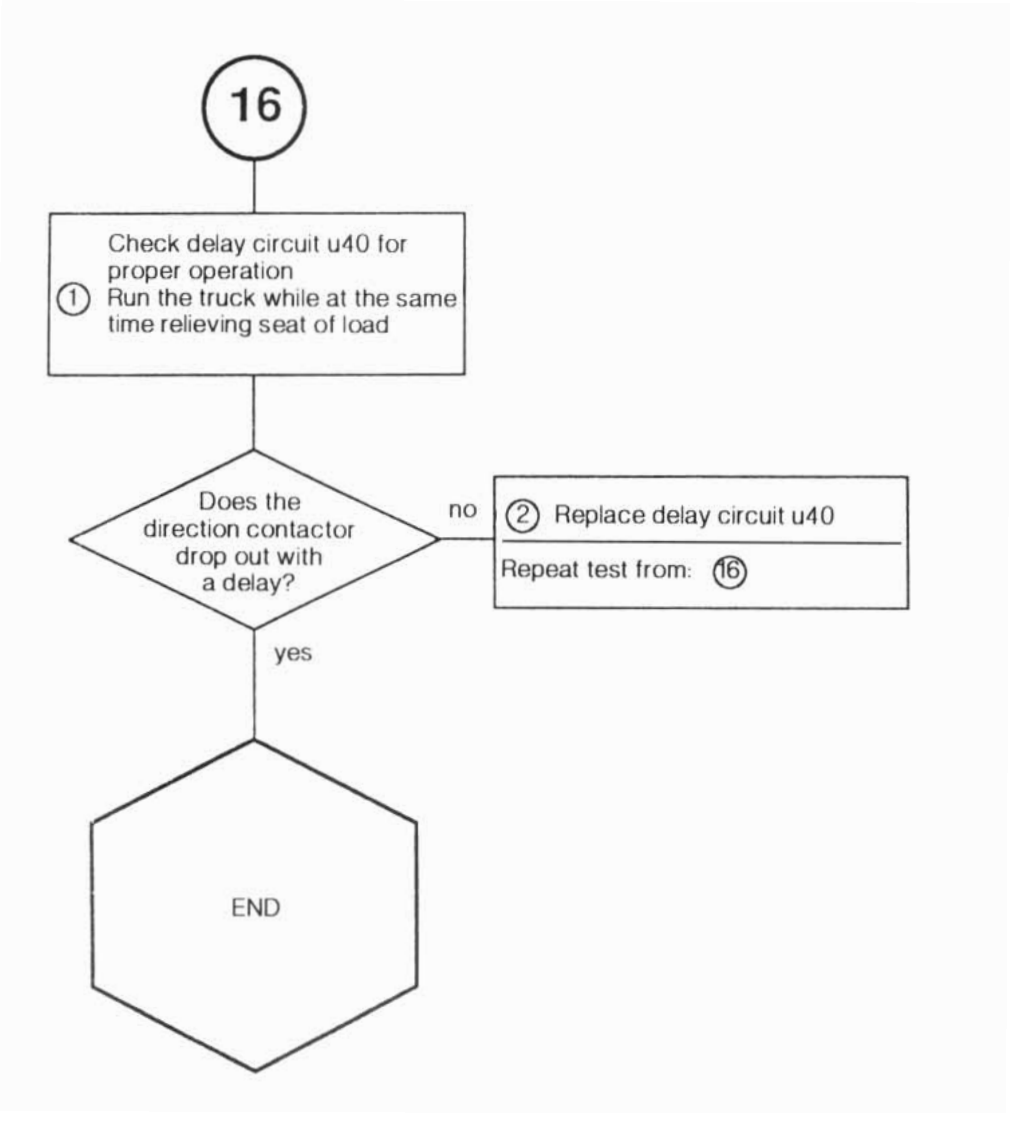

Attention: **Has jumper cable been removed from seat switch circuit?**
Bridging the seat switch is only allowed for **testing purposes!**

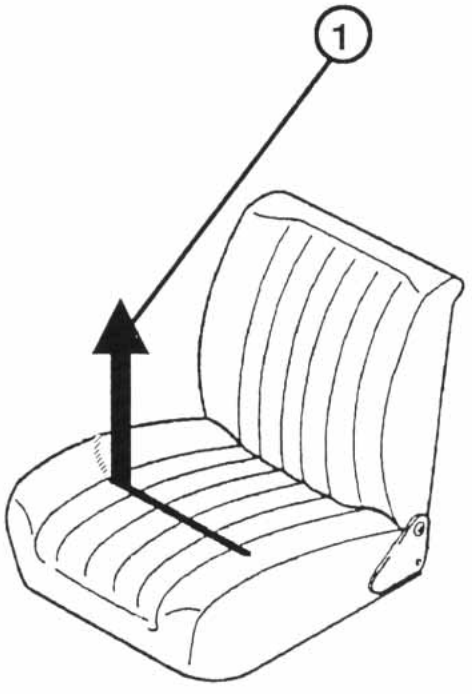
1

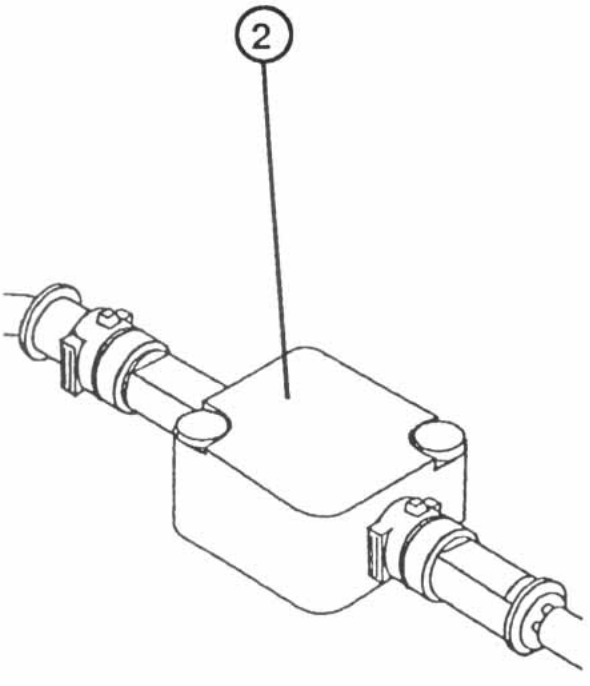
2

b 1	keyswitch
b 2	direction switch
b 06	windshield wiper switch
b 7	lighting switch
b 9	flasher switch
b 11	battery connector half
b 12	battery connector half
b 21	parking brake interlock switch
b 31	seat switch
b 32	safety electrical interlock switch (actuated by battery latch)
b 51	valve microswitch "hoisting" function
b 52	valve microswitch "tilting" function
b 53/54	valve microswitches "34d/4th hyd. functions"
b 62	switch, seat heater
b 70	spot (working) light switch
b 85	stop lamp switch
b 89	horn switch
c 2	fwd. contactor
c 3	rev. contactor
c 5	pump contactor
d 84	relay
d 91	transmitter, direction flasher indicator
d 94	emergency flasher switch
e 1-4	control circuit fuses
e 2	drive motor fuse
e 5	pump motor fuse
e 08	power steer fuse
e 5-8	fuses, lighting
e 11	fuse, voltage transformer
g 11	B.D.I., instrument
g 13	work hour meter (driving and hoisting)
g 13*	hour meter (standard)
h 2	check light, driving
h 5	check light, pump
h 08	check light, steering
h 9	check light
h 70	spot (working) light
h 71	R.H. headlamp
h 72	L.H. headlamp
h 77	R.H. sidelamp
h 78	L.H. sidelamp
h 80	number plate lamp
h 81	R.H. rear light
h 82	L.H. rear light
h 84	reverse lamp
h 85	R.H. stop light
h 86	L.H. stop light
h 89	warning horn
h 91	rear R.H. flasher
h 92	rear L.H. flasher
h 93	rear R.H. flasher
h 94	rear L.H. flasher
k 22	turn-off capacitor F
k 89	protective circuitry/horn
k 221	turn-off capacitor P
m 2	drive motor
m 5	pump motor
m 06	windshield motor
m 08	power steer motor
m 22	choke F
m 23	charge current transformer
m 24	commutating choke F
m 221	choke P
m 241	commutating choke P
n 1	battery
n 2-4	diodes
n 13	set of diodes
n 18	bridge-circuit rectifier
n 20	main thyristor F
n 22	turn-off thyristor F
n 24	"free-wheel" diode F
n 25	plugging diode F
n 30	reg. braking diode F
n 35	current sonsor F
n 36	charging SCR F
n 201	main thyristor P
n 221	turn-off thyristor P
n 241	"free-wheel" diode P
n 361	charging SCR P
r 10	braking resistor
r 11	series resistor F
r 46	charging resistor F
r 60	terminal resistor
r 62	seat heater
r 111	series resistor P
u 7	voltage converter
u 15	brush wear monitoring facility
u 19	protective circuitry
u 25	accelerator pedal transmitter
u 29	hall effect transmitter, steering
u 35	B.D.I.
u 40	delay circuit
u 100	steering pulse controller
u 200	p.c.b. F
u 201	p.c.b. P

F = Drive Pulse Controller

P = Pump Pulse Controller

Lead for optional equipment

Lead eliminated where truck is fitted with an optional equipment