https://truckmanualshub.com/

PREFACE

1. This parts catalog covers the parts of clawler back - hoe Model B15 for AMMANN YANMAR manufactured since February, 1997

Issue No. : 000Y00S3620

Date of Issue : May, 1997

2. The mounted engine of B15 is 3TNE68 - NBAB.

3. MODEL

SECTION	MODEL	CODE
I (VEHICLE)	B15C - AY	172194C
	B15CR - AY	172194A
	B15P - AY	172194D
	B15PR CKD	172194ア
	B15PR - AY	172194B
II (ENGINE)	3TNE68 - NBAB	Q19266A, BBB, U25

https://truckmanualshub.com/

塗装色一覧
TABLE OF PAINTED COLOR

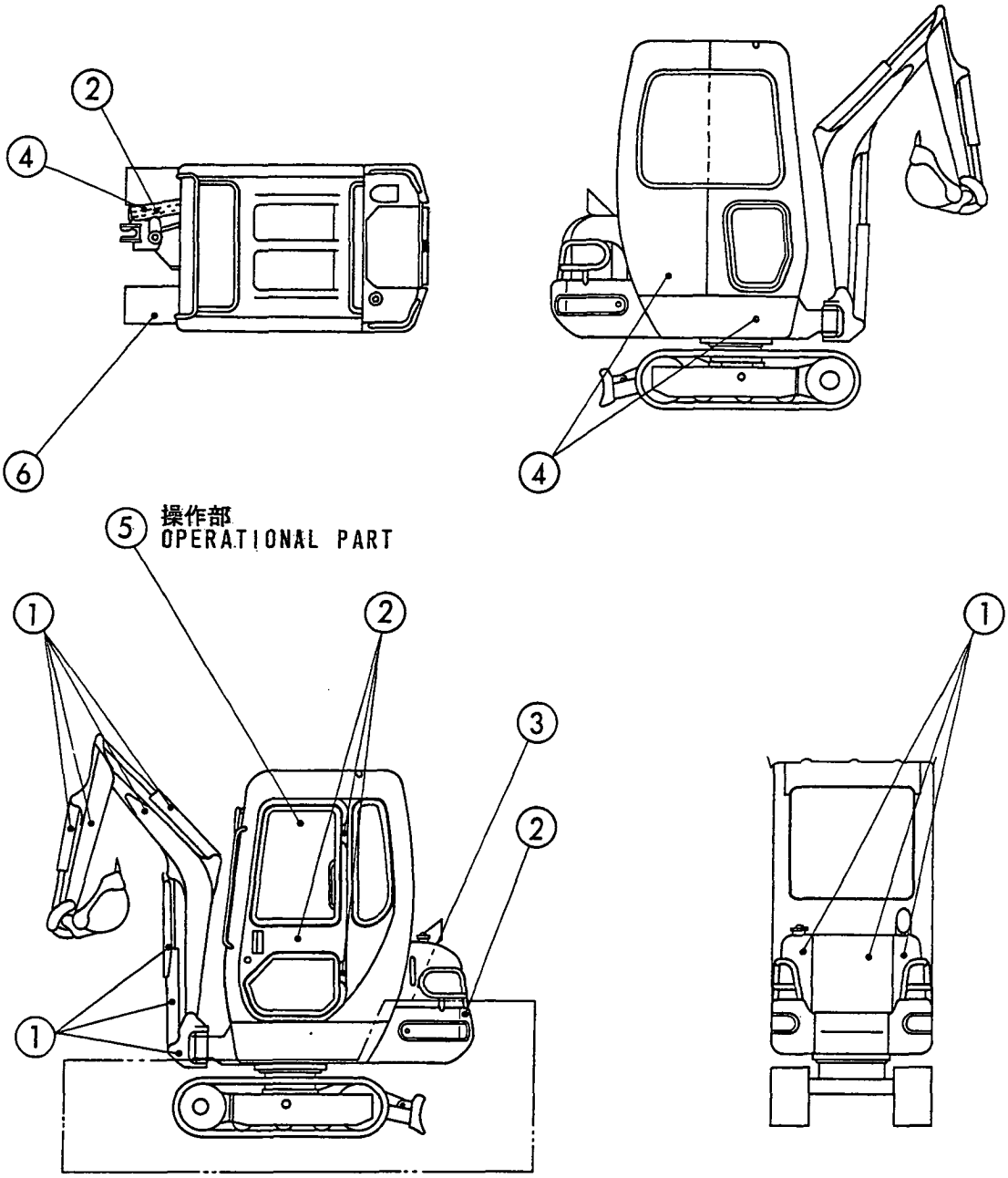

部所 Part	塗装色 Painted Color マンセル記号 Munsel No.	色区分 Color Code	塗料部品番号 (Paint Part No.)		
			16L缶(16L Can)	4L缶(4L Can)	スプレー(SPRAY)
①	ヤンマー新パーマネントイエロー YANMAR New Permanent Yellow 5.2Y8.5/11	87	981101-09519	977620-40870	977620-30871
②	ヤンマーディープグリーン YANMAR Deep Green 6.36BG2.11/1.76	82	981101-09517	977620-40820	977620-30N31
③	ヤンマー新ディープグリーン YANMAR New Deep Green 0.6B2.2/4.2	88	981101-09588	977620-40880	977620-30881
④	ヤンマー新グレイッシュグリーン YANMAR New Grayish Green 2.9BG4.8/3.0	86	981101-09616	977620-40860	977620-30861
⑤	ヤンマーダークオリーブグレー YANMAR Dark Olive Gray 5.39Y2.92/0.78	72	-------	977620-40720	TOR-90460003
⑥	ヤンマーチャコールグレー YANMAR Charcoal Gray N2	71	981101-09516	977620-40710	977620-30371

https://truckmanualshub.com/

絵目次（1）・・・・・・・主要部分
PICTURESQUE INDEX(1)・・・MAIN PARTS

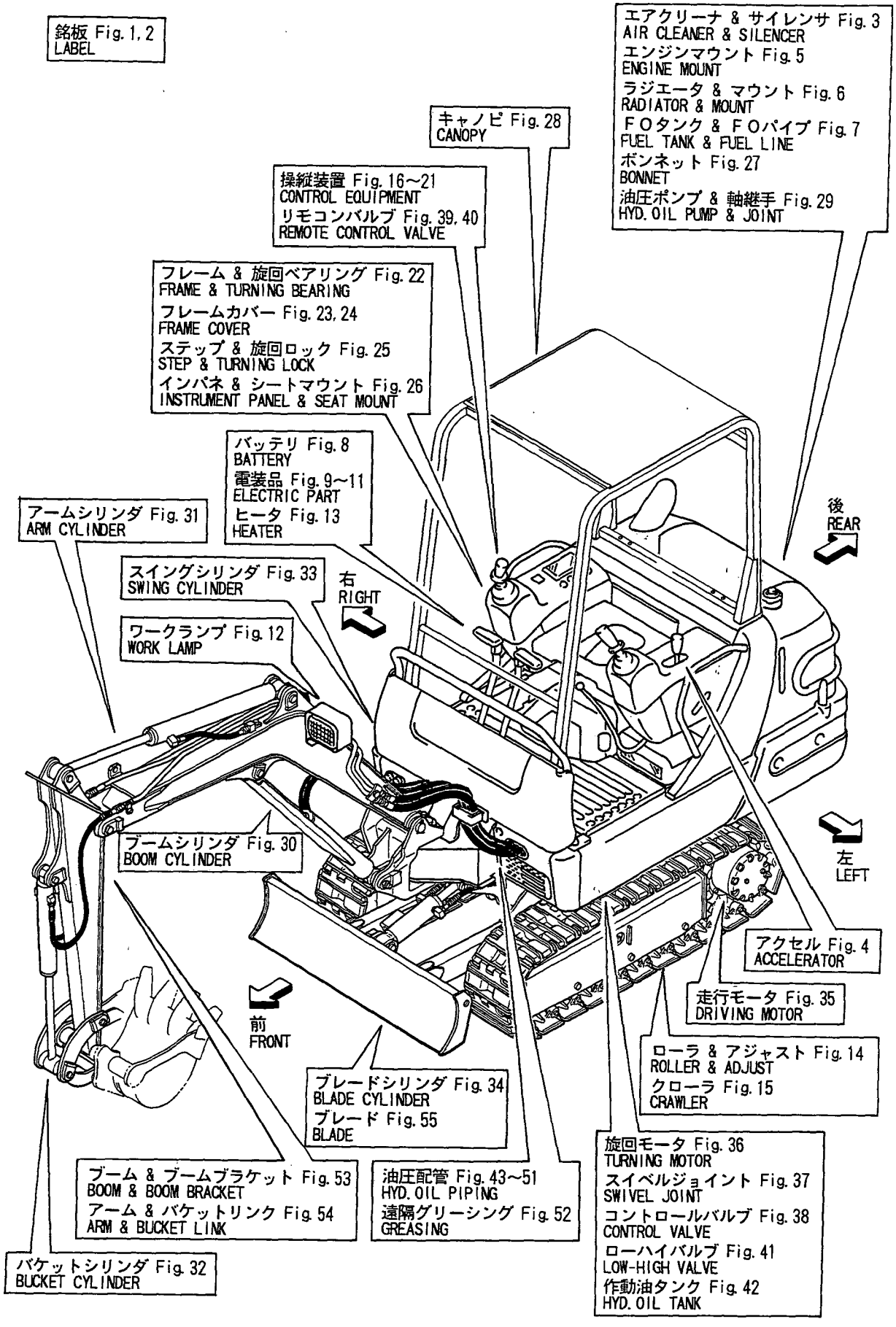

https://truckmanualshub.com/

絵目次（2）・・・・・・・・油圧関係
PICTURESQUE INDEX(2)・・・HYDRAULIC SECTION

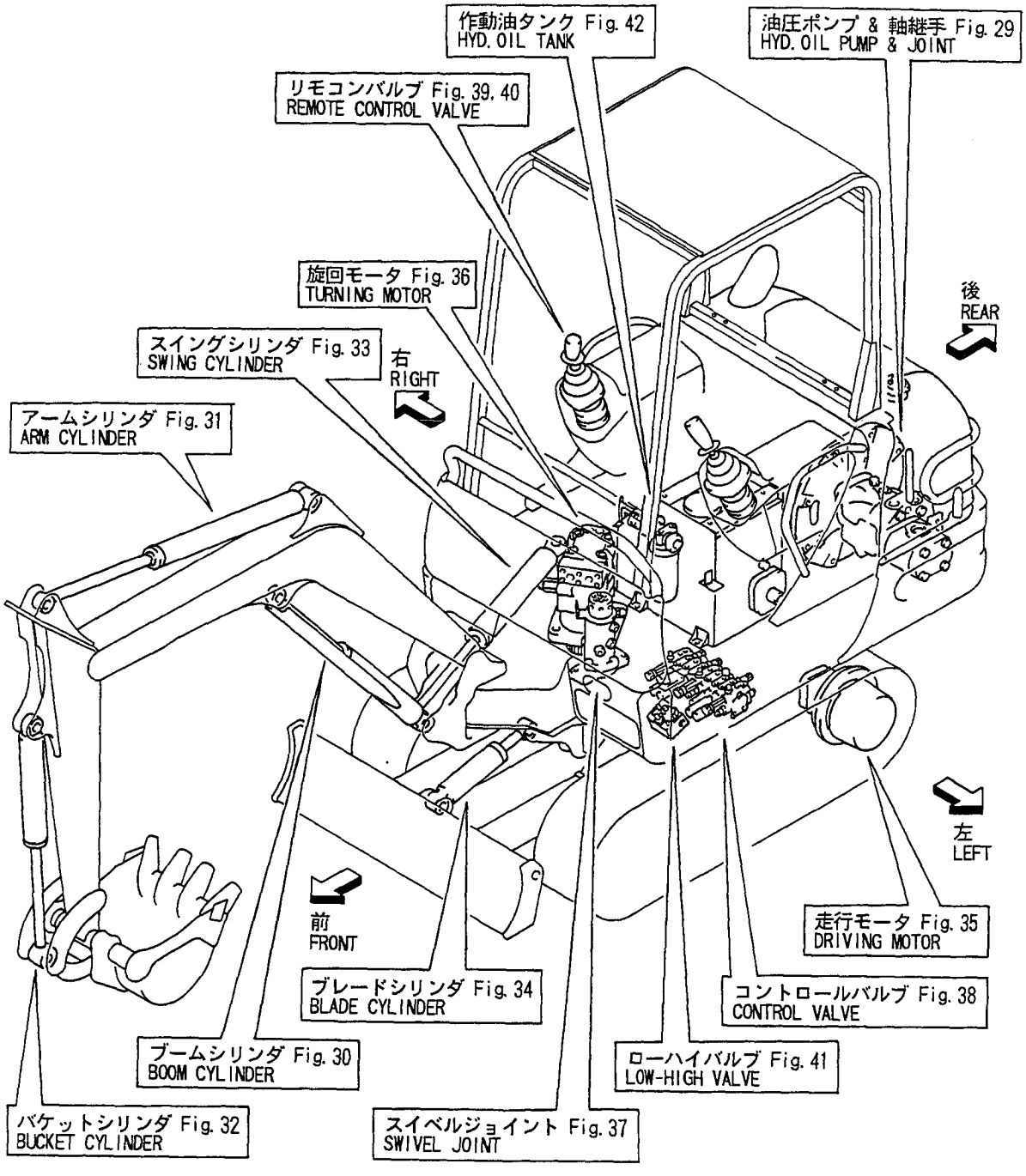

https://truckmanualshub.com/

配線図 WIRING DIAGRAM

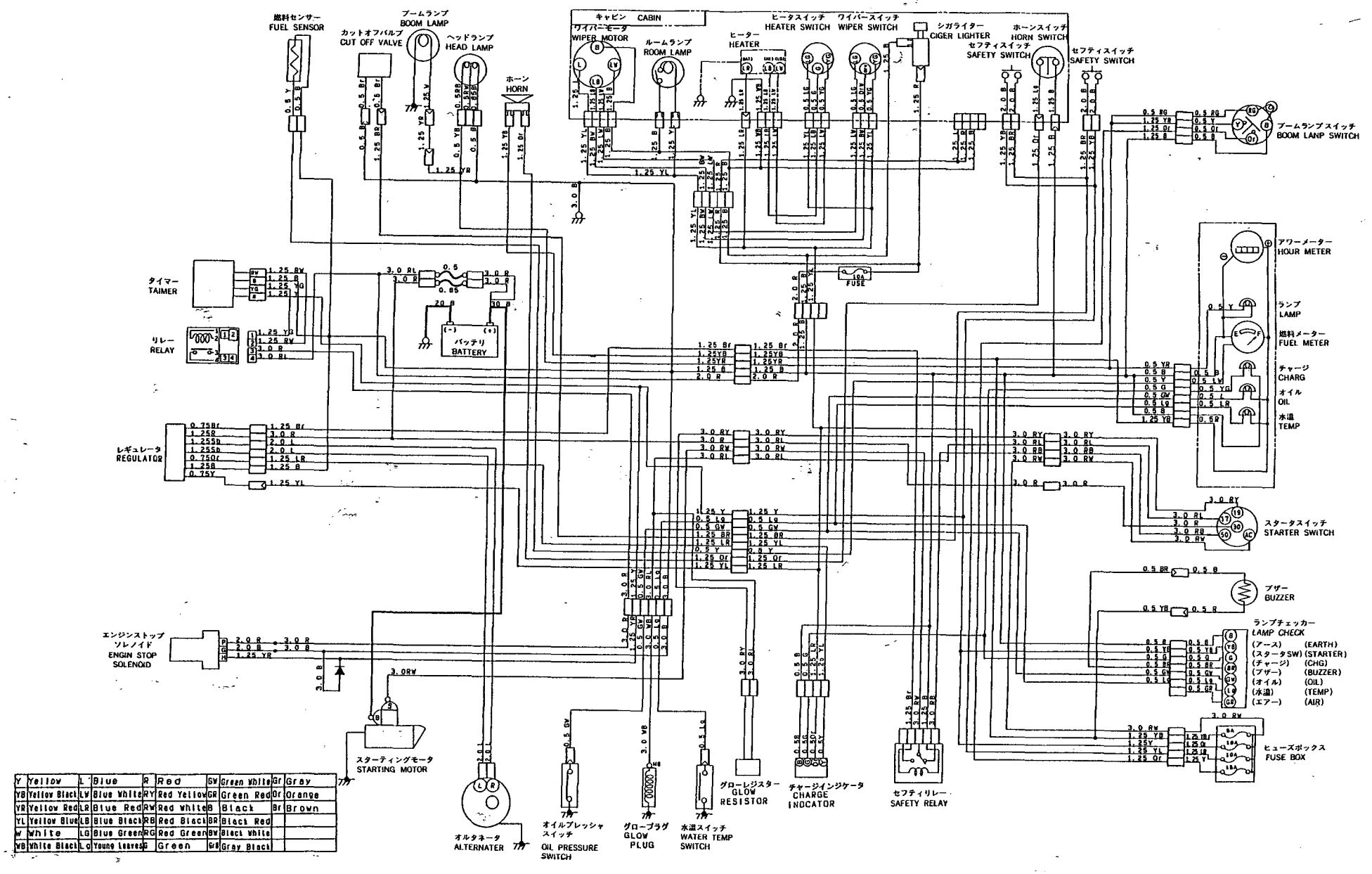

Y	Yellow	L	Blue	R	Red	GW	Green White	Gr	Gray
YB	Yellow Black	LW	Blue White	RY	Red Yellow	GR	Green Red	Or	Orange
YR	Yellow Red	LR	Blue Red	RW	Red White	B	Black	Br	Brown
YL	Yellow Blue	LB	Blue Black	RB	Red Black	BR	Black Red		
W	White	LG	Blue Green	RG	Red Green	BW	Black White		
WB	White Black	LO	Young Leaves	G	Green	GB	Gray Black		

https://truckmanualshub.com/

```
1,1,,772194-03100,,"LABEL SET",1,,,,,,,,,,,,,,,,,
2,2,,172194-03110,,"LABEL,SPECIFICATION",1,,,,,,,,,,,,,,,,,,
3,2,,172194-03120,,"LABEL,B17 L.H",1,,,,,,,,,,,,,,,,,,
4,2,,172194-03130,,"LABEL,B17 R.H",1,,,,,,,,,,,,,,,,,,
5,2,,172194-03140,,"LABEL,OIL & WATER",1,,,,,,,,,,,,,,,,,,
6,2,,172179-03160,,"LABEL,SWING LOCK",1,,,,,,,,,,,,,,,,,,
7,2,,172179-03170,,"LABEL,REAR YANMAR",1,,,,,,,,,,,,,,,,,,
8,2,,172174-03190,,"LABEL,ACCELERATOR",1,,,,,,,,,,,,,,,,,,
9,2,,172159-03242,,"LABEL, BOOM",2,,,,,,,,,,,,,,,,,,
10,2,,172174-03270,,"LABEL, P.T.O.",1,,,,,,,,,,,,,,,,,,
11,2,,172159-03290,,LABEL,1,,,,,,,,,,,,,,,,,,
12,2,,172174-03330,,"LABEL,GREASE FEED",1,,,,,,,,,,,,,,,,,,
13,2,,172159-03340,,"LABEL, OIL FEED",1,,,,,,,,,,,,,,,,,,
14,2,,172174-03340,,"LABEL, GREASE",1,,,,,,,,,,,,,,,,,,
15,2,,172159-03350,,"LABEL, FUEL",1,,,,,,,,,,,,,,,,,,
16,2,,172159-03360,,"LABEL, AIR CLEANER",1,,,,,,,,,,,,,,,,,,
17,2,,172161-03360,,"LABEL,STARTER SWITCH",1,,,,,,,,,,,,,,,,,,,
18,2,,172159-03370,,"LABEL, SUBTANK",1,,,,,,,,,,,,,,,,,,
19,2,,172174-03380,,LABEL,1,,,,,,,,,,,,,,,,,,
20,2,,172159-03390,,"LABEL, ANTI-FREEZING",1,,,,,,,,,,,,,,,,,,,
21,2,,172159-03450,,LABEL,1,,,,,,,,,,,,,,,,,,
22,2,,172174-03570,,"LABEL,DANGER",1,,,,,,,,,,,,,,,,,,
23,2,,172174-03600,,LABEL,1,,,,,,,,,,,,,,,,,,
24,2,,172174-03630,,LABEL,2,,,,,,,,,,,,,,,,,,
25,2,,172174-03640,,"LABEL,TRANSPORT",1,,,,,,,,,,,,,,,,,,
26,2,,172174-03650,,"LABEL,GREASE CYL.",2,,,,,,,,,,,,,,,,,,
27,2,,172174-03660,,"LABEL,CABLE",1,,,,,,,,,,,,,,,,,,
28,2,,172174-03670,,"LABEL,NEUTRAL",1,,,,,,,,,,,,,,,,,,
29,2,,172174-03680,,"LABEL,SWING AREA",1,,,,,,,,,,,,,,,,,,
30,2,,172174-03690,,"LABEL,RADIATOR",1,,,,,,,,,,,,,,,,,,
31,2,,172174-03700,,LABEL,1,,,,,,,,,,,,,,,,,,
32,2,,172174-03710,,LABEL,1,,,,,,,,,,,,,,,,,,
33,2,,22857-300050,,"SCREW 3X 5",4,,,,,,,,,,,,,,,,,,
34,1,,172174-03290,,"LABEL,CAB",1,,,,,,,,,,,,,,,,,,
35,1,,172174-03360,,"LABEL,PATTERN A",1,,,,,,,,,,,,,,,,,,
36,1,,172174-03550,,"LABEL,HEATER SWITCH",1,,,,,,,,,,,,,,,,,,
37,1,,172174-03560,,"LABEL,WIPER SWITCH",1,,,,,,,,,,,,,,,,,,
```

Fig. 1 銘板(キャビン) LABEL(CABIN)

https://truckmanualshub.com/

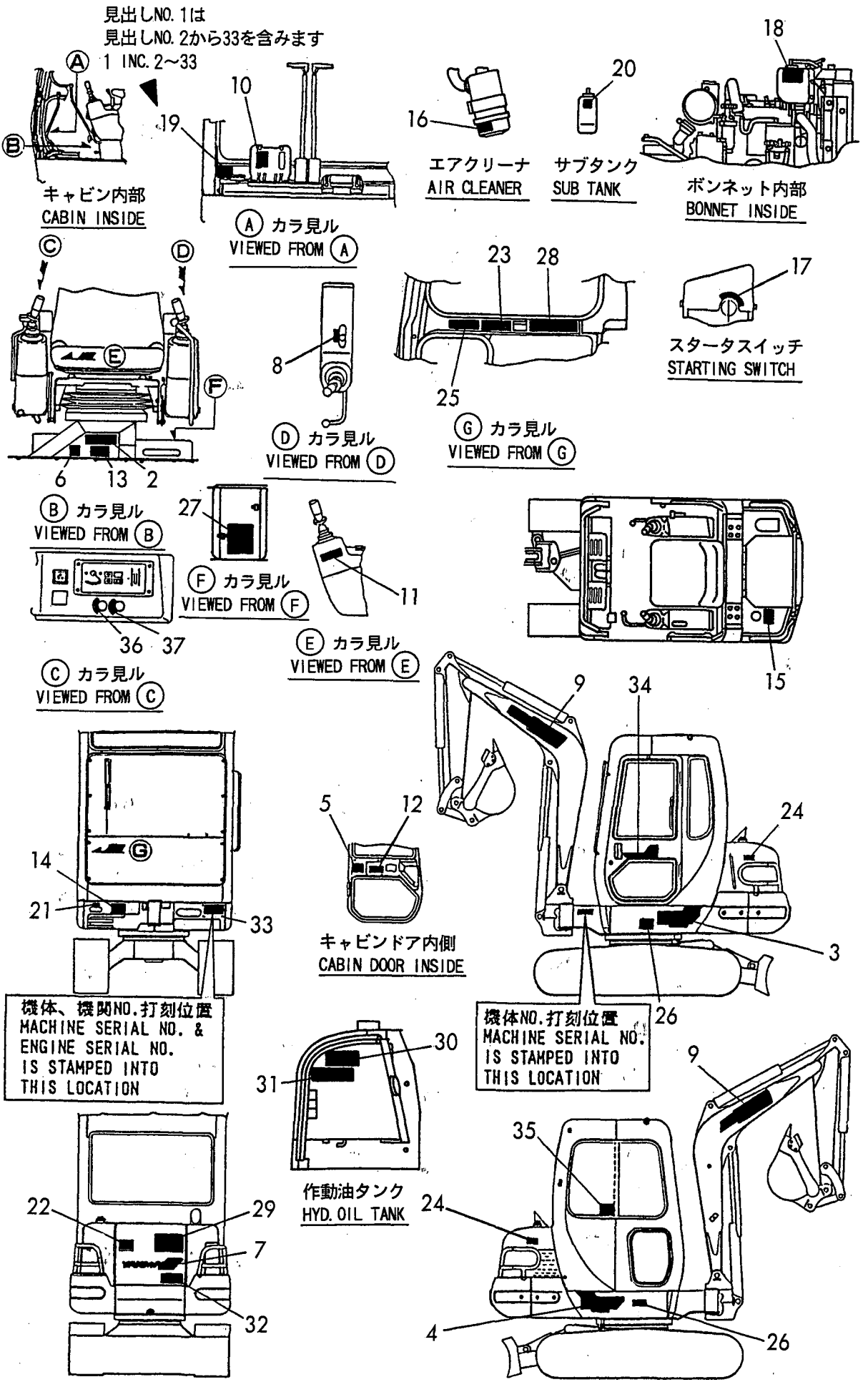

https://truckmanualshub.com/

```
2,2,,172194-03110,,"LABEL,SPECIFICATION",,1,,,,,,,,,,,,,,,,
3,2,,172194-03120,,"LABEL,B17 L.H",,1,,,,,,,,,,,,,,,,
4,2,,172194-03130,,"LABEL,B17 R.H",,1,,,,,,,,,,,,,,,,
5,2,,172194-03140,,"LABEL,OIL & WATER",,1,,,,,,,,,,,,,,,,
6,2,,172179-03160,,"LABEL,SWING LOCK",,1,,,,,,,,,,,,,,,,
7,2,,172179-03170,,"LABEL,REAR YANMAR",,1,,,,,,,,,,,,,,,,
8,2,,172174-03190,,"LABEL,ACCELERATOR",,1,,,,,,,,,,,,,,,,
9,2,,172159-03242,,"LABEL, BOOM",,2,,,,,,,,,,,,,,,,
10,2,,172174-03270,,"LABEL, P.T.O.",,1,,,,,,,,,,,,,,,,
11,2,,172159-03290,,LABEL,,1,,,,,,,,,,,,,,,,
12,2,,172174-03330,,"LABEL,GREASE FEED",,1,,,,,,,,,,,,,,,,
13,2,,172159-03340,,"LABEL, OIL FEED",,1,,,,,,,,,,,,,,,,
14,2,,172174-03340,,"LABEL, GREASE",,1,,,,,,,,,,,,,,,,
15,2,,172159-03350,,"LABEL, FUEL",,1,,,,,,,,,,,,,,,,
16,2,,172159-03360,,"LABEL, AIR CLEANER",,1,,,,,,,,,,,,,,,,
17,2,,172161-03360,,"LABEL,STARTER SWITCH",,1,,,,,,,,,,,,,,,,
18,2,,172159-03370,,"LABEL, SUBTANK",,1,,,,,,,,,,,,,,,,
19,2,,172174-03380,,LABEL,,1,,,,,,,,,,,,,,,,
20,2,,172159-03390,,"LABEL, ANTI-FREEZING",,1,,,,,,,,,,,,,,,,
21,2,,172159-03450,,LABEL,,1,,,,,,,,,,,,,,,,
22,2,,172174-03570,,"LABEL,DANGER",,1,,,,,,,,,,,,,,,,
23,2,,172174-03600,,LABEL,,1,,,,,,,,,,,,,,,,
24,2,,172174-03630,,LABEL,,2,,,,,,,,,,,,,,,,
25,2,,172174-03640,,"LABEL,TRANSPORT",,1,,,,,,,,,,,,,,,,
26,2,,172174-03650,,"LABEL,GREASE CYL.",,2,,,,,,,,,,,,,,,,
27,2,,172174-03660,,"LABEL,CABLE",,1,,,,,,,,,,,,,,,,
28,2,,172174-03670,,"LABEL,NEUTRAL",,1,,,,,,,,,,,,,,,,
29,2,,172174-03680,,"LABEL,SWING AREA",,1,,,,,,,,,,,,,,,,
30,2,,172174-03690,,"LABEL,RADIATOR",,1,,,,,,,,,,,,,,,,
31,2,,172174-03700,,LABEL,,1,,,,,,,,,,,,,,,,
32,2,,172174-03710,,LABEL,,1,,,,,,,,,,,,,,,,
33,2,,22857-300050,,"SCREW 3X 5",,4,,,,,,,,,,,,,,,,
34,1,,172174-03140,,"LABEL,FRONT",,1,,,,,,,,,,,,,,,,
35,1,,172174-03370,,"LABEL,PATTERN A",,1,,,,,,,,,,,,,,,,
```

Fig. 2 銘板(キャノピ) LABEL(CANOPY)

https://truckmanualshub.com/

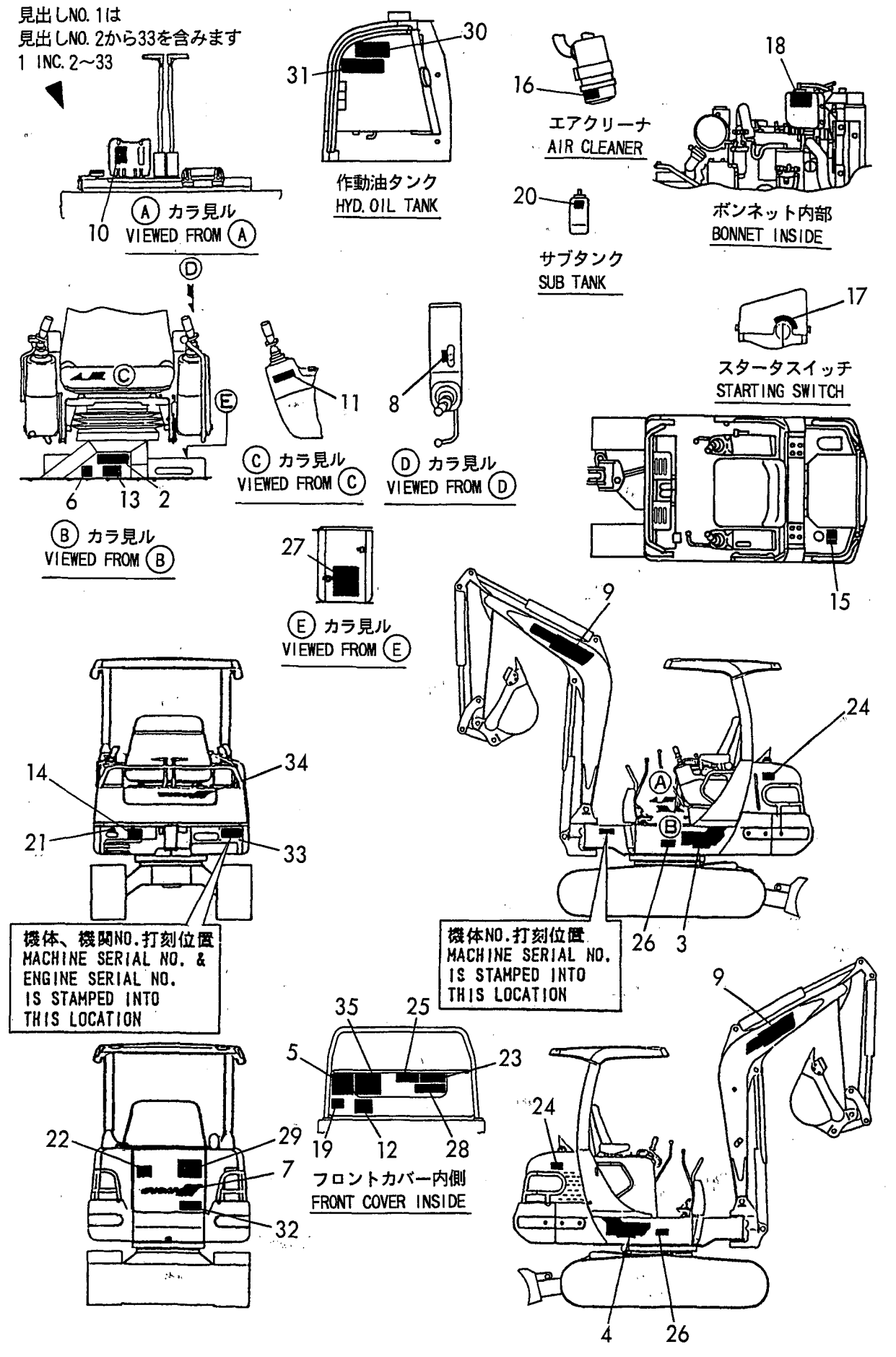

https://truckmanualshub.com/

```
1,1,,172179-11300,,"EXHAUST,SILENCER",1,1,,,,,,,,,,,,,,,,
2,1,,172179-11310,,SILENCER,1,1,,,,,,,,,,,,,,,,
3,1,,172179-11360,,"SUPPORT B,SILENCER",1,1,,,,,,,,,,,,,,,,
4,1,,124701-11911,,"GASKET, (NON-ASB.)",1,1,,,,,,,,,,,,,,,,
5,1,,119831-13580,,CLAMP,1,1,,,,,,,,,,,,,,,,
6,1,,22117-080000,,"WASHER  8",1,1,,,,,,,,,,,,,,,,
7,1,,22217-080000,,"SPRING WASHER  8",1,1,,,,,,,,,,,,,,,,
8,1,,22217-080000,,"SPRING WASHER  8",4,4,,,,,,,,,,,,,,,,
9,1,,26013-080202,,"BOLT W/WASHER M8X20",4,4,,,,,,,,,,,,,,,,
10,1,,26106-080552,,"BOLT M 8X 55 PLATED",1,1,,,,,,,,,,,,,,,,
11,1,,26706-080002,,"NUT M 8",1,1,,,,,,,,,,,,,,,,
12,1,,26716-080002,,"NUT M 8",4,4,,,,,,,,,,,,,,,,
13,1,,172179-11500,,"HOSE,AIR CLEANER",1,1,,,,,,,,,,,,,,,,
14,1,,172179-11510,,"HOSE,AIR INTAKE",1,1,,,,,,,,,,,,,,,,
15,1,,172179-11550,,"SUPPORT,AIR CLEANER",1,1,,,,,,,,,,,,,,,,
16,1,,119253-12500,,"CLEANER, AIR",1,1,,,,,,,,,,,,,,,,
17,2,,121024-12660,,"PAN ASSY, DUST",1,1,,,,,,,,,,,,,,,,
18,2,,121465-12700,,RETAINER,1,1,,,,,,,,,,,,,,,,
19,2,,121465-12510,,"ELEMENT, AIR CLEANER",1,1,,,,,,,,,,,,,,,,
20,2,,124064-12680,,"BOLT, WING",1,1,,,,,,,,,,,,,,,,
21,2,,124064-12690,,WASHER,1,1,,,,,,,,,,,,,,,,
22,1,,172159-45160,,"CLAMP 350",1,1,,,,,,,,,,,,,,,,
23,1,,22217-100000,,"SPRING WASHER 10",8,8,,,,,,,,,,,,,,,,
24,1,,23000-060000,,"CLAMP 60",1,1,,,,,,,,,,,,,,,,
25,1,,23000-060000,,"CLAMP 60",2,2,,,,,,,,,,,,,,,,
26,1,,26116-100252,,"BOLT M10X 25 PLATED",4,4,,,,,,,,,,,,,,,,
27,1,,26366-080002,,"NUT M 8",1,1,,,,,,,,,,,,,,,,
28,1,,26716-080002,,"NUT M 8",1,1,,,,,,,,,,,,,,,,
```

Fig. 3 エアクリーナ & サイレンサ AIR CLEANER & SILENCER

https://truckmanualshub.com/

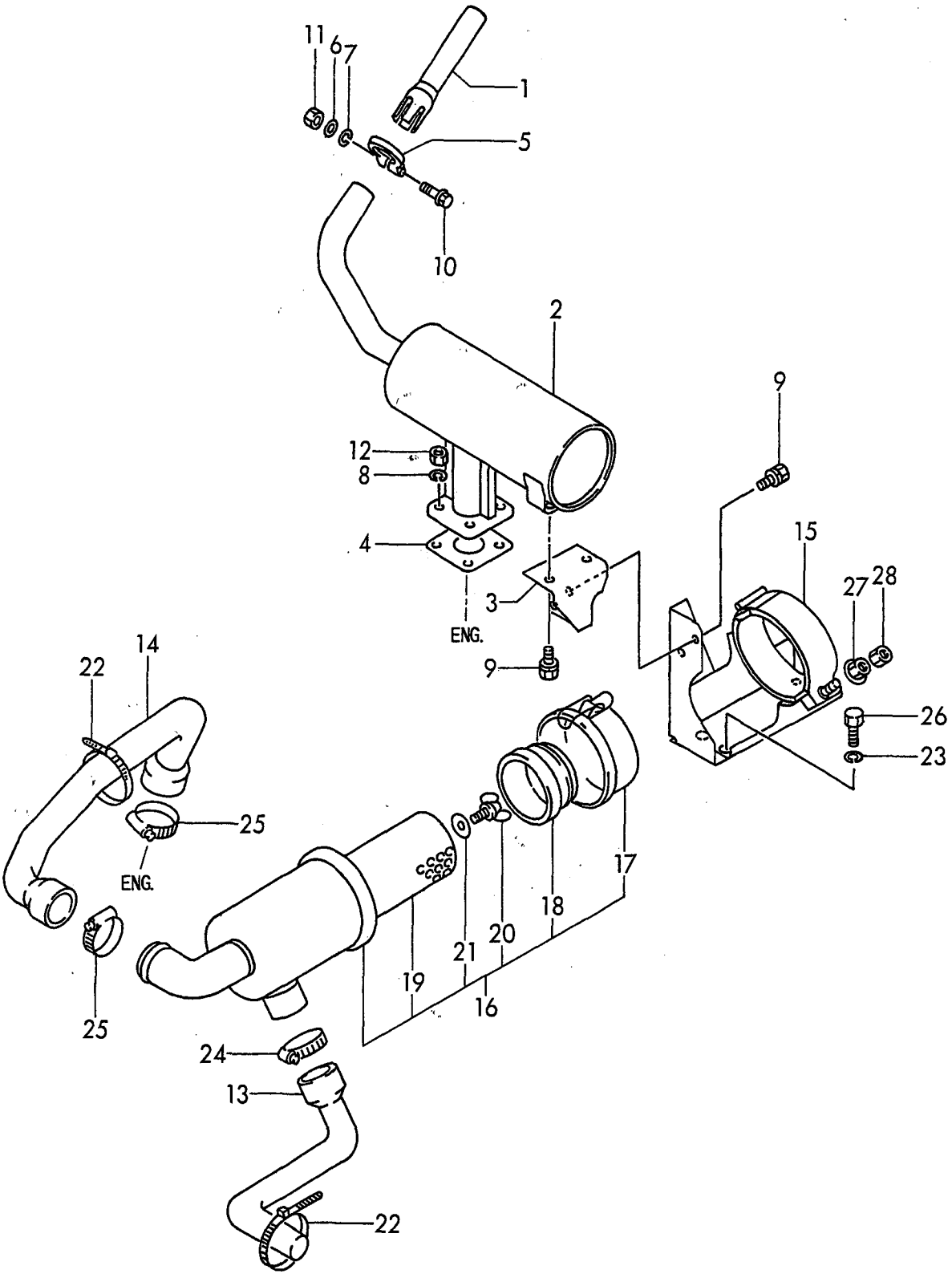

https://truckmanualshub.com/

```
1,1,,172179-12100,,"LEVER,ACCEL",1,1,,,,,,,,,,,,,,,,,
2,2,,172165-12140,,GRIP(RED,1,1,,,,,,,,,,,,,,,,,,,
3,1,,172194-12110,,"CABLE,ACCEL",1,1,,,,,,,,,,,,,,,,,,,
4,1,,172194-12150,,"BRACKET ASSY,ACCEL",1,1,,,,,,,,,,,,,,,,,,,
5,1,,172159-12270,,"JOINT, CABLE",1,1,,,,,,,,,,,,,,,,,,,
6,1,,172159-12520,,"PIN, CABLE",1,1,,,,,,,,,,,,,,,,,,,
7,1,,172159-12530,,"PIN  6X 17",1,1,,,,,,,,,,,,,,,,,,,
8,1,,172159-42070,,"PIN 6,COME-OFF SNAP",2,2,,,,,,,,,,,,,,,,,,,
9,1,,22137-060000,,"WASHER 6, POLISHED",2,2,,,,,,,,,,,,,,,,,,,
10,1,,22217-080000,,"SPRING WASHER  8",2,2,,,,,,,,,,,,,,,,,,,
11,1,,26013-100302,,"BOLT M10X 30",2,2,,,,,,,,,,,,,,,,,,,
12,1,,26116-080202,,"BOLT M 8X 20 PLATED",2,2,,,,,,,,,,,,,,,,,,,
```

Fig. 4 アクセル ACCELERATOR

https://truckmanualshub.com/

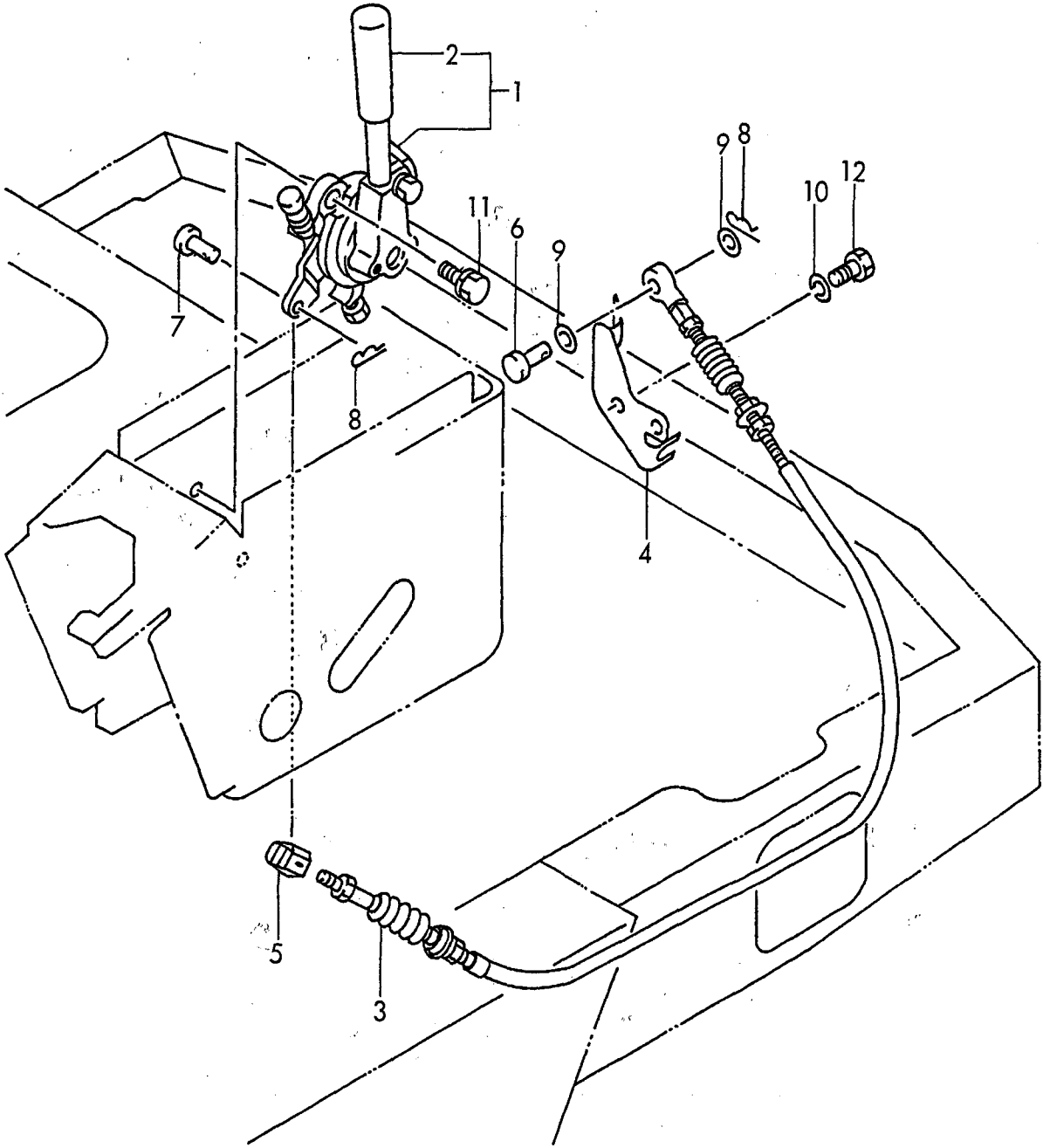

https://truckmanualshub.com/

```
1,1,,172179-13100,,"MOUNT ASSY,ENG",2,2,,,,,,,,,,,,,,,,
2,1,,172179-13150,,"MOUNT ASSY,ENG",2,2,,,,,,,,,,,,,,,,
3,1,,172179-13200,,"STOPPER,ENG",4,4,,,,,,,,,,,,,,,,
4,1,,172179-13210,,CUSHION,4,4,,,,,,,,,,,,,,,,
5,1,,22217-100000,,"SPRING WASHER 10",8,8,,,,,,,,,,,,,,,,
6,1,,26013-100202,,"BOLT W/WASHER M10X20",8,8,,,,,,,,,,,,,,,,
7,1,,26013-100252,,"BOLT W/WASHER M10X25",16,16,,,,,,,,,,,,,,,,
8,1,,26716-100002,,"NUT M10",8,8,,,,,,,,,,,,,,,,
```

Fig. 5 エンジンマウント ENGINE MOUNT

https://truckmanualshub.com/

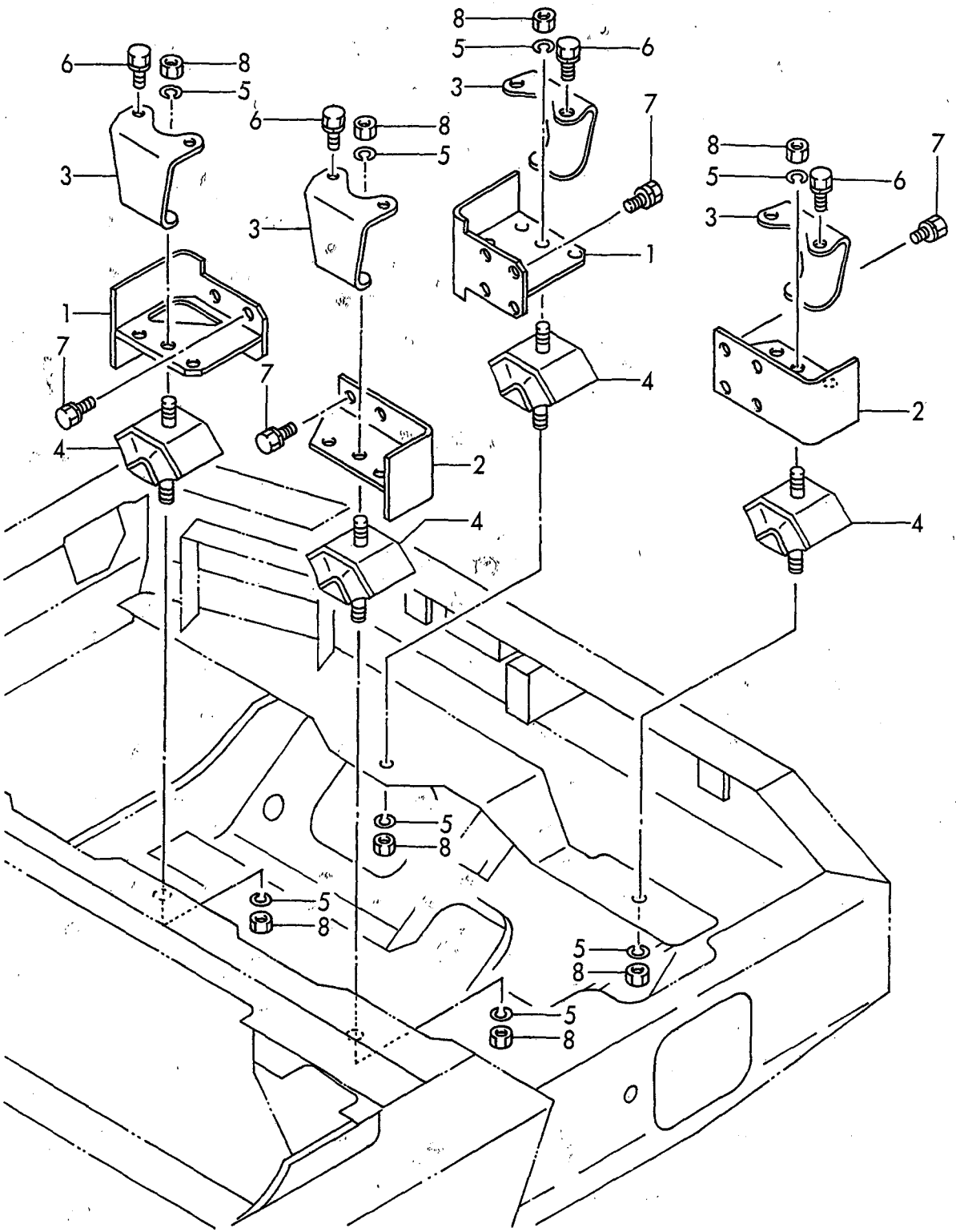

https://truckmanualshub.com/

```
1,1,,172179-13300,,RADIATOR,1,1,,,,,,,,,,,,,,,
2,2,,124450-44590,,CAP,1,1,,,,,,,,,,,,,,,
3,1,,172122-13310,,"MOUNT, RADIATOR",4,4,,,,,,,,,,,,,,,
4,1,,172179-13310,,"MOUNT ASSY,RADIATOR",2,2,,,,,,,,,,,,,,,
5,1,,172179-13350,,"PLATE ASSY,RADIATOR",1,1,,,,,,,,,,,,,,,
6,1,,172179-13390,,"PLATE,RADIATOR",1,1,,,,,,,,,,,,,,,
7,1,,172179-13450,,"HOSE 7X480",1,1,,,,,,,,,,,,,,,
8,1,,172179-13470,,"HOSE 7X220 ASSY",1,1,,,,,,,,,,,,,,,
9,1,,172179-13501,,"WIRE NET,FAN",1,1,,,,,,,,,,,,,,,
10,1,,172179-13800,,"C.W.TUBE,UPPER",1,1,,,,,,,,,,,,,,,
11,1,,172179-13850,,C.W.TUBE(LOWER,1,1,,,,,,,,,,,,,,,
12,1,,172174-16540,,"CLAMP 10X70",1,1,,,,,,,,,,,,,,,
13,1,,121468-44510,,"SUB-TANK ASSY",1,1,,,,,,,,,,,,,,,
14,2,,121470-44521,,"BODY,SUB-TANK",1,1,,,,,,,,,,,,,,,
15,2,,121450-44531,,CAP,1,1,,,,,,,,,,,,,,,
16,2,,121468-44540,,"PLUG, SUB-TANK",1,1,,,,,,,,,,,,,,,
17,2,,124450-44560,,CLAMP,1,1,,,,,,,,,,,,,,,
18,2,,121470-44581,,GASKET,1,1,,,,,,,,,,,,,,,
19,2,,23065-070130,,"PIPE  7X 130",1,1,,,,,,,,,,,,,,,
20,1,,121450-49110,,"COCK ASSY, 3-WAY",1,1,,,,,,,,,,,,,,,
22,2,,121250-49121,,PLUG,1,1,,,,,,,,,,,,,,,
23,2,,24311-000160,,"O-RING 1A P-16.0",1,1,,,,,,,,,,,,,,,
24,1,,124766-59050,,"CLAMP 12",4,4,,,,,,,,,,,,,,,
25,1,,124766-59050,,"CLAMP 12",1,1,,,,,,,,,,,,,,,
26,1,,22137-060000,,"WASHER 6, POLISHED",2,2,,,,,,,,,,,,,,,
27,1,,22217-080000,,"SPRING WASHER  8",2,2,,,,,,,,,,,,,,,
28,1,,22217-100000,,"SPRING WASHER 10",1,1,,,,,,,,,,,,,,,
29,1,,23010-038000,,"CLAMP 38",4,4,,,,,,,,,,,,,,,
30,1,,26013-060202,,"BOLT M 6X 20",2,2,,,,,,,,,,,,,,,
31,1,,26013-080162,,"BOLT W/WASHER M8X16",4,4,,,,,,,,,,,,,,,
32,1,,26013-080162,,"BOLT W/WASHER M8X16",2,2,,,,,,,,,,,,,,,
33,1,,26013-100302,,"BOLT M10X 30",4,4,,,,,,,,,,,,,,,
34,1,,26051-080002,,"NUT M 8",8,8,,,,,,,,,,,,,,,
35,1,,26116-080142,,"BOLT M 8X 14 PLATED",2,2,,,,,,,,,,,,,,,
36,1,,26116-100122,,"BOLT M10X 12 PLATED",1,1,,,,,,,,,,,,,,,
37,1,,26716-080002,,"NUT M 8",1,1,,,,,,,,,,,,,,,
```

Fig. 6 ラジエータ & マウント RADIATOR & MOUNT

https://truckmanualshub.com/

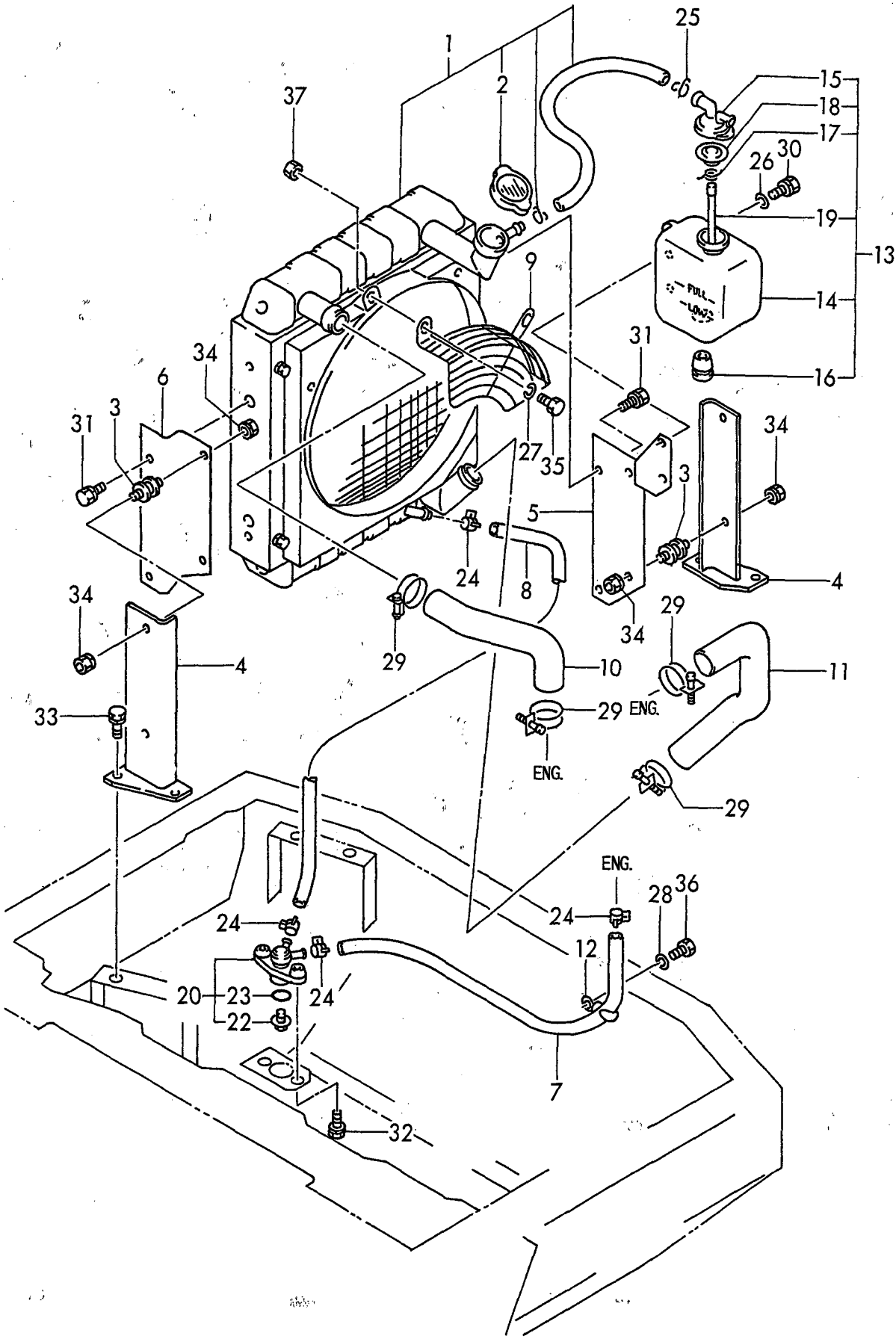

https://truckmanualshub.com/

```
1,1,,772194-14100,,"TANK ASSY, FUEL",1,1,,,,,,,,,,,,,,,,
2,2,,104200-11920,,COCK,1,1,,,,,,,,,,,,,,,,
4,3,,172179-14190,,"RUBBER,SEAL",1,1,,,,,,,,,,,,,,,,
5,2,,172162-14200,,GASKET,1,1,,,,,,,,,,,,,,,,
6,2,,172183-14250,,"FILTER (FUEL",1,1,,,,,,,,,,,,,,,,
7,2,,172122-14301,,"CAP, FUEL TANK",1,1,,,,,,,,,,,,,,,,
8,3,,172122-14350,,GASKET,1,1,,,,,,,,,,,,,,,,
9,2,,172173-14300,,"GAUGE UNIT,FUEL",1,1,,,,,,,,,,,,,,,,
10,2,,22217-050000,,"SPRING WASHER  5",5,5,,,,,,,,,,,,,,,,
11,2,,26557-050122,,"SCREW M 5X 12",5,5,,,,,,,,,,,,,,,,
12,1,,172142-14320,,"GAUGE, FUEL",1,1,,,,,,,,,,,,,,,,
13,1,,172159-65930,,"WASHER 10",5,5,,,,,,,,,,,,,,,,
14,1,,22217-100000,,"SPRING WASHER 10",5,5,,,,,,,,,,,,,,,,
15,1,,23080-013000,,"CLAMP 13,HOSE",1,1,,,,,,,,,,,,,,,,
16,1,,26116-100252,,"BOLT M10X 25 PLATED",5,5,,,,,,,,,,,,,,,,
17,1,,172179-14600,,"HOSE 7X410",1,1,,,,,,,,,,,,,,,,
18,1,,172179-14610,,"HOSE 7X310",1,1,,,,,,,,,,,,,,,,
19,1,,172179-14620,,"HOSE 7X570",1,1,,,,,,,,,,,,,,,,
20,1,,26116-080652,,"BOLT M 8X 65 PLATED",1,1,,,,,,,,,,,,,,,,
21,1,,129335-55700,,"SEPARATOR, WATER",1,1,,,,,,,,,,,,,,,,
22,2,,104200-55321,,"VALVE, TAPER",1,1,,,,,,,,,,,,,,,,
23,2,,104200-55330,,"SPRING, TAPER VALVE",1,1,,,,,,,,,,,,,,,,
24,2,,104200-55341,,"HANDLE, COCK",1,1,,,,,,,,,,,,,,,,
25,2,,124064-55510,,"BOWL, FUEL STRAINER",1,1,,,,,,,,,,,,,,,,
26,2,,102103-55520,,O-RING,1,1,,,,,,,,,,,,,,,,
27,2,,110250-55610,,"RING, RETAINING",1,1,,,,,,,,,,,,,,,,
28,2,,121257-55720,,"SPRING, SCREEN",1,1,,,,,,,,,,,,,,,,
29,2,,121257-55731,,FLOAT,1,1,,,,,,,,,,,,,,,,
31,2,,101720-55750,,"PLUG 6",2,2,,,,,,,,,,,,,,,,
32,2,,104200-55750,,"SCREW M 4",1,1,,,,,,,,,,,,,,,,
33,2,,171081-55910,,SCREEN,1,1,,,,,,,,,,,,,,,,
34,2,,23418-060000,,"GASKET 6, NYLON",2,2,,,,,,,,,,,,,,,,
35,2,,24311-240100,,"O-RING 1A P-10A",1,1,,,,,,,,,,,,,,,,
36,1,,22217-080000,,"SPRING WASHER  8",1,1,,,,,,,,,,,,,,,,
37,1,,23010-016000,,"CLAMP 16",6,6,,,,,,,,,,,,,,,,
```

Fig. 7 ＦＯタンク ＆ ＦＯパイプ
FUEL TANK & FUEL LINE

https://truckmanualshub.com/

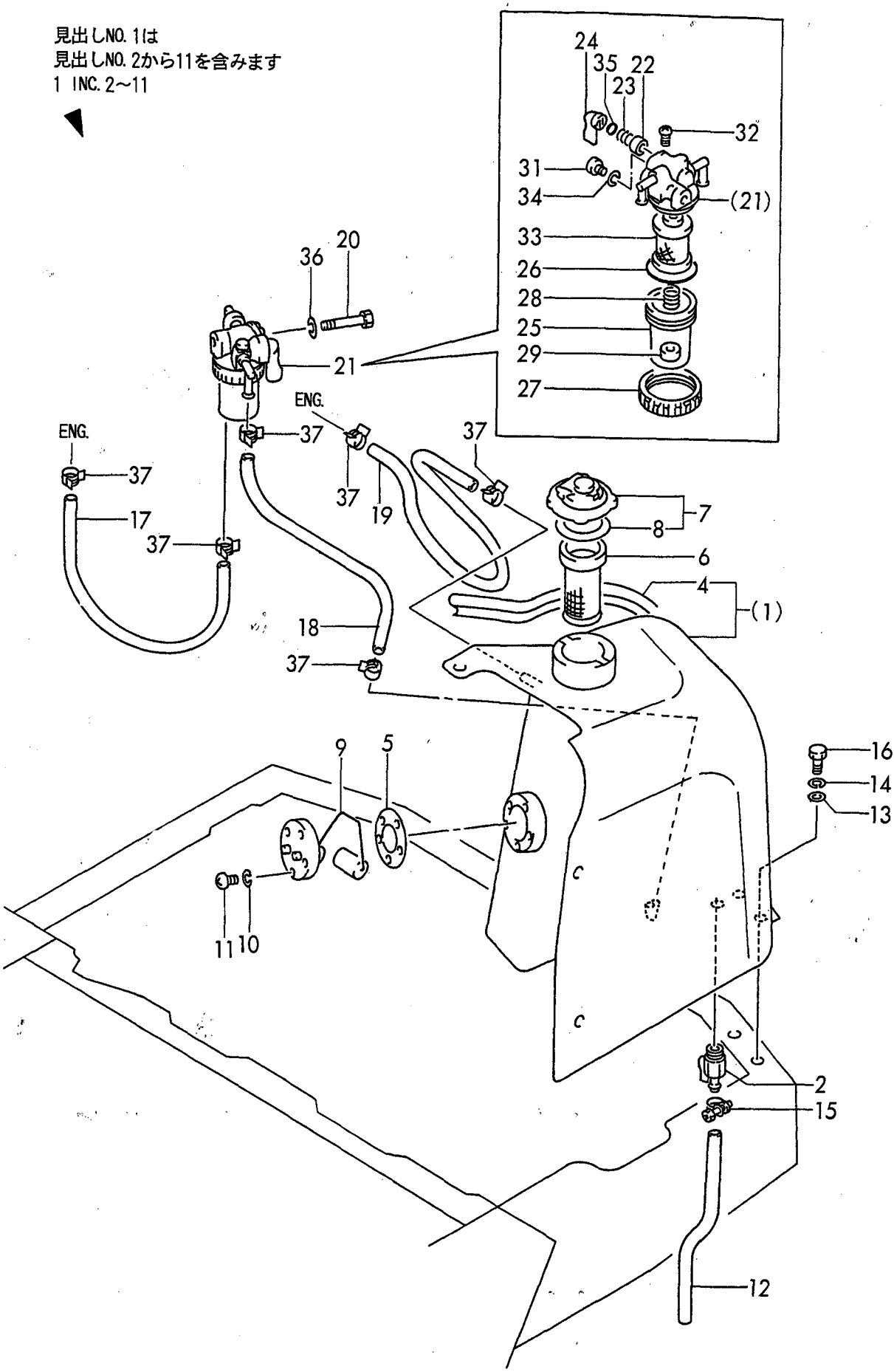

https://truckmanualshub.com/

```
1,1,,172159-16100,,"BATTERY NS60",1,1,,,,,,,,,,,,,,,,
2,1,,172179-16100,,"PLUS WIRE,BATTERY",1,1,,,,,,,,,,,,,,,,
3,1,,172179-16110,,"MINUS WIRE,BATTERY",1,1,,,,,,,,,,,,,,,,
4,1,,22137-100000,,"WASHER 10,POLISHED",1,1,,,,,,,,,,,,,,,,
5,1,,22217-080000,,"SPRING WASHER  8",1,1,,,,,,,,,,,,,,,,
6,1,,22217-100000,,"SPRING WASHER 10",1,1,,,,,,,,,,,,,,,,
7,1,,26116-100162,,"BOLT M10X 16 PLATED",1,1,,,,,,,,,,,,,,,,
8,1,,26716-080002,,"NUT M 8",1,1,,,,,,,,,,,,,,,,
9,1,,172179-16300,,"CLAMP ASSY,BATTERY",1,1,,,,,,,,,,,,,,,,
10,1,,172179-16350,,"BOLT ASSY",2,2,,,,,,,,,,,,,,,,
11,1,,22217-080000,,"SPRING WASHER  8",2,2,,,,,,,,,,,,,,,,
```

Fig. 8 バッテリ BATTERY

https://truckmanualshub.com/

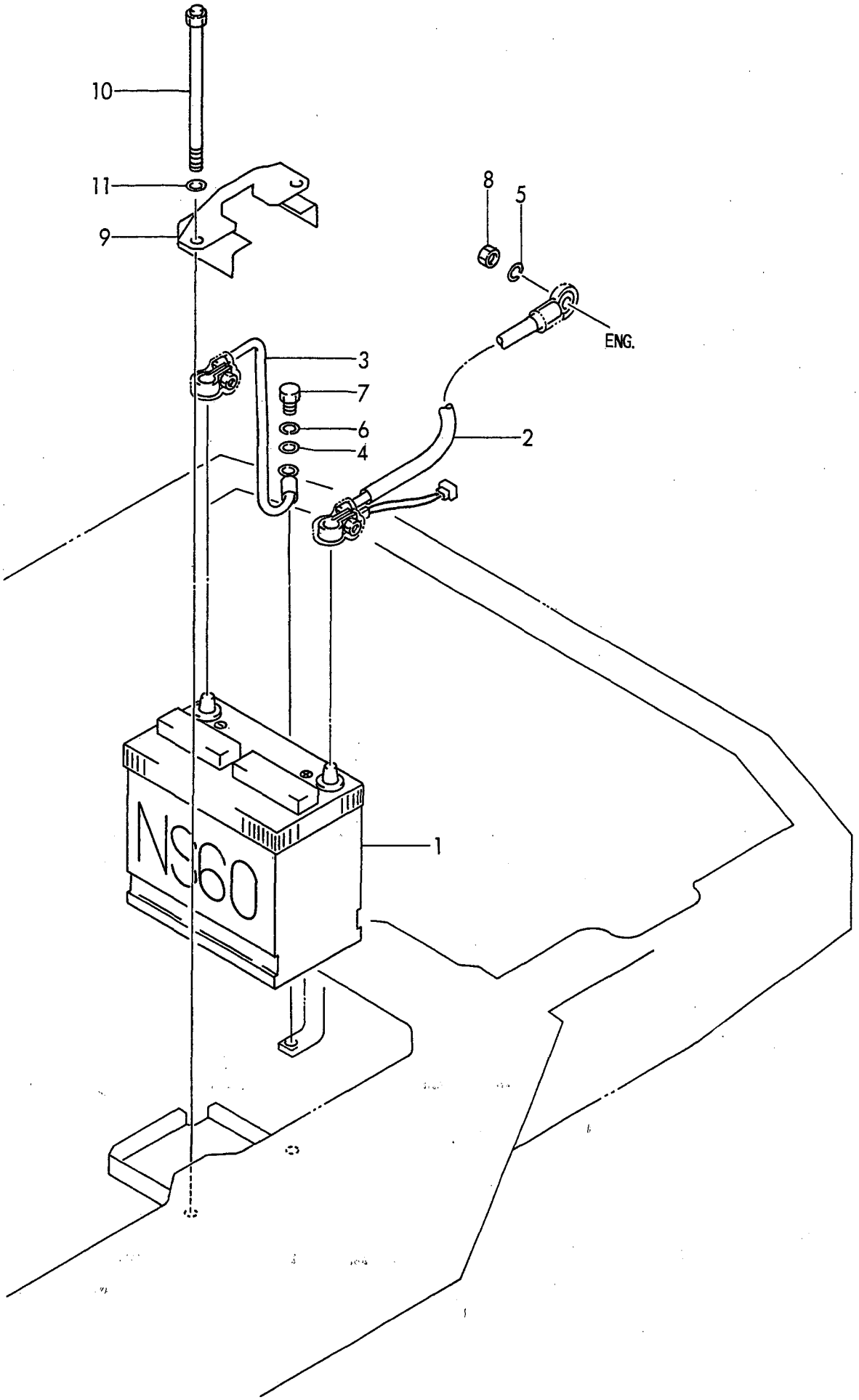

https://truckmanualshub.com/

```
1,1,,172161-16150,,"CORD,EARTH",1,1,,,,,,,,,,,,,,,,
2,1,,172179-16500,,"HARNESS A",1,1,,,,,,,,,,,,,,,,
3,1,,172179-16510,,"HARNESS B",1,1,,,,,,,,,,,,,,,,
4,1,,172149-16520,,"HARNESS, STARTER",1,1,,,,,,,,,,,,,,,,
5,1,,172179-16521,,"HARNESS (C), WIRE",1,1,,,,,,,,,,,,,,,,
6,1,,172179-16530,,"FLW 0.85+0.5",1,1,,,,,,,,,,,,,,,,
7,1,,172174-16540,,"CLAMP 10X70",1,1,,,,,,,,,,,,,,,,
8,1,,172174-16550,,CLAMP,1,1,,,,,,,,,,,,,,,,
9,1,,172165-16560,,"HARNESS (G)",1,1,,,,,,,,,,,,,,,,
10,1,,172159-45160,,"CLAMP 350",5,5,,,,,,,,,,,,,,,,
11,1,,172179-54870,,GROMET,1,1,,,,,,,,,,,,,,,,
12,1,,1A1380-58050,,"GROMMET 16X20X4.5",1,1,,,,,,,,,,,,,,,,
13,1,,172159-78080,,CLAMP,5,5,,,,,,,,,,,,,,,,
14,1,,22137-100000,,"WASHER 10,POLISHED",1,1,,,,,,,,,,,,,,,,
15,1,,22137-100000,,"WASHER 10,POLISHED",2,2,,,,,,,,,,,,,,,,
16,1,,22217-060000,,"SPRING WASHER  6",1,1,,,,,,,,,,,,,,,,
17,1,,22217-100000,,"SPRING WASHER 10",1,1,,,,,,,,,,,,,,,,
18,1,,22217-100000,,"SPRING WASHER 10",2,2,,,,,,,,,,,,,,,,
19,1,,22217-100000,,"SPRING WASHER 10",1,1,,,,,,,,,,,,,,,,
20,1,,26116-060122,,"BOLT M 6X 12",1,1,,,,,,,,,,,,,,,,
21,1,,26116-100162,,"BOLT M10X 16 PLATED",1,1,,,,,,,,,,,,,,,,
22,1,,26116-100162,,"BOLT M10X 16 PLATED",2,2,,,,,,,,,,,,,,,,
23,1,,26116-100162,,"BOLT M10X 16 PLATED",1,1,,,,,,,,,,,,,,,,
```

Fig. 9 電装品(ﾜｲﾔﾘﾝｸﾞ) ELECTRIC PART(WIRING)

https://truckmanualshub.com/

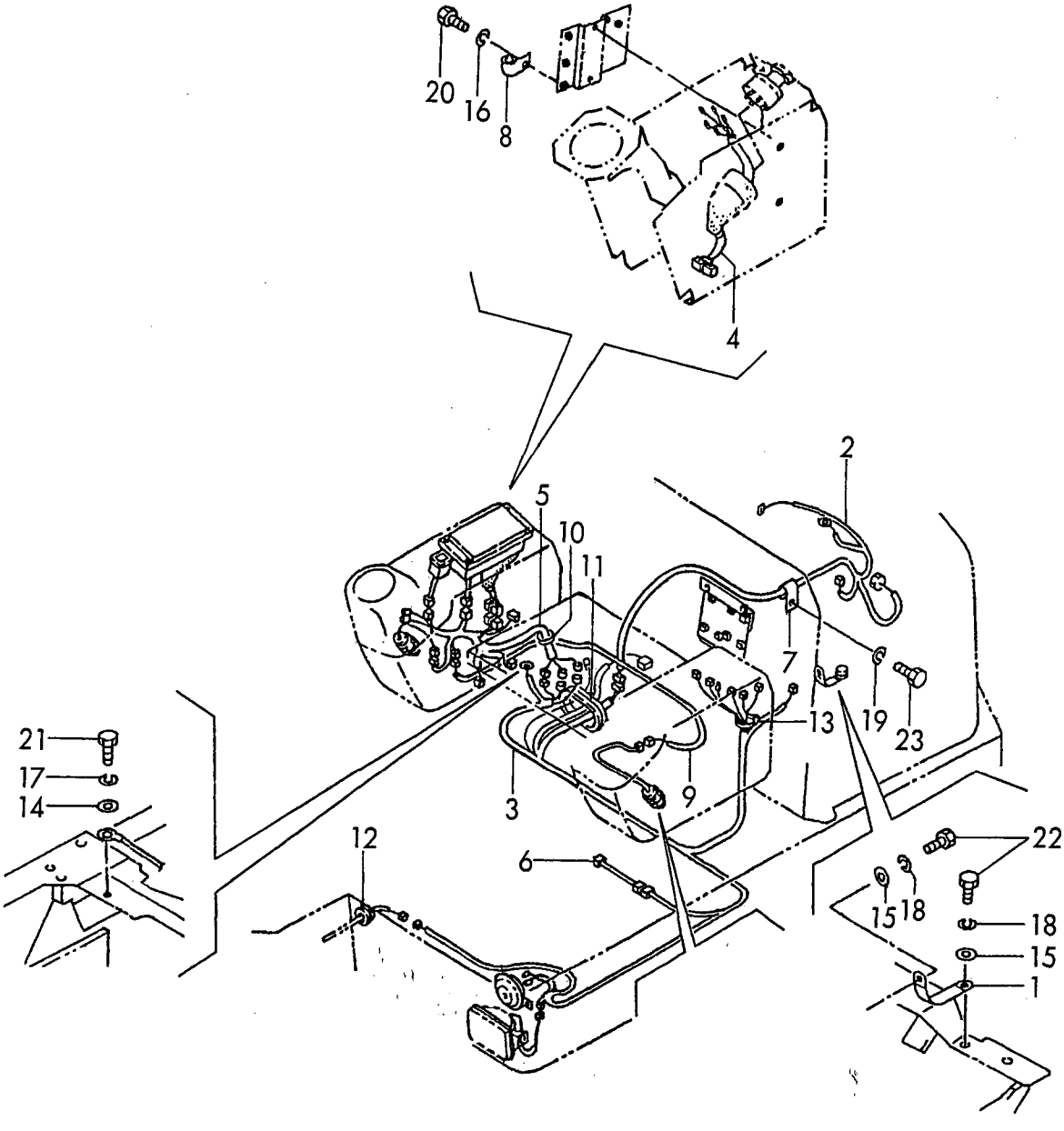

```
1,1,,172162-17101,,"BOX ASSY, INDICATOR",1,1,,,,,,,,,,,,,,,
2,2,,172162-17120,,VALVE,4,4,,,,,,,,,,,,,,,
3,2,,172162-17130,,HOURMETER,1,1,,,,,,,,,,,,,,,
4,2,,172162-17240,,"METER ASSY, FUEL",1,1,,,,,,,,,,,,,,,
5,2,,172162-17250,,HARNESS,1,1,,,,,,,,,,,,,,,
6,2,,172162-17270,,"COVER, FRONT",1,1,,,,,,,,,,,,,,,
7,1,,172174-17100,,"BRACKET (E) ASSY",1,1,,,,,,,,,,,,,,,
8,1,,172179-17100,,"BRACKET (T) ASSY",1,1,,,,,,,,,,,,,,,
9,1,,172141-17141,,"UNIT, CHECKER",1,1,,,,,,,,,,,,,,,
10,1,,172164-17140,,SWITCH,1,1,,,,,,,,,,,,,,,
11,1,,172141-17150,,BUZZER,1,1,,,,,,,,,,,,,,,
12,1,,172141-17161,,"BOX, FUSE",1,1,,,,,,,,,,,,,,,
13,2,,29411-150000,,"FUSE (15A),CARTRIDGE",5,5,,,,,,,,,,,,,,,
14,1,,172141-17190,,"SWITCH, WORK LAMP",1,1,,,,,,,,,,,,,,,
15,2,,172141-17230,,"BULB 24V- 6W",1,1,,,,,,,,,,,,,,,
16,1,,172162-17410,,"LAMP ASSY, HEADLIGHT",1,1,,,,,,,,,,,,,,,
17,2,,29220-788200,,BULB,1,1,,,,,,,,,,,,,,,
18,1,,119247-77100,,"RELAY, SAFETY",1,1,,,,,,,,,,,,,,,
19,1,,119640-77711,,"LIMITER,CURRENT",1,1,,,,,,,,,,,,,,,
20,1,,121522-77721,,"INDICATOR, CHARGING",1,1,,,,,,,,,,,,,,,
21,1,,129155-77810,,RESISTOR,1,1,,,,,,,,,,,,,,,
22,1,,119650-77910,,"RELAY, GROW",1,1,,,,,,,,,,,,,,,
25,1,,119632-77922,,TIMER,1,1,,,,,,,,,,,,,,,
26,1,,22137-060000,,"WASHER 6, POLISHED",2,2,,,,,,,,,,,,,,,
27,1,,22137-060000,,"WASHER 6, POLISHED",1,1,,,,,,,,,,,,,,,
28,1,,22137-060000,,"WASHER 6, POLISHED",2,2,,,,,,,,,,,,,,,
29,1,,22137-060000,,"WASHER 6, POLISHED",1,1,,,,,,,,,,,,,,,
30,1,,22217-060000,,"SPRING WASHER  6",2,2,,,,,,,,,,,,,,,
31,1,,22217-080000,,"SPRING WASHER  8",2,2,,,,,,,,,,,,,,,
32,1,,22217-080000,,"SPRING WASHER  8",2,2,,,,,,,,,,,,,,,
33,1,,22217-100000,,"SPRING WASHER 10",3,3,,,,,,,,,,,,,,,
34,1,,26013-060122,,"BOLT M 6X 12",2,2,,,,,,,,,,,,,,,
35,1,,26022-050162,,"SCREW M 5X 16",2,2,,,,,,,,,,,,,,,
36,1,,26022-060122,,"SCREW M 6X 12",1,1,,,,,,,,,,,,,,,
37,1,,26022-060122,,"SCREW M 6X 12",1,1,,,,,,,,,,,,,,,
38,1,,26022-060122,,"SCREW M 6X 12",2,2,,,,,,,,,,,,,,,
39,1,,26022-060162,,"SCREW M 6X 16",1,1,,,,,,,,,,,,,,,
40,1,,26022-060162,,"SCREW M 6X 16",1,1,,,,,,,,,,,,,,,
41,1,,26022-060162,,"SCREW M 6X 16",1,1,,,,,,,,,,,,,,,
42,1,,26022-060252,,"SCREW M 6X 25",2,2,,,,,,,,,,,,,,,
43,1,,26116-060122,,"BOLT M 6X 12",2,2,,,,,,,,,,,,,,,
44,1,,26116-080162,,"BOLT M 8X 16 PLATED",2,2,,,,,,,,,,,,,,,
45,1,,26116-080162,,"BOLT M 8X 16 PLATED",2,2,,,,,,,,,,,,,,,
46,1,,26589-040202,,"SCREW M4,BINDING",4,4,,,,,,,,,,,,,,,
47,1,,26716-100002,,"NUT M10",3,3,,,,,,,,,,,,,,,
48,1,,26776-160002,,"LOCK NUT M16 PLATED",1,1,,,,,,,,,,,,,,,
49,1,,933110-00100,,"SWITCH ASSY, STARTER",1,1,,,,,,,,,,,,,,,
50,2,,933110-00200,,"SWITCH, STARTING",1,1,,,,,,,,,,,,,,,
51,2,,933110-00301,,"KEY ASSY",1,1,,,,,,,,,,,,,,,
54,1,,933110-05300,,HORN,1,1,,,,,,,,,,,,,,,
55,1,,933113-15900,,"COVER, SWITCH TERMI.",1,1,,,,,,,,,,,,,,,
```

Fig. 10 電装品(機器:ｷｬﾋﾞﾝ,ｷｬﾉﾋﾟ共通) ELECTRIC PART(EQUIPMENT:CABIN, CANOPY)

https://truckmanualshub.com/

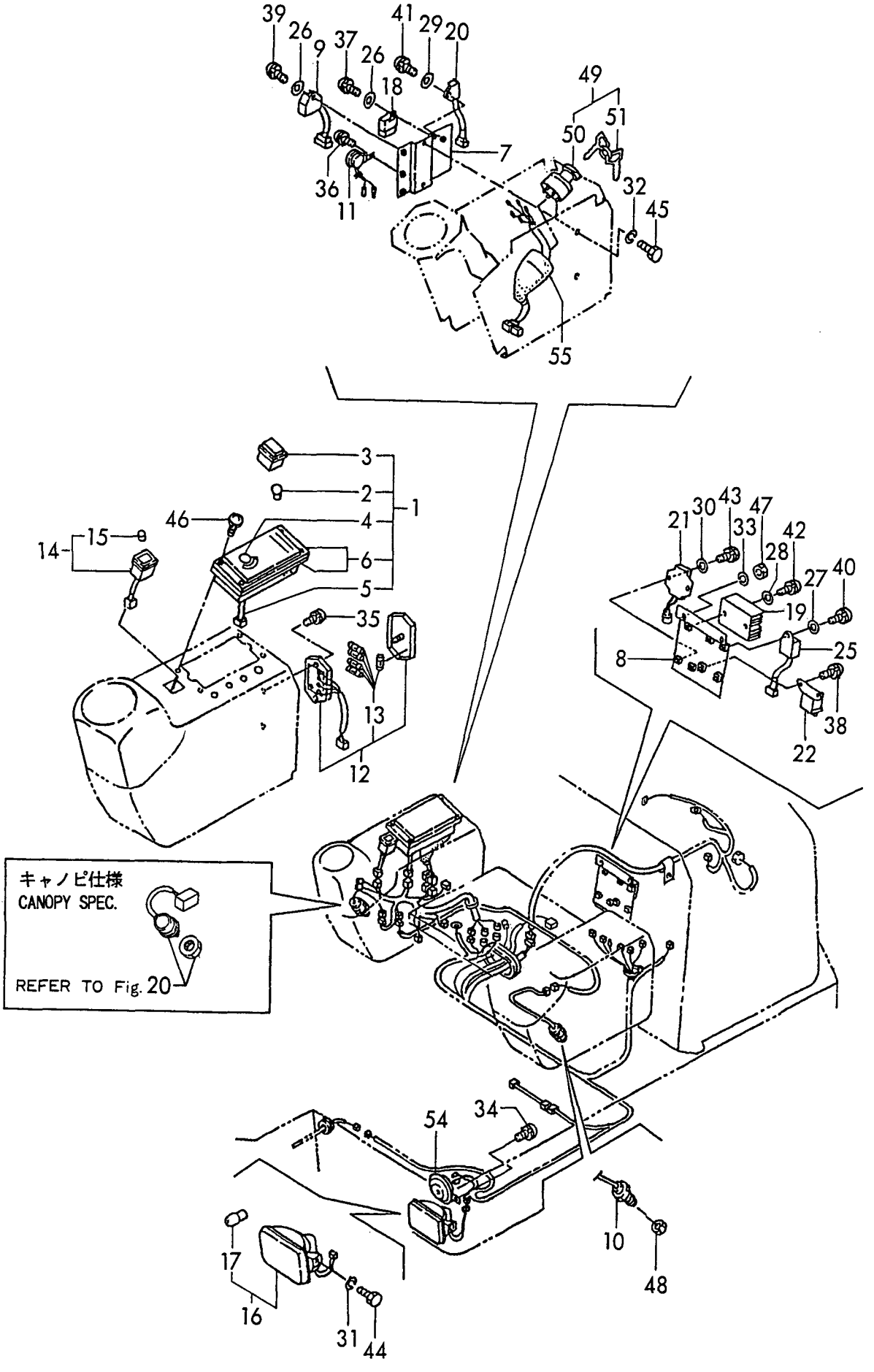

https://truckmanualshub.com/

```
1,1,,172165-16600,,"HARNESS E",1,,,,,,,,,,,,,,,,,
2,1,,172162-17330,,"SWITCH,WIPER",1,,,,,,,,,,,,,,,,,
3,1,,172162-17610,,"SWITCH,HEATER",1,,,,,,,,,,,,,,,,,
4,1,,933113-15000,,"CIGAR LIGHTER ASSY",1,,,,,,,,,,,,,,,,,,
```

Fig. 11 電装品(キャビン専用) ELECTRIC PART(CABIN)

https://truckmanualshub.com/

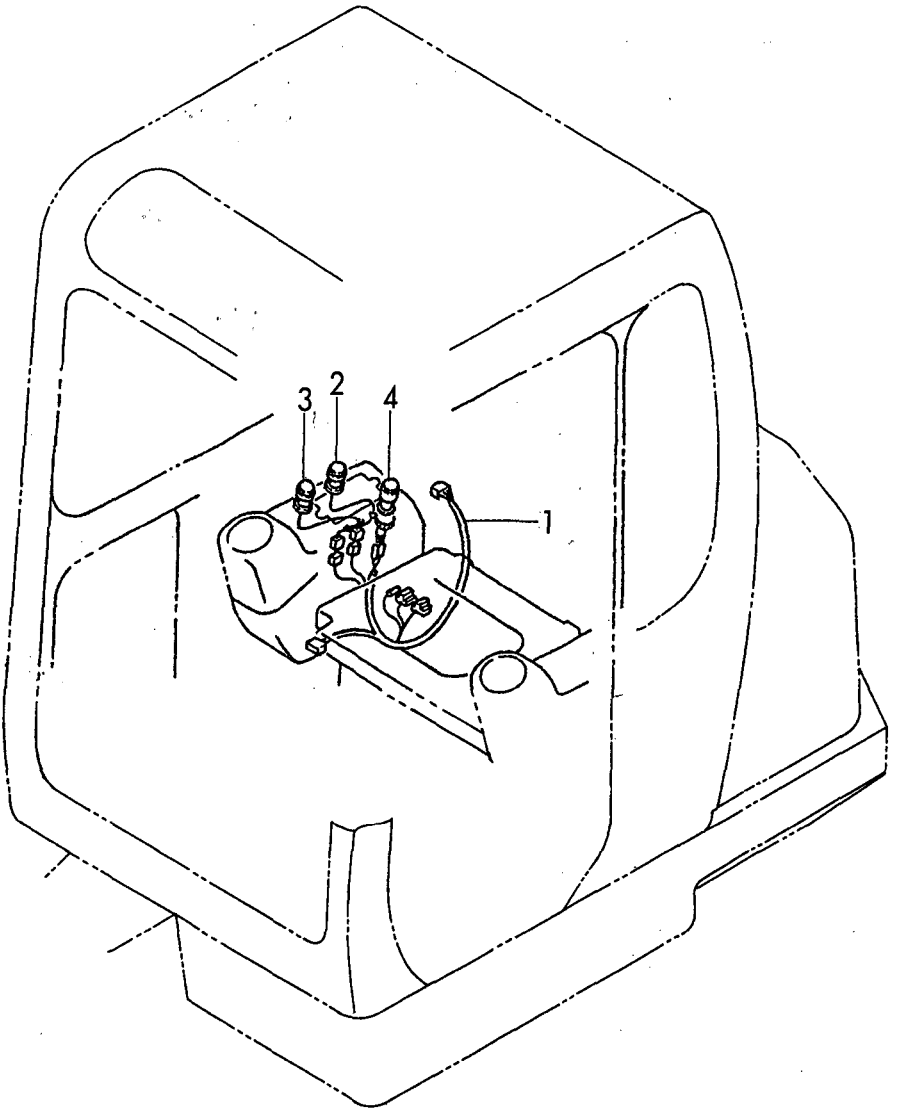

https://truckmanualshub.com/

```
1,1,,172161-17200,,"LAMP,WORK",1,1,,,,,,,,,,,,,,,,
2,2,,172161-17210,,"BULB 15V-60W",1,1,,,,,,,,,,,,,,,,,
3,1,,172180-17400,,"WIRE, LAMP",1,1,,,,,,,,,,,,,,,,,
4,1,,172159-17430,,BAND,5,5,,,,,,,,,,,,,,,,,
5,1,,172194-17450,,"COVER ASSY,LAMP",1,1,,,,,,,,,,,,,,,,,
6,1,,172159-75500,,"WASHER, SIDE CLUTCH",1,1,,,,,,,,,,,,,,,,,,
7,1,,22137-100000,,"WASHER 10,POLISHED",1,1,,,,,,,,,,,,,,,,,
8,1,,26013-120302,,"BOLT W/WASHER M12X30",1,1,,,,,,,,,,,,,,,,,,
```

Fig. 12 ワークランプ WORK LAMP

https://truckmanualshub.com/

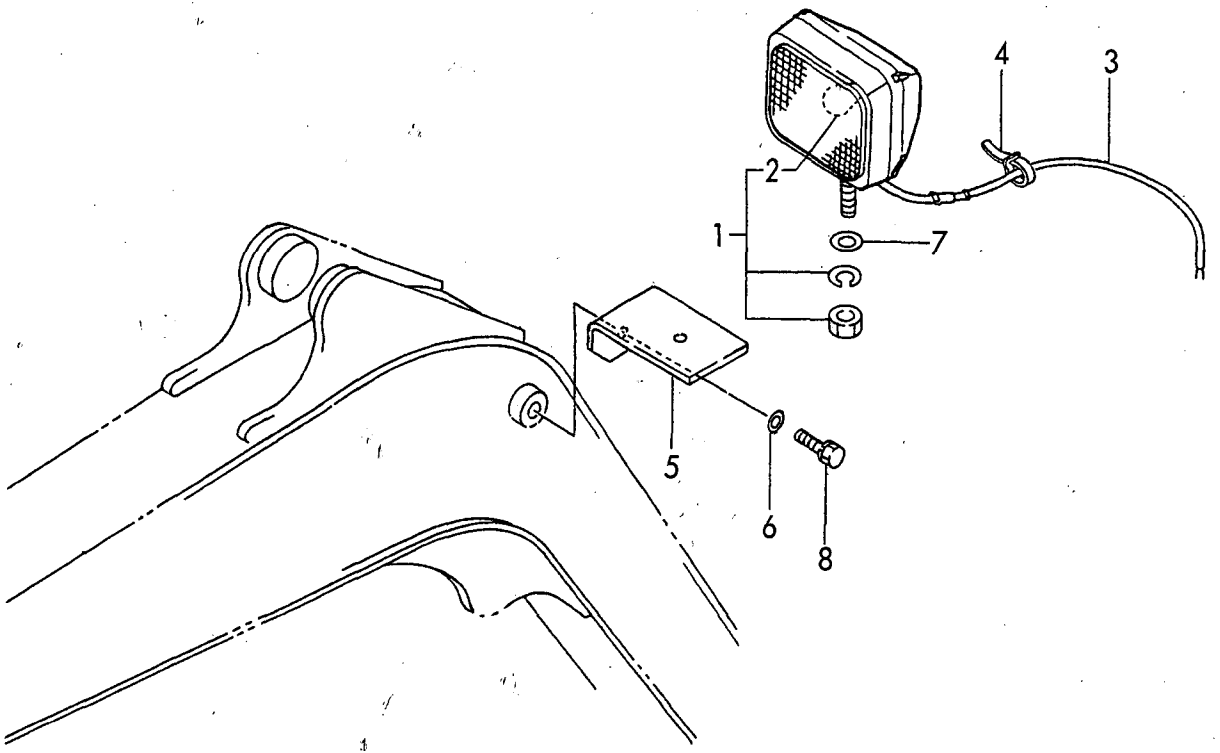

https://truckmanualshub.com/

```
1,1,,172161-13510,,"JOINT,HEATER",1,,,,,,,,,,,,,,,,,,
2,1,,172179-17600,,"JOINT 3/8",2,,,,,,,,,,,,,,,,,,
3,1,,172174-17620,,"CONNECTOR PT3/8-M16",1,,,,,,,,,,,,,,,,,,,,
4,1,,172124-17630,,"VALVE, MINIATURE",1,,,,,,,,,,,,,,,,,,
5,1,,124465-44950,,"GASKET 16",1,,,,,,,,,,,,,,,,,,
```

Fig. 13 ヒータ HEATER

https://truckmanualshub.com/

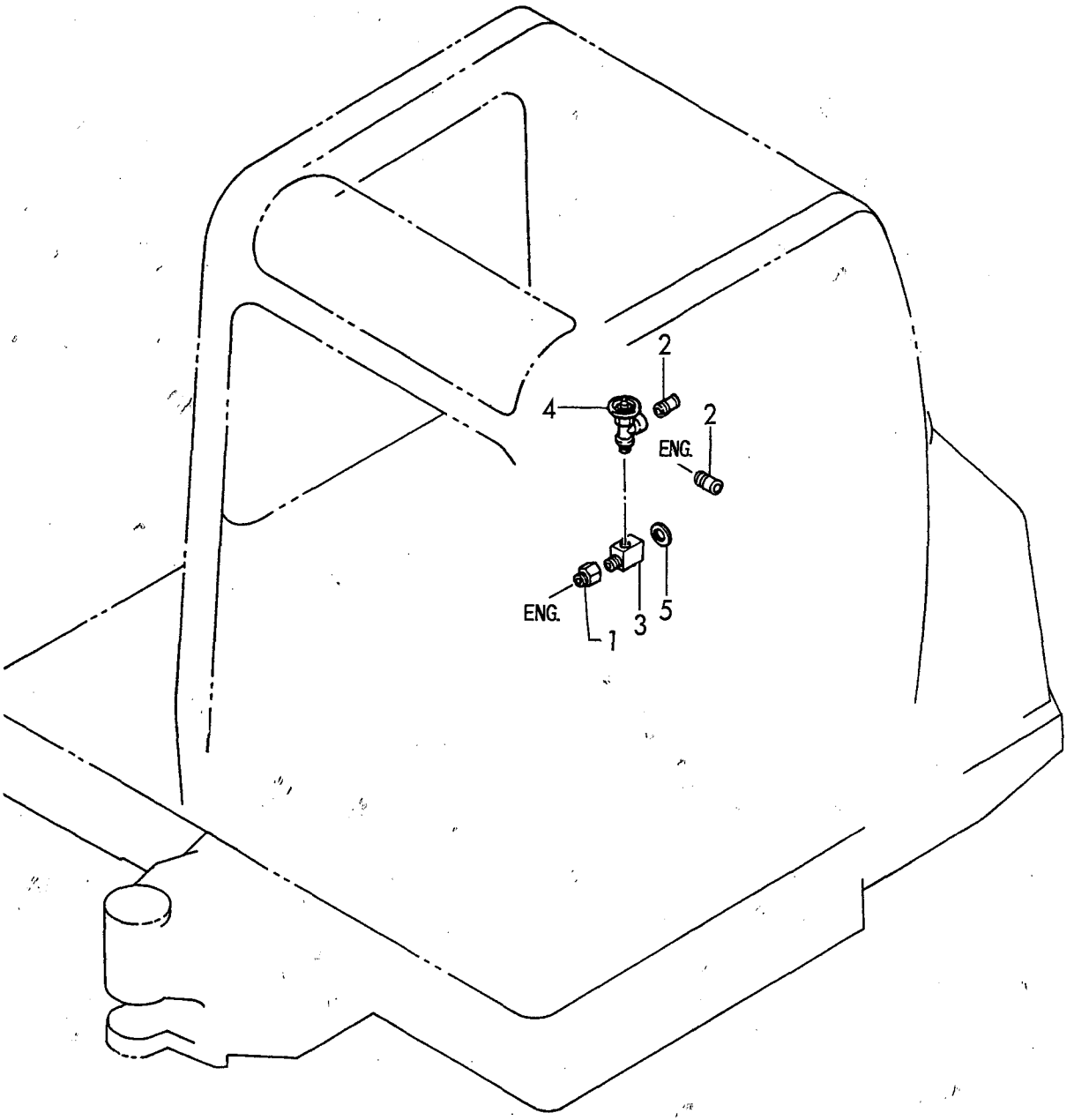

https://truckmanualshub.com/

```
1,1,,172137-29111,,"SPROCKET R",2,2,,,,,,,,,,,,,,,,
2,1,,26013-100252,,"BOLT W/WASHER M10X25",18,18,,,,,,,,,,,,,,,,,,
3,1,,172137-29120,,SPROCKET,2,2,,,,,,,,,,,,,,,,,,
4,1,,772137-37100,,"IDLER ASSY",2,2,,,,,,,,,,,,,,,,,,
5,2,,172137-99490,,"IDLER KIT, FRONT",2,2,,,,,,,,,,,,,,,,,,
6,3,,172137-37110,,"SHAFT, IDLER",2,2,,,,,,,,,,,,,,,,,,
7,3,,1A1030-48250,,"SEAL QLF30621218,OIL",4,4,,,,,,,,,,,,,,,,,,
8,3,,22242-000300,,"CIRCLIP   30",2,2,,,,,,,,,,,,,,,,,,
9,3,,22252-000620,,"CIRCLIP 62(H)",4,4,,,,,,,,,,,,,,,,,,
10,3,,24101-062064,,"BALL BEARING",4,4,,,,,,,,,,,,,,,,,,
11,3,,933168-13990,,"COLLAR(B),IDLE.SHAFT",2,2,,,,,,,,,,,,,,,,,,
12,2,,172137-37100,,"IDLER ASSY",2,2,,,,,,,,,,,,,,,,,,
13,2,,172137-37130,,"COVER (L), SEAL",2,2,,,,,,,,,,,,,,,,,,
14,2,,172137-37140,,"COVER (R), SEAL",2,2,,,,,,,,,,,,,,,,,,
15,1,,772137-37300,,"ROLLER ASSY, TRUCK",6,6,,,,,,,,,,,,,,,,,,
17,2,,172137-37330,,"SHAFT, TRACK ROLLER",6,6,,,,,,,,,,,,,,,,,,
18,2,,172137-37360,,SEAL,12,12,,,,,,,,,,,,,,,,,,
19,2,,22242-000250,,"CIRCLIP 25S",12,12,,,,,,,,,,,,,,,,,,
20,2,,22252-000470,,"CIRCLIP   47",12,12,,,,,,,,,,,,,,,,,,
21,2,,24101-060054,,"BALL BEARING",12,12,,,,,,,,,,,,,,,,,,
22,1,,172159-51900,,PLATE,4,4,,,,,,,,,,,,,,,,,,
23,1,,26013-100302,,"BOLT M10X 30",8,8,,,,,,,,,,,,,,,,,,
24,1,,172137-37710,,"SPRING, ADJUSTING",2,2,,,,,,,,,,,,,,,,,,
25,1,,172137-37801,,"TUBE, ADJUSTER",2,2,,,,,,,,,,,,,,,,,,
26,1,,172122-37843,,"VALVE ASSY, NIPPLE",2,2,,,,,,,,,,,,,,,,,,
27,2,,24315-000140,,"O-RING 1B P-14.0",2,2,,,,,,,,,,,,,,,,,,
28,2,,24761-020000,,"NIPPLE PT1/8,GREASE",2,2,,,,,,,,,,,,,,,,,,
29,1,,172137-37850,,"RING, BACK UP",2,2,,,,,,,,,,,,,,,,,,
30,1,,24315-000300,,"O-RING 1B P-30.0",2,2,,,,,,,,,,,,,,,,,,
31,1,,26013-100302,,"BOLT M10X 30",8,8,,,,,,,,,,,,,,,,,,
32,1,,933126-38600,,"SEAL, DUST",2,2,,,,,,,,,,,,,,,,,,
33,1,,933171-13691,,"PLUG PT1/8",2,2,,,,,,,,,,,,,,,,,,
```

Fig. 14 ローラ & アジャスト ROLLER & ADJUST

https://truckmanualshub.com/

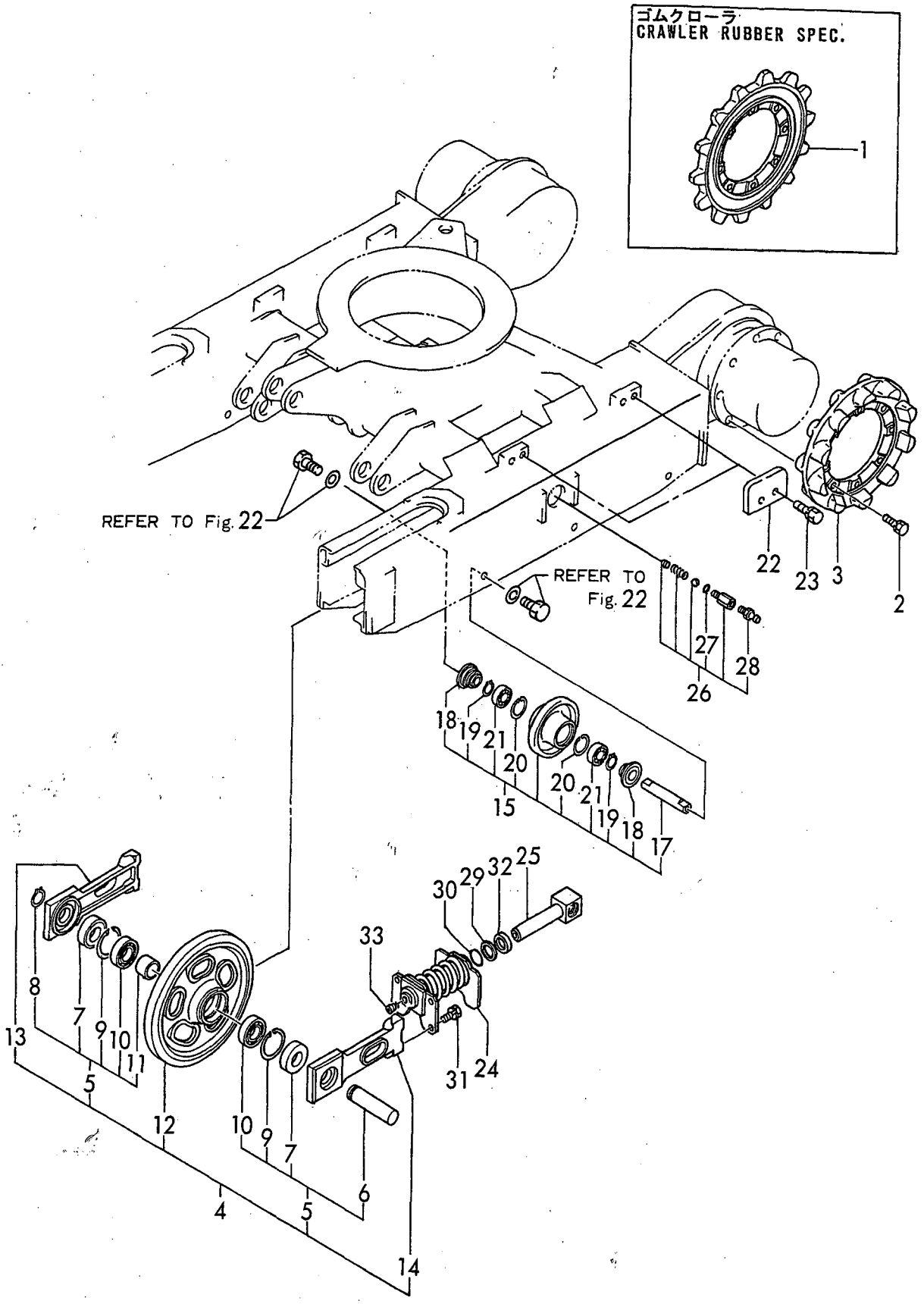

https://truckmanualshub.com/

```
1,1,,772137-38101,,"CRAWLER ASSY",2,2,,,,,,,,,,,,,,,,,,
2,2,,172137-38101,,"LINK ASSY, TRACK",2,2,,,,,,,,,,,,,,,,,,
3,3,,172137-38131,,"COLLAR, LINK",58,58,,,,,,,,,,,,,,,,,,
4,3,,172137-38161,,"PIN, TRACK",58,58,,,,,,,,,,,,,,,,,,
5,3,,22351-060020,,"SPRING PIN 6X20",58,58,,,,,,,,,,,,,,,,,,,
6,3,,172137-38111,,"SHOW PLATE",60,60,,,,,,,,,,,,,,,,,,
7,2,,172137-38131,,"COLLAR, LINK",2,2,,,,,,,,,,,,,,,,,,
8,2,,172137-38161,,"PIN, TRACK",2,2,,,,,,,,,,,,,,,,,,
9,2,,22351-060020,,"SPRING PIN 6X20",2,2,,,,,,,,,,,,,,,,,,
10,1,,172159-38600,,"CRAWLER ASSY,RUBBER",2,2,,,,,,,,,,,,,,,,,,,
```

Fig. 15 クローラ CRAWLER

https://truckmanualshub.com/

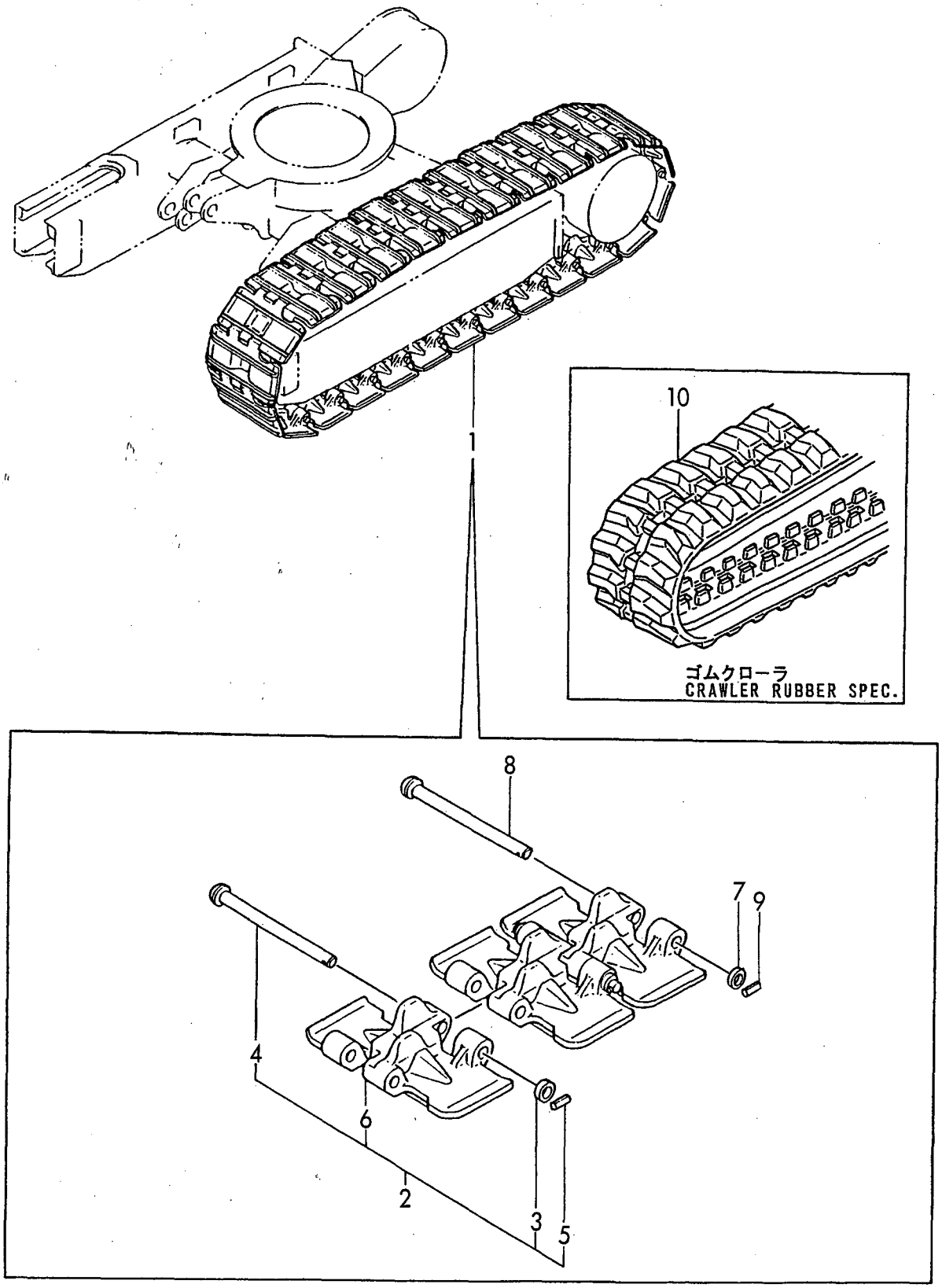

https://truckmanualshub.com/

```
1,1,,172146-41320,,GROMMET,1,1,,,,,,,,,,,,,,,,
2,1,,172194-44100,,"LEVER STAND R ASSY",1,1,,,,,,,,,,,,,,,,
3,2,,172161-41370,,"BUSH 2015",2,2,,,,,,,,,,,,,,,,
5,2,,24550-025150,,"BUSH 25X15",2,2,,,,,,,,,,,,,,,,
6,1,,172174-44110,,SUPPORT,1,1,,,,,,,,,,,,,,,,
7,1,,172194-44170,,"LEVER STAND L ASSY",1,1,,,,,,,,,,,,,,,,
8,2,,172161-41370,,"BUSH 2015",2,2,,,,,,,,,,,,,,,,
10,2,,24550-025150,,"BUSH 25X15",2,2,,,,,,,,,,,,,,,,
11,1,,172174-44210,,COVER,1,1,,,,,,,,,,,,,,,,
12,1,,172174-44710,,"GUIDE L, HOSE",1,1,,,,,,,,,,,,,,,,
13,1,,172174-44740,,"BRACKET, ACCEL",1,1,,,,,,,,,,,,,,,,
14,1,,172174-44820,,"SHIM 42X25.5X0.5",4,4,,,,,,,,,,,,,,,,
15,1,,172174-44850,,"BOLT  8X 16",5,5,,,,,,,,,,,,,,,,
16,1,,172174-44860,,WASHER,2,2,,,,,,,,,,,,,,,,
17,1,,172174-44870,,"GUIDE COMP.,HOSE",1,1,,,,,,,,,,,,,,,,
18,1,,172151-53430,,GROMMET,2,2,,,,,,,,,,,,,,,,
19,1,,172159-65930,,"WASHER 10",2,2,,,,,,,,,,,,,,,,
20,1,,22217-100000,,"SPRING WASHER 10",4,4,,,,,,,,,,,,,,,,
21,1,,22242-000250,,"CIRCLIP 25S",2,2,,,,,,,,,,,,,,,,
22,1,,24311-000340,,"O-RING 1A P-34.0",4,4,,,,,,,,,,,,,,,,
23,1,,24761-020000,,"NIPPLE PT1/8,GREASE",3,3,,,,,,,,,,,,,,,,
24,1,,26013-080202,,"BOLT W/WASHER M8X20",4,4,,,,,,,,,,,,,,,,
25,1,,26013-100202,,"BOLT W/WASHER M10X20",2,2,,,,,,,,,,,,,,,,
26,1,,26116-100202,,"BOLT M10X 20 PLATED",4,4,,,,,,,,,,,,,,,,
27,1,,26116-100504,,"BOLT M10X 50 PLATED",1,1,,,,,,,,,,,,,,,,
28,1,,26116-100902,,"BOLT M10X 90 PLATED",2,2,,,,,,,,,,,,,,,,
29,1,,26716-100002,,"NUT M10",1,1,,,,,,,,,,,,,,,,
30,1,,194630-62360,,GROMMET,4,4,,,,,,,,,,,,,,,,
```

Fig. 16 操縦装置(レバー & スタンド) CONTROL EQUIPMENT(LEVER & STAND)

https://truckmanualshub.com/

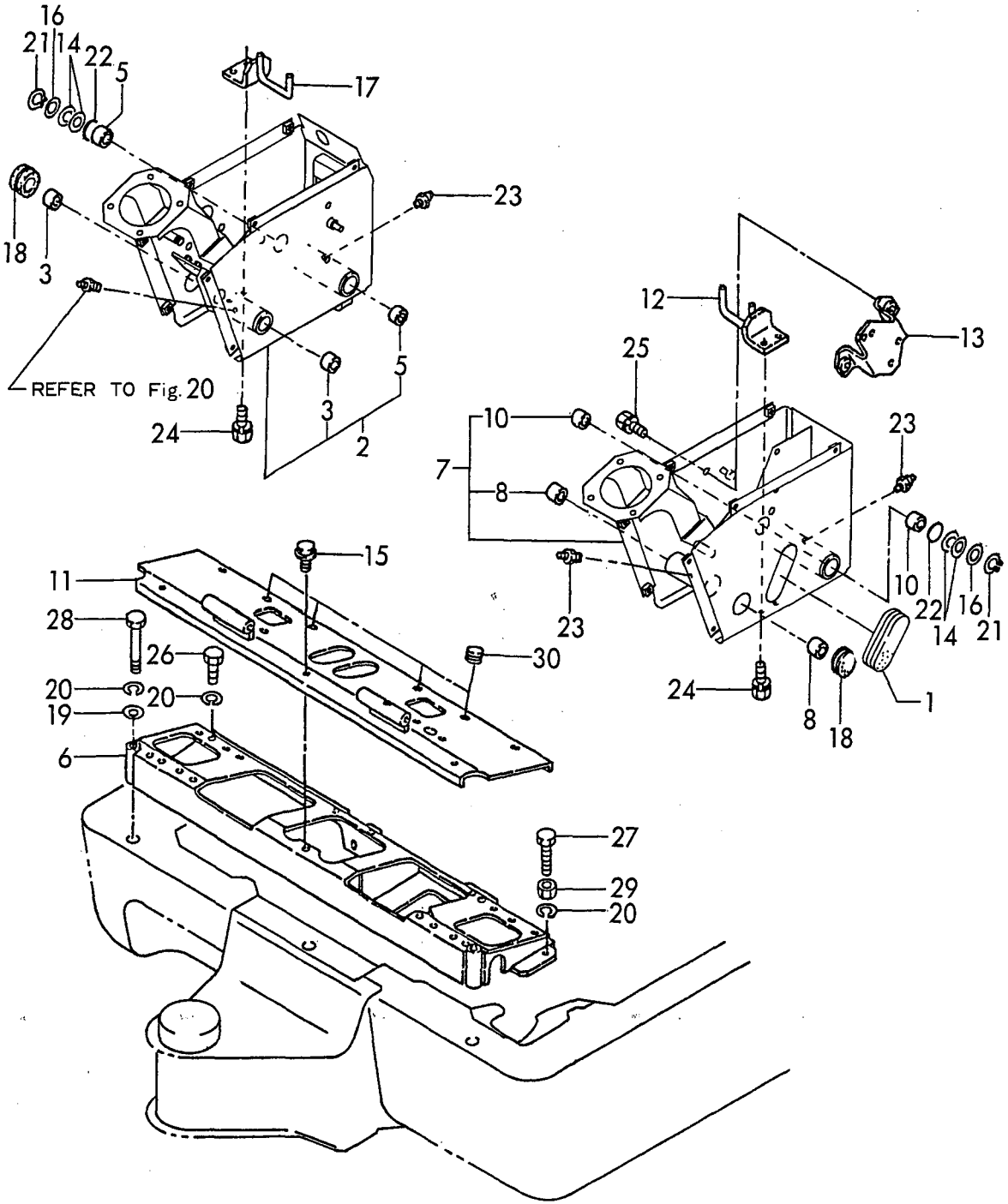

https://truckmanualshub.com/

```
1,1,,172141-41340,,BOOTS,2,2,,,,,,,,,,,,,,,,,
2,1,,172194-45100,,"LEVER L ASSY,TRACK",1,1,,,,,,,,,,,,,,,,,
3,2,,172161-41370,,"BUSH 2015",2,2,,,,,,,,,,,,,,,,,
5,1,,172194-45130,,"LEVER R ASSY,TRACK",1,1,,,,,,,,,,,,,,,,,
6,2,,172161-41370,,"BUSH 2015",2,2,,,,,,,,,,,,,,,,,
8,1,,172164-45951,,"GRIP L, DRIV.",1,1,,,,,,,,,,,,,,,,,
9,1,,172164-45961,,"GRIP R, DRIV.",1,1,,,,,,,,,,,,,,,,,
10,1,,172161-46200,,"O-RING 27X5.7",3,3,,,,,,,,,,,,,,,,,
11,1,,24761-020000,,"NIPPLE PT1/8,GREASE",2,2,,,,,,,,,,,,,,,,,
12,1,,26116-100504,,"BOLT M10X 50 PLATED",4,4,,,,,,,,,,,,,,,,,
13,1,,26716-100002,,"NUT M10",4,4,,,,,,,,,,,,,,,,,
14,1,,26756-100002,,"LOCK NUT M10 PLATED",2,2,,,,,,,,,,,,,,,,,
15,1,,172179-45200,,"SHAFT, TRACK",1,1,,,,,,,,,,,,,,,,,
16,1,,172122-45720,,"ROD-END 14",2,2,,,,,,,,,,,,,,,,,
17,1,,22137-140000,,"WASHER 14,POLISHED",2,2,,,,,,,,,,,,,,,,,
18,1,,22157-140000,,"WASHER 14",2,2,,,,,,,,,,,,,,,,,
19,1,,22217-140000,,"SPRING WASHER 14",2,2,,,,,,,,,,,,,,,,,
20,1,,26716-140002,,"NUT M14",2,2,,,,,,,,,,,,,,,,,
21,1,,26756-140002,,"LOCK NUT M14 PLATED",2,2,,,,,,,,,,,,,,,,,
22,1,,172174-46100,,"PEDAL L ASSY",1,1,,,,,,,,,,,,,,,,,
23,1,,172174-46150,,"PEDAL R COMP",1,1,,,,,,,,,,,,,,,,,
24,1,,26013-060302,,"BOLT M 6X 30",4,4,,,,,,,,,,,,,,,,,
25,1,,172159-42910,,"PIN 4.75X14",2,2,,,,,,,,,,,,,,,,,
26,1,,172179-45660,,"ROD 190",2,2,,,,,,,,,,,,,,,,,
27,1,,172122-46590,,"ELBALL 8",2,2,,,,,,,,,,,,,,,,,
28,1,,22137-080000,,"WASHER 8, POLISHED",2,2,,,,,,,,,,,,,,,,,
29,1,,22417-160160,,"COTTER PIN 1.6X16",2,2,,,,,,,,,,,,,,,,,
30,1,,26051-080002,,"NUT M 8",4,4,,,,,,,,,,,,,,,,,
```

Fig. 17 操縦装置(走行) CONTROL EQUIPMENT(DRIVE)

https://truckmanualshub.com/

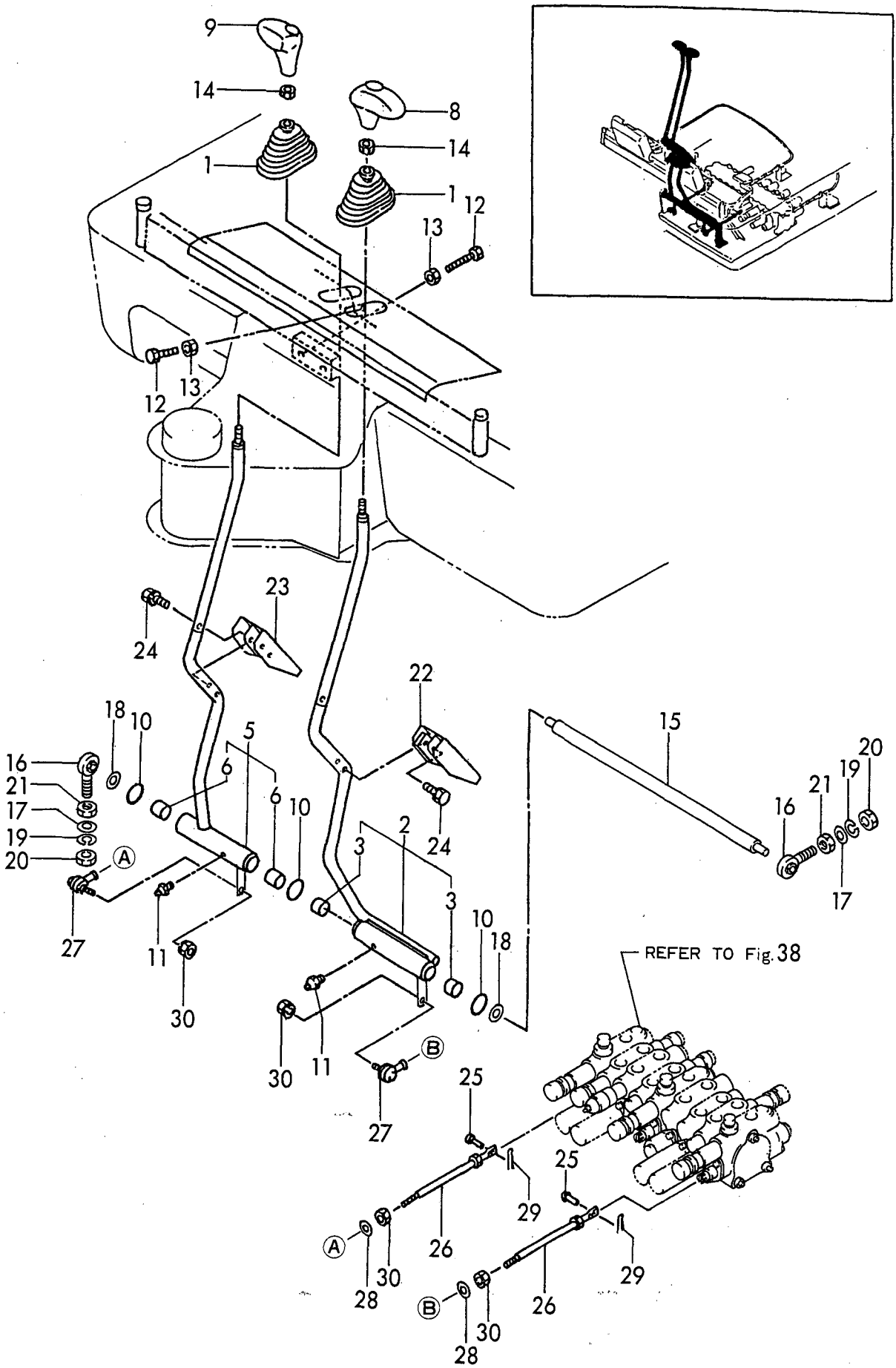

https://truckmanualshub.com/

```
1,1,,172159-41860,,"WASHER 10 36 4.5",1,1,,,,,,,,,,,,,,,,
2,1,,172194-45210,,"SHAFT ASSY,SWING",1,1,,,,,,,,,,,,,,,,
3,1,,172179-45230,,"LINK W/BUSH, SWING",1,1,,,,,,,,,,,,,,,,,
4,2,,172161-41370,,"BUSH 2015",2,2,,,,,,,,,,,,,,,,
6,1,,172174-45410,,"LINK, PEDAL",1,1,,,,,,,,,,,,,,,,,
7,2,,172161-41360,,"BUSH 1415",2,2,,,,,,,,,,,,,,,,
9,1,,172174-45470,,"BRACKET, PEDAL",1,1,,,,,,,,,,,,,,,,,
10,1,,172174-45510,,"PIN 14X105",1,1,,,,,,,,,,,,,,,,
11,1,,172161-46200,,"O-RING 27X5.7",2,2,,,,,,,,,,,,,,,,,
12,1,,22217-100000,,"SPRING WASHER 10",1,1,,,,,,,,,,,,,,,,,
13,1,,22351-040032,,"SPRING PIN 4X32",1,1,,,,,,,,,,,,,,,,
14,1,,24311-000210,,"O-RING 1A P-21.0",2,2,,,,,,,,,,,,,,,,
15,1,,24761-020000,,"NIPPLE PT1/8,GREASE",1,1,,,,,,,,,,,,,,,,,
16,1,,24761-040000,,"NIPPLE B,GREASE",1,1,,,,,,,,,,,,,,,,
17,1,,26013-100202,,"BOLT W/WASHER M10X20",2,2,,,,,,,,,,,,,,,,,
18,1,,26013-100252,,"BOLT W/WASHER M10X25",2,2,,,,,,,,,,,,,,,,,
19,1,,26116-100202,,"BOLT M10X 20 PLATED",1,1,,,,,,,,,,,,,,,,,
20,1,,172157-45990,,"BOOTS, PEDAL",1,1,,,,,,,,,,,,,,,,
21,1,,172174-46230,,"SHAFT, SWING",2,2,,,,,,,,,,,,,,,,
22,1,,172174-46260,,"COVER, PEDAL",2,2,,,,,,,,,,,,,,,,
23,1,,172174-46280,,"PEDAL COMP.,SWING",1,1,,,,,,,,,,,,,,,,,
24,1,,172174-46350,,BOLT,2,2,,,,,,,,,,,,,,,,
25,1,,172174-46360,,"SPRING  8",4,4,,,,,,,,,,,,,,,,
26,1,,22137-080000,,"WASHER 8, POLISHED",2,2,,,,,,,,,,,,,,,,
27,1,,22351-040020,,"SPRING PIN 4X20",2,2,,,,,,,,,,,,,,,,
28,1,,26116-080254,,"BOLT M 8X 25 PLATED",2,2,,,,,,,,,,,,,,,,
29,1,,26716-080002,,"NUT M 8",2,2,,,,,,,,,,,,,,,,
30,1,,26756-080002,,"LOCK NUT M 8 PLATED",4,4,,,,,,,,,,,,,,,,
31,1,,172159-42910,,"PIN 4.75X14",1,1,,,,,,,,,,,,,,,,
32,1,,172179-45620,,"ROD 365",1,1,,,,,,,,,,,,,,,,
33,1,,172179-45700,,ROD,1,1,,,,,,,,,,,,,,,,
34,1,,172122-46590,,"ELBALL 8",3,3,,,,,,,,,,,,,,,,
35,1,,22137-080000,,"WASHER 8, POLISHED",3,3,,,,,,,,,,,,,,,,
36,1,,22417-160160,,"COTTER PIN 1.6X16",1,1,,,,,,,,,,,,,,,,
37,1,,26051-080002,,"NUT M 8",6,6,,,,,,,,,,,,,,,,
```

Fig. 18 操縦装置(スイング)
CONTROL EQUIPMENT(SWING)

https://truckmanualshub.com/

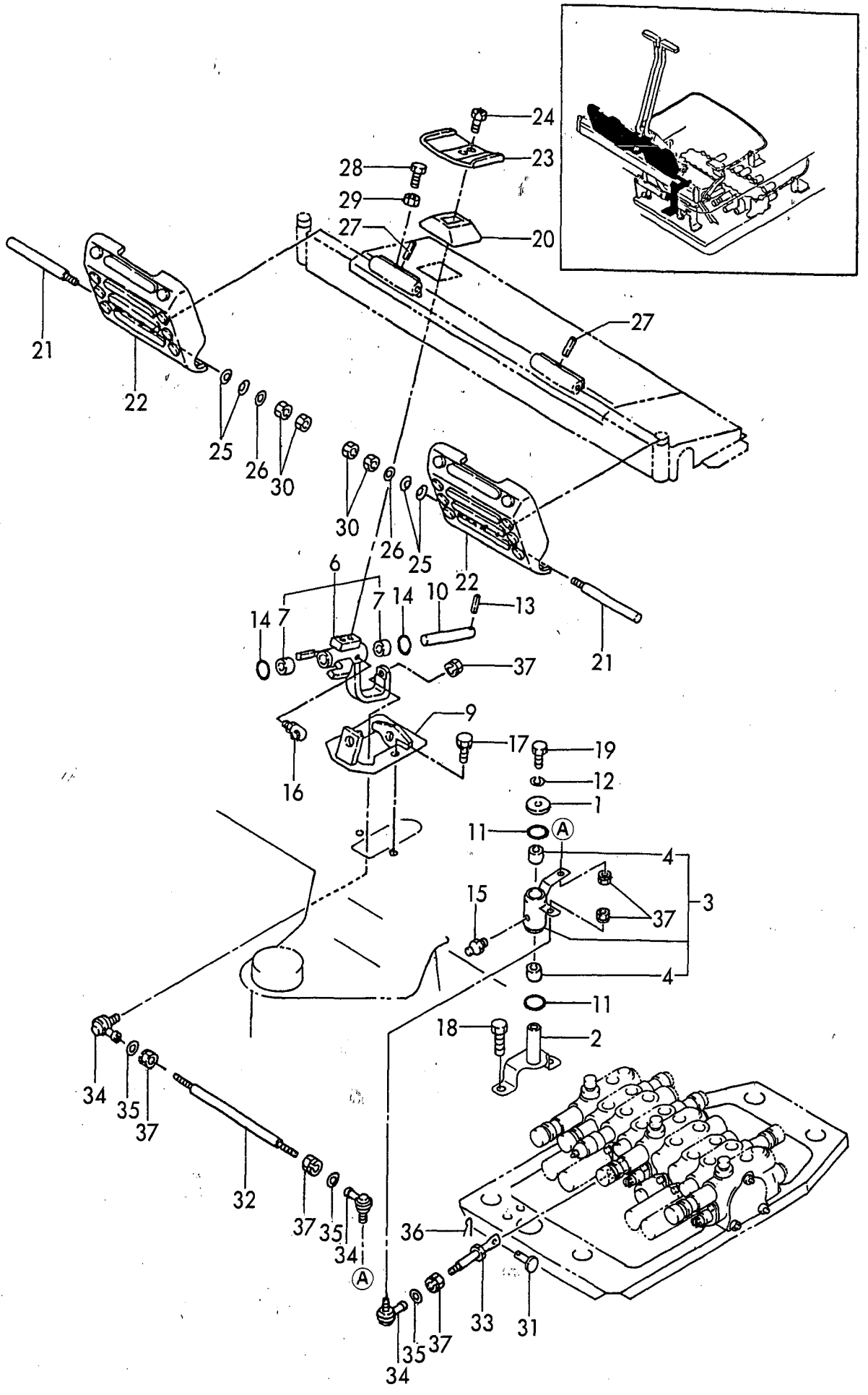

https://truckmanualshub.com/

```
1,1,,172179-45271,,"LEVER ASSY, BLADE S",1,1,,,,,,,,,,,,,,,,,
2,1,,172164-45970,,"GRIP, BLADE",1,1,,,,,,,,,,,,,,,,,
3,1,,22351-050032,,"SPRING PIN 5X32",1,1,,,,,,,,,,,,,,,,,
4,1,,172174-45300,,"LINK, BLADE",1,1,,,,,,,,,,,,,,,,,
5,1,,172179-45300,,"BOLT M10X 20 PLATED",3,3,,,,,,,,,,,,,,,,,
6,1,,172174-45330,,"BRACKET ASY",1,1,,,,,,,,,,,,,,,,,
7,2,,172161-41360,,"BUSH 1415",2,2,,,,,,,,,,,,,,,,,
9,1,,24311-000210,,"O-RING 1A P-21.0",2,2,,,,,,,,,,,,,,,,,
10,1,,26116-100354,,"BOLT M10X 35 PLATED",2,2,,,,,,,,,,,,,,,,,,
11,1,,26716-100002,,"NUT M10",2,2,,,,,,,,,,,,,,,,,
12,1,,172159-42910,,"PIN 4.75X14",1,1,,,,,,,,,,,,,,,,,
13,1,,172159-42940,,"JOINT, CABLE",1,1,,,,,,,,,,,,,,,,,
14,1,,172194-45500,,"CABLE,BLADE",1,1,,,,,,,,,,,,,,,,,
15,1,,172179-45600,,"BRACKET, BLADE",1,1,,,,,,,,,,,,,,,,,
16,1,,172122-46590,,"ELBALL 8",1,1,,,,,,,,,,,,,,,,,
17,1,,172174-47110,,"ROD,SPOOL",1,1,,,,,,,,,,,,,,,,,
18,1,,172174-47160,,"WASHER 20X9X3.2",1,1,,,,,,,,,,,,,,,,,
19,1,,22417-160160,,"COTTER PIN 1.6X16",1,1,,,,,,,,,,,,,,,,,
20,1,,26013-100202,,"BOLT W/WASHER M10X20",2,2,,,,,,,,,,,,,,,,,,
21,1,,26051-080002,,"NUT M 8",1,1,,,,,,,,,,,,,,,,,
```

Fig. 19 操縦装置(ブレード) CONTROL EQUIPMENT(BLADE)

https://truckmanualshub.com/

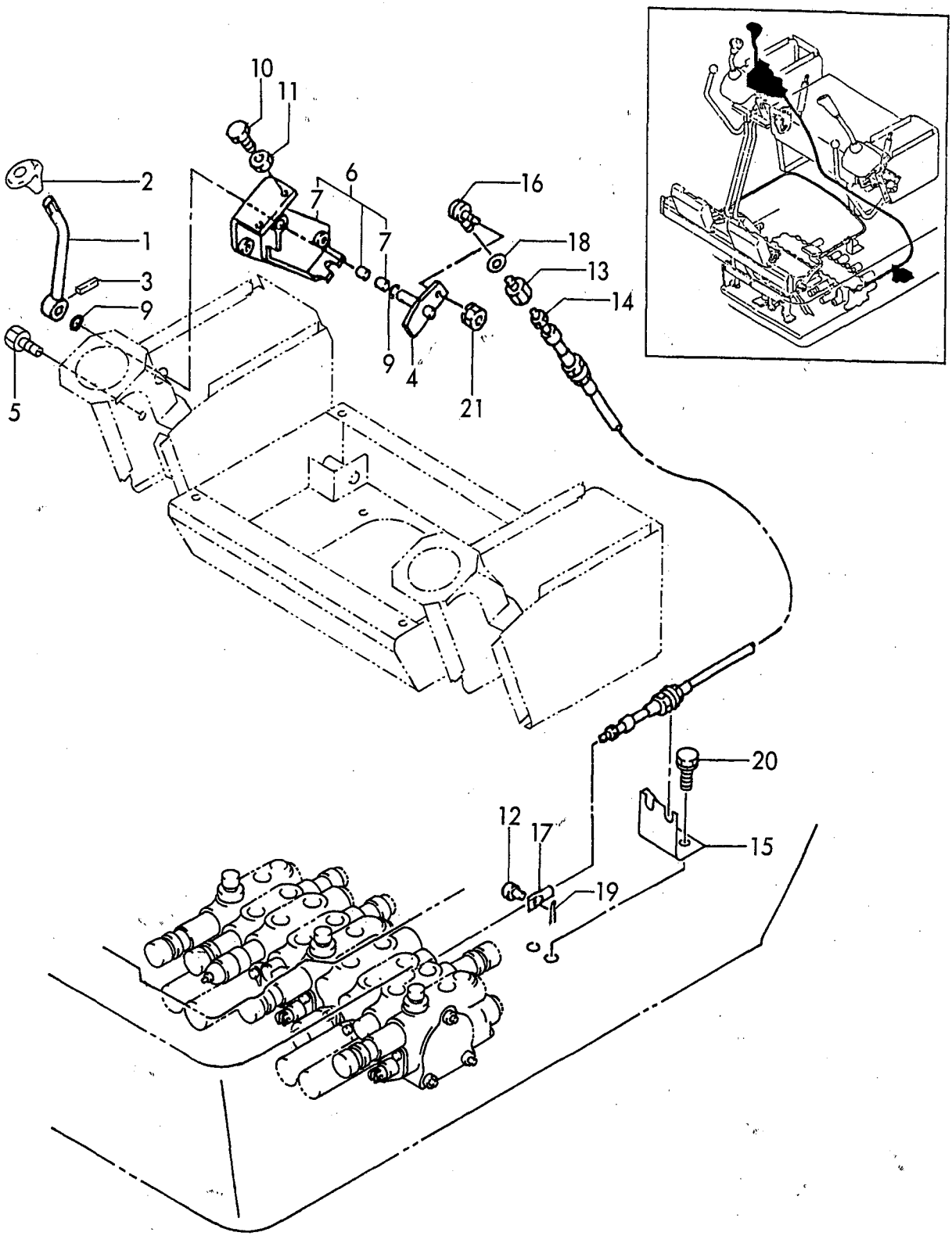

https://truckmanualshub.com/

```
1,1,,1D4070-23580,,"GRIP,RED ROUND",1,1,,,,,,,,,,,,,,,,
2,1,,172174-44630,,"GUIDE L COMP.,LOCK",1,1,,,,,,,,,,,,,,,,
3,1,,172174-44660,,"RUBBER L CMP,EP LOCK",1,1,,,,,,,,,,,,,,,,
4,1,,172174-45711,,PLATE,1,1,,,,,,,,,,,,,,,,
5,1,,172174-45720,,"ARM, LOCK",1,1,,,,,,,,,,,,,,,,
6,1,,172174-45760,,BUSH,1,1,,,,,,,,,,,,,,,,
7,1,,172174-45840,,"SPRING,ROTARY RETURN",1,1,,,,,,,,,,,,,,,,
8,1,,172161-46200,,"O-RING 27X5.7",2,2,,,,,,,,,,,,,,,,
9,1,,172194-47800,,"GAS SPRING GS068",1,1,,,,,,,,,,,,,,,,
10,1,,22137-080000,,"WASHER 8, POLISHED",2,2,,,,,,,,,,,,,,,,
11,1,,22137-080000,,"WASHER 8, POLISHED",2,2,,,,,,,,,,,,,,,,
12,1,,22272-000070,,"CIRCLIP E- 7",1,1,,,,,,,,,,,,,,,,
13,1,,22351-035040,,"SPRING PIN 3.5X40",1,1,,,,,,,,,,,,,,,,
14,1,,22351-060040,,"SPRING PIN 6X40",1,1,,,,,,,,,,,,,,,,
15,1,,22417-200200,,"COTTER PIN 2.0X20",2,2,,,,,,,,,,,,,,,,
16,1,,26013-080202,,"BOLT W/WASHER M8X20",2,2,,,,,,,,,,,,,,,,
17,1,,26013-100202,,"BOLT W/WASHER M10X20",2,2,,,,,,,,,,,,,,,,
18,1,,172194-44140,,BAR,1,,,,,,,,,,,,,,,,
19,1,,22137-080000,,"WASHER 8, POLISHED",2,,,,,,,,,,,,,,,,
20,1,,22417-200200,,"COTTER PIN 2.0X20",2,,,,,,,,,,,,,,,,
21,1,,172164-17140,,SWITCH,,1,,,,,,,,,,,,,,,,
22,1,,1D4070-23580,,"GRIP,RED ROUND",,1,,,,,,,,,,,,,,,,
23,1,,172174-45711,,PLATE,,1,,,,,,,,,,,,,,,,
24,1,,172174-45720,,"ARM, LOCK",,1,,,,,,,,,,,,,,,,
25,1,,172174-45760,,BUSH,,1,,,,,,,,,,,,,,,,
26,1,,172174-45770,,"GUIDE R ASSY, LOCK",,1,,,,,,,,,,,,,,,,
27,1,,172174-45800,,"LEVER R CMP.,EP LOCK",,1,,,,,,,,,,,,,,,,
28,1,,172174-45840,,"SPRING,ROTARY RETURN",,1,,,,,,,,,,,,,,,,
29,1,,172161-46200,,"O-RING 27X5.7",,2,,,,,,,,,,,,,,,,
30,1,,172165-47801,,"SPRING,GAS",,1,,,,,,,,,,,,,,,,
31,1,,22137-080000,,"WASHER 8, POLISHED",,2,,,,,,,,,,,,,,,,
32,1,,22137-080000,,"WASHER 8, POLISHED",,2,,,,,,,,,,,,,,,,
33,1,,22272-000070,,"CIRCLIP E- 7",,1,,,,,,,,,,,,,,,,
34,1,,22351-035040,,"SPRING PIN 3.5X40",,1,,,,,,,,,,,,,,,,
35,1,,22351-060040,,"SPRING PIN 6X40",,1,,,,,,,,,,,,,,,,
36,1,,22417-200200,,"COTTER PIN 2.0X20",,2,,,,,,,,,,,,,,,,
37,1,,24761-020000,,"NIPPLE PT1/8,GREASE",,1,,,,,,,,,,,,,,,,
38,1,,26013-080202,,"BOLT W/WASHER M8X20",,2,,,,,,,,,,,,,,,,
39,1,,26013-100202,,"BOLT W/WASHER M10X20",,2,,,,,,,,,,,,,,,,
40,1,,172194-45880,,"BRACKET ASSY",1,1,,,,,,,,,,,,,,,,
41,1,,26013-100202,,"BOLT W/WASHER M10X20",2,2,,,,,,,,,,,,,,,,
```

Fig. 20 操縦装置(カットオフレバー & ローハイペダル) CONTROL EQUIPMENT(CUT OFF LEVER & LOW-HIGH PEDAL)

https://truckmanualshub.com/

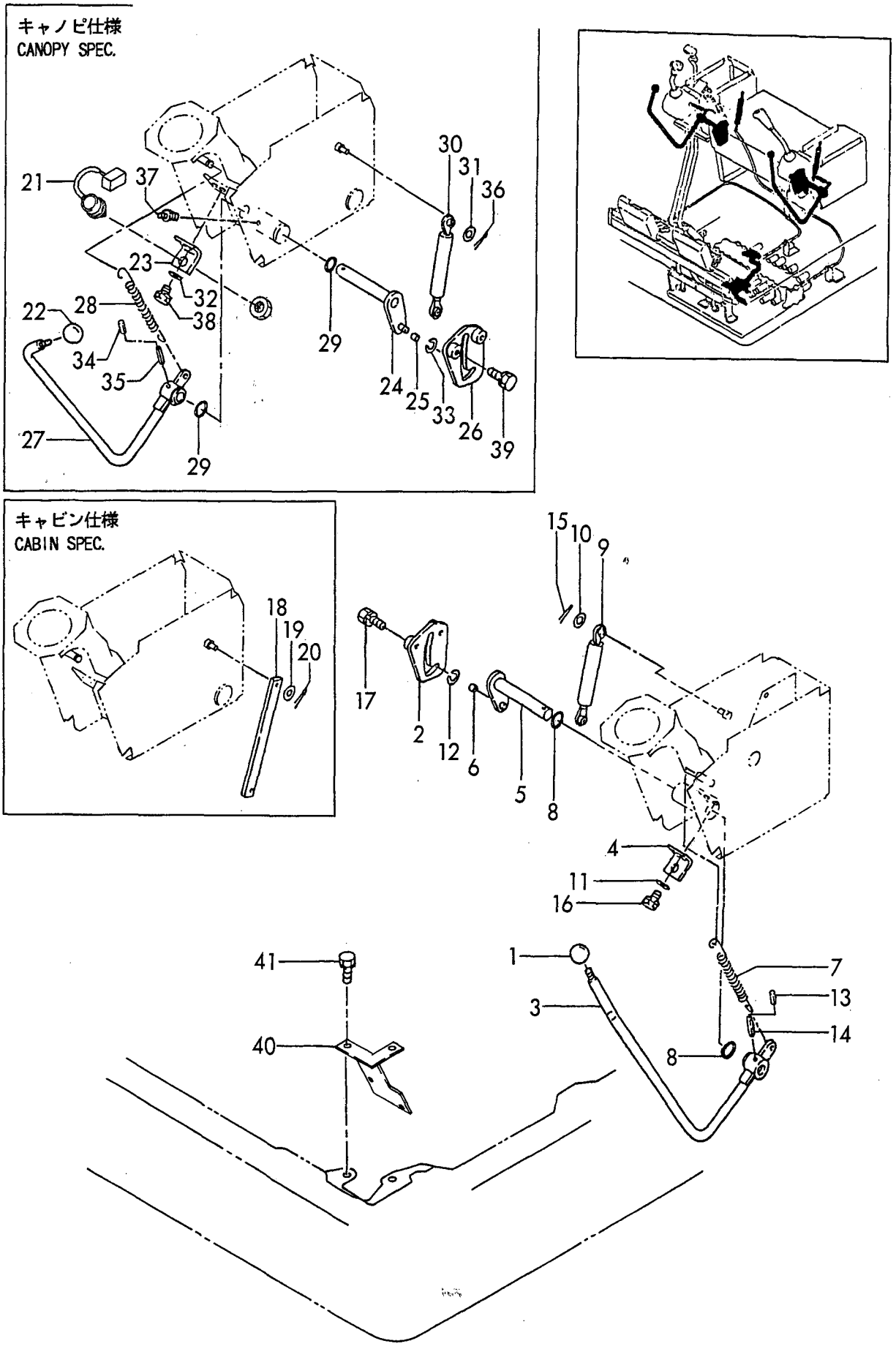

https://truckmanualshub.com/

```
1,1,,172159-42910,,"PIN 4.75X14",1,1,,,,,,,,,,,,,,,,
2,1,,172159-42940,,"JOINT, CABLE",1,1,,,,,,,,,,,,,,,,
3,1,,172194-45260,,"CABLE 2300",1,1,,,,,,,,,,,,,,,,
4,1,,172174-45510,,"PIN 14X105",1,1,,,,,,,,,,,,,,,,
5,1,,172157-45990,,"BOOTS, PEDAL",1,1,,,,,,,,,,,,,,,,
6,1,,172179-46100,,BRACKET,1,1,,,,,,,,,,,,,,,,
7,1,,172174-46280,,"PEDAL COMP.,SWING",1,1,,,,,,,,,,,,,,,,
8,1,,172174-46350,,BOLT,2,2,,,,,,,,,,,,,,,,
9,1,,172122-46590,,"ELBALL 8",1,1,,,,,,,,,,,,,,,,
10,1,,172174-47110,,"ROD,SPOOL",1,1,,,,,,,,,,,,,,,,
11,1,,172174-47160,,"WASHER 20X9X3.2",1,1,,,,,,,,,,,,,,,,
12,1,,172174-47200,,"SPRING, LOCK",1,1,,,,,,,,,,,,,,,,
13,1,,172174-47260,,"BRACKET, PEDAL",1,1,,,,,,,,,,,,,,,,
14,1,,172174-47310,,"LOCK CMP",1,1,,,,,,,,,,,,,,,,
15,1,,172174-47340,,BOLT,1,1,,,,,,,,,,,,,,,,
16,1,,172174-47350,,SHIM,5,5,,,,,,,,,,,,,,,,
17,1,,172174-47360,,"LINK, PEDAL",1,1,,,,,,,,,,,,,,,,
18,2,,172161-41360,,"BUSH 1415",2,2,,,,,,,,,,,,,,,,
20,1,,22137-080000,,"WASHER 8, POLISHED",2,2,,,,,,,,,,,,,,,,
21,1,,22351-040032,,"SPRING PIN 4X32",1,1,,,,,,,,,,,,,,,,
22,1,,22417-160160,,"COTTER PIN 1.6X16",1,1,,,,,,,,,,,,,,,,
23,1,,24311-000210,,"O-RING 1A P-21.0",2,2,,,,,,,,,,,,,,,,
24,1,,24761-050000,,"NIPPLE C,GREASE",1,1,,,,,,,,,,,,,,,,
25,1,,26013-100202,,"BOLT W/WASHER M10X20",2,2,,,,,,,,,,,,,,,,
26,1,,26051-080002,,"NUT M 8",1,1,,,,,,,,,,,,,,,,
27,1,,26116-080304,,"BOLT  8* 30",2,2,,,,,,,,,,,,,,,,
28,1,,26716-080002,,"NUT M 8",2,2,,,,,,,,,,,,,,,,
29,1,,26756-080002,,"LOCK NUT M 8 PLATED",2,2,,,,,,,,,,,,,,,,
30,1,,26013-100202,,"BOLT W/WASHER M10X20",2,2,,,,,,,,,,,,,,,,
```

Fig. 21 操縦装置(PTO) CONTROL EQUIPMENT(P.T.O.)

https://truckmanualshub.com/

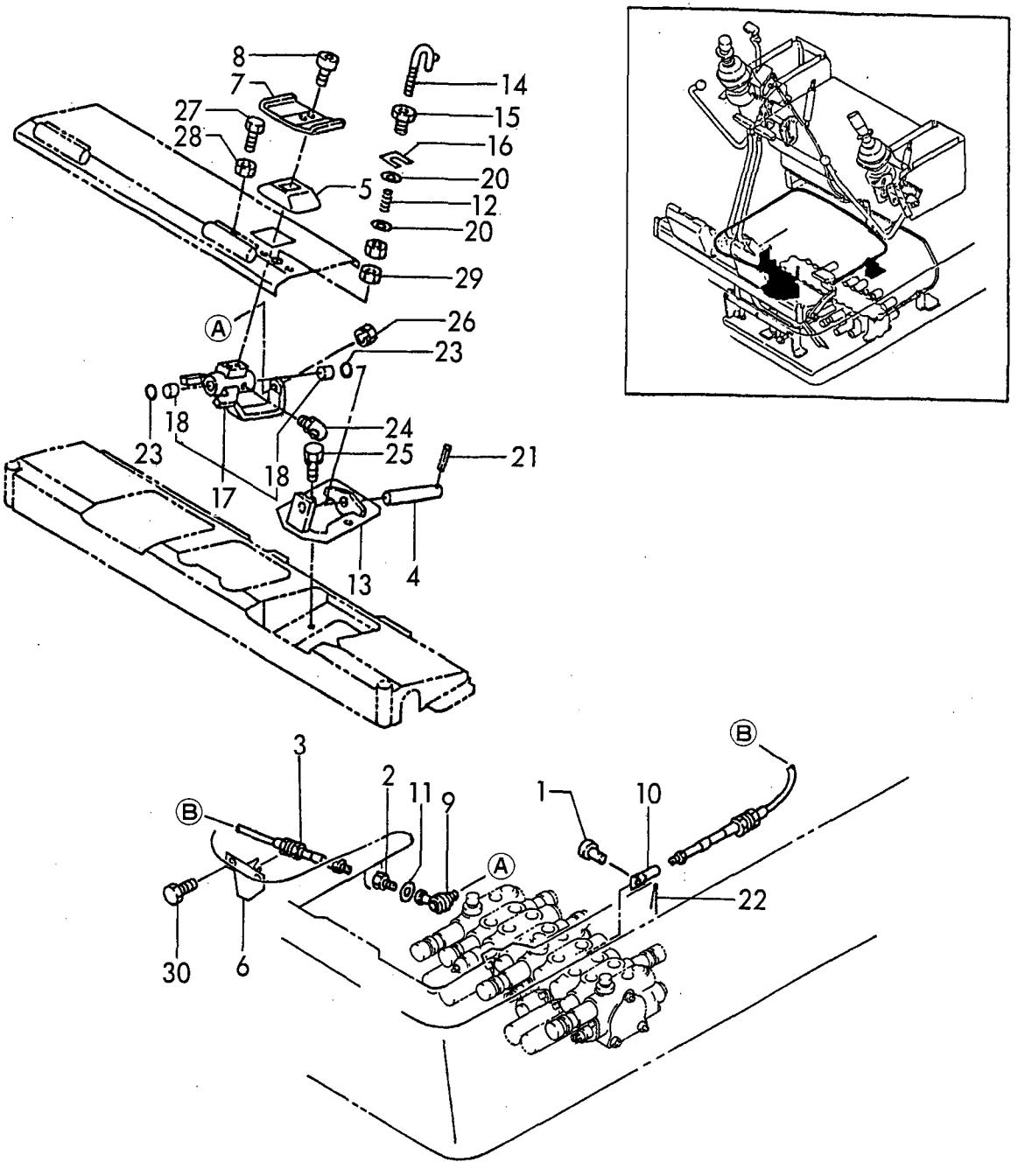

https://truckmanualshub.com/

```
1,1,,172194-50100,,"FRAME ASSY,LOWER",1,1,,,,,,,,,,,,,,,,
2,1,,172141-50890,,GROMMET,2,2,,,,,,,,,,,,,,,,
3,1,,22217-120000,,"SPRING WASHER",12,12,,,,,,,,,,,,,,,,
4,1,,26116-120252,,"BOLT M12X 25 PLATED",12,12,,,,,,,,,,,,,,,,
5,1,,172161-50890,,"WASHER 12",7,7,,,,,,,,,,,,,,,,
6,1,,172194-53300,,"WEIGHT ASSY,CENTER",1,1,,,,,,,,,,,,,,,,
7,1,,172179-53321,,"WEIGHT L ASSY",1,1,,,,,,,,,,,,,,,,
8,1,,172161-53350,,"GROMMET 26",4,4,,,,,,,,,,,,,,,,
9,1,,172174-53360,,"BOLT M12X 30",4,4,,,,,,,,,,,,,,,,
10,1,,172179-53381,,"WEIGHT R ASSY",1,1,,,,,,,,,,,,,,,,
11,1,,172179-53430,,"BOLT 12X50",2,2,,,,,,,,,,,,,,,,
12,1,,22217-120000,,"SPRING WASHER",6,6,,,,,,,,,,,,,,,,
13,1,,26716-120002,,"NUT M12",2,2,,,,,,,,,,,,,,,,
14,1,,26116-120302,,"BOLT M12X 30 PLATED",1,1,,,,,,,,,,,,,,,,
15,1,,172194-54100,,"FRAME ASSY,TURNING",1,1,,,,,,,,,,,,,,,,
16,2,,172180-54050,,"BUSHING 50X55",2,2,,,,,,,,,,,,,,,,
17,1,,172165-81760,,"SEAL 50X60X4, DUST",2,2,,,,,,,,,,,,,,,,
18,1,,24761-040000,,"NIPPLE B,GREASE",1,1,,,,,,,,,,,,,,,,
19,1,,172180-57600,,"BEARING,SWING",1,1,,,,,,,,,,,,,,,,
20,1,,22312-100250,,"PARALLEL PIN 10X25",4,4,,,,,,,,,,,,,,,,
21,1,,26116-120302,,"BOLT M12X 30 PLATED",18,18,,,,,,,,,,,,,,,,
22,1,,26116-120452,,"BOLT M12X 45 PLATED",18,18,,,,,,,,,,,,,,,,
```

Fig. 22 フレーム & 旋回ベアリング
FRAME & TURNING BEARING

https://truckmanualshub.com/

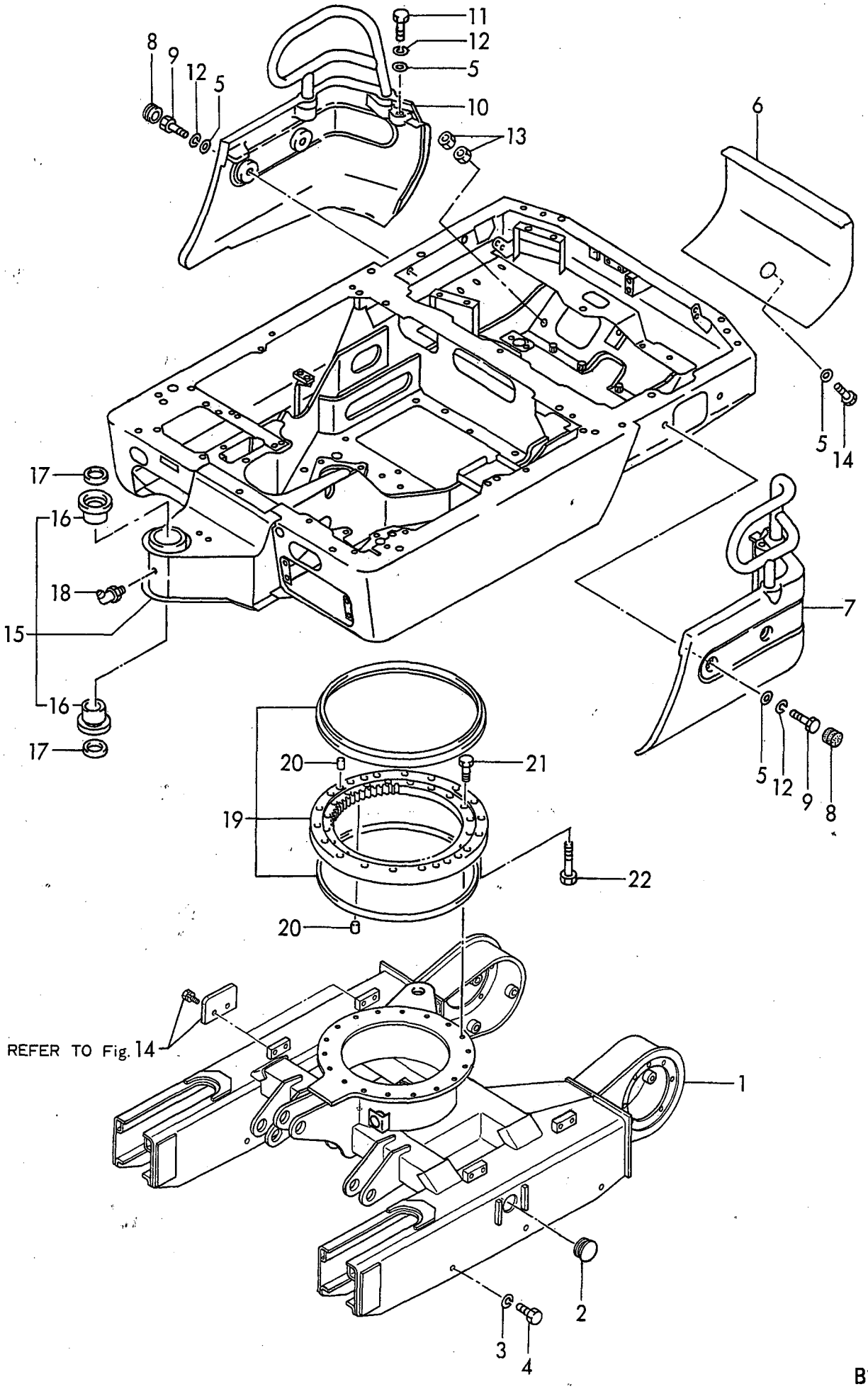

https://truckmanualshub.com/

```
1,1,,172174-44850,,"BOLT  8X 16",4,4,,,,,,,,,,,,,,,,
2,1,,172174-44850,,"BOLT  8X 16",2,2,,,,,,,,,,,,,,,,
3,1,,172179-61100,,"COVER,BATTER",1,1,,,,,,,,,,,,,,,,
4,1,,172194-61110,,"COVER A",1,1,,,,,,,,,,,,,,,,
5,1,,172179-61120,,"COVER B",1,1,,,,,,,,,,,,,,,,
6,1,,172180-61120,,"COVER G",1,1,,,,,,,,,,,,,,,,
7,1,,172180-61130,,"COVER C",1,1,,,,,,,,,,,,,,,,
8,1,,172194-61140,,"COVER D ASSY",1,1,,,,,,,,,,,,,,,,
9,1,,172194-61160,,"COVER,TRAVEL-M",2,2,,,,,,,,,,,,,,,,
10,1,,172194-61170,,"COVER E",1,1,,,,,,,,,,,,,,,,
11,1,,172179-61190,,"COVER ASSY,LUMP",1,1,,,,,,,,,,,,,,,,
12,1,,172179-61390,,"COVER,UNDER",1,1,,,,,,,,,,,,,,,,
13,1,,172179-61450,,COVER,1,1,,,,,,,,,,,,,,,,
14,1,,172174-61700,,"COVER COMP.,BL LINK",1,1,,,,,,,,,,,,,,,,
15,1,,172174-61720,,RUBBER,1,1,,,,,,,,,,,,,,,,
16,1,,22137-100000,,"WASHER 10,POLISHED",5,5,,,,,,,,,,,,,,,,
17,1,,22217-100000,,"SPRING WASHER 10",6,6,,,,,,,,,,,,,,,,
18,1,,22217-100000,,"SPRING WASHER 10",28,28,,,,,,,,,,,,,,,,
19,1,,26013-100252,,"BOLT W/WASHER M10X25",4,4,,,,,,,,,,,,,,,,
20,1,,26116-100202,,"BOLT M10X 20 PLATED",6,6,,,,,,,,,,,,,,,,
21,1,,26116-100202,,"BOLT M10X 20 PLATED",28,28,,,,,,,,,,,,,,,,
22,1,,26366-100002,,"NUT M10",4,4,,,,,,,,,,,,,,,,
23,1,,26647-100152,,"WING BOLT M10X15",2,2,,,,,,,,,,,,,,,,
```

Fig. 23 フレームカバー(1) FRAME COVER(1)

https://truckmanualshub.com/

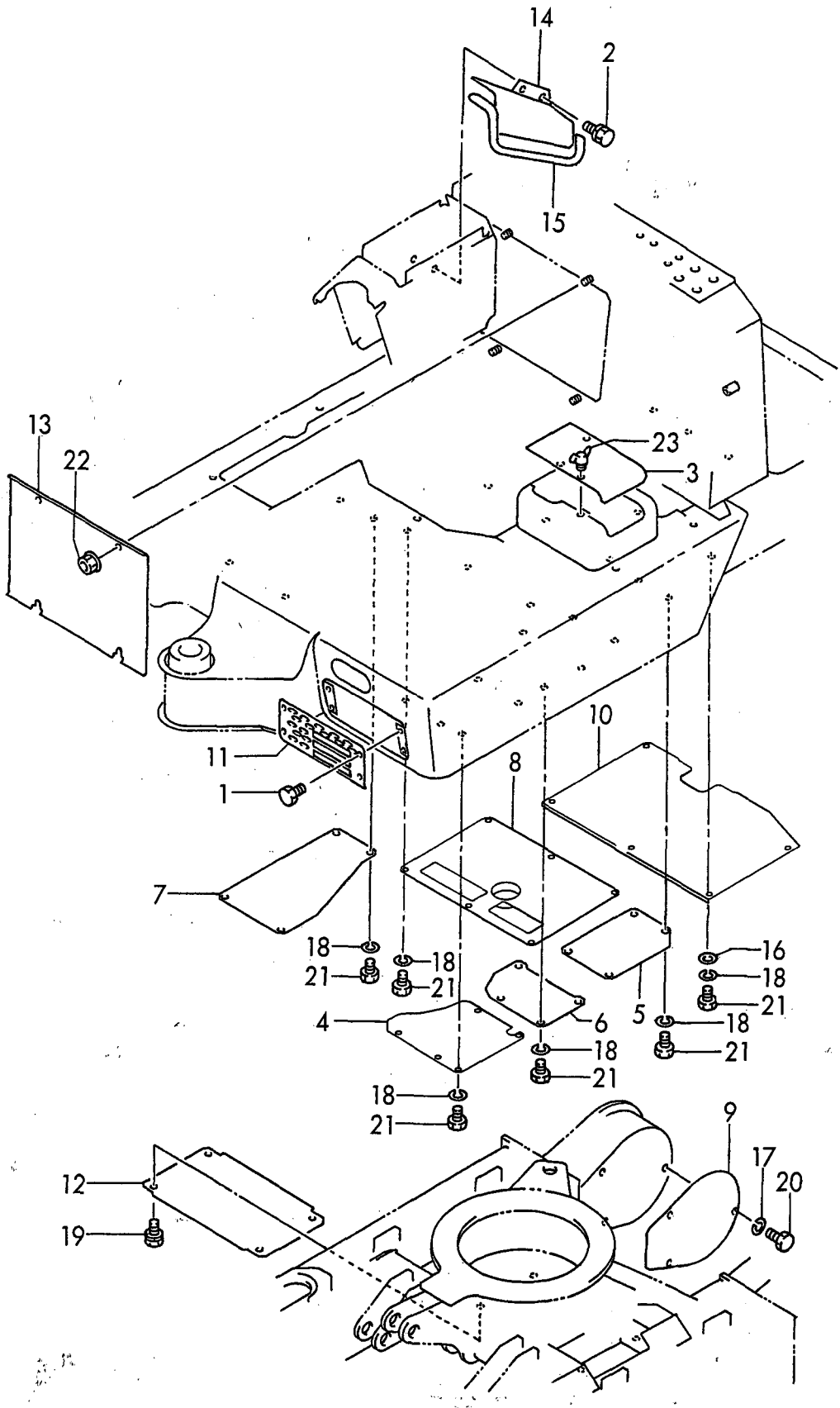

https://truckmanualshub.com/

```
1,1,,172179-61210,,"COVER G ASSY",,1,,,,,,,,,,,,,,,,
2,1,,172194-61230,,"COVER L ASSY",,1,,,,,,,,,,,,,,,,
3,1,,172194-61210,,"COVER R ASSY",,1,,,,,,,,,,,,,,,,
4,1,,172165-61801,,PLUG,,2,,,,,,,,,,,,,,,,
5,1,,22137-100000,,"WASHER 10,POLISHED",,2,,,,,,,,,,,,,,,,
6,1,,22137-100000,,"WASHER 10,POLISHED",,6,,,,,,,,,,,,,,,,
7,1,,26013-100202,,"BOLT W/WASHER M10X20",,6,,,,,,,,,,,,,,,,,,
8,1,,26013-100352,,"BOLT M10X 35",,2,,,,,,,,,,,,,,,,
9,1,,172179-61320,,"TOOL BOX ASSY",1,,,,,,,,,,,,,,,,,,
10,1,,172126-65500,,KEY,1,,,,,,,,,,,,,,,,
11,2,,26347-100002,,"U-NUT 10",1,,,,,,,,,,,,,,,,,
12,1,,172179-65590,,LOCK,1,,,,,,,,,,,,,,,,
13,1,,172159-65930,,"WASHER 10",2,,,,,,,,,,,,,,,,,
14,1,,22137-100000,,"WASHER 10,POLISHED",1,,,,,,,,,,,,,,,,,,
15,1,,26013-100502,,"BOLT M10X 50",2,,,,,,,,,,,,,,,,,
16,1,,933110-00301,,"KEY ASSY",1,,,,,,,,,,,,,,,,,,
```

Fig. 24 フレームカバー(2) FRAME COVER(2)

https://truckmanualshub.com/

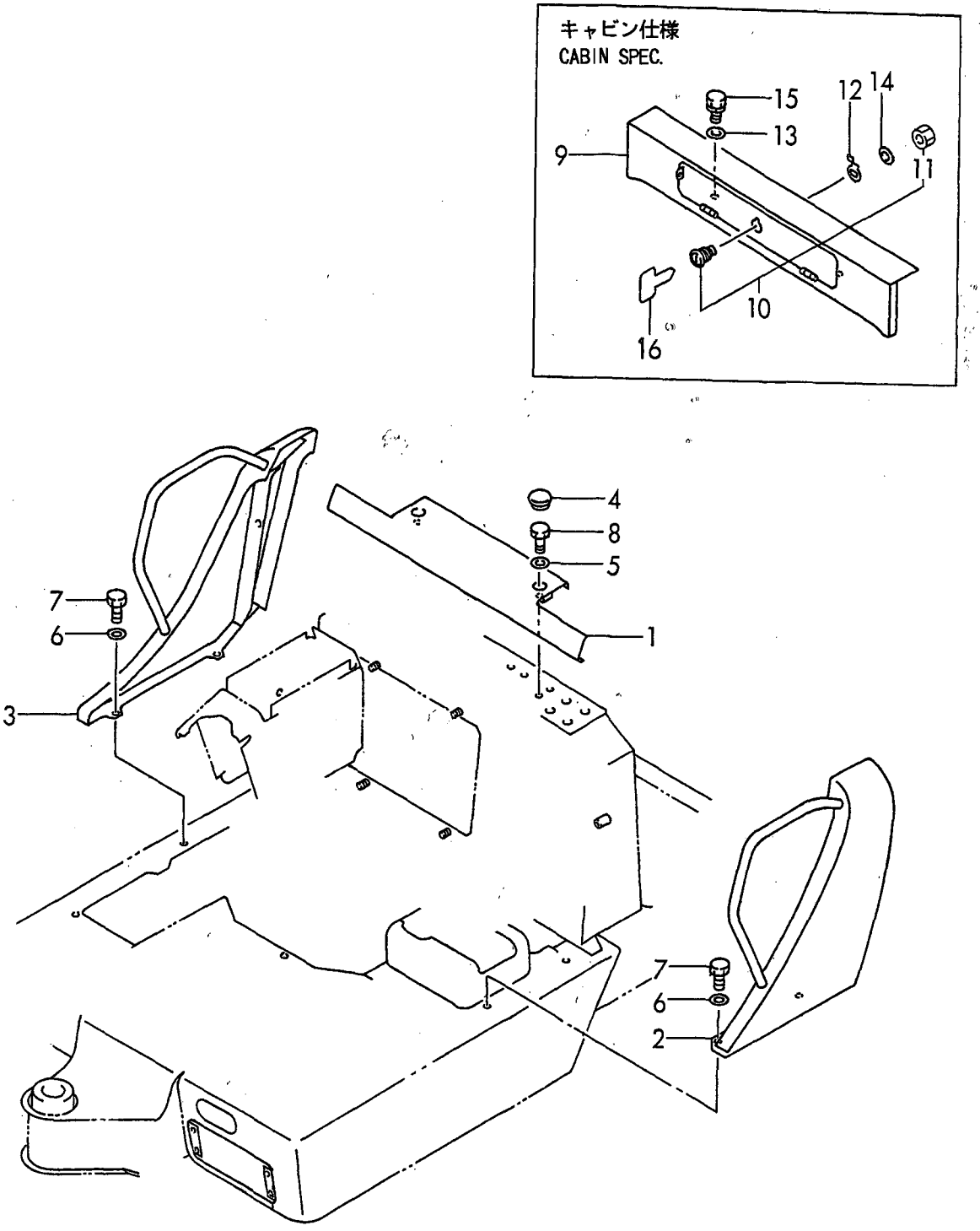

https://truckmanualshub.com/

```
1,1,,172116-46630,,"KNOB, LOCK LEVER",1,1,,,,,,,,,,,,,,,,
2,1,,172194-58800,,"PIN ASSY,LOCK",1,1,,,,,,,,,,,,,,,,
3,1,,172194-62100,,"STEP F",1,1,,,,,,,,,,,,,,,,
4,1,,172194-62110,,"STEP R ASSY",2,1,,,,,,,,,,,,,,,,
5,1,,172179-62200,,"STEP L ASSY",,1,,,,,,,,,,,,,,,,
6,1,,172174-62440,,"RUBBER 90,EDGE",,2,,,,,,,,,,,,,,,,
7,1,,172174-62450,,"WING BOLT M10X15",,1,,,,,,,,,,,,,,,,
8,1,,172179-62450,,"MAT,FLOOR",,1,,,,,,,,,,,,,,,,
9,1,,22217-100000,,"SPRING WASHER 10",10,10,,,,,,,,,,,,,,,,
10,1,,22217-100000,,"SPRING WASHER 10",9,9,,,,,,,,,,,,,,,,
11,1,,22417-320200,,"COTTER PIN 3.2X20",1,1,,,,,,,,,,,,,,,,
12,1,,26116-100202,,"BOLT M10X 20 PLATED",10,10,,,,,,,,,,,,,,,,
13,1,,26116-100202,,"BOLT M10X 20 PLATED",9,9,,,,,,,,,,,,,,,,
14,1,,172165-68250,,"PLUG,RUBBER",1,,,,,,,,,,,,,,,,
15,1,,172157-54850,,"GROMMET 18",,1,,,,,,,,,,,,,,,,
```

Fig. 25 ステップ & 旋回ロック STEP & TURNING LOCK

https://truckmanualshub.com/

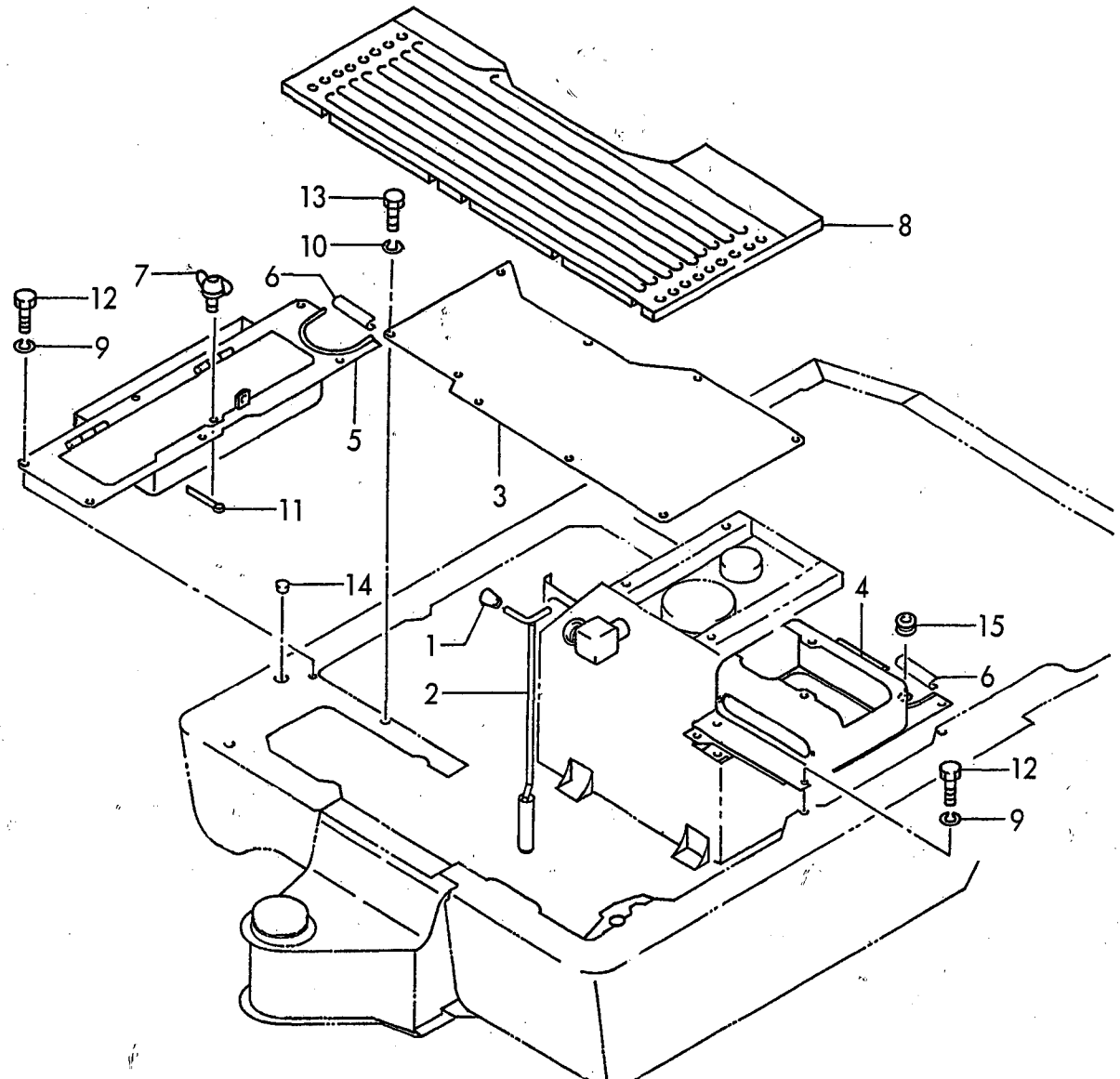

https://truckmanualshub.com/

```
1,1,,194300-21460,,CAP,,1,,,,,,,,,,,,,,,,
2,1,,172174-44850,,"BOLT  8X 16",16,16,,,,,,,,,,,,,,,,
3,1,,172179-63100,,"CONSOLE L.H",1,1,,,,,,,,,,,,,,,,
4,1,,172174-63600,,"COVER R.H,CONSOLE",1,1,,,,,,,,,,,,,,,,
5,1,,172174-63620,,"COVER L.H,CONSOLE",1,1,,,,,,,,,,,,,,,,
6,1,,172165-63650,,"PLUG 10,HOLE",1,3,,,,,,,,,,,,,,,,
7,1,,172174-63700,,"CONSOLE R.H",1,1,,,,,,,,,,,,,,,,
8,1,,172194-64200,,"MOUNT ASSY,SEAT",1,1,,,,,,,,,,,,,,,,
9,1,,26013-080202,,"BOLT W/WASHER M8X20",4,4,,,,,,,,,,,,,,,,
10,1,,26013-080502,,"BOLT M 8X 50",4,4,,,,,,,,,,,,,,,,
11,1,,26013-100202,,"BOLT W/WASHER M10X20",4,4,,,,,,,,,,,,,,,,
12,1,,172194-64300,,"SEAT, PLATE",1,1,,,,,,,,,,,,,,,,
```

Fig. 26 インパネ & シートマウント INSTRUMENT PANEL & SEAT MOUNT

https://truckmanualshub.com/

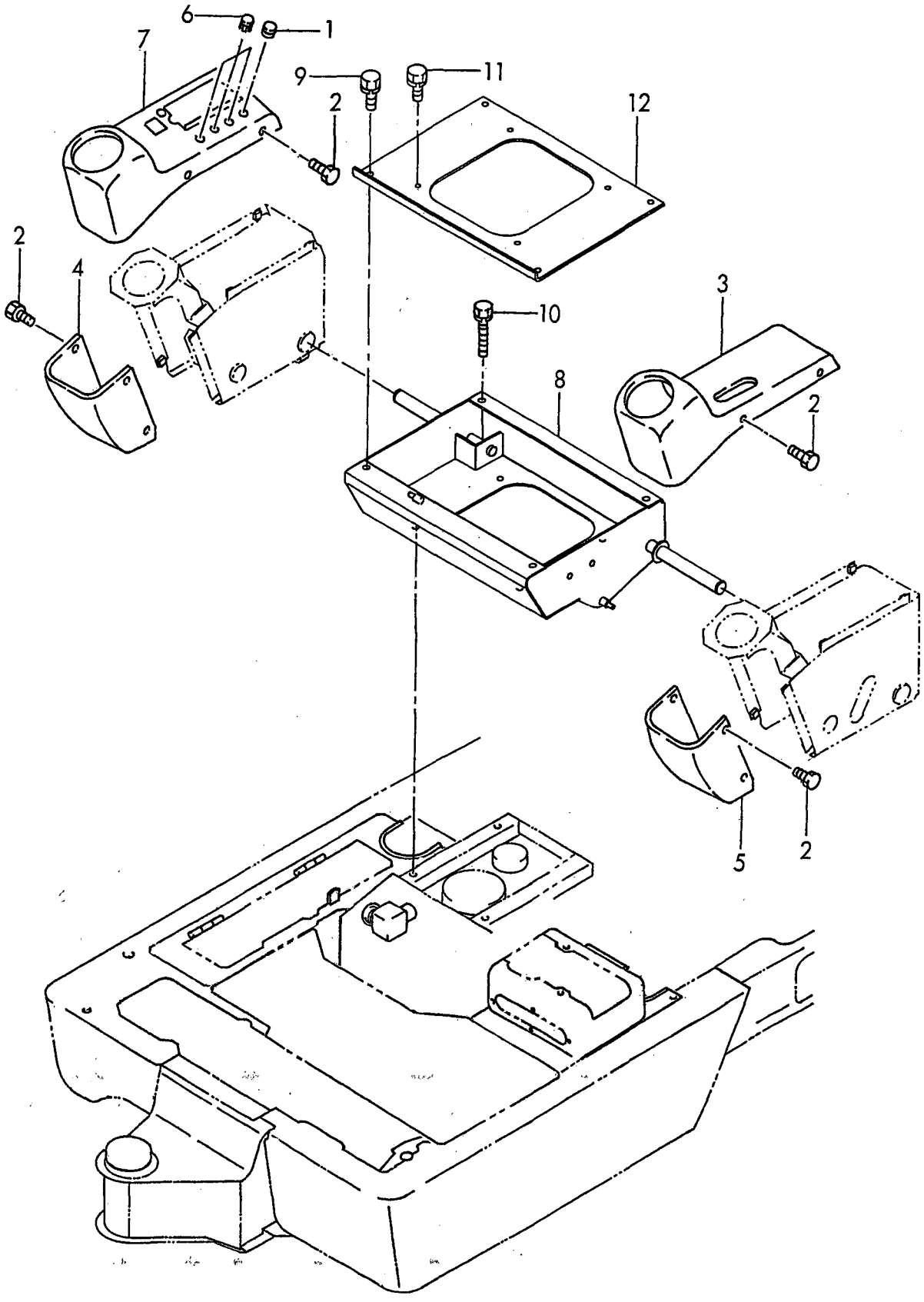

```
1,1,,172159-65050,,"LEVER, LOCK",1,1,,,,,,,,,,,,,,,
2,1,,172161-65070,,"HOOK COMP.,KEY",1,1,,,,,,,,,,,,,,,
3,1,,172179-65100,,BONNET,1,1,,,,,,,,,,,,,,,
5,2,,172179-65230,,BONNET,1,1,,,,,,,,,,,,,,,
6,2,,172179-65240,,BONNET,1,1,,,,,,,,,,,,,,,
7,2,,172179-65780,,"SEAL, RUBBER",1,1,,,,,,,,,,,,,,,
8,1,,172179-65250,,"BONNET B ASSY, EV",1,1,,,,,,,,,,,,,,,
10,2,,172179-65360,,"NOISE ABSORBER",1,1,,,,,,,,,,,,,,,
11,2,,172179-65790,,"SEAL, RUBBER",1,1,,,,,,,,,,,,,,,
12,1,,172194-65410,,"BONNET A ASSY",1,1,,,,,,,,,,,,,,,
13,1,,172126-65500,,KEY,1,1,,,,,,,,,,,,,,,
14,2,,172126-65571,,"WASHER LOCK",1,1,,,,,,,,,,,,,,,
15,2,,26347-100002,,"U-NUT 10",1,1,,,,,,,,,,,,,,,
16,1,,172179-65610,,"DUCT A ASSY",1,1,,,,,,,,,,,,,,,
17,1,,172179-65630,,DUCT,1,1,,,,,,,,,,,,,,,
18,1,,172179-65650,,"PLATE, DUCT",1,1,,,,,,,,,,,,,,,
19,1,,172179-65670,,"SEAL, DUCT",1,1,,,,,,,,,,,,,,,
20,1,,172179-65680,,"SEAL, DUCT",1,1,,,,,,,,,,,,,,,
21,1,,172159-65690,,"PLATE,CATCH",1,1,,,,,,,,,,,,,,,
22,1,,172179-65700,,"STAY A",1,1,,,,,,,,,,,,,,,
23,1,,172179-65720,,"STAY B",1,1,,,,,,,,,,,,,,,
24,1,,172179-65750,,"RUBBER,SEAL295",2,2,,,,,,,,,,,,,,,
25,1,,172179-65760,,"RUBBER,SEAL240",1,1,,,,,,,,,,,,,,,
26,1,,172179-65770,,"RUBBER,SEAL100",1,1,,,,,,,,,,,,,,,
27,1,,172179-65800,,"RUBBER,SEAL350",1,1,,,,,,,,,,,,,,,
28,1,,172194-65820,,"GAS SPRING",1,1,,,,,,,,,,,,,,,
29,1,,172179-65850,,"PIPE ASSY,EXTHAUST",1,1,,,,,,,,,,,,,,,
30,1,,172179-65870,,"SEAL,DUCT",1,1,,,,,,,,,,,,,,,
31,1,,172179-65900,,"NOISE ABSORBER",1,1,,,,,,,,,,,,,,,
32,1,,172179-65910,,"NOISE ABSORBER",1,1,,,,,,,,,,,,,,,
33,1,,172159-65930,,"WASHER 10",4,4,,,,,,,,,,,,,,,
34,1,,172159-65930,,"WASHER 10",8,8,,,,,,,,,,,,,,,
35,1,,172159-65930,,"WASHER 10",5,5,,,,,,,,,,,,,,,
36,1,,172159-65940,,"PIN, BONNET LEVER",1,1,,,,,,,,,,,,,,,
37,1,,172159-65950,,CATCHER,1,1,,,,,,,,,,,,,,,
38,1,,172159-65960,,"SPRING CATCH",1,1,,,,,,,,,,,,,,,
39,1,,22137-080000,,"WASHER 8, POLISHED",2,2,,,,,,,,,,,,,,,
40,1,,22137-100000,,"WASHER 10,POLISHED",2,2,,,,,,,,,,,,,,,
41,1,,22157-080000,,"WASHER  8",2,2,,,,,,,,,,,,,,,
42,1,,22217-080000,,"SPRING WASHER  8",2,2,,,,,,,,,,,,,,,
43,1,,22217-080000,,"SPRING WASHER  8",3,3,,,,,,,,,,,,,,,
44,1,,22217-100000,,"SPRING WASHER 10",2,2,,,,,,,,,,,,,,,
45,1,,22217-100000,,"SPRING WASHER 10",4,4,,,,,,,,,,,,,,,
46,1,,22417-200200,,"COTTER PIN 2.0X20",2,2,,,,,,,,,,,,,,,
47,1,,22417-200200,,"COTTER PIN 2.0X20",2,2,,,,,,,,,,,,,,,
48,1,,26013-100252,,"BOLT W/WASHER M10X25",4,4,,,,,,,,,,,,,,,
49,1,,26013-100252,,"BOLT W/WASHER M10X25",4,4,,,,,,,,,,,,,,,
50,1,,26013-100252,,"BOLT W/WASHER M10X25",4,4,,,,,,,,,,,,,,,
51,1,,26013-100252,,"BOLT W/WASHER M10X25",2,2,,,,,,,,,,,,,,,
52,1,,26013-100252,,"BOLT W/WASHER M10X25",5,5,,,,,,,,,,,,,,,
53,1,,26013-120352,,"BOLT M12X 35",5,5,,,,,,,,,,,,,,,
54,1,,26116-080162,,"BOLT M 8X 16 PLATED",3,3,,,,,,,,,,,,,,,
55,1,,26116-080202,,"BOLT M 8X 20 PLATED",2,2,,,,,,,,,,,,,,,
56,1,,26116-100202,,"BOLT M10X 20 PLATED",4,4,,,,,,,,,,,,,,,
57,1,,26116-100202,,"BOLT M10X 20 PLATED",2,2,,,,,,,,,,,,,,,
58,1,,172119-68600,,BUCK,1,1,,,,,,,,,,,,,,,
59,1,,22117-080000,,"WASHER  8",2,2,,,,,,,,,,,,,,,
60,1,,26116-080202,,"BOLT M 8X 20 PLATED",2,2,,,,,,,,,,,,,,,
61,1,,26716-080002,,"NUT M 8",2,2,,,,,,,,,,,,,,,
```

Fig. 27 ボンネット BONNET

https://truckmanualshub.com/

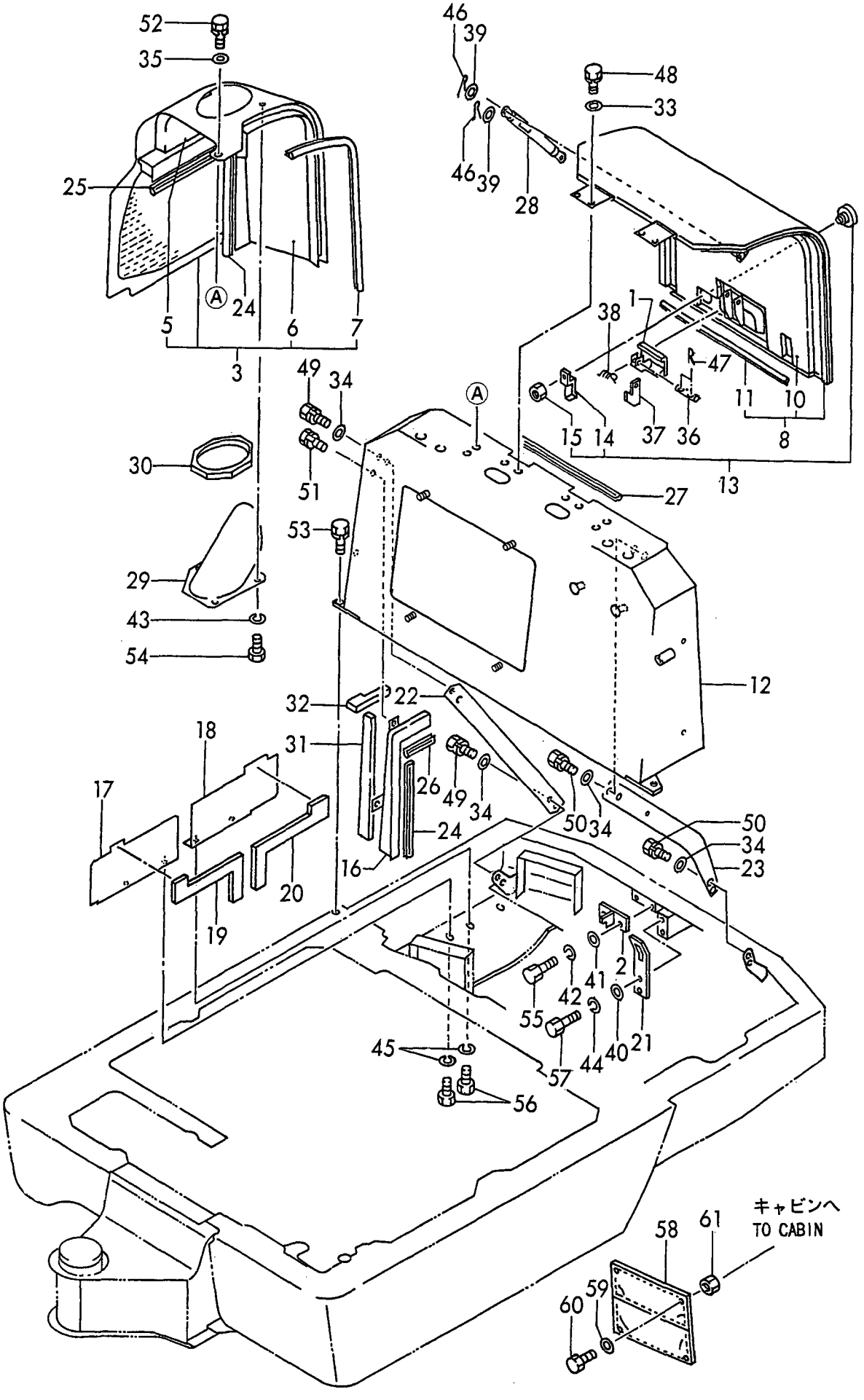

https://truckmanualshub.com/

```
1,1,,172194-68100,,"ROOF ASSY,CANOPY",,1,,,,,,,,,,,,,,,,,,
2,1,,000000000000,,BOLT,,7,,,,,,,,,,,,,,,,,,
```

Fig. 28 キャノピ CANOPY

https://truckmanualshub.com/

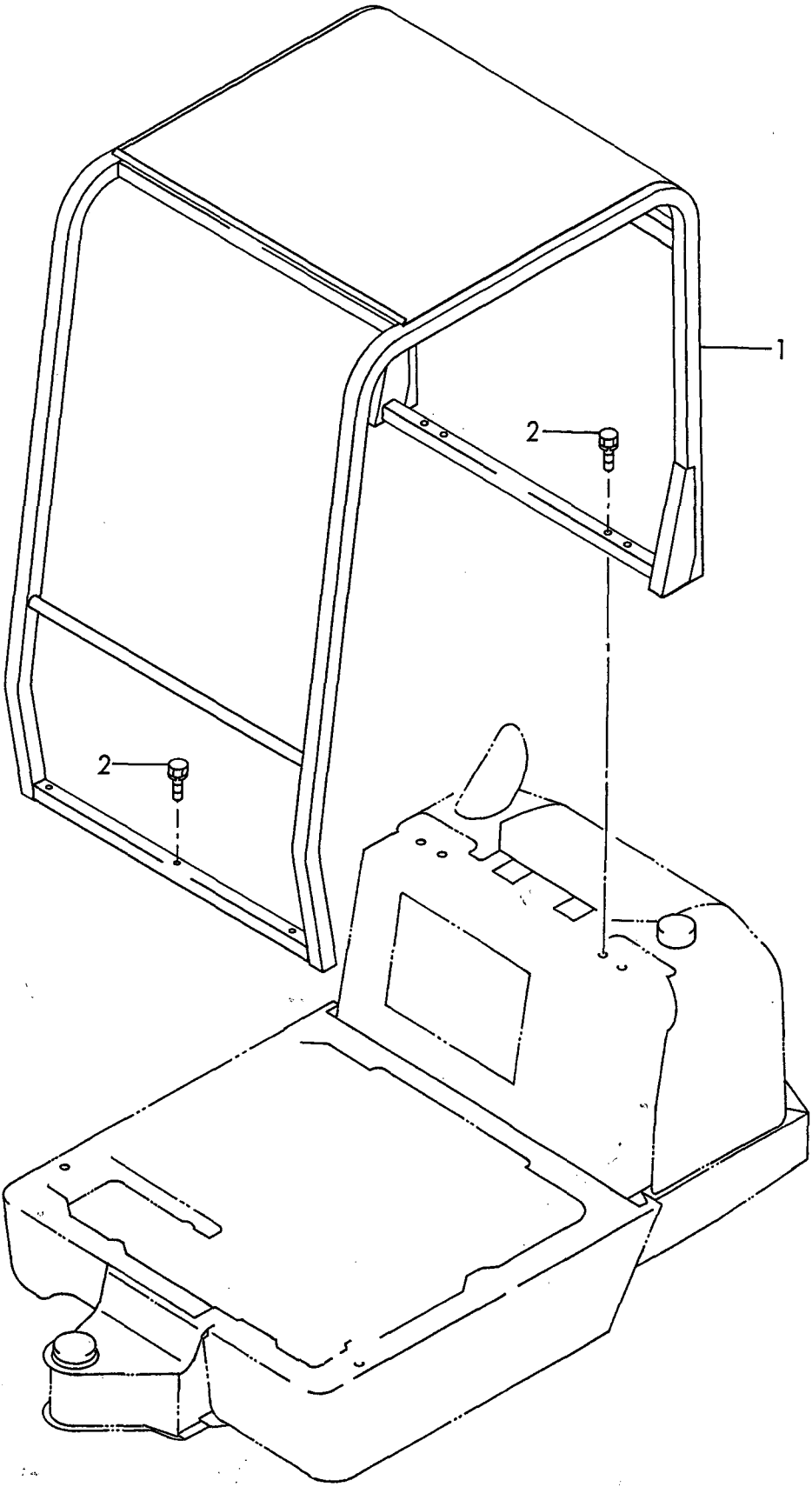

https://truckmanualshub.com/

```
1,1,,172194-71100,,"MOUNT,PUMP",1,1,,,,,,,,,,,,,,,,
2,1,,26013-100252,,"BOLT W/WASHER M10X25",8,8,,,,,,,,,,,,,,,,,,
3,1,,172179-71200,,"COUPLING,PUMP",1,1,,,,,,,,,,,,,,,,,,
4,1,,26450-100352,,"BOLT M10X 35",3,3,,,,,,,,,,,,,,,,,,
5,1,,172194-73100,,"HYD.PUMP ASSY",1,1,,,,,,,,,,,,,,,,,,
6,1,,172194-73110,,"VALVE,BLEED-OFF",1,1,,,,,,,,,,,,,,,,,,
7,1,,26116-100252,,"BOLT M10X 25 PLATED",2,2,,,,,,,,,,,,,,,,,,,,
8,1,,22217-100000,,"SPRING WASHER 10",2,2,,,,,,,,,,,,,,,,,,,,
```

Fig. 29 油圧ポンプ & 軸継手
HYD. OIL PUMP & JOINT

https://truckmanualshub.com/

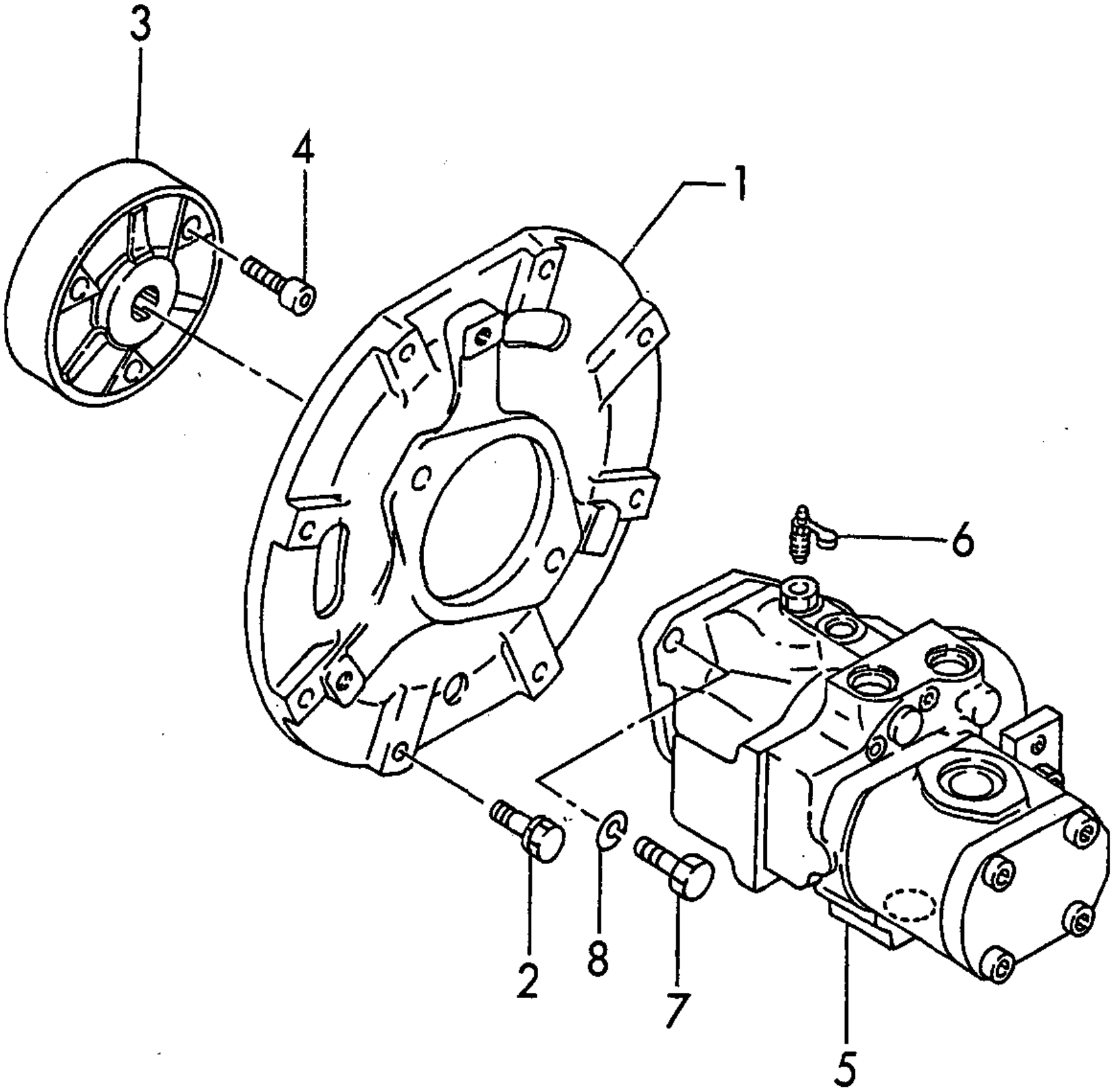

https://truckmanualshub.com/

Fig. 30 ブームシリンダ BOOM CYLINDER

https://truckmanualshub.com/

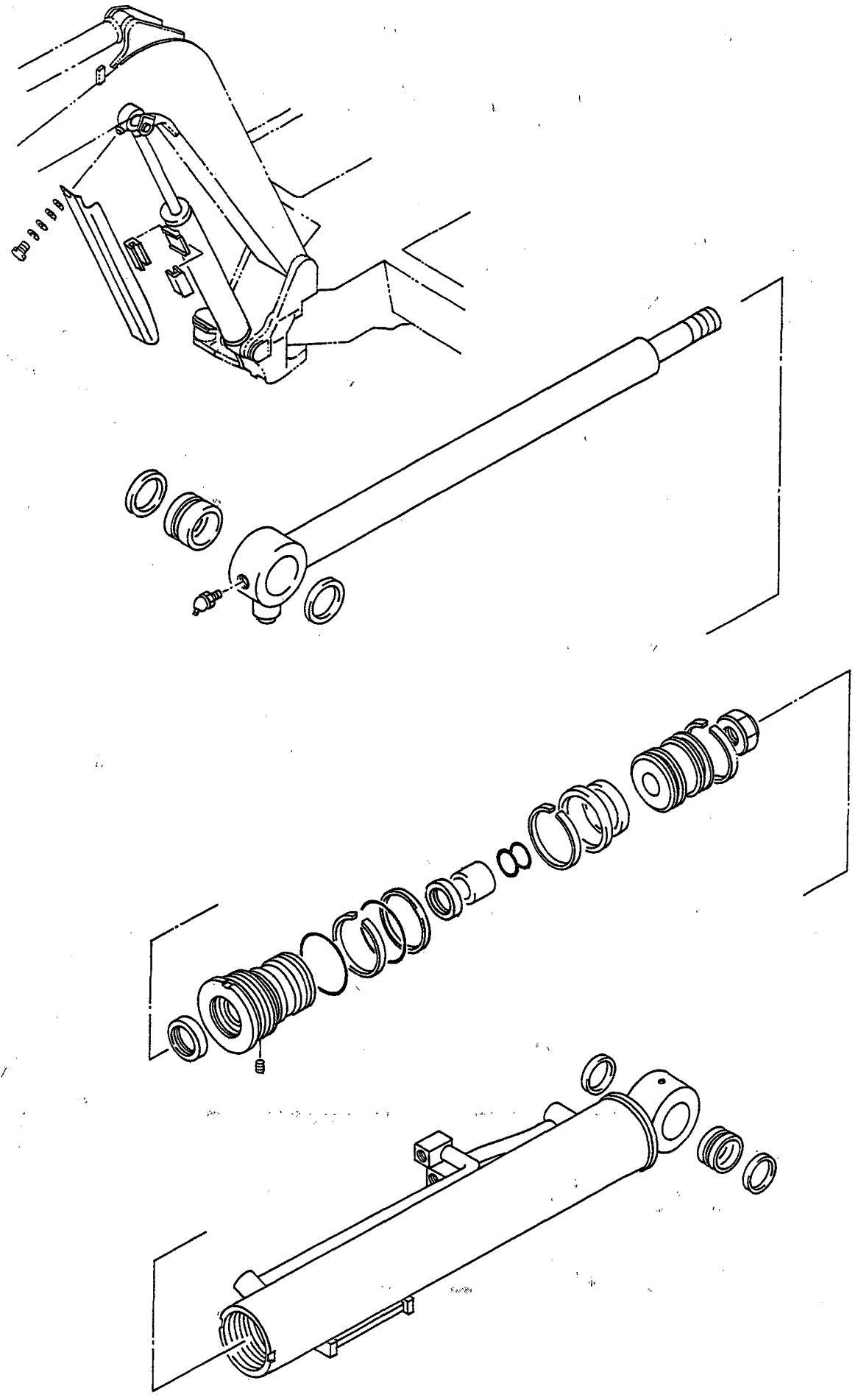

https://truckmanualshub.com/

Fig. 31 アームシリンダ ARM CYLINDER

https://truckmanualshub.com/

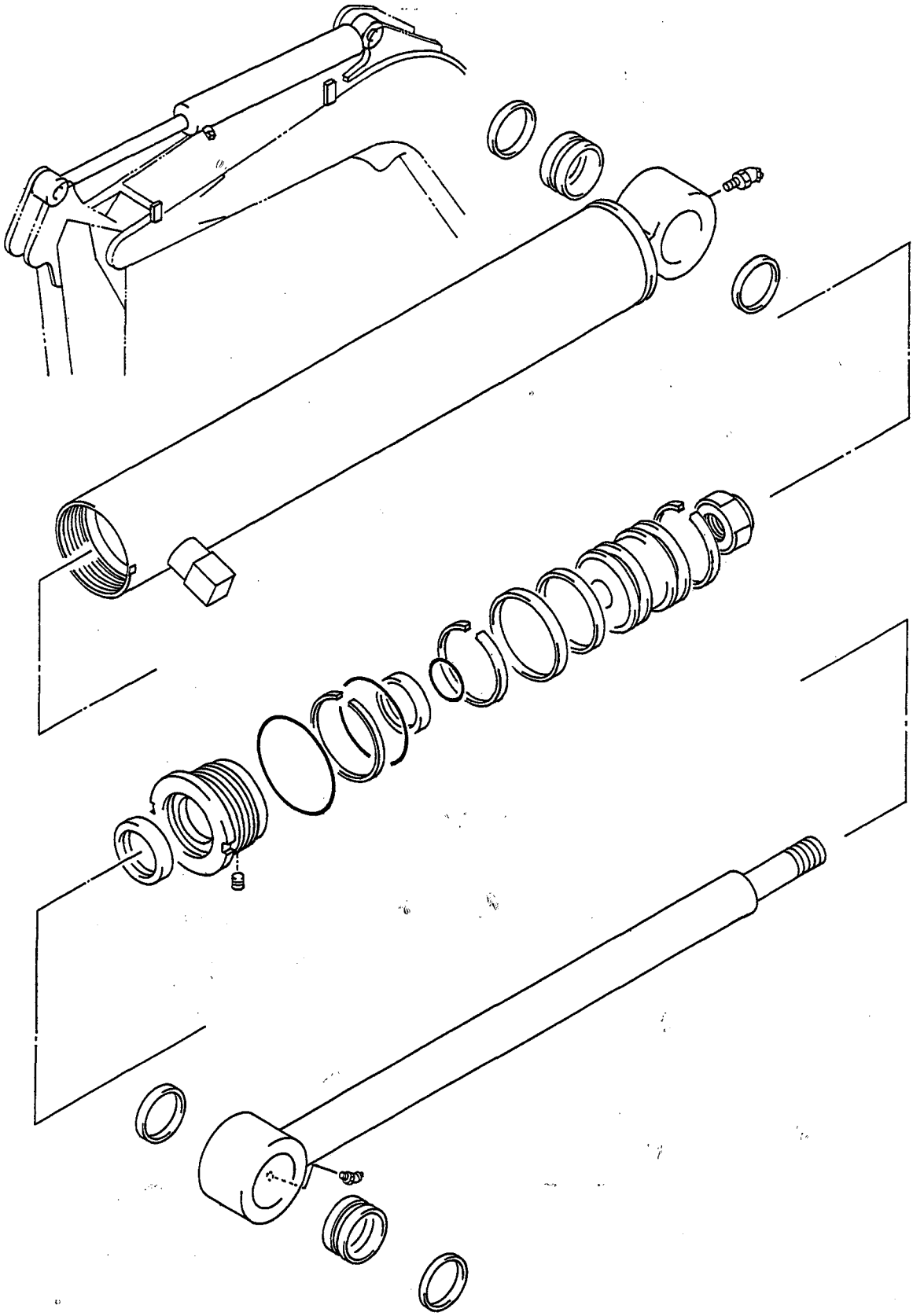

https://truckmanualshub.com/

Fig. 32 バケットシリンダ BUCKET CYLINDER

https://truckmanualshub.com/

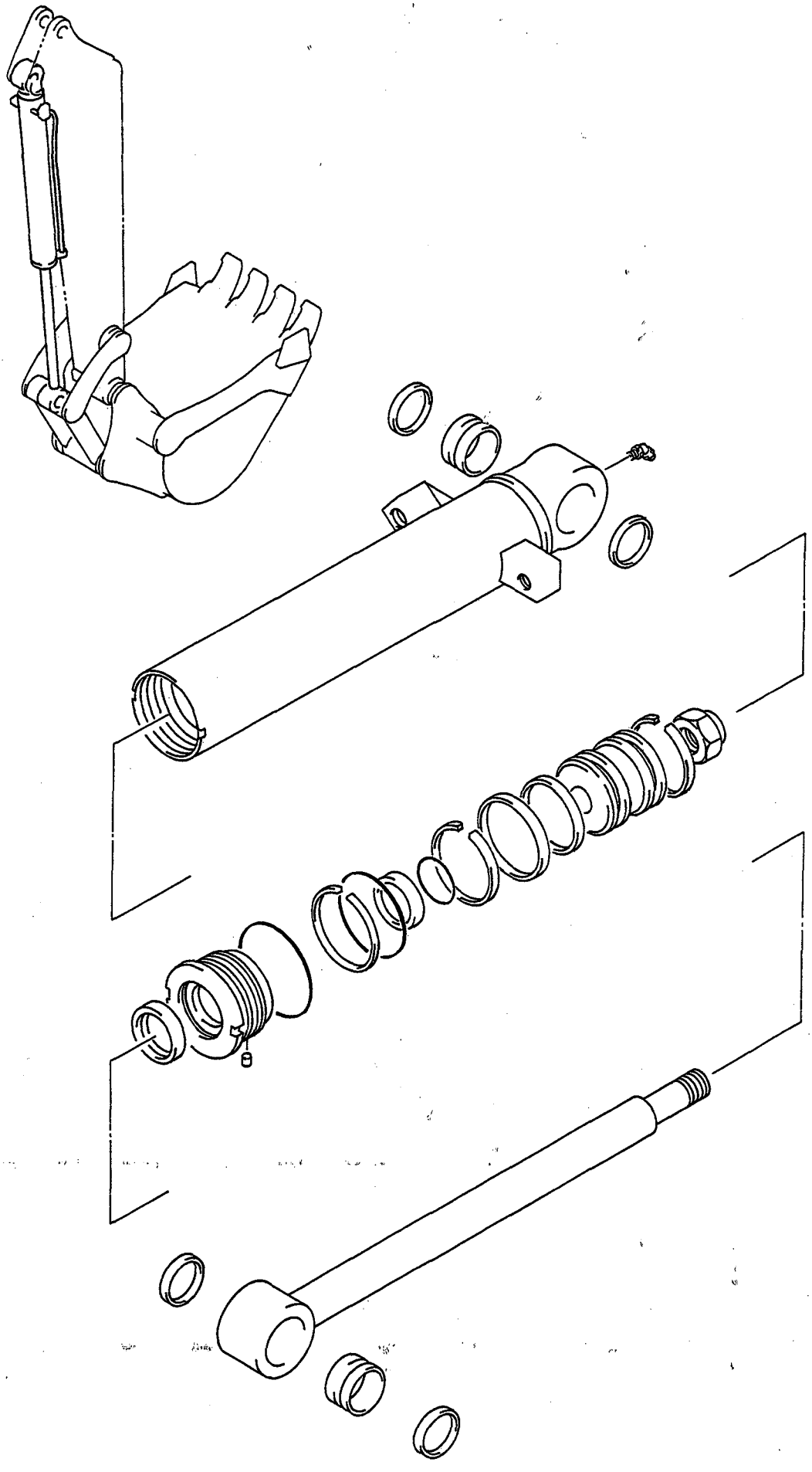

https://truckmanualshub.com/

Fig. 33 スイングシリンダ SWING CYLINDER

https://truckmanualshub.com/

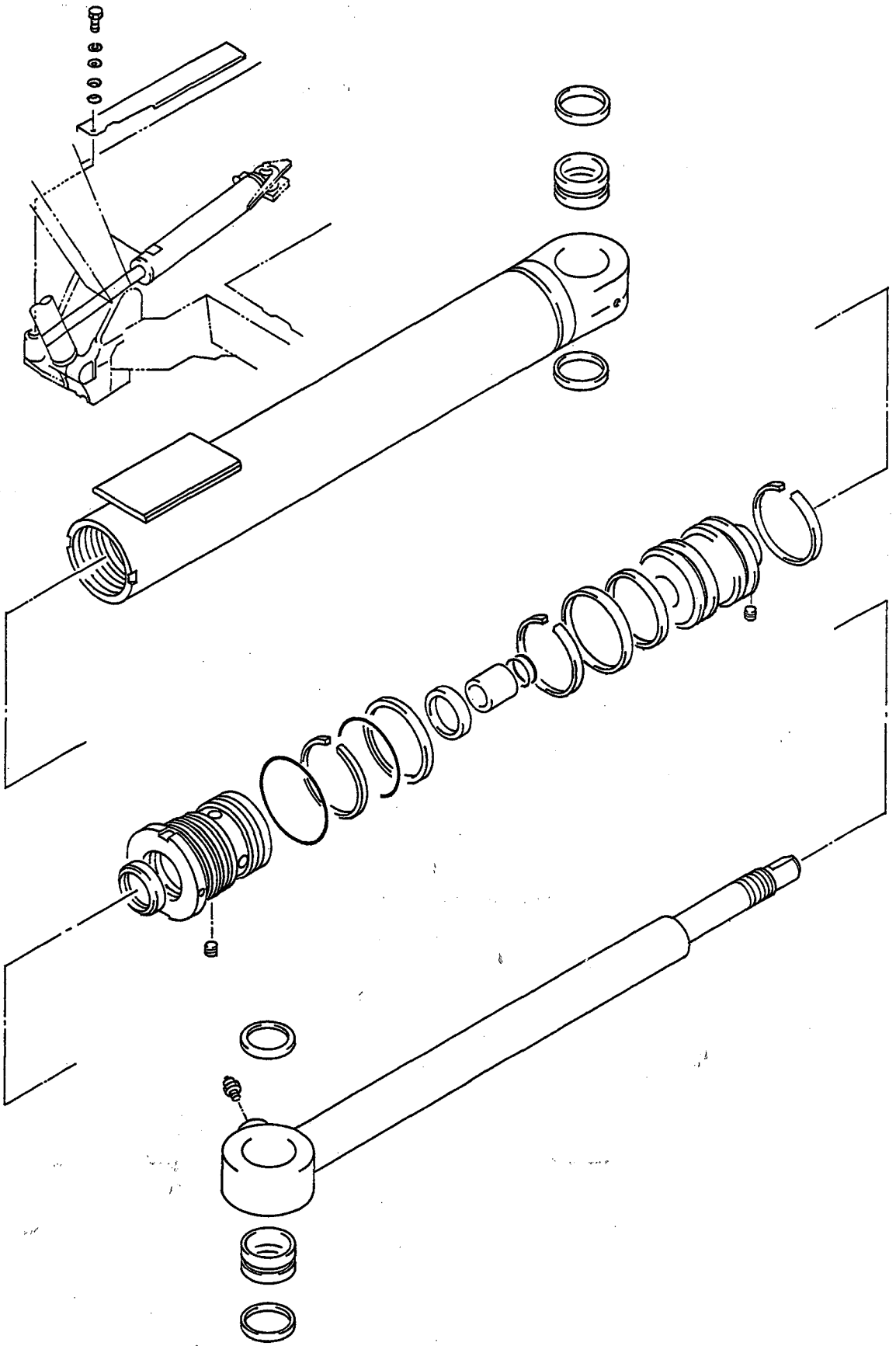

https://truckmanualshub.com/

Fig. 34 ブレードシリンダ BLADE CYLINDER

https://truckmanualshub.com/

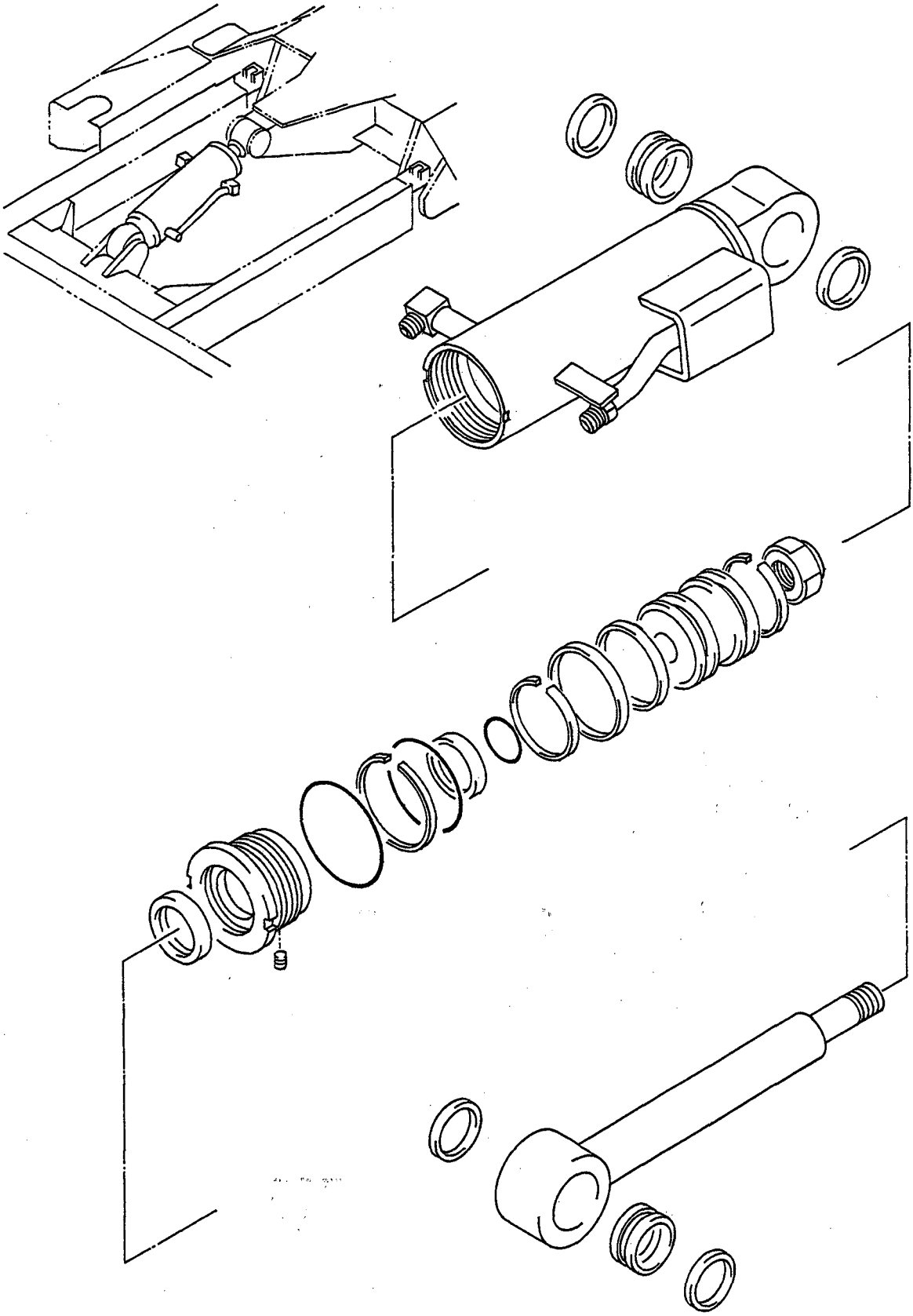

https://truckmanualshub.com/

```
1,1,,172194-73300,,"MOTOR ASSY,TRAVEL",2,2,,,,,,,,,,,,,,,,,,
2,1,,26013-100252,,"BOLT W/WASHER M10X25",16,16,,,,,,,,,,,,,,,,,,
```

Fig. 35 走行モータ DRIVING MOTOR

https://truckmanualshub.com/

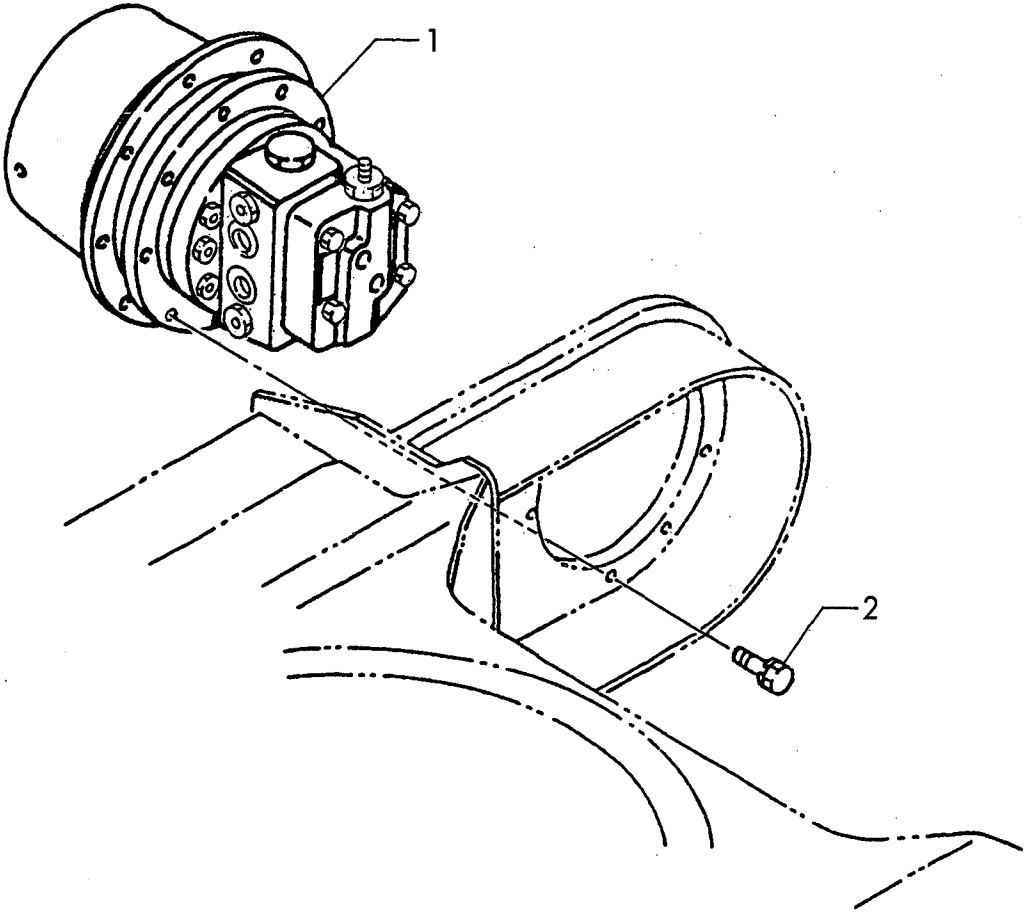

https://truckmanualshub.com/

```
1,1,,172194-73310,,"MOTOR ASSY,SWING",1,1,,,,,,,,,,,,,,,,,
2,1,,26013-120402,,"BOLT M12X 40",4,4,,,,,,,,,,,,,,,,,
```

Fig. 36 旋回モータ TURNING MOTOR

https://truckmanualshub.com/

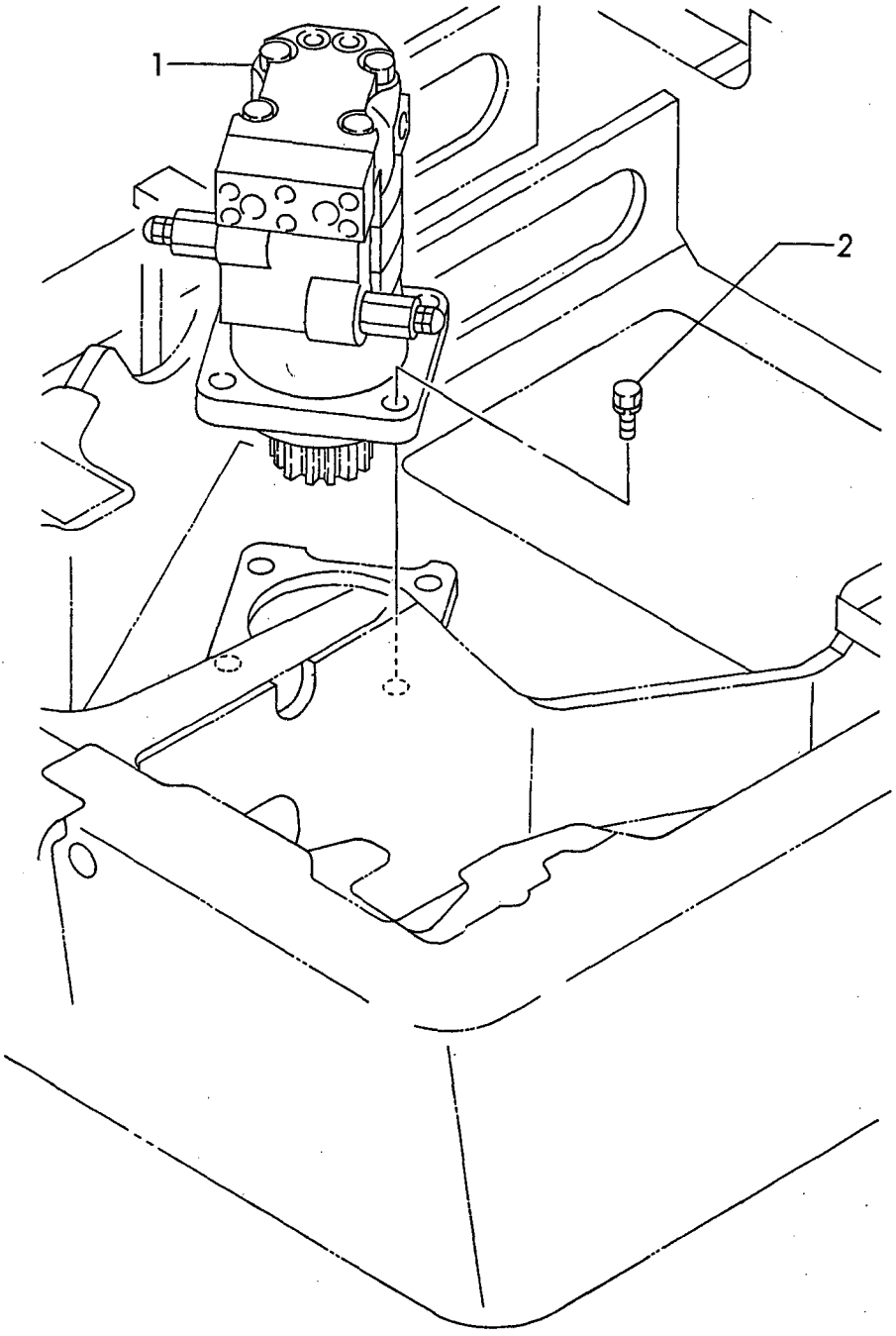

https://truckmanualshub.com/

```
1,1,,172194-73800,,"JOINT ASSY,SWIVEL",1,1,,,,,,,,,,,,,,,,
2,1,,26116-080252,,"BOLT M 8X 25 PLATED",4,4,,,,,,,,,,,,,,,,,
3,1,,22217-080000,,"SPRING WASHER  8",4,4,,,,,,,,,,,,,,,,,
4,1,,23871-010000,,"PLUG PT1/8,SCREW",2,2,,,,,,,,,,,,,,,,,
```

Fig. 37 スイベルジョイント SWIVEL JOINT

https://truckmanualshub.com/

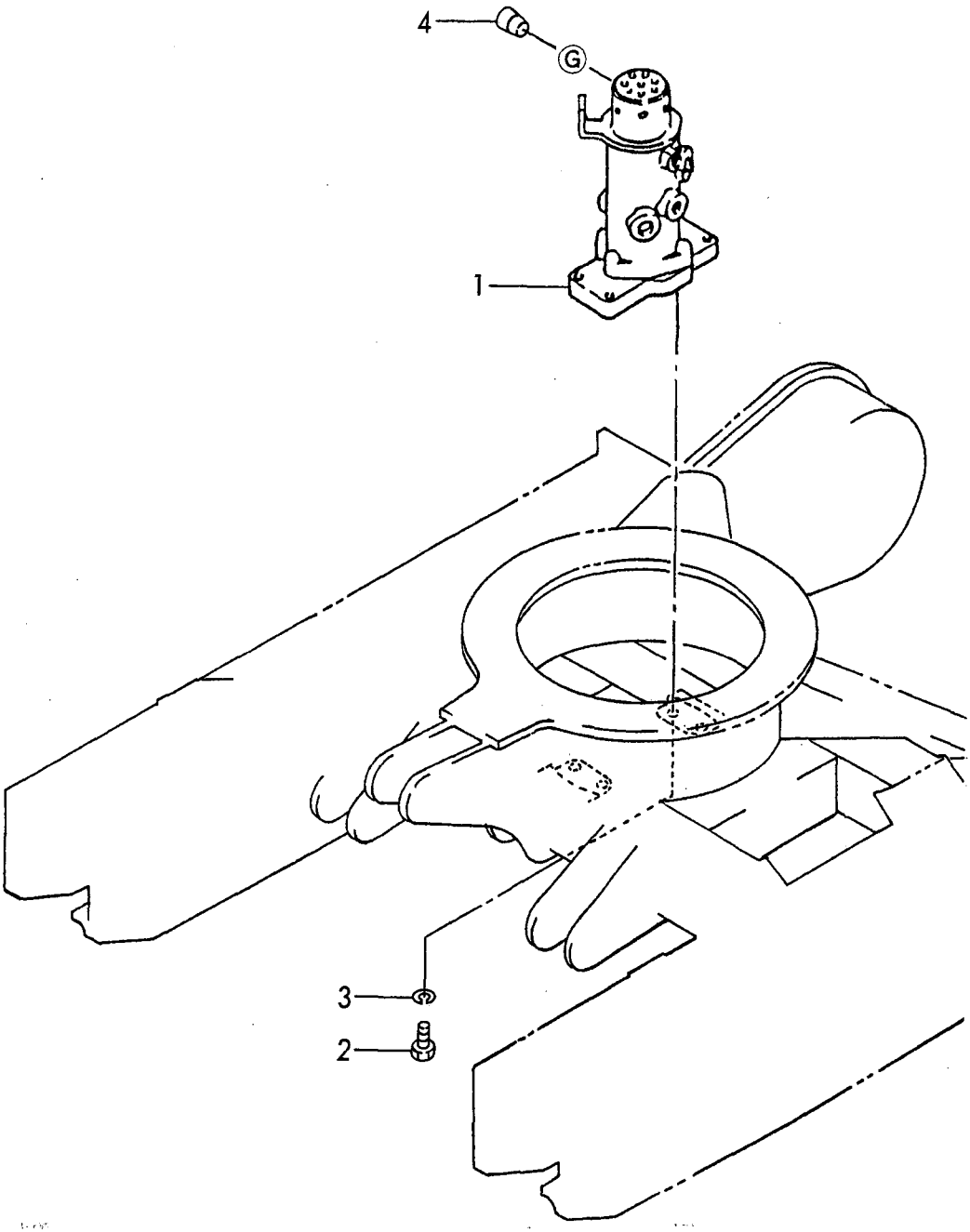

https://truckmanualshub.com/

```
1,1,,172194-45410,,"BRACKET, VALVE L",1,1,,,,,,,,,,,,,,,,
2,1,,172194-45420,,"BRACKET, VALVE R",1,1,,,,,,,,,,,,,,,,
3,1,,26116-100252,,"BOLT M10X 25 PLATED",4,4,,,,,,,,,,,,,,,,,,
4,1,,26716-100002,,"NUT M10",2,2,,,,,,,,,,,,,,,,
5,1,,22217-100000,,"SPRING WASHER 10",4,4,,,,,,,,,,,,,,,,
6,1,,172194-74100,,"VALVE ASSY,CONTROL",1,1,,,,,,,,,,,,,,,,
7,1,,26013-080162,,"BOLT W/WASHER M8X16",3,3,,,,,,,,,,,,,,,,
```

Fig. 38 コントロールバルブ CONTROL VALVE

https://truckmanualshub.com/

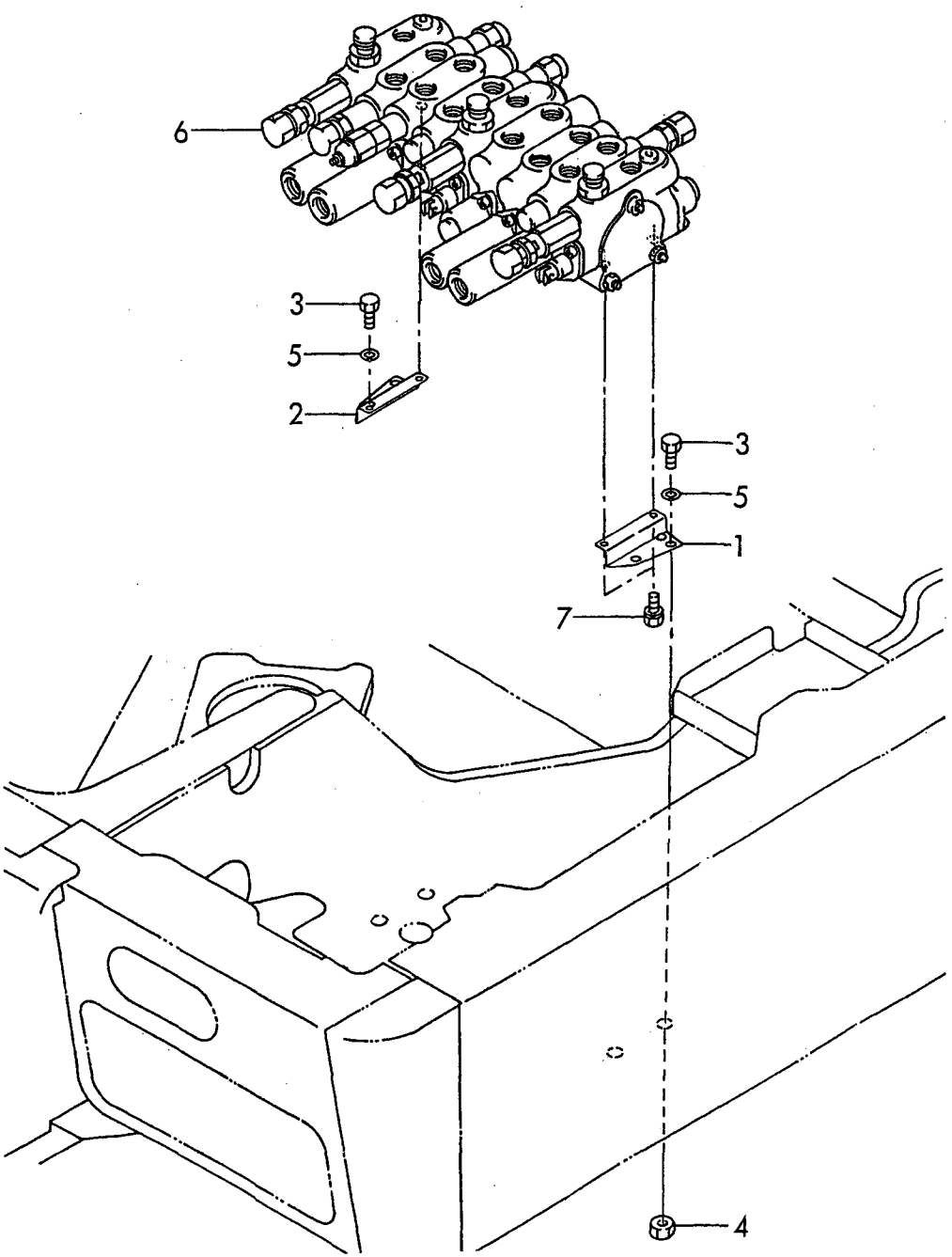

https://truckmanualshub.com/

```
1,1,,172165-74300,,"JOY-STICK L.H.",1,1,,,,,,,,,,,,,,,,,,
2,1,,26013-060252,,"BOLT M 6X 25",4,4,,,,,,,,,,,,,,,,,,
```

Fig. 39 リモコンバルブ(左) REMOTE CONTROL VALVE(LEFT)

https://truckmanualshub.com/

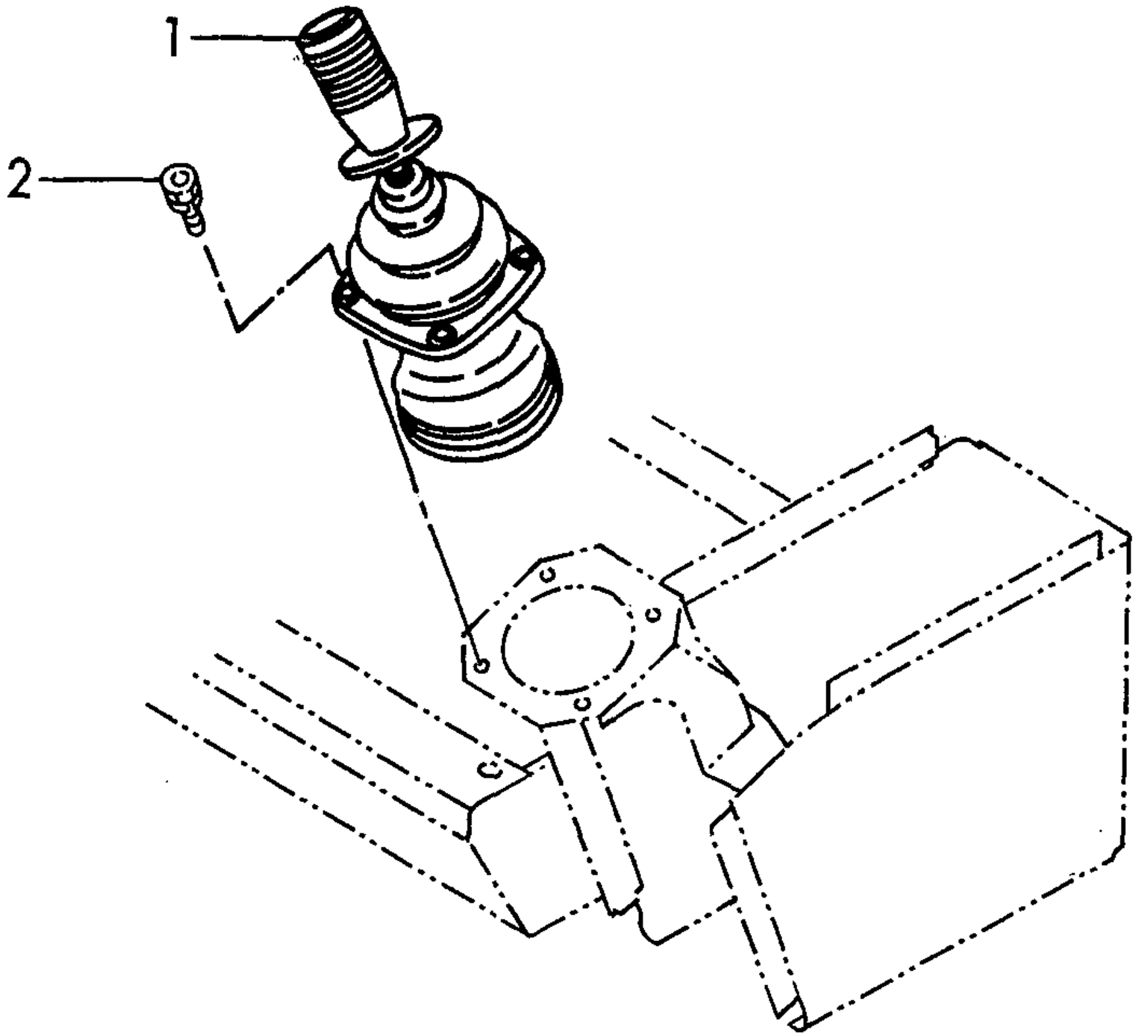

https://truckmanualshub.com/

```
1,1,,172165-74310,,"JOY-STICK R.H.",1,1,,,,,,,,,,,,,,,,,,
2,1,,26013-060252,,"BOLT M 6X 25",4,4,,,,,,,,,,,,,,,,,,
```

Fig. 40 リモコンバルブ(右) REMOTO CONTROL VALVE(RIGHT)

https://truckmanualshub.com/

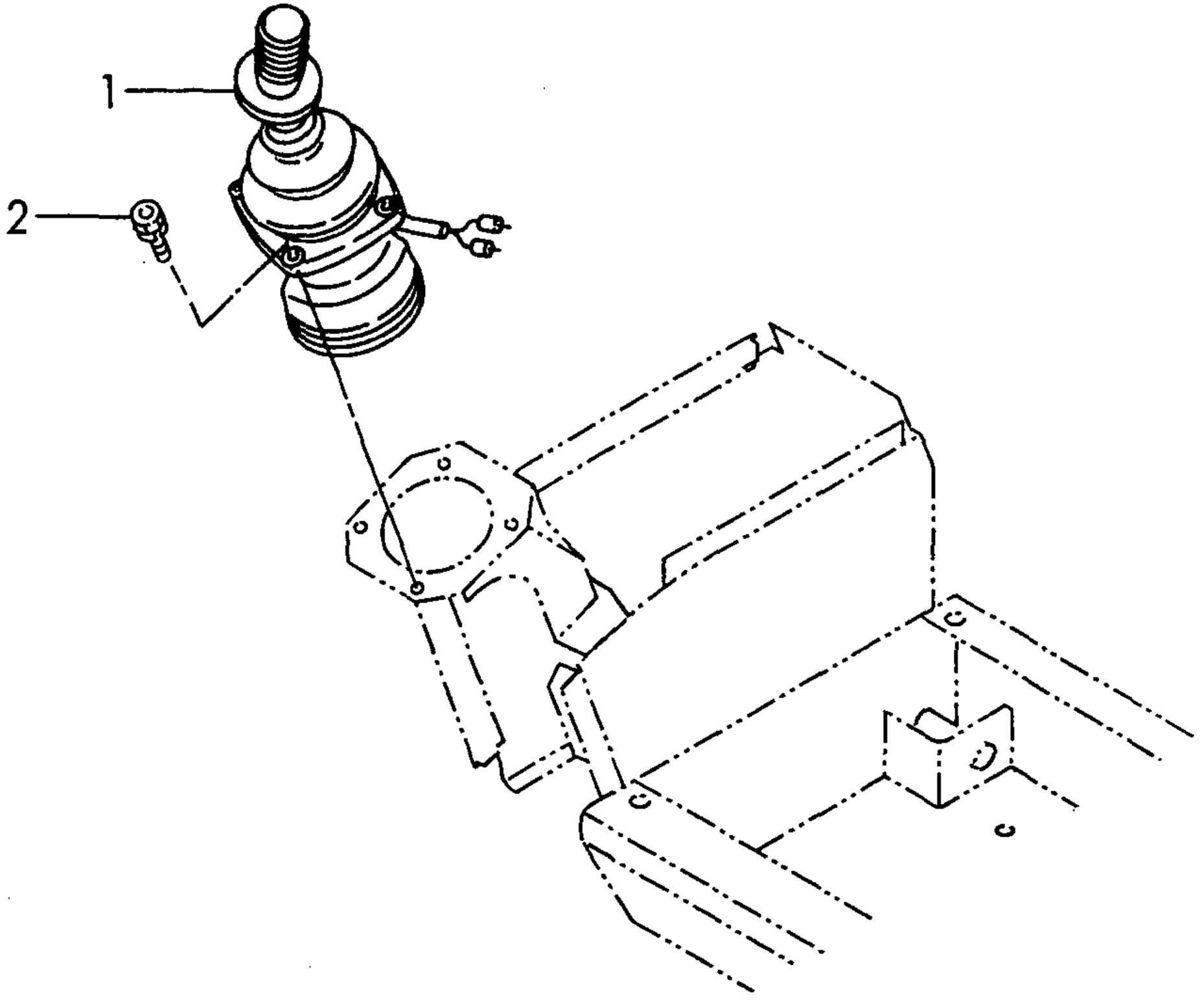

https://truckmanualshub.com/

```
1,1,,172194-74360,,"VALVE ASSY,LO-HI",1,1,,,,,,,,,,,,,,,,,
2,1,,26013-080162,,"BOLT W/WASHER M8X16",2,2,,,,,,,,,,,,,,,,,
```

Fig. 41 ローハイバルブ LOW-HIGH VALVE

https://truckmanualshub.com/

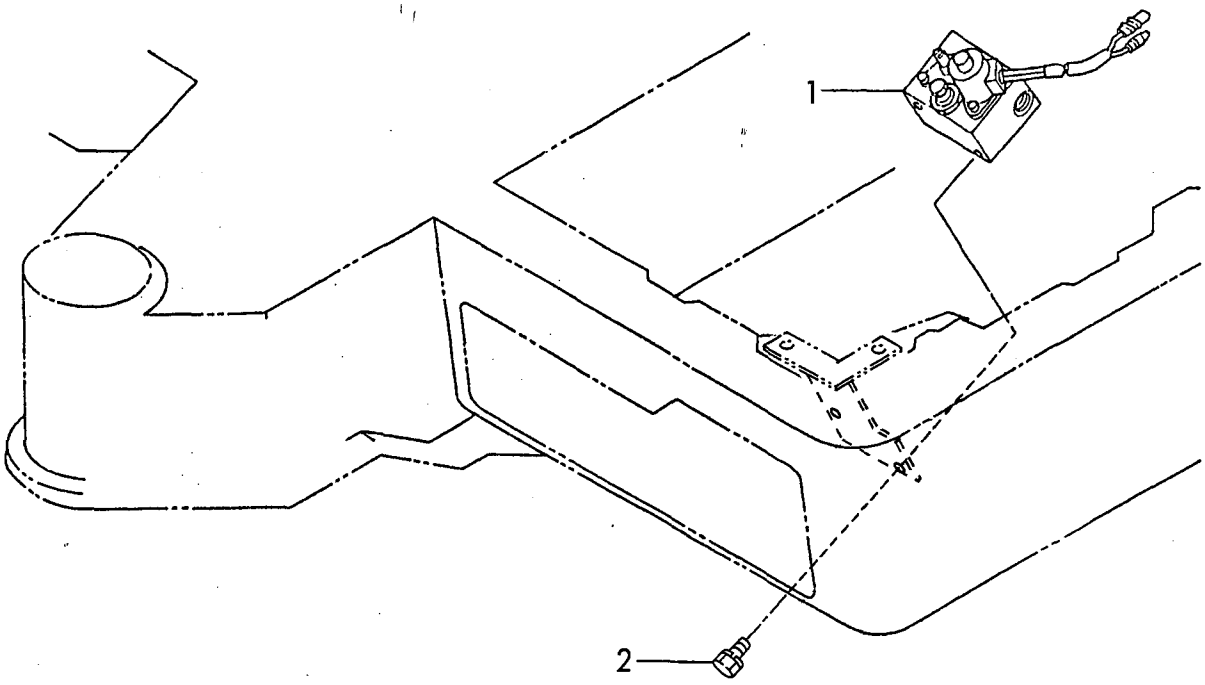

https://truckmanualshub.com/

```
1,1,,772194-75100,,"RESERVOIR ASSY",1,1,,,,,,,,,,,,,,,,
3,2,,172179-75410,,"TUBE ASSY,SUCTION",1,1,,,,,,,,,,,,,,,,
4,2,,172159-75430,,"COVER, INTAKE",1,1,,,,,,,,,,,,,,,,
5,2,,172174-75450,,PLATE,1,1,,,,,,,,,,,,,,,,
6,2,,172165-75460,,GASKET,1,1,,,,,,,,,,,,,,,,
7,2,,172194-75480,,ELEMENT,1,1,,,,,,,,,,,,,,,,
8,2,,24311-000380,,"O-RING 1A P-38.0",1,1,,,,,,,,,,,,,,,,
9,2,,172159-75550,,MAGNET,1,1,,,,,,,,,,,,,,,,
10,2,,172122-75600,,"GAUGE, OIL LEVEL",1,1,,,,,,,,,,,,,,,,
11,3,,172122-75620,,BOLT,2,2,,,,,,,,,,,,,,,,
12,3,,172122-75630,,GASKET,4,4,,,,,,,,,,,,,,,,
13,2,,172159-75720,,"PLUG 24, DRAIN",1,1,,,,,,,,,,,,,,,,
14,2,,22134-240000,,"WASHER 24",1,1,,,,,,,,,,,,,,,,
15,2,,22417-200160,,"COTTER PIN 2.0X16",1,1,,,,,,,,,,,,,,,,
16,2,,26013-080202,,"BOLT W/WASHER M8X20",3,3,,,,,,,,,,,,,,,,
17,2,,24321-001050,,"O-RING 1A G-105.0",2,2,,,,,,,,,,,,,,,,
18,2,,26013-100202,,"BOLT W/WASHER M10X20",4,4,,,,,,,,,,,,,,,,
19,2,,172194-73700,,"FILTER ASSY,RETURN",1,1,,,,,,,,,,,,,,,,
20,2,,172194-73730,,"FILTER,SUCTION",1,1,,,,,,,,,,,,,,,,
21,2,,26022-050102,,"SCREW M 5X 10",3,3,,,,,,,,,,,,,,,,
22,2,,172159-75850,,"PLUG, OIL FEED",1,1,,,,,,,,,,,,,,,,
23,1,,172174-75490,,HOSE,1,1,,,,,,,,,,,,,,,,
24,1,,23080-010000,,"CLAMP 10",1,1,,,,,,,,,,,,,,,,
25,1,,26013-120302,,"BOLT W/WASHER M12X30",2,2,,,,,,,,,,,,,,,,
26,1,,26013-120302,,"BOLT W/WASHER M12X30",2,2,,,,,,,,,,,,,,,,
```

Fig. 42 作動油タンク HYD. OIL TANK

https://truckmanualshub.com/

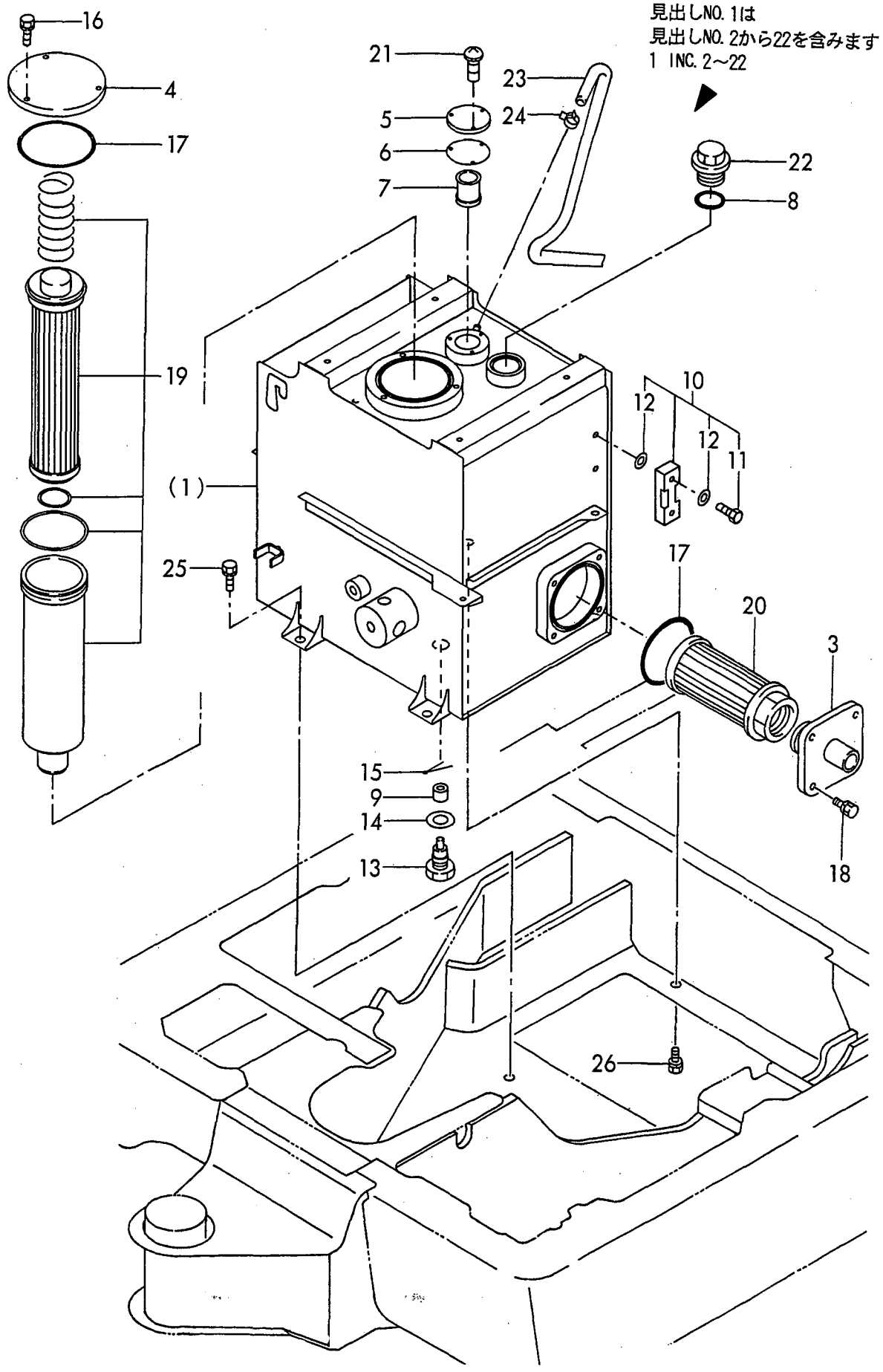

https://truckmanualshub.com/

Fig. 43 油圧配管(ﾀﾝｸ～ﾎﾟﾝﾌﾟ～ﾊﾞﾙﾌﾞ) HYD. OIL PIPING(TANK～PUMP～VALVE)

https://truckmanualshub.com/

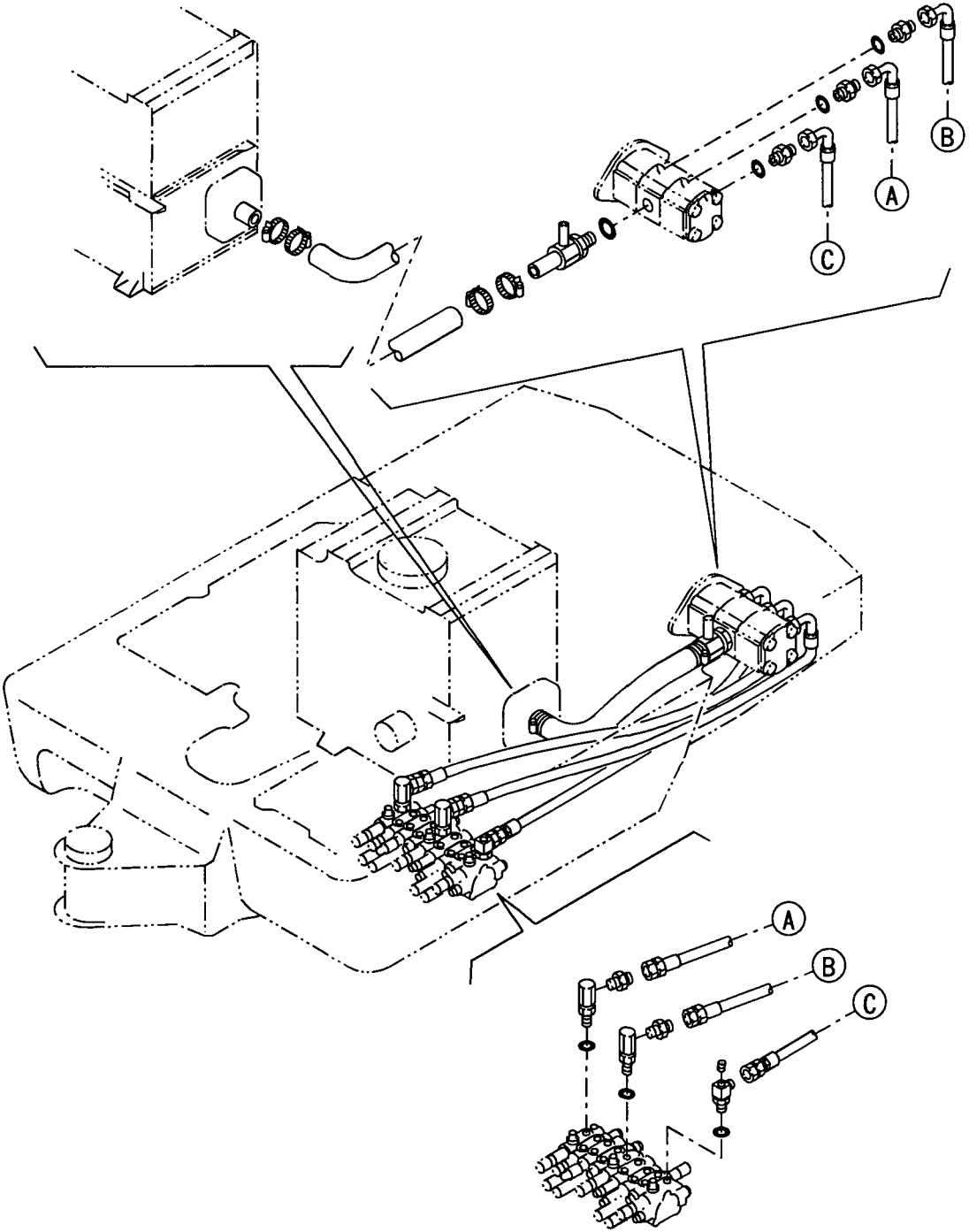

https://truckmanualshub.com/

Fig. 44 油圧配管(バルブ～モータ,ブーム) HYD. OIL PIPING(VALVE～MOTOR, BOOM)

https://truckmanualshub.com/

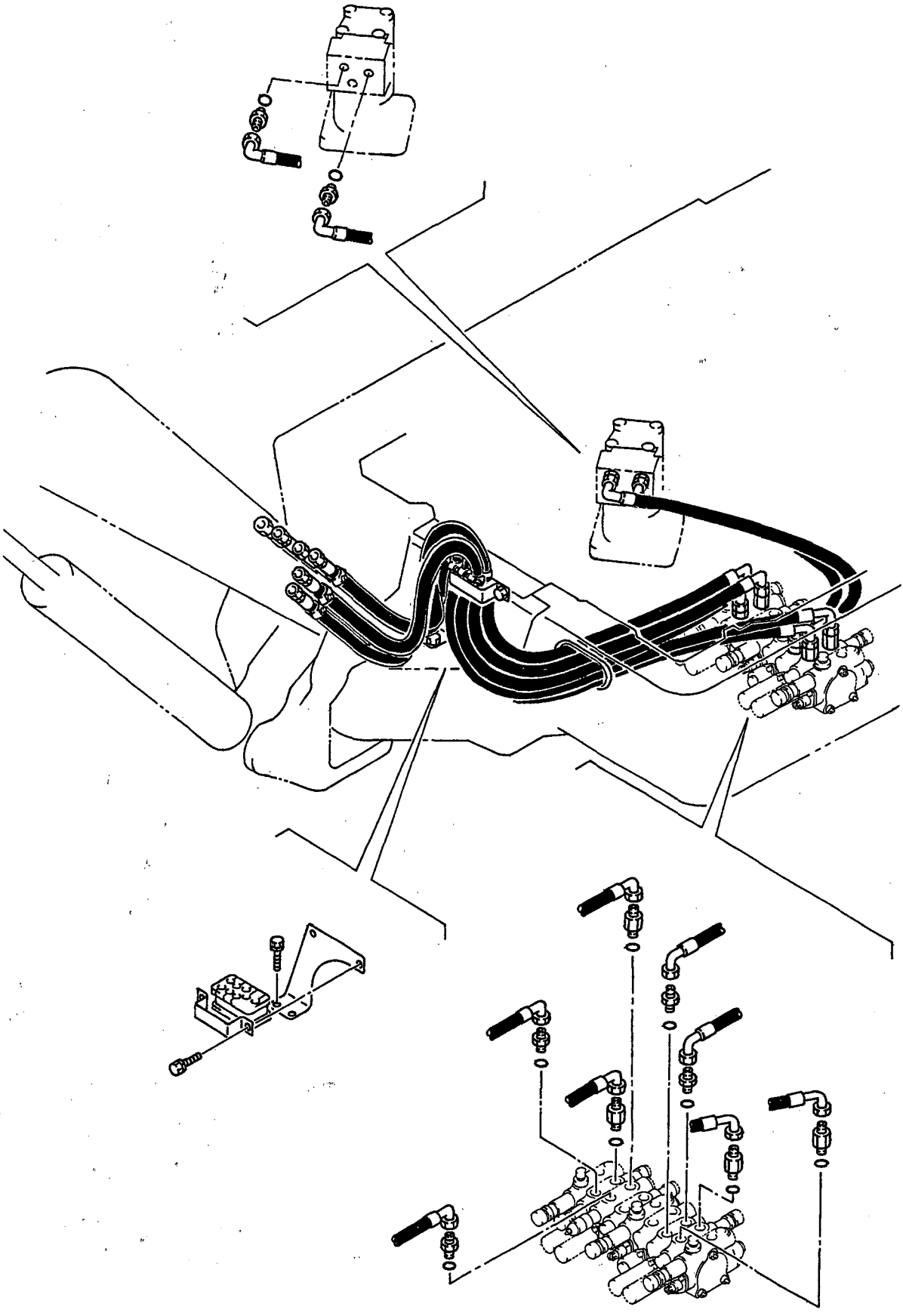

https://truckmanualshub.com/

Fig. 45 油圧配管(ﾊﾞﾙﾌﾞ～ｽｲﾍﾞﾙ,ｽｲﾝｸﾞ) HYD. OIL PIPING(VALVE～SWIVEL, SWING)

https://truckmanualshub.com/

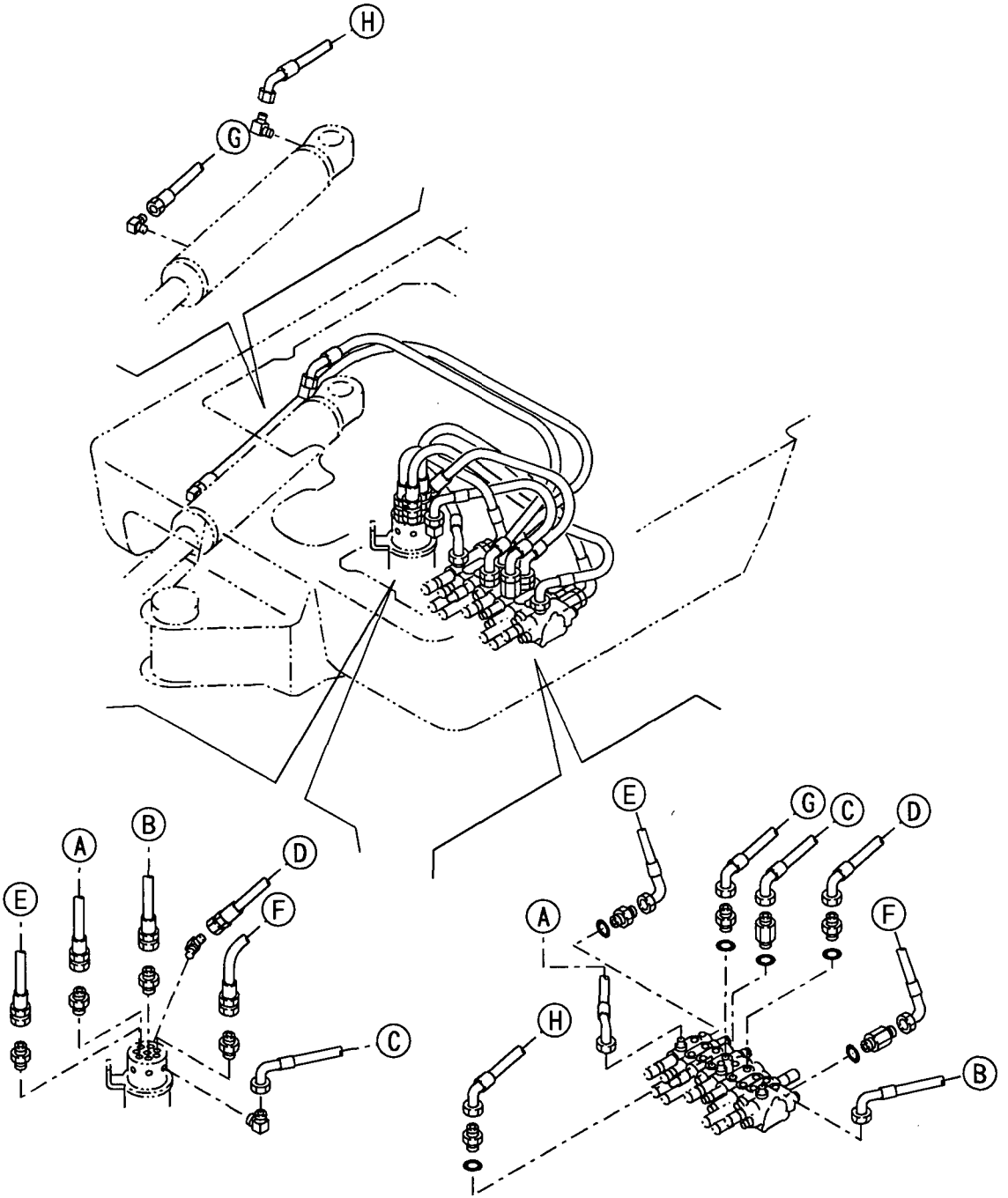

https://truckmanualshub.com/

Fig. 46 油圧配管(リターン) HYD. OIL PIPING(RETURN)

https://truckmanualshub.com/

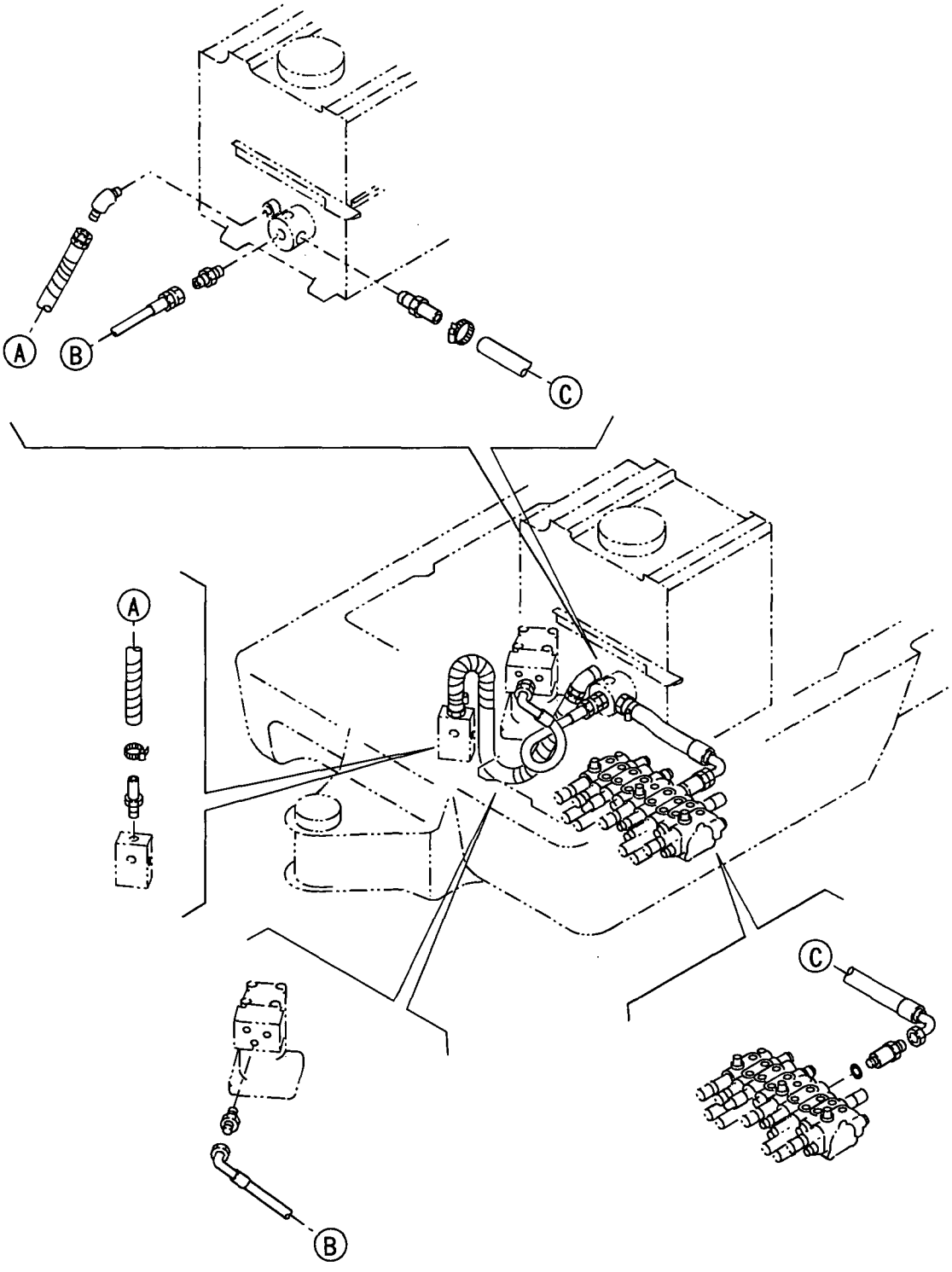

https://truckmanualshub.com/

Fig. 47 油圧配管(トラックフレーム) HYD. OIL PIPING(TRACK FRAME)

https://truckmanualshub.com/

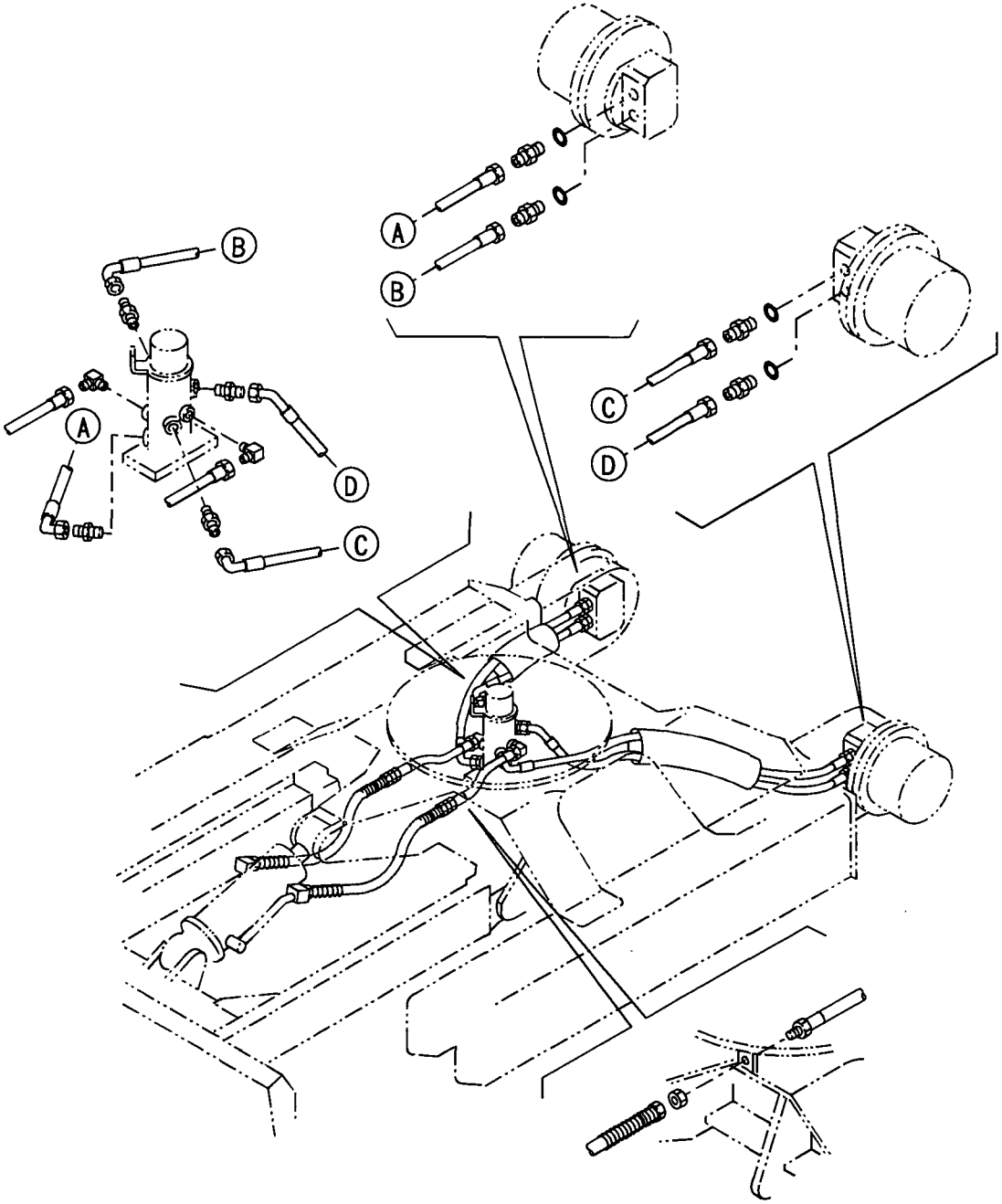

https://truckmanualshub.com/

Fig. 48 油圧配管(ブーム) HYD. OIL PIPING(BOOM)

https://truckmanualshub.com/

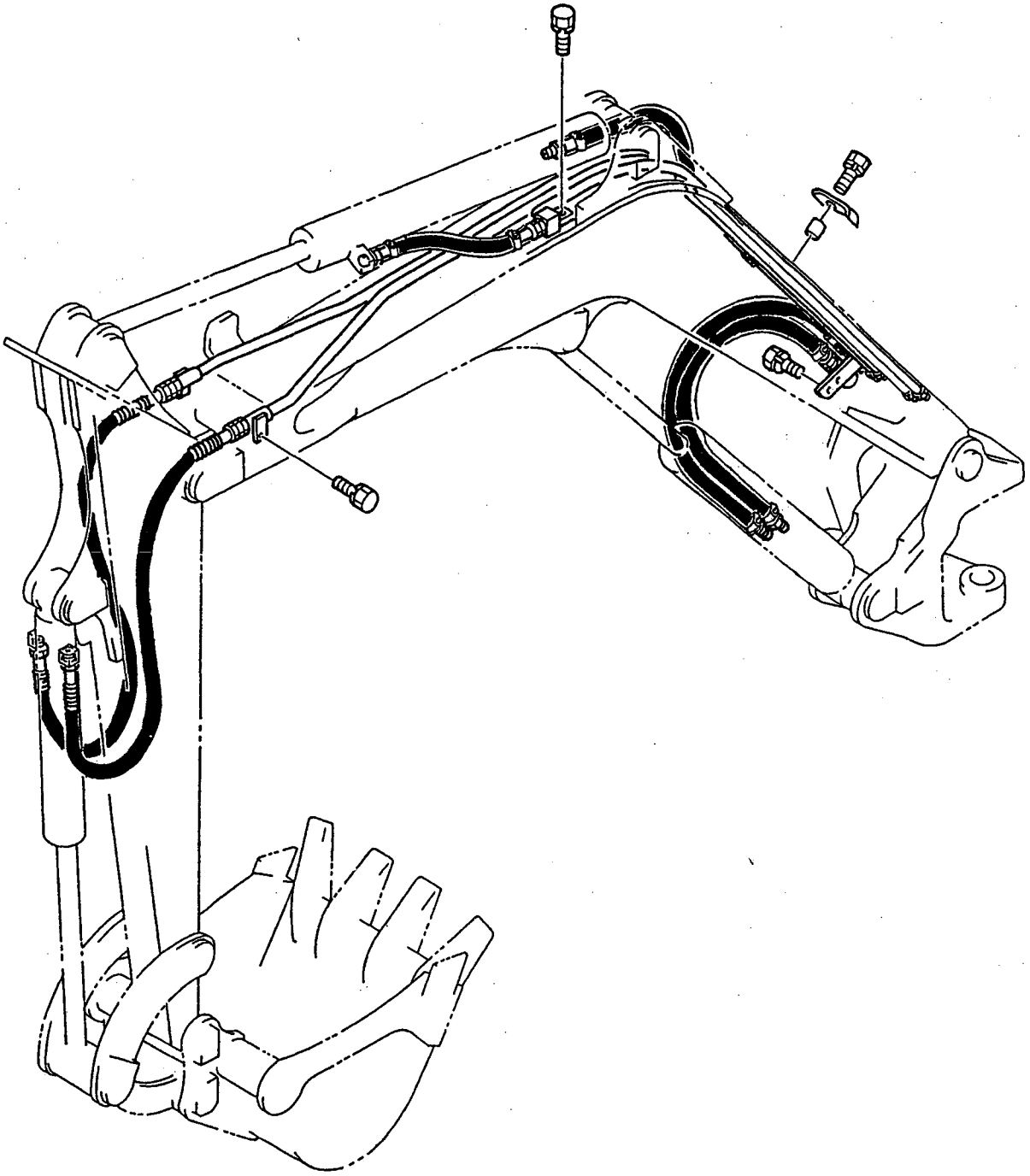

https://truckmanualshub.com/

Fig. 49 油圧配管(3RDﾊﾞﾙﾌﾞ) HYD. OIL PIPING(3RD VALVE)

https://truckmanualshub.com/

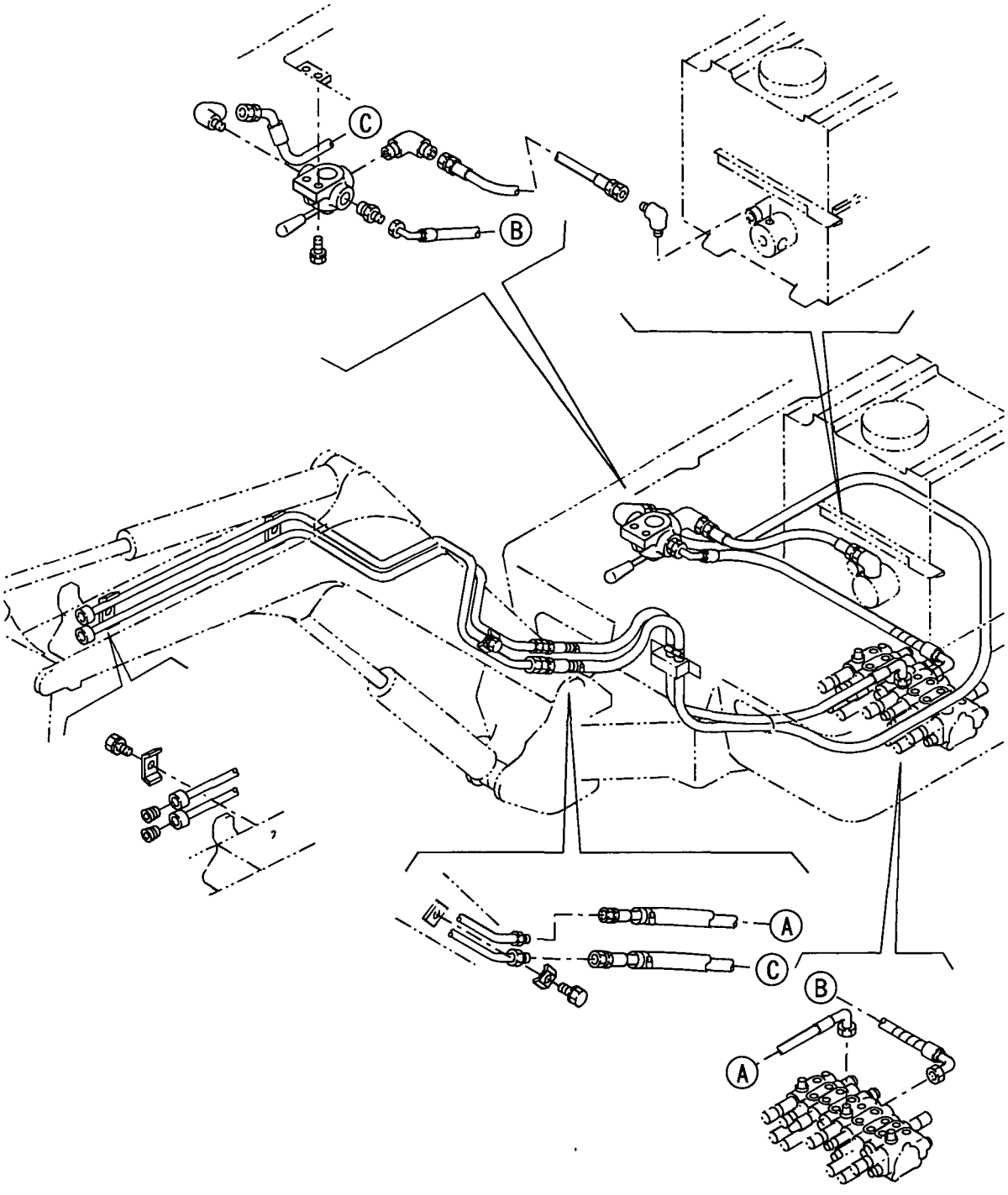

https://truckmanualshub.com/

Fig. 50 油圧配管(ポンプ，カットオフバルブ，リターン) HYD. OIL PIPING(PUMP, CUT-OFF VALVE, RETURN)

https://truckmanualshub.com/

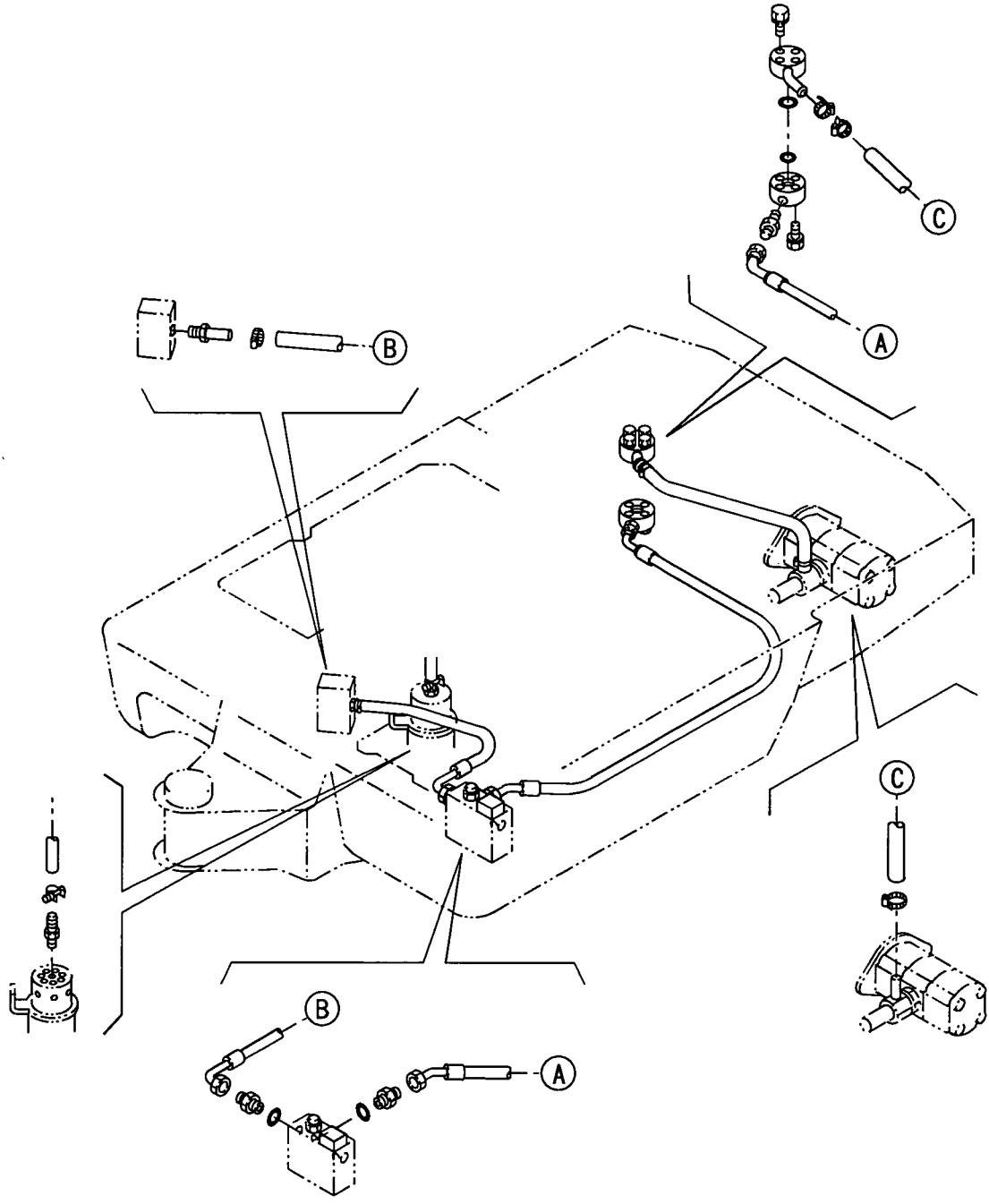

https://truckmanualshub.com/

Fig. 51 油圧配管(ダイレクト) HYD. OIL PIPING(DIRECT)

https://truckmanualshub.com/

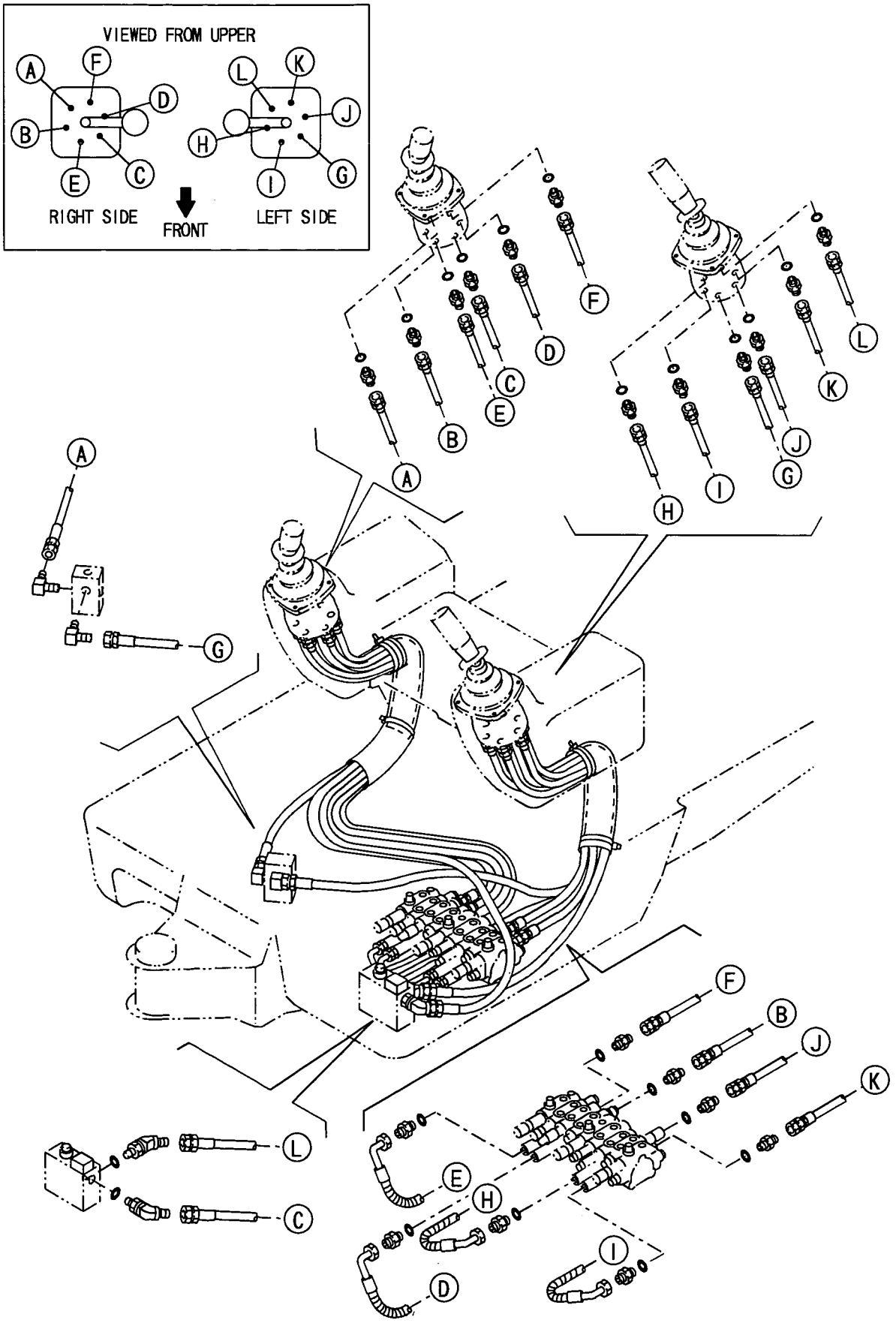

https://truckmanualshub.com/

```
1,1,,172159-76130,,"L-JOINT 1/8",1,1,,,,,,,,,,,,,,,,
2,1,,172159-76140,,"FITTING, GREASE",1,1,,,,,,,,,,,,,,,,
3,1,,172174-77580,,"JOINT 1/8",1,1,,,,,,,,,,,,,,,,
4,1,,172159-77800,,"JOINT, GREASE",4,4,,,,,,,,,,,,,,,,
5,1,,172180-77800,,HOSE,1,1,,,,,,,,,,,,,,,,
6,1,,172180-77810,,HOSE,1,1,,,,,,,,,,,,,,,,
7,1,,172180-77820,,HOSE,1,1,,,,,,,,,,,,,,,,
8,1,,24761-020000,,"NIPPLE PT1/8,GREASE",3,3,,,,,,,,,,,,,,,,
```

Fig. 52 遠隔グリーシング GREASING

https://truckmanualshub.com/

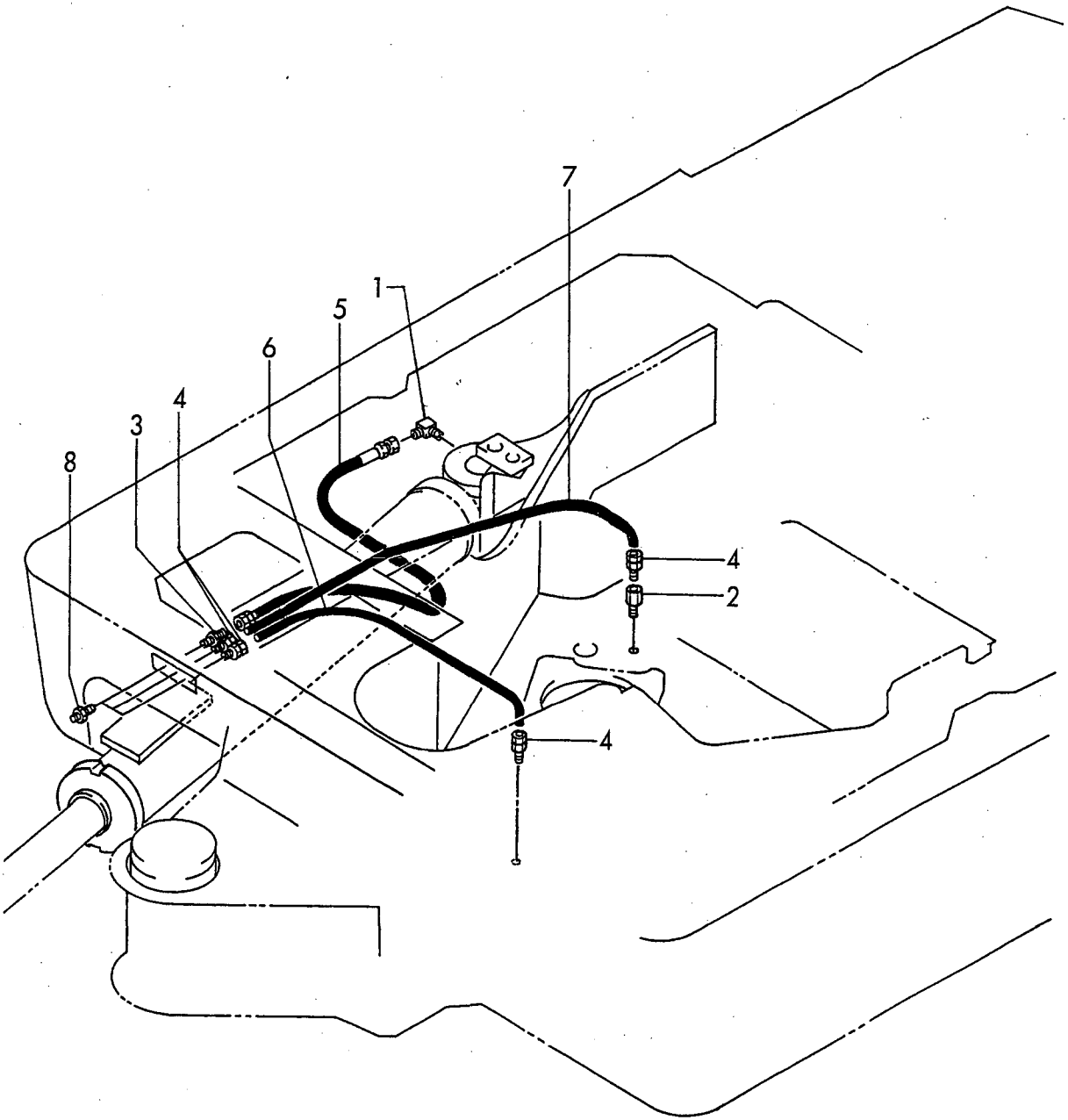

https://truckmanualshub.com/

```
1,1,,172194-81300,,"PIN 35X109A ASSY",1,1,,,,,,,,,,,,,,,,
2,1,,172194-81320,,"PIN 30X143 ASSY",1,1,,,,,,,,,,,,,,,,
3,1,,172194-81340,,"PIN 30X109 ASSY",1,1,,,,,,,,,,,,,,,,
4,1,,172194-81400,,"BOOM ASSY",1,1,,,,,,,,,,,,,,,,
5,2,,172171-81280,,"SEAL 35X45X4",2,2,,,,,,,,,,,,,,,,
6,2,,172159-81480,,"BUSH 38 45, PIN",2,2,,,,,,,,,,,,,,,,
7,1,,172159-81500,,"SHIM 35",3,3,,,,,,,,,,,,,,,,
8,1,,172159-81530,,"SHIM 30, PIN ADJUST",2,2,,,,,,,,,,,,,,,,
9,1,,24761-020000,,"NIPPLE PT1/8,GREASE",1,1,,,,,,,,,,,,,,,,
10,1,,172174-82460,,"COTTER PIN 8.0X45",3,3,,,,,,,,,,,,,,,,
11,1,,22157-100000,,"WASHER 10",3,3,,,,,,,,,,,,,,,,
12,1,,26116-100302,,"BOLT M10X 30 PLATED",3,3,,,,,,,,,,,,,,,,
13,1,,22217-100000,,"SPRING WASHER 10",3,3,,,,,,,,,,,,,,,,
14,1,,172159-81500,,"SHIM 35",2,2,,,,,,,,,,,,,,,,
15,1,,172180-81700,,"SHIM 50X80X0.8",1,1,,,,,,,,,,,,,,,,
16,1,,172180-81710,,"SHIM 50X80X0.5",1,1,,,,,,,,,,,,,,,,
17,1,,172194-83100,,"BRACKET ASSY,BOOM",1,1,,,,,,,,,,,,,,,,
19,2,,172180-83120,,"BUSH 50X30",2,2,,,,,,,,,,,,,,,,
20,1,,172159-83110,,PIN,1,1,,,,,,,,,,,,,,,,
21,1,,172194-83130,,"PIN 35X208 ASSY",1,1,,,,,,,,,,,,,,,,
22,1,,172194-83150,,"PIN 35X109 B",1,1,,,,,,,,,,,,,,,,
23,1,,172159-83170,,PIN,1,1,,,,,,,,,,,,,,,,
24,1,,172159-83180,,PIN,1,1,,,,,,,,,,,,,,,,
25,1,,172159-83190,,"PLATE, LOCK",1,1,,,,,,,,,,,,,,,,
26,1,,172159-83210,,"PLATE (C), LOCK",2,2,,,,,,,,,,,,,,,,
27,1,,172159-83220,,"SHIM SET, PIN 38",2,2,,,,,,,,,,,,,,,,
28,1,,24761-020000,,"NIPPLE PT1/8,GREASE",1,1,,,,,,,,,,,,,,,,
29,1,,26013-100202,,"BOLT W/WASHER M10X20",2,2,,,,,,,,,,,,,,,,
30,1,,26013-100252,,"BOLT W/WASHER M10X25",4,4,,,,,,,,,,,,,,,,
31,1,,172174-82460,,"COTTER PIN 8.0X45",2,2,,,,,,,,,,,,,,,,
32,1,,22157-100000,,"WASHER 10",2,2,,,,,,,,,,,,,,,,
33,1,,26116-100302,,"BOLT M10X 30 PLATED",2,2,,,,,,,,,,,,,,,,
34,1,,22217-100000,,"SPRING WASHER 10",2,2,,,,,,,,,,,,,,,,
```

Fig. 53 ブーム & ブームブラケット BOOM & BOOM BRACKET

https://truckmanualshub.com/

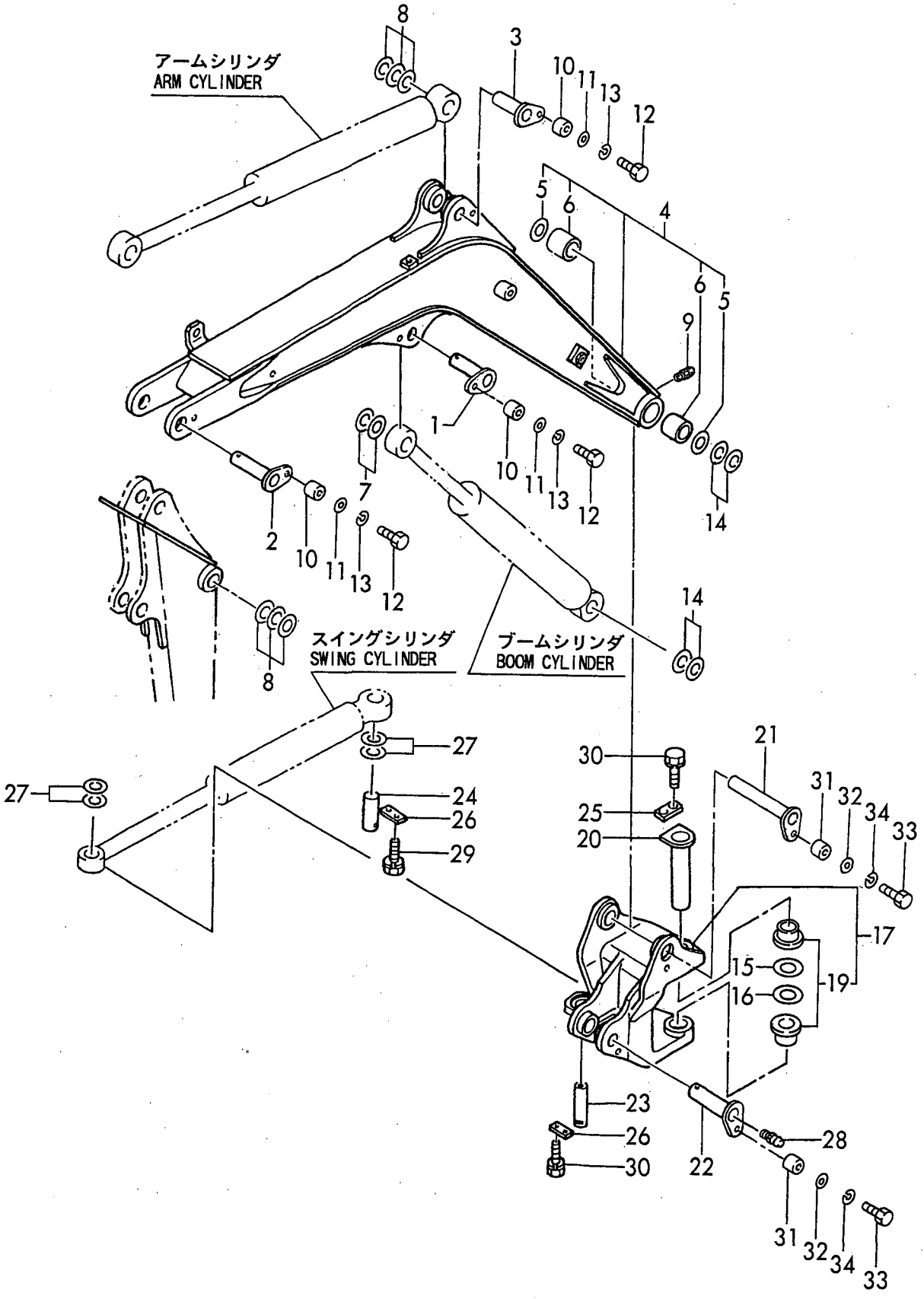

https://truckmanualshub.com/

```
1,1,,172159-81530,,"SHIM 30, PIN ADJUST",2,2,,,,,,,,,,,,,,,,,
2,1,,172194-82400,,"ARM ASSY",1,1,,,,,,,,,,,,,,,,,
3,2,,172183-72290,,"SEAL 38X48X 4, DUST",6,6,,,,,,,,,,,,,,,,,
4,2,,172180-82200,,"BUSH 30X45",2,2,,,,,,,,,,,,,,,,,
5,2,,172159-82270,,"BUSH 30X45, PIN",4,4,,,,,,,,,,,,,,,,,
6,1,,172194-94260,,"PIN 30-71 A ASSY",2,2,,,,,,,,,,,,,,,,,
7,1,,24761-040000,,"NIPPLE B,GREASE",1,1,,,,,,,,,,,,,,,,,
8,1,,172174-82460,,"COTTER PIN 8.0X45",2,2,,,,,,,,,,,,,,,,,
9,1,,22157-100000,,"WASHER 10",2,2,,,,,,,,,,,,,,,,,
10,1,,26116-100302,,"BOLT M10X 30 PLATED",2,2,,,,,,,,,,,,,,,,,
11,1,,172159-84401,,"LINK,BUCKET",1,1,,,,,,,,,,,,,,,,,
12,2,,172183-72290,,"SEAL 38X48X 4, DUST",6,6,,,,,,,,,,,,,,,,,
13,2,,172159-82270,,"BUSH 30X45, PIN",2,2,,,,,,,,,,,,,,,,,
14,2,,172159-84451,,"BUSH 30-21",2,2,,,,,,,,,,,,,,,,,
15,1,,172159-84500,,"ARM(L), BUCKET",1,1,,,,,,,,,,,,,,,,,
16,1,,172159-84510,,"ARM(R), BUCKET",1,1,,,,,,,,,,,,,,,,,
17,1,,000000000000,,"PIN KIT, ARM",2,2,,,,,,,,,,,,,,,,,
18,2,,172159-81530,,"SHIM 30, PIN ADJUST",4,4,,,,,,,,,,,,,,,,,
19,2,,172194-83200,,"PIN 30-154 ASSY",2,2,,,,,,,,,,,,,,,,,
20,2,,24761-020000,,"NIPPLE PT1/8,GREASE",2,2,,,,,,,,,,,,,,,,,
21,2,,172137-81380,,"NUT M16",2,2,,,,,,,,,,,,,,,,,
22,1,,24761-020000,,"NIPPLE PT1/8,GREASE",2,2,,,,,,,,,,,,,,,,,
23,1,,000000000000,,"PIN KIT, BUCKET",2,2,,,,,,,,,,,,,,,,,
24,2,,172159-81530,,"SHIM 30, PIN ADJUST",2,2,,,,,,,,,,,,,,,,,
25,2,,172194-86250,,"PIN 30-154 ASSY",2,2,,,,,,,,,,,,,,,,,
26,2,,24761-020000,,"NIPPLE PT1/8,GREASE",2,2,,,,,,,,,,,,,,,,,
27,2,,172194-83220,,COLLAR,2,2,,,,,,,,,,,,,,,,,
28,2,,26116-100602,,"BOLT M10X 60 PLATED",2,2,,,,,,,,,,,,,,,,,
29,2,,26716-100002,,"NUT M10",4,4,,,,,,,,,,,,,,,,,
30,1,,172180-82170,,"O-RING 56X6",2,2,,,,,,,,,,,,,,,,,
31,1,,22217-100000,,"SPRING WASHER 10",2,2,,,,,,,,,,,,,,,,,
```

Fig. 54 アーム & バケットリンク ARM & BUCKET LINK

https://truckmanualshub.com/

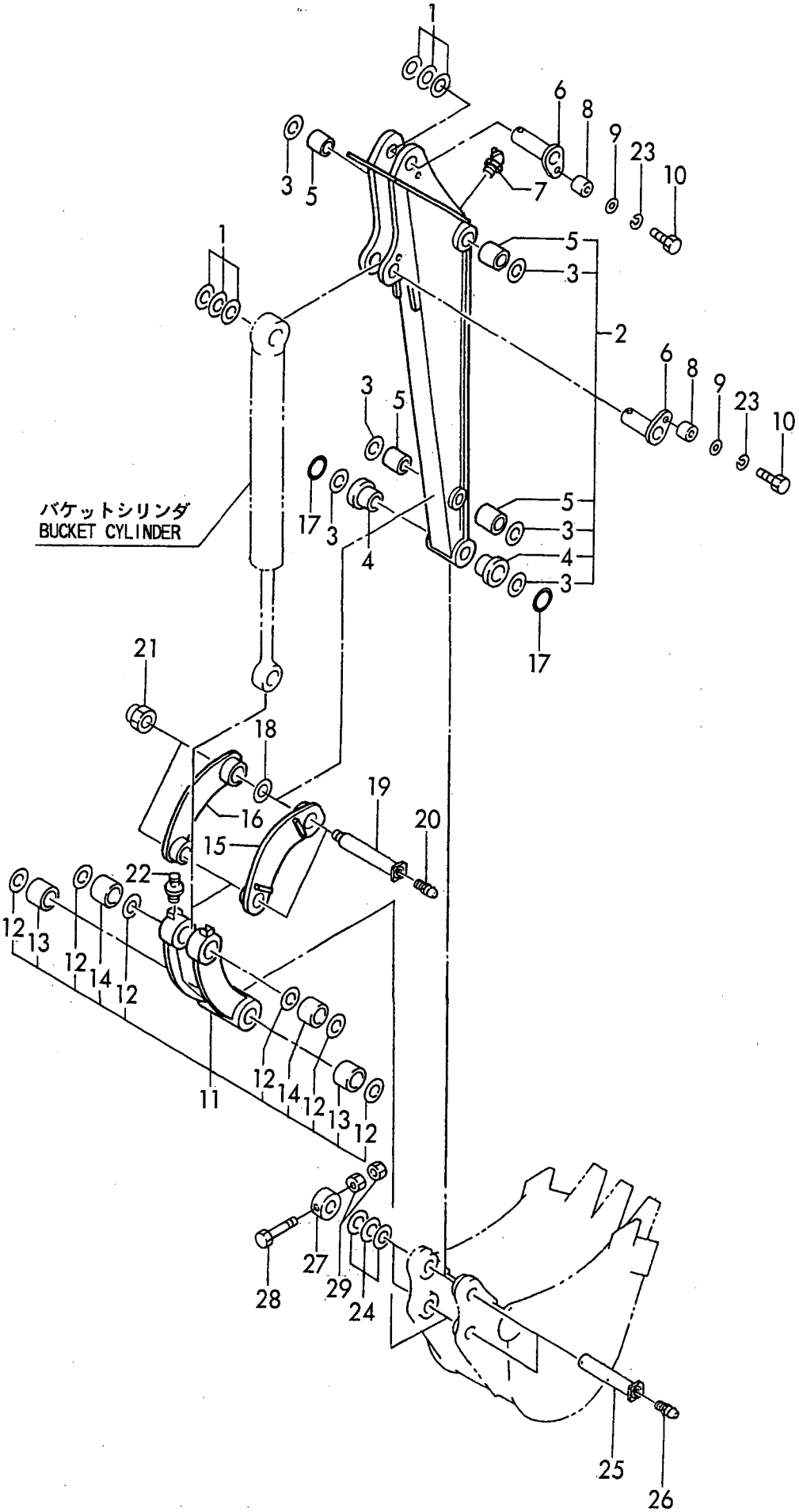

https://truckmanualshub.com/

```
1,1,,172159-81530,,"SHIM 30, PIN ADJUST",2,2,,,,,,,,,,,,,,,,,
2,1,,172194-94100,,"BLADE ASSY, 1000",1,1,,,,,,,,,,,,,,,,,
3,1,,172194-94260,,"PIN 30-71 A ASSY",2,2,,,,,,,,,,,,,,,,,
4,1,,172194-94270,,"PIN 30-71 B ASSY",2,2,,,,,,,,,,,,,,,,,
5,1,,24761-020000,,"NIPPLE PT1/8,GREASE",2,2,,,,,,,,,,,,,,,,,,
6,1,,24761-040000,,"NIPPLE B,GREASE",2,2,,,,,,,,,,,,,,,,,
7,1,,172174-82460,,"COTTER PIN 8.0X45",2,2,,,,,,,,,,,,,,,,,
8,1,,22157-100000,,"WASHER 10",2,2,,,,,,,,,,,,,,,,,
9,1,,26116-100302,,"BOLT M10X 30 PLATED",2,2,,,,,,,,,,,,,,,,,
10,1,,22217-100000,,"SPRING WASHER 10",2,2,,,,,,,,,,,,,,,,,
```

Fig. 55 ブレード BLADE

https://truckmanualshub.com/

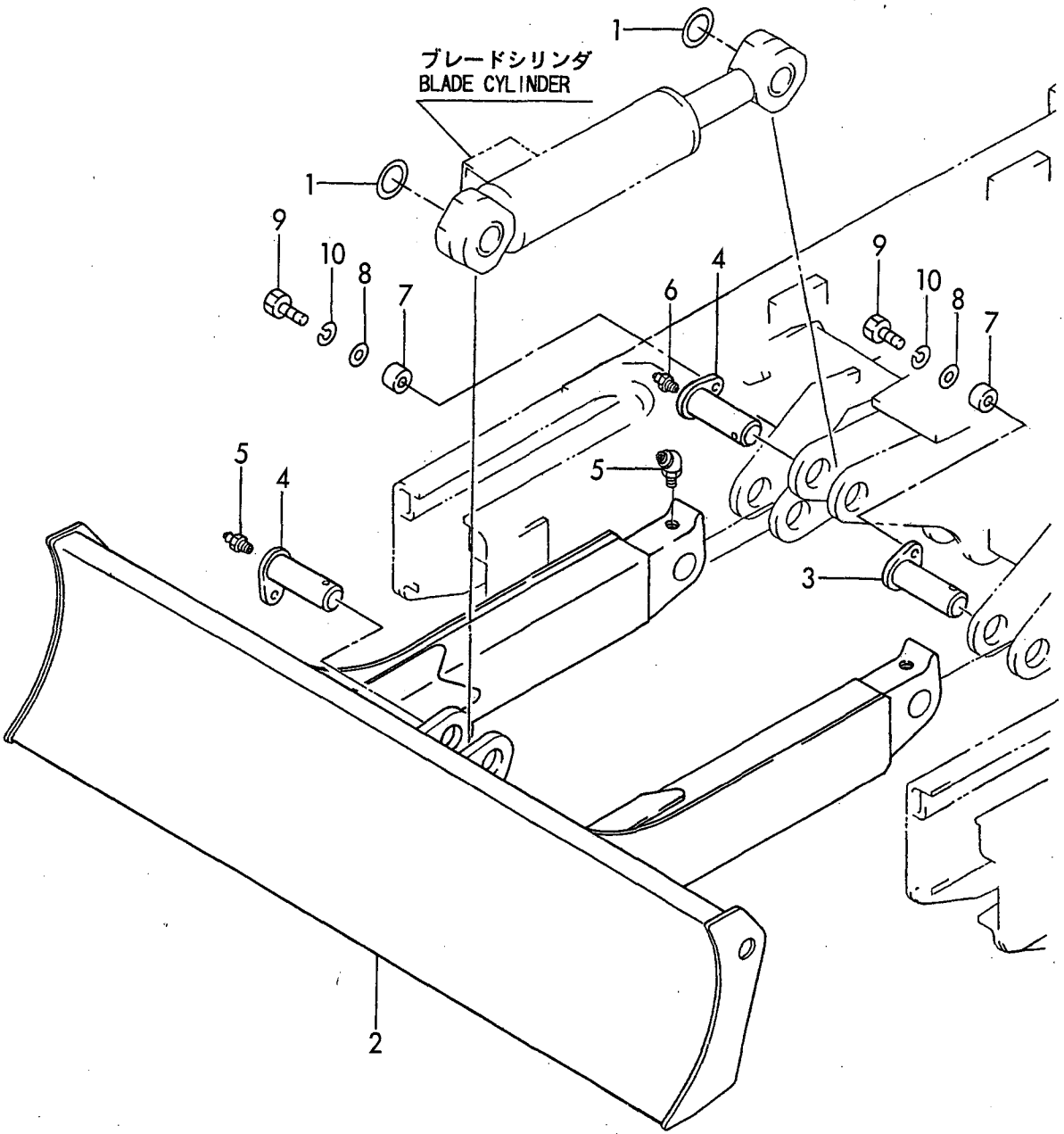

https://truckmanualshub.com/

```
Y00S3620,"Construction equipment",Excavator,B
[Info]
PcNo=Y00S3620
PcName=B15(AY)(B5780)
JpnUse=0
JpnSec1=
JpnSec2=
JpnSec3=
JpnPreface=0
EngUse=1
EngSec1=CONSTRUCTION
EngSec2=EXCAVATOR (B)
EngSec3=B
EngPreface=1
```

https://truckmanualshub.com/

```
0,Y00S3620
1,001,,"VEHICLE B15(AY)"
2,1,,LABEL(CABIN,"B15 C(R)AY","B15 P(R)AY",,
2,2,,LABEL(CANOPY,"B15 C(R)AY","B15 P(R)AY",,
2,3,,"AIR CLEANER & SILENCER","B15 C(R)AY","B15 P(R)AY",,
2,4,,ACCELERATOR,"B15 C(R)AY","B15 P(R)AY",,
2,5,,"ENGINE MOUNT","B15 C(R)AY","B15 P(R)AY",,
2,6,,"RADIATOR & MOUNT","B15 C(R)AY","B15 P(R)AY",,
2,7,,"FUEL TANK & FUEL LINE","B15 C(R)AY","B15 P(R)AY",,
2,8,,BATTERY,"B15 C(R)AY","B15 P(R)AY",,
2,9,,"ELECTRIC PART(WIRING","B15 C(R)AY","B15 P(R)AY",,
2,10,,"ELECTRIC PART(EQUIPMENT:CABIN,","B15 C(R)AY","B15 P(R)AY",,
2,11,,"ELECTRIC PART(CABIN","B15 C(R)AY","B15 P(R)AY",,
2,12,,"WORK LAMP","B15 C(R)AY","B15 P(R)AY",,
2,13,,HEATER,"B15 C(R)AY","B15 P(R)AY",,
2,14,,"ROLLER & ADJUST","B15 C(R)AY","B15 P(R)AY",,
2,15,,CRAWLER,"B15 C(R)AY","B15 P(R)AY",,
2,16,,"CONTROL EQUIPMENT(LEVER & STAN","B15 C(R)AY","B15 P(R)AY",,
2,17,,"CONTROL EQUIPMENT(DRIVE","B15 C(R)AY","B15 P(R)AY",,
2,18,,"CONTROL EQUIPMENT(SWING","B15 C(R)AY","B15 P(R)AY",,
2,19,,"CONTROL EQUIPMENT(BLADE","B15 C(R)AY","B15 P(R)AY",,
2,20,,"CONTROL EQUIPMENT(CUT OFF LEVE","B15 C(R)AY","B15 P(R)AY",,
2,21,,"CONTROL EQUIPMENT(P.T.O.","B15 C(R)AY","B15 P(R)AY",,
2,22,,"FRAME & TURNING BEARING","B15 C(R)AY","B15 P(R)AY",,
2,23,,"FRAME COVER(1)","B15 C(R)AY","B15 P(R)AY",,
2,24,,"FRAME COVER(2)","B15 C(R)AY","B15 P(R)AY",,
2,25,,"STEP & TURNING LOCK","B15 C(R)AY","B15 P(R)AY",,
2,26,,"INSTRUMENT PANEL & SEAT MOUNT","B15 C(R)AY","B15 P(R)AY",,
2,27,,BONNET,"B15 C(R)AY","B15 P(R)AY",,
2,28,,CANOPY,"B15 C(R)AY","B15 P(R)AY",,
2,29,,"HYD.OIL PUMP & JOINT","B15 C(R)AY","B15 P(R)AY",,
2,30,,"BOOM CYLINDER","B15 C(R)AY","B15 P(R)AY",,
2,31,,"ARM CYLINDER","B15 C(R)AY","B15 P(R)AY",,
2,32,,"BUCKET CYLINDER","B15 C(R)AY","B15 P(R)AY",,
2,33,,"SWING CYLINDER","B15 C(R)AY","B15 P(R)AY",,
2,34,,"BLADE CYLINDER","B15 C(R)AY","B15 P(R)AY",,
2,35,,"DRIVING MOTOR","B15 C(R)AY","B15 P(R)AY",,
2,36,,"TURNING MOTOR","B15 C(R)AY","B15 P(R)AY",,
2,37,,"SWIVEL JOINT","B15 C(R)AY","B15 P(R)AY",,
2,38,,"CONTROL VALVE","B15 C(R)AY","B15 P(R)AY",,
2,39,,"REMOTE CONTROL VALVE(LEFT","B15 C(R)AY","B15 P(R)AY",,
2,40,,"REMOTE CONTROL VALVE(RIGHT","B15 C(R)AY","B15 P(R)AY",,
2,41,,"LOW-HIGH VALVE","B15 C(R)AY","B15 P(R)AY",,
2,42,,"HYD.OIL TANK","B15 C(R)AY","B15 P(R)AY",,
2,43,,"HYD.OIL PIPING(TANK-PUMP-VALVE","B15 C(R)AY","B15 P(R)AY",,
2,44,,"HYD.OIL PIPING(VALVE-MOTOR,BOO","B15 C(R)AY","B15 P(R)AY",,
2,45,,"HYD.OIL PIPING(VALVE-SWIVEL,SW","B15 C(R)AY","B15 P(R)AY",,
2,46,,"HYD.OIL PIPING(RETURN","B15 C(R)AY","B15 P(R)AY",,
2,47,,"HYD.OIL PIPING(TRACK FRAME","B15 C(R)AY","B15 P(R)AY",,
2,48,,"HYD.OIL PIPING(BOOM","B15 C(R)AY","B15 P(R)AY",,
2,49,,"HYD.OIL PIPING(3RD VALVE","B15 C(R)AY","B15 P(R)AY",,
2,50,,"CONTROL PIPING(PUMP,CUT OFF VA","B15 C(R)AY","B15 P(R)AY",,
2,51,,"HYD.OIL PIPING(DIRECT","B15 C(R)AY","B15 P(R)AY",,
2,52,,GREASING,"B15 C(R)AY","B15 P(R)AY",,
2,53,,"BOOM & BOOM BRACKET","B15 C(R)AY","B15 P(R)AY",,
2,54,,"ARM & BUCKET LINK","B15 C(R)AY","B15 P(R)AY",,
2,55,,BLADE,"B15 C(R)AY","B15 P(R)AY",,
```