https://truckmanualshub.com/

FE3R06-12-BPT-001

⚠Warning

Operators should read and understand this manual and all warning labels on the forklift before using the forklift !
Keep the manual for future reference !

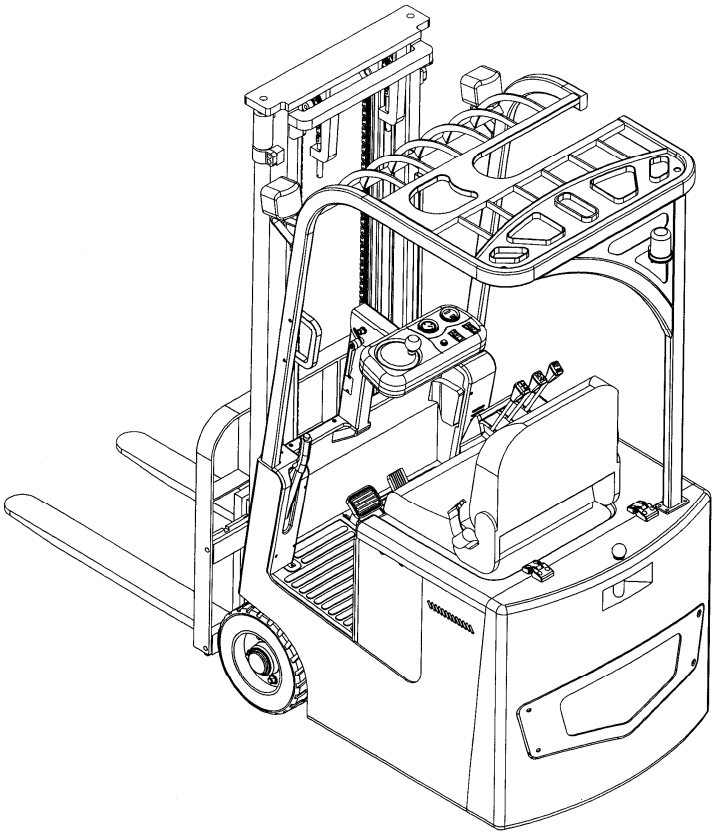

Parts List

FE3R06-12 SERIES

Battery Counterbalanced Forklift Truck

ZheJiang Noblelift Equipment Joint Stock Co.,Ltd

https://truckmanualshub.com/

Introduction

Welcome to use the Noblelift counterbalanced forklift truck!

1. This Parts List includes the parts of the **FE3R06-12** counterbalanced forklift truck.
2. Users can make desired inquiries according to Table of Contents.
3. Please use parts designated by Noblelift Company when replacing parts to ensure the quality of the forklift.
4. When ordering parts, be sure to clearly indicate the model and ex-factory serial No. of the forklift, SN of the needed parts, and the required quantity.
5. To further optimize the product, we reserve the right to modify our product. The product is subject to change without prior notice and thanks for your understanding for that. For the latest product information, you can obtain them from the sales and parts departments of Noblelift.

https://truckmanualshub.com/

Table of contents

	Introduction	1
1	The body of the fork and the working devices	4-5
2	Driving and steering assembly	6-7
3	Driving wheel 2.5kw	8-11
4	Driving wheel 3.0kw	12-15
5	Steering device (ZAPI)	16-17
6	Steering Device (CURTIS)	18-19
7	Strut brake wheel assembly	20-21
8	Frame and the balance weight (a)	22-25
9	Frame and the balance weight (b)	26-27
10	Instrument rack and hood	28-29
11	Seat and installation	30-31
12	Foot brake	32-33
13	Foot brake control pipeline	34-35
14	Accelerator	36-37
15	Lifting motor and oil tank	38-39
16	Lifting motor	40-41
17	Electrical components distribution	42-45
18	FE3R12 electronic control assembly（ZAPI）	46-47
19	FE3R08/12 electronic control assembly（CURTIS）	48-49
20	FE3R08 electronic control assembly（ZAPI）	50-51
21	Power connecting wire assembly	52-53
22	Multiple unit valve (Duplex)	54-55
23	Multiple unit valve (Triplex)	56-57
24	Hydraulic system	58-59
25	Pipeline system of mast (Standard mast)	60-61
26	Pipeline system of mast (2-level full free)	62-63
27	Fork	64-65
28	Fork frame, Block frame (Standard mast)	66-67
29	Fork frame, Block frame (2-level full free)	68-69

NOBUFT 诺力

https://truckmanualshub.com/

30 Mast (Standard mast) 70-71

31 Mast (2-stage full free) 72-73

32 Lifting cylinder (Standard mast) 74-77

33 Short lifting cylinder (2-level full free) 78-79

34 Lifting cylinder (2-stagefull free) 80-83

35 Lifting chain (Standard mast) 84-85

36 Lifting chain (2-stage full free) 86-87

37 Side shifter and pipeline installation system (Standard mast)..... 88-89

38 Side shifter and pipeline installation system (Standard mast)..... 90-93

39 Side shifter and pipeline installation system (2-stage full free)..... 94-97

40 Side shifter and pipeline installation system (2-stage full free)..... 98-101

41 Tilting oil cylinder..... 102-103

42 Overhead guard..... 104-105

43 Labels 106-107

NOBUFT 诺力

The body of the fork and the working devices

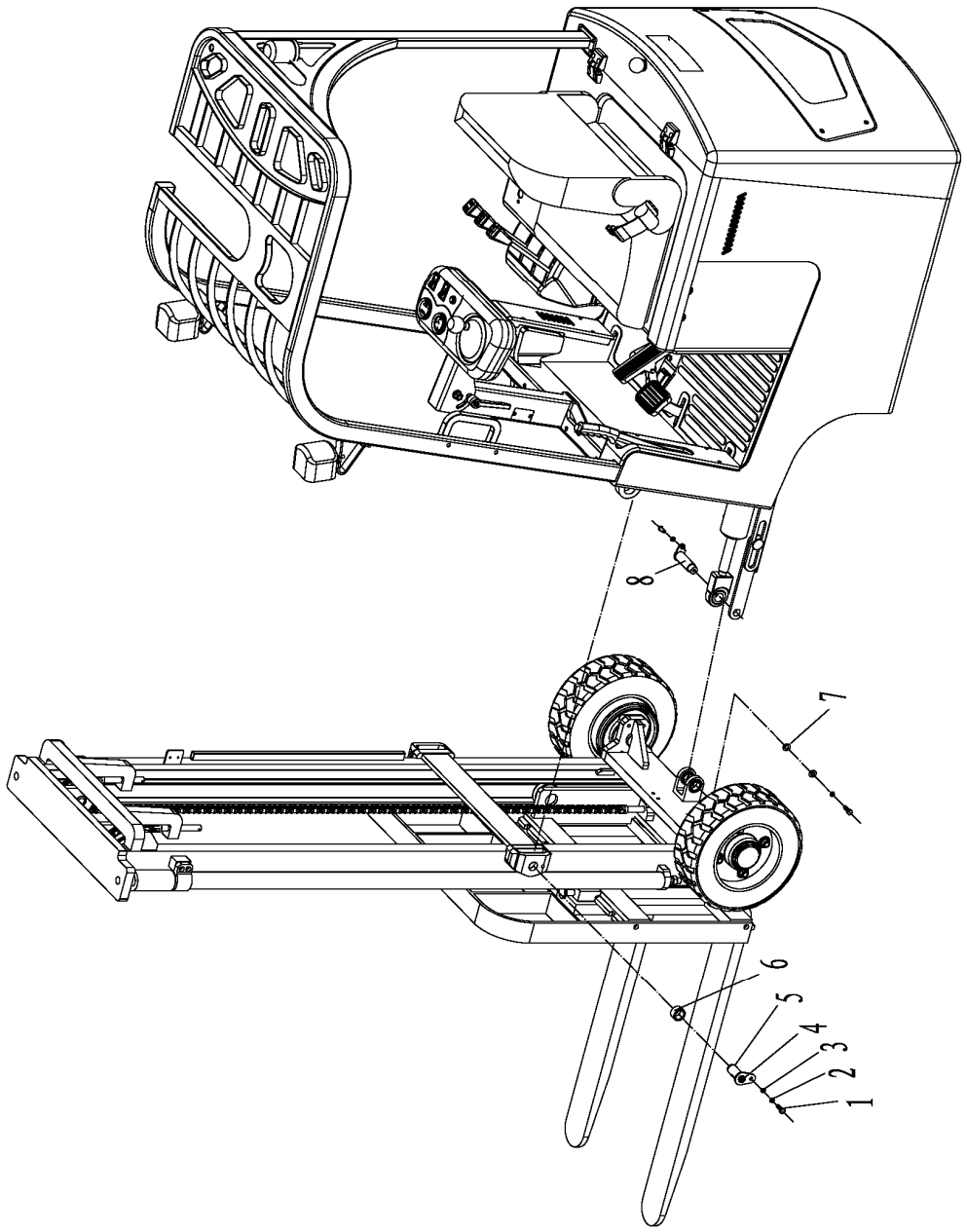

Figure 1

Figure 1 The body of the fork and the working devices A1

NO	SN	Name	QTY	Remarks
1	0000023230	bolt	6	
2	0000025046	spring washer	6	
3	0000025051	washer	6	
4	0000030023	oil-holder	2	
5	3028001005	shaft	2	
6	3028002002	copper bushing	2	
7	0000025061	washer	2	
8	3028002001	shaft	1	

NOBUFT 诺力

Driving and steering assembly

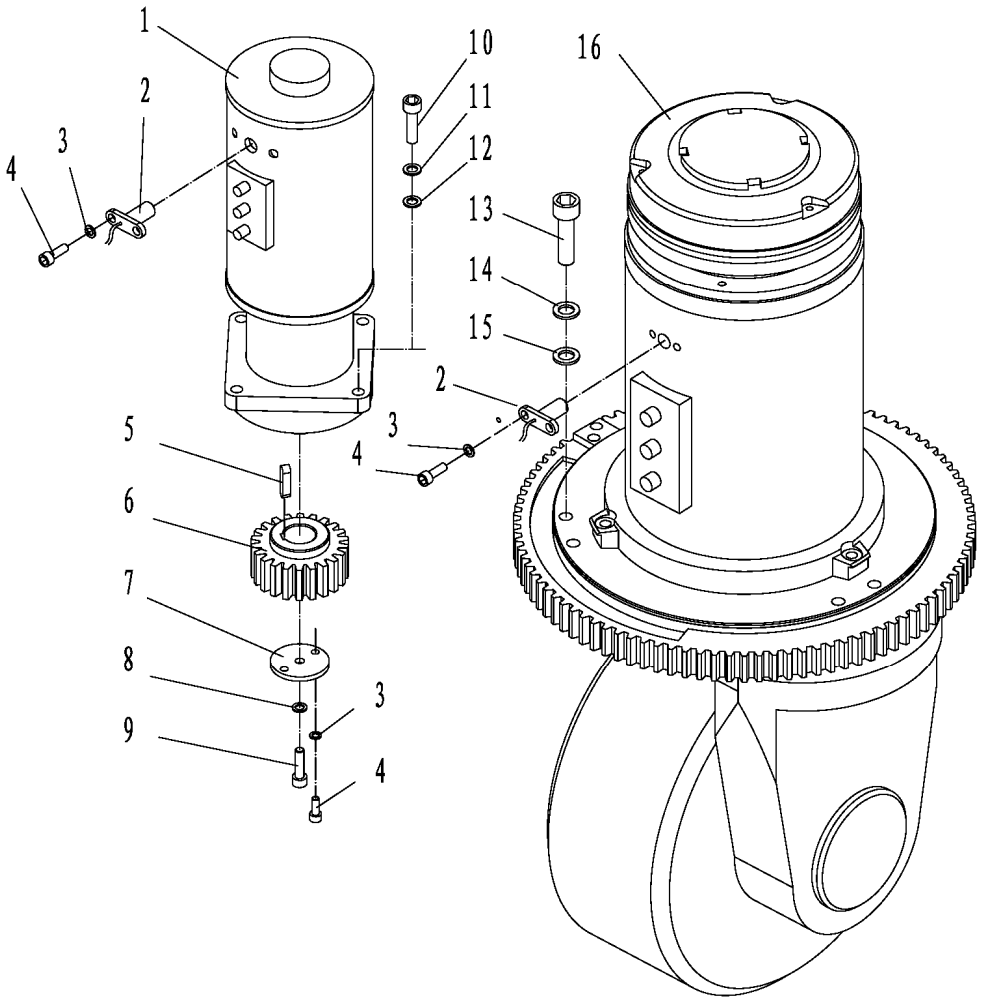

Figure 2

Figure 2 Driving and steering assembly B1

No.	SN	Name	QTY	Remarks
1	3024600002	steering motor	1	
2	9000011073	encoder	2	
3	0000025044	spring washer	5	
4	0000023217	bolt	5	
5	0000036012	flat key A model	1	
6	3024609003	steering gear	1	FE3R06/08
	3024609004	steering gear	1	FE3R10/12
7	3024602001	washer	1	
8	0000025045	spring washer	1	
9	0000023478	screw	1	
10	0000023369	screw	4	
11	0000025046	spring washer	4	
12	0000025051	washer	4	
13	0000023778	screw	6	FE3R06/08
	0000023265	screw		FE3R10/12
14	0000025041	spring washer	6	FE3R06/08
	0000025042	spring washer		FE3R10/12
15	0000025047	washer	6	FE3R06/08
	0000025048	washer		FE3R10/12
16	3024600001	driving wheel 24V,2.5W	1	FE3R06/08
	3024600003	driving wheel 24V,3.0W		FE3R10/12

NOBUET 诺力

Driving wheel 2.5KW

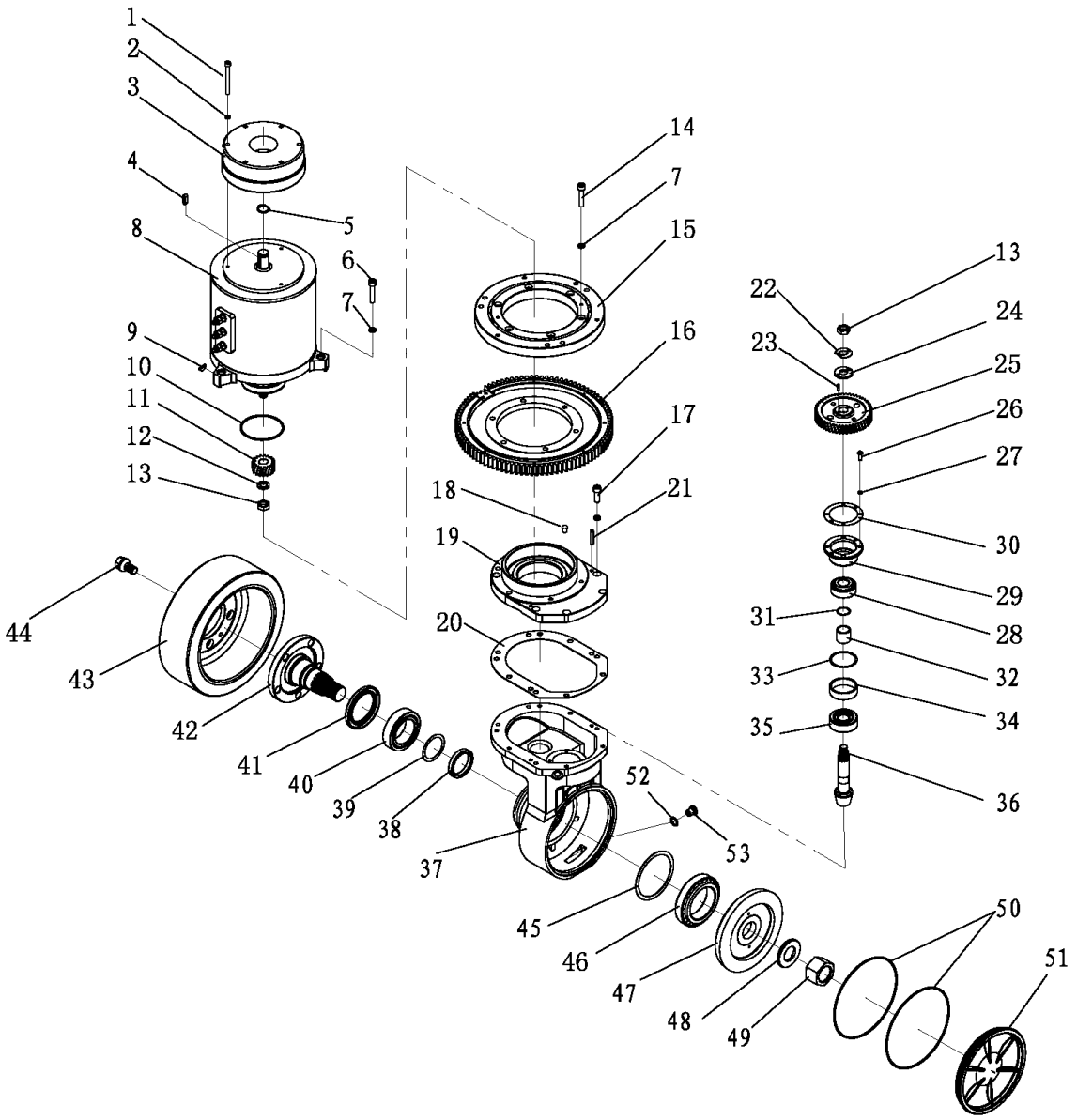

Figure 3

Figure 3 Driving wheel 2.5KW B2

No.	SN	Name	QTY	Remarks
A	3024600001	driving wheel 24V,2.5W	1	Inc.1-53
1	0000023563	screw	3	
2	0000025010	spring washer	3	
3	9000011074	brake	1	
4	0090000696	flat key A model A	1	
5	0000036012	circlip for shaft type -A	1	
6	0000023077	screw	5	
7	0000025001	spring washer	15	
8	9000011075	motor 24V/2.5KW	1	S233127G
9	0090000523	ordinary type woodruff key	1	
10	0090000720	O-ring	1	
11	9000009747	small gear	1	
12	0090000522	spring washer	1	
13	0090000090	nut	1	
14	0000023564	screw	5	
15	9000011076	slewing bearing	1	
16	1110209001	large steering gear	1	
17	0000023047	screw	4	
18	9000011078	breather plug	1	
19	2000303001	loam cake	1	
20	9000009742	paper washer	1	
21	0000028027	cylindrical pin	1	
22	0000025066	external tab washers	1	
23	0090000117	cylindrical pin		
24	9000009509	washer		
25	9000011077	large gear	1	
26	0000023675	screw	4	
27	0000025015	Spring washer	4	
28	0090000503	bearing	1	
29	9000009507	bearing block	1	

NOBUET 诺力

Driving wheel 2.5KW

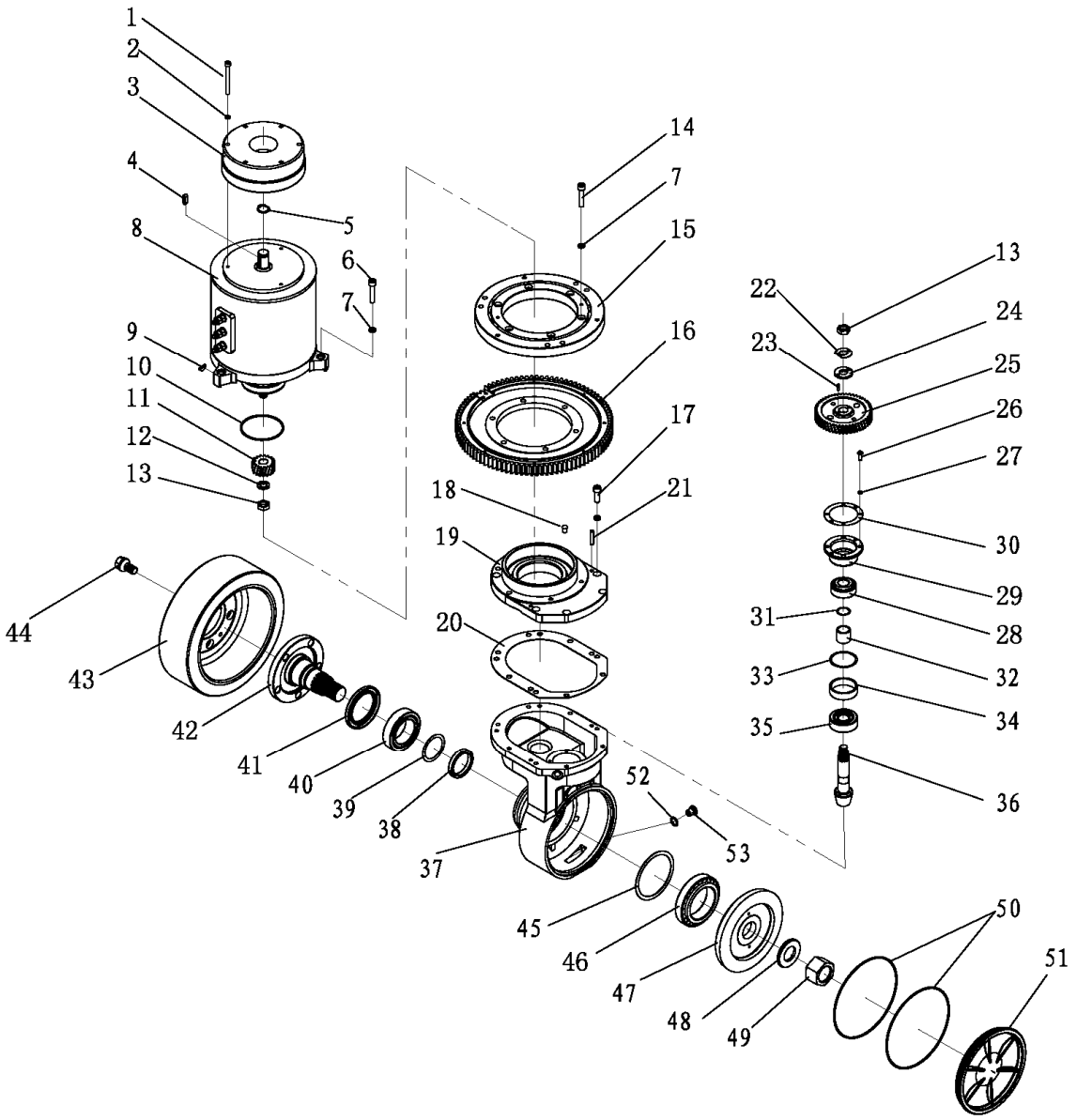

Figure 3

Figure 3 Driving wheel 2.5KW B2

No.	SN	Name	QTY	Remarks
30	9000009737	adjusting pad	1	
31	9000009506	adjusting pad	1	
32	9000011079	the inner casing	1	
33	9000009505	adjusting pad	1	
34	9000011080	outer shell	1	
35	0090000502	bearing	1	
36	9000009738	spiral bevel pinion	1	
37	9000009730	gear box	1	
38	9000009733	spacer sleeve	1	
39	9000009732	adjusting pad	1	
40	0090000502	bearing	1	
41	0090000520	skeleton oil seal	1	
42	9000009734	live axle	1	
43	2390200005	wheel 254	1	
44	2390223001	tyre screw	5	
45	9000009731	adjusting pad	1	
46	0090000145	bearing	1	
47	9000009735	passive spiral bevel gear	1	
48	9000009736	lock washers	1	
49	0090000527	nut	1	
50	0090000521	O-ring	2	
51	9000009740	side cap	1	
52	0000022036	combined sealing washer	3	
53	0090000506	screw	3	

NOBUFT 诺力

Driving wheel 3.0KW

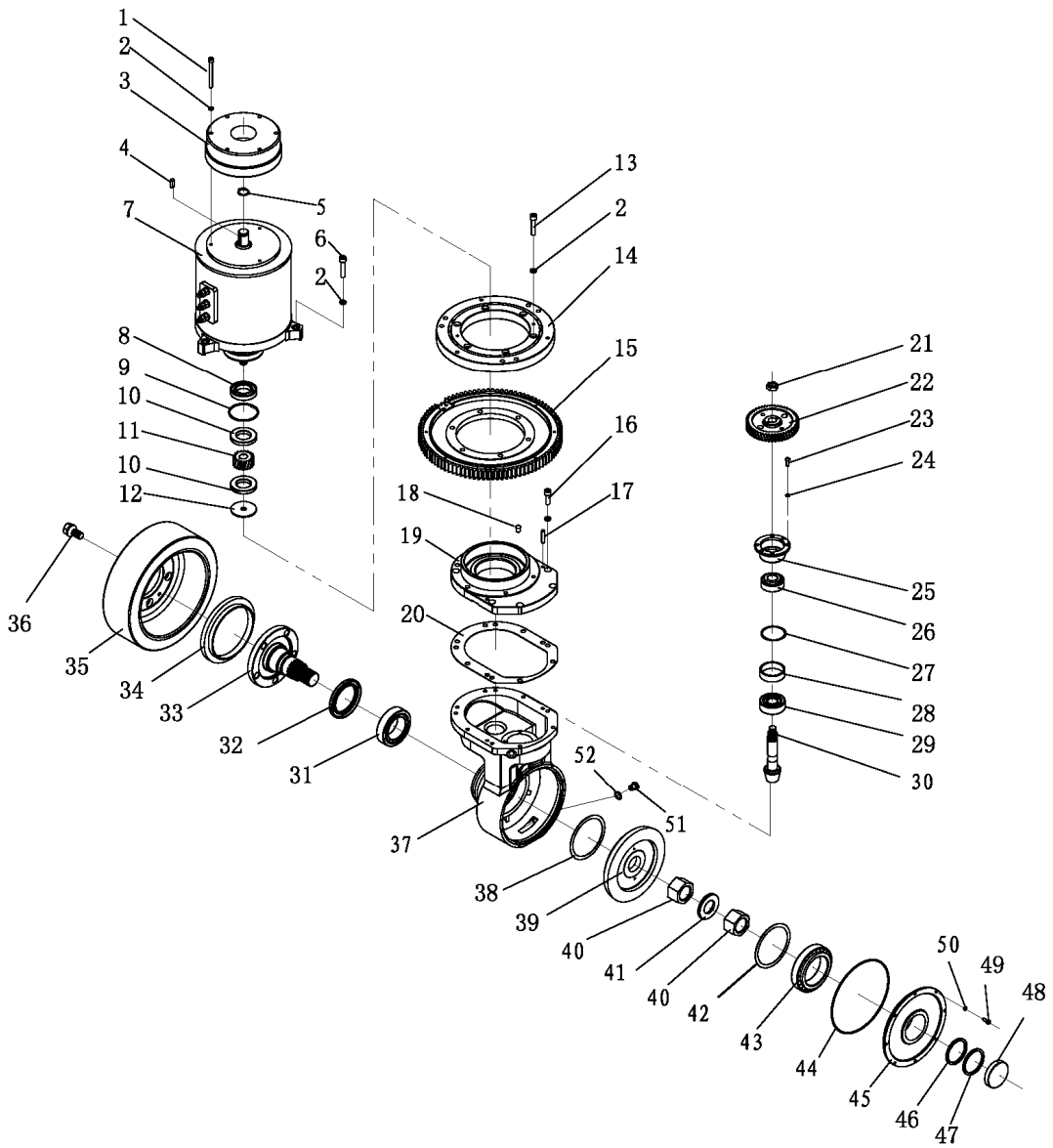

Figure 4

https://truckmanualshub.com/

Figure 4 Driving wheel 3.0KW B3

No.	SN	Name	QTY	Remarks
A	3024600003	dring wheel 24V,3.0W	1	Ind.1-52
1	0000023564	screw	3	
2	0000025001	spring washer	22	
3	9000011081	brake 14#	1	
4	0000036012	flat key A model A	1	
5	0000026003	circlip for shaft type -A	1	
6	0000023455	screw M8x35	6	
7	9000011082	motor24V/3.0KW	1	
8	0090000737	skeleton oil seal	1	
9	0000026010	the circlip for hole type -A	1	
10	0090000733	bearing	1	
11	9000011083	small gear	1	
12	9000011084	washer	1	
13	0000023047	screw	6	
14	9000011085	slewing bearing	1	
15	9000011086	steering gear	1	
16	0090000525	screw	7	
17	0000028032	cylindrical pin	1	
18	9000011078	breather plug	1	
19	9000011087	tank cover	1	
20	9000011088	paper washer	1	
21	9000011089	self-locking nut	1	
22	9000011090	big gear	1	
23	0000023675	screw	4	
24	0000025015	spring washer	4	
25	9000011091	bearing block	1	
26	0090000687	bearing	1	
27	9000011092	adjusting pad	1	
28	9000011093	spacer sleeve	1	

Driving wheel 3.0KW

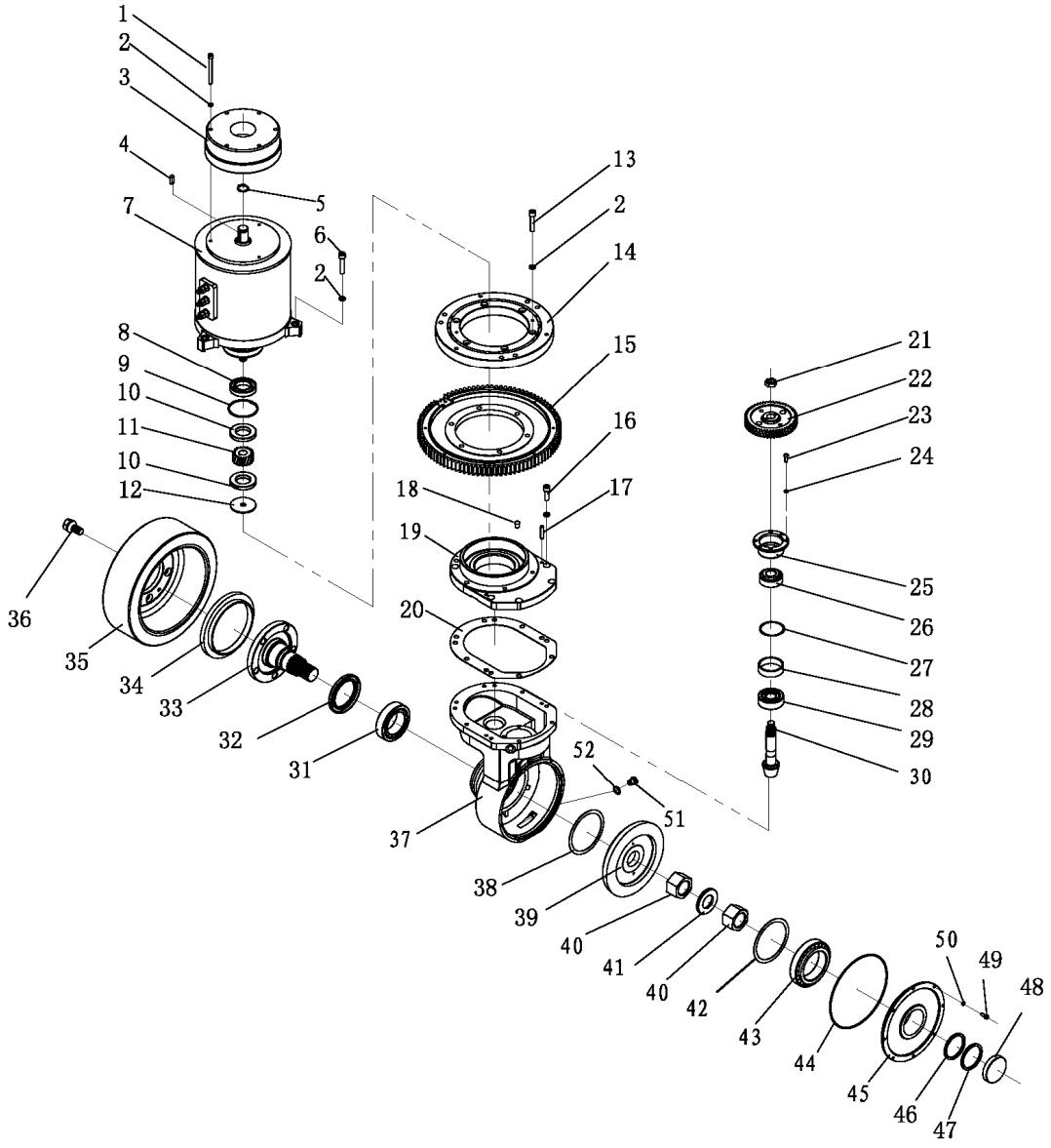

Figure 4

Figure 4 Driving wheel 3.0KW B3

No.	SN	Name	QTY	Remarks
29	0000027069	bearing	1	
30	9000011094	spiral bevel pinion	1	
31	0090000688	bearing	1	
32	0090000738	skeleton oil seal	1	
33	9000011095	live axle	1	
34	9000011096	dust guard	1	
35	9000011097	wheel	1	
36	9000011098	tyre screw	5	
37	9000011099	box	1	
38	9000011100	adjusting pad	1	
39	9000011101	passive spiral bevel gear	1	
40	0090000712	round nut	2	
41	0090000670	round nuts with washers	1	
42	9000011102	washer	1	
43	0090000689	bearing	1	
44	0090000721	O-ring	1	
45	9000011103	side cap	1	
46	9000011104	washer	1	
47	9000011105	adjusting pad	1	
48	9000011106	end cap	1	
49	0000023040	screw	8	
50	0000025010	spring washer	8	
51	0000023694	screw	3	
52	0000025021	combined sealing washer	3	

NOBUET 诺力

Steering device (ZAPI)

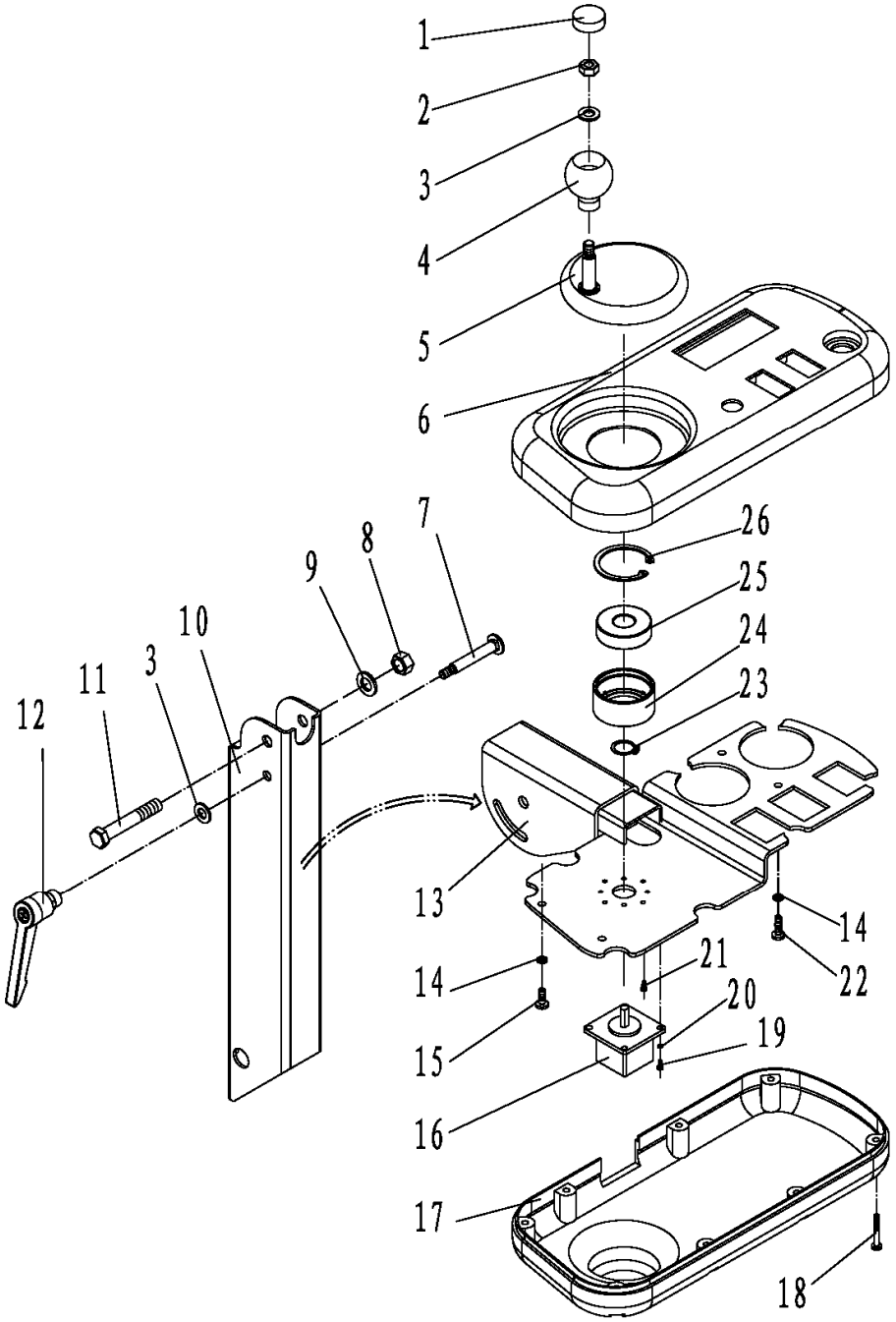

Figure 5

Figure 5 Steering device (ZAPI) C1

No.	SN	Name	QTY	Remarks
1	3024203002	plugging cover	1	
2	0000024018	nut	1	
3	0000025041	Spring washer	2	
4	3024203003	handle	1	
5	3024200003	rocker	1	
6	3024236001	upper dashboards	1	
7	3024202002	bolt	1	
8	0000024006	nut	1	
9	0000025048	washer	1	
10	3024201002	manipulate pillar	1	FE3R06/08
	3024201003			FE3R10/12
11	0000023243	bolt	1	
12	3024200001	adjusting handle	1	
13	3024201001	Instrument rack	1	
14	0000025045	spring washer	4	
15	0000023461	screw	2	
16	3022434014	stepper motor	1	
17	3024203001	lower dashboard	1	
18	0000023460	screw	8	
19	0000023219	screw	4	
20	0000025038	spring washer	4	
21	0000023463	screw	4	
22	0000023192	screw	2	
23	0000026003	circlip for shaft	1	
24	3024202003	bearing seat	1	
25	0000027067	bearing	1	
26	0000026002	circlip for hole	1	

NOBUFT 诺力

Steering device (CURTIS)

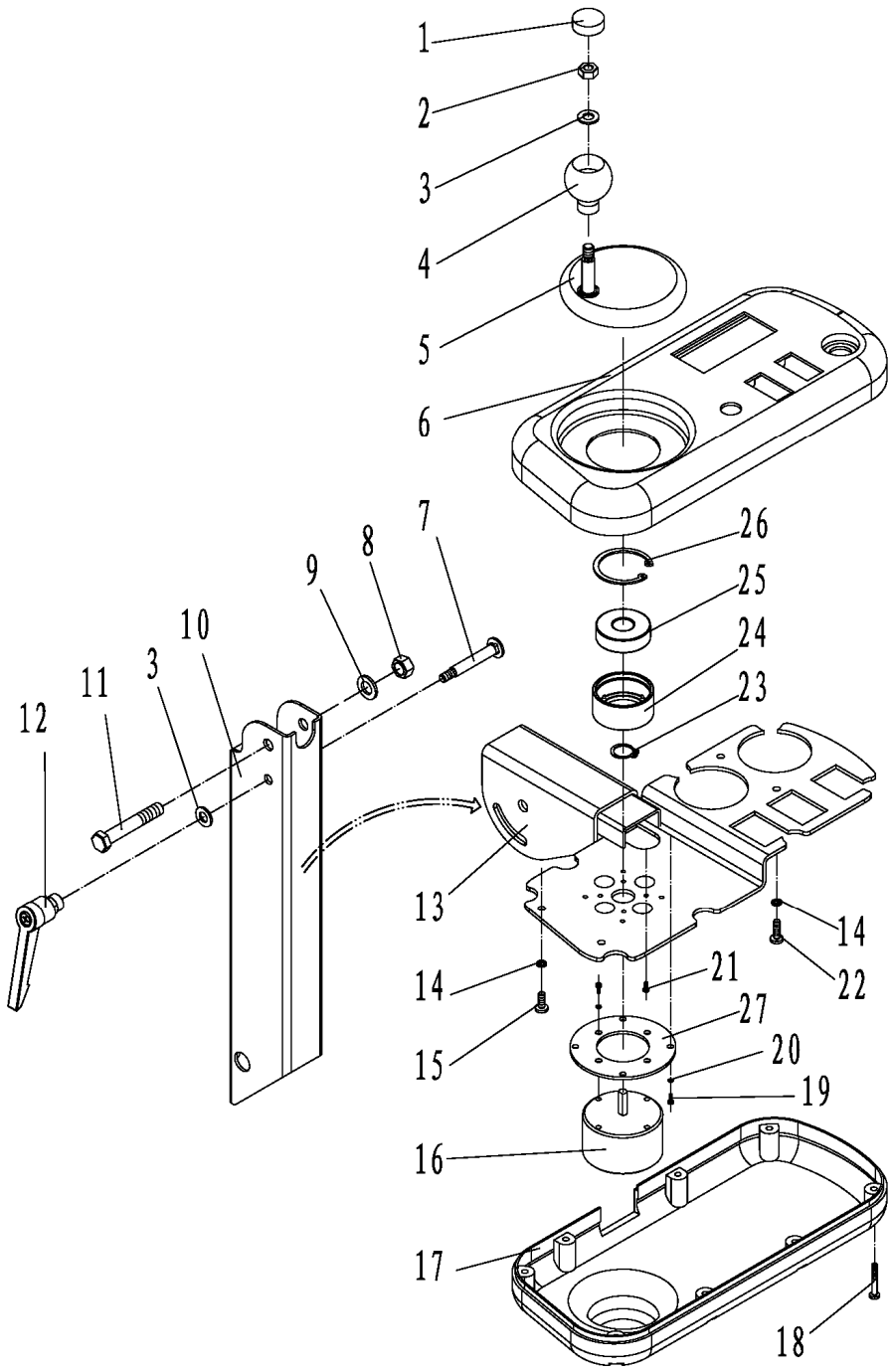

Figure 6

https://truckmanualshub.com/

Figure 6 Steering device (CURTIS) C2

No.	SN	Name	QTY	Remarks
1	3024203002	plugging cover	1	
2	0000024018	nut	1	
3	0000025041	spring washer	2	
4	3024203003	handle	1	
5	3024200003	rocker	1	
6	3024236001	upper dashboards	1	
7	3024202002	bolt	1	
8	0000024006	nut	1	
9	0000025048	washer	1	
10	3024201002	manipulate pillar	1	FE3R06/08
	3024201003			FE3R10/12
11	0000023243	bolt	1	
12	3024200001	adjusting handle	1	
13	9000010961	Instrument rack	1	
14	0000025045	spring washer	4	
15	0000023461	screw	2	
16	9000011107	coded disc	1	
17	3024203001	lower dashboard	1	
18	0000023460	screw	8	
19	0000023049	screw	8	
20	0000025044	spring washer	8	
21	0000023463	screw	4	
22	0000023192	screw	2	
23	0000026003	circlip for shaft	1	
24	9000010962	bearing seat	1	
25	0000027001	bearing	1	
26	0000026009	circlip for hole	1	
27	9000010963	transition Header	1	

NEBULA 诺力

https://truckmanualshub.com/

Strut brake wheel assembly

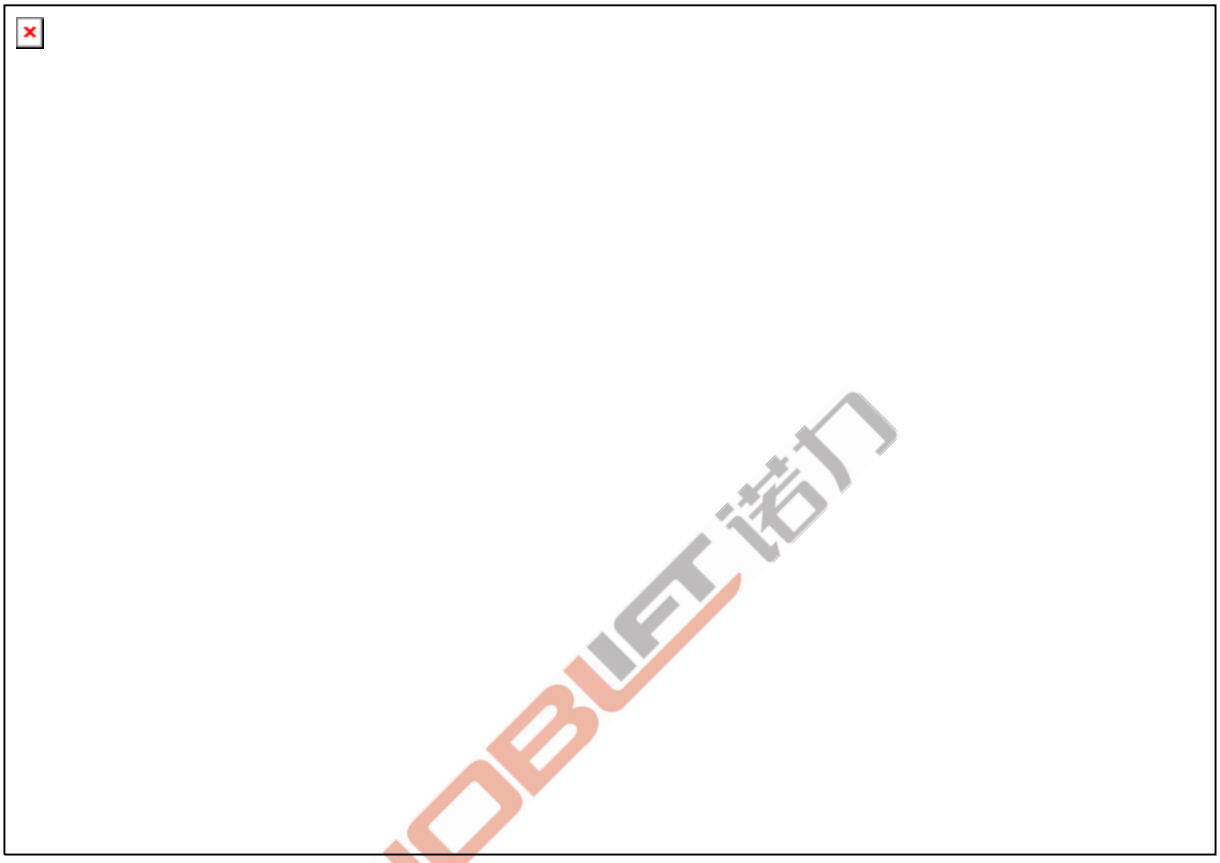

NOBUFT 诺力

Figure 7

Figure7 Strut brake wheel assembly C2

No.	SN	Name	QTY	Remarks
1	3024700004	brake assembly (left)	1	
	3024700005	brake assembly(right)	1	
2	0000025051	washer	8	
3	0000025046	spring washer	8	
4	0000023148	screw	8	
5	3014722001	TC double lip skeleton oil seal	2	
6	3014702001	spacer	2	
7	0000027034	bearing	2	
8	0000027035	bearing	2	
9	9000003926	brake drum	2	
10	3024700003	tire	2	
11	0000025138	stop washer for round nut	2	
12	0000024174	round nut	2	
13	3014702005	stud bolt	8	
14	3014602003	tire nut	8	
15	3024704001	front wheel plug	2	
16	3014702003	washer	2	
17	9000003935	adjusting washer	4	

NOBUET 诺力

Frame and the counterbalanced (a)

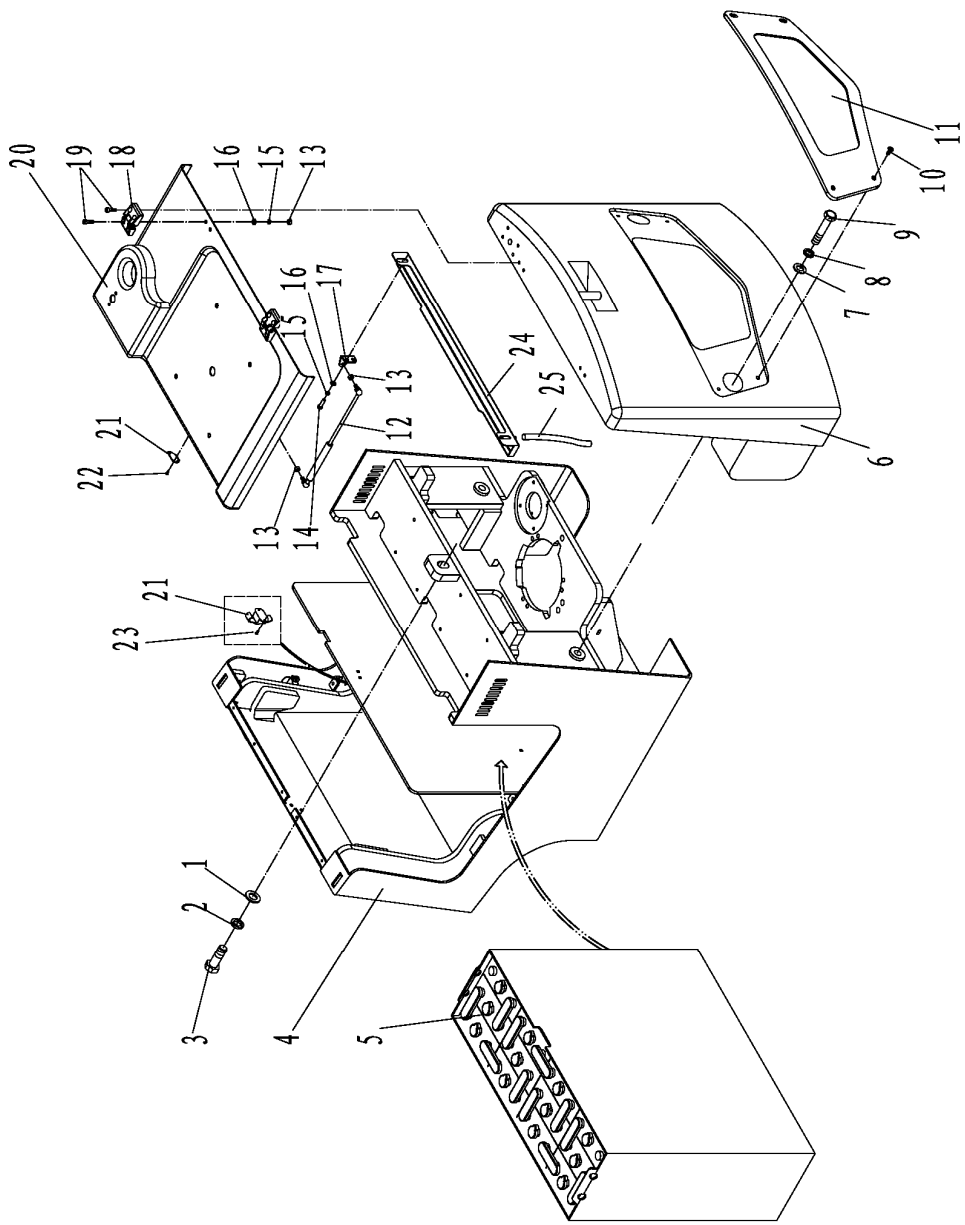

Figure 8

Figure 8 Frame and the counterbalanced (a) D1

No.	SN	Name	QTY	Remarks
1	0000025058	washer	1	FE3R06/08
2	0000025056	spring washer	1	FE3R06/08
3	0000023468	bolt	1	FE3R06/08
4	3026101001	fork frame	1	FE3R06/08
	3026101002			FE3R10/12
5	3021400002	accumulator 460Ah	1	FE3R08
	3021400001	accumulator 360Ah		FE3R06
	3021400005	accumulator 600Ah		FE3R12
	3021400008	accumulator 540Ah		FE3R10
6	3026305001	counterbalanced	1	FE3R06/08
	3026305002	counterbalanced		FE3R10/12
7	0000025067	washer	2	
8	0000025057	spring washer	2	
9	0000023469	bolt	2	
10	0000023477	screw	4	
11	3026403006	back cover plate	1	FE3R06/08
	3026403010	back cover plate		FE3R10/12
12	3026421001	gas spring	2	FE3R06/08
	3026421002	gas spring		FE3R10/12
13	0000024038	nut	8	
14	0000023147	screw	4	
15	0000025046	spring washer	8	
16	0000025051	washer	8	
17	3026402005	gas spring base	2	
18	3026401001	hinge	2	
19	0000023369	screw	8	
20	3026403005	battery box cover	1	FE3R06/08
	3026403009	battery box cover		FE3R10/12
21	3006400003	lock catch	1	
22	0000023476	screw	2	

NOBLET 诺力

Frame and the counterbalanced (a)

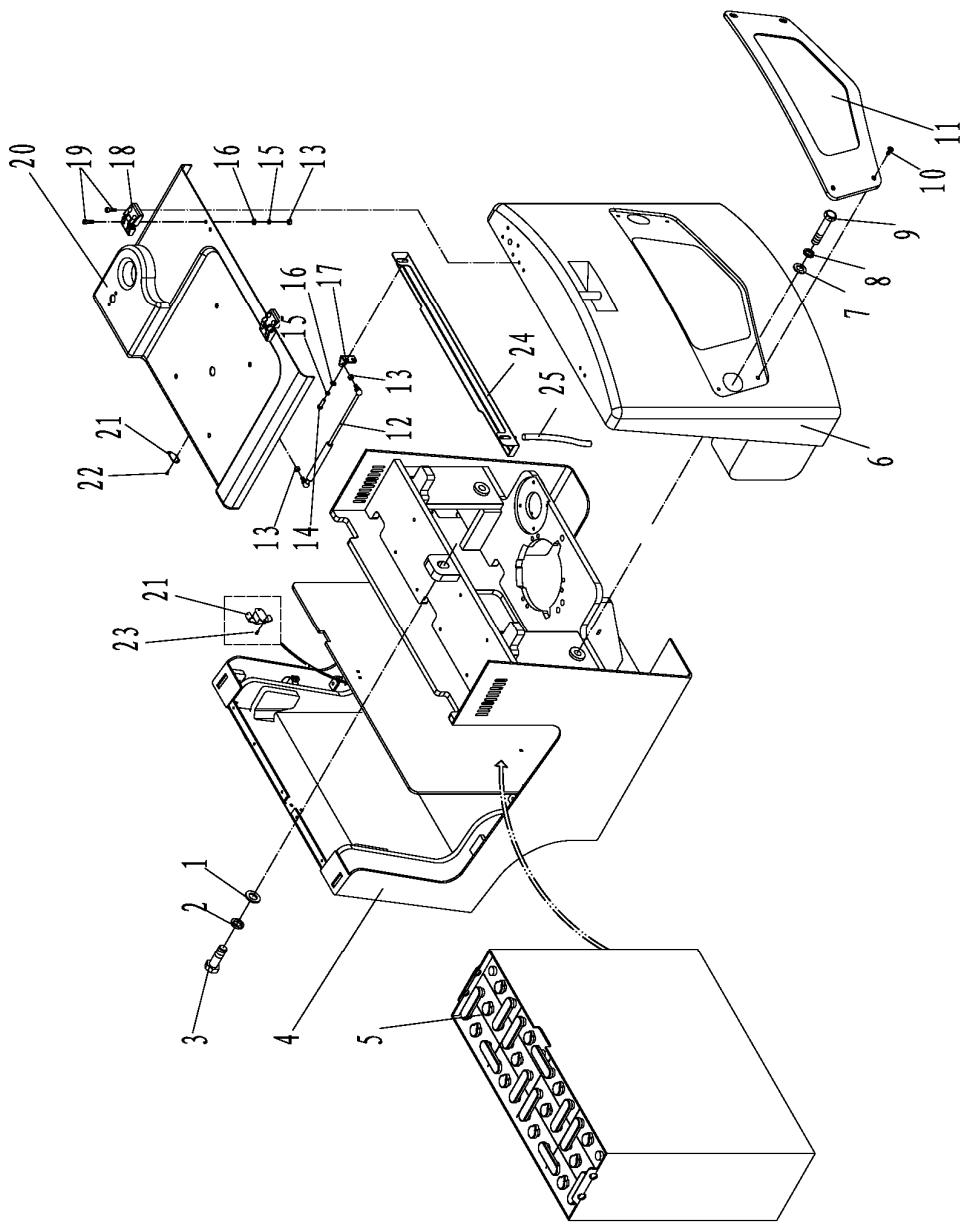

Figure 8

Figure 8 Frame and the counterbalanced （a） D1

No.	SN	Name	QTY	Remarks
23	0000023131	screw	2	
24	9000011287	guiding gutter	1	
25	9000011288	cess-pipe	1	

NOBUFT 诺力

Frame and the counterbalanced （b）

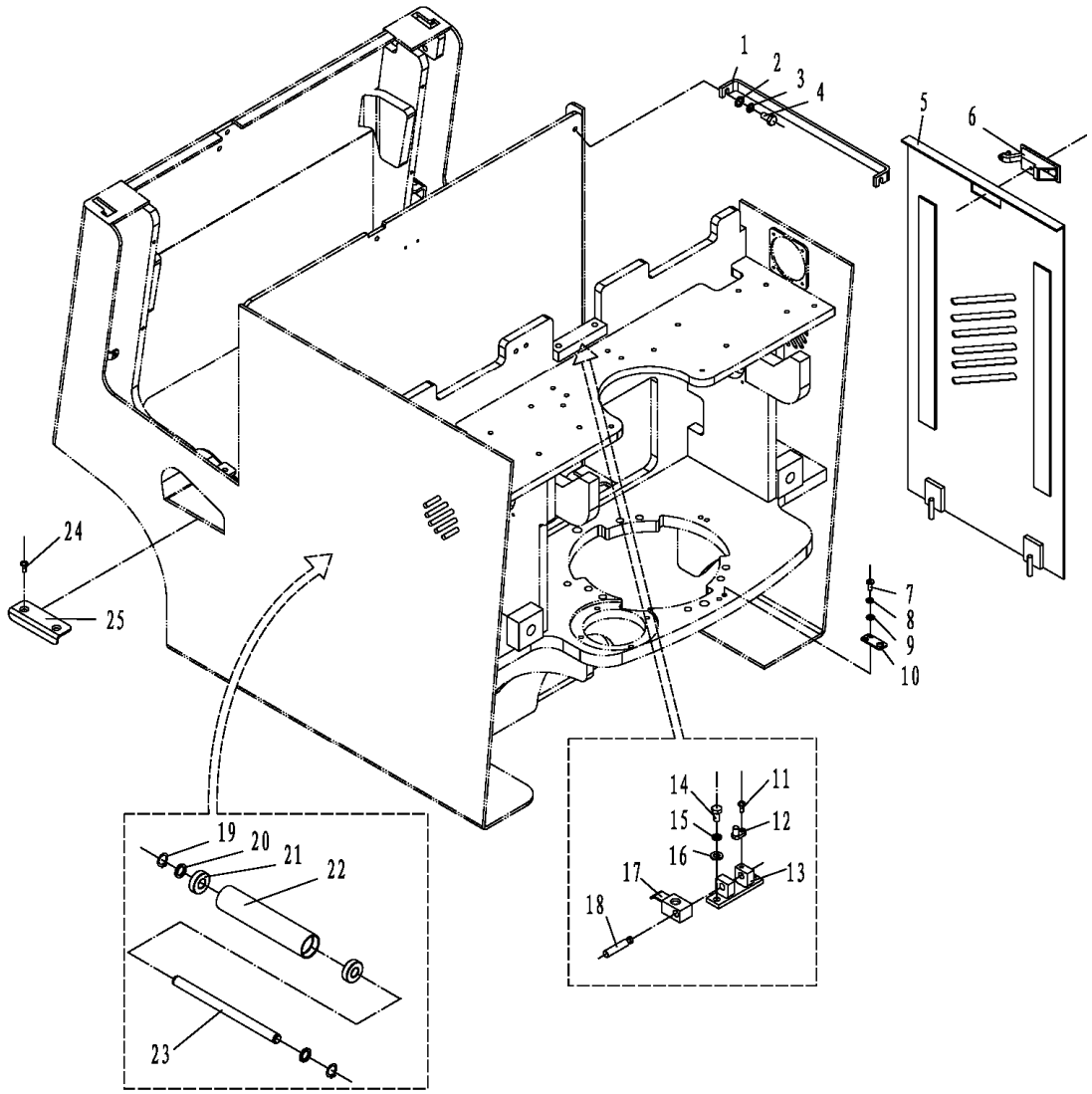

Figure 9

Figure 9 Frame and the counterbalanced （b） D2

No.	SN	Name	QTY	Remarks
1	3026404001	stop block	1	FE3R10/12
2	0000025051	washer	2	FE3R10/12
3	0000025046	spring washer	2	FE3R10/12
4	0000023148	bolt	2	FE3R10/12
5	3026402011	right plate	1	FE3R10/12
6	3026400001	compression lock	1	FE3R10/12
7	0000023478	screw	2	FE3R10/12
8	0000025050	washer	2	
9	0000025045	spring washer	2	
10	3026402008	closed switch	1	
11	0000023144	bolt	1	FE3R10/12
12	3021401006	block plate	1	FE3R10/12
13	3021401005	connecting base	1	FE3R10/12
14	0000023222	bolt	2	FE3R10/12
15	0000025041	spring washer	2	FE3R10/12
16	0000025047	washer	2	FE3R10/12
17	3021401007	stop block	1	FE3R10/12
18	3021402004	rotating shaft	1	FE3R10/12
19	0000026005	flesible washer for shaft	10	FE3R10/12
20	3021402001	pad	10	FE3R10/12
21	0000027068	bearing	10	FE3R10/12
22	3021402002	roller	5	FE3R10/12
23	3021402003	roller shaft	5	FE3R10/12
24	0000023477	screw	2	FE3R10/12
25	3026418003	pedal	1	FE3R10/12

NOBLET 诺力

Instrument rack and hood

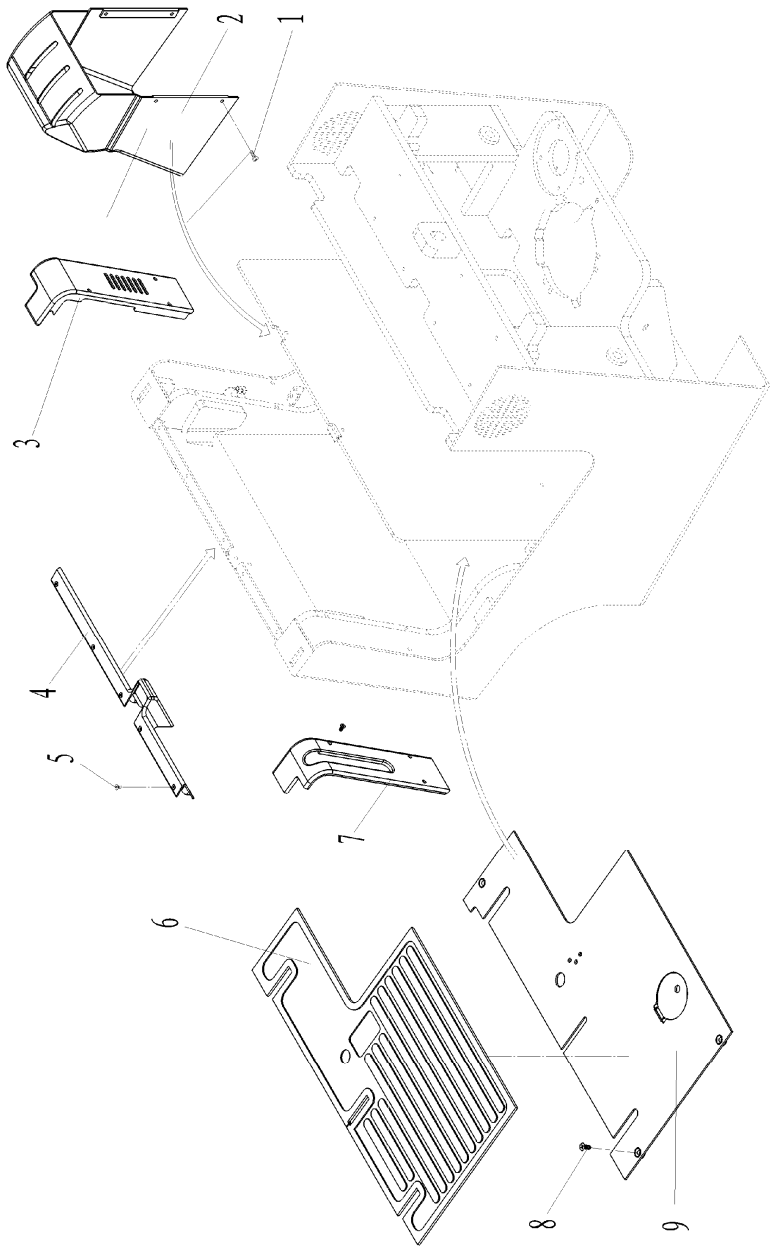

Figure 10

Figure10 Instrument rack and hood D3

No.	SN	Name	QTY	Remarks
1	3016402001	screw	8	
2	3026403004	multiple unit valve cap	1	
3	3026403003	left-side shield	1	FE3R06/08
	3026403008	left-side shield		FE3R10/12
4	3026403002	front blanking plate	1	
5	3016402002	screw	12	
6	3026418002	padding block	5	
7	3026403001	right-side shield	1	FE3R06/08
	3026403007	right-side shield		FE3R10/12
8	0000023477	screw	4	
9	3026401002	front plate	1	FE3R06/08
	3026401003	front plate		FE3R10/12

NOBUET 诺力

https://truckmanualshub.com/

Seat and installation

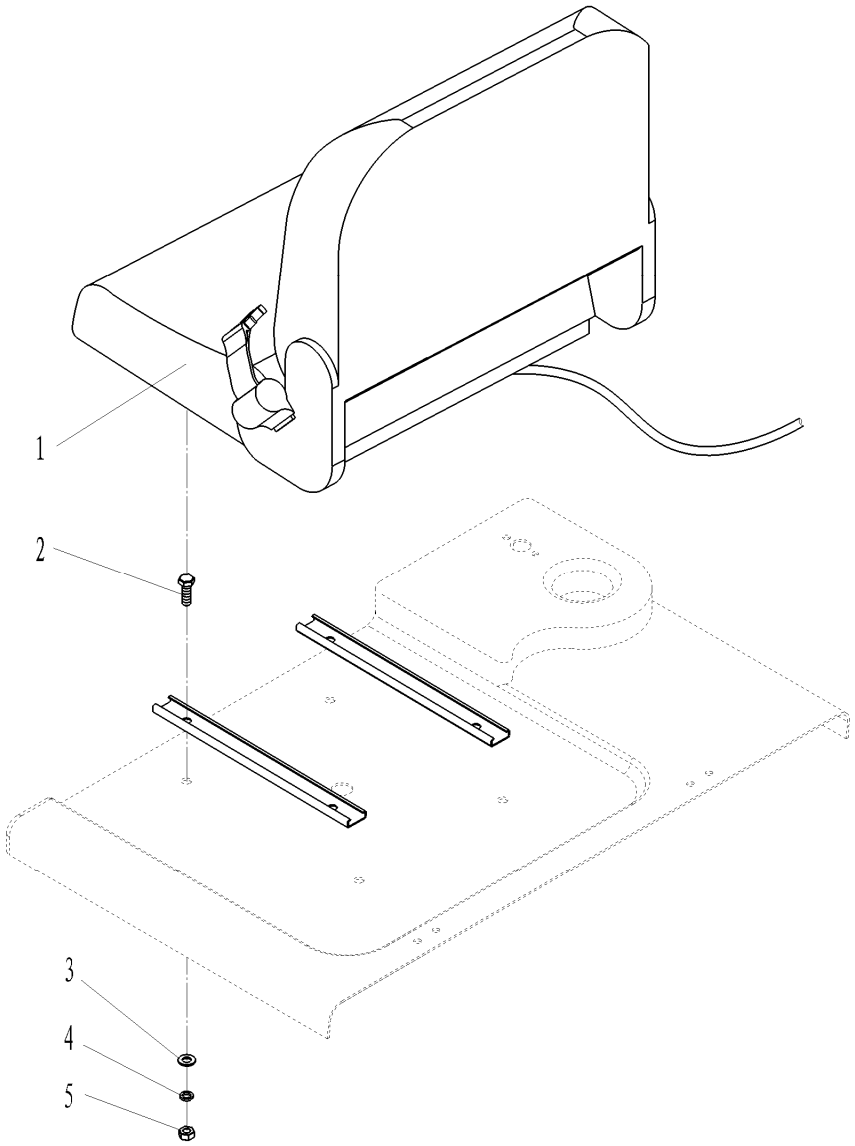

Figure 11

https://truckmanualshub.com/

Figure 11 Seat and installation D4

No.	SN	Name	QTY	Remarks
1	3006800001	seat SC1	1	
2	0000023255	bolt	4	
3	0000025051	washer	4	
4	0000025046	spring washer	4	
5	0000024026	nut	4	

NOBUFT 诺力

Foot brake

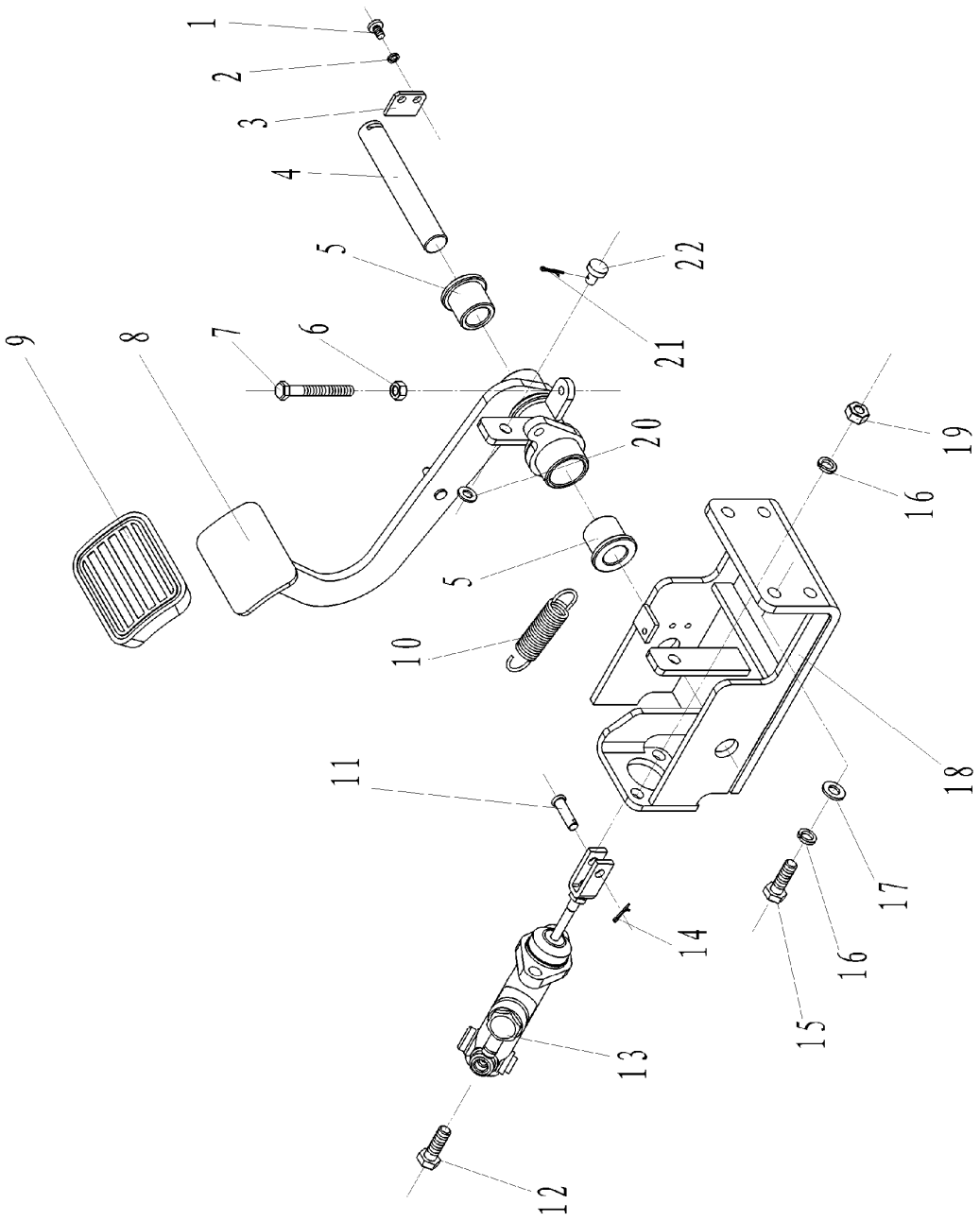

Figure 12

Figure12 Foot brake E1

No.	SN	Name	QTY	Remarks
A	3025700002	foot brake	1	Inc. 1-19
1	0000023239	screw	2	
2	0000025045	spring washer	2	
3	3015702004	fixed plate	1	
4	3015707001	shaft	4	
5	3005719001	bearing	2	
6	0000024026	nut	1	
7	0000023262	bolt	1	
8	3025701002	brake pedal	1	
9	3065418001	pedal set	1	
10	3005731001	tension spring	1	
11	0000028040	shaft	1	
12	0000023222	bolt	2	
13	3015700004	brake pump assembly	1	
14	0000028033	cotter pin	1	
15	0000023238	bolt	4	
16	0000025041	sping washer	6	
17	0000025047	washer	4	
18	3025701001	foot brake rack	1	
19	0000024018	nut	2	
20	0000025051	washer	2	
21	0000028042	cotter pin	1	
22	3005719002	anti-vibration pad	1	

NOBUET 诺力

Foot brake control pipeline

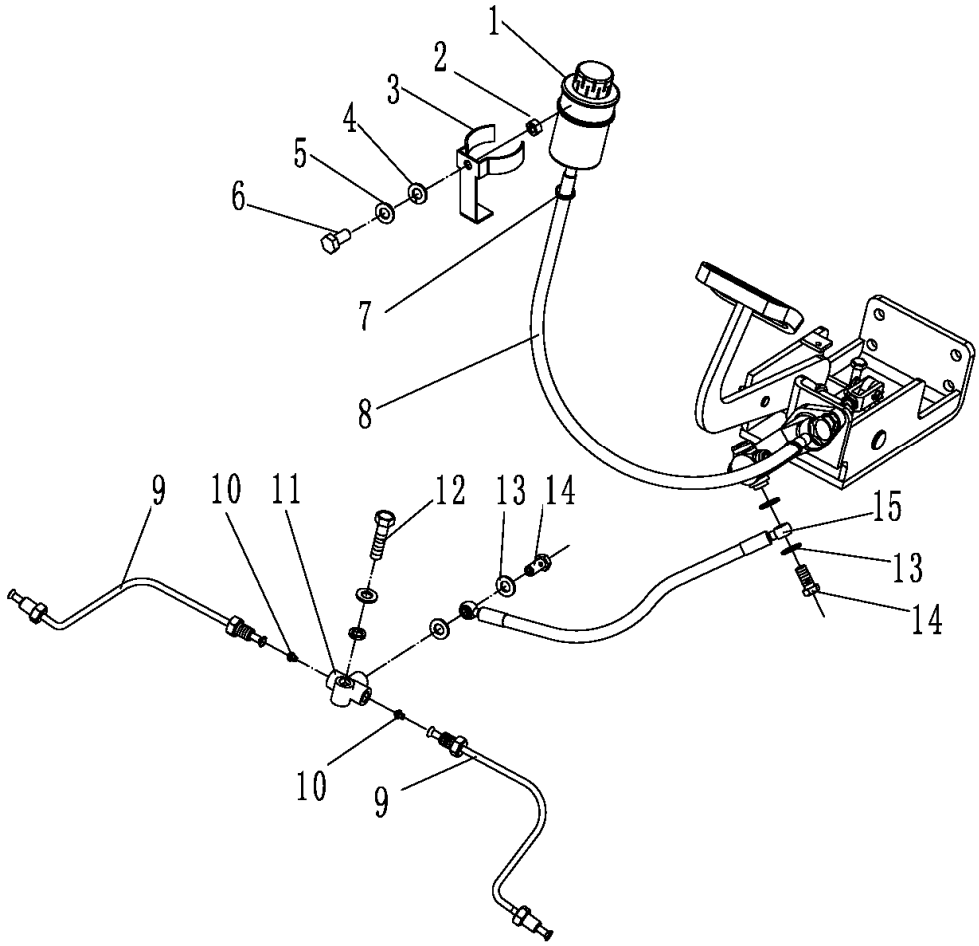

Figure 13

Figure13 Foot brake control pipeline E2

No.	SN	Name	QTY	Remarks
1	3015700003	oil-holder	1	
2	0000024026	nut	1	
3	3065802001	oil-holder bracket	1	
4	0000025051	washer	2	
5	0000025046	spring washer	2	
6	0000023231	bolt	1	
7	0000037004	double steel wire clamp	1	
8	3025703001	oil tube	1	
9	3025700001	brake rigid tube	2	
10	3005702001	adapter tube cone base	2	
11	3015705001	union tee	1	
12	0000023250	bolt	1	
13	0000025021	bonded washer	4	
14	3015702001	link bolt	2	
15	3015717001	brake hose	1	

NOBUET 诺力

https://truckmanualshub.com/

Accelerator

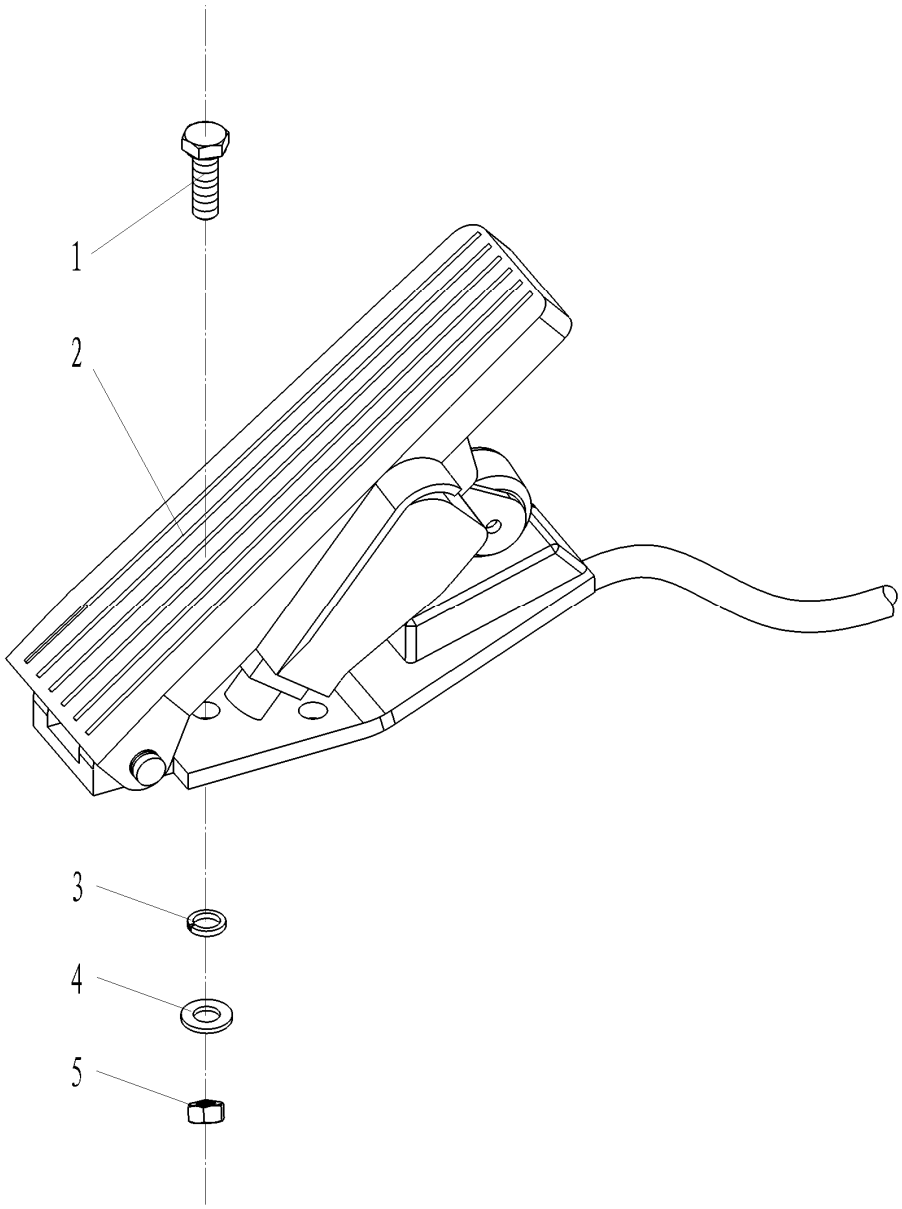

Figure 14

https://truckmanualshub.com/

Figure 14 Accelerator E3

No.	SN	Name	QTY	Remarks
1	0000023232	bolt	2	
2	3022800001	accelerator pedal	1	ZAPI
	9000009531	accelerator pedal		CURTIS
3	0000025046	spring washer	2	
4	0000025051	washer	2	
5	0000024026	nut	2	

NOBUFT 诺力

Lifting Motor and oil tank

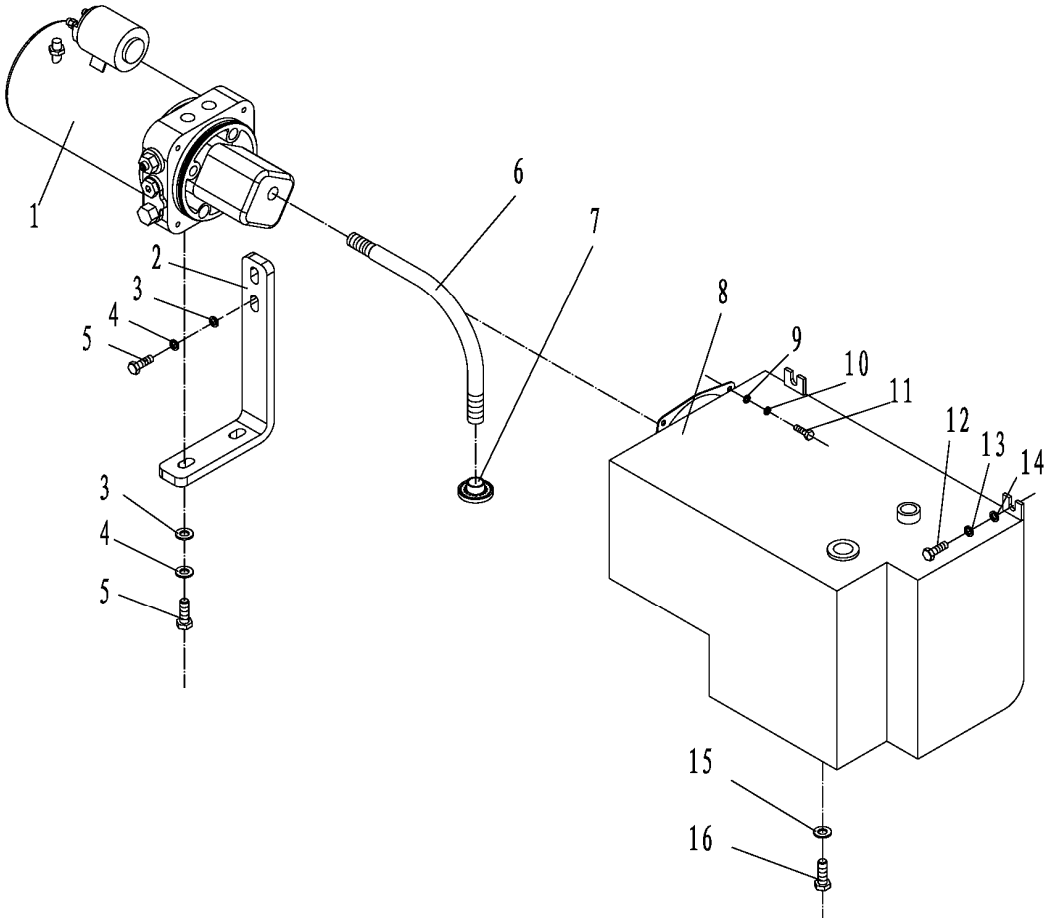

Figure 15

Figure 15 Lifting motor and oil tank F1

No.	SN	Name	QTY	Remarks
1	3021800001	lifting motor	1	See figure23
2	3027501002	pump bracket	1	
3	0000025047	washer	4	
4	0000025041	spring washer	4	
5	0000023222	bolt	4	
6	3021802001	oil suction pipe	1	
7	2000300004	filter	1	
8	3027501002	tank	1	FE3R06/08
	3027501003			FE3R10/12
9	0000025050	washer	4	
10	0000025045	spring washer	4	
11	0000023258	bolt	4	
12	0000025061	washer	2	
13	0000025046	spring washer	2	
14	0000023231	bolt	2	
15	0000022051	bonded washer	1	
16	0000037009	outer hexagonal screw	1	

NOBUET 诺力

https://truckmanualshub.com/

Lifting motor

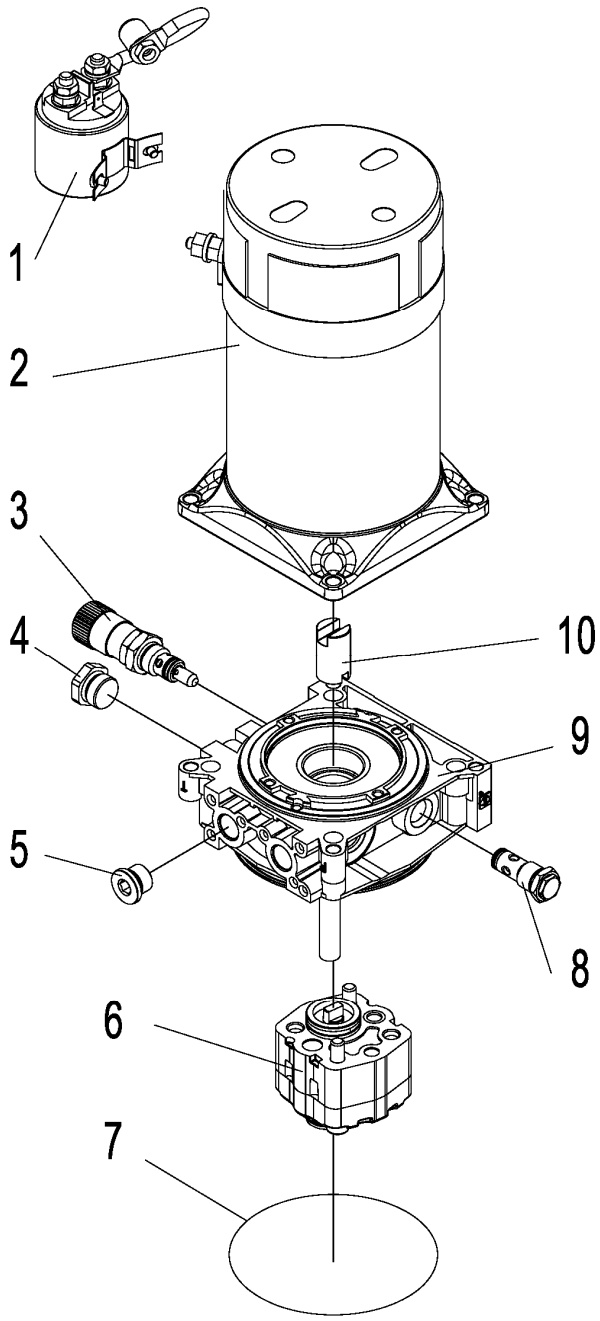

Figure 16

Figure 16 Lifting motor F2

No.	SN	Name	QTY	Remarks
A	3021800003	lifting motor	1	Inc.1-10
1	2040334001	starter	1	
2	9000008869	motor	1	
3	2040315003	overflow valve	1	
4	2000323003	MC short block handle	1	
5	2000323001	screwed plug	1	
6	9000008874	gear pump	1	
7	9000008875	O-ring	1	
8	9000008881	one-way valve	1	
9	2000300002	valve block	1	
10	9000010334	coupler	1	

NOBLET 诺力

Electrical components distribution

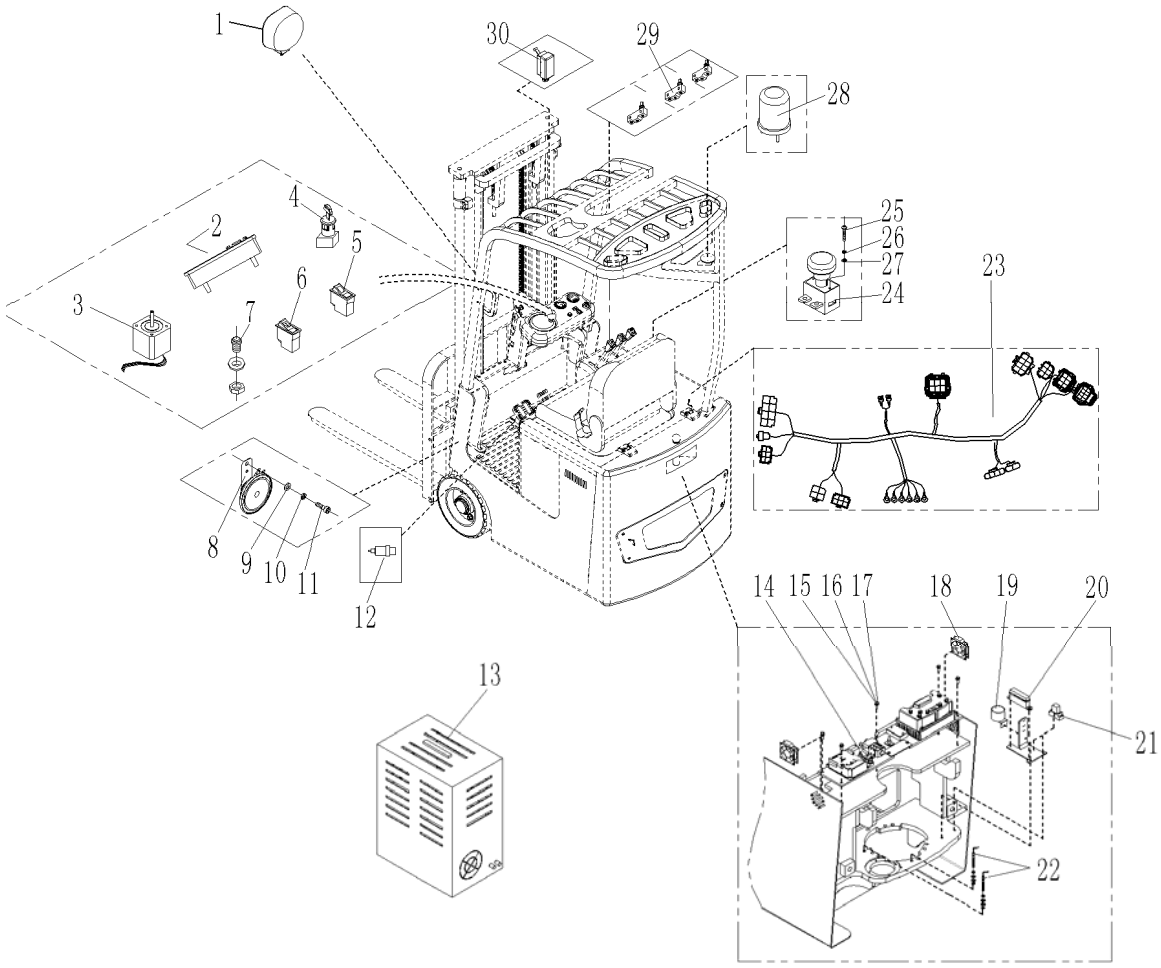

Figure 17

Figure 17 Electrical components distribution G1

No.	SN	Name	QTY	Remarks
1	3002434002	headlamp	2	
2	3022434018	ECO SMART DISPLAY	1	FE3R10/12（ZAPI）
	3022434002	ECO SMART DISPLAY		FE3R06/08（ZAPI）
	9000010845	840 display		FE3R10/12（CURTIS）
3	3022434014	stepper motor	1	ZAPI
	9000010846	coded disc		CURITS
4	9000009963	key switch	1	
5	3022434007	seesaw type switch	1	
6	3022434006	seesaw type switch	1	
7	9000009964	horn button switch	1	
8	1000434015	horn	1	
9	0000025047	washer	1	
10	0000025041	spring washer	1	
11	0000023128	screw	1	
12	3002434014	brake switch	1	
13	3022420001	charger 24V80A (Asian Chinese）	1	FE3R10/12
	9000011273	charger 24V80A (Asian English）		
	9000011274	charger 24V80A（European style）		
	9000011275	charger 24V80A（English style）		
	9000011276	charger 24V80A (Australian type）		
	9000011277	charger 24V80A （American type ）		
	9000010847	charger 24V60A（Asian Chinese）	1	FE3R06/08
	9000011278	charger 24V60A (Asian English）		
	9000011279	charger 24V60A （European style）		
	9000011280	charger 24V60A（English style）		
	9000011281	Charger 24V60A (Australian type）		
	9000011282	charger 24V60A (American type ）		

NOBUFT 诺力

Electrical components distribution

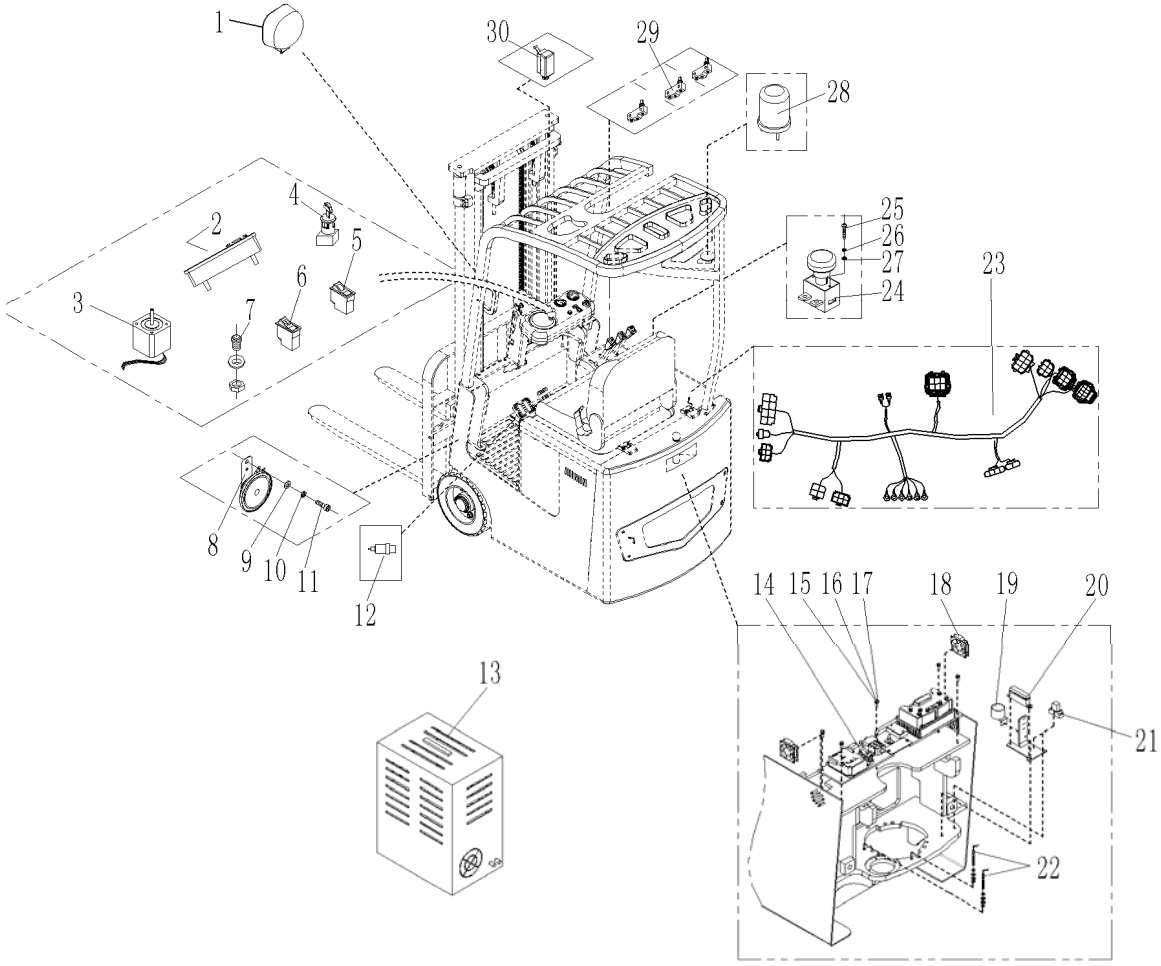

Figure 17

https://truckmanualshub.com/

Figure 17 Electrical components distribution G1

No.	SN	Name	QTY	Remarks
14	9000008677	electronic control assembly	1	FE3R10/12（ZAPI）
	9000011555	electronic control assembly		FE3R06/08（CURITS）
	9000010848	electronic control assembly		FE3R10/12（CURITS）
	9000008676	electronic control assembly		FE3R06/08（ZAPI）
15	0000023148	screw	5	
16	0000025051	washer	5	
17	0000025046	spring washer	5	
18	3012434012	fan	2	FE3R10/12（ZAPI）
19	3002434013	back-Up buzze	1	
20	3042434007	fuse box	1	FE3R06/12（ZAPI）
21	1000434014	electric relay	1	FE3R06/12（ZAPI）
22	1100234001	proximity switch	1/2	ZAPI:2 CURTIS:1
23	3022434015	FE3R10-12AC harness	1	FE3R10/12（ZAPI）
	9000011556	FE3R08AC harness (Curtis）		FE3R06/08（CURTIS）
	9000010849	FE3R12AC harness (Curtis）		FE3R10/12（CURTIS）
	3022434001	FE3R08AC harness		FE3R06/08（ZAPI）
24	2240434001	DC power supply switch	1	
25	0000023458	screw	4	
26	0000025054	washer	4	
27	0000025044	spring washer	4	
28	9000009464	caution light	1	
29	3022434009	inches switch	2/3	
30	3002434003	inches switch	1	

FE3R12 electronic control assembly（ZAPI）

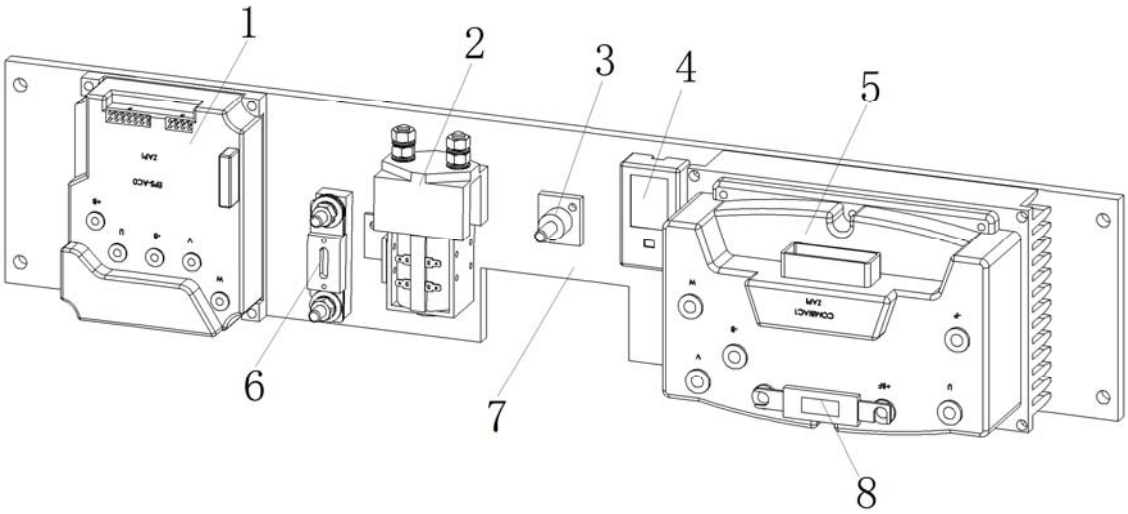

Figure 18

Figure 18 FE3R12 electronic control assembly（ZAPI） G2

No.	SN	Name	QTY	Remarks
1	3022434017	steering control device	1	
2	2390434003	contactor	1	
3	9000007715	wiring terminal	1	
4	1000434019	discharge module	1	
5	3022434016	traction power controller	1	
6	1000434020	bolt type fuse	1	
7	9000008674	FE3R12AC aluminium plate (Zapi)	1	
8	3002434017	fuse	1	

NOBUFT 诺力

FE3R08/12 Electronic control assembly（CURTIS）

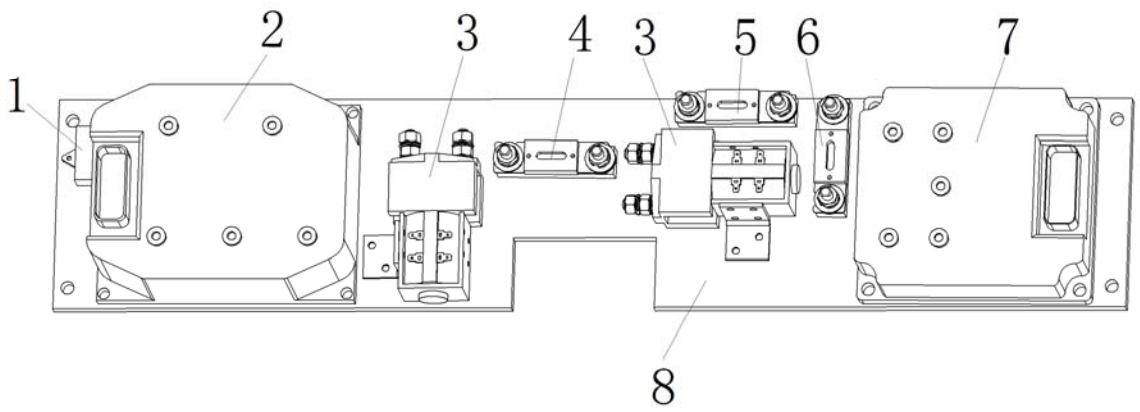

Figure 19

Figure 19 FE3R08/12 electronic control assembly（CURTIS） G3

No.	SN	Name	QTY	Remarks
1	9000010850	anti static module	1	
2	9000010851	traction power controller	1	FE3R10/12
	9000011554	traction power controller		FE3R06/08
3	2390434003	contactor	2	
4	9000010852	fuse	1	
5	9000010853	fuse	1	
6	9000010854	fuse	1	
7	9000010855	steering power controller	1	FE3R10/12
	9000011553	steering power controller		FE3R06/08
8	9000010856	aluminium plate	1	

NOBUFT 诺力

FE3R08 electronic control assembly（ZAPI）

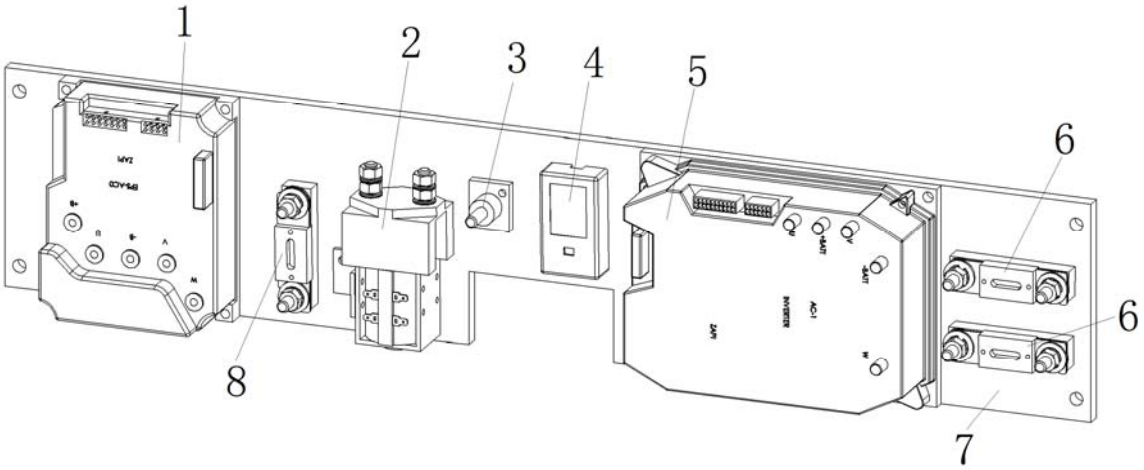

Figure 20

https://truckmanualshub.com/

Figure 20 FE3R08 Electronic control assembly（ZAPI） G4

No.	SN	Name	QTY	Remarks
1	3022434013	steering control device	1	
2	2390434003	contactor	1	
3	9000007715	wiring terminal	1	
4	1000434019	discharge module	1	
5	3022434012	traction power controller	1	
6	1020434001	bolt type fuse	1	
7	9000008673	aluminium plate	1	
8	1000434020	bolt type fuse	1	

NOBLIFT 诺力

Power connecting wire assembly

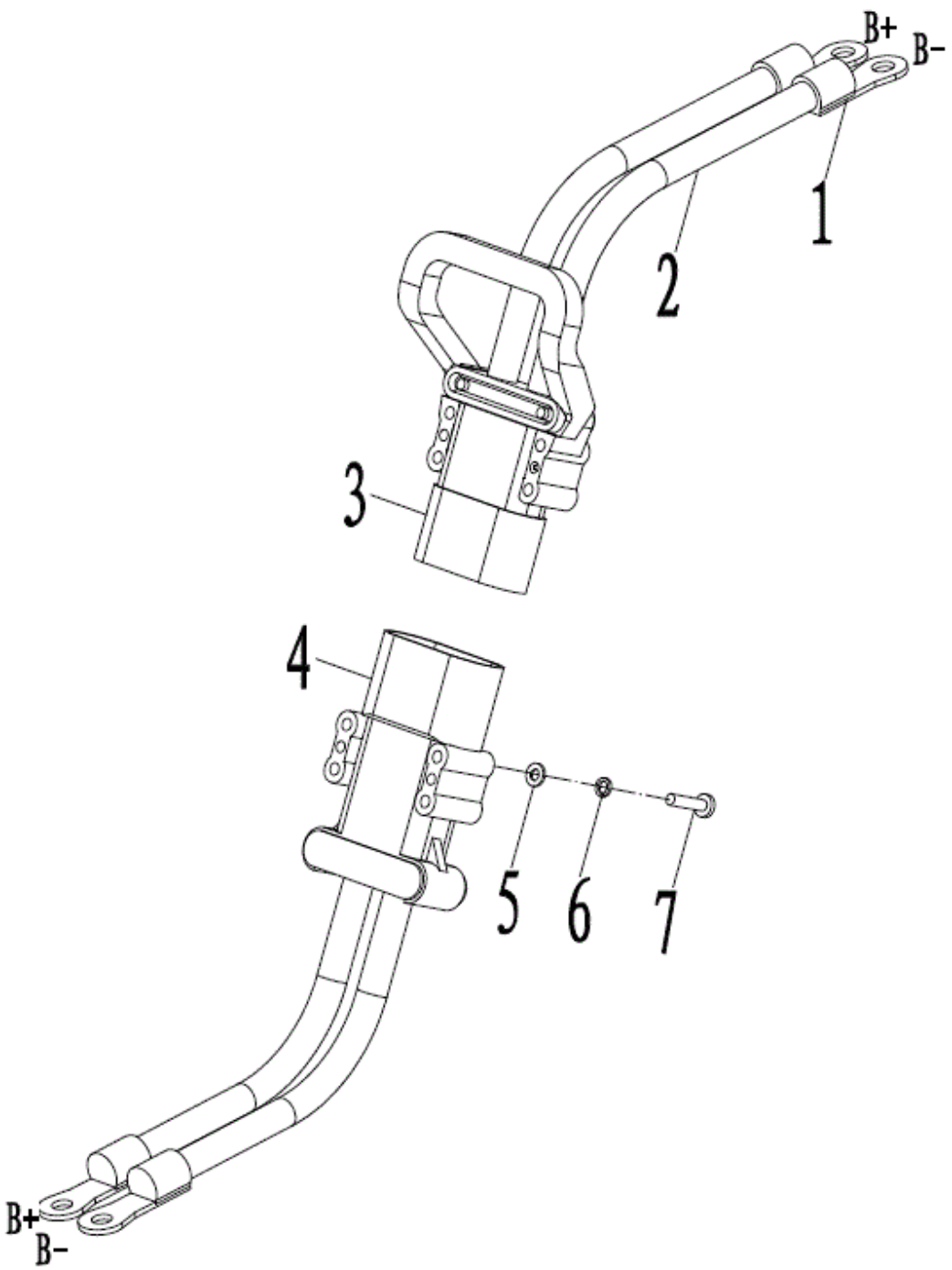

Figure 21

https://truckmanualshub.com/

Figure 21 Power connecting wire assembly G5

No.	SN	Name	QTY	Remarks
1	9000011504	binding post	2	
2	9000011503	cable conductor	4	
3	3002434023	connector female head	1	
4	3002434022	connector male head	1	
5	0000025050	washer	4	
6	0000025045	spring washer	4	
7	0000023290	bolt	4	

NOBUFT 诺力

Multiple unit valve (Duplex)

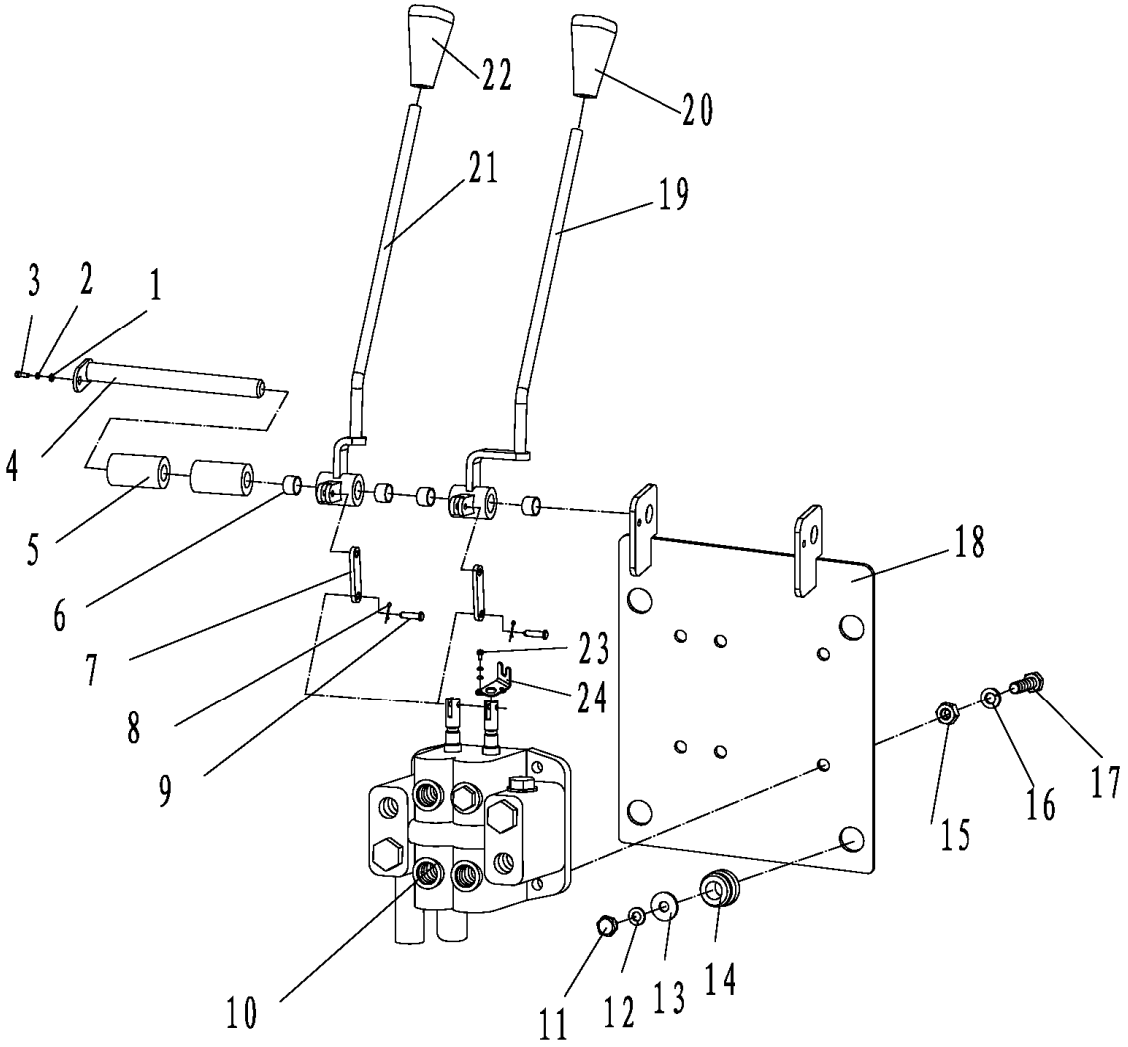

Figure 22

Figure 22 Multiple unit valve (Duplex) H1

No.	SN	Name	QTY	Remarks
1	0000025050	washer	5	
2	0000025045	spring washer	5	
3	0000023358	bolt	1	
4	3047401004	shaft	1	
5	3047402001	shaft sleeve	1	
6	3046400007	bearing	6	
7	3017402004	connecting plate	2	
8	0000028034	cotter pin	6	
9	0000028046	pin roll	6	
10	3017400001	duplex multiple unit valve	1	
11	0000023230	bolt	4	
12	0000025046	spring washer	4	
13	0000025051	big washer	4	
14	3011818001	anti-vibration pad	4	
15	0000024018	nut	3	
16	0000025041	spring washer	3	
17	0000023247	bolt	3	
18	3027401001	bracket,valve	1	
19	3027401002	lifting control handle	1	
20	3007403003	lifting ball knob	1	
21	3027401003	tilting control handle	1	
22	3007403006	tilting ball knob	1	
23	0000023141	screw	4	
24	9000004557	switch bracket	2	

NOBUET 诺力

Multiple unit valve (Triplex)

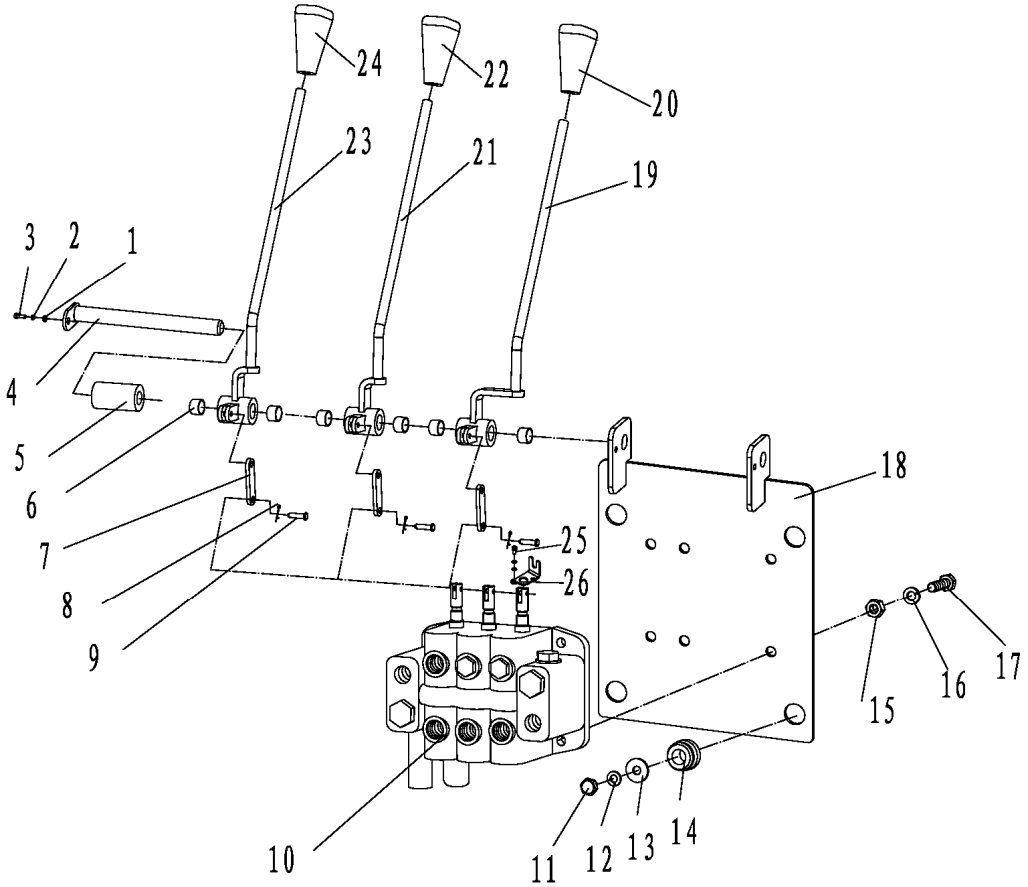

Figure 23

Figure23 Multiple unit valve (Triplex) H2

No.	SN	Name	QTY	Remarks
1	0000025050	washer	7	
2	0000025045	spring washer	7	
3	0000023358	bolt	1	
4	3047401004	shaft	1	
5	3047402001	shaft sleeve	1	
6	3046400007	bearing	6	
7	3017402004	connecting plate	2	
8	0000028034	cotter pin	6	
9	0000028046	pin roll	6	
10	3017400001	duplex multiple unit valve	1	
11	0000023230	bolt	4	
12	0000025046	spring washer	4	
13	0000025051	big washer	4	
14	3011818001	anti-vibration pad	4	
15	0000024018	nut	3	
16	0000025041	spring washer	3	
17	0000023247	bolt	3	
18	3027401001	bracket,valve	1	
19	3027401002	lifting control handle	1	
20	3007403003	lifting ball knob	1	
21	3027401003	Tilting control handle	1	
22	3007403006	tilting ball knob	1	
23	3027401004	joystick assembly of the accessory	1	
24	3007403004	handle knob of accessory	1	
25	0000023141	screw	6	
26	9000004557	switch bracket	3	

NOBUET 诺力

Hydraulic system

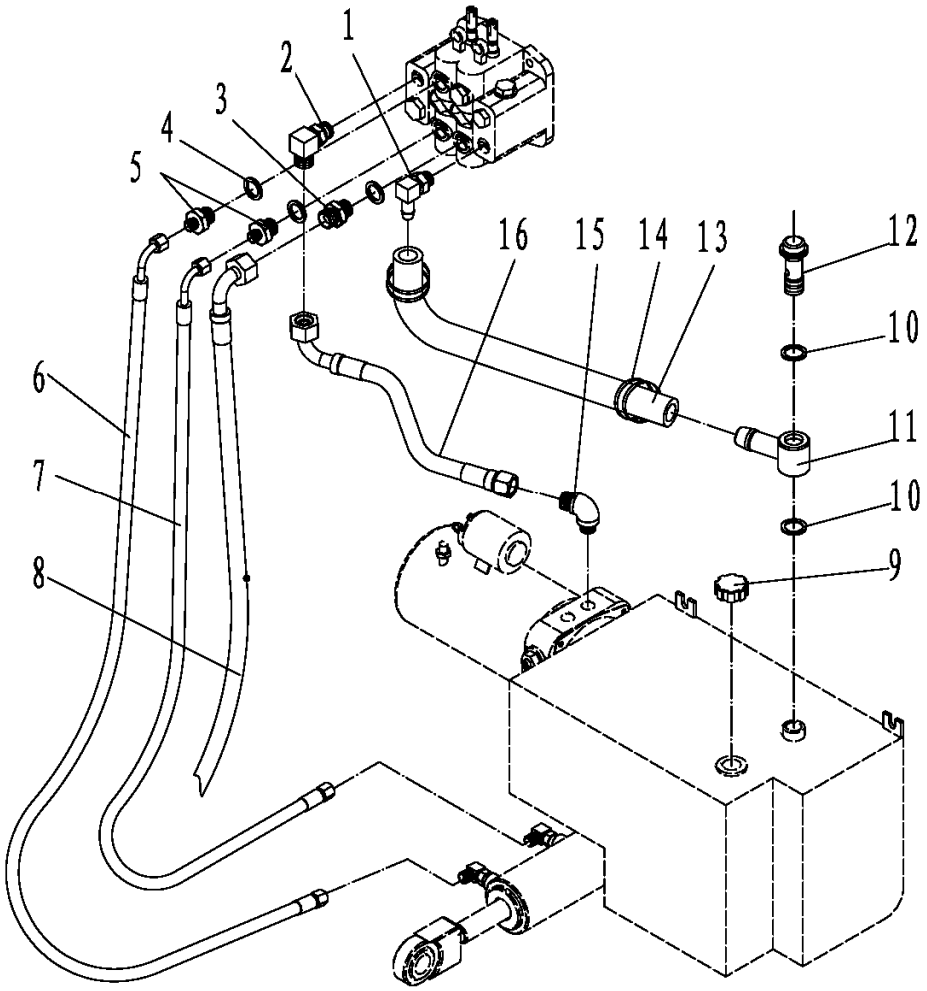

Figure 24

https://truckmanualshub.com/

Figure 24 Hydraulic system I1

No.	SN	Name	QTY	Remarks
1	3017600001	right-angle connector	1	
2	3007600005	right-angle connector	1	
3	3007402006	right-angle connector	2	
4	0000022082	O-ring	3	
5	3068017003	straight joint	2	
6	3027617004	outer the oil tube	1	FE3R06/08
	3027617009	outer the oil tube		FE3R10/12
7	3027617003	inside the oil tube	1	FE3R06/08
	3027617007	inside the oil tube		FE3R10/12
8	3027617002	lifting oil tube	1	FE3R06/08
	3027617008	lifting oil tube		FE3R10/12
9	3027503001	oil tank cap	1	
10	0000022052	bonded washer	2	
11	3007601002	union tee	1	
12	3007602011	link bolt	1	
13	3027617004	oil return tube	1	
14	0000037002	double steel wire clamp	2	
15	3027600001	straight joint	1	
16	3008017008	lifting oil tube	1	FE3R06/08
	3027617001	connector tube		FE3R10/12

Figure 25 Pipeline system of mast (Basic main frame) 12

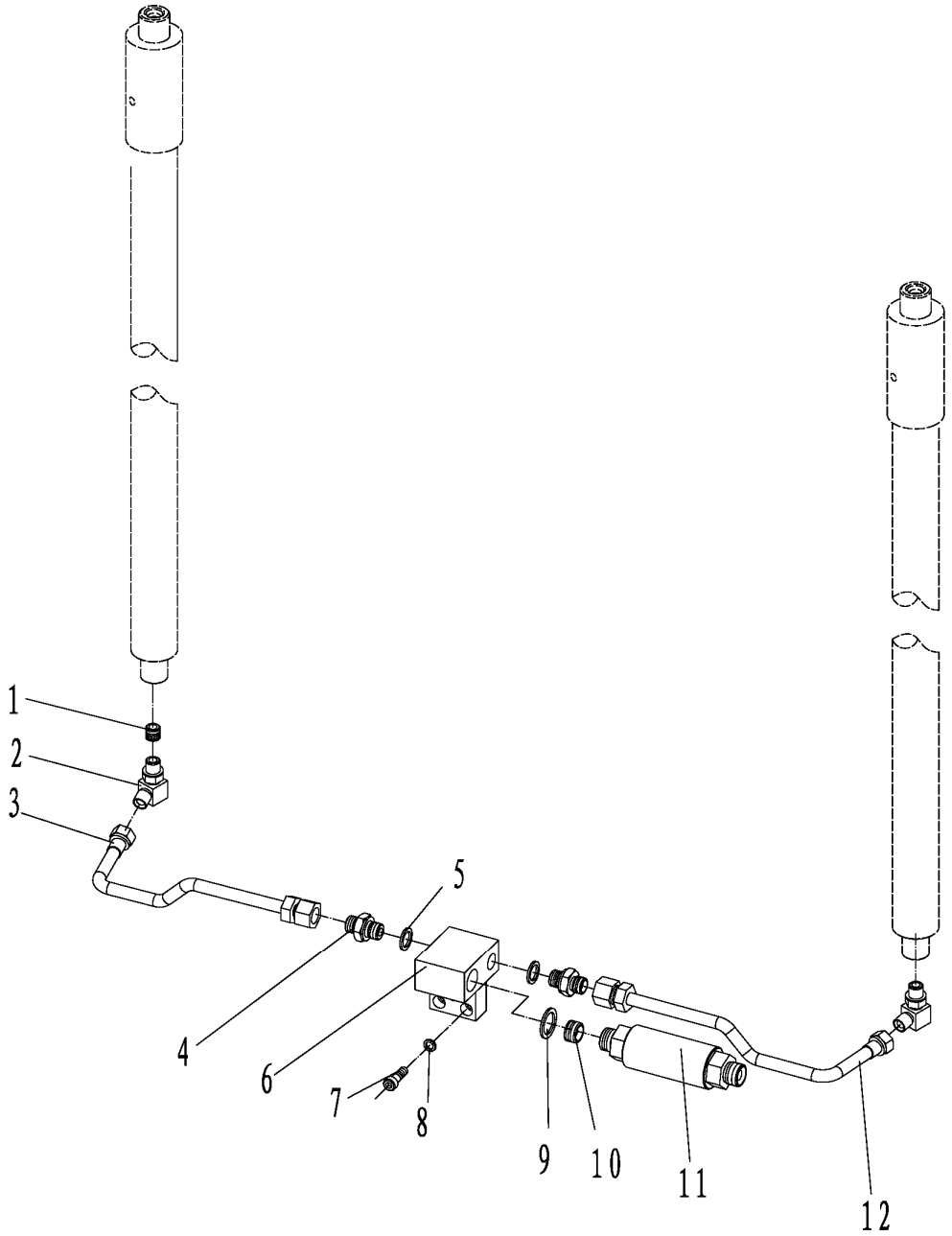

Figure 25

Pipeline system of mast (Basic main frame)

No.	SN	Name	QTY	Remarks
1	2000337001	valve	1	
2	3028000062	elbow	2	
3	9000004716	steering steel pipe lift	1	
4	9000010964	nipple	2	
5	0000022051	washer	2	
6	3027601002	union valve	1	
7	0000023148	bolt	2	
8	0000025046	spring washer	2	
9	0000022052	washer	1	
10	3027600002	governor valve	1	
11	3027617006	valve joint	1	
12	9000004715	steering steel pipe right	1	

NOBUFT 诺力

Pipeline system of mast (2-stage full free)

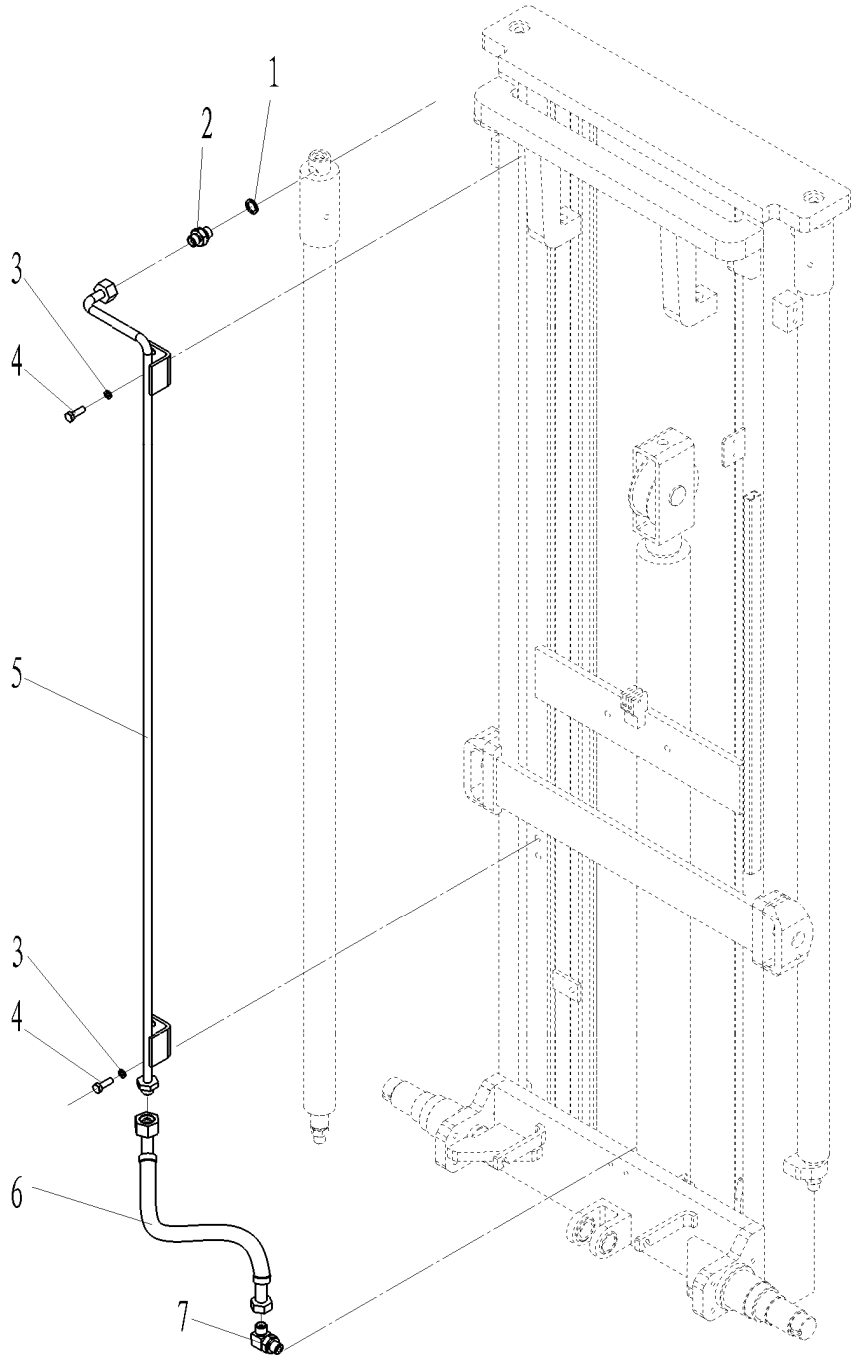

Figure 26

Figure26 Pipeline system of mast (2-stage full free) I3

No.	SN	Name	QTY	Remarks
1	0000022080	O-ring	1	
2	3028000062	straight joint	1	FE3R06/08
	3007602010	right angle joint		FE3R10-12
3	0000025046	spring washer	2	
4	0000023230	screw	2	
5	3028000058	oil tube (FE3R06/08)	1	H=3000mm
	3028000057			H =2500mm
	3028000056			H =2700mm
	3028000059			H =3300mm
	3028000060			H =3600mm
	3028000061			H=4000mm
	9000011547	oil tube (FE3R10/12)	1	H=3000mm
	9000011548			H =2500mm
	9000011549			H =2700mm
	9000011550			H =3300mm
	9000011551			H =3600mm
	9000011552			H=4000mm
6	3028017001	connecting tube	1	
7	3028000062	straight joint	1	

NOBUFT 诺力

https://truckmanualshub.com/

Fork

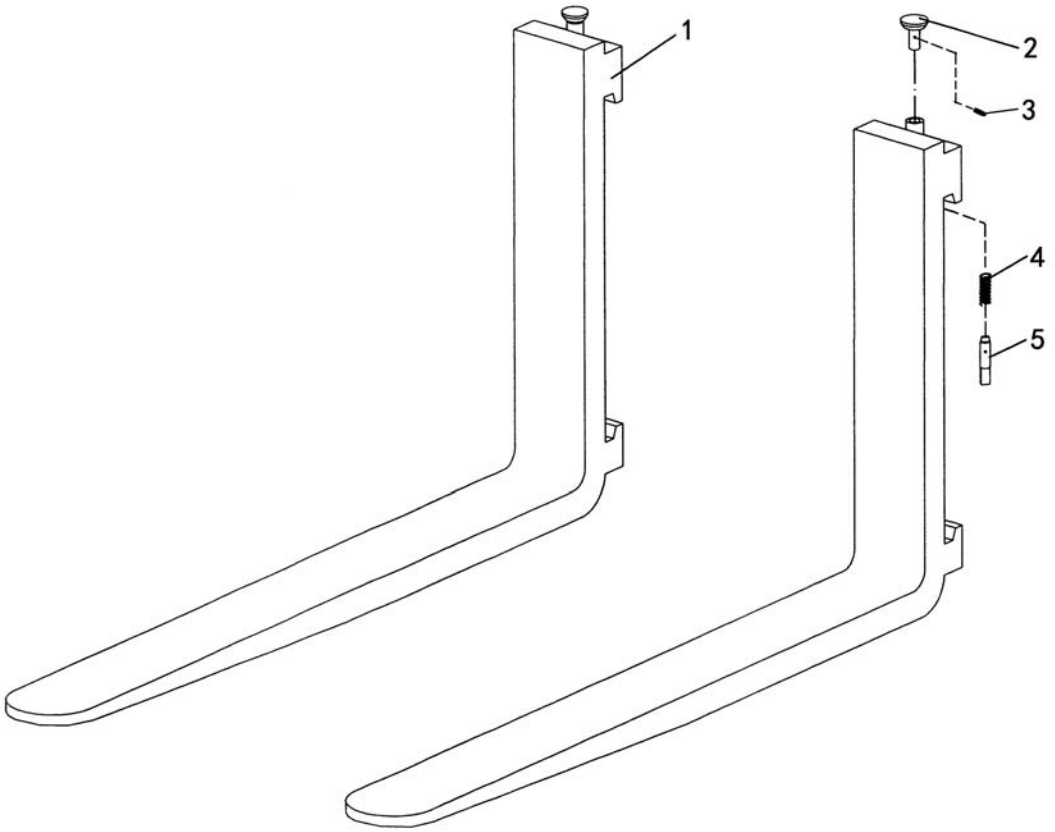

Figure 27

https://truckmanualshub.com/

Figure 27 Fork I4

No.	SN	Name	QTY	Remarks
A	3008000024	fork	2	L=920mm
	3008000025	fork		L=950mm
	3008000026	fork		L=1000 mm
	3008000027	fork		L=1150mm
	3008000028	fork		L=1200mm
1	3008001153	fork body	2	
2	9000003960	handle	2	
3	0090000598	pin	2	
4	9000003959	spring	2	
5	9000003958	locating pin	2	

NOBUFT 诺力

Fork Frame、Back-rest (standart mast)

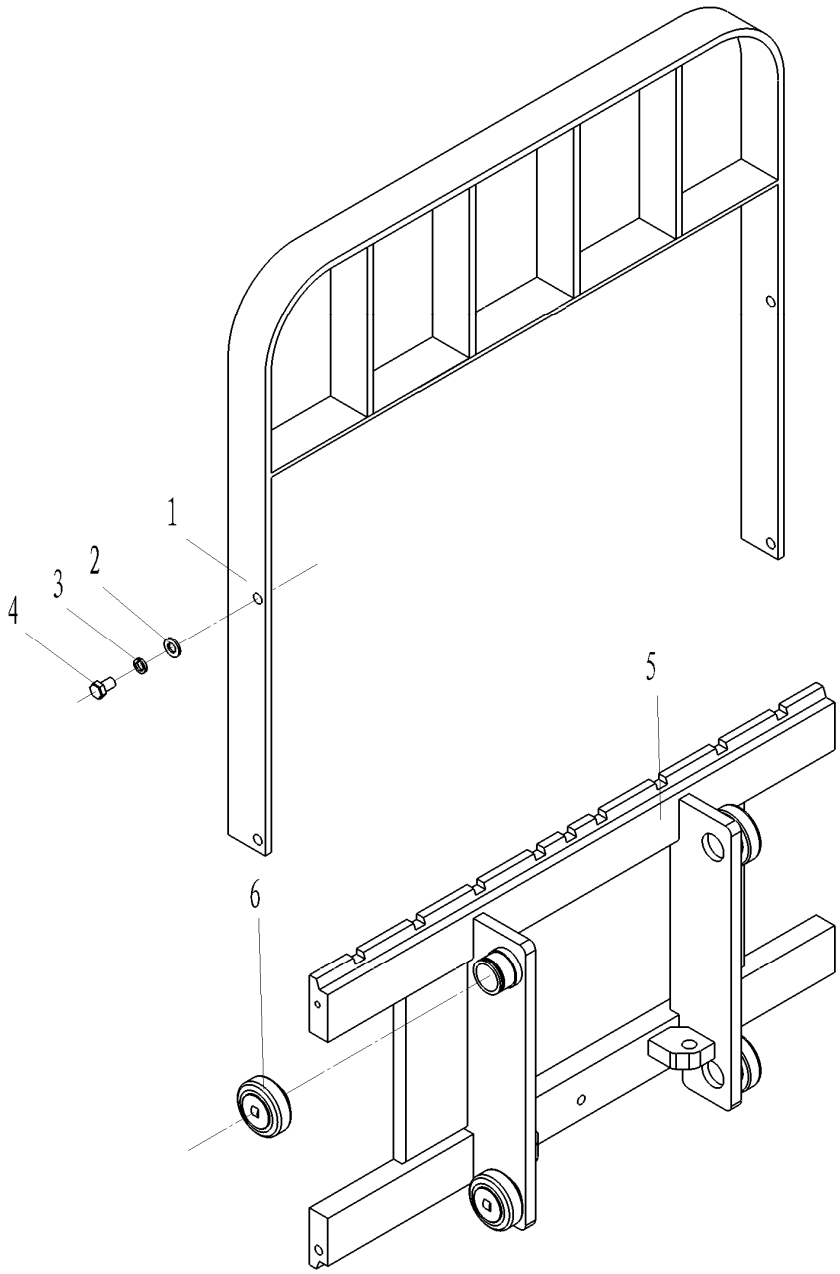

Figure 28

Figure 28 Fork Frame、Back-rest (standart mast) I5

No.	SN	Name	QTY	Remarks
1	3028001004	back-rest	1	
2	0000025048	washer	4	
3	0000025042	spring washer	4	
4	0000023226	bolt	4	
5	3028001003	fork frame	1	FE3R06/08
	3028001028	fork frame		FE3R10/12
6	3028001065	composite roller	4	

NOBUFT 诺力

Fork Frame、Back-rest (2-stage full free)

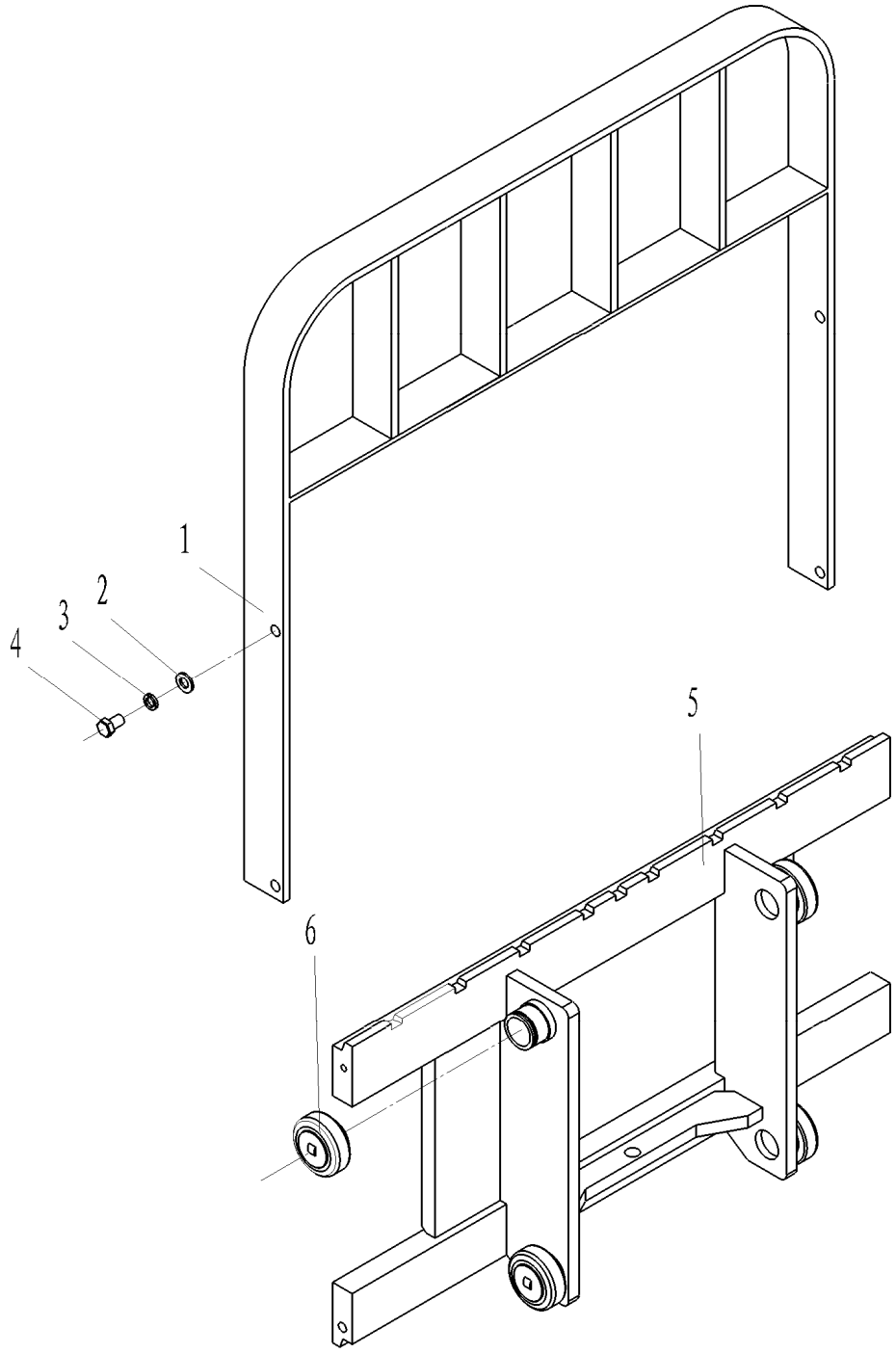

Figure 29

Figure 29 Fork Frame、Back-rest (2-stage full free) I6

No.	SN	Name	QTY	Remarks
1	3028001004	back-rest	1	
2	0000025048	washer	4	
3	0000025042	spring washer	4	
4	0000023226	bolt	4	
5	3028001041	fork frame	1	FE3R06/08
	3028001059	fork frame		FE3R10/12
6	3028001065	composite roller	4	

NOBUFT 诺力

https://truckmanualshub.com/

Mast (standart mast)

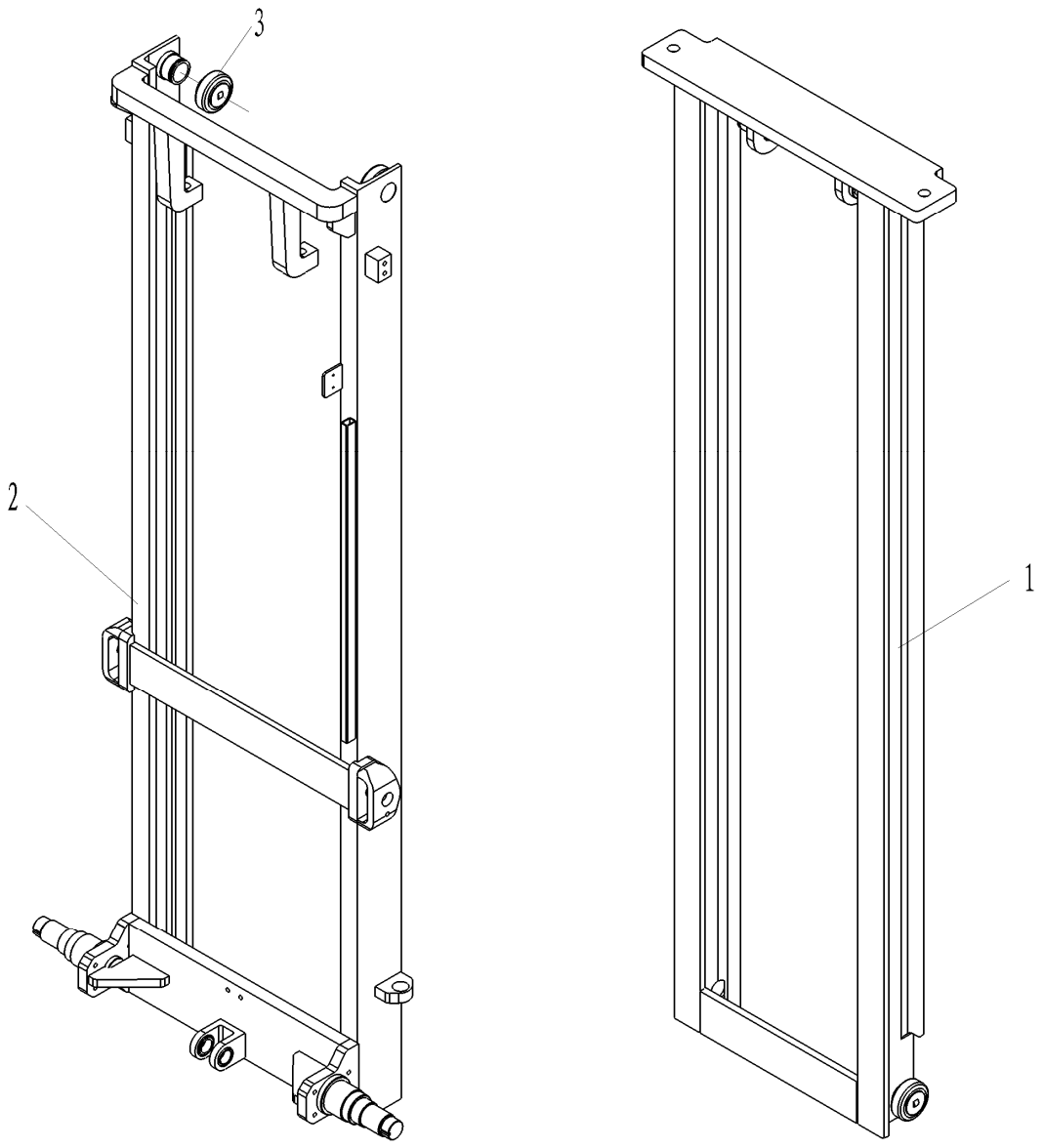

Figure 30

Figure 30 Mast (standart mast) I7

No.	SN	Name	QTY	Remarks
1	3028001001	outer main frame (FE3R06/08)	1	H=3000mm
	3028001006			H=2500mm
	3028001007			H=2700mm
	3028001008			H=3300mm
	3028001009			H=3600mm
	3028001010			H=4000mm
	3028001016	outer main frame (FE3R10/12)	1	H=3000mm
	3028001017			H=2500mm
	3028001018			H=2700mm
	3028001019			H=3300mm
	3028001020			H=3600mm
	3028001021			H=4000mm
2	3028001002	inner main frame (FE3R06/08)	1	H=3000mm
	3028001011			H=2500mm
	3028001012			H=2700mm
	3028001013			H=3300mm
	3028001014			H=3600mm
	3028001015			H=4000mm
	3028001022	inner main frame (FE3R10/12)	1	H=3000mm
	3028001023			H=2500mm
	3028001024			H=2700mm
	3028001025			H=3300mm
	3028001026			H=3600mm
	3028001027			H=4000mm
3	3028001065	composite roller	4	

NOBUFT 诺力

Mast (2-stage full free)

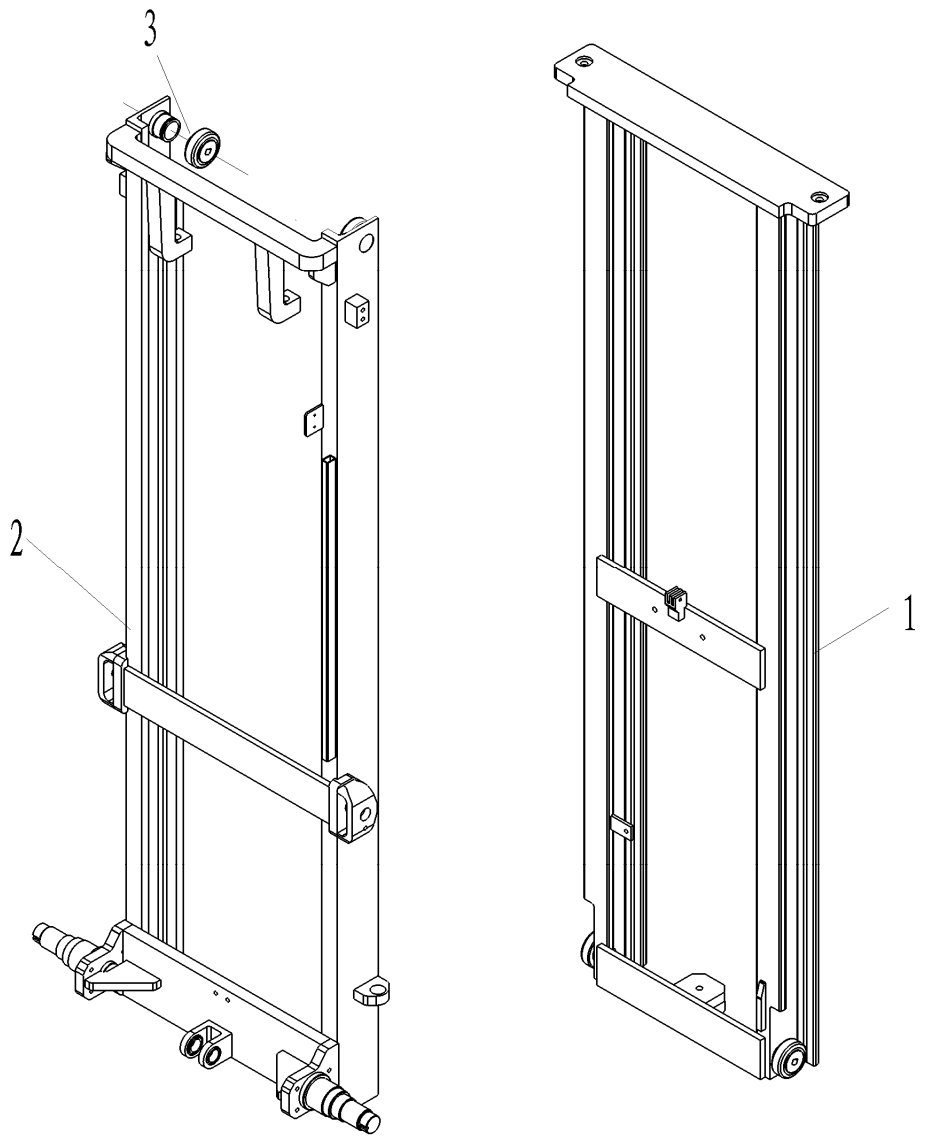

Figure **31**

Figure 31 Mast (2-stage full free) I8

No.	SN	Name	QTY	Remarks
1	3028001035	inner main frame (FE3R06/08)	1	H=3000mm
	3028001036			H=2500mm
	3028001037			H=2700mm
	3028001038			H=3300mm
	3028001039			H=3600mm
	3028001015			H=4000mm
	3028001047	inner main frame (FE3R10/12)	1	H=3000mm
	3028001048			H=2500mm
	3028001049			H=2700mm
	3028001050			H=3300mm
	3028001051			H=3600mm
	3028001052			H=4000mm
2	3028001029	outer main frame (FE3R06/08)	1	H=3000mm
	3028001030			H=2500mm
	3028001031			H=2700mm
	3028001032			H=3300mm
	3028001033			H=3600mm
	3028001034			H=4000mm
	3028001053	outer main frame (FE3R10/12)	1	H=3000mm
	3028001054			H=2500mm
	3028001055			H=2700mm
	3028001056			H=3300mm
	3028001057			H=3600mm
	3028001058			H=4000mm
3	3028001065	composite roller	4	

NOBUFT 诺力

Lifting cylinder (standart mast)

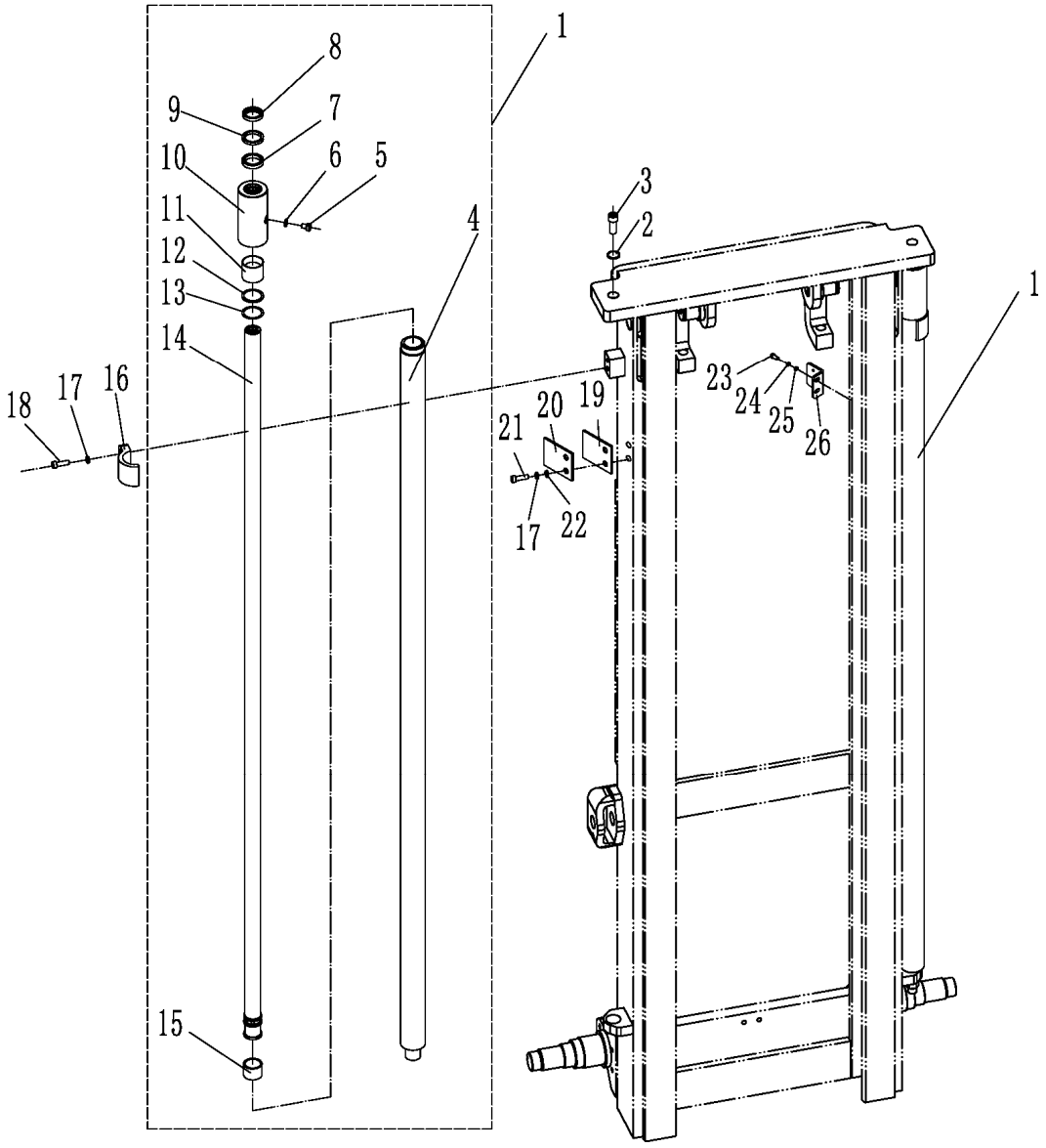

Figure **32**

Figure 32 Lifting cylinder (standart mast) I9

No.	SN	Name	QTY	Remarks
A	3028000001	lifting cylinder (FE3R06/08)	2	H=3000mm
	3028000009			H=2500mm
	3028000010			H=2700mm
	3028000011			H=3300mm
	3028000012			H=3600mm
	3028000013			H=4000mm
	3028000019	lifting cylinder (FE3R10/12)		H=3000mm
	3028000020			H=2500mm
	3028000021			H=2700mm
	3028000022			H=3300mm
	3028000023			H=3600mm
	3028000024			H=4000mm
1	0000023604	screw	2	
2	0000025042	spring washer	2	
3	0000023471	screw	2	
4	9000011108	cylinder block	1	FE3R06/08
	9000011109	cylinder block		FE3R10/12
5	0000023604	screw	2	
6	0090000645	combined sealing washer	2	
7	9000011110	shaft seal	1	FE3R06/08
	9000011111	shaft seal		FE3R10/12
8	9000011112	scraper seal	1	FE3R06/08
	9000011113	scraper seal		FE3R10/12
9	9000011114	bead flange	1	FE3R06/08
	9000011115	bead flange		FE3R10/12
10	9000011116	cylinder cover	1	FE3R06/08
	9000011117	cylinder cover		FE3R10/12
11	9000011118	steel-backed bearing	1	FE3R06/08
	9000011119	steel-backed bearing		FE3R10/12
12	0000022013	O-ring	1	FE3R06/08

Lifting cylinder (standart mast)

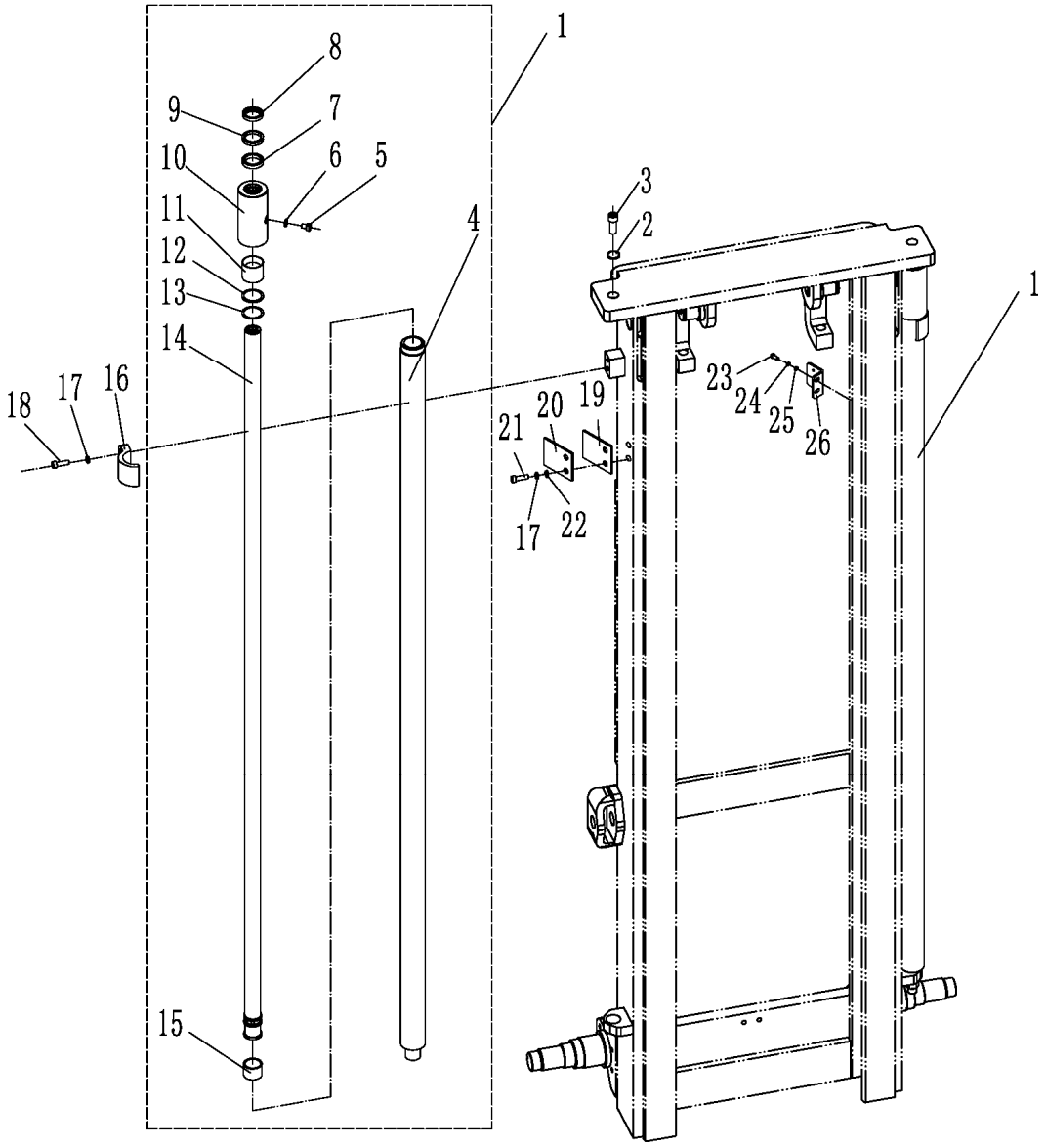

Figure 32

https://truckmanualshub.com/

Figure 32 Lifting cylinder (standart mast) I9

No.	SN	Name	QTY	Remarks
12	0000022048	O-ring	1	FE3R10/12
13	9000011120	bead flange	1	FE3R06/08
	9000011121	bead flange		FE3R10/12
14	9000011122	piston rod assembly	1	FE3R06/08
	9000011123	piston rod assembly		FE3R10/12
15	9000011124	hole with a support ring	1	FE3R06/08
	9000011285	hole with a support ring		FE3R10/12
16	3028005001	cylinder fixing seat	2	FE3R06/08
	3018005004	cylinder clamp		FE3R10/12
17	0000025046	spring washer	2	
18	0000023369	screw	2	
19	9000004123	pad adjusting oil cylinder	2	FE3R06/08
20	9000004122	oil cylinder fixed seat	2	FE3R06/08
21	0000023230	bolt	2	FE3R06/08
22	0000025051	washer	4	FE3R06/08
23	0000023478	screw	2	
24	0000025045	spring washer	2	
25	0000025050	washer	2	
26	9000008827	limiting switch mounting plate	1	

Short lifting cylinder (2-stage full free)

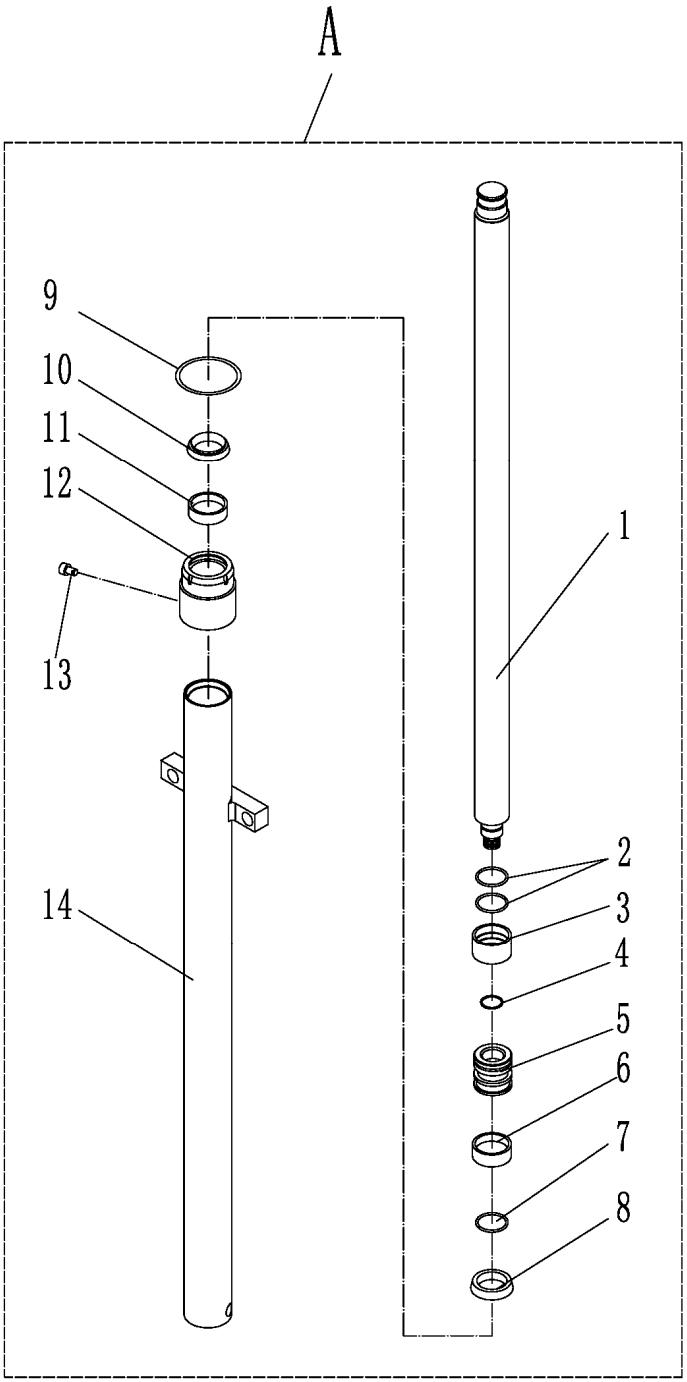

Figure 33

Figure33 Short lifting cylinder (2-stage full free) I10

No.	SN	Name	QTY	Remarks
A	3028000063	short lifting cylinder	1	H=3000mm
	3028000064	short lifting cylinder		H=2500mm
	3028000065	short lifting cylinder		H=2700mm
	3028000066	short lifting cylinder		H=3300mm
	3028000067	short lifting cylinder		H=3600mm
	3028000068	short lifting cylinder		H=4000mm
1	9000011125	piston rod	1	
2	0000022100	O-ring	2	
3	9000011126	regulator	1	
4	0090000431	Roundwire snap rings for shaft	1	
5	9000011127	plunger	1	
6	9000011128	hole with a support ring	1	
7	9000011129	bead flange	1	
8	9000011130	shaft seal	1	
9	0090000430	O-ring	1	
10	0000022125	dust seal	1	
11	9000011131	steel-backed bearing	1	
12	9000011132	cylinder cover	1	
13	9000011133	muffler	1	
14	9000011134	cylinder block assembly	1	

NOBUT 诺力

Lifting oil cylinder (2-stage full free)

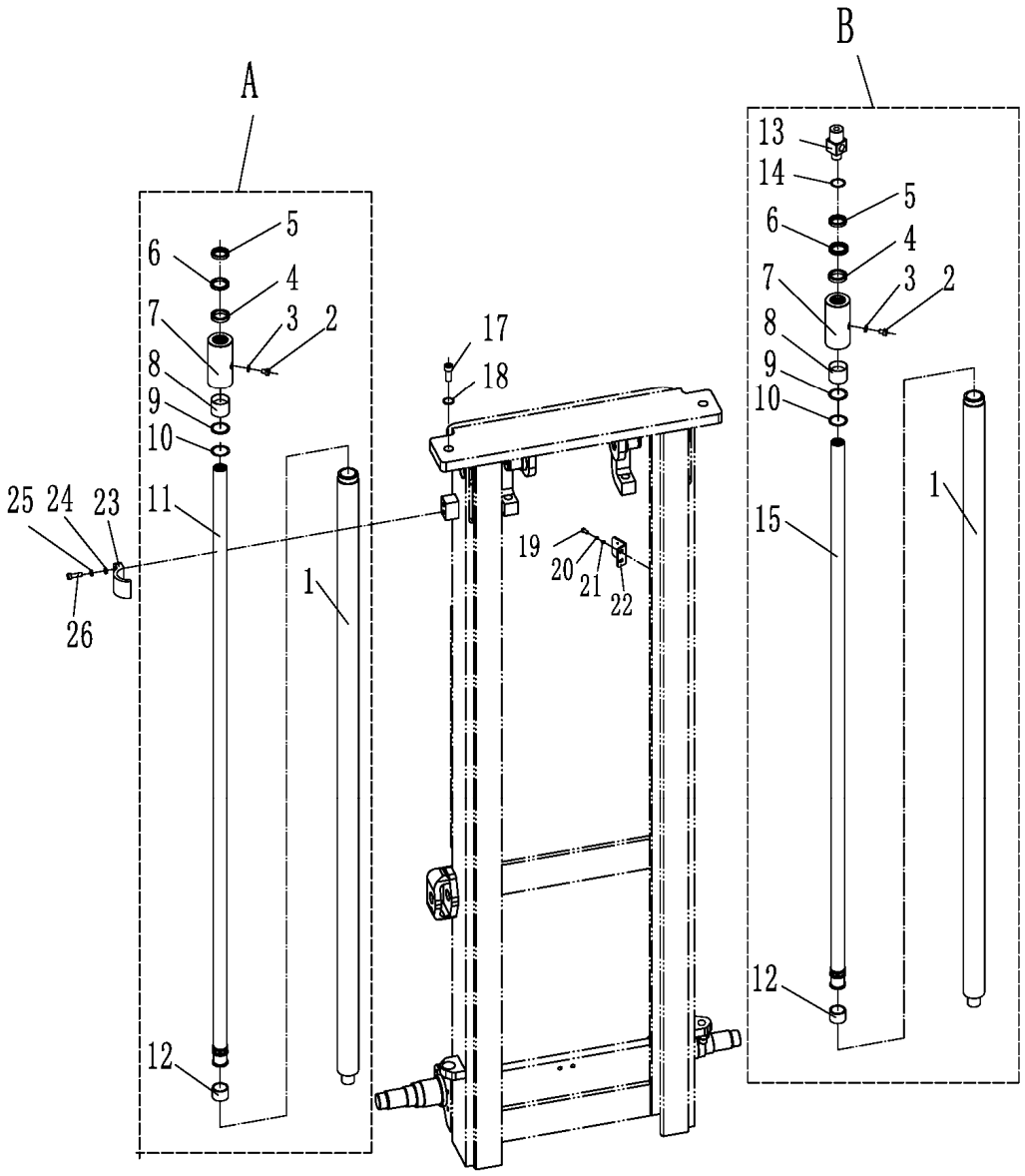

Figure 34

Figure34 Lifting oil cylinder (2-stage full free) I11

No.	SN	Name	QTY	Remarks
A	3028000032	lifting oil cylinder right	1	H=3000mm
	3028000009	lifting oil cylinder right		H=2500mm
	3028000010	lifting oil cylinder right		H=2700mm
	3028000011	lifting oil cylinder right		H=3300mm
	3028000012	lifting oil cylinder right		H=3600mm
	3028000013	lifting oil cylinder right		H=4000mm
B	3028000038	lifting oil cylinder left	1	H=3000mm
	3028000039	lifting oil cylinder left		H=2500mm
	3028000040	lifting oil cylinder left		H=2700mm
	3028000041	lifting oil cylinder left		H=3300mm
	3028000042	lifting oil cylinder left		H=3600mm
	3028000043	lifting oil cylinder left		H=4000mm
1	3028001046	cylinder block	2	
2	0000023604	screw	2	
3	0090000645	combined sealing washer	2	
4	9000011110	shaft seal	2	
5	9000011112	scraper seal	2	
6	9000011114	bead flange	2	
7	9000011135	cylinder cover	2	
8	9000011118	steel-backed bearing	2	
9	0000022013	O-ring	2	
10	9000011120	bead flange	2	
11	9000011136	right piston rod	1	
12	9000011124	hole with a support ring	2	
13	9000011331	left cylinder joint	1	
14	0000022020	O-ring	1	
15	9000011137	left piston rod	1	
16	9000011138	cylinder block	1	
17	0000023471	screw	2	
18	0000025042	spring washer	2	

NOBLET 诺力

Lifting oil cylinder (2-stage full free)

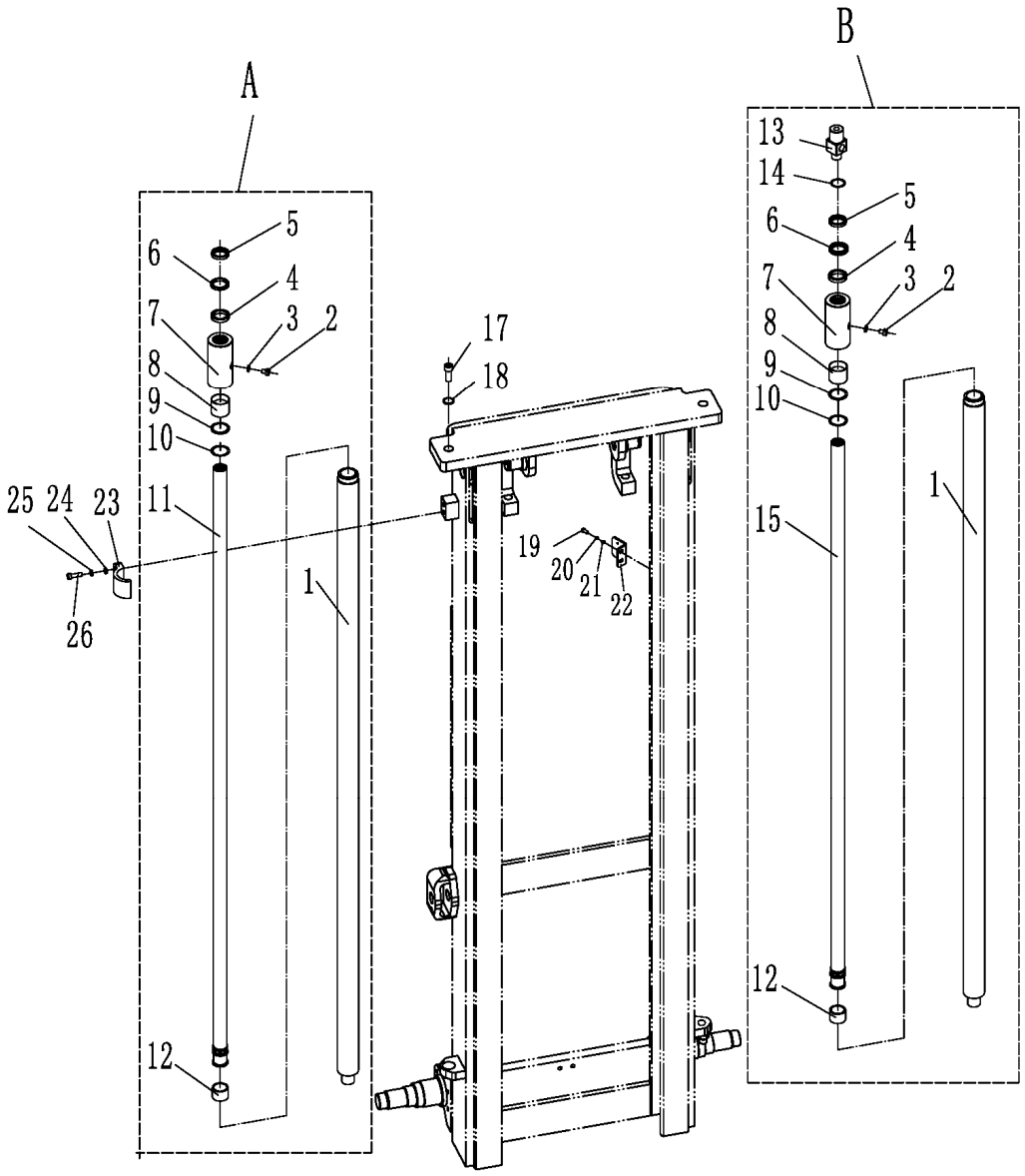

图 34

Figure34 Lifting oil cylinder (2-stage full free) I11

No.	SN	Name	QTY	Remarks
19	0000023478	screw	2	
20	0000025045	spring washer	2	
21	0000025050	washer	2	
22	9000008827	limiting switch mounting plate	1	
23	3028005001	cylinder fixing seat	2	
24	0000023369	screw	4	
25	0000025046	spring washer	4	
26	0000025051	washer	4	

NOBUFT 诺力

Lifting chain (standart mast)

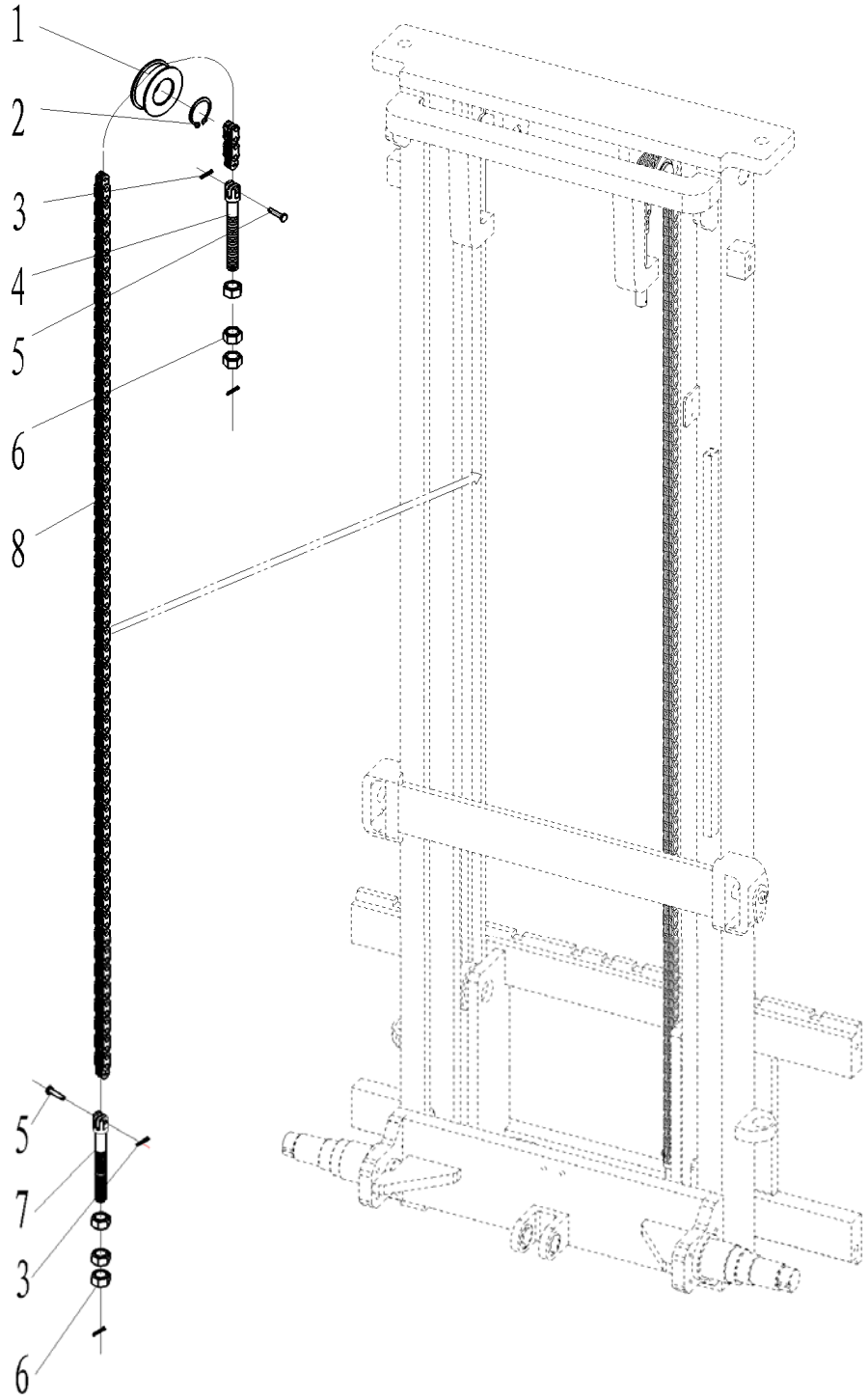

Figure 35

Figure35 Lifting chain (standart mast) I12

No.	SN	Name	QTY	Remarks
1	3028005001	chain wheel	2	
2	0000026014	steel wire washer for hole	2	
3	0000028019	cotter pin	8	
4	3028002003	chain joint	2	
5	3028002004	shaft	4	
6	0000024042	nut	12	
7	3028002005	chain joint	2	
8	0000029124	chain	2	H=3000mm
	0000029125	chain		H=2500mm
	0000029135	chain		H=2700mm
	0000029126	chain		H=3300mm
	0000029127	chain		H=3600mm
	0000029128	chain		H=4000mm

NOBLET 诺力

Lifting chain (2-stage full free)

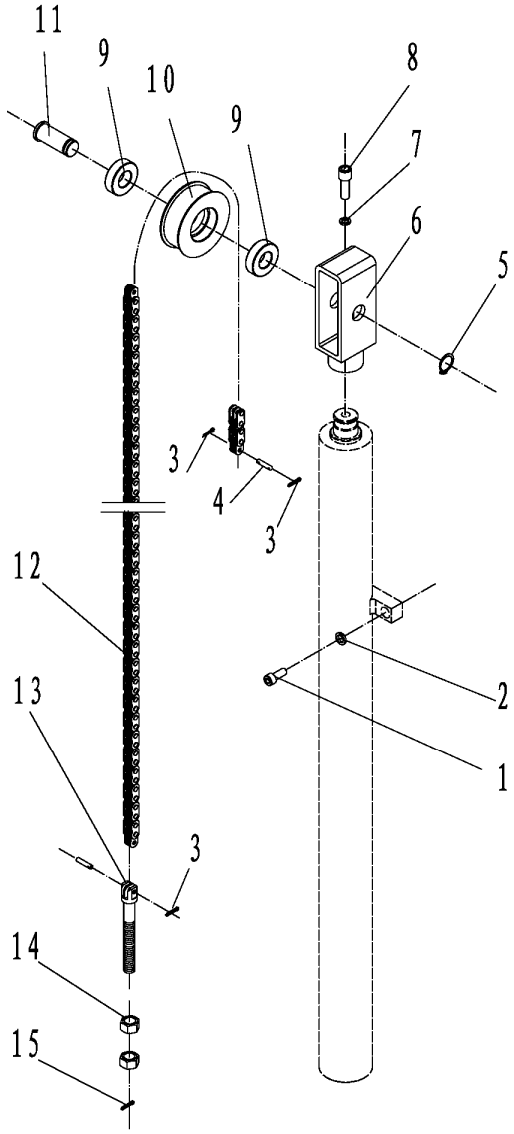

Figure 36

Figure 36 Lifting chain (2-stage full free) I13

No.	SN	Name	QTY	Remarks
1	0000023129	screw	2	
2	0000025041	spring washer	2	
3	0000028010	cotter pin	3	
4	3028002006	chain shaft	1	
5	0000026013	flesible washer for shaft	1	
6	3028005002	chain wheel frame	2	
7	0000025042	spring washer	1	
8	0000023471	screw	1	
9	0000027011	bearing	2	
10	3028002007	chain wheel	1	
11	9000003866	chain wheel shaft	1	
12	0000029136	chain	1	H=3000mm
	0000029137	chain		H=2500mm
	0000029138	chain		H=2700mm
	0000029139	chain		H=3300mm
	0000029140	chain		H=3600mm
	0000029141	chain		H=4000mm
13	3028002009	chain lever	1	
14	0000024042	nut	2	
15	0000028019	cotter pin	1	

NOBLET 诺力

External side shifter and pipeline installation system (Standard mast)

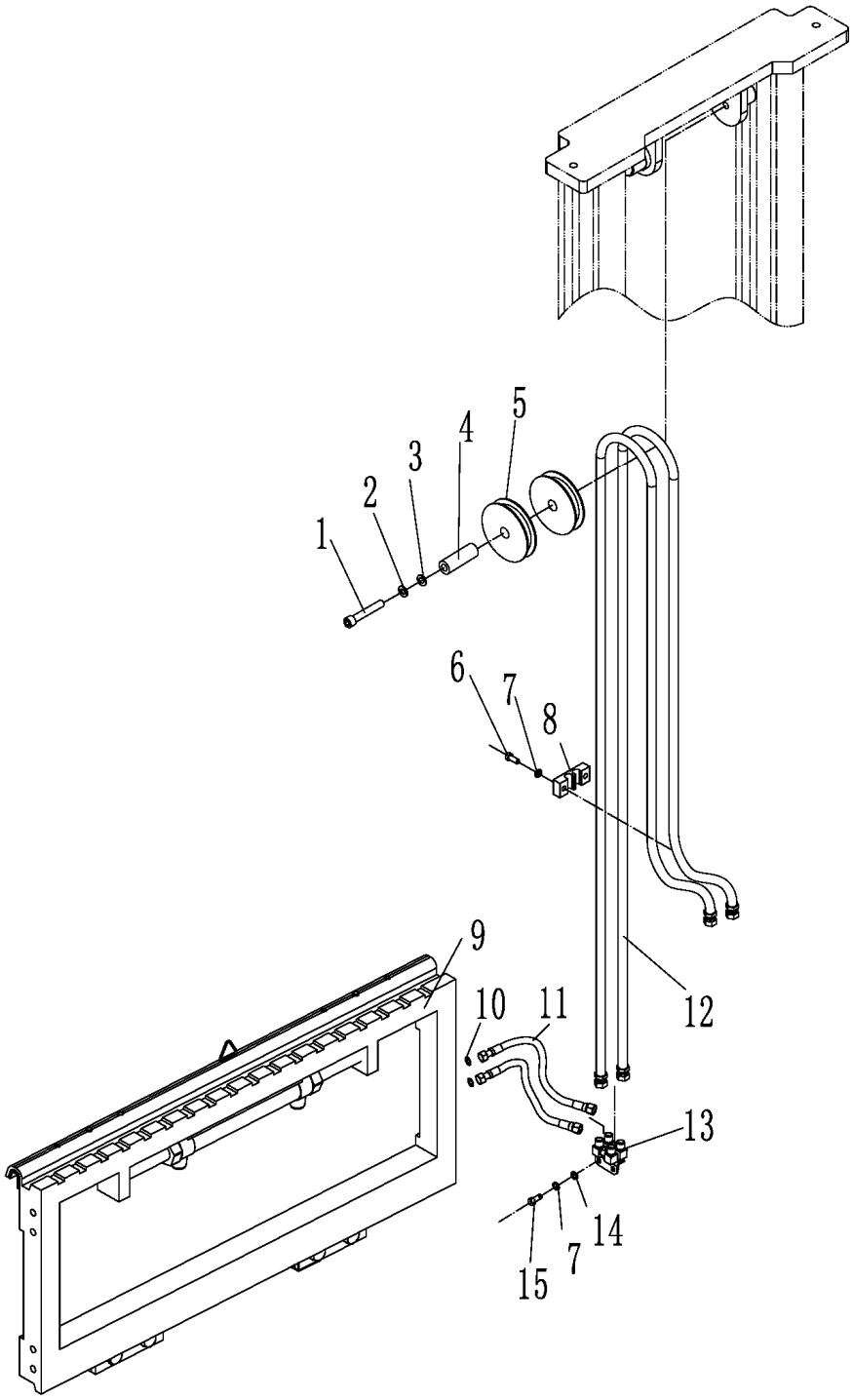

Figure 37

Figure37 External side shifter and pipeline installation system (Standard mast) I14

No.	SN	Name	QTY	Remarks
1	0090000169	bolt	1	
2	0000025042	spring washer	1	
3	0000025048	washer	1	
4	9000003826	bushing	1	
5	2000310002	pulley wheel	2	
6	0000023147	screw	4	
7	0000025046	spring washer	6	
8	3008002041	tubing clip	2	
9	9000011599	side shifter (external)	1	
10	0000022196	O-ring	2	
11	3008017039	side shifter hose	2	
12	9000004543	lateral hose	2	H=3000mm
	9000004544	lateral hose		H=2500mm
	9000004545	lateral hose		H=2700mm
	9000004546	lateral hose		H=3300mm
	9000004547	lateral hose		H=3600mm
	9000004548	lateral hose		H=4000mm
13	3008001034	four hole with oil block	1	
14	0000025051	washer	2	
15	0000023230	bolt	2	

Side shifter and pipeline installation system (Standard mast)

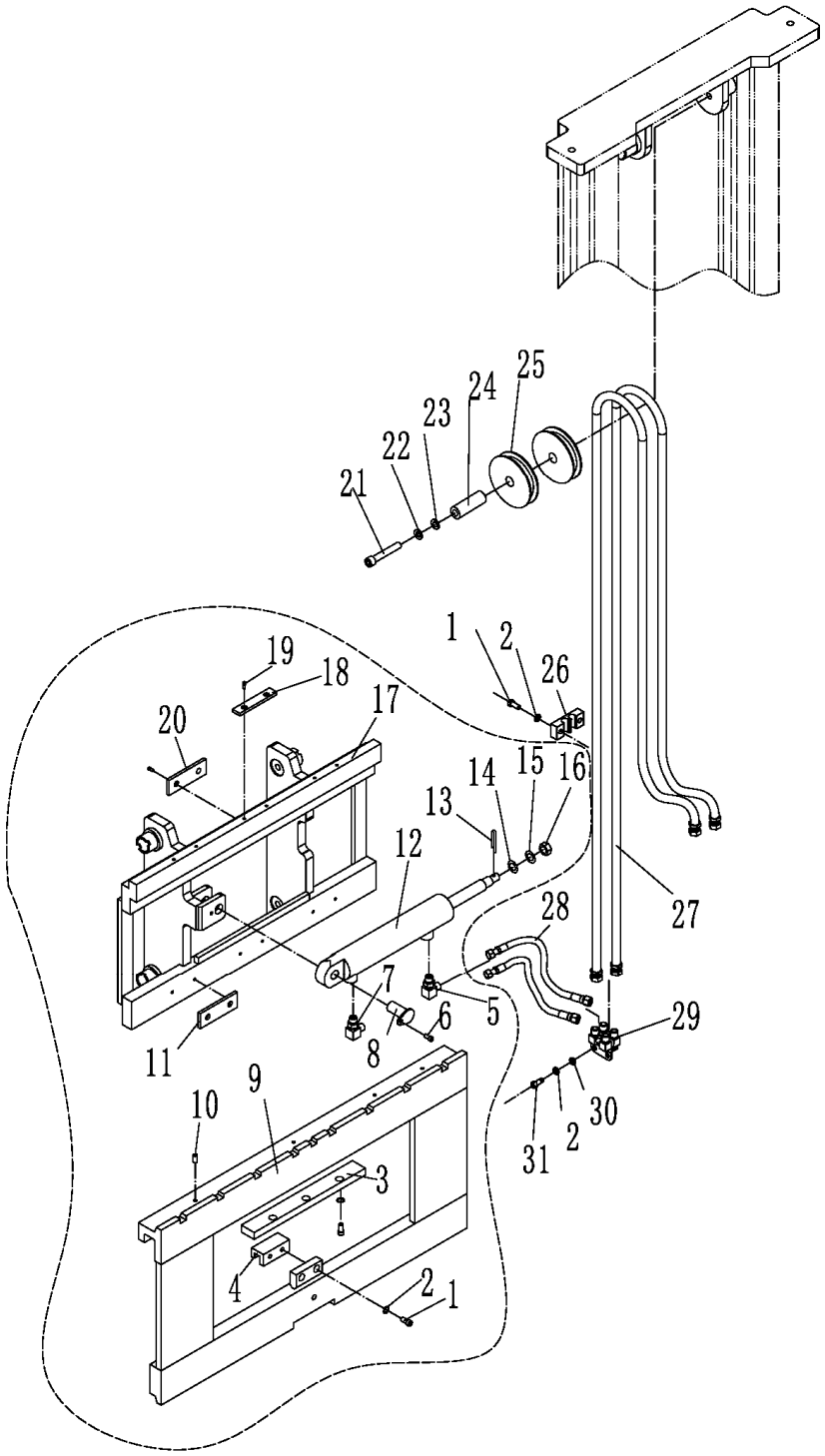

Figure 38

Figure38 Side shifter and pipeline installation system (Standard mast) I15

No.	SN	Name	QTY	Remarks
1	0000023147	screw	7	
2	0000025046	spring washer	9	
3	9000003850	stop block	1	
4	9000003846	link stopper	1	
5	9000005301	right angle joint	1	
6	0000023399	screw	1	
7	9000005302	right angle joint	1	
8	9000004720	pin roll	1	
9	9000004719	side shift frame	1	
10	0000030004	press fit type pressure oil filling cup	3	
11	9000003847	plate Ⅰ	3	
12	9000005303	sideshift cylinder	1	
13	0000028049	pin	1	
14	0000025049	washer	1	
15	0000025043	spring washer	1	
16	0000024020	nut	1	
17	9000004713	fork frame	1	FE3R06/08
	9000004722	fork frame		FE3R10/12
18	9000003849	plate Ⅲ	3	
19	0090000015	screw	18	
20	9000003848	plate Ⅱ	3	
21	0090000169	bolt	1	
22	0000025042	spring washer	1	
23	0000025048	washer	1	
24	9000003826	bushing	1	
25	2000310002	pulley	2	
26	3008002041	pipe clamp	1	
27	9000004543	lateral hose	2	H=3000mm
	9000004544	lateral hose		H=2500mm
	9000004545	lateral hose		H=2700mm

Side shifter and pipeline installation system (Standard mast)

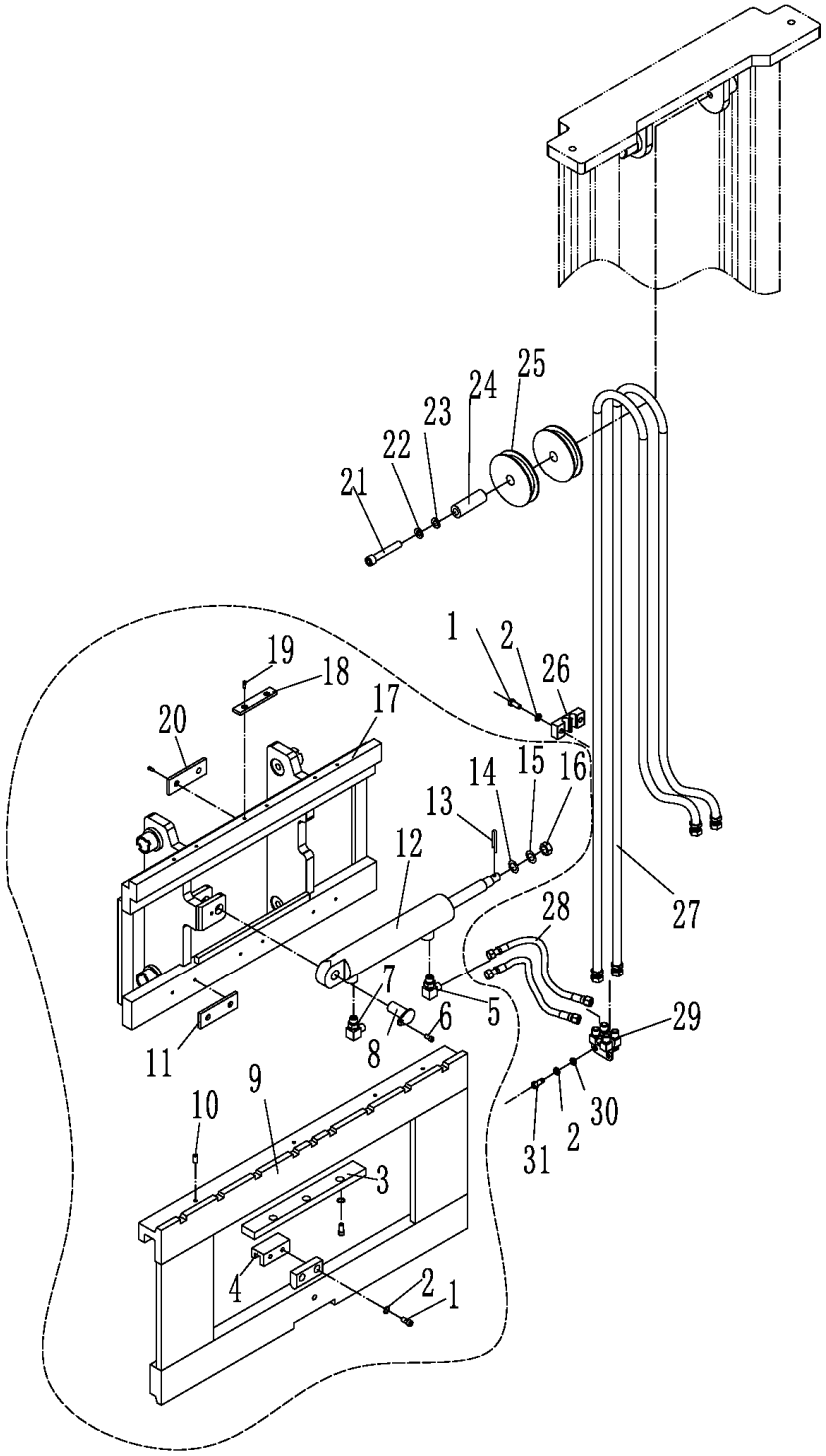

Figure 38

Figur38 Side shifter and pipeline installation system(Standard mast) I15

No.	SN	Name	QTY	Remarks
27	9000004546	lateral hose	2	H=3300mm
	9000004547	lateral hose		H=3600mm
	9000004548	lateral hose		H=4000mm
28	3008017005	side shifter hose	2	
29	3008001034	four hole with oil block	1	
30	0000025051	Washer	2	
31	0000023230	bolt	2	

NOBUFT 诺力

External side shifter and pipeline installation system(2-stage full free)

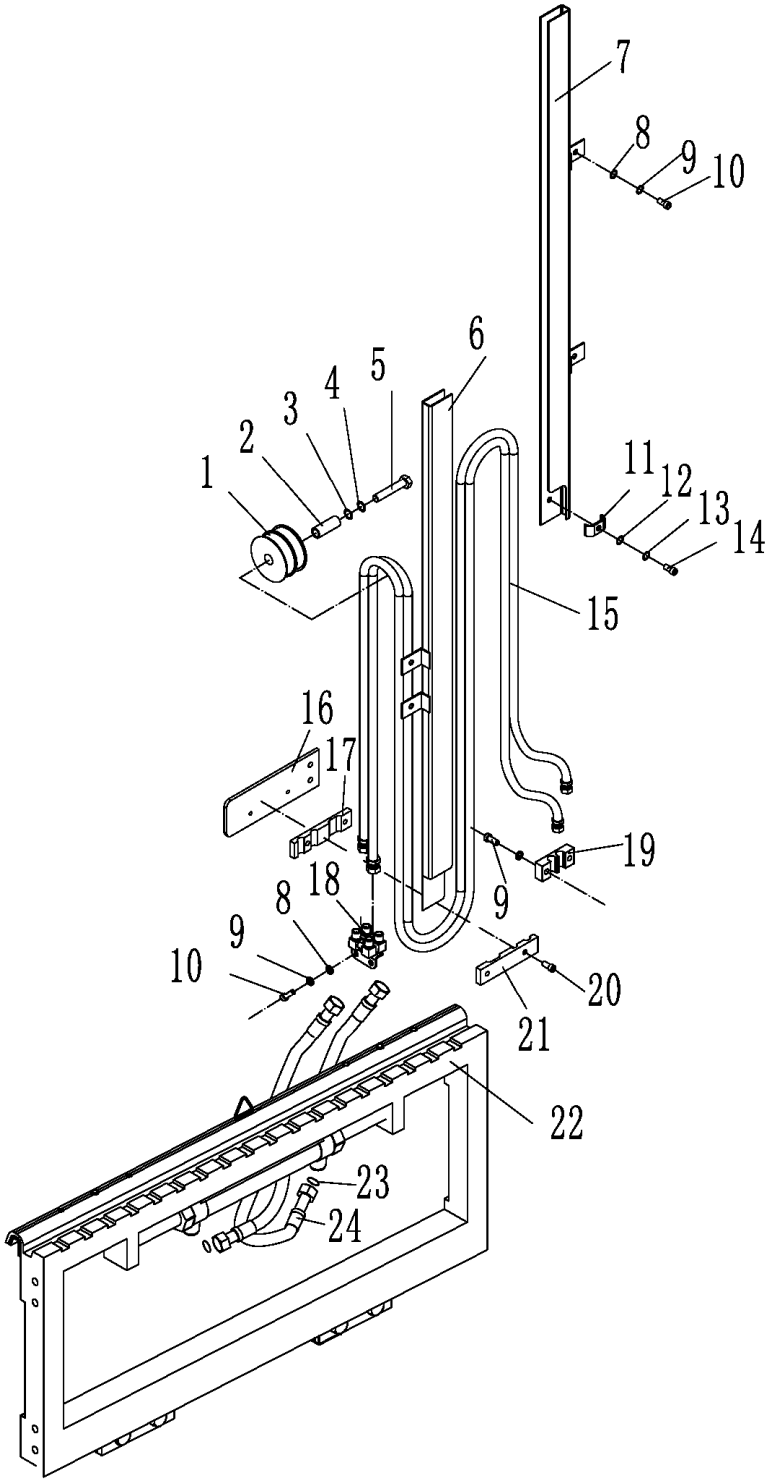

Figure 39

Figure39 External side shifter and pipeline installation system(2-stage full free) I16

No.	SN	Name	QTY	Remarks
1	9000003857	oil wheel	1	
2	9000003858	shaft sleeve	1	
3	0000025048	washer	1	
4	0000025042	spring washer	1	
5	0090000169	bolt	1	
6	9000004578	within the guide groove weld	1	H=3000mm
	9000004579	within the guide groove weld		H=2500mm
	9000004580	within the guide groove weld		H=2700mm
	9000004581	within the guide groove weld		H=3300mm
	9000004582	within the guide groove weld		H=3600mm
	9000004583	within the guide groove weld		H=4000mm
7	9000004585	outer the guide groove weld	1	H=3000mm
	9000004586	outer the guide groove weld		H=2500mm
	9000011541	outer the guide groove weld		H=2700mm
	9000004587	outer the guide groove weld		H=3300mm
	9000004588	outer the guide groove weld		H=3600mm
	9000004589	outer the guide groove weld		H=4000mm
8	0000025051	washer	8	
9	0000025046	spring washer	8	
10	0000023230	bolt	8	
11	9000003859	clip	2	
12	0000025050	wasehr	2	
13	0000025045	spring washer	2	
14	0000023290	bolt	2	
15	9000011600	lateral hose	1	H=3000mm
	9000011601	lateral hose		H=2500mm
	9000011602	lateral hose		H=2700mm
	9000011603	lateral hose		H=3300mm
	9000011604	lateral hose		H=3600mm
	9000011605	lateral hose		H=4000mm

External side shifter and pipeline installation system(2-stage full free)

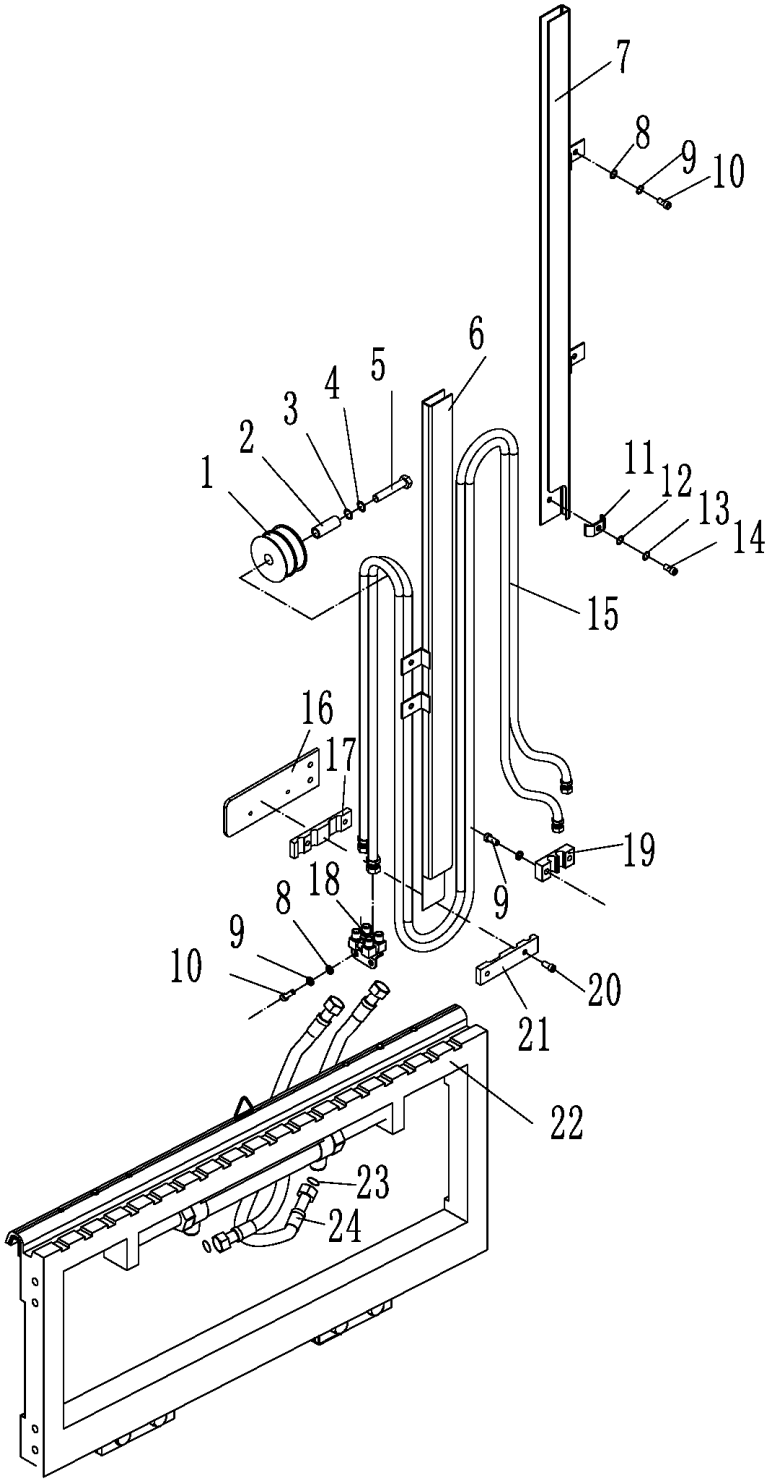

Figure 39

Figure39 External side shifter and pipeline installation system(2-stage full free) I16

No.	SN	Name	QTY	Remarks
16	9000003863	mounting plate	1	
17	9000003862	lower pipe clamp	1	
18	3008001034	four hole with oil block	1	
19	3008002041	clip	2	
20	0000023843	screw		
21	9000003861	upper pipe clamp	1	
22	9000011599	side shifter (external)	1	
23	0000022196	O-ring	2	
24	3008017039	side shifter hose	2	

NOBUFT 诺力

Side shifter and pipeline installation system (2-stage full free)

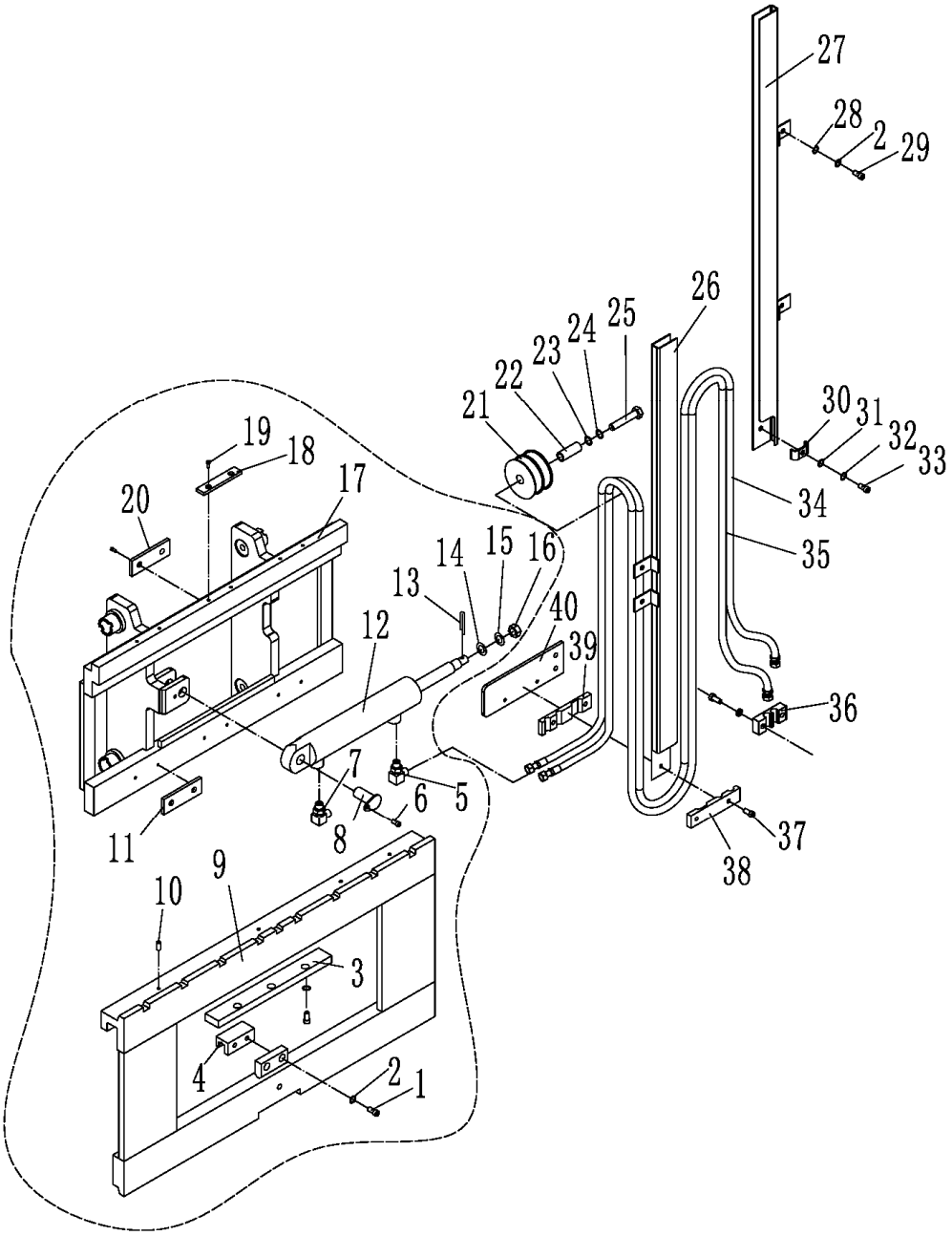

Figure 40

Figure40 Side shifter and pipeline installation system (2-stage full free) I17

No.	SN	Name	QTY	Remarks
1	0000023147	screw	5	
2	0000025046	spring washer	10	
3	9000003850	stop block	1	
4	9000003846	link stopper	1	
5	9000005301	right angle joint	1	
6	0000023399	screw	1	
7	9000005302	right angle joint	1	
8	9000004720	pin roll	1	
9	9000004719	side shift frame	1	
10	0000030004	press fit type pressure oil filling cup	3	
11	9000003847	plate Ⅰ	3	
12	9000005303	sideshift cylinder	1	
13	0000028049	pin	1	
14	0000025049	washer	1	
15	0000025043	spring washer	1	
16	0000024020	nut	1	
17	9000004714	fork frame	1	
18	9000003849	plate Ⅲ	3	
19	0090000015	screw	18	
20	9000003848	plate Ⅱ	3	
21	9000003857	oil wheel	1	
22	9000003858	shaft sleeve	1	
23	0000025048	washer	1	
24	0000025042	spring washer	1	
25	0090000169	bolt	1	
26	9000004578	within the guide groove weld	1	H=3000mm
	9000004579	within the guide groove weld		H=2500mm
	9000004580	within the guide groove weld		H=2700mm
	9000004581	within the guide groove weld		H=3300mm
	9000004582	within the guide groove weld		H=3600mm

Side shifter and pipeline installation system (2-stage full free)

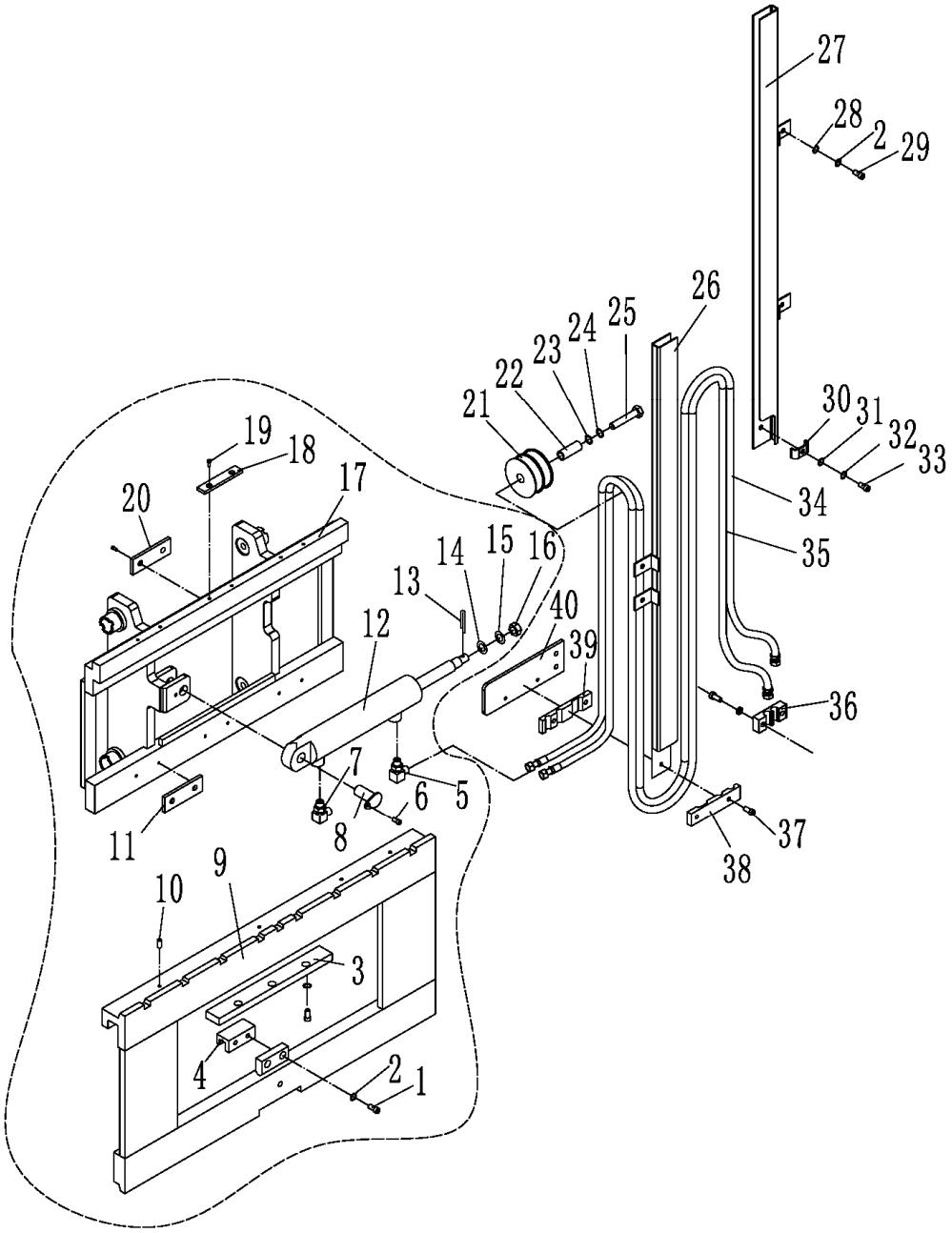

figure 40

Figure40 Side shifter and pipeline installation system (2-stage full free) I17

No.	SN	Name	QTY	Remarks
26	9000004583	within the guide groove weld	1	H=4000mm
27	9000004585	outer the guide groove weld	1	H=3000mm
	9000004586	outer the guide groove weld		H=2500mm
	9000011541	outer the guide groove weld		H=2700mm
	9000004587	outer the guide groove weld		H=3300mm
	9000004588	outer the guide groove weld		H=3600mm
	9000004589	outer the guide groove weld		H=4000mm
28	0000025051	washer	5	
29	0000023230	bolt	5	
30	9000003859	clip	1	
31	0000025050	washer	1	
32	0000025045	spring washer	1	
33	0000023290	bolt	1	
34	9000004517	lateral hose	1	H=3000mm
	9000004518	lateral hose		H=2500mm
	9000004519	lateral hose		H=2700mm
	9000004520	lateral hose		H=3300mm
	9000004521	lateral hose		H=3600mm
	9000004522	lateral hose		H=4000mm
35	9000004524	lateral hose	1	H=3000mm
	9000004525	lateral hose		H=2500mm
	9000004526	lateral hose		H=2700mm
	9000004527	lateral hose		H=3300mm
	9000004528	lateral hose		H=3600mm
	9000004529	lateral hose		H=4000mm
36	3008002041	clip	1	
37	0000023843	screw	2	
38	9000003861	upper pipe clamp	1	
39	9000003862	lower pipe clamp	1	
40	9000003863	mounting plate	1	

NOBLET 诺力

https://truckmanualshub.com/

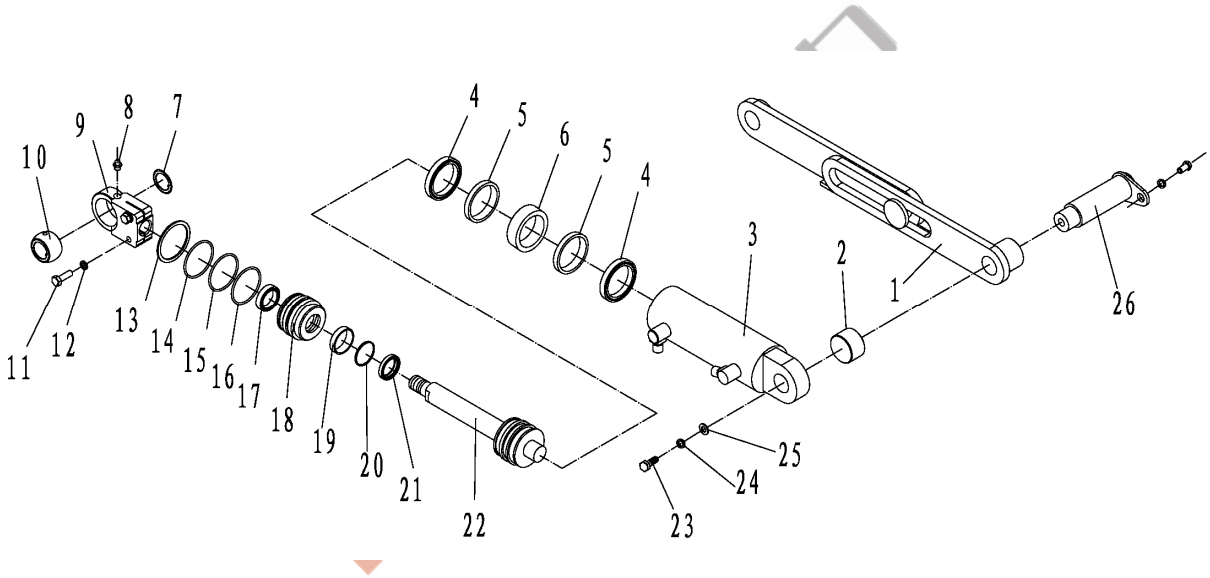

Figure 41

Figure 41 Tilting oil cylinder I18

No.	SN	Name	QTY	Remarks
1	3028001067	safety rod	1	
A	3028000002	tilting oil cylinder	1	Inc.2~20
2	9000011139	steel backed bearing	1	
3	9000011140	cylinder block	1	
4	9000011141	sealing ring for hole	2	
5	9000011142	bead flange	2	
6	9000011143	hole with a support ring	1	
7	0000026022	circlip for hole	1	
8	0000030002	grease cup	1	
9	9000011144	ear pendants	1	
10	0000027033	joint bearing	1	
11	0000023145	screw	2	
12	0000025041	spring washer	2	
13	0000026023	circlip for shaft	1	
14	0090000214	roundwire snap rings for hole	1	
15	9000011327	bead flange	1	
16	0000022218	O-ring	1	
17	9000011328	scraper seal	1	
18	9000011329	cylinder cover	1	
19	9000011330	steel-backed bearing	1	
20	9000011145	bead flange	1	
21	9000011146	shaft seal	1	
22	9000011147	piston rod assembly	1	
23	0000023230	bolt	2	
24	0000025046	spring washer	2	
25	0000025051	washer	2	
26	3028001069	tilt cylinder pin shaft	1	

NOBUET 诺力

Overhead guard

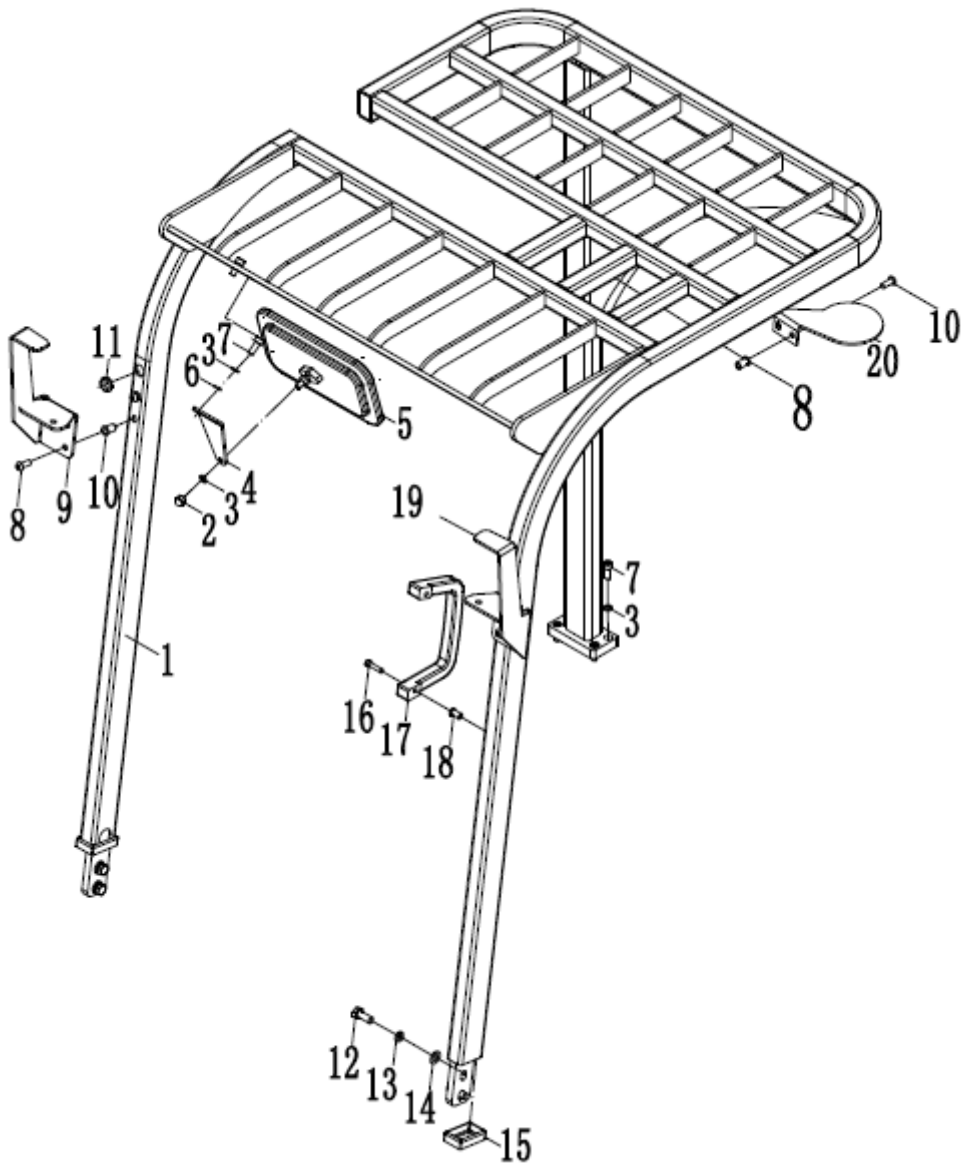

Figure 42

https://truckmanualshub.com/

Figure 42 Overhead guard J1

No.	SN	Name	QTY	Remarks
1	9000005996	overhead guard	1	FE3R06/08
	9000006014	overhead guard		FE3R10/12
2	0000024026	nut	1	
3	0000025046	spring washer	8	
4	3015102001	rear view bracket	1	
5	3015100001	rear view	1	
6	0000025046	washer	4	
7	0000023230	bolt	4	
8	0090000448	screw	4	
9	9000006006	right headlight bracket	1	
10	0090000596	flat head riveted nut	6	
11	3610119002	rubber plugging cover	3	
12	0000023222	bolt	4	
13	0000025041	spring washer	4	
14	0000025047	washer	4	
15	3025103001	rubber protective sleeve	2	
16	0000023144	screw	2	
17	3005119001	handrail	1	
18	0090000597	flat head riveted nut	2	
19	9000005996	left headlight bracket	1	
20	9000006014	warning lamp bracket	1	

NOBUET 诺力

Labels

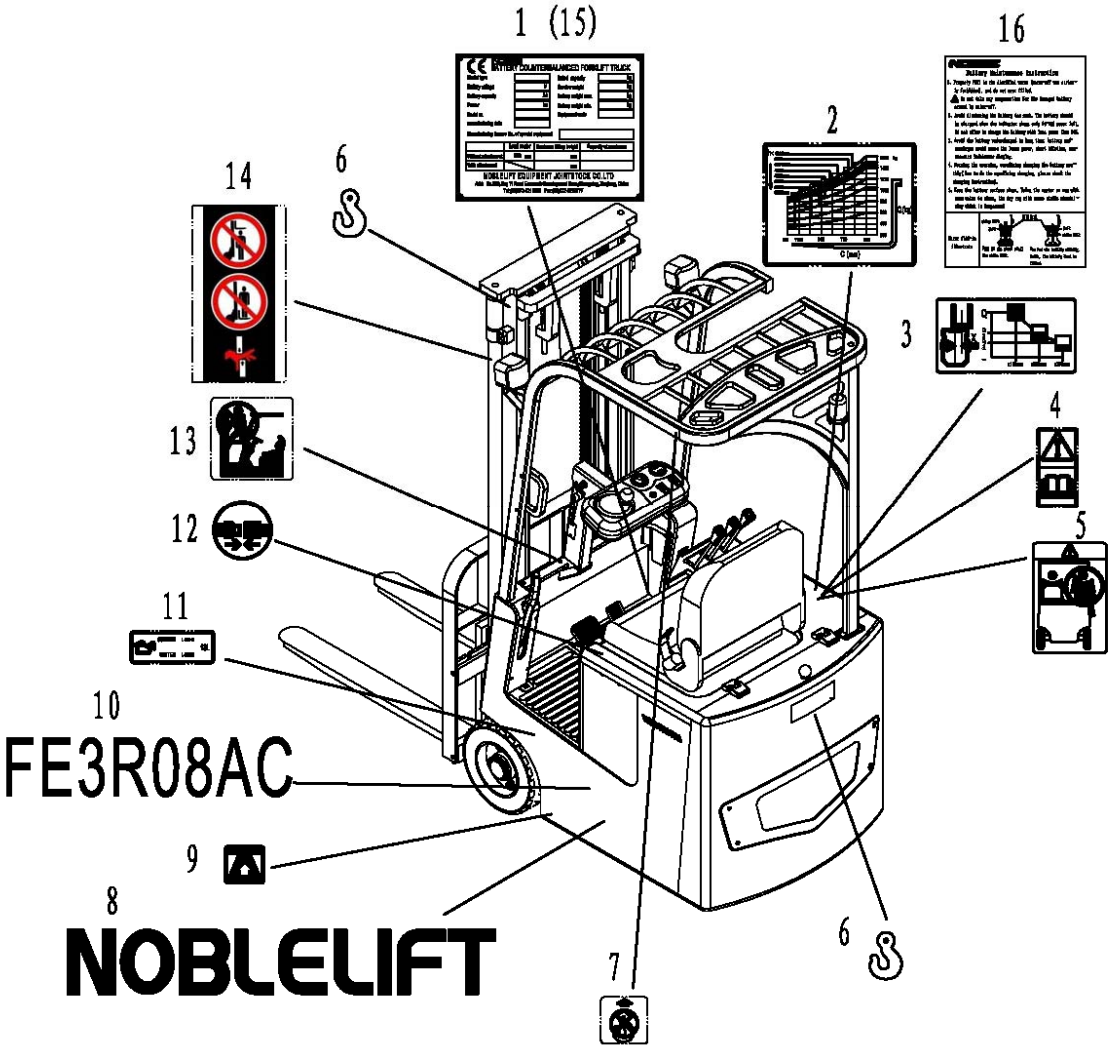

Figure 43

Figure 43 Labels K1

No.	SN	Name	QTY	Remarks
1	3029137004	nameplate	1	FE3R08
	3029137022	nameplate		FE3R06
	3029137020	nameplate		FE3R10
	3029137018	nameplate		FE3R12
2	3029137005	curve of load	1	FE3R08
	3029137013	curve of load		FE3R06
	3029137017	curve of load		FE3R10
	3029137014	curve of load		FE3R12
3	9000003915	lateral label	1	sidesway
4	9000003916	prompt label	1	
5	9000003917	A person is prohibited	1	
6	3009137002	hoisting label	3	
7	9000003919	ban lifting label	2	
8	3009137011	company logo	2	
9	9000003920	point of support	2	
10	3029137001	product model	2	FE3R08
	3029137015	product model		FE3R06
	3029137001	product model		FE3R10
	3029137012	product model		FE3R12
11	3029137003	hydraulic oil label	1	FE3R06/08
	9000003978	hydraulic oil label		FE3R10/12
12	9000003921	safety belt mark	1	
13	9000003922	no climbing	1	
14	9000003923	safety label	2	
15	0000028029	rivet	4	
16	3009137025	battery maintenance tips	1	

NOBLET 诺力

https://truckmanualshub.com/

NOBUFT 诺力

https://truckmanualshub.com/

ZheJiang Noblelift Equipment Joint Stock Co.,Ltd
Tel: 86-572-6210776 6210788
Fax: 86-572-6210777 6128612
PC: 313100
Email: info@noblelift.com
URL: www.noblelift.com www.noblelift.cn
Add: 528 Changzhou Road, Taihu Sub-district, Changxing, Zhejiang 313100 China