https://truckmanualshub.com/

CUSTOMISED HANDLING SOLUTIONS

Dear Customer,

Thank you for choosing us and showing your faith in the Combilift range of products. With this Combilift Product you now own a machine designed by our team of experienced engineers using the most up to date design techniques and technology with the sole aim of producing a machine that is efficient, reliable, safe and the right tool for your businesses material handling needs. The Combilift product possesses a vast range of multi functional application possibilities that makes it one of the leading products in the material handling industry.

Combilift Ltd

The Purpose of this Operators Manual

This Manual contains all of the information you will require to operate your Combilift product safely and efficiently. It is essential that this manual remain with the machine at all times. It is essential that the operator read this manual before attempting to operate the Combilift.

- Always follow all safety instructions laid out in this manual
- All instructions, prohibitive or otherwise, found in this manual should be adhered to at all times. They are there to protect your life and the lives of others.
- Always perform the Daily Inspection as indicated in this manual and follow the guidelines on service intervals.

www.COMBiLiFT.COM

https://truckmanualshub.com/

Contents

Section 1: Machine layout and Operator Controls.....1-1
1.1: Machine Overview and Components..... 1-1

Section 2: Operating instructions and Conditions 2-1
2.1: Understand the Capacity of your Lift-Truck 2-1
2.2: Centre of Gravity (CG) 2-1
2.3: Load Chart 2-2
2.4: Serial Plate 2-3
2.5: Operator Qualification 2-3
2.6: Operator Responsibilities..... 2-3
2.7: Entering and Exiting the Operator Cabin..... 2-4
2.8: Starting Procedure..... 2-4
2.9: Moving Off 2-5
2.10: Changing Direction without Changing Mode..... 2-5
2.11: Changing Into Sideward Mode 2-5
2.12: To Change Back to Forward Mode..... 2-5
2.13: Stopping 2-6
2.14: Loading 2-6
2.15: When Loading in Sideward Mode 2-6
2.16: When Loading in Forward Mode..... 2-6
2.17: Placing a Load When In Sideward Mode 2-7
2.18: Placing a Load When In Forward Mode..... 2-7
2.19: Double Forking 2-7
2.20: Stacking..... 2-8
2.21: De-Stacking..... 2-8
2.22: Adjusting Load Forks 2-8
2.23: Operating Conditions 2-9

Section 3: Safe operation 3-1
3.1: Safe Operation 3-1
3.2: Operating in Hazardous Areas 3-1
3.3: Safe Driving on Gradients 3-1
3.4: Driving Position 3-2
3.5: Parking 3-2
3.6: Bridge Plates and Dock Boards 3-2
3.7: Lifting the Machine..... 3-2

https://truckmanualshub.com/

Section 4: Maintenance & Service Information 4-1
4.1: Maintenance Schedule 4-1
4.2: Operators Daily Inspection Sheet 4-6
4.3: Initial Service – Conducted at 100 hours of Operation..... 4-7
4.4: Engine Oil & Engine Oil Filter (Service Interval = 250Hours)..... 4-7
4.5: Engine Coolant (Service interval = 2000Hours)..... 4-9
4.6: Mast Maintenance (Service Interval = 250Hours)..... 4-9
4.7: Hydraulic Oil & Filters 4-10
4.9: Water Pump V- Belt..... 4-12
4.10: Fuel Filter – diesel engine trucks (Service interval = 500 Hours) 4-12
4.11: Air Filter Element (Service Interval = 500 Hours) 4-12
4.12: Grease Point Chart 4-13
4.13: Diesel Particulate Filter (DPF)..... 4-14

Section 5: Technical Information & Circuit Diagrams 5-1
5.1 Hydraulic Functions Circuit..... 5-1
5.2 Hydraulic Drive Circuit 5-2
5.3 Towing the Combilift..... 5-3
5.4 Mechanical Brake Release..... 5-4
5.5 Checking the Charge Pressure 5-5
5.6 Fuse Box Layout..... 5-6
5.7 Relay Layout..... 5-6
5.8 Standard GM LPG PLC Electric Circuit: 5-7
5.9 Standard Kubota Diesel PLC Electric Circuit: 5-9
5.10 Standard Toyota 4Y LPG PLC Electric Circuit:..... 5-11
5.11 Tier IV GM LPG PLC Electric Circuit:..... 5-14
5.12 Colour Codes for Electric Circuits:..... 5-16
5.13 PLC Details..... 5-17
5.14 PLC Diagnostics 5-20

Section 6: Appendices.....6-1
6.1: Appendix A: Certified LPG Engine Emission Control Warranty 6-1
6.2: Appendix B: General Engine Warranty..... 6-2

https://truckmanualshub.com/

Section 1: Machine layout and Operator Controls

1.1: Machine Overview and Components

It is essential before you start operating the Combilift to be familiar with the main components and controls of the machine, their function and where they are located. Figure 1 below and Figure 2 on the following page indicate the major components of the machine and all of the operator controls.

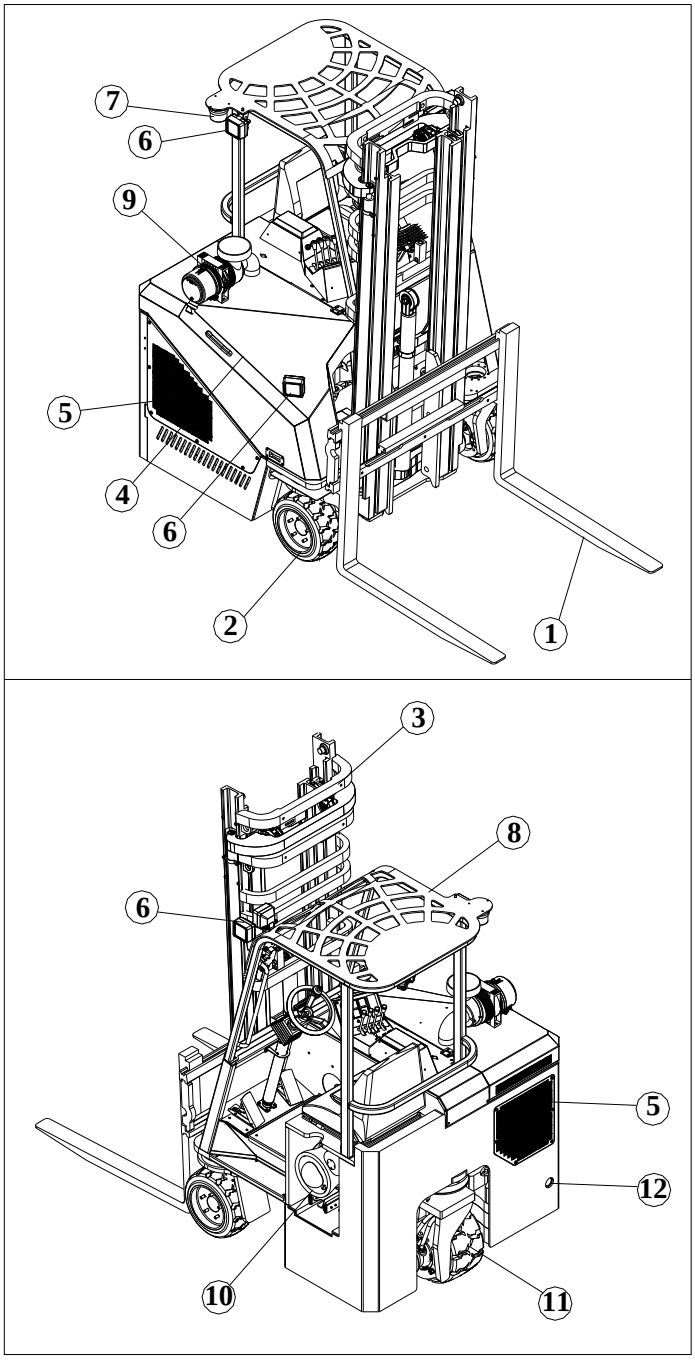

Component Layout

1. Forks
2. Front Swivels
3. Mast
4. Bonnet
5. Access Panels
6. Worklights
7. Strobe Beacon
8. Overhead Guard
9. Air Filter
10. LPG Tank / Diesel Tank
11. Rear Swivel
12. Exhaust

Figure 1: Machine Component Layout – Front View

https://truckmanualshub.com/

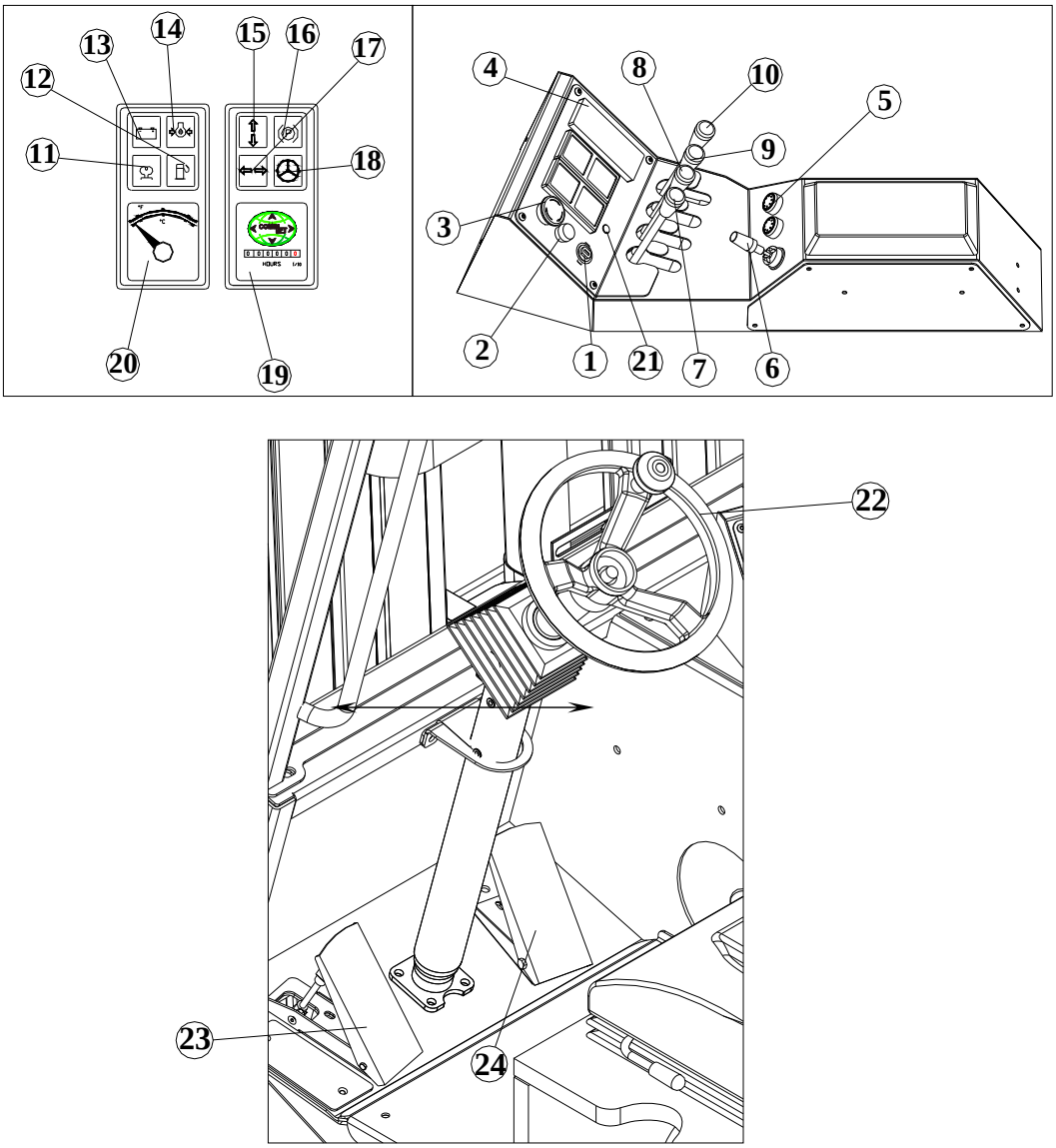

Figure 2: Machine Control Layout – Rear View

Control Layout

1. Ignition
2. Light Switch
3. Parking Brake
4. Fuse Box
5. Horn Button
6. Direction Control lever
7. Lift Control Lever
8. Tilt Control Lever
9. Sideshift Control Lever
10. Fork positioner Control Lever
11. Pre Heat indicator
12. Low Level Fuel Indicator
13. Battery Charge Indicator
14. Oil Pressure Indicator
15. Sideward Mode Indicator
16. Parking Brake Indicator
17. Normal Mode Indicator
18. Carousel Indicator
19. Hour Meter
20. Water Temperature Gauge
21. Engine Management Light
22. Steering Wheel
23. Inching Pedal
24. Accelerator Pedal

https://truckmanualshub.com/

Ignition/Starter Switch

- This is a two-position key switch that isolates the electrical system when in the 'OFF' position.

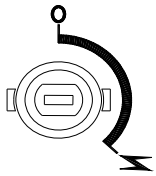

Light Switch

Illuminates all work lights, dash light and cabin light.

- To illuminate all lights, turn the switch clockwise.
- To extinguish all lights, turn the switch anti-clockwise.

Horn Button

- The horn button is located on the dash beside the Directional control lever. Press to operate.

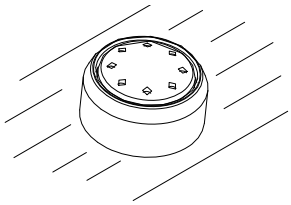

Direction control switch

- A four-position switch which will engage any of the four directions of travel.
- To operate push lever in the desired direction of travel.
- Always ensure that the Direction Control Switch to the neutral position after bringing the truck to a halt.

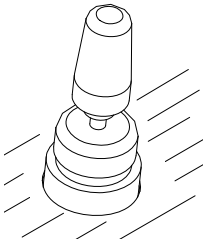

Parking Brake

- To APPLY brakes, PUSH button.
- To RELEASE brakes, TURN BUTTON CLOCKWISE.
- The machine will not drive with Parking Brake ON.

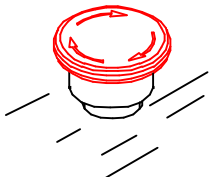

Water Temperature gauge

- This gauge Monitors the temperature of the engine cooling system
- The truck must not be operated if the gauge pointer moves to the red area as this indicates a fault in the cooling system

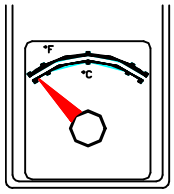

Hour Meter

- The hour meter records how many hours the truck has been operating for in hours and tenths of an hour.
- Use meter to determine maintenance intervals

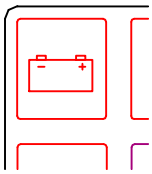

https://truckmanualshub.com/

Engine Management Light (Yellow Light On Dash)

- If this light comes on it means the engine control unit (ECU) has detected a problem with the engine.
- If the light is on and the engine is running ok you can drive the truck. However, it should be checked at the earliest convenience. If the engine is running poorly the truck should not be driven.
- The ECU will store the fault information that will allow the fault to be diagnosed when the ECU is connected to a PC.

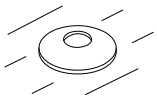

Oil Pressure Indicator Light

- When the key switch is in the 'ON' position, with the engine at rest, the oil pressure indicator is illuminated.
- If the indicator is illuminated when the engine is 'running' then this indicates low engine oil pressure and/or insufficient oil in the sump.

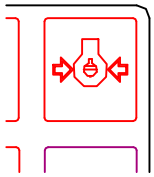

Note

Do **NOT** run engine if oil pressure indicator is illuminated.

Battery Charge Indicator Light

- This charging lamp indicates whether the alternator is charging the system or not. With the key switch turned ON and the engine not running, this red charge lamp should illuminate.
- If the charging lamp remains illuminated with the engine running, it indicates a malfunction of the charging system or associated components.

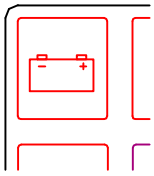

Pre-Heat Indicator Light – (diesel engines)

- The Pre-heat indicator is a lamp connected to the glow plugs on the diesel engine.
- When operating in cold conditions, wait until the pre-heat indicator extinguishes before attempting to start engine

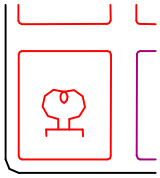

Low fuel level indicator light

- The low-level indicator light illuminates whenever the fuel level on the truck reaches a certain level.
- On LPG engines a buzzer will also sound.
- Whenever the light illuminates the truck should be refuelled immediately.

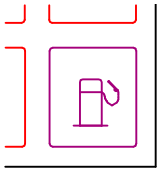

https://truckmanualshub.com/

Parking Brake Indicator Light

- The Parking Break indicator light indicate whether the brake is “ON” or “OFF”

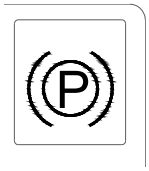

Mode Indicator Lights

- The Mode indicator lights indicate which mode of travel the machine is in.
- If the machine is in normal mode, then the normal mode indicator light will illuminate
- If the machine is in sideward mode, then the sideward mode indicator light will illuminate
- Note: Modes of travel are covered in more detail in section 3 of this manual

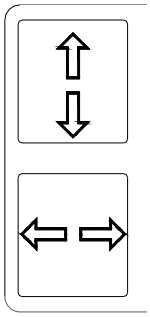

Normal Mode

Sideward Mode

Carousel Indicator Light

- The carousel indicator light is only used when the machine is in sideward mode.
- When the front wheels are steered in to a certain position, the carousel indicator light will illuminate. It is at this point that the carousel mode is activated and the machine can turn on its own axis.
- To deactivate the carousel the operator simply steers the wheels out of the carousel position

Lift Control Lever

- The lift control lever controls the lift function of the Mast.
- To raise the forks, PULL the lever BACK
- To lower the forks, PUSH the lever FORWARD

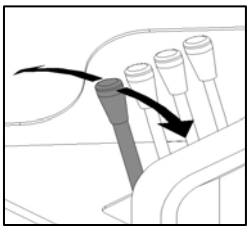

Tilt Control Lever

- The tilt control lever controls the tilt function of the Mast.
- To tilt the mast forward, PUSH the lever FORWARD
- To tilt the mast backward, PULL the lever BACKWARDS

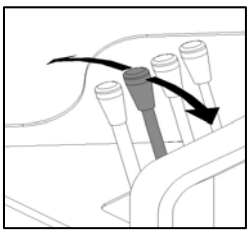

Sideshift Control Lever

- The Sideshift control lever controls the sideshift function of the forks.
- To shift the forks left, PUSH the lever FORWARD.
- To shift the forks, right, PULL the lever BACKWARDS.

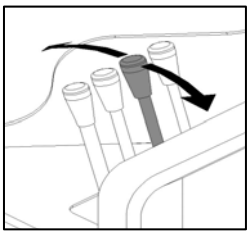

https://truckmanualshub.com/

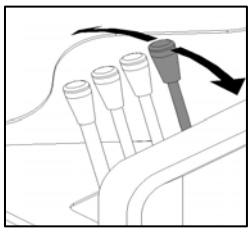

Fork Positioning Control Lever

- This lever controls the position of the forks on the mast carriage. The forks can be controlled simultaneously or individually by use of this lever.
- Push lever forward to position both forks outward, pull lever back to position forks inward.
- Depress left button on top of lever to control left fork. Push lever forward to position left fork outward. Pull lever back to position left fork inward.
- Depress right button on top of lever to control right fork. Push lever forward to position right fork outward. Pull lever back to position right fork inward.

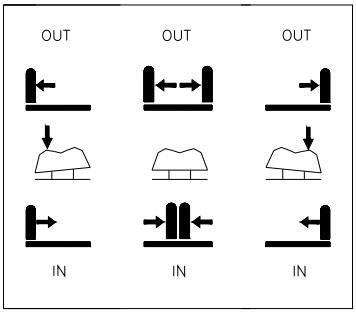

IMPORTANT

A new truck capacity plate **MUST** be obtained from Combilift Ltd to reflect the new maximum load capacity when ANY attachment is fitted. Only attachments approved by Combilift Ltd personnel should be fitted.

Steering

- All models have both front and rear-end steering.
- When in forward mode the front wheels are fixed and the rear wheel steers the truck.
- Rear-end steering allows sharper turns in confined areas but demands greater driver care when turning.
- When in sideward mode, the rear wheel is fixed and the front wheels steer the truck.
- When driving forwards, turn steering wheel clockwise to turn truck clockwise, turn steering wheel anticlockwise to turn truck anti clockwise.
- When driving in reverse, turn steering wheel clockwise to turn truck anticlockwise, turn steering anti clockwise to turn truck clockwise.
- When driving sideward to the right, turn steering wheel clockwise to turn truck clockwise, turn steering wheel anticlockwise to turn truck anticlockwise.
- When driving sideward to the left, turn steering wheel clockwise to turn truck clockwise, turn steering wheel anticlockwise to turn truck anticlockwise.
- The steering wheel is also equipped with a spinner knob for easier steering.

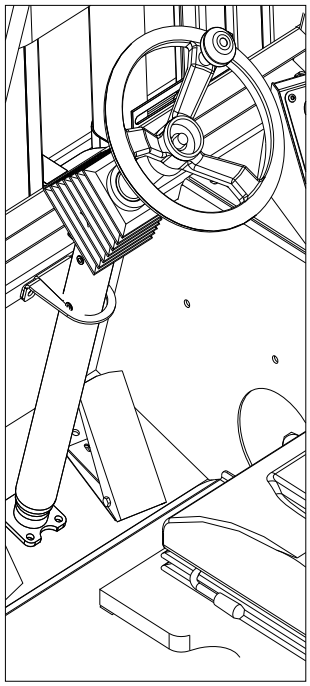

https://truckmanualshub.com/

Brake/Inching Pedal

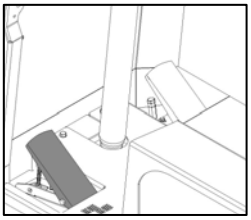

The combined Brake/Inching Pedal has two functions:

- Stops drive to slow the machine down.
- Permits slow speed, for precise manoeuvring of the truck in confined spaces - See Section 2 for Operating Instructions and Conditions.

Accelerator Pedal

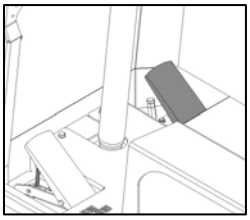

- The accelerator pedal is located on the floor on the right hand side of the steering column.
- It is used to increase the speed of the engine, therefore increasing travel speed and / or hydraulic function speed.

Battery Isolator Switch

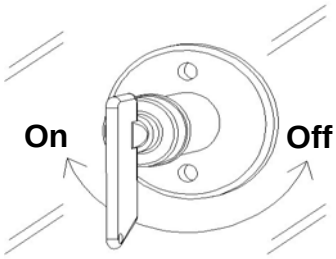

- This switch is used to disconnect power from the battery in the event of an emergency.
- The switch is located inside the cabin, beside the dash.
- When the Combilift is not in use turn switch to ‘OFF’ by pressing switch until it clicks into the closed position.
- The Combilift will not power-up unless the switch is returned to the ‘ON’ position by pulling the switch up.

https://truckmanualshub.com/

Seat Adjustment

- It is the responsibility of the Operator to ensure that the seat is adjusted according to operator weight, height etc before operating the truck.
- ALWAYS report any malfunctioning of the seat adjustments immediately.
- ALWAYS wear the seat belt provided.
- DO NOT adjust the seat when vehicle is in operation.
- Keep clear of moving parts.
- Authorised & competent personnel should carry out Installation & Maintenance only.

1) The standard seat can be positioned as the operator requires by releasing the seat slide lever (item 1) and moving the seat forward or back.

2) The weight adjustment is controlled by moving the weight adjustment lever (item 2) to increase or decrease the firmness of the seat base suspension. There are 5 weight settings from 50-120 kg (110-265lbs).

3) The seat angle can be adjusted by releasing the seat tilt lever (item 3) and tilting the seat forward or back. There are 2 seat tilt positions.

4) The backrest can also tilt to suit the operator by releasing the backrest tilt lever (item 4), and tilting the backrest forward or back. There are three backrest tilt settings.

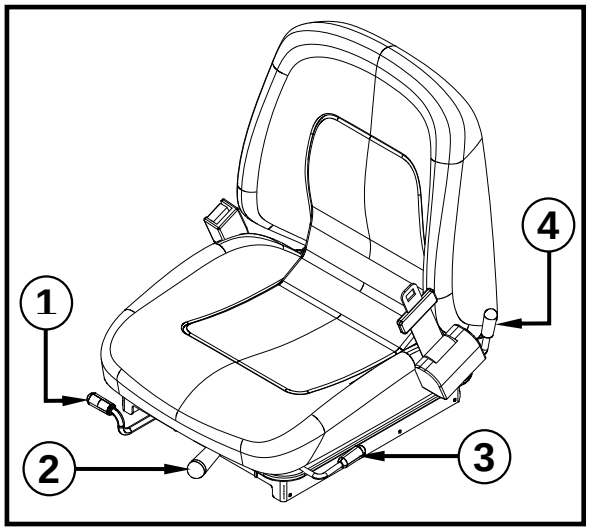

https://truckmanualshub.com/

Section 2: Operating instructions and Conditions

2.1: Understand the Capacity of your Lift-Truck

The basic function of a lift truck is to lift, move and place materials. It operates on the seesaw principle - two weights on opposite sides of a fulcrum. In this case, the load on the forks must be balanced by the weight of the Combilift. The location of the centre of gravity of both the Combilift and the load is a major factor.

2.2: Centre of Gravity (CG)

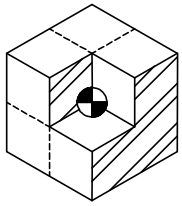

The centre of gravity of any object is the single point about which the object is balanced in all directions. Every object has a centre of gravity. When the lift truck picks up a load, the truck and load have a new, combined centre of gravity.

The Combilift has moving parts that change its centre of gravity. The centre of gravity moves as the mast is tilted backwards and forwards. The centre of gravity also moves up and down as the mast moves up and down. The centre of gravity and therefore stability is also affected by the size, weight, shape and position of the load; the height to which it is raised; tilt and side shift. Truck movement such as acceleration, braking, turning and uneven surfaces will also affect truck stability.

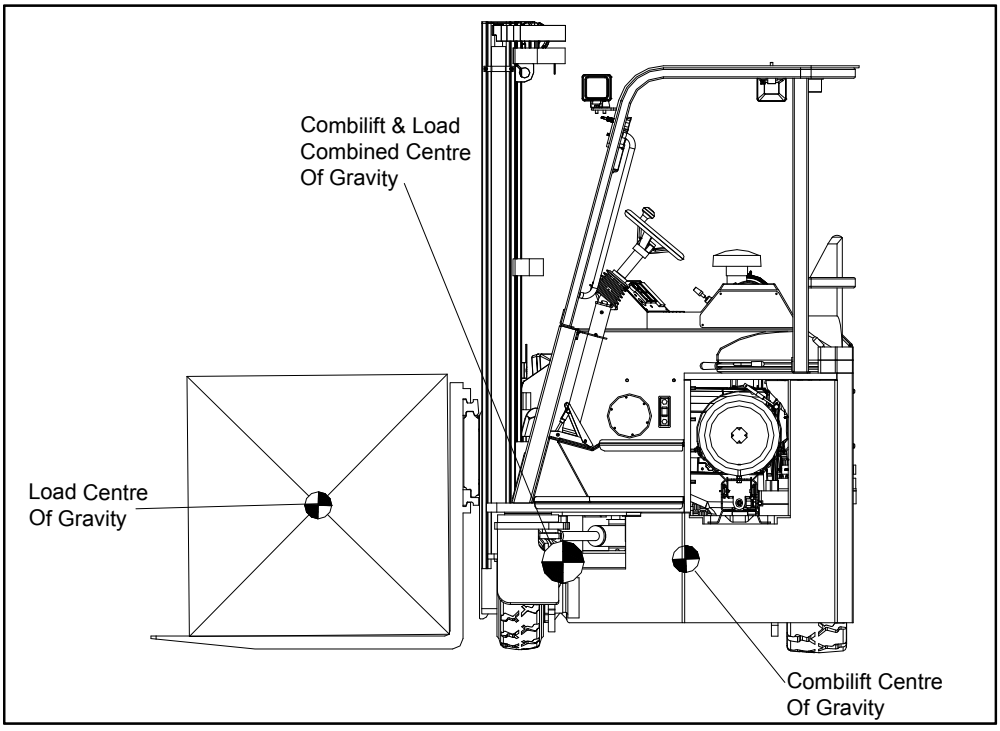

https://truckmanualshub.com/

To keep the lift truck stable, the centre of gravity must stay within the area of the lift truck represented by a triangle drawn between the three wheels. If the centre of gravity moves forward of the triangle front, the lift truck will tip forwards. If it moves outside the right or left of the triangle the truck will tip to the side.

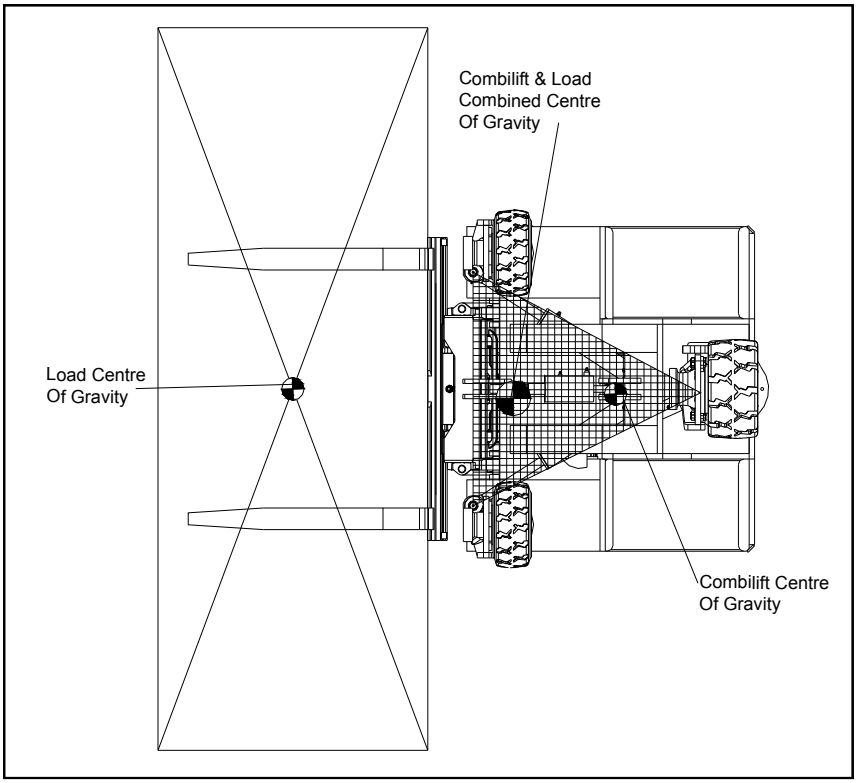

2.3: Load Chart

The rated capacity of the truck is illustrated on a load chart located inside the cabin. The load centre is determined by its centre of gravity and is measured from the front face of the forks to the centre of gravity of the load. It is assumed that the centre of gravity in the vertical direction is no greater than the specified horizontal load centre.

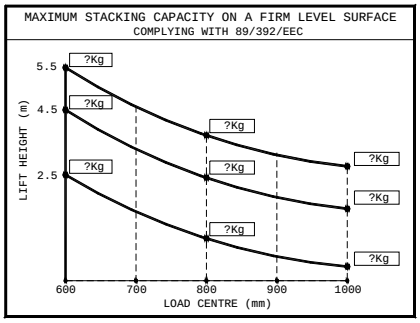

It is the responsibility of the operator to determine that the weight of the load to be handled is not greater than the capacity shown on the load chart. The operator **must not** handle any load that is greater than the capacity shown.

https://truckmanualshub.com/

2.4: Serial Plate

The Serial Plate is the Metal Disc that is fixed to the Combilift in the cabin of every machine. It is engraved with a number of details, which are required by law. These are:

- The Trucks serial Number
- Its rated Capacity
- It's unladen weight
- It's date of manufacture
- The manufacturers name and address.

This plate should not be removed by anyone. If lost order a replacement from Combilift immediately.

2.5: Operator Qualification

The Combilift must NOT be operated by any other individual other than those who have been trained to do so. Training should be carried out either by Combilift Driver training personnel or a Combilift authorised training organisation. Details of these organisations can be acquired from Combilift Ltd.

2.6: Operator Responsibilities

Always ensure that the truck is in good working order before commencing work. This is achieved by performing the Daily inspection of the Combilift. The daily inspection is to be carried out at the beginning of the working day or at the start of each shift.

It is the operators' responsibility to perform the daily inspection before each shift. The Inspection and how it should be conducted is covered later in this publication.

Unless authorised and trained to do so, the operator must not attempt any repairs, but report defects immediately. When authorised to perform maintenance work and/or repairs, ALWAYS ensure that the appropriate Health and Safety regulations are strictly adhered to.

Report any operational problems that may develop, (damaged pallets, ground surface breaking up etc.) which could not only reduce safety but also cause damage to the truck.

Never attempt to exceed your truck's handling capacity and take all precautions to ensure safety of others as well as yourself. Stop working and switch off if for any reason, in your opinion, the truck becomes unsafe or defective.

https://truckmanualshub.com/

2.7: Entering and Exiting the Operator Cabin

- When entering or exiting the Operator cabin of the Combilift, always use a three point contact method to avoid slips and falls. The three point contact method is applied by keeping 3 of the bodies 4 limbs (hands & feet) in contact with the machine.
- Always use the handles and footsteps on the machine.
- NEVER use the steering wheel as a handle.

2.8: Starting Procedure

Diesel Engine

- Ensure that the parking brake is applied and that the directional control lever is in the neutral position
- Insert the key into the ignition switch and turn clockwise to the preheat position. The charge indicator lamp must light up.
- Depress the accelerator.
- Turn the ignition key further clockwise to the “Start” position. After the engine starts, release the ignition key which will return automatically to the ON position.
- Check that all the indicator lamps are extinguished and that all gauges are registering correctly.

LP Gas System

- Open the valve on the LPG tank.
- Ensure that the parking brake is applied and that the directional control lever is in the neutral position
- Insert the key into the ignition switch and turn clockwise to the ‘ON’ position. The charge indicator lamp must light up.
- Turn the ignition key further clockwise to the ‘start’ position.
- As soon as the engine starts, release the ignition key, which will automatically return to the ‘ON’ position.
- Check that all warning lamps are extinguished and that all gauges are registering correctly

NOTE:
The truck will NOT start unless the directional control lever is in the neutral position.

NOTE:
The starter must not be operated continuously for more than 30 Seconds. If the engine does not start, return key to the “OFF” position and wait 10 seconds before trying again.

NOTE:
When the machine is started the wheels will remain in whatever Position they were in when the machine was stopped until the Operator selects a direction of travel on the direction control lever.

https://truckmanualshub.com/

2.9: Moving Off

- Ensure that the forks are as low as possible.
- Select forward or reverse, or, right or left with Direction Control switch.
- Look around and when all is clear release parking brake and apply light pressure to the accelerator pedal until the truck begins to move.
- Increase pressure on accelerator pedal to increase truck speed.

NOTE

The Combilift has a maximum ground speed of 10km/hr. Always adhere to all speed limits in the area which the truck is operating

2.10: Changing Direction without Changing Mode

- Remove foot from the accelerator pedal.
- Gradually apply inching pedal to halt the truck.
- Select change of direction and gradually increase pressure on accelerator until truck is travelling at desired speed.

2.11: Changing Into Sideward Mode

- Bring the truck slowly to a halt by depressing inching pedal fully.
- Ensure that all observers stand clear of the truck.
- Move the direction control switch from forward/reverse into the required sideward direction. The wheels will automatically align themselves at right angles to the forks.
- Wait until wheels are locked and dash light is illuminated before moving

NOTE

When in sideward mode the front wheels steer the truck while the back wheel remains fixed

2.12: To Change Back to Forward Mode

NOTE

When in sideward mode, turn the steering completely anti-clockwise at least once. **This ensures correct alignment of the front wheels in forward mode**.

- Bring the truck slowly to a halt by depressing the inching pedal fully.
- Ensure all observers stand clear of truck.
- Move the direction control switch from left/right into the required forwards direction.
- Wheels will automatically align themselves parallel with the forks.
- Wait until wheels are locked and dash light is illuminated before moving.

NOTE

When in forward mode the back wheel steers the truck, while the front wheels remain fixed.

https://truckmanualshub.com/

2.13: Stopping

- Always brake evenly and smoothly. Violent braking may cause the load to slip from the forks.
- The forks must be lowered when the truck has stopped.
- After stopping the truck, return the direction control switch to neutral.
- When the operator leaves the forklift truck unattended, the parking brake must be applied and the ignition key removed to prevent unauthorised use

NOTE

The brake/inching pedal permits slow drive speed for precise manoeuvring of the truck in confined spaces. It operates independently of the accelerator pedal, but if fully depressed stop drive to slow the machine down.

2.14: Loading

- Do not exceed rated capacity of truck. Overloading can cause truck instability. If in doubt, check with the load chart, located inside the cabin.
- Before picking up a load adjust the forks to ensure that they are equally spaced about the centre line of the fork carriage and as widely spaced as possible to take the weight of the load evenly.
- Check that the forks are of sufficient length. The length should be at least two thirds of the depth (front to back) of the load.
- When manoeuvring to pick up a load, avoid erratic movements that could result in damage to the load and/or truck.
- Apply parking brake when loading

2.15: When Loading in Sideward Mode

- Move forward as close to the load as possible.
- Manoeuvre the machine so it is at the centre of the load.
- Apply parking brake.
- Lower/raise the forks to the required height.
- Slowly drive forks into the pallet
- Lift load.
- Double fork load if necessary until load is tight against face of forks. (See section on “double forking”)
- Tilt rearward to secure the load.
- Lower forks until load is 150mm (6”) above the ground.

2.16: When Loading in Forward Mode

- Lower/raise forks to the required height.
- Manoeuvre the machine forward so it is at the centre of the load.
- Apply parking brake.
- Lift load.
- Tilt rearward to secure load.
- Double fork load if necessary until load is tight against face of forks.
- Lower forks until load is 150mm (6”) above the ground.

https://truckmanualshub.com/

2.17: Placing a Load When In Sideward Mode

- Drive the machine forward as close to the placing area as possible.
- Apply parking brake.
- Lower/raise the forks to the required height.
- Lower load.
- Tilt forward.
- Release parking brake.
- Drive rearward until machine is clear of load
- Continue to drive in the sideward direction

NOTE

When handling long length loads, drive whenever possible in the sideward mode. Tilt elevated loads forwards, only when directly over load destination

2.18: Placing a Load When In Forward Mode

- Drive machine forward as close to the placing area as possible.
- Apply parking brake.
- Lower/raise the forks to the required height.
- Lower load.
- Tilt forward.
- Drive rearward until machine is clear of load

2.19: Double Forking

If it is not possible to engage forks fully when lifting a load it will be necessary to move the load closer to the front of the machine before lifting. This can be achieved by double forking the load.

NOTE

The lift capacity of the Combilift is reduced if the forks are not fully engaged.

To Double Fork a Load:

- Raise the load slightly and drive rearward sufficiently to bring the load closer to the machine.
- Lower the load and drive forward until the load is against the fork face.
- The load is now ready to be lifted.

https://truckmanualshub.com/

2.20: Stacking

- Slowly approach stack with load tilted backwards.
- Stop at face of stack, select neutral and apply parking brake.
- Elevate load until clear of stack top. Operate accelerator pedal to ensure that engine speed is sufficient to prevent stalling and to give the required lifting speed.
- Move forward until load is above the stack.
- Tilt mast to vertical position and lower load onto stack.
- Drive rearward and lower forks to 150mm (6”) above ground before moving off.

2.21: De-Stacking

- Stop at face of stack, select neutral and apply parking brake.
- Elevate forks to permit entry into pallet.
- Move forward and enter the pallet with the forks.
- Elevate load until clear of stack and tilt mast backwards to stabilise load. Operate accelerator pedal to ensure that the engine speed is sufficient to prevent stalling.
- Drive rearward and lower load to 150mm (6”) above ground.

2.22: Adjusting Load Forks

- Forks should be spaced as far apart as the load being moved will allow. Both forks should always be the same distance from the centre of the fork carriage.
- To adjust, raise forks approximately 25mm (1”) off the floor.
- Apply parking brake and switch off engine.
- Lift up the keeper pin and slide the forks along the carriage.
- When the forks are set to the desired position ensure that the keeper pin is engaged in a slot on the top of the fork carriage bar.

https://truckmanualshub.com/

2.23: Operating Conditions

The Combilift can operate on various surfaces but the following should be noted

- **Ground Surface:** Floor and road surfaces should be of adequate load capacity, firm, smooth and level. Approaches to kerbs, railway crossings etc. should also be firm, smooth and adequately ramped to prevent possible displacement.

- **Aisle Dimensions:** Aisles should be arranged to eliminate corners, angles, inclines, steep ramps, narrow passages and low ceilings.

- **Headroom:** Structures over aisles, which may be potential obstacles should be defined and marked with a conspicuous colour. Low doorways should be marked with their clearance limits.

- **Operating in Hazardous Areas:** Standard trucks are not equipped to operate in cold stores, flammable or explosive areas, corrosive atmospheres or areas containing a high degree of dust contamination.

- **Gradients:** When differences in levels exist, low gradient ramps should be provided, having smooth, gradual level changes at top and bottom to prevent shocks to the load or fouling of the forks. Except in emergencies, do not turn the truck on gradients. Correct gradient procedure should be followed at all times (see Safety Precautions) Do not park on a gradient. In an emergency apply parking brake and chock wheels, but do not leave the truck unattended.

https://truckmanualshub.com/

Section 3: Safe operation

Combilift forklift trucks are equipped with certain safety devices as standard equipment and strongly urge that these vehicles be operated with the safety devices supplied.

3.1: Safe Operation

- Combilift will not assume any liability for injuries or damage arising from or caused by the removal of any safety devices from their vehicles by the user.
- Fully trained, qualified and authorised drivers must only operate combi-Lift forklift trucks.
- Ensure that the truck is suitable for the area in which it is to be operated.
- Before raising or lowering forks, give clear indication of your intentions to other people and ask them to stand clear.
- Do not allow anyone to walk or stand beneath elevated forks.
- Do not exceed rated load capacity of the truck. In no circumstances should counterweights be added to increase capacity.
- If the hoist mechanism malfunctions or becomes stuck in a raised position, operate the hoist control lever to eliminate any slack in the chains. DO NOT go under the elevated parts of the truck to attempt to carry out repairs.

WARNING

Never lower the hoist mechanism with the load forks mechanically supported. Failure to observe this rule will result in carriage plus load forks falling as they are pulled clear of the support causing excess shock loading and possible damage to the hoist components as the hoist chain slack is taken up.

3.2: Operating in Hazardous Areas

- No spark proofing is fitted to the truck as standard; consequently it MUST NOT be used in flammable or explosive areas.
- The truck MUST NOT be used in corrosive atmospheres or in areas containing a high degree of dust contamination.

3.3: Safe Driving on Gradients

- When differences in levels exist, gradient ramps should be provided, having smooth, gradual level changes at the top and bottom to prevent shocks to the load or fouling of the forks.
- Do not drive across, turn or stack on gradients.
- Correct gradient procedure should be followed at all times.
- Do not park on a gradient. In an emergency apply the parking brake and chock the wheels - but do not leave the truck unattended.
- Always approach an incline straight on, and keep forks and /or load facing uphill at all times.

https://truckmanualshub.com/

3.4: Driving Position

- Only operate controls from the correct driving position and do not operate any control until you are certain of its function.

3.5: Parking

- Apply parking brake by pressing the red button.
- Ensure that the direction control switch is set to neutral.
- Lower the forks fully.
- Park clear of aisles, doorways, stairways and fire points and ensure that the truck will not obstruct other traffic.

3.6: Bridge Plates and Dock Boards

- Bridge plates and dock boards must have an adequate safety factor to support a loaded truck and be secured when in use to prevent accidental movement.
- Do not exceed the maximum permissible load, which must be clearly marked on all bridge plates and dock boards.
- The sides of bridge plates, and where possible dock boards, must be raised to minimise the possibility of the truck being driven over the edge.
- The surface of the above equipment must be of a slip resistant substance.
- Drive slowly when crossing bridge plates and dock boards.

3.7: Lifting the Machine

- Lift the machine only when necessary.
- Check machine weight before lifting
- Use only the two lifting points on the mast and ensure that the mast is tilted back before lifting.

https://truckmanualshub.com/

Section 4: Maintenance & Service Information

4.1: Maintenance Schedule

In order to keep the Combilift in optimum working condition it is necessary to service the truck at regular intervals. The Chart below details the intervals (in hours of machine operation) at which maintenance tasks should be performed.

Item		Service Interval (Hrs)			
		Daily	*250*	*500*	*2000*
Check Engine Oil level		●			
Change Oil Filter Cartridge			●		
Change Engine Oil			●		
Check Air Filter Cartridge				●	
Change Air Filter Cartridge				●	
Change Diesel Engine Glow plugs					●
Change LPG engine Spark Plugs					●
Check Engine Mounts				●	
Check Engine Mount Bolts				●	
Check Engine Idling Speed				●	
Change Both Diesel Fuel Filters				●	
Engine Belts	Check for Wear	●			
	Check Tension	●			
Check Cooling Fan		●			
Check Radiator / Oil Cooler		●			
Check Engine Coolant Level		●			
Change Coolant in Cooling System					●
Check Hydraulic Oil Level		●			
Change Hydraulic Oil					●
Change Hydraulic Suction Filter Cartridge				●	
Change Hydraulic Return Filter Cartridge				●	
Change Hydraulic In-Tank Strainer Filter					●
Check Battery Electrolyte levels			●		
Check Swivel Bearings (Slew Rings)				●	
Check Mast Bearings		●			
Check Mast Chains		●			
Lubricate & Adjust Mast Chains			●		
Grease Mast Channels			●		
Check Wheel Nuts		●			
Torque Wheel Nuts			●		
Check Hydraulic Hoses for Leaks		●			
Check Hydraulic Hoses for Signs of Wear		●			

Note: Lubricate all grease points weekly.

https://truckmanualshub.com/

Note

Maintenance, replacement, or repair of the emission control devices and systems may be performed by any non-road engine repair establishment or individual.

There are a number of items indicated on the maintenance chart that must be performed on a daily basis. These checks are essential in keeping the truck in optimum working condition. These and a number of other checks form what is known as the daily inspection of the lift truck.

In most countries, it is required by law for the operator to perform the daily inspection and for the company to have a written record of these checks. Contact your local authorities in order to find out what regulations are in place regarding daily inspections of industrial equipment of this nature.

The daily inspection must be carried out at the start of the working day before the machine commences operation. Alternatively if your company operates a multi shift system the checks should be carried out by operators at the beginning of each shift. The inspection can be broken into 3 sections:

- **The Visual Checks**
- **The Engine Checks**
- **The Operational Checks**

The details of the Inspection should be recorded on a Checklist like the one provided (page 26) and a record of these inspections should be kept on file within your company's records.

The Visual Checks

These checks are performed by doing a "walk around" inspection of the machine. The checks are performed by checking the following items as detailed below.

Warning

Before attempting any checks ensure that you are wearing the correct safety equipment, i.e. gloves, safety boots, eye protection in form of safety glasses or a full-face shield.

- **Overall condition** – Look for scrapes, dents, and other signs of damage. Watch for missing or loose nuts and bolts. Check underneath the machine for signs of leaking fuel, engine coolant, or oil.

- **Tyres and wheels** – Check that all the wheel nuts are present and tight. Look for cuts in the tyres or foreign objects in the rubber. Also look for Plastic straps, wire, and other debris caught between the wheel and the wheel motor. **Note: Always wear gloves when checking the tyres to avoid injury on sharp pieces of debris.**

https://truckmanualshub.com/

- **Forks** – Check that the Forks have no signs of excessive wear or cracking. Check that both locating pins are in place and operational.

- **Mast** – Check for twisting and distortion in the channels. Look for signs of cracking and check that there are no missing or loose bolts. Check the mast chains for wear, missing links and pins. Make sure that the chains are of equal tension and are adequately lubricated. **DO NOT place your hands inside the mast at any stage to check the chains tension.** Press on the chains with a long stick or screwdriver. Check around the lift and tilt cylinders for signs of leakage. Also check all the hoses attached to the mast for signs of leaking oil.

- **Overhead Guard** – look for signs of damage and cracking to the overhead guard. Report any signs of damage immediately to your supervisor.

The Engine Checks (service interval = Daily)

These are a series of checks that ensure that the engine of the truck is in good working order.

- **Check All the Fluid levels** – i.e. the engine oil, the engine coolant, and the hydraulic oil level. Do not operate the truck if any of these fluid levels are below the min value reading.

- **Check the radiator and oil cooler** – Make sure that no leaves, dust or other debris have built up on, or between, the radiator and oil cooler.

- **Check all the belts and hoses** – Check that all of the belts and hoses are in good condition. Look for visible signs of wear and fray.

- **On diesel machines** – check the tank for signs of leakage or corrosion. Ensure that the filler cap is on correctly

- **On LPG machines**, the fuel tank needs to be checked regularly.

  - Check the tank for scrapes, dents and other damage.
  - Check that the tank is located on the locator pin.
  - Check the restraining straps
  - Check hose and connections for leaks – **Use a soapy water solution. NOT your hands. LP Gas can cause severe burns.**
  - Check that the tank fits inside the profile of the machine.

Warning

Always wear appropriate protective clothing such as gloves and face shield when checking LP tanks and fittings. LP can cause frostbite when released, due to its very low temperature.

https://truckmanualshub.com/

The Operational Checks (service Interval = Daily)

These checks are performed in order to ensure that every part of the Combilift functions correctly and in a safe manner. The checks are performed as follows:

- **Check the seat belt** – Enter the cabin using the three point contact method. Make sure that the seat belt functions correctly. Check for any cuts or fraying along the belt and that it secures correctly into the retainer. **Always wear the seat belt provided when you are driving the Combilift.**

- **Check the seat** – All Combilift machines come with adjustable air suspension seats. The operator must ensure that the seat is correctly adjusted for their individual height and weight. Instructions on how to set the seat are in the operators' manual.

- **Turn on the Machine –** Insert the key into the ignition and turn the key to the "On" position. This will allow power to flow through the electrical system. Several lights should illuminate in the dash.

- **Test the horn** – the horn button is on the dash to the right hand side of the operator. The Truck should not be operated if the horn is not functioning. Depress the button to test the horn.

- **Starting the engine** - Ensure that the Parking brake is applied by depressing the large red button on the dash. Also ensure that the directional control lever is in the Neutral position. Turn the key to the start position to start the engine and then release the key. It will return to the on position.

- **Listen** – Listen to the engine for a few seconds before driving off. Be alert for any strange sounds or noises from the engine. Also be on the lookout for any strange odours that may indicate a problem such as a very strong smell of gas or burning. If you detect anything, which is not normal, stop the machine immediately and investigate the problem.

- **Check the Dash** – look at the dash and make sure that the warning lights are all extinguished. The only light that should be on after the engine is started should be the parking brake. Should any other lights be illuminated, stop the machine and report the fault to your supervisor. A full list of all the gauges, indicators and controls along with each function can be found in section 1 of this manual.

- **Check the mast functions** – After checking that there is adequate space and headroom perform the checks on the mast functions. Raise and lower the mast making sure that the operation is smooth and controlled. Tilt the mast fully forwards and backwards. Then test any auxiliary function that may be fitted to **Your** Combilift.

https://truckmanualshub.com/

- **Check the Brakes** – With the parking brake still applied, select forward on the directional control lever. Keeping both feet away from the pedals, sound the horn, and release the parking brake. The machine should start to move slowly forward. Depress the inching pedal fully. The machine will stop. Release the pedal and the machine will move off again. Then reapply the parking brake and the machine will stop. If either brake is not working do not operate the machine and report the fault to your supervisor. In the highly unlikely event of neither brake working, the machine can be stopped by switching off the engine. Make sure that you have adequate space to perform this test and that it is performed on a level surface.

- **Check the Directional Control Lever** – With the engine running and the parking brake applied, select forward mode. Sound the horn and release the parking brake. The machine should move forward. Depress the inching pedal to stop the machine. Sound the horn, select reverse on the directional control stick and release the inching pedal. The machine should now travel backwards. Depress the inching pedal to stop the machine and apply the parking brake. Select left travel on the directional control lever. The wheels will start to realign for sideward mode. When the wheels are fully in position, sound the horn and release the parking brake. The machine should now travel to the left. Depress the inching pedal to stop the machine, select right travel on the directional control lever, sound the horn and release the inching pedal. The machine should now travel to the right.

- **Check the steering** – Set the steering wheel to the most comfortable position for driving by use of the adjustment lever on the right hand side of the column. With the engine running and the parking brake applied, turn the steering wheel fully clockwise and counter-clockwise. The steering should move easily in either direction, and not seem excessively stiff or loose. Perform this check in both normal mode and sideward mode.

On completion of the inspection the operator should:

- Report any defect immediately to the supervisor / appropriate person
- Never operate a lift truck that is in need of repair
- Repairs should only be performed by authorised personnel

In order to keep a record of these daily inspections it is advised that a daily inspection checklist like the one provided on the next page should be used when performing the checks. A copy of this checklist should be kept on file at all times in order to keep track of the machines service history as well as any faults that occur.

Note

Remember, in most countries, it is against the law NOT to perform these checks or keep a record of the inspections.

https://truckmanualshub.com/

Customised Handling Solutions

Operators Daily Inspection Sheet

Model:_____ Serial No:_____

Date:_____ Shift No:_____

Inspect the Combilift before each shift. Should the Combilift be found to require servicing or if during the operation the Combilift malfunctions or becomes unsafe, stop the truck and report the situation immediately to the designated authority. DO NOT operate the Combilift or attempt to service it. Servicing is only to be conducted by a qualified technician.

Mark the Appropriate Box with X [OK] **Machine OK** [ ] **Service Required**

		Mon		Tues		Wed		Thurs		Fri		Sat		Sun	
Visual Checks	**Damage** *Bent, Dented or Broken Parts*	OK		OK		OK		OK		OK		OK		OK	
	Leaks *Tank, Valves, Fittings, Hoses*	OK		OK		OK		OK		OK		OK		OK	
	Tires *Chunks missing, Loose wheel nuts*	OK		OK		OK		OK		OK		OK		OK	
	Forks *Bent, Damaged or Worn*	OK		OK		OK		OK		OK		OK		OK	
	Mast (inc. Chains) *Damage, Signs of bending, loose chains*	OK		OK		OK		OK		OK		OK		OK	
	Overhead Guard *Damage, Cracking*	OK		OK		OK		OK		OK		OK		OK	
	Engine *Smell, Belts tight and in good condition*	OK		OK		OK		OK		OK		OK		OK	
	Engine Oil Level *Signs of damage or leaking*	OK		OK		OK		OK		OK		OK		OK	
	Coolant level *Acceptable Range*	OK		OK		OK		OK		OK		OK		OK	
	Hydraulic Oil Level *Acceptable Range*	OK		OK		OK		OK		OK		OK		OK	
	Radiator & Oil Cooler *Build up of leaves, dust or debris*	OK		OK		OK		OK		OK		OK		OK	
	Hoses *Good Condition, No signs of wear*	OK		OK		OK		OK		OK		OK		OK	
Operational Checks	**Safety Equipment** *Horn, Operator Restraint, Reversing Bleeper*	OK		OK		OK		OK		OK		OK		OK	
	Engine *Starts and runs OK, no unusual noise*	OK		OK		OK		OK		OK		OK		OK	
	Mode change *Wheels realign smoothly, no sticking*	OK		OK		OK		OK		OK		OK		OK	
	Travel *No unusual Noise, Smooth changes*	OK		OK		OK		OK		OK		OK		OK	
	Steering *No excessive play or restriction in either mode*	OK		OK		OK		OK		OK		OK		OK	
	Inching Pedal *Stops travel, smooth deceleration*	OK		OK		OK		OK		OK		OK		OK	
	Parking Brake Functions and releases	OK		OK		OK		OK		OK		OK		OK	
	Hydraulic Controls Forks-Lift/lower, mast-in/out, tilt, Aux functions	OK		OK		OK		OK		OK		OK		OK	
	Hour Meter Reading														
	Operator Initials														
	Supervisors Initials														

Notes (regarding repair, etc): _____

_____

_____

https://truckmanualshub.com/

4.3: **Initial Service –** Conducted at 100 hours of Operation

The initial service is conducted at this interval to ensure that the truck is in optimum working condition upon leaving the factory. In order to complete the initial service the following task must be completed.

- Change engine oil & oil filter.
- Replace fuel filter.
- Check fan belt tension and adjust if required.
- Replace hydraulic suction filter (located at rear of hydraulic tank)
- Replace return filter (located on top of the hydraulic tank)
- Check hydraulic oil level.
- Check coolant level.
- Check the machine for hydraulic, coolant and fuel leaks.
- Check air cleaner and replace if necessary.
- Check all mast carriage-bearing lock nuts are tight.
- Check all bolts and fittings are tight.
- Check radiator, and if necessary, clean fins
- Grease all points indicated on grease point chart
- Torque all wheel nuts (210Nm / 155ft-lb)
- Check mast chains; lubricate and adjust if required.

Note

All grease points indicated on the grease point chart MUST be greased weekly using an appropriate EP2 Grease

Note

All wheel nuts should be checked daily and torqued every 250 hours to: (210Nm / 155ft-lb)

4.4: **Engine Oil & Engine Oil Filter** (Service Interval = 250Hours)

The engine oil used in the Combilift should have the correct temperature range for the ambient temperature in which the machine is to be operating. Temperature affects the viscosity of the oil and therefore it's lubricating properties. All Combilift trucks leave the factory with a special, high multi-grade oil in the engine and this can be used all year round except in very cold climates.

To check the engine oil level:

- Park the truck on level ground, apply the park brake and shut off the engine.
- Ensure the engine has been stopped for at least 3 minutes.
- Remove the dipstick and wipe it with a clean cloth.
- Fully insert the dipstick and remove it again, check if the oil level is between the upper and lower marks.
- If the oil is below the lower mark add oil of the same specification at that already in the engine, to the upper mark.

https://truckmanualshub.com/

Recommended Engine Oil Specification:

Diesel: API – CF (If a diesel particulate filter (DPF) is fitted See 4.13:)
SAE 15W40 – All Temperatures
SAE 10W30 – All Temperatures

LPG: API – SJ/CF
SAE 10W30 – All Temperatures
SAE 15W40 – Above -18°C (0°F)

In order to change the Oil and filter the following steps should be taken:

- Position a suitable container beneath the Oil drain plug. (Container must be capable of holding 7 litres / 1.85 US Gallons)
- Remove the oil filler cap from the top of the engine.
- Remove the drain plug (attach the drain hose provided – if applicable) and allow the system time to drain completely
- Once the system has drained completely, dispose of the used oil in a safe and responsible manner

Note

Do not pour fluids into the ground, down a drain or into a stream, pond or lake. Observe relevant environmental protection regulations when disposing of oil, coolant, fuel, electrolyte and other harmful waste.

- Remove the engine oil filter located on the side of the engine.
- Apply some engine oil to the new oil filter cartridge before fitting.
- Install the new engine oil filter cartridge, ensuring that the O-ring seal is correctly placed. Hand-tighten the filter, then give it an additional ½ turn with a filter wrench.
- Reinstall the drain plug and tighten appropriately (Use a new gasket if required).
- Fill the engine with the appropriate volume of oil ensuring that the oil with the correct temperature range is used. The Volume of oil required is:
    - Kubota Diesel Engine: 6.7 Litres / 1.77 US Gallons
    - GM LPG Engine: 4.7 Litres / 1.24 US Gallons
    - Toyota 4Y LPG Engine: 4.0 Litres / 1.1 US Gallons
- Reinstall the filler cap. Check the oil level on the dipstick. Ensure that the oil level is between the upper and lower marks on the dipstick.

https://truckmanualshub.com/

4.5: Engine Coolant (Service interval = 2000Hours)

The coolant must consist of a mixture of 50% water to 50% coolant additive (glycol based with anti-corrosion additives). This will give frost protection down to -25°C and also protect the alloy parts in the cooling system against corrosion. Therefore, the concentration of coolant additive must not fall below 40%. If greater frost protection is required, the coolant additive can be increased but only up to 60% (frost protection to -40°C approx.). Any greater proportion of coolant will decrease the frost protection and also the anti corrosive properties.

The coolant level is monitored via the coolant reservoir located on the left hand side of the cabin. The coolant level should always be kept between the upper and lower levels indicated on the reservoir and topped up as is deemed necessary.

To drain the cooling system, remove the filler cap from the top of the radiator and the pipe / bung from t bottom right hand corner of the radiator.

4.6: Mast Maintenance (Service Interval = 250Hours)

Mast chains should be checked for elongation periodically and adjusted as required. The chains must be adjusted so that the upper and lower stops on the mast never collide. Adjust all chains evenly. An interval of 250 hours can be taken as a typical value, under normal working conditions.

Periodic lubrication of the mast chains is required to ensure maximum life span is achieved. Use SAE 20 oil in cold conditions and SAE 40 oil in warm conditions. Frequency of lubrication depends largely on operating conditions.
A lubrication interval of 250 hours can be taken as a typical value, under normal working conditions.

Periodic lubrication of the mast channels is required to ensure maximum life span is achieved. All roller surfaces must be greased periodically where the fork carriage bearings and mast section bearings run. The frequency of this operation is at the discretion of the user and essentially depends upon the working conditions. A lubrication interval of 250 hours can be taken as a typical value, under normal working conditions. For this purpose use graphite grease, avoid spray greases.

Additional Mast Maintenance (Contact Combilift for further information)

- Replacement of hydraulic cylinder seals.
- Replacement of chains.
- Replacement of bearings.

https://truckmanualshub.com/

4.7: Hydraulic Oil & Filters

The hydraulic oil used in the Combilift should conform to the International Standard. I.S.O. G344 HV grade oils with improved viscosity / temperature characteristics. It should also have the correct temperature range for the ambient temperature in which the machine is being operated. If the operating temperature is outside the standard range, the standard oil should be replaced with the correct grade.

Ensure that the correct type is used in the relevant ambient temperature. The table below indicates a number of commercially available oils and the temperature ranges that they are suitable for.

AMBIENT OPERATING TEMPERATURE	**Low Range -20°C to25°C -4°F to 77°F**	**Standard Range -10°C to35°C 14°F to 95°F**	**High Range 0°C to45°C 32°F to 113°F**
Castrol: Hyspin	AWH 32	AWH 46	AWH 68
B.P. Bartran	HV 32	HV 46	HV 68
Esso: Univis	N 32	N 46	N 68
Mobil	13 M	15 M	16 M
Shell: Tellus oil	T32	T46	T68
Texaco	HDZ 32	HDZ 46	HDZ 68

Note

The Sequence in which the brand names are listed does not signify any grading as to their quality or preference.

Note

The machine is supplied with an AWH46 hydraulic fluid when leaving the factory. Please check if this is suitable for the ambient temperature in which the machine is to be operated

Note

Before adding hydraulic oil, ensure that all cylinders are retracted and fill to upper level on the hydraulic oil level gauge.
Hydraulic Tank Capacity – 39 litres
Hydraulic System Capacity – 52 litres approx.

There are a total of 3 filters on or in the hydraulic oil tank that must be replaced at certain intervals. These filters are:

1. **The Suction Filter**
2. **The Return Filter**
3. **The In-Tank Strainer Filter**

https://truckmanualshub.com/

The suction filter, located on the back of the tank, must be replaced initially after 100 hours and then at intervals of every 500 hours (or 8 months depending on which occurs first)

4.8: To replace the Suction Filter: (Service interval = 500Hours)

1. Loosen and remove the old filter cartridge.
2. Fill the new filter cartridge with hydraulic oil of the same grade as that already in the tank.
3. Smear some of the oil on the O-ring seal on the top of the filter cartridge
4. Install the new filter cartridge onto the filter housing. Hand tighten the cartridge into position.
5. Only use a genuine Combilift component.

Return Filter: (service Interval = 500 Hours)
The return filter, located on the top of the tank, must be replaced at intervals of every 500 hours (or 8months depending on which occurs first).

To replace the Return Filter:

1. Remove the four bolts from the lid of the filter housing in order to gain access to the filter element.
2. Remove the retaining spring from the top of the filter element
3. Remove the old filter element and replace with the new filter element. Only use a genuine Combilift component.
4. Fit the retaining spring into the top of the filter element and refit the housing lid.

In-Tank Strainer Filter: (Service Interval = 2000 Hours)
The In-Tank Strainer Filter, located in the bottom left hand corner of the tank, must be replaced at intervals of every 2000 hours (or 24 months depending on which occurs first). The strainer filter can only be accessed when the hydraulic tank has been drained.

To replace the In-Tank Strainer Filter:

1. Drain the hydraulic oil tank through the drain plug in the bottom of the tank
2. Remove the access panel on the side of the tank
3. Insert your hand into the tank and remove the filter by rotating it anti-clockwise.
4. Fit the new strainer filter. Only use a genuine Combilift component.
5. Replace the access panel in the side of the tank, remembering to correctly fit the access panel O-ring seal.

Change Hydraulic Oil (service interval = 2000Hours)

- Drain Hydraulic system including tank. Once completed fill system to the appropriate level with Hydraulic oil of the same grade as that, which was already in the tank.
- Capacity of Hydraulic oil in the Hydraulic system = 52 litres approx

https://truckmanualshub.com/

4.9: Water Pump V- Belt

The engine is kept cool via the coolant that is pumped round the cooling system. The water pump is powered by the Water pump V-belt. This is checked as follows:

Check the belt tension. Perform this when the engine IS NOT running. Press on the belt with a stick or rod. Ensure that the deflection is no more that 10mm to 12mm. If it is adjust the belt via the pulley adjusting bolts

Check the belt condition: Inspect the condition of the belt. Be on the lookout for signs of damage and wear. If the belt is damaged replace it immediately. Also check if the belt has sunk deeply into the pulley as this indicates excessive wear. Again replace the belt immediately if this is the case.

4.10: Fuel Filter – diesel engine trucks (Service interval = 500 Hours)

On all diesel engine Combilifts, there are two fuel filters located on the rear of the fuel tank. The first filter, the small plastic filter, is to prevent particles entering the electric fuel pump. The second larger filter is to prevent any remaining particles entering the engine. These must be replaced in accordance with the maintenance chart. They are both accessed by entering the frame of the machine.

4.11: Air Filter Element (Service Interval = 500 Hours)

The air filter housing is located on top of the bonnet on the right hand side of the machine. The air filter cartridge must be replaced at intervals of every 500 hours (or 8 months depending on which occurs first). Always ensure that the Dust Valve is pointing down.

In order to change the air filter Cartridge, take the following steps:

1. Remove the end cap from the filter housing
2. Remove the existing air filter cartridge and replace with the new cartridge. Only use a genuine Combilift component.
3. Replace the End cap of the housing ensuring that the Dust valve is pointing downwards as shown.

https://truckmanualshub.com/

4.12: Grease Point Chart

Lubricate all of the points indicated on the chart below on a weekly basis using the appropriate EP2 Grease. Also lubricate all grease points on the mast and any attachments that may be fitted to the Combilift.

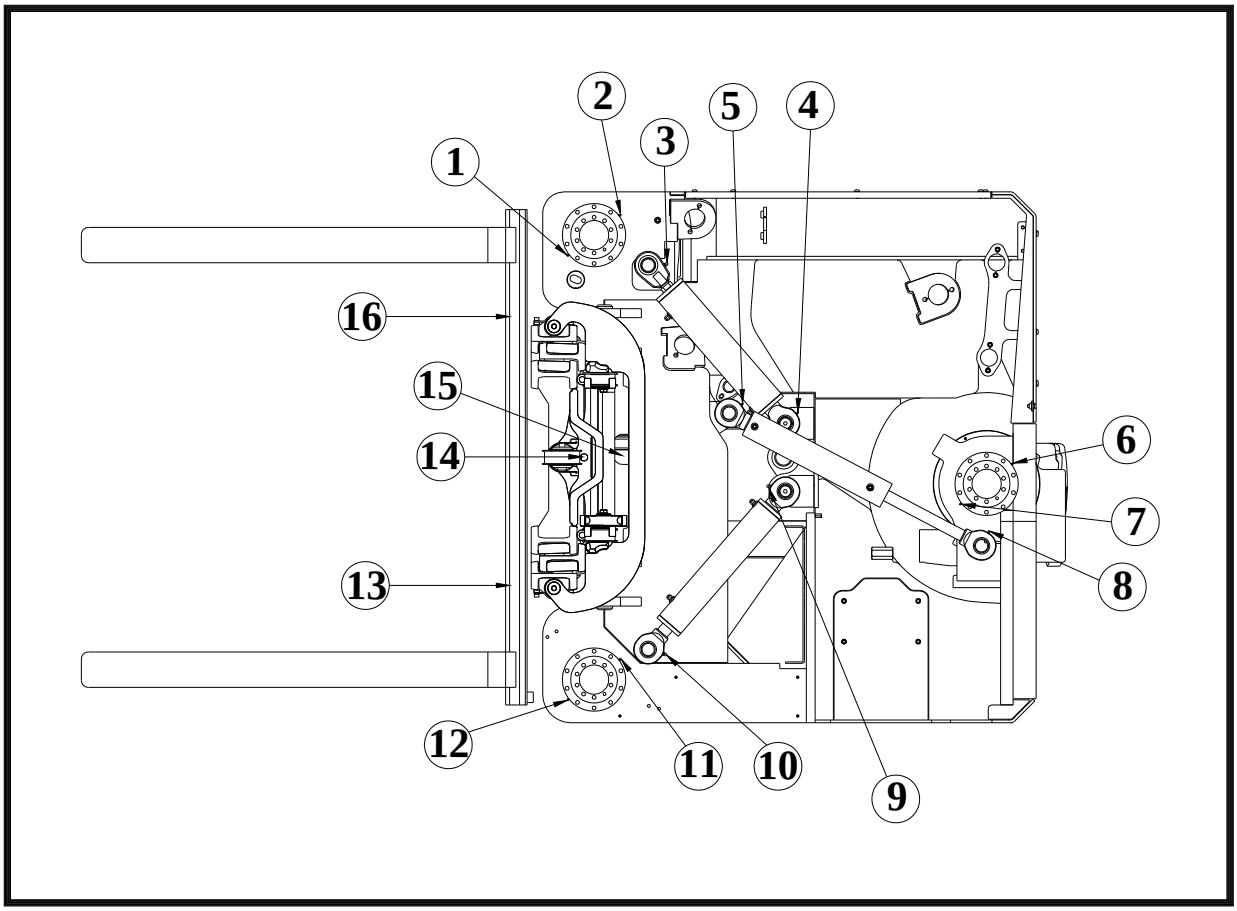

1. Swivel Front
2. Swivel Back
3. Steering Front
4. Steering Back
5. Rear Steering
6. Swivel Front
7. Swivel Back
8. Rear Steering
9. Steering Back
10. Steering Front
11. Swivel Back
12. Swivel Front
13. Fork Positioner Left
14. Front Tilt
15. Rear Tilt
16. Fork Positioner Right

Note

See Appendix A for ‘California Engine Emission Control Warranty Statement’ regarding owners ‘Warranty Rights and Obligations’.

See Appendix B for General Engine Warranty Statement.

https://truckmanualshub.com/

4.13: Diesel Particulate Filter (DPF)

Refer to the accompanying diesel particulate filter manual (only supplied if a DPF has been fitted) for further details.

Note

Where Diesel Particulate Filters (DPF) are fitted Diesel Fuels with a maximum sulphur content of 15ppm (parts per million) MUST be used.
Diesel Fuels specified to EN 590 or ASTM D975 S15 are Strongly Recommended.

Note

If a diesel particulate filter (DPF) is fitted to the truck then API CJ-4 engine oil **MUST** be used.

https://truckmanualshub.com/

Section 5: Technical Information & Circuit Diagrams

5.1 Hydraulic Functions Circuit

COMBILIFT LTD	Model: Combi CB	Title: Hyd. Functions Circuit
		Revision Date:06/10/09

Pressure Settings

Main = 3800PSI/262Bar

Lift = 3600PSI/248Bar

Tilt = 3800PSI/262Bar

Sideshift = 2600PSI/180Bar

Positioner = 2400PSI/166Bar

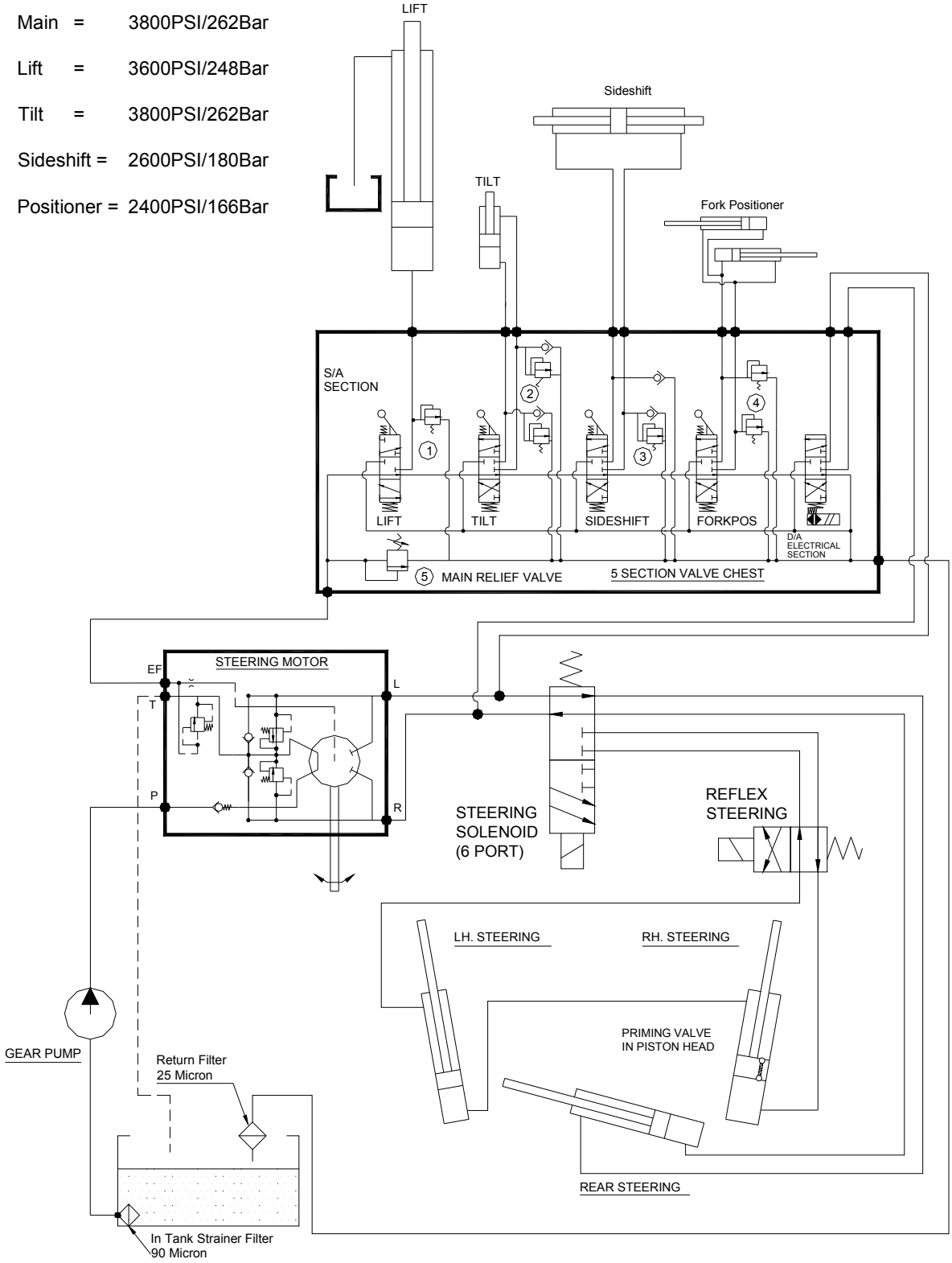

https://truckmanualshub.com/

5.2 Hydraulic Drive Circuit

COMBILIFT LTD	Model: Combi CB	Title: Hydraulic Drive Circuit
		Revision Date:06/10/09

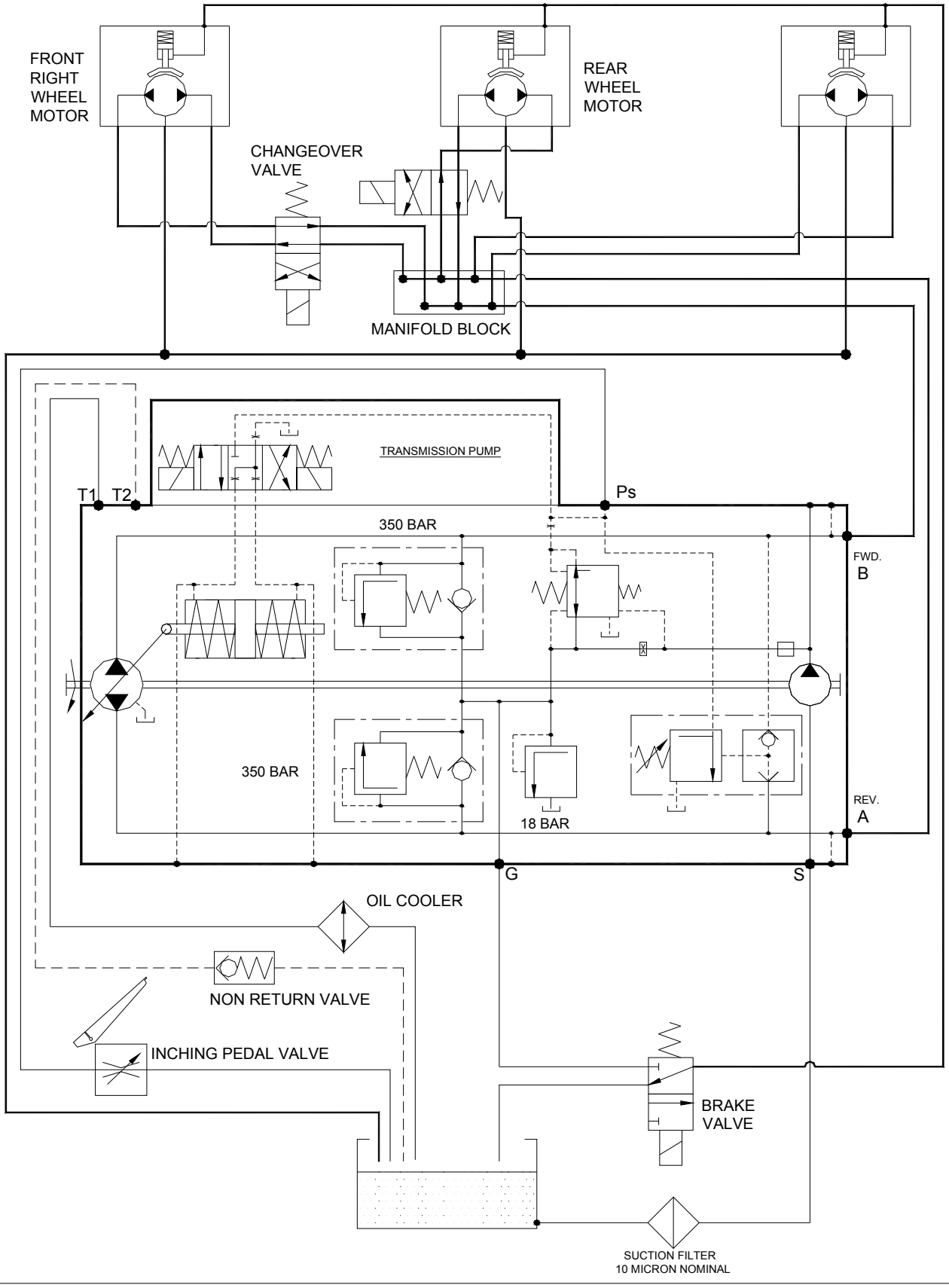

https://truckmanualshub.com/

5.3 Towing the Combilift

Should the need arise to Tow the Combilift it is necessary to first apply the bypass condition on the hydrostatic pump in order to prevent It from being damaged. It will then be necessary to mechanically release the brakes on the motors.

Hydrostatic transmission / Bypass condition.

In this case the travel drive is switched on the free wheel position. For this purpose the high-pressure valves of the variable displacement pump have a so-called bypass function. By turning the relevant screw (item 1) the valve is so released that free oil circulation is made possible. In order to bypass the motor, screw in item 1 until it is level with the nut.

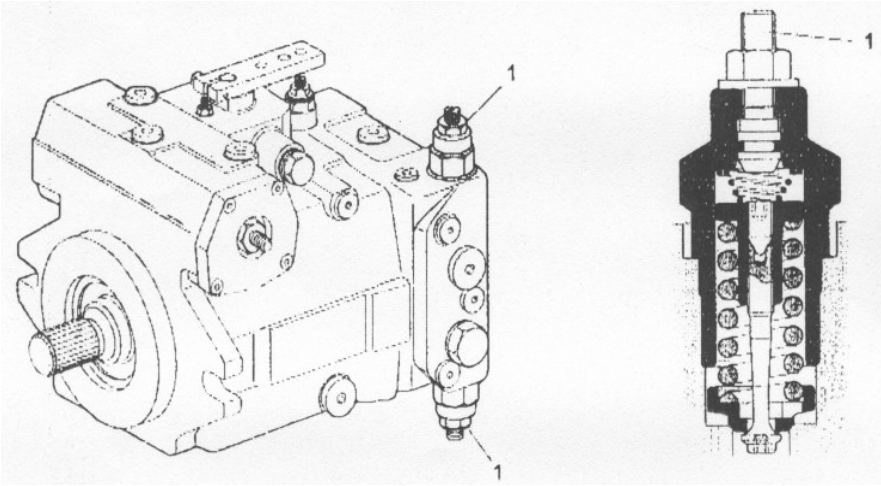

Towing Speed

The maximum permissible towing speed of 2 km/h **should not be exceeded.**

Towing distance

The towing distance should not exceed 1 km. (With no boost available to the hydraulic circuit drains, the heat generation in the hydraulic motor rotary group has to be taken into account.)

Termination of the towing operation

After termination of the towing operation turn back item 1 to its original position. The original set pressure valve is thereby available. Screw item 1 up to stop. Tighten the nut.

https://truckmanualshub.com/

5.4 Mechanical Brake Release

In order to release the brake, follow the steps laid out below.

1. Extract the plug from the rear cover of the motor. (Labelled 142 in the diagram opposite)

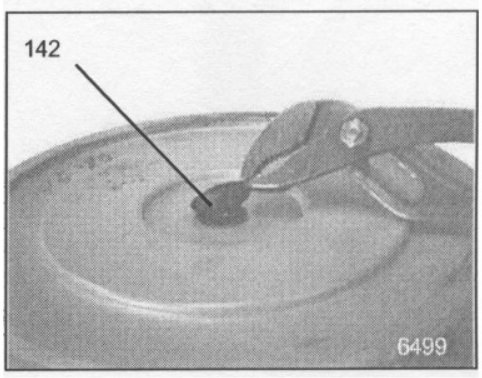

2. Insert a socket head bolt as shown in the diagram with a nut fully inserted onto the bolt.

3. Using a spacer similar to the one shown on the diagram tighten the bolt into the Brake assembly at the rear of the motor

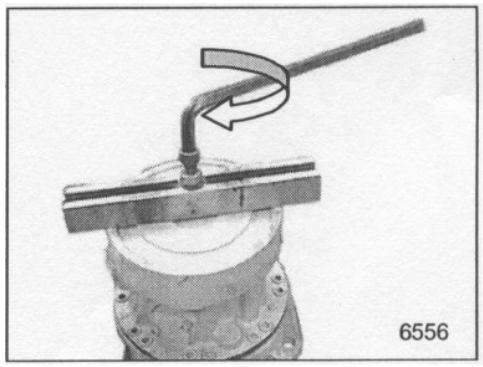

4. When the bolt is in tight, loosen the nut off the bolt by turning it anticlockwise as shown. This action will release the brake and allow the motor to turn freely

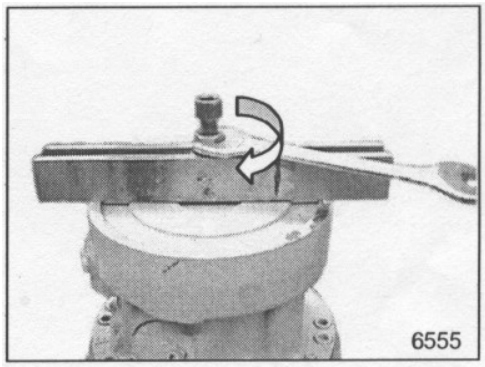

5. To reapply the brake, repeat the steps above in reverse order.

https://truckmanualshub.com/

5.5 Checking the Charge Pressure

In order to check the charge Pressure, the following steps should be taken. When the reading is taken the charge pressure should measure between 16 bar and 22 bar (230PSI and 320PSI)

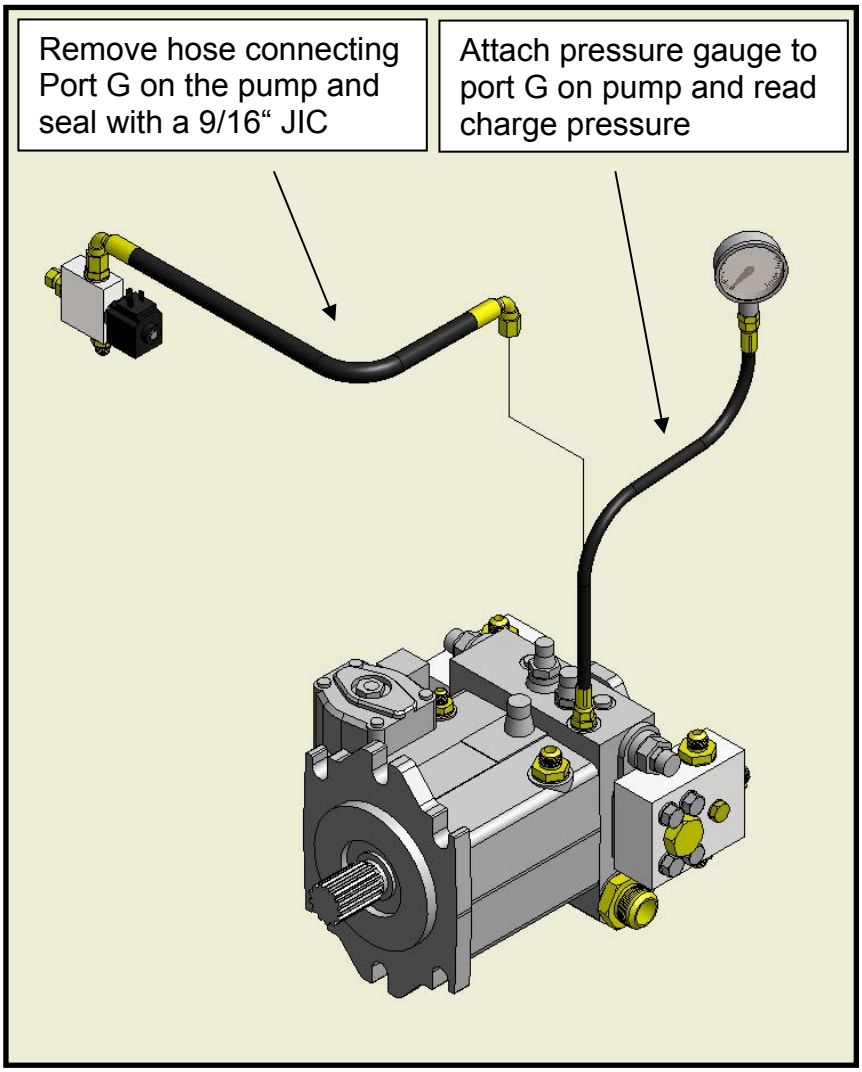

Warning

Ensure that the Machine is switched off until the pressure gauge has been attached before trying to read the charge pressure.

https://truckmanualshub.com/

5.6 Fuse Box Layout

The diagram and table below show the layout of the fuse box & the rating for each fuse.

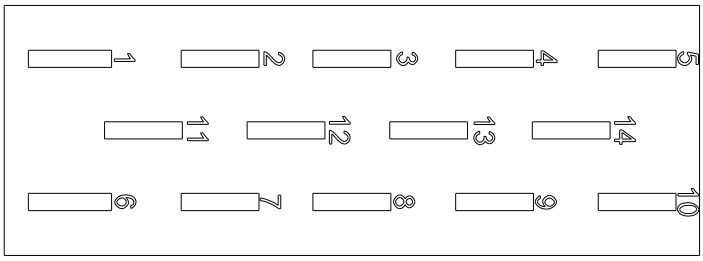

PLC Loom Fuse Table		
Fuse	**Amps**	**Function**
1-Diesel	7.5	Mast Height Override, Dash Display Lights, Glow Plug Light, Glow Plug Relay, PLC Supply
1-GM LPG	7.5	Mast Height Override, Dash Display Lights, PLC Supply
1-Toyota LPG	7.5	Mast Height Override, Dash Display Lights, PLC Supply, LPG Relay, Engine Plugs
2	7.5	Joystick Supply, Neutral Relay, Reverse Bleeper, PLC X3, (Alternator Plug Pin 3 – Toyota Only)
3-Diesel	7.5	Pull Hold Solenoid, Fuel Pump
3-GM LPG	7.5	Ignition Coil, Fuel Commander
3-Toyota LPG	10	Engine Cut-Off, Distributor Plug J Pin 1
4	20	Steering Solenoid Supply, PLC Output Supply
5	7.5	Push Button Brake Switch, Inch Pedal Brake Switch, Brake Light, Brake Solenoid Supply
6	7.5	Wiper
7	15	Front Work Lights, Dash Cluster Lights
8	15	Side Work Lights, Cabin Interior Light (Optional)
9	7.5	Cabin Heater Fan, Cabin Cooling Fan (Optional)
10	7.5	Horn
11	7.5	Independent Fork Positioning Solenoids
12	7.5	Proximity Switches Supply, Seat Switch, Seat Belt Switch
13	7.5	Flashing Beacon
14	7.5	Spare
Inline	10	Valve Chest Lock Valve Solenoids

5.7 Relay Layout

Below is a table of the relays inside the dash in the cabin of the Combilift.

PLC Loom Relay Table	
Relay	**Function**
1	Starter Solenoid
2	Glow Plug Timer
9	Steering Solenoid
15	Neutral Cut-Off
22	Work Lights (Spot Lights)
LV	Valve Chest Lock Valve Solenoids
LPG (Toyota)	LP Gas System Relay
C/O (Toyota)	Engine Cut-Off Relay

https://truckmanualshub.com/

5.8 Standard GM LPG PLC Electric Circuit:

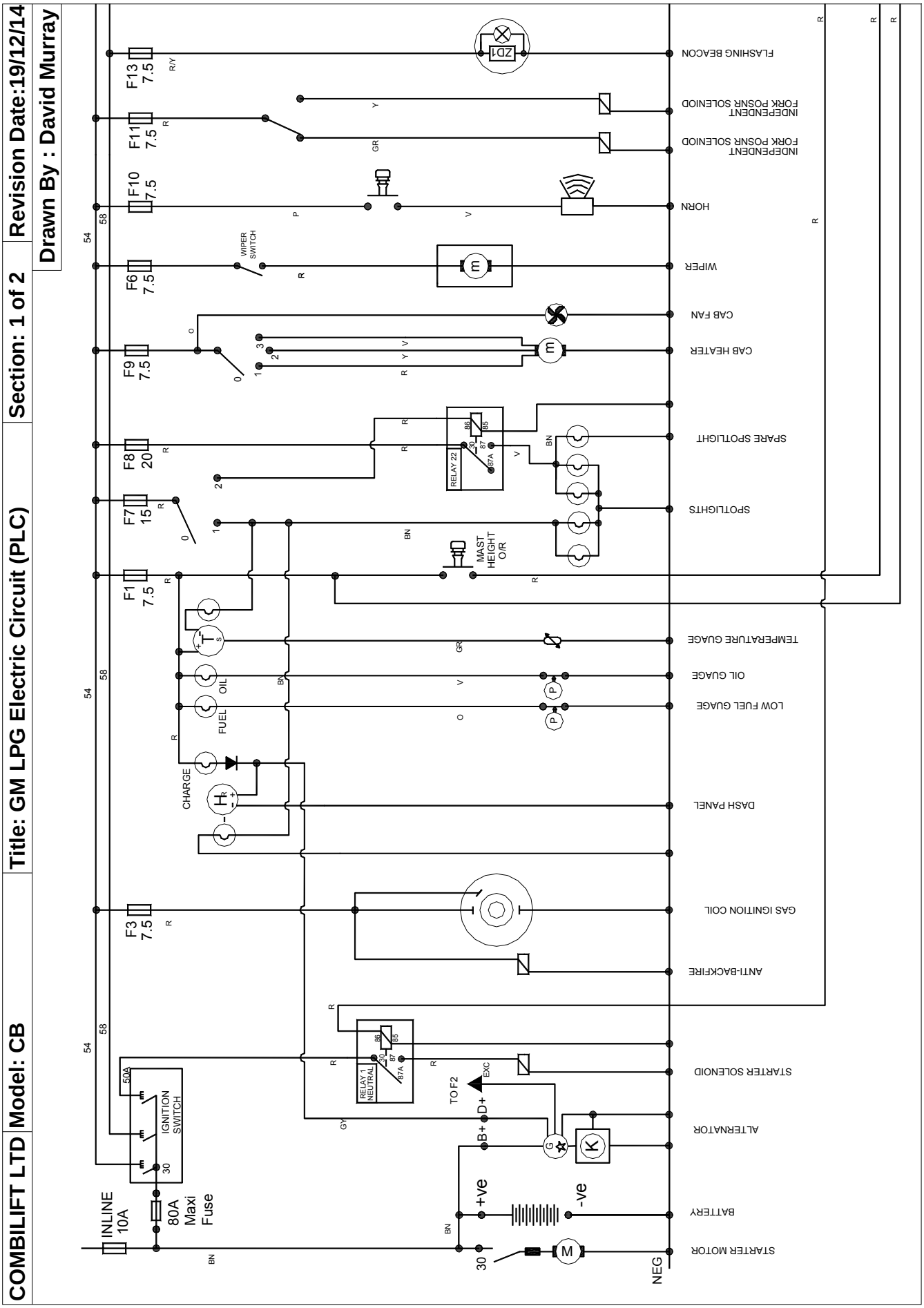

https://truckmanualshub.com/

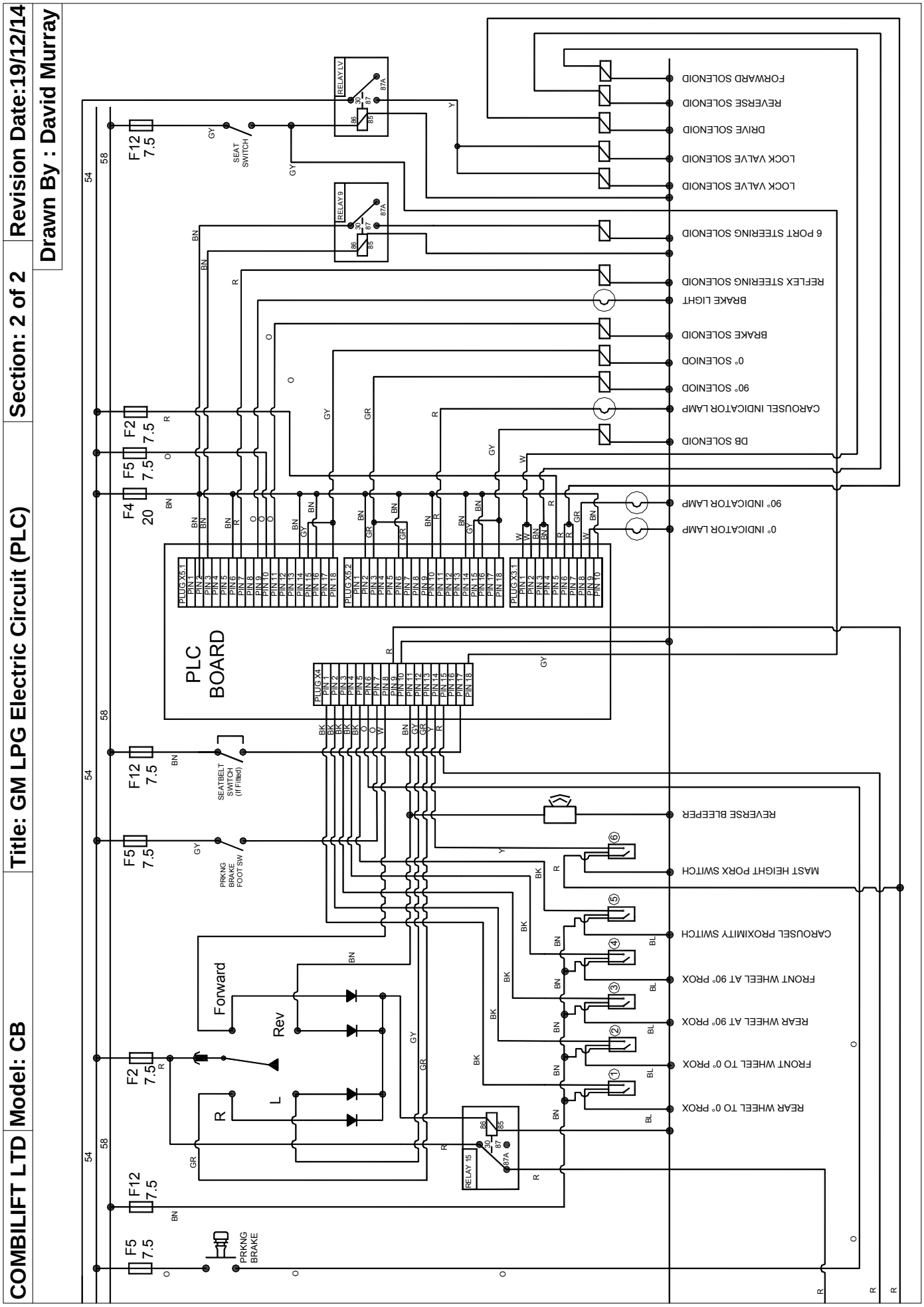

https://truckmanualshub.com/

5.9 Standard Kubota Diesel PLC Electric Circuit:

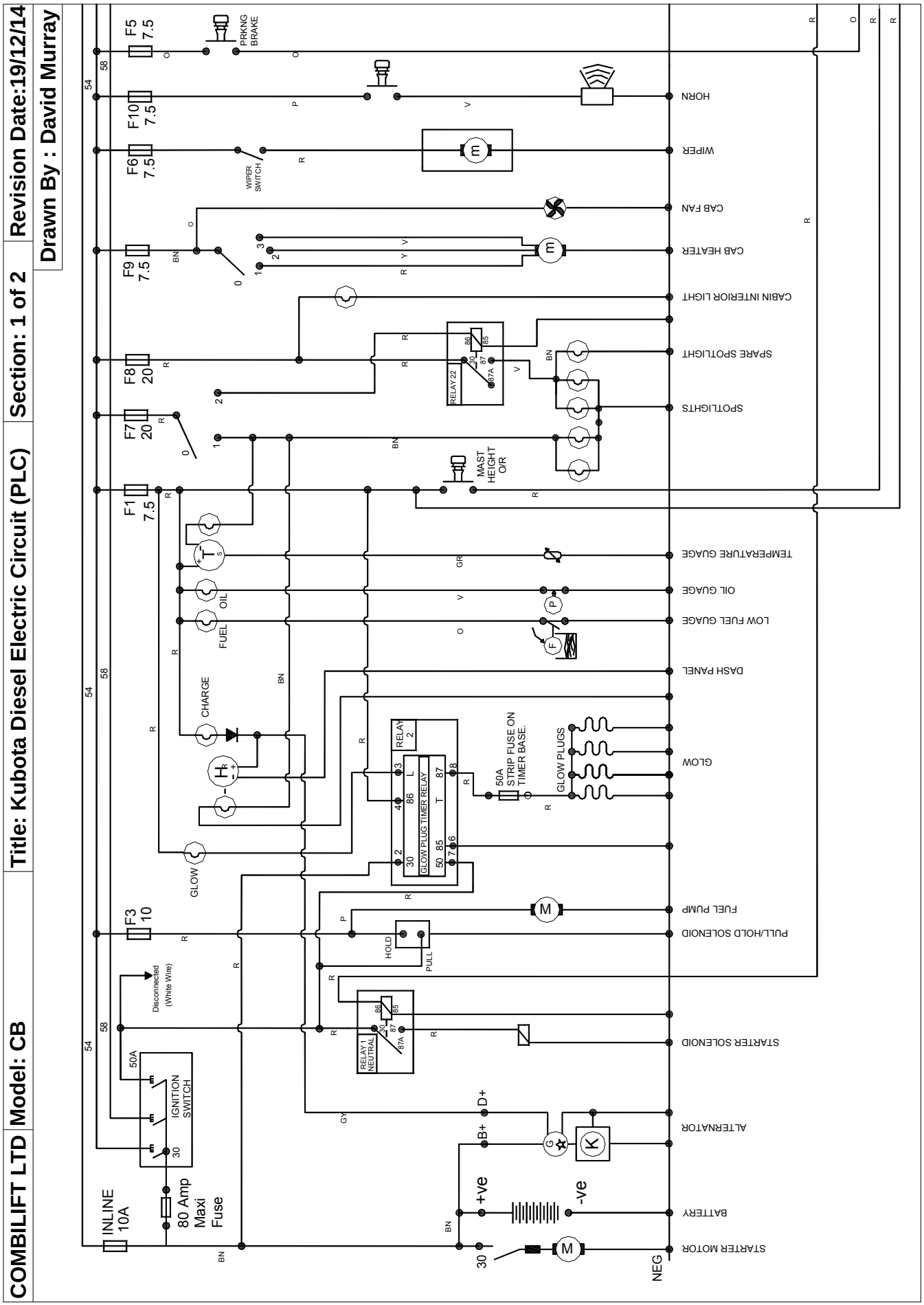

https://truckmanualshub.com/

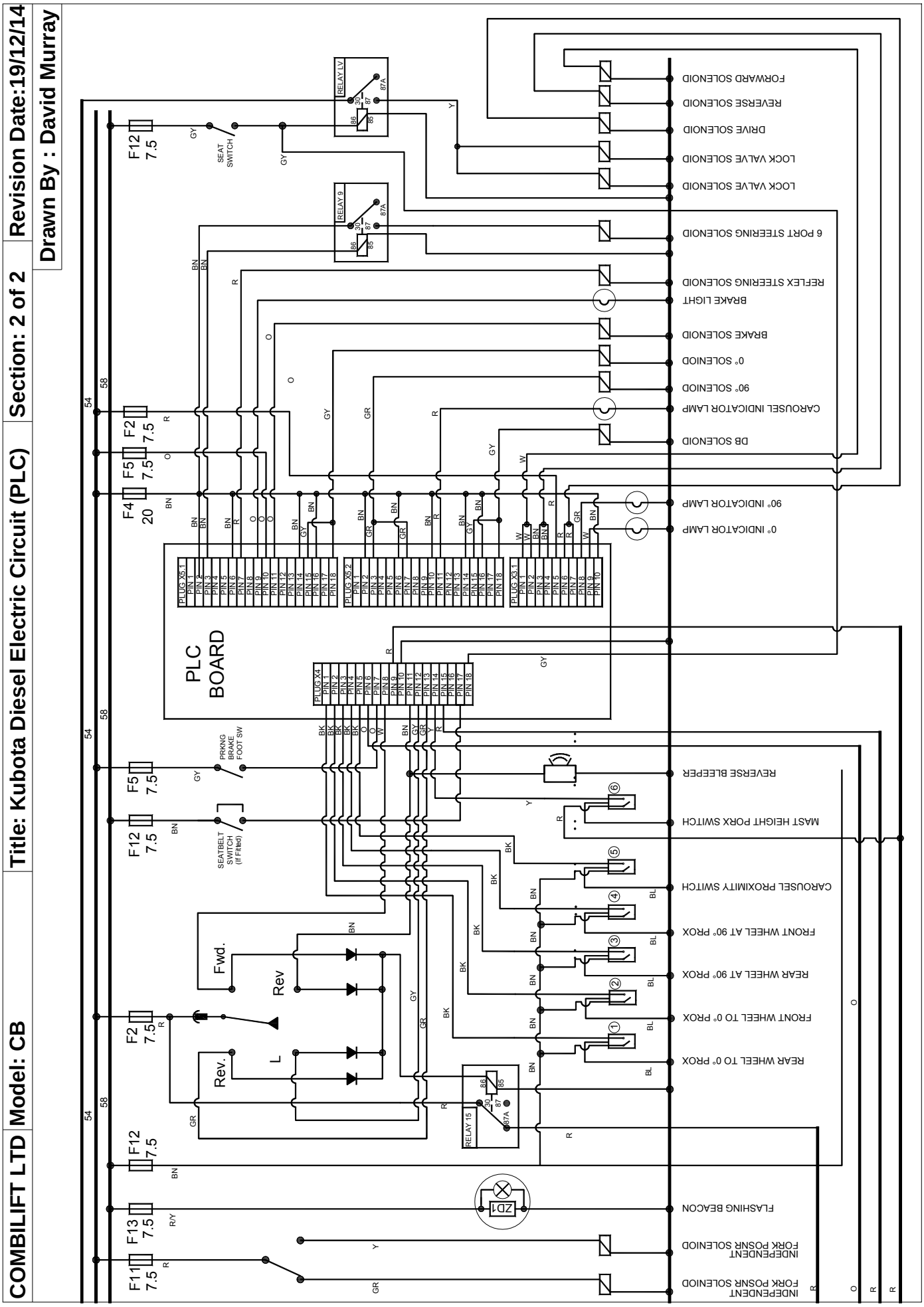

https://truckmanualshub.com/

5.10 Standard Toyota 4Y LPG PLC Electric Circuit:

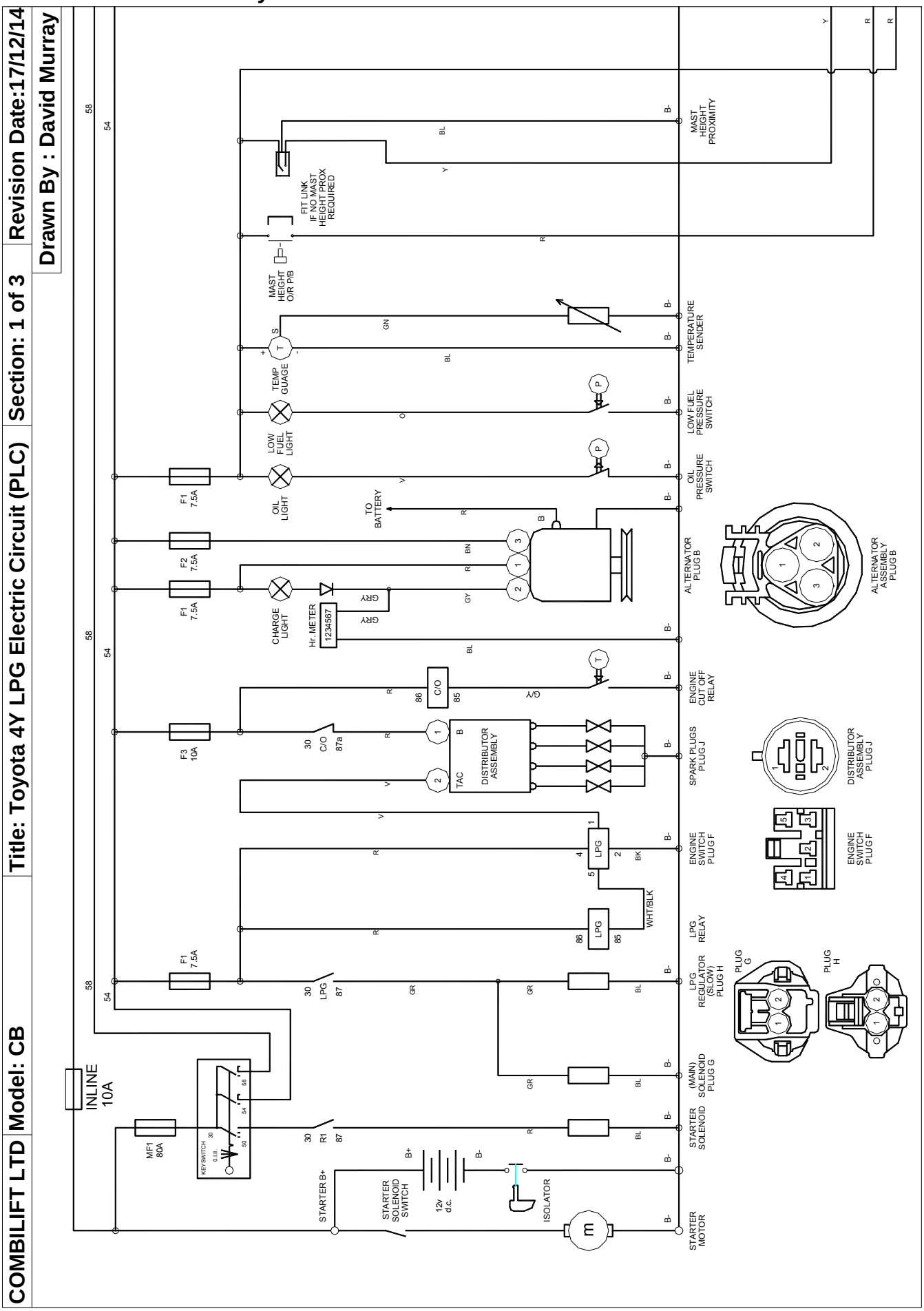

https://truckmanualshub.com/

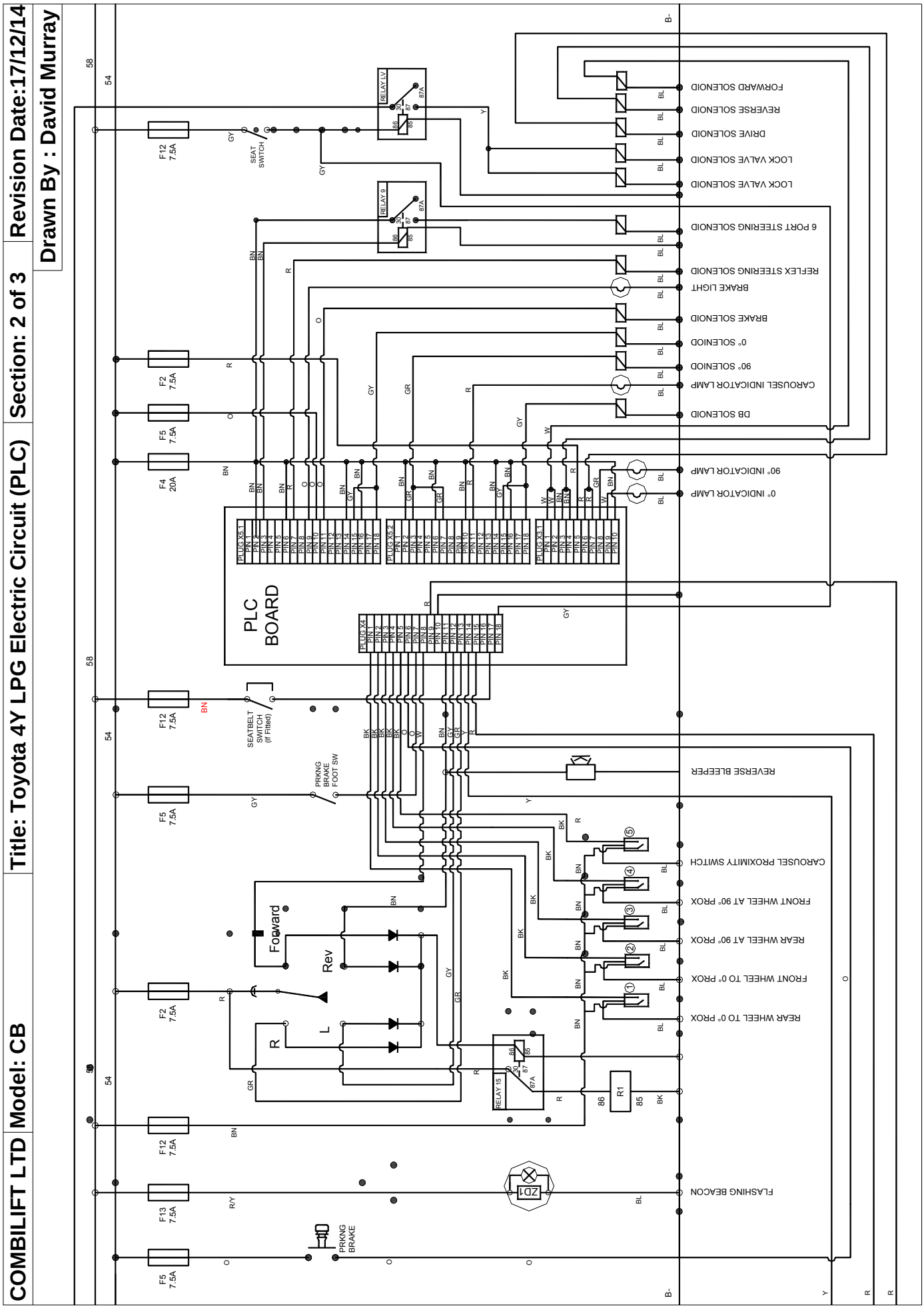

https://truckmanualshub.com/

COMBILIFT LTD | Model: CB | Title: Toyota 4Y LPG Electric Circuit (PLC) | Section: 3 of 3 | Revision Date:17/12/14

Drawn By : David Murray

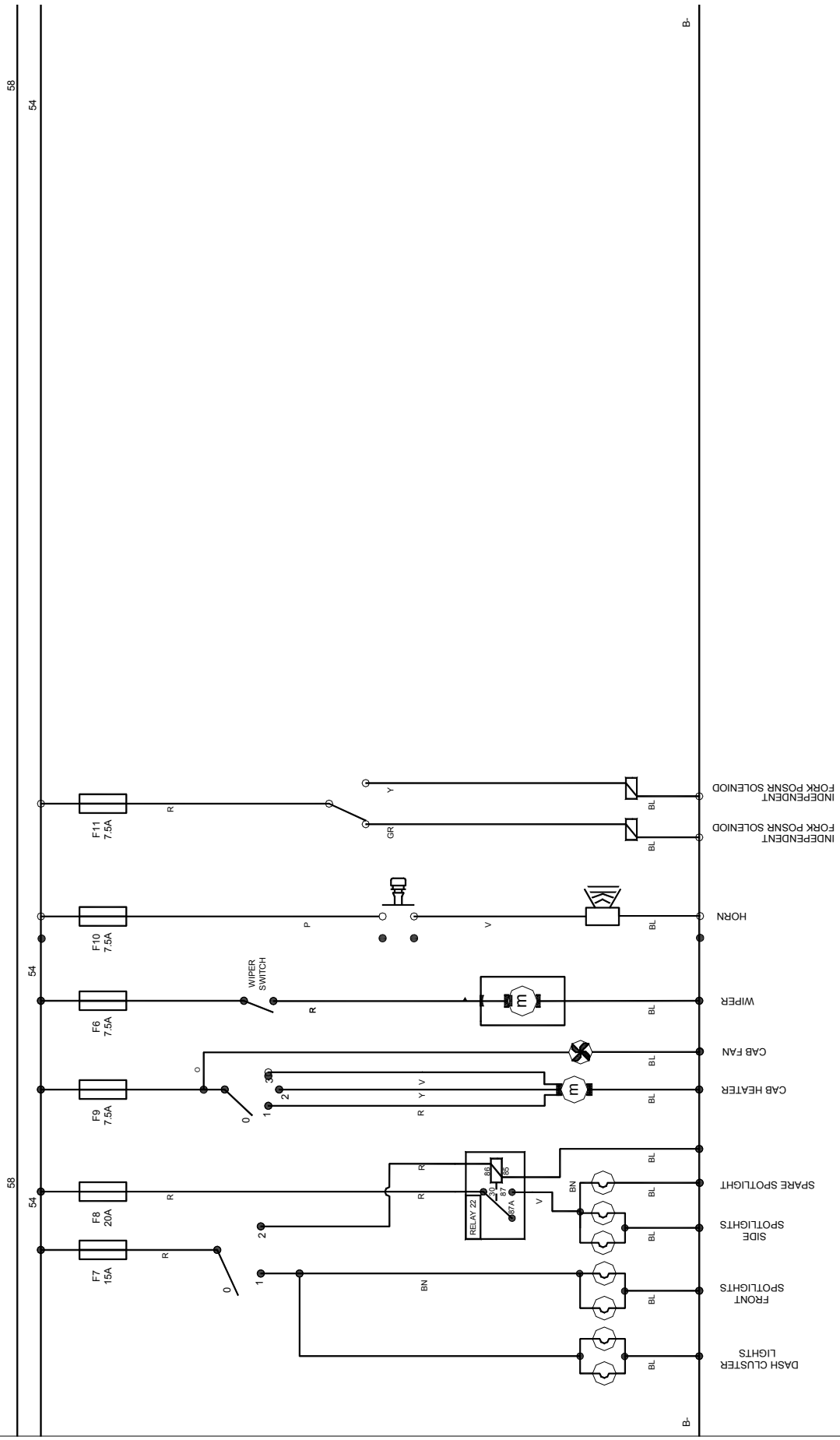

https://truckmanualshub.com/

5.11 Tier IV GM LPG PLC Electric Circuit:

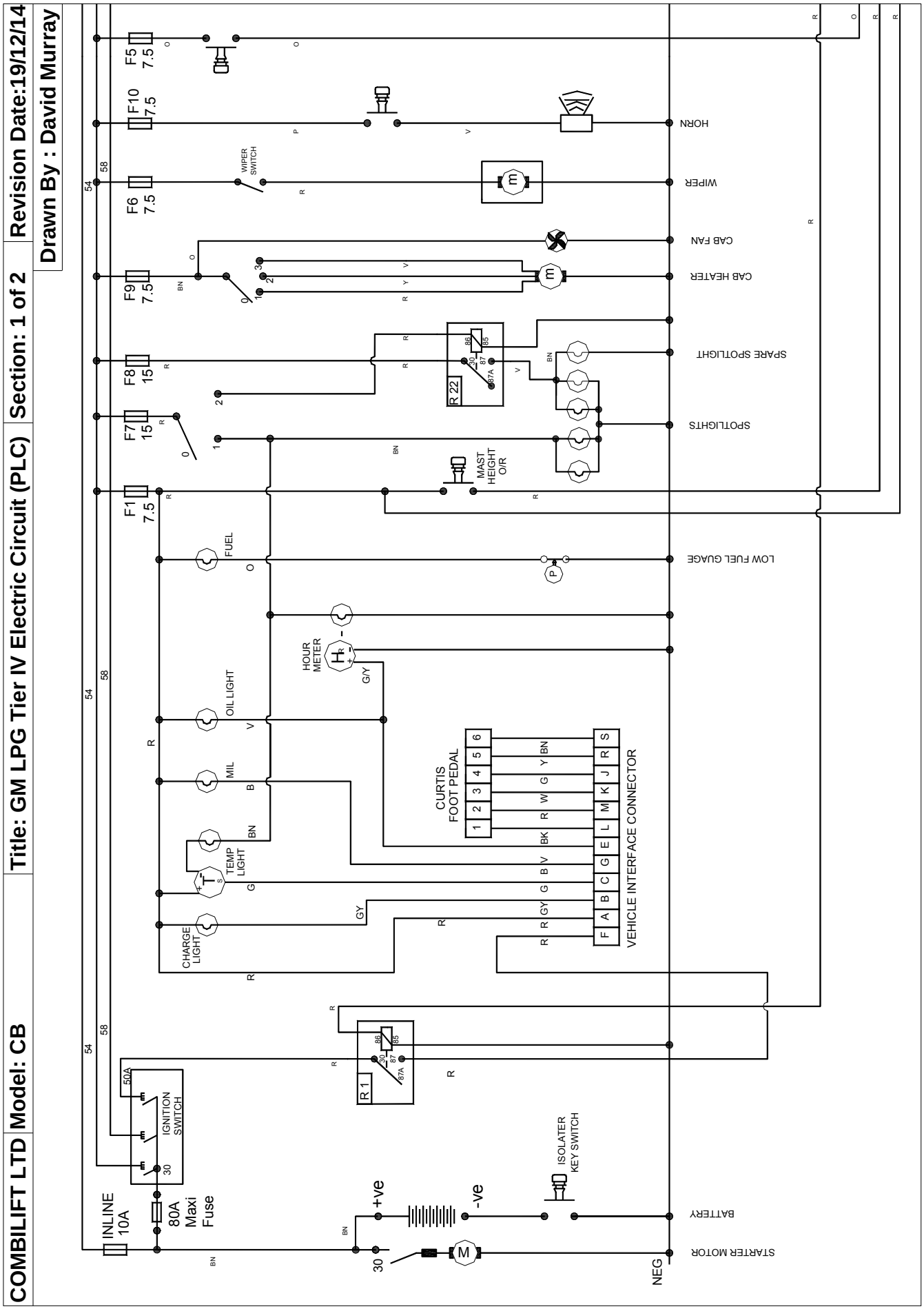

https://truckmanualshub.com/

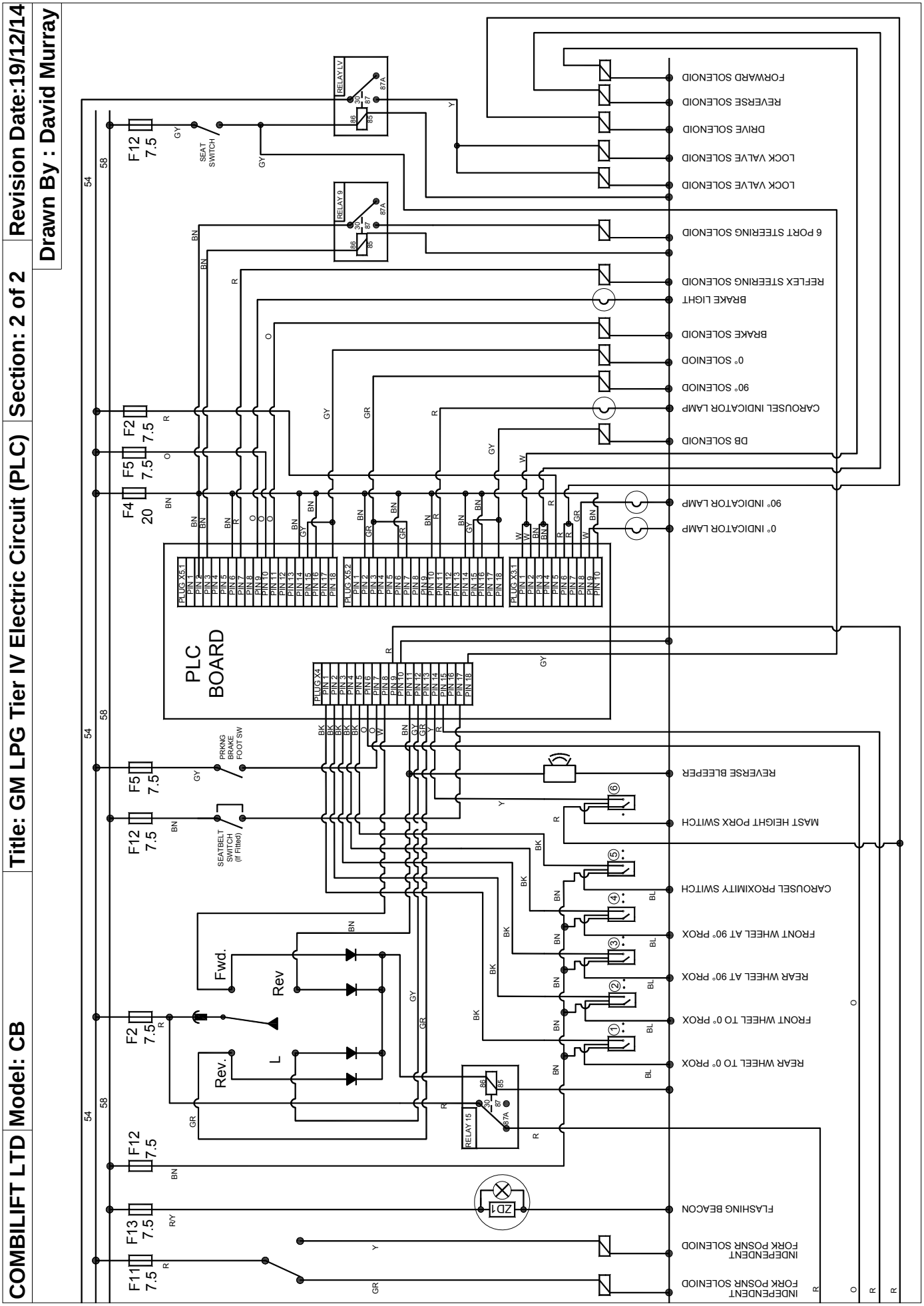

https://truckmanualshub.com/

5.12 Colour Codes for Electric Circuits:

CODE - COLOUR

BK - BLACK
BN - BROWN
BL - BLUE
R - RED
O - ORANGE
Y - YELLOW
GR - GREEN
V - VIOLET
P - PINK
GY - GREY
W - WHITE
G/Y - GREEN / YELLOW
R/Y - RED / YELLOW
O/W - ORANGE / WHITE

NEGATIVE WIRES ARE NORMALLY BLUE OR BLACK, DEPENDING ON WHAT UNIT IS BEING INVESTIGATED.
TAKE ALL NEGATIVES TO BE BLACK UNLESS STATED OTHERWISE.

https://truckmanualshub.com/

5.13 PLC Details

The diagram below shows the layout of the major components of the PLC board that need to be known in order to correctly find and repair faults.

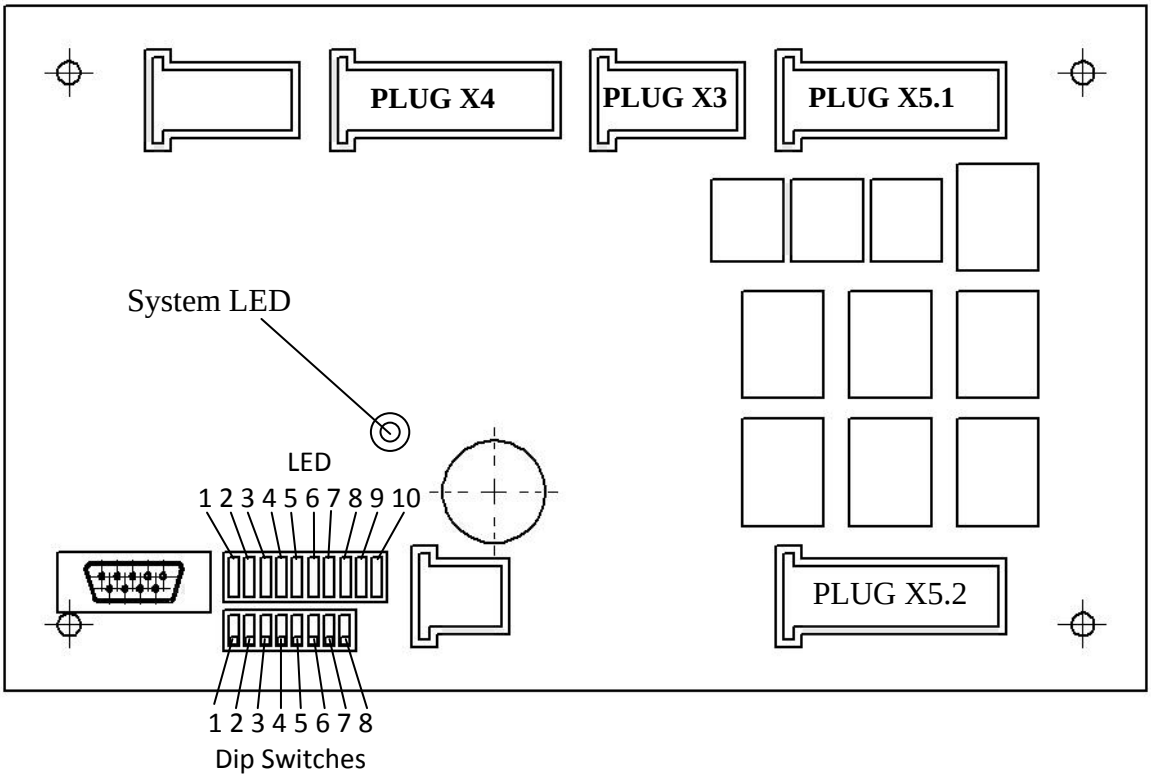

The pins in each of the plugs on the board are laid out as follows.

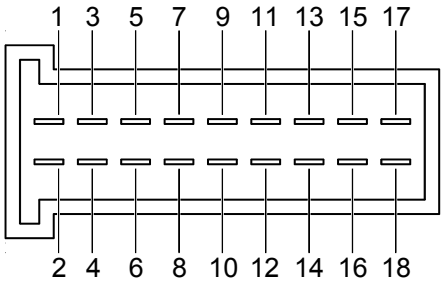

The System LED tells the operator what the PLC is doing. The following table gives an explanation of what the System LED is indicating.

System LED Status	Meaning
No LED	No power Supply to PLC
Flashing Green (Fast)	PLC is not Programmed
Flashing Green (Slow)	PLC is Programmed & Running Normally
Static Green	PLC is Programmed but not Running
Static Red	PLC has Failed (Replace PLC)

Each of the plugs has a specific function as do the pins on each plug. The tables on the following pages give details of the functions on each of the plugs and the pin associated with each function.

https://truckmanualshub.com/

INPUTS

Plug	Pin	Function	Wire Colour
X4	01	Rear Wheel @ Zero Degree Proximity Switch	Black
X4	02	Front Wheel @ Zero Degree Proximity Switch	Black
X4	03	Rear Wheel @ Ninety Degree Proximity Switch	Black
X4	04	Front Wheel @ Ninety Degree Proximity Switch	Black
X4	05	Carousel Steering Proximity Switch (DB Proxy)	Black
X4	06	Park Brake Switch Signal	Orange
X4	07	Inching Pedal Brake Switch Signal (Optional)	Orange
X4	08	Forward Signal Fron Direction Lever	White
X4	09	Power Supply to Board (Supplied From Fuse 1)	Red
X4	10	Negative for Board power Supply	Blue / Black
X4	11	Reverse Signal From Direction Lever	Brown
X4	12	Left Signal From Direction Lever	Grey
X4	13	Right Signal From Direction Lever	Green
X4	14	Mast Height Proximity Switch Signal	Yellow
X4	15	Mast Height Over Ride Button	Red
X4	16	Optional Extra	*n/a*
X4	17	Optional Extra	*n/a*
X4	18	Seat Switch Signal	Grey

OUTPUTS

Plug	Pin	Function	Wire Colour
X3	01	Forward Solenoid 01	White
X3	02	Forward Solenoid 02	White
X3	03	Reverse Solenoid 01	Brown
X3	04	Reverse Solenoid 02	Brown
X3	05	Common Supply for Pins 01-04 (From Fuse 2)	Red
X3	06	Drive Solenoid 01	Red
X3	07	Drive Solenoid 02	Red
X3	08	Ninety degree Indicator Light	Green
X3	09	Zero Degree Indicator Light	White
X3	10	Common Supply to pins 06-09 (From Fuse 4)	Brown

https://truckmanualshub.com/

Outputs (continued)

Plug	Pin	Function	Wire Colour
X5.1	01	*Not Used*	*n/a*
X5.1	02	Common Supply for Output 08 (From fuse 4)	Brown
X5.1	03	Steering Solenoid (Six Port) Relay Switching	Brown
X5.1	04	*Not Used*	*n/a*
X5.1	05	*Not Used*	*n/a*
X5.1	06	Common Supply for Output 09 (From fuse 4)	Brown
X5.1	07	Reflex Steering Solenoid	Red
X5.1	08	*Not Used*	*n/a*
X5.1	09	Dash Park Brake Light	Orange
X5.1	10	Common Supply for Output 10 (From fuse 5)	Orange
X5.1	11	Brake Solenoid	Orange
X5.1	12	*Not Used*	*n/a*
X5.1	13	*Not Used*	*n/a*
X5.1	14	Common Supply for Output 11 (From fuse 4)	Brown
X5.1	15	Zero Degree Solenoid 01	Grey
X5.1	16	Common Supply for Output 12 (From fuse 4)	Brown
X5.1	17	*Not Used*	*n/a*
X5.1	18	Zero Degree Solenoid 02	Grey

Plug	Pin	Function	Wire Colour
X5.2	01	*Not Used*	*n/a*
X5.2	02	Common Supply for Output 13 (From fuse 4)	Brown
X5.2	03	Ninety Degree Solenoid 01	Green
X5.2	04	*Not Used*	*n/a*
X5.2	05	*Not Used*	*n/a*
X5.2	06	Common Supply for Output 14 (From fuse 4)	Brown
X5.2	07	Ninety Degree Solenoid 02	Green
X5.2	08	*Not Used*	*n/a*
X5.2	09	*Not Used*	*n/a*
X5.2	10	Common Supply for Output 15 (From fuse 4)	Brown
X5.2	11	Carousel Indicator Light	Red
X5.2	12	*Not Used*	*n/a*
X5.2	13	*Not Used*	*n/a*
X5.2	14	Common Supply for Output 16 (From fuse 4)	Brown
X5.2	15	Dead Band (Carousel Steering) Solenoid 01	Grey
X5.2	16	Common Supply for Output 17 (From fuse 4)	Brown
X5.2	17	*Not Used*	*n/a*
X5.2	18	Dead Band (Carousel Steering) Solenoid 02	Grey

https://truckmanualshub.com/

5.14 PLC Diagnostics

The diagnostics function can be used to make sure all components are working correctly.

Mode 1 – Joystick Function

Move Switch ‘1’ to the ‘ON’ position

- **Neutral Position – No LED**
- **Forward Position – LED 1**
- **Reverse Position – LED 2**
- **Left Position – LED 3**
- **Right Position – LED 4**

FORWARD

LEFT

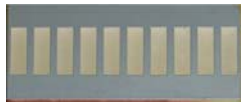

NEUTRAL

RIGHT

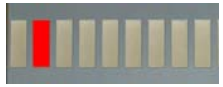

REVERSE

- If the joystick is working correctly each LED will only light with the joystick in the corresponding position.
- If the joystick is malfunctioning the LED corresponding to the position will not light up.

Mode 2 – Proximity Sensor Function

Move Switch ‘2’ to the ‘ON’ Position

Front Wheel 0 Degree Sensor – LED 1

Rear Wheel 0 Degree Sensor – LED 2

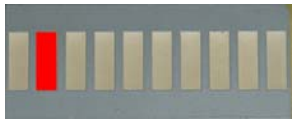

Carousel Sensor – LED 3

Front Wheel 90 Degree Sensor – LED 4

Rear Wheel 90 Degree Sensor – LED 5

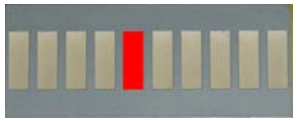

- Proximity Sensors can be energised by switching from Forward Mode to Sideward mode.
- If a LED does not light it should be energised manually to rule out the failure of the corresponding proximity sensor.
- Once activated the LEDs will remain lit until the switch is reset to the OFF position.

Mode 3 – Switch Mode

Move Switch ‘3’ to the ‘ON’ Position

Park Brake – LED 1

Mast Height Override Switch – LED 2

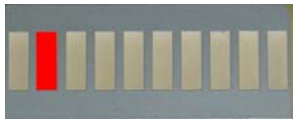

Mast Height Proximity Sensor – LED 3

- The Park Brake will only remain lit while the park brake is engaged.
- LED 2 will be ON constantly on all machines that do not have the Mast Height Override Function.
- To energise the mast height proximity sensor lift the forks to the height of the proximity sensor.

Mode 4 – Solenoid Mode

NOTE: This mode must only be used with the key turned on, **NOT** with the engine running.

Forward, Reverse, 0° and 90° Solenoids
Move Switch ‘4’ to the ‘ON’ Position to test.

Use the directional joystick to energise the solenoids as below

FWD Solenoid

0° Solenoid

90° Solenoid

REV Solenoid

Steering, Reflex, Carousel and Drive Solenoids
Move Switch ‘5’ to the ‘ON’ Position to test.

Steering Solenoid

Carousel Solenoid

Drive Solenoid

Reflex Solenoid

- The LED on each solenoid should be lit along with the LED on the board.
- If the solenoid LED does not light, a wiring problem may be present.
- If the solenoid LED is lit but a problem remains the solenoid and/or the valve should be checked for malfunction.

https://truckmanualshub.com/

Section 6: Appendices

6.1: Appendix A: Certified LPG Engine Emission Control Warranty

CALIFORNIA EMISSION CONTROL WARRANTY STATEMENT YOUR WARRANTY RIGHTS AND OBLIGATIONS

The California Air Resources Board and the Environmental Protection Agency are pleased to explain the emission control system warranty on your Model Year (*2013 - 2014)*[5] off-road Large Spark-Ignition (LSI) engine. New off-road LSI engines must be designed, built and equipped to meet the State's stringent anti-smog standards in all
50 states. *Combilift* must warrant the emission-control system on your engine for the periods of time listed below provided there has been no abuse, neglect or improper maintenance of your engine.

Your emission control system may include parts such as the fuel-injection system, regulator, ignition system, engine computer unit (ECM), catalytic converter and air induction system. Also included may be sensors, hoses, belts, connectors and other emission-related assemblies. Where a warrantable condition exists, *Combilift* will repair your LSI engine at no cost to you including diagnosis, parts and labor.

MANUFACTURER'S WARRANTY COVERAGE: The Model Year *(2013-2014)*[5] off-road LSI engines are warranted for 3 years or 2,500 hours, whichever occurs first, unless indicated otherwise. If any emission- related part on your engine is defective, the part will be repaired or replaced by *Combilift*.

Fuel Metering System	***Catalyst***	***Air Induction System***
Intake Manifold or Air Intake System	***Fuel Injection System***	***Catalytic Converter *Air/Fuel***
Ratio Feedback and Control System	***Exhaust Manifold***	***Air Mass Sensor Assembly***
Positive Crankcase Ventilation System (PCV)	***Ignition Control System***	***Ignition Module(s)***
PCV Valve	***Oil Filler Cap***	***Engine Control Module ****

Miscellaneous Items Used In Above Systems: vacuum, temperature, and time-sensitive valves and switches; sensors used for electronic controls; hoses, belts, connectors, assemblies, clamps, fittings, tubing, wiring, sealing gaskets or devices, and mounting hardware; pulleys, belts and idlers

* Covered for 5 years or 3,500 hours of operation whichever occurs first.

OWNER'S WARRANTY RESPONSIBILITIES:

- As the off-road LSI engine owner, you are responsible for the performance of the required maintenance listed in your owner's manual. *Combilift* recommends that you retain all receipts covering maintenance on your off-road engine, but *Combilift* cannot deny warranty solely for the lack of receipts or for your failure to ensure the performance of all scheduled maintenance.
- As the off-road LSI engine owner, you should however be aware that *Combilift* may deny you warranty coverage if your off-road LSI engine or a part has failed due to abuse, neglect, improper maintenance or unapproved modifications.
- Your engine is designed to operate on propane, gasoline, or compressed natural gas. Use of any other fuel may result in your engine no longer operating in compliance with California's emissions requirements. To confirm the fuel(s) this engine is capable of operating on, see the Emission Control Information label located under hood. LPG engines and fuel systems are designed to operate on HD–5 or HD–10 specification LPG fuel.
- You are responsible for initiating the warranty process. The ARB and EPA suggest that you present your off-road LSI engine to a Combilift dealer as soon as a problem exists. The warranty repairs should be completed by the dealer as expeditiously as possible.

If you have any questions regarding your warranty rights and responsibilities, you should contact *Combilift* at: *1-877-COMBI56*

https://truckmanualshub.com/

6.2: Appendix B: General Engine Warranty

Combilift warrants to the ultimate purchaser and each subsequent purchaser that this engine is designed, built and equipped so as to conform at the time of sale with the applicable regulations under section 213 of the Clean Air Act, and that this engine is free from defects in materials and workmanship which may cause such engine to fail to conform with the applicable regulations for the first two years from the date of sale to the first ultimate purchaser.

As the engine owner, you are responsible for the proper maintenance of the engine as stated in the maintenance instructions. Proper maintenance generally includes replacement and service, at the owner's expense, of such items as spark plugs, points, condensers, and any other part, item, or device related to emission control.

For engines located within 100 miles** of an authorized service center, warranty repairs must be made only at authorized service centers. For engines located more than 100 miles** from an authorized service center, Combilift will provide for a service technician to come to the owner to make the warranty repair.

** Under either circumstance for information on how to make arrangements for authorized warranty repairs first contact Combilift at:

service.usa@combilift.com or 1-877-COMBI56