https://truckmanualshub.com/

FOREWORD

Thank you for purchasing our tractor. We are confident it will give you many years of reliable Service.

The introduction in this manual sets out the correct manner of operating, maintaining and checking the tractor to ensure long-term durability.

Please ensure correct operation of the tractor as incorrect operation can cause substantial mechanical damage as well as cause accidents with the associated injuries.

Please note that in some cases differences can exist between this manual and your tractor due to the manufacture's policy of constant product improvement.

In the event that you encounter a problem not covered by this manual please contact your nearest dealer who will assist you in resolving your problem.

WARNING

CALIFORNIA Proposition 65 Warning

The Engine Exhaust from this product contains chemicals known to the state of California to cause cancer, birth defects or other reproductive harm.

https://truckmanualshub.com/

WARNING SIGNS IN THIS MANUAL

The following warning signs in this manual draw additional attention to items of importance for the safe and correct operation of the tractor.

SIGN	MEANING OF THE SIGN
DANGER	**This indicates that a condition may result in harm, serious injury or death to you or other persons if the warning is not heeded. Follow the advice provided with the warning.**
WARNING	**Hazard or unsafe practice that can lead to severe injury or death.**
CAUTION	**Hazard or unsafe practice that can lead in injury or death.**
IMPORTANT	**Instructions for the correct operation of the machine which, if followed, will ensure that it performs at its best.**

All information, illustrations and specifications in this manual are based on latest information available at the time of publication. The right is reserved to make changes at any time without notice.

https://truckmanualshub.com/

1. TRACTOR IDENTIFICATION

The engine number is stamped on the left hand side of the engine block.

The chassis number is shown on the left hand side of the tractor as shown in the drawing.

WARRANTY OF THE PRODUCT

The manufacturer warrants this product and full details of the warranty are provided on a separate warranty schedule.

SERVICE

Service is available from any **TYM** dealer in the country.

PARTS

To obtain spare parts please contact your nearest dealer and give him the details listed below.

- Tractor model
- Tractor serial number
- Tractor engine number
- Part number and description
- Quantity required

https://truckmanualshub.com/

2. ABOUT THIS MANUAL

This manual has been prepared to assist you in following/adopting the correct procedure for running-in operation and maintenance of your new **Tong Yang Moolsan CO., LTD (**Here in after refer to **TYM**) tractor.

Your tractor has been designed and built to give maximum performance, with good fuel economy and ease of operation under a wide variety of operating conditions. Prior to delivery, The tractor was carefully inspected, both at the factory and by your **TYM** Dealer/Distributor, to ensure that it reaches you in optimum conditions .To maintain this condition and ensure trouble free performance. it is important that the routine services, as specified in this manual, are carried out at the recommended intervals.

Read this Manual carefully and keep it in a convenient place for future reference. If at any time you require advice concerning your tractor, do not hesitate to contact your Authorized **TYM** dealer/Distributor. He has trained personnel, genuine parts and necessary equipments to undertake all your service requirements.

Manufacturer's policy is one of continuous improvement, and the right to change prices, specifications or equipments at any time without notice is reserved.

All data given in this book is subject to production variations. Dimensions & weight are approximate only and the illustrations do not necessarily show tractors in standard condition. For exact information about any particular tractor, please consult your **TYM** dealer/Distributor.

https://truckmanualshub.com/

3. INTRODUCTION & DESCRIPTION

TRACTOR AN INTRODUCTION

The word, 'tractor' has been derived from 'traction' which means pulling.

A tractor is required to pull or haul an equipment, implement or trolley which are coupled to the tractor body through suitable linkage. A tractor can also be used as a prime mover as it has a power outlet source which is also called Power Take or PTO shaft.

In this book the operating, maintenance and storage instructions for all models of **TYM** Diesel tractors has been complied. This material has been prepared in detail to help you in the better understanding of maintenance and efficient operation of the machine.

If you need any information not given in this manual, or require the services of a trained mechanic, please get in touch with the **TYM** Dealer/ Distributor in your locality. Dealer/ Distributors are kept informed of the latest methods of servicing tractors. They stock genuine spare parts and are backed by the Company's full support.

Through this manual. The use of the terms LEFT, RIGHT, FRONT and REAR must be understood, to avoid any confusion when following the introductions. The LEFT and RIGHT means left and right sides of the tractor when facing forward in the driver's seat, Reference to the FRONT indicates the radiator end of the tractor, while the REAR, indicates the drawbar end.

When spare parts are required, always specify the tractor and engine serial number when ordering these parts. (See 45HO001A). This will facilitate faster delivery and help ensure that the correct parts for your particular tractor is received. The tractor serial number is punched on a plate attached to the left hand side of the engine body (illust. 45HO001A), For easy reference, we suggest you to write the number in the space pro-vided in the owner's personal data.

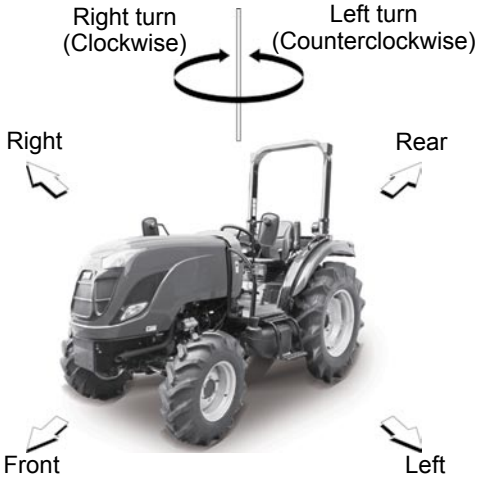

45HO002A

https://truckmanualshub.com/

DESCRIPTION

▶GENERAL CONSTRUCTION

The transmission case, Engine and Front Axle Support are bolted together to form a rigid unit.

▶FRONT AXLE & WHEELS

The 4WD front axle is a center-pivot, reverse Eliot type. The front wheel drive mechanism is incorporated as a part of the axle.

The front wheel drive power is taken off the rear transmission and transmitted to the differential in the front axle where the power is divided into right and left and to the respective final cases.

In the final cases, the transmitted revolution is reduced by the level gears to drive the front wheel. The 4WD mechanism with level gears provides wider steering and greater durability.

▶ENGINE

The tractors are fitted with vertical, Water-cooled 4-cycle and spherical chamber type YANMAR

ENGINES(3TNV88C-DKTF)

▶TRANSMISSION WITH HST (HYDROSTATIC TRANSMISSION)

The Tractor is fitted HST with 3 Range and can be selected Speed range by HIGH-LOW selector lever.

The Tractor has Two pedals for forward/reverse control . Tractor with Independent Power Take Off

is fitted with electro-hydraulic Clutch Assy. The Rear PTO can be operated both or separately by a lever.

TYM tractors are provided with independent disc brakes operated by

two road travel. A foot brake lever is fitted for parking.

▶REAR AXLE & WHEELS

This is mounted on ball bearings and is enclosed in removable housing which are bolted to the transmission case. The rim & Disc fitted with Rear tires are bolted to the outer flange of Rear Axle.

▶HYDRAULIC SYSTEM & LINKAGES

TYM Tractors are fitted with Live (i.e. system is in operation) independent, very touch of hydraulic System. Three point Linkages can be used for category 1 type of implements.

▶STEERING

It consists of Hydrostatic Power steering system, which has a hydraulic cylinder and tandem type hydraulic pump.

https://truckmanualshub.com/

▶ELECTRICAL SYSTEM

A 12 Volt Lead Acid Propylene Battery is used to activate the Engine through the Starter Motor and the Electrical system comprising Horn, Head Lamp. Side indicator Lamps, Plough Lamp, Brake Light, Gauge lamp, Hazard Lamp. Generator or Alternator, Fuse box also from part of the Electrical system.

WARNING

- When operating the tractor at High speed, Do not attempt to make sharp turns by using the brakes. This may result in overturning of the tractor causing serious injury or DEATH.

4. OWNER ASSISTANCE

We at **TYM CO.,LTD** and your **TYM** Dealer/Distributor wants you to be completely satisfied with your investment. Normally any problems with your equipment will be handled by your Dealer/Distributor's Service Departments, however, misunderstanding can occur. If you feel that your problem has not been handled to your satisfaction, we suggest the following.

Contact the owner or General Manager of the Dealership, explain the problem, and request assistance. When additional assistance is needed, Your Dealer/Distributor has direct access to your office. If you cannot obtain satisfaction by doing this, contact the **TYM CO.,LTD**. Office and provide them with;

- Your name, address and telephone number
- Model and tractor serial number
- Dealer/Distributor Name & Address
- Machine purchase date and Hours used
- Nature of problem

Before contacting **TYM CO.,LTD** office, be aware that your problem will likely to be resolved in the Dealership using the Dealer's/Distributor's facilities, equipment and personnel. So it is important that your initial contact be with the Dealer/Distributor.

https://truckmanualshub.com/

5. ROPS (ROLL OVER PROTECTIVE STRUCTURES)

ROLL OVER PROTECTIVE STRUCTURES (ROPS)

TYM tractors are equipped with a frame for the protection of operators.

In the case of cab tractors the frame is incorporated in the cab structure.

The objective of the frame or cab structure is to protect the operator in the event of a roll over

and they are designed to support the entire weight of the tractor in that event.

Each **TYM** ROPS frame or cab structure is designed and has been tested to meet industry and or government standards.

Included in these tests were all mounting bases and bolts or other fasteners.

DANGER

- For ROPS frames to be effective and protect the operator, the seat belt provided must be worn in order to keep operators within the ROPS protected area in the event of a roll over. Failure to use the seat belt can still cause serious injury or death.

On some models the ROPS frame has a fold down feature, which can be used to enter low buildings etc.

Take care when lowering the upper section of the ROPS frame and take extreme care while driving the tractor with the ROPS frame lowered.

Do not wear the seat belt with the ROPS lowered and please remember that the fold down facility is for special circumstances only and must not be lowered for general use.

USE OF THE TRACTOR WITH THE ROPS LOWERED CAN CAUSE FATAL INJURIES

As the ROPS frame or cab together with the seat belt was designed to meet certain standards, they must be maintained in good order and condition. To achieve this objective, both the structure and the seat belt should be inspected on a regular basis. (Every time the tractor is serviced)

In the event that the seat belt is damaged or frayed, it should be replaced and in the event that the ROPS frame or any part of the mounting structure is damaged or cracked, the faulty component must be replaced with a new unit. Such a unit must meet all of the test criteria of the original unit. Fitment of an inferior item or items affects the certification of the entire ROPS structure and the effectiveness of the structure in the event of an accident. Drilling or welding of the ROPS structure is forbidden.

https://truckmanualshub.com/

DAMAGE OF THE ROPS

If the tractor has rolled over or the ROPS has damaged (such as striking an overhead object during transport), It must be replaced to provide the original protection. After an accident, check for damages to the 1.ROPS. 2.Seat. 3.seat belt & seat mountings. Before you operate a tractor, replace all damaged parts.

WARNING

- Do not weld, drill or straighten the ROPS.

WARNING

- Never attach chains, ropes to the ROPS for pulling purposes; this will cause the tractor to tip backwards. Always pull from the tractor drawbar. Be careful when driving through door opening or under low overhead objects. Make sure there is sufficient overhead clearance for the ROPS fatal injuries.

WARNING

- If the ROPS is removed or replaced, make certain that the proper hardware is used to replace the ROPS and the recommended torque values are applied to the attaching bolts.

WARNING

- Always wear your seat belt if the tractor is equipped with ROPS.

SEAT SLIDING

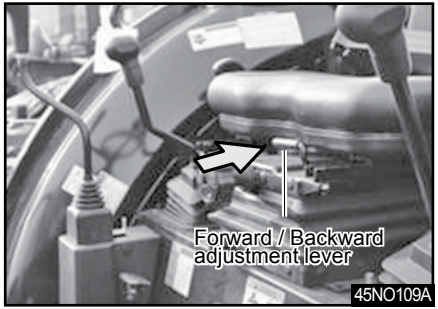

Before operating a tractor it is important to adjust the seat to the most comfortable position & check whether it is properly locked in its position.

NOTE

- Do not use solvents to clean the seat. Use warm water with a little detergent added.

CAUTION

- Do not put a hand between the seat and the slides when adjusting the seat position. You can get injured unexpectedly.

https://truckmanualshub.com/

To select Seat position, move Adjusting lever and slide Seat closer to or away from Dash panel and controls.

DANGER

- Check whether the seat properly locked in its position before driving the tractor.

DANGER

- Always use the seat belt when the ROPS is installed. Do not use the seat belt if a foldable ROPS is down or there is no ROPS. Check the seat belt regularly and replace if frayed or damaged.

6. SAFETY INSTRUCTIONS

RECOGNIZE SAFETY INFORMATION

T74O201A

This symbol means ATTENTION! YOUR SAFETY IS INVOLVED. The message that follows the symbol contains important information about safety. Carefully read the message.

SIGNAL WORDS

DANGER

WARNING

CAUTION

T74O202B

A signal word "DANGER, WARNING OR CAUTION" is used with safety alert symbol. DANGER identifies the most serious hazards. Safety signs with signal Word "DANGER OR WARNING" are typically near specific hazards. General precautions are listed on CAUTION safety signs.

https://truckmanualshub.com/

READ SAFETY INSTRUCTION

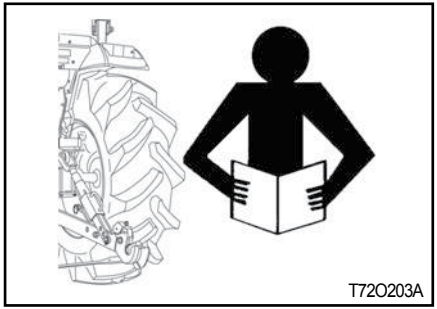

Carefully read all safety instructions given in this manual for your safety. Tempering with any of the safety devices can cause serious injuries or death. Keep all safety signs in good condition. Replace missing or damaged safety signs.

Keep your tractor in proper condition and do not allow any unauthorized modifications to be carried out on the tractor, which may impair the function/safety and affect tractor life.

PROTECTION CHILDREN

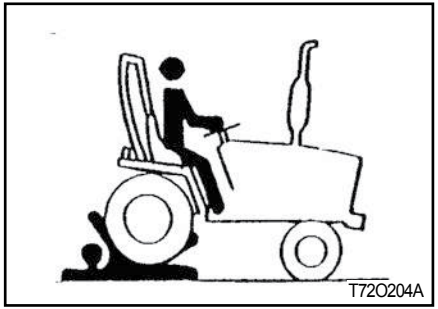

Keep children and others away from the tractor while operating.

BEFORE YOU REVERSE:

- Look behind tractor for children.
- Do not let children to ride on tractor or any implement.

USE OF ROPS AND SEAT BELT

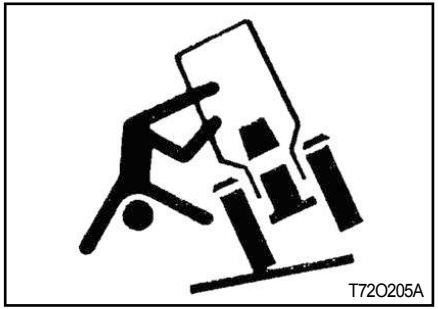

The Roll Over Protective Structure (ROPS) has been certified to industry and/or government standards. Any damage or alternation to the ROPS, mounting hard-ware, or seat belt voids the certification and will reduce or eliminate protection for the operator in the event of a roll-over. The ROPS, mounting hardware, and seat belt should be checked after the first 100 hours of tractor and every 500 hours there-

https://truckmanualshub.com/

after for any evidence of damage, wear or cracks. In the event of damage or alteration, the ROPS must be replaced prior to further operation of the tractor.

The seat belt must be worn during machine operation when the machine is equipped with a certified ROPS.

Failure to do so will reduce or eliminate protection for the operator in the event of a roll over.

PRECAUTION TO AVOID TIPPING

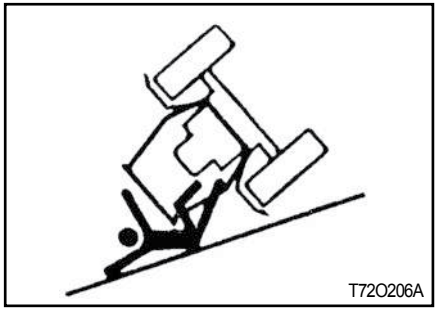

Do not drive where the tractor could slip or tip.

Stay alert for holes and rocks in the terrain, and other hidden hazards.

Slow down before you make a sharp turn.

Driving forward out of a ditch or mired condition could cause tractor to tip over backward. Back out of these situations if possible.

PARK TRACTOR SAFELY

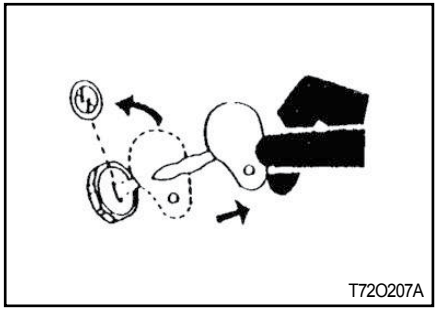

Before working on the tractor;

Lower all equipment to the ground.

Stop the engine and remove the key.

https://truckmanualshub.com/

KEEP RIDERS OFF TRACTOR

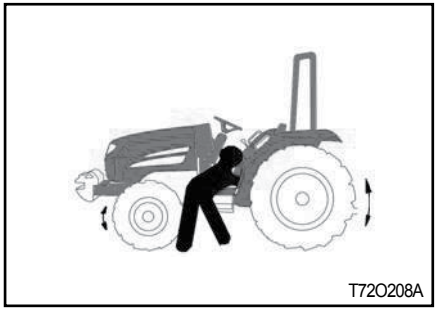

Do not allow riders on the tractor.

Riders on tractor are subject to injury such as being stuck by foreign objects and being thrown off of the tractor.

HANDLE FUEL SAFELY AVOID FIRES

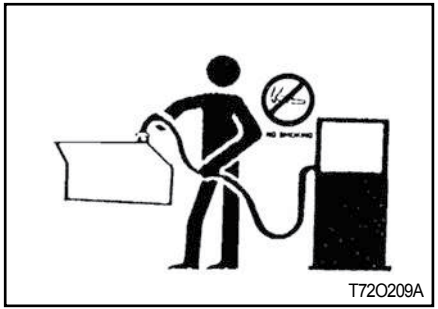

Handle fuel with care; it is highly flammable. Do not refuel the tractor while smoking or near open flame or sparks.

Always stop engine before refueling tractors.

Always keep your tractor clean of accumulated grease, and debris. Always clean up spilled fuel.

STAY CLEAR OF ROTATING SHAFTS

Entanglement in rotating shaft can cause serious injury or death.

Keep PTO shield in place at all times.

Wear close fitting clothing. Stop the engine and be sure PTO drive is stopped before making adjustments, connections, or cleaning out PTO driven equipment.

https://truckmanualshub.com/

ALWAYS USE SAFETY LIGHTS AND DEVICES

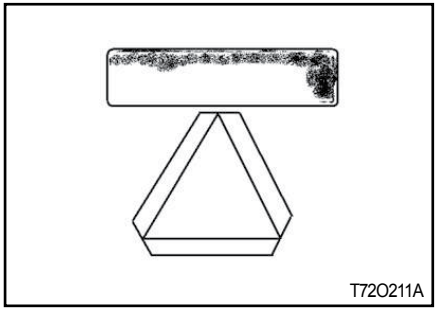

Use of hazard warning lights and turn signals are recommended when towing equipment on public roads unless prohibited by state or local regulations.

Use slow moving vehicle (SMV) sign when driving on public road during both day & night time, unless prohibited by law.

PRACTICE SAFE MAINTENANCE

Understand service procedure before doing work.

Keep the surrounding area of the tractor clean and dry.

Do not attempt to service tractor when it is in motion.

Keep body and clothing away from rotating shafts.

Always lower equipment to the ground. Stop the engine.

Remove the key. Allow tractor to cool before any work repair is caused on it.

Securely support any tractor elements that must be raised for service work.

Keep all parts in good condition and properly installed.

Replace worn or broken parts. Replace damage/missing decals.

Remove any buildup of grease or oil from the tractor.

Disconnect battery ground cable(-) before making adjustments on electrical systems or welding on tractor.

https://truckmanualshub.com/

AVOID HIGH-PRESSURE FLUIDS

Escaping fluid under pressure can penetrate the skin causing serious injury. Keep hands and body away from pinholes and nozzles, which eject fluids under high pressure. If any fluid is injected into the skin. Consult your doctor immediately.

PREVENT BATTERY EXPLOSIONS

Keep sparks, lighted matches, and open flame away from the top of battery. Battery gas can explode.

Never check battery charge by placing a metal object across the poles.

PREVENT ACID BURNS

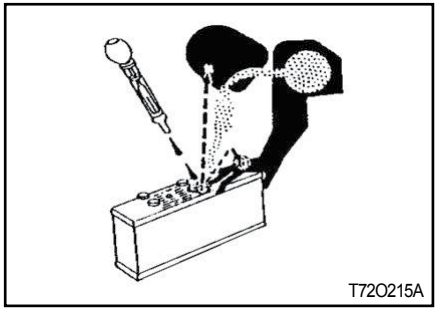

Sulfuric acid in battery electrolyte is poisonous. It is strong enough to burn skin, cause holes in clothing and cause blindness if found entry into eyes.

For adequate safety always;

1. Fill batteries in a well-ventilated area.
2. Wear eye protection and acid proof hand gloves.
3. Avoid breathing direct fumes when electrolyte is added.
4. Do not add water to electrolyte as it may splash off causing severe burns.

https://truckmanualshub.com/

If you spill acid on yourself;

1. Flush your skin with water.
2. Flush your eyes with water for 10-15 minutes.

Get medical attention immediately.

BATTERY DISCONNECT

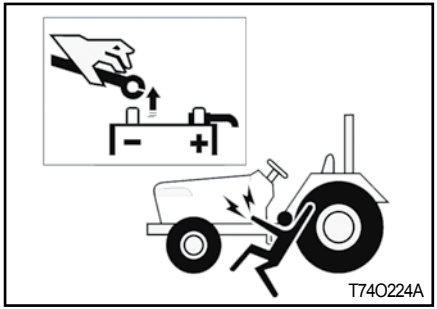

1. When working with your tractors electrical components you must first disconnect the battery cables.
2. To ensure that there are no accidents from sparks you must first disconnect the negative battery cable.

SERVICE TRACTOR SAFELY

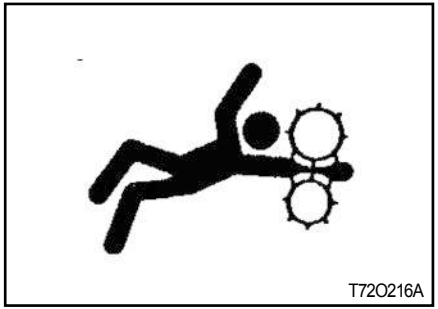

Do not wear a necktie, scarf or loose clothing when you work near moving parts. If these items were to get caught, severe injury could result.

Remove rings and other jeweler to prevent electrical shorts and entanglement in moving parts.

https://truckmanualshub.com/

WORK IN VENTILATED AREA

T72O217A

Do not start the tractor in an enclosed building unless the doors & windows are open for proper ventilation, as tractor fumes can cause sickness or death. If it is necessary to run an engine in an enclosed area remove the exhaust fumes by connecting exhaust pipe extension.

TRACTOR RUNAWAY

1. The tractor can start even if the transmission is engaged position causing tractor to runaway and serious injury to the people standing nearby the tractor.
2. For additional safety keep the pull to stop knob (Fuel shut off control) in fully pulled out position.

   Transmission in neutral position, Foot brake engaged and PTO lever in disengaged position while attending to Safety Starter Switch or any other work on tractor.

SAFETY START

1. Safety Starter switch for starting is provided on transmission High-low shifter lever and in PTO shifter lever. The tractor can be started only if High-low shifter lever is in neutral position.

CAUTION

- Safety Starter Switch is to be replaced after every 2,000 hours/4 years, whichever is earlier.

https://truckmanualshub.com/

EMERGENCY EXITS

If exit from the cab side doors is blocked (following an accident or vehicle overturn) the alternative safety exits are indicated by decals.

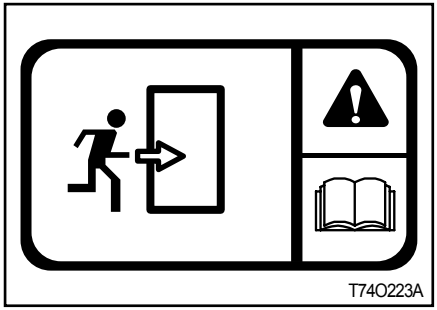

The possible safety exits are:

- Rear window hatch (All tractors)
- Front window (for versions with openable front window).

SAFETY PRECAUTIONS WHEN USING THE LOADER

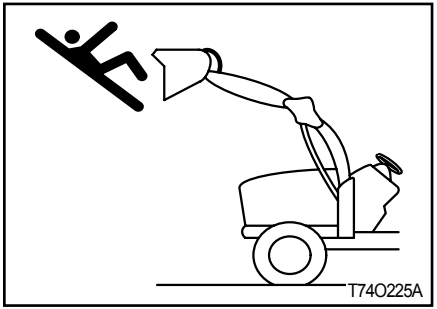

Never let anyone get in the loader and use the loader as a workbench. Otherwise, it may lead to a fatal injury or even death.

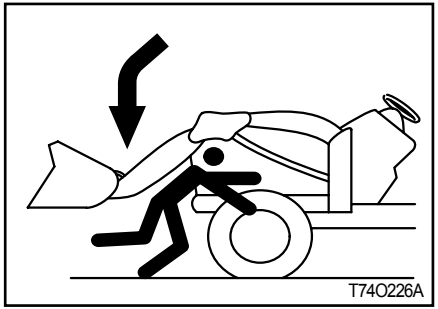

Do not stand under the lifted loader or get close to it. Also, lower the loader arm onto the ground before leaving the tractor. Otherwise, it may lead to a fatal injury or even death.

https://truckmanualshub.com/

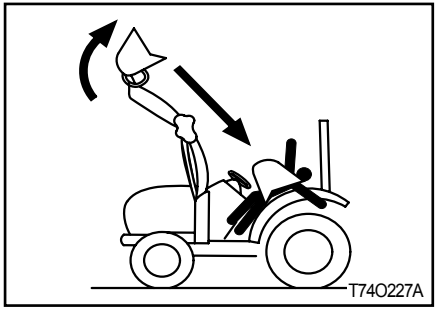

When attaching or detaching the loader, fix all parts which are connected to the bucket and boom. The bucket or boom can be accidentally dropped down, leading to an injury or even death.

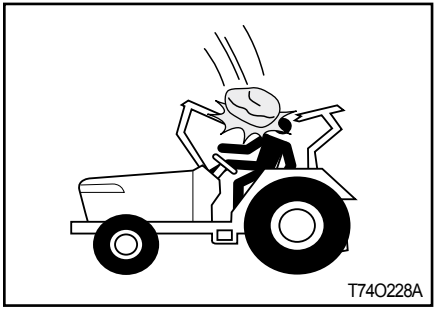

IMPORTANT

- ROPS (Roll Over Protective Structure), sun canopy or cabin are not a FOPS (Falling Object Protective Structure).

  It never can protect the riders against falling objects.

  Avoid driving the vehicle into a dangerous area such as falling rocks zone.

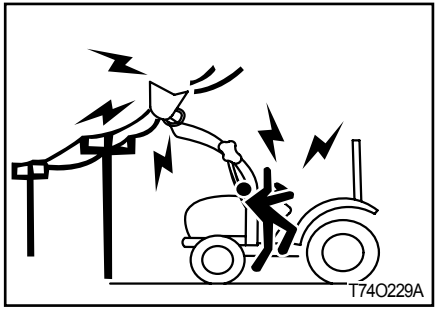

Do not allow loader arms or attachment to contact electrical power lines. Electrocution will cause serious injury or death.

https://truckmanualshub.com/

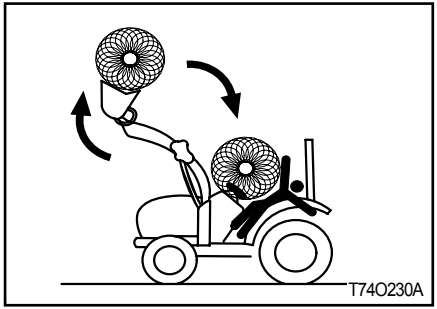

Never carry a big object with the loader unless a proper implement is attached. Keep a carried object low during driving. Otherwise, it may lead to an injury or even death.

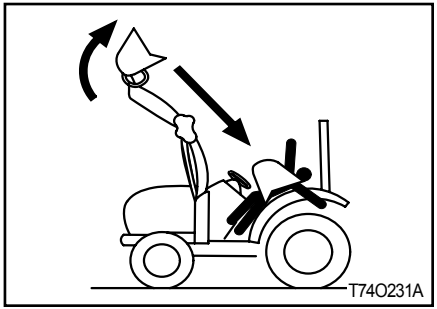

When attaching or detaching the loader, fix all parts which are connected to the bucket and boom. The bucket or boom can be accidentally dropped down, leading to an injury or even death.

https://truckmanualshub.com/

SAFE OPERATION OF YOUR TRACTOR

The manufacturer of your tractor has made every effort to make it as safe as is humanly possible.

Beyond this point it is the responsibility of the operator to avoid accidents and we ask that you read and implement our suggestions for your safety.

Ensure that only trained and competent operators use this tractor and ensure that they are fully conversant with the machine and aware of all it' s control and safety features.

Operators should not operate the tractor or associated machinery while tired or untrained.

To avoid accidents please ensure that the operator wears clothing which will not get entangled in the moving parts of the tractor or machine and protect him or her from the elements.

When spraying or using chemicals, please ensure that clothing and protective equipment is worn which prevents respiratory or skin problems.

For full details consult the manufacturer of the chemicals.

To avoid lengthy exposure to noise ensure that ear protection is worn.

If adjustment to the tractor or machinery need to be made ensure the tractor or machine are turned off beforehand.

Use of certified Roll Over Protection Structure (ROPS) is a must while operating a tractor.

Use of seat belt is a must while operating a tractor.

In summary, ensure at all times that the safety of the operator and any other worker is paramount.

Ensure no one is between the tractor and a towed vehicle (trailer or implement).

https://truckmanualshub.com/

SAFETY TIPS DURING MAINTENANCE

1. At least on a daily basis check all oil levels. Water level in the radiator and electrolyte level in the battery and perform services according to the service schedule.
2. Ensure tire pressure are even and the correct pressure for the job being done is maintained.
3. Check to ensure that the all controls and preventative mechanisms of the tractor and implement work correctly and effectively.
4. Ensure that an adequate set of the correct tools is available for maintenance and minor repairs.
5. Ensure that all service work and repairs are carried out on a flat area with a concrete or similar floor.

   Do not carry out service work on a tractor until it is switched off, and the parking brake applied and wheels choked.

   Where a tractor is started in a confined area, ensure that the area is well ventilated as exhaust gases are very harmful, and can cause death.
6. Do not work under raised implements.
7. When changing wheels or tires ensure that a suitable wheel stand is placed under the axle prior to removing the wheel and the wheels are chocked.
8. Where guards or shields need to be removed to perform a service or repair, ensure that the guard or shield is correctly reinstalled before starting the tractor.
9. Never refuel near a naked flame or with an overheated engine. Ensure to turn off Engine before refueling.
10. The cooling system operates under pressure, take care when removing the radiator cap on a hot engine to prevent being scalded by steam or hot water. Do not add water in the radiator when the engine is hot. Add water to the radiator only after the engine cools down completely.
11. To prevent fires keep the tractor including the engine clean and free from inflammable material and well away from fuels and other inflammable material.

https://truckmanualshub.com/

MOUNTING AND DEMOUNTING IMPLEMENTS

1. Ensure that all mounting and removal of implements is done on safe flat ground. Ensure no one is between the tractor and implement and do not get under the implement to avoid accidental injuries.
2. After mounting the implement, ensure that all sway chains are correctly adjusted and, where PTO shafts are used that the shaft is fitted and secured correctly.
3. Where heavy implements are used, ensure that the combination is well balanced or use proper ballast to achieve balance.
4. Before leaving the tractor at any time, lower the implement, stop the PTO shaft where applicable, set the parking brake and switch off the engine.
5. While operating the implements with the PTO keep all bystanders away from any moving parts and do not attempt to make adjustments while the machine is running.
6. Only the driver should ride on the tractor with the ROPS frame fitted and with the seat belt properly fastened.
7. Where young children are present, particular care should be taken and the tractor should not be moved until the whereabouts of all children is known.
8. Only trained operators should operate the tractor and so taking care to ensure that other workers are not injured. In particular they should take care during dusty operations, which will reduce visibility substantially.
9. Never start the tractor unless the transmission is out of gear, the operator is in the seat and all round safety has been checked.
10. Only operate the tractor seated in the drivers seat and never turn or brake suddenly at high speed as this can cause a roll-over and serious injury or death.
11. When traveling on a public road ensure that the tractor and driver both meet all laws relating to safety and licensing. When traveling with wide implements use red flags on the extremities and observe all legal including escort requirements.
12. When operating under adverse conditions, hilly terrain or on bad ground adjust the speed of the tractor to suit the conditions, safety comes first. Never drive down hill at high speed or with the transmission in neutral. Use of the braking capacity of the engine as well as the service brakes.

    Do not try to change gear going up or down a steep slope, select the correct gear before starting.
13. Take care when traveling uphill with a heavy implement to ensure that it does not overbalance and tip up the front end.

https://truckmanualshub.com/

14. Never remove or modify the seat belt.
15. Never remove, modify or repair the ROPS frame.

Please remember that a little bit of extra care can prevent serious injury or teath and avoid damage to your tractor.

▶THE FOLLOWING PRECAUTIONS ARE SUGGESTED TO HELP PREVENT ACCIDENTS

A careful operator is the best operator. Most accidents can be avoided by observing certain precautions. Read and take the following precautions before operating the tractor to prevent accidents.

Tractor should be operated only by those who are responsible and properly trained to do so.

<THE TRACTOR>

1. Read the operator's manual carefully before using the tractor. Lack of operating knowledge can lead to accidents.
2. Use an approved rollover bar and seat belt for safe operation. Overturning of a tractor without a rollover bar can result in death or injury.
3. Do not remove ROPS (Roll Over Protective Structure). Always use the seat belt.
4. Fiberglass canopy does not give any protection.
5. To prevent falls, keep steps and platform clear of mud and oil.
6. Do not permit anyone but the operator to ride on the tractor. There is no safety place for extra riders.
7. Replace all missing, illegible or damaged safety signs.
8. Keep safety signs clean of dirt and grease.

<SERVICING THE TRACTOR>

1. keep the tractor in good operating condition for your safety. An improperly maintained tractor can be hazardous.
2. Stop the engine before performing any service on the tractor.
3. The cooling system operates under pressure, which is controlled by the radiator cap. It is dangerous to remove the cap while the system is hot. First turn the cap slowly to stop and allow the

https://truckmanualshub.com/

pressure to escape before removing the cap entirely.

4. Do not smoke while the refueling the tractor. Keep away any type of open flame.
5. The fuel in the injection system is under high pressure and can penetrate the skin. Unqualified persons should not remove or attempt to adjust a pump, injector, nozzle or any part of the fuel injection system.

   Failure to follow these instructions can result in serious injury.
6. Keep open flame away from battery or cold weather starting aids to prevent fire or explosions.
7. Do not modify or alter or permit anyone else to modify or alter this tractor or any of its components or any tractor functions.

<OPERATING THE TRACTOR>

1. Before starting the tractor apply the parking brake, place the PTO (Power Take Off) lever in the “OFF” position, the hydraulic control levers in the downward position, the remote control valve levers in the neutral position(If fitted) and the transmission in neutral.
2. Do not start the engine or controls while standing besides the tractor. Always sit on the tractor seat when the engine or operating controls.
3. Safety start

   In order to prevent the accidental starting of the tractor, a safety switch has been provided. The starting system of the tractor is connected through this switch. On some models shuttle shifter lever and PTO button should also be in neutral position for completing the starting circuit. Do not bypass the safety switch. Consult your **TYM** tractor Dealer/Distributor if safety switch malfunctions.
4. Avoid accidental contact with the gear shifter lever while the engine is running. Unexpected tractor movement can result from such contact.
5. Do not get off or climb the tractor while it is in motion.
6. Shut off the engine, remove the key and apply the parking brake before getting off the tractor.
7. Do not operate the tractor in an enclosed building without adequate ventilation. Exhaust fumes can cause death.
8. Do not park the tractor on a steep slope.
9. If power steering or Engine seizes to operate, stop the tractor immediately.
10. Pull only from the swinging draw bar or the lower link drawbar in the down position. Use only a drawbar pin that locks in place.

https://truckmanualshub.com/

Pulling from the tractor rear axle carriers or any point above the rear axle may cause the tractor' s front end to lift.

11. If the front end of the tractor tends to rise when heavy implements are attached to the three-point linkage, install front end or front wheel weights. Do not operate the tractor with a light front end.
12. Always use hydraulic position control lever when attaching equipments/implement and when transporting equipment. Be sure that the hydraulic couplers are properly mounted and will disconnect safely in case of accidental detachment of implement.
13. Do not leave equipment/implement in the raised position.
14. Use the flasher/ Turn signal lights and Slow Moving Vehicle (SMV) signs when driving on public roads during both day and night time, unless prohibited by law.
15. Dim tractor lights when meeting a vehicle at night. Be sure the lights are adjusted to prevent the blinding on the eyes of coming vehicle operator.
16. Emergency stopping instruction; If tractor fails to stop even after application of brakes. Pull the knob of fuel shut off control rod.

<DRIVING THE TRACTOR>

1. Watch where you are going especially at row ends, on roads, around trees and low hanging obstacles.
2. To avoid upsets, drive the tractor with care and at speeds compatible with safety, especially when operating over rough ground, crossing ditches or slopes, and when turning at corners.
3. Lock the tractor brake pedals together when transporting on roads to provide proper wheel braking.
4. Keep the tractor in the same gear when going downhill as used when going uphill. Do not coast or free wheel down hills.
5. Any towed vehicle and/or trailer whose total weight exceeds that of the towing tractor, must be equipped with its own brakes for safe operation.
6. When the tractor is stuck or tires are frozen to the ground, back out to prevent upset.
7. Always check overhead clearance, especially when transporting the tractor.

<OPERATING THE PTO>

1. When operating PTO driven equipment, shut off the engine and wait until the PTO stops before getting off the tractor and disconnecting the equipment.

https://truckmanualshub.com/

2. Do not wear loose clothing when operating the power take-off or near rotating equipment.
3. When operating stationery PTO driven equipment, always apply the tractor parking brake and block the rear wheels from front and rear side.
4. To avoid injury, always move down flip part of PTO. Do not clean, adjust or service PTO driven equipment when the tractor engine is running.
5. Make sure the PTO master shield is installed at all times and always replace the PTO shield cap when the PTO is not in use.

<DIESEL FUEL>

1. Keep the equipment clean and properly maintained.
2. Under no circumstances should gasoline, alcohol or blended fuels be added to diesel fire or explosive hazard. Such blends are more explosive than pure gasoline. In a closed container, such as a fuel tank. DO NOT USE THESE BLENDS.
3. Never remove the fuel cap or refuel the tractor with the engine running.
4. Do not smoke while refueling or when standing near fuel.
5. Maintain control of the fuel filler pipe when filling the tank.
6. Do not fill the fuel tank to capacity. Allow room for expansion.
7. Wipe up spilled fuel immediately.
8. Always tighten the fuel cap securely.
9. If the original fuel tank cap is lost, replace it with genuine cap. A none approved cap may not be safe.
10. Do not drive equipment near open fire.
11. Never use fuel for cleaning purpose.
12. Arrange fuel purchases so that winter grade fuel are not held over and used in the spring.
13. USE ultra low sulfur fuel only.

※N.B: It is suggested that after repairs if any of the Safety Decal/sign is peeled/defaced, the same may be replaced immediately in interest of your safety.

https://truckmanualshub.com/

7. DO'S AND DON'T'S

DO'S-FOR BETTER PERFORMANCE

DO - Ensure that safety shields are in place and in good condition.

DO - Read all operating instructions before commencing to operate tractor.

DO - Carry out all maintenance tasks without fail.

DO - Keep the air cleaner clean.

DO - Ensure that the correct grade of lubricating oils is used and that they are replenished and changed at the recommended intervals.

DO - Fit new sealing rings when the filter elements are changed.

DO - Watch the oil pressure gauge or warning light and investigate any abnormality immediately.

DO - Keep the radiator filled with clean water and in cold weather use anti-freeze mixture. Drain the system only in an emergency and fill before starting the engine.

DO - Ensure that the transmission is in neutral before starting the engine.

DO - Keep all fuel in clean storage and use a filter when filling the tank.

DO - Attend to minor adjustments and repairs as soon as necessity is apparent.

DO - Allow the engine to cool before removing the radiator filler cap and adding water, remove the radiator cap slowly.

DO - Shift into low gear when driving down steeps hills.

DO - Latch the brake pedals together when driving on a highway.

DO - Keep draft control lever fully down when not in use.

https://truckmanualshub.com/

DON'TS-FOR SAFE OPERATION

DON'T - Run the engine with the air cleaner disconnected.

DON'T - Start the tractor in an enclosed building unless the doors and windows are open for proper ventilation.

DON'T - Operate the tractor or engine while lubricating or cleaning.

DON'T - Allow the tractor to run out of diesel fuel otherwise it will be necessary to vent the system.

DON'T - Temper the fuel injection pump, If seal is broken the warranty becomes void.

DON'T - Allow the engine to run idle for a long period.

DON'T - Run the engine if it is not firing on all cylinders.

DON'T - Ride the brake. This will result in excessive wear of the brake lining.

DON'T - Use the independent brakes for making turns on the highway or at high speeds.

DON'T - Refuel the tractor with the engine running.

DON'T - Mount or dismount from the right side of the tractor.

DON'T - Temper the hydraulic control levers' upper limit stops.

DON'T - Use draft control lever for lifting of implements.

DON'T - Start the engine with the PTO engaged.

DON'T - Use the governor Control Lever (Hand throttle) while driving on roads.

DON'T - Move the hydraulic levers rearward.

https://truckmanualshub.com/

MEMO

https://truckmanualshub.com/

GENERAL INFORMATION 1
DESCRIPTION OF TRACTOR CONTROLS 2
OPERATION 3
WORK PROCEDURE 4
MAINTENANCE 5
CABIN SYSTEM 6
STORAGE AND DISPOSAL 7
TROUBLESHOOTING 8
SAFETY STANDARD FOR FARM WORK 9
APPENDIX 10
INDEX 11
WARRANTY 12

https://truckmanualshub.com/

TABLE OF CONTENTS

GENERAL INFORMATION 1

1. EXTRRIOR VIEW (NON CAB MODEL) 1-2
2. EXTRRIOR VIEW (CABIN MODEL)..... 1-4
3. SAFETY SIGNS 1-7

DESCRIPTION OF TRACTOR CONTROLS 2

1. INSTRUMENT AND SWITCHES (NON CAB TYPE) 2-2
2. INSTRUMENT AND SWITCHES (CABIN TYPE)..... 2-3
3. OPERATING METHOD 2-15
4. INSTRUMENT PANEL LAMP AND BUZZER OPERATING CONDITIONS 2-16
5. OPERATION THE CONTROLS (NON CAB TYPE) 2-19
6. OPERATION THE CONTROLS (CABIN TYPE)..... 2-20
7. OPERATING THE 3 POINT LINKAGE (NON CAB MODEL)..... 2-33
8. OPERATING THE 3 POINT LINKAGE (CABIN MODEL) 2-34

OPERATION 3

1. ENGINE STARTING..... 3-2
2. ENGINE STOPPING 3-3
3. ENGINE IDLING..... 3-3
4. RUNNING-IN PERIOD 3-4
5. STARTING OFF, SHIFTING AND DRIVING... 3-4
6. TURNING IN FIELD 3-5
7. STOPPING AND PARKING..... 3-5
8. DRIVING ON SLOPE 3-6
9. CAUTIONS FOR DRIVING INTO / OUT OF FIELD... 3-7
10. LOADING TO / UNLOADING FROM TRUCK.. 3-7
11. CAUTIONS FOR DRIVING ON ROAD..... 3-8
12. OPERATION CHECK DURING DRIVING.... 3-8

WORK PROCEDURE 4

1. PRECAUTIONS FOR HANDLING IMPLEMENT..... 4-2
2. GENERAL IMPLEMENT..... 4-2

https://truckmanualshub.com/

MAINTENANCE 5

1. OPENING COVERS 5-2
2. INSPECTION ITEMS 5-2
3. INSPECTING AND CHANGING COOLANT .. 5-4
4. CHECKING AND CHANGING OIL 5-6
5. REPLACING FILTER AND CARTRIDGE 5-10
6. FUEL SYSTEM 5-12
7. CHECKING AND CLEANING AIR CLEANER... 5-13
8. ADJUSTING TREAD 5-14
9. GREASING 5-15
10. CHECKING HOSES 5-16
11. CHECKING ELECTRIC SYSTEM 5-16
12. CHECK AND ADJUST EACH PART 5-21
13. ROUTINE MAINTENANCE SCHEDULE.... 5-24

CABIN SYSTEM 6

1. MAJOR FEATURES 6-2
2. INSTRUMENT AND RELATED PARTS 6-3
3. HOW TO CONTROLS CABIN 6-5

STORAGE AND DISPOSAL 7

1. TRACTOR STORAGE 7-2
2. USAGE AND DISPOSAL 7-3

TROUBLESHOOTING 8

1. ENGINE SYSTEM 8-2
2. BRAKE SYSTEM 8-6
3. STEERING SYSTEM 8-6
4. HYDRAULIC SYSTEM 8-7
5. ELECTRIC SYSTEM 8-8

SAFETY STANDARD FOR FARM WORK 9

1. INSTRUCTION BEFORE USE 9-2
2. CHECKUP LIST BEFORE OPERATION 9-3
3. CAUTIONS DURING THE WORK 9-4
4. CAUTIONS WHEN DRIVING ON THE FARM ROAD ... 9-5
5. INSTRUCTION AFTER USE 9-6
6. CAUTIONS FOR INSPECTION AND MAINTENANCE.. 9-6
7. TRACTOR 9-7

https://truckmanualshub.com/

APPENDIX 10

1. MAJOR SPECIFICATIONS 10-2
2. MAJOR CONSUMABLES 10-6

INDEX 11

1. INDEX.....11-2

WARRANTY 12

1. ENGINE WARRANTIES..... 12-2
2. EMISSION SYSTEM WARRANTY..... 12-5
3. TYM WARRANTY..... 12-13

https://truckmanualshub.com/

GENERAL INFORMATION

1. EXTRRIOR VIEW (NON CAB MODEL)..... 1-2

2. EXTRRIOR VIEW (CABIN MODEL)..... 1-4

3. SAFETY SIGNS 1-7

https://truckmanualshub.com/

1. EXTRRIOR VIEW (NON CAB MODEL)

45HO101A

https://truckmanualshub.com/

https://truckmanualshub.com/

2. EXTRRIOR VIEW (CABIN MODEL)

45NO103B

https://truckmanualshub.com/

45NO104B

https://truckmanualshub.com/

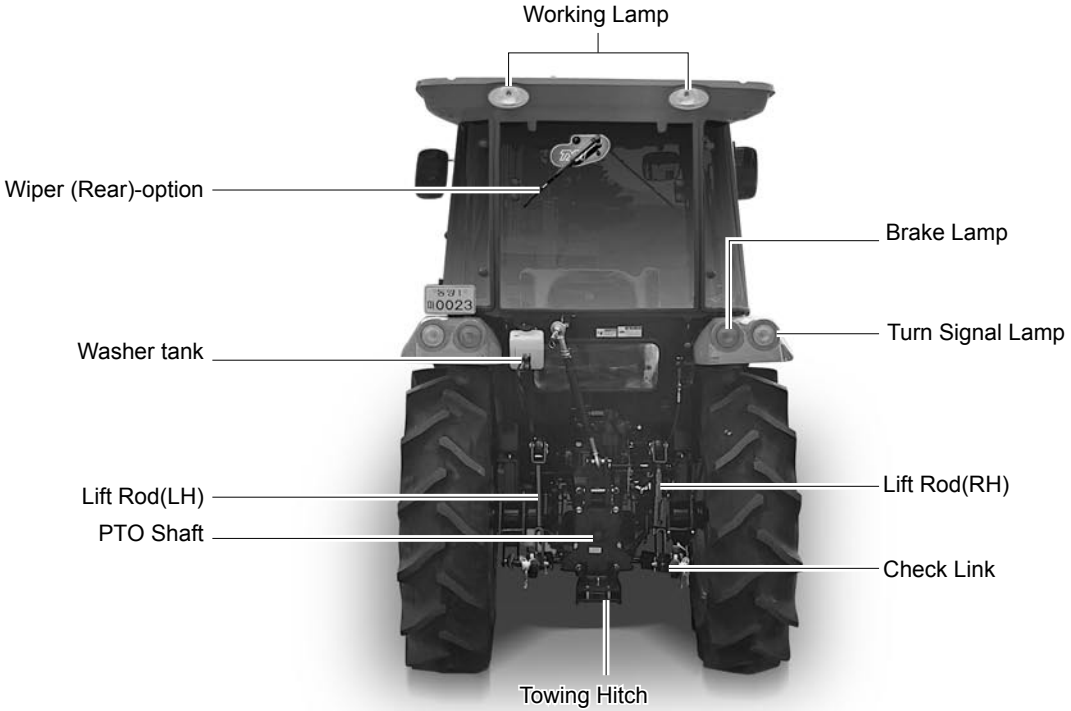

58CO106A

https://truckmanualshub.com/

3. SAFETY SIGNS

- **In order to work with the machine safely, safety decals are placed on the machine.**
- **Make sure to read and follow the directions.**

■ **Keep the safety decals clean and not damaged at all times.**

If a safety decal on the machine is dirty, wash it with soapy water and wipe it off with a soft cloth.

Never use solution as thinner or acetone because these can erase characters or pictures.

■ **If washed with high-pressured water, a decal may be peeled off.**

Do not apply high-pressured water directly onto decals.

■ **If a safety decal is damaged or lost, order a new one immediately and place it on the machine.**

When putting a new decal, wipe off the place to post the decal thoroughly and wait till it is dried. Then post the decal.

Each decal has a part number on the bottom.

■ **When replacing a part attached with a decal with a new part, replace the decal as well.**

https://truckmanualshub.com/

45HO105A

https://truckmanualshub.com/

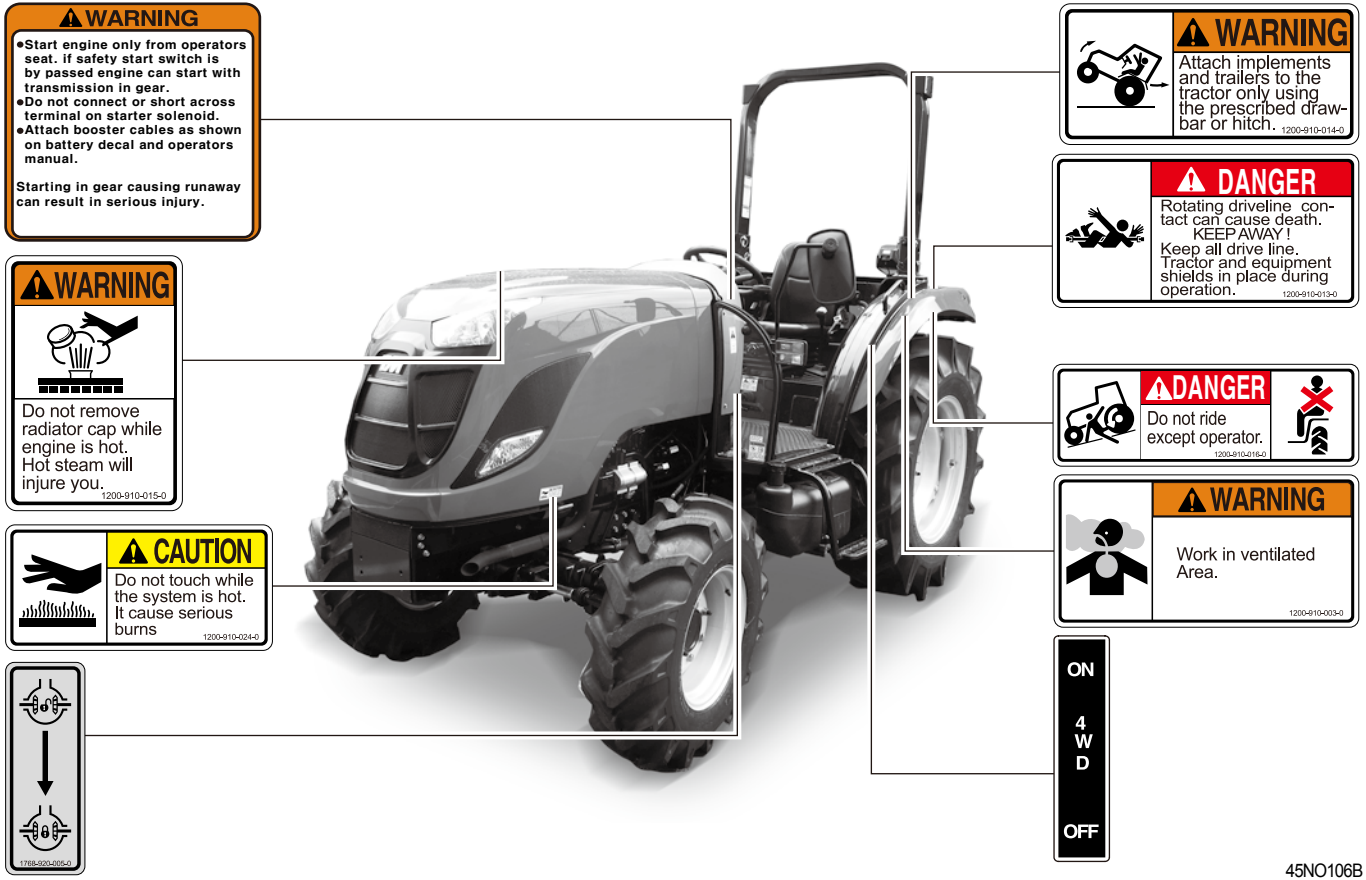

45NO106B

https://truckmanualshub.com/

45NO107B

https://truckmanualshub.com/

CAUTION

Keep hands and clothing away from rotating fan and belts to prevent serious injury.

1200-910-012-0

WARNING

Do not remove radiator cap while engine is hot.
Hot steam will injure you.

1200-910-015-0

DANGER

Do not ride except operator.

1200-910-016-0

Inner/Outer air Ventilation

- When grills of rear and both sides are opened,inner air will ventilate in.
- For effective use, open it when operate heater or air conditioner and close when ventilate fresh air.

1220-904-122-1

DANGER

Periodic venrilation should be made to avoid suffocation while heating an air conditioning is used.
Sleeping in the cab is prohibited.

WARNING

Work in ventilated Area.

1200-910-003-0

SPEED TABLES

APPLICATION	TRENCHER PLANTER	ROTA-VATOR	PUDDL-ING	MOWER	PLOW	DRIVE
SPEED (Km/h)	0 1 2 3 4 5 10 15 20 25 28					
E/G:2600rpm						E/G MAX.RPM
MAIN SHIFT	1 2 3 4			1 2 3 4		
SUB SHIFT	L			H		

※ The proper driving speed and PTO RPM depend on the type of works, tires and ground condition.
For your safety, operate the tractor at the suitable speed.

45NO108B

https://truckmanualshub.com/

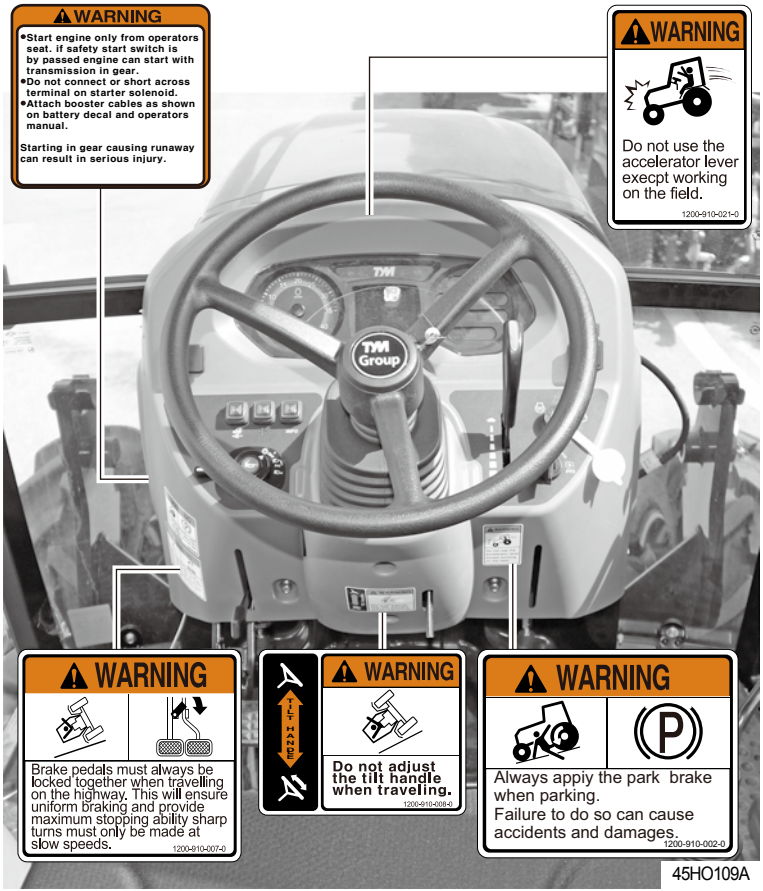

45HO109A

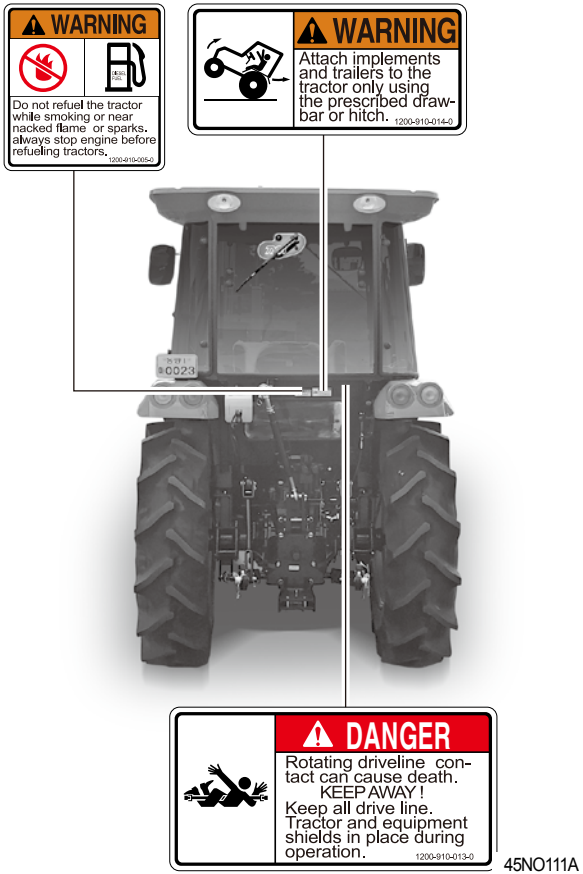

45NO111A

https://truckmanualshub.com/

DESCRIPTION OF TRACTOR CONTROLS

1. INSTRUMENT AND SWITCHES (NON CAB TYPE) ... 2-2

2. INSTRUMENT AND SWITCHES (CABIN TYPE) 2-3

3. OPERATING METHOD 2-15

4. INSTRUMENT PANEL LAMP AND BUZZER OPERATING CONDITIONS 2-16

5. OPERATION THE CONTROLS (NON CAB TYPE) ... 2-19

6. OPERATION THE CONTROLS (CABIN TYPE) 2-20

7. OPERATING THE 3 POINT LINKAGE (NON CAB MODEL) 2-33

8. OPERATING THE 3 POINT LINKAGE (CABIN MODEL) 2-34

https://truckmanualshub.com/

1. INSTRUMENT AND SWITCHES (NON CAB TYPE)

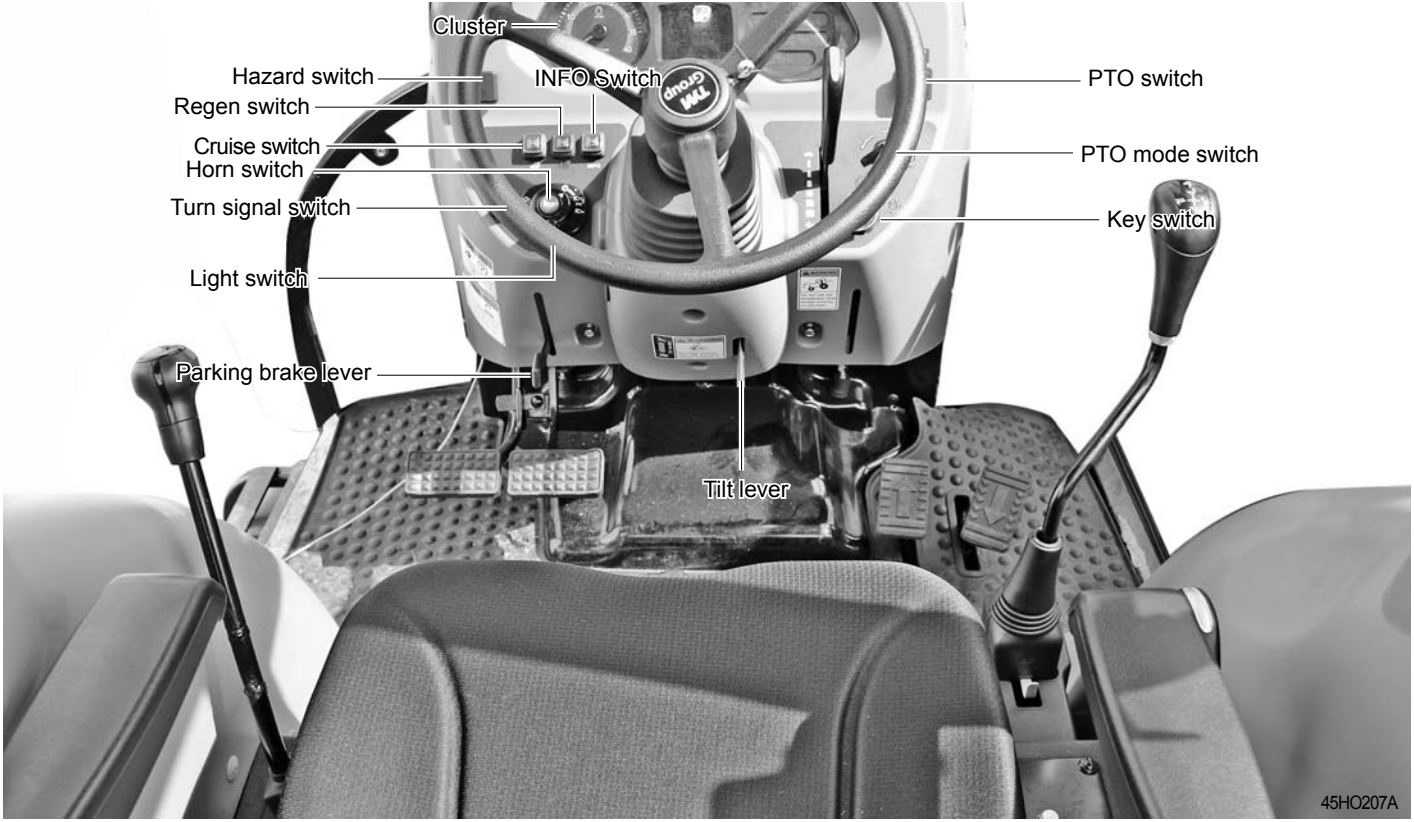

https://truckmanualshub.com/

2. INSTRUMENT AND SWITCHES (CABIN TYPE)

https://truckmanualshub.com/

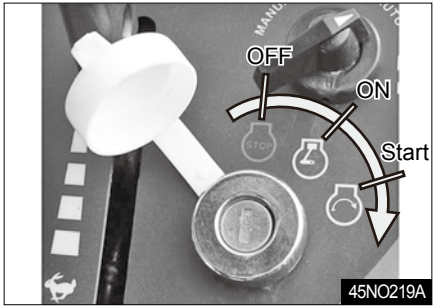

►KEY SWITCH

It is used to start and stop the engine.

- **"OFF" position**
  The ignition key can be inserted and removed in this position.
  When turning the switch to the OFF position with the engine running, the engine is stopped.

- **"ON" position**
  The engine is kept running and the switch is energized in this position.

- **"START" position**
  The engine can be started in this position. When releasing the key, the switch is returned to the "ON" position.

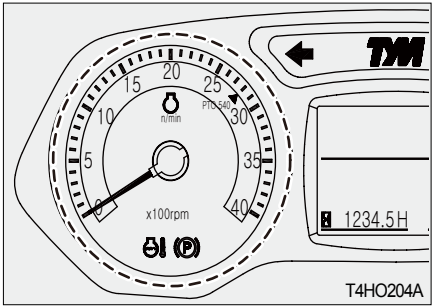

►CLUSTER

It displays the revolution of the engine or PTO shaft per minute.

https://truckmanualshub.com/

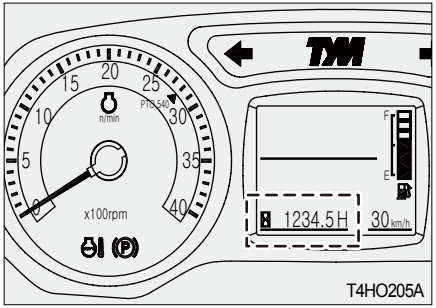

T4HO205A

► HOUR METER

It indicates the total time of use. The last digit indicates one tenth hours. (decimal place) While the hour meter on the leftmost section is in operation, the lamp below it blinks.

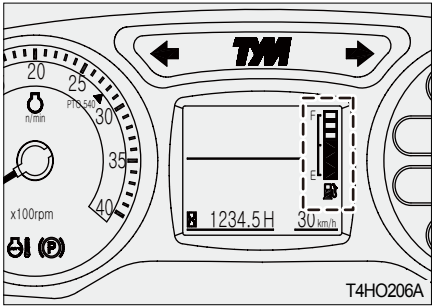

T4HO206A

► FUEL GAUGE

This indicates the amount of fuel while the main switch is in the "ON"position.

F - Full

E - Empty

NOTE

- Poor fuel quality can damage the engine. Make sure to use only the specified genuine Diesel fuel.
- Use fuel for winter season in winter to enhance engine starting performance.

https://truckmanualshub.com/

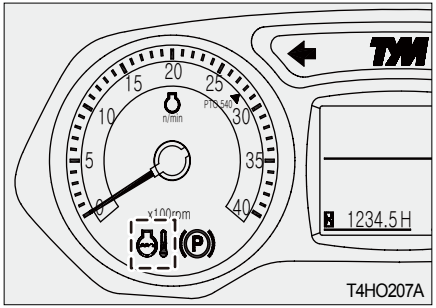

►COOLANT WARNING LAMP

This indicates the temperature of coolant while the main switch is in the "ON" position. If the needle is in the red "H" zone during driving, the coolant is overheated. In this case, stop driving and take any necessary action according to the troubleshooting instructions.

☞ Ref to the page 7-4 for “Troubleshooting” section.

NOTE

- The engine can be damaged if increasing its speed too fast.

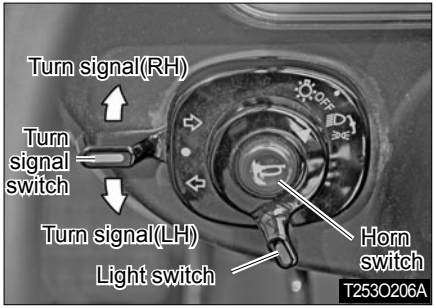

►COMBINATION SWITCH

(1) Light switch operation

The light switch can be operated with the main switch in the "ON" position.

「OFF」 - All light OFF

- Instrument lamp, tail lamp and low beam lamp ON.

- Instrument lamp, tail lamp and high beam lamp ON.

WARNING

- The high beam can obstruct the view of other drivers coming in the opposite direction on a road, leading to an unexpected accident.

https://truckmanualshub.com/

(2) Turn signal lamp operation

The turn signal lamps can be operated with the main switch in the "ON" position.

- Left turn

Turn the turn signal switch counterclockwise. Then, the left turn signal lamp and the left turn signal indicator on the instrument cluster blink.

- Right turn

Push the turn signal switch clockwise. Then, the right turn signal lamp and the right turn signal indicator on the instrument cluster blink.

NOTE

- If one side is blinking, The other side is still on.
- This lever is not automatically returned to the neutral position. Therefore, set it back to the neutral position after turn.

(3) Horn

The horn can be operated with the main switch in the "ON" position regardless of the light switch.

- Operating- Press the switch sounds the horn.

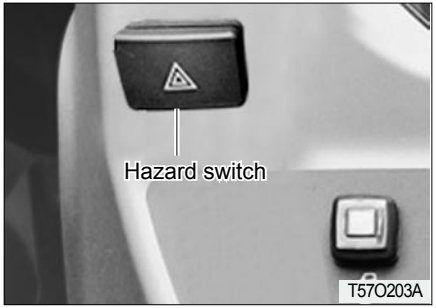

►HAZARD SWITCH

Push the hazard warning signal once to operate the hazard warning light. (Left and right turn indicators flash)

Push the hazard warning light switch again to switch off the hazard warning lights.

https://truckmanualshub.com/

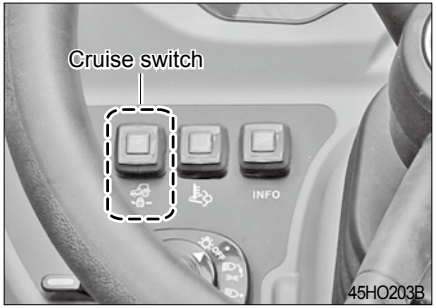

►CRUISE SWITCH

When pressing the cruise switch, the button lamp comes on, cruise is activated, and the indicator on the instrument cluster comes on. The cruise is deactivated if pressing the switch to the OFF portion or depressing the brake pedal.

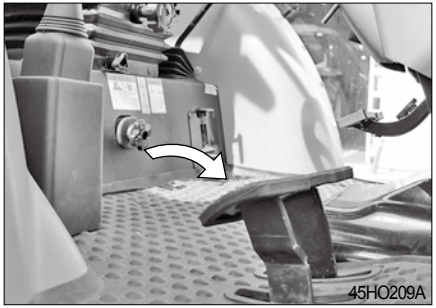

►AUTO THROTTLE

To activate the Auto throttle function Depress the speed control pedal. To forward speed position then the vehicle will be accelerated to a certain speed level. To deactivate the function release the foot from the speed control pedal.

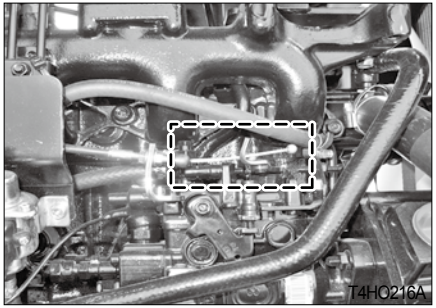

https://truckmanualshub.com/

►MONITOR LAMP

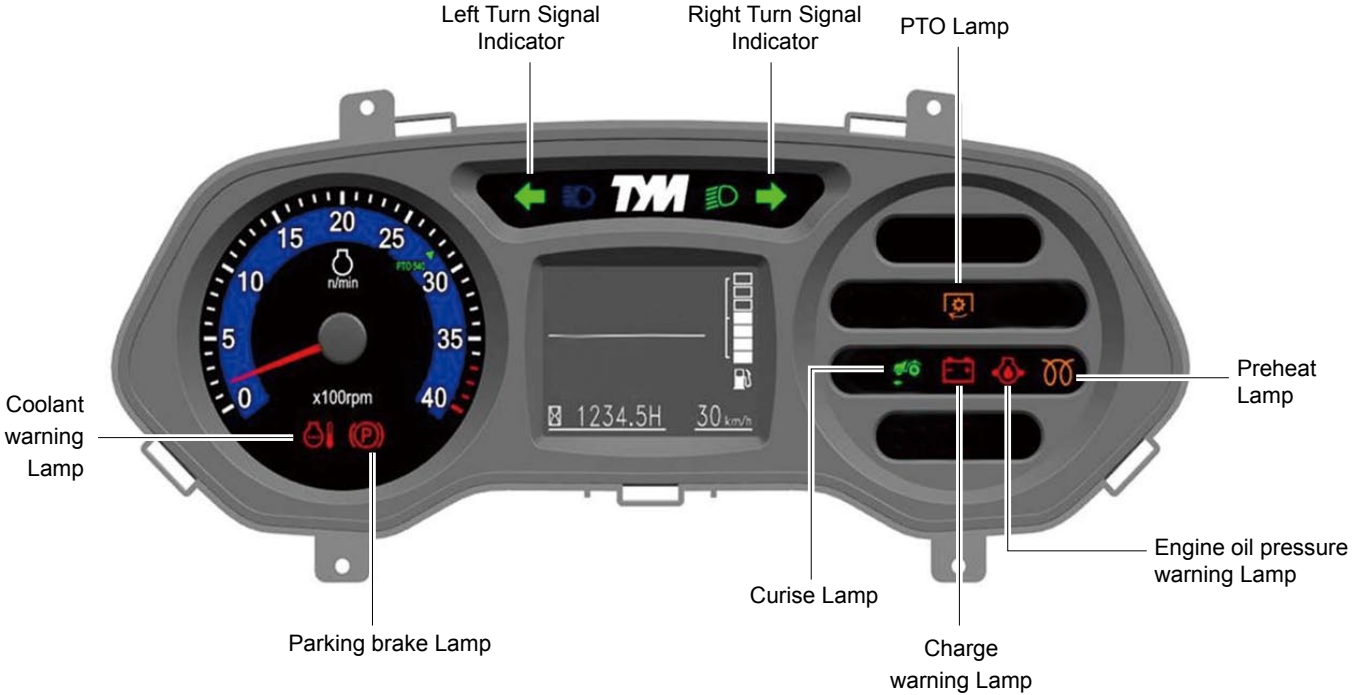

45HO207A

https://truckmanualshub.com/

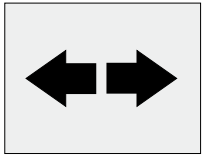

Tractor turn signal indicator

(1) Tractor turn signal indicator

This lamp is used to indicate the intended turning direction of the driver. When pulling down the turn signal switch, the left turn signal lamp blinks. When pushing up the turn signal switch, the right turn signal lamp blinks. These lamps are operated when pressing the hazard warning lamp switch as well.

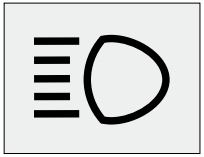

High beam lamp

(2) High beam lamp

This comes on when the high beam is turned on.

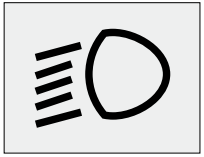

Low beam lamp

(3) Low beam lamp

This comes on when the low beam is turned on.

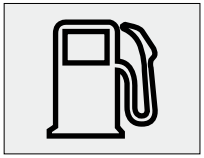

Fuel level warning lamp

(4) Fuel level warning lamp

If keeping driving with the needle of the fuel gauge pointing at 'E', the warning lamp comes on which means there is only approx. 5 liters of fuel left in the tank.

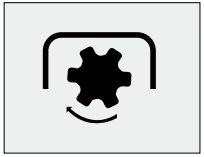

PTO lamp

(5) PTO lamp

This comes on while the PTO shaft is rotating.

https://truckmanualshub.com/

Parking lamp

(6) Parking lamp

This comes on when the parking brake is applied.

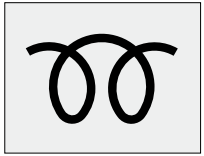

Preheat lamp

(7) Preheat lamp

This comes on while the engine preheating function is activated. It goes off as soon as preheating is completed.

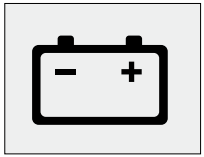

Charge warning lamp

(8) Charge warning lamp

This comes on when the main switch is turned to the 「ON」 position, and goes off as soon as the engine is started.

NOTE

- If the charge warning lamp comes on while driving, the battery is not properly charged. Therefore, turn off any unnecessary electrical devices and have your vehicle checked by your workshop immediately.

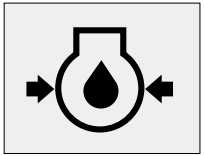

Coolant warning lamp

(9) Coolant warning lamp

This is illuminated when the engine oil pressure or oil amount is insufficient during driving.

NOTE

- When the oil pressure warning lamp comes on, this indicates malfunction of the lubrication system. Check the engine oil immediately and have your vehicle serviced by your workshop as necessary.

https://truckmanualshub.com/

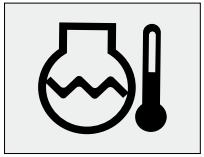

DPF temperature lamp

(10) Coolant temperature warning lamp

If this lamp comes on, coolant is overheated.

NOTE

- When the coolant temperature warning lamp comes on, coolant is overheated so check the coolant.

Engine warning lamp

(11) Engine warning lamp

It comes on when the engine is malfunctioning.

CAUTION

- When Engine warning lamp is it, ensure that you operator the tractor only after the engine RPM reaches at the normal speed. If this instruction is not kept, it may cause a performance degradation or accident due to a system error.

EGT warning lamp

(12) EGT warning lamp

When exhaust gas temperature is abnormality.

NOTE

- Do not perform other work during regeneration.

https://truckmanualshub.com/

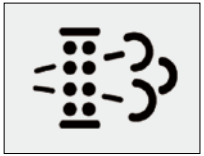

DPF warning lamp

(13) DPF warning lamp

This lamp blinks when carbon is accumulated in the diesel particulate filter. If this lamp blinks, press the regeneration button.

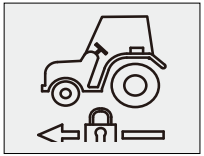

Cruise lamp

(14) Cruise lamp

Will turn on when cruise control is engaged.

►INDEPENDENT PTO OPERATION SWITCH

(1) Operation of PTO selection switch

「OFF」 - The PTO shaft is stopped.

「Automatic」

When the implement is lifted to the preset height, the PTO shaft is automatically stopped.

「Manual」 -

The rotating status of the PTO shaft can be controlled by operating the PTO ON/OFF switch to the ON/OFF position manually.

https://truckmanualshub.com/

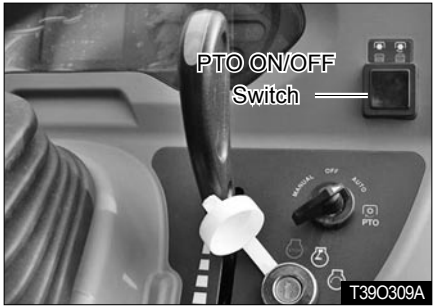

(2) Operation of PTO ON/OFF button switch

Operation for 'automatic' and 'manual' positions of the PTO selection switch is as follows :

「ON」

When pressing the switch, the red lamp comes on and the PTO shaft rotates.

「OFF」

When pressing the switch again, the lamp goes off and the PTO shaft stops rotating.

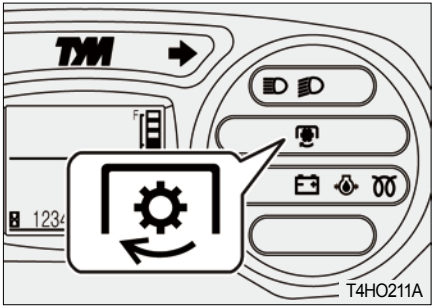

(3) PTO operation indicator

ON - The PTO shaft is rotating.

OFF - The PTO shaft is stopped.

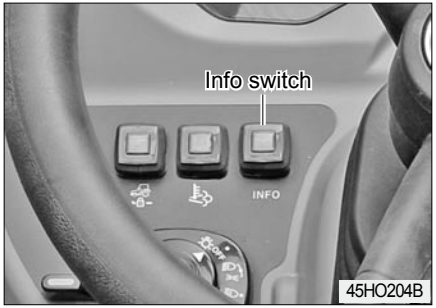

►INFO SWITCH

Pressing the button displays useful information on the instrument cluster such as the battery voltage and coolant temperature.

https://truckmanualshub.com/

3. OPERATING METHOD

1) Operating principles : For DPF regeneration, the exhaust gas temperature is increased by increasing the engine back pressure.

Operation sequence		Step
Regeneration Alarm	DPF Lamp On	
DPF Regeneration	Engine Max.RPM ↓ Regeneration Button Press ↓ Electronic Exhaust Valve Operation	
Regeneration Complete	DPF Lamp Off	

https://truckmanualshub.com/

4. INSTRUMENT PANEL LAMP AND BUZZER OPERATING CONDITIONS

►INSTALLATION AND DPF REGENERATION

Item	Lamp		Buzzer
DPF regeneration necessary		ON	Buzzing 3times [1s-1s-1s], buzzing again in 1minute
DPF regeneration start			Buzzing 1time [2s]
During DPF regeneration		[DPF]+[EGT] on + Regeneration button blinking	
DPF regeneration complete	Lamp Off		Buzzing 3times [1s-1s-1s]

1) Cleaning logic (30% valve operation) is performed at every key-On after electronic exhaust valve leaning.

https://truckmanualshub.com/

►ABNORMAL OPERATION DURING DPF REGENERATION

Item		Lamp		Buzzer
Coolant temperature over 105˚C during DPF regeneration			[DPF]+[EGT] On + Regeneration button blinking	
Release mode	Regeneration failure		[DPF]+[EGT] Blinking	
	Release mode		[DPF]+[EGT] Blinking	
	Force release		[DPF]+[EGT]+[Regeneration button] Blinking	

https://truckmanualshub.com/

► ENGINE AND DPF MALFUNCTION

Item		Lamp		Buzzer
Engine sensor fault	RPM	MIL + [RPM] OFF	On	
	Coolant temperature	MIL + [Coolant temp] OFF	On	
Electronic exhaust valve fault		MIL	[Fail]+[EGT] Blinking	
DPF fail	DPF damage	MIL	[Fail]+[DPF] On	
	DPF removal	MIL	[Fail]+[DPF] On	

https://truckmanualshub.com/

5. OPERATION THE CONTROLS (NON CAB TYPE)

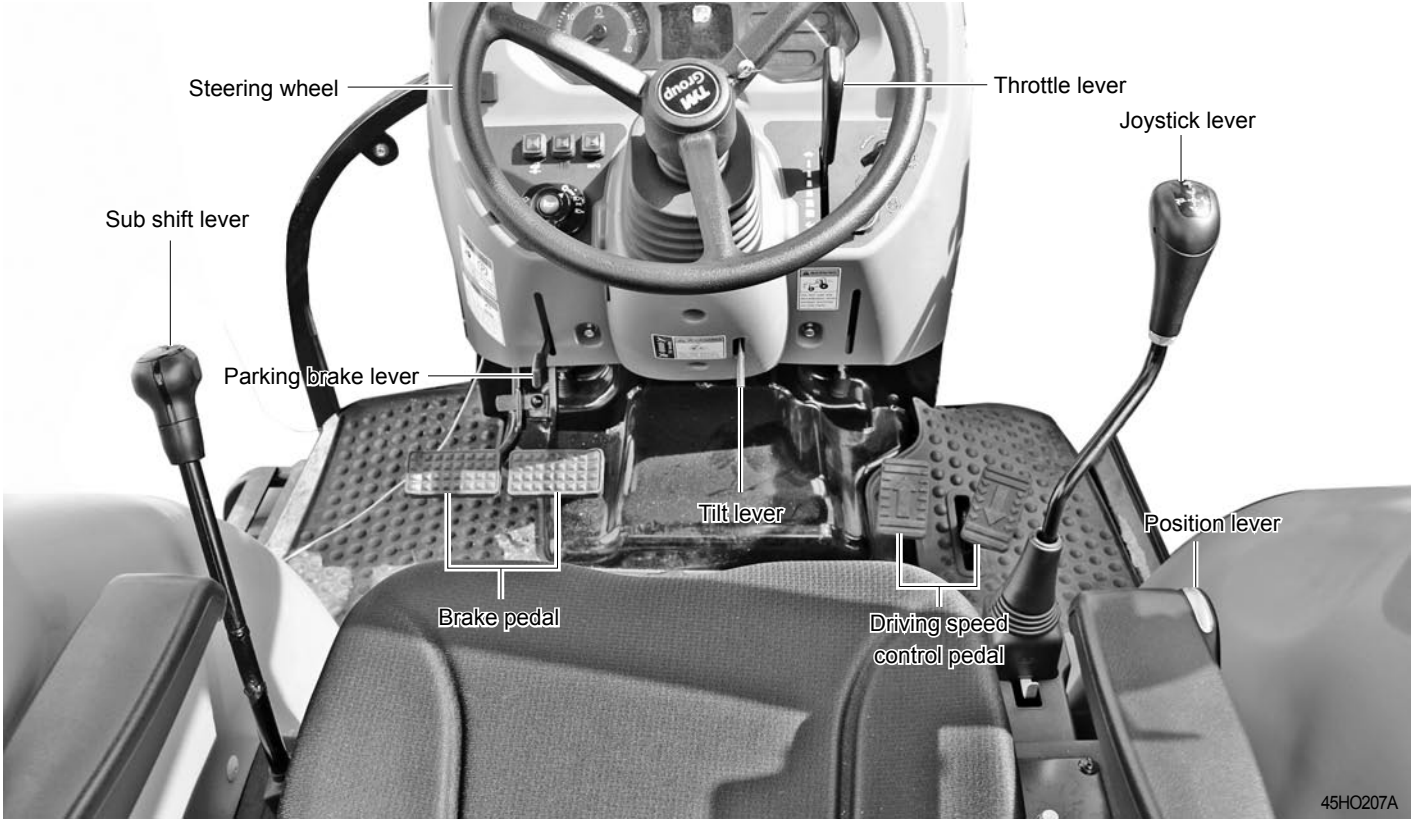

https://truckmanualshub.com/

6. OPERATION THE CONTROLS (CABIN TYPE)

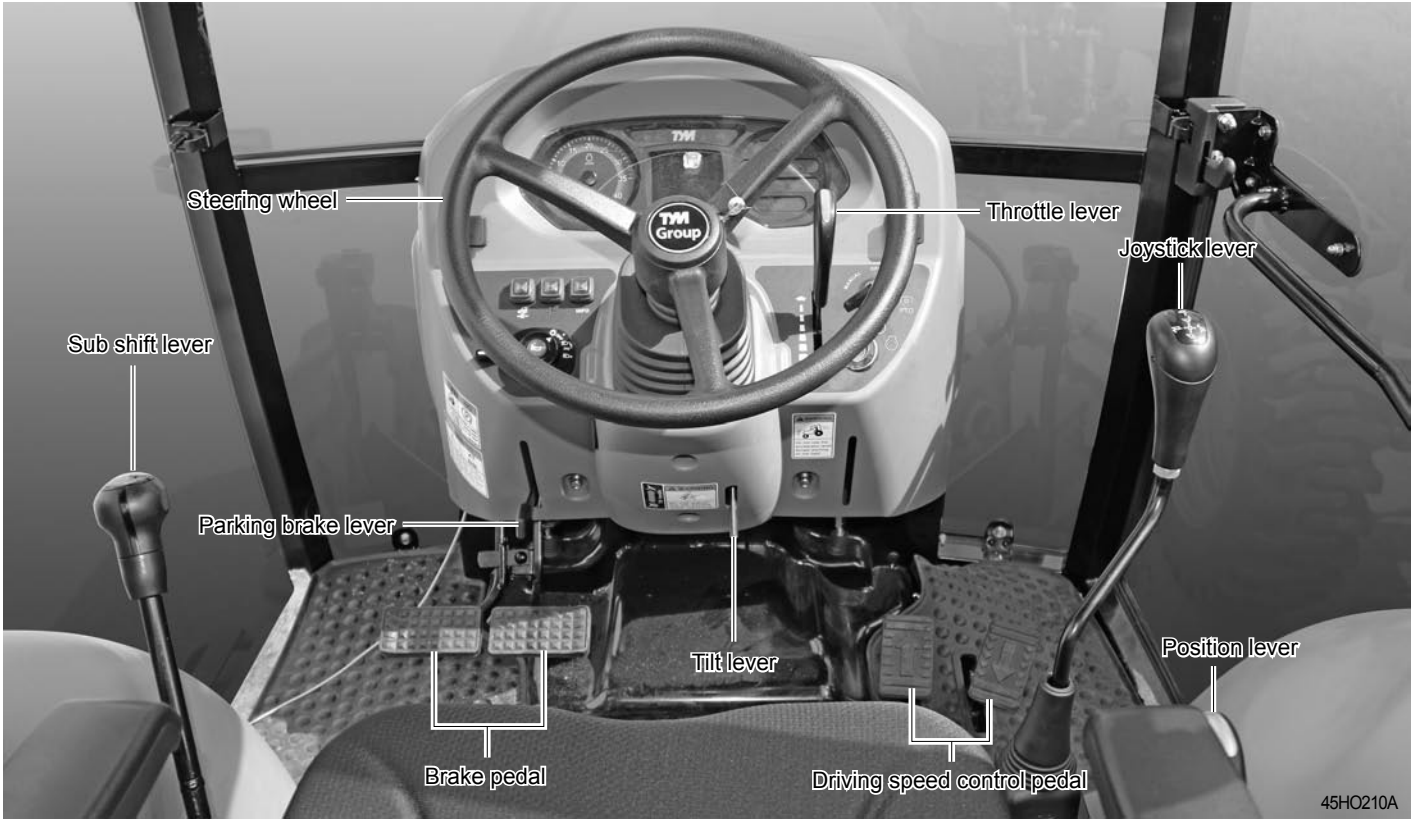

https://truckmanualshub.com/

►THROTTLE LEVER

It is used to adjust the engine speed like the throttle pedal.

Pulling : increasing speed

Pushing : decreasing speed

WARNING

- Never use it unless working in a field. It can lead to speeding and an accident.

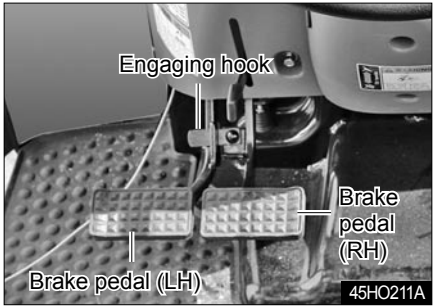

►BRAKE PEDEL

The brake is used to stop the vehicle forcibly. This vehicle is equipped with separate brakes for its left and right sides. Therefore, it is possible to apply braking force only to one rear wheel.

When the one side brake lever is released, the warning lamp is illuminated. When the lever is engaged, the lamp is turned off.

There is an engaging hook for connecting the left and right brake pedals.

- **Driving on road -** Engage (both brake pedals operated together) One-side brake warning lamp OFF
- **Working in field -** Disengage (One side brake pedal operated) One-side brake warning lamp ON

WARNING

- Connect the left and right brake pedals while driving on a road, loading/unloading the vehicle or driving into/out of a field to avoid rollover and collision.
- Check the left and right brakes periodically so that they can be operated simultaneously.

https://truckmanualshub.com/

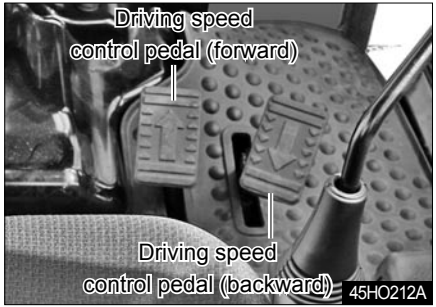

►DRIVING SPEED CONTROL PEDAL

When depressing the forward driving speed control pedal, forward driving is selected. Reverse driving is selected by depressing the reverse driving speed control pedal. When releasing the speed control pedal, it is returned to the neutral position and the tractor is stopped.

WARNING

- When switching the driving direction (forward/backward) directly during driving, a shock due to inertia can lead to an injury. Therefore, switch the driving direction while the tractor is stopped.
- Switch the driving direction only while you are on the driver's seat.

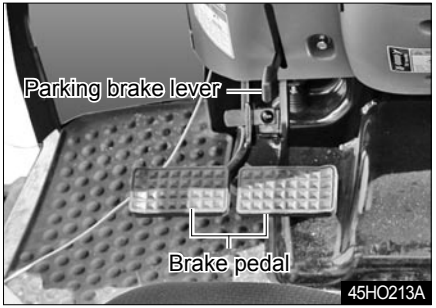

►PARKING BRAKE LEVER

① With the left and right brake pedals interlocked, depress the brake pedal with a right foot firmly and pull up the parking brake lever to lock the pedals.

② To release the parking brake, depress the brake pedal firmly.

NOTE

- The brake discs can be worn prematurely if driving the vehicle with the parking brake engaged partially.

https://truckmanualshub.com/

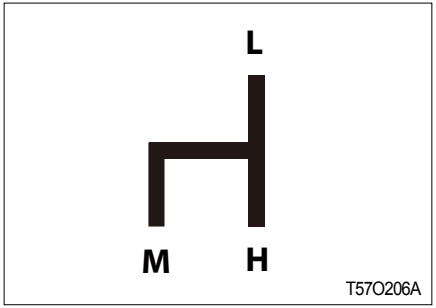

► SUB SHIFT LEVER

- The driving direction can be selected between forward direction and reverse direction using the shuttle shift lever and range shift lever.
- Use the throttle lever to increase/decrease the engine speed.

NOTE

- Operate the range shift lever only after the tractor is completely stopped. Shifting the lever during driving can damage the gears.

⚠ WARNING

- When the range shift lever is placed in the position "H," the driving speed increased. Therefore, never put the range shift lever in the position "H" during driving backwards.

► DIFFERENTIAL LOCK PEDAL

The differential lock is a device to lock the differential system in order to rotate the left and right wheels at the same speed. This function can be used when the rear wheels slip or one wheel spins.

Engagement - Depressing pedal

Disengagement - Releasing pedal

https://truckmanualshub.com/

WARNING

- Never use the differential lock when driving on a road. A collision or rollover can occur.
- Make sure to release it during turning. Otherwise, it can lead to an injury or accident.

NOTE

- When using the differential lock, run the engine at a low speed.
- If differential lock is still not disengaged after releasing the differential lock pedal, gently depress the left and right brake pedals alternately.

< Examples of useful conditions of differential lock >

① One wheel slips or tractor cannot be driven forward when moving into/out of a field.

② A wheel slips during work requiring traction, such as plowing.

③ One wheel is stuck into a soft field and can't escape.

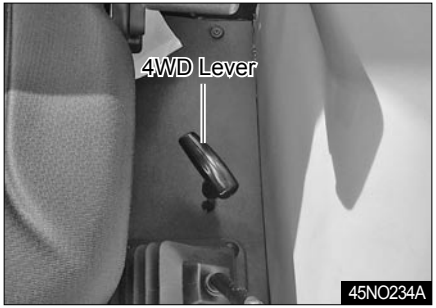

►4WD LEVER

「ON」

Pull the shift lever to the "ON" position to engage 4WD.

「OFF」

Push the shift lever to the "OFF" position to disengage 4WD.

https://truckmanualshub.com/

< Examples of useful conditions of 4WD >

The 4WD can be used under the following conditions

① When cultivating in a field.

② When traction is required on a slope, in a wet field or for towing a trailer.

③ When working in a wet or sandy field.

④ When When cultivating on firm soil with a rotavator to prevent the tractor from being pushed forward.

⑤ When driving into/out of a field or going over a field bank.

NOTE

- Before operating the 4WD lever, make sure to stop the tractor.
- If it is hard to engage the 4WD lever, do not apply excessive force to it. Instead, drive the tractor forward or backward slightly and try it again.
- Avoid using 4WD on public roads to reduce wear on tires.

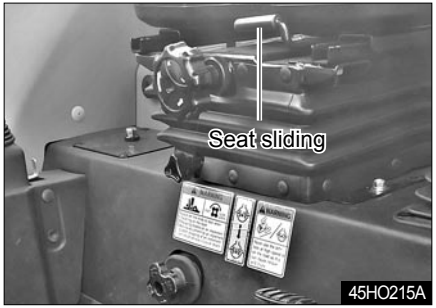

► SEAT AND SAFETY BELT

(1) Seat sliding

The seat can be adjusted by moving it forwards and backwards with the seat sliding lever on its front pushed to the left. After adjustment, make sure that the seat is firmly secured.

(2) Seat belt

Before driving, adjust the belt's length to fit to your body and insert it into its buckle. When it is engaged properly, a clicking sound is heard.

https://truckmanualshub.com/

WARNING

- Make sure to wear your seat belt to protect yourself from a possible rollover or crash accident.
- Never adjust the seat during driving.

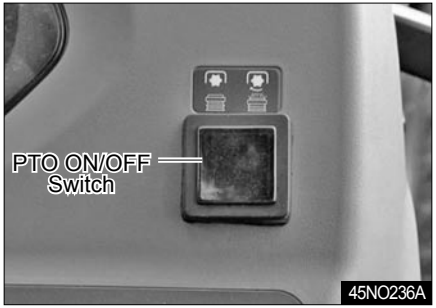

►PTO ON/OFF SWITCH

Operation for 'automatic' and 'manual' position of the PTO selection switch is as follows:

「ON」- When Pressing the switch, the red lamp comes on and the PTO shaft ratates.

「OFF」- When pressing the switch again, the lamp goes off and the PTO shaft stops ratating.

NOTE

- Operate the PTO shift lever only after setting the PTO ON/OFF switch to the OFF position.

Rear PTO	
PTO speed	540RPM

https://truckmanualshub.com/

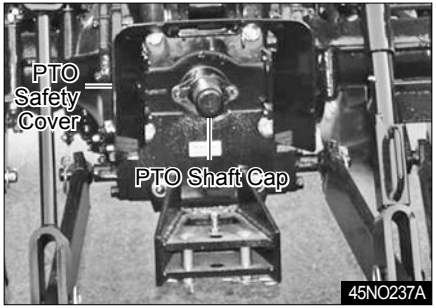

►PTO SHAFT CAP

When the PTO shaft is not in use, grease the PTO shaft and install the cap to it.

⚠ CAUTION

- It is dangerous to use an implement at a high speed if it is designed to be operated at a low speed.
- Before using an implement, make sure to read its owner's manual.

⚠ DANGER

- If caught by the PTO shaft, a severe injury or even death can occur.
- Stay out of the PTO shaft while it is rotating.
- When the PTO shaft is not in use, place the cap over it. Also, never remove the PTO safety cover.

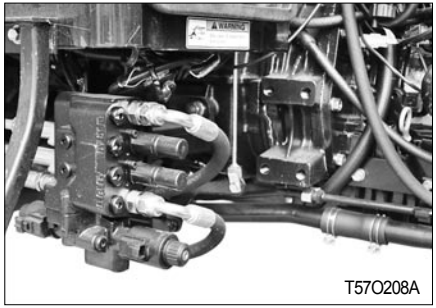

►LOADER VALVE AND JOYSTICK LEVER

The loader valve is installed under the step on the right side and the joystick lever is installed on the right section in the cabin for easy installation and operation of a loader.

https://truckmanualshub.com/

WARNING

- Abnormal operation of a loader can lead to an accident. Therefore, when connecting the hydraulic pipes, set the valve connection according to the operating directions specified on the label attached to the joystick lever.

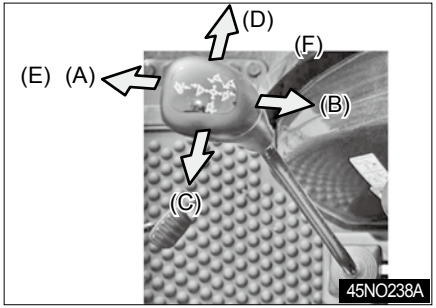

(1) Joystick lever operating directions

- Boom down (A)
- Boom up (B)
- Bucket up (C)
- Bucket down (D)
- Floating (E)
- Bucket down fast (F)

NOTE

- Do not operate the boom cylinder and bucket cylinder at the same time. A loader may malfunction due to insufficient oil flow.

https://truckmanualshub.com/

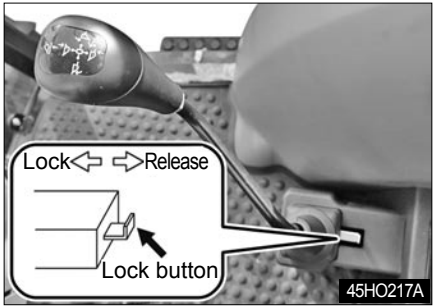

(2) Joystick lever safety device

There is a button to lock the operation of the joystick lever. Pulling it forwards unlocks the lever while pushing it backwards locks the lever.

WARNING

- Make sure to set the joystick lever in the neutral position and press the lock button to lock the lever in that position when the lever is not in use. Otherwise, an implement may fall accidentally by unintended operation of the lever.

►OPERATING TIPS FOR POWER STEERING WHEEL

(1) Operate the power steering wheel only while the engine is running. You may feel the steering wheel heavier with a low engine speed.

(2) When an implement, such as a loader, is attached to the front, the steering wheel may be felt heavy with the tractor stopped. If so, operate the steering wheel while driving the tractor at a low speed.

(3) When the steering wheel is completely turned to one end, the safety valve is activated to output the audible signal (relief sound). When this sounds, avoid using the steering wheel (O.K. only for a short time). Also, never turn the steering wheel completely continuously.

(4) Turning the steering wheel to its end unnecessarily (with the tractor stopped) can wear tires rapidly.

(5) In winter, warm up the engine sufficiently before use.

(6) When repairing components, such as a pipe, make sure that no foreign material enters the system.

(7) The steering wheel can be operated with a small amount of force. Therefore, operate it with care and keep your hands on it at all times.

WARNING

- Releasing the steering wheel during driving can result in a collision and rollover. Never release the steering wheel during driving.

https://truckmanualshub.com/

►IMPLEMENT LIFT CONTROL SYSTEM

(1) Position lever

This lever is used to lift and lower an implement to a certain working height freely and maintain it.

<Operation>

「Lifting implement」

Pull the lever back to lift the implement.

「Lowering implement」

Push the lever forward to lower the implement.

WARNING

- When leaving the tractor, make sure to lower the implement and stop the engine. Others may operate one of the controls, leading to a dangerous situation.

►EXTERNAL POSITION LEVER

It is used to lift or lower an implement to the desired position and hold it at that position.

<How to operate>

- Lifting an implement: Push the lever up.
- Lowering an implement: Pull the lever down.

https://truckmanualshub.com/

►HYDRAULIC LOWERING SPEED CONTROL KNOB

This can be used to adjust the lowering speed of the implement.

Adjust the lowering speed according to the implement type and working environment.

<Operation>

- Rotavator - Slow the lowering speed.
- Plow - Speed up the lowering speed.

WARNING

Set it to the Lock position under the following conditions to prevent falling of the implement :

- When driving on a public road
- When replacing the rotavator blade or removing straws and grass
- When servicing the implement

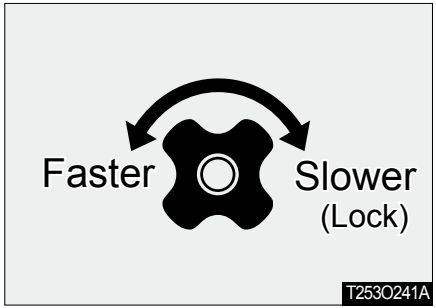

- Decreasing lowering speed
  Turn the knob clockwise (slower).
- Increasing lowering speed
  Turn the knob counterclockwise (faster).
- Lock
  Turn the knob clockwise (slower) to its end.

https://truckmanualshub.com/

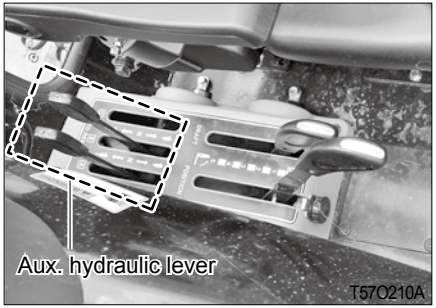

►AUX. HYDRAULIC LEVER

When using an attachment for an implement (rotavator, hydraulic plow, etc.), connect its hose to the proper port between the port A and B according to its use.

- Lever A operation - Hydraulic pressure applied to the port A of the external hydraulic valve coupler
- Lever B operation - Hydraulic pressure applied to the port B of the external hydraulic valve coupler

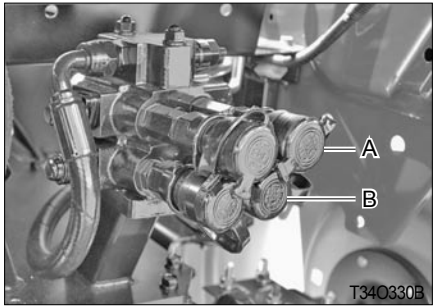

►AUX. HYDRAULIC VALVE

(1) How to engage coupler

① Clean the couplers on the tractor and implement thoroughly.

② Remove the dust cover from the tractor side. Then, fit the male coupler on the implement side while moving its external ring backward slightly.

③ Pull the male coupler on the implement side backward slightly to check its firm engagement.

(2) How to disengage coupler

① Lower the implement on the ground to release pressure in the hydraulic hose.

② Stop the engine and operate the remote hydraulic lever to remove any residual pressure in the hose.

③ Disconnect the male coupler on the implement side while moving its external ring on the tractor side backward slightly.

④ Wipe oil and dust from the coupler and plug the dust cover.

⚠ WARNING

- To prevent a burn and skin damage, make sure to stop the engine before connecting or disconnecting the coupler.
- Do not use your hands to check for oil leakage.

https://truckmanualshub.com/

7. OPERATING THE 3 POINT LINKAGE (NON CAB MODEL)

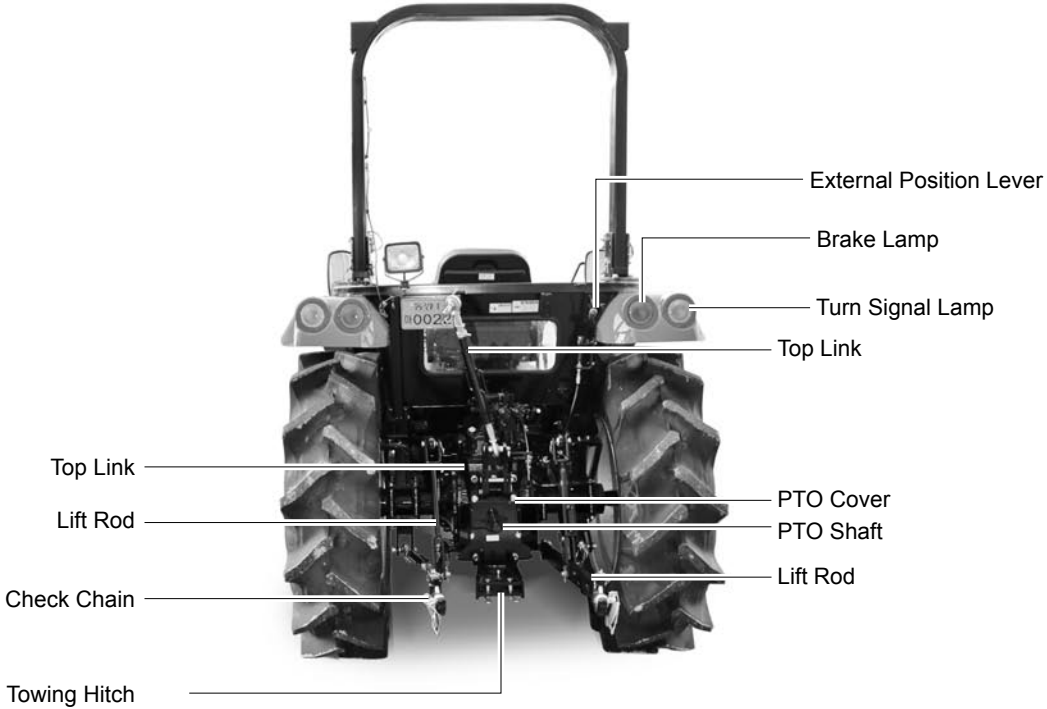

45NO241A

https://truckmanualshub.com/

8. OPERATING THE 3 POINT LINKAGE (CABIN MODEL)

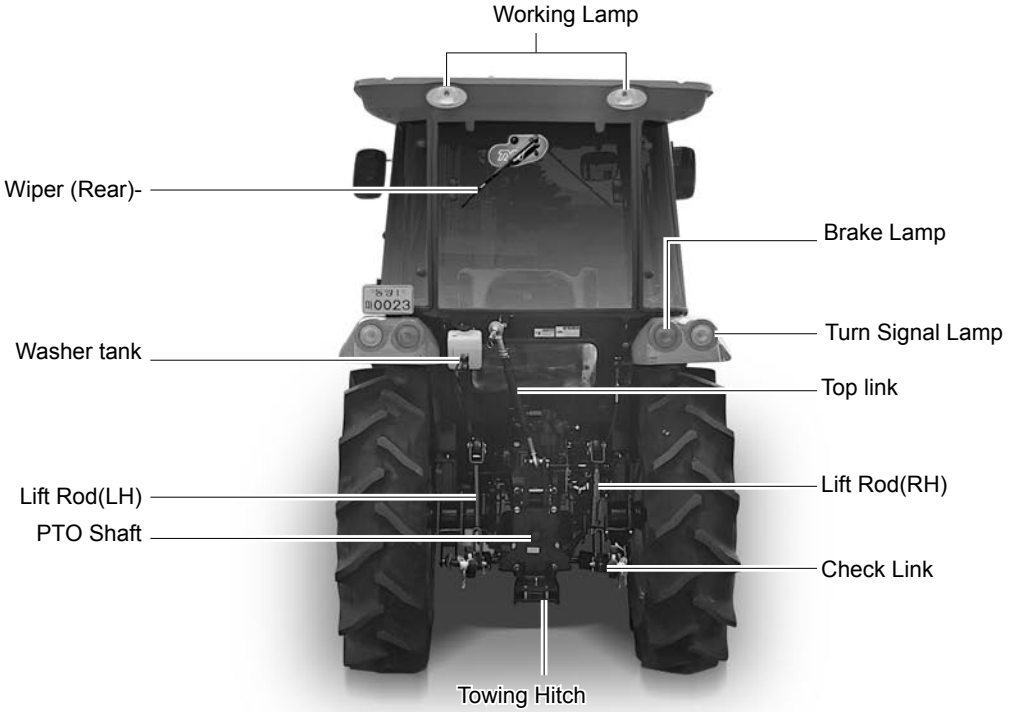

58CO106A

https://truckmanualshub.com/

►TOP LINK ADJUSTMENT

(1) The angle of an implement can be adjusted by extending or retracting the top link.

(2) After adjustment, fix the adjusting lever with its mounting nut.

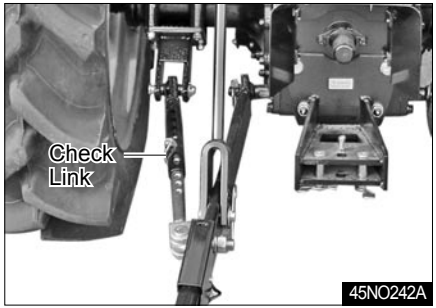

►CHECK LINK

The check link can be adjusted to relieve vibration and shock of an implement.

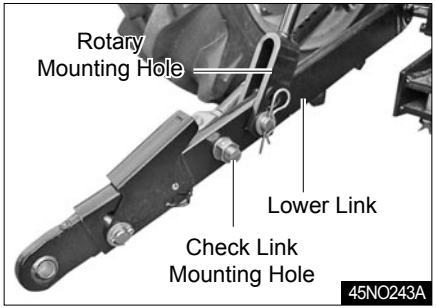

►LOWER LINK

An implement can be attached to this. The installation type is Category I.

NOTE

- When no implement is attached, fix the lower links with the left and right check links so that they do not touch the rear wheels.
- Engage the top link with the hook.

https://truckmanualshub.com/

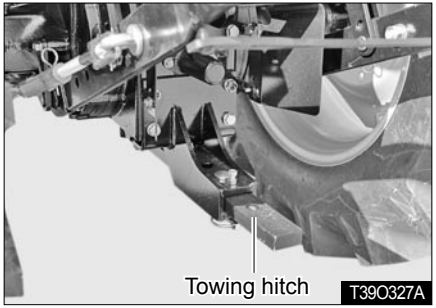

► TOWING HITCH

Install only an implement applicable to this tractor.

WARNING

- Make sure to use the towing hitch for towing to avoid rollover. Never tow anything by connecting a rope to the top link bracket, axle or safety frame.
- When using a rotavator that draws power through the universal joint from the PTO shaft, remove the towing hitch from the tractor. Otherwise, the universal joint hits and damages the towing hitch, leading to an accident.

►SAFETY FRAME ROPS

The safety frame is intended to reduce damage of an accident in case of a rollover, so it cannot prevent an accident.

Always have the safety frame installed securely for driving to ensure your safety unless going under an area with a low ceiling such as a garage.

https://truckmanualshub.com/

WARNING

- If a rollover accident occurs without the safety frame, the frame cannot protect the driver, leading to a severe injury or even death. Never drive with the safety frame detached.

https://truckmanualshub.com/

MEMO

https://truckmanualshub.com/

OPERATION

1. ENGINE STARTING 3-2
2. ENGINE STOPPING 3-3
3. ENGINE IDLING 3-3
4. RUNNING-IN PERIOD 3-4
5. STARTING OFF, SHIFTING AND DRIVING 3-4
6. TURNING IN FIELD 3-5
7. STOPPING AND PARKING 3-5
8. DRIVING ON SLOPE 3-6
9. CAUTIONS FOR DRIVING INTO / OUT OF FIELD .. 3-7
10. LOADING TO / UNLOADING FROM TRUCK 3-7
11. CAUTIONS FOR DRIVING ON ROAD 3-8
12. OPERATION CHECK DURING DRIVING 3-8

https://truckmanualshub.com/

1. ENGINE STARTING

► HOW TO START ENGINE

① Make sure that there is no obstacle around the tractor.

② Seat on the driver's seat and confirm that the parking brake is applied.

③ Check that each shift lever and PTO switch are in the neutral position.

④ Pull the throttle lever halfway.

⑤ Insert the key into the main switch and turn the switch to the "ON" position. Check that the engine oil lamp and charge warning lamp come on.

⑥ Turn the main switch to the "START" position. When the engine is started, release the switch.

⑦ Confirm that all monitoring lamps go off after the engine is started.

WARNING

- Never start the engine by connecting the start motor terminal or safety switch directly. The tractor may move suddenly and cause an accident.

NOTE

- The engine will not start unless the brake pedal is depressed.
- Do not turn the main switch to the "START" position while the engine is running.
- Avoid running the start motor over 10 seconds. It consumes a lot of current.
- If the engine cannot be started within 10 seconds, wait for 30 seconds and try it again.
- The engine cannot be started unless the driver is seated on the driver's seat. Start the engine on the driver's seat.

https://truckmanualshub.com/

2. ENGINE STOPPING

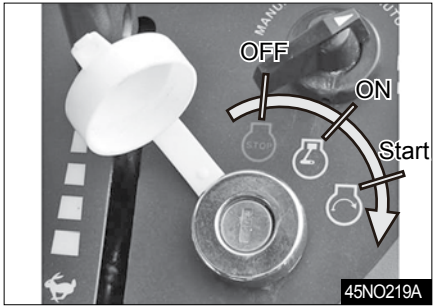

► STOPPING

① Idle the engine.

② Turn the main switch to the "OFF" position.

③ Remove the key from the switch.

NOTE

- Do not stop the engine at a high speed.
- If the engine has been running for an extended period of time, stop the engine only after idling it for 5 to 10 minutes.

3. ENGINE IDLING

► GENERAL ENGINE IDLING

After starting the engine, idle the engine for 5 to 10 minutes so that oil is delivered to each part of the engine.

NOTE

- If the engine is loaded right after it is started, it may cause engine stalling and failure. Make sure to idle the engine first.
- If neglecting to idle the engine, it can cause:
  - Seizure of the hydraulic pump
  - Filure in the hydraulic system.

⚠ WARNING

- Make sure to apply the parking brake while idling the engine.
- Never idle the engine in a poorly ventilated area. It can cause carbon monoxide poisoning by emissions.

► ENGINE IDLING IN COLD CONDITION

Hydraulic oil in this vehicle is also used as transmission fluid.

If the temperature drops in winter so oil gets cold, its viscosity rises and the hydraulic pump cannot suck oil in, causing malfunction.

Make sure to idle the engine in winter according to the following instructions.

Temperature	Idling time
0°C or higher	At least 10 min
0 ~ -10°C	10 ~ 20 min.
-10 ~ -20°C	20 ~ 30 min.
-20°C or less	At least 30 min.

https://truckmanualshub.com/

4. RUNNING-IN PERIOD

Make sure to keep the following instructions for the initial 50-hour use.

(1) Avoid abrupt starting and abrupt stopping.

(2) Do not use excessive speed or load.

(3) Drive the tractor only when the engine is sufficiently warm.

(4) Do not idle the engine at the maximum speed.

(5) Check each part and change oil and fluid after 50-hour use.

(6) Refer to the section Maintenance for adding and changing engine oil.

5. STARTING OFF, SHIFTING AND DRIVING

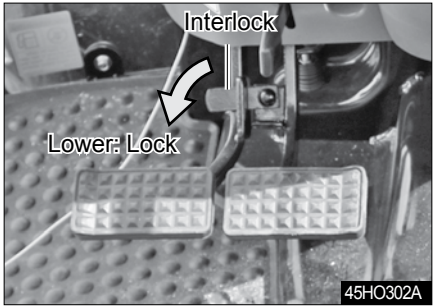

► STARTING OFF

① Confirm that the left and right brake pedals are interlocked.
Make sure to interlock the left and right brake pedals unless working in a field.

② Lift an implement.

③ Place range shift lever into the desired position.

④ Depress the brake pedal to release the parking brake.

⑤ Depressing the HST pedal to increase the engine speed.

► SHIFTING AND DRIVING

To shift during driving, depress the brake pedal to stop the vehicle in advance.

WARNING

- The driving speed in the reverse direction is almost the same to the speed in the forward direction. Make sure to check the surroundings carefully when driving backward.
- Especially, never drive backwards with the range shift lever in the position H. The driving speed becomes faster and it can cause an accident.

https://truckmanualshub.com/

6. TURNING IN FIELD

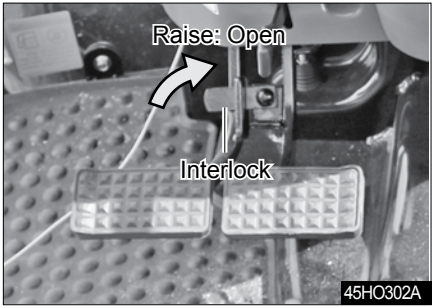

① To turn in a field, release the hook for the left and right brake pedals.

② Turn the steering wheel and depress the brake pedal for the desired direction.

③ While turning, keep the engine speed low and turn slowly.

WARNING

- Avoid turning at a high speed. The tractor can fall on its side.
- When the tractor is installed with an implement, its overall length becomes large. Be extra care with other people and objects around when turning.
- Connect the left and right brake pedals when it is about to drive.

7. STOPPING AND PARKING

① Operate the throttle lever to set the engine at a low speed.

② Release the forward driving (HST type) and accelerator (mechanical) pedals slowly. Depress the brake pedals for abrupt braking.

③ When the vehicle is completely stopped, set the shift lever in the neutral position.

④ Apply the parking brake.

⑤ If an implement is attached to the vehicle, lower it.

https://truckmanualshub.com/

⑥ Remove the key from the switch after parking vehicle.

☞ Refer to the page 2-15 for operation of the parking brake.

WARNING

- After parking, make sure to apply the parking brake.
- Avoid parking on a slope if possible. If it is absolutely necessary to park on a slope, chock the rear wheels.

8. DRIVING ON SLOPE

► STARTING OFF ON STEEP SLOPE

① Depress the brake pedals.

② Place range shift lever in the low speed position.

③ Set the engine at the mid speed with the throttle lever.

④ Depress the HST pedal fulley.

⑤ Release the brake pedal at the same time.

⑥ Pull the throttle lever again to rev up the engine. .

► TIPS FOR DRIVING ON SLOPE

(1) Set the range shift lever in the low speed position on a slope to prevent the engine from stopping.

(2) Keep the driving speed low on a downhill road.

(3) Do not set the range shift lever in the neutral position on a downhill road.

WARNING

- On a downhill road, but use the engine brake. Otherwise, it can cause an accident.

https://truckmanualshub.com/

NOTE

- When the needle on the coolant temperature gauge is pointing at 'H,' the engine is overheated. If running the engine under this condition continuously, the engine parts can be severely damaged. Make sure to take an appropriate action immediately.

9. CAUTIONS FOR DRIVING INTO / OUT OF FIELD

(1) Check that the left and right brake pedals are connected.

(2) It is dangerous to drive into/out of a field if the field is deep from its bank. Use ramps.

(3) Move in the perpendicular direction to the bank.

(4) When driving out of the field, lower the implement so that the front wheels cannot be lifted.

(5) It is recommended to drive into a field backward to utilize full power.

⚠ WARNING

- Be careful to keep the tractor's balance when working on a slope. The tractor may become out of balance and roll over.
- It is very dangerous to ride a person as a front weight.

☞ For detailed precautions, refer to the page 0-23.

10. LOADING TO / UNLOADING FROM TRUCK

(1) When loading the tractor onto a truck, drive backward.

(2) Be extra careful when using ramps.

(3) If the engine stops on ramps, depress the brake pedals immediately and release them slowly to move onto the ground. Then, start the engine again to climb the ramps again.

https://truckmanualshub.com/

11. CAUTIONS FOR DRIVING ON ROAD

(1) When changing the direction on a road, use the turn signal lamp to inform other drivers.

(2) Use the low beam when there is any vehicle coming on the other side at nighttime.

(3) Check that the left and right brake pedals are connected.

(4) Keep the work lamps off when driving at night.

(5) Follow any applicable laws and keep safe driving.

(6) Never let anyone ride the tractor, except yourself as a driver.

WARNING

- If driving on a road with an implement attached, the front side of the tractor tends to be lifted and vehicle may not be steered properly.

12. OPERATION CHECK DURING DRIVING

Observe that every part is properly operated during driving.

►ENGINE OIL PRESSURE

If the engine oil level warning lamp comes on during driving, the lubrication system may malfunction. Check the engine oil immediately and have your vehicle checked by your workshop.

►CHARGING

If the battery charge warning lamp comes on during driving, the battery is not properly charged. In this case, check the battery condition, and if necessary, have it checked by your workshop.

►ENGINE COOLANT

If the coolant temperature war-ning lamp comes on, stop the en-gine and check the followings:

- Radiator coolant
- Radiator fin for clogging
- Fan belt for looseness

If necessary, have your machine checked by your workshop.

NOTE

- When the coolant temperature warning lamp comes on, the engine is overheated. If running the engine under this condition continuously, the engine parts can be severely damaged. Make sure to take an appropriate action immediately.

https://truckmanualshub.com/

WORK PROCEDURE

1. PRECAUTIONS FOR HANDLING IMPLEMENT..... 4-2

2. GENERAL IMPLEMENT..... 4-2

https://truckmanualshub.com/

1. PRECAUTIONS FOR HANDLING IMPLEMENT

(1) When driving the tractor to attach or detach an implement, make sure that there is no one in between or around the tractor and implement.

(2) Install and remove the implement only on safe and level ground.

(3) When installing a heavy implement, install weight on the front to keep balance.

(4) When adjusting an implement, apply the parking brake, stop the engine and set the PTO switch in the OFF position in advance.

(5) To tow anything, use the towing hitch only.

WARNING

- Read instructions on warning decals on each implement thoroughly before work.
- To avoid an injury due to mishandling of an implement, read the user's manual of the implement thoroughly and work safely and precisely with caution.
- Installation of an improper implement can lead to an injury. Install only implements specified by the Manufacturer.

2. GENERAL IMPLEMENT

► ROTAVATOR

<Safety precautions for rotavator>

- Never remove the safety cover of the rotavator.
- Do not remove the PTO shaft cover and safety cover on the universal joint.
- When adjusting each part, disengage the PTO and stop the engine in advance.
- When driving on a road, keep the PTO disengaged. Also, keep the rotavator lowered on a road as long as it does not hit the ground.
- For the universal joint, its inner shaft and outer shaft should be overlapped at least 15 cm.
- Check that the universal joint is firmly fixed to the tractor and rotavator shaft.

https://truckmanualshub.com/

<Effective plowing pattern>

(1) Sequential returning plowing pattern

- This pattern can be useful in a well-planned field in a good condition.
- The border shown in the figure is the effective plowing width of the rotavator and should be set a little narrower than three times of one plowing width.
- The starting point is the ending point.
- Plow in a sequential pattern from (1) to (6) and in a circular pattern from (7) to (18).
- When driving forward to plow, have the bank on the right side.
- Be careful not to press already-plowed soil with the wheels.

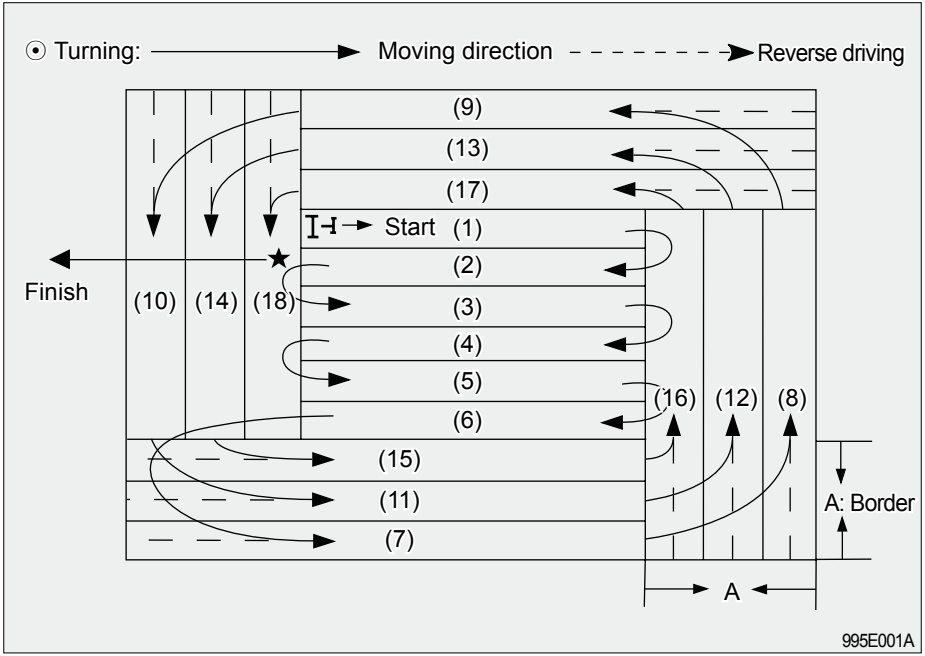

https://truckmanualshub.com/

(2) Alternating returning plowing pattern

- This pattern is useful for narrow or short fields or poorly planned fields in which are not easy to turn.
- In the figure, the plowing width for (1), (2), (3) and (4) should be overlapped with the one for (5), (6) and (7) for approx. 10 cm.
- For the sections (1) to (7), perform plowing in an alternating pattern. For the sections (8) to (19), plow in a circular pattern.
- Refer to the sequential returning pattern for other details.

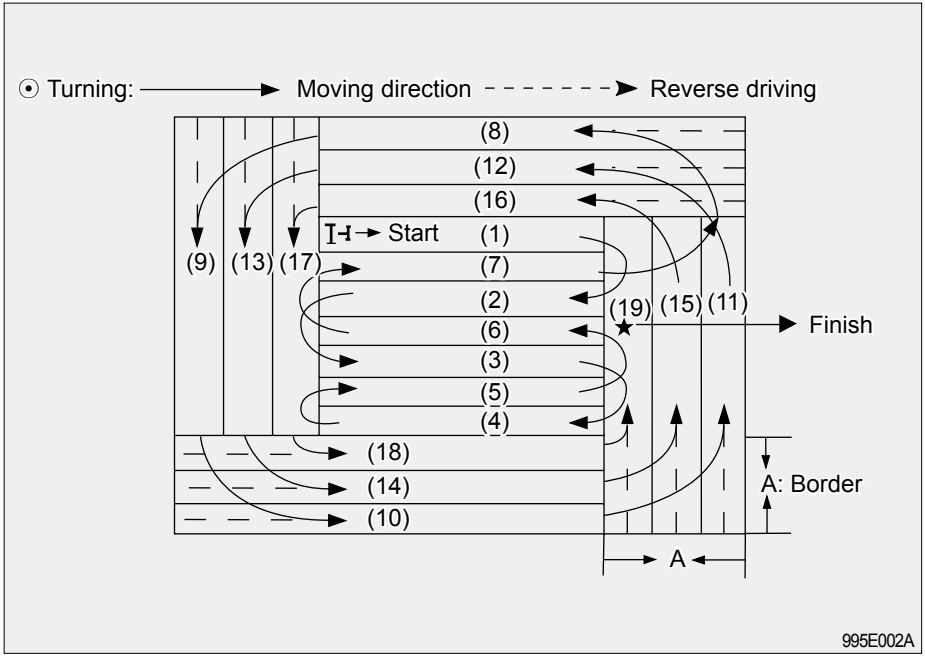

https://truckmanualshub.com/

(3) Land leveling pattern

- The land leveling work may be performed after crushing soil or not.
- The vehicle speed can be set faster when performing the land leveling work with soil crushed already.
- When working in a wet field, fill the field with a sufficient amount of water so that the trace of plowing cannot be seen.
- The border shown in the figure should be set a little narrower than two times of one plowing width.
- Refer to the alternating returning pattern for other details.

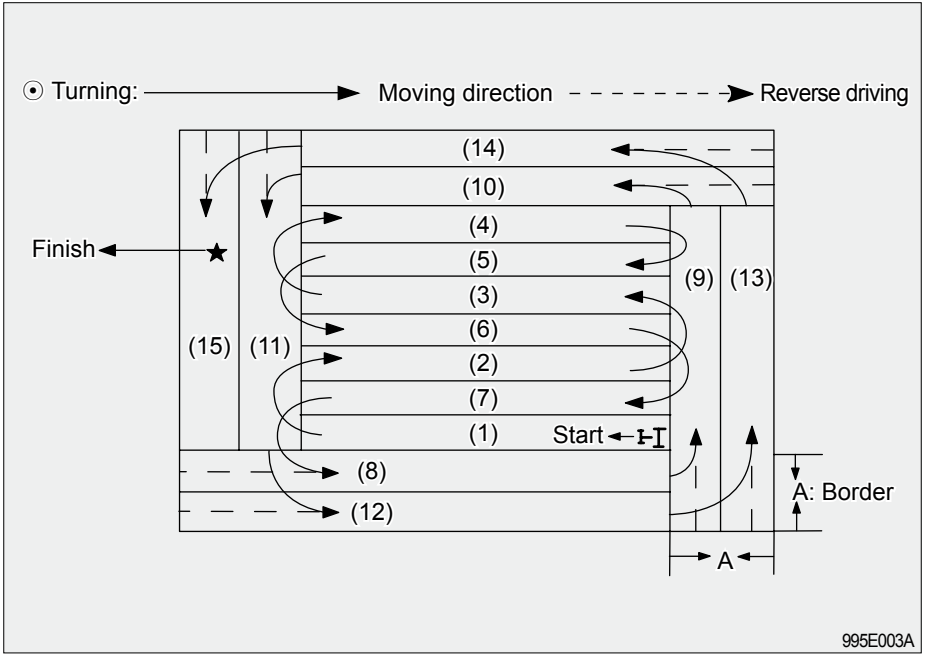

https://truckmanualshub.com/

MEMO

https://truckmanualshub.com/

MAINTENANCE

1. OPENING COVERS 5-2
2. INSPECTION ITEMS 5-2
3. INSPECTING AND CHANGING COOLANT 5-4
4. CHECKING AND CHANGING OIL 5-5
5. REPLACING FILTER AND CARTRIDGE 5-9
6. FUEL SYSTEM 5-11
7. CHECKING AND CLEANING AIR CLEANER 5-12
8. ADJUSTING TREAD 5-13
9. GREASING 5-14
10. CHECKING HOSES 5-15
11. CHECKING ELECTRIC SYSTEM 5-15
12. CHECK AND ADJUST EACH PART 5-20
13. ROUTINE MAINTENANCE SCHEDULE 5-23

https://truckmanualshub.com/

1. OPENING COVERS

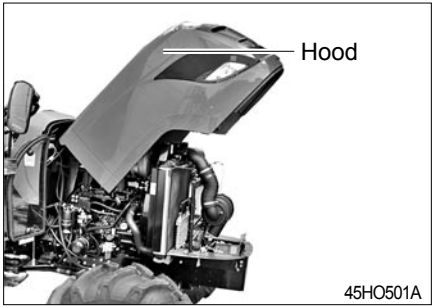

► OPENING HOOD

① Slide the hook to the side. Then, the hood opens with a clicking sound.

② Lift the hood with hands. Then, the hood is automatically opened and fixed by its damper.

2. INSPECTION ITEMS

To prevent any possible failure, some items should be checked daily.

Make sure to perform inspection before driving.

► INSPECTION ITEMS

Inspect each part in the following order:

① Check the items that were faulty yesterday.

② Go around the tractor and check:

- Lamps for proper illumination and damage
- Tires for inflation pressure, crack, damage and wear
- Rotating parts for loose bolts and nuts
- Transmission fluid level
- Implement attachment status

https://truckmanualshub.com/

③ Open the hood and check:
- Engine oil level
- Coolant level
- Fan belt for looseness and damage

④ Sit on the driver's seat, turn the main switch to the "ON" position and check:
- Fuel gauge for proper operation
- Fuel level
- Engine oil and charge warning lamps for blinking operation
- Turn signal lamp
- Horn operation
- Brake pedal free play

⑤ Start the engine, drive the tractor slowly and check:
- Emission color
- Brake pedal operation
- One brake pedal operation
- Steering wheel for heaviness and vibration
- Coolant gauge operation
- Hydraulic operation of 3-point link

https://truckmanualshub.com/

3. INSPECTING AND CHANGING COOLANT

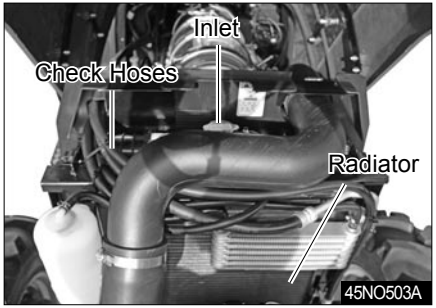

► ENGINE COOLANT INSPECTION AND CHANGE

(1) Inspection

Open the radiator cap and check that the radiator is filled with coolant up to its filler inlet. If the coolant amount is insufficient, add more coolant.

WARNING

- Do not open the cap when the engine is hot. Otherwise, hot steam can burn you seriously. Wait until the engine is sufficiently cooled down.

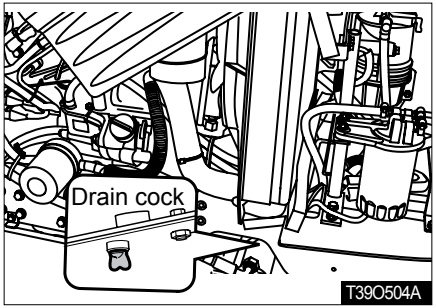

(2) Change

① To drain coolant, open the drain cock and radiator cap as well for faster draining.

At this time, place the heater cock in the opening position.

② Wash the inside of the radiator with clean water thoroughly.

③ Fit the drain cock and add coolant.

④ Start and idle the engine for approx. 5 minutes. Then, check coolant in the reservoir tank and add more coolant as necessary.

(3) Antifreeze

If coolant freezes, the engine can be damaged.

- Clean the radiator thoroughly before adding antifreeze.
- The mixture ratio of antifreeze is different by manufacturers and temperature. Refer to the manufacturer's manual.
- Mix antifreeze with water sufficiently before adding it.
- Adding antifreeze

  If evaporated - Add water for the reduced amount.

  If leaked - Add mixture of antifreeze and water with the same mixture ratio.

CAUTION

- If engine coolant gets on your skin, it can irritate the skin and cause a skin condition. Make sure to clean your skin with soap and water or hand cleaner thoroughly.

https://truckmanualshub.com/

4. CHECKING AND CHANGING OIL

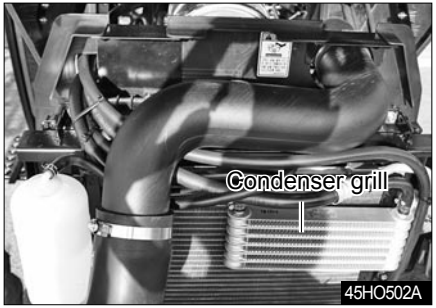

►CLEANING RADIATOR AND CONDENSER GRILLES

When working in a grassy field or working at night, the radiator or condenser grille may be clogged by grass, straws or bugs, reducing cooling performance.

In this case, clean the grille. If dust is stuck between the fan and tube, flush the area with clean water.

NOTE

- Do not clean the radiator fin with water jet. It can deform the fin.

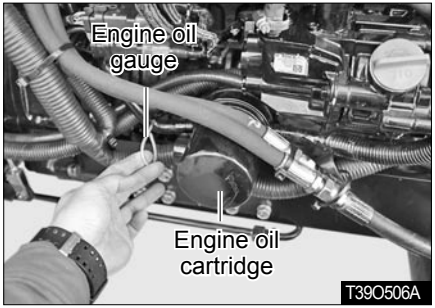

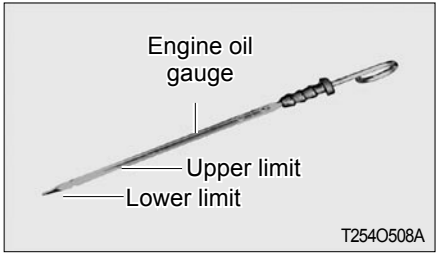

►CHECKING AND CHANGING ENGINE OIL

(1) Inspection

① Pull out the dipstick, wipe its tip and insert it again. Then, pull it out and check that the oil level is between the upper and lower limits.

② If insufficient, add oil.

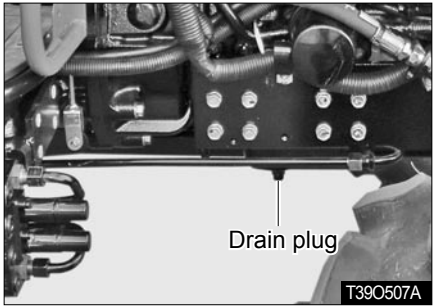

(2) Changing

- Unscrew the drain plug on the lower section of the engine to drain contaminated engine oil. Since hot oil flows out of the engine first, be careful not to get burnt.
- After draining oil, tighten the engine oil drain plug.
- Add the specified amount of the specified engine oil through the filler hole.

https://truckmanualshub.com/

NOTE

- Do not add engine oil over the upper limit level.
- Check the engine oil before starting the engine or at least in 5 minutes after the engine is stopped.
- When trying to use new oil from a different manufacturer or oil with different viscosity, drain used oil completely before adding new oil.

(3) Oil specification

Diesel engine oil:

(API CJ-4 SAE 15W40)

CAUTION

- If engine oil gets on your skin, it can irritate the skin and cause a skin condition. Make sure to clean your skin with soap and water or hand cleaner thoroughly.
- Make sure to cool down the engine sufficiently before draining oil. Oil is very hot and can cause a burn if changing oil right after the engine is stopped.

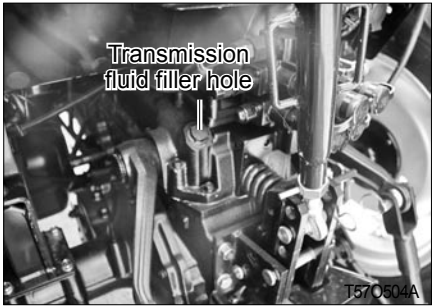

►CHECKING AND CHANGING TRANSMISSION FLUID

(1) Inspection

Perform inspection with the engine stopped.

① Check the transmission fluid level through the sight glass to see if the level is between the upper and lower limits.

② If insufficient, add oil.

https://truckmanualshub.com/

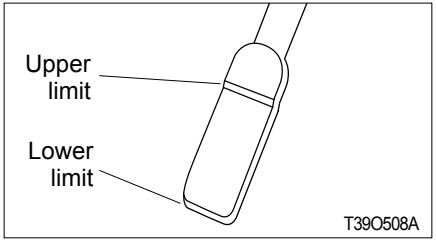

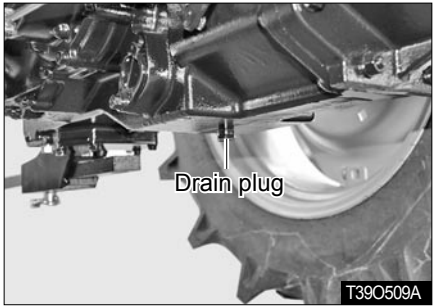

(2) Changing

① Unscrew the drain plug on the lower section of the transmission to drain contaminated transmission fluid. Since hot fluid flows out of the engine first, be careful not to get burnt.

② After draining fluid, tighten the transmission fluid drain plug.

③ Add the specified amount of the specified transmission fluid through the filler hole.

NOTE

- Do not add fluid over the upper limit level.
- Check the fluid before starting the engine or at least in 5 minutes after the engine is stopped.
- When trying to use new fluid from a different manufacturer or fluid with different viscosity, drain used fluid completely before adding new fluid.

https://truckmanualshub.com/

CAUTION

- If transmission fluid gets on your skin, it can irritate the skin and cause a skin condition. Make sure to clean your skin with soap and water or hand cleaner thoroughly.

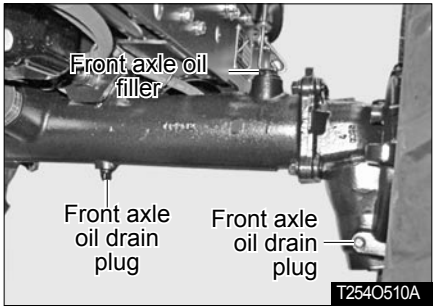

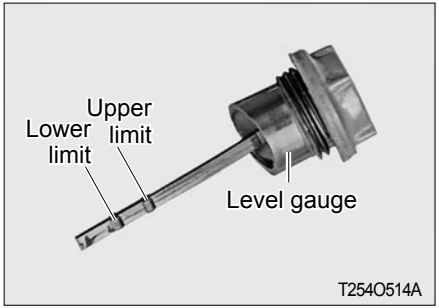

►CHECKING AND CHANGING FRONT AXLE OIL

(1) Inspection

① Pull out the dipstick, wipe its tip and insert it again. Then, pull it out and check that the oil level is between the upper and lower limits.

② If insufficient, add oil.

(2) Changing

① Unscrew the drain plugs on the bottom of the axle and left/right final cases to drain engine oil. Since hot fluid flows out of the engine first, be careful not to get burnt.

② After draining oil, tighten the oil drain plug.

③ Add the specified amount of the specified oil through the filler hole.

NOTE

- Do not add front axle oil over the upper limit level.
- Check the front axle oil before starting the engine or at least in 5 minutes after the engine is stopped.
- When trying to use new oil from a different manufacturer or oil with different viscosity, drain used oil completely before adding new oil.

https://truckmanualshub.com/

5. REPLACING FILTER AND CARTRIDGE

CAUTION

- If oil gets on your skin, it can irritate the skin and cause a skin condition. Make sure to clean your skin with soap and water or hand cleaner thoroughly.
- Make sure to cool down the engine sufficiently before draining oil. Oil is very hot and can cause a burn if changing oil right after the engine is stopped.

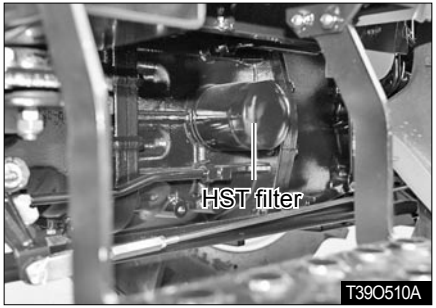

►REPLACING TRANSMISSION FLUID FILTER CARTRIDGE

① The HST oil filter is located under the floor.

② Remove the hydraulic oil filter element by turning it counterclockwise with a wrench.

③ Apply a thin film of oil to the O-ring of a new cartridge and install the new cartridge by tightening it with a hand. When its packing touches the sealing surface, turn it approx. 2/3 turns further with a wrench.

④ Add hydraulic oil to the specified level.

⑤ Check the oil level with the dipstick again. If still insufficient, add more.

https://truckmanualshub.com/

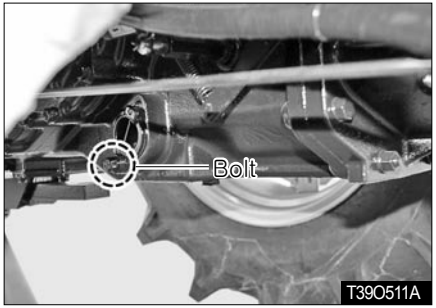

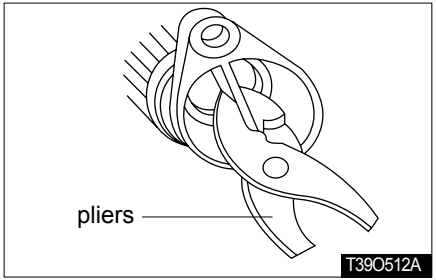

►TRANSMISSION STRAINER CLEANING

① When changing transmission fluid, clean with diesel fuel.

② Unscrew the filter body support bolt from the right lower section of the rear transmission case and gently pull the filter with pliers to remove it.

►REPLACING ENGINE OIL FILTER CARTRIDGE

① Remove the engine oil filter cartridge by turning it counterclockwise with a wrench.

② Apply a thin film of oil to the O-ring of a new cartridge and install the new cartridge by tightening it with a hand. When its packing touches the sealing surface, turn it approx. 2/3 turns further with a wrench.

③ Put the engine oil to the specified level. in new oil filter cartridge.

https://truckmanualshub.com/

④ Run the engine for approx. 5 minutes and check for proper operation through the engine oil warning lamp. Then, stop the engine.

(This warning lamp should be turned off while the engine is running.)

⑤ Check the oil level with the dipstick again. If still insufficient, add more.

6. FUEL SYSTEM

►FUEL SYSTEM

Use only low sulfur or ultra low sulfur diesel fuel.

(1) Fuel tank

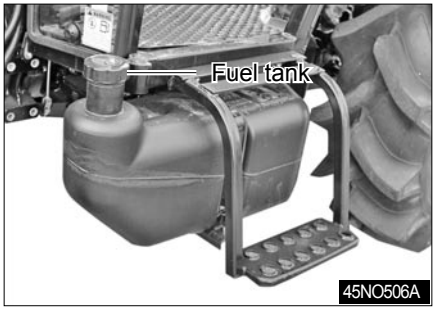

NOTE

- If foreign materials, such as dust and sand, or water are mixed in fuel, it can deteriorate the performance of the fuel injection pump. Make sure to add quality fuel through the strainer.

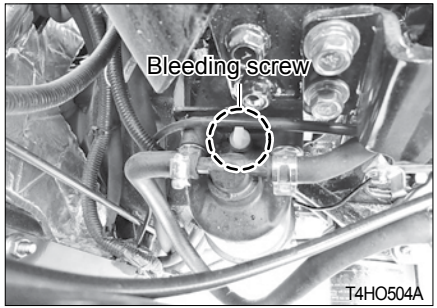

(2) How to bleed fuel system

It is necessary to bleed the system under the following conditions.

- The engine is stopped due to the empty fuel tank.

- The filter or pipe is removed.

① Unscrew the bleeding screw.

② Start the engine.

③ When clean fuel flows out of the bleeding screw, tighten the screw.

④ Repeat the procedure if the system is not bled completely.

https://truckmanualshub.com/

(3) Fuel filter cleaning and element replacing

This filter is to remove foreign material and water from fuel.

① Set the fuel filter cock to the 'OFF' position.

② Loosen the ring screw on top of the cap to remove the cap. Then,

③ Flush the element with diesel fuel to remove any foreign material from it.

④ If the element is severely contaminated, replace it with a new one.

NOTE

- Replace the fuel filter every 500hrs ofter replacing it at first 50hrs.

7. CHECKING AND CLEANING AIR CLEANER

Check and clean the air cleaner according to the following instructions:

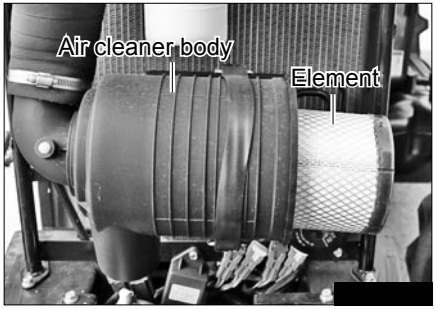

►VACUUM VALVE CLEANING

- Pull out the valve with a hand and remove dust from its inside. If it is dirty or watery, wipe it with a dry rag thoroughly before fitting it again.

< Cautions for inspection and service of air cleaner >

(1) Use the standard element and filter and do not apply oil on them.

(2) Remove any dust in the cover thoroughly.

(3) Install it firmly so that dust does not enter below the cover.

(4) Never drive with the element and filter removed.

https://truckmanualshub.com/

►AIR CLEANER CLEANING

① Blow compressed air from the inside toward the outside of the element. Keep proper distance between the air nozzle and element.

►AIR CLEANER REPLACING

After cleaning the element 5 times or if it is damaged, replace it with a new one.

NOTE

- Do not hit the element with a rock or concrete during its cleaning.
- Make sure to install the element firmly.
- Tighten each part of the air cleaner securely to block dust completely.

8. ADJUSTING TREAD

►ADJUSTING FRONT WHEEL TREAD

It can be adjusted in two steps by switching the left and right tires and discs.

► ADJUSTING REAR WHEEL TREAD

It can be adjusted in four steps by switching the left and right tires and discs.

WARNING

- For safety, have tread adjustment performed by your dealer or workshop.
- Never remove tires if there is no safe supporting device. The tractor can roll over.

CAUTION

- After adjusting the wheel tread, the vehicle's breadth and turning radius are changed. Keep this in mind during driving.

https://truckmanualshub.com/

■ STANDARD

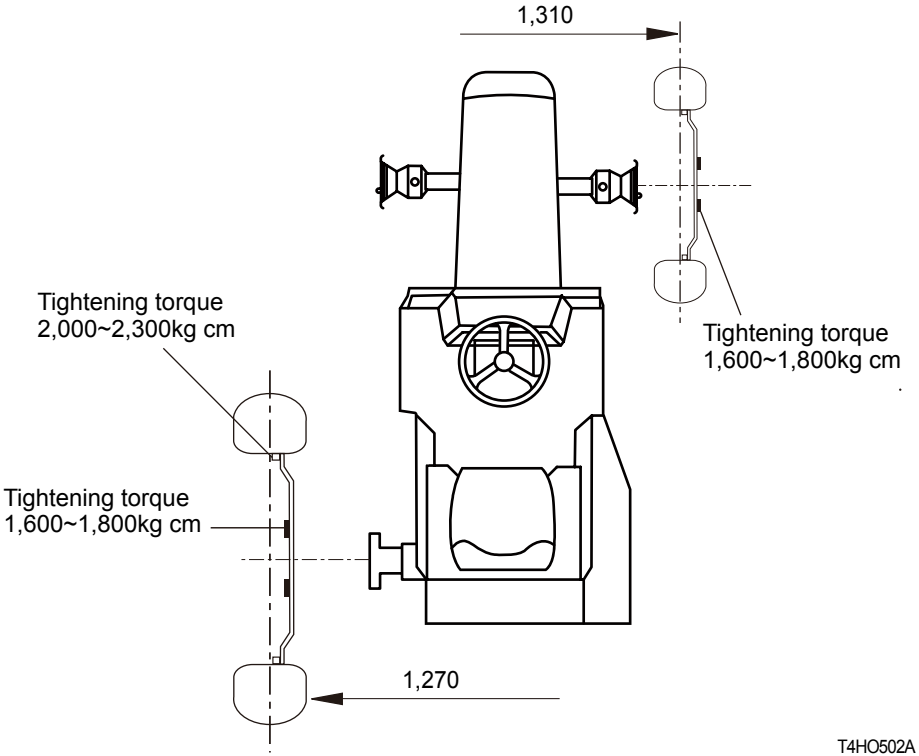

9. GREASING

►GREASING POINTS

For general greasing points, refer to the fuel, oil and fluid specification chart. (See page 5-26.)

However, add grease before work if the tractor is to be used in a wet field.

►GREASING BRAKE ARM

Remove the rubber caps on the floor and dash panel to access to the grease nipple.

Add grease with the supplied grease gun.

https://truckmanualshub.com/

10. CHECKING HOSES

Rubber parts, such as the fuel hose and radiator hose, are aged by time even when the tractor is not in use. Therefore, such parts should be replaced with their tightening bands every 2 years or when they are damaged.

WARNING

- If any fuel hose is damaged, fuel leaks and it can catch fire. Make sure to check the fuel hose and take a necessary action.

11. CHECKING ELECTRIC SYSTEM

► CHECKING AND CHARGING BATTERY

DANGER

- When charging the battery after removing it from the tractor, it produces hydrogen gas, presenting a fire risk. Charge the battery only in a well-ventilated area.
- The battery produces highly flammable hydrogen gas which can explode. Keep flammable items and spark away from the battery.
- The battery electrolyte is sulfuric acid so can burn your skin and eyes. Be careful not to spill any.

DANGER

- If the battery electrolyte gets on your eyes, skin, clothes or object, rinse it with water thoroughly. If you swallowed it, drink a lot of water. Also, get medical attention immediately if acid contacts your eye or is swallowed.

https://truckmanualshub.com/

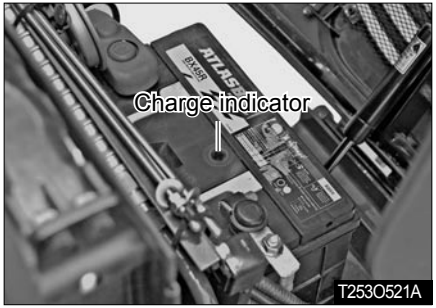

The battery has the charge indicator:

check	Battery Status
Green	Fully charged
Red	Charging required
White	Insufficient electrolyte

<Checking>

① Checking battery charging level

- If the battery is not used for over two weeks, it may become hard to start the engine. Charge the battery in this case.

② If the battery terminal is corroded, it cannot deliver current. If it is corroded or contaminated, wipe it with sandpaper or a brush.

Battery specification
12V 80AH (20HR)

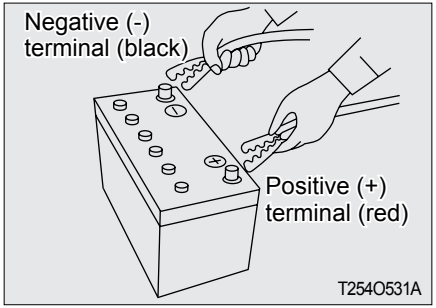

<Charging>

① Turn the ignition switch to the "OFF" position and remove the battery from the tractor.

② Charge the battery in a well-ventilated area.

③ Charge the battery with the normal procedures and avoid quick charging.

④ Turn the charger switch OFF and connect the cables to the negative and positive battery terminals correctly.

⑤ When using a charger, its charging current should be below 10 A.

https://truckmanualshub.com/

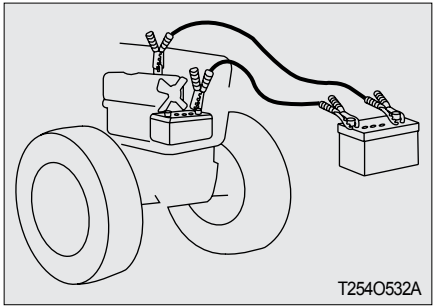

► JUMP START

① Turn off all electric devices.

② Connect the positive terminal of the normal battery to the positive terminal of the discharged battery with the jump cable.

③ Connect the negative terminal of the normal battery to the engine body of the tractor for the discharged battery with the jump cable.

④ Firstly, start the engine of the vehicle with the normal battery. Then, start the engine of the tractor with the discharged battery.

⑤ After the engine is started, disconnect the negative cable first. Then, disconnect the positive cable.

⑥ Charge the discharged battery for approx. 30 minutes after the engine is started.

WARNING

- Make sure to connect the positive terminal first and connect the negative terminal to the engine body of the tractor with the discharged battery.

► CHECKING ELECTRIC WIRING

(1) Loose wiring terminals can cause contact failure and damaged wirings can lead to performance deterioration of electric devices, short circuit and fire. Replace or repair aged and damaged wirings.

(2) If wiring sheath is peeled off, wrap wiring with insulating plastic tape.

(3) If fasteners or bands to fix wirings are damaged, fix wirings with clamps.

(4) Have wirings checked by your workshop once a year regularly to avoid fire.

https://truckmanualshub.com/

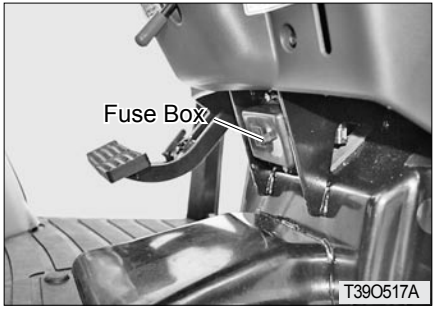

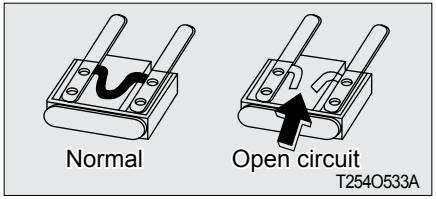

► CHECKING AND REPLACING FUSE

(1) Body fuse box

Fuses are installed in this tractor to prevent any possible accident in case of wiring circuit malfunction.

If the electric system is malfunctioning during driving, check for any blown fuse.

① Remove the cover of the fuse box.

② Remove the blown fuse.

③ Fit a new fuse with the same capacity.

④ The function and capacity of each fuse are indicated on the cover of the fuse box.

WARNING

- If using fuses other than the specified, wirings can be overheated, leading to a fire. Never use a fuse with different capacity. Also, never use a steel wire or foil instead of a fuse.

(2) High-capacity fuse (50 A)

This tractor is equipped with four fuses for wirings.

These fuses are blown to cut current to the electric circuit in order to protect wirings. Find the cause for blown fuses and replace them with the specified genuine parts.

https://truckmanualshub.com/

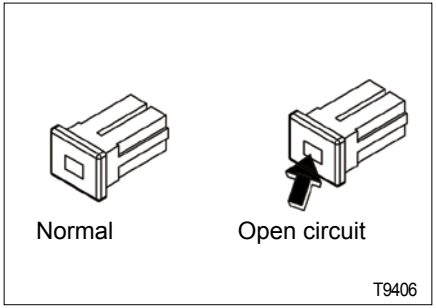

<Inspection>

Check the fuse through the transparent window to see if it is blown.

►REPLACING LAMP BULB

If a lamp does not come on by operating the corresponding switch:

① Check the corresponding fuse.

② If the fuse is intact, remove the bulb socket from the lamp.

③ Remove the bulb from the socket and check for blown filament.

④ If the filament is blown, replace the bulb with a new bulb with the same capacity.

Bulb	Specifications
Headlamp	12V H4 55W
Turn signal lamp (Front)	12V 21W
Turn signal lamp (Rear)	12V 21W
Position lamp (Front)	12V 5W
Stop lamp/position lamp	12V 21W / 5W
Instrument cluster lamp	12V 3.4W
Work lamp(Rear)	12V 25W

https://truckmanualshub.com/

12. CHECK AND ADJUST EACH PART

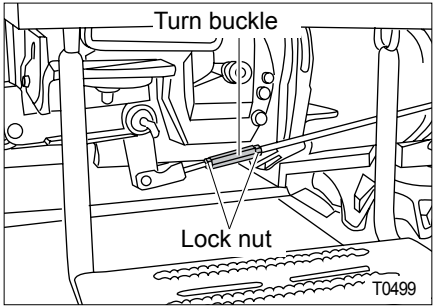

►CHECKING AND ADJUSTING BRAKE PEDAL

The brake pedal's play increases as it is used for an extended period of time.

Its balance is changed as well.

If its play is excessive, adjust it.

<Adjustment>

① Unscrew the lock nut and turn the adjusting nut to adjust the play (left and right).

② Turning it counterclockwise increases the play while turning it clockwise decreases the play.

③ After adjustment, tighten the lock nut firmly.

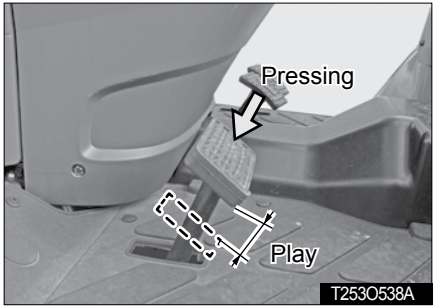

►BRAKE PEDAL PLAY

Depress the pedal lightly with a hand to check its play.

division	Specified value
Play	30~40㎜

⚠ WARNING

- If the left and right brakes are not operated simultaneously, braking force is applied only to one side, leading to a dangerous situation. Make sure to adjust the left and right pedals' play to the same level.
- After adjustment, confirm the operating state.

https://truckmanualshub.com/

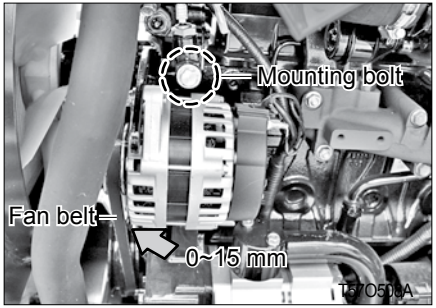

►CHECKING AND ADJUSTING FAN BELT

Check and adjust the fan belt's tension periodically.

① Unscrew the alternator mounting bolt slightly and move the alternator to adjust the tension.

② Check the belt's tension. Press the middle of the belt with about 10kg of force. It is okay when the belt is deflected about 0~15mm.

③ Replace the belt if it is crocked or frayed.

④ Replace the belt if tegument is worn out or some pieces are detached.

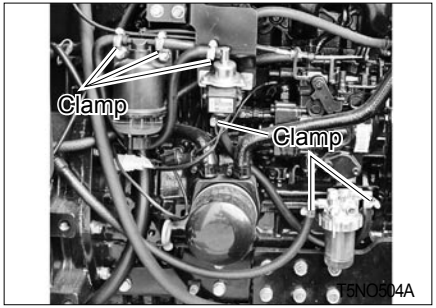

►FUEL HOSE CHECKING

Check the fuel hose as follows :

① Stop the engine. After the engine is sufficiently cooled down, open the hood.

② Check if the fuel hose is damaged or leaks. Replace it if necessary.

③ Tighten the clamp.

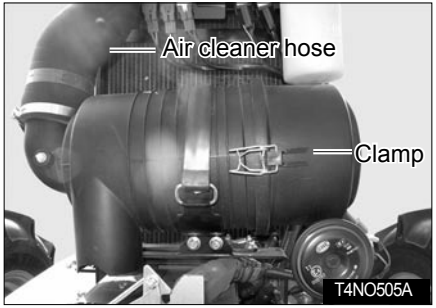

►AIR CLEANER HOSE CHECKING

Check the air cleaner hose as follows :

① Stop the engine. After the engine is sufficiently cooled down, open the hood.

② Check if the air cleaner hose is damaged or leaks. Replace it if necessary.

③ Tighten the clamp.

https://truckmanualshub.com/

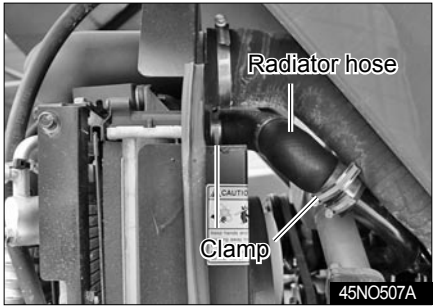

►RADIATOR HOSE CHECKING

Check the radiator hose as follows :

① Stop the engine. After the engine is sufficiently cooled down, open the hood.

② Check if the radiator hose is damaged or leaks. Replace it if necessary.

③ Tighten the clamp.

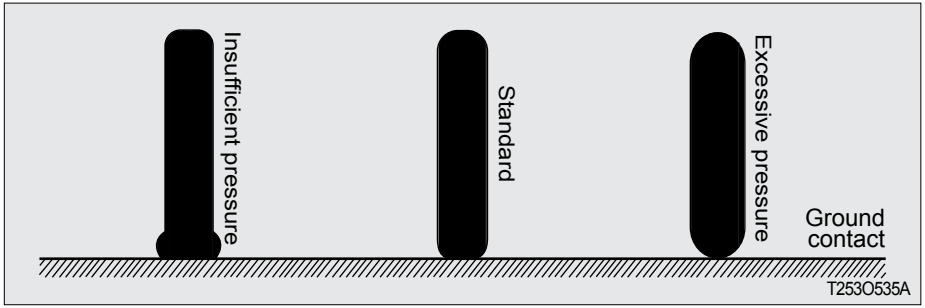

►TIRE INFLATION PRESSURE

Check if the inflation pressure of the front and rear tires is correct. If not, adjust it to the specification.

Item \ Tire	Standard Specifications
Front (R1/ Agricultural)	9.5-16
Rear (R1 Agricultural)	13.6-26
Front (R4/ Industrial Tires)	12-16.5
Rear (R4/ Industrial Tires)	17.5-24

WARNING

- Make sure to keep the specified inflation pressure of the tires to avoid an accident or even death due to tire's rupture.

https://truckmanualshub.com/

13. ROUTINE MAINTENANCE SCHEDULE

►ROUTINE MAINTENANCE SCHEDULE

CAUTION

- Check or adjust each part only when the engine is stopped.
- When any hot part should be serviced, wait until it is cooled down.

○ : Check, Add, Adjust
△ : Clean, Wash
● : Change
★ : Service by workshop

Item	Inspection part	Hourmeter display													Remarks	Remarks page
		Daily	50	100	150	200	250	300	350	400	450	500	550	600		
Engine	Engine oil & cartridge		●					●					●		Every 250 hrs	5-5
	Cleaning fuel filter and replacing element	○										●			Replace element every 500 hours	5-11
	Radiator coolant	○										●				5-4
	Air cleaner element			△		△		●		△			●			5-12
	Fan belt		Check tension every 50 hours and replace as necessary													5-21
	Battery		Check and replenish every 100 hours and replace as necessary													5-15
	Radiator and air cleaner hoses and bands						○					○			Hoses Replace every 2 years	-
	Checking fuel hose and band						○					○			Hoses Replace every 2 years	-

https://truckmanualshub.com/

○ : Check, Add, Adjust △ : Clean, Wash
● : Change ★ : Service by workshop

Item	Inspection part	Hourmeter display												Remarks	Remarks page
		50	100	150	200	250	300	350	400	450	500	550	600		
Body	Transmission fluid	●										●		Replace at every 500 hours	5-10
	Hydraulic oil filter	●										●			5-10
	Front axle oil	●										●			5-8
	Toe-in						★						★	2 - 6 mm	-
	Greasing each part	Add every 50 hours, daily if working in watery field													5-25
	Brake pedal play	Check frequently before driving (check simultaneous operation of left and right parts)												Play: 30 - 40 mm	5-20
	Tightness of front / rear wheels	Check frequently before driving													-
	Adjusting throttle system						○						○		-
	Rubber hoses					○					○				-
	Checking electric wiring	○			○			○			○			Every year	-

https://truckmanualshub.com/

►FUEL, OIL AND FLUID SPECIFICATION CHART

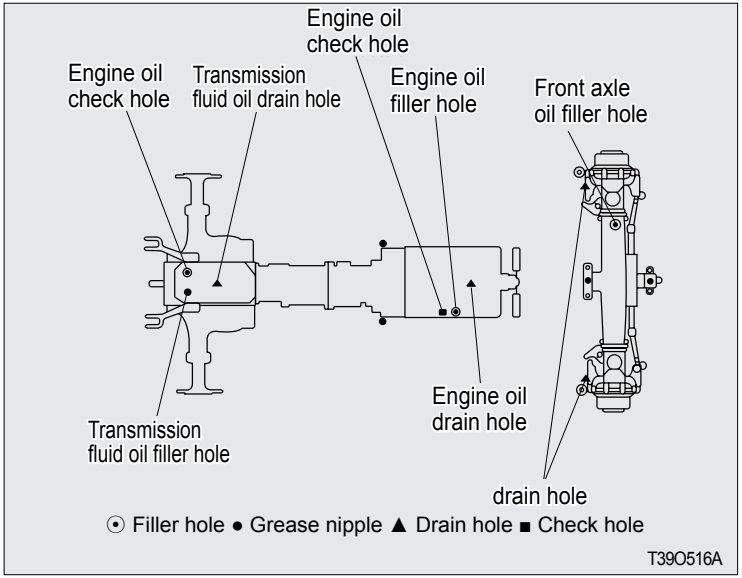

⦿ Filler hole ● Grease nipple ▲ Drain hole ■ Check hole

No.	Applied part	Oil	gal(ℓ) HST
1	Coolant	Antifreeze	1.72 (6.5)
2	Engine	Engine Oil API CJ-4 SAE 15W/40	1.19 (4.5)
3	Transmission fluid	Tractor Hydraulic Fluids - API GL-4 Grade - Below -4℉(-20℃) ISO VG 32 - Above -4℉(-20℃) ISO VG 46	10.8 (41)
4	Front axle	Gear Oils - API GL-4 Grade - SAE 80W/90	2.16 (8.2)
5	Fuel tank	Diesel fuel	9.51 (36)

https://truckmanualshub.com/

MEMO

https://truckmanualshub.com/

CABIN SYSTEM

1. MAJOR FEATURES 6-2

2. INSTRUMENT AND RELATED PARTS..... 6-3

3. HOW TO CONTROLS CABIN 6-5

https://truckmanualshub.com/

1. MAJOR FEATURES

The cab fully conforms to the international standard as far as safety and soundproofing are concerned.

It can be provided with ventilation, heating and air-conditioning system.

It is available in the following version:

- Cab with ventilation and heating systems.
- Cab with ventilation, heating and air-conditioning systems.

CAUTION

- The cab is in full conformity with the international standards as to the cab's soundproofing.
- Be very careful when operating in small spaces and always protect your ears whenever other working equipment is generating dangerous noise levels.

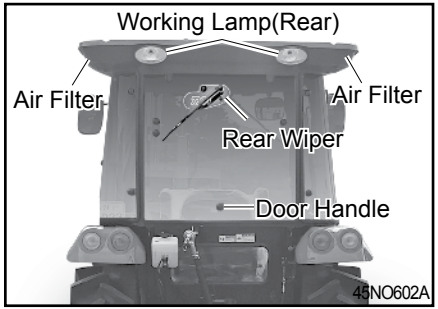

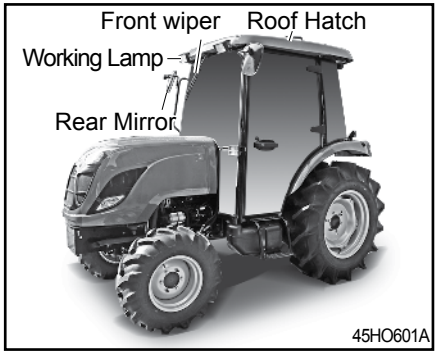

CAUTION

- Remember that steering, braking and operational performances are highly influenced by the implements mounted, the trailers transported and the ballasts applied to the tractor.

CAUTION

- When transporting heavy loads (Exceeding the weight of the tractor) reduce the speed under 15 Km/h (9.32 m/h).

CAUTION

- All the implements mounted onto the tractor must be safely secured.

CAUTION

- Be very careful during implement hitching and unhitching operations. When using implement supports, be sure they are suitable and sufficiently strong.

https://truckmanualshub.com/

2. INSTRUMENT AND RELATED PARTS

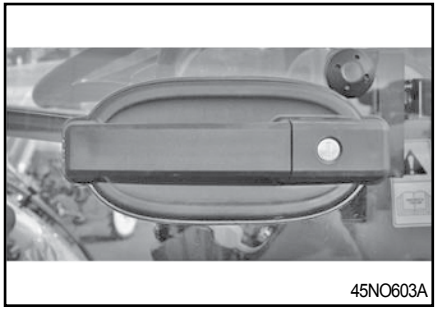

► DOORS

The doors are provided with key locks.

To open from the outside, when unlocked, pull the handle.

To open from inside, push the handle downwards.

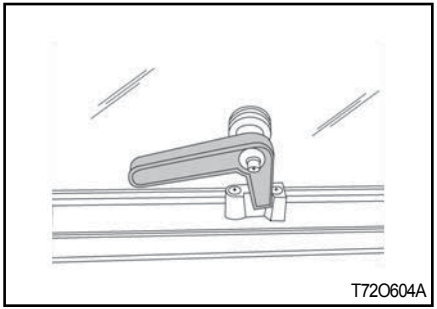

► REAR WINDOW

The rear window is fitted with central handle for opening.

When opened it is held in place by two dampers.

► WORKING LAMPS (FRONT AND REAR)

The working lamps are located on the cab roof (Two in the front and two in the rear). They are switched on by means of the special switches on the roof console.

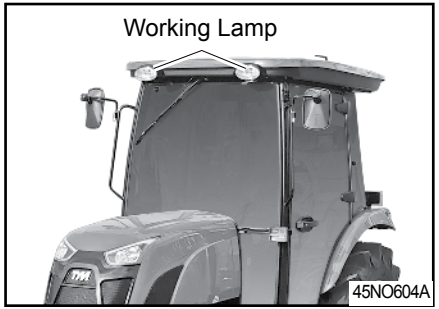

https://truckmanualshub.com/

► REARVIEW MIRRORS

The cab is provided with rearview mirrors on both sides. They can be adjusted and folded, whenever necessary, to avoid interference with external obstacles.

The mirror have a telescopic arm to allow positioning for maximum convenience by the user.

Remember that mirrors must always be positioned in compliance with road traffic regulations when driving on a public highway.

► CAB CEILING

The ceiling is padded with insulation material to block heat radiation into the cab and keep the temperature down when working in very sunny areas.

The cab platform is covered with a "firm grip" carpet in the most commonly used areas.

It is recommended to keep this carpet clear of earth, mud, etc. so that the operator may get on and off the tractor in full safety.

https://truckmanualshub.com/

3. HOW TO CONTROLS CABIN

► INTERIOR DEVICES

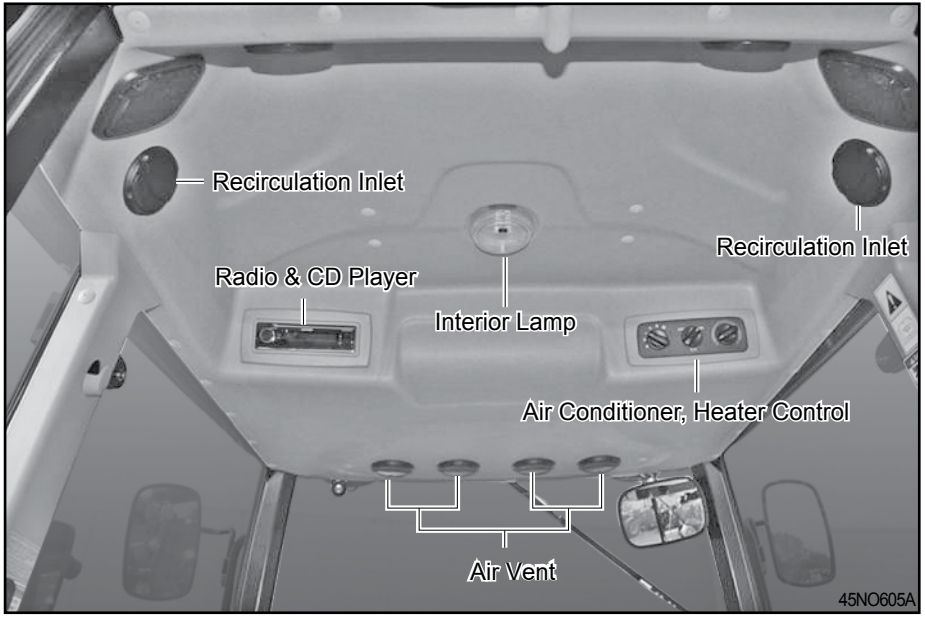

► VENTILATION

The ventilation unit is housed in the cab ceiling.

To switch it on and adjust it, turn the electrical fan switch to the desired speed.

The cab becomes slightly pressurized when the ventilation system is in operation, so that the fresh air can enter only by way of the filter installed in the rear section of the cab roof.

The fan switch can be operated only after the ignition key is inserted.

The air flow can be regulated and directed by suitable positioning the air diffusers.

Air can be taken in fresh from outside or recirculated from within the cab by way of the relative side inlets.

https://truckmanualshub.com/

RECIRCULATION INLETS FULLY CLOSED

Air is taken in entirely from outside the cab through the rear grille and filtered through a paper element positioned behind the grille.

※N.B: It is very important that the air diffusers never be completed closed so as to allow for a steady air flow.

To obtain a greater pressurization inside the cab, it is necessary to take the air from the outside, therefore the inside air recirculatiing grille should be fully closed.

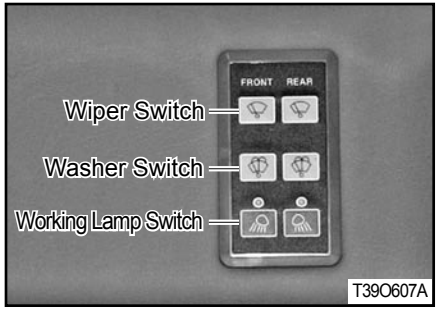

► WORKING LAMP SWITCH

The front and rear working lights are "ON" when push the button.The work light indicator lamp on the instrument cluster will illuminate.

► WIPER CONTROL SWITCH

< ON SWITCH >

- Wind screen wiper operation.
- Continuous pushing button operates wiper and washer pump.

< OFF SWITCH >

- Wind screen wiper "Off" and operates washer pump.

https://truckmanualshub.com/

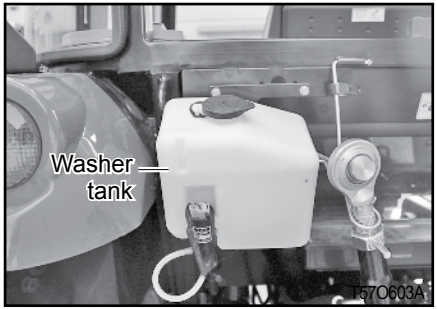

► WINDSCREEN WASHER TANK

Check the level of windscreen washer fluid in the plastic reservoir located on the rear side of tractor.

During winter it is advisable to add a suitable antifreeze or methyl alcohol to the windscreen washer fluid.

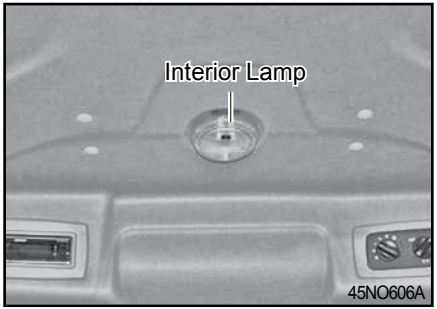

► INTERIOR LAMP

Push the button to light on and push it again to light off.

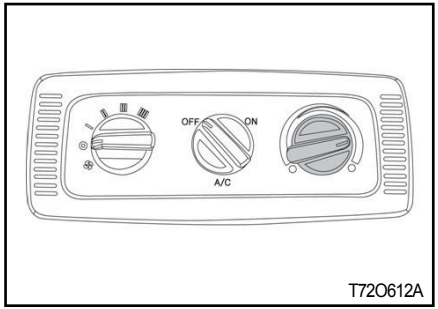

► BLOWER CONTROL SWITCH

① **Blower switch**

Air volume can be changed in 5 steps, from 0 to 4. At the '4' position, the largest air volume is obtained.

Air conditioner/heater on/off switch.

② - ON (turn right) - A/C is turned on.
- OFF (turn left) - A/C is turned off.

https://truckmanualshub.com/

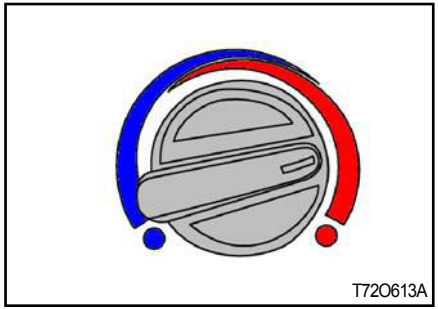

►TEMPERATURE CONTROL

③ **Temperature control switch**
Set this dial at the desired position to obtain the optimum air temperature.

- Turn right - to obtain warmer air.
- Turn left - to obtain cooler air.

► AIR CON. SWITCH

To operate the air conditioner, the blower must be on.The blower volume and temperature control and all vents must be adjusted to obtain the best cooling/heating for the ambient temperature and dust conditions. When operating the air conditioner system,the moisture level is decreased.

NOTE

- During cold weather,with ambient temperature above 32 ºF (0 ºC) operate the air conditioner at least once per month, for a period of 10 to 15 minutes. This will lubricate the seals to prevent them becoming brittle and help prevent the loss of refrigerant from the system.
- The system is equipped with an environmentally safe refrigerant, R134a. Never recharge the air conditioning system with refrigerant other than R134a as this will result in loss of cooling and permanent damage to all air conditioning components.

https://truckmanualshub.com/

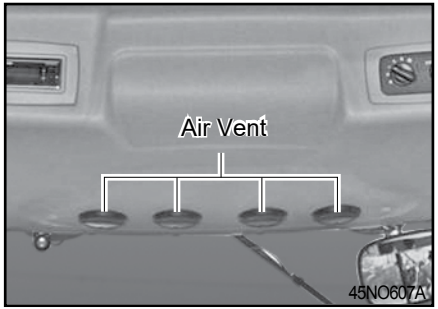

► AIR VENTS

With the air vent set in any position outside air will still be pulled into the cab.

► HEATING SYSTEM

The heater is switched on and adjusted by rotating the control knob at the roof console, then switching on the blower and setting the selector at the preferred speed.

Warm the cab up quickly, the knob should be rotated fully clockwise and the blower set to speed 3.

The screen is demisted or defrosted by air directed through a slot vent. For defrost or fast demist, all other vents should be closed off.

IMPORTANT

- Ventilation is provided by a single blower unit serving both the heating system and the air conditioning system.
- After reaching the desired temperature adjust the system to suit your needs.

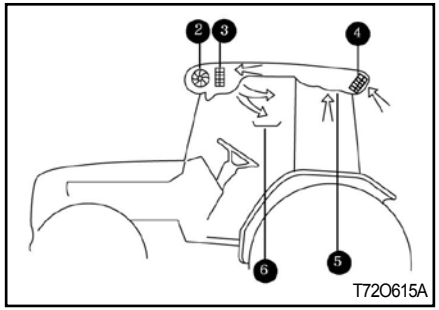

② Speed heating fan
③ Electric resistances
④ Air filter
⑤ Recirculation inlets
⑥ Air vent

NOTE

- For ideal system operation, the engine must run at 1,000 rpm.

https://truckmanualshub.com/

WARNING

- Before starting the engine, make sure the system is off (by turning off the ventilation fan) so as not to overload the battery.
- After the system at full power for a long period of time, never turn it off suddenly but let it first idle for about 20 seconds.

► HEATING SYSTEM CONFIGURATION

The heating system consist of two units:

1. Heater and blower unit installed behind roof console.
2. Power supplying set, consisting of an auxiliary alternator located front of the engine and driven by a belt directly linked to the engine pulley.

   If the air does not come out from the diffusers right away as soon as the system is started, turn off immediately and identify the fault.

※ N.B: Never turn on the heating system when working in dusty environments.

► HEATING AIR CONDITIONER SYSTEM

The system is designed to ensure optimum temperature inside the cab and maximum comfort and safety for the operator.

However, it is advisable to consult our specialized workshops whenever repairs or adjustments need to be performed.

Do not approach the system with open flames, as any escape from the circuit may produce a lethal gas.

https://truckmanualshub.com/

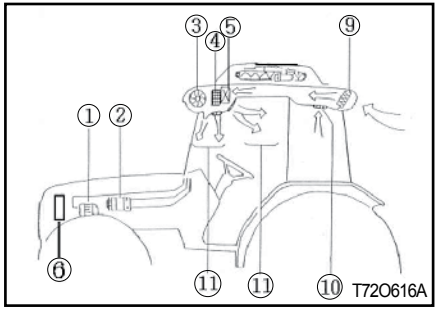

① Alternator
② Compressor
③ Speed fan
④ Electric resistance
⑤ Evaporator
⑥ Condenser
⑨ Air filter
⑩ Recirculation inlets
⑪ Air vents

► CIRCULATION VENT

With the circulation vent set in any position outside Air will still be pulled into the cab.

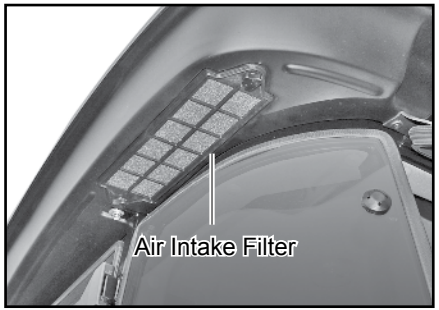

► CAB AIR INTAKE FILTER

The "paper" filter is not suitable for the treatment of pesticides and so must be replaced by an "active carbon" filter available optionally. Once the pesticide treatment is finished, it is necessary to once again replace the "Active carbon" filter with the paper filter, since this is the only type suited for filtering foreign particles from the air.

https://truckmanualshub.com/

WARNING

- Cab air filters remove dust in the air,but are not capable of removing chemicals used in spraying crops or in weed control.Many chemicals used for these purposes are toxic when improperly used.and can be hazardous to operators and others in the area. Follow the instructions of manufacturers of both the equipment and the chemicals regarding prohibition of dust or spray,personal hygiene practices,and other precautions noted by the manufacturers.

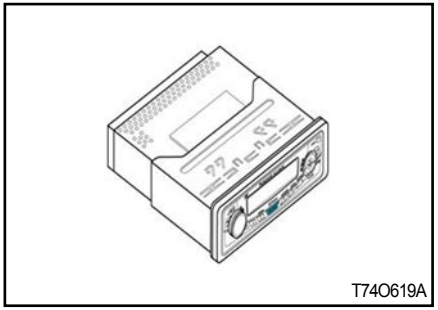

► RADIO, CD PLAYER (IF EQUIPPED)

For operation refer to the Radio, CD player manufacturers instructions.

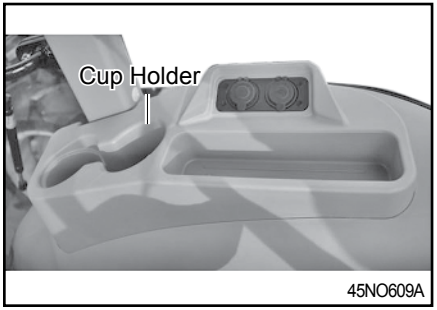

► CUP HOLDER

Put the bottles and Personal belongings.

https://truckmanualshub.com/

► CHECKING THE AIR CONDITIONING SYSTEM

1. Economic friendly refrigerant :
   R134a (0.7～0.85Kg)

The presence of air and water in the system could jeopardize its efficiency.

- The air is uselessly compressed by the compressor and no cooling effect is produced.
- The moisture has a tendency rise to obstructions which prevent the cooling efficiency.

2. Check belt tension;
   when finger pressure is applied to the mid-point between both pulleys.
3. Condenser fins must always be duly clean using water or an air set.

► CHECKING THE AIR CONDITIONING SYSTEM CHARGE

1.Check the refrigerant charge.

- Run the engine at 1,500 rpm.
- Set the air conditioning system in the coldest for 5 minutes.
- Check the sight glass dear or cloud.

⚠ CAUTION

- If the air-con. is operated with not charged.
- The lubrication in the compressor can cause the damage.

2. Check the refrigerant with receive drier sight glass.

https://truckmanualshub.com/

► DIAGNOSING MALFUNCTIONS

1. TRACING FAULTS

	SYMPTOM	CONDITION	CAUSE	REMEDY
1.Compressor	Abnormal sound	Inlet sound Outlet sound	• Insufficient Lub	• Replenish
			• Belt tension release	• Adjust
			• Release the bracket	• Tighten the bolts
			• Clutch fail	• Check
	Abnormal revolution	Inlet cause	• Damaged parts	• Check, Replace
			• Slip the clutch	• Check, Replace
			• Not Lub	• Replenish
		Outlet cause	• Belt tension released	• Adjust
	Refrigerant or oil leakage	Refrigerant or oil leakag	• Sealing washer damaged	• Replace
			• Head bolt released	• Tighten the bolts
			• D-ring damaged	• Replace
	Excessive pressure	Low, High pressur	• Insufficient refrigerator	• Adjust
			• Compressor	• Replace
2.Motor	Weak from pres-sure or don”t work	Motor is normal	• Air inlet clogged	• Remove
			• Evaporator freezing	• Controlling minimum pressure
			• Ventilator switch damage	• Replace the switch
			• Compressor	• Replace
		Motor is abnorma	• Motor failure	• Replace
			• Wire cut	• Replace
		Air leakage	• Duct leakage	• Check, Tighten
	Unable to control the fan	Motor	• Air volume control switch failure	• Check, Tighten
		Motor is abnormal	• Motor failure	• Replace

https://truckmanualshub.com/

	SYMPTOM	CONDITION	CAUSE	REMEDY
3. Clutch	Noise	• Regular noise irregular noise	• Interference with pulley	• Control the compressor direction
	Disengage	• Engaged sometimes	• Wire defect	• Check wire
		• Engaged to push with hand	• Clutch gap large	• Adjust
			• Low voltage	• Check battery
		• No defect wire	• Malfunction	• Replace
	Slip	• Slip during rotation	• Low voltage	• Check battery
			• Oil stick at clutch	• Clean
			• Malfunction	• Replace

2. How to check the air conditioning system with the needle of high low gauge

To connect with manifold pressure gauge can find the cause of air conditioning system.

Because manifold pressure gauge is various sensibly. (Ambient Temp. is based on 30~35℃)

CAUTION

- Operating E/G RPM 1500~2000 is must, and so to that you can check the correct cause and air conditioning. (In case below the figure of indicated pressure gauge has some clearance, confirm with approximate indicated needle data.)

3. Gauge pressure conversion

- lb/in² =PSI
- 1 kgf/㎠=14.22 lb/in² (Ex) 200 PSI=14 kgf/㎠

https://truckmanualshub.com/

MEMO

https://truckmanualshub.com/

STORAGE AND DISPOSAL

1. TRACTOR STORAGE 7-2

2. USAGE AND DISPOSAL 7-3

https://truckmanualshub.com/

1. TRACTOR STORAGE

►DAILY STORAGE

(1) Store the tractor after cleaning it. Especially, clean it thoroughly after harrowing or working in a wet field.

(2) Make sure to lower an implement.

(3) Store the tractor indoors if possible.

(4) If storing the tractor outside, cover it.

(5) For better startability, it is recommended to remove the battery from the tractor and keep it indoors in winter.

(6) If the outside temperature is below 0℃, add antifreeze or drain coolant completely to prevent the engine from freezing and bursting.

(7) Remove the key and store it separately.

►LONG-TERM STORAGE

Clean the tractor thoroughly and store it as follows:

(1) Change engine oil with new oil and run the engine for 5 minutes to distribute oil to each part evenly.

(2) Drain coolant from the radiator. Then, make a label indicating "No Coolant" and fix it onto the steering wheel.

If antifreeze is already added, it is not necessary to drain coolant.

(3) Add oil, fluid and fuel to each part according to the maintenance chart.

(4) Apply a thin film of grease of oil to body parts that are apt to rust.

(5) Check each bolt and nut for looseness and tighten any loose bolt and nut.

(6) Set the tire inflation pressure a little higher than the specification.

(7) Remove a weight. Detach or lower an implement.

(8) Chock the rear wheels.

(9) Remove the battery from the tractor or turn off its switch to cut power connection.

(10) Place wood blocks under the tires to protect them.

(11) Charge the battery every 2 months during long-term storage.

(12) Store it in a dry place to avoid rain or snow and cover the body.

https://truckmanualshub.com/

2. USAGE AND DISPOSAL

►USE AFTER LONG-TERM STORAGE

Keep the following instructions when using the tractor after its long-term storage.

(1) Inspect the tractor thoroughly before driving it.

(2) To keep performance and life of the engine, idle the engine for approx. 30 minutes after starting it.

NOTE

- For engine lubrication, run the engine at 1,500 ~ 2,000 RPM for 5 to 10 minutes once a month.
- Remove the key from the tractor and store it separately.

CAUTION

- If leaving the battery connected to the tractor, turn off its switch to cut electric power.
- If wiring is damaged by rodents, its short circuit can start a fire.

It is recommended to keep the followings to protect the environment:

(1) Avoid overloading work as it can lead to incomplete combustion and emissions that can pollute the air.

(2) When changing oil, including engine oil, transmission fluid, hydraulic oil and coolant, be careful not to spill it and discard used oil according to the applicable law.

Used oil should be treated with care and discarded properly as it can contaminate soil and water.

(3) When this or other machine's life is expired, do not neglect or discard it on your own, but contact your dealer so that the approved service provider can discard the machine according to the laws.

https://truckmanualshub.com/

MEMO

https://truckmanualshub.com/

TROUBLESHOOTING

1. ENGINE SYSTEM 8-2

2. BRAKE SYSTEM 8-6

3. STEERING SYSTEM 8-6

4. HYDRAULIC SYSTEM 8-7

5. ELECTRIC SYSTEM 8-8

https://truckmanualshub.com/

1. ENGINE SYSTEM

	TROUBLE	PROBABLE CAUSE	SOLUTION
Engine	The start motor does not run even when turning the main switch.	• PTO switch set to ON position	• Set the PTO switch to the OFF position
		• Defective safety switch	• Have it repaired or replaced by workshop
		• Battery discharged	• Charge the battery
		• Loose terminal	• Check for looseness and corrosion. Clean, tighten and apply grease
		• Faulty switch	• Have it repaired or replaced by workshop
		• Defective start motor	• Have it repaired or replaced by workshop
	The start motor runs but its speed cannot be increased	• Weak battery	• Charge the battery
		• Poor ground	• Clean the contact and connect the ground firmly
		• Incorrect viscosity of engine oil	• Change engine oil with proper viscosity
	The start motor runs but the engine cannot be started	• Air in fuel system	• Bleed the system
		• Clogged fuel filter	• Clean or replace the filter
		• No delivery of fuel	• Open the cock to add fuel
		• Defective engine	• Have it repaired by workshop
		• Defective key stop unit	• Have it repaired by workshop
	The engine runs irregularly	• Air in fuel system	• Bleed the system
		• Clogged fuel filter	• Clean or replace the filter

https://truckmanualshub.com/

TROUBLE		PROBABLE CAUSE	SOLUTION
Engine	The engine runs irregularly	• Clogged injection nozzle	• Have it repaired by workshop
		• Fuel leak at pipe	• Tighten the clamp, replace the pipe and machine and attach the copper washer
		• Poor fuel injection quality	• Have it repaired by workshop
	Engine stops at low speed	• Defective injection pump	• Have it repaired by workshop
		• Incorrect clearance of engine valve	• Have it repaired by workshop
		• Low idle speed	• Adjust it to the standard speed
		• Faulty nozzle	• Have it repaired by workshop
	The engine overruns	• Restricted governor	• Have it repaired by workshop
		• Oil rise	• Have it repaired by workshop
	The engine stalls suddenly	• Low fuel level	• Add fuel and bleed the system
		• Faulty nozzle	• Have it repaired by workshop
		• Engine seizure by insufficient oil or poor lubrication	• Have it repaired by workshop
	The engine is overheated	• Insufficient coolant amount	• Add coolant
		• Damaged fan belt	• Replace the belt
		• Clogged radiator	• Clean the radiator
		• Insufficient engine oil	• Check and add

https://truckmanualshub.com/

TROUBLE		PROBABLE CAUSE	SOLUTION
Engine	The engine produces white smoke	• Clogged air cleaner	• Check and clean it
		• Excessive engine oil amount	• Check and set it to the proper amount
		• Insufficient fuel supply amount	• Have it repaired by workshop
	The engine produces black smoke	• Low quality fuel	• Add the specified fuel
		• Excessive fuel amount delivery	• Have it repaired by workshop
		• Insufficient nozzle pressure	• Have it repaired by workshop
	The engine does not produce sufficient power	• Clogged or carbon on nozzle tip	• Have it repaired by workshop
		• Insufficient compression or gas leak from valve seat	• Have it repaired by workshop
		• Improperly adjusted valve clearance	• Have it repaired by workshop
		• Incorrect injection timing	• Have it repaired by workshop
		• Low fuel level	• Add fuel
		• Clogged air cleaner	• Clean the element
	The oil warning lamp comes on during driving	• Low engine oil level	• Add to the specified level
		• Low viscosity of engine oil	• Change engine oil with proper viscosity
		• Faulty pressure switch	• Replace the switch

https://truckmanualshub.com/

	TROUBLE	PROBABLE CAUSE	SOLUTION
Engine	The oil warning lamp comes on during driving	• Defective oil pump	• Have it repaired by workshop
		• Clogged oil filter element	• Replace the oil filter
	The charge warning lamp comes on during driving	• Defective wiring	• Check for loose or missing terminal, short circuit and poor ground and repair as necessary
		• Defective alternator	• Have it repaired by workshop
		• Defective battery	• Replace the battery
		• Damaged fan belt	• Replace the belt

https://truckmanualshub.com/

2. BRAKE SYSTEM

TROUBLE		PROBABLE CAUSE	SOLUTION
Brake	The brake won't operate. Also, only one-side brake operates	• Excessive brake pedal play	• Adjust the play
		• Worn or burnt liner	• Have it repaired by workshop
		• Different play amount on left and	• Set the left and right play amount the same
	The brake pedal does not return to its original position properly	• Damaged brake pedal return spring	• Replace the spring
		• No grease on each sliding section	• Remove rust and apply grease

3. STEERING SYSTEM

TROUBLE		PROBABLE CAUSE	SOLUTION
Steering system	The steering wheel feels heavy The steering wheel vibrates	• Improper toe-in	• Adjust
		• Incorrect tire inflation pressure	• Set the left and right tires to the same specified pressure
		• Vibration from each connection	• Tighten or replace connection
	The free movement of the steering wheel is excessive	• Worn steering wheel shaft	• Have it repaired by workshop
		• Worn metal parts	• Have it repaired by workshop
		• Free play from each connection	• Tighten

https://truckmanualshub.com/

4. HYDRAULIC SYSTEM

TROUBLE		PROBABLE CAUSE	SOLUTION
Hydraulic system	Oil leaks from the pipe or hose	• Loose clamp	• Tighten
		• Cracked pipe	• Have it replaced by workshop
	The hydraulic pressure won't be decreased	• Lowering speed control lever fixed to stop position	• Set it to the lowering position
		• Defective valve	• Have it repaired by workshop
		• Damaged cylinder	• Have it repaired by workshop
		• Damaged and seizured lift shaft rotating part	• Have it repaired by workshop
	The hydraulic pressure won't be increased	• Insufficient engine RPM	• Set the speed to 1000 to 1500 RPM
		• Insufficient transmission fluid	• Add to the specified level
		• Air sucked into suction pipe	• Tighten the connection. If any pipe or hose is cracked or O-ring is damaged, replace it
		• Clogged oil filter	• Clean
		• Defective hydraulic pump	• Have it repaired by workshop
		• Defective valve	• Have it repaired by workshop
		• Damaged cylinder	• Have it repaired by workshop

https://truckmanualshub.com/

5. ELECTRIC SYSTEM

	TROUBLE	PROBABLE CAUSE	SOLUTION
Electric system	The battery won't be charged	• Blown fusible link	• Check the wiring and replace the fusible link
		• Defective wiring	• Check for loose or missing terminal, short circuit and poor ground and repair as necessary
		• Defective alternator	• Have it repaired by workshop
		• Loose or damaged fan belt	• Adjust the tension or replace the belt
		• Defective battery function	• Check for loose or corroded terminal and insufficient electrolyte and take any necessary action
	The headlamp does not produce enough light	• Low charging level of battery	• Charge
		• Contact failure in wiring	• Check, clean and re-tighten the ground and terminal
	The headlamp does not come on	• Blown bulb	• Replace the bulb
		• Blown fuse	• Check the wiring and replace the fuse
		• Contact failure	• Check and clean the ground and terminal
	The horn does not operate	• Defective horn switch	• Replace
		• Defective wiring	• Repair
		• Damaged horn	• Repair or replace

https://truckmanualshub.com/

TROUBLE		PROBABLE CAUSE	SOLUTION
Electric system	The turn signal lamp does not blink	• Blown bulb	• Replace the bulb
		• Defective flasher unit	• Replace
		• Poor contact	• Check and clean the ground and terminal
	The work lamp does not come on	• Blown bulb	• Replace the bulb
		• Contact failure	• Check and clean the ground and terminal

https://truckmanualshub.com/

MEMO

https://truckmanualshub.com/

SAFETY STANDARD FOR FARM WORK

1. INSTRUCTION BEFORE USE..... 9-2

2. CHECKUP LIST BEFORE OPERATION..... 9-3

3. CAUTIONS DURING THE WORK..... 9-4

4. CAUTIONS WHEN DRIVING ON THE FARM ROAD .. 9-5

5. INSTRUCTION AFTER USE 9-6

6. CAUTIONS FOR INSPECTION AND MAINTENANCE.. 9-6

7. TRACTOR..... 9-7

https://truckmanualshub.com/

SAFETY MARK

Excerpted from general information system of agricultural mechanic research center (August, 2002) 8.)

Agricultural Mechanic Research Center, an affiliation of Ministry of Agriculture and Forestry stipulated "safety instructions" when working with agricultural equipment for safety purpose.

Please read carefully the contents as the user's manual. Try to work safely.

- Always make sure to check the operating condition of the safety lamp (such as turn signal lamp) before operating the machine.

※ If any lighting system is removed※

- It may lead to an unexpected accident because it is not possible to give signals to people or machine nearby.

1. INSTRUCTION BEFORE USE

- Operator must attend his/her health and should get enough rest.

- Before using the machine, check it and repair if there is a malfunction.
  - Check if the assembly of front and rear wheels is okay.
  - Check the tightening of bolts and nuts in each unit.

- Do not drive if you are mentally unstable, drunk, pregnant, under the age of 16, not trained, overworked, sick, under the influence of drugs, and any other reason that may affect normal operation of the machine.

- Please wear the appropriate working clothing.
  - Put on a hard hat to protect your head.
  - Put on a hat and a working clothes, to prevent an injury such as being twined into the machine.
  - Protective measures to prevent any injury on foot or slipping - Put on an appropriate non-slippery shoes to prevent a fall from the machine, scattering soil, and slippery surface.
  - Measures against dust and toxic gas.
  - Wear an appropriate protective gear.
  - Measures against the herbicide – wear protective gear to protect respiratory system, eyes and skin.

https://truckmanualshub.com/

- Measures against noise – wear a protective gear to protect your ears.
- Handling protective gear – Do neither let children get on the machine nor get close to the machine.

- If it is not possible to park the agricultural machine on a road either due to a breakdown or any other reason, operator must take an action such as moving the equipment to a place other than a road.

- Also, put a signal that there is a broken car, 100m behind and 200m at night in accordance with Automobile Regulation Article 23.

- When starting to drive, make sure to check around carefully.
  - Do not let anyone such as a child get close to the machine, keep them away and then drive the machine.

- Do not load flammable, explosive material (diesel, gasoline , etc) on the machine.

- When getting on and off a truck, have a helper give you signal and follow his/her lead.

- Refer to chapter 1 in user's manual regarding the decals on the machine.

2. CHECKUP LIST BEFORE OPERATION

- Before using the machine, check it and repair if there is a malfunction.

- Check engine oil.
  - Pull out level gauge, wipe off any fuel leak, put it back in, and pull it out again to see if the oil level is between「upper limit」and「lower limit」.

- Before any operation, check for any foreign materials caught on the engine, muffler, battery, and the fuel tank. Remove them immediately.

- Covers that are removed during the maintenance work should be reinstalled to their original positions.
  - Attach the cover correctly and firmly.

https://truckmanualshub.com/

3. CAUTIONS DURING THE WORK

- Do not load anything that can interfere driving.
  - Always keep the driver's seat clean.

- Always buckle up when driving.

- Opening radiator cap when heated can spring out the steam to have the operator burned. Open the cap after it is sufficiently cooled down.

- Do not drive with depressing the differential gear pedal.

- Prohibit anyone to get on the machine.
  - Prohibit anyone to get on the machine other than the designated place.
  - Even thought there are some designated place, do not let people more than capacity get on the machine.
  - Never let any passenger mount on the machine. Also, do not put any object on the machine. Keep people away from the machine.
  - Do not jump on/off the operating machine except for emergency.

- Be cautious not to let anyone touch the belt . Always check the connected area of belt.

- When two people are working collaboratively, exchange signals each other.

- Prevent injury
  - Do not touch power transmission gear, rotating unit, and other dangerous parts.
  - Pay special attention if you are working with the machine with blade or sharp projection
  - Be careful not to injure from the work where soils and stones are scattered around.

- Safety in inspection, adjustment, etc.
  - Make sure to stop the motor and carry out the work in a safe environment.
  - When leaving the machine for a break, or other reason, leave the machine in a safe place and descend the working unit to keep them in a safe stopped state.

- Removing and installing should be carried out in a safe place and with a safe method.

- Do neither stay nor insert foot under the working units.

https://truckmanualshub.com/

4. CAUTIONS WHEN DRIVING ON THE FARM ROAD

- Driving on roads
  - Drive safely observing the relevant regulation.
  - Drive at safe speed.
  - Be careful not to disturb other drivers.
  - When driving a machine with sharp blade or bump, put on a warning sign or detach in advance to prevent any injury.
  - Do not drive fast particularly on winding roads with projecting rocks.
  - When driving at night, do not detach lighting device. (headlight, turn indicator, work light, brake light, etc)
  - Do not drive fast, abrupt starting, abrupt acceleration, sudden stop, and quick turning.
  - When driving at high speed, do not slam on the brake. Never slam on the brake especially when turning at high speed.

- When loading/unloading the machine
  - Choose a place with a leveled and safe ground.
  - Drive at low speed.
  - Use a ramp with anti-slippery.

- When entering paved road
  - Use a ramp to cross a ditch or a bank.
  - Make sure to use a ramp to enter/exit a high footpath Be careful with fall and not to overturn.
  - Check the safety around the surrounding before starting to drive.

- When driving on a slope
  - Drive at the minimum speed, lower the operating machine as low as possible and low the center position.

https://truckmanualshub.com/

5. INSTRUCTION AFTER USE

- When the work is completed, stop the engine on a leveled ground, check the machine to clean. (remove any foreign materials)
  - Remove straws, dirt, etc and clean around the engine, silencer, and fuel tank.
- Lay a cover on the transplanter (equipment) after the muffler and engine cool down.
- Get a regular inspection after the season is over.
  - When discarding a part (battery, oil, etc) or scrap a machine, consult to a dealer and proceed accordingly.
- For long-term storage, remove the battery from the machine and store it or disconnect the negative battery cable.

6. CAUTIONS FOR INSPECTION AND MAINTENANCE

- Do not refuel either when the engine is still hot or while driving.
- Measures against a fire: Every working place with a risk of fire should be provided with a fire extinguisher. Prevent a fire by taking measures such as making a smoking area.
- Always wipe off the leaked fuel.
- Be seated in the cab when starting the engine.
- After refueling, tighten the fuel cap and check if there is any fuel leakage from tank or pipe.
- When opening a cap to supply water to radiator, be careful because steam or boiling water may spray due to overheating.
- When getting off the cab, turn off the engine, lock the parking brake and remove the ignition key.
- If it is inevitable to park on a slope, choke the wheels.
- Park on a leveled and safe ground safely.
- Check if the wiring code is in contact with other parts, peeled, loose or having spacing.

https://truckmanualshub.com/

7. TRACTOR

- Manage PTO
  - Stop PTO before stopping the engine.
  - Do not remove the PTO protective cover or protective panel for operating machine.
  - Do not use PTO adaptor in order to extend the POT coupler or universal joint to outside of PTO protective cover.

- To repair, secure the wheel width, or changing the wheel under either tractor or trailer, with the tractor or trailer raised, choke the wheels that are on the ground.

- Do not use hydraulic jack for operating machine or tractor. Instead, use block or stand.

- Safety frame
  - Do neither weld nor drill a hole on the attached safety frame. Also do not modify it.
  - Replace the damaged safety frame with a new one.
  - If the safety frame was removed for specialized work, restore it immediately.

- Be careful to touch dangerous area such as power transmission gear, rotating unit, etc. Put on a protective cover.

- Do neither modify nor remove the safety device.

- When checking and replacing the blade to plow the ground.
  - Stop the engine.
  - Prevent the rotary from falling by turning the fall adjusting handle to stop hydraulic pressure.
  - Apply the parking brake.
  - Do not stand between tractor and rotary.

- When working with rotary
  - Do not put your hands near the rotating part such as blade axle and universal joint.
  - Do not ride on the rotary.
  - When driving backward or turning quickly with the rotary raised up, make sure to check behind the machine.
  - Adjust the rear cover.

https://truckmanualshub.com/

MEMO

https://truckmanualshub.com/

APPENDIX

1. MAJOR SPECIFICATIONS..... 10-2

2. MAJOR CONSUMABLES 10-6

https://truckmanualshub.com/

1. MAJOR SPECIFICATIONS

MODEL	T574NH/SH	
Engine	Engine Manufacturer	KM
	Engine Model	A2300T3
	Engine Type	Turbo
	Engine HP-gross	41kW [55hp]
	Rated engine speed	2600rpm ± 5%
	Number of cylinders	4
	Displacement-cu. in.[cc]	139.5 [2,286]
	Air Cleaner	Dual Dry
	Generator	12V 70A
	Max Torque	15kg f.m(147N.m) / 1550rpm ± 5%
Powertrain	Transmission type	HST
	Number of Speeds	Infinite / 3 Range
	MaxTravellingspeed, mph[km/h]	15.1 [24.3]
	Brakes	Wet Disc
	Steering	Hydrostatic

MODEL	T574NH/SH	
Hydralic System	Pump type	Dual gear pump
	Implement pump cap. gpm[L/Min]	9.5 [36.1]
	Steering pump cap. gpm [L/Min]	5.0 [19.0]
	Max Total flow gpm [L/Min]	14.5 [55.1]
	Category, 3 Point Hitch	1
	Hitch lift capacity, lb. [kg]	3,819 [1,732]
	at 24 inches behind link ends, lb. [kg]	2,945 [1,336]
	Lift Control type	Position/Draft
	Joy Stick Valve	Standard (3rd Opt.)
	No. of standard remote valves-option	2
PTO	PTO Type	Independent
	PTO Control	Electric/Hydro
	PTO rear [rpm]	540
	PTO Shaft Diameter in.[mm]	1 3/8 [35]

https://truckmanualshub.com/

MODEL	T574NH/SH		
Fluid Capacities	Fuel Tank	gal. [L]	17 [60]
	Cooling System	qt. [L]	6.9 [6.5]
	Crankcase [with filter]	qt. [L]	6.8 [6.4]
	Trans.& Hydr. System	gal. [L]	9.2 [35]
	Front Axle	qt. [L]	10.5 [10]
Dimensions	Overall length with 3-Point Hitch in. [mm]	Non cab type	133.8 [3,400]
		Cab type	133.8 [3,400]
	Overall width in. [mm]	Non cab type	63.8 [1,620]
		Cab type	63.8 [1,620]
	Overall Height in. [mm]	Non cab type	76.2 [1,935]
		Cab type	76.2 [1,935]
	Wheelbase	in. [mm]	76.2 [1,935]
	Min. Ground Clearance	in. [mm]	13.8 [350]
	Min. Turning Radius with brakes	in. [mm]	131.9 [2,800]

MODEL	T574NH/SH		
Weight with ROPS or Cab		Non cab type	4,034 [1,830]
		Cab type	4,299 [1,950]
Tire	Front	R1 / R2 / R3 / R4	9.5-16/ 12-16.5
	Rear	R1 / R2 / R3 / R4	13.6-26 / 17.5-24

https://truckmanualshub.com/

MODEL	T494 NH/SH	
Engine	Engine Manufacturer	KM
	Engine Model	A2300N5
	Engine Type	Natural Aspiration
	Engine HP-gross	36kW [48.3hp]
	Rated engine speed	2600rpm ± 5%
	Number of cylinders	4
	Displacement-cu. in.[cc]	139.5 [2,286]
	Air Cleaner	Dual Dry
	Generator	12V 70A
	Max Torque	15kg f.m(147N.m) / 1550rpm ± 5%
Powertrain	Transmission type	HST
	Number of Speeds	Infinite / 3 Range
	MaxTravellingspeed, mph[km/h]	15.1 [24.3]
	Brakes	Wet Disc
	Steering	Hydrostatic

MODEL	T494 NH/SH	
Hydralic System	Pump type	Dual gear pump
	Implement pump cap. gpm[L/Min]	9.5 [36.1]
	Steering pump cap. gpm [L/Min]	5.0 [19.0]
	Max Total flow gpm [L/Min]	14.5 [55.1]
	Category, 3 Point Hitch	1
	Hitch lift capacity, lb. [kg]	3,819 [1,732]
	at 24 inches behind link ends, lb. [kg]	2,945 [1,336]
	Lift Control type	Position/Draft
	Joy Stick Valve	Standard (3rd Opt.)
	No. of standard remote valves-option	2
PTO	PTO Type	Independent
	PTO Control	Electric/Hydro
	PTO rear [rpm]	540
	PTO Shaft Diameter in.[mm]	1 3/8 [35]

https://truckmanualshub.com/

MODEL	T494 NH/SH		
Fluid Capacities	Fuel Tank	gal. [L]	17 [60]
	Cooling System	qt. [L]	6.9 [6.5]
	Crankcase [with filter]	qt. [L]	6.8 [6.4]
	Trans.& Hydr. System	gal. [L]	9.2 [35]
	Front Axle	qt. [L]	10.5 [10]
Dimensions	Overall length with 3P in. [mm]	Non cab type	133.8 [3,400]
		Cab type	133.8 [3,400]
	Overall width in. [mm]	Non cab type	63.8 [1,620]
		Cab type	63.8 [1,620]
	Wheelbase	in. [mm]	76.2 [1,935]
	Height to top of ROPS in. [mm]	Non cab type	102.1 [2,594]
		Cab type	99.6 [2,530]
	Min. Ground Clearance	in. [mm]	13.8 [350]
	Min. Turning Radius with brakes	in. [mm]	131.9 [2,800]
	Min. Turning Radius w/o brakes	in. [mm]	131.9 [2,800]

MODEL	T494 NH/SH		
Standard Tires	Agricultural Tire Front		9.5 - 16
	Agricultural Tire Rear		13.6 - 26
	Industrial Tire Front		12 - 16.5
	Industrial Tire Rear		17.5 - 24
ROPS & Weight	Roll Over Protection Standard		ROPS
	Total Weight in. [mm]	Non cab type	4,012 [1,820]
		Cab type	4,277 [1,940]

https://truckmanualshub.com/

2. MAJOR CONSUMABLES

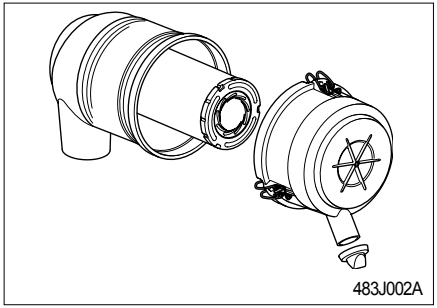

Air Cleaner

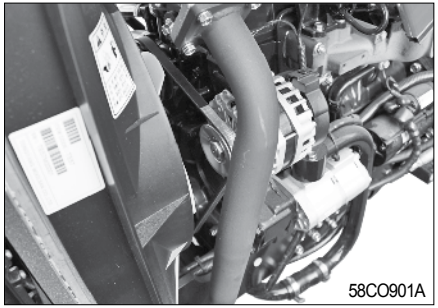

Engine fan belt

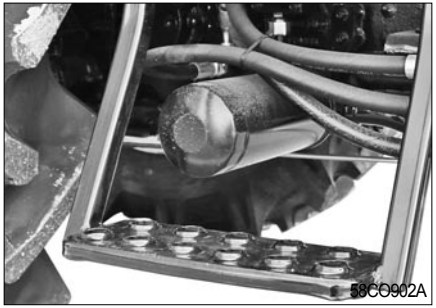

Element

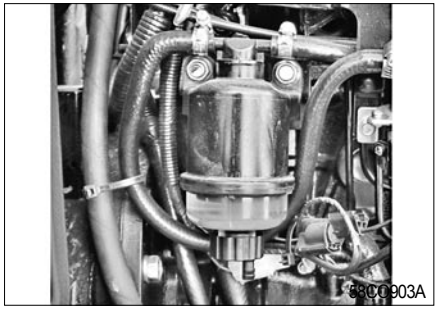

Engine fuel filter

Engine oil filter

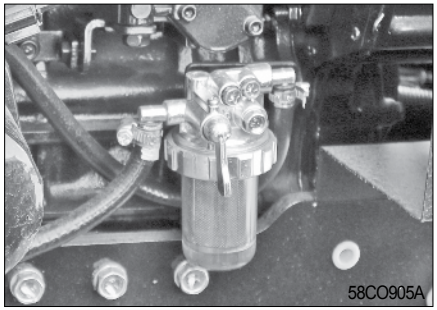

Fuel filter assy

https://truckmanualshub.com/

INDEX

1. INDEX.....11-2

https://truckmanualshub.com/

NUMERIC

4WD LEVER....2-24

A

ABNORMAL OPERATION DURING DPF REGENERATION2-17
ADJUSTING FRONT WHEEL TREAD....5-13
ADJUSTING REAR WHEEL TREAD....5-13
ADJUSTING TREAD....5-13
AIR CLEANER CLEANING....5-13
AIR CLEANER HOSE CHECKING....5-21
AIR CLEANER REPLACING....5-13
AIR CON. SWITCH....6-8
APPENDIX....10-1
AUTO THROTTLE....2-8
AUX. HYDRAULIC LEVER....2-32
AUX. HYDRAULIC VALVE....2-32

B

BLOWER CONTROL SWITCH....6-7
BRAKE PEDAL PLAY....5-20
BRAKE PEDEL....2-21
BRAKE SYSTEM....8-6

C

CAB AIR INTAKE FILTER....6-11
CAB CEILING....6-4
CABIN SYSTEM....6-1
CAUTIONS DURING THE WORK....9-4
CAUTIONS FOR DRIVING INTO / OUT OF FIELD....3-7
CAUTIONS FOR DRIVING ON ROAD....3-8
CAUTIONS FOR INSPECTION AND MAINTENANCE....9-6
CAUTIONS WHEN DRIVING ON THE FARM ROAD....9-5
CHARGING....3-8
CHECK AND ADJUST EACH PART....5-20
CHECK LINK....2-35
CHECKING AND ADJUSTING BRAKE PEDAL....5-20
CHECKING AND ADJUSTING FAN BELT....5-21
CHECKING AND CHANGING ENGINE OIL....5-5
CHECKING AND CHANGING FRONT AXLE OIL....5-8
CHECKING AND CHANGING OIL....5-5
CHECKING AND CHANGING TRANSMISSION FLUID....5-6
CHECKING AND CHARGING BATTERY....5-15
CHECKING AND CLEANING AIR CLEANER....5-12
CHECKING AND REPLACING FUSE....5-18
CHECKING ELECTRIC SYSTEM....5-15
CHECKING ELECTRIC WIRING....5-17

https://truckmanualshub.com/

CHECKING HOSES 5-15
CHECKING THE AIR CONDITIONING SYSTEM 6-13
CHECKING THE AIR CONDITIONING SYSTEM CHARGE 6-13
CHECKUP LIST BEFORE OPERATION 9-3
CIRCULATION DIFFUSER 6-9
CIRCULATION DIFFUSER 6-11
CLEANING RADIATOR AND CONDENSER GRILLES 5-5
CLUSTER 2-4
COMBINATION SWITCH 2-6
COOLANT WARNING LAMP 2-6
CRUISE SWITCH 2-8
CUP HOLDER 6-12

D

DAILY STORAGE 7-2
DESCRIPTION OF TRACTOR CONTROLS 2-1
DIAGNOSING MALFUNCTIONS 6-14
DIFFERENTIAL LOCK PEDAL 2-23
DOORS 6-3
DRIVING ON SLOPE 3-6
DRIVING SPEED CONTROL PEDAL 2-22

E

ELECTRIC SYSTEM 8-8
EMISSION SYSTEM WARRANTY 12-5
ENGINE AND DPF MALFUNCTION 2-18
ENGINE COOLANT 3-8
ENGINE COOLANT INSPECTION AND CHANGE 5-4
ENGINE IDLING 3-3
ENGINE IDLING IN COLD CONDITION 3-3
ENGINE OIL PRESSURE 3-8
ENGINE STARTING 3-2
ENGINE STOPPING 3-3
ENGINE SYSTEM 8-2
ENGINE WARRANTIES 12-2
EXTERNAL POSITION LEVER 2-30
EXTRRIOR VIEW (CABIN MODEL) 1-4
EXTRRIOR VIEW (NON CAB MODEL) 1-2

F

FUEL GAUGE 2-5
FUEL HOSE CHECKING 5-21
FUEL SYSTEM 5-11
FUEL SYSTEM 5-11
FUEL, OIL AND FLUID SPECIFICATION CHART 5-25

https://truckmanualshub.com/

G

GENERAL ENGINE IDLING....3-3
GENERAL IMPLEMENT....4-2
GENERAL INFORMATION....1-1
GREASING....5-14
GREASING BRAKE ARM....5-14
GREASING POINTS....5-14

H

HAZARD SWITCH....2-7
HEATING AIR CONDITIONER SYSTEM....6-10
HEATING SYSTEM....6-9
HEATING SYSTEM CONFIGURATION....6-10
HOUR METER....2-5
HOW TO CONTROLS CABIN....6-5
HOW TO START ENGINE....3-2
HYDRAULIC LOWERING SPEED CONTROL KNOB....2-31
HYDRAULIC SYSTEM....8-7

I

IMPLEMENT LIFT CONTROL SYSTEM....2-30
INDEPENDENT PTO OPERATION SWITCH....2-13
INDEX....11-1
INFO SWITCH....2-14
INSPECTING AND CHANGING COOLANT....5-4
INSPECTION ITEMS....5-2
INSPECTION ITEMS....5-2
INSTALLATION AND DPF REGENERATION....2-16
INSTRUCTION AFTER USE....9-6
INSTRUCTION BEFORE USE....9-2
INSTRUMENT AND RELATED PARTS....6-3
INSTRUMENT AND SWITCHES (CABIN TYPE)....2-3
INSTRUMENT AND SWITCHES (NON CAB TYPE)....2-2
INSTRUMENT PANEL LAMP AND BUZZER OPERATING CONDITIONS....2-16
INTERIOR DEVICES....6-5
INTERIOR LAMP....6-7

J

JUMP START....5-17

K

KEY SWITCH....2-4

L

LOADER VALVE AND JOYSTICK LEVER....2-27
LOADING TO / UNLOADING FROM TRUCK....3-7
LONG-TERM STORAGE....7-2
LOWER LINK....2-35

https://truckmanualshub.com/

M

MAINTENANCE 5-1
MAJOR CONSUMABLES 10-6
MAJOR FEATURES 6-2
MAJOR SPECIFICATIONS 10-2
MONITOR LAMP 2-9

O

OPENING COVERS 5-2
OPENING HOOD 5-2
OPERATING METHOD 2-15
OPERATING THE 3 POINT LINKAGE (CABIN MODEL).....2-34
OPERATING THE 3 POINT LINKAGE (NON CAB MODEL)2-33
OPERATING TIPS FOR POWER STEERING WHEEL 2-29
OPERATION.....3-1
OPERATION CHECK DURING DRIVING.....3-8
OPERATION THE CONTROLS (CABIN TYPE).....2-20
OPERATION THE CONTROLS (NON CAB TYPE) 2-19

P

PARKING BRAKE LEVER.....2-22
PRECAUTIONS FOR HANDLING IMPLEMENT 4-2
PTO ON/OFF SWITCH 2-26
PTO SHAFT CAP 2-27

R

RADIATOR HOSE CHECK-ING.....5-22
RADIO, CD PLAYER (IF EQUIPPED).....6-12
REAR WINDOW.....6-3
REARVIEW MIRRORS 6-4
REPLACING ENGINE OIL FILTER CARTRIDGE 5-10
REPLACING FILTER AND CARTRIDGE 5-9
REPLACING LAMP BULB.....5-19
REPLACING TRANSMISSION FLUID FILTER CARTRIDGE 5-9
ROTAVATOR 4-2
ROUTINE MAINTENANCE SCHEDULE.....5-23
ROUTINE MAINTENANCE SCHEDULE.....5-23
RUNNING-IN PERIOD 3-4

S

SAFETY FRAME ROPS.....2-36
SAFETY SIGNS 1-7
SAFETY STANDARD FOR FARM WORK 9-1
SEAT AND SAFETY BELT 2-25
SHIFTING AND DRIVING 3-4
STARTING OFF 3-4
STARTING OFF ON STEEP SLOPE 3-6
STARTING OFF, SHIFTING AND DRIVING.....3-4

https://truckmanualshub.com/

S

STEERING SYSTEM 8-6
STOPPING 3-3
STOPPING AND PARKING 3-5
SUB SHIFT LEVER 2-23

T

TEMPERATURE CONTROL 6-8
THROTTLE LEVER 2-21
TIPS FOR DRIVING ON SLOPE 3-6
TIRE INFLATION PRESSURE 5-22
TOP LINK ADJUSTMENT 2-35
TOWING HITCH 2-36
TRACTOR 9-7
TRACTOR STORAGE 7-2
TRANSMISSION STRAINER CLEANING 5-10
TROUBLESHOOTING 8-1
TURNING IN FIELD 3-5
TYM WARRANTY 12-13

U

USAGE AND DISPOSAL 7-3
USE AFTER LONG-TERM STORAGE 7-3

V

VACUUM VALVE CLEANING 5-12
VENTILATION 6-5

W

WARRANTY 12-1
WINDSCREEN WASHER TANK 6-7
WIPER CONTROL SWITCH 6-6
WORK PROCEDURE 4-1
WORKING LAMP SWITCH 6-6
WORKING LAMPS (FRONT AND REAR) 6-3

https://truckmanualshub.com/

WARRANTY

1. ENGINE WARRANTIES.....12-2

2. EMISSION SYSTEM WARRANTY 12-5

3. TYM WARRANTY 12-13

https://truckmanualshub.com/

1. ENGINE WARRNTIES

■ ENGINE LIMITED WARRANTY

What is Covered by this Warranty?

ENGINE warrants to the original retail purchaser that a new ENGINE TNV common rail series industrial engine will be free from defects in material and/or workmanship for the duration of the warranty period.

Note: ENGINE engines may be equipped with external components including, but not limited to: wiring harnesses, electrical devices, control panels, radiators, air filters, fuel filters, and/or exhaust systems that are supplied and/or installed by manufacturers other than ENGINE. For warranty information on such external components, please contact the machine or component manufacturer directly or see your authorized ENGINE dealer or distributor.

This warranty is provided in lieu of all other warranties, express or implied. ENGINE specifically disclaims any implied warranties of merchantability or fitness for a particular purpose, except where such disclaimer is prohibited by law. If such disclaimer is prohibited by law, then implied warranties shall be limited in duration to the life of the express warranty.

How Long is the Warranty Period?

The ENGINE standard limited warranty period runs for a period of twenty-four (24) months or two-thousand (2000) engine operation hours, whichever occurs first. An extended limited warranty of thirty-six (36) months or three thousand (3000) engine operating hours, whichever occurs first, is provided for these specific parts only: the cylinder block, cylinder head, crankshaft forging, connecting rods, flywheel, flywheel housing, camshaft,

https://truckmanualshub.com/

timing gear, and gear case. The warranty period for both the standard limited warranty and the extended limited warranty (by duration or operation hours) begins on the date of delivery to the original retail purchaser and is valid only until the applicable warranted duration has passed or the operation hours are exceeded, whichever comes first.

What is not Covered by this Warranty?

This warranty does not cover parts affected by or damaged by any reason other than defective materials or workmanship, including, but not limited to, accident, misuse, abuse, "Acts of God," neglect, improper installation, improper maintenance, improper storage, the use of unsuitable attachments or parts, the use of contaminated fuels, the use of fuels, oils, lubricants, or fluids other than those recommended in your ENGINE Operation Manual, unauthorized alterations or modifications, ordinary wear and tear, and rust or corrosion. This warranty does not cover the cost of parts and/or labor required to perform normal/scheduled maintenance on your ENGINE engine. This warranty does not cover consumable parts such as, but not limited to, filters, belts, hoses, fuel injector, lubricants and cleaning fluids. This warranty does not cover the cost of shipping the product to or from the warranty repair facility.

Warranty Limitations:

The foregoing is ENGINE's only obligation to you and your exclusive remedy for breach of warranty. Failure to follow the requirements for submitting a claim under this warranty may result in a waiver of all claims for damages and other relief. In no event shall ENGINE or any authorized industrial engine dealer or distributor be liable for incidental, special or consequential damages. Such consequential damages may include, but not be limited to, loss of revenue, loan payments, cost of rental of substitute equipment, insurance coverage, storage, lodging,

https://truckmanualshub.com/

transportation, fuel, mileage, and telephone costs. The limitations in this warranty apply regardless of whether your claims are based on breach of contract, tort (including negligence and strict liability) or any other theory. Any action arising hereunder must be brought within one (1) year after the cause of action accrues or it shall be barred. Some states and countries do not allow certain limitations on warranties or for breach of warranties. This warranty gives you specific legal rights, and you may also have other rights which vary from state to state and country to country. Limitations set forth in this paragraph shall not apply to the extent that they are prohibited by law.

Warranty Modifications:

Except as modified in writing and signed by the parties, this warranty is and shall remain the complete and exclusive agreement between the parties with respect to warranties, superseding all prior agreements, written and oral, and all other communications between the parties relating to warranties. No person or entity is authorized to give any other warranty or to assume any other obligation on behalf of ENGINE, either orally or in writing.

Questions:

If you have any questions or concerns regarding this warranty, please call or write to the nearest authorized ENGINE industrial engine dealer or distributor or other authorized facility.

https://truckmanualshub.com/

2. EMISSION SYSTEM WARRANTY

ENGINE CO., LTD. EMISSION CONTROL SYSTEM WARRANTY- USA ONLY

Your Warranty Rights and Obligations:

The California Air Resources Board (GARB), the United State Environmental Protection Agency (EPA) and ENGINE CO., LTD. hereafter referred to as ENGINE, are pleased to explain the emission control system warranty on your 2013, 2014, or 2015 model year industrial compression-ignition engine. California-certified, new off-road compression-ignition engines must be designed, built and equipped to meet the State's stringent anti-smog standards. In the remaining forty nine (49) states, new non-road compression-ignition engines must be designed, built and equipped to meet the United States EPA emissions standards. ENGINE must warrant the emission control system on your engine for the periods of time listed below provided there has been no abuse, neglect or improper maintenance of your engine.

Your emission control system may include parts such as the fuel injection system, the air induction system, the electronic control system, EGR (Exhaust Gas Recirculation) system and the diesel particulate filter system. Also included may be hoses, belts, connectors and other emission-related assemblies.

Where a warrantable condition exists, ENGINE will repair your off-road compression-ignition engine at no charge to you including diagnosis, parts and labor.

https://truckmanualshub.com/

Manufacturer's Warranty Period:

2013, 2014, or 2015 model year off-road compression-ignition engines are warranted for the periods listed below. If any emission-related part on your engine is found to be defective during the applicable warranty period, the part will be repaired or replaced by ENGINE.

If your engine is certified as	And its maximum power is	And its rated speed is	Then its warranty period is
Variable speed or constant speed	kW < 19	Any speed	1 ,500 hours or two (2) years whichever comes first. In the absence of a device to measure the hours of use, the engine has a warranty period of two (2) years.
Constant speed	19 ≤ kW < 37	3,000 rpm or higher	1 ,500 hours or two (2) years whichever comes first. In the absence of a device to measure the hours of use, the engine has a warranty period of two (2) years.
Constant speed	19 ≤ kW < 37	Less than 3,000 rpm	3,000 hours or five (5) years whichever comes first. In the absence of a device to measure the hours of use, the engine has a warranty period of five (5) years.
Variable speed	19 ≤ kW < 37	Any speed	3,000 hours or five (5) years whichever comes first. In the absence of a device to measure the hours of use, the engine has a warranty period of five (5) years.
Variable speed or constant speed	kW ≥ 37	Any speed	3,000 hours or five (5) years whichever comes first. In the absence of a device to measure the hours of use, the engine has a warranty period of five (5) years.

https://truckmanualshub.com/

Warranty Coverage:

This warranty is transferable to each subsequent purchaser for the duration of the warranty period. Repair or replacement of any warranted part will be performed at an authorized ENGINE dealer.

Warranted parts not scheduled for replacement as required maintenance in the owner's manual shall be warranted for the warranty period. Warranted parts scheduled for replacement as required maintenance in the owner's manual are warranted for the period of time prior to the first scheduled replacement. Any warranted parts scheduled for replacement as required maintenance that are repaired or replaced under warranty shall be warranted for the remaining period of time prior to the first scheduled replacement. Any part not scheduled for replacement that is repaired or replaced under warranty shall be warranted for the remaining warranty period.

During the warranty period, ENGINE is liable for damages to other engine components caused by the failure of any warranted part during the warranty period.

Any replacement part which is functionally identical to the original equipment part in all respects may be used in the maintenance or repair of your engine, and shall not reduce ENGINE's warranty obligations.

Add-on or modified parts that are not exempted may not be used. The use of any non-exempted add-on or modified parts shall be grounds for disallowing a warranty.

Warranted Parts:

This warranty covers engine components that are a part of the emission control system of the engine as delivered by ENGINE to the original retail purchaser. Such components may include the following:

(A) Fuel injection system (including Altitude compensation system)

(B) Cold start enrichment system

(C) Intake manifold and Air intake throttle valve

https://truckmanualshub.com/

(D) Turbocharger systems
(E) Exhaust manifold
(F) Positive crankcase ventilation system
(G) Charge Air Cooling systems
(H) Exhaust Gas Recirculation (EGR) systems
(I) Exhaust gas after treatment (diesel particulate filter system)
(J) Electronic Control units, sensors, solenoids and wiring harnesses used in above systems
(K) Hoses, belts, connectors and assemblies used in above systems
(L) Emission Control Information Labels

Since emissions related parts may vary slightly between models, certain models may not contain all of these parts and other models may contain the functional equivalents.

Exclusions:

Failures other than those arising from defects in material or workmanship are not covered by this warranty.

The warranty does not extend to the following: malfunctions caused by abuse, misuse, improper adjustment, modification, alteration, tampering, disconnection, improper or inadequate maintenance, or use of non-recommended fuels and lubricating oils; accident-caused damage and replacement of expendable items made in connection with scheduled maintenance. ENGINE disclaims any responsibility for incidental or consequential such as loss of time, inconvenience, loss of use of equipment/engine or commercial loss.

https://truckmanualshub.com/

Owner's Warranty Responsibilities:

As the off-road compression-ignition engine owner, you are responsible for the performance of the required maintenance listed in your owner's manual. ENGINE recommends that you retain all documentation, including receipts, covering maintenance on your off-road compression-ignition engine, but ENGINE cannot deny warranty solely for the lack of receipts, or for your failure to ensure the performance of all scheduled maintenance.

ENGINE may deny your warranty coverage if your off-road compression-ignition engine or a part has failed due to abuse, neglect, improper maintenance or unapproved modifications.

Your engine is designed to operate on diesel fuel only. Use of any other fuel may result in your engine no longer operating in compliance with GARB and EPA emissions requirements.

You are responsible for initiating the warranty process. You must present your engine to a ENGINE dealer as soon as a problem exists. The warranty repairs should be completed by the dealer as expeditiously as possible. If you have any questions regarding your warranty rights and responsibilities, or would like information on the nearest ENGINE dealer or authorized service center, you should contact ENGINE America Corporation.

Website: www.ENGINE.com
E-mail: CS_support@ENGINE.com
Toll free telephone number: 1-800-872-2867, 1-855-416-7091

https://truckmanualshub.com/

■ EMISSION-RELATED INSTALLATION INSTRUCTIONS (REF)

Failing to follow these instructions when installing a certified engine in a piece of non-road equipment violates Federal Law (40 CFR1068.105(8)), subject to fines or other penalties as described in the clean air act.

Installation of Non-road Engines into Equipment

To ensure engines operate under the certified configurations, ENGINE has established defined application requirements when installing any certified engine into a piece of equipment. The instructions outlined below are included in our certification process and any failure to comply will be considered tampering.

ENGINE certifies engines to operate under variable speed or constant speed conditions. Engines certified as constant speed are prohibited from installation into variable speed applications. The emission control information label will identify an engine certified as constant speed.

Allowable Air Intake Restriction and Exhaust Back Pressure

Resistance to intake airflow and exhaust gas flow is generated in the intake and exhaust systems.

Exceeding the limitations will affect the operation of an engine and its certified configuration. Refer to the installation requirements and limitations of the TNV series Application Manual for the engine being equipped with these systems.

https://truckmanualshub.com/

Allowable Air Intake Restriction

Engine model	Allowable air intake restriction ≤ kPa (mmAq)	
	Initial upper limit	Upper limit for air cleaner replacement
All TNV models	2.94 (300)	6.23 (635)

Allowable Exhaust Back Pressure

Engine model	Allowable air intake restriction ≤ kPa (mmAq)	
	Initial upper limit	Upper limit for exhaust system cleaning
All models	12.7 (1300)	45 (4590)

In-Use Testing Requirements

Exhaust systems should be designed so that a 20 cm (7.87 in.) extension can be installed to the end of the exhaust pipe for purposes of sampling emissions. For equipment that does not allow installation of an extension pipe, a connection must be designed into the exhaust system for temporary attachment of exhaust sampling equipment. An example of an approved connection would be internally threaded with standard pipe threads of a size not larger than one-half inch, and shall be closed by a pipe-plug when not in use.

https://truckmanualshub.com/

Emission Control Label

If you install the engine in a way that makes the engine's emission control information label hard to read during normal engine maintenance, you must place a duplicate label on the equipment, as described in 40 CFR 1068.105.

Fuel Inlet Label

Unless otherwise specified, ENGINE will also provide a supplemental fuel inlet label with each certified engine for installation on the equipment. Permanently attach this label to the equipment near the fuel inlet.

Installation Evaluation

ENGINE CO., LTD. and its regional headquarters will determine approval of applications to the guidelines of the Application Manual, including these Emission-Related Installation Instructions.

To ensure engine performance and exhaust emissions compliance ENGINE will review net rated output based on engine build, intake air restriction, exhaust back pressure, engine heat balance and any other operational characteristic required under the Engine Installation Evaluation process.

Engine Maintenance

Equipment manufacturers are responsible for relaying all emission-related service intervals to the final consumer of the product.

For equipment manufacturers who prepare their own warranty cards, owner's manuals, service manuals, operation manuals and any related documents; they must reference the emission-related service intervals and procedures indicated in Y ANMAR's technical documents: Warranty Statement, Operation Manual, Service Manual and Application Manual.

https://truckmanualshub.com/

3. TYM WARRANTY

WARRANTY POLICY

1. Tong yang product Limited Warranty

TYM warrants that each TYM product is free from defects in both material and workmanship, and that TYM will repair or replace, at TYM's sole option, any parts which are determined by TYM to be defective in material or workmanship.

BASIC Warranty: (24 months), (1,000)Hours.

This Limited warranty will cover the period from the date of delivery to the original purchaser from an authorized TYM dealer for a term of (24 month) or (1,000) operating hours, whichever comes first.

Coverage

This Limited warranty is limited to TYM repairing or replacing, at TYM's option, warranted parts by an authorized TYM dealer at no charge for either the parts or services. Parts replaced under this Limited Warranty are only warranted for the balance of the warranty period.

https://truckmanualshub.com/

1. TYM shall have no obligation or liability under this warranty.

(1) for normal maintenance or operation services for Products, including but not limited to, providing lubricants, fuel, tune-up inspection or adjustments.

(2) for any consumable parts when such parts are replaced as a part of normal maintenance or operating services.

(3) to any exclusions and limitations contained in the Limited Warranty.

2. Options, accessories, attachments installed by Dealers which are not manufactured by TYM will not be warranted in any way by TYM. For information about the warranty or to obtain warranty service on such parts, Dealers should contact the manufacturer directly

3. The Limited Warranty is exclusive and in lieu of all other warranties, whether written, Oral, express or implied, including any warranty of merchantability or fitness for particular purpose.

The liability of TYM under this warranty is expressly limited to the provlsions in the Limited Warranty and in no event shall TYM incur any Iiability(including liability for general, special, incidental or consequential damages, or economic or moral loss, arising out of any failure of the Products) which is not expressly assumed by TYM under this warranty.

https://truckmanualshub.com/

4. PDI CHECKLIST

TRACTOR

Item	Inspection Description	Confirm (v)	Item	Inspection Description	Confirm (v)
Engine	1. Engine start and stop		Hydraulic Device	1. Hydraulic lifting/lowering operation of implement	
	2. Operation sound (noise)			2. PTO operation	
	3. Amount of Oil and Leakage		Steering system	1. Power steering operation	
	4. Operating throttle lever and pedal		Electronic Device	1. Engaged with Batter terminal	
	5. Operating choke handle			2. Ignition Safety Device	
	6. Air conditioner & fan belt tension			3. Status of Headlight Lighting	
Transmission	1. Front axle oil level and leakage			4. Independent PTO operation	
	2. Transmission fluid level and leakage			5. Work lamp illumination	
Driving and Control Device	1. Shuttle shift lever operation		Instrument Device	1. Instrument flash and light	
	2. Each lever operation			2. Warning alarm and lamp operation	
	3. Front/rear tire inflation pressure		Other	1. Status of bolts and nuts in all units	
Brake Device	1. Applying parking brake			2. Checking oil leakage in all units	
Warning Decal	1. Status in the attached location			3. A/C and heater operation	
Protective film	1. Removing the protective film		Additional Tools	1. Availability of user's manual, tools, and parts	

※ Caution ※

If the protective film is not removed for a prolonged period of time, the film may be difficult to remove and stains may occur as a result of failing to remove the film.

It is confirmed that there is nothing wrong with the product before delivery.

Year Month Day

Inspector: (Signature)

https://truckmanualshub.com/

https://truckmanualshub.com/

T494/T574 NH, SH
Operator's Manual for Tractor

Code No.
1387-940-001-0

Printed on May 2020
1st Edition