https://truckmanualshub.com/

FOREWORD

Congratulations, and welcome to the fabulous world of **KIOTI DK35/40/450L** ownership,where serious work is made fun again!
This versatile tractor is a culmination of the entire tractor and diesel knowledge gained by the **Daedong Industrial Co.,LTD** over the years since 1947 and has been designed with the finest materials and under rigid quality control standards set forth by the **KIOTI Engineering Department**.

Knowledge of tractor operation is essential for many years of dependable service and reliability. to help new owners familiarize themselves with the **KIOTI DK35/40/450L,** it is the policy of **KIOTI** tractor to provide an owner's manual which includes helpful information about tractor safety, operation and maintenance. If the information you seek is not found in this manual,your **KIOTI** tractor dealer will be happy to help you. please feel free to contact **DAEDONG-USA,INC.** with your questions/concerns. Throughout this manual you will see text in **bold type**, preceded by the words **DANGER**, **WARNING**, **CAUTION** or **IMPORTANT**.
Such text has the following significance.

SIGNS		DESCRIPTION
	DANGER	This mark indicates a hazardous situation which, if not observed, may result in death or fatal injury. This mark should be indicated for most dangerous situations only.
	WARNING	This mark indicates potentially hazardous situations which, if not observed, may result in death or moderate injury.
	CAUTION	This mark indicates potentially hazardous situations which, if not observed, may result in minor or moderate injury. And this mark can be used as a warning against unsafe activities.
	IMPORTANT	This mark indicates emphasis on notable characteristics in working procedures or information on working procedures and technology for convenient use.

NOTE: USA : only USA / EU : Europe / AU : Australia, New zealand, etc

https://truckmanualshub.com/

ABBREVIATIONS LIST

Abbreviations	Definitions
4WD	Four Wheel Drive
API	American Petroleum Institute
ASAE	American Society of Agricultural Engineers, USA
ASTM	American Society of Testing and Materials, USA
fpm	Feet Per Minute
Hi-Lo	High Speed-Low Speed
HST	Hydrostatic Transmission
m/s	Meters Per Second
P.T.O	Power Take OFF
RH/LH	Right-hand and Left-hand sides are determined by facing in the direction of forward travel
ROPS	Roll-Over Protective Structures
m^{-1} (rpm)	Revolutions Per Minute
S^{-1} (r/s)	Revolutions Per Second
SAE	Society of Automotive Engineers, USA
SMV	Slow Moving Vehicle

https://truckmanualshub.com/

UNIVERSAL SYMBOLS

Various universal symbols have been used on the instruments and controls of your **KIOTI** tractor. Below is a list of the universal symbols and their meanings.

- Safety Alert Symbol
- Fuel-Level
- Engine Coolant-Temperature
- Parking Brake
- Battery Charging Condition
- Engine Oil-Pressure
- Turn Signal
- Power Take-Off Clutch Control-Off Position
- Power Take-Off Clutch Control-ON Position
- Differential Lock
- Position Control-Lowered Position
- Hazard Warning Lights
- Headlight-Low Beam
- Headlight-High Beam
- Four-Wheel Drive-ON
- Fast
- Slow
- High Range
- Middle Range
- Low Range
- N Neutral Position
- Coolant
- Preheat

https://truckmanualshub.com/

https://truckmanualshub.com/

CONTENTS

1. SAFETY PRECAUTIONS .....

2. SERVICING OF TRACTOR .....

3. SPECIFICATIONS .....

4. DESCRIPTION OF OPERATING SYSTEM .....

5. OPERATING .....

6. MAINTENANCE .....

7. STORAGE .....

8. TROUBLESHOOTING .....

9. INDEX .....

https://truckmanualshub.com/

1 SAFETY PRECAUTIONS

BEFORE OPERATING THE TRACTOR
OPERATING THE TRACTOR
DRIVING THE TRACTOR
PARKING THE TRACTOR
OPERATING THE P.T.O
USING 3-POINT HITCH
SERVICING THE TRACTOR
TRACTOR SAFETY LABELS

https://truckmanualshub.com/

BEFORE OPERATING THE TRACTOR

A careful operator is the best operator. Most accidents can be avoided by observing certain precautions. To help prevent accidents, use these safety precautions, and pay attention to the job at hand. If you can prevent an accident, your time will have been well spent.

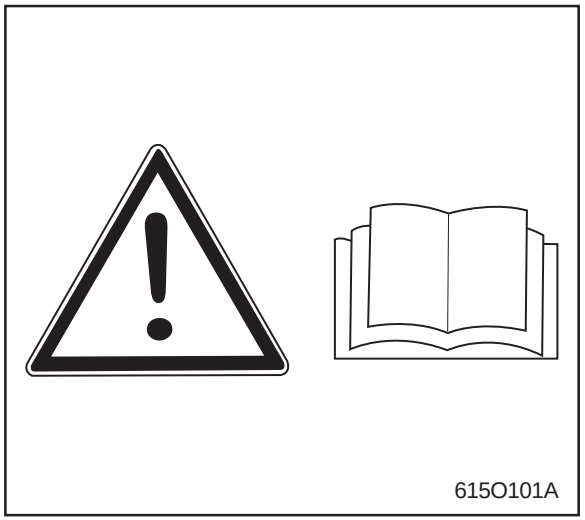
615O101A

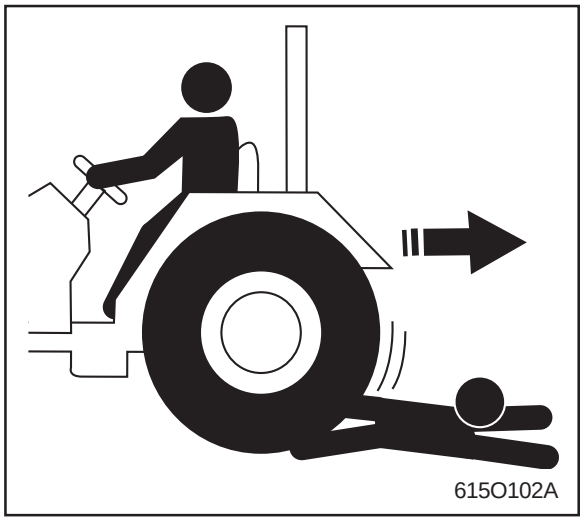
615O102A

1. It is recommended that you read and understand this entire manual before operation of your new tractor. Failure to do so could result in accidents or injury.
2. Only persons who are properly trained should be allowed to operate the tractor.
3. Read and follow all warning labels and decals affixed to the tractor.
4. Replace any missing or damaged decals as soon as it is practical. A list of decals is shown on page1-14~16
5. Keep safety decals clean from dirt and debris.
6. When getting on and off the tractor, handholds and step plates should always be used. This will help to prevent accidental slips trips and falls.
7. Be sure to scrape off mud or soil from your shoes before mounting the tractor.
8. Watch where you are going at all times so that you are able to avoid obstacles that can cause injury or damage to your tractor.
9. When starting the tractor make sure your path is clear of people to avoid accidents caused by sudden movements.
10. Before making reverse movements with your tractor, you should always check to see that the path is clear.

https://truckmanualshub.com/

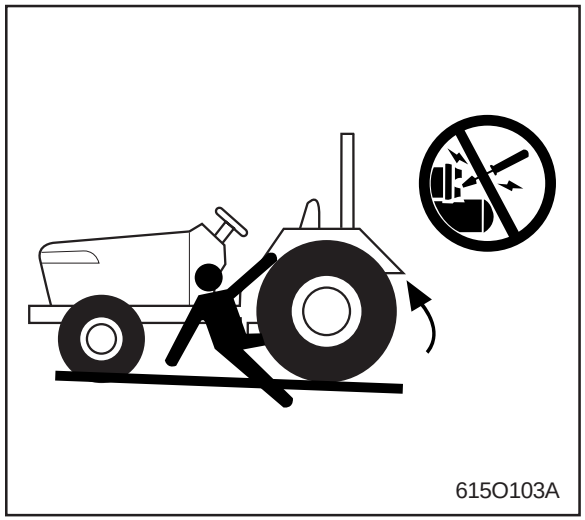

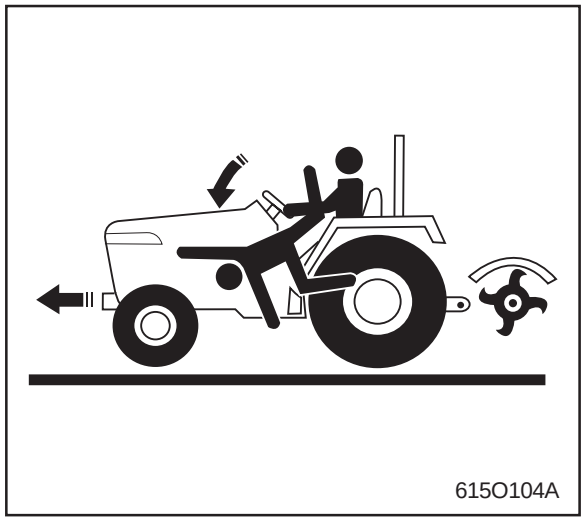

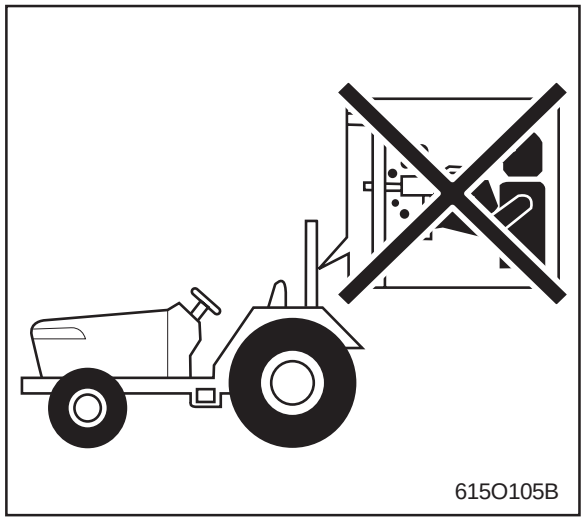

11. Never operate this tractor or any other agricultural equipment while under the influence of alcohol, drugs or while fatigued.
12. While working in cooperation with other tractors always communicate your intentions.
13. Do not start your tractor by shorting across the starter.
14. Never start the engine while standing on the ground.
15. Only the operator should ride on the tractor unless a passenger seat is installed. Keep bystanders away from the tractor while in operation.
16. All persons using the tractor should have knowledge of its proper operation and should read this manual carefully.
17. Never get off the tractor without setting the parking brake, lowering the implement to the ground and shutting of the tractor.
18. No alterations should be made to your **KIOTI** tractor without first consulting your **KIOTI** dealer.

https://truckmanualshub.com/

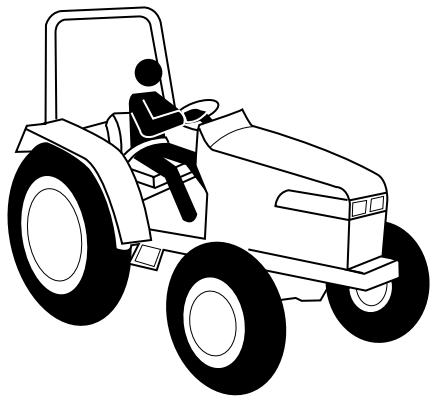
615O106A

19. Before starting your tractor you should disengage the clutch, and make sure that all shift levers are in the neutral position.

20. For your safety **ROPS** with a seat belt is recommended for most applications.

NOTE

- Always use seat belt when the tractor is equipped with a **ROPS**. Never use the seat belt when tractor is not equipped with a **ROPS**.
  (**ROPS**: Roll-Over Protective Structures)

A **ROPS** should never be modified by welding, grinding or cutting, as this can weaken the **ROPS** structure. If any components of the **ROPS** unit is damaged, it must be replaced.

If the **ROPS** unit is removed or loosened for any reason, the parts should be fitted back to their original positions and all bolts should be properly torqued.

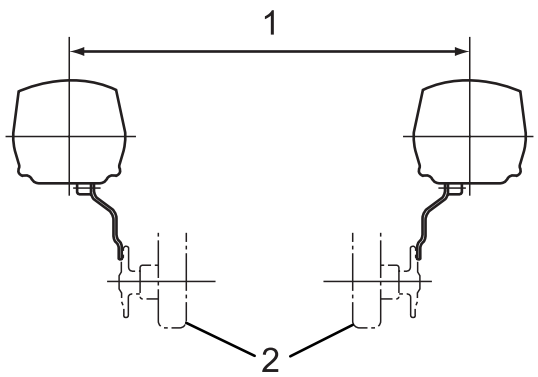

615O107A

(1) Max. tread width (2) Rear wheels

21. Extra caution should be taken when driving tractors with narrow tread widths. For added stability you should adjust your rear wheel tread width, see page 8-3.

https://truckmanualshub.com/

OPERATING THE TRACTOR

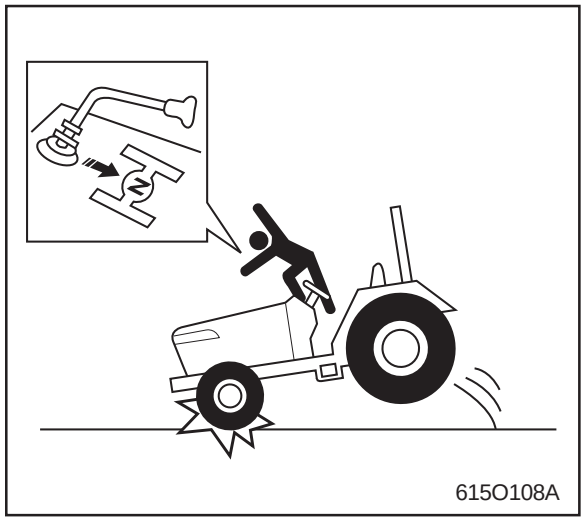

615O108A

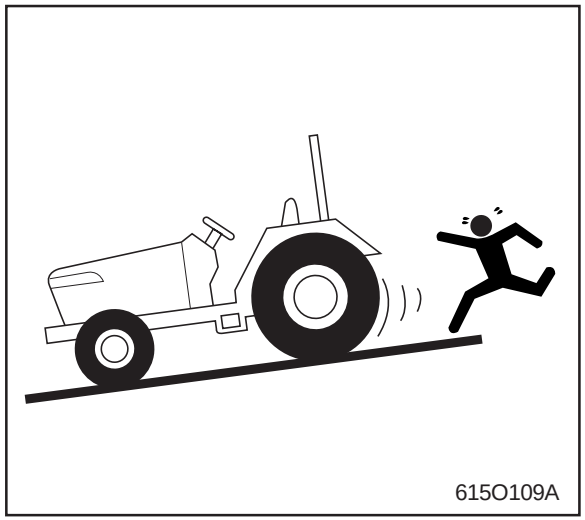

615O109A

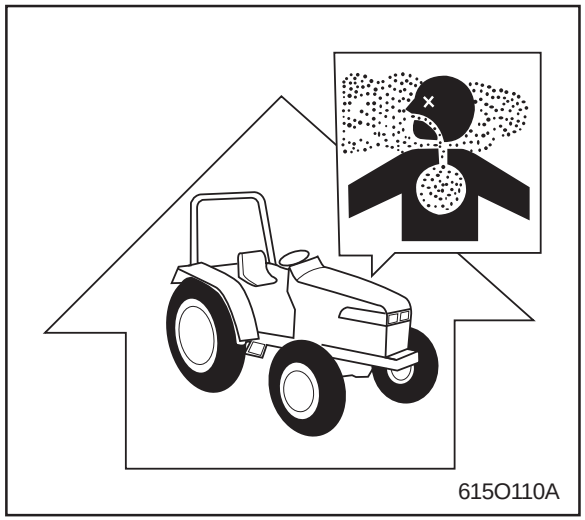

615O110A

1. Avoid accidental contact with gear shift levers while the engine is running. Unexpected tractor movements can result in bodily injury.
2. Do not park your tractor on a steep incline, and remember to shut off the engine and P.T.O before dismounting the tractor.
3. Do not operate your tractor in an enclosed building without the proper ventilation. Exhaust fumes can cause serious injury or death.

https://truckmanualshub.com/

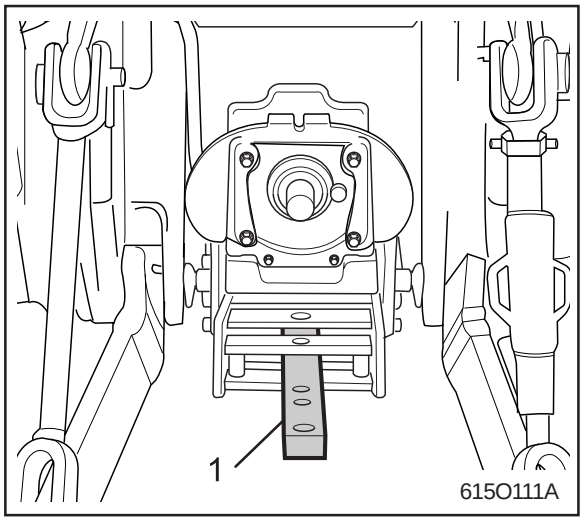

(1) Drawbar

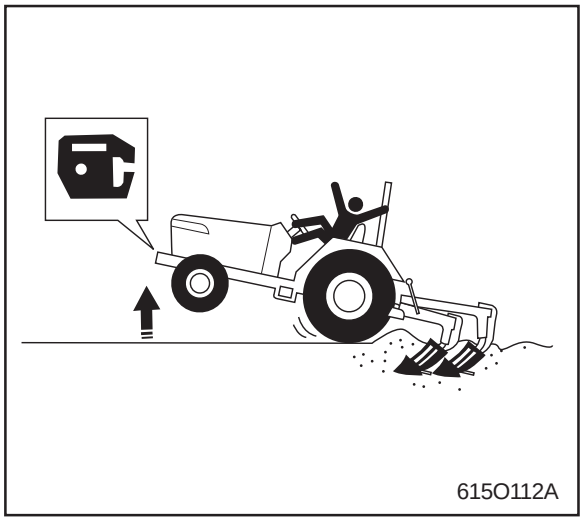

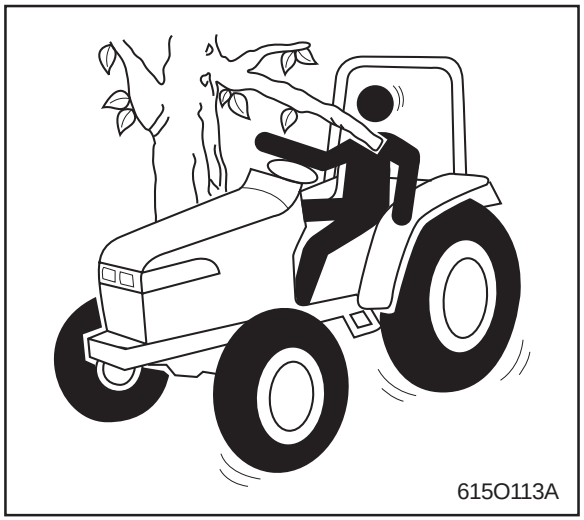

4. Make sure that all pressure lines are tight before starting the tractor.
5. Pull only from the drawbar. Never hitch anything to the axle housing or any other point except the drawbar. Pulling from any other location only increase the risk of serious personal injury or death.
6. If The front of the tractor tends to rise up when heavy implements are attached to the three point hitch, the weights should be installed on the tractor. Do not operate the tractor with a light front end.
7. Do not leave equipment in the raised position when the vehicle is stopped or unattended.
8. When using implements or attachments with your tractor you should first read their respective owner's manual. You should always keep their safe operation procedures in mind.
9. You should be familiar with your equipment and its limitations.
10. Always use the proper ballast weight on your tractor when using rear implements.

https://truckmanualshub.com/

11. Driving forward out of a ditch or steep inclines can cause the tractor to tip over backwards. To avoid this you should back out of these positions. Four wheel drive tractors can give you a false sense of security in the tractors ability to maneuver out of these positions, so extra caution should be taken.
12. Watch front and rear for and avoid obstacles at row ends, near trees and around other obstructions.

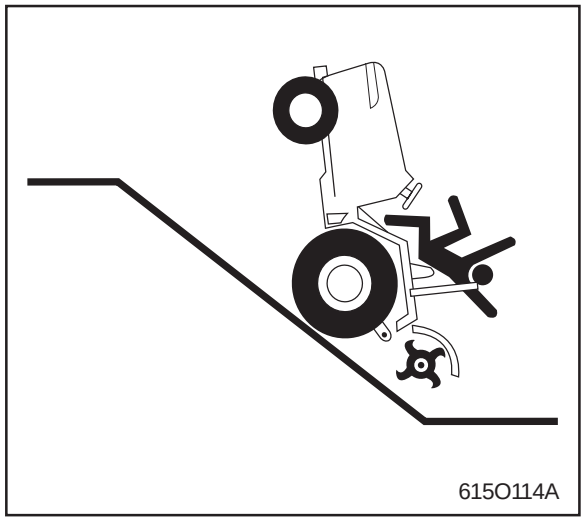

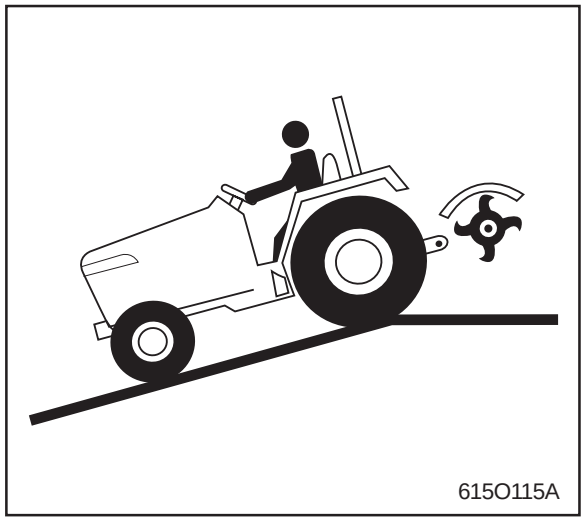

13. If abused or used incorrectly your tractor can become dangerous to you and bystanders. Overloading your tractor or using unsafe equipment can also be dangerous and should be avoided. Refer to the “Specifications of Implement Limitation”, which outlines the maximum load for safe tractor operation.
14. Never try to get on or off a moving tractor.
15. When working in groups, always let the others know what you are going to do before you do it.
16. Never “freewheel”. Disengaging the clutch or shifting into neutral while descending a slope as this could lead to a loss of control.
17. Do not operate near ditches, holes, embankments, or other terrain features which may collapse under the tractor’s weight. The risk of tractor upset is even higher when the ground is loose or wet.

https://truckmanualshub.com/

DRIVING THE TRACTOR

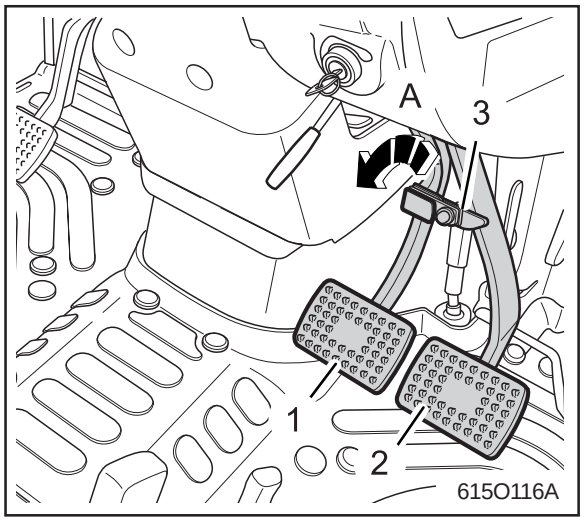

(1) Brake Pedal(LH) *(3) Brake Pedal Lock*
(2) Brake Pedal(RH)
(A) Whenever travelling on the road

1. Lock the brake pedals together when traveling at road speeds. Brake both wheels simultaneously when making an emergency stop. Uneven braking at road speeds could cause the tractor to tip over.

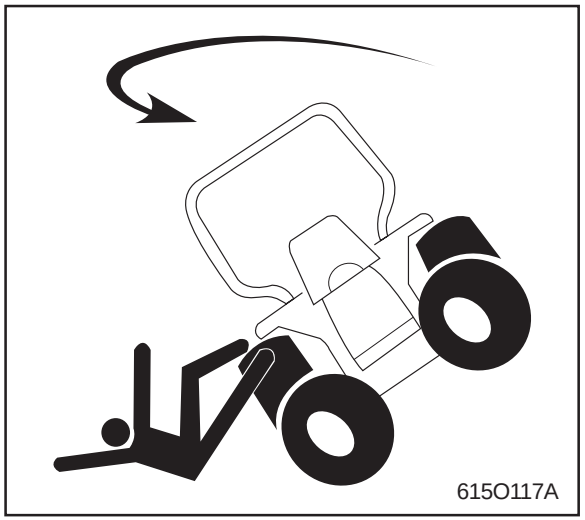

2. Always slow the tractor down before turning. Turning at high speed may tip the tractor over.

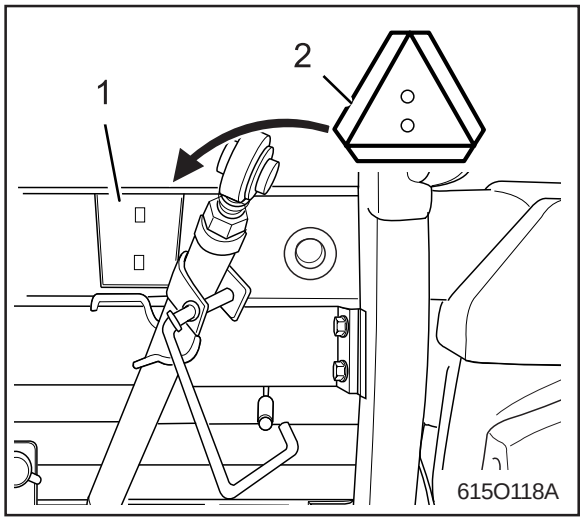

(1) Bracket *(2) SMV sign (USA)*

3. Make sure that the Slow Moving Vehicle (SMV) sign is clean and visible. Use hazard lights as required.

https://truckmanualshub.com/

4. Observe all local traffic and safety regulations.
5. Turn the headlights on. Dim them when meeting another vehicle.
6. Drive at speeds that allow you to maintain control at all times.
7. Do not apply the differential lock while traveling at road speeds. As the tractor may run out of control.
8. Avoid sudden movements of the steering wheel as this can cause a loss of control of the tractor. This risk is especially great when traveling at road speeds.
9. Do not operate an implement while the tractor is on the road. Lock the three point hitch in the raised position.
10. When towing other equipment, use a safety chain and place an SMV emblem on it as well.

PARKING THE TRACTOR

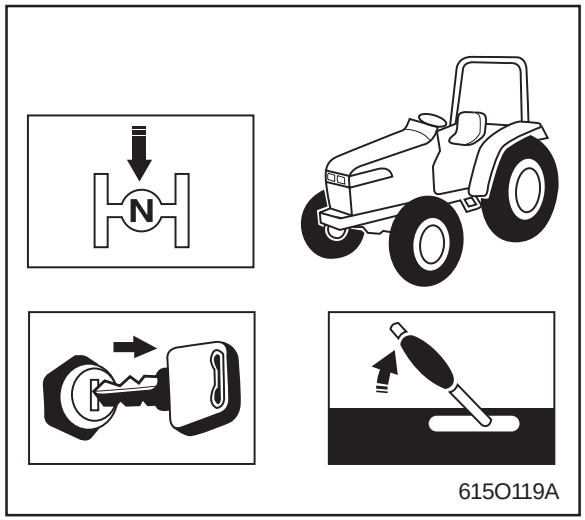

1. Disengage the P.T.O, lower all implements, place all control levers in the neutral position, set the parking brake, stop the engine and remove the key.

OPERATING THE P.T.O

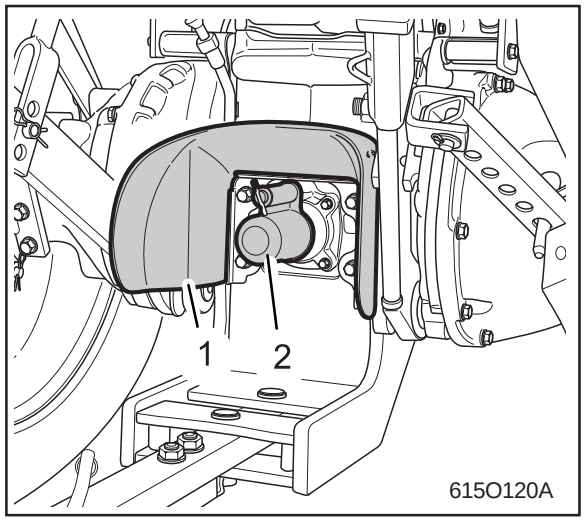

(1) PTO Shaft cover (2) PTO Shaft cap

1. Make sure the tractor is completely stopped, gears are in neutral and all moving components have completely stopped before connecting, disconnecting, adjusting, cleaning or servicing any P.T.O driven equipment.
2. Keep the P.T.O shaft cover in place at all times. Replace the P.T.O shaft cap when the shaft is not in use.

https://truckmanualshub.com/

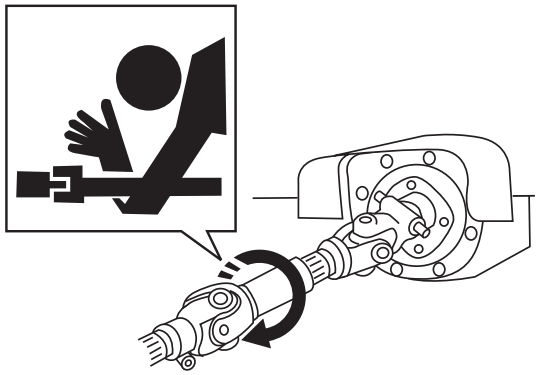

3. Before installing or using P.T.O driven equipment, read the maunfacturer's manual and review the safety labels attached to the equipment.
4. When operating stationary P.T.O driven equipment, always apply the tractor parking brake and place chocks behind and in front of the rear wheels. Stay clear of all rotating parts.

USING 3-POINT HITCH

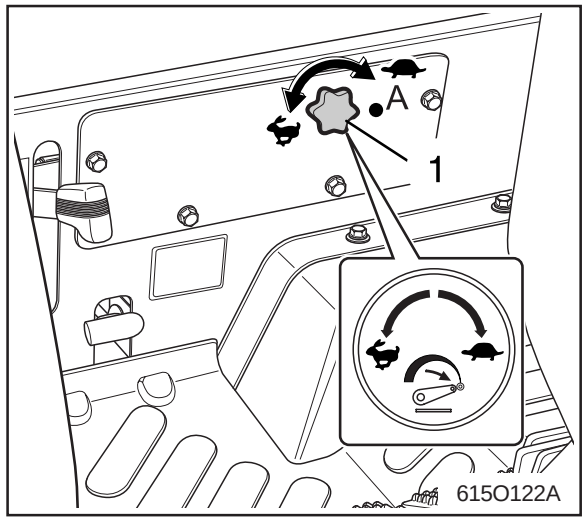

(1) 3-point hitch lowering speed knob

(A) Lock ( ) Fast ( ) Slow

1. Use the 3-point hitch only with equipment designed for 3-point hitch usage.
2. When using a 3-point hitch mounted implement, be sure to install the proper counterbalance weight on the front of the tractor.
3. When transporting on the road, set the implement lowering control in the "LOCK" position to hold the implement in the raised position.

SERVICING THE TRACTOR

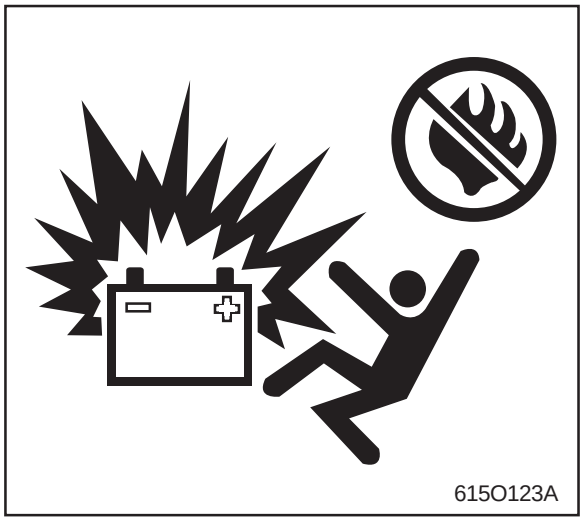

In order to service your tractor you must park it on a flat level surface, set the parking brake, place the gear shift lever in neutral and stop the engine.

1. Allow the tractor time to cool off before servicing any part that may have become hot while the tractor was running.
2. You must always stop the engine before refueling the tractor. Avoid overfilling the tractor or spilling the fuel.
3. Do not smoke while working around the battery or when refueling your tractor. Keep all sparks and flames away for the battery and fuel tank. The battery presents an explosive hazard because it gives off hydrogen and oxygen… especially when recharging.

https://truckmanualshub.com/

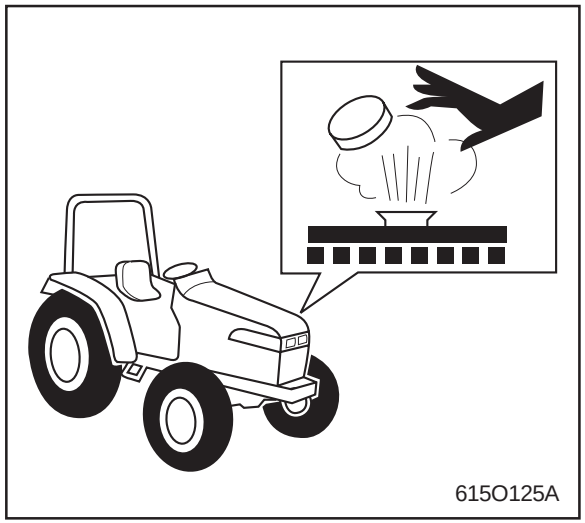

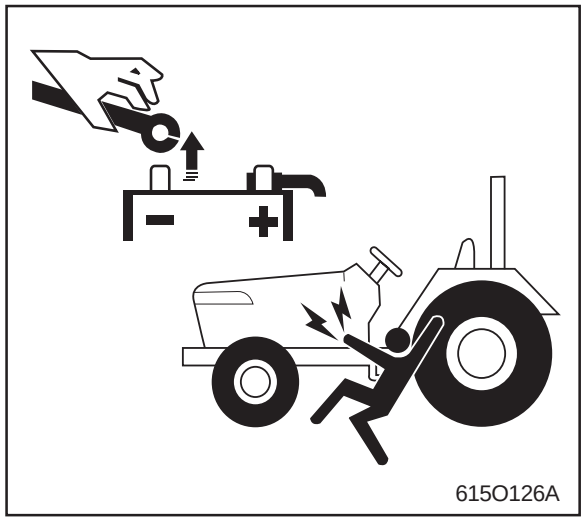

4. Before jump starting a dead battery, read and follow all of the instructions.
5. Keep a first aid kit and fire extinguisher handy at all times.
6. Do not remove the radiator cap while the coolant is hot. When cool, slowly rotate the cap to the first stop and allow sufficient time for excess pressure to escape. After all the pressure is released remove the cap completely. If your tractor is equipped with a coolant recovery tank, add coolant there instead of to the radiator.
7. When working with your tractors electrical components you must first disconnect the battery cables.
8. To ensure that there are no accidents from sparks you must first disconnect the negative battery cable.

https://truckmanualshub.com/

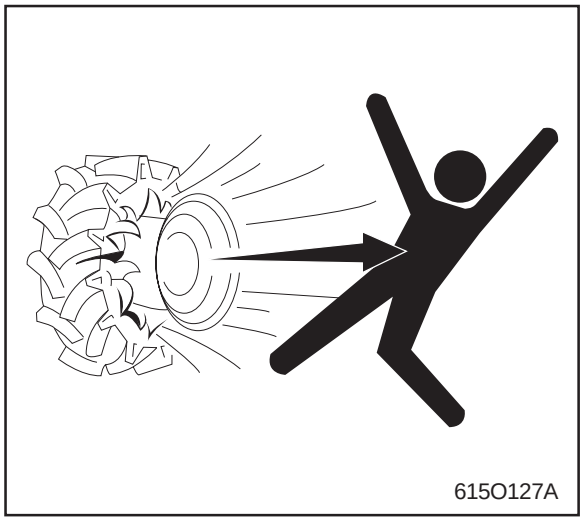

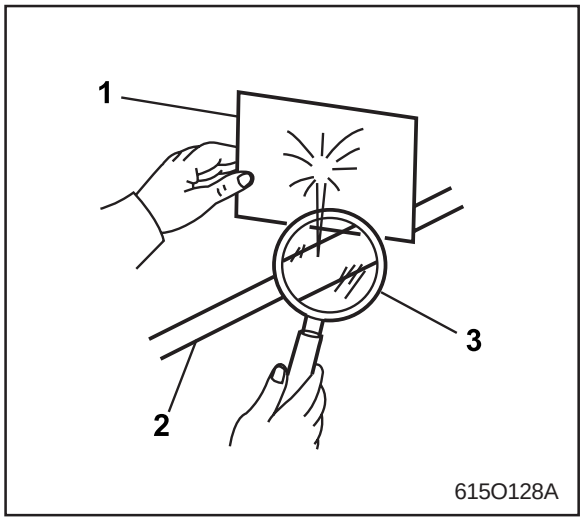

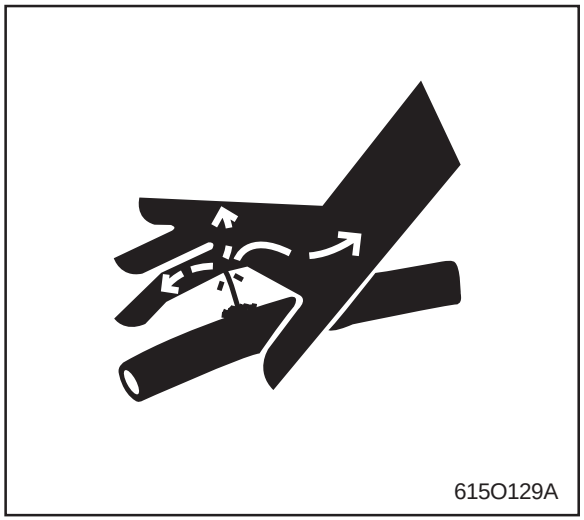

(1) Cardboard
(2) Hydraulic line
(3) Magnifying glass

9. Tire mounting should be done by qualified professionals, with the proper equipment.
10. Maintaining correct tire pressure is important for the life of your tires. You should not inflate the tires above the recommended pressure specified in the owner's manual.
11. Securely support the tractor when changing wheels or the wheel tread width.
12. Make sure that wheel bolts have been tightened to the specified torque.
13. Escaping hydraulic fluid under pressure has sufficient force to penetrate skin, causing serious personal injury. Before disconnecting hydraulic lines, *Be sure to release all residual pressure. Before disconnecting hydraulic line* Before adding pressure to the hydraulic system, make sure that all connections are tight and that all line, pipes and hoses are free of damage.
14. Fluid escaping from pinholes may be invisible. Do not use hands to search for suspected leaks;

    Use a piece of cardbord or wood, instead. Use of safety goggles or other eye protection is also highly recommended. If injured by escaping fluid, see a medical doctor at once. This fluid can produce gangrene or severe allergic reaction.

https://truckmanualshub.com/

15. Keep the environmental pollution in mind. When replacing cooling water or oil, disuse it to the right way.

    Be sure to observe the relevant regulations when you dispose of the engine oil, transmission oil, fuel, coolant filter and battery.

https://truckmanualshub.com/

CAUTION LABELS

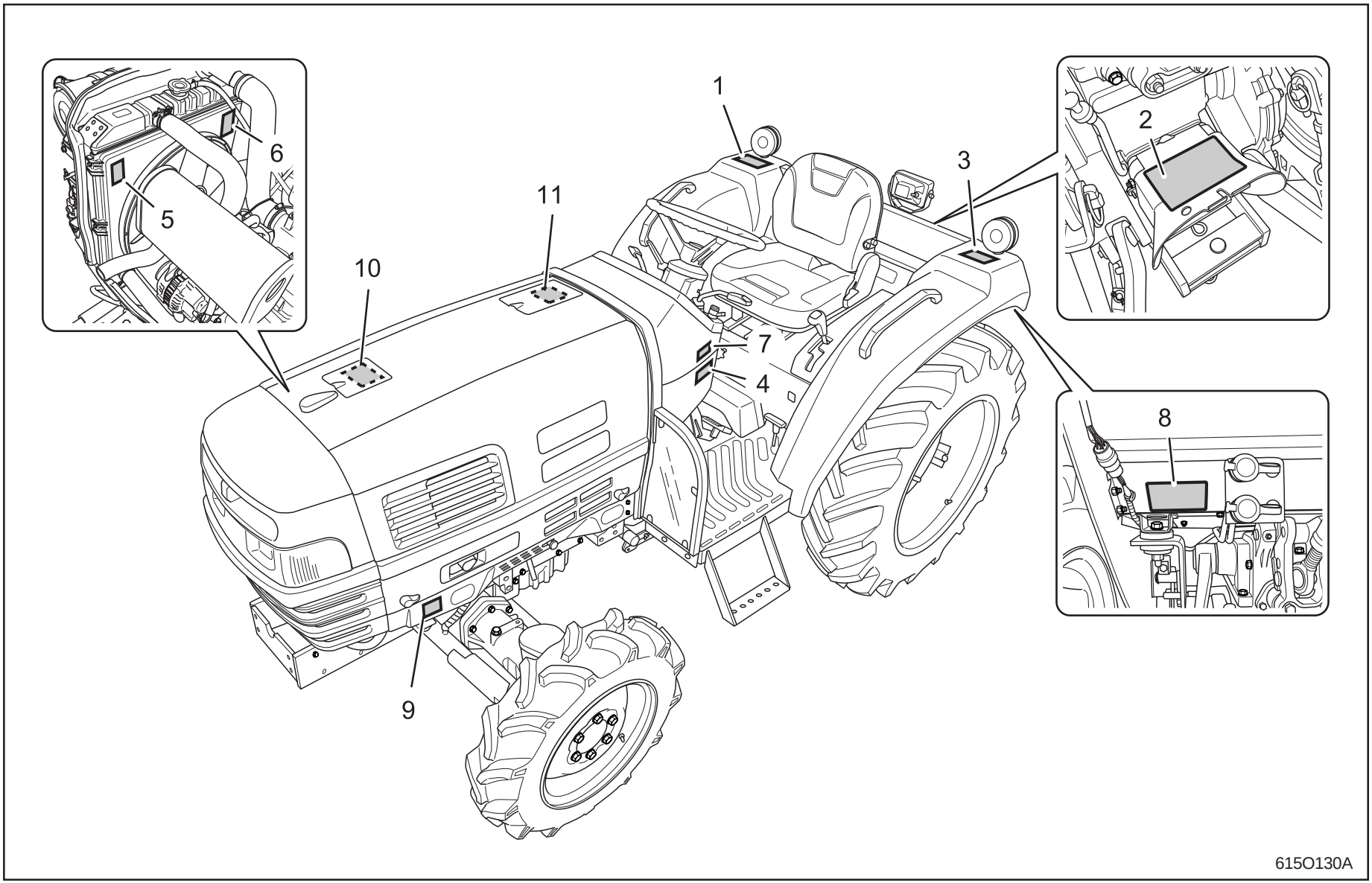

https://truckmanualshub.com/

1. T2325-50512

⚠ CAUTION

1. Read and understand the owner's manual before attempting to operate this tractor
2. Start the tractor in neutral and with clutch pedal fully depressed.
3. Start the engine only while in the operator's seat.
4. Keep people far away from tractor when working.
5. Avoid sharp turns or sudden braking.
6. Always slow down when driving on rough ground.
7. Always stop the engine and set the brake before checking, adjusting or repairing the tractor or implement.
8. Always lower implements to the ground before leaving the tractor seat.
9. Only the operator should be allowed on the tractor.
10. Lock brake pedals together, use warning lights, and use a slow moving vehicle emblem when traveling on the roadway.
11. Failure to follow the instructions above or in the owner's manual can cause serious injury to the operator or other persons.

T2325-50512

2. T2325-50743

⚠ WARNING ⚠

TO AVOID INJURY FROM PTO:

1. Keep all shields in place.
2. keep hands, feet and clothing away.
3. Disengage PTO, stop the engine and set the brake before adjusting, repairing or sevicing the tractor or implement.

TO AVOID PERSONAL INJURY:

1. Attached pulled or towed loads to the drawbar only.
2. Use the 3-point hitch only with equipment designed for 3-point hitch usage.

T2325-50743

3. T2445-50724

⚠ WARNING ⚠

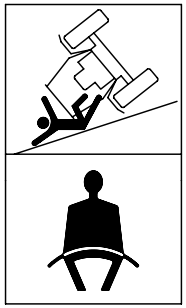

TO AVOID PERSONAL INJURY:

1. Roll-Over Protective Structure(ROPS) with a seat belt is recommended in most applications. Check the OWNER's manual and discuss with your local dealer.
2. Always use the seat belt when the tractor is equipped with ROPS. Never use the seat belt when the tractor is not equipped with ROPS.

T2445-50724

4. T2241-50702

⚠ WARNING

TO AVOID POSSIBLE INJURY OR DEATH

1. Do not start engine by shorting across starter terminals. Machine may start in gear and move if normal starting circuitry is bypassed.
2. Start engine only from operator's seat with transmission and PTO in neutral.
   Never start engine while standing on ground.

T2241-50702

5. T4625-52361

T4625-52361

6. T4625-52351

T4625-52351

7.T4625-53191

⚠ WARNING

1.Before leaving the tractor, park the tractor on level ground, apply the parking brake, disengage the P.T.O. and stop the engine.

2.Avoid accidental contact with the gear shift levers while the engine is running as unexpected tractor movement can result.

T4625-53191

https://truckmanualshub.com/

8.T2615-52131

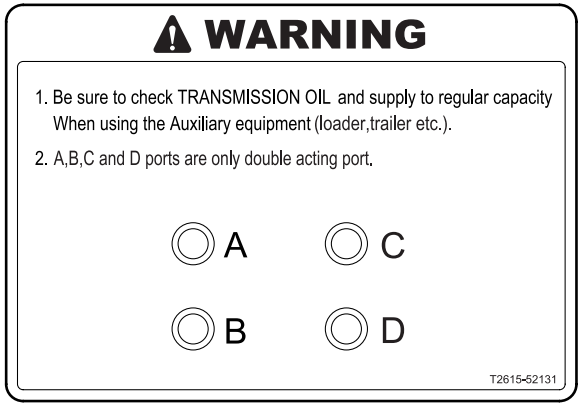

10.T2615-53561

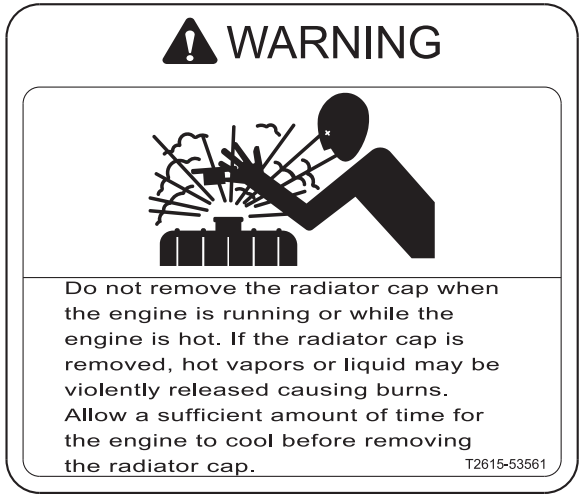

9.T2625-55111

11.T2615-54112

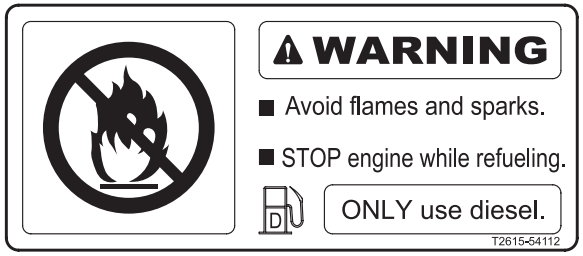

https://truckmanualshub.com/

2 SERVICING OF TRACTOR

https://truckmanualshub.com/

Your dealer is interested in your new tractor and has the desire to help you get the most value from it. After reading this manual thoroughly, you will find that you can do some of the regular maintenance yourself.

However, when in need of parts or major service, be sure to see your **KIOTI** dealer. For service, contact the **KIOTI** Dealership from which you purchased your tractor or your local authorized **KIOTI** dealer.

When in need of parts, be prepared to give your dealer both the tractor and engine serial numbers.

The tractor serial number is located on the left side of the front axle frame.

The transmission serial number is located above of the P.T.O cover. The engine serial number is located on the right side of the engine crankcase. Locate the serial numbers now and record them in the space provided.

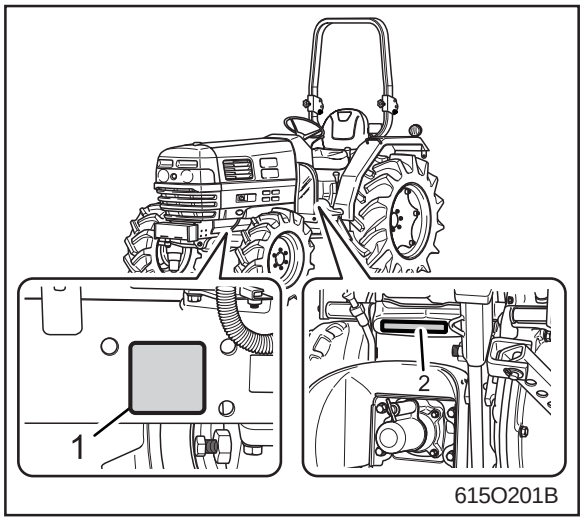

(1) Manufacture Plate
(2) Transmission Serial Number

Tractor Serial No.

Engine Serial No.

Transmission Serial No.

Date of Purchase
(To be filled in by purchaser)

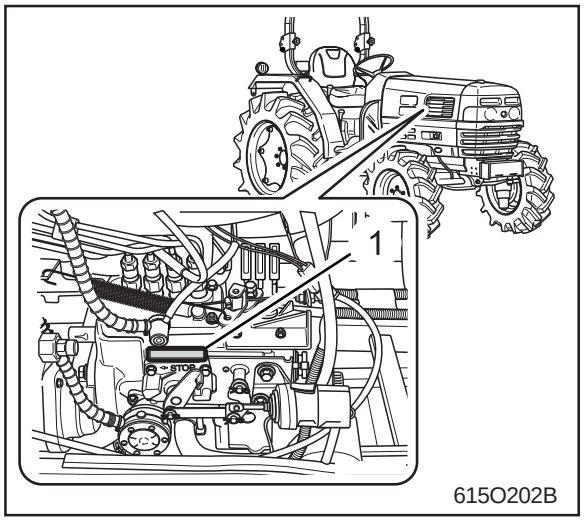

(1) Engine Serial Number

WARNING

- ***Do not make any modifications to the tractor. Modifications may cause hazard. Never touch the sealed parts on the engine.***

Modifying the tractor or removing the engine seal voids the warranty since it is considered as being used other than original usage.

https://truckmanualshub.com/

3 SPECIFICATIONS

SPECIFICATIONS
TRAVELING SPEED
IMPLEMENT LIMITATIONS

https://truckmanualshub.com/

SPECIFICATIONS

USA

Model		DK35	DK40	DK35CR	DK40CR
Engine GROSS Power HP		35	40.4	35	40.4
Engine	Model	3A165D	4A200	3A165D	4A200
	Type	Indirect injection, vertical, water-cooled, 4-cycle diesel engine			
	Number of Cylinder	3	4	3	4
	Bore and stroke mm(in)	87x92.4 (3.43x3.64)	83x92.4 (3.43x3.69)	87x92.4 (3.43x3.64)	83x92.4 (3.43x3.69)
	Total displacement	1,647	1,999	1,647	1,999
	Rated revolution rpm	2,600			
	Injection timing	18° before T.D.C .			
	Injection order	1-2-3	1-3-4-2	1-2-3	1-3-4-2
	Compression ratio	22 : 1			
	Lubricating system	Forced lubrication by trochoid pump			
	Cooling system	Pressurized radiator, Forced circulation with water pump			
	Alternator	12V, 50AMPS			
	Weight (Dry) kg	179	205	179	205
Capacities	Fuel tank ℓ(U.S.gal.)	40 (10.6)			
	Engine crankcase ℓ(U.S.gal.)	5.8 (1.5)	7.0 (1.5)	5.8 (1.5)	7.0 (1.5)
	Engine coolant ℓ(U.S.gal.)	7.0 (1.9)	8.9 (1.9)	7.0 (1.9)	8.9 (1.9)
	Transmission case ℓ(U.S.gal.)	44 (11.6)	←	44 (11.6)	←
	Front axle case ℓ(U.S.gal.)	7.5 (2.0)	←	7.5 (2.0)	←

https://truckmanualshub.com/

USA

Model				DK35	DK40	DK35CR	DK40CR
Dimensions (with Std. tires)	Overall length (without 3p)		mm(in)	3,357 (132.2)	3,365 (132.5)	3,357 (132.2)	3,365 (132.5)
	Overall length (with 3p)		mm(in)	3,468 (136.5)	3,550 (139.8)	3,468 (136.5)	3,550 (139.8)
	Overall width (minimum tread)		mm(in)	1,440 (56.7)	1,505 (59.3)	1,440 (56.7)	1,505 (59.3)
	Overall height (Top of ROPS)		mm(in)	2,445 (96.5)	2,465 (97.0)	2,445 (96.5)	2,465 (97.0)
	Overall height (Top of steering wheel)		mm(in)	1,530 (60.2)	1,545 (60.8)	1,530 (60.2)	1,545 (60.8)
	Wheel Base		mm(in)	1,668 (65.7)	1,780 (70)	1,668 (65.7)	1,780 (70)
	Min. ground clearance		mm(in)	239 (9.4)	257 (10.1)	239 (9.4)	257 (10.1)
	Tread	Front	mm(in)	1,240(48.8)			
		Rear	mm(in)	1,151~1,387 (45.3~54.6)	1,157~1,467 (45.6~57.8)	1,151~1,387 (45.3~54.6)	1,157~1,467 (45.6~57.8)
Traveling System	Tire size (Std. tires)	Front		7-16 PR	8-16 PR	7-16 PR	8-16 PR
		Rear		12.4-24 PR	13.6-24 PR	12.4-24 PR	13.6-24 PR
	Clutch			Dry single stage			
	Steering			Hydraulic power steering			
	Transmission			Synchronized shuttle and transmission (8 forward and 8 reverse speeds)		Synchronized shuttle and transmission (16 forward and 16 reverse speeds)	
	Brake	Front		Wet disc type			
		Rear		Connected with the traveling brake			
	Differential			Bevel gear			

https://truckmanualshub.com/

USA

Model			DK35	DK40	DK35CR	DK40CR
Hydraulic System	Hydraulic lift control system		Position, Draft and Mixed control			
	Pump Capacity ℓ/min (U.S.gal.)	Main pump	28.6 (7.6)			
		Power steering pump	17.2 (4.5)			
	Three point hitch		SAE Category 1			
	Maximum Lifting Capacity (at the end of lower line) kg(lbs)		1,650 (3,638)	1,550 (3,417)	1,650 (3,638)	1,550 (3,417)
PTO	No. of Remote control valve ports (Option)		2 or 4			
	PTO Shaft		SAE 1-3/8, 6 splines			
	Revolution (independent PTO)	MID PTO rpm	2,000 (2,542)			
		Rear PTO rpm	540 (2,451)			
Min.Turning Radius (without brake) mm(in)			3,100 (112.7)			
Traction System			Swing Draw-Bar			
Weight (with ROPS) kg(lbs)			1,515 (3,340.0)	1,665 (3,670.7)	1,515 (3,340.0)	1,665 (3,670.7)
Traveling Speed (at 2600 engine speed with Std. tires)		Forward km/h(mph)	1.62 ~ 22.36 (1.01 ~ 13.89)	1.70 ~ 23.38 (1.06 ~ 14.53)	0.20 ~ 22.36 (0.13 ~ 13.89)	0.21 ~ 23.38 (0.13 ~ 14.53)
		Reverse km/h(mph)	1.50 ~ 20.62 (0.93 ~ 12.81)	1.57 ~ 21.57 (0.98 ~ 13.40)	0.19 ~ 20.62 (0.12 ~ 12.82)	0.19 ~ 21.57 (0.12 ~ 13.40)

https://truckmanualshub.com/

EU

Model		DK35	DK40	DK35CR	DK40CR	DK450L
Engine GROSS Power	HP	35	41 (30.5kw)	34 (25.4kw)	41 (30.5kw)	44.4
Engine	Model	3A165D	4A200B	3A165D	4A200B	4A200L
	Type	Indirect injection, vertical, water-cooled, 4-cycle diesel engine				
	Number of Cylinder	3	4	3	4	←
	Bore and stroke mm(in)	87x92.4 (3.43x3.64)	83x92.4 (3.43x3.69)	87x92.4 (3.43x3.64)	83x92.4 (3.43x3.69)	←
	Total displacement	1,647	2,000	1,647	2,000	←
	Rated revolution rpm	2,600				
	Injection timing	18° before T.D.C .				
	Injection order	1-2-3	1-3-4-2	1-2-3	1-3-4-2	←
	Compression ratio	22 : 1				
	Lubricating system	Forced lubrication by trochoid pump				
	Cooling system	Pressurized radiator, Forced circulation with water pump				
	Alternator	12V, 50AMPS				
	Weight (Dry) kg	179	205	179	205	207
Capacities	Fuel tank ℓ(U.S.gal.)	40 (10.6)				
	Engine crankcase ℓ(U.S.gal.)	5.8 (1.5)	8.0 (2.1)	5.8 (1.5)	7.0 (1.5)	←
	Engine coolant ℓ(U.S.gal.)	7.4 (2.0)	8.8 (2.3)	7.4 (2.0)	8.8 (2.3)	←
	Transmission case ℓ(U.S.gal.)	44 (11.6)	←	←	←	←
	Front axle case ℓ(U.S.gal.)	7.5 (2.0)	←	←	←	←

https://truckmanualshub.com/

EU

Model				DK35	DK40	DK35CR	DK40CR	DK450L
Dimensions (with Std. tires)	Overall length (without 3p)		mm(in)	3,357 (132.2)	3,365 (132.5)	3,357 (132.2)	3,365 (132.5)	3,262(128.4)
	Overall length (with 3p)		mm(in)	3,468 (136.5)	3,550 (139.8)	3,468 (136.5)	3,550 (139.8)	3,450(135.8)
	Overall width (minimum tread)		mm(in)	1,440 (56.7)	1,505 (59.3)	1,440 (56.7)	1,505 (59.3)	1,430 (56.3)
	Overall height (Top of ROPS)		mm(in)	2,445 (96.5)	2,465 (97.0)	2,445 (96.5)	2,465 (97.0)	2,365 (93.1)
	Overall height (Top of steering wheel)		mm(in)	1,530 (60.2)	1,545 (60.8)	1,530 (60.2)	1,545 (60.8)	1,465 (57.7)
	Wheel Base		mm(in)	1,668 (65.7)	1,780 (70)	1,668 (65.7)	1,780 (70)	1,650 (65)
	Min. ground clearance		mm(in)	239 (9.4)	257 (10.1)	239 (9.4)	257 (10.1)	174 (6.9)
	Tread	Front	mm(in)	1,240(48.8)				1,230 (48.4)
		Rear	mm(in)	1,151~1,387 (45.3~54.6)	1,157~1,467 (45.6~57.8)	1,151~1,387 (45.3~54.6)	1,157~1,467 (45.6~57.8)	1,125~1,451 (44.3~57.1)
Traveling System	Tire size (Std. tires)	Front		7-16 PR	8-16 PR	7-16 PR	8-16 PR	8-16 PR
		Rear		12.4-24 PR	13.6-24 PR	12.4-24 PR	13.6-24 PR	12.4-24 PR
	Clutch			Dry single stage				
	Steering			Hydraulic power steering				
	Transmission			Synchronized shuttle and transmission (8 forward and 8 reverse speeds)		Synchronized shuttle and transmission (16 forward and 16 reverse speeds)		
	Brake	Front		Wet disc type				
		Rear		Connected with the traveling brake				
	Differential			Bevel gear				

https://truckmanualshub.com/

EU

Model			DK35	DK40	DK35CR	DK40CR	DK450L
Hydraulic System	Hydraulic lift control system		Position, Draft and Mixed control				
	Pump Capacity ℓ/min (U.S.gal.)	Main pump	28.6 (7.6)				
		Power steering pump	17.2 (4.5)				
	Three point hitch		SAE Category 1				
	Maximum Lifting Capacity (at the end of lower line) kg(lbs)		1,650 (3,638)	1,550 (3,417)	1,650 (3,638)	1,550 (3,417)	1,950 (4,299)
PTO	No. of Remote control valve ports (Option)		4				
	PTO Shaft		SAE 1-3/8, 6 splines				
	Revolution (independent PTO)	MID PTO rpm	2,000 (2,542)				None
		Rear PTO rpm	540 (2,451)				
Min.Turning Radius (without brake) mm(in)			3,100 (112.7)				2,930 (115.3)
Traction System			Swing Draw-Bar				
Weight (with ROPS) kg(lbs)			1,515 (3,340.0)	1,665 (3,670.7)	1,515 (3,340.0)	1,665 (3,670.7)	1,615 (3560.5)
Traveling Speed (at 2600 engine speed with Std. tires)		Forward km/h(mph)	1.62 ~ 22.36 (1.01 ~ 13.89)	1.70 ~ 23.38 (1.06 ~ 14.53)	0.20 ~ 22.36 (0.13 ~ 13.89)	0.21 ~ 23.38 (0.13 ~ 14.53)	0.20 ~ 22.07 (0.12 ~ 13.71)
		Reverse km/h(mph)	1.50 ~ 20.62 (0.93 ~ 12.81)	1.57 ~ 21.57 (0.98 ~ 13.40)	0.19 ~ 20.62 (0.12 ~ 12.82)	0.19 ~ 21.57 (0.12 ~ 13.40)	0.18 ~ 20.36 (0.11 ~ 12.65)

NOTE: The specifications are subject to change for the purpose of improvement without any notice.

https://truckmanualshub.com/

AU

Model		DK35	DK40CR
Engine GROSS Power HP		34	41
Engine	Model	3A165D	4A200
	Type	Indirect injection, vertical, water-cooled, 4-cycle diesel engine	
	Number of Cylinder	3	4
	Bore and stroke mm(in)	87x92.4 (3.43x3.64)	83x92.4 (3.43x3.69)
	Total displacement	1,647	2,000
	Rated revolution rpm	2,700	
	Injection timing	18° before T.D.C .	
	Injection order	1-2-3	1-3-4-2
	Compression ratio	22 : 1	
	Lubricating system	Forced lubrication by trochoid pump	
	Cooling system	Pressurized radiator, Forced circulation with water pump	
	Alternator	12V, 50AMPS	
	Weight (Dry) kg	179	205
Capacities	Fuel tank ℓ(U.S.gal.)	40 (10.6)	
	Engine crankcase ℓ(U.S.gal.)	5.8 (1.5)	7.0 (1.5)
	Engine coolant ℓ(U.S.gal.)	7.0 (1.9)	8.9 (1.9)
	Transmission case ℓ(U.S.gal.)	44 (11.6)	←
	Front axle case ℓ(U.S.gal.)	7.5 (2.0)	←

https://truckmanualshub.com/

AU

Model			DK35	DK40CR
Dimensions (with Std. tires)	Overall length mm(in)		3,150 (124.0)	3,230 (127.2)
	Overall width mm(in)		1.562 (61.5)	1,505 (59.3)
	Overall height mm(in)	Bottom ↔ ROPS	2,350 (92.5)	2,395 (94.3)
		Bottom ↔ Pender	1.310 (51.6)	1,355 (53.3)
		Bottom ↔ Seat	1.135 (44.7)	1,188 (46.8)
	Wheel Base mm(in)		1,668 (65.7)	1,780 (70)
	Min. ground clearance mm(in)		355 (14.0)	354 (13.9)
	Tread	Front mm(in)	1,245(49.0)	
		Rear mm(in)	1,217~1,417 (47.9~55.8)	1,157~1,467 (45.6~57.8)
Traveling System	Tire size (Std. tires)	Front	8-16 PR	
		Rear	13.6-24 PR	
	Clutch		Dry single stage	
	Steering		Hydraulic power steering	
	Transmission		Synchronized shuttle and transmission (8 forward and 8 reverse speeds)	Synchronized shuttle and transmission (16 forward and 16 reverse speeds)
	Brake	Front	Wet disc type	
		Rear	Connected with the traveling brake	
	Differential		Bevel gear	

https://truckmanualshub.com/

AU

Model			DK35	DK40CR
Hydraulic System	Hydraulic lift control system		Position, Draft and Mixed control	
	Pump Capacity ℓ/min (U.S.gal.)	Main pump	29.7 (7.8)	
		Power steering pump	17.8 (4.7)	
	Three point hitch		SAE Category 1	
	Maximum Lifting Capacity (at the end of lower line) kg(lbs)		1,030 (2,271)	
PTO	No. of Remote control valve ports (Option)		2 or 4	
	PTO Shaft		SAE 1-3/8, 6 splines	
	Revolution (independent PTO)	MID PTO rpm	2,000 (2,542)	
		Rear PTO rpm	540 (2,451)	
Min.Turning Radius (without brake) mm(in)			2,900 (114.2)	3,100 (122.0)
Traction System			Swing Draw-Bar	
Weight (with ROPS) kg(lbs)			1,560 (3,439)	1,650 (3,638)
Traveling Speed (at 2600 engine speed with Std. tires)	Forward km/h(mph)		0.21 ~ 23.2 (0.13 ~ 14.41)	1.75 ~ 24.3 (1.09 ~ 15.09)
	Reverse km/h(mph)		0.19 ~ 21.4 (0.12 ~ 13.29)	1.60 ~ 22.4 (0.99 ~ 13.92)

https://truckmanualshub.com/

TRAVELING SPEED

* At rated engine speed(2600rpm) with Std.tires.

[FORWARD]

Km/h(mile/h)

Operating The lever		Model	
Hi-Low	Main	**DK35/DK35-EU**	**DK40/DK40-EU**
Low	1	1.62(1.01)	1.70(1.06)
	2	2.25(1.40)	2.36(1.47)
	3	3.48(2.16)	3.64(2.26)
	4	5.09(3.16)	5.32(3.31)
High	1	7.13(4.43)	7.46(4.64)
	2	9.90(6.15)	10.35(6.43)
	3	15.29(9.50)	15.99(9.94)
	4	22.36(13.89)	23.38(14.53)

[REVERSE]

Km/h(mile/h)

Operating The lever		Model	
Hi-Low	Main	**DK35/DK35-EU**	**DK40/DK40-EU**
Low	1	1.50(0.93)	1.57(0.98)
	2	2.08(1.29)	2.17(1.35)
	3	3.21(1.99)	3.36(2.09)
	4	4.70(2.92)	4.91(3.05)
High	1	6.58(4.09)	6.88(4.28)
	2	9.13(5.67)	9.55(5.93)
	3	14.10(8.76)	14.74(9.16)
	4	20.62(12.81)	21.57(13.40)

https://truckmanualshub.com/

[FORWARD]

Km/h(mile/h)

Operating The lever			Model		
Creep	Hi-Low	Main	DK35CR/ DK35CR-EU	DK40CR/ DK40CR-EU	DK450L-EU
Low	Low	1	0.20(0.13)	0.21(0.13)	0.20(0.12)
		2	0.28(0.17)	0.29(0.18)	0.28(0.17)
		3	0.43(0.27)	0.45(0.28)	0.43(0.27)
		4	0.63(0.39)	0.66(0.41)	0.62(0.39)
	High	1	0.88(0.55)	0.92(0.57)	0.87(0.54)
		2	1.23(0.76)	1.28(0.80)	1.21(0.75)
		3	1.90(1.18)	1.98(1.23)	1.87(1.16)
		4	2.77(1.72)	2.90(1.80)	2.74(1.70)
High	Low	1	1.62(1.01)	1.70(1.06)	1.60(0.99)
		2	2.25(1.40)	2.36(1.47)	2.22(1.38)
		3	3.48(2.16)	3.64(2.26)	3.44(2.14)
		4	5.09(3.16)	5.32(3.31)	5.03(3.13)
	High	1	7.13(4.43)	7.46(4.64)	7.04(4.37)
		2	9.90(6.15)	10.35(6.43)	9.77(6.07)
		3	15.29(9.50)	15.99(9.94)	15.09(9.38)
		4	23.36(13.89)	23.38(14.53)	22.07(13.71)

[REVERSE]

Km/h(mile/h)

Operating The lever			Model		
Creep	Hi-Low	Main	DK35CR/ DK35CR-EU	DK40CR/ DK40CR-EU	DK450L-EU
Low	Low	1	0.19(0.12)	0.19(0.12)	0.18(0.11)
		2	0.26(0.16)	0.27(0.17)	0.25(0.16)
		3	0.40(0.25)	0.42(0.26)	0.39(0.24)
		4	0.58(0.36)	0.61(0.38)	0.58(0.36)
	High	1	0.82(0.51)	0.85(0.53)	0.81(0.50)
		2	1.13(0.70)	1.18(0.73)	1.12(0.70)
		3	1.75(1.09)	1.83(1.14)	1.73(1.07)
		4	2.56(1.59)	2.68(1.67)	2.53(1.57)
High	Low	1	1.50(0.93)	1.57(0.98)	1.48(0.92)
		2	2.08(1.29)	2.17(1.35)	2.05(1.27)
		3	3.21(1.99)	3.36(2.09)	3.17(1.97)
		4	4.70(2.92)	4.91(3.05)	4.64(2.88)
	High	1	6.58(4.09)	6.88(4.28)	6.49(4.03)
		2	9.13(5.67)	9.55(5.93)	9.01(5.60)
		3	14.10(8.76)	14.74(9.61)	13.92(8.65)
		4	20.62(12.82)	21.57(13.40)	20.36(12.65)

https://truckmanualshub.com/

IMPLEMENT LIMITATIONS

The **KIOTI** tractor has been thoroughly tested for proper performance with implements sold or approved by **KIOTI**. Use with implements which are not sold or approved by **KIOTI** and which exceed the maximum specifications listed below, or which are otherwise unfit for use with the **KIOTI** tractor may result in malfunctions or failures of the tractor, damage to other property and injury to the operator or others. [Any malfunctions or failures of the tractor resulting from use with improper implements are not covered by the warranty.]

Item / Model	Tread (max. width)		Lifting Capacity max. loading weight (24 in. aft of hitch)
	Front	Rear	
DK35	1,245 mm (49.0 in)	1,387 mm (54.6 in)	1,030 Kg (2270.7 lbs.)
DK40		1,457 mm (57.4 in)	
DK450L	1,230 mm (48.4 in)	1,451 mm (57.1 in)	

Item / Model	Actual figures		Trailer loading weight W_3 Max. capacity
	Implement weight W_1 and / or size	Max. Drawbar Load W_2	
DK35	As in the following list (Shown in the next page)	650 kg (1433.0 lbs.)	3,500 Kg (7716.1 lbs.)
DK40			
DK450L			

Lifting Capacity max. loading weight ..... The max. allowable load which can be put on the 24 in. aft of hitch : W_0

Implement weight ..... The implement's weight which can be put on the lower link : W_1

Max. drawbar load ..... W_2

Trailer loading weight ..... The max. loading weight for trailer (without trailer's weight) : W_3

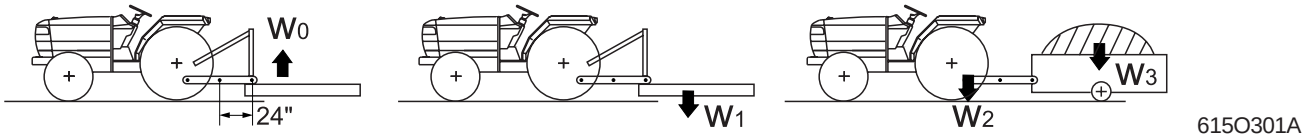

NOTE: Implement size may vary depending on soil operating conditions.

https://truckmanualshub.com/

4 DESCRIPTION OF OPERATING SYSTEM

EXTERIOR VIEW AND APPELLATION
INSTRUMENTS PANEL AND SWITCHES
OPERATING THE CONTROLS
DESCRIPTION OF CABIN OPERATING SYSTEM(OPTION)

https://truckmanualshub.com/

EXTERIOR VIEW AND APPELLATION

DK35 / DK35CR / DK40 / DK40CR (USA, AU TYPE)

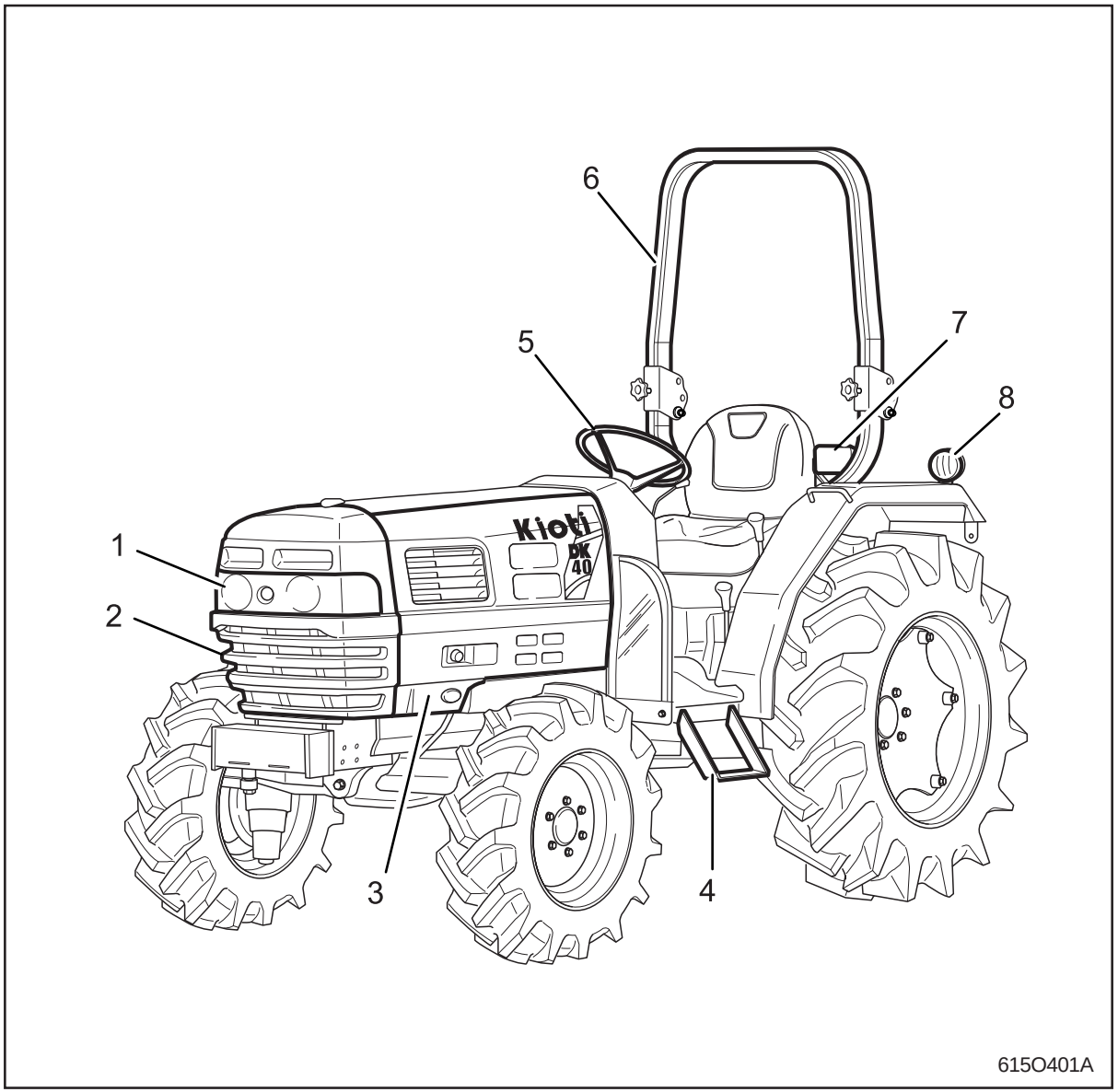

(1) Head Light
(2) Front Grill
(3) Side Cover
(4) Step(LH)
(5) Steering Wheel
(6) ROPS
(7) Working Lamp
(8) Turn Signal Light

https://truckmanualshub.com/

DK35-EU / DK35CR-EU / DK40-EU / DK40CR-EU / DK450L-EU

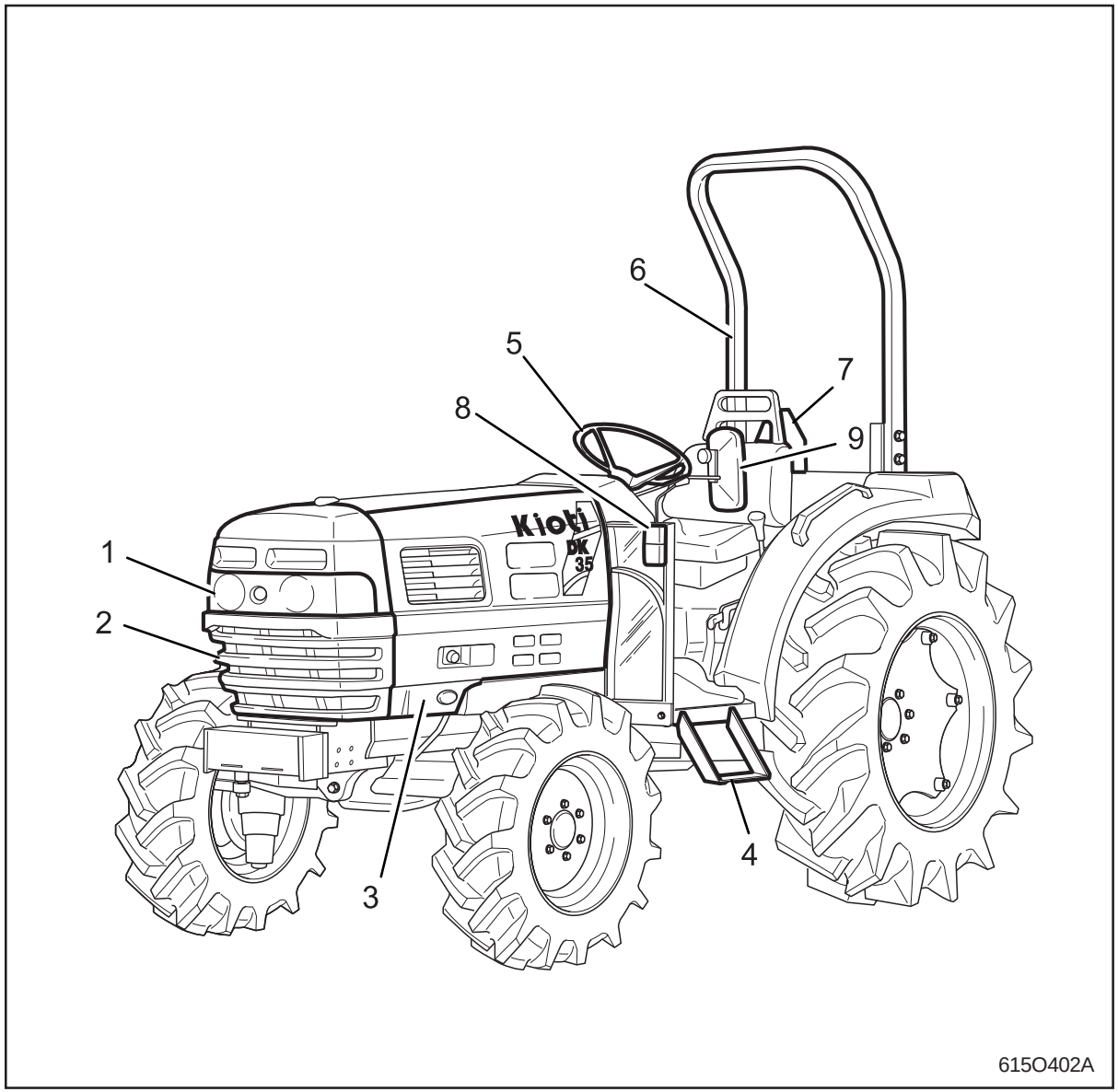

(1) Head Light
(2) Front Grill
(3) Side Cover
(4) Step(LH)
(5) Steering Wheel
(6) ROPS
(7) License Plate
(8) Turn Signal Light
(9) Rear View Mirror

https://truckmanualshub.com/

INSTRUMENTS PANEL AND SWITCHES

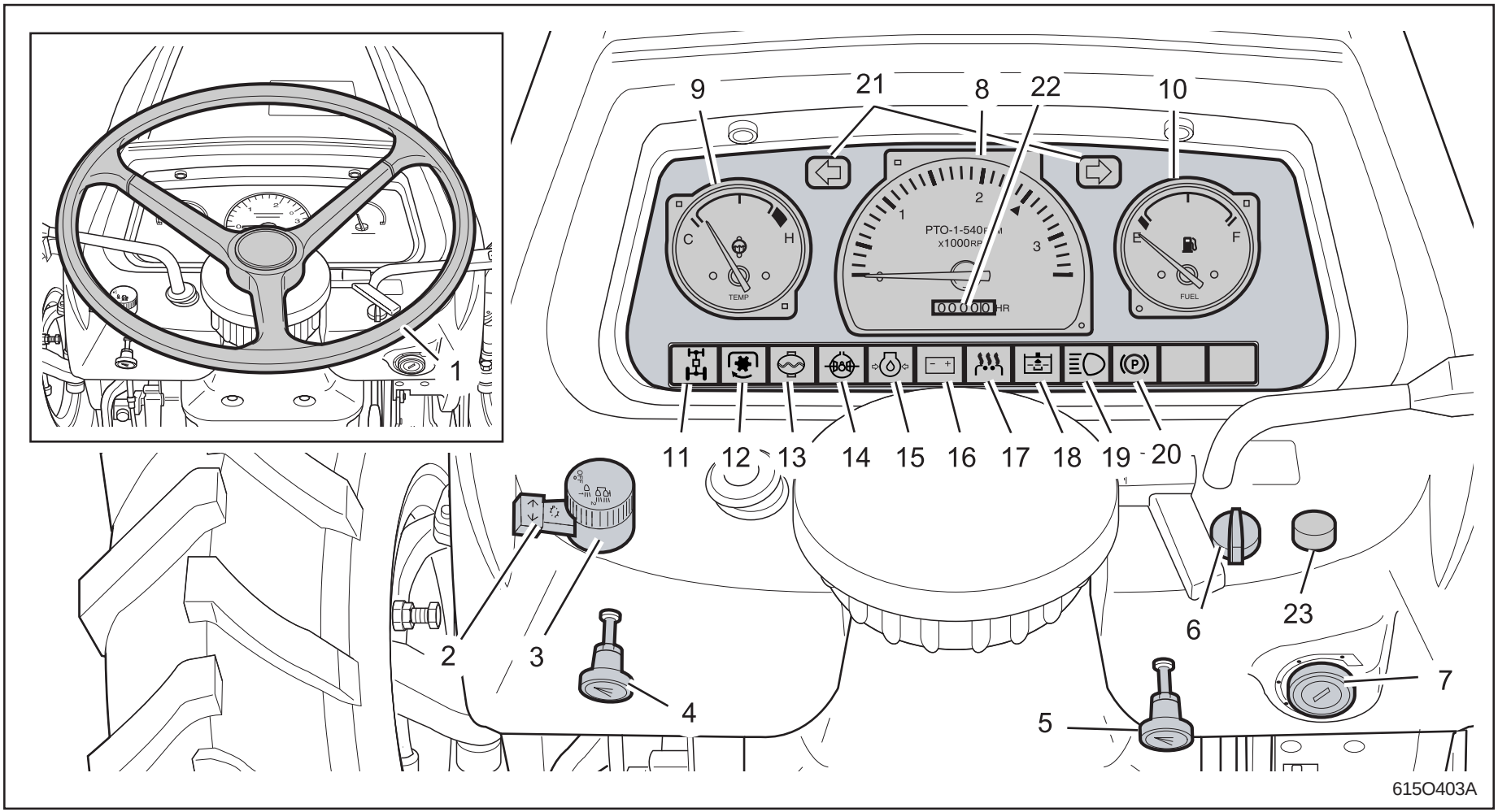

(1) Steering Wheel
(2) Turn Signal Switch
(3) Headlight Switch
(4) Hazard Lamp Switch
(5) Engine Stop Knob
(6) PTO Change Switch
(7) Start Switch
(8) Tachometer
(9) Temperature gauge
(10) Fuel Gauge
(11) 4WD Operation Indicator (Only USA)
(12) PTO ON Indicator
(13) Coolant Level Warning Lamp
(14) Differential Lock Indicator
(15) Engine Oil Pressure Warning Lamp
(16) Battery Charge Warning Lamp
(17) Glow Plug Indicator
(18) Hydraulic System Warning Lamp
(19) Main Beam Indicator
(20) Parking Brake Indicator
(21) Turning Signal Indicator
(22) Hour Meter
(23) Horn Button(Only EU, AU)

https://truckmanualshub.com/

KEY SWITCH

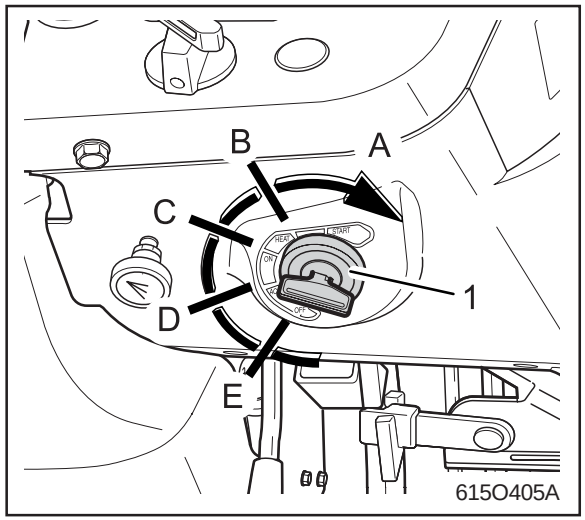

(1) Key Switch (A) Start (B) Heat
(C) On (D) Acc (E) Off

This tractor has an automatic pre-heating system. To pre-heat the engine, turn the key switch to the “ON” position then pre-hearting works automatically for 8 seconds. You can see the pre-heating indicator light on during that time. You can start the engine at any time during this 8 seconds.

f you need additional pre-heating, turn the key off and try the same procedure again or turn the key to “Manual pre-heat” position and hold it. Do not pre-heat over 15 seconds, more than 10 times without any break.

OFF

A key position for stopping the engine.

ACC

A key position for operating accessory function.

ON

A key position at which the engine is running.

Heat

A key position for preheating the inside of the combustion chamber.

Start

A key position for operating the motor.

> **⚠ CAUTION**
>
> - **Because of the safety device, the engine may not be started except when the clutch is depressed.**

When the coolant temperature is over 60°C(140°F) the auto pre-heating does not work.

In this case, just turn the key to “start” to crank the engine.

TURN SIGNAL/ HEAD LIGHT SWITCH

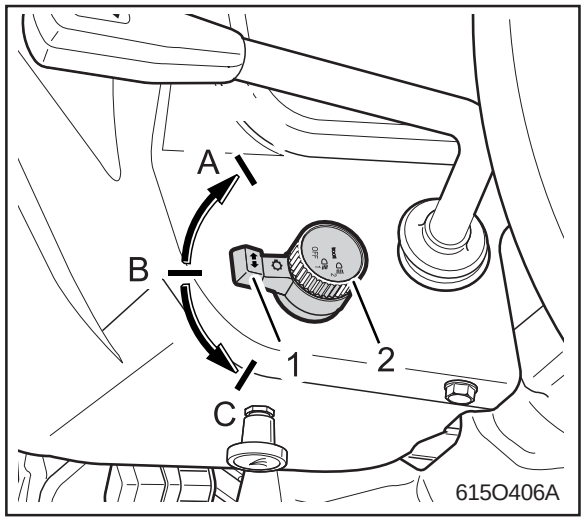

(1) Turn Signal Light Switch
(2) Head Light Switch
(A) Right (B) N (C) Left

Turning the light switch one click to C.W. illuminates the low beam headlights and taillights.

Next, turning it one more click illuminates the high beam headlights.

OFF

Headlight is turned OFF

Low beam headlight is turned ON

Upper beam headlight is turned ON

Direction indication lamp is turned ON

https://truckmanualshub.com/

PTO CHANGE SWITCH (MANUAL/AUTOMATIC)

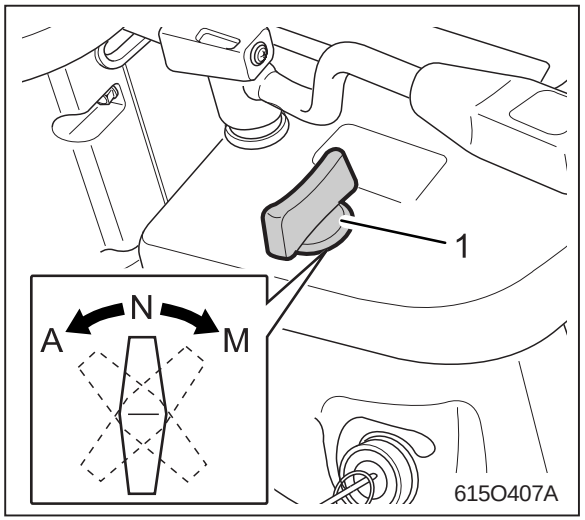

(1) PTO Change Switch

The PTO change switch must be placed to the “neutral” position before starting the engine. Otherwise, the engine will not start. When turning PTO change switch to Automatic, the PTO operates only when the implement is in the lowered position. For example, if you lift the implement while working, the PTO will stop. If the PTO change switch is in the Manual position, the PTO will operate continuosly.

IMPORTANT

- ***Always turn the starter switch key to the “OFF” position. Damage may occur to the electrical system if the engine is running with the starter switch off.***

HAZARD LAMP SWITCH

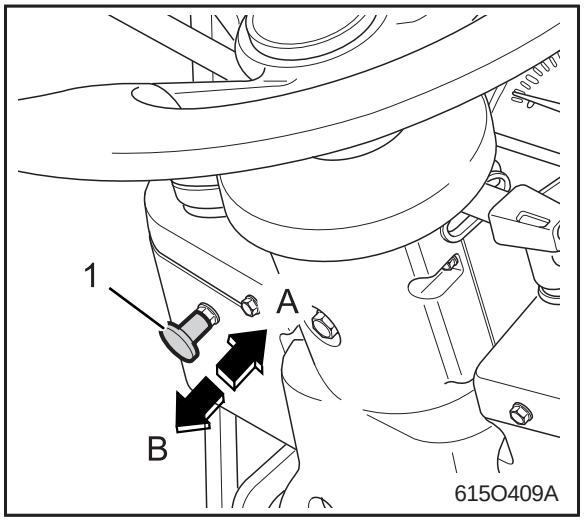

(1) Hazard Lamp Switch
(A) Hazard Lights ON (B) Hazard Lights OFF

When a hazard lamp switch is pulled to on position, the hazard lamps blink.

CAUTION

- **When it is used for a long time, a lot of electricity will be used. Therefore, it must be used only in case of emergency.**

ENGINE STOP SWITCH

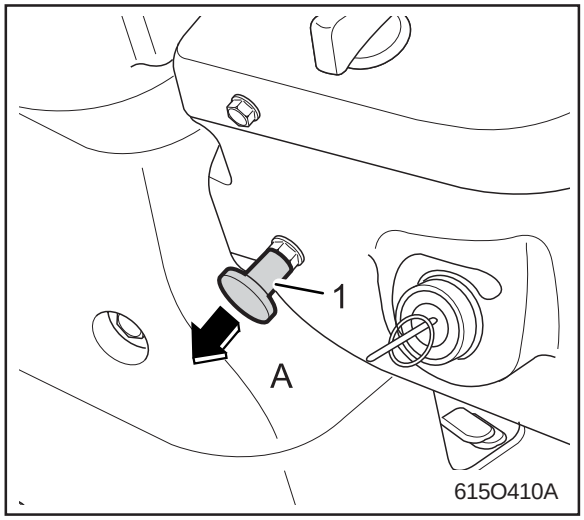

(1) Engine Stop Switch
(A) Engine Off

Whether engine is not stop with key switch or stop the engine in emergency situation, pull this switch.

https://truckmanualshub.com/

HORN BUTTON (ONLY EU, AU)

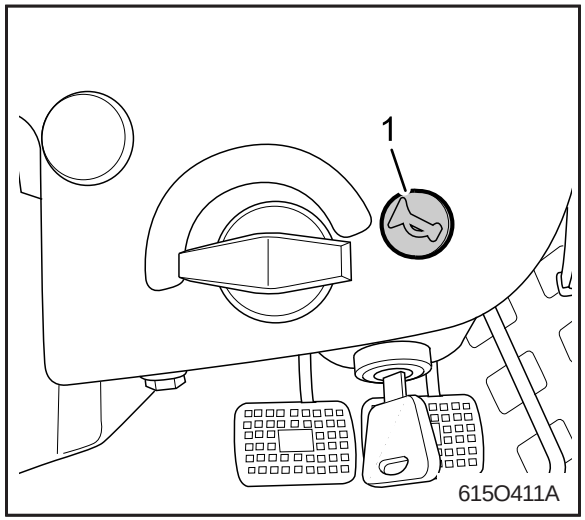

(1) Horn Button

Pressing the button blows the horn.

CAUTION

- **If it is often used for a short time, its life will be shortened. And so, please avoid using it less than 1 second.**

TACHOMETER/HOUR METER

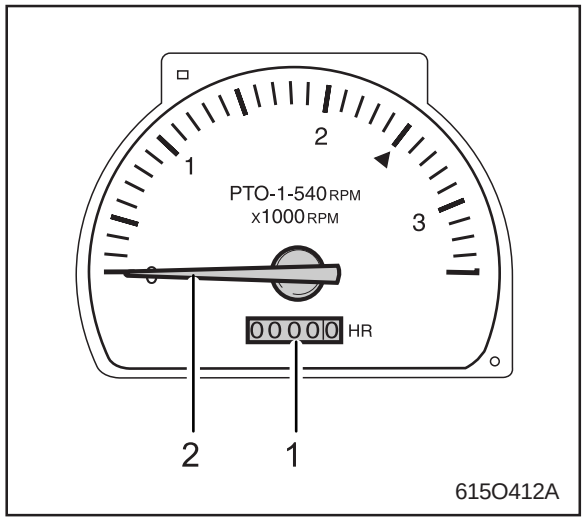

(1) Hour Meter
(2) Engine Revolution Meter

This meter shows the number of hours the tractor has been operated at rated engine rpm. The last digit (white background) indicates 1/10 of an hour. The time in minutes will be shown by multiplying by six to last digit on white background.

Example 01701 .... 170 hours 6 minutes used. Moving hand indicates the revolution per minute of the engine

TEMPERATURE GAUGE

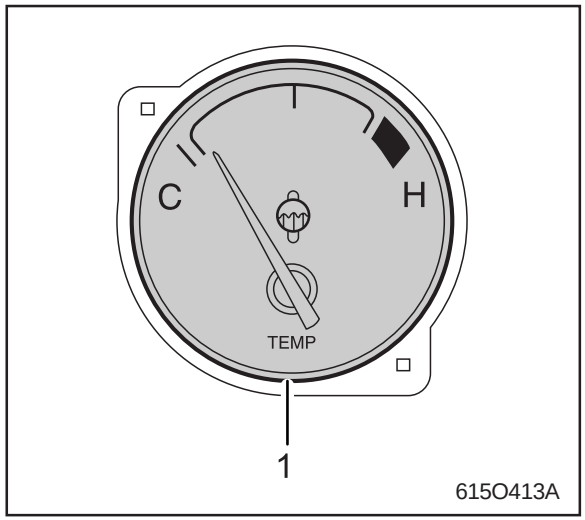

(1) Temperature Gauge

Wait until Engine is warm enough. Do not operate tractor before Temp. meter indicates the proper temperature. Be careful not to overheat the engine by exceeding the normal operating of the cooling water (red section on temperature gauge indicates overheating). Before operating tractor, always check the amount of cooling water in the radiator.

https://truckmanualshub.com/

FUEL GAUGE

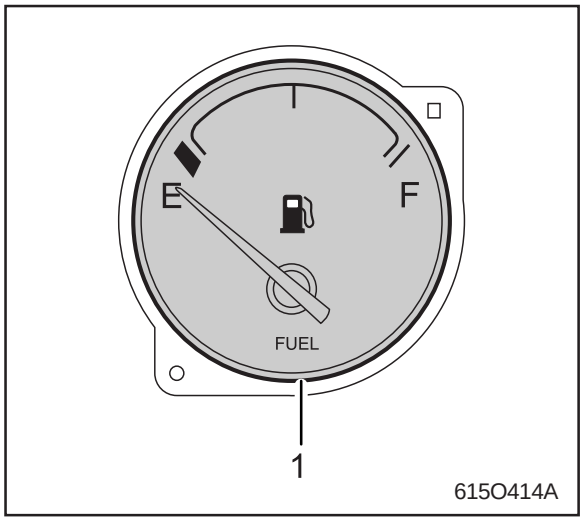

(1) Fuel Gauge

When the key switch is on, the fuel gauge indicates the fuel level.

Be careful not to empty the fuel tank. Otherwise air may enter the fuel system. Should this happen, the system should

be bled

4WD OPERATION INDICATOR (only USA)

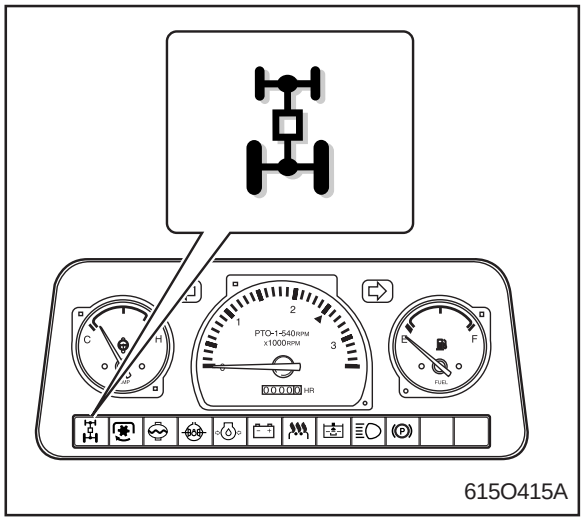

This lamp lights up yellow when 4WD switch is in “4WD” position. At this time, the machine drives with 4 wheel drive mode.

PTO ON INDICATOR

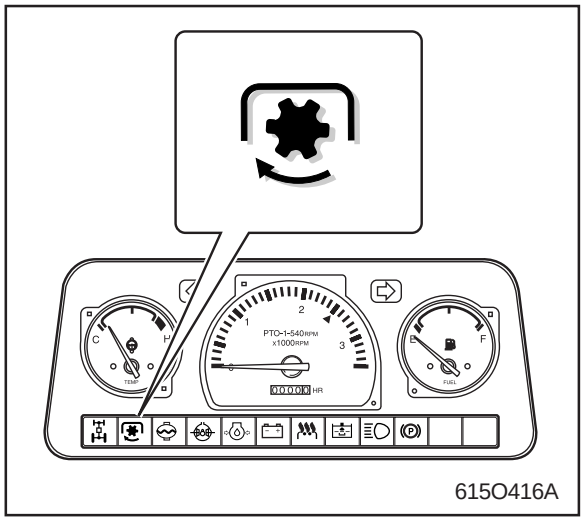

This lamp lights up red while operating PTO.

CAUTION

- **It is not possible to start the engine if this lamp lights up.**

https://truckmanualshub.com/

COOLANT LEVEL WARNING LAMP

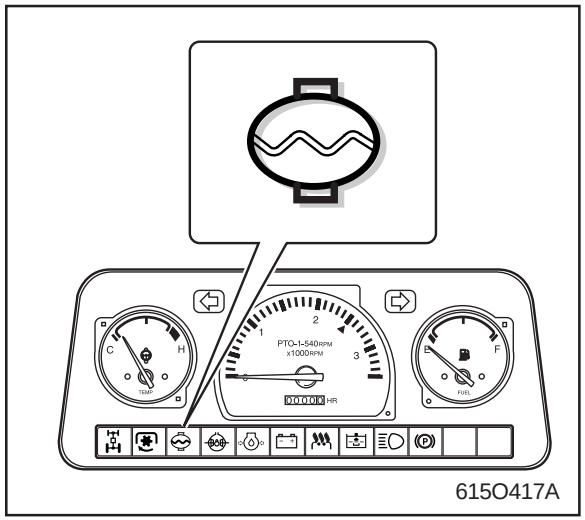

615O417A

DIFFERENTIAL LOCK INDICATOR (ONLY DK35CR, 40CR, 450L-EU)

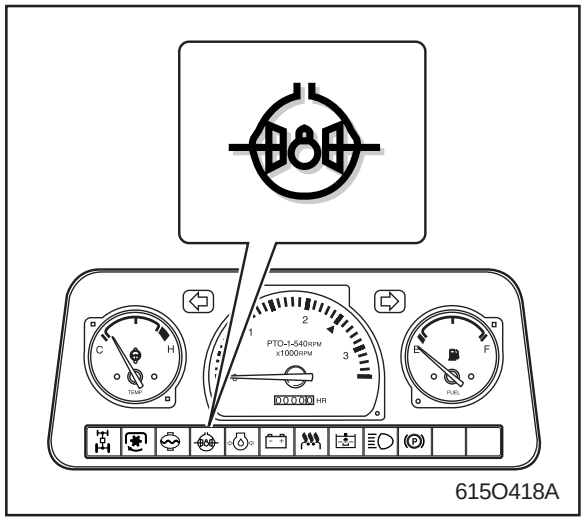

615O418A

ENGINE OIL PRESSURE INDICATOR

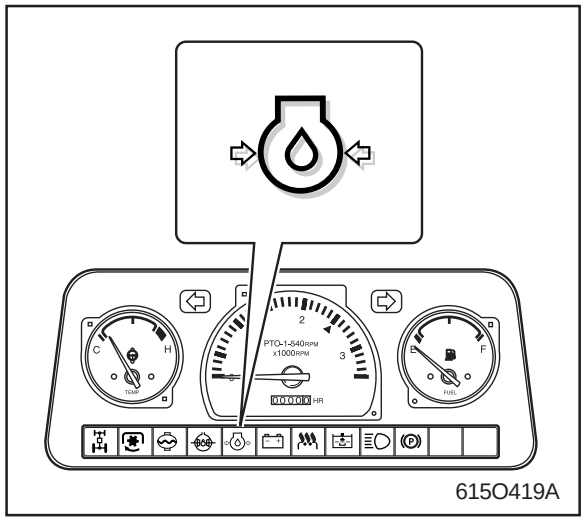

615O419A

⚠ CAUTION

To avoid personal injury:

- **Do not remove radiator cap until coolant temperature is well below its boiling point. Then loosen cap slightly to the stop to relieve any pressure before removing cap completely.**

1. When the key switch is turned “ON” this guage indicates the temperature of the coolant. “C” is for cold, and “H” is for hot. Normal temp will indicate between the C and middle.

The light will illuminate when the differential lock pedal is engaged.

When the oil pressure in the tractor’s engine falls below the prescribed level, the warning lamp will illuminate.

If this should happen during tractor operation and it does not go off when the engine is accelerated above 1,000 rpm, check the engine oil level.

https://truckmanualshub.com/

BATTERY CHARGE WARNING LAMP

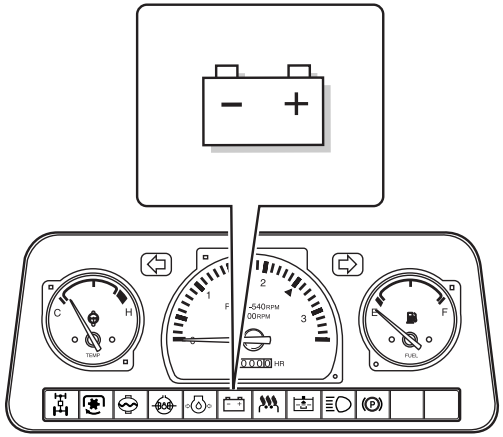

The battery charge lamp will glow red when the main switch is turned on and should go out as engine starts. If the lamp continues to glow above idle speeds, the battery is being discharged, indicating the electrical system should be checked.

GLOW PLUG INDICATOR

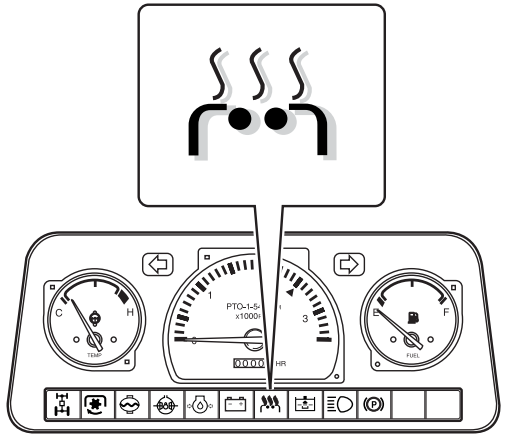

When the key switch is turned to the right, the glow plug indicator becomes amber. This shows the condition of pre-heating in the combustion chamber.

HYDRAULIC SYSTEM WARNING LAMP

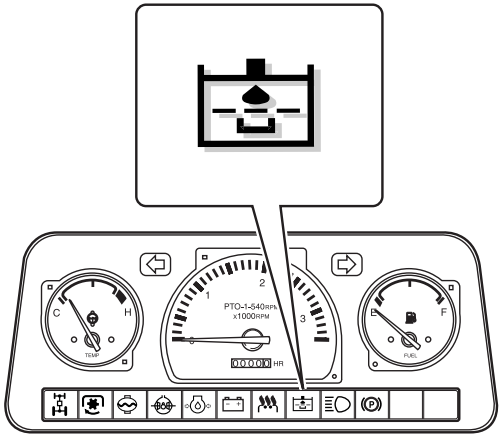

This lamp lights up yellow when certain problems occur in hydraulic system.

This lamp lights up when the pressure in hydraulic system drops down below a specified value due to high oil temperature (approx. 60 ± 5°C) or blocked oil filter carefully check the hydraulic system.

https://truckmanualshub.com/

HIGH-BEAM INDICATOR

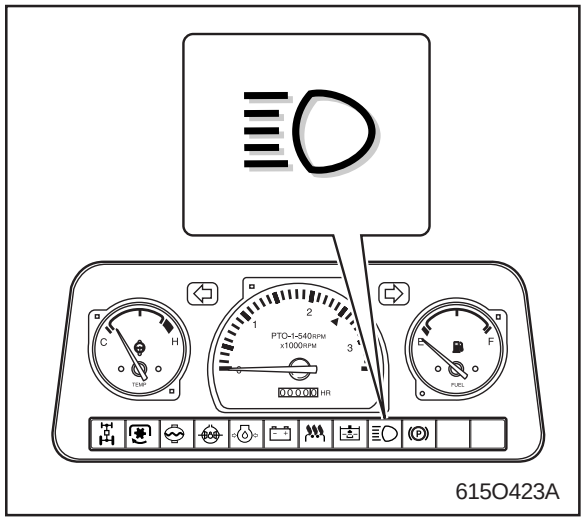

615O423A

This indicator lights up blue when the headlamp switch is in high-beam position.

PARKING BRAKE INDICATOR

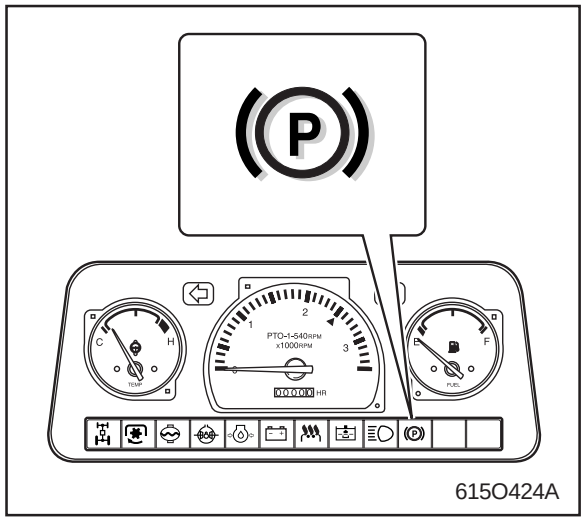

615O424A

This lamp lights up red when locking the parking brake while depressing the brake pedal. Make sure to drive the machine with parking brake unlocked.

https://truckmanualshub.com/

OPERATING THE CONTROLS

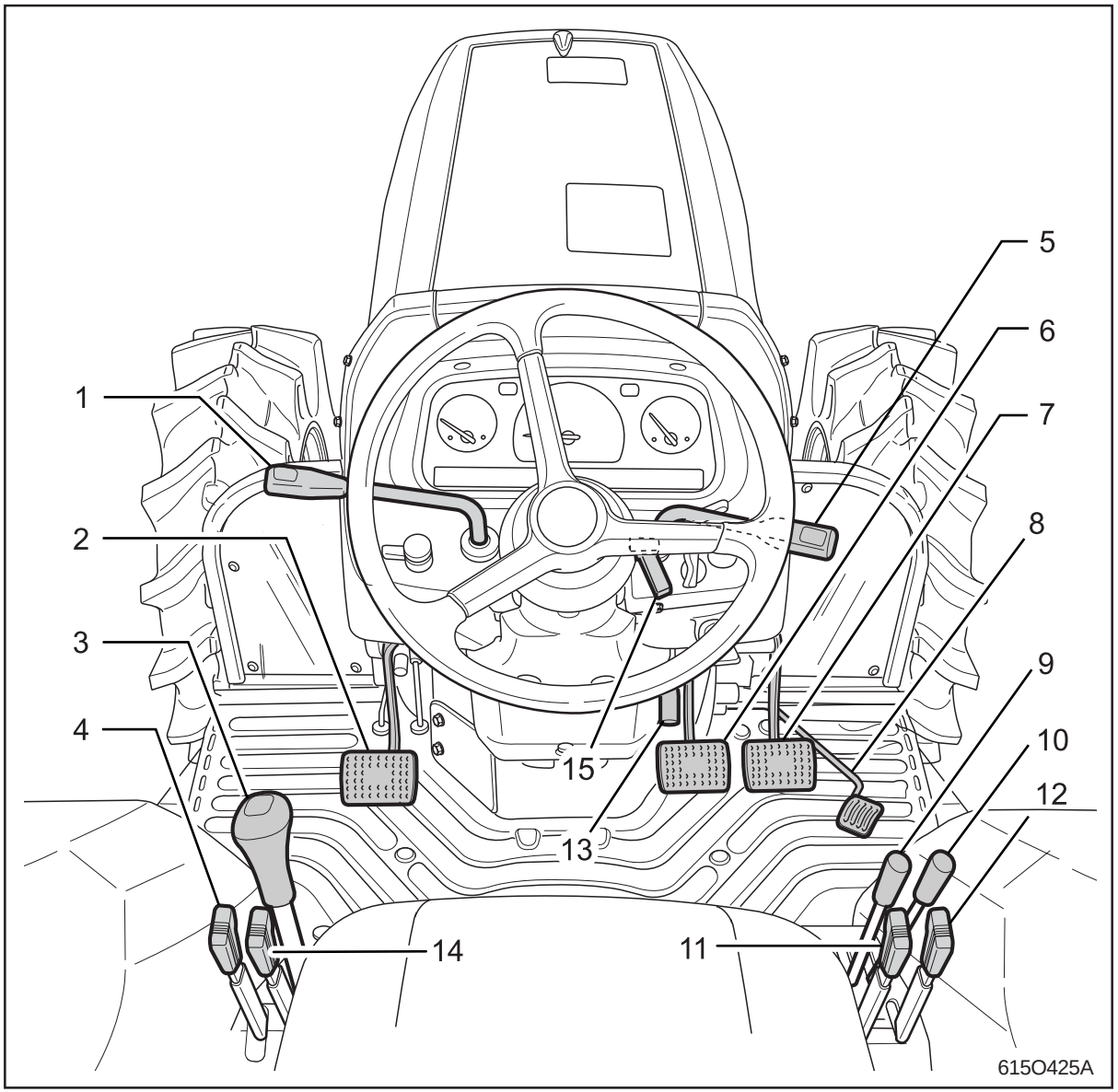

(1) Shuttle Shift Lever
(2) Clutch Pedal
(3) Main Gear-Shift Lever
(4) Hi-Lo Shift
(5) Hand Accelerator Lever
(6) Brake Pedal (L)
(7) Brake Pedal (R)
(8) Foot Throttle
(9) Double Action Lever (A, B)
(10) Double Action Lever (C, D) (USA-Option)
(11) Draft Control Lever
(12) Position Control Lever
(13) Parking Brake (Only USA, AU)
(14) Creep Speed Lever (Option)
(15) Tilting Steering Lever

https://truckmanualshub.com/

MAIN SHIFT LEVER

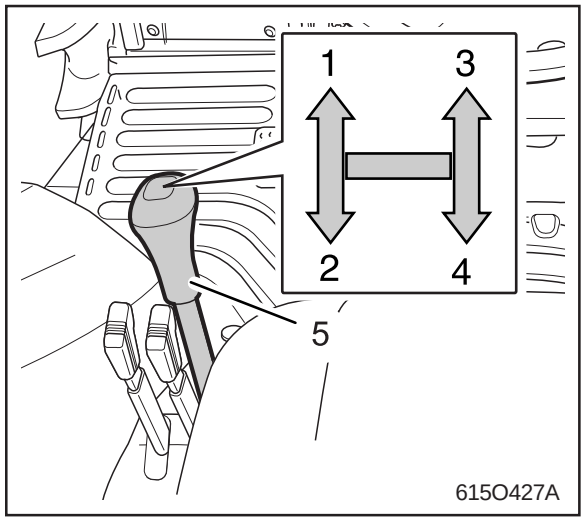

(1) 1st Speed
(2) 2nd Speed
(3) 3rd Speed
(4) 4th Speed
(5) Main Shift Lever

You can shift into 4 gears with one lever. The synchromesh type gearbox allows you to change gear without stopping just by depressing the clutch pedal.

CAUTION

To avoid personal injury:

- **Use the clutch when making an emergency stop or working in confined areas, such as getting tractor in position to attach an Implement.**
- **An accident may occur with erratic shifting operation. For safe operation, move main gear shift lever only one gear at a time.**
- **Shift the main gear shift lever firmly and without hesitation. Improper shift lever position will cause the tractor to momentarily coast on slopes.**
- **Avoid changing gears when climbing or descending a slope.**
- **Before ascending or descending a slope, shift to a gear low enough to control tractor speed without using brakes to maintain control.**
- **Operate in reverse at slow speeds to maintain control.**

IMPORTANT

- **Start in lower gears and shift one gear at a time until desires gear is obtained.**
- **To prolong clutch life, avoid slipping the hydraulic clutch. Pay attention to the following points:**
- **Select proper gear and engine speed depending on the type of job.**
- **Avoid lugging the engine, especially in higher gears. If RPM's drop excessively, shift to lower gear.**
- **In cold climate, it may take linger for the tractor to move after the main shift lever is moved. This is because the transmission oil must warm up.**
- **Warm up the machine long enough. If there is not enough time to do so, start the machine with the shuttle shift lever or the clutch.**
- **There is no problem with a delay in starting. The machine will start as the oil temperature increases.**

https://truckmanualshub.com/

HI-LO SHIFT LEVER

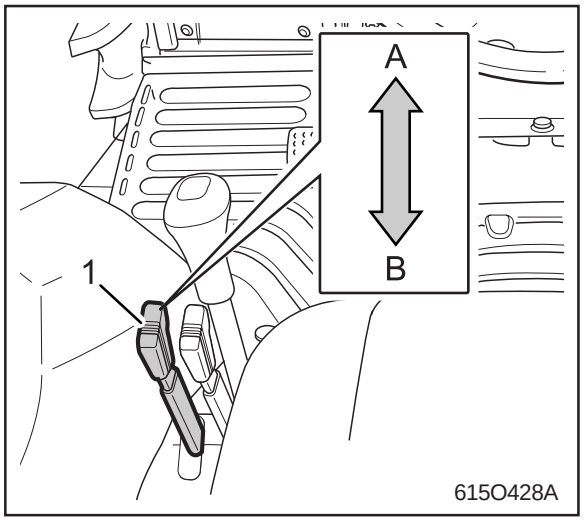

(1) Hi-Lo shift Lever
(A) Low Speed (B) High Speed

You can shift into “High” range or “Low” range of speed.

To shift into high or low range, completely stop the tractor and depress the clutch.

If you attempt to shift while driving, it may cause damage to the transmission.

CREEP SPEED LEVER

CR MODEL, DK450L-EU

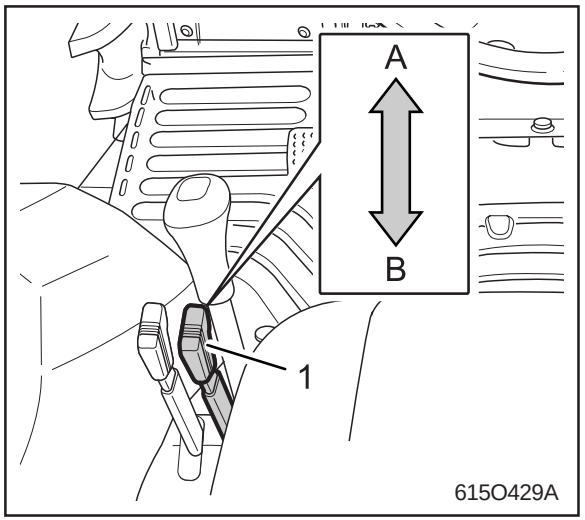

(1) Creep Speed Lever(Option)
(A) Low Speed (B) High Speed

HOW TO USE CREEP SPEED

If you misuse or mishandle the creeping speed, it may cause damage to the unit, so please note the following.

1. Permissible uses
- Deep and narrow cultivating with rotary cultivator.
- When you can not cultivate hard ground with standard speed during rotary cultivation.
- Transplanting
- Works with agricultural trencher.
- When loading and unloading goods.

2. Prohibited uses
- Using creeping speed to escape from dampened soil.
- Towing and trailing works
- Frontal loader works
- Frontal snowplow works
- Engineering works.

3. Observance
- To shift the gears, fully depress the clutch pedal.
- Before driving off, release the parking brake.

⚠ CAUTION

- **To stop the tractor, be sure to disengage the clutch first, then depress the brake pedal. This is because creep range gives high torque at low forward speeds thus making braking ineffective.**
- **To avoid any hazards, do not convert from forwarding gear to reversing gear and vice verse while driving.**

Depending on the structure arrangement of Main shift lever, Hi-Lo shift lever, creep speed lever and forwards and reverse lever, you can shift into 16-forwards and 16-reverse speeds.

https://truckmanualshub.com/

SHUTTLE SHIFT LEVER

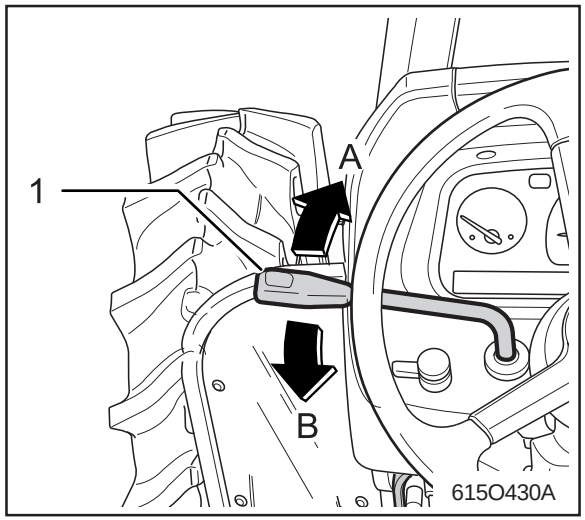

(1) Shuttle Shift Lever
(A) Forward (B) reverse

The tractor's driven forward or in reverse, without the steps of main or secondary shift by pushing it forward or pulling it backward.

CAUTION

- **The shuttle shift lever maybe be shifted while the tractor is moving stop and the clutch is depressed.**
- **Sudden gear shift may cause transmission damage.**

IMPORTANT

- **Reduce engine speed to low idle before shifting the shuttle shift lever.**

HAND ACCELERATOR LEVER

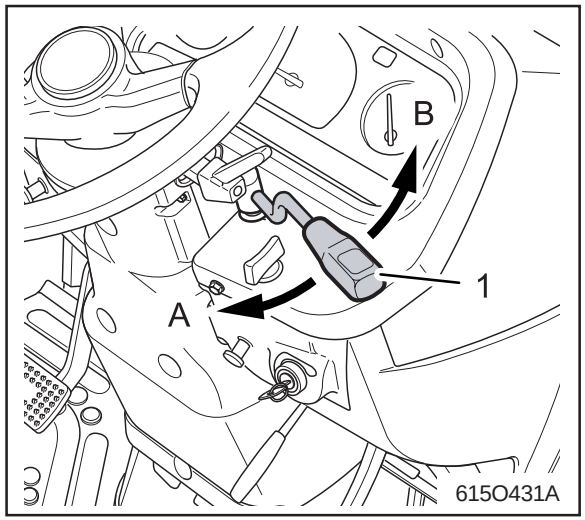

(1) Hand Accelerator Lever
(A) Decrease
(B) Increase

When the hand accelerator lever is pushed forward, the engine speed will increase. When pulled rearward, the engine speed will decrease.

https://truckmanualshub.com/

STEERING WHEEL ADJUSTMENT

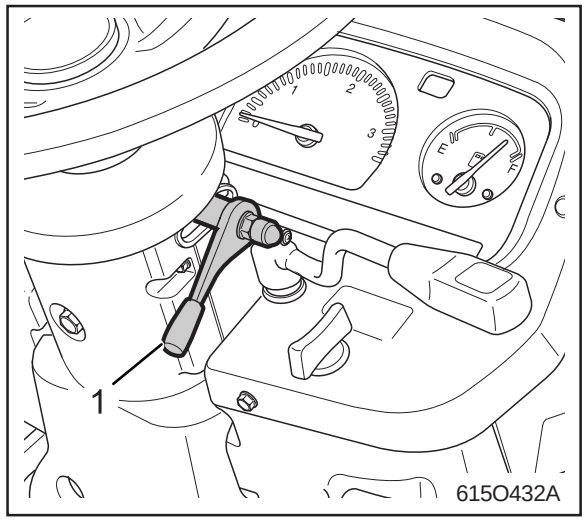

(1) Tilting Steering Lever

Steering Wheel tilt lever is a ratchet type of lever. Push lever in and turn clockwise to release steering wheel and turn counterclockwise to tighten steering wheel once in required position.

WARNING

- ***Once the steering wheel is in the desired position, and has been tightened using the lever, it the important to check that it is tight before moving off.***
  Do not adjust steering wheel while in motion.

BRAKE PEDAL(RIGHT AND LEFT)

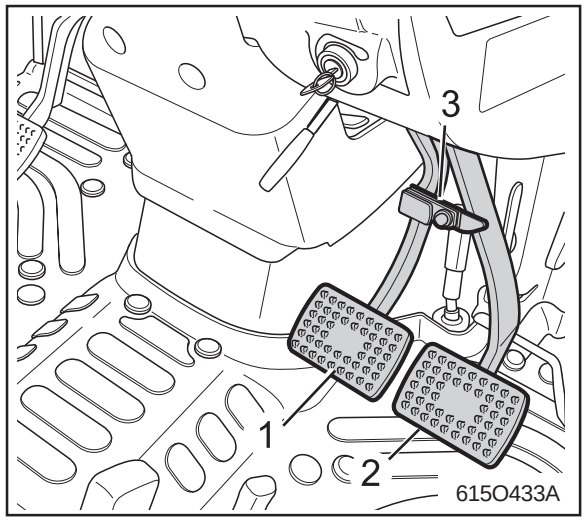

(1) Brake Pedal (L)
(2) Brake Pedal (R)
(3) Brake Lock

1. Before operating the tractor on a road, be sure to interlock the right and left pedals as illustrated below. It will be very dangerous to use only one brake.
2. Use individual brake to assist in making sharp turns. Disengage the brake lock and depress only one brake pedal with direction that you are turning.
3. When operating the tractor on roads, always be sure to interlock the left and the right brake pedals. Do not forget to observe this precaution, otherwise, stepping on only one brake while operating on roads would cause unforeseen accidents.

FOOT THROTTLE

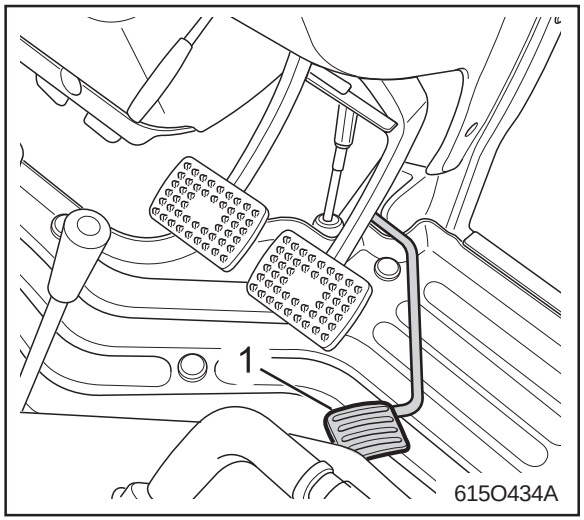

(1) Foot Throttle

The foot throttle is interlocked with the hand throttle. Depressing the foot throttle increases engine speed. Full engine speed control can be obtained with the foot throttle if the hand throttle is in full rearward position. The foot throttle may also be used to temporarily increase engine speed above the hand throttle setting.

https://truckmanualshub.com/

CLUTCH PEDAL

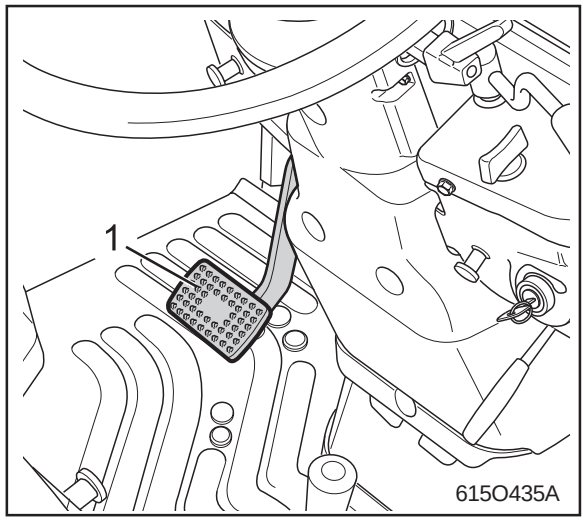

(1) Clutch Pedal

When the clutch pedal is fully depressed, the clutch is disengaged. Shift the main shift lever to the desired speed and gradually release the clutch pedal, then the clutch will become engaged.

The clutch should be disengaged by stepping on the pedal quickly, and engaged by slow releasing the foot from the pedal so as not to damage the clutch plate.

IMPORTANT

- **The clutch pedal must be quickly disengaged and be slowly engaged.**
- **Never operate the tractor with your foot resting on the clutch pedal. Doing so may contribute to premature clutch wear.**

PARKING BRAKE LEVER

(USA, AU TYPE)

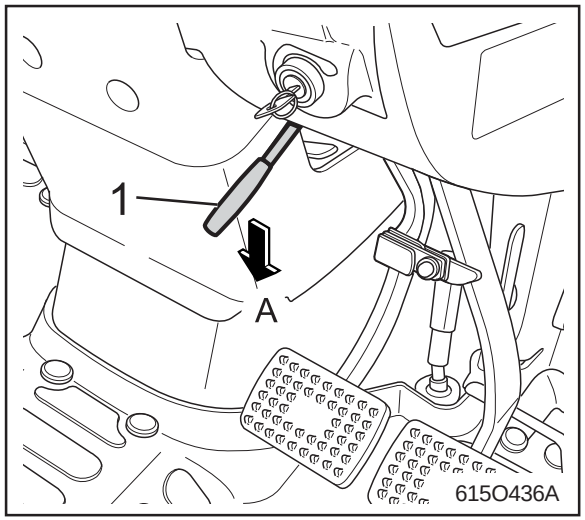

(1) Parking Brake Lever
(A) Lock

1. To set the parking brake;
   - Interlock the brake pedals
   - Depress the brake pedals
   - Latch the brake pedals with the parking brake lever.
2. To release the parking brake, depress the brake pedals again.

(EU TYPE)

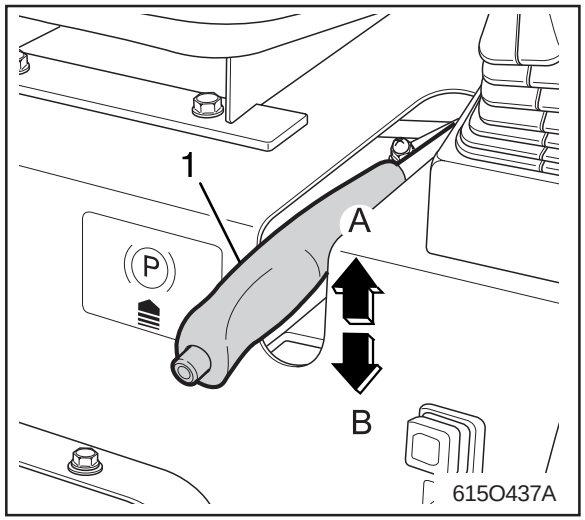

(1) Parking brake lever
(A) Lock
(B) Release

1. To set the parking brake, pull the brake lever up.
2. To release the parking brake (push in the button and release the lever).

https://truckmanualshub.com/

MID PTO LEVER (EXCLUDING DK450L-EU)

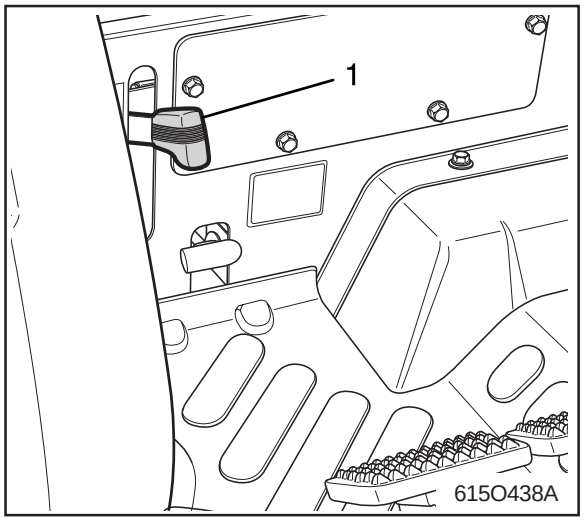

(1) MID PTO Lever

There is a MID PTO equiped to do various jobs using implements. If you pull the lever up, it would be connected. On the other hand if you push it down, it would be disconnected.

CAUTION

- **To avoid possible injury make sure the mid PTO is disconnected (lever down) when not in use.**

DIFFERENTIAL LOCK PEDAL

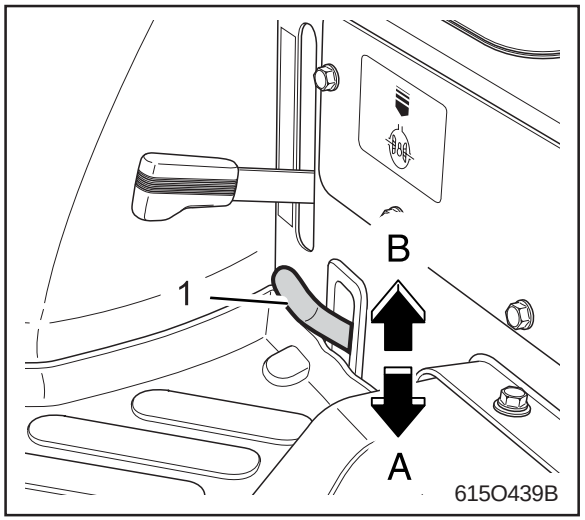

(1) Differential Lock Pedal
(A) Press to "ENGAGE"
(B) Release to "DISENGAGE"

Differential lock is applied only in cases where: the wheels are likely to slip, or only one of the rear wheel slips. Lightly stepping on the differential lock pedal with the heel makes the rear wheels run at equal speed. To unlock, just release the pedal.

While the Diff. Lock pedal is engaged, the warning lamp in instrument panel will light up in the instrument panel.

WARNING

- ***To prevent loss of control of tractor, never use the differential lock at speeds above 8 km/h (5 MPH).***
- ***Never use the differential lock when turning the tractor. When engaged, the differential lock will prevent the tractor from turning.***

IMPORTANT

- **If a rear wheel spins at speed, reduce engine speed before engaging the differential lock, to avoid shock loads to the transmission.**

https://truckmanualshub.com/

FRONT WHEEL DRIVE LEVER / BUTTON

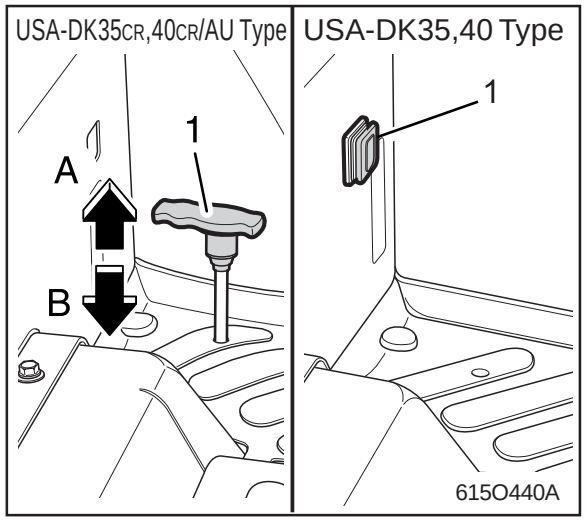

(1) Front Wheel Drive Lever / Button
(A) Disengagement (B) Engagement

ON *- ON* OFF *- OFF*

Push the front wheel drive lever down or switch 'ON' to engage the front wheel drive mechanism.

The front wheel drive mechanism is very effective on the following jobs.

1. On slopes and in wet fields, or when connected to the Trailer or the Front-End-Loader where great traction is required.
2. On sandy land.
3. To prevent the tractor being thrust forward during rotary tilling hard soil.
4. Entering a job location or going over a high bank.

Under normal operating conditions, keep the lever up or switch 'OFF' to leave the mechanism disengaged.

QUICK-TURN DEVICE OPERATION (ONLY DK450L-EU)

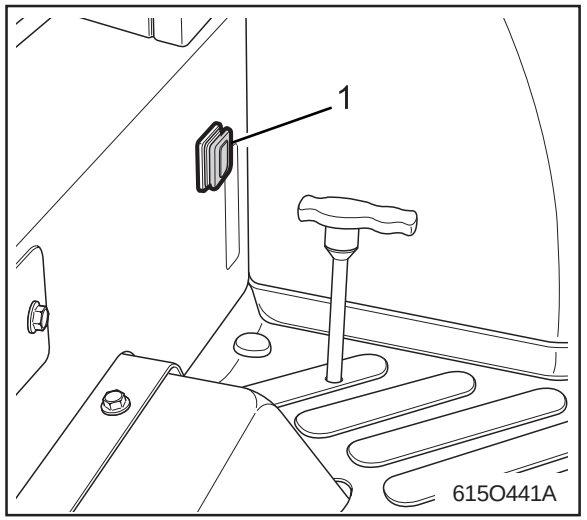

(1) Quick-turn Device Switch

ON *- ON* OFF *- OFF*

To operate the Quick-turn device, observe the following steps.

1. Set the front wheels in the straight ahead position.
2. Engage four wheel drive by pushing the lever downward switch 'ON'.
3. Turn 'ON' the Quick-turn turning selection switch.

WARNING

- ***Never use Quick-turn while high-speed driving.***
- ***Never use Quick-turn while driving on steep hills and sharp turns.***

CAUTION

- **To avoid any hazards, turn "OFF" the Quick-turn selection switch.**
- **Do not use in high-speed works such as plowing.**
- **Do not use when a loader is installed.**
- **For the safety reasons, the Quick-turn device cannot be operated even though you turn ON the Quick-turn selection switch while the Hi-Lo shift lever is in high-speed position.**
  Normally, the Quick-turn device operates when the steering wheel is completely turned to left or right direction.
  It will shift into four-wheel drive when the steering wheel returns to straight ahead position.
  However, when shifting into four-wheel drive after turning, tractor may not move due to rear wheel's slip. (You may hear clicking sounds from the transmission but this is normal) When you meet this condition, simply depress the clutch pedal to operate four-wheel drive.

https://truckmanualshub.com/

SEAT

(USA, AU TYPE)

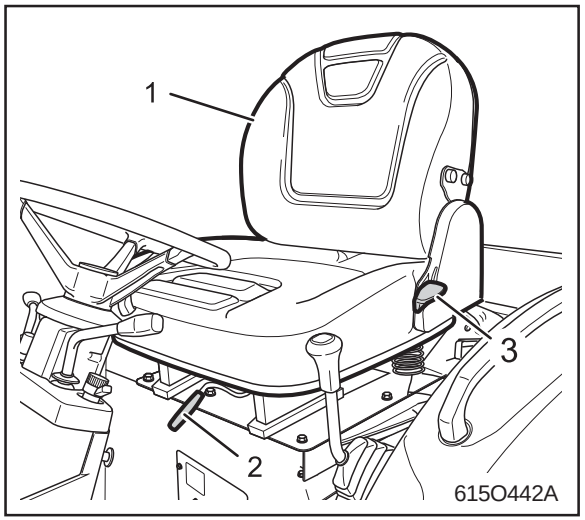

(1) Seat *(2) Seat Ajusting Lever*
(3) Seat Reclining Lever

SEAT SLIDING ADJUSTMENT

To adjust the seat sliding, move the seat to the desirable position while pulling the lever located under the front of the seat. After adjustment, gently rock in the seat to make sure it is securely locked.

SEATBACK RECLINING ADJUSTMENT

To adjust the seatback reclining angle, lean forward and pull the lever upwards. Pull the lever upwards, adjust the seatback angle then release the lever. After adjustment, check if the lever is returned to the original position and seat is securely locked.

SEAT BELT ADJUSTMENT

1. Check if the seat belt is not twisted. Then place the belt and the latch plate vertically and adjust the belt length so that there is enough space in a size of the fist between the waist and the belt.
2. Insert the latch plate into the buckle until it clicks. Position the lap belt portion as low as possible across your hips, not across your abdomen. This lets your strong pelvis bones take the force of a crash.
3. Press the button on the buckle to release the seat belt.

(EU TYPE)

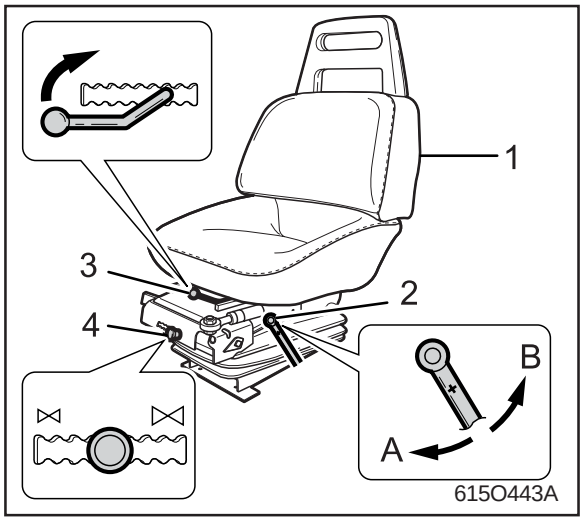

(1) Seat.
(2) The lever which control the seat position (up or down) in accordance with operator's weights. Use the lever when you change the seat position.
(3) When you change the seat position (front or rear), pull the lever up and push or pull the seat to front or rear direction.
(4) When you change the suspension of the seat, you can adjust the suspension of the seat using the lever. Pull the lever front direction and move the lever left or right.
(A) (+) Heavy *(B) (-) Light*

The operator's seat can be adjusted forward and backward in 100 mm (3.9 in.) range by pulling the seat sliding lever. The seat has been especially designed so that it can be adjusted three stages, forward or backward, to fit the physique of the operator.

https://truckmanualshub.com/

SWING DRAWBAR

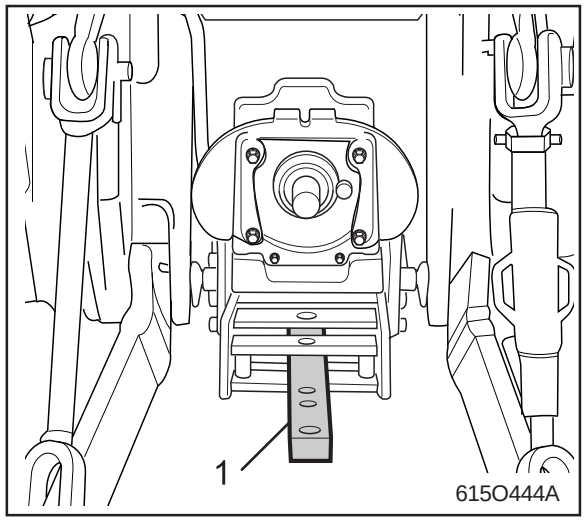

(1) Swing drawbar

Use swing drawbar only with equipment designed for using with this tractor.

CAUTION

- **Only attach implements to the 3 point linkage that are designed for fitting to the 3 point linkage.**

P.T.O CAP

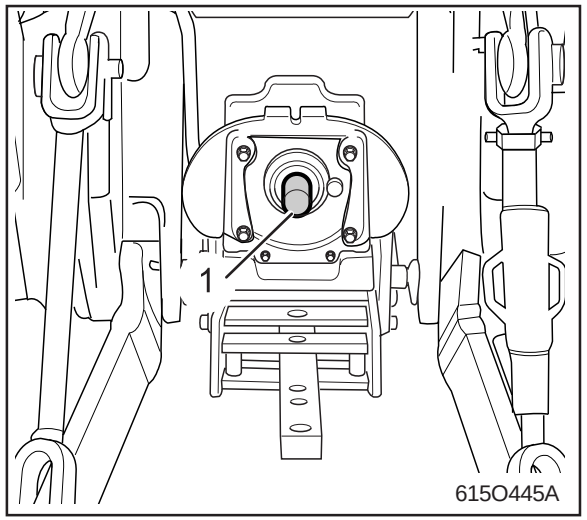

(1) P.T.O Cap

CAUTION

- **When not using PTO shaft, attach PTO cap after greasing.**

https://truckmanualshub.com/

5 OPERATING

PRE-OPERATION CHECK
OPERATING NEW TRACTOR
OPERATING THE ENGINE
OPERATING THE TRACTOR

https://truckmanualshub.com/

PRE-OPERATION CHECK

It is a good practice to know the condition of your tractor before you start it. You should do routine check before each use.

CAUTION

To avoid personal injury:

- **Be sure to check and service the tractor on a level surface with the engine shut off and the parking brake "ENGAGED".**

- Do a walk around inspection.
- Check the engine oil level
- Check the transmission oil level
- Check the coolant level
- Clean the grill and radiator screen.
- Check the air cleaner and evacuator valve.
- Check the brake pedal
- Check all dash gauges and indicators
- Check head lights, tail lights, and all working lights.
- Check accessible wiring harness for any damage.
- Check the seat belt and ROPS for damage.
- Refuel (See "daily check" in the periodic service section)
- Check all danger and warning labels.

OPERATING NEW TRACTOR

How a new tractor is handled and maintained determines the life of the tractor.

A new tractor just off the factory production line has been, of course, tested, but the various parts are not accustomed to each other, so care should be taken to operate the tractor for the first 50 hours at a slower speed and avoid excessive work or operation until the various parts become "broken-in.". The manner in which the tractor is handled during the "breaking-in." period greatly affects the life of your tractor. Therefore, to obtain the maximum performance and the longest life of the tractor, it is very important to properly break-in your tractor.

https://truckmanualshub.com/

In handling a new tractor, the following precautions should be observed.

- You Should not operate the your tractor at full speed for the first fifty hours of use.
- Do not start your tractor abruptly or apply the brakes suddenly.
- In cold climates, allow your tractor plenty of time to warm up.
- Do not run the engine at speeds faster than necessary.
- Use due caution when operating your tractor on rough roads or terrain.

The above precautions are not limited to new tractors only, but are a good practice for tractors regardless of their age.

CHANGING LUBRICATING OIL FOR NEW TRACTORS

Special attention should be given to new tractors lubrication oil. New parts are not accustomed to each other and are not broken in properly. Small metal grit can develop in the lubricating system as metal parts begin to “break in”, and continuous use of the contaminated oil can cause damage and failure. Therefore you should change the tractor’s oil before you normally would.

For further details of the oil change and service schedule, see “maintenance” section.

OPERATING THE ENGINE

STARTING THE ENGINE

WARNING

- ***Carefully read and understand the instructions in “Safe Operation” chapter in the owner’s manual and warning and warning plates attached to the tractor.***
- ***Avoid engine starting in concealed space as much as possible. It may be fatal. Do so only with proper ventilation.***
- ***When stating the engine, apply the parking brake after positioning the main shift lever to Neutral position and turning the PTO switch to OFF.***
- ***Do not start the engine with unseated in driver’s seat since it may cause unwanted accident.***

https://truckmanualshub.com/

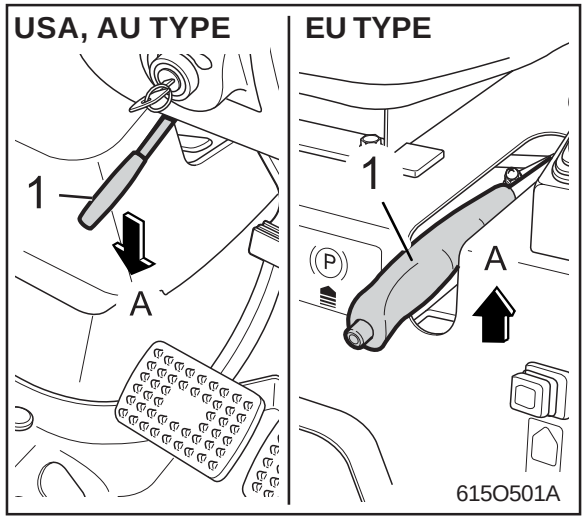

(1) Parking Brake Lever
(A) Lock

1. Apply the parking brake.

   Pull (push) the parking brake lever while fully depressing the pedal after connecting the left and the right of the brake pedal. The “P” lamp in the instrument panel turns on when the key is inserted while brake engaged.

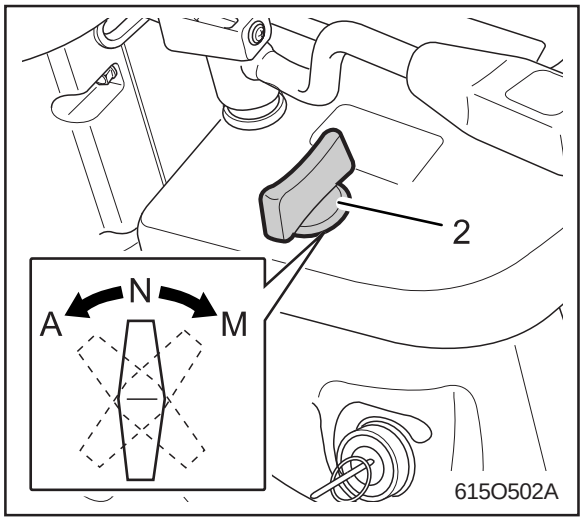

(1) PTO Switch *(2) P.T.O Change Switch*
(A) OFF - OFF *(B) ON - ON*

2. Place the P.T.O switch (Only EU) to the off position and the P.T.O change switch in the neutral position.

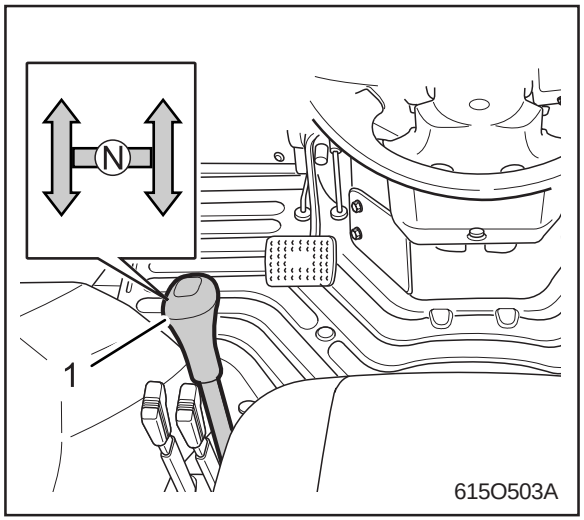

(1) Main Shift Lever

3. Place the main shift lever in the neutral position.

https://truckmanualshub.com/

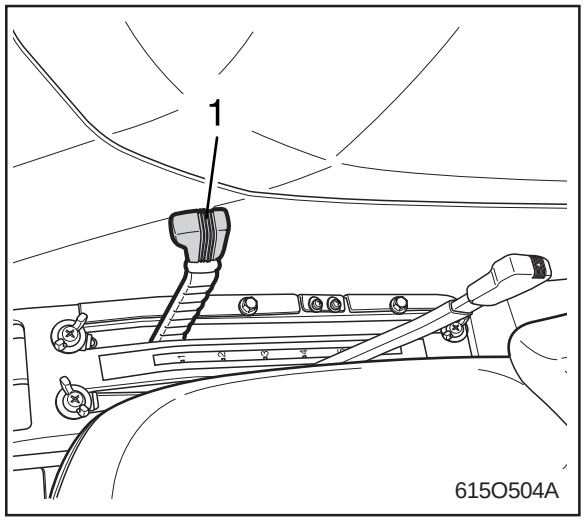

(1) Position Control Lever

4. Lower the attachment by pushing the position control lever forward.

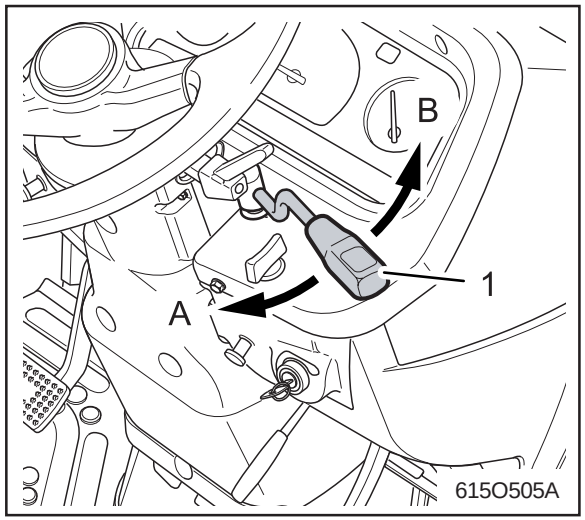

(1) Hand Accelerator Lever
(A) Decrease
(B) Increase

5. Pull the hand accelerator lever halfway.

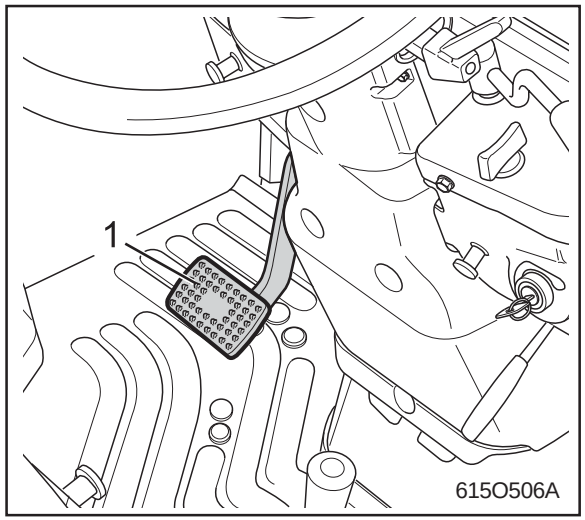

(1) Clutch Pedal

6. Step on the clutch pedal.

WARNING

- ***If you do not step on the clutch pedal, the safety switch will not operate so that the engine is not starting.***

https://truckmanualshub.com/

7. Turn the switch key to “Start” position.

WARNING

- ***As starting motor needs a lot of electric current, please do not use it more than 10 seconds continuously. If it is not started within 10 seconds, stop doing it more than 30 seconds, and then repeat the same operation. If it will not start at all, please do not restart before the flywheel stops.***

8. Please take your hands off from the key when the engine is starting. It is automatically turned ON.
9. Operation principle of preheating system
   - If you continue to turn the start switch more than 8 seconds, the indicator of preheating plug is glowing.

WARNING

- ***Please do not turn the key to start position while the engine is running.***

10. Let it run for heating for about 5 minutes after taking your foot off from the clutch pedal.

HOW TO START IN WINTER

1. First, you place the start switch in “ON” position, and please wait (about 20 seconds) till the indicator light for preheating is turned off. Now, you can start. If the start is not smoothly performed in spite of the try, repeat the above method.
2. Turn the switch key for start to “Start” position with your foot stepping on the clutch pedal.
3. Take your hands off from the key when the engine is starting. It is automatically turned ON.
4. Let it run with warm-up at idle speed for about 10 minutes after starting.

STOPPING THE ENGINE

Reduce engine revolution and apply even foot pressure on both brake pedals. Depress the clutch pedal and place main gear shift lever and PTO switch in neutral. Lower equipment. Allow engine to idle for a short time before turning it off. Stopping a hot engine at high speed may cause internal engine damage.

Set parking brake by pulling the rod.

Turn main switch key counterclockwise to the “OFF” position to open electric circuit.

https://truckmanualshub.com/

IMPORTANT

- **Remove the key whenever you leave the tractor. Then you are certain the ignition and lights are off. Also, it prevents unauthorized operators from starting the tractor.**

WARNING

- ***After operating the tractor or engine, never touch the muffler or the heat shield until it has sufficient time to cool.***

CAUTION

To avoid the damage to the turbo charger of this engine:

- **Do not accelerate quickly right after engine start.**
- **A minute of idling is recommended before getting into the work and also before the engine stop.**

WARMING UP

CAUTION

To avoid personal injury:

- **During warm up of the engine be sure that the parking brake is set.**

After starting your tractors engine allow a five minute warm up before applying any load to the tractor. This will allow time for oil to reach every part of the engine. If a load is applied to the tractor before it has time to warm up then serious damage can occur like, premature wear, breakage, or seizure.

WARM-UP AND TRANSMISSION OIL IN THE LOW TEMPERATURE RANGE

Hydraulic oil serves as transmission fluid. In cold weather, the oil may be cold with increased viscosity. This can cause delayed oil circulation or abnormally low hydraulic pressure for some time after engine start-up. This in turn can result in trouble in the hydraulic system. To prevent the above, observe the following instructions:

Warm up the engine at about 50 % of rated rpm according to the table below:

Ambient temperature	Warm-up time requirement
Above 0 °C (32 °F)	At least 10 minutes
0 ~ -10 °C (32 ~ 14 °F)	10 ~ 20 minutes
-10 ~ -20 °C (14 ~ -4 °F)	20 ~ 30 minutes
Below -20 °C (-4 °F)	More than 30 minutes

IMPORTANT

- **Do not operate the tractor under full load condition until it is sufficiently warmed up.**

https://truckmanualshub.com/

JUMP STARTING

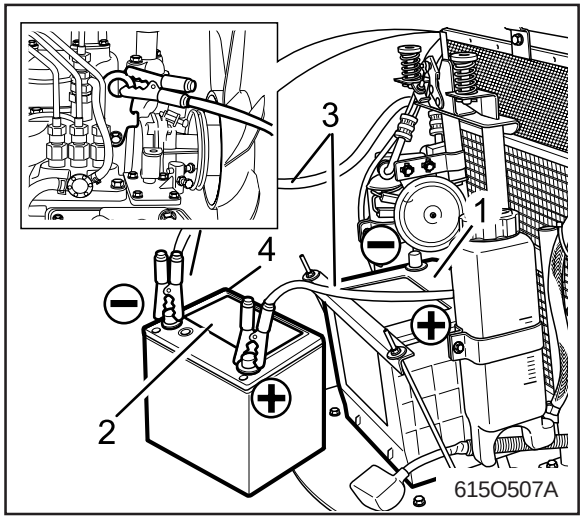

(1) Dead Battery
(2) Lay a Damp Rag Over the Vent Caps
(3) Jumper Cables (4) Helper Battery

When jump starting the engine, follow the instructions below to safely start the engine.

1. Use a battery of the same voltage as the disabled tractor to jump start the tractor. Make sure the battery is within a safe distance to the tractor so that the jumper cables can reach.
2. Engage the parking brake of the tractor and shut the tractor off.
3. Put on safety goggles and rubber gloves.
4. Make sure that the battery vent caps are securely in place.
5. Cover the vent hole with damp rags, and do not allow the rags to touch the battery terminals.
6. Attach the red clamp to the positive terminal of the dead battery, and attach the other end to the positive cable of the helper battery.
7. Clamp the black cable to the negative terminal of the dead battery, and attach the other end to the negative cable of the hook.
8. If the helper battery is in a vehicle, start the vehicles engine and let it run for a few moments. Then start the disabled tractor.
9. Disconnect the battery cables in the exact opposite order as they were attached.
10. Remove the damp rags and reinstall the vent caps.

⚠ WARNING

- ***This tractor has a 12 volt negative ground starting system.***
- ***Use only the same voltage for jump starting the tractor.***
- ***Keep all flames, sparks, and cigarettes away from the battery.***
- ***If the tractors battery is frozen, do not jump start the engine.***
- ***The use of a higher voltage system for jump starting can cause severe damage to the tractors electrical system.***
- ***Use only a matching voltage source when "Jump Starting" a dead battery.***
- ***Do not allow battery fluid to contact your skin, eyes, fabric, or painted surfaces.***
  After touching a battery, do not touch or rub your eyes. Thoroughly wash your hands.
  If the acid contacts your body or clothing, immediately flush with water for at least 15 minutes and you may see a physician, if necessary.

https://truckmanualshub.com/

OPERATING THE TRACTOR

STARTING THE TARCTOR

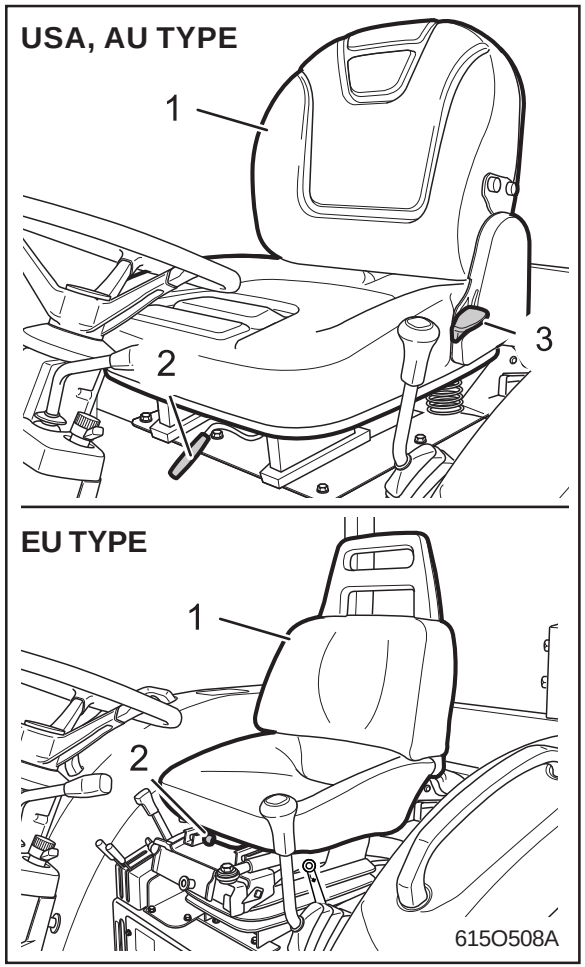

(1) Seat *(2) Seat Ajusting Lever*
(3) Seat Reclining Lever

1. Adjust the seat and fasten the seat belt.

SEAT ADJUSTMENT

Adjust the seat to the position for easy access to the pedal and steering wheel.

WARNING

- ***Check if the seat is securely locked after the seat adjustment.***
- ***Do not adjust the seat while driving. The seat may move suddenly causing the loss of control of the tractor.***

WEARING THE SEAT BELT

For the safety reasons, always wear the seat belt properly.

WARNING

- ***Always wear the seat belt when cabin or ROPS is installed***
  In case where cabin or ROPS is absent or ROPS is folded, do not wear the seat belt.
- ***When the seat belt is worn at the waist or belly other than at the pelvis, it may cause abdominal injury during collision.***

2. Adjust the steering wheel according to the driver's physique.

WARNING

- ***Do not adjust the steering wheel while driving. You could lose the control of your tractor, causing an accident.***

https://truckmanualshub.com/

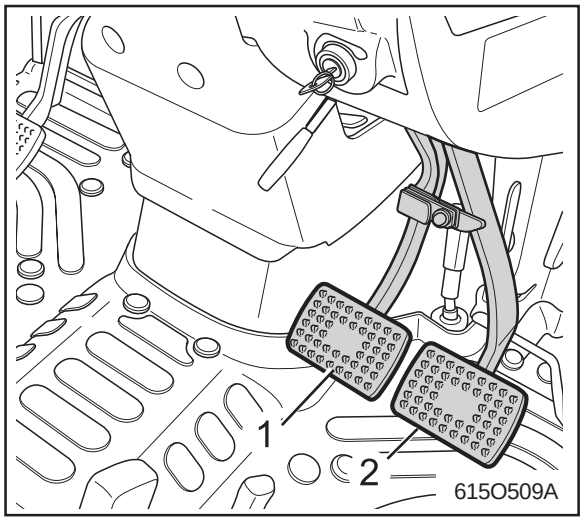

(1) Brake Pedal (LH)
(2) Brake Pedal (RH)

3. Make sure whether the brake pedal of the left and right side is engaged.

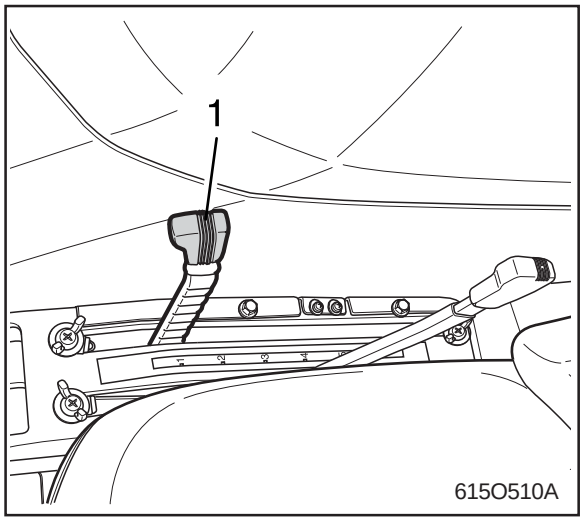

(1) Position Control Lever

4. Pull the position control lever backward to raise the detachment

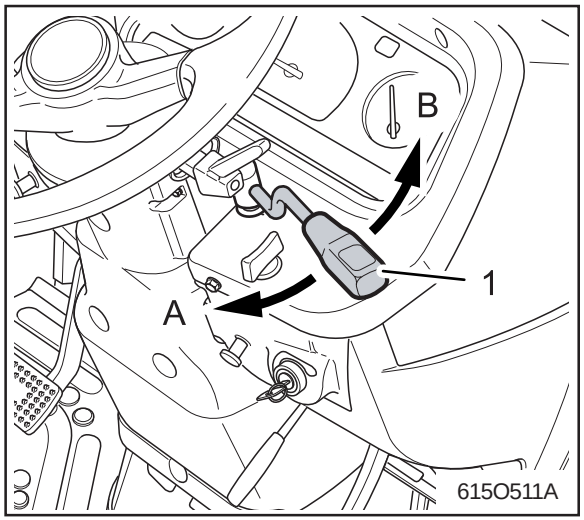

(1) Hand Accelerator Lever
(A) Decrease
(B) Increase

5. Increase slowly the engine RPM from idle speed to the middle speed.
6. Step on the clutch to the full.

https://truckmanualshub.com/

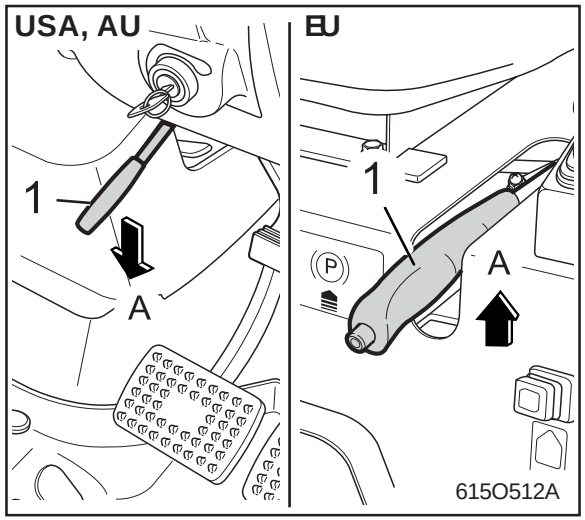

(1) Parking Brake Lever
(A) Lock

7. Release the parking brake.
8. Change the main and Hi-Lo shift, and forward and reverse lever shuttle lever to the position you want.
9. The tractor starts to move if you take away the clutch pedal slowly.

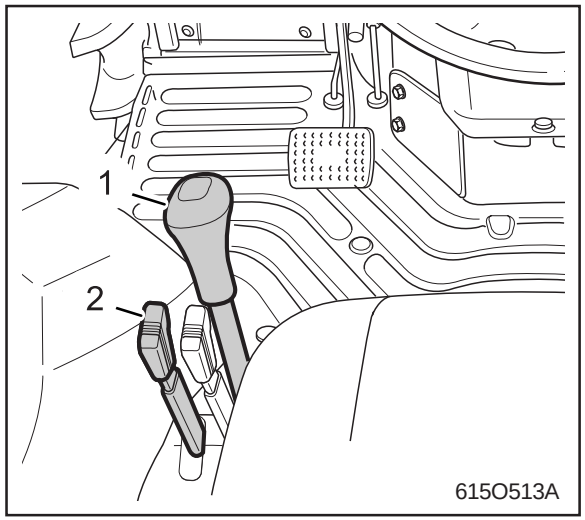

(1) Main shift Lever
(2) Hi-Lo Shift Lever

8. Change the main and Hi-Lo shift, and forward and reverse lever shuttle lever to the position you want.
9. The tractor starts to move if you take away the clutch pedal slowly.

⚠ CAUTION

- **Do not put one of your feet on the clutch while driving. If you put it, the clutch stays in the slip position, and as a result it wears quickly.**
- **As for the clutch operation. You should take away the clutch quickly, and connect it slowly.**
- **Avoid sudden speed change for the safety.**
- **Before moving the tractor, take care of the front and back, and left and right direction. If you are careless about it, you may have injury.**
- **When driving on the steep slope, loading and unloading something to or from the vehicle, entering and going out of the job field, driving over the ridge way, please do not drive with your hand off from the main shift lever. If you change gears halfway, it is dangerous. Therefore, you should put the gears in the low speed position in advance.**
- **If you must shift gear in inevitable condition, step on the clutch and brake pepal to the full. After the tractor has stopped.**
  Shift to desires gear.

https://truckmanualshub.com/

STOPPING THE TRACTOR

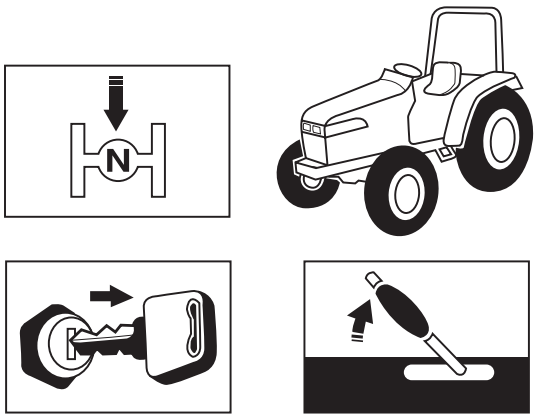

1. Adjust the accelerator to put the engine rotation in the idle speed.
2. Step on the clutch pedal and brake pedal.
3. If it stops completely, put the shift lever in the neutral position.
4. If some implement is mounted, put PTO clutch switch and PTO shift lever in the neutral position.
5. Pull the lifting lever forward to lower the attachment slowly.
6. You should surely lock the parking brake.
7. If you put the start switch in “OFF” position, the engine will stop.

IMPORTANT

- **When you park and stop the tractor, you should pull the parking brake to fix it. As the tractor is constructed in transmission that is always engaged, if the Hi-Lo shift is put in “Low”, the tractor can move even in “Neutral” position. Such phenomenon can easily occur easily when:**
  1. **The temperature of the mission oil is low, and**
  2. **The rotation of the engine is high. But this phenomenon is not abnormal.**
- **Please get out of the tractor after confirming the tractor is stopped while you are parking and stopping it.**
- **When you park the tractor at the steep place, please fix its tire so that the tractor will not move.**
- **Do not park it on the grass or straw.**
  If they touches the exhausting pipe, a fire can break out.

PARKING

PARKING BRAKE LEVER

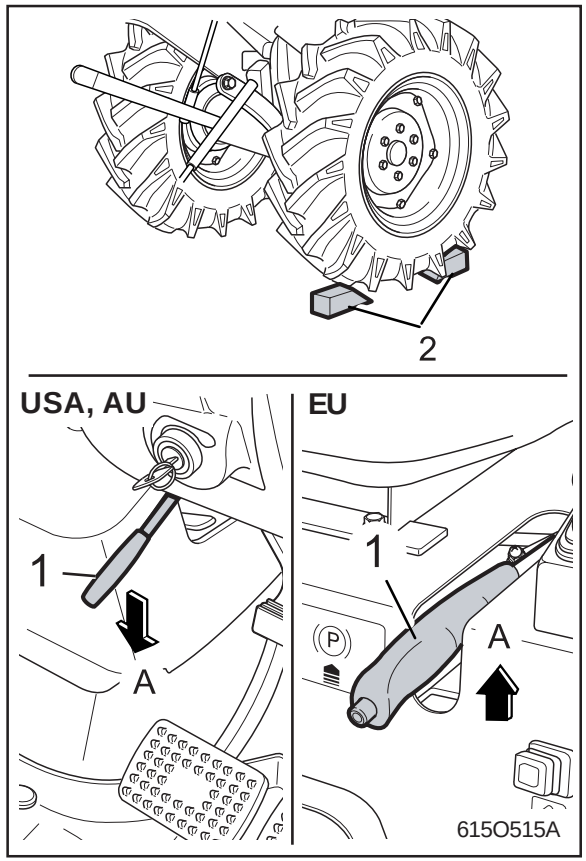

(1) Parking Brake Lever
(2) Chocks
(A) Lock

https://truckmanualshub.com/

When parking or stopping the tractor, secure it by applying the brake pedal. When applying the parking brake, connect the left and the right of the brake pedal, fully depress the brake pedal and then push (move upwards) the parking brake lever.

In order to release the parking brake, depress the brake pedal fully once more.

WARNING

- ***Driving without releasing the parking brake will cause brake disc to wear out quickly.***
- ***Apply the parking brake and place the chocks at the rear wheels when parking.***
- ***When parking the vehicle on a hill, position the shift lever at low forward 1st gear for uphill and low reverse 1st gear for downhill.***
- ***Leaving transmission in gear with the engine stopped will not prevent tractor with H-shift transmission from rolling.***
- ***Do not park on steep hills. The vehicle may roll down and cause accident.***

HOW TO TURN

You should turn slowly by lowering the engine rotation if possible.

WARNING

- ***If you turn at high speed, the tractor can turn over.***
  Please turn slowly with differential lock pedal locked and the speed lowered. If you neglect it, you will be injured.

HOW TO DRIVE ON A SLOPE

1. Please drive according to the conditions of the slope at safe speed so that the engine is not under heavy load if possible.
2. On the uphill slope, change the main shift lever into a lower gear so that the engine will not stop.
3. On the downhill slope, drive at the low speed.

WARNING

- ***Make sure that the coupling device of brake pedal and differential lock pedal are surely released.***
- ***On the slope, do not put the main shift in neutral position or do not cut off the clutch.***
- ***On the downhill slope, apply engine brake, and should not step on the clutch pedal. If you do not keep this rule, you can be injured.***

https://truckmanualshub.com/

THE CAUTIONS WHEN COMING IN AND OUT OF PAVED ROAD

1. Make sure that the left and right pedal are connected.
2. If the difference of the height is large when coming in and out of the cultivated land, it is dangerous. Therefore, use a prop and the like in this case.
3. Go in and out of the cultivated land at a right angle.
4. When going up, lower the implement not to let the front wheel rise. Please raise the implement as soon as the front and rear wheels are over the bank.
5. As for 4 wheel drive, climbing capacity is getting much better if it climbs rearward taking advantage of the 4 wheel drive when the tractor is going over the bank.

CAUTIONS WHILE DRIVING ON THE ROAD

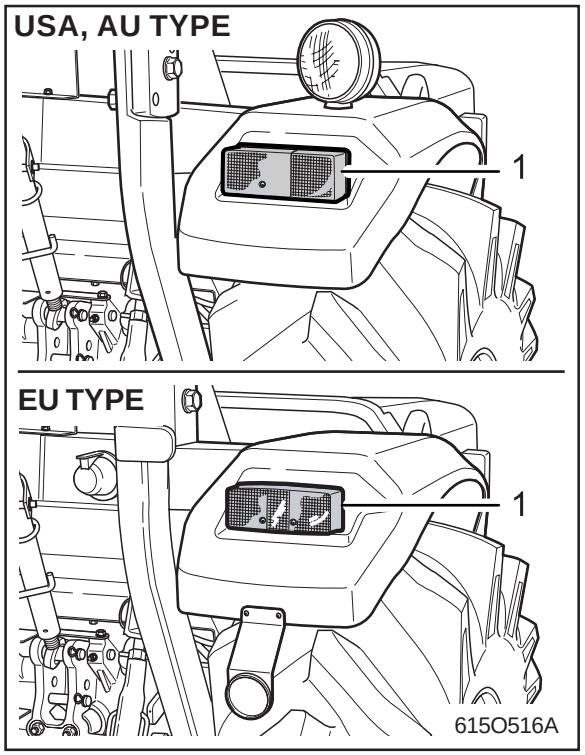

(1) Direction Indicator (rear)

1. When you change the driving direction on the road, let other car know your direction by using the direction indicator.
2. When you meet another car in the opposite direction in the night, let the light be directed to the ground so that it will not interrupt another driver's view.
3. Connect the left and right pedal surely.

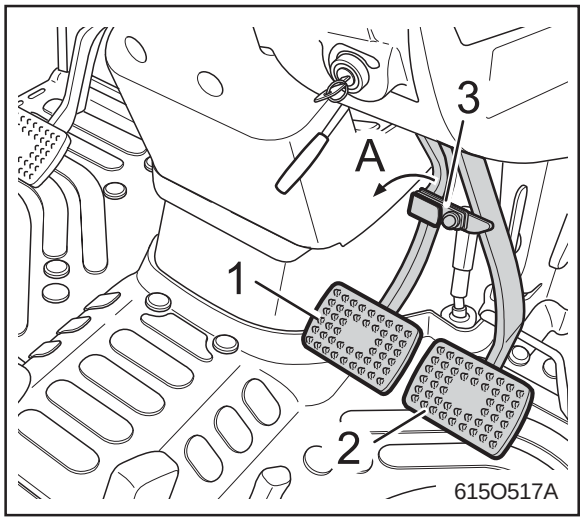

(1) Brake Pedal(LH)
(2) Brake Pedal(RH)
(1) Brake Pedal Lock
(A) Whenever Travelling On The Road

⚠ WARNING

- ***If you drive on the road, you must connect the left and right pedal surely.***
  If not, the tractor will operate one-sidedly. As a result, it can turn over, tumble down, and collide.
- ***When you are driving on the road, keep the relate regulations and remember the safe driving always. If not, you can have an accident of bodily injury on a person.***

https://truckmanualshub.com/

WARNING

- ***Do not stay in the cabin except the driver. If not, you can have an accident of bodily injury on a person.***
- ***When you are passing through a passage with some ditch or the farm road with steep sides, please be careful of both ends of the road. If not, you can have an accident of bodily injury on a person.***
- ***When you are driving on the road with the implement like a rotary, the front part of the tractor becomes lighter. As a result, the operation of the steering wheel is getting bad. Be careful of it.***

LOADING INTO AND UNLOADING OUT OF THE TRUCK

1. When you load the tractor, do it by driving backward.
2. If the engine is out halfway, step on the brake pedal at once, and then take away the pedal slowly to reach the road. After that, start the engine again to go up.

CAUTIONS WHILE DEALING THE POWER STEERING

1. Power steering is only possible while the engine is running. If the engine rotation is at low speed, the handle is getting somewhat heavy. When the engine is stopped, it is operating with the normal steering.
2. If you operate the steering wheel, with the tractor halted, using the implement equipped in front of the loader and the like, the steering wheel operation can be getting a little heavy. Operate the steering wheel moving the tractor at low speed in this case. When a loader is mounted, adjust the air pressure of the front wheel (refer to the page), and mount weight or rotary at the rear part of the tractor, and control the front weight to make the front and rear balance more stable for safe working.
3. If you turn the steering wheel to the full, the safety valve is activated to let the signal sound (relief valve sound). Do not use the tractor with this sound activated (but it is only for a short time, it will do). If possible, please avoid using it continuously with the steering wheel turned to the full.
4. Please avoid turning the steering wheel to the end (turning it without driving) because its tires are wearing faster.

https://truckmanualshub.com/

5. In cold weather, use it after enough preheating.
6. While you are repairing the pipes and the like, be careful that dust does not come in.
7. Steering wheel operation is very easily performed, so be careful of the operation.
8. When you add or change the oil, use the prescribed oil.

THE CAUTIONS ON DEALING OF THE IMPLEMENT

1. When you remove and attach the implement, make sure that no one stands around the tractor or between the implements.
2. Remove and attach the implement at the flat and safe place. Please use proper lighting apparatus for the night work.
3. When you have mounted a heavy implement, fix a balance weight in front to keep the balance.
4. In case that you adjust the implement, apply the parking brake of the tractor, or stop the engine, then perform the adjustment after confirming that PTO switch and PTO shift lever are in the “Neutral” position.
5. When you do the draft work, you must use the draft hitch. Do not tow anything other equipments than the draft hitch.
6. When you do draft work, or you are working on the slope, you should make the breadth of the tractor wider (breadth of left and right tire).
7. As the length of the tractor can get much longer according to the kinds of the implement, be careful of the persons or objects around the job field when turning the corner.
8. Do not load any person or objects instead of the balance weight.
9. When you are working with the front loader, keep the balance by attaching the implement in the rear.
10. Do the safe and proper work after reading the manual for the implement to be installed.

WARNING

- ***If you neglect this rule, you can be easily injured.***

https://truckmanualshub.com/

THE CAUTIONS WHEN ATTACHING AN IMPLEMENT

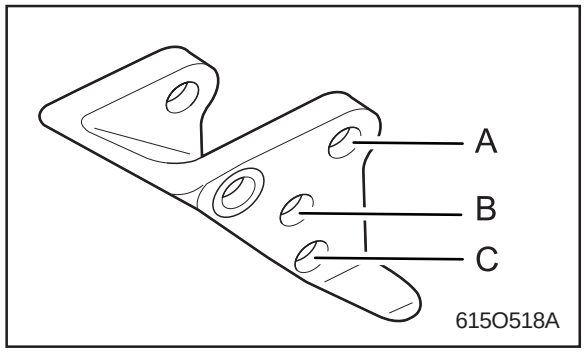

CAUTION

- **A plate describing how to attach the implement is placed on the standard implement of our company.**
- **When you are attaching an implement (like rotary) not requiring any traction, mount the assembling spot of the top link into the hole A or B.**
- **When you are attaching an implement (like plow) requiring some traction, mount the assembling spot of the top link into the hole C.**
- **When you are moving with an attached implement, you have to mount the top link into the hole A or B. If not, the lifting part can be troubled, and it can fall down because the draft sensor is activated.**

SEVEN PIN ELECTRICAL POWER OUTLET

ONLY EU TYPE

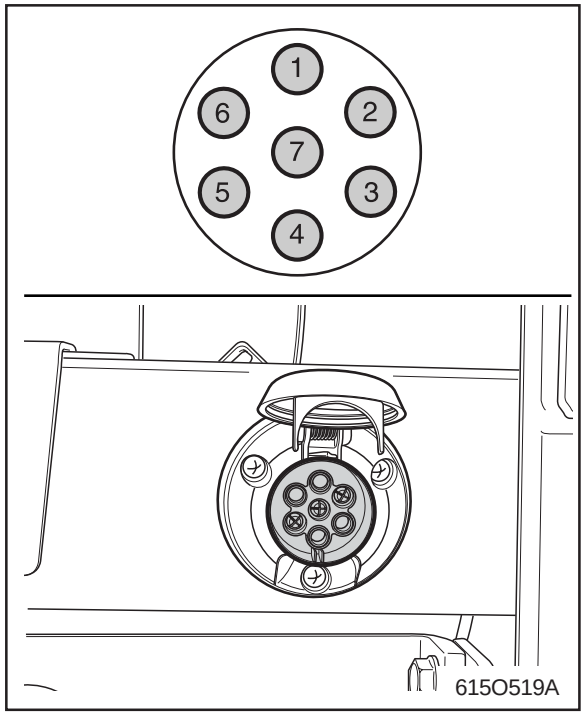

A standard 7-pin trailer lighting socket is provided and mounted right side of the tractor, at the rear of the tractor.

No	Circuit	Color of wire
1	Left turn signal	Y
2	-	-
3	Earth	W
4	Right turn signal	G
5	Illumination(Right)	Br
6	Stop	R
7	Illumination	B

ONLY USA, AU TYPE

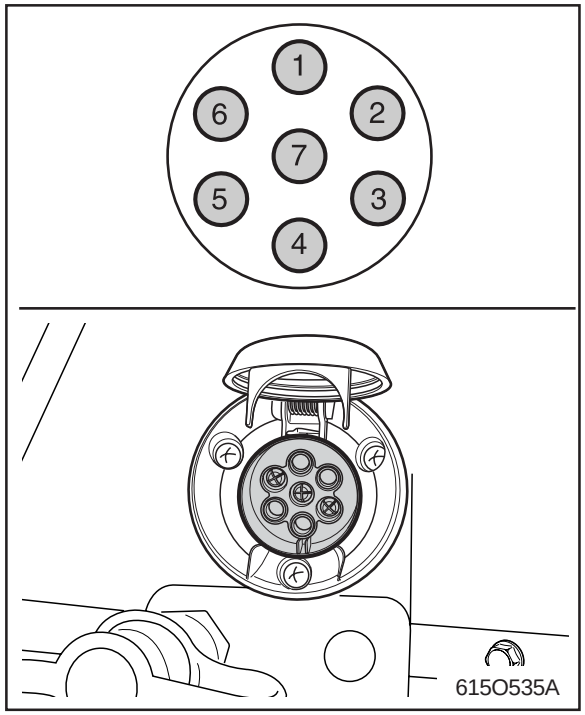

A standard 7-pin trailer lighting socket is provided and mounted right side of the tractor, at the rear of the tractor.

No	Circuit	Color of wire
1	Earth	W
2	Illumination	Br
3	Right turn signal	G
4	Stop	R
5	Left turn signal	Y
6	Illumination	B
7	-	-

https://truckmanualshub.com/

LIFTING DEVICES FOR AN ATTACHMENT

The hydraulic lifter can always be operated while the engine is running, regardless of engagement or disengagement of the clutch.

POSITION CONTROL

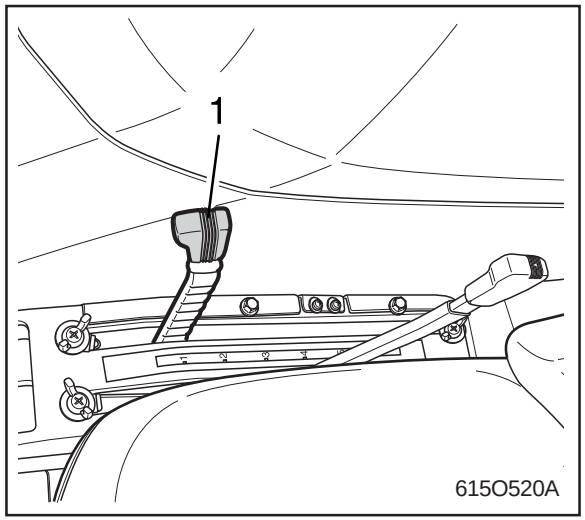

(1) Position Control Lever

The position of an attachment can be freely controlled within the range of position control, using the lever. An attachment will completely lower when the lever is in the floating range.

DRAFT CONTROL

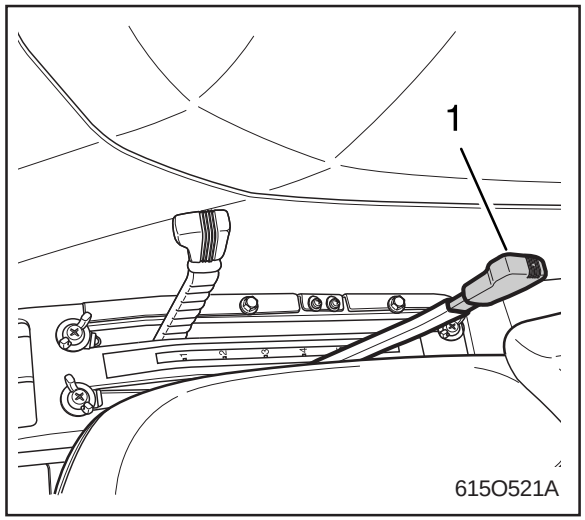

(1) Draft contol Lever

1. The draft control is used to do draft work with an attachment, like a plow, attached to the 3-point linkage.
2. In the floating range. the attachment will completely lower.
3. In the draft control range, the hydraulic unit will have a force to lift the attachment. In this stage, it is possible to do stable work without slipping.
4. If the draft force is higher than the resistance of the attachment, the attachment will be lifted up. If it is lower than the resistance of the attachment, the attachment will be restored to its original state.
5. By placing the lever closer to shallow, the attachment can be lifted up by smaller draft resistance.

https://truckmanualshub.com/

MIXED CONTROL

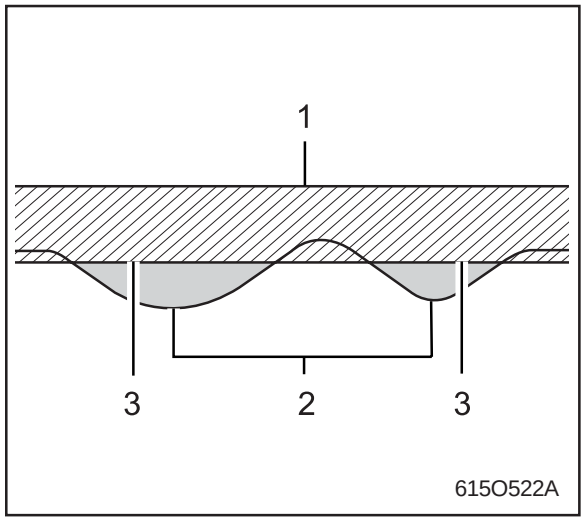

(1) Ground Surface (2) Soft Soil
(3) Implement Penetration Limit

In draft control, when draft decreases, the implement automatically lowers to increase draft. However, the implement sometimes lowers too much. To limit the degree, the implement can be lowered, set the position control lever at the lowest working depth desire for the implement. Lower the draft control lever to the point where the implement is at the desired depth.

This stops the implement from going too deep and causing loss of traction and ground speed.

3-POINT HITCH LOWERING SPEED

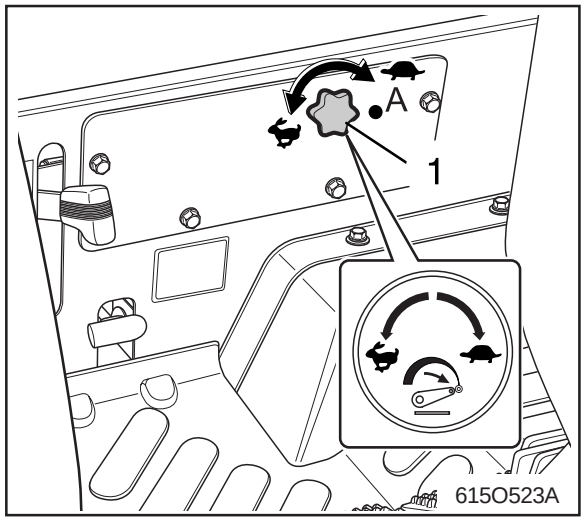

(1) 3-point hitch lowering speed knob

(A) Lock ( ) Fast ( ) Slow

The lowering speed of the 3-pint hitch can be controlled by adjusting the 3-point lowering speed knob.

CAUTION

To avoid personal injury:

- **Fast lowering speed may cause damage or injury. Lowering speed of implement should be adjusted to two or more seconds.**

DEALING OF SINGLE-DOUBLE ACTING VALVE

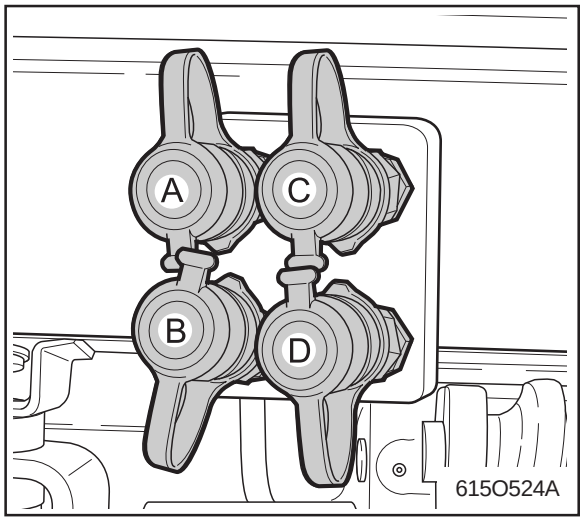

WARNING

To avoid personal injury:

- ***When not using the P.T.O axle, please cover it after applying grease on it.***
- ***When connecting or disconnecting the coupler, take away pressure after stopping the engine.***
- ***Do not use hands to check oil leakage***

https://truckmanualshub.com/

CONNECTION AND DISCONNECTION OF COUPLER

HOW TO CONNECT THE COUPLER

1. Clean up female coupler and male coupler of the tractor by removing dust and foreign particles and wiping moisture.
2. Open the dust cover of the female coupler.
3. Insert the male coupler of the attachment into the female coupler.
4. Pull back the male coupler of the attachment lightly to confirm whether the coupler is fully connected.

HOW TO DISCONNECT THE COUPLER

1. First, lower the attachment to the ground to remove the pressure within the hydraulic hose.
2. Clean the coupler.
3. Disconnect the coupler after removing the pressure by moving the lever
4. Wash off oil and dust on the coupler, and shut the dust cover.

OPERATION OF SINGLE - DOUBLE ACTING VALVE

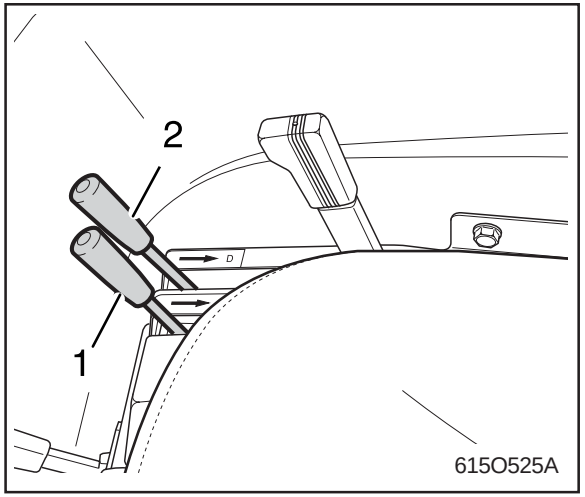

(1) Lever1 *(2) Lever2*

When the relief valve begins to operate, with the hydraulic cylinder lifted by the lever, let go the lever to be in the neutral position. If the relief valve is keeping on operating, it leads to performance deterioration of related parts due to overheating of oil.

1,2 Remote control valve lever

		Pressure ⇨	Returning ⬅
Lever 1		Push	Pull
Port	**A**	In ⬅	Out ⇨
	B	Out ⇨	In ⬅
Lever 2		Push	Pull
Port	**C**	In ⬅	Out ⇨
	D	Out ⇨	In ⬅

	Coupler size
Port A B	PT 1 / 2
Port C D	

ATTACHING DEVICES FOR AN IMPLEMENT (FOR GENERAL IMPLEMENT)

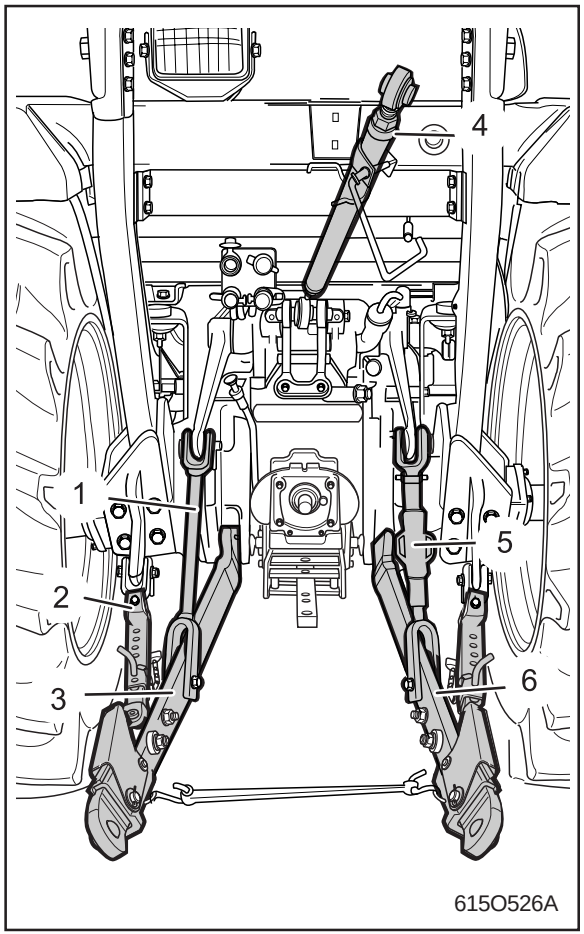

(1) Lift Rod (LH)
(2) Check Link
(3) Lower Link (LH)
(4) Top Link
(5) Lift Rod (RH)
(6) Lower Link (RH)

https://truckmanualshub.com/

WHEN IMPLEMENT IS NOT ATTACHED

1. Fix lower link (LH. RH) not to touch with wheels when implement is not attached.
2. Fix Top link into fixed bracket.

ADJUSTMENT OF TOP LINK

1. Extend or reduce Top link to adjust the inclination of an attachment.
2. Fix Top link with fixed nut after adjusting top link.
3. The position for mounting Top link varies depending on the kind of attachment.

ADJUSTMENT OF LOWER LINK

Implement	Stabiliser adjustment
Soil engaging (plough etc)	Place pin in slotted hole
Non-soil engaging (mower etc)	Place pin in a non slotted hole so that implement cannot sway laterally.

ADJUSTMENT OF LIFT ROD

1. Adjust the length of the lift rod according to the property of implement.

   A standard length is 430 mm (16.9 in.) from lifting arm.
2. Fasten the fixed nut after keeping the implement from leaning by turning. Turn buckle of the lift rod on the right side.

ADJUSTMENT OF CHECK LINK (WITHOUT AU, DK450L-EU)

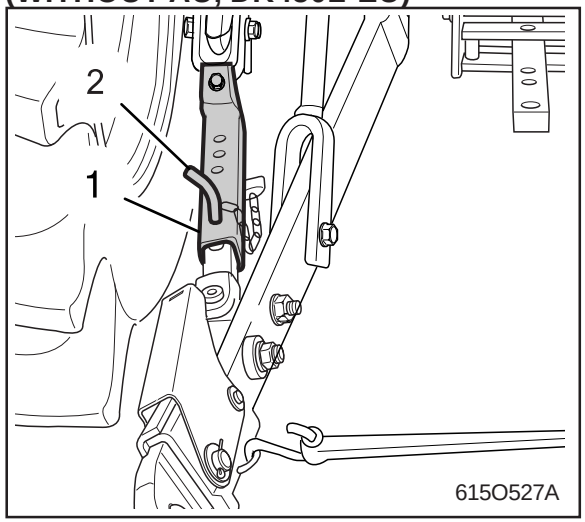

(1) Check Link *(2) Pin*

Adjust the check links to control horizontal sway of the implement.

Attachment	Adjustment of chain length
Plow and harrow	Loosen the chain for an attachment to sway laterally by 50 to 60 mm. (1.97 to 2.36in.)
Rotavator, mower, hayrack and cultivator	Fasten lightly

TIRES

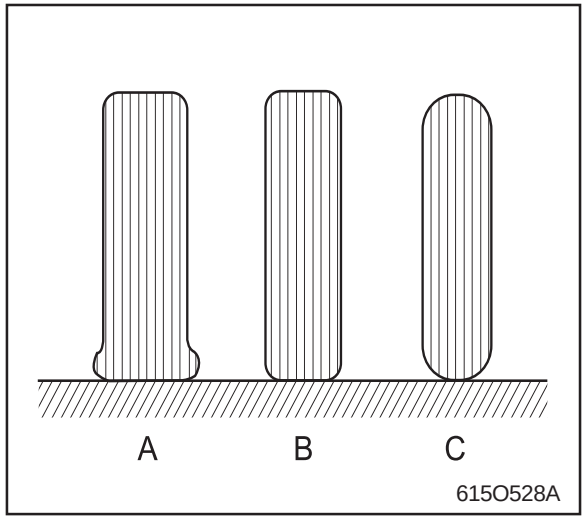

(A) Insuffient *(B) Standard*
(C) Excessive

Though the tire pressure is factory-set to the prescribed level, it naturally drops slowly in the course of time. Thus, check it everyday and inflate as necessary.

https://truckmanualshub.com/

WARNING

- ***Do not use tires larger than specified.***
- ***Do not attempt to mount a tire. This should be done by a qualified person with the proper equipment. Qualified persons with the proper tire mounting equipment should recognize the following warning.***
- ***Never exceed 241 kPa (35 psi) when attempting to seat a bead. If beads have not been seated by the time the pressure reaches 241 kPa (35 psi), deflate the assembly, reposition the tire on the rim, reduplicate and reinflate. After seating the bead, adjust inflation pressure as recommended in the inflation pressure chart.***

INFLATION PRESSURE

Though the tire pressure is factory-set to the prescribed level, it naturally drops slowly in the course of time. Thus, check it everyday and inflate as necessary.

	Tire Size (inch)	Inflation Pressure
Front	7-16 4PR	177kPa(1.8kgf/cm^2, 25.7 psi) [216kPa(2.2kgf/cm^2, 31.4 psi)]
	8-16 6PR	158kPa(1.6kgf/cm^2, 22.9 psi) [197kPa(20kgf/cm^2, 28.6 psi)]
Rear	12.4-24 6PR	158kPa(1.6kgf/cm^2, 22.9 psi)
	13.6-24 6PR	158kPa(1.6kgf/cm^2, 22.9 psi)

[ ] is when attaching the loader.

NOTE

- Maintain the maximum pressure in front tires, if using a front loader or when equipped with a full load of front weights.

https://truckmanualshub.com/

TREAD

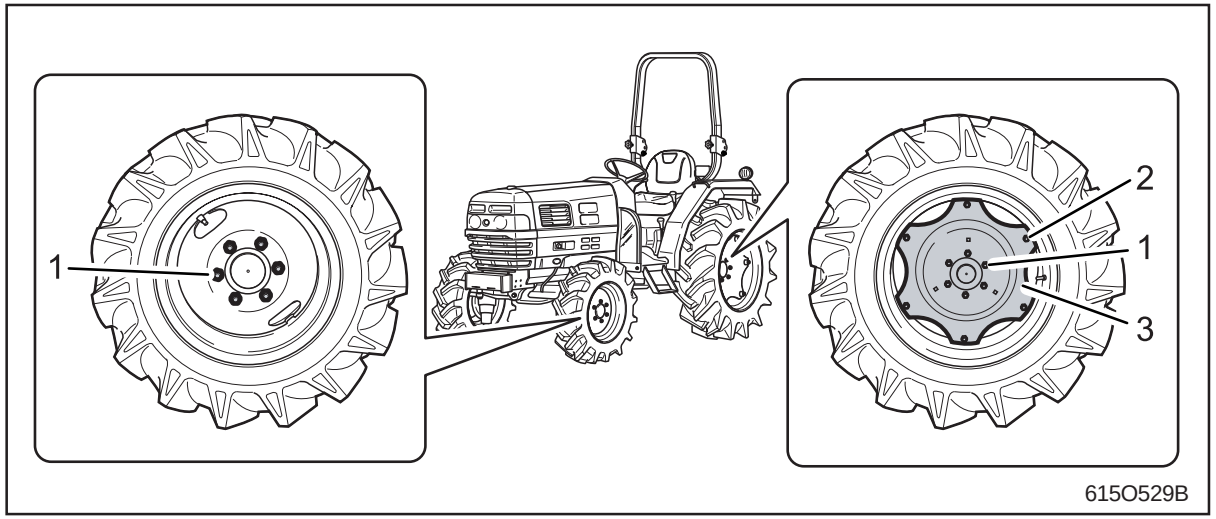

(1) Bolt *(2) Rim Bolt* *(3) Disc*

When working the fields where plants are in rows, it is necessary to change the wheel tread so that the tires would not pass over the plants. It is also necessary to widen wheel tread to decrease danger when working on slopes or hills, or when doing trailer work, etc.

WARNING

Never operate tractor with a loose rim, wheel, or axle.

- ***Always tighten nuts to the specified torque.***
- ***Check all of them frequently and keep them tight.***

IMPORTANT

Follow same checking procedure when tractor is first used.

- **To decrease the wheel tread danger when working on slopes or hills, or when working with trailer, etc.**
- **Do not use tires larger than specified.**

FRONT WHEELS

Front axle is not adjustable. Check and tighten as instructed.

IMPORTANT

- **Always attach tires as shown in the right-side drawings.**
- **If not attached as illustrated, transmission parts may be damaged.**

Wheel bolt torque	17 ~ 19 kgf·m 196.1 ~ 225.5 N.m 144.7 ~166.3 lbf.ft

WARNING

- ***Do not use tires larger than specified.***

https://truckmanualshub.com/

REAR WHEELS

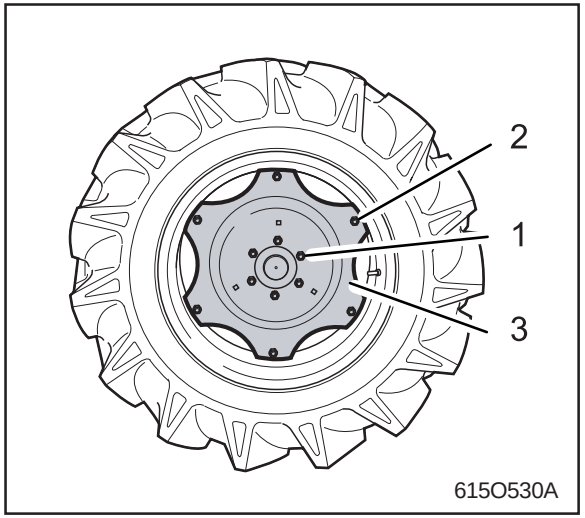

(1) Wheel Bolt *(3) Disc*
(2) Rim Bolt

The rear axle tread width are adjustable from 1077 to 1437.6 mm (42.4 to 54.6 in.) by changing the installation of the tire (together with rim) to the disk, to suit the type or condition of work. In either case, the tire should be installed so that arrow mark would show the direction of rotation. Furthermore, the tire mark on the ground should be in “V” shape.

To change the present tread to the desired tread, all of the arrow mark would show the direction of rotation.

Remove rim bolts, slide in peripheral direction to move to outside or inside of disk and set.

Change the left with the right tire, and set to the inside or outside of the disk.

Change the direction of the disk.

IMPORTANT

- **Always attach tires as shown in the above drawings.**
- **If not attached as illustrated, transmission parts may be damaged.**

Wheel bolt torque	26.6 ~ 31.0 kgf·m 260.9 ~ 304.0 N.m 192.4 ~ 224.2 lbf.ft

Rim bolt torque	20 kgf·m 196.1 N.m 144.7 lbf.ft

DK35

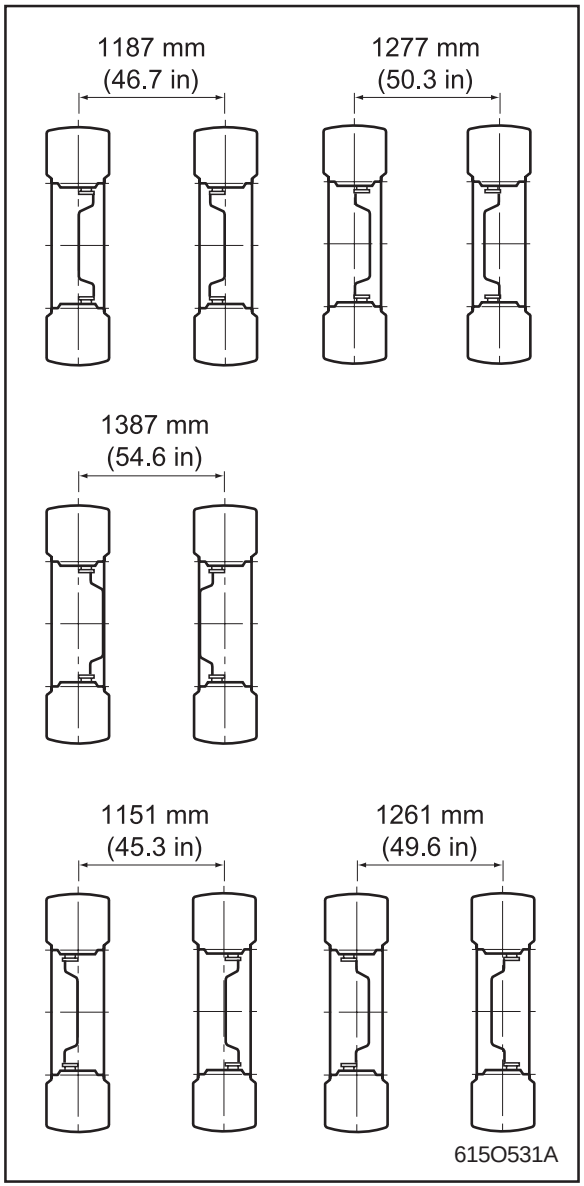

https://truckmanualshub.com/

DK40

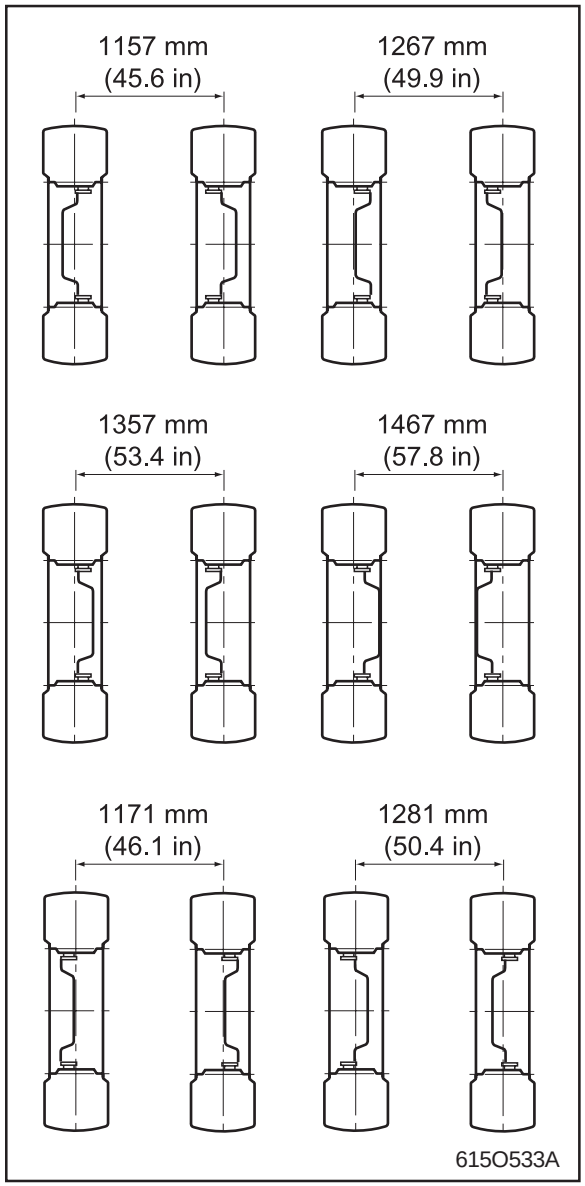

DK450L

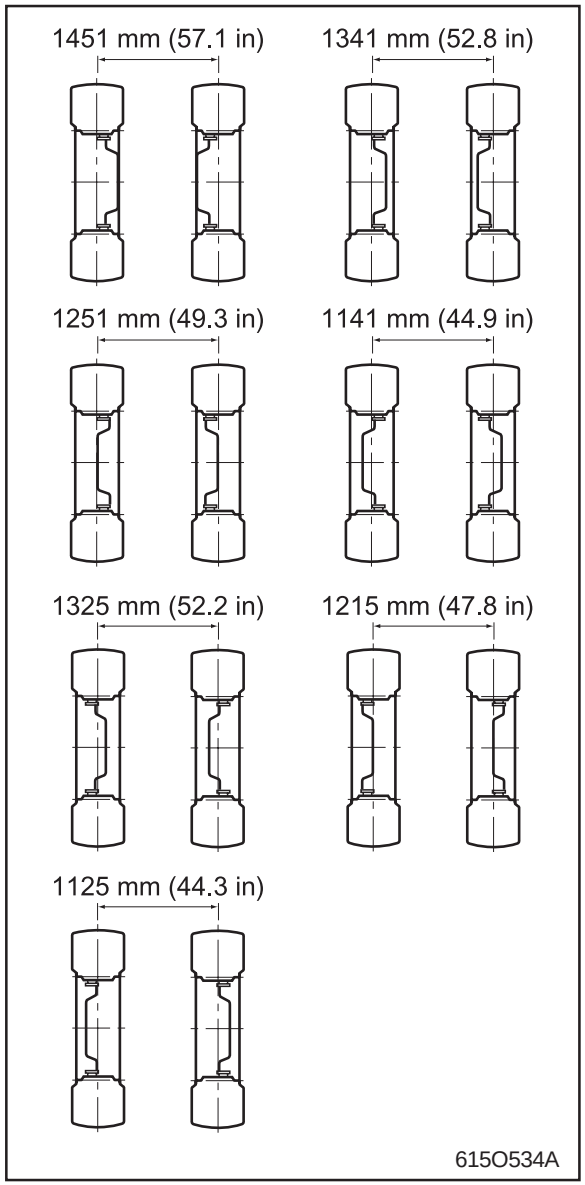

BALLAST

SELECTING FRONT BALLAST

Add weight to front end if needed for stability. Heavy pulling and heavy rear mounted implements tend to lift front wheels. Add enough ballast to maintain steering control and prevent tip over. Remove weight where it is no longer needed. Front weights are available from your **DAEDONG** Dealer. Your dealer can help you decide how much is required for your particular application.

⚠ CAUTION

- **Additional ballast may be needed for transporting heavy integral implements. When implement is raised, drive slowly over rough ground, regardless of how much ballast is used.**

Maximum weight	17 kg X 5 Pieces (37.5 lbs. X 5 Pieces)

https://truckmanualshub.com/

SELECT REAR BALLAST CAREFULLY

Add weight to rear wheels if needed to improve traction or for stability. Amount of rear ballast should be matched to job and ballast should be removed when it is not needed. Rear wheel weights are available or liquid may be added to the tires. Consult your **DAEDONG** Dealer for the correct ballasting necessary for your particular application.

CAUTION

- **Additional ballast may be needed for transporting heavy integral implements. When implement is raised, drive slowly over rough ground, regardless of how much ballast is used.**

Maximum weight per wheel	25kg X 2 Pieces (55.1 lbs. X 2Pieces)

https://truckmanualshub.com/

6 MAINTENANCE

SERVICE INTERVALS
LUBRICANTS
PERIODIC SERVICE

https://truckmanualshub.com/

SERVICE INTERVALS

No.	Period		Indication on hour meter																Since then	Reference page
			50	100	150	200	250	300	350	400	450	500	550	600	650	700	750	800		
1	Engine oil	Change	⊙	O		O		O		O		O		O		O		O	Every 100 Hr	6-11
2	Engine oil filter	Replace	⊙			O				O				O				O	Every 200 Hr	6-20
3	Hydraulic oil filter	Replace	⊙			O				O				O				O	Every 200 Hr	6-20
4	Transmission fluid	Change	⊙					O						O					Every 300 Hr	6-23
5	Front axle case oil	Change	⊙							O								O	Every 400 Hr	6-24
6	Greasing	-	O	O	O	O	O	O	O	O	O	O	O	O	O	O	O	O	Every 50 Hr	6-9
7	Wheel bolt torque	Check	O	O	O	O	O	O	O	O	O	O	O	O	O	O	O	O	Every 50 Hr	6-11
8	Battery condition	Check		O		O		O		O		O		O		O		O	Every 100 Hr	6-16
9	Air cleaner element	Clean		O		O		O		O		O		O		O		O	Every 100 Hr	6-12
		Replace																	Every 1 years	6-25
10	Fuel filter element	Clean		O		O		O		O		O		O		O		O	Every 100 Hr	6-13
		Replace						O						O					Every 300 Hr	6-24
11	Fan belt	Adjust		O		O		O		O		O		O		O		O	Every 100 Hr	6-14
12	Clutch	Adjust	⊙	O		O		O		O		O		O		O		O	Every 100 Hr	6-15
13	Brake(Hand brake inclusion)	Adjust		O		O		O		O		O		O		O		O	Every 100 Hr	6-15
14	Radiator hose and clamp	Check				O				O				O				O	Every 200 Hr	6-21
		Replace																	Every 2 years	6-27
15	Power steering oil line	Check				O				O				O				O	Every 200 Hr	6-22
		Replace																	Every 2 years	6-27
16	Fuel line	Check		O		O		O		O		O		O		O		O	Every 100 Hr	6-14
		Replace																	Every 2 years	6-27

https://truckmanualshub.com/

No.	Period		Indication on hour meter																Since then	Reference page
			50	100	150	200	250	300	350	400	450	500	550	600	650	700	750	800		
17	Front axle pivot	Adjust												○					Every 600 Hr	6-24
18	Toe-in	Adjust				○				○				○				○	Every 200 Hr	6-22
19	Engine valve clearance	Adjust																○	Every 800 Hr**	6-25
20	Cooling system	Flush																	Every 2 years	6-26
21	Coolant	Change																	Every 2 years	6-26
22	Fuel system	Bleed																	Service as required	6-27
23	Clutch housing water	Drain																		6-27
24	Fuse	Replace																		6-28
25	Light bulb	Replace																		6-30

IMPORTANT

- **The jobs indicated by ◉ must be done after the first 50 hours of operation.**

https://truckmanualshub.com/

LUBRICANTS

To prevent serious damage by hydraulic systems, use only DAEDONG genuine fluid or its equivalent.

<table>
<tr><th rowspan="2">No.</th><th rowspan="2">Locations</th><th colspan="3">Capacities (ℓ / U.S.gal.)</th><th rowspan="2">Lubricants</th></tr>
<tr><th>DK35</th><th>DK40</th><th>DK450L</th></tr>
<tr><td>1</td><td>Fuel</td><td colspan="3">40 (10.6)</td><td>No.2-D diesel fuel
No.1-D diesel fuel if temperature is below -10°C (14°F)</td></tr>
<tr><td>2</td><td>Coolant</td><td>7.0 (1.9)</td><td colspan="2">8.9 (2.4)</td><td>Fresh clean water with anti-freeze</td></tr>
<tr><td>3</td><td>Engine crankcase</td><td>5.8 (1.5)</td><td colspan="2">7.0 (1.9)</td><td>Engine oil: API Service Classification CC or CD
<table>
<tr><td>Above 25°C (77°F)</td><td>SAE30, SAE10W-30 or 10W-40</td></tr>
<tr><td>0 to 25°C (32 to 77°F)</td><td>SAE20, SAE10W-30 or 10W-40</td></tr>
<tr><td>Below 0°C (32°F)</td><td>SAE10W, SAE10W-30 or 10W-40</td></tr>
</table></td></tr>
<tr><td>4</td><td>Transmission case</td><td colspan="3">44 (11.6)</td><td>Multi-grade transmission fluid the fluid listed below or equivalent are recommended.
<table>
<tr><th>Maker</th><th>Brand(Standard)</th></tr>
<tr><td>Shell</td><td>DONAX-TD,DONAX-TM</td></tr>
<tr><td>Mobil</td><td>Mobile Fluid 350</td></tr>
<tr><td>Exxon</td><td>Torque Fluid 56</td></tr>
</table></td></tr>
<tr><td>5</td><td>Front axle case</td><td colspan="2">7.5 (2.0)</td><td>7.0 (1.9)</td><td>SAE 90 gear oil</td></tr>
<tr><td>6</td><td>Apply grease
• Front axle support
• Brake pedal
• Brake lever
• Top link holder
• Control lever</td><td colspan="3">A little</td><td>SAE mult-purpose type grease</td></tr>
</table>

https://truckmanualshub.com/

PERIODIC SERVICE

HOW TO DISCONNECT THE SIDE COVER AND FRONT GRILLE

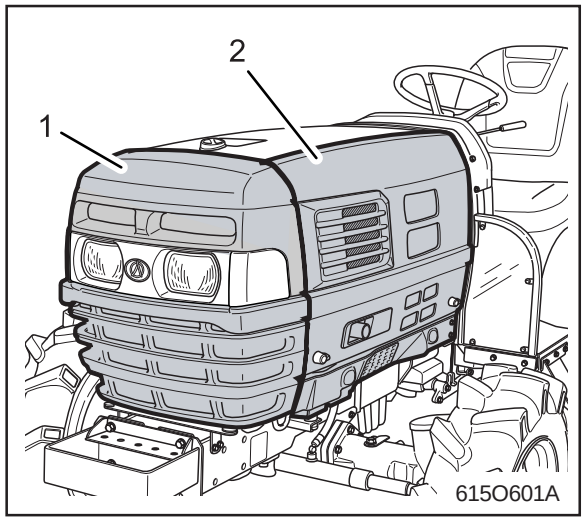

(1) Front Grille *(2) Side Cover*

To open the bonnet, twist the lock screw.

CAUTION

- **The wiring connection for the headlights must be disconnected before the front grille is removed completely.**

The side panels can be removed by turning the two black catches downwards then lifting the panels straight up and off.

CAUTION

- **Be careful not to trap your fingers when closing the bonnet panels.**

DAILY CHECK

WALK AROUND INSPECTION

For your own safety and maximum service life of the machine, make a thorough daily inspection before operating the machine to start the engine.

CAUTION

To avoid personal injury:

- **Be sure to check and service the tractor on a flat place with the engine shut off and the parking brake "ON".**

Look around and under the tractor for such items as loose bolts, trash build-up, oil or coolant leaks, broken or worn parts.

CHECKING AND REFUELING

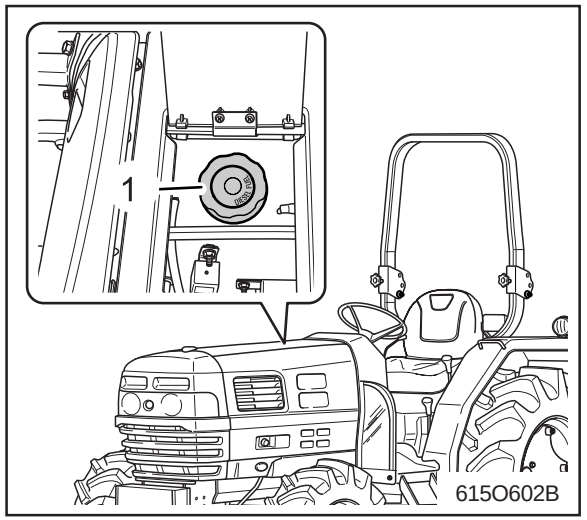

(1) Fuel Tank Cap

Model	Fuel tank capacity
DK35/40/ 450L	40 ℓ (10.6 U.S.gal.)

CAUTION

To avoid personal injury:

- **Do not smoke while refueling.**
- **Be sure to stop the engine before refueling.**
- **Dirt or sand contained in fuel may cause the fuel injection pump to malfunction, use the strainer when refuelling.**

https://truckmanualshub.com/

Dirt may block the vent hole for the fuel tank, thus causing the engine to lose power, periodically clear the vent hole and do not cover.

1. Turn the key switch to “ON”, check the amount of fuel by fuel gauge.
2. Fill fuel tank when fuel gauge shows 1/4 or less fuel in tank.
3. Use grade No.2-Diesel fuel at temperatures above -10°C (14°F).

IMPORTANT

- **Do not permit dirt or trash to get into the fuel system.**
- **Be careful not to let the fuel tank become empty, otherwise air will enter the fuel system, necessitating bleeding before next engine start.**
- **Be careful not to spill during refueling. If should spill, wipe it off at once, or it may cause a fire.**
- **To prevent condensation (water) accumulation in the fuel tank, fill the tank before parking overnight.**

NOTE

- No.2-D is a distillate fuel of lower volatility for engines in industrial and heavy mobile service. (SAE J313 JUN87)
- Grade of Diesel Fuel Oil According to ASTM D975

Flash Point, °C (°F)	Water and Sediment, volume %	Carbon Residue on, 10 percent Residuum, %	Ash, weight %
Min	Max	Max	Max
52 (125)	0.05	0.35	0.01

Distillation Temperatures, °C(°F) 90% Point		Viscosity Kinematic cSt or mm^2/s at 40°C		Viscosity Saybolt, SUS at 100°F		sulfur, weight %	Copper Strip Corrosion	Cetane Number
Min	Max	Min	Max	Min	Max	Max	Max	Min
282 (540)	338 (640)	1.9	4.1	32.6	40.1	0.50	No.3	40

AIR DISCHARGE

Air discharge is needed,

- When disengaging the fuel filter or the fuel pipe.
- When the fuel is used up fully.
- When tractor has not been used for a long time.

1. Turn the fuel filter cock to the ON position.
2. Open the cock in the fuel injection pump.
3. Fill the tank with fuel.
4. Start the engine and stop it after it has run for one minute.
5. Close the fuel injection pump cock.

CAUTION

- **The fuel injection pump cock must be kept closed except when discharging air.**

https://truckmanualshub.com/

CHECKING ENGINE OIL LEVEL

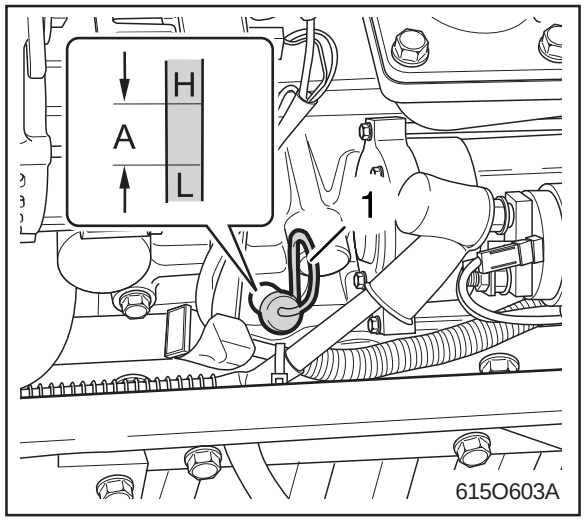

(1) Oil Inlet
(A) Oil Level Is Acceptable Within Range

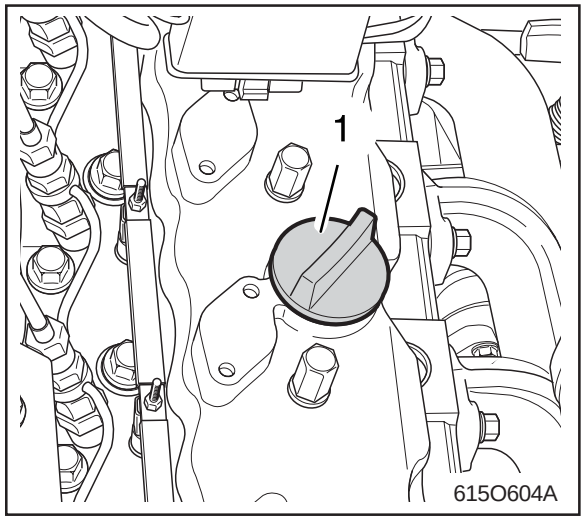

(1) Inlet Plug

IMPORTANT

- **When using an oil of different maker or viscosity from the previous one, remove all of the old oil. Never mix two different types of oil.**
- **If oil level is low, do not run engine.**

CAUTION

To avoid personal injury:

- **Be sure to stop the engine before checking the oil level.**

1. Park the machine on a flat surface.
2. Check engine oil before starting the engine or 5 minutes or more after the engine has stopped.
3. To check the oil level, draw out the dipstick, wipe it clean, replace it, and draw it out again. Check to see that the oil level lies between the two notches. If the level is too low, add new oil to the prescribed level at the oil inlet.

   (See “LUBRICANTS” in Maintenance Section)

CHECKING TRANSMISSION FLUID LEVEL

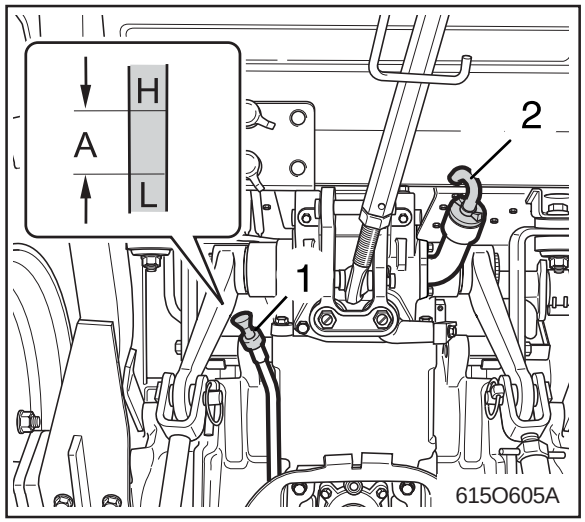

(1) Gauge *(1) Oil Filling Plug*
(A) Oil Level is Acceptable Within This Range

1. Park the machine on a flat surface, lower the implement and shut off engine.
2. View the fluid level through the fluid level gauge. If the level is too low, add new oil to the prescribed level at the oil inlet.

   (See “LUBRICANTS” in Maintenance Section)

IMPORTANT

- **If oil level is low, do not run engine.**

https://truckmanualshub.com/

CHECKING COOLANT LEVEL

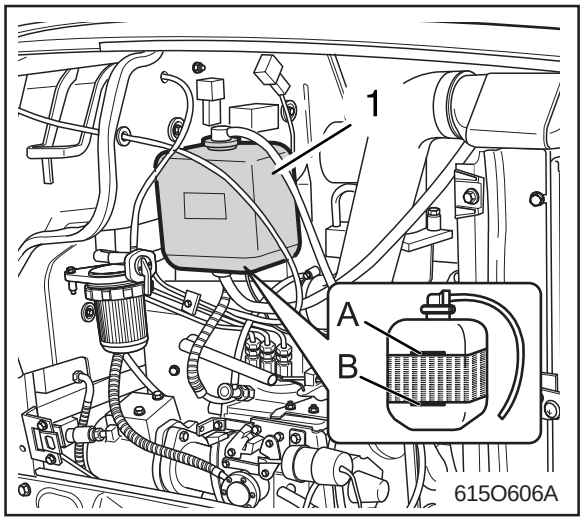

(1) Reserve Tank
(A) High *(B) Low*

CAUTION

To avoid personal injury:
- **Do not remove radiator cap while coolant is hot. When cool, slowly rotate cap to the first stop and allow sufficient time for excess pressure to escape before removing the cap completely.**

1. Check to see that the coolant level is between the “Hight” and “LOW” marks of recovery tank.
2. When the coolant level drops due to evaporation, add water only up to the full level.

   In case of leakage, add anti-freeze and water in the specified mixing ratio up to the full level.

   (See “Flush Cooling System and Changing Coolant” in every 2 years maintenance.)

IMPORTANT

- **If the radiator cap has to be removed, follow the caution above and securely retighten the cap.**
- **Use clean, fresh water and anti-freeze to fill the recovery tank.**
- **If water should leak, consult your local KIOTI Dealer.**

CLEANING GRILL, RADIATOR NET

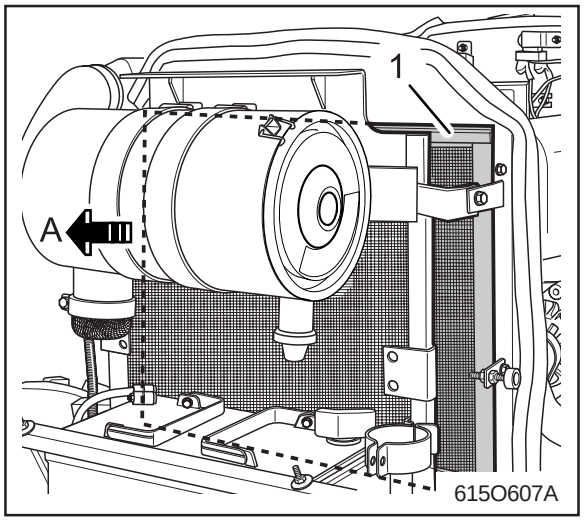

(1) Radiator Net *(A) Detach*

CAUTION

To avoid personal injury:
- **Be sure to stop the engine before removing the screen.**

1. Check front grill and side screens to be sure they are clean of debris.
2. Detach the screen and remove all the foreign material.

IMPORTANT

- **Grill and screen must be clean from debris to prevent engine from overheating and to allow good air intake for the air cleaner.**

https://truckmanualshub.com/

CHECKING BRAKE AND CLUTCH PEDALS

1. The brake and clutch pedals should be inspected for free travel, and smooth operation.
2. You should adjust these pedals if an incorrect measurement is found.

   (See “adjusting clutch and brake pedals” in the 100 hour maintenance schedule.)

NOTE
● Brake pedals should be equal when depressed.

CHECKING GAUGES, METER AND EASY CHECKER

1. Inspect the instrument panel for broken gauge(s), meter(s) and Easy Checker lamps.
2. Replace if broken.

CHECKING HEAD LIGHT, HAZARD LIGHT ETC.

1. Inspect the lights for broken bulbs and lenses.
2. Replace if broken.

CHECKING SEAT BELT AND ROPS

1. Always check condition of seat belt and ROPS attaching hardware before operating tractor.
2. Replace if damaged.

EVERY 50 HOURS

LUBRICATING GREASE FITTINGS

You should apply a small amount of multi-purpose grease to the following points every 50 hours or as needed.

If your tractor is operated in extremely wet, muddy, or dusty conditions you should lubricate the fittings more often.

https://truckmanualshub.com/

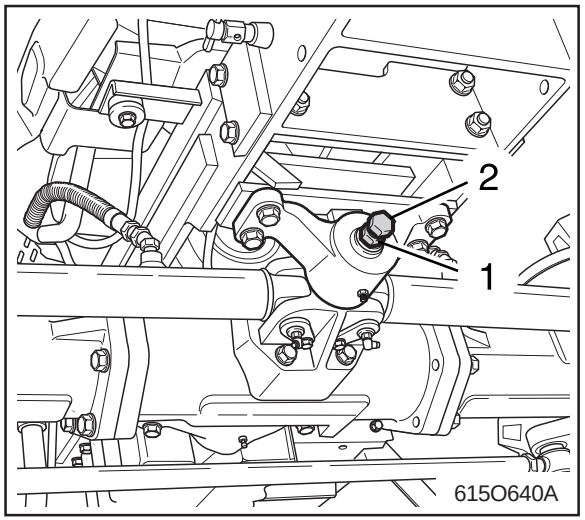

(1) Lock Nut
(2) Adjusting Bolt

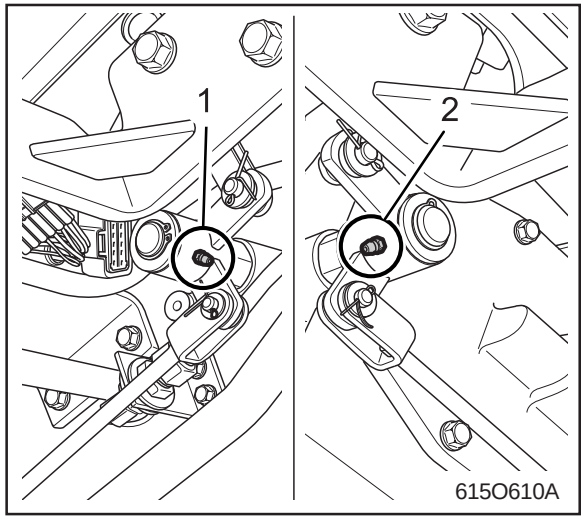

(1) Brake Pedal(LH) (2) Brake Pedal(RH)

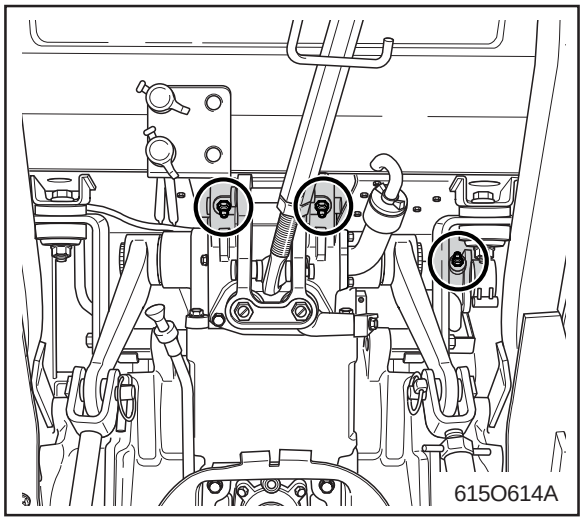

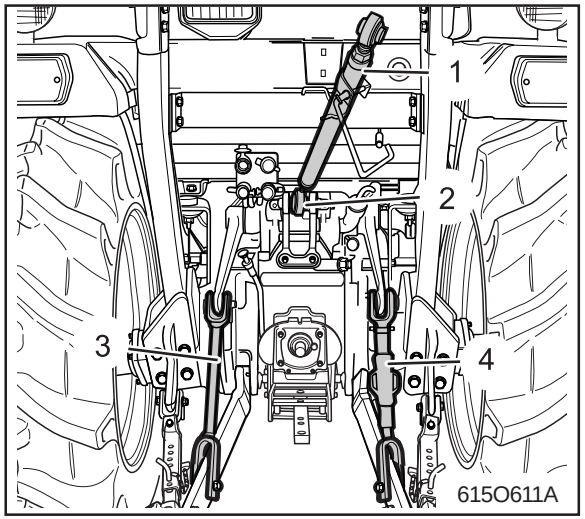

(1) Top Link (3) Lifting Rod (LH)
(2) Top Link Holder (4) Lifting Rod (RH)

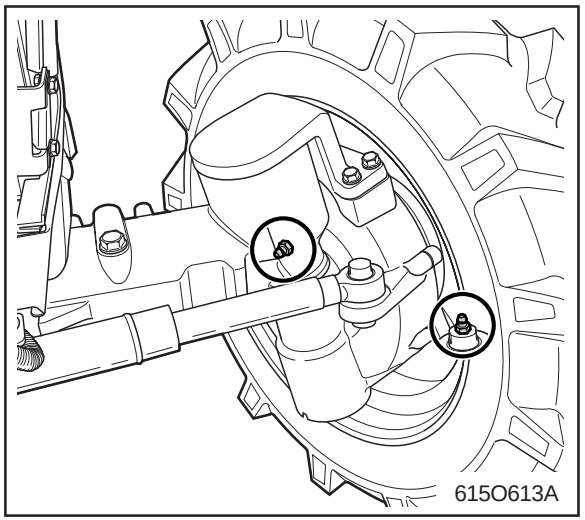

https://truckmanualshub.com/

CHECKING WHEEL BOLT TORQUE

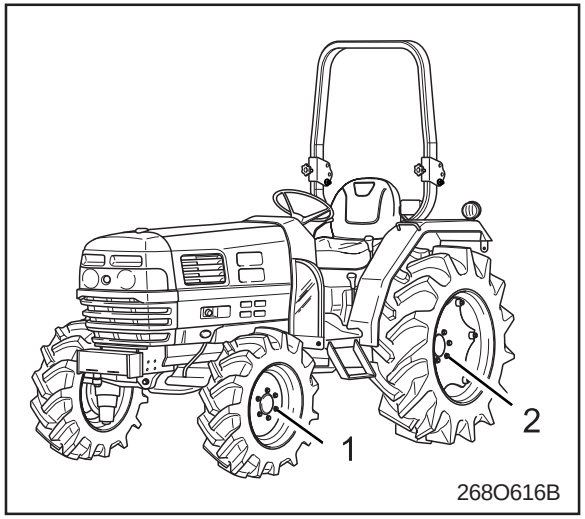

(1) 17 ~ 19 kgf·m
196.1 ~ 225.5 N.m
144.7 ~166.3 lbf.ft

(2) 26.6 ~ 31.0 kgf·m
260.9 ~ 304.0 N.m
192.4 ~ 224.2 lbf.ft

CAUTION

To avoid personal injury:
- **Never operate tractor with a loose rim, wheel, or axle.**
- **Any time bolts and nuts are loosened, retighten to specified torque.**
- **Check all bolts and nuts frequently and keep them tight.**

Check wheel bolts and nuts regularly especially when new. If they are loose, tighten them as above.

EVERY 100 HOURS

CHANGING ENGINE OIL

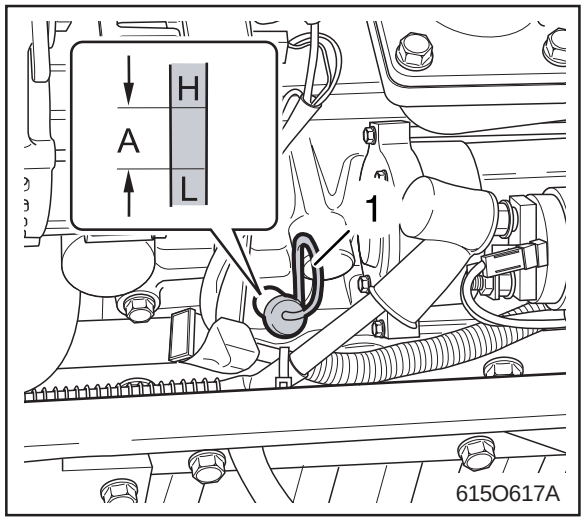

(1) Oil Inlet
(A) Oil level is acceptable within this range

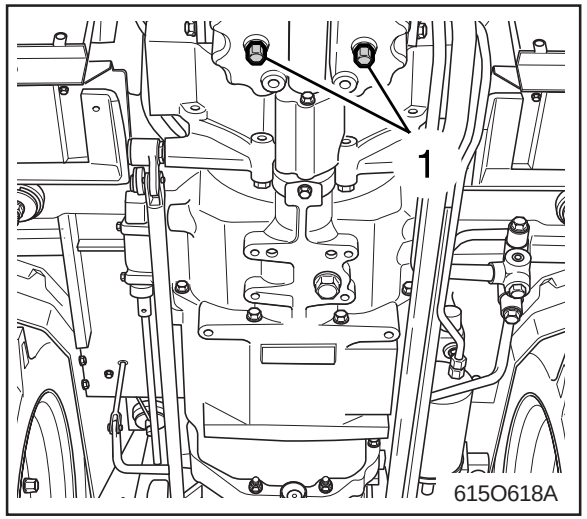

(1) Drain Plug

CAUTION

To avoid personal injury:
- **Be sure to stop the engine before changing the oil.**
- **Allow engine to cool down sufficiently, oil can be hot and can burn.**

1. To drain the used oil, remove the drain plug at the bottom of the engine and drain the oil completely into the oil pan.

   All the used oil can be drained out easily when the engine is still warm.
2. After draining reinstall the drain plug.
3. Fill with the new oil up to the upper notch on the dipstick.

Model	Oil capacity with filter
DK35	5.8 ℓ (1.5 U.S.gal.)
DK40/ DK450L	7.0 ℓ (1.9 U.S.gal.)

https://truckmanualshub.com/

CLEANING AIR CLEANER PRIMARY ELEMENT

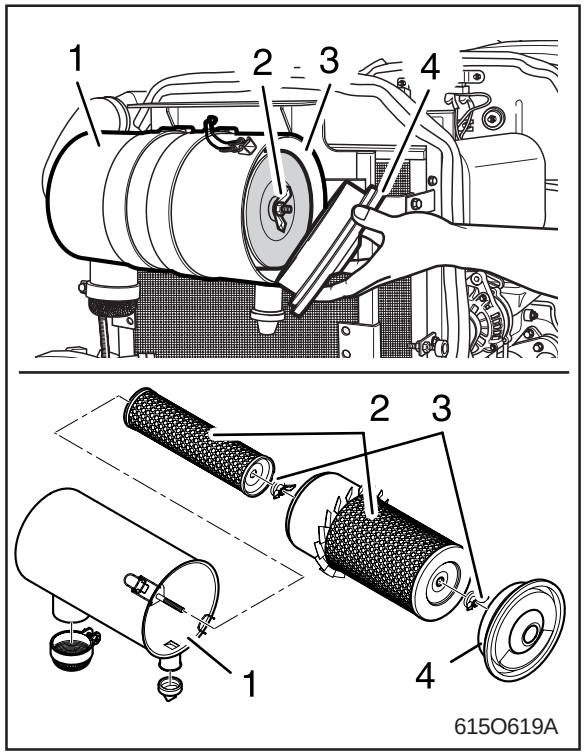

(1) Body *(3) Element*
(2) Nut *(4) Cap*

1. The air cleaner uses a dry element. Never apply oil.
2. Do not let dust build up to more than a half of the dust cup. Detach the dust cap and clean out the dust and clean the element normally once a week. But everyday check if working conditions are especially dusty.
3. Do not touch the filter element except in cases where cleaning is required.
4. When cleaning the element, refer to the instructions that follow.
5. If the element is stained with carbon or oil, replace the filter.
6. Change the element every 6 months or every 100 hours.

CLEANING AIR FILTER ELEMENT

To clean the element, use only clean dry compressed air on the inside of the element. Air pressure at the nozzle must not exceed 29 psi (2 kgf/cm²). Maintain reasonable distance between the nozzle and the filter.

IMPORTANT

- **The air cleaner will only fulfill its function if it is correctly and regularly maintained. A poorly maintained air cleaner will mean loss of power, excessive fuel consumption and a reduction in engine life.**

IMPORTANT

- **The air cleaner uses a dry element, never apply oil.**
- **Do not run the engine with filter element removed.**
- **Be sure to refit the cover with the arrow ↑ (on the rear of cover) upright. If the cover is improperly fitted, evacuator valve will not function and dust will adhere to the element.**
- **Do not touch the secondary element except in cases where replacing is required. (See "Replacing Air Cleaner Secondary Element" in Every 1 Year maintenance.)**

EVACUATOR VALVE

Open the evacuator valve once a week under ordinary conditions - or daily when used in a dusty place - to get rid of large particles of dust and dirt.

https://truckmanualshub.com/

DEHYDRATE IN THE FUEL FILTER

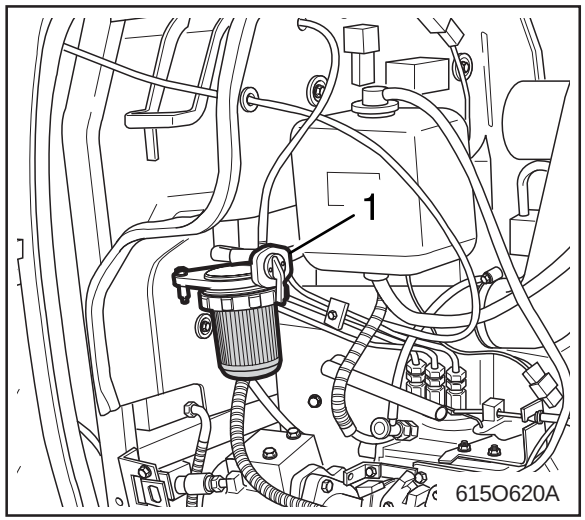

(1) Fuel Filter Cock

1. Moistures and dusts included in fuel are deposited in the filter. Please drain the fuel filter by loosening its sensor under the fuel filter.
2. Please tighten it out by hand after drainage. (Not using tools)
3. Bleed the air by pushing down the priming pump by hand.
4. Bleed the air entirely, then lock the air plug.
5. Start the engine, and checkfor oil leakage.

AIR MUST BE ELIMINATED FROM THE FUEL SYSTEM IN THE FOLLOWING CASES :

1. When the fuel filter and pipes are removed.
2. When tank is completely empty.
3. After the tractor has not been used for a long period of time.

CAUTION

- **Do not bleed the fuel system when the engine is hot.**

4. In order to eliminate air from the fuel system, proceed as follows.
5. Fill the fuel tank with fuel and open the fuel cock.
6. Open the air plug of the fuel filter, and operate the priming pump, then lock it after the air is bleeded completely.
7. When there are no more air bubbles in the fuel line which flows out, tighten as before.

IMPORTANT

- **When the air venting is finished, fuel which does not contain air bubbles will be filtered by the fuel filter and sent to the fuel injection pump. Fill the fuel tank before it becomes empty. If a diesel system is allowed to run out of fuel, it will become necessary to eliminate air from the fuel system after filling the fuel tank.**

https://truckmanualshub.com/

ADJUSTING FAN BELT TENSION

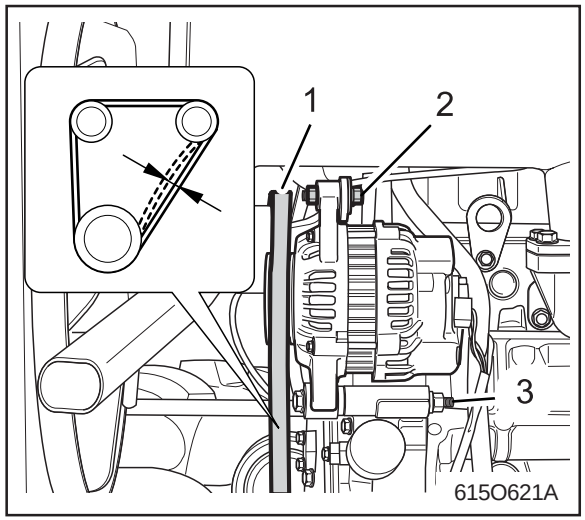

(1) Lock Nut *(2) Adjusting Bolt*
(3) Tension Bolt

1. Stop the engine and remove the key.
2. Apply moderate thumb pressure to belt between pulleys.
3. If tension is incorrect, loosen the alternator mounting bolts and, using a lever placed between the alternator and the engine block, pull the alternator out until the deflection of the belts falls within acceptable limits.
4. Replace fan belt if it is damaged.

CAUTION

To avoid personal injury:
- **Be sure to stop the engine before checking belt tension.**

Proper fan belt tension	A deflection of between 7 ~ 9 mm (0.28 ~ 0.34 in.) when the belt is pressed in the middle of the span.

CHECKING FUEL LINE

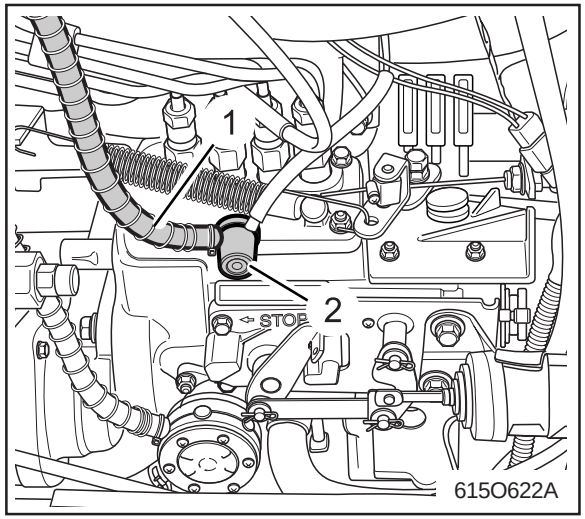

(1) Fuel Pipe *(2) Air Vent Cock*

WARNING

- ***Stop the engine when attempting the check and change prescribed below.***
- ***Never fail to check the fuel pipe periodically. The fuel pipe is subject to wear and aging, fuel may leak out onto the running engine, causing a fire.***

https://truckmanualshub.com/

Although checking the fuel pipe connection is recommended every 100 service hours, it should be done every 6 months if operation does not exceed 100 hours in 6 months.

1. If the tightener band is loose, apply a slight coat of lubricant onto the threads and securely tighten it.
2. The fuel pipe is made of rubber and ages regardless of period of service. Change the fuel pipe together with the tightener band every two years and securely tighten.
3. However, if the fuel pipe and tightener band are found damaged or deteriorated earlier than two years, then change them right off.
4. After the fuel pipe and tightener band have been changed, bleed the fuel system.

IMPORTANT

- **When the fuel pipe is disconnected in order to be changed close both ends of the fuel pipe with a piece of clean cloth or paper to prevent dust and dirt from entering. Entrance of dust and dirt cause malfunction of the fuel injection pump. In addition, particular care must be taken not to admit dust into the fuel pump.**

ADJUSTING CLUTCH PEDAL

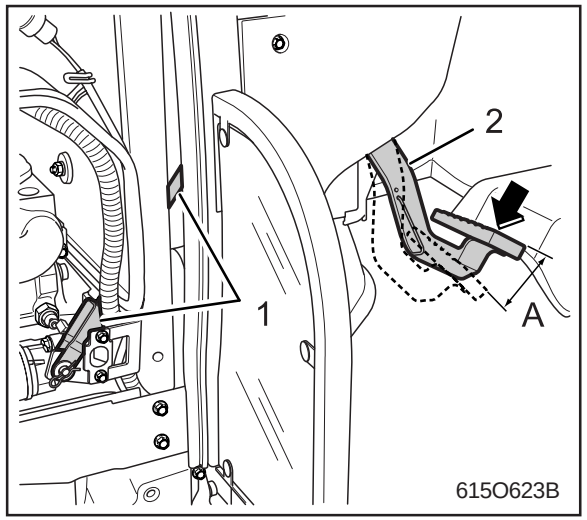

(1) Clutch Rod *(2) Clutch Pedal*
(A) Clearance

Proper clutch pedal free travel(A)	20 ~ 30 mm (0.8 ~ 1.2 in.) on the pedal

1. Stop the engine and remove the key.
2. Slightly depress the clutch pedal and measure free travel at top of pedal stroke.
3. If adjustment is needed, loosen the lock nut, remove the clevis pin and adjust the rod length within acceptable limits.
4. Retighten the lock nut and split the cotter pin.

ADJUSTING BRAKE PEDAL

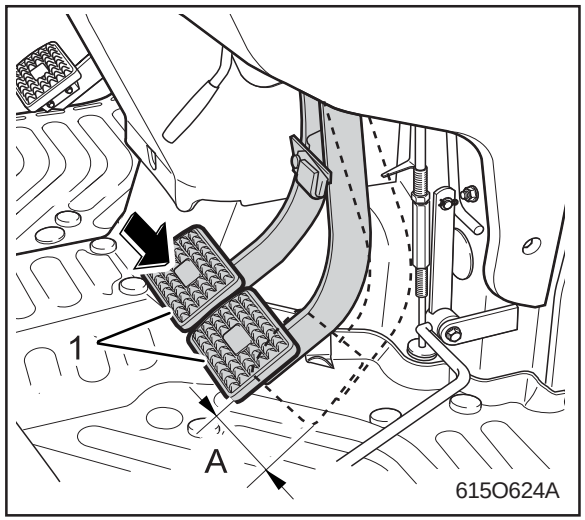

(1) Brake Pedal
(A) 25 ~ 35mm (1.0 ~ 1.4 in.)

CAUTION

To avoid personal injury:

- **Stop the engine and chock the wheels before checking brake pedal.**

https://truckmanualshub.com/

Proper brake pedal free travel	25 ~ 35 mm (1.0 ~ 1.4in.) on the pedal.
	Keep the free travel in the right and left brake pedals equal.

1. Release parking brake.
2. Slightly depress the pedals and measure the free travel at the top of the pedal stroke.
3. When adjustments are needed, loosen the locking nut and turn the turnbuckle until the rod length is at the desired and acceptable limit.
4. Re-tighten the lock nuts.

BATTERY

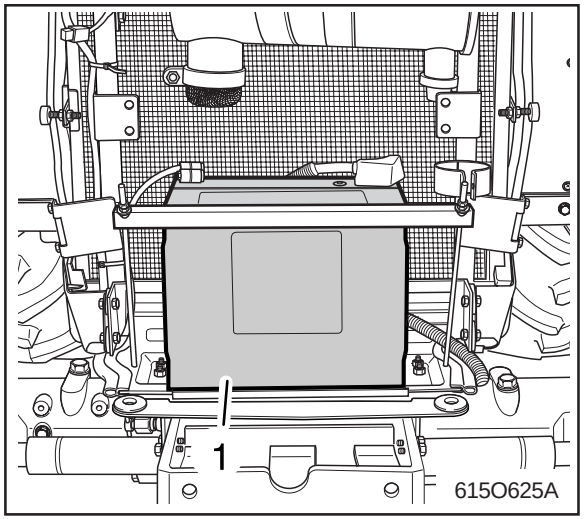

(1) Battery

⚠ WARNING

- ***Never remove the battery cap while the engine is running. Keep electrolyte away from eyes, hands and clothes. If you are spattered with it, wash it away completely with water.***

Mishandling the battery shortens the service life and adds to maintenance costs. Be sure to handle it correctly so that it will develop its full potential performance.

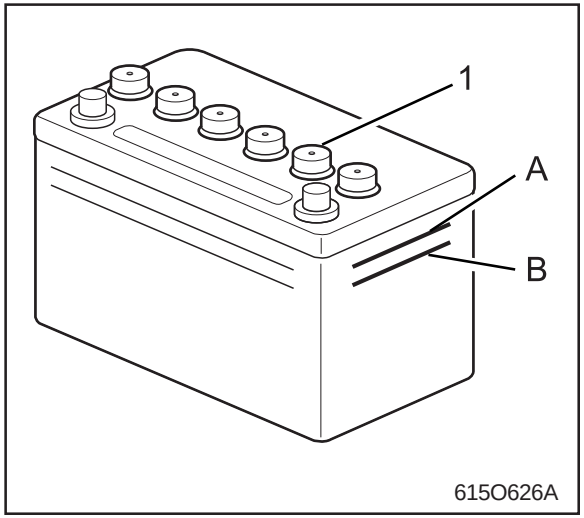

(1) Plug
(A) Highest Level *(B) Lowest Level*

⚠ WARNING

- ***Gas given off by batteries is explosive. To avoid injury or battery damage, avoid sparks near the batteries.***

1. If the battery is weak, the engine is difficult to start and the lamps become dim. It is important to check the battery daily and recharge before trouble occurs.
2. The water in the electrolyte evaporates during recharging. Liquid shortage damages the battery and excessive liquid spills over and damages the tractor body. If low, be sure to fill up the battery with distilled water.

https://truckmanualshub.com/

BATTERY ELECTROLYTE

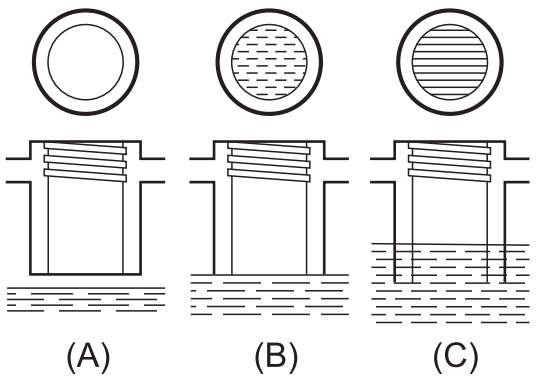

(A) Deficient *(C) Excessive*
(B) Correct

IMPORTANT

- **Always check electrolyte level after charging battery. If necessary, add distilled water to maintain proper level.**
- **Check battery terminals to be sure they are clean and free from corrosion. Keeping the battery clean will give prolonged service. Remove corrosion from the terminals periodically and coat terminals with grease.**
- **Maintain the battery at full charge during the winter to prevent freezing. When water is added during freezing weather, run the engine for at least an hour to make sure water and electrolyte have mixed thoroughly.**

OPERATING INSTRUCTION

1. Battery must be fixed tightly in case holder.
2. The battery should be secured and the connecting cables properly fitted and sufficiently long to prevent pulling the terminals off of the battery.
3. Keep vent plugs tight on the vent holes.
4. Keep battery and surrounding parts, particularly the tops of the cells clean and dry.
5. Keep the terminals and the cables free from corrosion by coating with pure Vaseline or grease.
6. The level of electrolyte should always be kept between the level lines (At hard rubber container should be kept to a height 10 mm (3/8 in.) above upper edge of separator). Add approved water (preferably distilled water) regularly to each cell until this level will be reached. Never add acid.
7. Recharge battery periodically after 4 weeks when operation is irregular or battery is taken out of service, but only until all cells gas evenly and freely. Make sure to prevent overcharging.
8. Battery should be charged once each month when in service.
9. To charge the battery connect the battery positive terminal to the charger positive terminal and the negative to the negative, then recharge in the standard fashion.
10. A boost charge is only for emergencies. It partially charges the battery at a high rate and in a short time. When using a boost-charged battery, it is necessary to recharge the battery as early as possible after the operation has been finished. Failure to do this extremely affects the service life due to over discharge.

https://truckmanualshub.com/

IMPORTANT

- **When connecting the battery, do not reverse the polarities. Connection with reverse polarities causes troubles to the battery and electrical system in the tractor.**
- **When disconnecting the cord from the battery, start with the negative terminal first, when connecting start with the positive terminal first.**
  Reversing the steps may cause short-circuiting, should a metallic tool touch the terminals.
- **If the tractor is to be operated for a short time without battery (using a slave battery for starting), do not, under any circumstances, interrupt the circuit by switching off the key switch before stopping the engine by means of fuel pump shut off cable. Use additional current (lights) while engine is running. Insulate terminal of battery cable before starting by means of slave battery. If this advice is disregarded, damage to alternator and regulator may result.**

DIRECTION FOR STORAGE

1. When shutting down the tractor for long period of time, remove the battery from the tractor, adjust the electrolyte to the proper level and store in a dry place out of direct sunlight.
2. The battery self-discharges even while it is stored. Recharge it once a month in hot seasons and once every two months in cold seasons.

IMPORTANT

- **The tractor has been shipped with dry-type battery. Your dealer will fill electrolyte and charge for use for the first time.**

CHARGING DRY TYPE BATTERY

1. Remove vent plugs and discard temporary sealing cardboards and tapes.
2. Fill each cell with electrolyte having a specific gravity given in Table 1 up to highest level marked on the battery case side.

< Table 1 >

	AIR TEMPERATURES	
	TEMPERATE Ordinarily below 20°C (68°F)	TROPICAL Frequently above 20°C (68°F)
sp. gr. of Electrolyte for Filling	1.260	1.240
sp. gr. of Electrolyte for fully charged	1.260 ~ 1.275	1.240 ~ 1.255

3. After standing for 2 or 3 hours correct the electrolyte to former level.
4. Connect positive terminal (+) of battery, with positive terminal of D.C. charging unit, and negative terminal (-) with negative terminal.

https://truckmanualshub.com/

5. Batteries are preferably charged by current showed in Table 2. Keep vent plugs removed during charging.

< Table 2 >

TYPE	N70ZL	75D26L	PT80 - 34FR
Volt (V)	12	12	12
Number of plate per cell	15	13	-
Capacity at 20H.R (A.H.)	70	65	100
Volume of Electrolyte (ℓ)	4.7	4.2	5.4
Normal Charging Rate(A)	7	7	5 ~ 10

6. Check temperature of electrolyte, if it reaches 40°C (105°F), lower the charging rate. When temperature is too high, reduce charging rate and charge for a proportionately longer period.
7. If the tractor is stored after original charge, periodically recharge as shown below :

< Table 3 >

Period of storage from manufacture (months)	Fresh charging (times)
0 ~ 6	about 5 hours
6 ~ 12	10
over 12	30

A battery is fully charged when the cells are all gassing freely and the specific gravity ceases to rise for three consecutive readings taken at hour intervals. Specific gravity shall then be adjusted to showed in Table 1.

8. Check electrolyte level two hours after chargingis finished and correct it.

https://truckmanualshub.com/

EVERY 200 HOURS

REPLACING ENGINE OIL FILTER

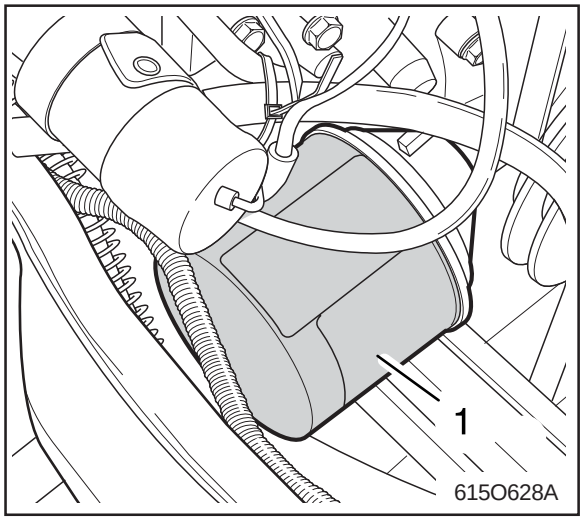

(1) Oil Filter Cartridge

IMPORTANT

- **To prevent serious damage to the engine, use only a DAEDONG genuine filter.**

CAUTION

To avoid personal injury:

- **Be sure to stop the engine before changing oil filter cartridge.**
- **Allow engine to cool down sufficiently, oil can be hot and can burn.**

1. Remove the oil filter.
2. Put a film of clean engine oil on the rubber seal of the new filter.
3. Tighten the filter quickly until it contacts the mounting surface.

   Tighten filter by hand an additional half turn only.
4. After the new filter has been replaced, the engine oil normally decreases a little. Make sure that the engine oil does not leak through the seal and be sure to check the oil level on the dipstick. Then, replenish the engine oil up to the prescribed level.

REPLACING HYDRAULIC OIL FILTER

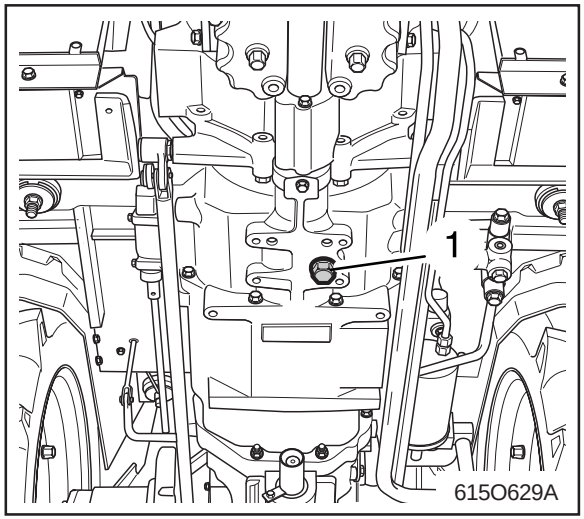

(1) Drain Plug

CAUTION

To avoid personal injury:

- **Be sure to stop the engine before changing the oil filter cartridge.**
- **Allow engine to cool down sufficiently, oil can be hot and can burn.**

The oil filter cartridge must be cleaned every 300 service hours. It is located to the right of the tractor.

1. Remove the drain plug at the bottom of the transmission case and drain the oil completely into the oil pan.
2. After draining reinstall the drain plug.

https://truckmanualshub.com/

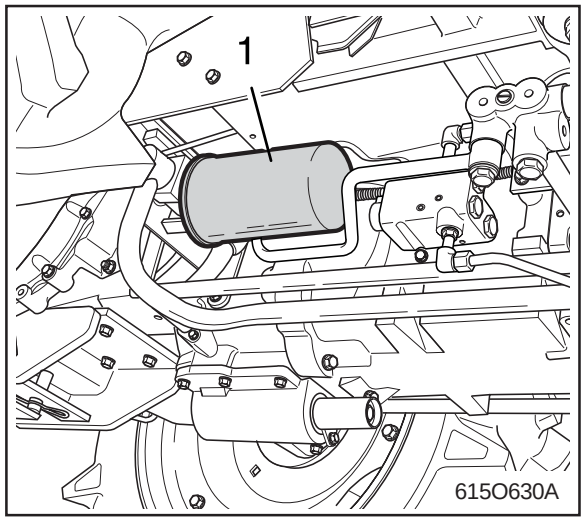

(1) Oil Filter Cartidge

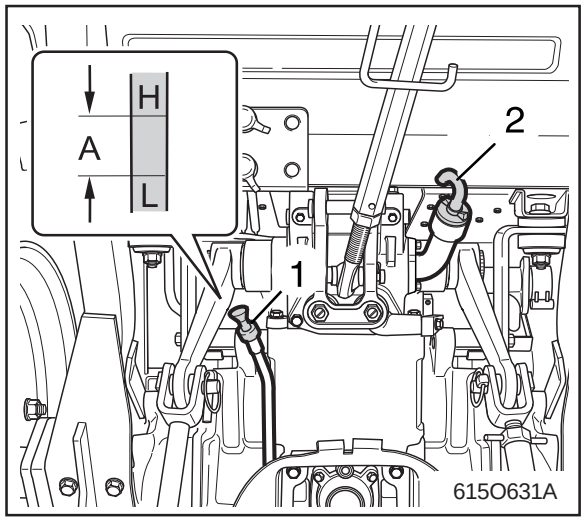

(1) Gauge (2) Oil Filling Plug
(A) Oil Level is Acceptable Within This Range

3. Remove the oil filter.
4. Place a film of clean transmission fluid of the rubber seal of the new filter.
5. Tighten the filter firmly until it contacts the mounting surface. Then tighten the filter, by hand, an additional half turn only.
6. After the new filter is in place , fill the transmission up with oil to the upper line of the oil gauge.
7. After running the engine for a few minutes, stop it and check the oil level again, add oil to the prescribed level.
8. Make sure that the transmission fluid doesn't leak through the seal.

IMPORTANT

- **To prevent serious damage to the hydraulic system, use only a DAEDONG genuine filter.**

CHECKING RADIATOR HOSE AND CLAMP

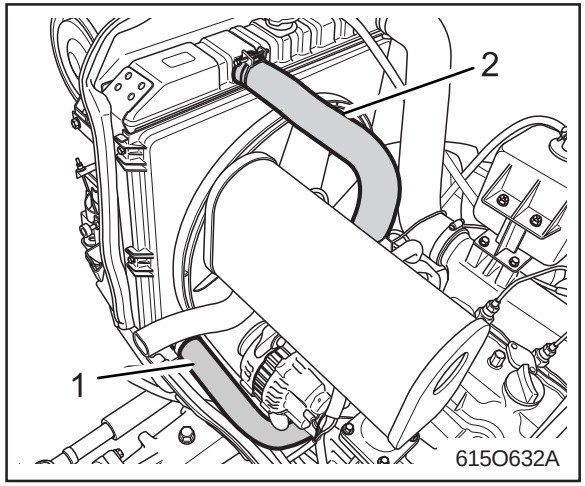

(1) Radiator Hose 1 (2) Radiator Hose 2

Check to ensure the radiator hoses are free from damage and are tightened properly every 200 hours or every 6 months, whichever comes first.

1. If the hose clamps are loose or water leaks from hose, tighten clamps securely.
2. If the radiator hoses are swollen, hardened, cracked, or otherwise damaged, you must replace the hose.

It is a good practice to replace the radiator hoses once every two years.

https://truckmanualshub.com/

PRECAUTION AT OVERHEATING

Take the following actions in the event the coolant temperature be nearly or more than the boiling point, what is called “Overheating”.

1. Stop the machine operation in a safe place and keep the engine unloaded idling.
2. Don’t stop the engine suddenly, but stop it after about 5 minutes of unloaded idling.
3. Keep yourself well away from the machine for further 10 minutes or while the steam blown out.
4. Checking that there is no danger of burn, get rid of the causes of overheating according to the manual, see “Troubleshooting” section, and then, start the engine again .

POWER STEERING LINE

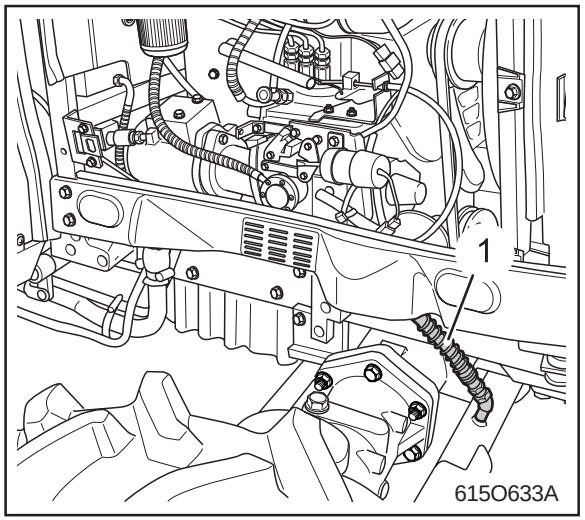

(1) Power Steering Oil Line

1. Check to see that all hydraulic lines and hose clamps are tight and undamaged.
2. If damage is found you should replace the hose or clamp at once.

ADJUSTING TOE-IN

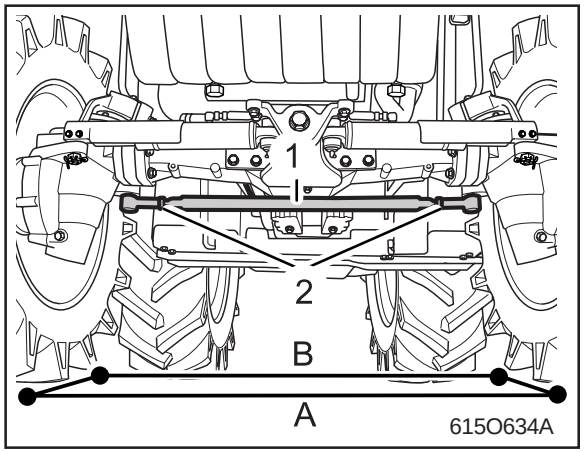

(1) Wheel - to - wheel distance at front (A)
(2) Wheel - to - wheel distance at rear (B)

When you have adjusted toe-in wrong, you can feel abnormal vibration from the steering wheel.

You should measure the front (A) and rear (B) of the front wheel, and confirm that (B)-(A) = 8 ~ 10mm (0.31 ~ 0.39in)

ADJUSTING PROCEDURE

1. Loosen the lock nut and turn the turnbuckle to adjust the rod length until the proper toe-in measurement is obtained.
2. Retighten the lock nut.

https://truckmanualshub.com/

EVERY 300 HOURS

CHANGING TRANSMISSION FLUID

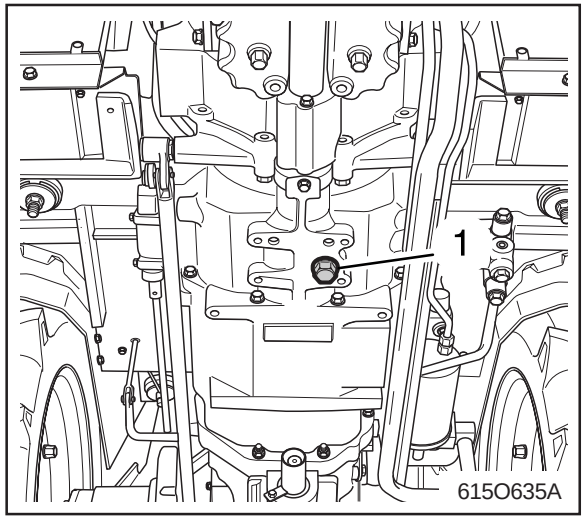

(1) Drain Plug

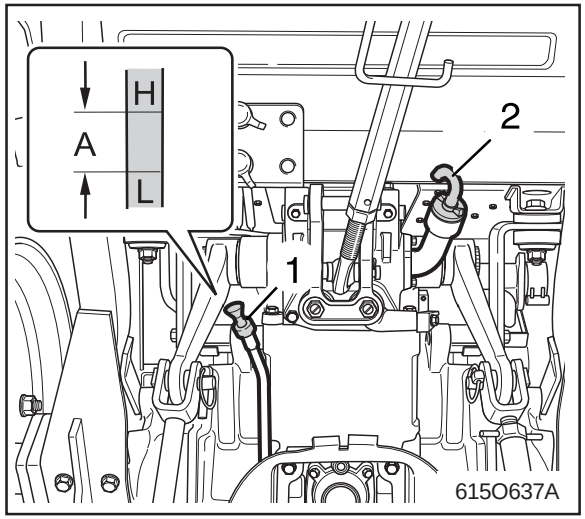

(1) Gauge *(2) Oil Filling Plug*
(A) Oil Level is Acceptable Within This Range

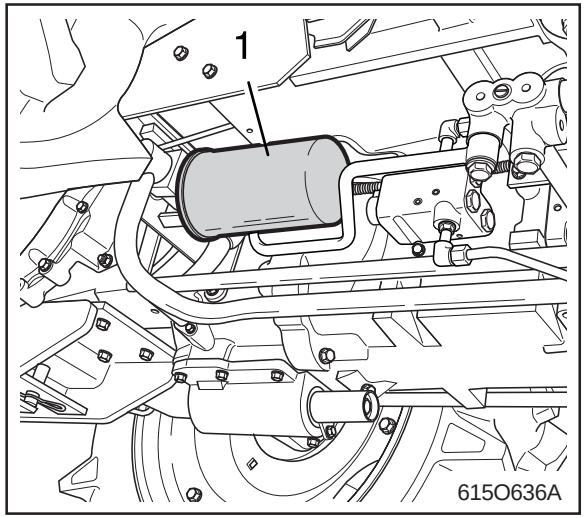

(1) Oil Filter Cartidge

IMPORTANT

- **Do not operate the tractor immediately after changing the transmission fluid.**
  Run the engine at medium speed for a few minutes to prevent damage to the transmission.

CAUTION

To avoid personal injury:
- **Allow engine to cool down sufficiently, oil can be not and can burn.**

1. To drain the used oil, remove the drain plug at the bottom of the transmission case and drain the oil completely into the oil pan.
2. After draining reinstall the drain plug.
3. Fill with the new DAEDONG TF65 fluid up to the upper line of the gauge.

   (See “LUBRICANTS” in Maintenance Section)
4. After running the engine for a few minutes, stop it and check the oil level again; add oil to prescribed level.

Oil Capacity	44 ℓ (11.6 U.S.gals.)

https://truckmanualshub.com/

FULE FILTER ELEMENT REPLACEMENT

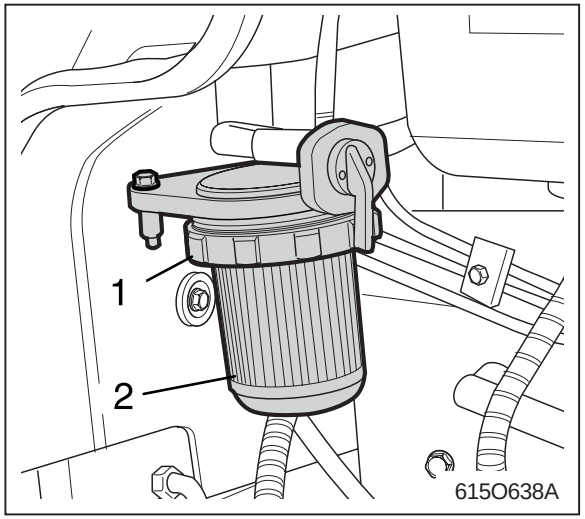

(1) Fuel Filter Ass'y *(2) Fuel Filter*

1. Clean up the surface of the fuel filter.
2. Drain water and oil by turning off & loosening the sensor in the bottom of the fuel filter.
3. Replace new filter after the old fuel filter removed.
4. For new filter replacement, bring the packing into contact with the seal surface, then turn it around 2/3 by hand to lock.
5. Open the air plug and operate the priming pump until the air is bleeded completely.
6. Lock the air plug after bleeding the air.

IMPORTANT

- **Be careful not to leave dusts and motes on the element when the element is replaced.**

EVERY 400 HOURS

CHANGING FRONT AXLE CASE OIL

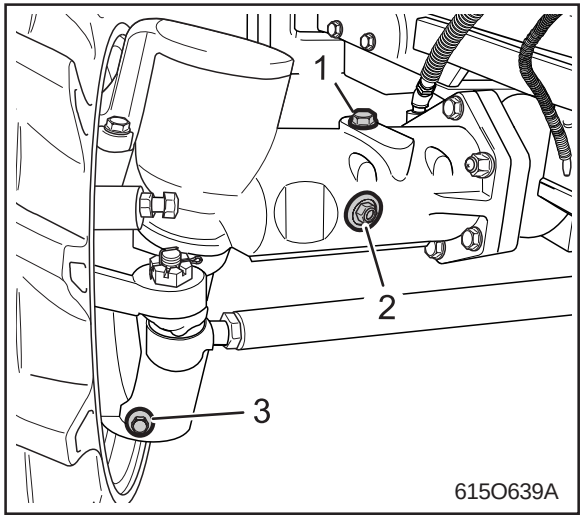

(1) Filling Plug *(3) Drain Plug*
(2) Oil Level Check Plug

1. To drain the used oil, remove the right and left drain plugs and filling plug at the front axle case and drain the oil completely into the oil pan.
2. After draining reinstall the drain plugs.
3. Remove the oil level check plug.
4. Fill with the new oil up to the check plug port.

   (See "LUBRCANTS" in Maintenance Section)
5. After filling reinstall the filling plug and check plug.

Model	Oil Capacity
DK35/DK40	7.5 ℓ (2.0 U.S.gal.)
DK450L	7.0 ℓ (1.9 U.S.gal.)

EVERY 600 HOURS

ADJUSTING FRONT AXLE PIVOT

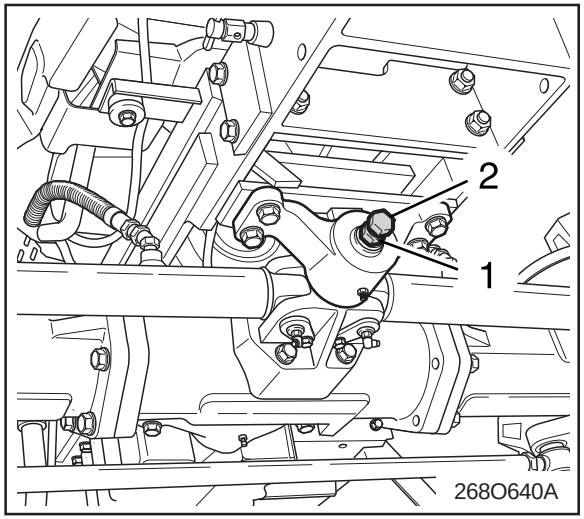

(1) Lock Nut
(2) Adjusting Bolt

Poor adjustment of the front axle support may cause serious trembling of the front wheels and vibration of the steering wheel.

- Checking the support for any shaking, check the support for any shaking forward or backward, If there is any movement, make an adjustment.
- Clearance adjustment.

  Unfasten the lock nut fasten the adjusting bolt tightly. And then, unfasten the adjusting bolt about 90°, at last fasten the lock nut properly.

https://truckmanualshub.com/

EVERY 800 HOURS

ADJUSTING ENGINE VALVE CLEARANCE

Consult your local DAEDONG DEALER for this service.

EVERY 1 YEAR

REPLACING AIR CLEANER ELEMENT

(See “Cleaning Air Cleaner Element” in every 100 hours maintenance.)

EVERY 2 YEARS

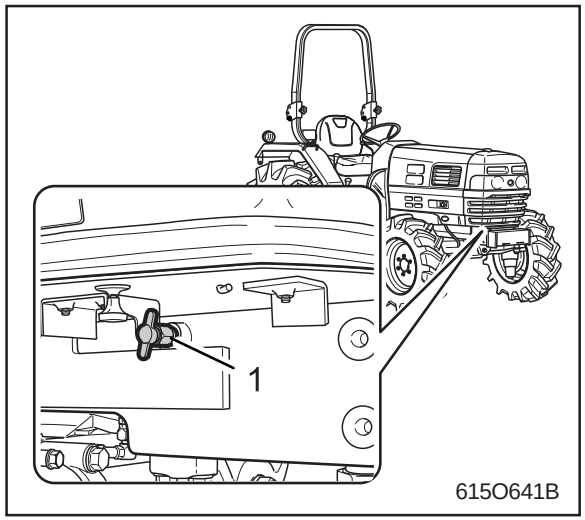

(1) Drain Cock

IMPORTANT

- **Do not start engine without coolant.**
- **Use clean, fresh water and anti-freeze to fill the radiator and recovery tank.**
- **When the anti-freeze is mixed with water, the anti-freeze mixing ratio must be less than 50%.**
- **Securely tighten radiator cap. If the cap is loose or improperly fitted, water may leak out and the engine could overheat.**

https://truckmanualshub.com/

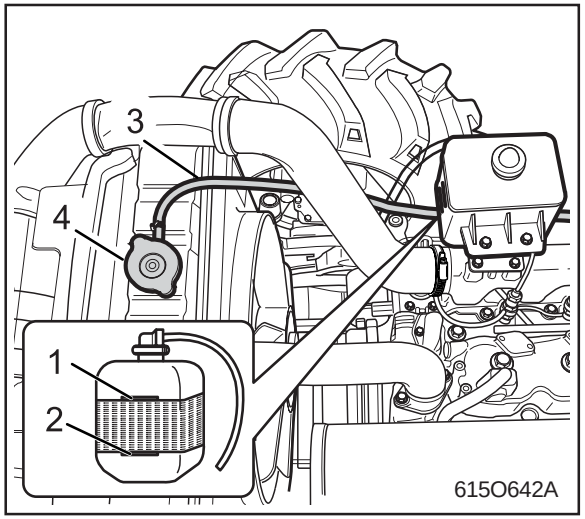

(1) Radiator Cap *(2) Recovery Tank*
(A) Full *(B) Low*

CAUTION

To avoid personal injury:

- **Do not remove the radiator cap when the engine is hot. Then loosen cap slightly to the stop the relieve any excess pressure before removing cap completely.**

FLUSH COOLING SYSTEM AND CHANGING COOLANT

1. Stop the engine and let cool down.
2. To drain the coolant, open the radiator drain plug and remove radiator cap. The radiator cap must be removed to completely drain the coolant.
3. After all coolant is drained, close the drain plug.
4. Fill with clean water and cooling system cleaner.
5. Follow directions of the cleaner instruction.
6. After flushing, fill with clean water and anti-freeze until the coolant level is just below the port.

   Install the radiator cap securely.
7. Fill with coolant up to the “FULL” mark on the recovery tank.
8. Start and operate the engine for few minutes.
9. Stop the engine and let cool.
10. Check coolant level of recovery tank and add coolant if necessary.

Model	Coolant capacity
DK35	7.0 ℓ (1.9 U.S.gal.)
DK40/ DK450L	8.9 ℓ (2.4 U.S.gal.)

ANTI-FREEZE

If cooling water freezes, it can damage the cylinders and radiator. It is necessary, if the ambient temperature falls below 0°C (32°F), to remove cooling water after operating or to add anti-freeze to it.

1. There are two types of anti-freeze available; use the permanent type (PT) for this engine.
2. Before adding anti-freeze for the first time, clean the radiator interior by pouring fresh water and draining it a few times.
3. The procedure for mixing of water and anti-freeze differs according to the make of the anti-freeze and the ambient temperature, basically it should be referred to SAE J1034 standard, more specifically also to SAE J814c.
4. Mix the anti-freeze with water, and then fill into the radiator.

Vol % Anti-freeze	Freezing Point		Boiling Point*	
	℃	℉	℃	℉
40	-24	-12	106	222
50	-37	-34	108	226

https://truckmanualshub.com/

* At 760 mmHg pressure (atmospheric). A higher boiling point is obtained by using a radiator pressure cap which permits the development of pressure within the cooling system.

NOTE

- The above date represents industry standards that necessitate a minimum glycol content in the concentrated anti-freeze.
- When the cooling water level drops due to evaporation, add water only. In case of leakage, add anti-freeze and water in the specified mixing ratio.
- Anti-freeze absorbs moisture. Keep unused anti-freeze in a tightly sealed container.
- Do not use radiator cleaning agents when anti-freeze has been added to the cooling water. (Anti-freeze contains an anti-corrosive agent, which will react with the radiator cleaning agent forming sludge which will affect the engine parts.)

REPLACING RADIATOR HOSE (WATER PIPES)

Replace the hoses and clamps.

(See “Checking Radiator Hose and Clamp” in every 200 hours maintenance.)

REPLACING POWER STEERING HOSE

Replace the hoses and clamps.

(See “ Checking power steering line” in every 200 hours maintenance.)

REPLACING FUEL HOSE

Replace the hoses and clamps.

(See “ Checking Fuel line” in every 100 hours maintenance.)

SERVICE AS REQUIRED

DRAINING CLUTCH HOUSING WATER

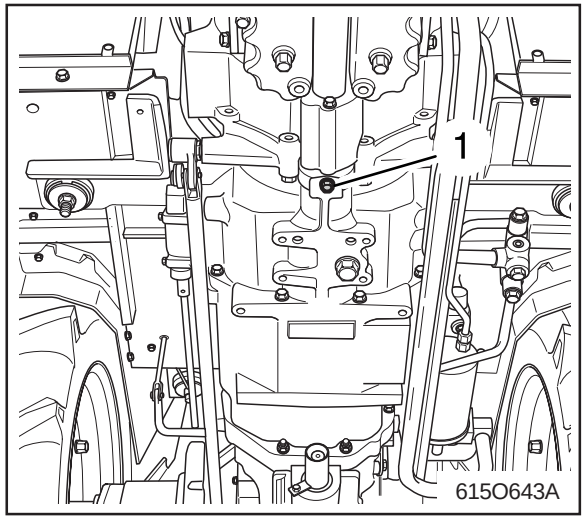

(1) Plugs

Your tractor is equipped with a plug under the clutch housing.

After you operate your tractor in the rain, snow, or after washing the tractor, water may get into the clutch housing. If this happens, remove the plug in the clutch housing and drain water. Remember to reinstall the plug to avoid serious damage to clutch.

https://truckmanualshub.com/

STEERING WHEEL

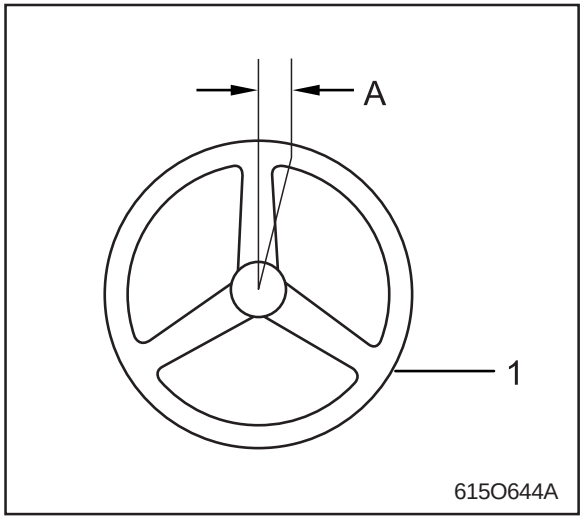

(1) Steering wheel
(A) 20 ~ 40mm (0.8 ~ 2.0 in.)

It is difficult to drive straight, if the steering wheel clearance is not good.

Moderate steering wheell play is 20~40mm(0.8~1.97in)

REPLACING FUSE

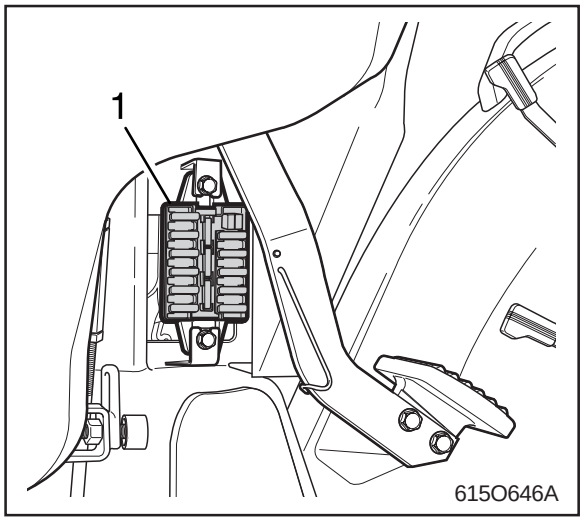

(1) Fuse Box

The tractor electrical system is protected from potential damage by fuses.

A blown fuse indicates that there is an overload or short somewhere in the electrical system.

If any of the fuses should blow, replace with a new one of the same capacity.

USA, AU TYPE

10A	10A	20A	20A	10A	10A
THE POWER OF TIMER RELAY	BACK-UP LAMP	WORKING LAMP	HEAD LAMP/ TAIL LAMP	P.T.O.	4WD/ FFT CONTROLLER
10A	SPARE	20A	SPARE	25A	SPARE
10A	10A	10A	25A	10A	FUSE HOLDER
SPARE	SPARE	STOP LAMP	TURN SIGNALS LAMP /TIMER RELAY	SPARE	
Use only the rating capacity fuse.					

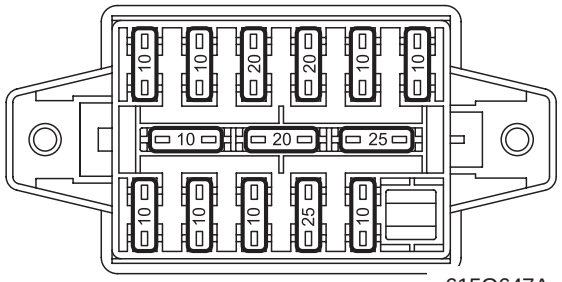

https://truckmanualshub.com/

EU TYPE

20A	10A	10A	20A	10A	10A
CUST-OMER USE	4WD	THE PO-WER OF TIMER RELAY	HEAD LAMP/ TAIL LAMP	P.T.O.	QUICK TURN/ FFT CONT-ROLLER
10A		20A		25A	
10A	10A	10A	25A	10A	
SPARE	WORKING LAMP	STOP LAMP	TURN SIG-NALS LAMP /TIMER RELAY	HORN	FUSE HOLDER
Use only the rating capacity fuse.					

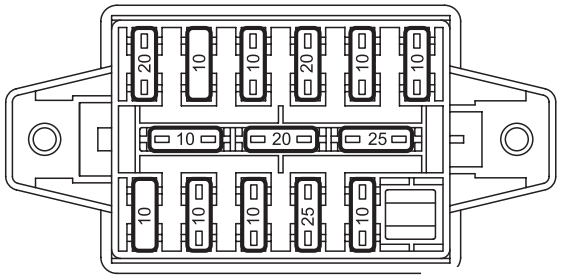

615O649A

IMPORTANT

- **Before replacing a blown fuse, determine why the fuse blew and make any necessary repairs. Failure to follow this procedure may result in serious damage to the tractor electrical system. Refer to the troubleshooting section of this manual or your local Kioti Dealer for specific information dealing with electrical problems.**

REPLACEMENT OF THE SLOW BLOW FUSE

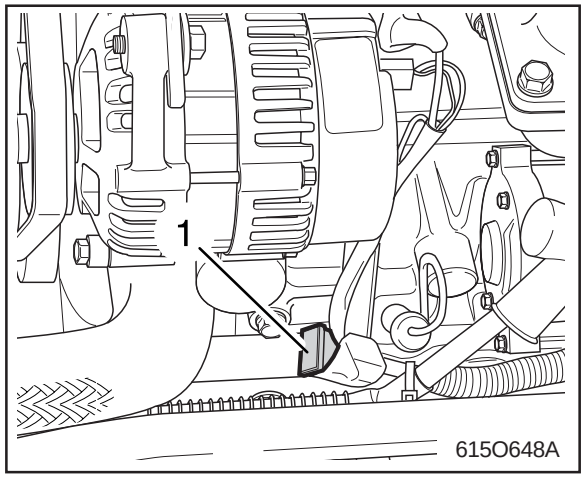

615O648A

(1) Slow Blow Fuse

Remove the coupling and replace the old slow blow fuse with a new one.

CAUTION

- **The slow blow fuse serves to protect electric wires. If it is cut off, be sure to find the cause. Do not use a substitute for it. Use designated fuses only.**

Capacity	60A

https://truckmanualshub.com/

REPLACING LIGHT BULB

1. Head lights and rear combination lights:

   Take the bulb out of the light body and replace with a new one.

2. Other lights:

   Detach the lens and replace the bulb.

[USA, AU TYPE]

Light	Capacity
Head light	12V 35W/35W
Turn Signal light (front)	12V 21W
Turn Signal light (rear)	12V 21W
Stop light	12V 21W
position light rear	12V5W
Diff.rock inchcator illumination of instrument	12V 3.4W
Others indicators	14V 3W

[EU TYPE]

Light	Capacity
Head light	12V 35W / 35W(RHD)
Turn Signal light (front)	12V 21W
Turn Signal light (rear)	12V 21W
Position rear lamp(front)	12V 10W
Stop lamp/ position lamp (rear) Instrument gauge warning lamp	12V 21W / 10W
Fuel tank lever warning lamp	12V 3.4W
The others among instrument gauge lamp	12V3W
Number palter lamp	12V 10W

https://truckmanualshub.com/

7 STORAGE

TRACTOR STORAGE
REMOVING THE TRACTOR FROM STORAGE

https://truckmanualshub.com/

TRACTOR STORAGE

⚠ CAUTION

To avoid personal injury:

- **Do not clean the machine with engine running.**
- **To avoid the danger of exhaust fume poisoning, do not operate the engine in a closed building without proper ventilation.**
- **When storing, remove the key from the key switch to avoid unauthorized persons from operating the tractor and getting injured.**

If you intend to store your tractor for an extended period of time, follow the procedures outlined below. These procedures will insure that the tractor is ready to operate with minimum preparation when it is removed from storage.

1. Check the bolts and nuts for looseness, and tighten if necessary.
2. Apply grease to tractor areas where bare metal will rust also to pivot areas.
3. Detach the weights from the tractor body.
4. Inflate the tires to a pressure a little higher than usual.
5. Change the engine oil and run the engine to circulate oil throughout the engine block and internal moving parts for about five minutes.
6. Pull the engine stop knob all the way out.
7. Keep the clutch disengaged. If the clutch is left engaged for a long period of time, the clutch plate may rust, making clutch disengagement impossible at the next operation.

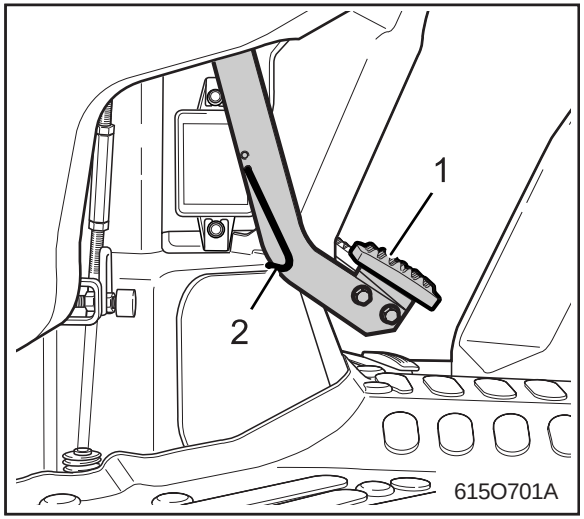

(1) Clutch Pedal *(2) Detent*

8. With all implements lowered to the ground, coat any exposed hydraulic cylinder piston rods with grease.
9. Remove the battery from the tractor. Store the battery following the battery storage procedures. (See “Battery condition” in every 50 hours in periodic service section.)

https://truckmanualshub.com/

10. Keep the tractor in a dry place where the tractor is sheltered from rain. Cover the tractor.
11. Store the tractor indoors in a dry area that is protected from sunlight and excessive heat. If the tractor must be stored outdoors, cover it with a waterproof tarpaulin.

    Jack the tractor up and place blocks under the front and rear axles so that all four tires are off the ground. Keep the tires out of direct sunlight and extreme heat.

IMPORTANT

- **When washing the tractor, be sure to stop the engine. Allow sufficient time for the engine to cool before washing.**
- **Cover the tractor after the muffler and the engine have cooled down.**

REMOVING THE TRACTOR FROM STORAGE

1. Check the tire air pressure and inflate the tires if they are low.
2. Jack the tractor up and remove the support blocks form under the front and rear axles.
3. Install the battery. Before installing the battery, be sure it is fully charged.
4. Check the fan belt tension.
5. Check all fluid levels (engine oil, transmission/hydraulic oil, engine coolant and any attached implements.)
6. Start the engine. Observe all gauges. If all gauges are functioning properly and reading normal, move the tractor outside. Once outside, park the tractor and let the engine idle for at least five minutes. Shut the engine off and walk around tractor and make a visual inspection looking for evidence of oil or water leaks.
7. With the engine fully warmed up, release the parking brake and test the brakes for proper adjustment as you move forward. Adjust the brakes as necessary.

https://truckmanualshub.com/

8 TROUBLE SHOOTING

https://truckmanualshub.com/

ENGINE TROUBLESHOOTING

WHEN ENGINE IS DIFFICULT TO START

Cause	Countermeasures
Fuel is thick and doesn't flow	- Check the fuel tank and fuel filter. - Remove water, dirt and other impurities. - As all fuel will be filtered by the filter, if there should be water of other foreign matters on the filter, replace the filter.
Air or water mixed in fuel system	- If air is in the fuel filter or injection lines, the fuel pump will not work properly. To attain proper fuel injection pressure, check carefully for loosened fuel cap nut, etc. - Loosen air vent screw over fuel filter and fuel injection pump to eliminate all the air in the fuel system.
Thick carbon deposits on orifice of injection nozzle.	- This is caused when water or dirt is mixed in the fuel. Clean the nozzle injection piece, being careful not to damage the orifice. - Check to see if nozzle is working properly or not, if not, install a new nozzle.
Valve clearance is wrong	- Adjust valve clearance inlet 0.25 mm (0.0098 in.), exhaust 0.3 mm (0.0118 in.) when the engine is cold.
Leaking valves	- Grind valve
Fuel injection timing is wrong	- Adjust injection timing. - The injection timing (before top dead center) 18° (0.3 rad)
Engine oil become thick in cold weather and engine cranks slow.	- Change grade of oil according to the weather (temperature).
Low compression	- Bad valve or excessive wear of rings, pistons and liners cause insuffi cient compression. Replace with new parts.
Battery is discharged and the engine will not crank	- Charge battery. - Use decompression device. - In winter, always remove battery from tractor, charge fully and keep indoors. Install in tractor at time of use.

https://truckmanualshub.com/

WHEN OUTPUT IS INSUFFICIENT

Cause	Countermeasures
Carbon stuck around orifice of nozzle piece	- Clean orifice and needle valve, being very careful not to damage the nozzle orifice. - Check nozzle. If defective, replace with new parts.
Compression is insufficient leaking valves	- Band valve and excessive wear of rings, pistons and liners cause insufficient compression. Replace with new parts. - Grind valves.
Overheating of moving parts	- Check lube oil system. - Check to see if lube oil filter is working properly. - Filter screens or elements deposited with impurities would cause poor lubrication clean screens. - Check to see if bearing clearance are within factory specs.
	- Check engine timing. - Adjusting timing 18° (0.3 rad) before top dead center.
Valve out of adjustment	- Adjust to proper valve clearance of inlet 0.25 mm (0.0098 in.), exhaust 0.3 mm (0.0118 in.) with engine cold.
Air cleaner is dirty	- Clean the element every 100 ~ 200 hours of operation.
Fuel injection pressure is wrong	- Adjust to proper pressure of 140 kgf/cm² (2,000 psi, 13.7MPa).
Injection pump wear	- Do not use poor quality fuel for it will cause wear of the pump. Only use No. 2 diesel fuel. - Check the fuel injection pump element and delivery valve assembly and replace as necessary.

WHEN COLOR OF EXHAUST IS SPECIALLY BAD

See your **KIOTI** dealer.

https://truckmanualshub.com/

WHEN COLOR OF EXHAUST IS SPECIALLY BAD

Cause	Countermeasures
Fuel governing device is bad	- Contact dealer for repairs.
Fuel is of extremely poor quality	- Select good quality fuel. Temperature — Fuel type above -10°C (14°F) — NO.2 Diesel below -10°C (14°F) — NO.1 Diesel
Nozzle is bad	- If necessary, replace with new nozzle.
Combustion is incomplete	- Cause is poor atomization, improper injection timing, etc. because of trouble in injection system or in poor valve adjustment, or compression leakage, poor compression, etc. Check for the cause and repair.

WHEN ENGINE SUDDENLY STOPS

Cause	Countermeasures
Leak of fuel	- Check the fuel tank and refill if necessary. - Also check the fuel system for air or leaks.
Bad nozzle	- If necessary, replace with a new nozzle.
Moving parts are overheated due to shortage of lube oil or improper lubrication	- Check amount of engine oil with oil level gauge. - Check lubricating oil system. - Check to see if element inside the lubricating oil filter has become old and clogged. If necessary, replace with new element. - Check to see if the engine bearing clearances is within factory spec.

IMPORTANT

- **When the engine has suddenly stopped, decompress the engine by the decamp. and turn the engine lightly by pulling on the fan belt, if the engine turns easily without abnormalities, the cause of the trouble is usually lack of fuel or bad nozzle.**

https://truckmanualshub.com/

WHEN ENGINE MUST BE STOPPED IMMEDIATELY

Cause	Countermeasures
Speed suddenly decreases or increases	- Check the adjustments and timing of injection and the fuel system.
Unusual sound is heard suddenly	- Check all moving parts carefully.
Color of exhaust suddenly turns dark	- Check the fuel injection system, especially the fuel injection nozzle.
Bearing parts are overheated	- Check the lubricating system.
Oil lamp lights up during operation	- Check the lubricating system. - Check to see if the engine bearing clearances are within factory specs. - Check the function of the regulating valve inside of oil filter. - Check pressure switch. - Check filter base gasket.

https://truckmanualshub.com/

TRACTOR TROUBLESHOOTING

WHEN TRACTOR DOES NOT MOVE WHILE ENGINE IS RUNNING

Cause	Countermeasures
Speed change lever is at neutral	- Check speed change lever.
Parking brake is working	- Release the parking brake.

WHEN 3 POINT HITCH DOES NOT MOVE

Cause	Countermeasures
Oil filter is clogged	- Clean or change the filter.
3 point hitch does not lower	- Check the hydraulic adjusting grip.

https://truckmanualshub.com/

BATTERY TROUBLESHOOTING

Condition of Battery	Cause	Countermeasure	Cause
Starter does not function	- Key is not “ON” - Battery is over-used until light becomes dim. - Charging of battery neglected defective alternator rectifier. - Dirty or corroded terminal contacts. - Bad brushes, armature or field. - Life of battery expired.	- Turn key “ON” - Charge for long period by ordinary charging method until specific gravity of 1.26 is reached. - Repair alternator and replace defective rectifier. - Charge battery well. - Wash terminal with hot water and tighten well. - Replace. - Replace battery.	- Do not overuse the battery and charge before fully discharged. (Refrain from over discharging) - Check alternator rectifier. - Keep terminals clean, tighten well and grease to prevent corrosion.
From beginning, starter does not function, and lights become dim quickly	- Battery is not charged well.	- Charge battery for a long period by ordinary charging method.	- Battery must be serviced properly before initial use.
Low electrolyte level	- Battery used with shortage of electrolyte. - Battery over-used. Moreover, charging was neglected (Refrain from over-discharging). - Defective alternator rectifier, defective terminal contacts causing sulphation of electrodes.	- Add distilled water and charge battery. - Charge for a long period. - Check alternator and rectifier and charge for a long period by ordinary charging method.	- Make routine checks of electrolyte. - Do not overuse the battery and fully discharge. - Make routine checks of terminals, to make sure they are clean and tight.
Battery cannot be charged	- The current of the alternator during operation is too high causing plates to drop, warp or short circuit. - Life of battery expired.	- Decrease the charging current of alternator. - Exchange defective battery. - Exchange battery.	- Check charging current of Alternator.
Corrosion of terminals is severe	- Current of the Alternator during operation is too large.	- Clean scale from terminals and tighten well. - Adjust charging current of alternator.	- Keep terminals clean and well tightened. Apply grease to prevent corrosion. - Check charging current of alternator.
Electrolyte decrease rapidly	- Over heating due to over charging. - Storage battery cracked or has small holes.	- Check charging output. - Replace battery.	- Secure battery to tractor so it would not move.

https://truckmanualshub.com/

9 INDEX

https://truckmanualshub.com/

B

BATTERY TROUBLESHOOTING 8-7
BEFORE OPERATING THE TRACTOR ... 1-2

C

CAUTION LABELS 1-13

D

DESCRIPTION OF OPERATING SYSTEM 4-1
DRIVING THE TRACTOR 1-8

E

ENGINE TROUBLESHOOTING 8-2
When engine is difficult to start ... 8-2
When output is insufficient 8-3
When color of exhaust is specially bad 8-3
When color of exhaust is specially bad 8-4
When engine suddenly stops 8-4
When engine must be stopped immediately 8-5
EXTERIOR VIEW AND APPELLATION . 4-2

I

IMPLEMENT LIMITATIONS 3-13
INSTRUMENTS PANEL AND SWITCHES 4-4
Key switch 4-5
Turn signal/ Head light switch 4-5
PTO change switch(Manual/Automatic) 4-6
Hazard lamp switch 4-6
Engine stop switch 4-6
Horn button (Only EU, AU) 4-7
Tachometer/hour meter 4-7
Temperature gauge 4-7
Fuel gauge 4-8
4WD opeation indicator (Only USA) 4-8
PTO on indicator 4-8
Coolant lever warning lamp (Only DK35CR, 40CR, 450L-EU) 4-9
Differential lock indicaeor 4-9
Engine oil pressure warning lamp 4-9
Battery charge warning lamp 4-10
Glow plug indicator 4-10
Hydraulic system warning lamp ... 4-10
High-beam indicator 4-11
Parking brake indicator 4-11

L

LUBRICANTS 6-4

M

MAINTENANCE 6-1

O

OPERATING 5-1
OPERATING NEW TRACTOR 5-2
Changing lubricating oil for new tractors 5-3
OPERATING THE CONTROLS 4-12
Main shift lever 4-13
Hi-Lo shift lever 4-14
Creep speed lever 4-14
Shuttle shift lever 4-15
Hand accelerator lever 4-15
Steering wheel adjustment 4-16
Brake pedal(Right & Left) 4-16
Foot throttle 4-16
Clutch pedal 4-17
Parking brake lever 4-17
Mid PTO lever (Excluding DK450L-EU) 4-18
Differential lock pedal 4-18
Front wheel drive lever (Only 35CR, 40CR, USA, AU) 4-19
Quick-turn device operation (Only DK450L-EU) 4-19

https://truckmanualshub.com/

Seat 4-20
Swing drawbar 4-21
PTO cap 4-21
OPERATING THE ENGINE 5-3
Starting the engine 5-3
How to start in winter 5-6
Stopping the engine 5-6
Warming up 5-7
Jump starting 5-8
OPERATING THE PTO 1-9
OPERATING THE TRACTOR 1-5
OPERATING THE TRACTOR 5-9
Starting the tarctor 5-9
Stopping the tractor 5-12
Parking 5-12
How to turn 5-13
How to drive on a slope 5-13
The cautions when coming in and out of paved road 5-14
Cautions while driving on the road 5-14
Loading into and unloading out of the truck 5-15
Cautions while dealing the power steering 5-15
The cautions on dealing of the implement 5-16
The cautions when attaching an implement 5-17
Seven pin electrical power outlet 5-17
Lifting devices for an attachment 5-18
Dealing of single-double acting Valve 5-19
Attaching devices for an imple-ment (for general implement) 5-20
Tires 5-21
Tread 5-23
Ballast 5-25

P

PARKING THE TRACTOR 1-9
PERIODIC SERVICE 6-5
How to disconnect the side cover and front grille 6-5
Daily check 6-5
Every 50 hours 6-9
Every 100 hours 6-11
Every 200 hours 6-20
Every 300 hours 6-23
Every 400 hours 6-24
Every 600 hours 6-24
Every 800 hours 6-25
Every 1 year 6-25
Every 2 year 6-25
Service as required 6-27
PRE-OPERATION CHECK 5-2

R

REMOVING THE TRACTOR FROM STOR-AGE 7-3

S

SAFETY PRECAUTIONS 1-1
SERVICING OF TRACTOR 2-1
SERVICING THE TRACTOR 1-10
SERVISE INTERVALS 6-2
SPECIFICATIONS 3-2
STORAGE 7-1

T

TRACTOR STORAGE 7-2
TRACTOR TROUBLESHOOTING 8-6
When tractor does not move while en gine is running 8-6
When 3point hitch does not move 8-3
TRAVELING SPEED 3-11
TROUBLESHOOTING 8-1

U

USING 3-POINT HITCH 1-10