https://truckmanualshub.com/

DDC-SVC-MAN-0081

DD Platform Workshop Manual

EPA07/10 Engine

DETROIT DIESEL
DEMAND PERFORMANCE™

13400 Outer Drive, West, Detroit, Michigan 48239-4001
Telephone: 313-592-5000
www.detroitdiesel.com

Specifications are subject to change without notice. Detroit Diesel Corporation is registered to ISO 9001:2001. Copyright © Detroit Diesel Corporation. All rights reserved. Detroit Diesel Corporation is a Daimler company. Printed in U.S.A.

https://truckmanualshub.com/

CALIFORNIA
Proposition 65 Warning

Diesel engine exhaust and some of its constituents are known to the State of California to cause cancer, birth defects, and other reproductive harm.

CALIFORNIA
Engine Idle Limiting Standard Notice

Vehicles with engines certified by the State of California are equipped with software features making them compliant with the California Engine Idle Regulations. In order to meet this regulation, the engine control strategy is generally configured to automatically shut down the engine after five minutes of continuous idle operation. This shutdown feature is not an engine malfunction and is required to meet the California emission regulations.

https://truckmanualshub.com/

TABLE OF CONTENTS

1 ROCKER COVER

1.1 DESCRIPTION AND OPERATION OF ROCKER COVER AND RELATED PARTS 1-3
1.2 REMOVAL OF THE ROCKER COVER 1-4
1.3 CLEANING AND INSPECTION OF THE ROCKER COVER 1-6
1.4 INSTALLATION OF THE ROCKER COVER 1-7

2 CAMSHAFT AND ROCKER SHAFT/ENGINE BRAKE ASSEMBLY

2.1 DESCRIPTION AND OPERATION OF CAMSHAFT AND ROCKER SHAFT/ENGINE BRAKE ASSEMBLY AND RELATED PARTS 2-3
2.2 REMOVAL OF CAMSHAFT AND ROCKER SHAFT/ENGINE BRAKE ASSEMBLY 2-7
2.3 INSPECTION OF THE CAMSHAFT AND ROCKER SHAFT/ENGINE BRAKE ASSEMBLY 2-15
2.4 INSTALLATION OF THE CAMSHAFT AND ROCKER SHAFT/ENGINE BRAKE ASSEMBLY 2-16
2.5 DD13 EGR COOLER CLEANING PROCEDURE TO REMOVE EXCESS FUEL FROM COOLER AFTER ENGINE BRAKE SOLENOID FAILURE 2-26
2.6 DD15 EGR COOLER CLEANING PROCEDURE TO REMOVE EXCESS FUEL FROM COOLER AFTER ENGINE BRAKE SOLENOID FAILURE 2-31

3 CAMSHAFT HOUSING

3.1 REMOVAL OF THE CAMSHAFT HOUSING 3-3
3.2 INSPECTION OF CAMSHAFT HOUSING 3-8
3.3 INSTALLATION OF THE CAMSHAFT HOUSING 3-9

4 CAMSHAFT TIMING

4.1 CAMSHAFT TIMING VERIFICATION 4-3
4.2 TIMING THE CAMSHAFTS WITH THE GEAR TRAIN INSTALLED 4-6

5 GEAR TRAIN AND ENGINE TIMING

5.1 DESCRIPTION AND OPERATION OF GEAR TRAIN AND RELATED PARTS 5-3
5.2 ENGINE GEAR TRAIN INSTALLATION AND TIMING 5-8
5.3 CHECKING AND ADJUSTING GEAR LASH WITH CAMSHAFT HOUSING REMOVED 5-16

6 WATER MANIFOLD

6.1 DESCRIPTION AND OPERATION OF DD15 & DD16 WATER MANIFOLD AND RELATED COMPONENTS 6-3
6.2 REMOVAL OF THE DD15 & DD16 WATER MANIFOLD 6-5
6.3 CLEANING AND INSPECTION OF THE DD15 & DD16 WATER MANIFOLD 6-7
6.4 INSTALLATION OF THE DD15 & DD16 WATER MANIFOLD 6-8

 Copyright © 2010 DETROIT DIESEL CORPORATION

6.5 DD13 EXHAUST GAS RECIRCULATION COOLER WATER MANIFOLD ASSEMBLY 6-10

7 COLD BOOST PIPE (CHARGE AIR PIPE)

7.1 DESCRIPTION AND OPERATION OF COLD BOOST PIPE (CHARGE AIR PIPE) AND RELATED COMPONENTS 7-3
7.2 REMOVAL OF THE COLD BOOST PIPE (CHARGE AIR PIPE) 7-4
7.3 INSPECTION OF COLD BOOST PIPE (CHARGE AIR PIPE) 7-5
7.4 INSTALLATION OF THE COLD BOOST PIPE (CHARGE AIR PIPE) 7-6

8 AIR INTAKE MANIFOLD

8.1 DESCRIPTION AND OPERATION OF AIR INTAKE MANIFOLD AND RELATED PARTS 8-3
8.2 REMOVAL OF AIR INTAKE MANIFOLD 8-6
8.3 CLEANING OF THE AIR INTAKE MANIFOLD 8-7
8.4 INSPECTION OF THE AIR INTAKE MANIFOLD 8-8
8.5 INSTALLATION OF AIR INTAKE MANIFOLD 8-9

9 DD13 TURBOCHARGER

9.1 DESCRIPTION AND OPERATION OF THE DD13 TURBOCHARGER AND RELATED PARTS 9-3
9.2 REMOVAL OF THE DD13 TURBOCHARGER 9-5
9.3 INSPECTION OF THE DD13 TURBOCHARGER 9-9
9.4 INSTALLATION OF THE DD13 TURBOCHARGER 9-10
9.5 EGR COOLER CLEANING PROCEDURE TO REMOVE EXCESS FUEL FROM COOLER AFTER DD13 TURBOCHARGER FAILURE 9-12

10 DD13 WASTEGATE SOLENOID

10.1 DESCRIPTION AND OPERATION OF THE DD13 WASTEGATE SOLENOID 10-3
10.2 REMOVAL OF THE DD13 WASTEGATE SOLENOID 10-4
10.3 INSTALLATION OF THE DD13 WASTEGATE SOLENOID 10-6

11 DD15 TURBOCHARGER

11.1 DESCRIPTION AND OPERATION OF TURBOCHARGER AND RELATED PARTS 11-3
11.2 REMOVAL OF DD15 TURBOCHARGER 11-5
11.3 INSPECTION OF DD15 TURBOCHARGER 11-7
11.4 INSTALLATION OF DD15 TURBOCHARGER 11-8
11.5 EGR COOLER CLEANING PROCEDURE TO REMOVE EXCESS OIL FROM EGR COOLER AFTER DD15 TURBOCHARGER FAILURE 11-10

12 DD15 AXIAL POWER TURBINE

12.1 DESCRIPTION AND OPERATION OF DD15 AXIAL POWER TURBINE AND RELATED PARTS 12-3
12.2 REMOVAL OF DD15 AXIAL POWER TURBINE 12-5
12.3 INSPECTION OF THE DD15 AXIAL POWER TURBINE 12-6
12.4 INSTALLATION OF DD15 AXIAL POWER TURBINE 12-7

All information subject to change without notice.
DDC-SVC-MAN-0081 2010 Copyright © 2010 DETROIT DIESEL CORPORATION

https://truckmanualshub.com/

13 DD15 AXIAL POWER TURBINE GEAR BOX

13.1 DESCRIPTION AND OPERATION OF DD15 AXIAL POWER TURBINE GEAR BOX AND RELATED PARTS 13-3
13.2 REMOVAL OF THE DD15 AXIAL POWER TURBINE GEAR BOX 13-5
13.3 INSPECTION OF DD15 AXIAL POWER TURBINE GEAR BOX 13-6
13.4 INSTALLATION OF THE AXIAL POWER TURBINE GEAR BOX 13-7

14 CYLINDER HEAD

14.1 DESCRIPTION AND OPERATION OF CYLINDER HEAD AND RELATED PARTS 14-3
14.2 REMOVAL OF THE DD13 CYLINDER HEAD 14-10
14.3 INSTALLATION OF THE DD13 CYLINDER HEAD 14-12
14.4 REMOVAL OF THE DD15 CYLINDER HEAD 14-15
14.5 CLEANING OF THE CYLINDER HEAD 14-17
14.6 ASSEMBLY OF CYLINDER HEAD 14-18
14.7 INSTALLATION OF THE DD15 CYLINDER HEAD 14-19
14.8 REMOVAL OF VALVE SPRING (CYLINDER HEAD INSTALLED) 14-22
14.9 REMOVAL OF THE VALVE SPRING (CYLINDER HEAD REMOVED) ... 14-24
14.10 REMOVAL OF INTAKE AND EXHAUST VALVES 14-25
14.11 CLEANING OF VALVES AND RELATED PARTS 14-26
14.12 INSPECTION OF VALVE SPRINGS 14-27
14.13 INSPECTION OF VALVE 14-28
14.14 INSTALLATION OF VALVE, SPRING, SEAL AND VALVE CAP 14-29
14.15 VALVE LASH ADJUSTMENTS 14-31
14.16 SETTING THE ENGINE BRAKE LASH 14-33

15 PISTON AND CONNECTING ROD ASSEMBLY

15.1 DESCRIPTION AND OPERATION OF PISTON AND CONNECTING ROD AND RELATED PARTS 15-3
15.2 REMOVAL OF PISTON AND CONNECTING ROD ASSEMBLY 15-5
15.3 DISASSEMBLY OF PISTON AND CONNECTING ROD ASSEMBLY 15-7
15.4 INSPECTION OF PISTON AND CONNECTING ROD ASSEMBLY 15-8
15.5 ASSEMBLY OF PISTON AND CONNECTING ROD ASSEMBLY 15-9
15.6 INSTALLATION OF PISTON AND CONNECTING ROD ASSEMBLY 15-11

16 CYLINDER LINER

16.1 DESCRIPTION AND OPERATION OF CYLINDER LINER AND RELATED PARTS 16-3
16.2 REMOVAL OF CYLINDER LINER 16-4
16.3 INSPECTION OF CYLINDER LINER 16-5
16.4 CLEANING OF THE CYLINDER LINER 16-7
16.5 INSTALLATION OF THE CYLINDER LINER 16-8

17 CRANKSHAFT

17.1 DESCRIPTION AND OPERATION OF CRANKSHAFT AND RELATED PARTS 17-3
17.2 REMOVAL OF CRANKSHAFT 17-6
17.3 INSPECTION OF THE CRANKSHAFT AND RELATED PARTS 17-9
17.4 INSTALLATION OF CRANKSHAFT 17-10

 Copyright © 2010 DETROIT DIESEL CORPORATION

https://truckmanualshub.com/

17.5 REMOVAL OF CRANKSHAFT REAR OIL SEAL 17-14
17.6 INSTALLATION OF THE REAR OIL SEAL 17-15
17.7 REMOVAL OF THE CRANKSHAFT FRONT OIL SEAL 17-17
17.8 INSTALLATION OF THE CRANKSHAFT FRONT OIL SEAL 17-18

18 LUBRICATION SYSTEM

18.1 DESCRIPTION AND OPERATION OF THE LUBRICATION SYSTEM AND RELATED COMPONENTS 18-3

19 OIL PAN

19.1 DESCRIPTION AND OPERATION OF OIL PAN AND RELATED COMPONENTS 19-3
19.2 REMOVAL OF OIL PAN 19-4
19.3 CLEANING OF OIL PAN 19-5
19.4 INSPECTION OF OIL PAN 19-6
19.5 REMOVAL OF THREADED INSERT — PLASTIC OIL PAN ONLY 19-7
19.6 INSTALLATION OF THREADED INSERT — PLASTIC OIL PAN ONLY . 19-8
19.7 INSTALLATION OF OIL PAN 19-9

20 OIL DIPSTICK TUBE

20.1 DESCRIPTION AND OPERATION OF OIL DIPSTICK TUBE AND RELATED COMPONENTS 20-3
20.2 REMOVAL OF THE OIL DIPSTICK TUBE 20-4
20.3 INSTALLATION OF THE OIL DIPSTICK TUBE 20-5

21 OIL PUMP

21.1 DESCRIPTION AND OPERATION OF OIL PUMP AND RELATED COMPONENTS 21-3
21.2 REMOVAL OF THE OIL PUMP, OIL SUCTION MANIFOLD, AND OIL LINES 21-4
21.3 INSPECTION OF THE OIL PUMP, OIL SUCTION MANIFOLD, AND OIL LINES 21-5
21.4 INSTALLATION OF THE OIL PUMP, OIL SUCTION MANIFOLD, AND OIL LINES 21-6

22 CRANKCASE BREATHER

22.1 DESCRIPTION AND OPERATION OF CRANKCASE BREATHER 22-3
22.2 REMOVAL OF THE CRANKCASE BREATHER 22-5
22.3 INSPECTION OF THE CRANKCASE BREATHER 22-6
22.4 INSTALLATION OF THE CRANKCASE BREATHER 22-7

23 OIL FILTER

23.1 REPLACEMENT OF THE OIL FILTER 23-3

24 OIL SAMPLE VALVE

24.1 REPLACING OIL PLUG WITH OIL SAMPLE VALVE 24-3
24.2 REMOVAL OF OIL SAMPLE VALVE 24-4
24.3 INSTALLATION OF OIL SAMPLE VALVE 24-5

25 OIL FILLER NECK

25.1 REMOVAL OF THE OIL FILLER NECK 25-3

All information subject to change without notice.
DDC-SVC-MAN-0081 2010 Copyright © 2010 DETROIT DIESEL CORPORATION

https://truckmanualshub.com/

25.2 INSTALLATION OF THE OIL FILLER NECK 25-4

26 OIL COOLANT MODULE

26.1 DESCRIPTION AND OPERATION OF THE OIL COOLANT MODULE .. 26-3
26.2 REMOVAL OF THE OIL COOLANT MODULE 26-5
26.3 INSTALLATION OF THE OIL COOLANT MODULE 26-7
26.4 REMOVAL OF THE OIL THERMOSTAT 26-9
26.5 INSTALLATION OF THE OIL THERMOSTAT 26-11

27 PRIMING THE LUBRICATION SYSTEM

27.1 PRIMING THE ENGINE LUBRICATION SYSTEM 27-3

28 COOLING SYSTEM

28.1 DESCRIPTION AND OPERATION OF COOLING SYSTEM AND RELATED COMPONENTS 28-3

29 ENGINE WATER PUMP

29.1 DESCRIPTION AND OPERATION OF ENGINE WATER PUMP 29-3
29.2 REMOVAL OF THE WATER PUMP 29-4
29.3 INSPECTION OF THE WATER PUMP 29-5
29.4 INSTALLATION OF THE WATER PUMP 29-6

30 COOLANT THERMOSTAT

30.1 DESCRIPTION AND OPERATION OF COOLANT THERMOSTAT 30-3
30.2 REMOVAL OF COOLANT THERMOSTAT AND SEAL 30-5
30.3 INSPECTION OF COOLANT THERMOSTAT AND SEAL 30-6
30.4 INSTALLATION OF COOLANT THERMOSTAT AND SEAL 30-7

31 COOLANT FILTER

31.1 DESCRIPTION AND OPERATION OF COOLANT FILTER 31-3
31.2 REMOVAL OF THE COOLANT FILTER 31-4
31.3 INSTALLATION OF THE COOLANT FILTER 31-5

32 COOLANT FILTER SERVICE MODULE

32.1 REMOVAL OF COOLANT FILTER SERVICE MODULE 32-3
32.2 INSTALLATION OF COOLANT FILTER SERVICE MODULE 32-4

33 COOLANT INLET ELBOW

33.1 REMOVAL OF THE COOLANT INLET ELBOW 33-3
33.2 INSTALLATION OF THE COOLANT INLET ELBOW 33-4

34 FLYWHEEL AND FLYWHEEL HOUSING

34.1 DESCRIPTION AND OPERATION OF FLYWHEEL, FLYWHEEL HOUSING AND RELATED PARTS 34-3
34.2 REMOVAL OF FLYWHEEL HOUSING 34-6
34.3 INSTALLATION OF FLYWHEEL HOUSING 34-7
34.4 REMOVAL OF THE FLYWHEEL 34-9
34.5 INSPECTION OF FLYWHEEL 34-10
34.6 INSTALLATION OF FLYWHEEL 34-11
34.7 INSPECTION OF FLYWHEEL HOUSING AND REAR OIL SEAL AREA OF CRANKSHAFT 34-12
34.8 REMOVAL OF RING GEAR 34-13

All information subject to change without notice.
DDC-SVC-MAN-0081 2010 Copyright © 2010 DETROIT DIESEL CORPORATION

https://truckmanualshub.com/

34.9 INSTALLATION OF RING GEAR 34-14

35 FRONT ENGINE MOUNT/RADIATOR SUPPORT

35.1 DESCRIPTION AND OPERATION OF FRONT ENGINE MOUNT/RADIATOR SUPPORT AND RELATED PARTS 35-3
35.2 REMOVAL OF THE FRONT ENGINE MOUNT/RADIATOR SUPPORT .. 35-4
35.3 INSPECTION OF THE FRONT ENGINE MOUNT/RADIATOR SUPPORT 35-5
35.4 INSTALLATION OF THE FRONT ENGINE MOUNT/RADIATOR SUPPORT 35-6

36 VIBRATION DAMPER

36.1 REMOVAL OF THE VIBRATION DAMPER 36-3
36.2 INSTALLATION OF THE VIBRATION DAMPER 36-4

37 FRONT ENGINE COVER

37.1 DESCRIPTION AND OPERATION OF THE FRONT ENGINE COVER .. 37-3
37.2 REMOVAL OF THE FRONT ENGINE COVER 37-4
37.3 INSPECTION OF THE FRONT ENGINE COVER 37-5
37.4 INSTALLATION OF THE FRONT ENGINE COVER 37-6

38 ENGINE LIFTER BRACKETS

38.1 DESCRIPTION AND OPERATION OF ENGINE LIFTER BRACKETS AND RELATED PARTS 38-3
38.2 REMOVAL OF THE FRONT ENGINE LIFTER BRACKET WITHOUT FRONT ENGINE POWER TAKE-OFF 38-8
38.3 REMOVAL OF THE FRONT ENGINE LIFTER BRACKET WITH FRONT ENGINE POWER TAKE-OFF 38-9
38.4 REMOVAL OF THE REAR ENGINE LIFTER BRACKETS 38-10
38.5 INSPECTION OF THE ENGINE LIFTER BRACKETS 38-11
38.6 INSTALLATION OF THE REAR ENGINE LIFTER BRACKETS 38-12
38.7 INSTALLATION OF THE FRONT ENGINE LIFTER BRACKET WITHOUT FRONT ENGINE POWER TAKE-OFF 38-13
38.8 INSTALLATION OF THE FRONT ENGINE LIFTER BRACKET WITH FRONT ENGINE POWER TAKE-OFF 38-14

39 BELT DRIVE TENSIONER SYSTEM

39.1 DESCRIPTION AND OPERATION OF BELT DRIVE TENSIONER AND RELATED PARTS 39-3
39.2 REMOVAL OF THE BELT TENSIONER 39-5
39.3 INSTALLATION OF THE BELT TENSIONER 39-6
39.4 REMOVAL OF THE IDLER PULLEY AND IDLER PULLEY BRACKET .. 39-7
39.5 INSTALLATION OF THE IDLER PULLEY AND IDLER PULLEY BRACKET 39-8
39.6 REMOVAL OF NON-BRACKETED IDLER PULLEY 39-9
39.7 INSTALLATION OF NON-BRACKETED IDLER PULLEY 39-10
39.8 REMOVAL OF THE ACCESSORY MOUNTING BRACKET 39-11
39.9 INSTALLATION OF THE ACCESSORY MOUNTING BRACKET 39-12

All information subject to change without notice.
DDC-SVC-MAN-0081 2010 Copyright © 2010 DETROIT DIESEL CORPORATION

https://truckmanualshub.com/

40 POLY-V-BELTS
40.1 REMOVAL OF THE POLY-V-BELTS 40-3
40.2 INSPECTION OF THE POLY-V-BELTS 40-6
40.3 INSTALLATION OF THE POLY-V-BELTS 40-9

41 AIR COMPRESSOR
41.1 DESCRIPTION AND OPERATION OF THE AIR COMPRESSOR 41-3
41.2 REMOVAL OF THE AIR COMPRESSOR 41-5
41.3 INSPECTION OF THE AIR COMPRESSOR 41-6
41.4 INSTALLATION OF THE AIR COMPRESSOR 41-8

42 CYLINDER BLOCK
42.1 DESCRIPTION AND OPERATION OF CYLINDER BLOCK AND RELATED PARTS 42-3
42.2 REMOVAL AND DISASSEMBLY OF ENGINE FROM THE VEHICLE 42-9
42.3 CLEANING THE CYLINDER BLOCK 42-12
42.4 REASSEMBLY AND INSTALLATION OF CYLINDER BLOCK 42-16

 Copyright © 2010 DETROIT DIESEL CORPORATION

https://truckmanualshub.com/

All information subject to change without notice.
DDC-SVC-MAN-0081 2010 Copyright © 2010 DETROIT DIESEL CORPORATION

https://truckmanualshub.com/

1 ROCKER COVER

Section **Page**

1.1 DESCRIPTION AND OPERATION OF ROCKER COVER AND RELATED PARTS 1-3

1.2 REMOVAL OF THE ROCKER COVER 1-4

1.3 CLEANING AND INSPECTION OF THE ROCKER COVER 1-6

1.4 INSTALLATION OF THE ROCKER COVER 1-7

https://truckmanualshub.com/

All information subject to change without notice.
DDC-SVC-MAN-0081 2010 Copyright © 2010 DETROIT DIESEL CORPORATION

https://truckmanualshub.com/

1.1 DESCRIPTION AND OPERATION OF ROCKER COVER AND RELATED PARTS

The rocker cover (2) is made of an aluminum or plastic material and uses an elastomer seal (1) which completely encloses the valve operating mechanism including the overhead camshafts, brake assemblies and the injector harness.

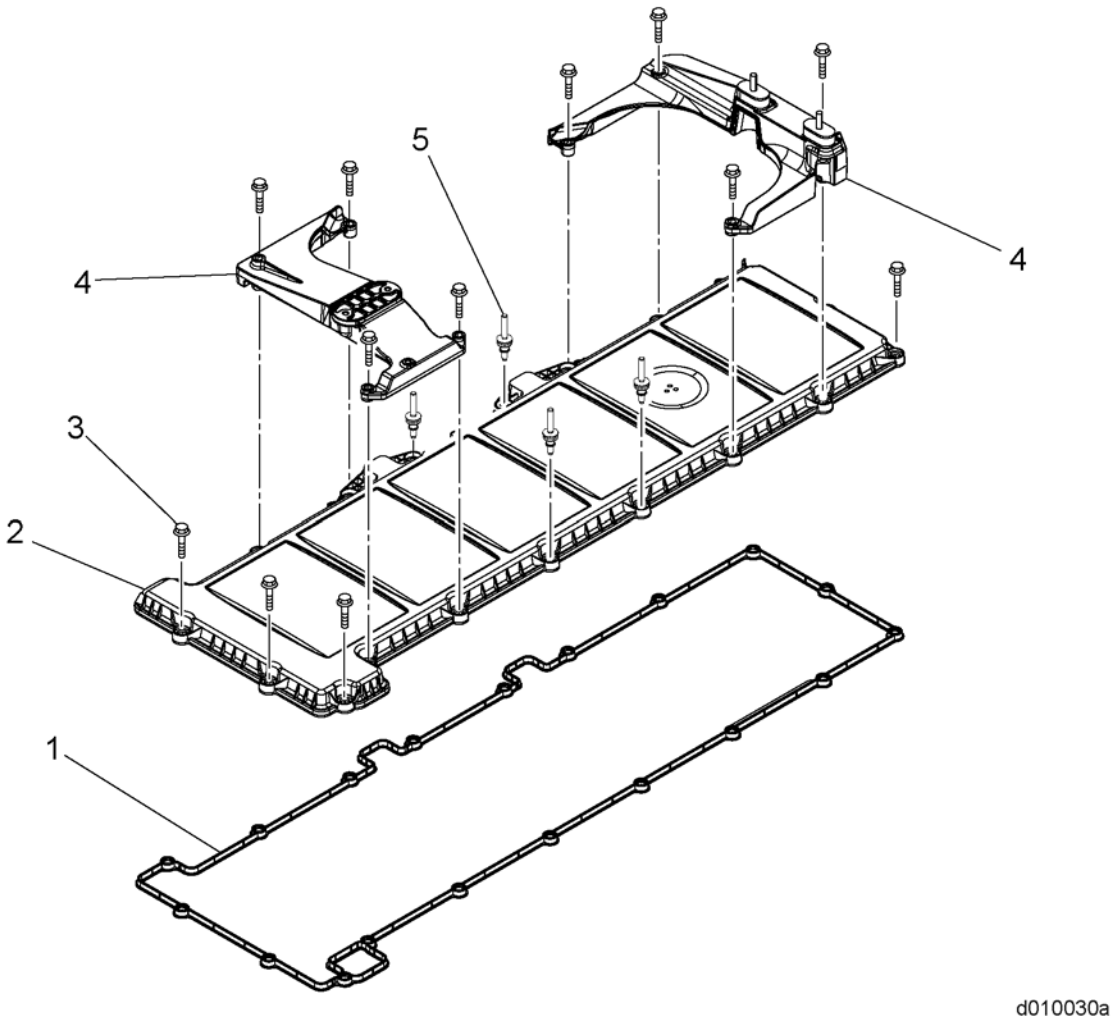

1. Gasket
2. Rocker Cover
3. Bolt
4. Air Cleaner Bracket
5. Stud (Bolt)

Figure 1-1 Rocker Cover

 Copyright © 2010 DETROIT DIESEL CORPORATION

https://truckmanualshub.com/

1.2 REMOVAL OF THE ROCKER COVER

Remove as follows:

1. Steam clean the engine.
2. Remove bolts (1) or nuts (if equipped) from the two air filter housing brackets (2) and remove housings from the rocker cover.

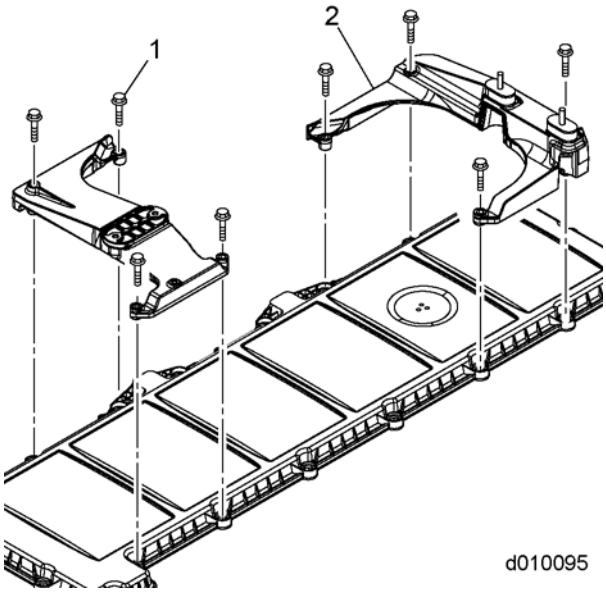

All information subject to change without notice.
DDC-SVC-MAN-0081 2010 Copyright © 2010 DETROIT DIESEL CORPORATION

https://truckmanualshub.com/

3. Loosen the bolts (1) or stud bolts (2) (if equipped) and isolators (3); remove rocker cover.

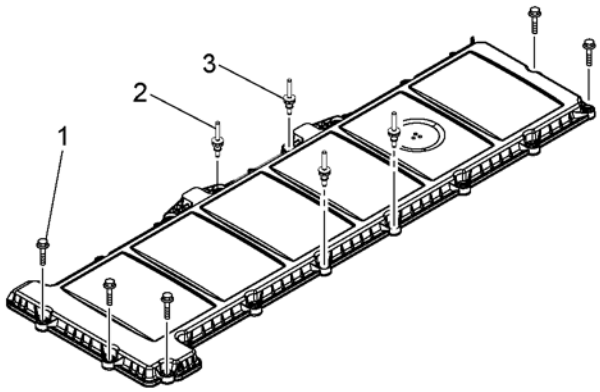

d010096

NOTE:
Mark the location of the stud bolts. The stud bolts must be replaced in their original location during installation.

4. Remove rocker cover gasket from the rocker cover.

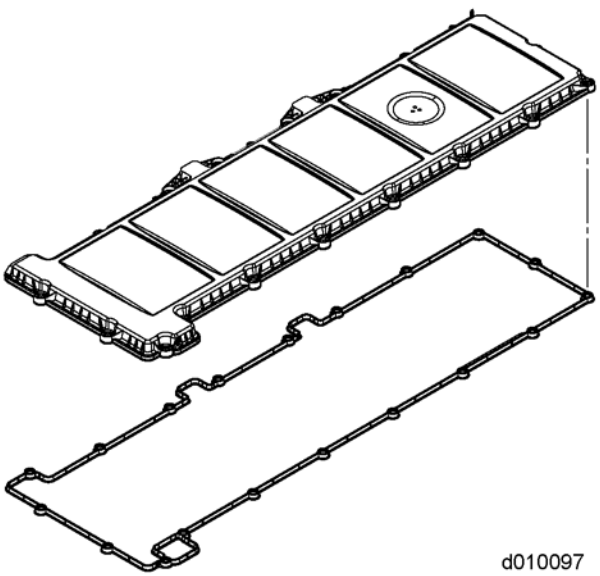

d010097

 Copyright © 2010 DETROIT DIESEL CORPORATION

https://truckmanualshub.com/

1.3 CLEANING AND INSPECTION OF THE ROCKER COVER

Clean as follows:

1. Clean cover in clean solvent or fuel.

WARNING:
EYE INJURY
To avoid injury from flying debris when using compressed air, wear adequate eye protection (face shield or safety goggles) and do not exceed 276 kPa (40 psi) air pressure.

2. Blow dry with compressed air.
3. Check the rocker cover, breather passage and seal for damage. Replace as necessary.
4. Inspect the bolts. Replace if damaged.

All information subject to change without notice.
DDC-SVC-MAN-0081 2010 Copyright © 2010 DETROIT DIESEL CORPORATION

https://truckmanualshub.com/

1.4 INSTALLATION OF THE ROCKER COVER

Install as follows:

1. Install rocker cover gasket into groove in rocker cover.

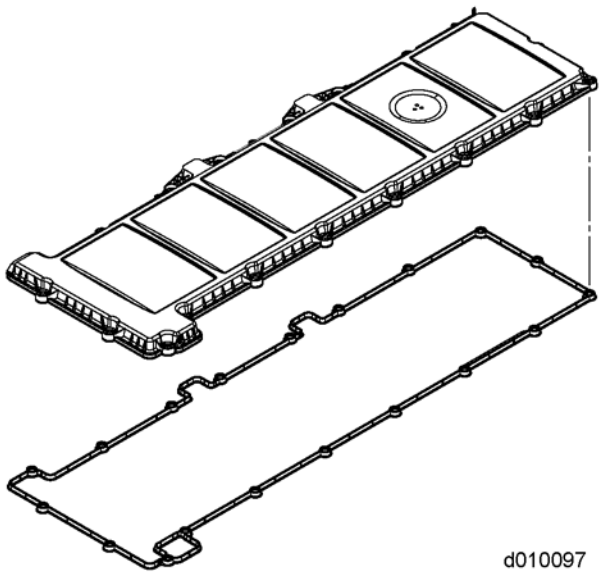

2. Install bolts (1) or stud bolts (2) (if removed) and isolators (3) into rocker cover.

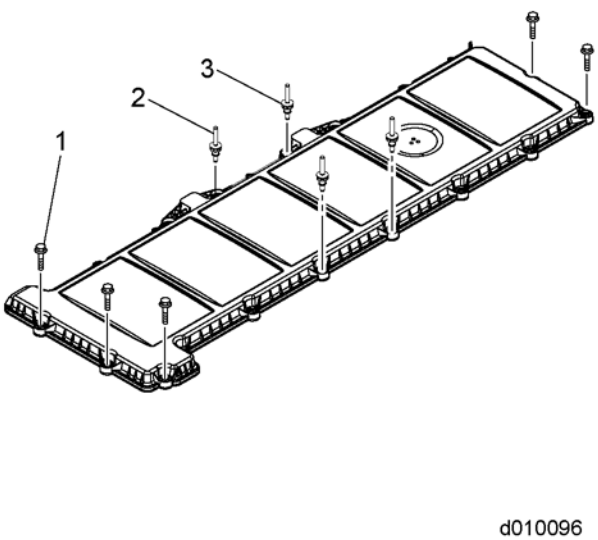

3. Install rocker cover onto camshaft housing.
4. Finger tighten all bolts (1) and stud bolts; then torque to 20 N·m (14 lb·ft).

 Copyright © 2010 DETROIT DIESEL CORPORATION

https://truckmanualshub.com/

5. Install the two air filter brackets (2) (if equipped), onto the rocker cover and torque the eight nuts to 20 N·m (14 lb·ft).

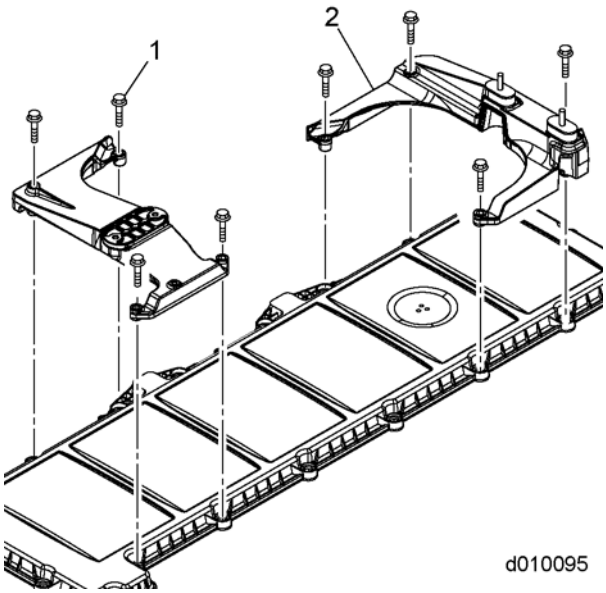

WARNING:
ENGINE EXHAUST
To avoid injury from inhaling engine exhaust, always operate the engine in a well-ventilated area. Engine exhaust is toxic.

6. Start the engine and check for leaks.

All information subject to change without notice.
DDC-SVC-MAN-0081 2010 Copyright © 2010 DETROIT DIESEL CORPORATION

https://truckmanualshub.com/

2 CAMSHAFT AND ROCKER SHAFT/ENGINE BRAKE ASSEMBLY

Section **Page**

2.1 DESCRIPTION AND OPERATION OF CAMSHAFT AND ROCKER SHAFT/ENGINE BRAKE ASSEMBLY AND RELATED PARTS 2-3

2.2 REMOVAL OF CAMSHAFT AND ROCKER SHAFT/ENGINE BRAKE ASSEMBLY 2-7

2.3 INSPECTION OF THE CAMSHAFT AND ROCKER SHAFT/ENGINE BRAKE ASSEMBLY 2-15

2.4 INSTALLATION OF THE CAMSHAFT AND ROCKER SHAFT/ENGINE BRAKE ASSEMBLY 2-16

2.5 DD13 EGR COOLER CLEANING PROCEDURE TO REMOVE EXCESS FUEL FROM COOLER AFTER ENGINE BRAKE SOLENOID FAILURE 2-26

2.6 DD15 EGR COOLER CLEANING PROCEDURE TO REMOVE EXCESS FUEL FROM COOLER AFTER ENGINE BRAKE SOLENOID FAILURE 2-31

https://truckmanualshub.com/

All information subject to change without notice.
DDC-SVC-MAN-0081 2010 Copyright © 2010 DETROIT DIESEL CORPORATION

https://truckmanualshub.com/

2.1 DESCRIPTION AND OPERATION OF CAMSHAFT AND ROCKER SHAFT/ENGINE BRAKE ASSEMBLY AND RELATED PARTS

The engine uses a dual overhead camshaft and rocker shaft design. The intake and exhaust camshafts are timed to each other, through a geartrain, to the crankshaft. The camshaft housing houses the camshafts and valve train. It has internal oil passages to supply oil from the block to the camshaft and rocker bearings along with pressurized oil to the engine brake rockers via the engine brake solenoids through the exhaust shaft. The camshaft housing is made of aluminium material.

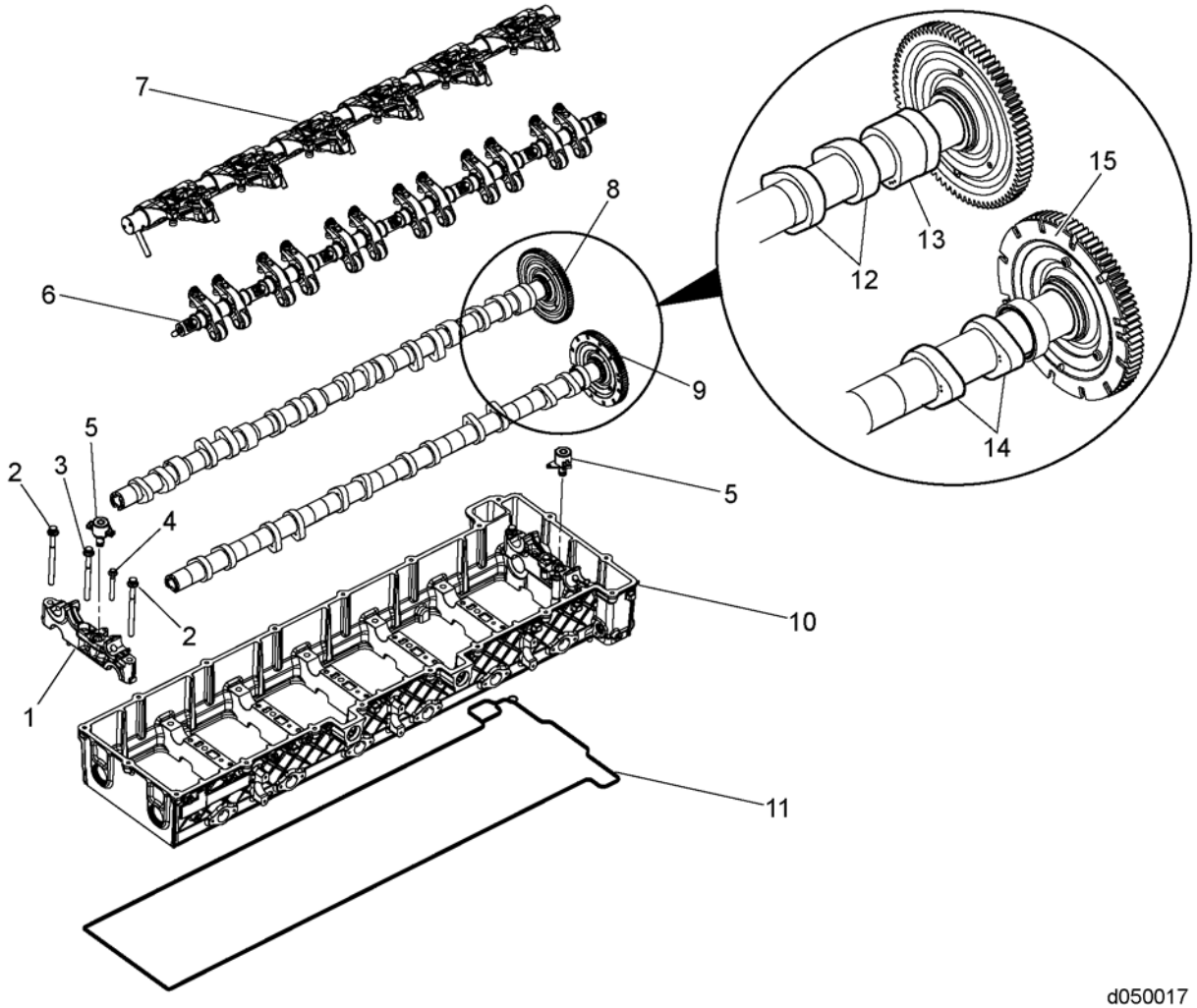

1. Camshaft Bearing Cap	6. Intake Rocker Arm	11. Gasket
2. Bolt 120 mm	7. Exhaust Rocker Arm	12. Exhaust Camshaft Lobes
3. Bolt 108 mm	8. Exhaust Camshaft and Gear	13. Exhaust Camshaft Brake Cam Lobe
4. Bolt 63 mm	9. Intake Camshaft and Gear	14. Intake Camshaft Lobes
5. Engine Brake Solenoid	10. Camshaft Housing	15. Intake Camshaft Tone Wheel

Figure 2-1 Camshaft Housing and Related Parts

 Copyright © 2010 DETROIT DIESEL CORPORATION

https://truckmanualshub.com/

2.1.1 Engine Braking

The engine uses an integral engine brake. Engine braking is controlled electronically by the engine control system with an electric solenoid. When activated, the solenoid allows oil pressure to activate a piston on the exhaust rocker arm. Engine braking is accomplished with a single exhaust valve in each cylinder. The exhaust camshaft uses a separate engine brake-only lobe that allows for double valve activation for high efficiency braking. The exhaust valve is first operated toward the completion of the intake stroke, closed during the compression stroke and opened a second time when the compression stroke is completed. The engine brake system is enabled using the following components:

For EPA07 engines:

- Engine brake solenoid valve in front of engine applies low engine braking.
- Engine brake solenoid valve in rear of engine applies medium engine braking.
- For high, both front and rear solenoids are activated.
- Six exhaust rocker arms with actuator pistons.
- Six brake rocker arms which are actuated by the brake cam lobes.
- Exhaust camshaft has one brake cam lobe per cylinder.

All information subject to change without notice.
DDC-SVC-MAN-0081 2010 Copyright © 2010 DETROIT DIESEL CORPORATION

https://truckmanualshub.com/

For EPA07 engines, the exhaust rocker arm shaft lubricating oil passages direct pressurized oil to the rocker arms. The exhaust rocker arm has two additional oil passages to operate the engine brakes. Oil for cylinders 1 and 2 is supplied by the Front Engine Brake Solenoid Valve. Oil for cylinders 3 to 6 are supplied by the Rear Engine Brake Solenoid Valve.

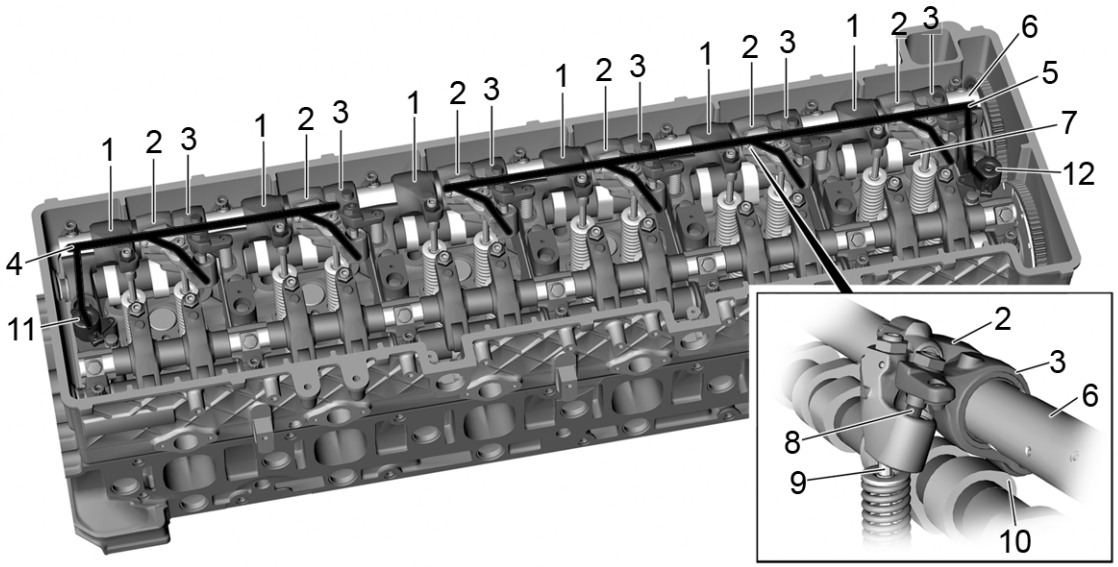

1. Exhaust Rocker Arm
2. Exhaust Rocker Arm with Actuator Piston
3. Brake Rocker Arm
4. Oil Passage for Cylinders 1 and 2
5. Oil Passage for Cylinders 3, 4, 5 and 6
6. Exhaust Rocker Arm Shaft
7. Exhaust Camshaft
8. Actuator Piston
9. Exhaust Valve
10. Brake Cam Lobe
11. Engine Brake Solenoid Valve, Front
12. Engine Brake Solenoid Valve, Rear

Figure 2-2 EPA07 Engine Brake

For EPA10 engines:

- □ Engine brake solenoid valve in front of engine applies low engine braking.
- □ For medium engine braking, both front and rear solenoids are activated.
- □ For high, both front and rear solenoids are activated, along with EGR.
- □ Six exhaust rocker arms with actuator pistons.
- □ Six brake rocker arms which are actuated by the brake cam lobes.
- □ Exhaust camshaft has one brake cam lobe per cylinder.

 Copyright © 2010 DETROIT DIESEL CORPORATION

https://truckmanualshub.com/

For EPA10 engines, the exhaust rocker arm shaft lubricating oil passages direct pressurized oil to the rocker arms. The exhaust rocker arm has two additional oil passages to operate the engine brakes. Oil for cylinders 1 through 3 is supplied by the Front Engine Brake Solenoid Valve. Oil for cylinders 4 through 6 are supplied by the Rear Engine Brake Solenoid Valve.

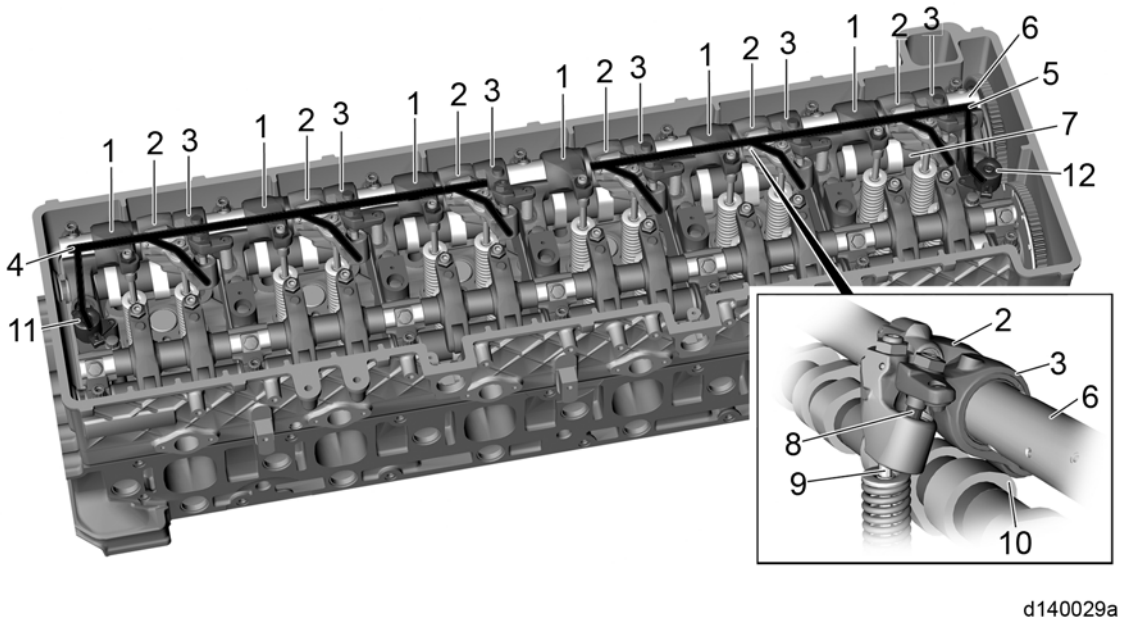

1. Exhaust Rocker Arm
2. Exhaust Rocker Arm with Actuator Piston
3. Brake Rocker Arm
4. Oil Passage for Cylinders 1, 2 and 3
5. Oil Passage for Cylinders 4, 5 and 6
6. Exhaust Rocker Arm Shaft
7. Exhaust Camshaft
8. Actuator Piston
9. Exhaust Valve
10. Brake Cam Lobe
11. Engine Brake Solenoid Valve, Front
12. Engine Brake Solenoid Valve, Rear

Figure 2-3 EPA10 Engine Brake

All information subject to change without notice.
DDC-SVC-MAN-0081 2010 Copyright © 2010 DETROIT DIESEL CORPORATION

https://truckmanualshub.com/

2.2 REMOVAL OF CAMSHAFT AND ROCKER SHAFT/ENGINE BRAKE ASSEMBLY

Remove as follows:

1. Turn engine OFF, (key OFF, engine OFF).
2. Steam clean the engine.
3. Disconnect the battery power to the engine. Refer to OEM procedures.
4. Remove the air cleaner and the turbocharger inlet pipe and hose. Refer to OEM procedures.
5. Remove air cleaner housing. Refer to OEM procedures.
6. Remove the rocker cover. Refer to section 1.2.
7. Remove the two 14-pin fuel injector harness connectors (1) from the camshaft housing housing (2).

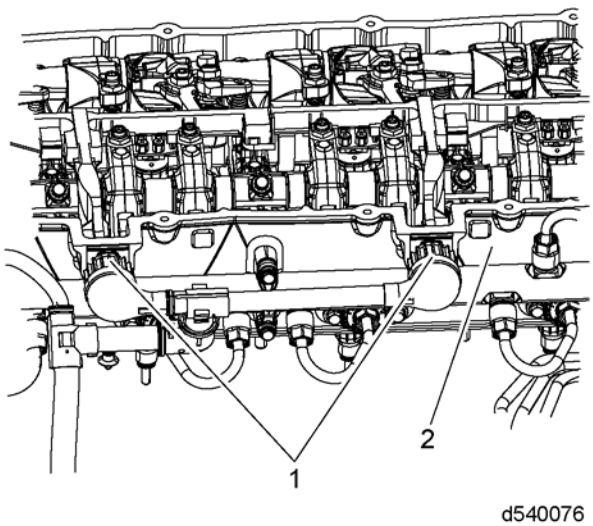

NOTE:
Top Dead Center (TDC) can be confirmed by installing camshaft timing tool. For the DD13 use Camshaft Timing Tool (W470589034000). For the EPA07 DD15 use Camshaft Timing Tool (W470589054000). For the EPA10 DD15 use Camshaft Timing Tool (W470589104000).

8. Using Engine Barring tool (J-46392), rotate the crankshaft to TDC on cylinder No. 1.

 Copyright © 2010 DETROIT DIESEL CORPORATION

https://truckmanualshub.com/

9. Remove the Crankshaft Position Sensor (CKP) (1) from the rear of the flywheel housing. Refer to section .

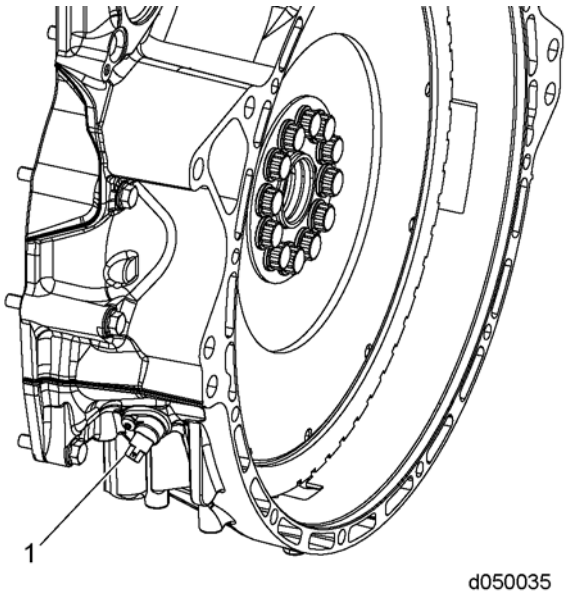

10. To accurately locate TDC, install the flywheel housing crankshaft TDC Locating Pin (W470589001500) into the CKP sensor hole located in the rear of the flywheel housing. The plastic tip will protrude into the cutout in the tone wheel. TDC can be verified by the proper installation of the camshaft timing tool.

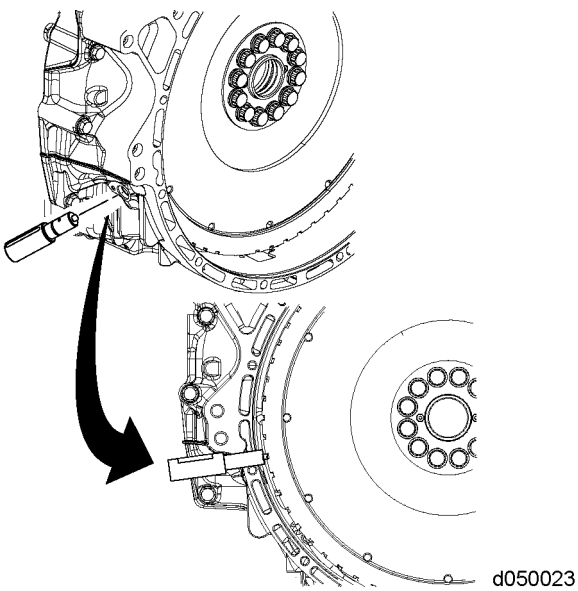

All information subject to change without notice.
DDC-SVC-MAN-0081 2010 Copyright © 2010 DETROIT DIESEL CORPORATION

https://truckmanualshub.com/

11. When the TDC dot (3) between two teeth on the flywheel aligns with the edge of pointer (2), the engine is at TDC firing stroke.

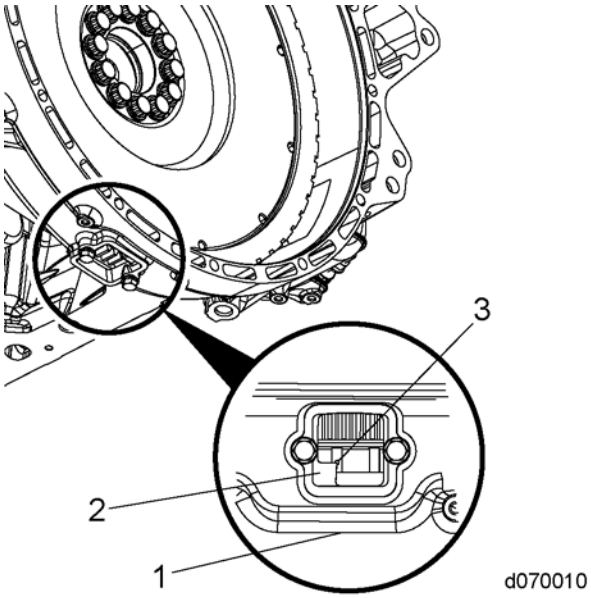

12. ***For EPA07 DD13:***
    [a] Disconnect both 14-pin injector harness connectors (8).
    [b] Disconnect the 24 electrical terminals at the fuel injectors (7).
    [c] Disconnect two wiring terminals at each engine brake solenoid (6).

 Copyright © 2010 DETROIT DIESEL CORPORATION

https://truckmanualshub.com/

[d] Loosen the Allen screws holding the intermediate frame (5) to the camshaft housing (1). Remove the intermediate frame .

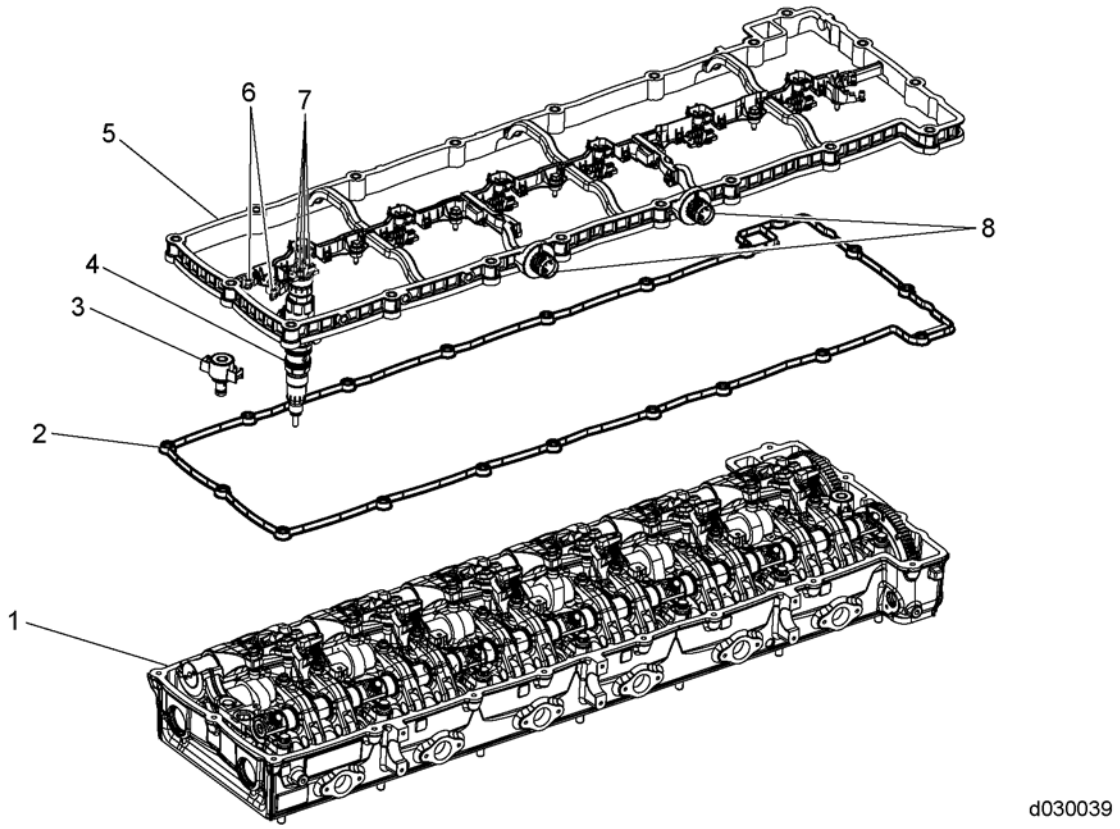

13. ***For EPA10 engines:***

[a] Remove the fuel injector electrical harness clips (2) from the 14-pin electrical connectors.

All information subject to change without notice.
DDC-SVC-MAN-0081 2010 Copyright © 2010 DETROIT DIESEL CORPORATION

https://truckmanualshub.com/

[b] Remove the bolts securing the two-piece fuel injector electrical harness (1 and 3) and remove the harness from the camshaft housing housing.

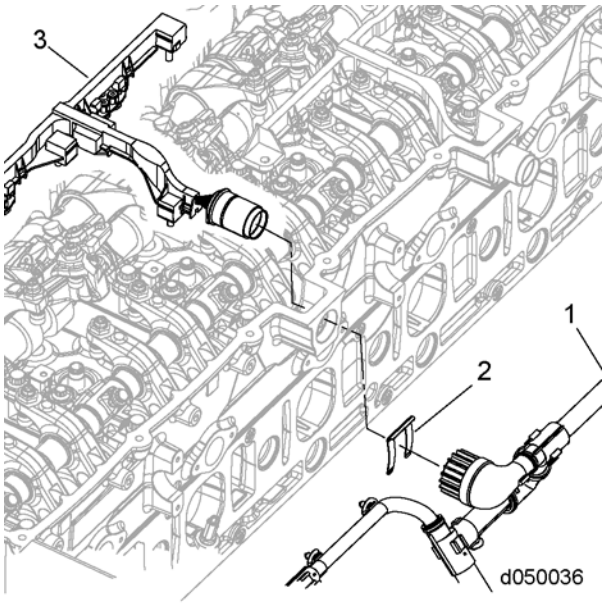

14. Remove the engine brake solenoids from the camshaft housing.

NOTICE:
Ensure when loosening the rocker shaft bolts that the bolts are loosened from the inside bolts outward in 1/2 turn increments. The increment procedure needs to be followed to prevent the rocker shaft from breaking.

15. Completely loosen all of the adjusting screws on all of the rocker arms.
16. Loosen the seven bolts securing the intake rocker shaft to the camshaft bearing caps.

NOTICE:
Make sure that the camshaft housing housing is not damaged during removal of the intake/exhaust rocker shaft assemblies.

 Copyright © 2010 DETROIT DIESEL CORPORATION

https://truckmanualshub.com/

17. Using Rocker Arm Lifter / Spacer tool (W470589044000) for the DD13, or Rocker Arm Lifter / Spacer Intake tool (W470589004000) for the DD15, remove the intake rocker shaft assembly.

NOTICE:
Ensure when loosening the rocker shaft bolts that the bolts are loosened from the inside bolts outward in 1/2 turn increments. The increment procedure needs to be followed to prevent the rocker shaft from breaking.

18. Loosen the seven bolts securing the exhaust rocker shaft to the camshaft caps.
19. Using Rocker Arm Lifter / Spacer Exhaust (W470589074000) for the DD13 or Rocker Arm Lifter / Spacer Exhaust (W470589004000) for the DD15, remove the exhaust rocker shaft assembly. When removing the EPA10 exhaust rocker shaft, ensure the rockers are in the up position.

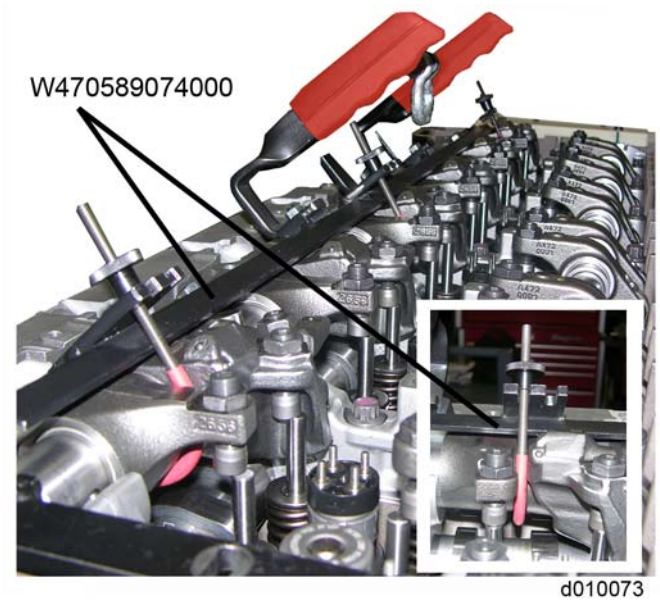

NOTE:
The engine brake solenoids do not have to be removed unless damaged.

NOTE:
Mark cap position for proper reassembly.

All information subject to change without notice.
DDC-SVC-MAN-0081 2010 Copyright © 2010 DETROIT DIESEL CORPORATION

https://truckmanualshub.com/

20. Remove the remaining bolts (1) from the camshaft bearing caps (2).

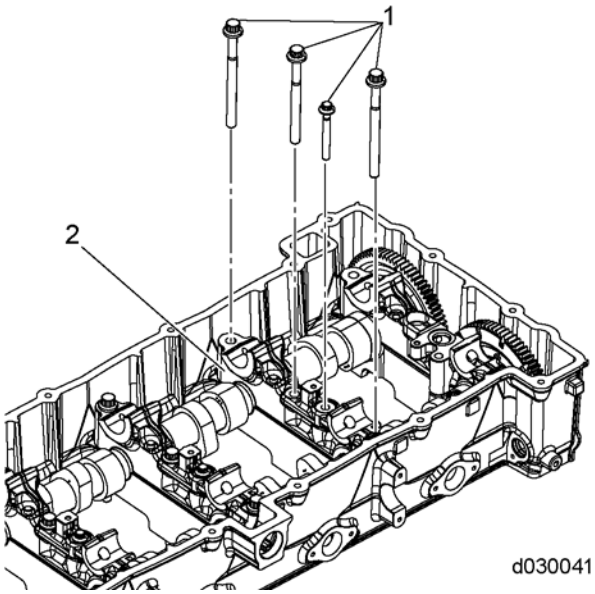

21. Using tool Cam Bearing Cap Puller (J-48883) and Injector Unit Pump Puller (J-46375), remove the camshaft bearing caps (1) from the camshaft housing.

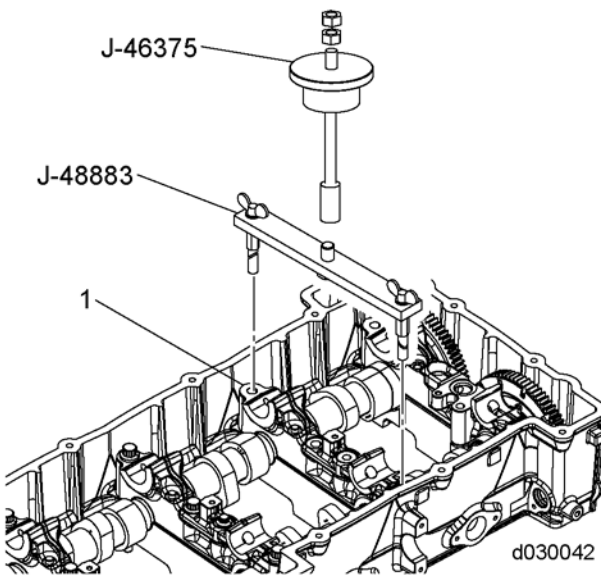

 Copyright © 2010 DETROIT DIESEL CORPORATION

https://truckmanualshub.com/

22. Remove the intake and exhaust camshaft assemblies (1 & 2) from the camshaft housing (3). Use care not to damage intake cam tone wheel when handling.

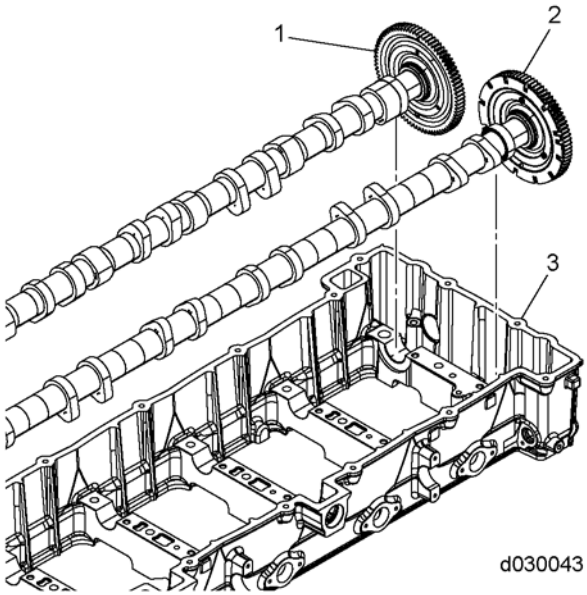

All information subject to change without notice.
DDC-SVC-MAN-0081 2010 Copyright © 2010 DETROIT DIESEL CORPORATION

https://truckmanualshub.com/

2.3 INSPECTION OF THE CAMSHAFT AND ROCKER SHAFT/ENGINE BRAKE ASSEMBLY

Inspect the camshaft and rocker shaft assemblies as follows:

1. Inspect the camshafts for lobe damage; replace if necessary.
2. Inspect the camshaft gears for damage; replace if necessary.
3. Inspect the rocker shaft for scoring or scuffing; replace if necessary.
4. Inspect rocker arms for roller and bushing damage; replace if necessary.
5. Inspect adjusting screws and buttons; replace if necessary.
6. Inspect cam caps and cam journals in camshaft housing for damage; replace if necessary.
7. Inspect the tone wheel on the intake camshaft for cracks, bending or any damage. If damage is found, replace the intake camshaft.

 Copyright © 2010 DETROIT DIESEL CORPORATION

https://truckmanualshub.com/

2.4 INSTALLATION OF THE CAMSHAFT AND ROCKER SHAFT/ENGINE BRAKE ASSEMBLY

Install as follows:

1. Verify that the crankshaft is at top dead center (TDC) on cylinder number one using TDC Locating Pin (W470589001500) installed in crankshaft position sensor (CKP) hole located in the flywheel housing.

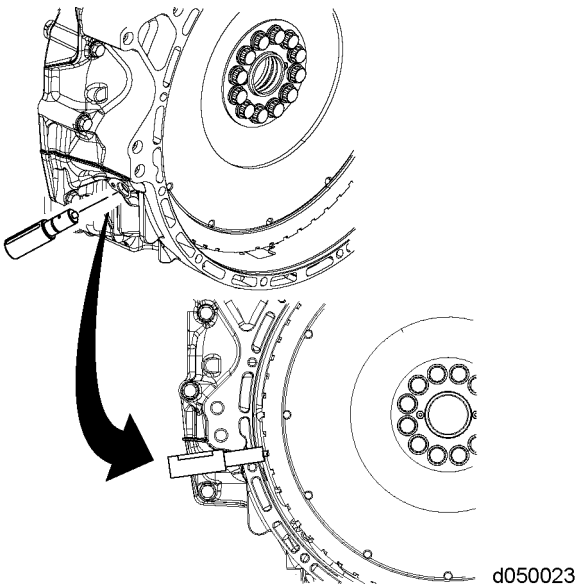

2. Install Camshaft Timing Tool (W470589054000) (1) for EPA07 DD15, (W470589104000) for EPA10 DD15, and (W470589034000) for EPA10 DD13 to the rear of the camshaft housing. Tighten the two bolts.

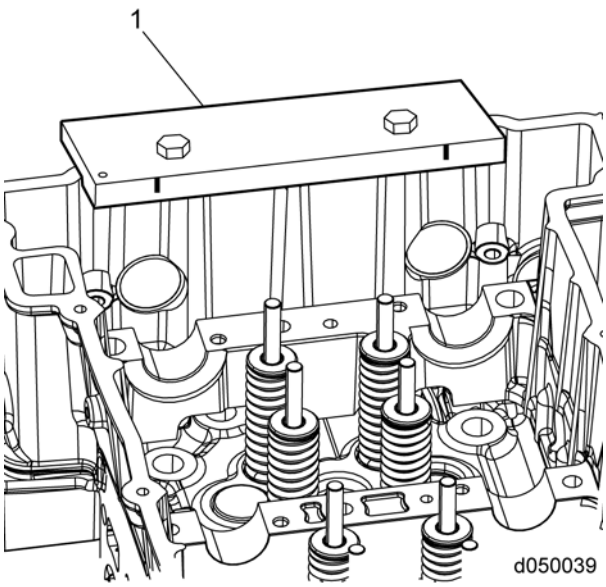

All information subject to change without notice.
DDC-SVC-MAN-0081 2010 Copyright © 2010 DETROIT DIESEL CORPORATION

https://truckmanualshub.com/

3. Locate the etched triangle on the camshaft gear teeth and mark the teeth with a paint pen.
4. Lubricate the lower camshaft bearing surfaces and camshaft journals before installing the camshafts. Install the exhaust and intake camshaft gear assemblies into the camshaft housing.
5. Align the marked gear teeth with the marks on the timing tool.

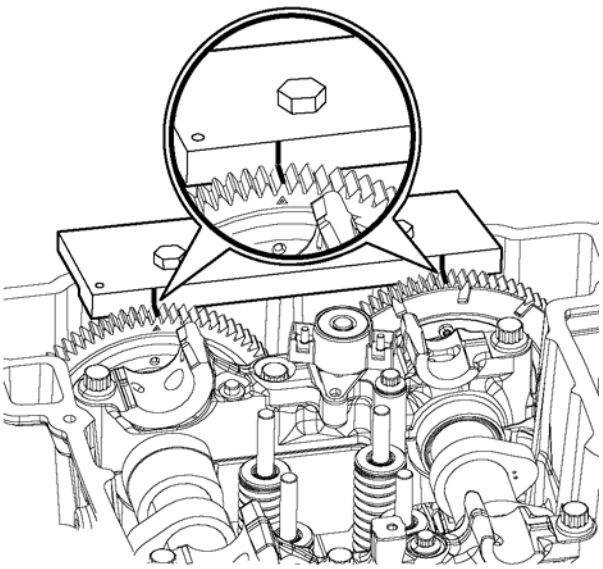

6. Install Camshaft Timing Tool (W470589054000) (1) for EPA07 DD15, (W470589104000) for EPA10 DD15, and (W470589034000) for EPA10 DD13 to the front of the camshaft housing and into the grooves cut into the camshafts. Secure timing tool to the camshaft with a bolt.
   [a] At this point the front timing tool should slide into the camshaft grooves easily with no drag.

 Copyright © 2010 DETROIT DIESEL CORPORATION

https://truckmanualshub.com/

[b] If there is excessive drag when installing the tool, the camshafts are out of time. If so, repeat this procedure at Step 3.

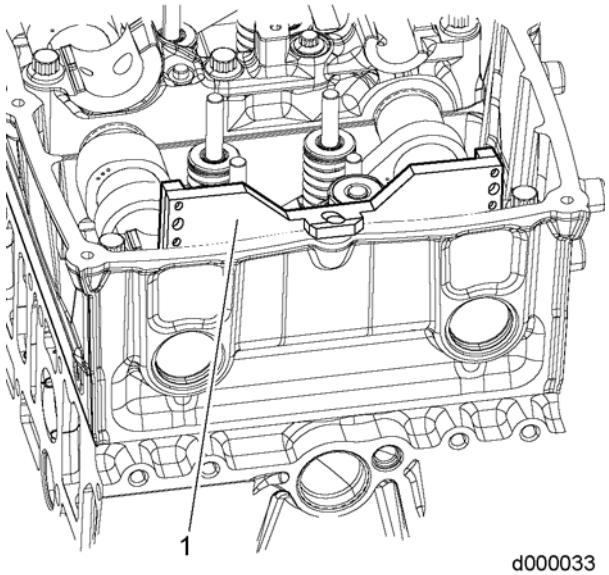

7. Verify that the marks on the gear teeth match the marks on the timing tool.

NOTICE
The camshaft caps are numbered and need to be installed correctly.

8. Install the seven camshaft caps onto intake and exhaust camshafts.
9. The first and seventh camshaft caps hold the engine brake solenoid to camshaft cap. Replace the O-rings on the solenoid prior to reinstallation. Install the engine brake solenoid.

NOTE:
There are 30 bolts retaining the DD13 camshaft assemblies (shown); 14 120 mm (M10) bolts, seven 108 mm (M10) bolts and nine 63 mm (M8) bolts. The DD15 uses 28 bolts, with two external bolts at the rear of the camshaft housing.

All information subject to change without notice.
DDC-SVC-MAN-0081 2010 Copyright © 2010 DETROIT DIESEL CORPORATION

https://truckmanualshub.com/

10. Install the 30 bolts to camshaft caps; finger tighten the bolts. Refer to figure for proper bolt placement.

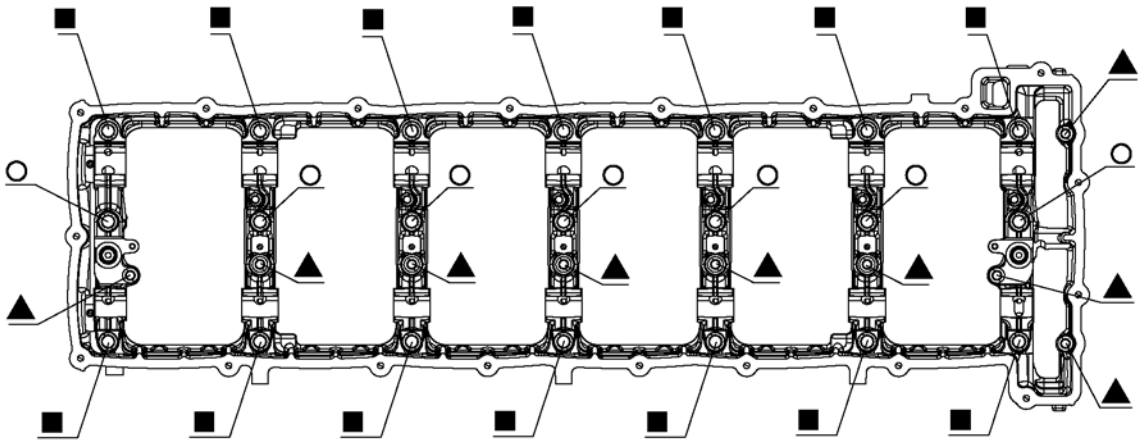

■ 120 mm (14 QTY.)
○ 108 mm (7 QTY.)
▲ 63 mm (9 QTY.)

d010085

11. Using the torque sequence shown below torque the M10 camshaft cap bolts to the following:
    - □ 20 N·m (15 lb·ft)
    - □ Then torque to 50-55 N·m (37-40 lb·ft).

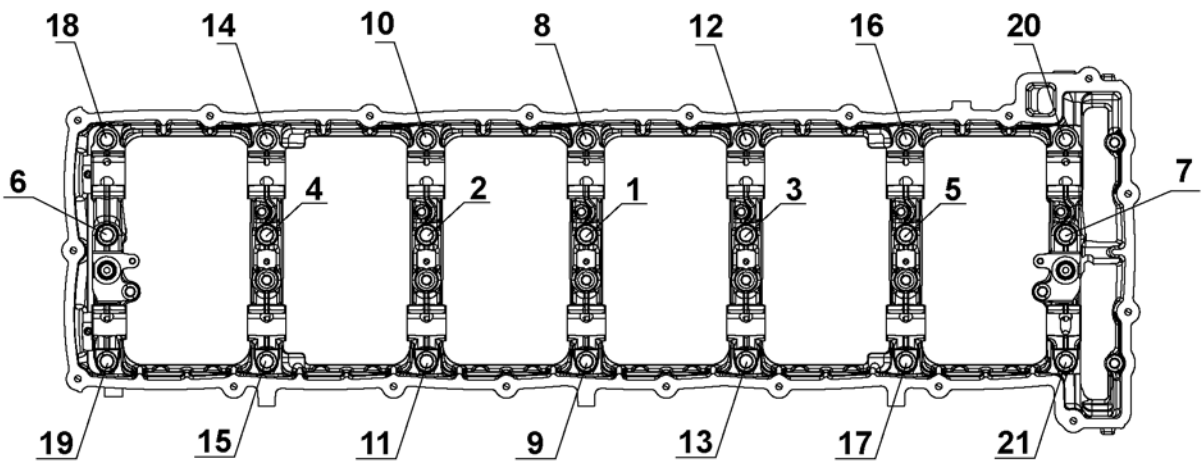

d010091

 Copyright © 2010 DETROIT DIESEL CORPORATION

https://truckmanualshub.com/

12. Using the torque sequence shown below, torque the nine 63 mm M8 bolts to 30 N·m (22 lb·ft).

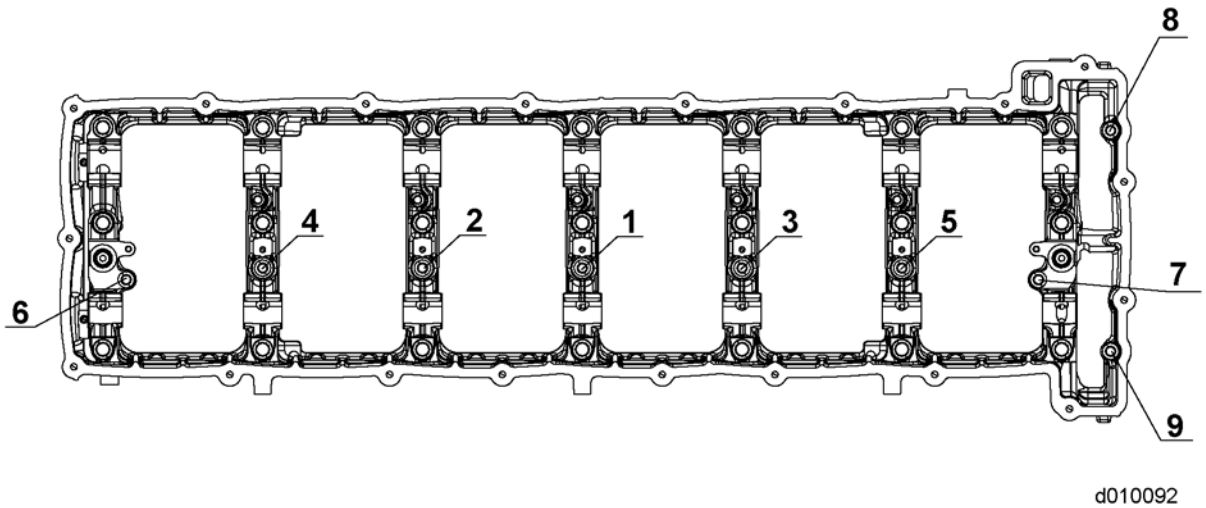

13. Remove TDC Locating Pin (W470589001500) from CKP sensor hole in the flywheel housing.
14. Install crankshaft position sensor. Refer to section .
15. Install a dial indicator onto gear case and zero out the dial indicator.
16. Position the stem of dial indicator to rest between the teeth on the camshaft gear.
17. Hold the number five idler gear with a screwdriver. Check the lash between the camshaft gear and idler gear number five.

All information subject to change without notice.
DDC-SVC-MAN-0081 2010 Copyright © 2010 DETROIT DIESEL CORPORATION

https://truckmanualshub.com/

18. The dial indicator should read 0.051 - 0.257 mm (0.002 - 0.010 in). If the gear lash is excessive between either camshaft gear and the number five idler gear, inspect the number five idler gear spindle, camshaft gear and camshaft housing. Repair as necessary.

NOTICE:
The camshaft journal area is lubricated by oil that has to travel through the rocker shaft. If the rocker shaft is installed incorrectly, oil passages do not line up. This results in insufficient lubrication and damage to the camshaft journals. Incorrect shaft installation may also result in the engine brakes not functioning and cause damage to the rocker arm bushings.

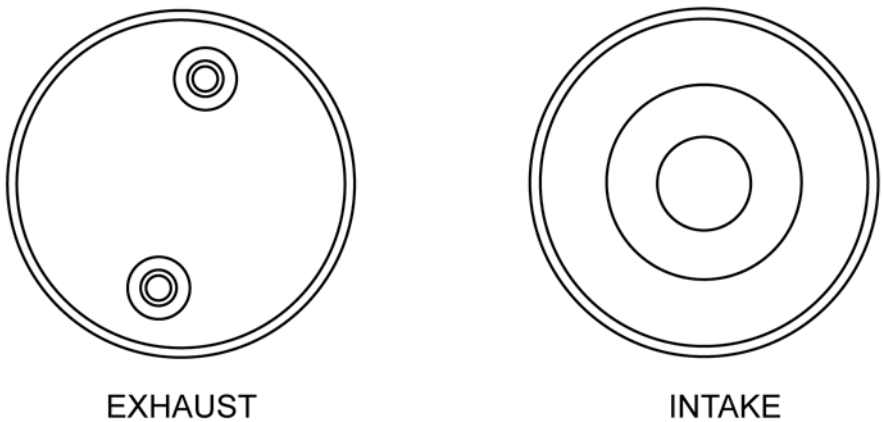

d030046

 Copyright © 2010 DETROIT DIESEL CORPORATION

https://truckmanualshub.com/

NOTICE:
The markings on the front of the rockers shafts **must** face the front of the engine for proper rocker arm lubrication and engine brake operation.

NOTICE:
Ensure when tightening the rocker shaft bolts that the bolts are drawn down from the inside bolts outward in 1/2 turn increments, before final torque. If the rocker shaft bolt is fully torqued without using the increment procedure the rocker shaft can break.

NOTE:
On EPA10 engines the intake and exhaust rocker shafts are marked "TOP FRONT" and “TOP REAR.” Top front must face towards the front of the engine.

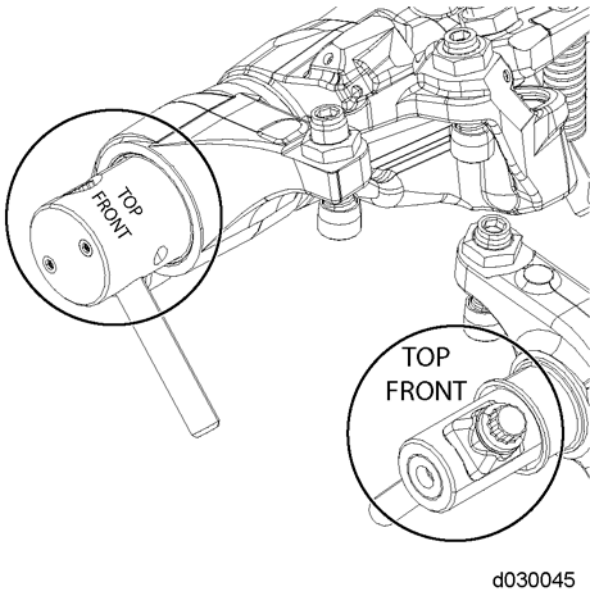

19. Remove timing tools.

All information subject to change without notice.
DDC-SVC-MAN-0081 2010 Copyright © 2010 DETROIT DIESEL CORPORATION

https://truckmanualshub.com/

20. Using Rocker Arm Lifter / Spacer Intake (W470589044000) (1) for the DD13 or Rocker Arm Lifter / Spacer Intake (W470589004000) for the DD15, install the intake rocker shaft assembly to the camshaft cap and secure with seven clamping blocks and bolts.

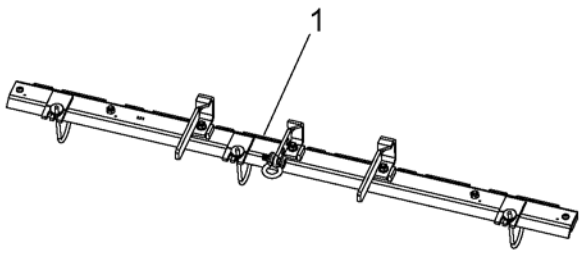

d050030

21. Using the torque sequence shown below, torque the bolts to 50-55 N·m (36-41 lb·ft) +90°.

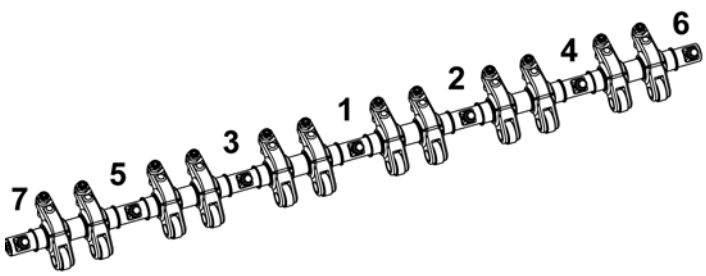

d050028a

 Copyright © 2010 DETROIT DIESEL CORPORATION

https://truckmanualshub.com/

22. Using Rocker Arm Lifter / Spacer (W4705589074000) for the DD13 or Rocker Arm Lifter / Spacer Intake (W470589004000) for the DD15, install the exhaust rocker shaft assembly to the camshaft cap and secure with seven clamping blocks and bolts.

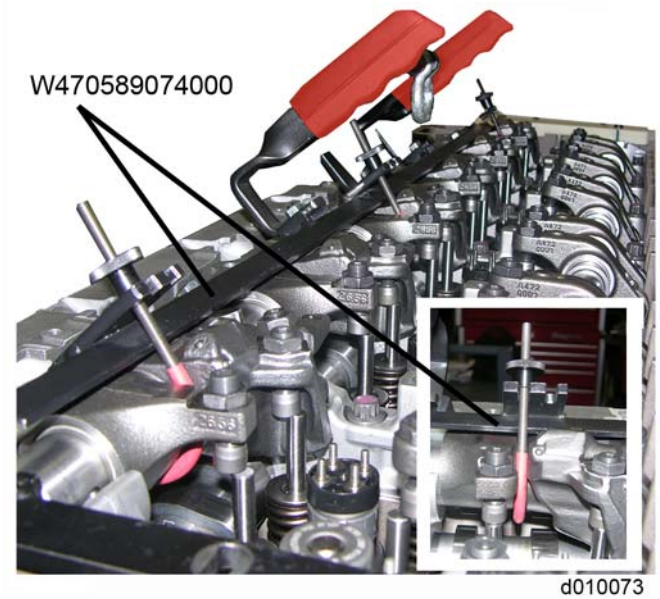

23. Using the torque sequence shown below, torque the bolts to 50-55 N·m (36-41 lb·ft) +90°.

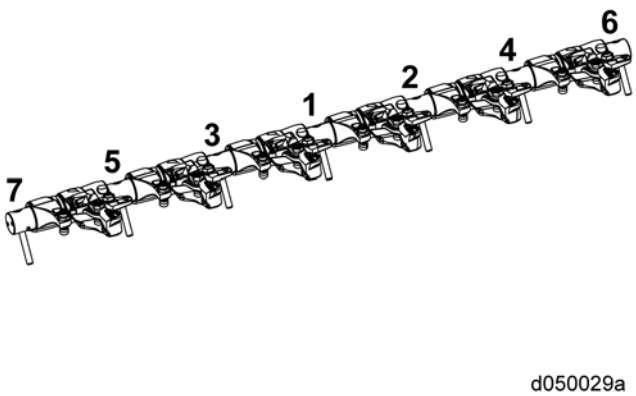

24. Remove timing tools.
25. Install the fuel injectors, if removed. Refer to section .
26. Lash the valves and engine brakes. Refer to section 14.15.
27. Install the fuel injector wiring harness. Refer to section .
28. Install the rocker cover. Refer to section 1.4.
29. Reconnect the battery power to the engine. Refer to OEM procedures.

All information subject to change without notice.
DDC-SVC-MAN-0081 2010 Copyright © 2010 DETROIT DIESEL CORPORATION

https://truckmanualshub.com/

30. Install air cleaner housing. Refer to OEM procedures.
31. Install the turbocharger inlet pipe and hose, and air cleaner. Refer to OEM procedures.
32. Prime lubrication system. Refer to section 27.1.

 Copyright © 2010 DETROIT DIESEL CORPORATION

https://truckmanualshub.com/

2.5 DD13 EGR COOLER CLEANING PROCEDURE TO REMOVE EXCESS FUEL FROM COOLER AFTER ENGINE BRAKE SOLENOID FAILURE

Inspect as follows:

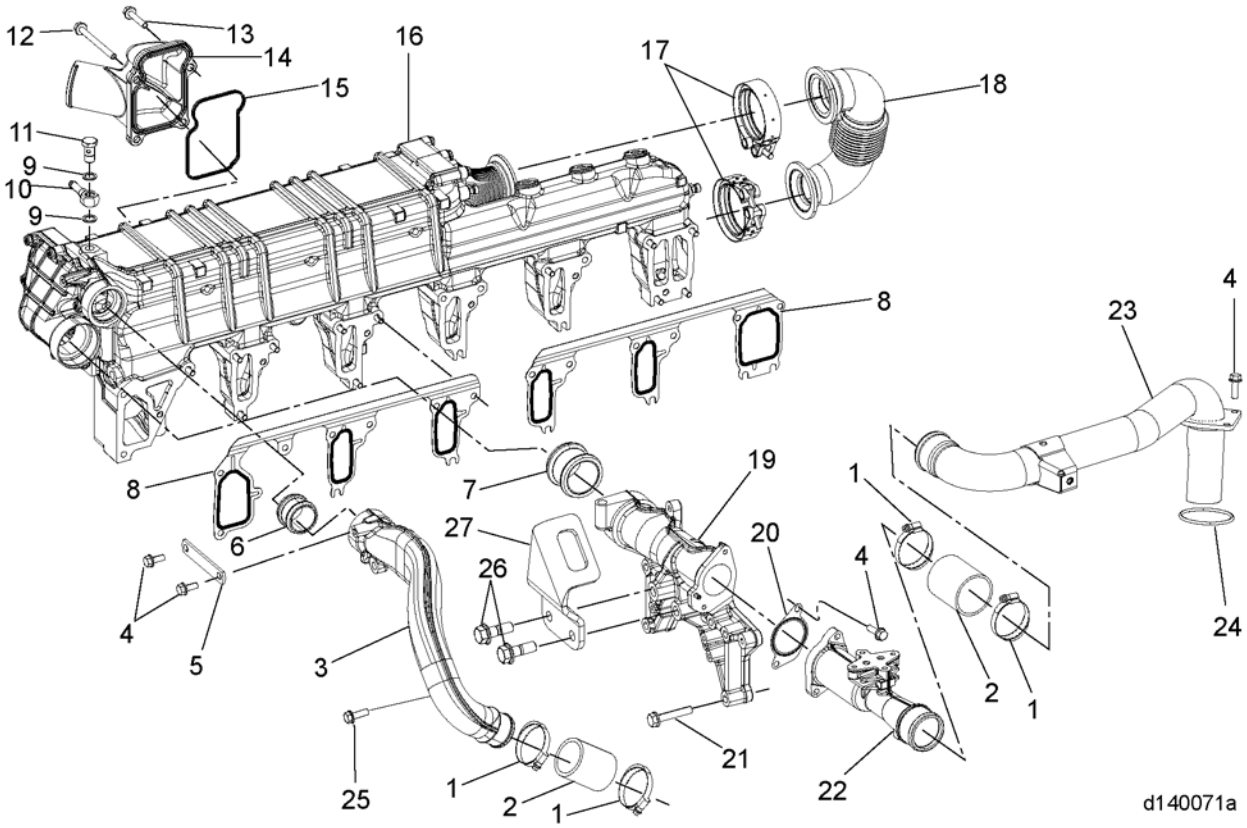

1. Clamp	10. Banjo Union	19. Exhaust Gas Crossover Tube
2. Hose	11. Banjo Bolt	20. Gasket
3. Coolant Crossover Pipe	12. Bolt	21. Bolt
4. Bolt	13. Bolt	22. Venturi
5. Support	14. Outlet Nipple	23. Mixer Pipe
6. Coolant Connecting Tube	15. Seal	24. Seal Ring
7. Exhaust Gas Connecting Tube	16. Exhaust Gas Recirculation Cooler Water Manifold Assembly	25. Bolt
8. Gasket	17. Clamps	26. Lifting Bracket Mounting Bolt
9. Seal Ring	18. Hot Pipe	27. Front Lifting Bracket

Figure 2-4 EPA10 DD13 EGR Cooler Water Manifold and Related Parts

All information subject to change without notice.
DDC-SVC-MAN-0081 2010 Copyright © 2010 DETROIT DIESEL CORPORATION

https://truckmanualshub.com/

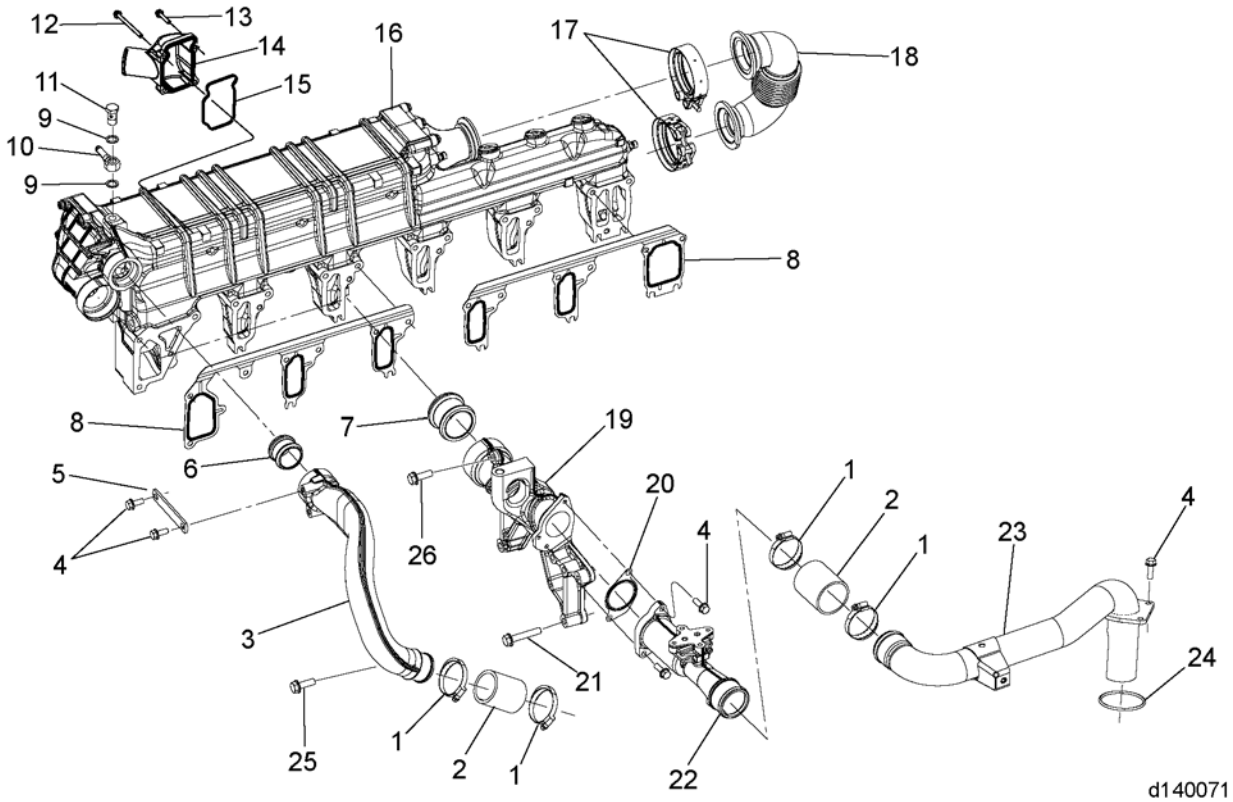

1. Clamp	10. Banjo Union	19. Exhaust Gas Crossover Tube / Lifting Eye
2. Hose	11. Banjo Bolt	20. Gasket
3. Coolant Crossover Pipe	12. Bolt	21. Bolt
4. Bolt	13. Bolt	22. Venturi
5. Support	14. Outlet Nipple	23. Mixer Pipe
6. Coolant Connecting Tube	15. Seal	24. Seal Ring
7. Exhaust Gas Connecting Tube	16. Exhaust Gas Recirculation Cooler Water Manifold Assembly	25. Bolt
8. Gasket	17. Clamps	26. Bolt
9. Seal Ring	18. Hot Pipe	

Figure 2-5 EPA10 DD13 EGR Cooler Water Manifold and Related Parts

 Copyright © 2010 DETROIT DIESEL CORPORATION

https://truckmanualshub.com/

Check as follows:

NOTICE:
This procedure must be followed after replacing an engine brake solenoid due to any failure that could cause high DOC temperature codes, excessive fuel, oil, or coolant to enter the exhaust system. Failure to perform this procedure could cause severe engine damage.

1. Remove the marmon clamps (2) and EGR hot pipe (3) and inspect for any signs of liquid or moisture. The EGR hot pipe (exhaust pipe) and EGR cooler inlet (1) should have a black dry soot residue inside.
   [a] If liquid or moisture is present in the pipe, go to the next step.
   [b] If there is no sign of liquid or moisture in the pipe or EGR cooler (1), install the hot pipe. No further action is required.

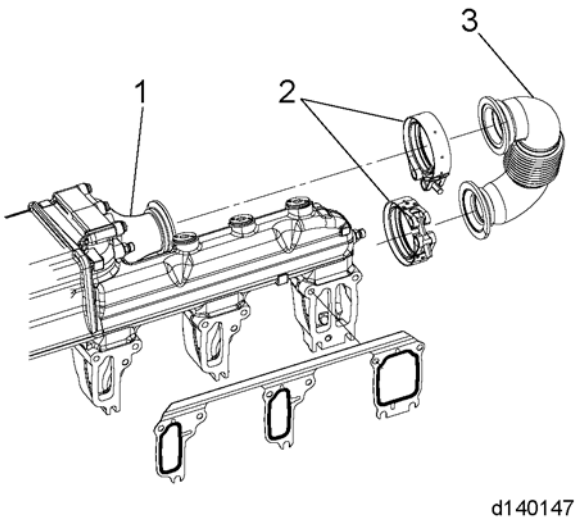

All information subject to change without notice.
DDC-SVC-MAN-0081 2010 Copyright © 2010 DETROIT DIESEL CORPORATION

https://truckmanualshub.com/

2. Remove the mixer pipe (1) from the cold boost pipe (2).

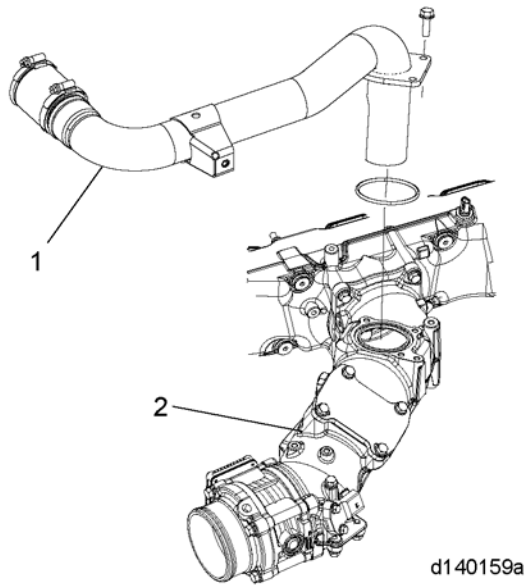

3. Remove the exhaust gas crossover tube / lifting eye (2) and venturi (6).

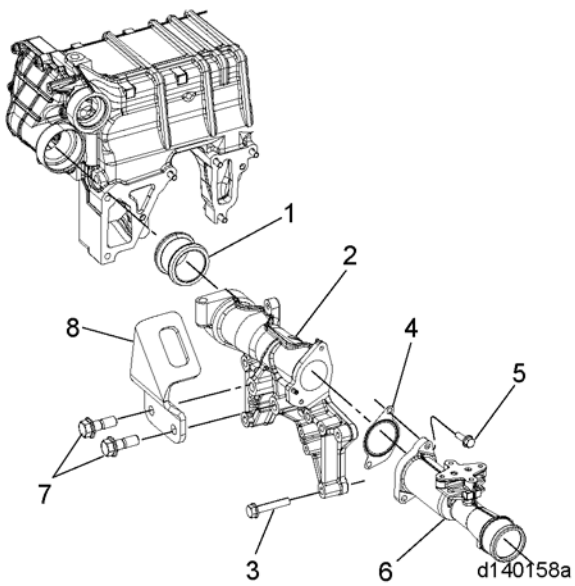

4. Place a towel over the outlet of the EGR cooler and retain it with a zip tie.

 Copyright © 2010 DETROIT DIESEL CORPORATION

https://truckmanualshub.com/

CAUTION:

To avoid injury from flying debris when using compressed air, wear adequate eye protection (face shield or safety goggles) and do not exceed 40 psi (276 kPa) air pressure.

5. Using a rubber tipped blow gun, blow compressed shop air into the individual tubes in the EGR cooler to clear any excess fuel, soot, and carbon.
6. After performing the cleaning procedure, refer to section to install the:
   [a] mixer pipe.
   [b] exhaust gas crossover tube/lifting eye (EPA07 engines) and exhaust gas crossover tube (EPA10 engines).
   [c] venturi.
7. If the cooler has an excessive amount of buildup that cannot be removed, replace the EGR cooler. Refer to section .

All information subject to change without notice.
DDC-SVC-MAN-0081 2010 Copyright © 2010 DETROIT DIESEL CORPORATION

https://truckmanualshub.com/

2.6 DD15 EGR COOLER CLEANING PROCEDURE TO REMOVE EXCESS FUEL FROM COOLER AFTER ENGINE BRAKE SOLENOID FAILURE

Inspect as follows:

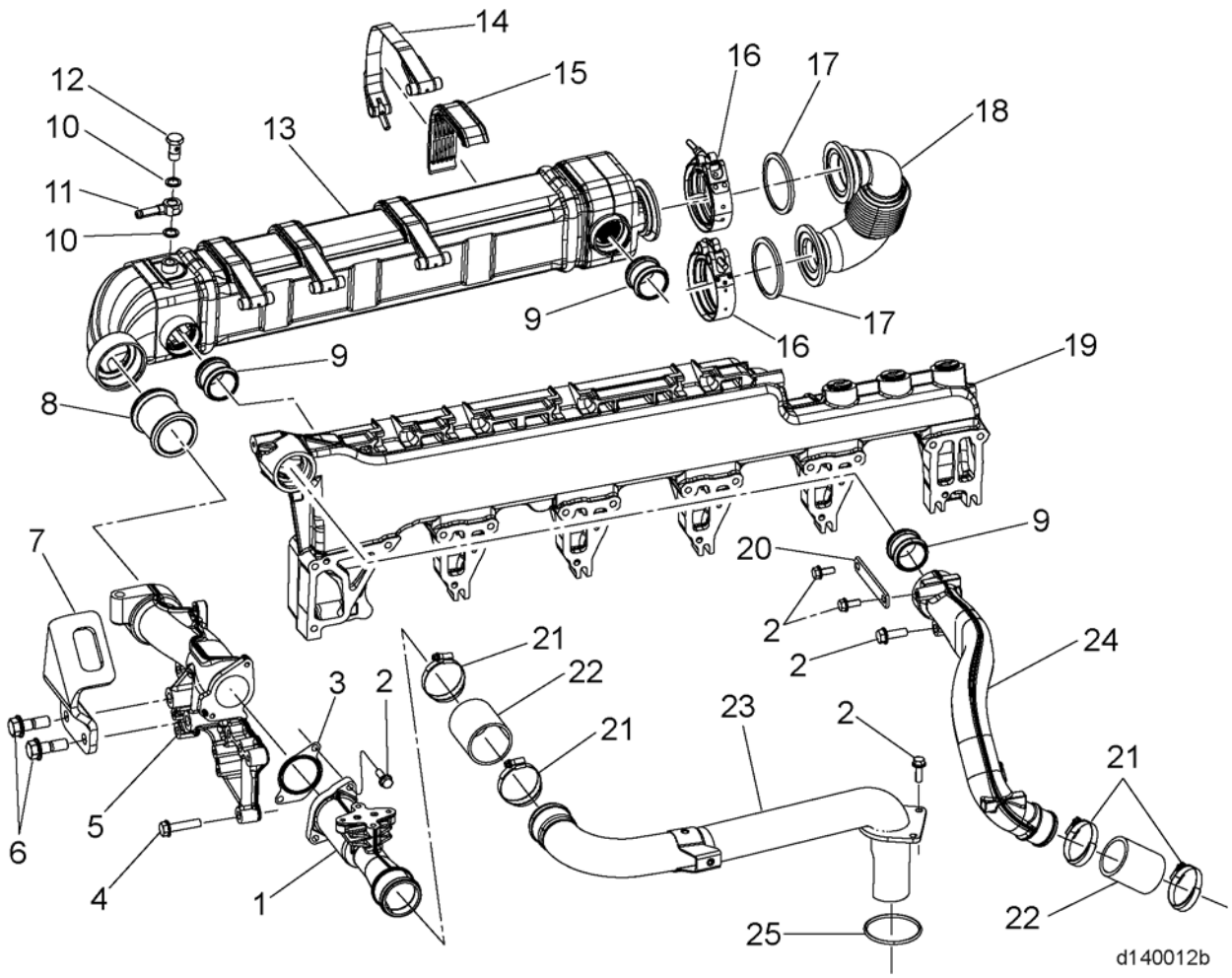

1. Venturi
2. Bolt
3. Gasket
4. Bolt
5. Exhaust Gas Crossover Tube
6. Bolt
7. Lifting Bracket
8. Connecting Tube
9. Connecting Tube
10. Seal Ring
11. Banjo Union
12. Banjo Bolt
13. Exhaust Gas Cooler
14. Strap
15. Shim
16. Clamp
17. Metal Seal
18. Hot Pipe
19. Water Manifold
20. Support
21. Clamp
22. Hose
23. Mixer Pipe
24. Coolant Delivery Pipe
25. Seal Ring

Figure 2-6 EPA10 DD15 EGR Cooler and Related Parts

 Copyright © 2010 DETROIT DIESEL CORPORATION

https://truckmanualshub.com/

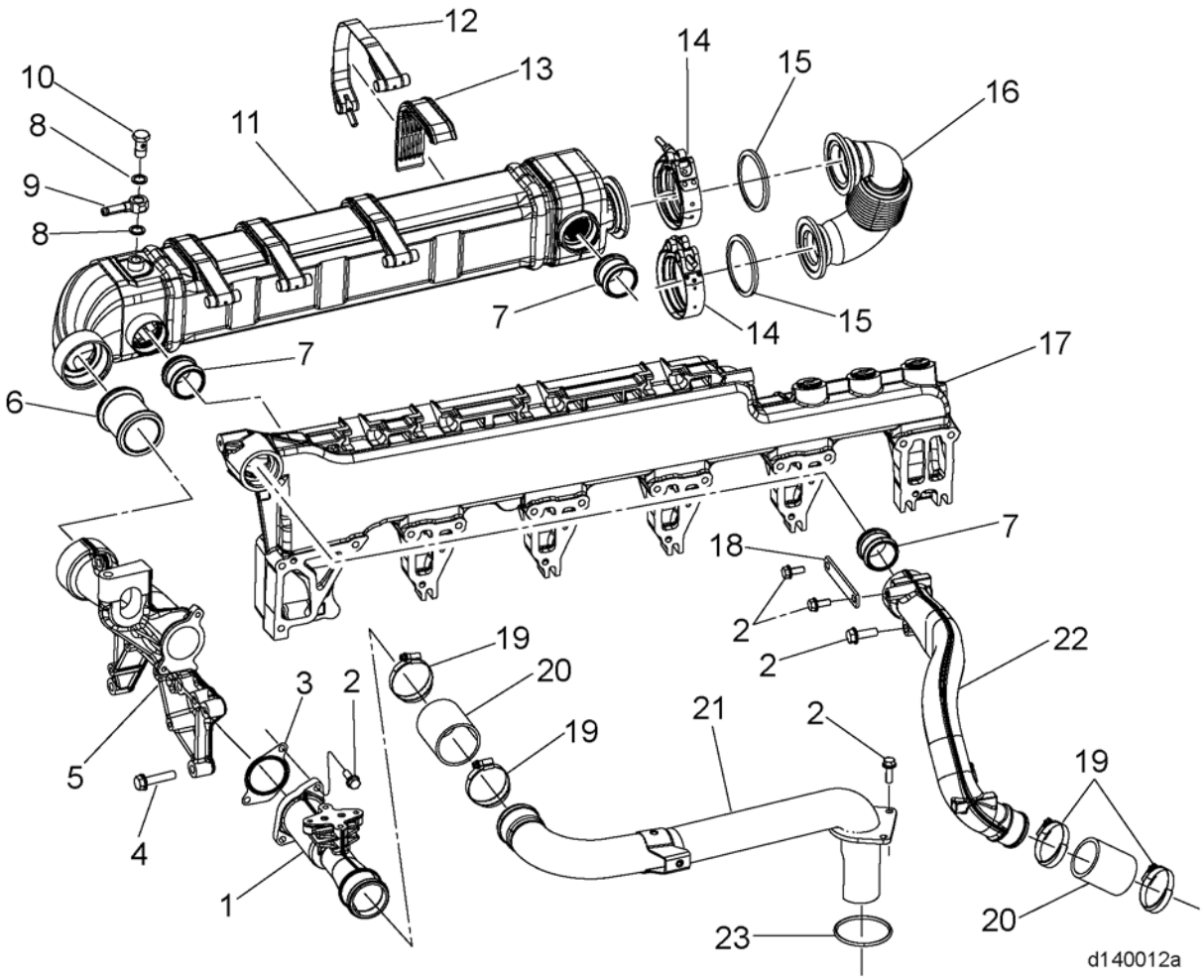

1. Venturi
2. Bolt
3. Gasket
4. Bolt
5. Exhaust Gas Crossover Tube/Lifting Eye
6. Connecting Tube
7. Connecting Tube
8. Seal Ring
9. Banjo Union
10. Banjo Bolt
11. Exhaust Gas Cooler
12. Strap
13. Shim
14. Clamp
15. Metal Seal
16. Hot Pipe
17. Water Manifold
18. Support
19. Clamp
20. Hose
21. Mixer Pipe
22. Coolant Delivery Pipe
23. Seal Ring

Figure 2-7 EPA07 DD15 EGR Cooler and Related Parts

All information subject to change without notice.
DDC-SVC-MAN-0081 2010 Copyright © 2010 DETROIT DIESEL CORPORATION

https://truckmanualshub.com/

Check as follows:

NOTICE:
This procedure must be followed after replacing an engine brake solenoid due to any failure that could cause high DOC temperature codes, excessive fuel, oil, or coolant to enter the exhaust system. Failure to perform this procedure could cause severe engine damage.

1. Remove the clamps (2), exhaust pipe (4) and gaskets (3) from the EGR cooler (1) and inspect and inspect for any signs of liquid or moisture. The EGR hot pipe and EGR cooler inlet should have a black dry soot residue inside.
   [a] If liquid or moisture is present in the pipe, go to the next step.
   [b] If there is no sign of liquid or moisture in the pipe, install the EGR cooler hot pipe. No further action is required. Refer to section .

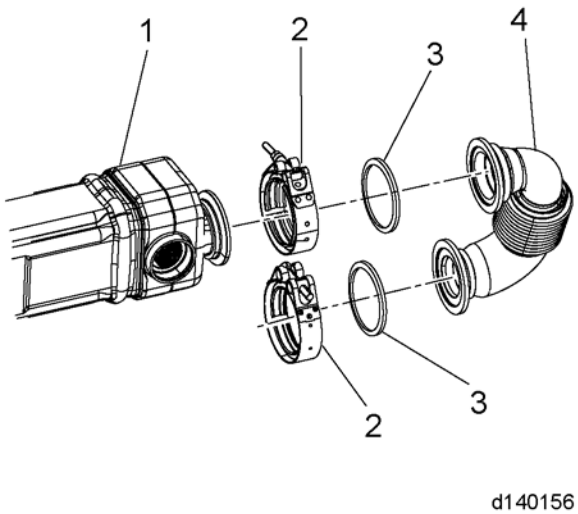

 Copyright © 2010 DETROIT DIESEL CORPORATION

https://truckmanualshub.com/

2. Remove the mixer pipe (4) from the cold boost pipe (1). Refer to section .

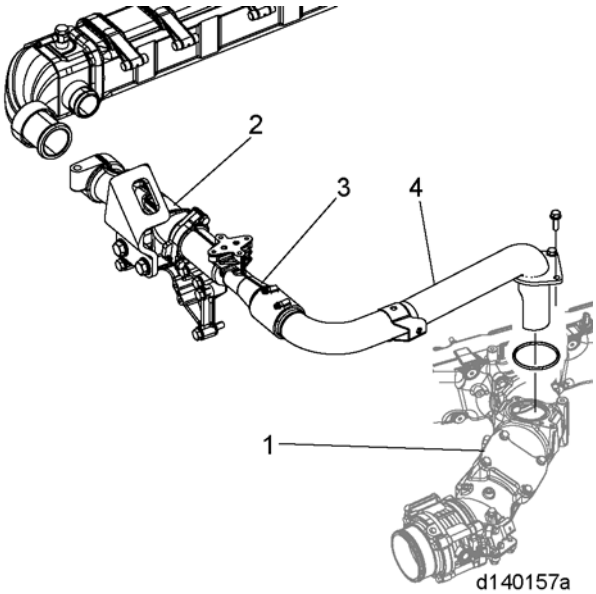

3. Remove the exhaust gas crossover tube/lifting eye (2) and venturi (3).
4. Place a towel over the outlet of the EGR cooler and retain it with a zip tie.

CAUTION:

To avoid injury from flying debris when using compressed air, wear adequate eye protection (face shield or safety goggles) and do not exceed 40 psi (276 kPa) air pressure.

5. Using a rubber tipped blow gun blow compressed shop air into the individual tubes in the EGR cooler to clear any excess fuel, soot, and carbon.
6. After performing the cleaning procedure, refer to section to install the:
   [a] mixer pipe.
   [b] exhaust gas crossover tube/lifting eye (EPA07 engines) and exhaust gas crossover tube (EPA10 engines).
   [c] venturi.
7. If the cooler has an excessive amount of buildup that cannot be removed, replace the EGR cooler. Refer to section .

All information subject to change without notice.
DDC-SVC-MAN-0081 2010 Copyright © 2010 DETROIT DIESEL CORPORATION

https://truckmanualshub.com/

3 CAMSHAFT HOUSING

Section **Page**

3.1 REMOVAL OF THE CAMSHAFT HOUSING 3-3

3.2 INSPECTION OF CAMSHAFT HOUSING 3-8

3.3 INSTALLATION OF THE CAMSHAFT HOUSING 3-9

https://truckmanualshub.com/

All information subject to change without notice.
DDC-SVC-MAN-0081 2010 Copyright © 2010 DETROIT DIESEL CORPORATION

https://truckmanualshub.com/

3.1 REMOVAL OF THE CAMSHAFT HOUSING

The camshaft housing houses the camshafts and valve train. It has internal oil passages to supply oil from the block to the camshaft and rocker bearings along with pressurized oil to the engine brake rockers via the engine brake solenoids through the exhaust shaft. The camshaft housing is made of aluminium material.

Remove as follows:

1. Steam clean the engine.
2. Remove the rocker cover. Refer to section 1.2.
3. Disconnect the fuel injector harness (1) from the camshaft housing (2).

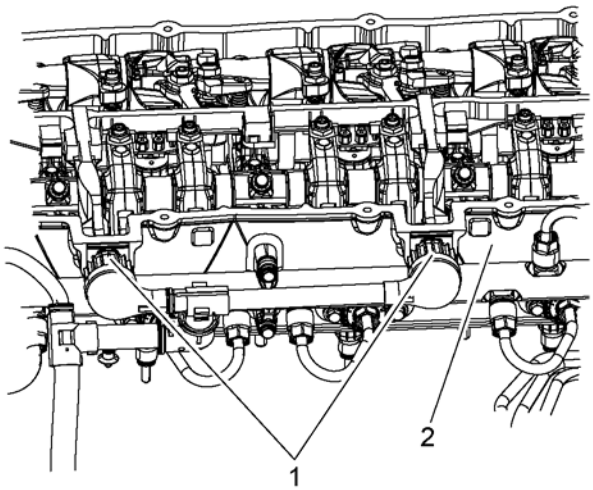

d540076

4. Remove the following high pressure fuel line components:

WARNING:

PERSONAL INJURY

To prevent the escape of high pressure fuel that can penetrate skin, ensure the engine has been shut down for a minimum of 10 minutes before servicing any component within the high pressure circuit. Residual high fuel pressure may be present within the circuit.

[a] High pressure fuel line bracket (1) and high pressure fuel lines from the fuel rail to the high pressure fuel pump (2). Refer to section .

[b] High pressure fuel lines from the fuel rail to the fuel injectors (3). Refer to section .

 Copyright © 2010 DETROIT DIESEL CORPORATION

https://truckmanualshub.com/

[c] Pressure Limiting Valve (PLV) return line from the fuel rail to the fuel filter module (4). Refer to section .

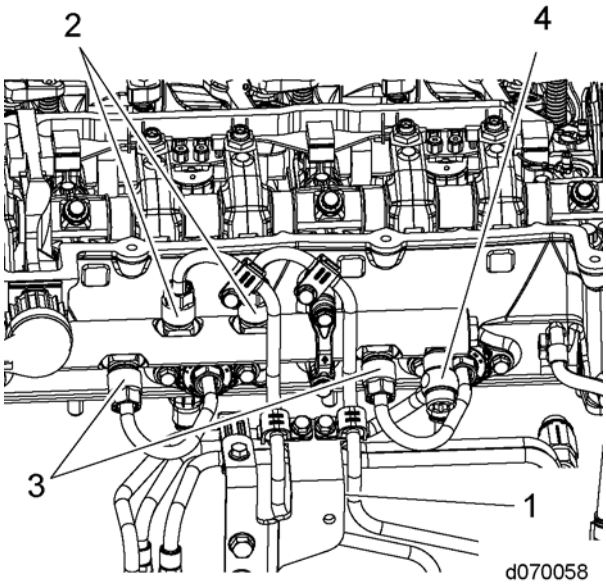

5. Remove the rocker shaft/engine brake and camshaft assemblies. Refer to section 2.2.
6. Disconnect the intake manifold temperature sensor (2).

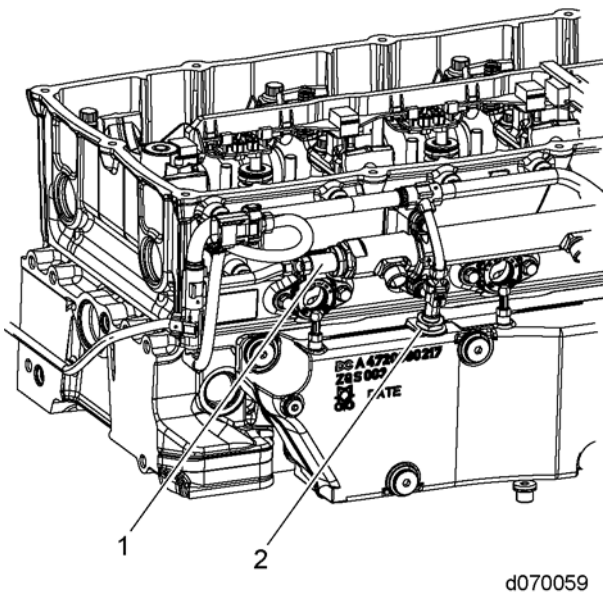

All information subject to change without notice.
DDC-SVC-MAN-0081 2010 Copyright © 2010 DETROIT DIESEL CORPORATION

https://truckmanualshub.com/

7. Disconnect the fuel rail pressure sensor (1).

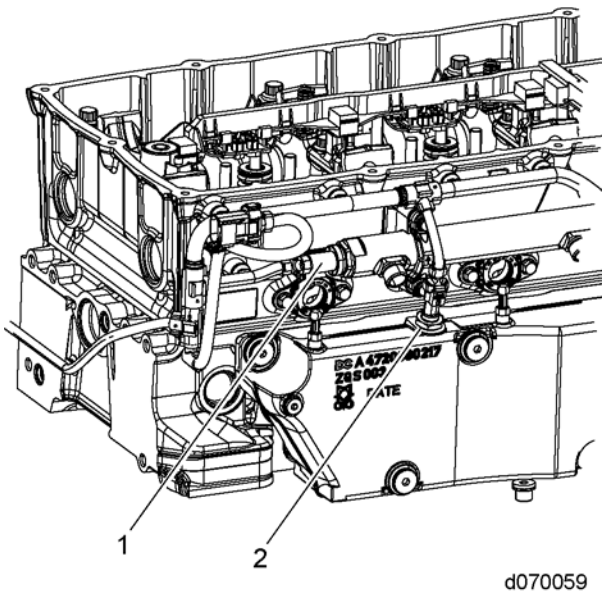

8. Disconnect the camshaft position sensor (1) from the camshaft housing (2).

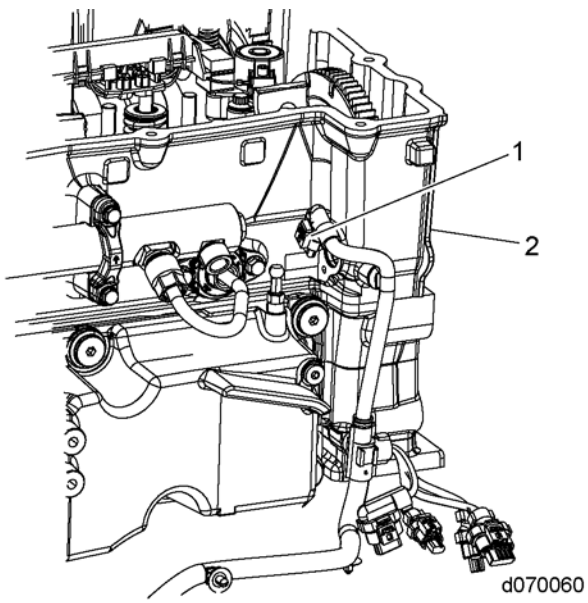

9. Unclip all of the electrical wiring harness attaching points from the camshaft housing.

 Copyright © 2010 DETROIT DIESEL CORPORATION

https://truckmanualshub.com/

10. Remove the bolt (2) securing the doser coolant line (1) and the P-clip to the camshaft housing (3).

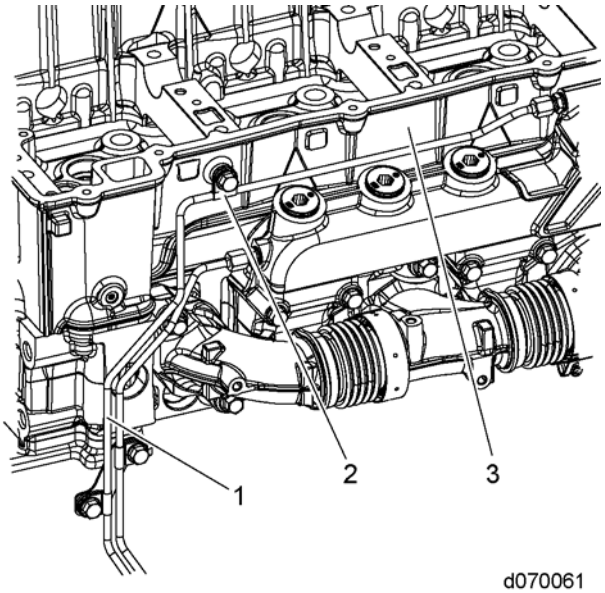

11. Remove the remaining two bolts (29 and 30) securing the camshaft housing to the cylinder head.

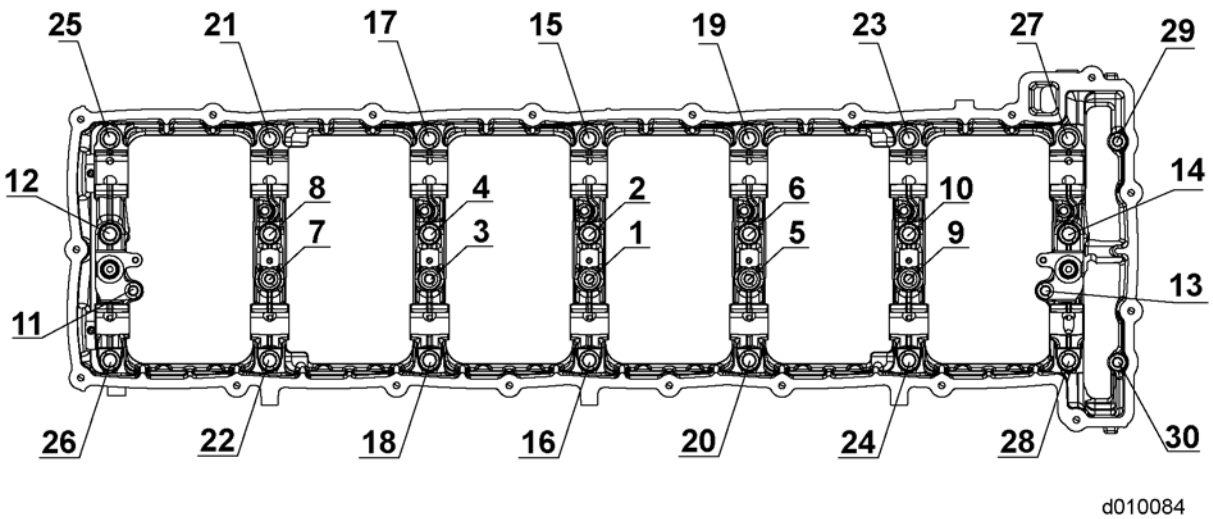

12. Attach a lifting device to the camshaft housing and lift the camshaft housing off of the cylinder head.

All information subject to change without notice.
DDC-SVC-MAN-0081 2010 Copyright © 2010 DETROIT DIESEL CORPORATION

https://truckmanualshub.com/

WARNING:

PERSONAL INJURY

To avoid injury when removing or installing a heavy engine component, ensure the component is properly supported and securely attached to an adequate lifting device to prevent the component from falling.

 Copyright © 2010 DETROIT DIESEL CORPORATION

https://truckmanualshub.com/

3.2 INSPECTION OF CAMSHAFT HOUSING

Inspect the camshaft housing as follows:

1. Inspect the camshaft journals for scoring or scratches, replace if damaged.
2. Inspect the camshaft caps for cracks, replace if damaged.
3. Inspect the camshaft housing for cracks and damage to the bolt hole threads in the housing, replace if damaged.
4. Inspect the camshaft housing sealing surfaces for damage. Inspect the following sealing surfaces for damage:
   [a] The camshaft housing to rocker cover.
   [b] The camshaft housing to cylinder head.
   [c] The O-ring seal on the injector harness.
   [d] The O-ring seal on the engine brake solenoids.
5. Inspect the rocker shaft installation surface located inside the camshaft housing for scoring or scratches.

All information subject to change without notice.
DDC-SVC-MAN-0081 2010 Copyright © 2010 DETROIT DIESEL CORPORATION

https://truckmanualshub.com/

3.3 INSTALLATION OF THE CAMSHAFT HOUSING

Install as follows:

1. Install a new seal into the camshaft housing.
2. Using an appropriate lifting device install camshaft housing onto the cylinder head.

WARNING:

PERSONAL INJURY

To avoid injury when removing or installing a heavy engine component, ensure the component is properly supported and securely attached to an adequate lifting device to prevent the component from falling.

3. Ensuring that no oil gets into the bearing cap dowel pin hole, lubricate the camshaft housing camshaft journals.
4. Install the camshaft assemblies into the camshaft housing. Refer to section 2.4.
5. Install the following high pressure fuel line components:
   [a] High pressure fuel line bracket (1), and high pressure fuel lines from fuel rail to high pressure fuel pump (2); refer to section .
   [b] High pressure fuel lines from fuel rail to fuel injectors (3); refer to section .
   [c] Fuel line from fuel rail to fuel filter module (4); refer to section .

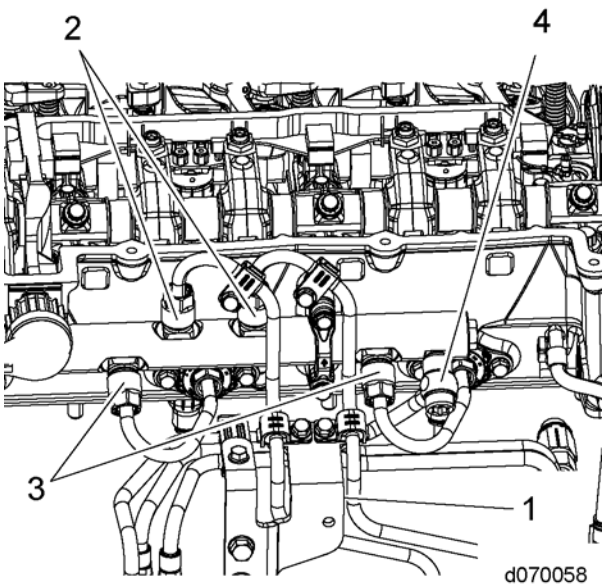

6. Install the rocker cover. Refer to section 1.4.
7. Prime the fuel system. Refer to section .

 Copyright © 2010 DETROIT DIESEL CORPORATION

https://truckmanualshub.com/

All information subject to change without notice.
DDC-SVC-MAN-0081 2010 Copyright © 2010 DETROIT DIESEL CORPORATION

https://truckmanualshub.com/

4 CAMSHAFT TIMING

Section **Page**

4.1 CAMSHAFT TIMING VERIFICATION 4-3
4.2 TIMING THE CAMSHAFTS WITH THE GEAR TRAIN INSTALLED 4-6

https://truckmanualshub.com/

All information subject to change without notice.
DDC-SVC-MAN-0081 2010 Copyright © 2010 DETROIT DIESEL CORPORATION

https://truckmanualshub.com/

4.1 CAMSHAFT TIMING VERIFICATION

Verify the camshaft timing as follows:

1. Remove the rocker cover. Refer to section 1.2.
2. Bar the engine to top dead center (TDC) with Engine Barring Tool (J-46392) (3) on cylinder No.1 with the No. 6 valve in overlap. The dot (2) that is located inside the flywheel tone ring is aligned with the edge of the pointer (1).

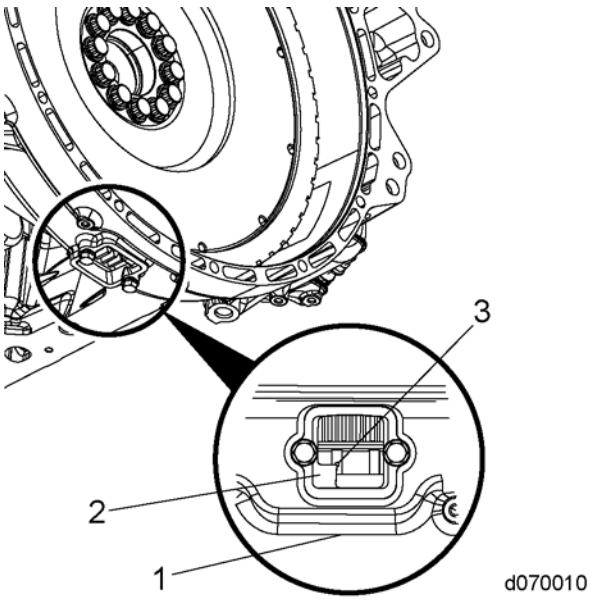

3. Locate the mark on the camshaft and mark the top of the corresponding gear tooth with a light colored paint pen.
4. Remove the Crankshaft Position Sensor (CKP) from the flywheel housing. Refer to section .

 Copyright © 2010 DETROIT DIESEL CORPORATION

https://truckmanualshub.com/

5. Install the flywheel TDC Locating Pin (W470589001500), through the crankshaft position sensor hole in the flywheel housing and engage into the flywheel notch.

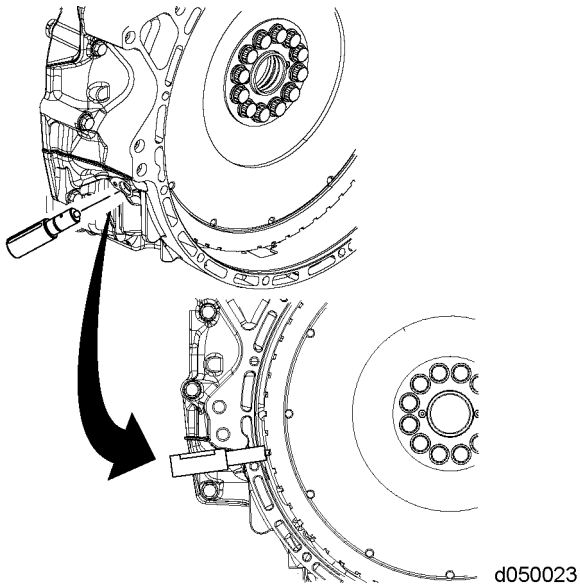

6. Install the rear Camshaft Timing Tool (W470589054000) for EPA07 DD15, (W470589104000) for EPA10 DD15, and (W470589034000) for DD13 (1) onto the camshaft housing.

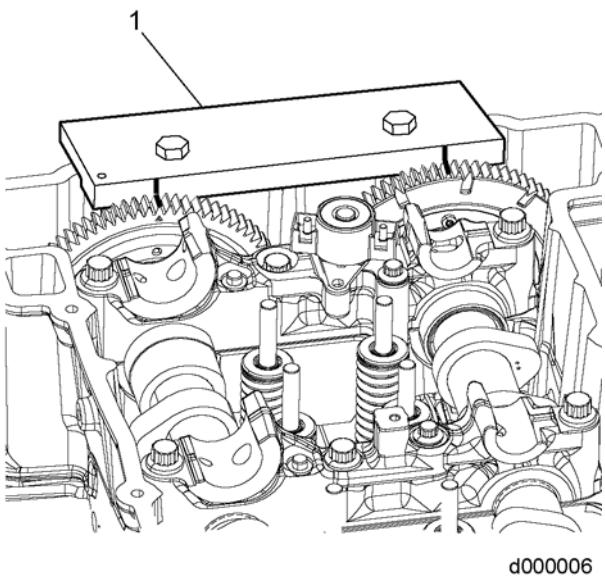

All information subject to change without notice.
DDC-SVC-MAN-0081 2010 Copyright © 2010 DETROIT DIESEL CORPORATION

https://truckmanualshub.com/

7. Install the rear Camshaft Timing Tool (W470589054000) for EPA07 DD15, (W470589104000) for EPA10 DD15, and (W470589034000) for DD13 (1) into the grooves cut into the cams and pin it into the camshaft housing with a bolt.

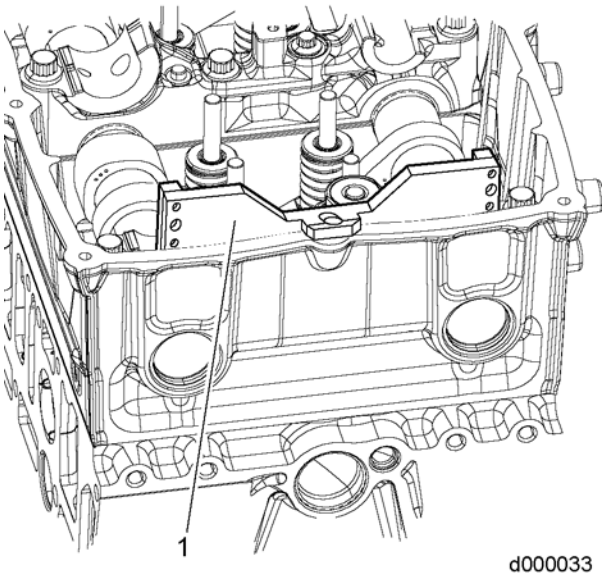

8. Verify that the marks on the gear teeth match the marks on the timing tool. If the marks do not match, research the root cause of incorrect camshaft timing.

 Copyright © 2010 DETROIT DIESEL CORPORATION

https://truckmanualshub.com/

4.2 TIMING THE CAMSHAFTS WITH THE GEAR TRAIN INSTALLED

Time as follows:

1. Bar the crankshaft over to TDC cylinder No. 1 and lock with W470589001500 through the crankshaft position sensor hole.
2. Install the rear Camshaft Timing Tool (W470589054000) for EPA07 DD15, (W470589104000) for EPA10 DD15, and (W470589034000) for DD13 (1) onto the rear of the camshaft housing.

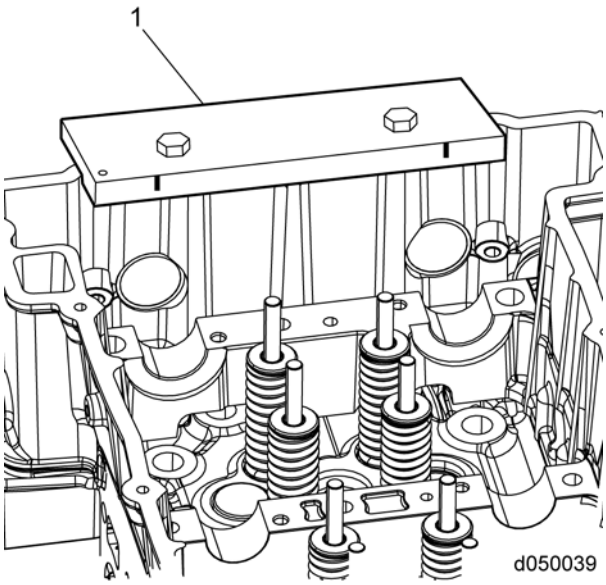

3. Locate the mark on the camshafts and mark the top of the corresponding gear tooth with a light colored paint pin.
4. Lubricate the camshafts and camshaft housing journals with clean engine oil.

NOTE:
The intake camshaft has the tone wheel and must be installed on the intake side of the engine.

5. Install the camshafts into the camshaft housing in their respective locations lining up the marked cam gear teeth with the mark on the timing plate.
6. Install the rear Camshaft Timing Tool (W470589054000) for EPA07 DD15, (W470589104000) for EPA10 DD15, and (W470589034000) for DD13 (1) into the grooves cut into the camshafts to verify correct cam timing. Any resistance felt while

All information subject to change without notice.
DDC-SVC-MAN-0081 2010 Copyright © 2010 DETROIT DIESEL CORPORATION

https://truckmanualshub.com/

installing or removing could indicate the camshafts being out of time. Install a bolt into the tool to hold it into place.

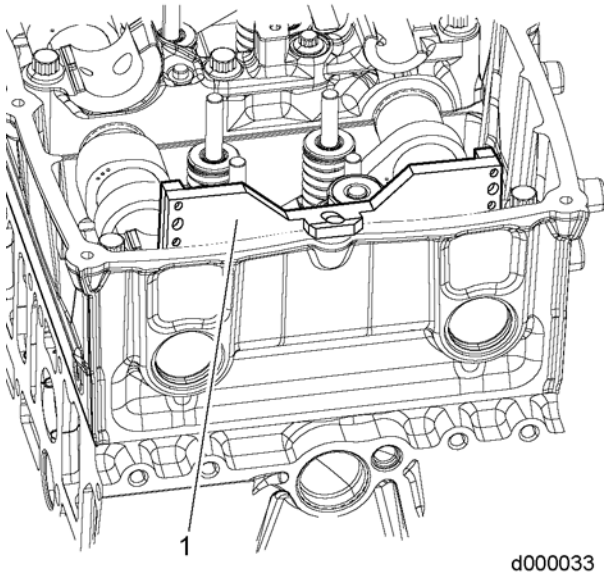

 Copyright © 2010 DETROIT DIESEL CORPORATION

https://truckmanualshub.com/

All information subject to change without notice.
DDC-SVC-MAN-0081 2010 Copyright © 2010 DETROIT DIESEL CORPORATION

https://truckmanualshub.com/

5 GEAR TRAIN AND ENGINE TIMING

Section **Page**

5.1 DESCRIPTION AND OPERATION OF GEAR TRAIN AND RELATED PARTS 5-3
5.2 ENGINE GEAR TRAIN INSTALLATION AND TIMING 5-8
5.3 CHECKING AND ADJUSTING GEAR LASH WITH CAMSHAFT HOUSING REMOVED 5-16

https://truckmanualshub.com/

All information subject to change without notice.
DDC-SVC-MAN-0081 2010 Copyright © 2010 DETROIT DIESEL CORPORATION

https://truckmanualshub.com/

5.1 DESCRIPTION AND OPERATION OF GEAR TRAIN AND RELATED PARTS

The gear train is located at the rear of the engine. The gear train consists of intake and exhaust camshaft gears, idler gears No. 1, 2, 3, 4, and 5, crankshaft gear, oil pump gear, fuel pump gear, air compressor gear, and Axial Power Turbine (APT) gear.

 Copyright © 2010 DETROIT DIESEL CORPORATION

https://truckmanualshub.com/

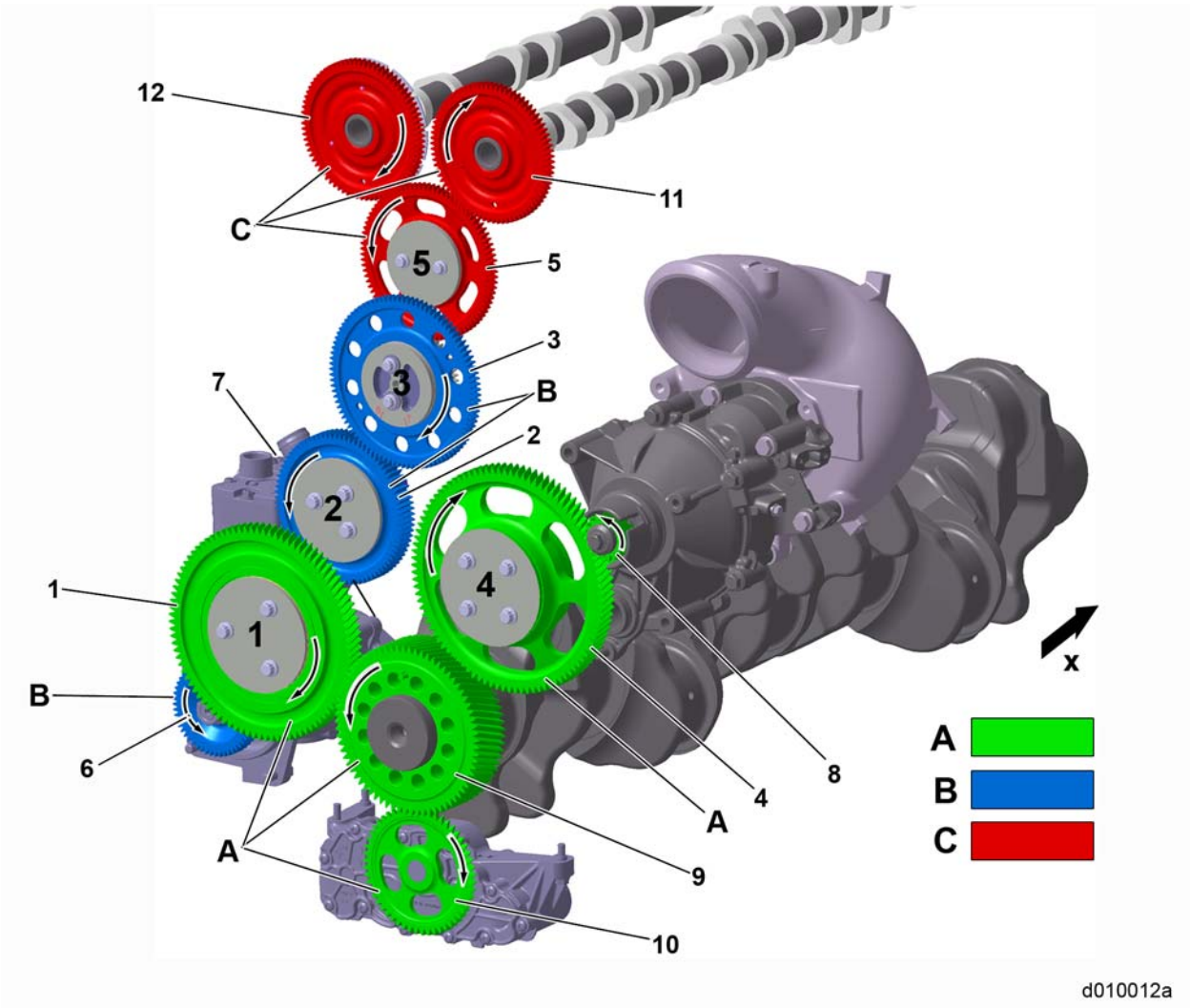

1. Idler Gear No. 1
2. Idler Gear No. 2
3. Idler Gear No. 3
4. Idler Gear No. 4
5. Idler Gear No. 5
6. Air Compressor Gear
7. Fuel Pump Gear
8. Axial Power Turbine Gear
9. Crankshaft Gear
10. Oil Pump Gear
11. Camshaft Gear Exhaust
12. Camshaft Gear Intake

A. Level A
B. Level B
C. Level C
x. To Front of Engine

Figure 5-1 DD15 Engine Gear Train

All information subject to change without notice.
DDC-SVC-MAN-0081 2010 Copyright © 2010 DETROIT DIESEL CORPORATION

https://truckmanualshub.com/

The gear train on the DD Platform engines is located at the rear of the engine and has three levels. Level A consists of the outermost gears (closest to the flywheel), Level B consists of the middle gears, and Level C consists of the innermost gears (closest to the block). The gears in the gear train are both directly and indirectly driven by the crankshaft gear.

- Level A: The outermost gears include the crankshaft gear which drives the outer idler gear number one and the oil pump gear. Idler gear number four is on the crankshaft gear and the axial power turbine drives the idler gear number four when the Axial Power Turbine (APT) is creating power. The APT can add additional torque to the crankshaft through idler gear number four up to 260 N·m (192 lb·ft). These gears are all helical cut.

NOTE:
On the DD13, there is no Axial Power Turbine (APT) and no Idler gear number four. The position of the idler gear number four is covered by a plate, and sealed with an O-ring.

- Level B: The middle gears include idler gear number one, which drives the air compressor gear and the idler gear number two. Idler gear number two drives the high pressure fuel pump and idler gear number three. These gears are all straight cut.
- Level C: The innermost gears include inner idler gear number three which drives idler gear number five. Idler gear number five drives both intake and exhaust camshafts. These gears are all straight cut.

Gear train noise is an indication of excessive gear lash, chipped or burred gear teeth. A rattling noise usually indicates excessive gear lash. A whining noise indicates too little gear lash. Therefore, when noise develops in a gear train, the gear train needs to be inspected.

 Copyright © 2010 DETROIT DIESEL CORPORATION

https://truckmanualshub.com/

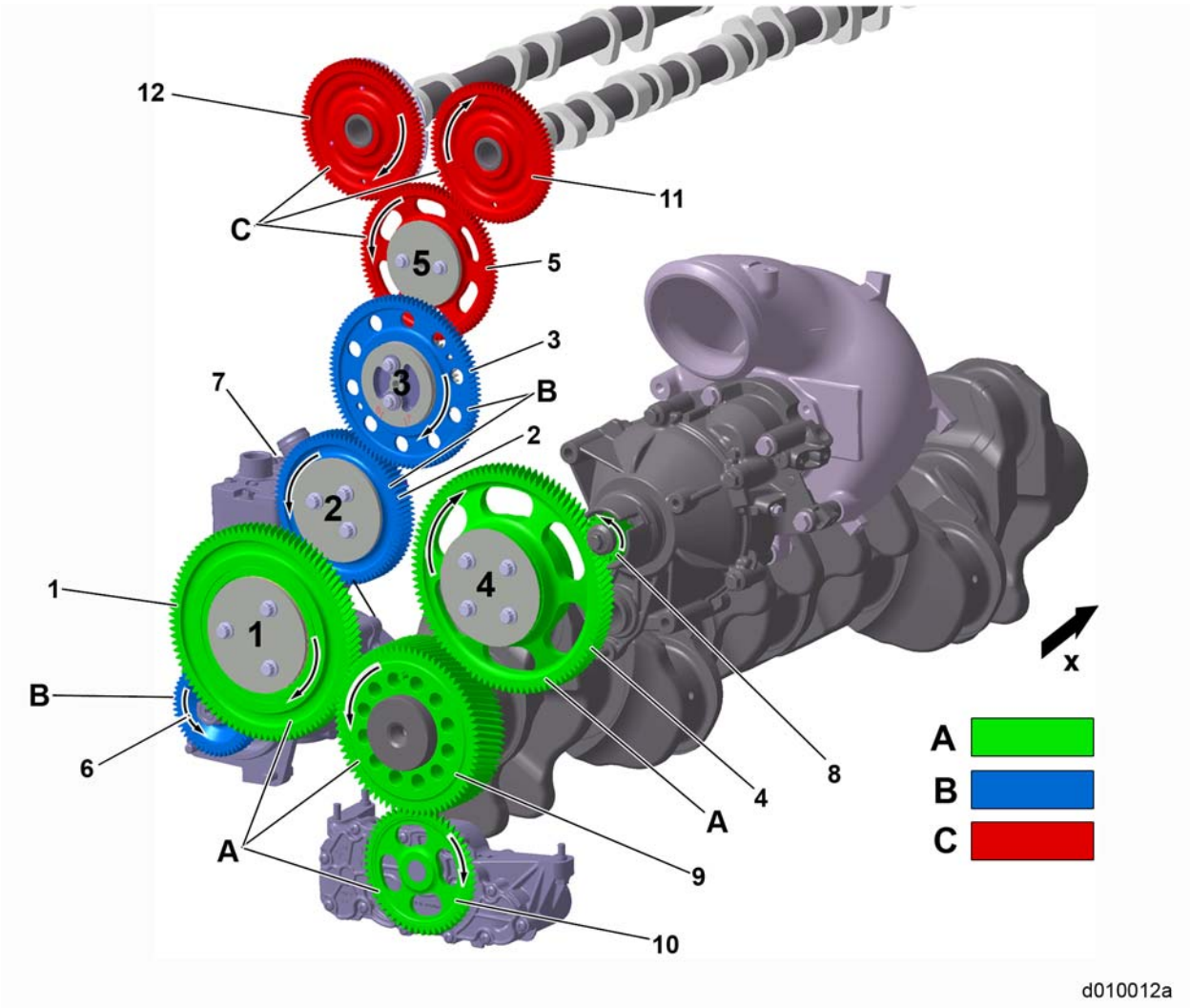

1. Idler Gear No. 1
2. Idler Gear No. 2
3. Idler Gear No. 3
4. Idler Gear No. 4
5. Idler Gear No. 5
6. Air Compressor Gear
7. Fuel Pump Gear
8. Axial Power Turbine Gear
9. Crankshaft Gear
10. Oil Pump Gear
11. Camshaft Gear Exhaust
12. Camshaft Gear Intake

A. Level A
B. Level B
C. Level C
x. To Front of Engine

Figure 5-2 DD15 Engine Gear Train

All information subject to change without notice.
DDC-SVC-MAN-0081 2010 Copyright © 2010 DETROIT DIESEL CORPORATION

https://truckmanualshub.com/

Multiply Crankshaft Speed by Effective Ratio to Attain Individual Component Speed		
Component	**Effective Ratio**	**Speed**
Crankshaft		_____ RPM
Camshafts	0.50	_____ RPM
Idler #1	0.79	_____ RPM
Idler #2	0.86	_____ RPM
Idler #3	0.75	_____ RPM
Idler #4	1.33	_____ RPM
Idler #5	0.45	_____ RPM
Water Pump	2.22	_____ RPM
Air Compressor	1.41	_____ RPM
Fuel Pump	1.50	_____ RPM
Oil Pump	1.33	_____ RPM
APT Gearbox Drive	4.00	_____ RPM
APT Turbine Shaft	26.64	_____ RPM

Table 5-1 HDEP Geartrain Ratios

The power steering pump can be mounted in two places. If the engine is equipped with a single-cylinder air compressor, it will be mounted to the front of the air compressor. If the engine is equipped with a two cylinder air compressor, then the power steering pump will be mounted on the back of the gear case to the fuel pump.

 Copyright © 2010 DETROIT DIESEL CORPORATION

https://truckmanualshub.com/

5.2 ENGINE GEAR TRAIN INSTALLATION AND TIMING

Install and time the gear train as follows:

NOTE:
Coat the inside of the gears, bushings and gear train with clean oil before installation.

1. Install the crankshaft gear on the crankshaft.
2. Rotate the crankshaft to top dead center (TDC) on cylinder number one. Install and lock Crankshaft TDC Locating Tool (J-48630) into place with bolt.

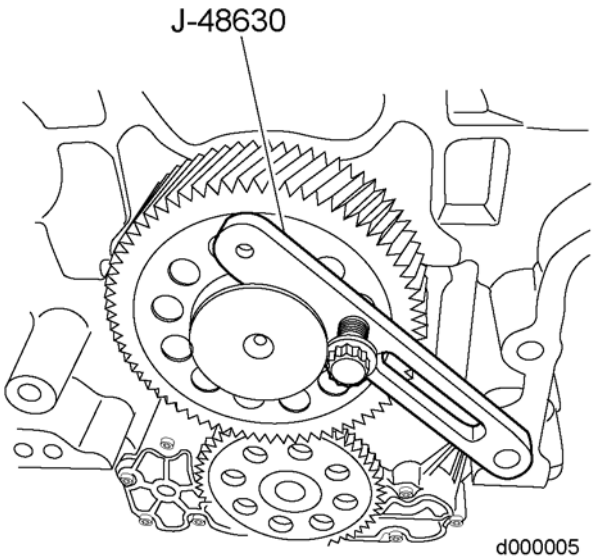

3. Install spindle into idler gear number five.
4. Install idler gear number five onto the cylinder head using Shoulder Bolt (J-47486).
5. Install two bolts into idler gear number five and hand tighten. Remove (J-47486). Torque to 60-65 N·m (44-48 lb·ft).
6. Install the spindle into idler gear number three.

All information subject to change without notice.
DDC-SVC-MAN-0081 2010 Copyright © 2010 DETROIT DIESEL CORPORATION

7. Install Installation Cantilever tool (J-47487) onto idler gear number three.

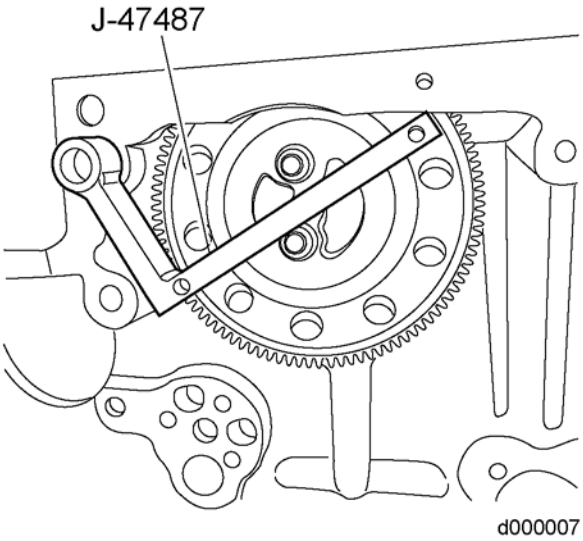

8. Install two bolts into the spindle and idler gear No. 3; snug the bolts.

NOTE:
When idler gear No. 3 and timing tool J–47487 are installed to the gear case, timing tool J–47487 should come off of the gear with ease. If the timing tool is not easily removed, that is a indication that the gears are not timed.

9. Check the gear lash between idler gear No. 3 and idler gear No. 5.
10. Install a dial indicator onto gear case and position the stem to rest between the teeth on large gear of idler gear No. 3; zero out the dial indicator.
11. Hold idler gear No. 5 with a screw driver to check gear lash.
12. The lash reading on the dial indicator should be 0.079 - 0.305 mm (0.003-0.012 in.).
13. When correct gear lash is established, torque idler gear No. 3 to 60–65 N·m (44-48 lb·ft).
14. Install the spindle and gear plate onto the idler gear number two.
15. Install the spindle, idler gear number two, and the gear plate onto the cylinder block. Torque to 100 N·m (73 lb·ft).
16. Remove the air compressor to the cylinder block (if installed). Refer to section 41.2.
17. Install the thrust washers and spindle onto the idler gear number one.

 Copyright © 2010 DETROIT DIESEL CORPORATION

https://truckmanualshub.com/

NOTE:
For ease of installation on idler gear number one, roll the gear into idler gear number two.

18. Install the spindle, thrust washers, idler gear number one, and gear plate onto the cylinder block by engaging the teeth of idler gear number one into the crankshaft gear teeth first, then roll upward into idler gear number two. Torque to 100 N·m (73 lb·ft).
19. Install the air compressor. Refer to section 41.4.

NOTE:
When installing idler gear number four, verify that the part number on the gear is facing the block.

20. ***On the DD15,*** with the cone of the idler gear number four facing outward, install the thrust washer onto the spindle then install the spindle onto the idler gear number four.
21. ***On the DD15,*** install the assembled thrust washer, spindle and idler gear number four onto the cylinder block. Torque to 100 N·m (73 lb·ft).

NOTE:
Tool J-47487 should remove with ease. If not, check gears for proper installation.

22. Remove the idler gear number three tool (J-47487).
23. Check that the idler gear number one is flush with the rear side of the crankshaft gear and that the idler gear number four on the DD15 is flush with the front side of the crankshaft gear.
24. Install the camshaft housing. Refer to section 3.3.
25. Lubricate the camshaft journals and install the camshafts into the camshaft housing.
26. Mark the camshafts TDC indicator triangle located on the inside of the camshaft gear with a suitable marker.

All information subject to change without notice.
DDC-SVC-MAN-0081 2010 Copyright © 2010 DETROIT DIESEL CORPORATION

https://truckmanualshub.com/

27. Install Camshaft Timing Tool (1) (W470589054000) for EPA07 DD15 - shown, (W470589104000) for EPA10 DDl5, and (W470589034000) for DD13 into the holes at the rear of the camshaft housing and secure to the camshaft housing with two bolts.

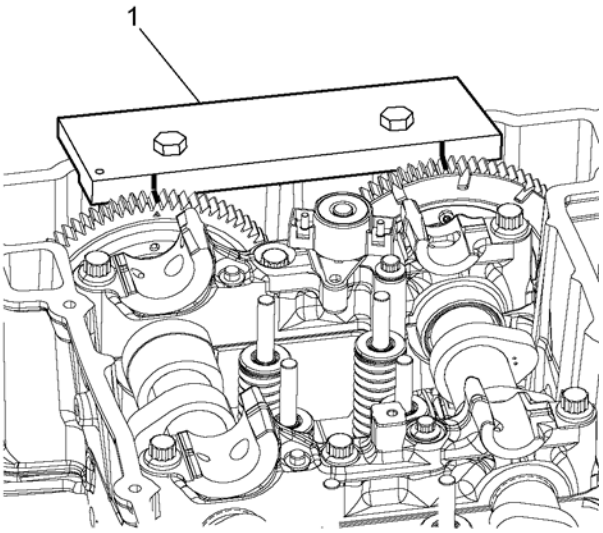

d000006

28. Install both of the intake and exhaust camshafts into the camshaft housing. Refer to section 2.4.
29. Rotate the camshafts until the mark on the inside of the gear aligns with the mark on Camshaft Timing Tool (W470589054000) for EPA07 DD15, (W470589104000) for EPA10 DDl5, and (W470589034000) for DD13.

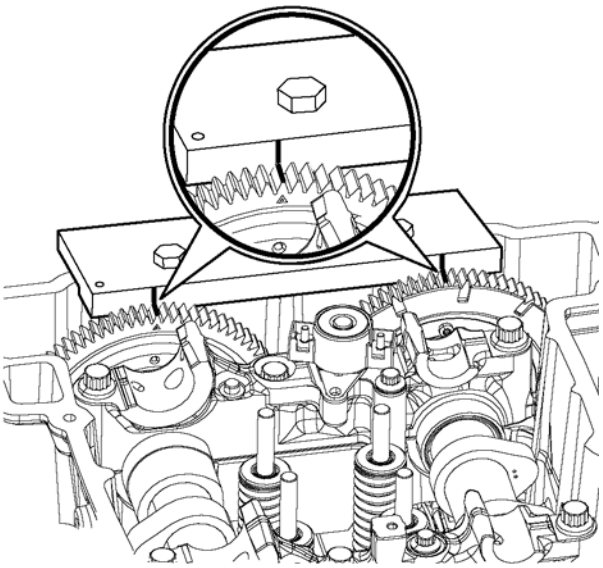

d000024

 Copyright © 2010 DETROIT DIESEL CORPORATION

https://truckmanualshub.com/

30. Install Camshaft Timing Tool (1) (W470589054000) for EPA07 DD15 - shown, (W470589104000) for EPA10 DDl5, and (W470589034000) for DD13 into the holes at the slot in the front of the camshaft housing and secure to the camshaft housing with one bolt.

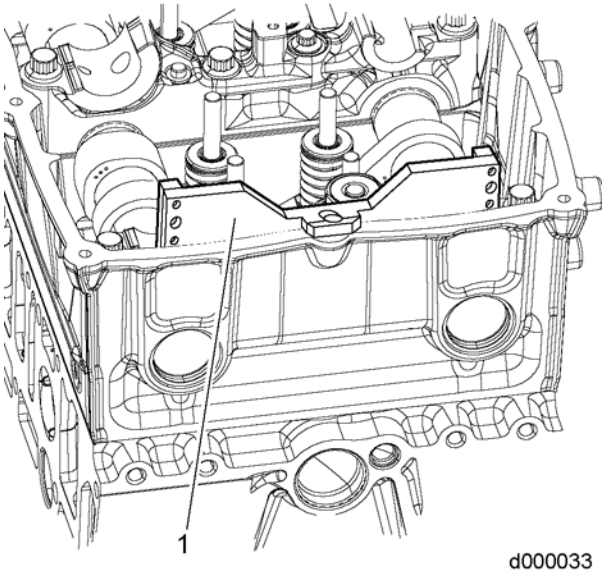

31. Ensure timing marks on the camshaft gears are at TDC and aligned to the marks on the tool.

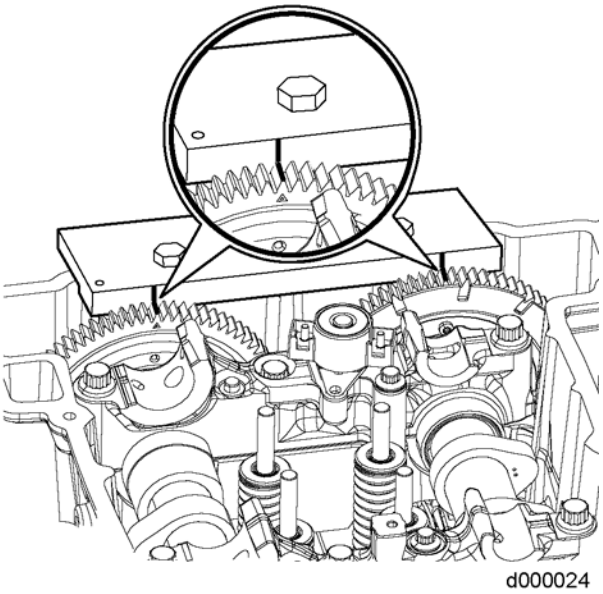

32. Install the seven camshaft caps onto intake and exhaust camshafts.

NOTE:
The first and seventh camshaft caps hold the engine brake solenoid to camshaft cap.

All information subject to change without notice.
DDC-SVC-MAN-0081 2010 Copyright © 2010 DETROIT DIESEL CORPORATION

https://truckmanualshub.com/

33. Prior to engine brake solenoid installation, replace the O-rings on the engine brake solenoids.

NOTE:
There are 30 bolts retaining the camshaft assemblies; fourteen 120 mm (M10) bolts, seven 108 mm (M10) bolts and nine 63 mm (M8) bolts.

34. Install the thirty bolts to camshaft caps; finger tighten the bolts. Refer to figure for proper bolt placement.

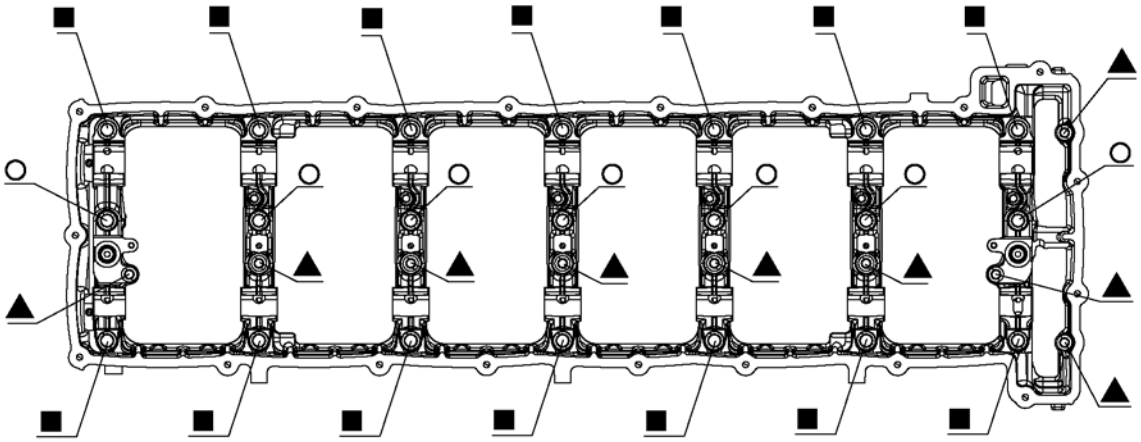

■ 120 mm (14 QTY.)
○ 108 mm (7 QTY.)
▲ 63 mm (9 QTY.)

d010085

 Copyright © 2010 DETROIT DIESEL CORPORATION

https://truckmanualshub.com/

35. Using torque sequence shown below, torque the 120 mm and 108 mm (M10) camshaft cap bolts to the following:
    - □ 20 N·m (15 lb·ft)
    - □ Then torque to 50-55 N·m (37-40 lb·ft)

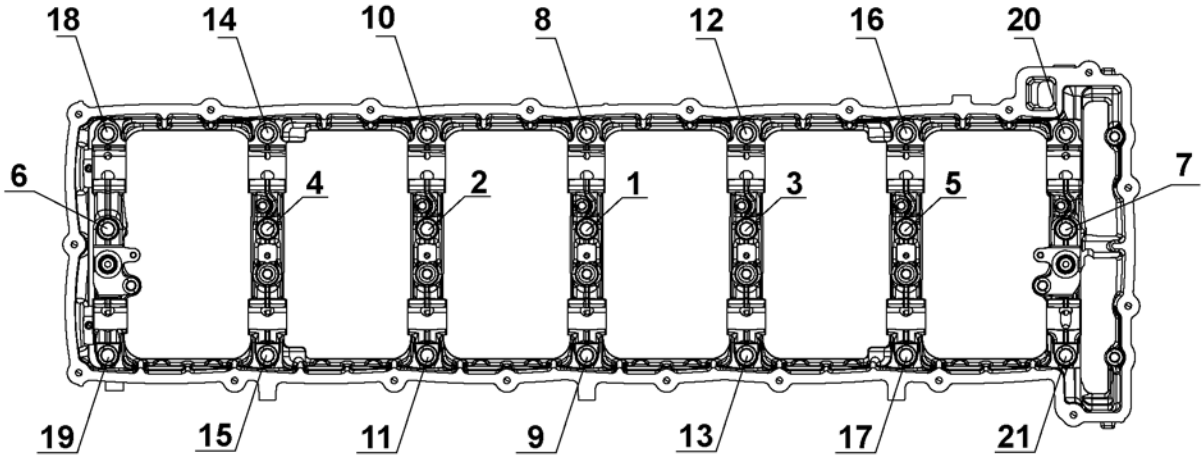

d010091

1. Using the torque sequence, torque the nine 63 mm (M8) bolts to 30 N·m (22 lb·ft).

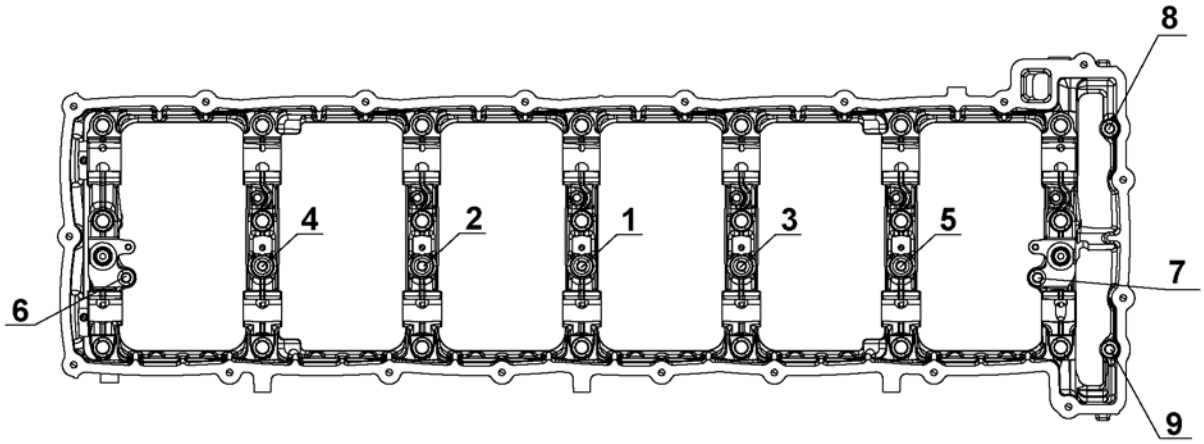

d010092

All information subject to change without notice.
DDC-SVC-MAN-0081 2010 Copyright © 2010 DETROIT DIESEL CORPORATION

https://truckmanualshub.com/

2. Verify correct camshaft timing by checking that the marks on the camshaft gears still align with the timing tool.

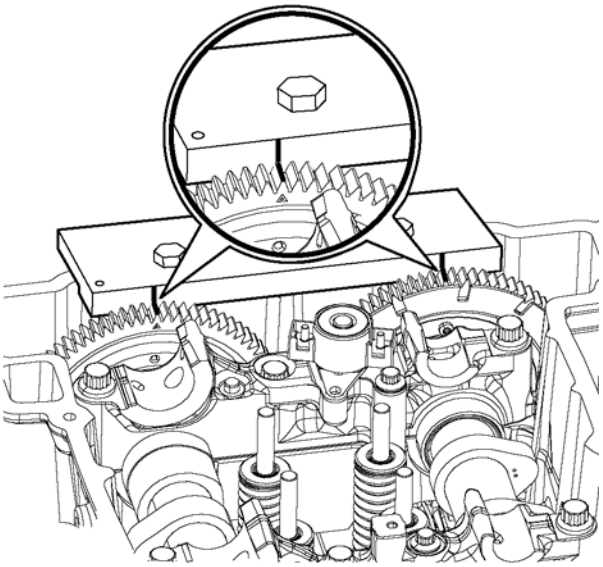

3. Remove timing tools from gears and camshaft housing.
4. Install the closing cover and two bolts to the rear of the cylinder head. Torque the closing cover bolts to 30 N·m (22 lb·ft).

 Copyright © 2010 DETROIT DIESEL CORPORATION

https://truckmanualshub.com/

5.3 CHECKING AND ADJUSTING GEAR LASH WITH CAMSHAFT HOUSING REMOVED

This is performed with camshaft housing removed. Check and adjust as follows:

1. Remove the camshaft housing if not already removed. Refer to section 3.1.
2. Install a magnetic base-dial indicator gauge on engine block.
3. Set the dial indicator on the idler gear number five gear tooth.

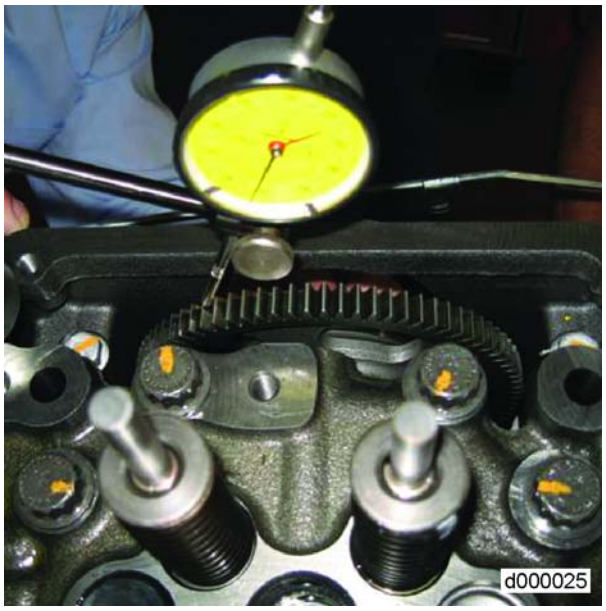

4. Turn idler gear number five counterclockwise (viewed from front of engine) until “0” lash is present, then zero the gauge on the dial indicator.
5. Check the gear lash by turning the idler gear number five stop-to-stop, verify that the lash reading on the dial indicator is 0.043 - 0.165 mm (0.0016 - 0.0065 in.).
6. If gear lash is incorrect, continue with the following steps to adjust.
7. Remove access cover to the idler gear number three bolts.
8. Loosen the two number three idler gear bolts and then snug by hand.

All information subject to change without notice.
DDC-SVC-MAN-0081 2010 Copyright © 2010 DETROIT DIESEL CORPORATION

9. Turning idler gear number five by hand will change gear lash from zero lash to maximum lash.

NOTE:
Rotating idler gear number five counterclockwise (viewed from front of engine) will result in zero lash. Rotating idler gear number five clockwise (viewed from front of engine) will result in maximum lash.

10. Install a magnetic base-dial indicator gauge on engine block.

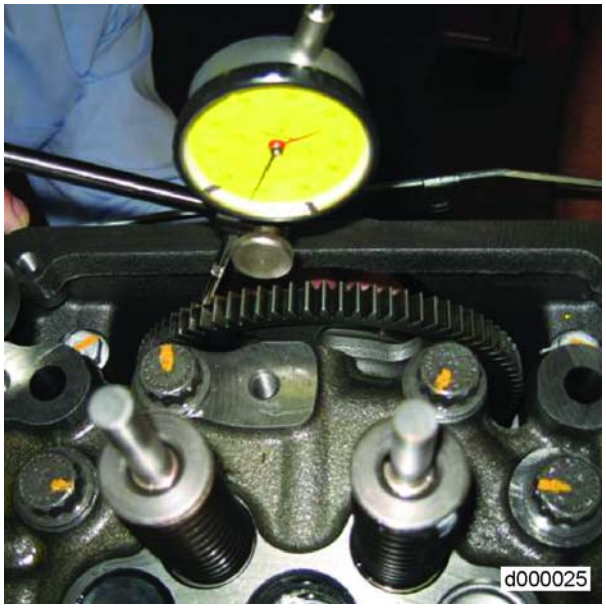

11. Set the dial indicator on the number five gear tooth.

 Copyright © 2010 DETROIT DIESEL CORPORATION

https://truckmanualshub.com/

12. Turn idler gear number five counterclockwise (viewed from front of engine) until “0” lash is present, then zero the gauge on the dial indicator.
13. Push idler gear number five clockwise (viewed from front of engine) till desired gear lash is present.
14. Tighten the two bolts on the number three gear.
15. Check gear lash by turning idler gear number five stop-to-stop; verify the lash reading on the dial indicator should be 0.043 - 0.165 mm (0.0016 - 0.0065 in.).
16. If gear lash is OK, then final torque idler gear number three bolts to 60–65 N·m (44-48 lb·ft).
17. Install access cover and tighten.
18. Install the camshaft housing as needed. Refer to section 3.3.

All information subject to change without notice.
DDC-SVC-MAN-0081 2010 Copyright © 2010 DETROIT DIESEL CORPORATION

https://truckmanualshub.com/

6 WATER MANIFOLD

Section **Page**

6.1 DESCRIPTION AND OPERATION OF DD15 & DD16 WATER MANIFOLD AND RELATED COMPONENTS 6-3

6.2 REMOVAL OF THE DD15 & DD16 WATER MANIFOLD 6-5

6.3 CLEANING AND INSPECTION OF THE DD15 & DD16 WATER MANIFOLD 6-7

6.4 INSTALLATION OF THE DD15 & DD16 WATER MANIFOLD 6-8

6.5 DD13 EXHAUST GAS RECIRCULATION COOLER WATER MANIFOLD ASSEMBLY 6-10

https://truckmanualshub.com/

All information subject to change without notice.
DDC-SVC-MAN-0081 2010 Copyright © 2010 DETROIT DIESEL CORPORATION

6.1 DESCRIPTION AND OPERATION OF DD15 & DD16 WATER MANIFOLD AND RELATED COMPONENTS

Coolant flows from the cylinder head through an opening next to each exhaust port and into the water manifold in the DD15 engine. The water manifold is attached to the cylinder head by a total of nineteen bolts, including two that are shared with the coolant outlet elbow. Two 3-port gaskets are used between the water manifold and the cylinder head.

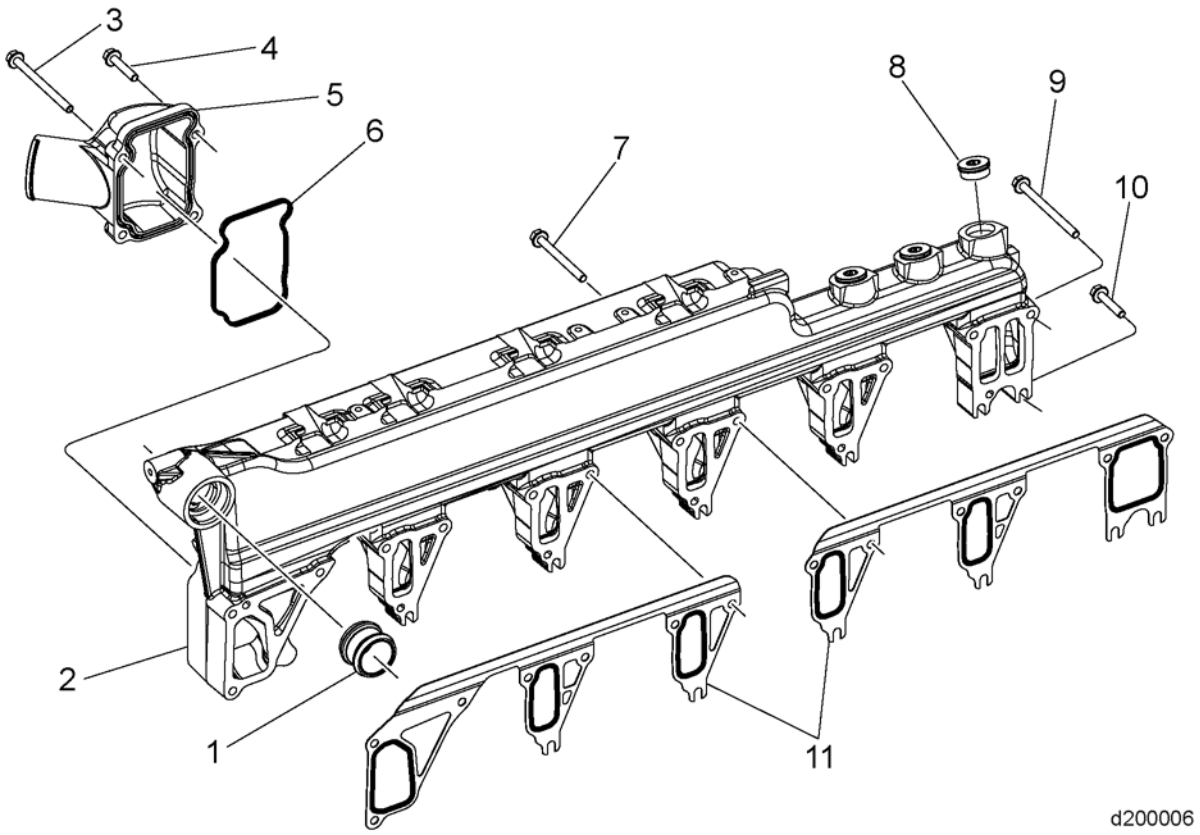

1. Connecting Pipe
2. Water Manifold
3. Bolt
4. Bolt
5. Coolant Outlet Elbow
6. Gasket
7. Bolt
8. Plug
9. Bolt
10. Bolt
11. Gasket

Figure 6-1 DD15 & DD16 Water Manifold and Related Parts

 Copyright © 2010 DETROIT DIESEL CORPORATION

https://truckmanualshub.com/

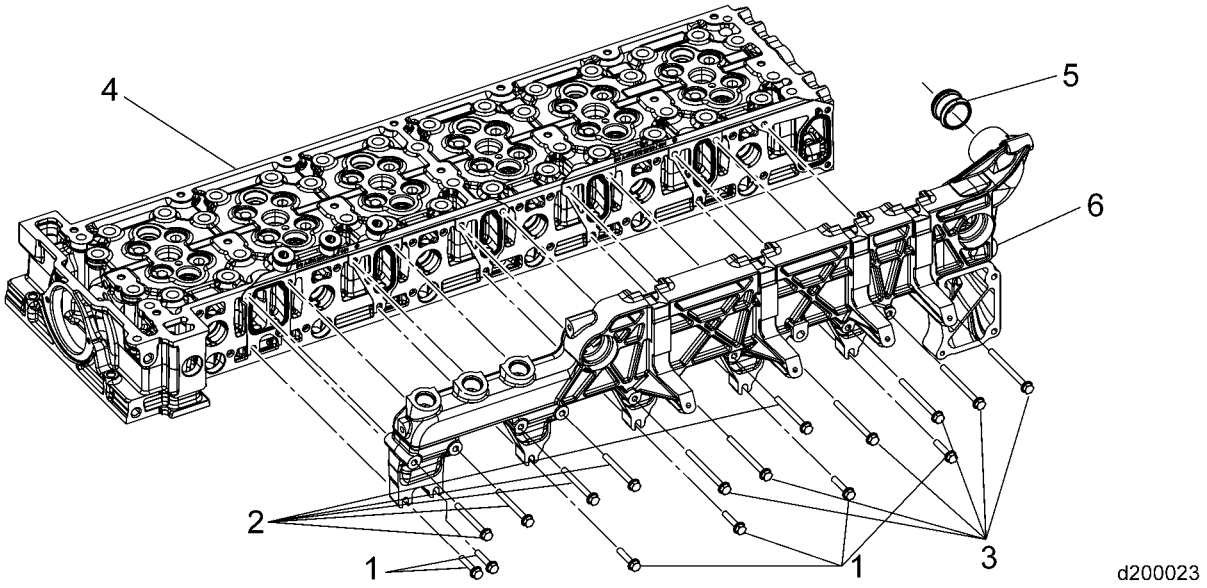

1. Bolt M8 x 40 (6 qty.)
2. Bolt M8 x 80 (5 qty.)
3. Bolt M8 x 100 (6 qty.)
4. Cylinder Head
5. Connecting Pipe
6. Water Manifold

Figure 6-2 DD15 & DD16 Water Manifold and Related Parts

All information subject to change without notice.
DDC-SVC-MAN-0081 2010 Copyright © 2010 DETROIT DIESEL CORPORATION

https://truckmanualshub.com/

6.2 REMOVAL OF THE DD15 & DD16 WATER MANIFOLD

Remove as follows:

1. Disconnect the batteries.
2. Drain the engine coolant.
3. Remove the air cleaner.
4. Remove the exhaust manifold heat shields.
5. Remove the Exhaust Gas Recirculation (EGR) hot pipe. Refer to section .

NOTE:
Hold water manifold doser coolant line fitting with a separate wrench while removing the coolant lines.

6. Disconnect and remove doser coolant lines and remove retaining clips.
7. Disconnect EGR cooler vent line.
8. Disconnect the outlet coolant temperature sensor electrical harness connector.
9. Remove EGR actuator coolant outlet line.
10. Remove upper radiator hose.
11. Remove four coolant outlet elbow bolts (1) and remove the coolant outlet elbow (2). Remove and discard the gasket (4).

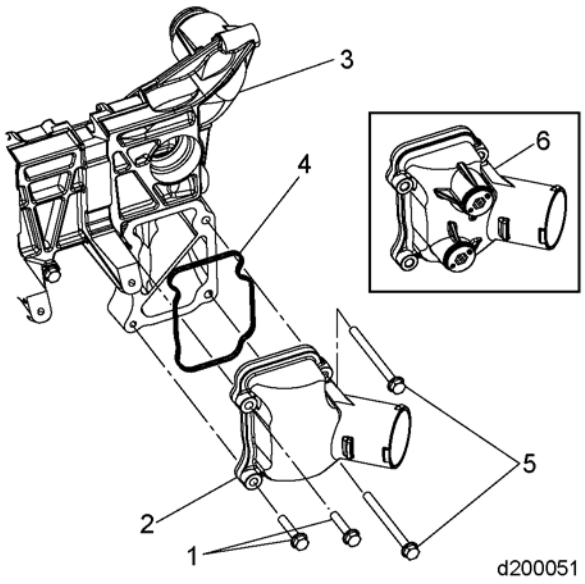

12. Remove EGR cooler. Refer to section .

 Copyright © 2010 DETROIT DIESEL CORPORATION

https://truckmanualshub.com/

NOTE:
Note bolt length differences for installation.

13. Remove eleven upper water manifold bolts.
14. Loosen six lower water manifold bolts.
15. Remove two bolts from the retaining strap for the water manifold outlet to the coolant crossover pipe.
16. Remove water manifold.
17. Remove and discard water manifold gaskets.

All information subject to change without notice.
DDC-SVC-MAN-0081 2010 Copyright © 2010 DETROIT DIESEL CORPORATION

https://truckmanualshub.com/

6.3 CLEANING AND INSPECTION OF THE DD15 & DD16 WATER MANIFOLD

Clean and inspect as follows:

1. Clean the water manifold.
2. Inspect the water manifold for damage or cracks; replace if necessary.
3. Replace the gaskets.

 Copyright © 2010 DETROIT DIESEL CORPORATION

6.4 INSTALLATION OF THE DD15 & DD16 WATER MANIFOLD

Install as follows:

NOTICE:
Ensure when installing the connecting pipe, that the pipe is lubricated with clean oil. see Figure 6-1 If it is not lubricated, the connecting pipe cannot be fully installed and the rubber can be cut.

NOTICE:
Do not use sealant when installing water manifold to the cylinder head.

1. Install water manifold gaskets and connecting pipe onto the water manifold.
2. Install six lower water manifold bolts and start by a few threads.
3. Install water manifold onto cylinder head.
4. Install eleven upper water manifold bolts.
5. Torque the water manifolds bolts to 30 N·m (22 lb·ft), using the torque sequence illustrated below.

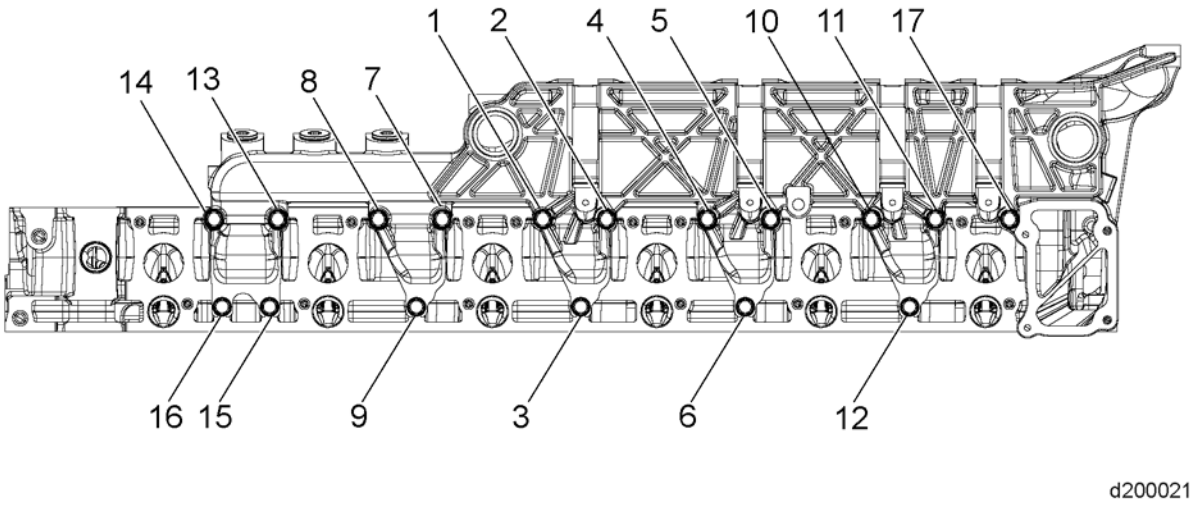

6. Install EGR cooler to water manifold and torque to 20 N·m (15 lb·ft).

All information subject to change without notice.
DDC-SVC-MAN-0081 2010 Copyright © 2010 DETROIT DIESEL CORPORATION

https://truckmanualshub.com/

7. Install coolant outlet elbow (2) with four bolts (1) and torque to 30 N·m (22 lb·ft).

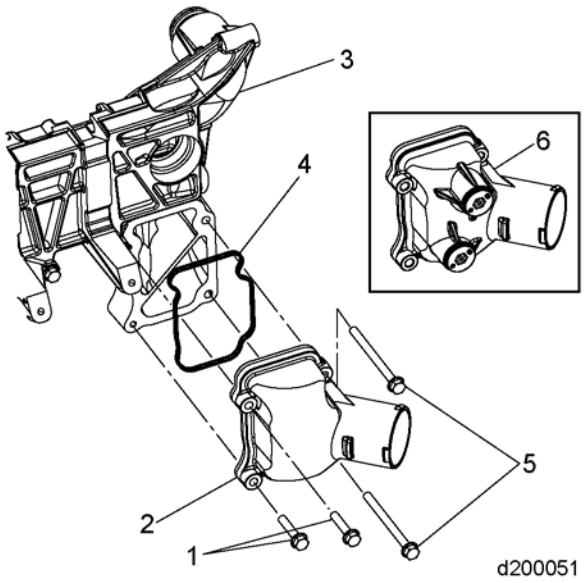

8. Install upper radiator hose.
9. Install EGR actuator coolant outlet line. Torque outlet line to 35 N·m (26 lb·ft).
10. Connect the outlet coolant temperature sensor.
11. Connect the EGR cooler vent line.
12. Connect doser coolant lines. Torque to 15 N·m (11 lb·ft).
13. Install the EGR hot pipe. Refer to section .
14. Install the exhaust manifold heat shields. Refer to section .
15. Install the air cleaner. Refer to OEM procedures.
16. Fill engine with coolant to the correct level.

WARNING:

ENGINE EXHAUST

To avoid injury from inhaling engine exhaust, always operate the engine in a well-ventilated area. Engine exhaust is toxic.

17. Start the engine and check for leaks.

 Copyright © 2010 DETROIT DIESEL CORPORATION

https://truckmanualshub.com/

6.5 DD13 EXHAUST GAS RECIRCULATION COOLER WATER MANIFOLD ASSEMBLY

Refer to the following:

- Description and Operation of DD13 Exhaust Gas Recirculation Cooler Water Manifold Assembly, refer to section .
- Removal of DD13 Exhaust Gas Recirculation Cooler Water Manifold Assembly, refer to section .
- Inspection of the DD13 EGR Cooler Water Manifold Assembly, refer to section .
- Testing and Inspection of the DD13 EGR Cooler Water Manifold Assembly, refer to section .
- Installation of the DD13 EGR Cooler Water Manifold Assembly, refer to section .

All information subject to change without notice.
DDC-SVC-MAN-0081 2010 Copyright © 2010 DETROIT DIESEL CORPORATION

https://truckmanualshub.com/

7 COLD BOOST PIPE (CHARGE AIR PIPE)

Section **Page**

7.1 DESCRIPTION AND OPERATION OF COLD BOOST PIPE (CHARGE AIR PIPE) AND RELATED COMPONENTS 7-3

7.2 REMOVAL OF THE COLD BOOST PIPE (CHARGE AIR PIPE) 7-4

7.3 INSPECTION OF COLD BOOST PIPE (CHARGE AIR PIPE) 7-5

7.4 INSTALLATION OF THE COLD BOOST PIPE (CHARGE AIR PIPE) 7-6

https://truckmanualshub.com/

All information subject to change without notice.
DDC-SVC-MAN-0081 2010 Copyright © 2010 DETROIT DIESEL CORPORATION

https://truckmanualshub.com/

7.1 DESCRIPTION AND OPERATION OF COLD BOOST PIPE (CHARGE AIR PIPE) AND RELATED COMPONENTS

The cold boost pipe (Charge Air Pipe) is installed onto the intake manifold and is a component of the EGR System.

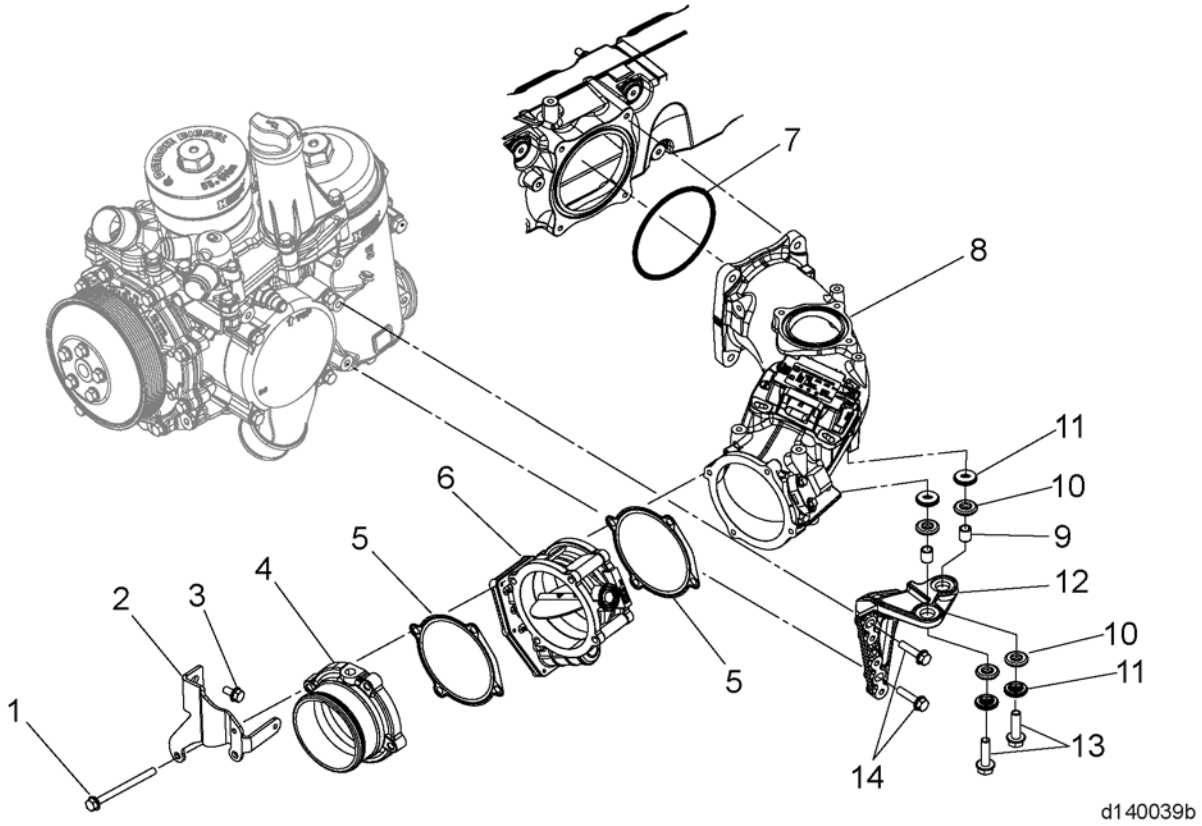

1. Bolt
2. Bracket
3. Bolt
4. Adaptor
5. Gasket
6. Intake Throttle Valve
7. Gasket
8. Cold Boost Pipe
9. Spacer
10. Isolators
11. Washer
12. Bracket to Oil Coolant Module
13. Bolt
14. Bolt

Figure 7-1 Cold Boost Pipe and Related Parts

 Copyright © 2010 DETROIT DIESEL CORPORATION

https://truckmanualshub.com/

7.2 REMOVAL OF THE COLD BOOST PIPE (CHARGE AIR PIPE)

Remove the cold boost pipe (charge air pipe) as follows:

1. Remove mixer pipe.
2. Disconnect sensor harness.
3. Remove Charge Air Cooler (CAC) hose clamp at the CAC.
4. Remove the four bolts securing the cold boost pipe to the intake manifold.
5. Remove two bolts at cold boost pipe bracket on oil module.
6. Remove the cold boost pipe.
7. If the Intake Throttle Valve is required to be removed from the Cold Boost Pipe, refer to section .

All information subject to change without notice.
DDC-SVC-MAN-0081 2010 Copyright © 2010 DETROIT DIESEL CORPORATION

https://truckmanualshub.com/

7.3 INSPECTION OF COLD BOOST PIPE (CHARGE AIR PIPE)

Inspect the cold boost pipe for cracks, flange damage, blockage and leaks; replace if necessary.

NOTICE:
If the cold boost pipe is damaged on the interior the pipe needs to be replaced.

 Copyright © 2010 DETROIT DIESEL CORPORATION

https://truckmanualshub.com/

7.4 INSTALLATION OF THE COLD BOOST PIPE (CHARGE AIR PIPE)

Install the cold boost pipe as follows:

1. If the Intake Throttle Valve was removed refer to section .
2. Install seal onto intake manifold.
3. Secure cold boost pipe to intake manifold with four bolts. Torque bolts to 30 N·m (22 lb·ft).
4. Attach support bracket to oil module with two bolts.
5. Install EGR mixer pipe.
6. If removed install seal, intake throttle valve and adaptor onto cold boost pipe. Torque four bolts to 30-38 N·m (22-28 lb·ft).
7. Connect the sensor harness.

All information subject to change without notice.
DDC-SVC-MAN-0081 2010 Copyright © 2010 DETROIT DIESEL CORPORATION

https://truckmanualshub.com/

8 AIR INTAKE MANIFOLD

Section **Page**

8.1 DESCRIPTION AND OPERATION OF AIR INTAKE MANIFOLD AND RELATED PARTS 8-3
8.2 REMOVAL OF AIR INTAKE MANIFOLD 8-6
8.3 CLEANING OF THE AIR INTAKE MANIFOLD 8-7
8.4 INSPECTION OF THE AIR INTAKE MANIFOLD 8-8
8.5 INSTALLATION OF AIR INTAKE MANIFOLD 8-9

https://truckmanualshub.com/

All information subject to change without notice.
DDC-SVC-MAN-0081 2010 Copyright © 2010 DETROIT DIESEL CORPORATION

https://truckmanualshub.com/

8.1 DESCRIPTION AND OPERATION OF AIR INTAKE MANIFOLD AND RELATED PARTS

On diesel engines, the intake charge air is routed to an intake manifold that is bolted to the cylinder head with thirteen bolts. Air is then routed through the manifold and into the cylinders. The mating surfaces of the manifold and the cylinder head are machined. The intake manifold is sealed to the cylinder head with six rubber and steel gaskets. If the manifold is removed, new gaskets must be installed to maintain seal under higher boost pressure. An intake manifold air temperature sensor is installed to the intake manifold. The Exhaust Gas Recirculation (EGR) mixer, intake throttle valve and adaptor installed to the air inlet of the intake manifold. CAC ducting is installed on the intake throttle valve adaptor. For EPA07 engines, there is a pressure combination sensor in the cold boost pipe, and a temperature sensor in the intake throttle adaptor. For EPA10 engines, these sensors are combined. The combination sensor is located in the Cold Boost Pipe, and is used to measure air pressure and air temperature.

 Copyright © 2010 DETROIT DIESEL CORPORATION

https://truckmanualshub.com/

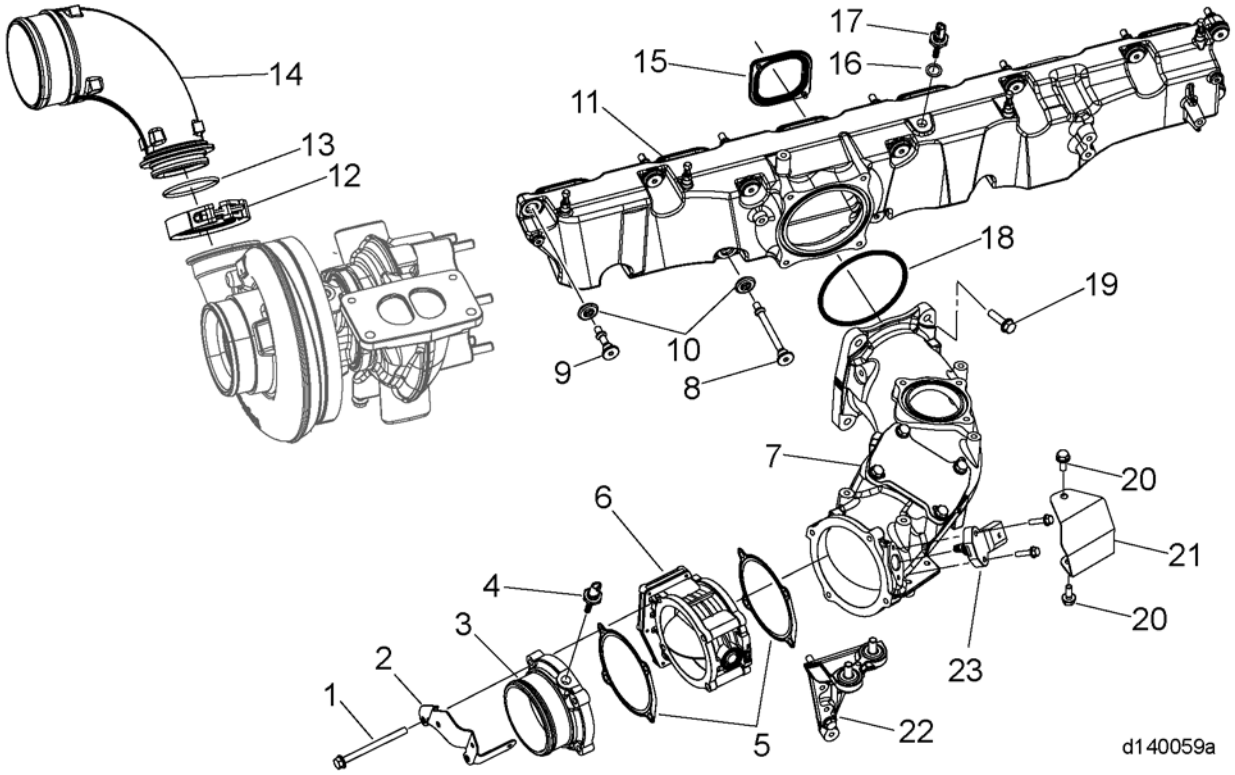

1. Hex Head Bolt
2. Bracket
3. Intake Pipe Bracket
4. Air Temperature Sensor (EPA10 Engine - Plug Only)
5. Gasket
6. EGR Throttle Valve
7. Cold Boost Pipe
8. Flanged Screw, Intake Manifold to Cylinder Head
9. Flanged Screw, Intake Manifold to Cylinder Head
10. Isolator Gasket
11. Intake Manifold
12. Clamp, Outlet Pipe
13. O-ring, Elbow Turbo Outlet
14. Turbocharger Outlet Pipe
15. Gasket, Intake Manifold
16. Seal Ring
17. Intake Manifold Temperature Sensor
18. Gasket, Cold Boost Pipe
19. Bolt, Cold Boost Pipe to Intake Manifold
20. Bolt
21. Shield
22. Bracket to Oil Coolant Module
23. Charge Air Pressure Sensor (EPA10 Combination Sensor)

Figure 8-1 DD13 Air Intake Manifold and Related Parts

All information subject to change without notice.
DDC-SVC-MAN-0081 2010 Copyright © 2010 DETROIT DIESEL CORPORATION

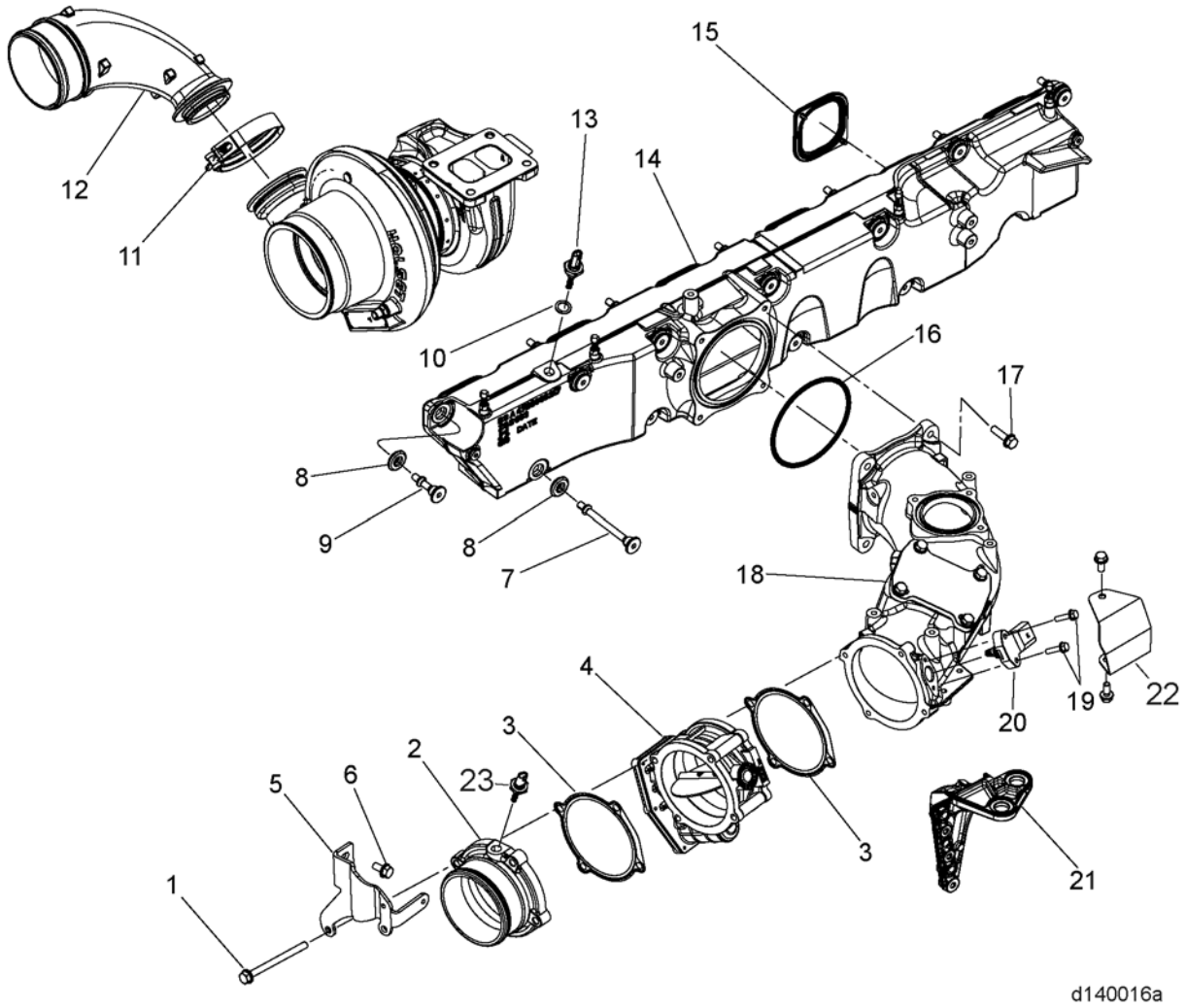

1. Bolt	9. Flanged Screw, Intake Manifold to Cylinder Head	17. Bolt, Cold Boost Pipe to Intake Manifold
2. Adaptor	10. Seal Ring, Charge Air Sensor	18. Cold Boost Pipe
3. Gasket	11. Clamp, turbocharger outlet pipe	19. Bolt, Combination Temperature and Pressure Sensor
4. EGR Throttle Valve	12. Turbocharger Outlet Pipe	20. Charge Air Pressure Sensor
5. Air Temperature Sensor Guard	13.Intake Manifold Air Temperature Sensor	21. Bracket to Oil Coolant Module
6. Bolt	14. Intake Manifold	22. Shield
7. Bolt, Intake Manifold to Cylinder Head	15. Gasket, Intake Manifold	23. Air Temperature Sensor (I-Cooler Out)
8. Isolator Gasket	16. Gasket, Cold Boost Pipe	

Figure 8-2 DD15 Air Intake Manifold and Related Parts

 Copyright © 2010 DETROIT DIESEL CORPORATION

https://truckmanualshub.com/

8.2 REMOVAL OF AIR INTAKE MANIFOLD

Remove as follows:

1. Drain the cooling system.
2. Drain the fuel filter module. Refer to section .
3. Remove the poly-V-belts. Refer to section 40.1.
4. Remove the Exhaust Gas Recirculation (EGR) mixer pipe and delivery pipe, refer to section .
5. Remove cold boost pipe. Refer to section 7.2.
6. Remove the fuel filter module. Refer to section .
7. Remove the oil coolant module. Refer to section 26.2
8. Disconnect the high pressure fuel lines connected to the common rail and output side of the high pressure fuel pump. Refer to section .
9. Disconnect and remove the fuel line connected to the common rail and base of the fuel filter housing.
10. Disconnect and remove the air intake pressure sensor electrical harness connectors from the two air intake sensors.
11. Identify the bolt locations prior to removal of bolts.
12. Remove the thirteen flanged screws and isolator gaskets securing the air intake manifold to cylinder head.
13. Remove the air intake manifold and six gaskets from the cylinder head. Discard gaskets.

All information subject to change without notice.
DDC-SVC-MAN-0081 2010 Copyright © 2010 DETROIT DIESEL CORPORATION

https://truckmanualshub.com/

8.3 CLEANING OF THE AIR INTAKE MANIFOLD

Clean as follows:

1. Remove loose gasket material from the cylinder head and intake manifold mating surfaces.
2. Wash all of the parts in clean fuel oil.

WARNING:
EYE INJURY
To avoid injury from flying debris when using compressed air, wear adequate eye protection (face shield or safety goggles) and do not exceed 276 kPa (40 psi) air pressure.

3. Blow dry with compressed air.

 Copyright © 2010 DETROIT DIESEL CORPORATION

https://truckmanualshub.com/

8.4 INSPECTION OF THE AIR INTAKE MANIFOLD

Inspect as follows:

1. Visually inspect the manifold for any cracks, dents or other damage. Pay particular attention to the bolt areas.
   [a] If a crack is found, replace the intake manifold.
   [b] If no cracks are found, reuse the intake manifold.
2. Inspect the manifold mating surface for imperfections that could affect its sealing to the cylinder head.
   [a] If the manifold mating surface has imperfections, replace the intake manifold.
   [b] If the manifold mating surface is not damaged, reuse part.
3. Laying a 0.5 cm (20 in) long by 6 mm (1/4 in) wide straight edge across the intake manifold, check the mating ports surfaces for warping.
   [a] If all port flange area measurements are less than 0.127 mm (0.005 in), the manifold is reusable and can be reinstalled with new gaskets.
   [b] If the manifold does not meet this requirement, the manifold *must* be replaced.

All information subject to change without notice.
DDC-SVC-MAN-0081 2010 Copyright © 2010 DETROIT DIESEL CORPORATION

https://truckmanualshub.com/

8.5 INSTALLATION OF AIR INTAKE MANIFOLD

Install as follows:

1. Install six gaskets to the air intake manifold.
2. Install thirteen flanged screws and isolator gaskets to the air intake manifold. Secure air intake manifold to cylinder head. Torque the bolts to 25 N·m (18 lb·ft).
3. Re-install electrical harness connectors to appropriate sensors.
4. Install oil coolant module. Refer to section 26.3.
5. Install fuel module. Refer to section .
6. Install cold boost pipe. Refer to section 7.4.
7. Install exhaust gas recirculation (EGR) mixer pipe and delivery pipe. Refer to section .
8. Install the poly-V-belts. Refer to section 40.3.
9. Prime fuel system. Refer to section .
10. Fill the cooling system. Refer to OEM specifications.

 Copyright © 2010 DETROIT DIESEL CORPORATION

https://truckmanualshub.com/

All information subject to change without notice.
DDC-SVC-MAN-0081 2010 Copyright © 2010 DETROIT DIESEL CORPORATION

https://truckmanualshub.com/

9 DD13 TURBOCHARGER

Section **Page**

9.1 DESCRIPTION AND OPERATION OF THE DD13 TURBOCHARGER AND RELATED PARTS 9-3

9.2 REMOVAL OF THE DD13 TURBOCHARGER 9-5

9.3 INSPECTION OF THE DD13 TURBOCHARGER 9-9

9.4 INSTALLATION OF THE DD13 TURBOCHARGER 9-10

9.5 EGR COOLER CLEANING PROCEDURE TO REMOVE EXCESS FUEL FROM COOLER AFTER DD13 TURBOCHARGER FAILURE 9-12

https://truckmanualshub.com/

All information subject to change without notice.
DDC-SVC-MAN-0081 2010 Copyright © 2010 DETROIT DIESEL CORPORATION

https://truckmanualshub.com/

9.1 DESCRIPTION AND OPERATION OF THE DD13 TURBOCHARGER AND RELATED PARTS

Compression of air in the turbocharger causes an air mass to flow into the combustion chamber. The turbocharger consists of a turbine and a compressor which are attached to a shaft. The exhaust gas flows to the turbine wheel and causes it to turn. This turning motion is transmitted to the shaft and the compressor impeller. The intake air from the air filter is compressed by the compressor impeller and flows over a charge air pipe to the charge air cooler. The compressed air is cooled in the charge air cooler, permitting a more dense charge of air to be delivered to the engine, and therefore, engine output is increased. The charge air then passes from charge air cooler into the intake manifold. The turbocharger is mounted on the exhaust outlet flange of the engine exhaust manifold.

The turbocharger is mounted on the exhaust outlet flange of the engine exhaust manifold.

The advantages are as follows:

- Increases the engine performance and torque
- Reduction of the fuel consumption compared to a similarly powered naturally aspirated engine
- Reduction of emissions.

 Copyright © 2010 DETROIT DIESEL CORPORATION

https://truckmanualshub.com/

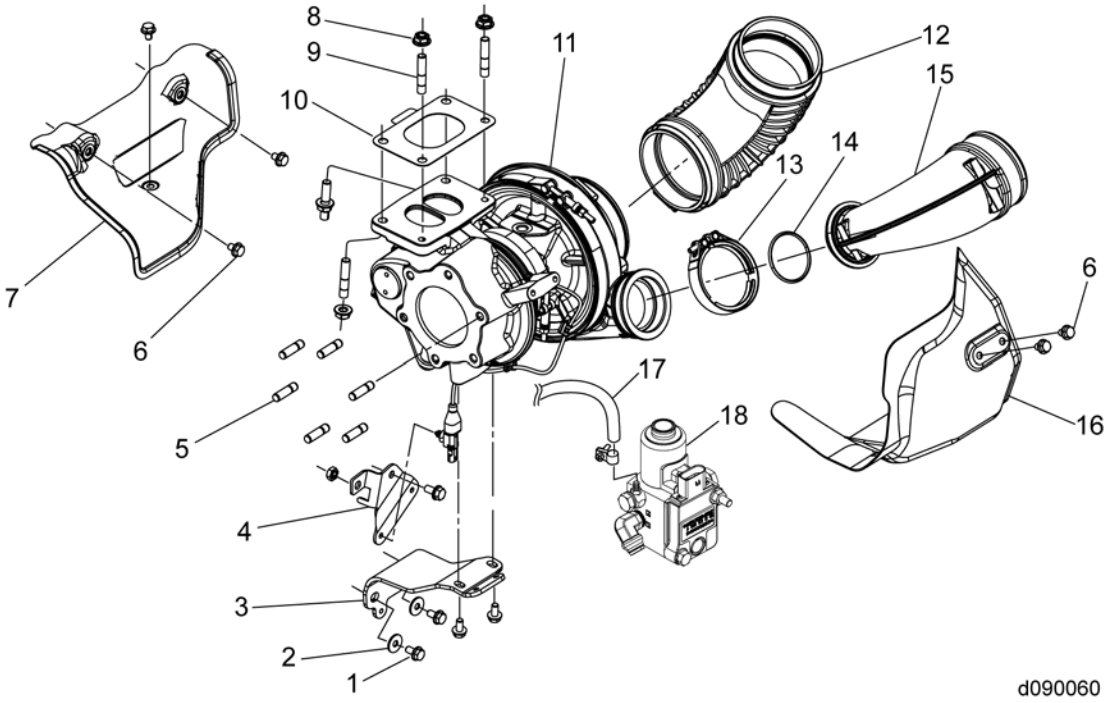

1. Bolt	7. Heat Shield	13. Clamp
2. Washer	8. Nut	14. Seal
3. Turbocharger Bracket	9. Stud	15. Turbo Outlet Elbow Pipe
4. Bracket	10. Gasket	16. Heat Shield
5. Stud (6 qty.)	11. Turbocharger	17. Air Hose
6. Bolt	12. Turbo Inlet Pipe	18. Electronic Proportioning Valve

Figure 9-1 EPA10 DD13 Turbocharger and Related Parts

All information subject to change without notice.
DDC-SVC-MAN-0081 2010 Copyright © 2010 DETROIT DIESEL CORPORATION

https://truckmanualshub.com/

9.2 REMOVAL OF THE DD13 TURBOCHARGER

Cleaning the turbocharger is necessary before removal.

WARNING:

PERSONAL INJURY

To avoid injury from hot surfaces, wear protective gloves, or allow engine to cool before removing any component.

WARNING:

PERSONAL INJURY

To avoid injury from contact with rotating parts when an engine is operating with the air inlet piping removed, install an air inlet screen shield over the turbocharger air inlet. The shield prevents contact with rotating parts.

Prior to removal, visually check for:

- □ Missing or loose nuts and bolts
- □ Loose or damaged intake and exhaust ducting
- □ Damaged oil drain lines
- □ Cracked or deteriorating turbocharger housing
- □ External oil leakage or exhaust leaks

Replace damaged parts with new parts.

To remove the turbocharger, perform the following:

NOTICE:

Do not attempt to remove carbon or dirt buildup on the compressor or turbine wheels without removing the turbocharger from the engine. If chunks of carbon are left on the blades, an unbalanced condition will exist and subsequent failure of the bearings will result if the turbocharger is operated. However, it is not necessary to disassemble the turbocharger to remove dirt or dust buildup.

1. Remove the turbocharger heat shields.
2. Disconnect the turbocharger ducting.

 Copyright © 2010 DETROIT DIESEL CORPORATION

https://truckmanualshub.com/

3. Disconnect and remove the CAC ducting at the compressor housing. Remove the compressor outlet elbow and inlet elbow.

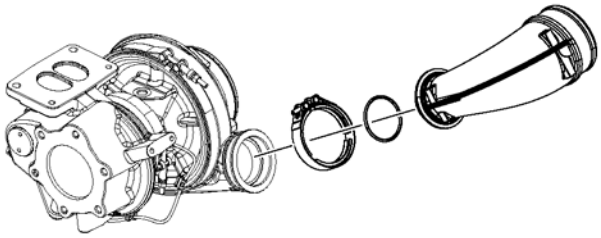

d090050

4. Remove the turbocharger oil supply and drain lines from the engine block and from the turbocharger. Remove the O-ring from the cylinder block.
5. Remove the fuel inlet line and coolant inlet and outlet lines from the doser injection valve.
6. To prevent coolant from spilling without draining the coolant system, cap the banjo bolt inlet and outlet coolant lines with a nut.
7. Disconnect the electrical wiring harness from the turbocharger speed sensor.

All information subject to change without notice.
DDC-SVC-MAN-0081 2010 Copyright © 2010 DETROIT DIESEL CORPORATION

https://truckmanualshub.com/

8. For EPA10 DD13 engines, remove the clamp (2) from the Electronic Proportioning Valve (EPV) air hose to the turbocharger and remove the hose (1) from the EPV.

NOTE:
Leave the air hose (1) connected to the turbocharger.

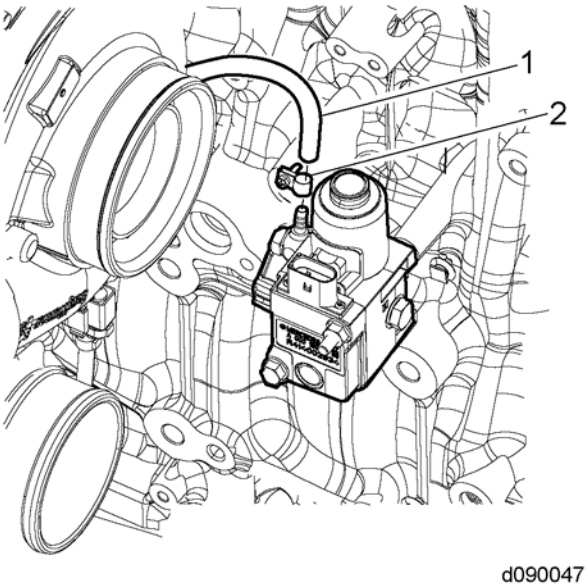

9. Remove the right side radiator support mount from the engine block.
10. Remove flange exhaust manifold from turbocharger housing.
11. Remove the four nuts from the studs attaching turbocharger to the exhaust manifold center section.

WARNING:

PERSONAL INJURY

To avoid injury when removing or installing a heavy engine component, ensure the component is properly supported and securely attached to an adequate lifting device to prevent the component from falling.

12. Attach a chain hoist and a suitable lifting sling to the turbocharger assembly.
13. Remove the two bolts from the turbocharger support bracket to the cylinder block.
14. Lower the turbocharger assembly away from the exhaust manifold and place it on a bench.
15. Discard the turbocharger gasket.
16. Cover the end of the oil supply line, the oil drain line, the air inlet and the exhaust outlet openings on the engine and turbocharger to prevent entry of foreign material.

 Copyright © 2010 DETROIT DIESEL CORPORATION

https://truckmanualshub.com/

WARNING:

PERSONAL INJURY

To avoid injury from improper use of chemicals, follow the chemical manufacturer's usage, handling, and disposal instructions. Observe all manufacturer's cautions.

17. Clean the exterior of the turbocharger with a non-caustic cleaning solvent.

All information subject to change without notice.
DDC-SVC-MAN-0081 2010 Copyright © 2010 DETROIT DIESEL CORPORATION

9.3 INSPECTION OF THE DD13 TURBOCHARGER

Check as follows:

1. Remove the exhaust pipe from the turbine outlet and remove the air intake pipe from the compressor inlet.
2. Visually inspect the turbine and compressor wheels for missing blades or blade damage.
3. Inspect the turbine and compressor wheels for heavy deposits of dirt, coke or carbon.
4. Using a flashlight, check the wheels and housings for signs of rubbing.
5. Rotate the turbine wheel to check for freedom of movement.
6. Replace the turbocharger if there is any visible damage. ***For DD13:*** refer to section 9.2.
   [a] Remove defective turbocharger from the engine.
   [b] Tag removed turbocharger for remanufacture.
   [c] Install a new turbocharger to the engine.

WARNING:
ENGINE EXHAUST
To avoid injury from inhaling engine exhaust, always operate the engine in a well-ventilated area. Engine exhaust is toxic.

7. Start the engine.
8. Run the engine speed to full load.
9. Visually inspect the exhaust for excessive smoke.
   [a] If the engine exhaust emission appears normal, no further troubleshooting is required. Shut down the engine.
   [b] If the engine exhaust emission is excessive, shut down the engine. Call Detroit Diesel Customer Support Center (313-592-5800).

 Copyright © 2010 DETROIT DIESEL CORPORATION

https://truckmanualshub.com/

9.4 INSTALLATION OF THE DD13 TURBOCHARGER

Install as follows:

WARNING:

PERSONAL INJURY

To avoid injury when removing or installing a heavy engine component, ensure the component is properly supported and securely attached to an adequate lifting device to prevent the component from falling.

1. Attach a chain hoist and a suitable lifting sling to the turbocharger assembly.
2. Remove any covers that were placed over the openings of the air inlet and exhaust outlet openings on the engine and turbocharger when the turbocharger was removed.
3. Remove any covers on the oil and coolant inlet lines, oil and coolant outlet lines, and drain openings on the turbocharger.
4. Place a new gasket, face up, with the tab towards outside on the exhaust manifold turbocharger flange.
5. Place the turbocharger assembly into position on the exhaust manifold flange studs. Tighten the nuts just enough to hold the turbocharger in place.
6. Torque the turbocharger exhaust manifold nuts to 50 N·m (37 lb·ft).
7. Install a new gasket and O-ring between the opening in the bottom side of the turbocharger center housing and the drain line that runs to the cylinder block. Torque the bolts to 30-38 N·m (22-28 lb·ft).
8. Install the turbocharger oil drain line.
9. Install the turbocharger oil supply line. Torque line to 30 N·m (22 lb·ft).

All information subject to change without notice.
DDC-SVC-MAN-0081 2010 Copyright © 2010 DETROIT DIESEL CORPORATION

WARNING:

PERSONAL INJURY

To avoid injury when removing or installing a heavy engine component, ensure the component is properly supported and securely attached to an adequate lifting device to prevent the component from falling.

10. For EPA10 DD13 engines, connect the air line supply (1) to the EPV (2).

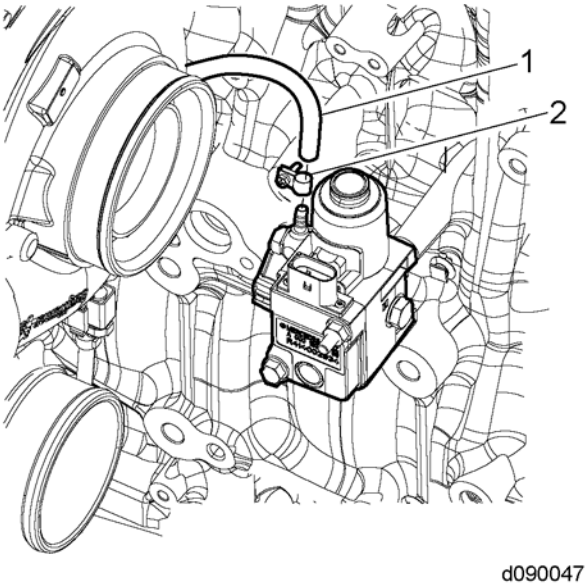

11. Connect the turbocharger speed sensor connector to the engine wiring harness.
12. Reconnect the flange to the exhaust manifold.
13. Install the coolant inlet and outlet lines to the doser injector housing. Torque to 15 N·m (11 lb·ft).
14. Install the fuel line to the doser injection valve. Torque to 23-25 N·m (17-18 lb·ft).
15. Install the turbocharger heat shields.
16. Install the two bolts to the turbocharger support bracket and turbocharger. Torque the bolts to 25 N·m (18 lb·ft).
17. Install the compressor elbow and the Charge Air Compressor (CAC) plumbing. Torque the clamps to 6 N·m (4 lb·ft).
18. Connect the compressor inlet hose.

 Copyright © 2010 DETROIT DIESEL CORPORATION

https://truckmanualshub.com/

9.5 EGR COOLER CLEANING PROCEDURE TO REMOVE EXCESS FUEL FROM COOLER AFTER DD13 TURBOCHARGER FAILURE

Inspect as follows:

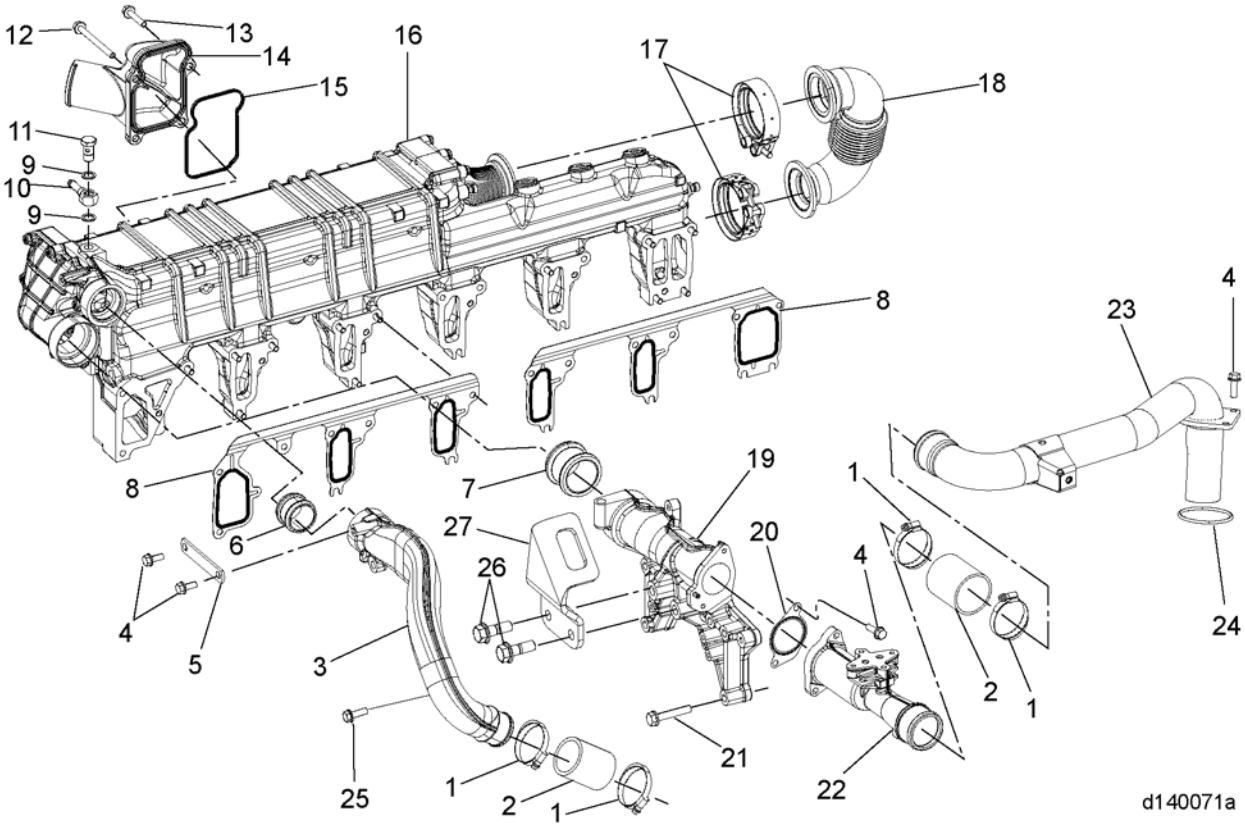

1. Clamp	10. Banjo Union	19. EGR Crossover Tube
2. Hose	11. Banjo Bolt	20. Gasket
3. Coolant Delivery Pipe	12. Bolt	21. Bolt
4. Bolt	13. Bolt	22. Venturi
5. Support	14. Coolant Outlet Elbow	23. Mixer Pipe
6. Connecting Tube	15. Gasket	24. O-ring
7. Connecting Tube	16. EGR Cooler Water Manifold Assembly	25. Bolt
8. Gasket	17. Clamps	26. Bolt
9. Seal Ring	18. EGR Hot Pipe	27. Front Lifting Eye

Figure 9-2 EPA10 DD13 EGR Cooler Water Manifold and Related Parts

All information subject to change without notice.
DDC-SVC-MAN-0081 2010 Copyright © 2010 DETROIT DIESEL CORPORATION

https://truckmanualshub.com/

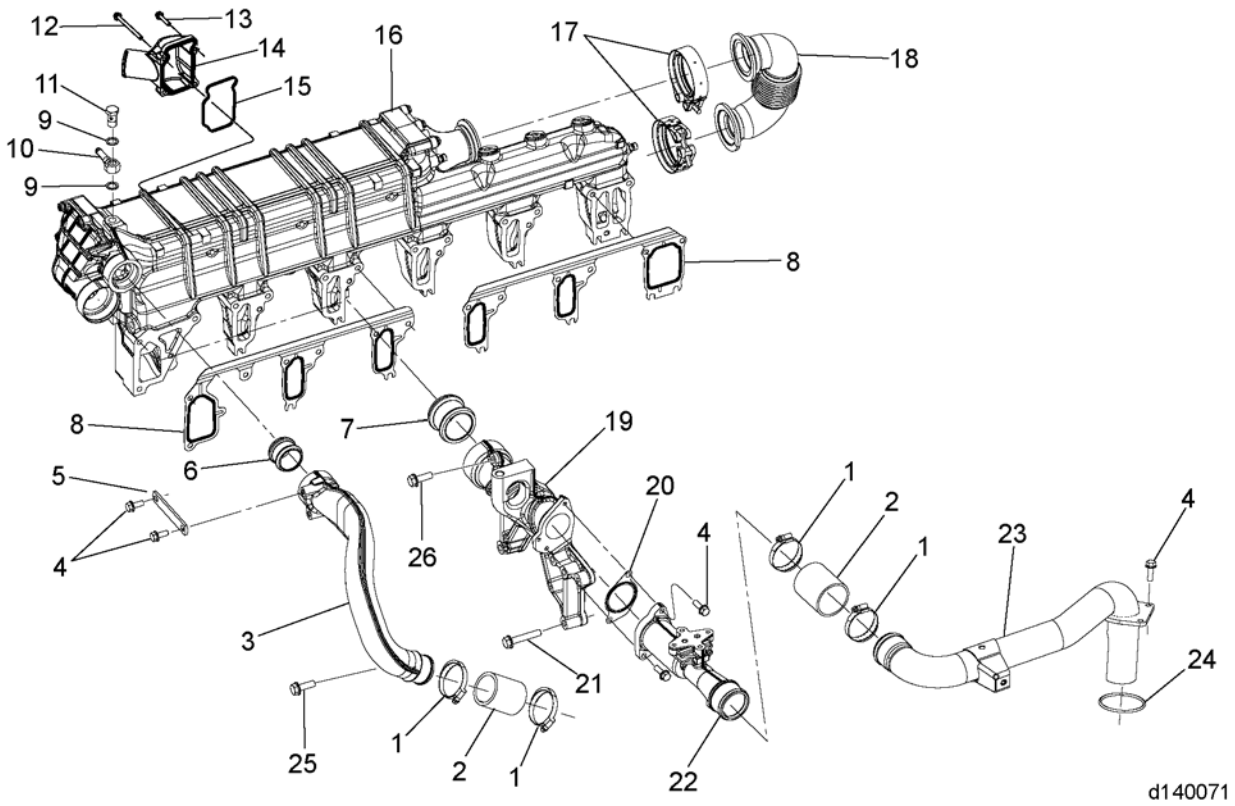

1. Clamp	10. Banjo Union	19. Exhaust Gas Crossover Tube / Lifting Eye
2. Hose	11. Banjo Bolt	20. Gasket
3. Coolant Crossover Pipe	12. Bolt	21. Bolt
4. Bolt	13. Bolt	22. Venturi
5. Support	14. Outlet Nipple	23. Mixer Pipe
6. Coolant Connecting Tube	15. Seal	24. Seal Ring
7. Exhaust Gas Connecting Tube	16. Exhaust Gas Recirculation Cooler Water Manifold Assembly	25. Bolt
8. Gasket	17. Clamps	26. Bolt
9. Seal Ring	18. Hot Pipe	

Figure 9-3 EPA07 DD13 EGR Cooler Water Manifold and Related Parts

 Copyright © 2010 DETROIT DIESEL CORPORATION

https://truckmanualshub.com/

Check as follows:

NOTICE:
This cleaning procedure must be followed after replacing a DD13 turbocharger so that any failure will not cause excessive fuel, oil, or coolant to enter the exhaust system. Failure to perform this procedure could cause severe engine damage.

1. Shut off the engine, apply the parking brake, chock the wheels, and perform any other applicable safety steps.
2. Remove the clamps (2) and the EGR hot pipe (3) from the EGR cooler and inspect for any signs of liquid or moisture. The hot pipe and EGR cooler inlet should have a black dry soot residue inside. Refer to section .
   [a] If liquid or moisture is present in the pipe, go to the next step.
   [b] If there is no sign of liquid or moisture in the pipe, install the EGR cooler hot pipe. No further action is required. Refer to section .

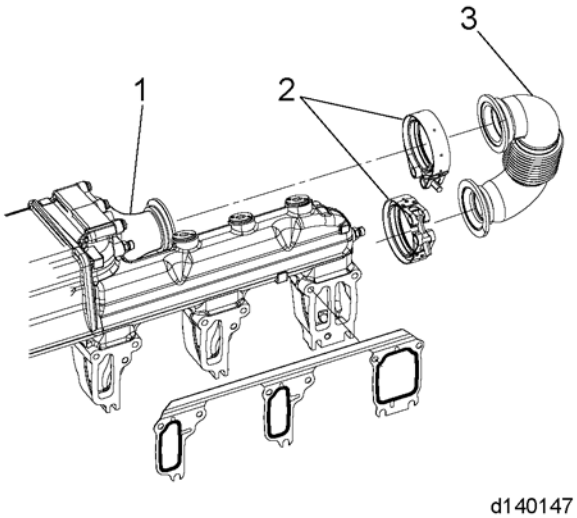

All information subject to change without notice.
DDC-SVC-MAN-0081 2010 Copyright © 2010 DETROIT DIESEL CORPORATION

3. Remove the EGR Mixer Pipe (2) from the cold boost pipe (1). Refer to section .

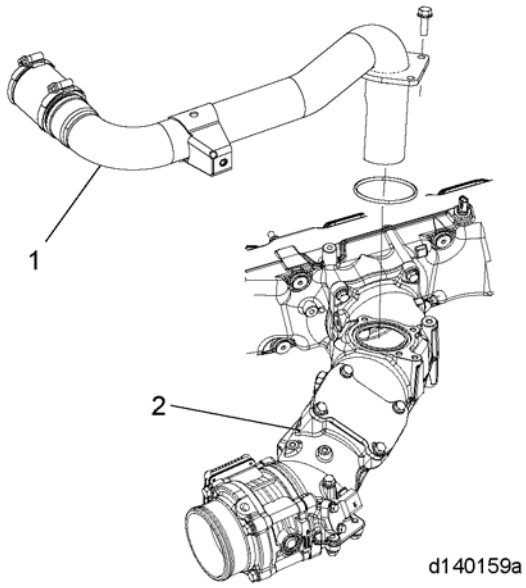

4. Remove the Exhaust Gas Crossover Tube (2), gasket (4), venturi (6), lifting eye (8) and connecting tube (1) from the EGR cooler.

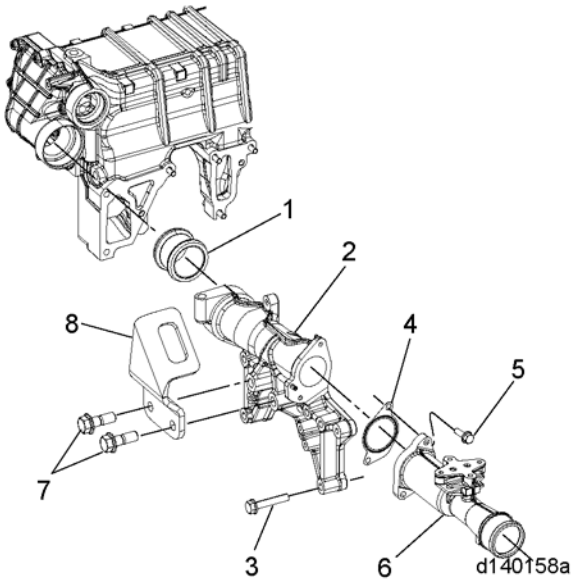

 Copyright © 2010 DETROIT DIESEL CORPORATION

https://truckmanualshub.com/

5. Place a towel over the outlet of the EGR cooler and retain it with a zip tie.

WARNING:

EYE INJURY

To avoid injury from flying debris when using compressed air, wear adequate eye protection (face shield or safety goggles) and do not exceed 276 kPa (40 psi) air pressure.

6. Using a rubber tipped blow gun, blow compressed shop air into the individual tubes in the EGR cooler to clear any excess fuel, soot, and carbon.
7. After performing the cleaning procedure, refer to section to install the:
   [a] mixer pipe.
   [b] exhaust gas crossover tube/lifting eye (EPA07 engines) and exhaust gas crossover tube (EPA10 engines).
   [c] venturi.
8. If the cooler has an excessive amount of buildup that cannot be removed, replace the EGR cooler. Refer to section .

All information subject to change without notice.
DDC-SVC-MAN-0081 2010 Copyright © 2010 DETROIT DIESEL CORPORATION

https://truckmanualshub.com/

10 DD13 WASTEGATE SOLENOID

Section **Page**

10.1 DESCRIPTION AND OPERATION OF THE DD13 WASTEGATE SOLENOID 10-3
10.2 REMOVAL OF THE DD13 WASTEGATE SOLENOID 10-4
10.3 INSTALLATION OF THE DD13 WASTEGATE SOLENOID 10-6

https://truckmanualshub.com/

All information subject to change without notice.
DDC-SVC-MAN-0081 2010 Copyright © 2010 DETROIT DIESEL CORPORATION

https://truckmanualshub.com/

10.1 DESCRIPTION AND OPERATION OF THE DD13 WASTEGATE SOLENOID

For EPA10, the DD13 uses an wastegate solenoid to control the turbocharger wastegate. The MCM uses a PWM signal to activate the wastegate solenoid to control the available air pressure to the wastegate on the turbocharger. There are many operating conditions that require use of the wastegate solenoid.

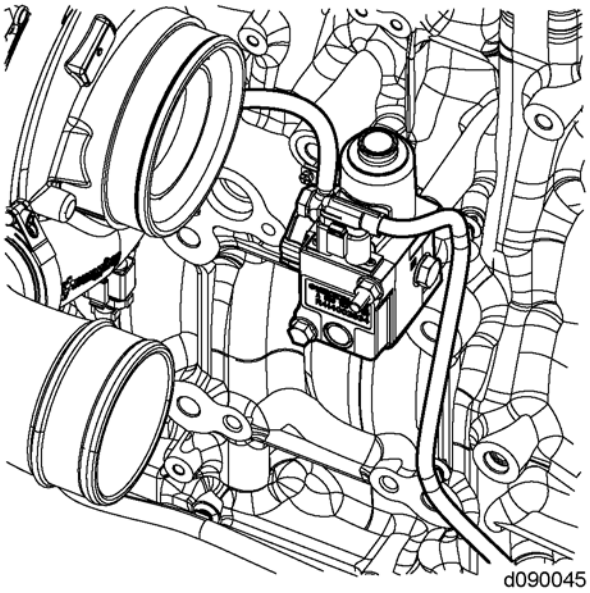

 Copyright © 2010 DETROIT DIESEL CORPORATION

https://truckmanualshub.com/

10.2 REMOVAL OF THE DD13 WASTEGATE SOLENOID

Remove as follows:

1. Disconnect the electrical harness connector (1) from the wastegate solenoid.

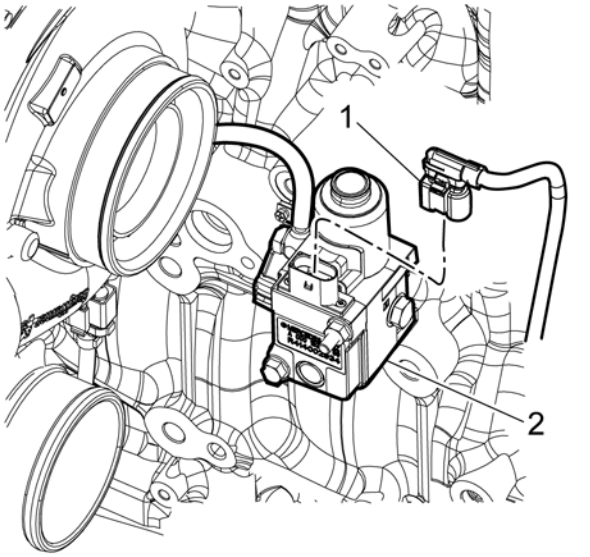

d090046

2. Remove the hose clamp (2) and remove the air line (1) from the wastegate solenoid.

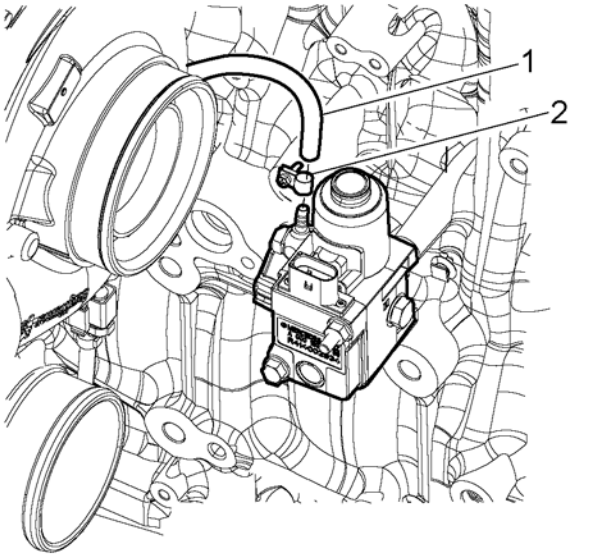

d090047

All information subject to change without notice.
DDC-SVC-MAN-0081 2010 Copyright © 2010 DETROIT DIESEL CORPORATION

https://truckmanualshub.com/

3. Remove the vehicle air supply (1) to the wastegate solenoid.

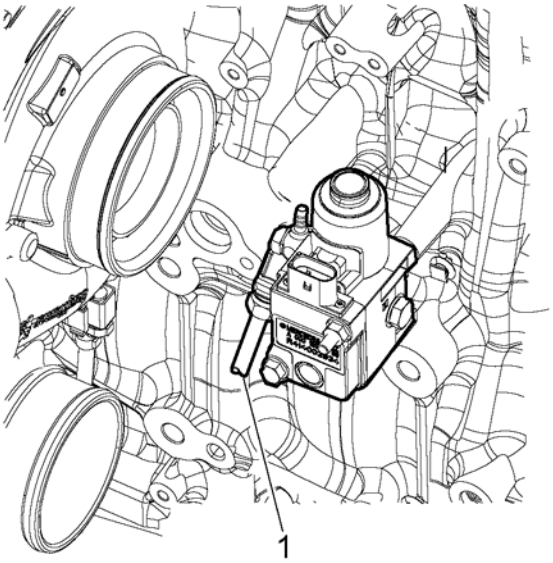

d090048

4. Remove the bolt (3) and the nut (2) from the stud (1) and remove the wastegate solenoid from the cylinder block.

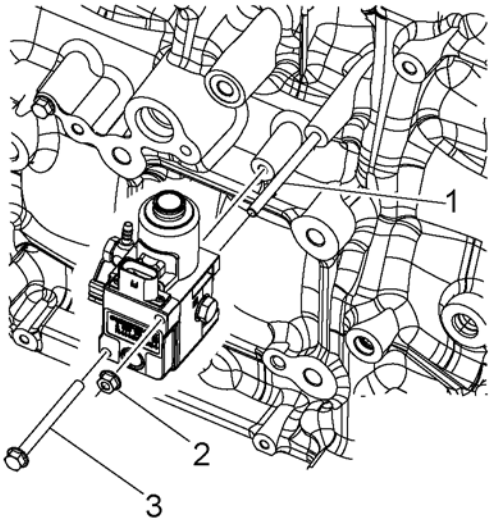

d090049

 Copyright © 2010 DETROIT DIESEL CORPORATION

10.3 INSTALLATION OF THE DD13 WASTEGATE SOLENOID

Install as follows:

1. If removed, install the stud to the cylinder block boss. Torque the stud to 10 N·m (7.4 lb·ft).
2. Install the wastegate solenoid on the cylinder block.
3. Install the bolt (3) and the nut (2). Torque each to 30 N·m (22 lb·ft).

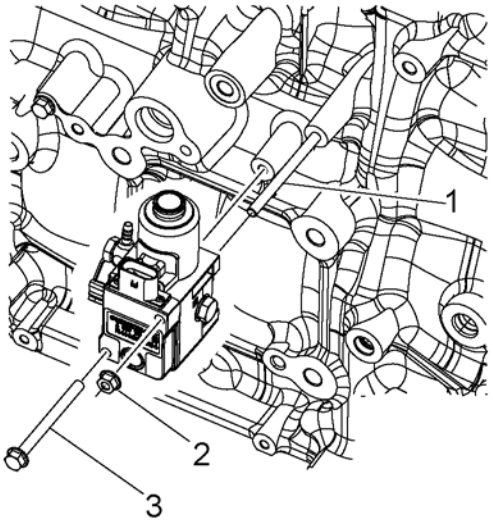

d090049

4. Install the vehicle air supply (1) to the wastegate solenoid. Torque to 25 N·m (18 lb·ft).

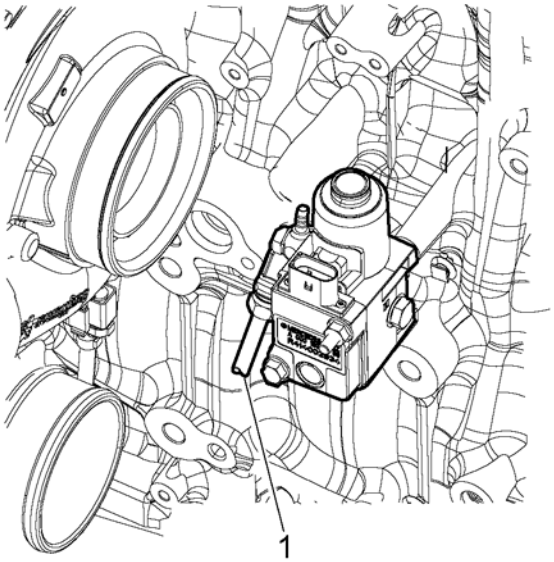

d090048

All information subject to change without notice.
DDC-SVC-MAN-0081 2010 Copyright © 2010 DETROIT DIESEL CORPORATION

https://truckmanualshub.com/

5. Install the air line to the wastegate solenoid and tighten hose clamp.

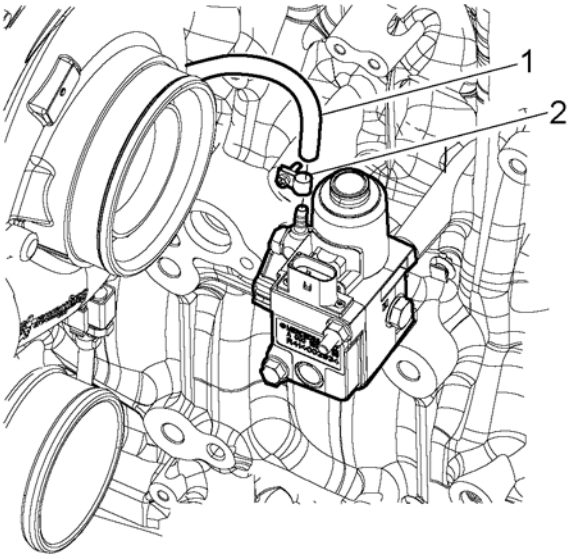

d090047

6. Connect the wastegate solenoid connector.

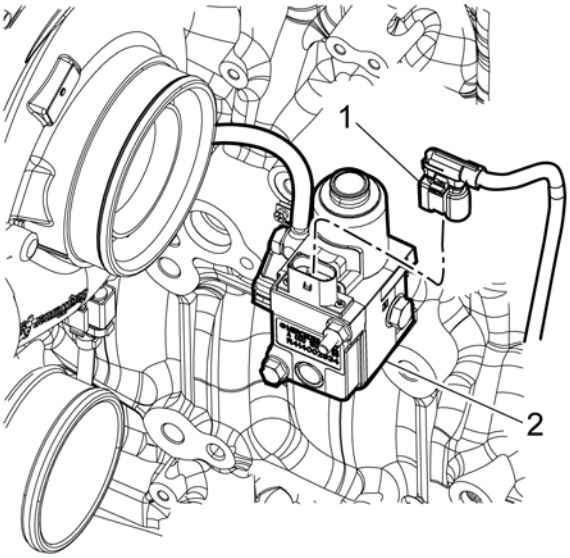

d090046

 Copyright © 2010 DETROIT DIESEL CORPORATION

https://truckmanualshub.com/

All information subject to change without notice.
DDC-SVC-MAN-0081 2010 Copyright © 2010 DETROIT DIESEL CORPORATION

https://truckmanualshub.com/

11 DD15 TURBOCHARGER

Section **Page**

11.1 DESCRIPTION AND OPERATION OF TURBOCHARGER AND RELATED PARTS 11-3

11.2 REMOVAL OF DD15 TURBOCHARGER 11-5

11.3 INSPECTION OF DD15 TURBOCHARGER 11-7

11.4 INSTALLATION OF DD15 TURBOCHARGER 11-8

11.5 EGR COOLER CLEANING PROCEDURE TO REMOVE EXCESS OIL FROM EGR COOLER AFTER DD15 TURBOCHARGER FAILURE 11-10

https://truckmanualshub.com/

All information subject to change without notice.
DDC-SVC-MAN-0081 2010 Copyright © 2010 DETROIT DIESEL CORPORATION

https://truckmanualshub.com/

11.1 DESCRIPTION AND OPERATION OF TURBOCHARGER AND RELATED PARTS

Compression of air in the turbocharger causes an air mass to flow into the combustion chamber. The turbocharger consists of a turbine and a compressor which are attached to a shaft. The exhaust gas flows to the turbine wheel and causes it to turn. This turning motion is transmitted to the shaft and the compressor impeller. The intake air from the air filter is compressed by the compressor impeller and flows over a charge air pipe to the charge air cooler. The compressed air is cooled in the charge air cooler, permitting a more dense charge of air to be delivered to the engine, and therefore, engine output is increased. The charge air then passes from charge air cooler into the intake manifold. The turbocharger is mounted on the exhaust outlet flange of the engine exhaust manifold.The turbocharger is mounted on the exhaust outlet flange of the engine exhaust manifold.

The advantages are as follows:

- Increases the engine performance and torque
- Reduces fuel consumption compared to a similarly powered naturally aspirated engine
- Reduces emissions.

 Copyright © 2010 DETROIT DIESEL CORPORATION

https://truckmanualshub.com/

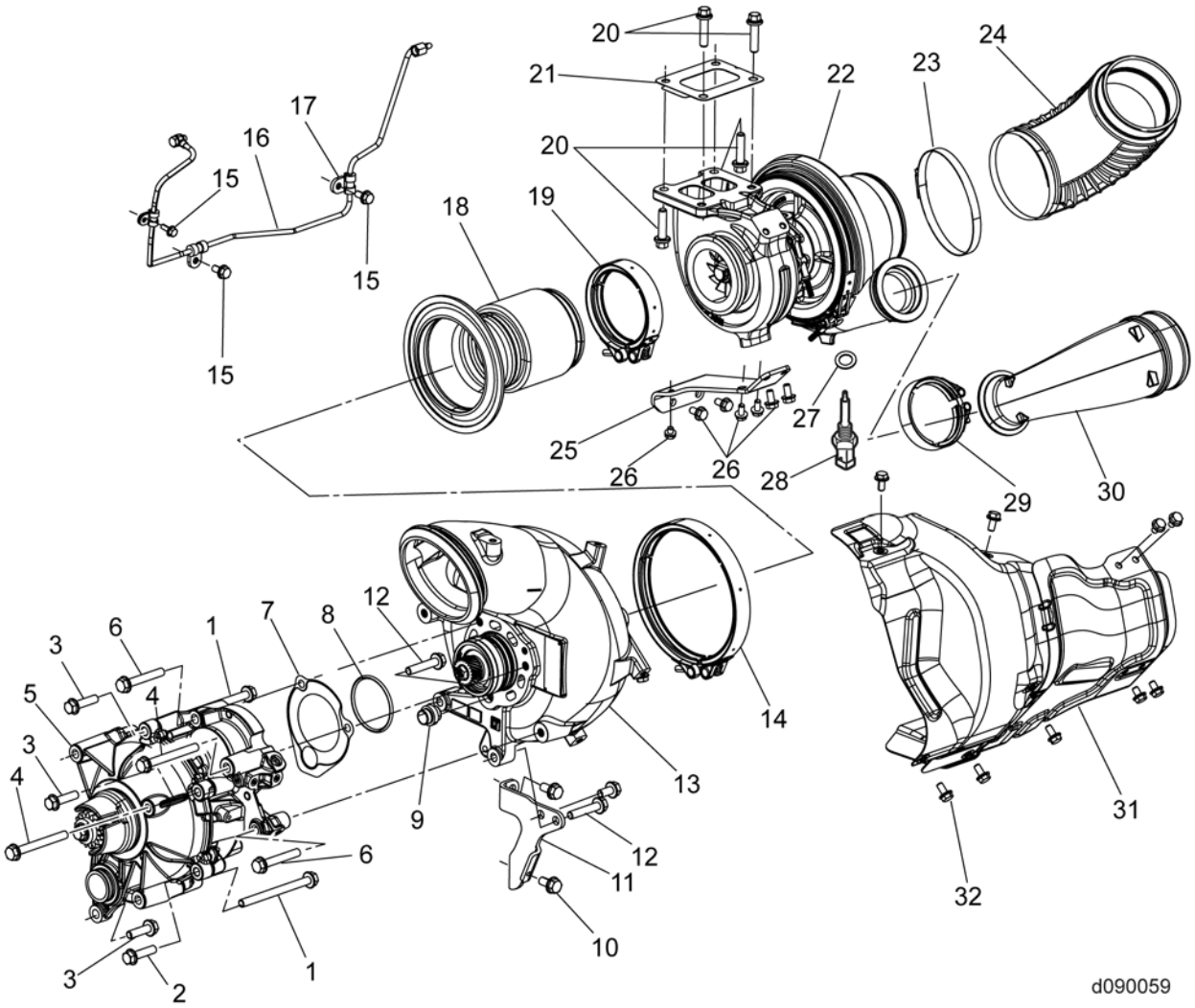

1. Bolt (M10 x 120 mm)	9. Locking Dowel	17. P-clip	25. Bracket
2. Bolt (M10 x 35 mm)	10. Bolt (M10 x 20 mm)	18. Interstage Duct	26. Bolts (6 qty.)
3. Bolt	11. Bracket	19. Clamp	27. O-ring
4. Bolt (M10 x 90 mm)	12. Bolt (M10 x 20 mm)	20. Bolt	28. Turbo Speed Sensor
5. Gear Box	13. Axial Power Turbine	21. Gasket	29. Clamp
6. Bolt (M10 x 65 mm)	14. Clamp	22. Turbocharger	30. Turbo Outlet Elbow
7. Gasket Seal	15. Bolts	23. Clamp	31. Heat Shield
8. O-ring	16. Air Line	24. Turbo Inlet Elbow	32. Heat Shield Mounting Bolt

Figure 11-1 EPA07 and EPA10 DD15 Turbocharger and Related Parts

All information subject to change without notice.
DDC-SVC-MAN-0081 2010 Copyright © 2010 DETROIT DIESEL CORPORATION

https://truckmanualshub.com/

11.2 REMOVAL OF DD15 TURBOCHARGER

Cleaning the turbocharger is necessary before removal.

WARNING:

PERSONAL INJURY

To avoid injury from hot surfaces, wear protective gloves, or allow engine to cool before removing any component.

WARNING:

PERSONAL INJURY

To avoid injury from contact with rotating parts when an engine is operating with the air inlet piping removed, install an air inlet screen shield over the turbocharger air inlet. The shield prevents contact with rotating parts.

Prior to removal, visually check for:

- □ Missing or loose nuts and bolts.
- □ Loose or damaged intake and exhaust ducting.
- □ Damaged oil drain lines.
- □ Cracked or deteriorating turbocharger housings.
- □ External oil leakage or exhaust leaks.

Replace damaged parts with new parts.

To remove the turbocharger, perform the following:

NOTICE:

Do not attempt to remove carbon or dirt buildup on the compressor or turbine wheels without removing the turbocharger from the engine. If chunks of carbon are left on the blades, an unbalanced condition will exist and subsequent failure of the bearings will result if the turbocharger is operated. However, it is not necessary to disassemble the turbocharger to remove dirt or dust buildup.

1. Remove the turbocharger heat shield.
2. Disconnect and remove the CAC ducting at the compressor housing. Remove the compressor outlet elbow and inlet elbow.

NOTE:
APT air feed line removal applies only to engines without an APT solenoid.

 Copyright © 2010 DETROIT DIESEL CORPORATION

https://truckmanualshub.com/

3. Remove APT air feed line from the compressor housing.
4. Remove the turbocharger oil supply and drain line from the center housing.
5. Remove and discard O-ring from the cylinder block and gasket from center section.
6. Remove large marmon clamp connecting APT to the interstage duct.
7. Loosen the bolts attaching the turbocharger support bracket to the cylinder block.
8. Remove four bolts attaching the turbocharger to the exhaust manifold center section.
9. Remove the two bolts from turbocharger bracket to turbine housing.

WARNING:

PERSONAL INJURY

To avoid injury when removing or installing a heavy engine component, ensure the component is properly supported and securely attached to an adequate lifting device to prevent the component from falling.

10. Attach a chain hoist and a suitable lifting sling to the turbocharger assembly.

NOTICE:

Turbocharger must be supported when removing the mounting bolts to avoid damage to the turbocharger.

11. Lift the turbocharger assembly away from the engine and place it on a bench.
12. Cover turbocharger to avoid any foreign material from entering oil, air, or exhaust passages.

WARNING:

PERSONAL INJURY

To avoid injury from improper use of chemicals, follow the chemical manufacturer's usage, handling, and disposal instructions. Observe all manufacturer's cautions.

13. Clean the exterior of the turbocharger with a non-caustic cleaning solvent.

All information subject to change without notice.
DDC-SVC-MAN-0081 2010 Copyright © 2010 DETROIT DIESEL CORPORATION

11.3 INSPECTION OF DD15 TURBOCHARGER

Check as follows:

1. Remove the exhaust pipe from the turbine outlet and remove the air intake pipe from the compressor inlet.
2. Visually inspect the turbine and compressor wheels for missing blades or blade damage.
3. Inspect the turbine and compressor wheels for heavy deposits of dirt, coke or carbon.
4. Using a flashlight, check the wheels and housings for signs of rubbing.
5. Rotate the turbine wheel to check for freedom of movement.
6. Replace the turbocharger if there is any visible damage. Refer to section 11.2.
   [a] Remove defective turbocharger from the engine.
   [b] Tag removed turbocharger for remanufacture.
   [c] Install a new turbocharger to the engine.

WARNING:

ENGINE EXHAUST

To avoid injury from inhaling engine exhaust, always operate the engine in a well-ventilated area. Engine exhaust is toxic.

7. Start the engine.
8. Run the engine speed to full load.
9. Visually inspect the exhaust for excessive smoke.
   [a] If the engine exhaust emission appears normal, no further troubleshooting is required. Shut down the engine.
   [b] If the engine exhaust emission is excessive, shut down the engine. Call Detroit Diesel Customer Support Center (313-592-5800).

 Copyright © 2010 DETROIT DIESEL CORPORATION

https://truckmanualshub.com/

11.4 INSTALLATION OF DD15 TURBOCHARGER

Install as follows:

1. If removed, install the gear box. Refer to section 13.4.
2. If removed, install the axial power turbine. Refer to section 12.4.
3. If removed, loosely install the install turbocharger support bracket to the cylinder block
4. Install interstage duct onto turbocharger.

WARNING:

PERSONAL INJURY

To avoid injury when removing or installing a heavy engine component, ensure the component is properly supported and securely attached to an adequate lifting device to prevent the component from falling.

5. Attach a chain hoist and a suitable lifting sling to the turbocharger assembly.
6. Remove any covers that were placed over the openings of the air inlet and exhaust outlet openings on the engine and turbocharger when the turbocharger was removed.
7. Remove any covers on the oil and coolant inlet and drain lines, and the oil and coolant inlet and drain openings on the turbocharger.
8. Install new turbocharger flange gasket with the tab facing the rear of the engine.

NOTICE:

The turbocharger must be supported after it has been installed to the exhaust manifold flange to avoid damage to the turbocharger.

9. Secure the turbocharger to the exhaust flange. Hand tighten bolts.

NOTE:
Do not use any type of lubricant on the inside of any air inlet hose or on the hose contact surfaces of the turbocharger compressor housing, CAC ducting or the intake manifold.

NOTE:
When installing the turbocharger, use care when moving the turbocharger into position onto the interstage duct.

10. Install turbocharger to turbocharger support bracket and hand tighten bolts.
11. Torque the turbocharger-to-exhaust manifold bolts to 50 N·m (37 lb·ft).
12. Tighten the interstage duct clamp to 12 N·m (9 lb·ft).
13. Torque turbine housing bracket bolts to 25 N·m (18 lb·ft).

All information subject to change without notice.
DDC-SVC-MAN-0081 2010 Copyright © 2010 DETROIT DIESEL CORPORATION

https://truckmanualshub.com/

14. Install the turbocharger oil drain line, using a new gasket and O-ring between the opening in the bottom side of the turbocharger center housing and the drain line that runs to the cylinder block. Torque the bolts to 30-38 N·m (22-28 lb·ft).
15. Install turbocharger oil supply line. Torque line to 30 N·m (22 lb·ft).
16. Install heat shields.
17. Install compressor elbow and charge air compressor plumbing. Torque clamps to 6 N·m (4 lb·ft).

 Copyright © 2010 DETROIT DIESEL CORPORATION

https://truckmanualshub.com/

11.5 EGR COOLER CLEANING PROCEDURE TO REMOVE EXCESS OIL FROM EGR COOLER AFTER DD15 TURBOCHARGER FAILURE

Observe the following:

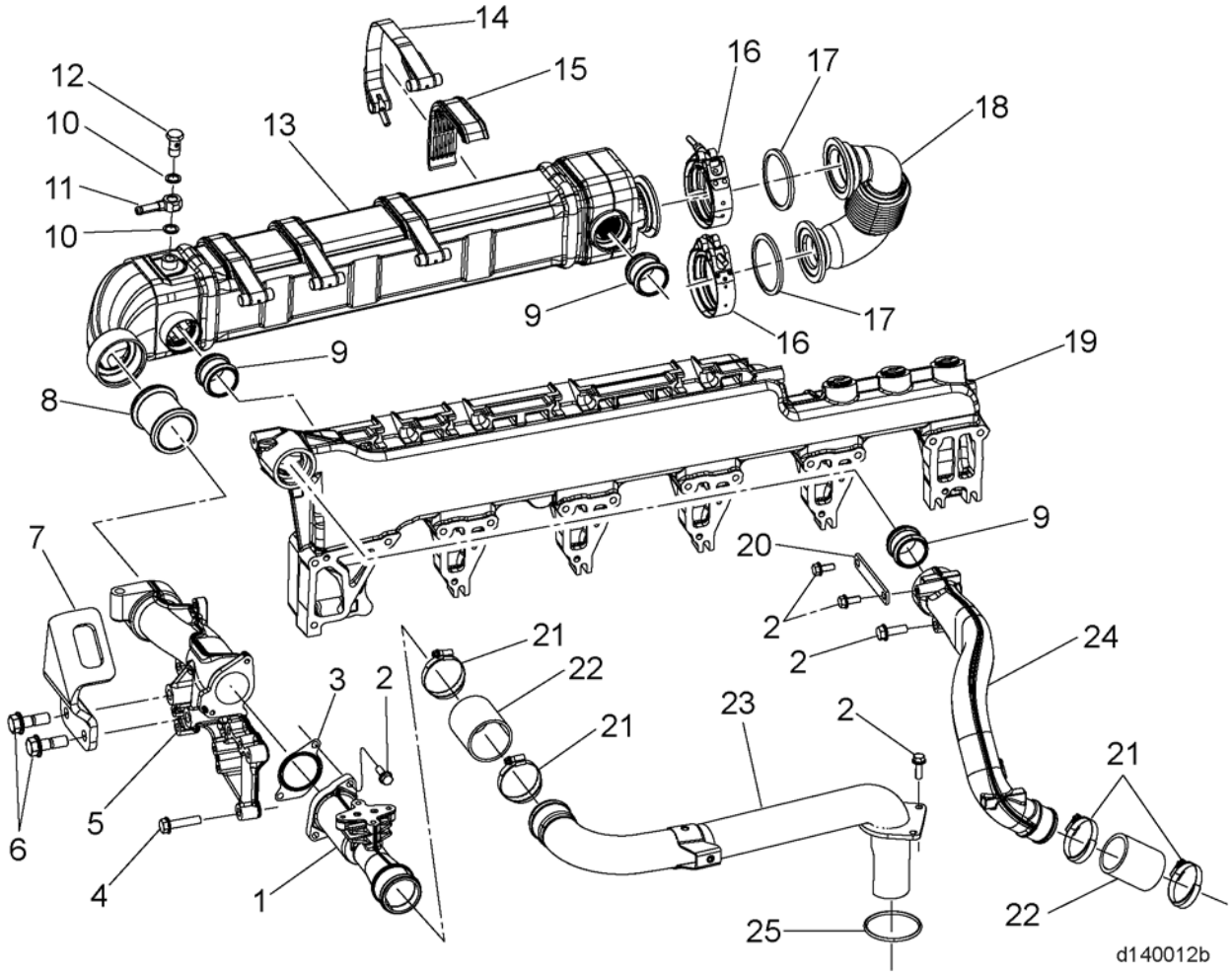

1. Venturi
2. Bolt
3. Gasket
4. Bolt
5. Exhaust Gas Crossover Tube
6. Bolt
7. Lifting Eye
8. Coolant Connecting Tube
9. Connecting Tube
10. Seal Ring
11. Banjo Union
12. Banjo Bolt
13. Exhaust Gas Cooler
14. Strap
15. Shim
16. Clamp
17. Seal Washer
18. EGR Hot Pipe
19. Water Manifold
20. Support
21. Clamp
22. Hose
23. Mixer Pipe
24. Coolant Crossover Pipe
25. Seal Ring

Figure 11-2 EPA10 DD15 EGR Cooler and Related Parts

All information subject to change without notice.
DDC-SVC-MAN-0081 2010 Copyright © 2010 DETROIT DIESEL CORPORATION

https://truckmanualshub.com/

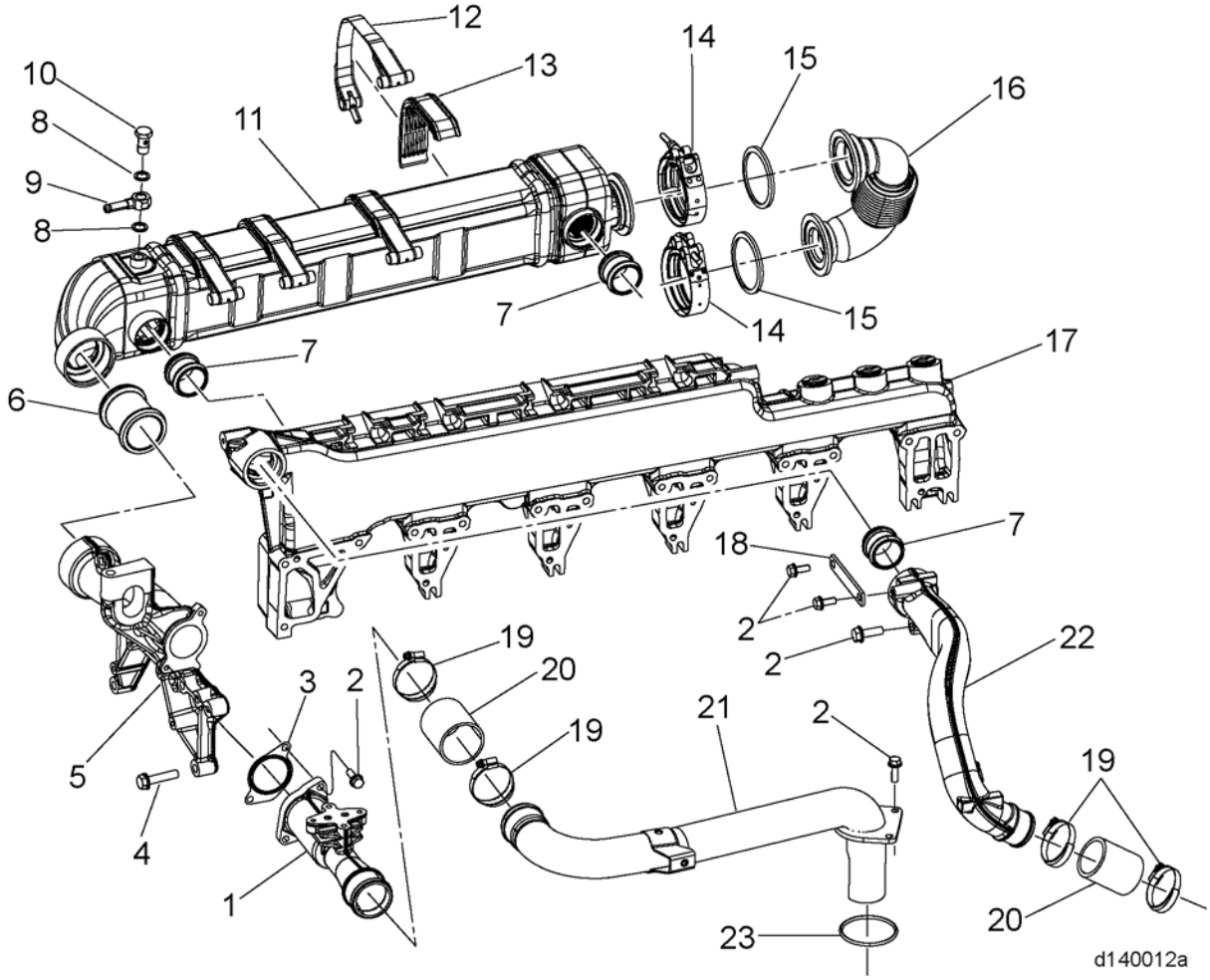

1. Venturi
2. Bolt
3. Gasket
4. Bolt
5. Exhaust Gas Crossover Tube/Lifting Eye
6. Connecting Tube
7. Connecting Tube
8. Seal Ring
9. Banjo Union
10. Banjo Bolt
11. Exhaust Gas Cooler
12. Strap
13. Shim
14. Clamp
15. Metal Seal
16. Hot Pipe
17. Water Manifold
18. Support
19. Clamp
20. Hose
21. Mixer Pipe
22. Coolant Delivery Pipe
23. Seal Ring

Figure 11-3 EPA07 DD15 EGR Cooler and Related Parts

 Copyright © 2010 DETROIT DIESEL CORPORATION

https://truckmanualshub.com/

Check as follows:

NOTICE:
This cleaning procedure must be followed after replacing a DD15 turbocharger so that any failure will not cause excessive fuel, oil, or coolant to enter the exhaust system. Failure to perform this procedure could cause severe engine damage.

1. Shut off the engine, apply the parking brake, chock the wheels, and perform any other applicable safety steps.
2. Remove the EGR hot pipe (4) and gaskets (3) and inspect for any signs of liquid or moisture. The hot pipe and EGR cooler inlet should have a black dry soot residue inside.
   [a] If liquid or moisture is present in the pipe, go to the next step.
   [b] If there is no sign of liquid or moisture in the pipe or EGR cooler, install the hot pipe. No further action is required.

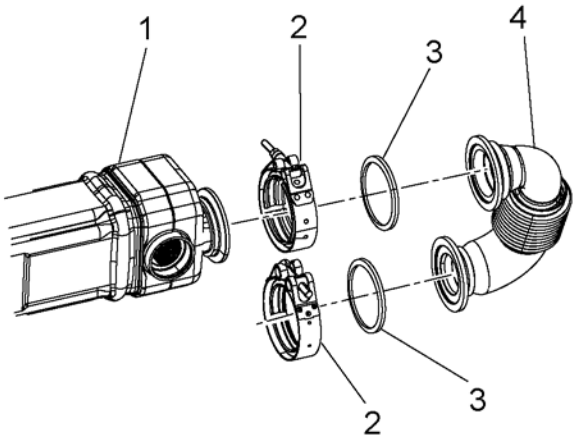

d140156

3. Remove the mixer pipe (4) from the cold boost pipe (1). Refer to section .

All information subject to change without notice.
DDC-SVC-MAN-0081 2010 Copyright © 2010 DETROIT DIESEL CORPORATION

4. Remove the exhaust gas crossover tube/lifting eye (2) Refer to section and venturi (3). Refer to section .

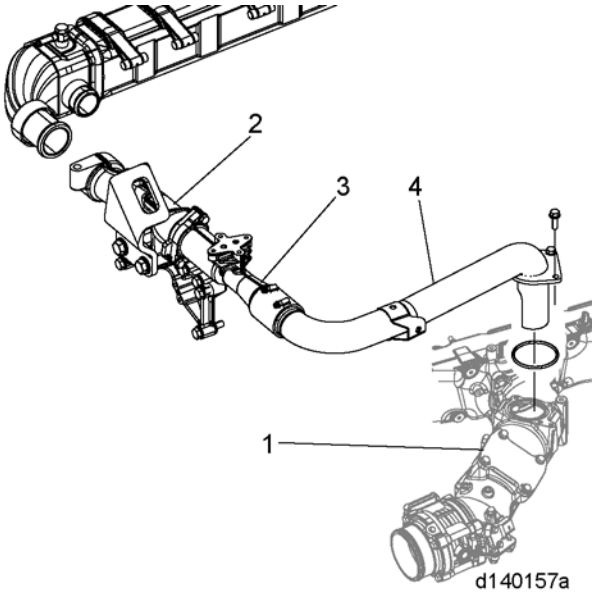

5. Place a towel over the outlet of the EGR cooler and retain it with a zip tie.

WARNING:
EYE INJURY
To avoid injury from flying debris when using compressed air, wear adequate eye protection (face shield or safety goggles) and do not exceed 276 kPa (40 psi) air pressure.

6. Using a rubber tipped blow gun, blow compressed shop air into the individual tubes in the EGR cooler to clear any excess fuel, soot, and carbon.
7. After performing the cleaning procedure, refer to section to install the:
   [a] mixer pipe.
   [b] exhaust gas crossover tube/lifting eye (EPA07 engines) and exhaust gas crossover tube (EPA10 engines).
   [c] venturi.
8. If the cooler has an excessive amount of buildup that cannot be removed, replace the EGR cooler. Refer to section .

 Copyright © 2010 DETROIT DIESEL CORPORATION

https://truckmanualshub.com/

All information subject to change without notice.
DDC-SVC-MAN-0081 2010 Copyright © 2010 DETROIT DIESEL CORPORATION

https://truckmanualshub.com/

12 DD15 AXIAL POWER TURBINE

Section **Page**

12.1 DESCRIPTION AND OPERATION OF DD15 AXIAL POWER TURBINE AND RELATED PARTS 12-3
12.2 REMOVAL OF DD15 AXIAL POWER TURBINE 12-5
12.3 INSPECTION OF THE DD15 AXIAL POWER TURBINE 12-6
12.4 INSTALLATION OF DD15 AXIAL POWER TURBINE 12-7

https://truckmanualshub.com/

All information subject to change without notice.
DDC-SVC-MAN-0081 2010 Copyright © 2010 DETROIT DIESEL CORPORATION

https://truckmanualshub.com/

12.1 DESCRIPTION AND OPERATION OF DD15 AXIAL POWER TURBINE AND RELATED PARTS

The Axial Power Turbine (APT) increases the efficiency and the economy of the engine by converting the thermal energy in the exhaust flow from the turbocharger into mechanical energy, delivering the resulting torque to the crankshaft. The rated speed of the turbine wheel of the APT device is about 50,000 rpm. The turbine wheel generates a torque in this range of about 10 N·m (7 lb·ft), which is increased through various gear ratios up to 260 N·m (192 lb·ft). The exhaust gas flows to the turbine wheel of the APT and drives the wheel. The rotational movement created is transmitted to the shaft of the small output gear, and from there, to the large output gear of the hydrodynamic clutch. The rotational speed is reduced because of the gear ratio between the output gear and drive gear; this gear ratio also multiplies torque output. The hydrodynamic clutch impeller is a part of the hydrodynamic clutch housing. The vanes on the impeller generate an oil flow in the hydrodynamic clutch which sets the turbine wheel of the hydrodynamic clutch into rotation and the output gear is driven over a shaft. The generated torque is transferred through the idler gear number four to the crankshaft gear. It is also possible to ensure, via the hydrodynamic clutch, that matching rotational speed takes place between the crankshaft and the axial power turbine-drive.

The APT is connected to the engine oil circuit. The gears and the bearing are lubricated and cooled by the engine oil. The hydrodynamic clutch is supplied with engine oil by the hollow bearing shaft. One special aspect is the seal between the shaft and the exhaust turbine housing. The seal between these two components is formed by using two metal sealing rings which are pressed into their seat by compressed air. The pressure is regulated either by an air sealed pressure regulator or from the turbo charger compressor.

 Copyright © 2010 DETROIT DIESEL CORPORATION

https://truckmanualshub.com/

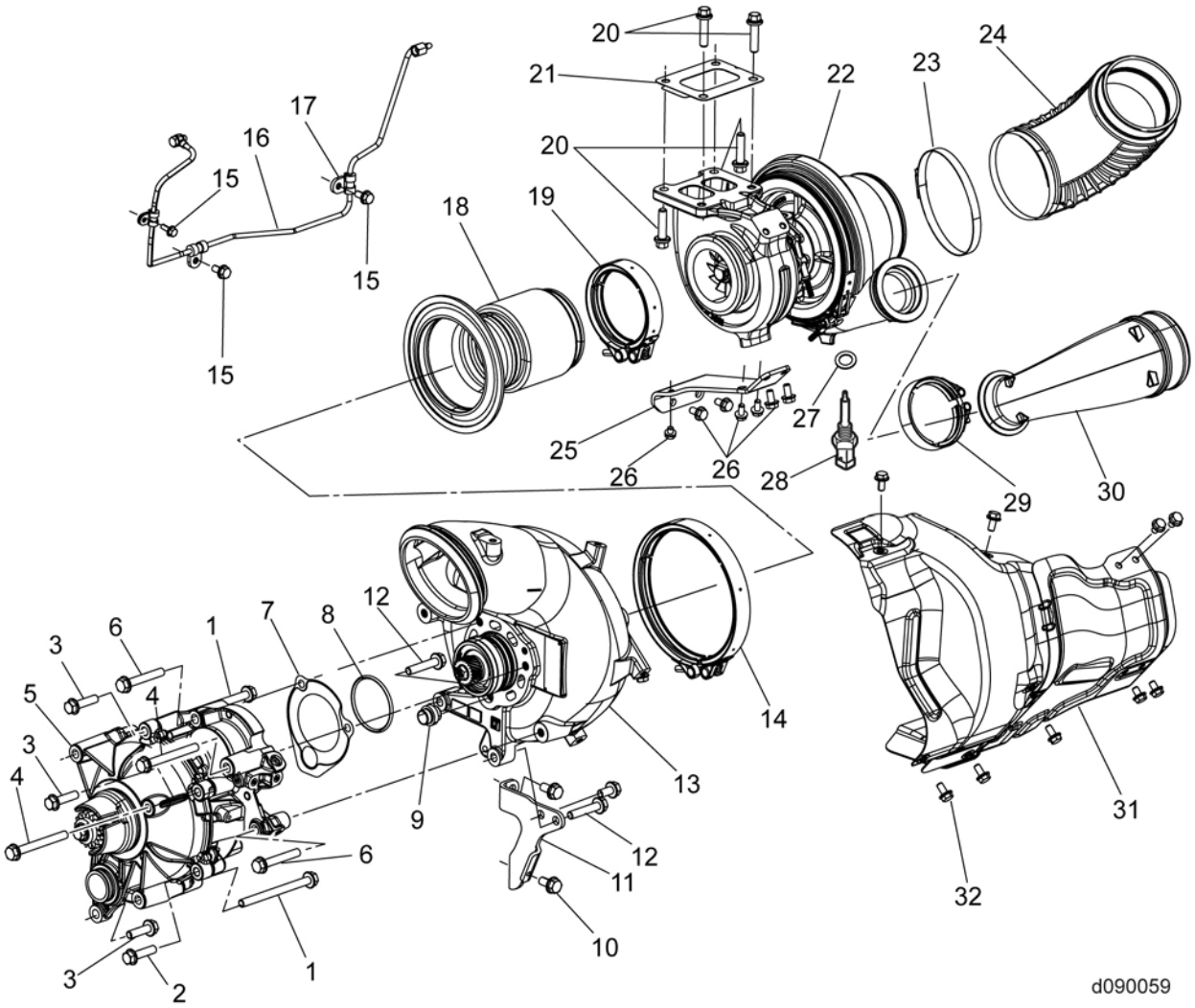

1. Bolt (M10 x 120 mm)	9. Locking Dowel	17. P-clip	25. Bracket
2. Bolt (M10 x 35 mm)	10. Bolt (M10 x 20 mm)	18. Interstage Duct	26. Bolts (6 qty.)
3. Bolt	11. Bracket	19. Clamp	27. O-ring
4. Bolt (M10 x 90 mm)	12. Bolt (M10 x 20 mm)	20. Bolt	28. Turbo Speed Sensor
5. Gear Box	13. Axial Power Turbine	21. Gasket	29. Clamp
6. Bolt (M10 x 65 mm)	14. Clamp	22. Turbocharger	30. Turbo Outlet Elbow
7. Gasket Seal	15. Bolts	23. Clamp	31. Heat Shield
8. O-ring	16. Air Line	24. Turbo Inlet Elbow	32. Heat Shield Mounting Bolt

Figure 12-1 Axial Power Turbine and Related Parts

All information subject to change without notice.
DDC-SVC-MAN-0081 2010 Copyright © 2010 DETROIT DIESEL CORPORATION

https://truckmanualshub.com/

12.2 REMOVAL OF DD15 AXIAL POWER TURBINE

Remove as follows:

NOTICE:
Ensure turbocharger and axial power turbine are supported prior to removal.

1. Shut off the engine, apply the parking brake, chock the wheels, and perform any other applicable safety steps.
2. Drain coolant.
3. Remove the turbocharger and APT heat shields.
4. Disconnect the doser injector housing lines and remove the exhaust S-pipe from APT outlet by removing the marmon clamp.
5. Remove the EGR hot pipe. Refer to section .
6. Remove the turbocharger and interstage duct. Refer to section 11.2.
7. Remove the air line from the air seal pressure regulator valve or from the compressor housing of the turbocharger.
8. Remove four bolts securing the gear box to the axial power turbine.
9. Remove four bolts from the APT support bracket.
10. Separate the turbine housing from the gear box.
11. Remove the gasket, graphite seal, oil passage tube and O-ring.

 Copyright © 2010 DETROIT DIESEL CORPORATION

https://truckmanualshub.com/

12.3 INSPECTION OF THE DD15 AXIAL POWER TURBINE

Inspect as follows:

1. Inspect axial power turbine for damage to the turbine and housing; replace if necessary.
2. Inspect the gear box for damage; replace if necessary.

All information subject to change without notice.
DDC-SVC-MAN-0081 2010 Copyright © 2010 DETROIT DIESEL CORPORATION

https://truckmanualshub.com/

12.4 INSTALLATION OF DD15 AXIAL POWER TURBINE

Install as follows:

1. Shut off the engine, apply the parking brake, chock the wheels, and perform any other applicable safety steps.
2. If removed, install the gear box to cylinder block with four bolts. Torque bolts to 55–60 N·m (41–45 lb·ft).
3. Install axial power turbine gasket, graphite seal, and O-ring. If removed, install the oil passage tube. DO NOT press into Gear Box, then install into APT.
4. Lubricate collar and O-ring with clean engine oil (the guide tube must be pressed into the turbine housing with the taper facing toward the gear box).
5. Install axial power turbine to gear box and bracket (the APT must be installed as straight to the gearbox as possible; uneven installation could cause an oil leak).

NOTICE:
When installing axial power turbine to gear box, ensure gears are aligned by viewing through exhaust port and rotating impeller. Damage to gear box and axial power turbine will occur if not installed correctly.

6. Install the front bolt through the APT into the gear box, and hand-tighten the bolt.
7. Install two bolts through the bracket into the axial power turbine; then install two bolts through the bracket into the cylinder block. Install the remaining three bolts into axial power turbine; hand-tighten.
8. Torque the bolts to 55-60 N·m (41-45 lb·ft).
9. Install air line to axial power turbine from air seal pressure regulator valve or from the turbocharger compressor housing. Torque the banjo bolt to 10 N·m (7 lb·ft).
10. Install the oil feed line from the block to the gear box (if removed) torque to 20 N·m (15 lb·ft).
11. Install the turbocharger and interstage duct. Refer to section 11.4.
12. Install the axial power turbine heat shields.
13. Fill the engine with coolant.

 Copyright © 2010 DETROIT DIESEL CORPORATION

https://truckmanualshub.com/

All information subject to change without notice.
DDC-SVC-MAN-0081 2010 Copyright © 2010 DETROIT DIESEL CORPORATION

https://truckmanualshub.com/

13 DD15 AXIAL POWER TURBINE GEAR BOX

Section **Page**

13.1 DESCRIPTION AND OPERATION OF DD15 AXIAL POWER TURBINE GEAR BOX AND RELATED PARTS 13-3

13.2 REMOVAL OF THE DD15 AXIAL POWER TURBINE GEAR BOX 13-5

13.3 INSPECTION OF DD15 AXIAL POWER TURBINE GEAR BOX 13-6

13.4 INSTALLATION OF THE AXIAL POWER TURBINE GEAR BOX 13-7

https://truckmanualshub.com/

All information subject to change without notice.
DDC-SVC-MAN-0081 2010 Copyright © 2010 DETROIT DIESEL CORPORATION

https://truckmanualshub.com/

13.1 DESCRIPTION AND OPERATION OF DD15 AXIAL POWER TURBINE GEAR BOX AND RELATED PARTS

The gear box is located on the right side of the engine between the axial power turbine and cylinder block.

 Copyright © 2010 DETROIT DIESEL CORPORATION

https://truckmanualshub.com/

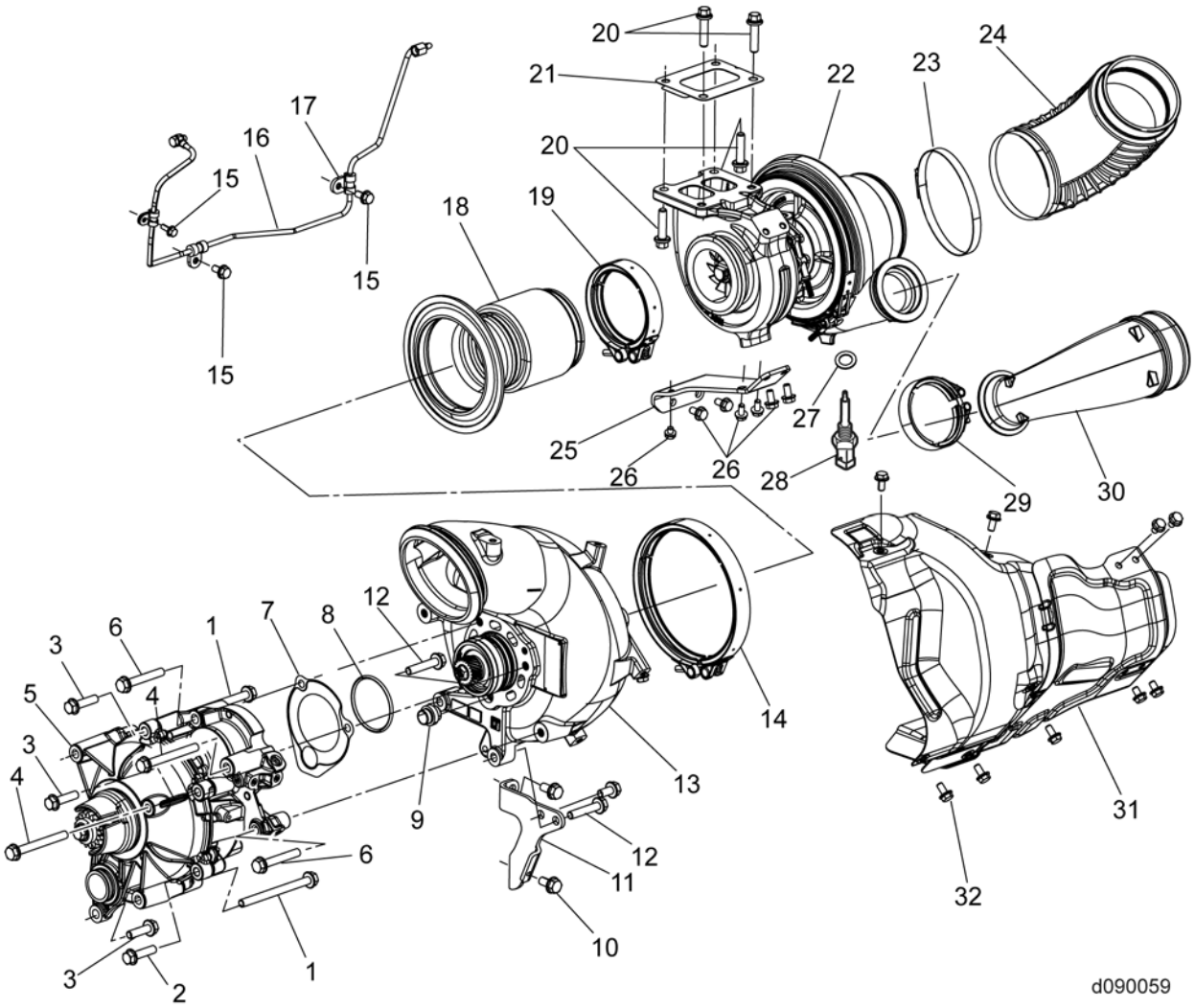

1. Bolt (M10 x 120 mm)	9. Locking Dowel	17. P-clip	25. Bracket
2. Bolt (M10 x 35 mm)	10. Bolt (M10 x 20 mm)	18. Interstage Duct	26. Bolts (6 qty.)
3. Bolt	11. Bracket	19. Clamp	27. O-ring
4. Bolt (M10 x 90 mm)	12. Bolt (M10 x 20 mm)	20. Bolt	28. Turbo Speed Sensor
5. Gear Box	13. Axial Power Turbine	21. Gasket	29. Clamp
6. Bolt (M10 x 65 mm)	14. Clamp	22. Turbocharger	30. Turbo Outlet Elbow
7. Gasket Seal	15. Bolts	23. Clamp	31. Heat Shield
8. O-ring	16. Air Line	24. Turbo Inlet Elbow	32. Heat Shield Mounting Bolt

Figure 13-1 Gear Box and Related Parts

All information subject to change without notice.
DDC-SVC-MAN-0081 2010 Copyright © 2010 DETROIT DIESEL CORPORATION

https://truckmanualshub.com/

13.2 REMOVAL OF THE DD15 AXIAL POWER TURBINE GEAR BOX

Remove as follows:

1. Remove the turbocharger. Refer to section 11.2.
2. Remove the Axial Power Turbine (APT). Refer to section 12.2.
3. Remove the oil line from cylinder block to gear box.
4. Remove four bolts from the axial power turbine gear box to the cylinder block and remove the axial power turbine gear box.

 Copyright © 2010 DETROIT DIESEL CORPORATION

https://truckmanualshub.com/

13.3 INSPECTION OF DD15 AXIAL POWER TURBINE GEAR BOX

Inspect the gear box for damage; replace if necessary.

All information subject to change without notice.
DDC-SVC-MAN-0081 2010 Copyright © 2010 DETROIT DIESEL CORPORATION

https://truckmanualshub.com/

13.4 INSTALLATION OF THE AXIAL POWER TURBINE GEAR BOX

Install as follows:

NOTICE:
Ensure the gear box gear and idler gear located in the gear case housing are meshed. Failure to mesh gears correctly will cause damage.

1. Install the gear box to cylinder block; ensuring the gears are meshed together when installed.

NOTICE:
Ensure the correct bolt length is used when the gear box is installed. If an incorrect bolt length (too long) is used, the cup plugs installed in the cylinder block can be pushed out into the gear train causing severe damage to the gear train. The correct bolt length for the bolt installed in the upper location near the cylinder block is 35 mm (1.37 in). The correct length for the bolt located in the lower position of the gear box is 120 mm (4.72 in).

2. Install four bolts into gear box and cylinder block and hand tighten.
3. Torque the four bolts to 55-60 N·m (41-44 ft·lb).
4. Install oil line to gear box and engine block. Torque to 35 N·m (26 lb·ft).

 Copyright © 2010 DETROIT DIESEL CORPORATION

https://truckmanualshub.com/

All information subject to change without notice.
DDC-SVC-MAN-0081 2010 Copyright © 2010 DETROIT DIESEL CORPORATION

https://truckmanualshub.com/

14 CYLINDER HEAD

Section **Page**

14.1 DESCRIPTION AND OPERATION OF CYLINDER HEAD AND RELATED PARTS 14-3
14.2 REMOVAL OF THE DD13 CYLINDER HEAD 14-10
14.3 INSTALLATION OF THE DD13 CYLINDER HEAD 14-12
14.4 REMOVAL OF THE DD15 CYLINDER HEAD 14-15
14.5 CLEANING OF THE CYLINDER HEAD 14-17
14.6 ASSEMBLY OF CYLINDER HEAD 14-18
14.7 INSTALLATION OF THE DD15 CYLINDER HEAD 14-19
14.8 REMOVAL OF VALVE SPRING (CYLINDER HEAD INSTALLED) 14-22
14.9 REMOVAL OF THE VALVE SPRING (CYLINDER HEAD REMOVED) ... 14-24
14.10 REMOVAL OF INTAKE AND EXHAUST VALVES 14-25
14.11 CLEANING OF VALVES AND RELATED PARTS 14-26
14.12 INSPECTION OF VALVE SPRINGS 14-27
14.13 INSPECTION OF VALVE 14-28
14.14 INSTALLATION OF VALVE, SPRING, SEAL AND VALVE CAP 14-29
14.15 VALVE LASH ADJUSTMENTS 14-31
14.16 SETTING THE ENGINE BRAKE LASH 14-33

https://truckmanualshub.com/

All information subject to change without notice.
DDC-SVC-MAN-0081 2010 Copyright © 2010 DETROIT DIESEL CORPORATION

https://truckmanualshub.com/

14.1 DESCRIPTION AND OPERATION OF CYLINDER HEAD AND RELATED PARTS

This section explains the description(s) and operation(s) of the following systems within the cylinder head:

- □ Cylinder Head
- □ Valve Springs and related components
- □ Intake and Exhaust Valves

14.1.1 Cylinder Head

The cylinder head has been designed with a compacted graphic iron material. There are two intake and two exhaust valves per cylinder. To ensure the correct bolts are used when installing the cylinder head, the bolt thread size 16 is stamped on the head of the bolt. All bolts must be tightened in the correct sequence. The valve train assembly needs to be removed in order to access the cylinder head bolts.

The cylinder head has a split coolant jacket; the coolant flows around the cylinder to the inlet side of the head and then to the exhaust side. The coolant flows in the lower level of the cylinder head around the injectors and the valve seat rings. The coolant then flows around in the upper level of the cylinder head and cools the valve guides. The advantage of this design is a very even and highly effective cooling system.

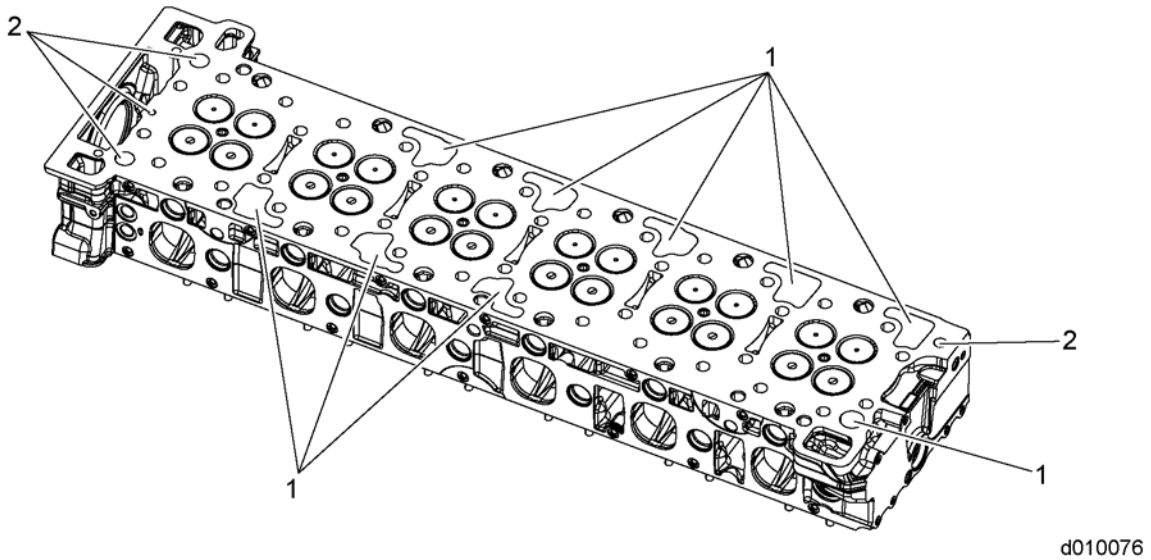

1. Oil Return Openings or Oil Return Holes From Cylinder Head to Cylinder Block
2. Oil Transfer Holes from Cylinder Block to Cylinder Head

Figure 14-1 Oil Hole Location on Fire Deck of Cylinder Head

 Copyright © 2010 DETROIT DIESEL CORPORATION

https://truckmanualshub.com/

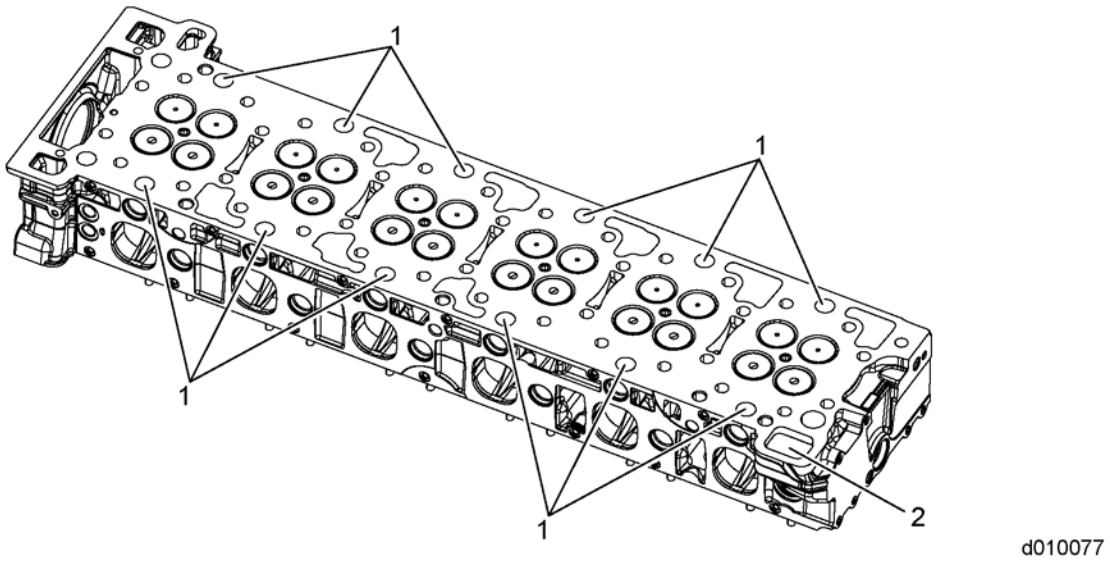

1. Water Transfer Holes from Cylinder Block to Cylinder Head
2. Water Return Openings from Cylinder Head to Cylinder Block

Figure 14-2 Water Hole Location on Fire Deck of Cylinder Head

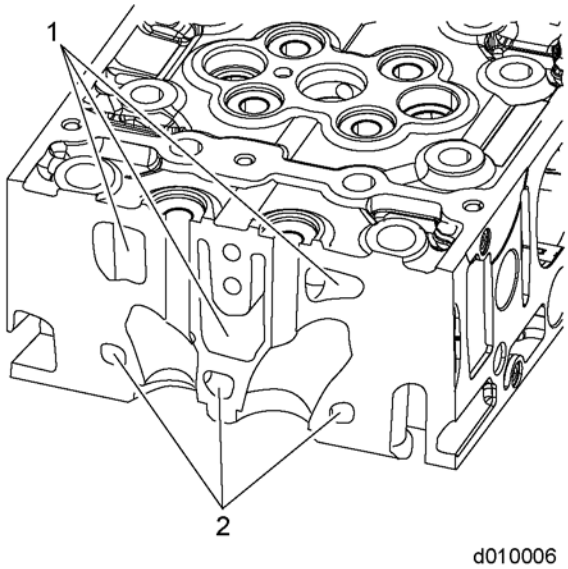

1. Upper Cooling Level
2. Lower Cooling Level

Figure 14-3 Cooling Levels

All information subject to change without notice.
DDC-SVC-MAN-0081 2010 Copyright © 2010 DETROIT DIESEL CORPORATION

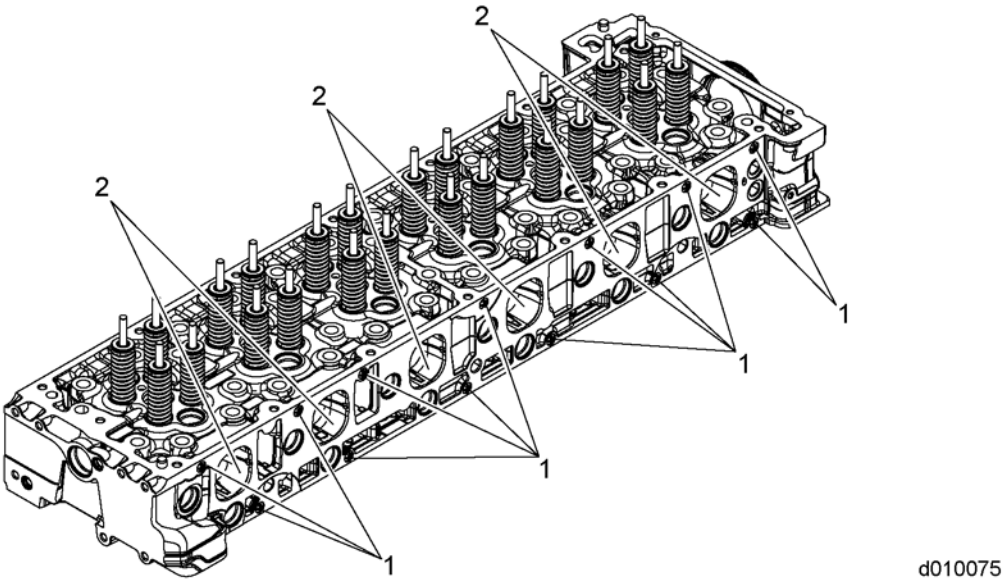

1. Holes for Installing the Intake Manifold
2. Inlet Ducts

Figure 14-4 Cylinder Head Inlet Duct Location

14.1.2 Intake and Exhaust Valves

There are four valves per cylinder; two intake valves and two exhaust valves.

Valves are made of heat-treated alloys, with precision-ground heads and stems. Stem ends are hardened to minimize wear in contact with the valve rocker buttons.

All valves are retained by valve spring caps and two-piece tapered valve locks.

Valve stem oil seals are installed on both intake and exhaust valves to provide controlled valve stem lubrication while limiting oil consumption.

 Copyright © 2010 DETROIT DIESEL CORPORATION

https://truckmanualshub.com/

The exhaust valves use a nickel-based alloy and are identified by a smaller dimple on the combustion face. The intake valves are an iron based alloy and are identified from the exhaust valve by a larger dimple on the combustion face.

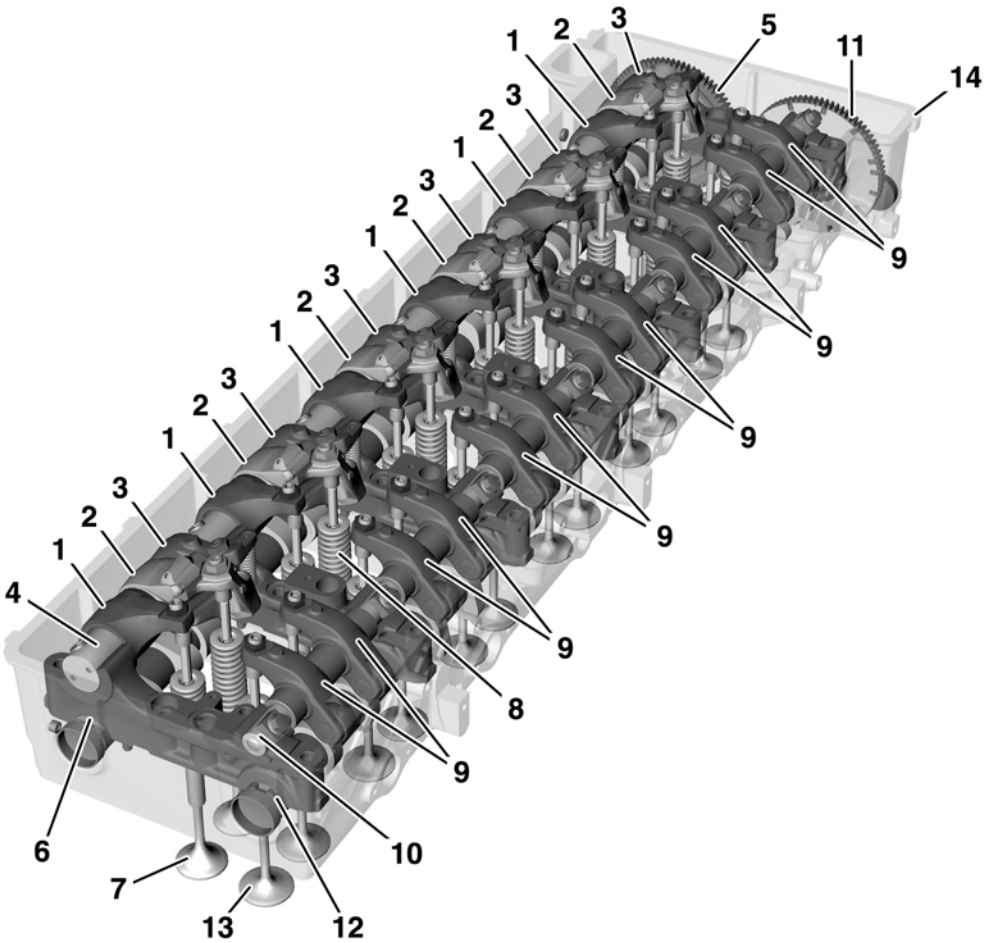

1. Exhaust Rocker Arm
2. Exhaust Rocker Arm with Actuator
3. Brake Rocker Arm
4. Exhaust Rocker Arm Shaft
5. Drive Gear for Exhaust Camshaft
6. Exhaust Camshaft
7. Exhaust Valve
8. Valve Spring
9. Intake Rocker Arm
10. Intake Rocker Arm Shaft
11. Drive Gear for Intake Camshaft
12. Intake Camshaft
13. Intake Valve
14. Camshaft Housing

Figure 14-5 Valves Rocker Arms and Related Parts

All information subject to change without notice.
DDC-SVC-MAN-0081 2010 Copyright © 2010 DETROIT DIESEL CORPORATION

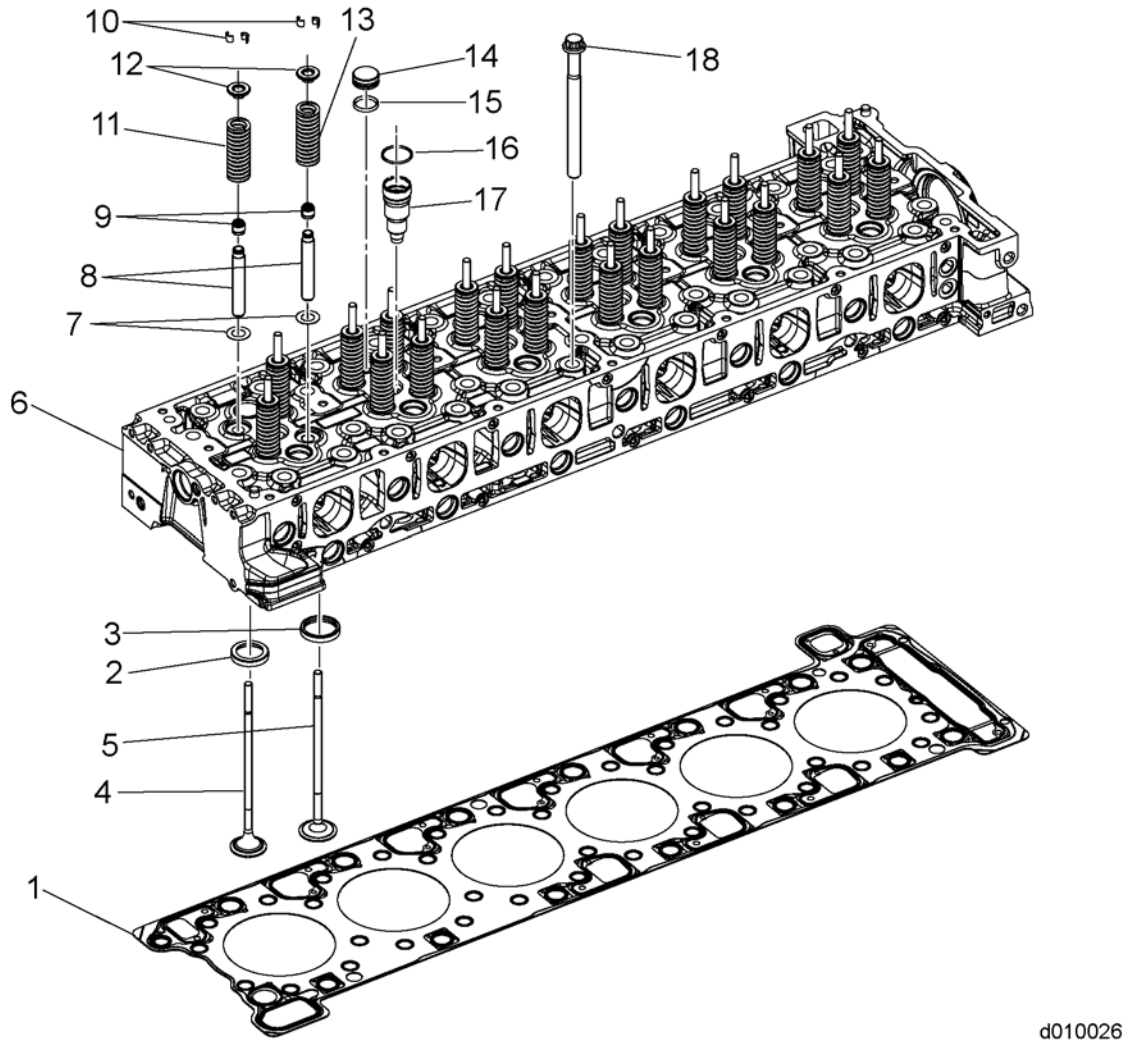

1. Cylinder Head Gasket
2. Exhaust Valve Seat Ring
3. Intake Valve Seat Ring
4. Exhaust Valve
5. Intake Valve
6. Cylinder Head
7. Washer
8. Valve Guide
9. Valve Stem Seal
10. Valve Keeper
11. Exhaust Valve Spring
12. Spring Retainer
13. Intake Valve Spring
14. Water Jacket Cover Plug
15. Water Jacket Seal Ring Plug
16. Water Protection Sleeve Seal Ring
17. Injector Cup
18. Cylinder Head-to-Cylinder Block Bolt

Figure 14-6 Valves and Related Parts

 Copyright © 2010 DETROIT DIESEL CORPORATION

https://truckmanualshub.com/

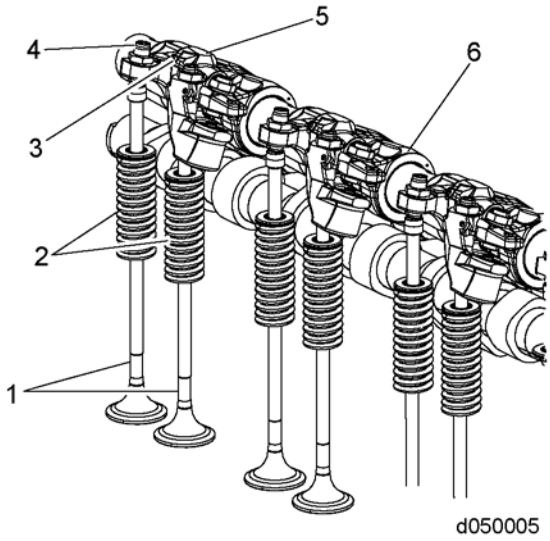

1. Exhaust Valve
2. Valve Springs
3. Exhaust Rocker Arm
4. Valve Clearance Adjusting Element
5. Exhaust Rocker Arm with Actuator
6. Exhaust Rocker Arm

Figure 14-7 Exhaust Valve Assembly

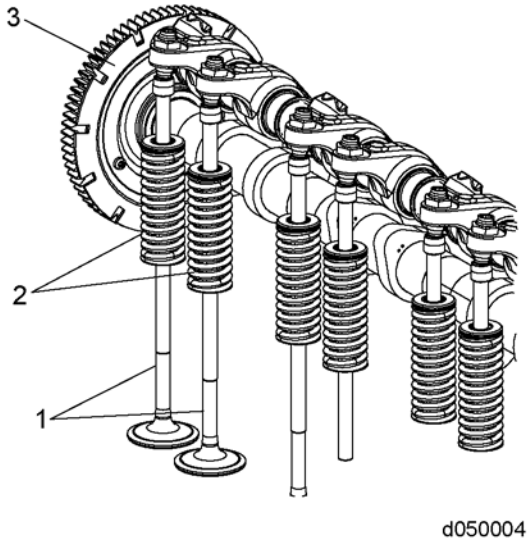

1. Intake Valves
2. Valve Springs
3. Drive Gear and Timing Wheel for Intake Camshaft

Figure 14-8 Intake Valve Assembly

All information subject to change without notice.
DDC-SVC-MAN-0081 2010 Copyright © 2010 DETROIT DIESEL CORPORATION

https://truckmanualshub.com/

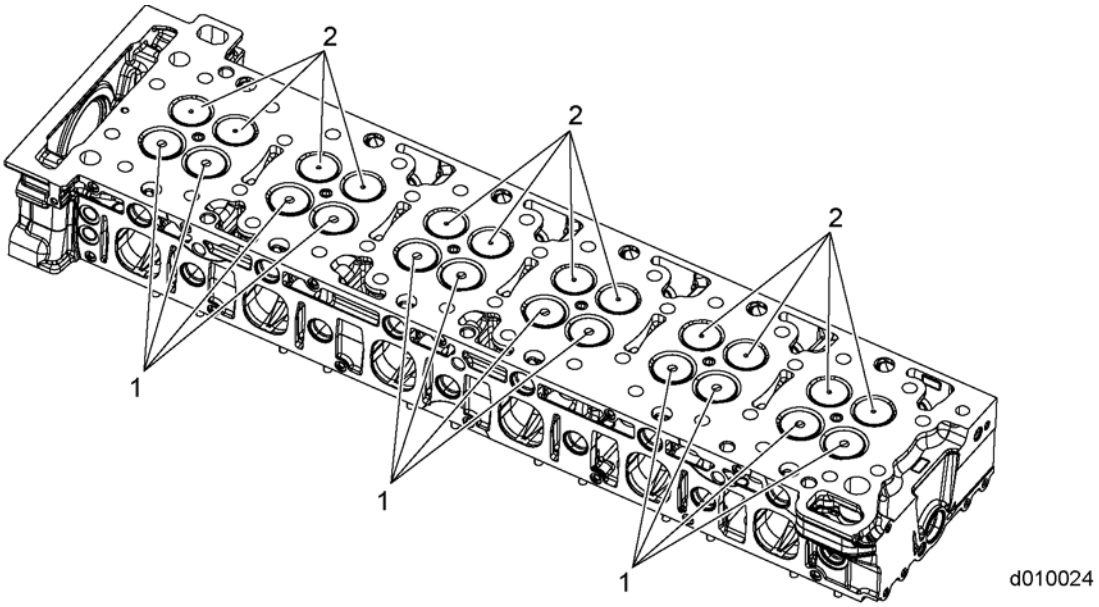

1.Inlet Valves

2. Exhaust Valves

Figure 14-9 Intake and Exhaust Valve Location

 Copyright © 2010 DETROIT DIESEL CORPORATION

https://truckmanualshub.com/

14.2 REMOVAL OF THE DD13 CYLINDER HEAD

Because optional and accessory equipment varies with the engine application, these procedures covers only the basic engine. If the engine is equipped with accessories that affect cylinder head removal, note the mounting details of each accessory to assure correct installation at reassembly.

Remove the cylinder head as follows:

1. Steam clean the engine.
2. Disconnect the batteries. Refer to OEM procedure.
3. Drain the fuel system. Refer to section .
4. Drain the oil. Refer to OEM procedure.
5. Drain the coolant. Refer to OEM procedure.
6. Remove the turbocharger inlet pipe. Refer to OEM procedure.
7. Remove the rocker cover. Refer to section 1.2.
8. Disconnect the following electrical harness connections:
   [a] Coolant Outlet Temperature sensor harness from the water manifold
   [b] Delta-p sensor
   [c] Intake Manifold Air Temperature sensor
   [d] Throttle Valve
   [e] Intake Air Temperature sensor
9. Remove the removal of high pressure fuel injector lines. Refer to section .
10. Remove high pressure fuel lines from fuel rail to high pressure fuel pump. Refer to section .
11. Remove amplifier return line, needle return line and pressure limiting valve (PLV) lines. Refer to section .
12. Disconnect fuel injector harness from the fuel injectors and engine brake solenoids.
    [a] ***EPA07 Engines:*** For Removal of One-Piece Fuel Injector Wiring Harness refer to section .
    [b] ***EPA10 Engines:*** For Removal of Two-Piece Fuel Injector Wiring Harness refer to section .
13. Remove the rocker arm shafts. Refer to section 2.2.
14. Remove coolant lines from the water manifold to the fuel doser injector housing. Refer to section .
15. Remove the Exhaust Gas Recirculation (EGR) vent (deaeration) line.
16. Remove the intake and exhaust camshafts. Refer to section 2.2.
17. Remove the camshaft housing. Refer to section 3.1.

All information subject to change without notice.
DDC-SVC-MAN-0081 2010 Copyright © 2010 DETROIT DIESEL CORPORATION

18. Remove the EGR crossover tube. Refer to section .
19. Remove the two bolts attaching the cold boost pipe to the support bracket.
20. Using Flywheel and Main Pulley Socket tool (J-45390), remove the 40 bolts securing the cylinder head to the cylinder block.
21. If the dipstick hose is attached to the intake throttle valve bracket, remove the clip attaching it.

WARNING:

PERSONAL INJURY

To avoid injury when removing or installing a heavy engine component, ensure the component is properly supported and securely attached to an adequate lifting device to prevent the component from falling.

22. Using Cylinder Head/Engine Lifting Bar tool (W470589006200), remove the cylinder head from the cylinder block.
23. Remove and discard the metallic gasket from the cylinder block.

 Copyright © 2010 DETROIT DIESEL CORPORATION

14.3 INSTALLATION OF THE DD13 CYLINDER HEAD

Install the cylinder head as follows:

1. Inspect the head bolt holes in both block and head for the presence of oil, water, dirt, or damaged threads; clean or re-tap as necessary. Ensure piston domes, cylinder head, and cylinder block fire deck surfaces are clean and free of foreign matter.
2. Verify that the cylinder liner protrusion heights are within specification prior to installing the cylinder head. Refer to section 16.5for cylinder liner protrusion specifications.
3. Install cylinder head guide studs (W471589016100).

4. Position a new cylinder head gasket onto the cylinder block.

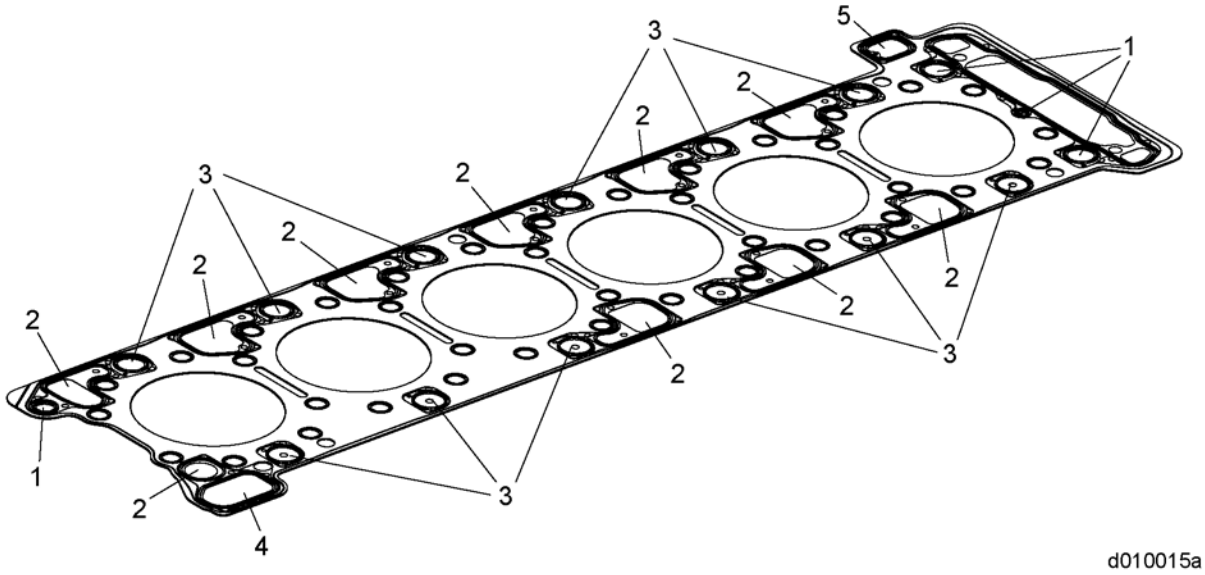

1. Engine Oil Feed Hole
2. Engine Oil Return Opening
3. Coolant Feed Hole
4. Coolant Return Opening
5. Opening for Blow-by Duct to Crankcase Vent

WARNING:

PERSONAL INJURY

To avoid injury when removing or installing a heavy engine component, ensure the component is properly supported and securely attached to an adequate lifting device to prevent the component from falling.

5. Install four lift hooks onto the cylinder head.

All information subject to change without notice.
DDC-SVC-MAN-0081 2010 Copyright © 2010 DETROIT DIESEL CORPORATION

6. Lift the cylinder head into position using Cylinder Head/Engine Lifting Bar tool (W470589006200). Lower cylinder head into place over the guide studs and dowel pins until it is seated on the engine block.
7. Remove the guide studs.
8. Remove the lifting hooks from the cylinder head.
9. Coat the threads and underside of bolt heads with clean engine oil before installation.
10. Install the 40 cylinder head bolts into the cylinder head. Torque bolts (1 through 38) in three steps as follows:
    [a] 200 N·m (147 lb·ft)
    [b] 90° torque turn.
    [c] 90° torque turn.
11. Torque the small bolts (39 and 40) to 60 N·m (44 lb·ft).

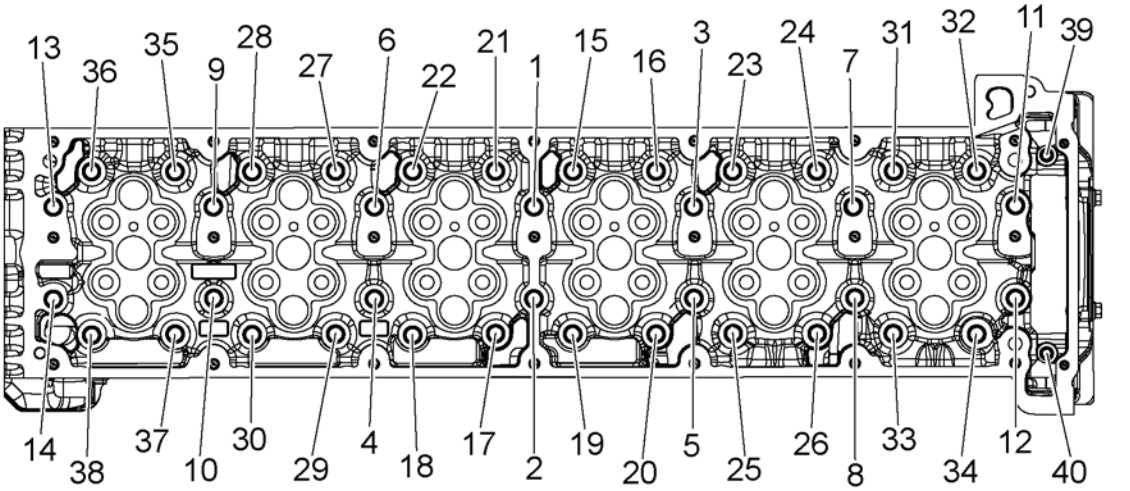

12. Check and adjust the gear lash, as needed. Refer to section 5.2.
13. Install the turbocharger flange bolts.
14. Install the EGR crossover tube. Refer to section .
15. Install the EGR actuator harness connector, linkage and the heat shield.
16. Install the coolant lines to EGR actuator.
17. Install the camshaft housing. Refer to section 3.2.
18. Install the intake and exhaust camshafts. Refer to section 2.4.
19. Install the rocker arm/engine brake assemblies. Refer to section 2.4.
20. Install the intake elbow.

 Copyright © 2010 DETROIT DIESEL CORPORATION

21. Install the mixer pipe. Refer to section .
22. Install the venturi. Refer to section .
23. Install the fuel injectors. Refer to section .
24. Install the engine brake solenoids and injector harness.
25. Install the amplification needle and pressure limiting valve (PLV). Refer to section .
26. Install the high pressure feed lines from high pressure pump to common fuel rail. Refer to section .
27. Install the injector feed lines from fuel rail. Refer to section .
28. Connect the coolant temperature sensor harness.
29. Install the turbocharger inlet pipe.
30. Install any components that were removed and fill with required fluids as recommended. Refer to OEM guidelines.
31. Set the valve lash and engine brake. Refer to section 14.15.

WARNING:

ENGINE EXHAUST

To avoid injury from inhaling engine exhaust, always operate the engine in a well-ventilated area. Engine exhaust is toxic.

32. Install the rocker cover. Refer to section 1.4.
33. Fill the cooling system.
34. Prime engine lubrication system. Refer to section 27.1.
35. Start the engine and check for fuel, coolant or oil leaks.
36. Shut down the engine.

All information subject to change without notice.
DDC-SVC-MAN-0081 2010 Copyright © 2010 DETROIT DIESEL CORPORATION

https://truckmanualshub.com/

14.4 REMOVAL OF THE DD15 CYLINDER HEAD

Because optional and accessory equipment varies with the engine application, this procedure covers only the basic engine. If the engine is equipped with accessories that affect cylinder head removal, note the mounting details of each to assure correct installation at reassembly.

Remove the cylinder head as follows:

NOTICE:
If the cylinder head is to be replaced, the new head must be thoroughly cleaned before installation to remove all rust and preventive compound, especially from the fuel and oil galleries. This can be done by immersion in a bath of fuel oil or mineral spirits-based solvent and scrubbing out all openings with a soft bristle brush. When clean, blow the head dry with compressed air.

1. Steam clean the engine.
2. Disconnect the batteries. Refer to OEM procedure.
3. Drain the fuel system. Refer to section .
4. Drain the oil. Refer to OEM procedure.
5. Drain the coolant. Refer to OEM procedure.
6. Remove the turbocharger inlet pipe. Refer to OEM procedure.
7. Remove the rocker cover. Refer to section 1.2.
8. Disconnect the following electrical harness connections:
   [a] Coolant Outlet Temperature sensor harness from the water manifold
   [b] Delta-p sensor
   [c] Intake Manifold Air Temperature sensor
   [d] Throttle Valve
   [e] Intake Air Temperature sensor
9. Remove fuel injector feed lines. Refer to section .
10. Remove high pressure fuel lines from fuel rail to high pressure fuel pump. Refer to section .
11. Remove amplifier return line, needle return line and pressure limiting valve (PLV) lines. Refer to section .
12. Disconnect fuel injector harness from the fuel injectors and engine brake solenoids.
    [a] For Euro 6 DD Platform engines, remove One Piece Fuel Injector Wiring Harness. Refer to section .

 Copyright © 2010 DETROIT DIESEL CORPORATION

[b] For NAFTA DD Platform engines, remove Two Piece Fuel Injector Wiring Harness. Refer to section .

13. Remove the rocker arm shafts. Refer to section 2.2.
14. Remove coolant lines from the water manifold to the fuel doser injector housing.
15. Remove the Exhaust Gas Recirculation (EGR) vent (de-aeration) line.
16. Remove the intake and exhaust camshafts. Refer to section 2.2.
17. Remove the camshaft housing. Refer to section .
18. Remove the EGR actuator coolant line from the cylinder block.
19. Disconnect the EGR actuator connector and remove the heat shield. Refer to section .
20. Remove the turbocharger flange bolts.
21. Remove the EGR crossover tube. Refer to section .
22. Remove the two bolts attaching the cold boost pipe to the support bracket.
23. Using the Flywheel and Main Pulley Socket tool (J-45390), remove the 40 bolts securing the cylinder head to the cylinder block.

WARNING:

PERSONAL INJURY

To avoid injury when removing or installing a heavy engine component, ensure the component is properly supported and securely attached to an adequate lifting device to prevent the component from falling.

24. Using Cylinder Head/Engine Lifting Bar tool (W470589006200), remove the cylinder head from the cylinder block.
25. Remove and discard the metallic gasket from the cylinder block.

All information subject to change without notice.
DDC-SVC-MAN-0081 2010 Copyright © 2010 DETROIT DIESEL CORPORATION

https://truckmanualshub.com/

14.5 CLEANING OF THE CYLINDER HEAD

Clean the cylinder head as follows:

1. Keep parts segregated according to original position to assure proper reassembly, if parts are to be reused.
2. Remove all plugs.
3. Steam clean the cylinder head once it has been stripped.
4. Clean the head in a de-scaling bath.

WARNING:

EYE INJURY

To avoid injury from flying debris when using compressed air, wear adequate eye protection (face shield or safety goggles) and do not exceed 276 kPa (40 psi) air pressure.

5. Clean the valves, springs, and rocker shafts in fuel oil and blow dry with compressed air.
6. Clean the rocker arm assemblies.

 Copyright © 2010 DETROIT DIESEL CORPORATION

https://truckmanualshub.com/

14.6 ASSEMBLY OF CYLINDER HEAD

Assembly the cylinder head as follows:

1. Install all of the required cup plugs using a good grade of non-hardening sealant, such as Loctite® 620 or equivalent, on the cup plugs. Use Cup Plug Installation Set (J–35653).
2. Ensure that all cup plugs on the front face of the cylinder head are flush or below the surface.
3. Install valves, valve stem seals, valve springs and keepers.

All information subject to change without notice.
DDC-SVC-MAN-0081 2010 Copyright © 2010 DETROIT DIESEL CORPORATION

14.7 INSTALLATION OF THE DD15 CYLINDER HEAD

Install the cylinder head as follows:

1. Inspect the head bolt holes in both block and head for the presence of oil, water, dirt, or damaged threads, clean or re-tap as necessary. Ensure piston domes and the cylinder head and cylinder block deck surfaces are clean and free of foreign matter.
2. Verify that the cylinder liner protrusion heights are all the same prior to installing the cylinder head.
3. Install Cylinder Head Guide Studs tool (J-35784).
4. Position a new cylinder head gasket onto engine block.

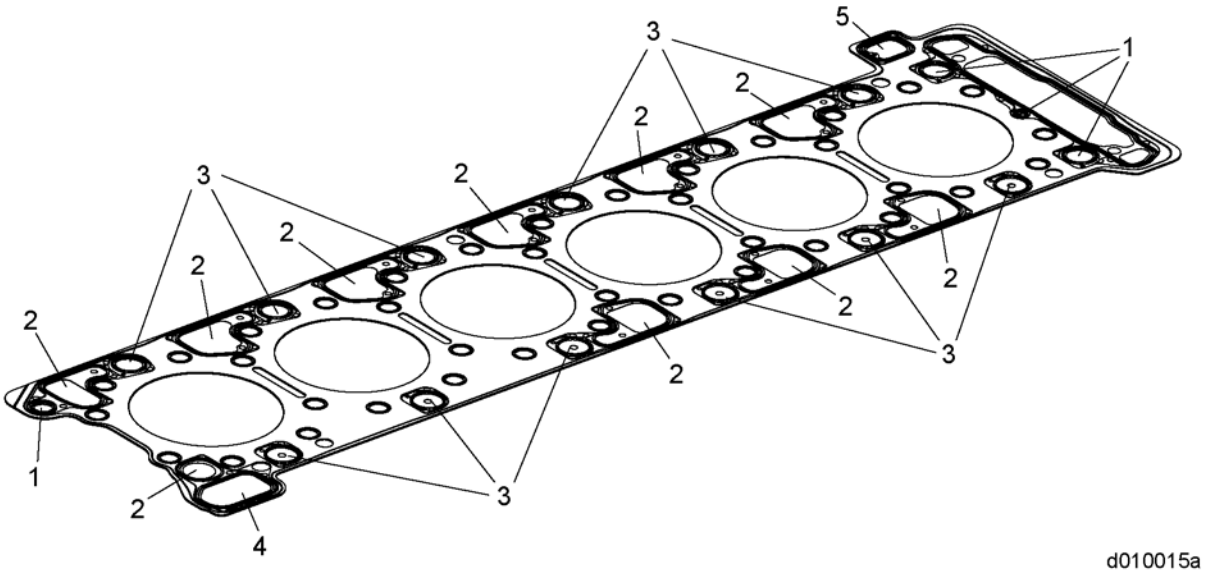

1. Engine Oil Feed Hole
2. Engine Oil Return Opening
3. Coolant Feed Hole
4. Coolant Return Opening
5. Opening for Blow-by Duct to Crankcase Vent

WARNING:

PERSONAL INJURY

To avoid injury when removing or installing a heavy engine component, ensure the component is properly supported and securely attached to an adequate lifting device to prevent the component from falling.

5. Install four lift hooks onto cylinder head.

 Copyright © 2010 DETROIT DIESEL CORPORATION

https://truckmanualshub.com/

6. Lift the cylinder head into position using Cylinder Head/Engine Lifting Bar tool (W470589006200). Lower into place over the guide studs and dowel pins until it is seated on the engine block.
7. Remove the guide studs.
8. Remove the lifting hooks from the cylinder head.
9. Coat the threads and underside of bolt heads with clean engine oil before installation.
10. Install the 40 cylinder head bolts into the cylinder head.
11. Torque the 38 large bolts in four steps to:
    [a] 50 N·m (37 lb·ft)
    [b] 250 N·m (184 lb·ft)
    [c] 90° torque turn
    [d] 90° torque turn
12. Torque the small bolts (39 and 40) to 60 N·m (44 lb·ft).

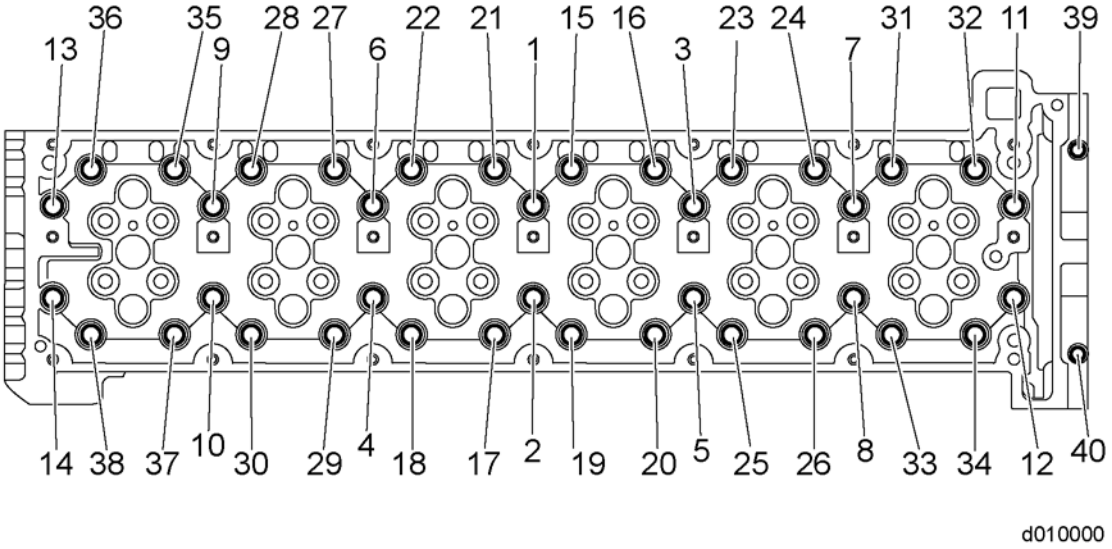

13. Install camshaft housing. Refer to section 3.3.
14. Install camshaft assemblies. Refer to section 2.4.
15. Time camshaft assembly. Refer to section 4.2.
16. Install rocker shaft assembly. Refer to section 2.4.
17. Set the valve lash and engine brake. Refer to section 14.15.
18. Install any components that were removed and fill with required fluids as recommended. Refer to OEM guidelines.
19. Fill the cooling system.

All information subject to change without notice.
DDC-SVC-MAN-0081 2010 Copyright © 2010 DETROIT DIESEL CORPORATION

https://truckmanualshub.com/

WARNING:

ENGINE EXHAUST

To avoid injury from inhaling engine exhaust, always operate the engine in a well-ventilated area. Engine exhaust is toxic.

20. Prime engine lubrication system. Refer to section 27.1.
21. Start the engine and check for fuel, coolant or oil leaks.
22. Shut down the engine.

 Copyright © 2010 DETROIT DIESEL CORPORATION

14.8 REMOVAL OF VALVE SPRING (CYLINDER HEAD INSTALLED)

Remove and clean as follows:

1. Steam clean the engine.
2. Drain the fuel system. Refer to section .
3. Remove the rocker cover. Refer to section 1.2.
4. Remove the rocker arm assemblies. Refer to section 2.2.
5. Remove the intake and exhaust camshafts. Refer to section 2.2.
6. Remove the camshaft housing. Refer to section 3.1.

NOTE:
All valve spring or seal removal and replacement must be completed for each cylinder being serviced ***while the piston is at Top Dead Center (TDC).*** After servicing a cylinder, turn the crankshaft to TDC for the next cylinder being serviced.

7. Remove the fuel injector from the appropriate cylinder. Refer to section .
8. Using Engine Barring Tool (J-46392), bar the engine over until the cylinder is at Top Dead Center (TDC).

WARNING:
EYE INJURY
To avoid injury from flying debris when using compressed air, wear adequate eye protection (face shield or safety goggles) and do not exceed 276 kPa (40 psi) air pressure.

9. Install the adaptor (J-47411) into the cylinder and torque to 20 N·m (14 lb·ft) plus 90 degrees with the injector hold-down clamp and bolt, connect shop air to compression adaptor.

All information subject to change without notice.
DDC-SVC-MAN-0081 2010 Copyright © 2010 DETROIT DIESEL CORPORATION

https://truckmanualshub.com/

10. Position the spring compressor cage portion of the valve spring compressor(J–47406) directly over the valve spring to be compressed. Engage the dowel of the cage in the closest slot of the valve spring compressor handle.

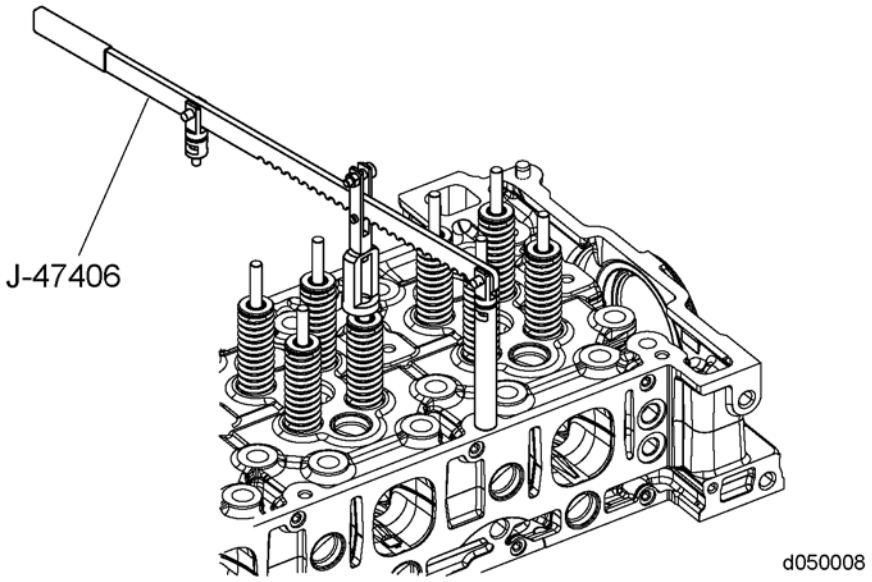

NOTICE:
Do not contact the valve with the compressor tool.

11. Compress the valve spring and remove the valve locks using a small magnet to prevent the locks from falling into the cylinder head oil return galleries.
12. Release the spring and remove the valve cap and valve spring. If the valve stem oil seal is to be replaced, remove the seal and discard it.

 Copyright © 2010 DETROIT DIESEL CORPORATION

14.9 REMOVAL OF THE VALVE SPRING (CYLINDER HEAD REMOVED)

With the cylinder head assembly removed from the engine, remove the valve springs as follows:

1. Remove the valve locks using valve spring compressor(J–47406), compressing each valve spring.

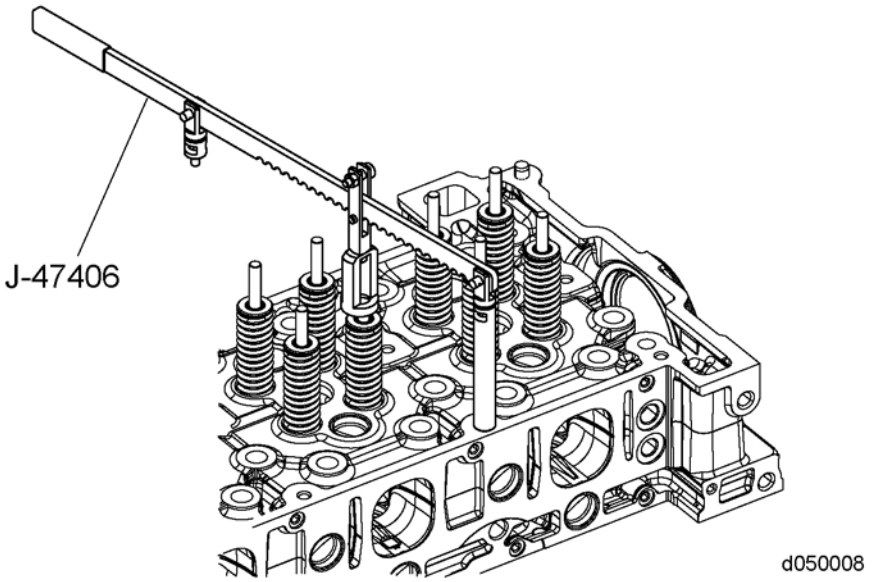

2. Release the spring and remove the valve, valve cap and valve spring.
3. Remove the valve stem oil seal and discard the seal.
4. Remove the valve spring seat.
5. As parts are removed, mark or segregate them according to their original position for possible reuse.
6. Mark the location of each intake and exhaust valve in accordance to its cylinder number and whether it is an intake or an exhaust valve.
7. Flip the cylinder head over and carefully remove the valves from the cylinder head.

All information subject to change without notice.
DDC-SVC-MAN-0081 2010 Copyright © 2010 DETROIT DIESEL CORPORATION

https://truckmanualshub.com/

14.10 REMOVAL OF INTAKE AND EXHAUST VALVES

Remove as follows:

1. Remove the cylinder head.
   [a] ***For the DD13 ONLY:*** Refer to section 14.2.
   [b] ***For the DD15 ONLY:*** Refer to section 14.4.
2. Remove the valve spring(s). Refer to section 14.9.

 Copyright © 2010 DETROIT DIESEL CORPORATION

https://truckmanualshub.com/

14.11 CLEANING OF VALVES AND RELATED PARTS

Clean the valves and parts as follows:

WARNING:

EYE INJURY

To avoid injury from flying debris when using compressed air, wear adequate eye protection (face shield or safety goggles) and do not exceed 276 kPa (40 psi) air pressure.

1. Using proper eye protection, clean all of the disassembled parts with fuel oil and dry with compressed air.
2. Clean the carbon from the valve stems and wash the valves with fuel oil.
3. Clean the valve guide bore to remove all gum and carbon deposits use bore brush (J–5437 or equivalent) for this procedure.

NOTICE:

If a valve is removed through a stem seal, the stem seal must be replaced.

All information subject to change without notice.
DDC-SVC-MAN-0081 2010 Copyright © 2010 DETROIT DIESEL CORPORATION

https://truckmanualshub.com/

14.12 INSPECTION OF VALVE SPRINGS

Inspect the valve springs and replace any that are pitted or cracked. The entire spring should be inspected. When a broken spring is replaced, the spring retainer and valve locks for that valve and spring should also be replaced.

NOTE:
If a valve is removed through a stem seal, the stem seal must be replaced.

 Copyright © 2010 DETROIT DIESEL CORPORATION

https://truckmanualshub.com/

14.13 INSPECTION OF VALVE

The valve stems must be free from scratches or scuff marks, and the valve faces must be free from ridges or cracks. Some pitting of the valve face is normal, and is acceptable as long as no leak paths are evident. If leak paths exist, re-face the valves or install new valves. If the valve heads are warped or the valve stem is bent, replace the valves. See Figures 14-10 and 14-11.

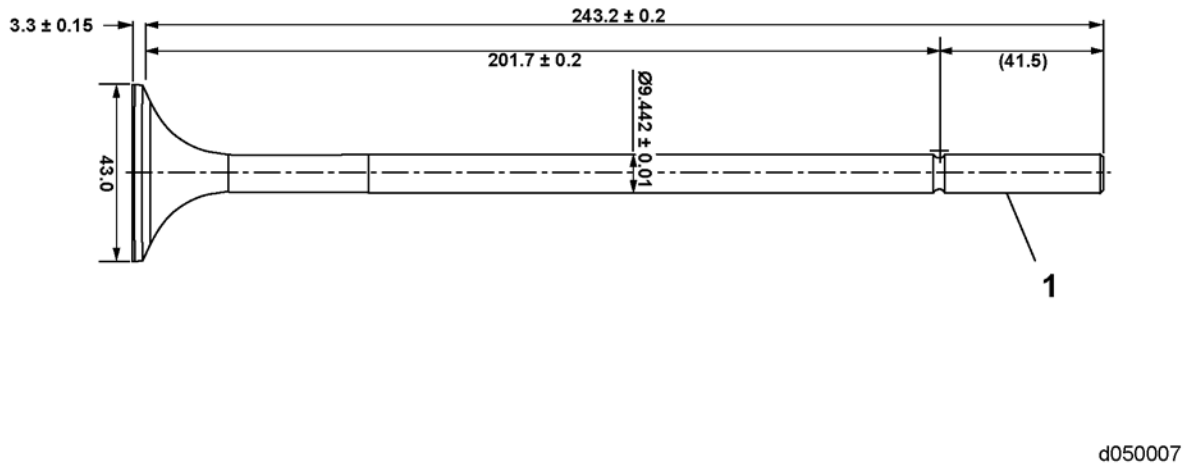

Figure 14-10 Exhaust Valve

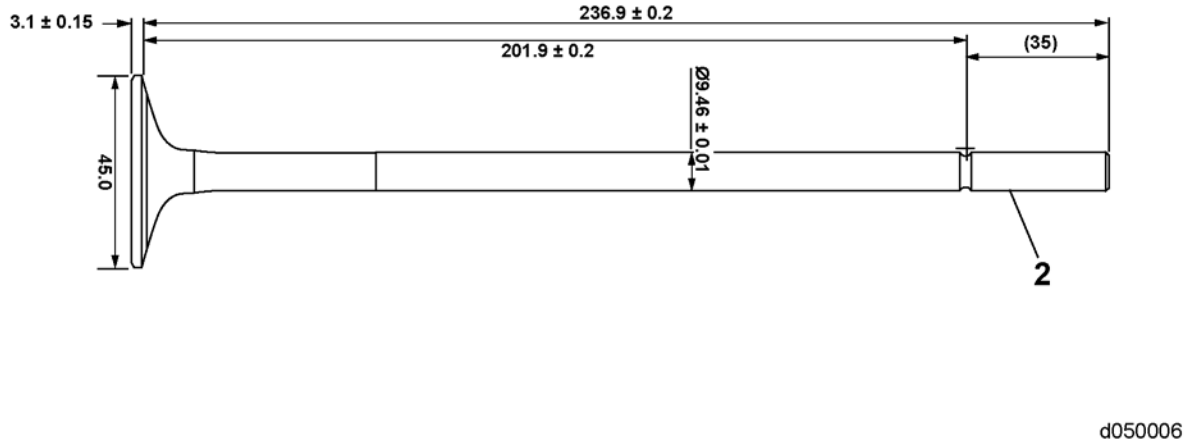

Figure 14-11 Intake Valve

All information subject to change without notice.
DDC-SVC-MAN-0081 2010 Copyright © 2010 DETROIT DIESEL CORPORATION

14.14 INSTALLATION OF VALVE, SPRING, SEAL AND VALVE CAP

Install as follows:

1. Position the cylinder head on a work bench for valve installation, if removed. Lubricate the valve stems with clean engine lubricating oil and slide them into their respective valve guides and against the valve seats. If reusing valves, install them to their original positions.

NOTE:
Clean valve guide of old seal material and oil before installing the new seal.

NOTICE:
Ensure all valve spring seats have been installed before the valve stem oil seal is installed.

2. Install the valve spring seat over the valve guide.
3. With the valve installed into the cylinder head, clean the valve guide and valve stem with brake cleaner.
4. Install the protective cap over the valve stem.

NOTE:
Do not coat valve stem or seal with oil prior to installation.

5. Install the valve stem seal over the protective cap.
6. Push the seal down on the valve stem using the seal installer (J–47490). When the installer tool contacts the cylinder head, the seal is correctly positioned. Be sure the installer is square against the cylinder head. Remove the seal installer and protector cap.
7. Install the valve spring and retainer. If reusing parts, install them to their original positions.

NOTE:
Always install new valve stem locks when installing valves.

8. Using the valve spring compressor tool (J–47406), compress the valve spring only as much as required to install the valve locks. After installing the valve locks, rap the end of the valve stem sharply with a plastic mallet to seat the valve locks.

NOTICE:
Be sure the valve retainer is properly centered and aligned to avoid scoring the valve stem. Do not compress the spring any more than necessary to install the locks, to avoid damaging the oil seal.

9. Remove Compression test adaptor J-47411.
10. On the other three valves it may be necessary to repeat these steps for cylinders being worked on.

 Copyright © 2010 DETROIT DIESEL CORPORATION

https://truckmanualshub.com/

11. If the cylinder head is removed from engine, install cylinder head.
    [a] ***For the DD13 ONLY:*** refer to section 14.3.
    [b] ***For the DD15 ONLY:*** refer to section 14.7.
12. Prime fuel system. Refer to section .
13. Close any drain cocks that were opened and fill the cooling system. Purge the air from the system using the vent in the thermostat housing. Complete filling of the cooling system is essential for proper engine operation.

WARNING:
ENGINE EXHAUST
To avoid injury from inhaling engine exhaust, always operate the engine in a well-ventilated area. Engine exhaust is toxic.

14. Start the engine and check for leaks.

All information subject to change without notice.
DDC-SVC-MAN-0081 2010 Copyright © 2010 DETROIT DIESEL CORPORATION

https://truckmanualshub.com/

14.15 VALVE LASH ADJUSTMENTS

Accurate adjustment of clearance between intake and exhaust valves is important if maximum performance and economy are to be obtained.

NOTE:
Every time the valve lash is adjusted the engine brake lash will also need to be set.

NOTE:
Adjust the valve lash before setting the engine brake lash.

NOTICE:
Failure to measure valve clearances at the required initial period and make necessary adjustments may result in gradual degrading of engine performance and reduced fuel combustion efficiency.

Adjust the valves as follows:

1. Turn engine OFF, (key OFF, engine OFF).
2. Steam clean the engine.
3. Disconnect the starting power for the engine. Refer to OEM procedures.
4. Remove the air cleaner and the turbocharger inlet pipe and hose.
5. Remove air cleaner housing.
6. Remove the rocker cover. Refer to section 1.2.
7. Bar the engine over until cylinder number one is at Top Dead Center (TDC) compression stroke. (J-46392).
8. Using a feeler gauge (1), lash intake valves one, two and four to 0.4 mm (0.016 in.).

 Copyright © 2010 DETROIT DIESEL CORPORATION

https://truckmanualshub.com/

9. Using a feeler gauge (1), lash exhaust valves one, three and five to 0.6 mm (0.024 in.).

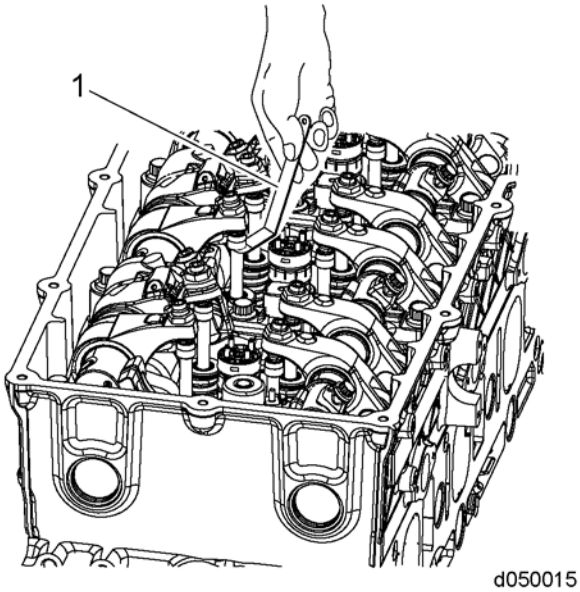

10. Bar the engine over 360° until cylinder number six is at TDC compression stroke. (J-46392)
11. Lash intake valves three, five, and six to 0.4 mm (0.016 in.).
12. Lash exhaust valves two, four and six to 0.6 mm (0.024 in.).
13. Torque the locknut valve adjusting screw to 50 N·m (37 lb·ft).
14. Remove any tools used for this procedure.
15. Set the engine brake lash. Refer to section 14.16.

All information subject to change without notice.
DDC-SVC-MAN-0081 2010 Copyright © 2010 DETROIT DIESEL CORPORATION

https://truckmanualshub.com/

14.16 SETTING THE ENGINE BRAKE LASH

Set the brake lash as follows:

1. Set the lash on all the exhaust adjusting screws first (all the adjusting screws in direct contact with the exhaust valves).
2. Rotate the engine until a given cylinder is at maximum intake lift. When this is reached, the brake lash can be set on this cylinder.
3. Lash the engine brakes in the following firing order; one, five, three, six, two, then four.
4. When the engine brake rocker arm is in contact with the exhaust valve, set the lash between the engine brake rocker arm adjusting screw and the actuator piston stem. Using Engine Brake Adjustment tool (W470589022300), set the lash to 4.1 mm (0.1614 in.).
5. Lash the engine brakes in the following firing order; 1, 5, 3, 6, 2, and 4.
6. Torque the locknut valve adjusting screw to 50 N·m (37 lb·ft).
7. Install the rocker cover. Refer to section 1.4.
8. Reconnect the battery power to the engine. Refer to OEM procedures.

 Copyright © 2010 DETROIT DIESEL CORPORATION

https://truckmanualshub.com/

All information subject to change without notice.
DDC-SVC-MAN-0081 2010 Copyright © 2010 DETROIT DIESEL CORPORATION

https://truckmanualshub.com/

15 PISTON AND CONNECTING ROD ASSEMBLY

Section **Page**

15.1 DESCRIPTION AND OPERATION OF PISTON AND CONNECTING ROD AND RELATED PARTS 15-3
15.2 REMOVAL OF PISTON AND CONNECTING ROD ASSEMBLY 15-5
15.3 DISASSEMBLY OF PISTON AND CONNECTING ROD ASSEMBLY 15-7
15.4 INSPECTION OF PISTON AND CONNECTING ROD ASSEMBLY 15-8
15.5 ASSEMBLY OF PISTON AND CONNECTING ROD ASSEMBLY 15-9
15.6 INSTALLATION OF PISTON AND CONNECTING ROD ASSEMBLY 15-11

https://truckmanualshub.com/

All information subject to change without notice.
DDC-SVC-MAN-0081 2010 Copyright © 2010 DETROIT DIESEL CORPORATION

https://truckmanualshub.com/

15.1 DESCRIPTION AND OPERATION OF PISTON AND CONNECTING ROD AND RELATED PARTS

The connecting rods are forged from a high strength steel. A connecting rod bushing is pressed into the small end of the connecting rod.

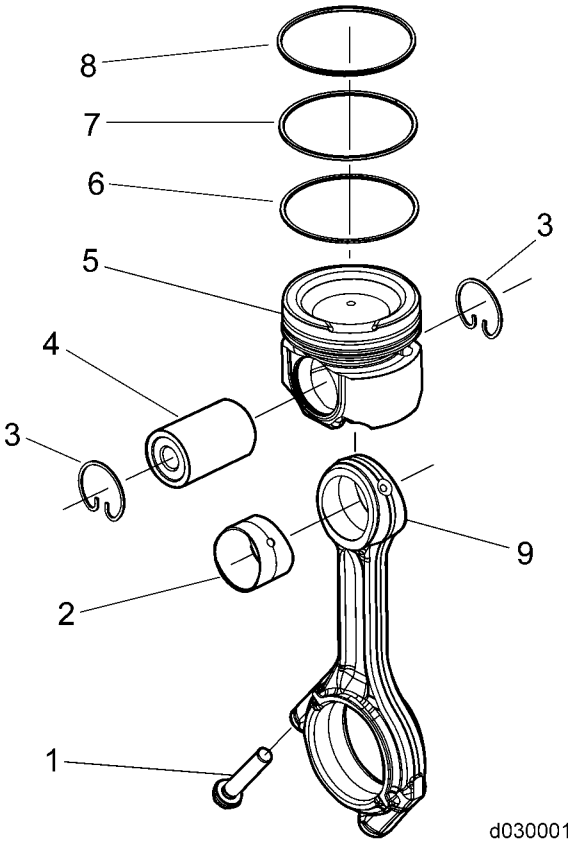

1. Connecting Rod Bolt (2 qty.)
2. Connecting Rod Bushing
3. Retaining Ring (2 qty.)
4. Piston Pin
5. Piston
6. Oil Control Ring
7. Compression Ring
8. Fire Ring
9. Connecting Rod

Figure 15-1 Piston and Connecting Rod Assembly

 Copyright © 2010 DETROIT DIESEL CORPORATION

https://truckmanualshub.com/

Each piston has an oil control ring (6), a middle compression ring (7), and a fire ring (8).

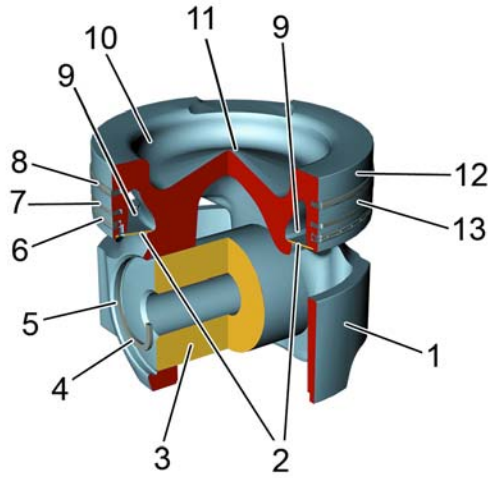

1. Piston Skirt
2. Cover Plate (EPA07 pistons only)
3. Piston Pin
4. Retaining Clip
5. Piston Boss
6. Oil Control Ring
7. Compression Ring
8. Fire Ring
9. Cooling Galley
10. Combustion Bowl
11. Piston Dome
12. Top Land
13. Second Land

Figure 15-2 Piston

All information subject to change without notice.
DDC-SVC-MAN-0081 2010 Copyright © 2010 DETROIT DIESEL CORPORATION

https://truckmanualshub.com/

15.2 REMOVAL OF PISTON AND CONNECTING ROD ASSEMBLY

Remove the piston and connecting rod assembly as follows:

1. Drain the engine cooling system.
2. Drain the engine oil.
3. Remove the oil pan. Refer to section 19.2
4. Remove the camshaft housing and associated parts. Refer to section 3.1
5. Remove the cylinder head and gasket.
   [a] ***For DD13 ONLY:*** refer to section 14.2
   [b] ***For DD15 ONLY:*** refer to section 14.4
6. Use Scotch-Brite® pads to remove any carbon deposits from the upper inner surface of the cylinder liner.

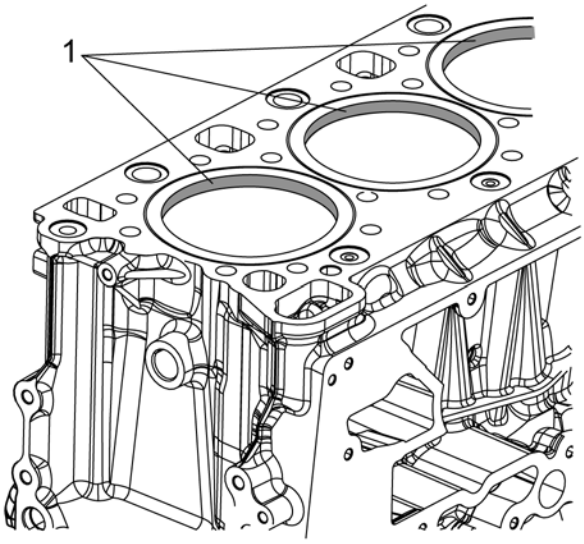

1. Carbon Deposits in Cylinder Liners

https://truckmanualshub.com/

7. Remove the piston cooling nozzles (1) from the base of the cylinder bores and discard the nozzles.

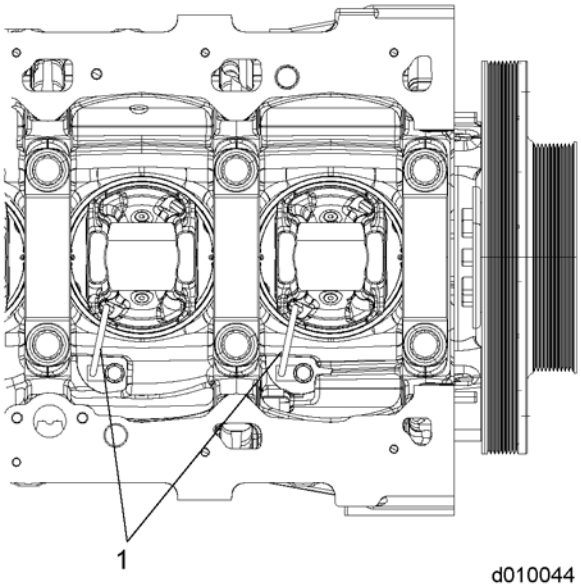

8. Position the crankshaft for each piston and connecting rod assembly to be removed at bottom dead center.
9. Remove the connecting rod bearing cap with lower bearing shell from the connecting rod.

NOTICE
The connecting rod assembly is a cracked rod design. Ensure when the bearing cap is removed that it is placed on its side. Damage to the bearing cap will occur if it is placed on end; the connecting rod assembly will need to be replaced if the cap is damaged.

10. Remove the piston and connecting rod assembly through the top of the cylinder liner.
11. Assemble the connecting rod bearing cap and lower bearing shell to the connecting rod after removal. If not already marked, match-mark the rod and cap (on the tang side) with the cylinder number from where they were removed.

NOTE:
When removed, the bearing cap and the bearing shell must be assembled to its original connecting rod before another connecting rod bearing cap is removed.

All information subject to change without notice.
DDC-SVC-MAN-0081 2010 Copyright © 2010 DETROIT DIESEL CORPORATION

https://truckmanualshub.com/

15.3 DISASSEMBLY OF PISTON AND CONNECTING ROD ASSEMBLY

Piston assembly components should be segregated by cylinder and match-marked during disassembly to ensure they are assembled in the same position and orientation.

NOTICE:
Stamping cylinder numbers on the piston assembly will damage the components.

Disassemble piston and connecting rod assembly as follows:

1. Place the piston, dome down, on the table.
2. Using appropriate flat-nosed pliers, remove the retaining rings from the piston boss.
3. Slide out the piston wrist pin and remove the connecting rod from piston.

 Copyright © 2010 DETROIT DIESEL CORPORATION

https://truckmanualshub.com/

15.4 INSPECTION OF PISTON AND CONNECTING ROD ASSEMBLY

Inspect as follows:

1. Inspect the connecting rod and bearing cap for damage; replace as necessary.
2. Inspect the piston, wrist pin and piston rings for damage; replace as necessary.

All information subject to change without notice.
DDC-SVC-MAN-0081 2010 Copyright © 2010 DETROIT DIESEL CORPORATION

https://truckmanualshub.com/

15.5 ASSEMBLY OF PISTON AND CONNECTING ROD ASSEMBLY

Assemble as follows:

1. Using appropriate flat-nosed pliers, install one of the retaining rings into a retaining ring recess in the piston. Orient the retaining ring gap (1) to either the 12 o'clock or 6 o'clock position.

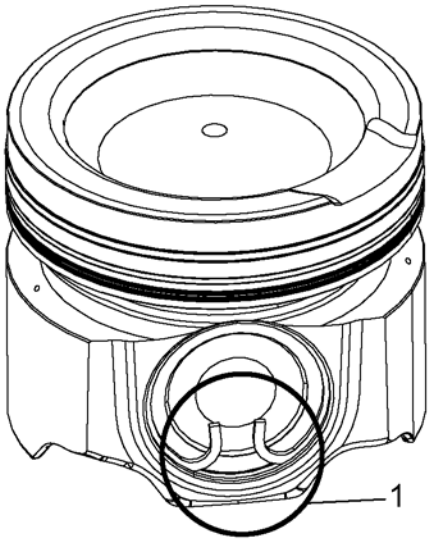

d030038a

2. Liberally lubricate the piston pin bore, the piston pin, and the connecting rod bushing in the small end of the connecting rod with 80/90w oil (or equivalent).

 Copyright © 2010 DETROIT DIESEL CORPORATION

https://truckmanualshub.com/

3. Position the long end of the connecting rod (2) on the same side as the valve relief (1) in the top of the piston.

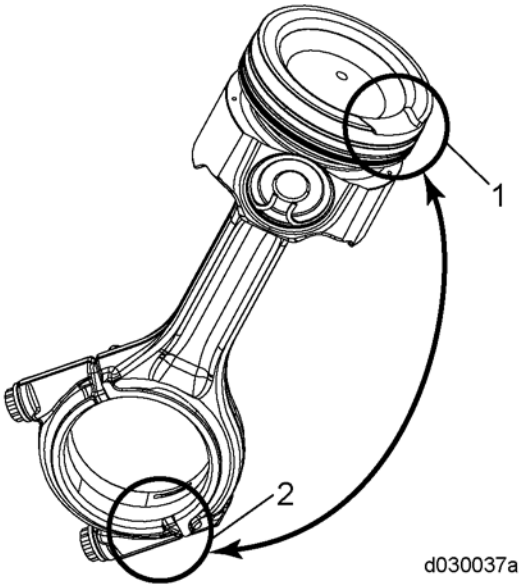

4. Install piston pin into the pin bore, through the rod, until it rests against the previously installed retaining ring.
5. Using the appropriate flat-nosed pliers, install the other retaining ring into the retaining ring recess in the piston boss to lock the pin in place. Orient the retaining ring gap to either the 12 o'clock or 6 o'clock position.

All information subject to change without notice.
DDC-SVC-MAN-0081 2010 Copyright © 2010 DETROIT DIESEL CORPORATION

https://truckmanualshub.com/

15.6 INSTALLATION OF PISTON AND CONNECTING ROD ASSEMBLY

Install as follows:

1. If the rings have been removed, install them into the grooves of the piston and rotate 120° apart as follows:
   [a] Install the oil ring expander in the lowest groove in the piston.
   [b] Install the oil ring (top label up) in the lowest groove around the oil expander ring.
   [c] Install the compression ring (top label up) in the middle groove.
   [d] Install the fire ring (top label up) in the top groove.

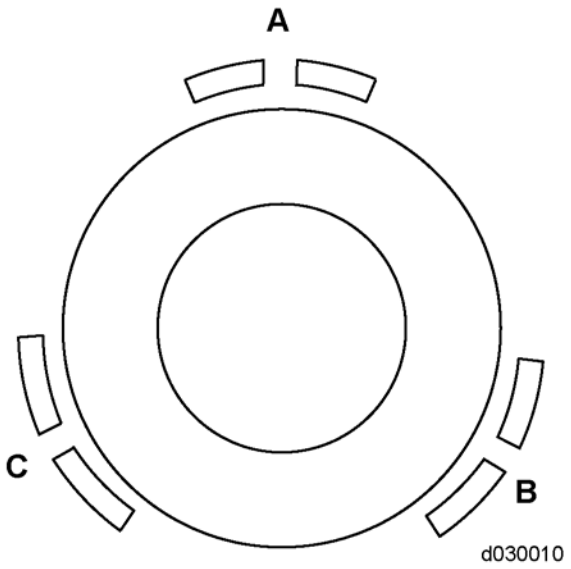

2. Allowable new ring end gaps for (A), (B), and (C) are shown below.

Ring	Ring End Gap
Fire Ring (A)	0.35 - 0.75 mm (0.024 - 0.030 in.)
Compression Ring (B)	0.7 - 0.9 mm (0.027 - 0.035 in.)
Oil Control Ring (C)	0.4 - 0.6 mm (0.016 - 0.024 in.)

Table 15-1 Allowable Ring End Gaps

3. Add clean engine oil to a clean pan at least 305 mm (12 in) in diameter, until the level reaches approximately 76 mm (3 in).
4. Place the piston and connecting rod assembly into the pan, with the combustion dome of the piston on the bottom of the pan.
5. Coat the upper connecting rod bearing shell with clean engine oil.

 Copyright © 2010 DETROIT DIESEL CORPORATION

https://truckmanualshub.com/

6. Coat the piston skirt liberally with the engine oil, saturating the piston rings and ring lands.
7. Coat the inside diameter of the piston ring compression tool with clean engine oil.
   [a] ***For the DD13,*** use Piston Ring Compressor tool (W470589005900).

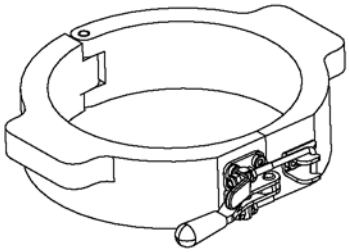

d580054

   [b] ***For the DD15,*** use Piston Ring Compressor tool (J-47386).

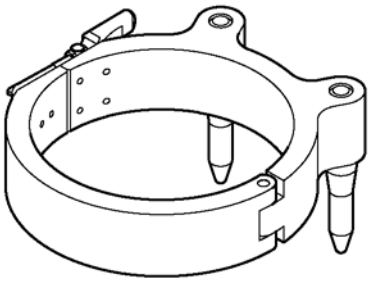

d580000

All information subject to change without notice.
DDC-SVC-MAN-0081 2010 Copyright © 2010 DETROIT DIESEL CORPORATION

[c] ***For the DD15,*** Piston Ring Compressor tool (W470589015900) may also be used.

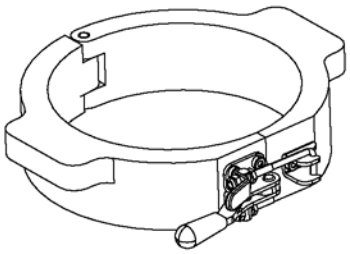

d580054

8. Place piston on a bench with dome side down, install piston ring compressor tool.
9. Once the ring compressor is clamped, ensure the piston can rotate freely. If rotation is hindered, remove the compressor and reposition the dome and rings, or inspect for ring damage.
10. Lubricate the inside of the cylinder liner with clean engine oil.
11. Position the throw of the crankshaft to bottom dead center for the cylinder being installed with the piston and connecting rod assembly.

NOTICE:
Failure to orient the piston and connecting rod assembly properly during piston installation may result in the bearing end of the rod striking the nozzle, causing damage to the nozzle or loosening it from the block. A damaged, bent, or loosened nozzle may cause a loss of main gallery pressure. In these cases piston overheating or lack of adequate lubrication may result in severe engine damage.

12. Ensure the valve relief located on the top of the piston is orientated towards the exhaust side of the engine during installation. The piston also has an arrow that should face the

 Copyright © 2010 DETROIT DIESEL CORPORATION

https://truckmanualshub.com/

front of the engine. The connecting rod has a serial number printing that must also face towards the exhaust side of the engine.

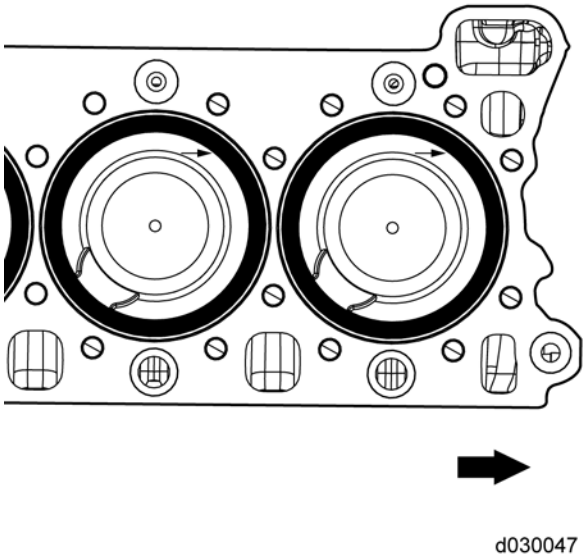

13. Align the ring compressor guide pins (if equipped) over the two bolt holes on the top of the cylinder block.

NOTICE:
DO NOT force the piston into the liner. Considerable force on the piston could scratch or otherwise damage the inside of the cylinder liner. Therefore, care must be taken during the installation of the piston to prevent damage.

14. With care and moderate pressure, press the piston into the liner.
15. Remove the ring compressor.
16. Push or tap the piston and connecting rod within the liner until the upper rod bearing is firmly seated on the appropriate crankshaft journal.
17. Lubricate the lower bearing shell with clean engine oil.
18. With the number on the cap and rod on the same side and the arrow facing forward, install the bearing cap.

All information subject to change without notice.
DDC-SVC-MAN-0081 2010 Copyright © 2010 DETROIT DIESEL CORPORATION

https://truckmanualshub.com/

19. Torque the connecting rod bolts alternately to the following:

Connecting Rod Bolt Torque		
DD13	**DD15**	**DD16**
190 N·m (140 lb·ft) + 90° torque turn	115 N·m (85 lb·ft) + 180° torque turn	115 N·m (85 lb·ft) + 180° torque turn

Bearing Cap to Rod Bolt Cap Bolt Maximum Length		
DD13	**DD15**	**DD16**
79 mm (3.11 in.)	82.3 mm (3.240 in.)	82.3 mm (3.240 in.)

 Copyright © 2010 DETROIT DIESEL CORPORATION

20. Check connecting rod axial clearance by moving the rod from side to side on the crank journal. If there is no clearance, check for proper bearing cap installation.

Connecting Rod Axial Clearance		
DD13	0.12 mm (0.0047 in.)	0.29 mm (0.0114 in.)
DD15	0.12 mm (0.0047 in.)	0.29 mm (0.0114 in.)
DD16	0.12 mm (0.0047 in.)	0.29 mm (0.0114 in.)

Table 15-2

21. Install the remaining piston and rod assemblies in the same manner.

NOTICE:
Ensure when installing the piston spray nozzles that damage to the nozzle does not occur. Damaged oil spray nozzles could result in a loss of oil pressure to cool the pistons, which may cause engine damage.

22. Install new piston spray nozzles (1) at the base of the cylinder bores. Torque each piston spray nozzle bolt to 30 N·m (22 lb·ft).

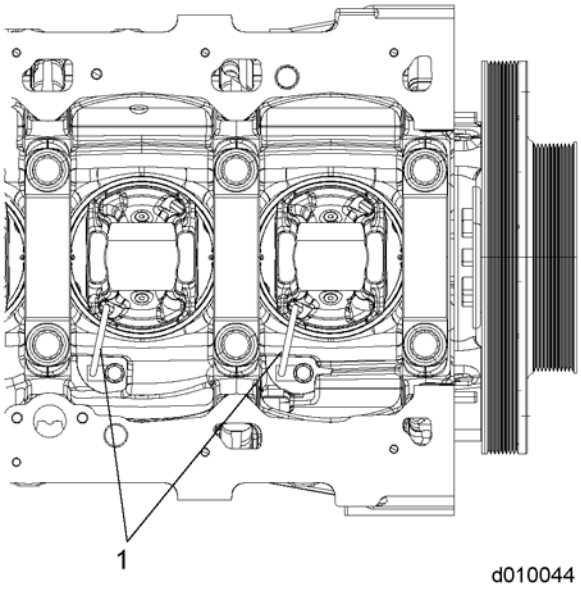

23. Using a dial gauge and holder, measure the piston protrusion relative to cylinder block top dead center at all the pistons.

All information subject to change without notice.
DDC-SVC-MAN-0081 2010 Copyright © 2010 DETROIT DIESEL CORPORATION

24. Allowable piston protrusion (A) is in the table below:

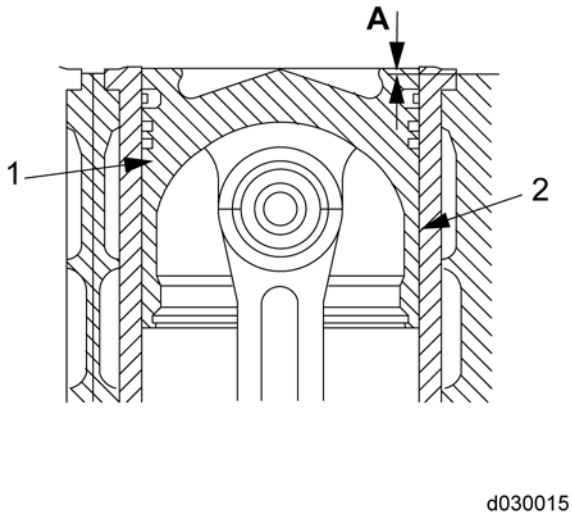

1. Piston
2. Cylinder Liner
A. Allowable Piston Protrusion

Engine	Minimum	Maximum
DD13	-0.201 mm (-0.0079 in)	0.2215 mm (0.0087 in.)
DD15	-0.213 mm (-0.0090 in.)	0.2075 mm (0.0081 in.)
DD16	-0.213 mm (-0.0090 in.)	0.2075 mm (0.0081 in.)

Table 15-3 Allowable Piston Protrusion

25. If piston protrusion is not between minimum and maximum specifications, check the following:
    [a] Inspect piston, piston pin boss, and piston pin for wear or damage. If damaged, repair as necessary.
    [b] Inspect connecting rod, checking for bent rod, piston pin bore wear or damage. If damaged, repair as necessary.
    [c] Inspect connecting rod bearings for wear or damage. If damage is found replace rod bearings.
    [d] Inspect crankshaft for damage to rod journal or evidence of spun bearing. If damaged, repair as necessary.
26. Install a new cylinder head gasket.
    - For DD13, refer to section 14.3.
    - For DD15, refer to section 14.7.

 Copyright © 2010 DETROIT DIESEL CORPORATION

https://truckmanualshub.com/

27. Install the cylinder head.
    - □ For DD13, refer to section 14.3.
    - □ For DD15, refer to section 14.7.
28. Install the lubricating oil pump inlet pipe and screen assembly, and the lubricating oil pump. Refer to section 21.4.

NOTE:
Debris from a failed bearing can damage the internal components of the oil pump. If debris is found in the oil pan, replace the oil pump as necessary.

29. Install the oil pan. Refer to section 19.7.
30. Complete any other engine assembly as necessary.
31. After the engine has been completely assembled, refill the oil pan to the proper oil level on the dipstick.
32. Prime engine lubrication system. Refer to section 27.1.
33. Close the drain cocks and fill the engine with the recommended coolant.

NOTE:
Coolant system maintenance is very important. Bleed off all the air from the system and top off.

34. Verify repairs made to the piston and connecting rod assembly. If new parts such as pistons, rings, cylinder liners or bearings were installed, operate the engine on the run-in schedule.

All information subject to change without notice.
DDC-SVC-MAN-0081 2010 Copyright © 2010 DETROIT DIESEL CORPORATION

https://truckmanualshub.com/

16 CYLINDER LINER

Section **Page**

16.1 DESCRIPTION AND OPERATION OF CYLINDER LINER AND RELATED PARTS 16-3
16.2 REMOVAL OF CYLINDER LINER 16-4
16.3 INSPECTION OF CYLINDER LINER 16-5
16.4 CLEANING OF THE CYLINDER LINER 16-7
16.5 INSTALLATION OF THE CYLINDER LINER 16-8

https://truckmanualshub.com/

All information subject to change without notice.
DDC-SVC-MAN-0081 2010 Copyright © 2010 DETROIT DIESEL CORPORATION

16.1 DESCRIPTION AND OPERATION OF CYLINDER LINER AND RELATED PARTS

The cylinder liners feature a “bottom stop” design, which means that the cylinder liners are installed with a lower collar in the cylinder block. This design allows for a shorter distance between cylinders and a more compact design for the cylinder block. Each cylinder liner has 2 sealing rings: the upper sealing ring, sealed by the upper coolant jacket to the cylinder block bore, and the lower sealing ring, sealed by the lower coolant jacket to the cylinder block bore.

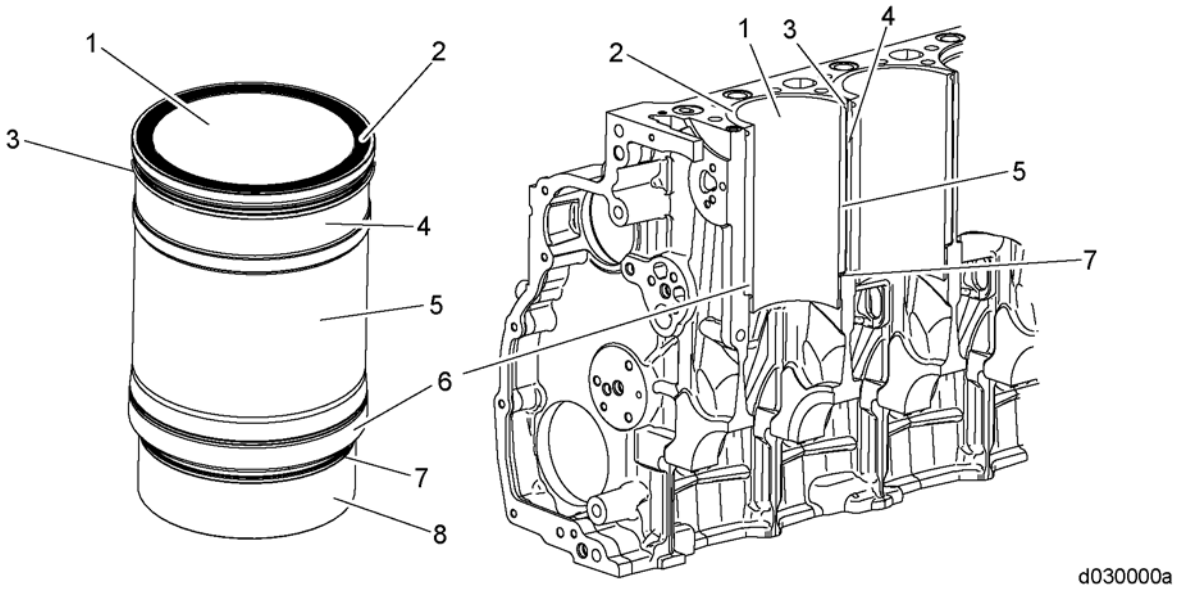

1. Cylinder Liner
2. Compression Seal Surface
3. Upper Sealing Ring
4. Upper Coolant Jacket
5. Lower Coolant Jacket
6. Lower Collar
7. Lower Sealing Ring
8. Bottom Stop Balcony

Figure 16-1 Cylinder Liner

 Copyright © 2010 DETROIT DIESEL CORPORATION

https://truckmanualshub.com/

16.2 REMOVAL OF CYLINDER LINER

Remove as follows:

NOTICE:
The proper method must be followed when removing the cylinder liner. Damage to the liners and cylinder block may occur if the proper tools and procedures are not used.

1. Remove the piston and connecting rod. Refer to section 15.2.
2. Install cylinder liner removal tool (J-45876) into the cylinder liner.

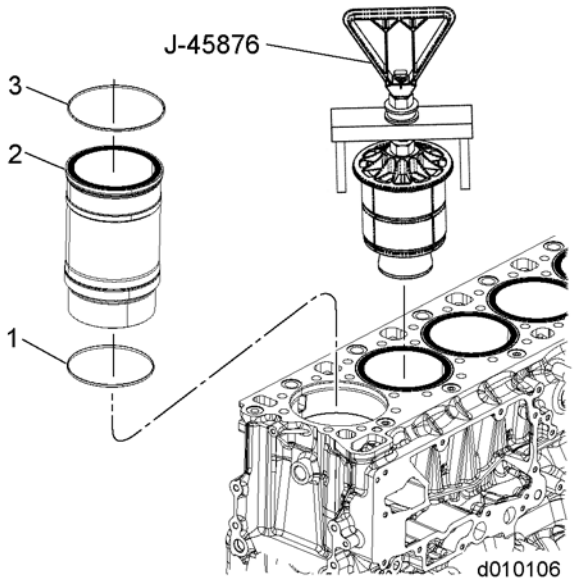

3. Remove cylinder liner (2).

NOTICE:
After removing the liners from the engine and prior to installation, always store them in an upright position until ready for use. Liners left on their side for any length of time can become egg-shaped and distorted, making installation in cylinder bores difficult or impossible. If the cylinder liners are to be reused, they should be marked for cylinder location and engine orientation, a paint mark can be used to indicate the front of the engine so they may be installed to the same cylinder from which they were removed.

4. Remove the two seal rings (1, 3) from the cylinder liner (2) and discard them.

All information subject to change without notice.
DDC-SVC-MAN-0081 2010 Copyright © 2010 DETROIT DIESEL CORPORATION

https://truckmanualshub.com/

16.3 INSPECTION OF CYLINDER LINER

Inspect as follows:

1. Inspect the cylinder liner.
   [a] Check the cylinder liner for cracks or scoring. If cracks or scoring are present, replace the liner.

NOTICE:
Cavitation is due to poor cooling system maintenance. If uncorrected, it will eventually make holes through the liner. This can result in combustion gases blowing water out of the radiator, oil in the coolant, or when the engine is stopped will allow water to flow into the cylinder and result in major engine damage due to water in the oil or hydraulic lockup.

   [b] Check the cylinder liner for cavitation. If indication of cavitation is present, replace the liner.
   [c] Check for bore polishing; if detected, replace the cylinder liner.
2. Inspect the outside diameter of the liner.
   [a] Check the liner for fretting.
   [b] If any fretting is found, remove it from the surface of the liner with a course, flat stone.
3. Inspect the liner flange in two steps:
   [a] Inspect the top surface of compression seal for cracks, smoothness and flatness.
   [b] Inspect the balcony (bottom stop).

 Copyright © 2010 DETROIT DIESEL CORPORATION

https://truckmanualshub.com/

4. Inspect the block bore and cylinder liner.
   [a] Measure the block bore and the outside diameter of the liner.

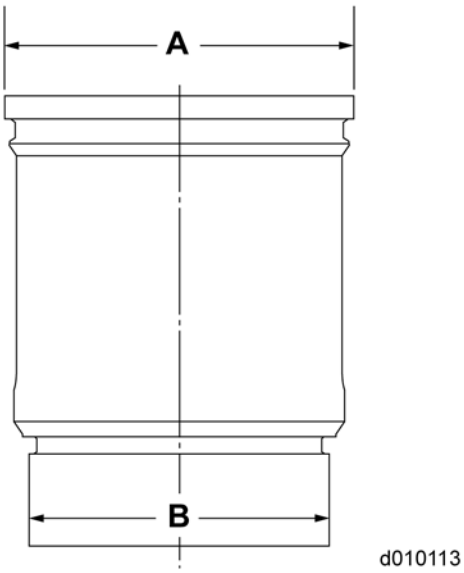

Location	DD13	DD15	DD16
A	158.98 to 159 mm (6.2590 to 6.2598 in.)	166.98 to 167 mm (6.5740 to 6.5748 in.)	166.98 to 167 mm (6.5740 to 6.5748 in.)
B	141.97 to 141.95 mm (5.589 to 5.588 in.)	148.95 to 148.97 mm (5.864 to 5.865 in.)	148.95 to 148.97 mm (5.864 to 5.865 in.)

Table 16-1 Acceptable Cylinder Liner Diameters

   [b] If the liner does not meet specification, replace with a new part.
5. Inspect the cylinder liner.
   [a] Check the two seal ring grooves for burrs or sharp edges.
   [b] If any are detected, smooth with a Scotch-Brite® pad.

All information subject to change without notice.
DDC-SVC-MAN-0081 2010 Copyright © 2010 DETROIT DIESEL CORPORATION

https://truckmanualshub.com/

16.4 CLEANING OF THE CYLINDER LINER

Clean as follows:

NOTE:
If using de-greasing solution to clean cylinder liner when finished, an application of clean engine oil will need to be applied to protect the cylinder liner from corrosion.

1. If cleaning a new or used liner, use a clean cloth and clean engine oil.

CAUTION:

To avoid injury from flying debris when using compressed air, wear adequate eye protection (face shield or safety goggles) and do not exceed 40 psi (276 kPa) air pressure.

2. Dry the liner with compressed air.

NOTICE:

If the liners are not to be installed at this time, oil them lightly with clean engine lubricating oil and store them upright in a clean, dry area. Do not let the liners rest on their sides and do not store anything on top of the liners.

3. Coat the bore of the liner with clean engine lubricating oil.
4. Allow the liner to sit for 10 minutes (to allow the oil to work into the surface finish).
5. Wipe the inside of the liner with white paper towels.
6. If a dark residue appears on the towels, repeat the oiling and wiping procedure until residue no longer appears.

 Copyright © 2010 DETROIT DIESEL CORPORATION

https://truckmanualshub.com/

16.5 INSTALLATION OF THE CYLINDER LINER

Install as follows:

1. Wipe the inside and outside of the liner clean.

NOTE:
Thoroughly clean the cylinder block, liner, and counter bores to remove any foreign material. Foreign material in the cylinder liner counter bores can cause the liner to seat improperly. Clean with a wire brush.

2. Install the two new seal rings (1, 3) onto the cylinder liner (2).

NOTE:
Ensure when installed, the seal rings are properly seated in the proper grooves (locations 1 and 3).

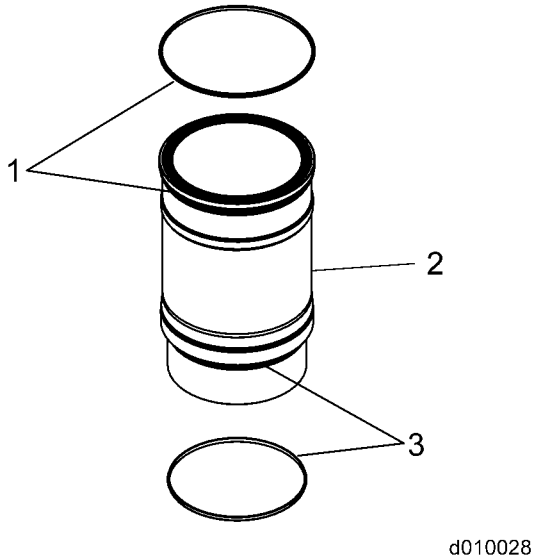

3. Lubricate the seal rings with clean engine oil.
4. Install the cylinder liner in cylinder block bore using cylinder liner installation tool J-45876.

All information subject to change without notice.
DDC-SVC-MAN-0081 2010 Copyright © 2010 DETROIT DIESEL CORPORATION

5. Seat the liner into the block using cylinder liner installation tool ***J-47407 for the DD15***, for the ***and tool J-47407-128 for the DD13***.

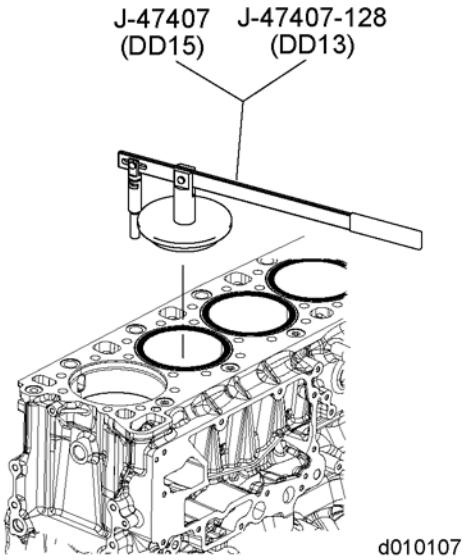

6. Install the cylinder liner protrusion tool J-47415 onto the cylinder block. Thread four cylinder head bolts through the tool and into a head bolt hole and alternately torque the four bolts to 10 N·m (7 lb·ft).

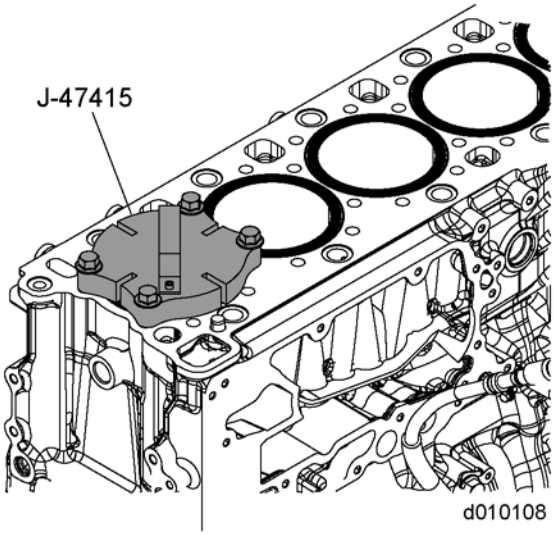

 Copyright © 2010 DETROIT DIESEL CORPORATION

https://truckmanualshub.com/

7. Install a dial indicator.
8. Measure the distance from the top of the liner flange to the top of the block. Allowable liner protrusion is 0.18-0.27 mm (0.007-0.010 in).
   [a] If the liner protrusion exceeds the maximum allowable, remove the piston and connecting rod assembly (if installed) and then remove the liner to check for debris under the liner flange.
   [b] If the liner protrusion is below the minimum specification, contact Detroit Diesel Customer Support Center (313-592-5800).

All information subject to change without notice.
DDC-SVC-MAN-0081 2010 Copyright © 2010 DETROIT DIESEL CORPORATION

https://truckmanualshub.com/

17 CRANKSHAFT

Section **Page**

17.1 DESCRIPTION AND OPERATION OF CRANKSHAFT AND RELATED PARTS 17-3
17.2 REMOVAL OF CRANKSHAFT 17-6
17.3 INSPECTION OF THE CRANKSHAFT AND RELATED PARTS 17-9
17.4 INSTALLATION OF CRANKSHAFT 17-10
17.5 REMOVAL OF CRANKSHAFT REAR OIL SEAL 17-14
17.6 INSTALLATION OF THE REAR OIL SEAL 17-15
17.7 REMOVAL OF THE CRANKSHAFT FRONT OIL SEAL 17-17
17.8 INSTALLATION OF THE CRANKSHAFT FRONT OIL SEAL 17-18

https://truckmanualshub.com/

All information subject to change without notice.
DDC-SVC-MAN-0081 2010 Copyright © 2010 DETROIT DIESEL CORPORATION

https://truckmanualshub.com/

17.1 DESCRIPTION AND OPERATION OF CRANKSHAFT AND RELATED PARTS

The crankshaft is made out of induction-hardened steel. The crankshaft bearing journals and connecting rod journals are hardened in the boundary layer and then are ground. In order to avoid vibrations, counterweights are cast onto the guide-ways. The crankshaft is mounted with seven crankshaft bearing journals in the crankcase. There are oil holes located at the crankshaft bearing journal and the connecting rod journal through which the crankshaft bearing and connecting rod bearing are lubricated.

NOTE:
The DD13 engine has four counterweights, the DD15 and DD16 each have eight counterweights.

NOTE:
The crankshaft throws on the DD16 are longer than on the DD15 crankshaft.

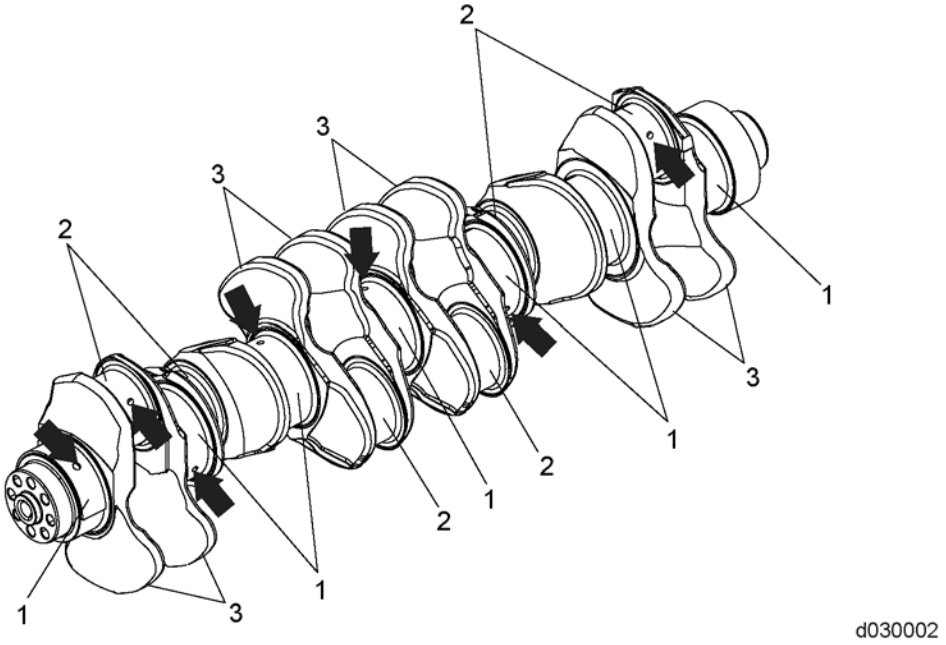

1. Crankshaft Bearing Journals
2. Connecting Rod Bearing Journals

3 Counterweights (number varies by engine model)

Arrows show oil passage locations

Figure 17-1 Crankshaft

 Copyright © 2010 DETROIT DIESEL CORPORATION

https://truckmanualshub.com/

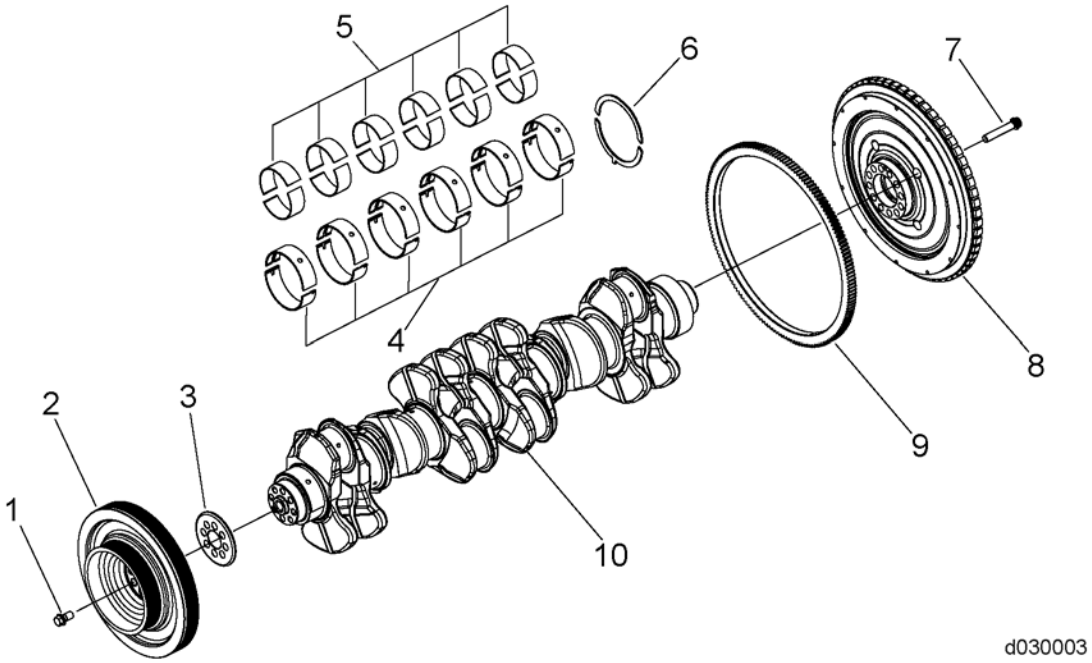

1. Bolt
2. Vibration Damper
3. Cover Plate
4. Crankshaft Bearings
5. Connecting Rod Bearings
6. Thrust Washer
7. Bolt
8. Flywheel
9. Ring Gear
10. Crankshaft

Figure 17-2 DD15 & DD16 Crankshaft and Related Parts

All information subject to change without notice.
DDC-SVC-MAN-0081 2010 Copyright © 2010 DETROIT DIESEL CORPORATION

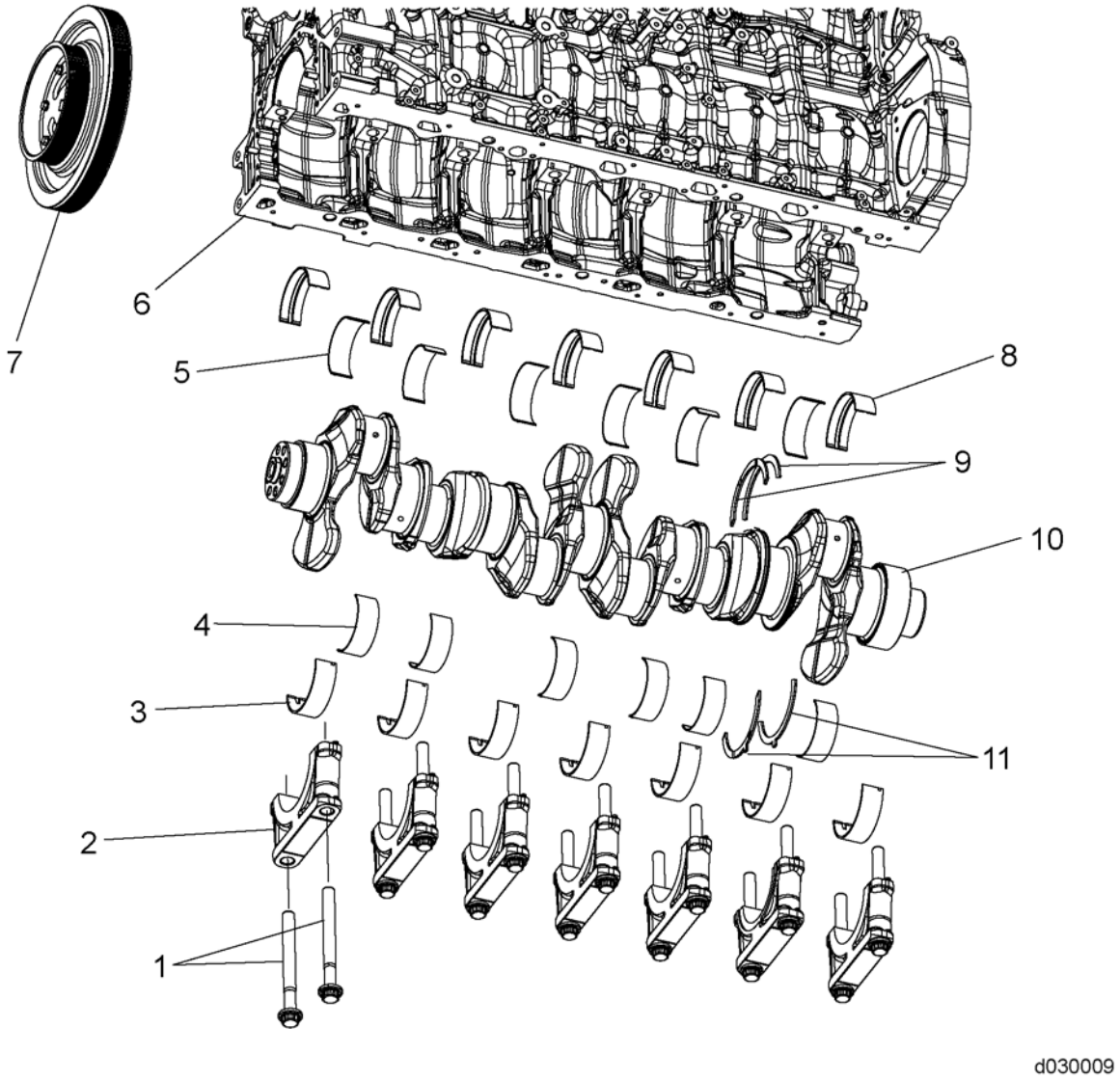

1. Bolt
2. Main Bearing Caps
3. Lower Crankshaft Bearing Shells
4. Lower Connecting Rod Bearing Shells
5. Upper Connecting Rod Bearing Shells
6. Cylinder Block
7. Vibration Damper
8. Upper Crankshaft Bearing Shells
9. Thrust Washer
10. Crankshaft
11. Thrust Washer

Figure 17-3 DD13 Crankshaft and Related Parts

 Copyright © 2010 DETROIT DIESEL CORPORATION

https://truckmanualshub.com/

17.2 REMOVAL OF CRANKSHAFT

When removal of the crankshaft becomes necessary, first remove the transmission, then proceed as follows:

1. Steam clean the engine.
2. Drain the cooling system. Refer to OEM procedures.
3. Drain the lubricating oil. Refer to OEM procedures.

WARNING:

PERSONAL INJURY

To avoid injury when removing or installing a heavy engine component, ensure the component is properly supported and securely attached to an adequate lifting device to prevent the component from falling.

4. Attach Cylinder Head/Engine Lifting Bar tool (W470589006200) with hooks to the three engine lifter brackets (one at the front and two at the rear). Remove all engine-to-base attaching bolts and remove the engine from its chassis.

WARNING:

FALLING ENGINE

To avoid injury from a falling engine, ensure the engine is securely attached to the engine overhaul stand before releasing the lifting sling.

All information subject to change without notice.
DDC-SVC-MAN-0081 2010 Copyright © 2010 DETROIT DIESEL CORPORATION

5. Remove and inspect all of the accessories and assemblies with their attaching parts, as necessary, to permit the engine block adaptor to be bolted to the intake (left) side of the cylinder block. Mount the engine to the overhaul stand (J–29109) with adaptor (J–35635–A).

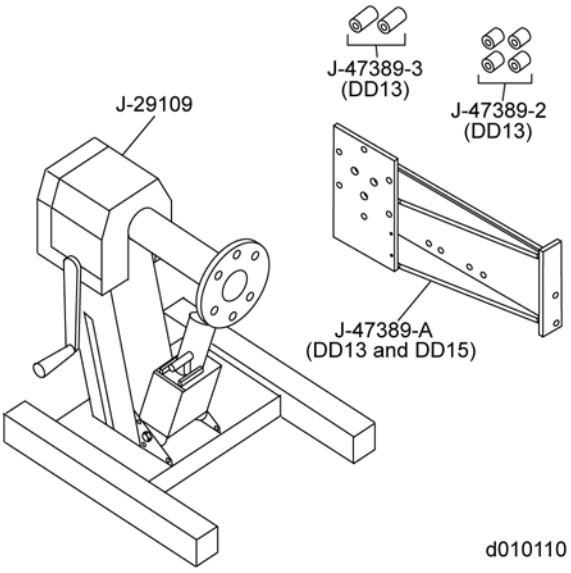

6. Remove the oil pan. Refer to section 19.2.
7. Remove the oil pump. Refer to section 21.2.
8. Remove the flywheel. Refer to section 34.4.
9. Remove flywheel housing. Refer to section 34.2.

NOTICE:
Use care when removing the crankshaft pulley and vibration assembly. If the damper is allowed to fall, damage to the internal components of the damper may result.

10. Loosen and remove two of the crankshaft pulley retaining bolts and hardened washers 180 degrees apart and install Flywheel Guide Studs tool (J–36235) in their place. Then loosen and remove the remaining six pulley retaining bolts and hardened washers.
11. Remove the vibration damper assembly. Refer to section 36.1.
12. Remove front cover. Refer to section 37.2.
13. Remove connecting rod caps, and/or piston assemblies (if necessary). Refer to section 15.2.
14. Rotate the engine so the crankshaft is facing up.

 Copyright © 2010 DETROIT DIESEL CORPORATION

https://truckmanualshub.com/

15. Loosen and remove the main bearing cap bolts. Using Main Bearing Cap Puller tool (J–48884), remove the main bearing caps for inspection.

NOTE:
Paint-mark the main bearing caps so that they can be installed to their respective, original positions. The main bearing caps must be kept in sequence, so that they are installed to their original positions.

16. Remove the thrust washers from each side of the No. 6 main bearing cap.
17. Remove the crankshaft.

All information subject to change without notice.
DDC-SVC-MAN-0081 2010 Copyright © 2010 DETROIT DIESEL CORPORATION

https://truckmanualshub.com/

17.3 INSPECTION OF THE CRANKSHAFT AND RELATED PARTS

Inspect as follows:

WARNING:

EYE INJURY

To avoid injury from flying debris when using compressed air, wear adequate eye protection (face shield or safety goggles) and do not exceed 276 kPa (40 psi) air pressure.

1. Inspect the crankshaft for cracks.
2. If the crankshaft shows evidence of excessive overheating, replace the crankshaft since the heat treatment has probably been destroyed.
3. Clean out the oil passages thoroughly with a stiff wire brush. Clean the crankshaft with fuel oil and dry it with compressed air.
4. Check the crankshaft journal surfaces for score marks and other imperfections. If excessively scored, replace the crankshaft.
5. Carefully inspect the front end of the crankshaft in the area of the oil seal contact surface for evidence of a rough or grooved condition. Any imperfections of the oil seal contact surfaces will result in oil leakage at these points. If excessively scored, replace the crankshaft.
6. Check the crankshaft thrust surfaces for excessive wear or grooving. If excessively worn, replace the crankshaft.
7. Inspect the crankshaft gear for damage. Replace if necessary.
8. Check the crankshaft journal run-out.
   - □ Set journals number 1 and number 7 on a pair of V-blocks
   - □ Rotate crankshaft and measure journals with a dial indicator

Journal 1	Journal 2	Journal 3	Journal 4	Journal 5	Journal 6	Journal 7
On V-Block	0.040 mm (0.0015 in.)	0.060 mm (0.0024 in.)	0.090 mm (0.0035 in.)	0.060 mm (0.0024 in.)	0.040 mm (0.0015 in.)	On V-Block

Table 17-1 Maximum Crankshaft Journal Runout

9. Check journals for damage.
10. Check main and rod bearings for wear or scoring. Replace as necessary.
11. Inspect the thrust washers for wear or scoring. Replace as necessary.
12. Inspect the main cap bolt length. If the length exceeds 200.5 mm (7.89 in), replace the bolt.
13. Inspect the cylinder block journals. Refer to section 42.3.2.

 Copyright © 2010 DETROIT DIESEL CORPORATION

https://truckmanualshub.com/

17.4 INSTALLATION OF CRANKSHAFT

Install the crankshaft using the following procedure:

WARNING:

EYE INJURY

To avoid injury from flying debris when using compressed air, wear adequate eye protection (face shield or safety goggles) and do not exceed 276 kPa (40 psi) air pressure.

1. Steam clean the crankshaft to remove the rust preventive and blow out the oil passages with compressed air.
2. Install the upper main bearing shells in the block. If the old bearing shells are to be used again, install them in the same locations from which they were removed.

NOTE:
When a new crankshaft is installed, ALL new main and connecting rod (upper and lower) bearing shells and new thrust washers must also be installed.

3. Install the thrust washer upper halves in the counterbores on either side of the No. 6 bearing saddle. Coat the backs of the thrust washers (without oil grooves) with petroleum jelly and install with the oil-grooved sides facing away from the saddle.
4. Apply clean engine oil 360 degrees around all crankshaft bearing journals and install the crankshaft.
5. Install the lower main bearing shells in the main bearing caps as follows:
   [a] Align the tang on the lower main bearing shell with the groove in the main bearing cap. Install the bearing shell to the main bearing cap.

NOTE:
The main bearing caps are bored in position and stamped with position number. They must be installed in their original positions, with the marked (numbered) side of each cap toward the cooler side of the cylinder block.

   [b] If the old bearing shells are to be used again, install them in the same bearing caps from which they were removed.
6. Check main bearing cap bolt length.

DD13	175.5 mm (6.909 in.)
DD15	200.5 mm (7.894 in.)

Table 17-2 Maximum Main Bearing Cap Bolt Length

7. Install the main bearing caps together with lower bearing shells in place.

All information subject to change without notice.
DDC-SVC-MAN-0081 2010 Copyright © 2010 DETROIT DIESEL CORPORATION

https://truckmanualshub.com/

8. Apply a small quantity of clean engine oil to the bolt threads and underside of the bolt heads. Install the main bearing cap bolts and draw them up snug.
9. Torque main bearing cap bolt torque to 50 N·m (36 lb·ft).
10. Check the crankshaft end play as follows:
    [a] Move the crankshaft toward the gauge with a small 304 mm (less than 12 in.) pry bar. Keep a constant pressure on the pry bar and zero the pointer on the dial indicator.
    [b] Remove and insert the pry bar on the other side of the bearing cap. Force the crankshaft in the opposite direction and note the amount of end play on the dial.
    [c] The end play should be 0.099-0.419 mm (0.0039 -0.0165 in). Insufficient end play can be the result of a misaligned No. 6 main bearing, a misaligned upper thrust washer or a burr or dirt on the inner face of one or more of the thrust washers.
11. ***For the DD13,*** torque all of the main bearing cap bolts, in three steps, using the sequence shown below. Torque the main bearing cap bolts to:
    [a] 150 N·m (110 lb·ft)
    [b] 300 N·m (221 lb·ft)
    [c] 90° torque turn

 Copyright © 2010 DETROIT DIESEL CORPORATION

https://truckmanualshub.com/

12. ***For the DD15,*** torque all of the main bearing cap bolts, in four steps, using the sequence shown below. Torque the main bearing cap bolts to:
    [a] 150 N·m (110 lb·ft)
    [b] 250 N·m (184 lb·ft)
    [c] 1st 90° torque turn
    [d] 2nd 90° torque turn

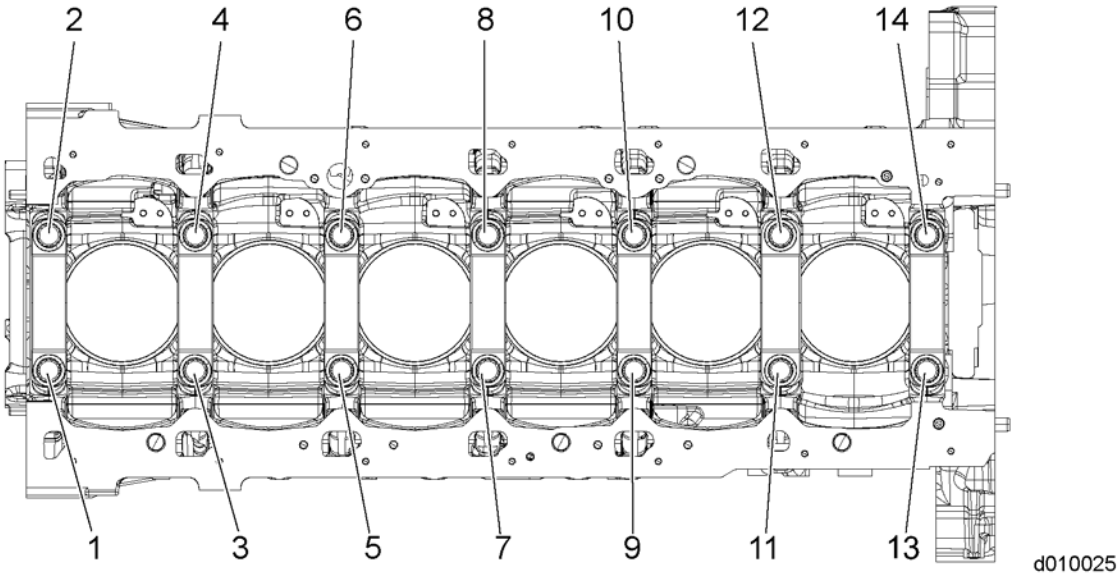

NOTE:
If the bearings have been installed properly, the crankshaft will turn freely with all of the main bearing cap bolts drawn to the specified torque.

13. Install the piston and connecting rod assemblies. Refer to section 15.6.
14. If removed, install the cylinder head.
    [a] ***For DD13 ONLY:***Refer to section 14.3.
    [b] ***For DD15 ONLY:*** refer to section 14.7.
15. If removed, install the camshaft housing. Refer to section 3.3.
16. If removed, install the gear train. Refer to section 5.2.
17. Install the flywheel housing. Refer to section 34.3.
18. Replace the rear crankshaft seal with new seal. Refer to section 17.6.
19. Install the flywheel. Refer to section 34.6
20. Install the oil pump, inlet and outlet pipes. Refer to section 21.4.
21. Replace the front crankshaft oil seal with new seal. Refer to section 17.8.
22. Install the crankshaft pulley and vibration damper assembly. Refer to section 36.2.

All information subject to change without notice.
DDC-SVC-MAN-0081 2010 Copyright © 2010 DETROIT DIESEL CORPORATION

https://truckmanualshub.com/

23. Install the oil pan. Refer to section 19.7.

WARNING:

PERSONAL INJURY

To avoid injury when removing or installing a heavy engine component, ensure the component is properly supported and securely attached to an adequate lifting device to prevent the component from falling.

24. Use a Cylinder Head/Engine Lifting Bar tool (W470589006200) with hooks attached to the lifting brackets at each end of the engine and remove the engine from the overhaul stand.
25. Remove the overhaul stand adaptor plate from the engine block.
26. Install any accessories that were removed.
27. Install the engine to the equipment from which it was removed.
28. Fill the cooling system. Refer to OEM specifications.
29. Prime engine lubrication system. Refer to section 27.1.
30. After replacing the main or connecting rod bearings or installing a new crankshaft, operate the engine as outlined in the "Run-In Schedule." See *DDC-SCV-MAN-0075*.

 Copyright © 2010 DETROIT DIESEL CORPORATION

17.5 REMOVAL OF CRANKSHAFT REAR OIL SEAL

Remove as follows:

WARNING:

PERSONAL INJURY

To avoid injury before starting and running the engine, ensure the vehicle is parked on a level surface, parking brake is set, and the wheels are blocked.

1. Remove the flywheel from the flywheel housing (1).

NOTICE:

When drilling pilot holes in the seal, ensure that the drill is straight and perpendicular to the seal. Failure to drill the holes straight could result in damage to the seal bore, resulting in replacement of the flywheel housing.

NOTE:
When drilling the holes for screws, make sure to coat the drill bit with grease to catch the shavings.

2. Drill 3.174 mm (0.125 in) pilot holes in the seal (2); use the sheet metal screws and the Rear Crankshaft Seal Installer & Remover tool (W470589004300); remove the seal (2) and discard the seal.

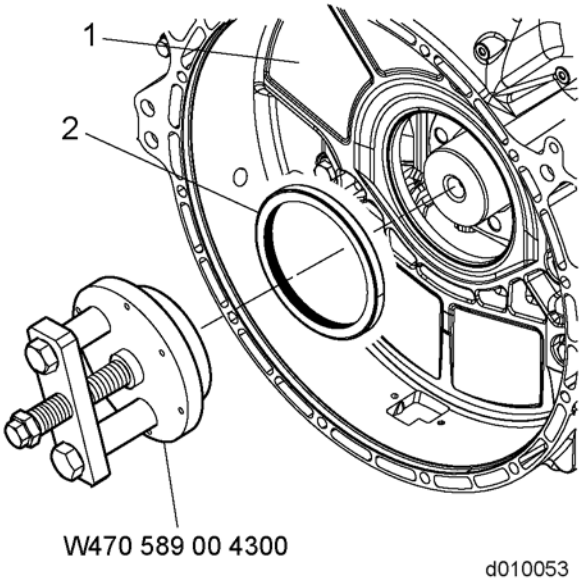

All information subject to change without notice.
DDC-SVC-MAN-0081 2010 Copyright © 2010 DETROIT DIESEL CORPORATION

https://truckmanualshub.com/

17.6 INSTALLATION OF THE REAR OIL SEAL

Install as follows:

NOTE:
The standard size rear oil seal has an inside diameter of 138 mm (5.433 in.).

1. Inspect the contact area of the flywheel for damage and wear. If it is scored or worn, replace it.
2. Install the new rear seal (2) onto the Rear Crankshaft Seal Installer & Remover tool (W470589004300).

NOTE:
For ease of installation into the flywheel housing, apply a light coating of a soapy water solution to the outer diameter (2) of the seal.

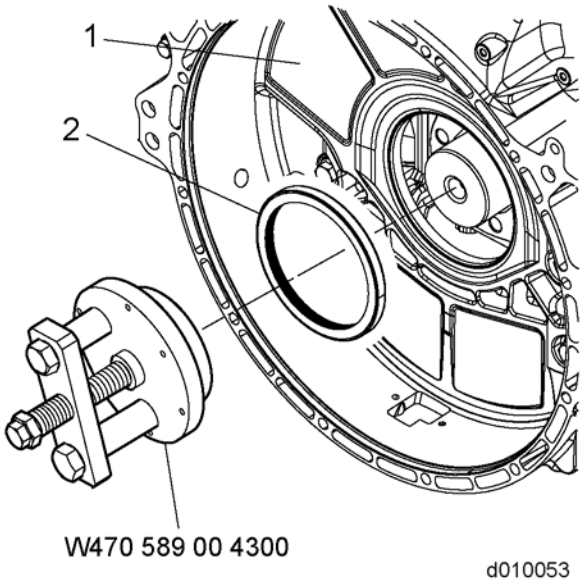

3. Position the seal into the flywheel housing (1).

 Copyright © 2010 DETROIT DIESEL CORPORATION

https://truckmanualshub.com/

4. Install the seal by turning the forcing screw until the tool bottoms out on the end of the crankshaft.

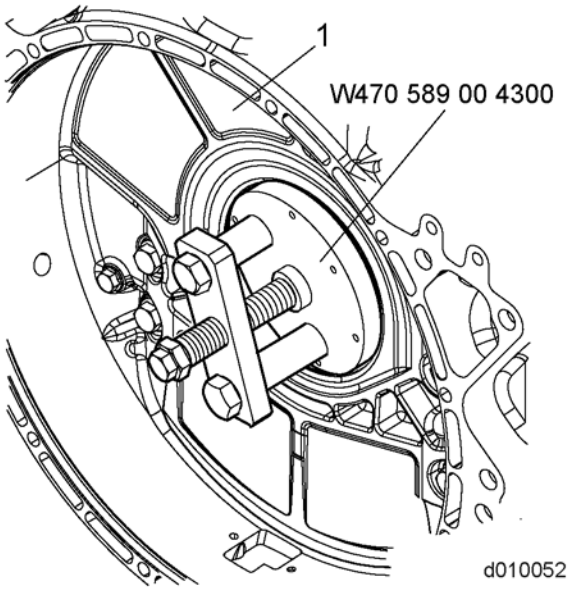

5. Remove tool W470589004300 and visually check the seal and sealing lip for correct installation.
6. Install the flywheel into the flywheel housing (1). Refer to section 34.6.

All information subject to change without notice.
DDC-SVC-MAN-0081 2010 Copyright © 2010 DETROIT DIESEL CORPORATION

17.7 REMOVAL OF THE CRANKSHAFT FRONT OIL SEAL

To remove the front crankshaft oil seal, use Front Crankshaft Seal Installer/Remover tool (W541589023300).

Remove as follows:

1. Remove the poly-V-belts. Refer to section 40.1.
2. Remove the vibration damper pulley. Refer to section 36.1.
3. Install Front Crankshaft Seal Installer / Remover tool W541589023300.

NOTICE:
When drilling pilot holes for the removal of seal, ensure that the drill is straight and perpendicular to the seal. Failure to drill the hole straight could result in damage to the seal bore, resulting in the replacement of the front cover.

NOTE:
When drilling the holes for screws, make sure to coat the drill bit with grease to catch the shavings.

NOTE:
Handle the new seal with care. Do not bend the seal lip; bending the lip will damage the seal and cause it to leak.

4. Drill 3.174 mm (0.125 in.) pilot holes in the seal, use the sheet metal screws and tool W541589023300; remove the seal and discard the seal.

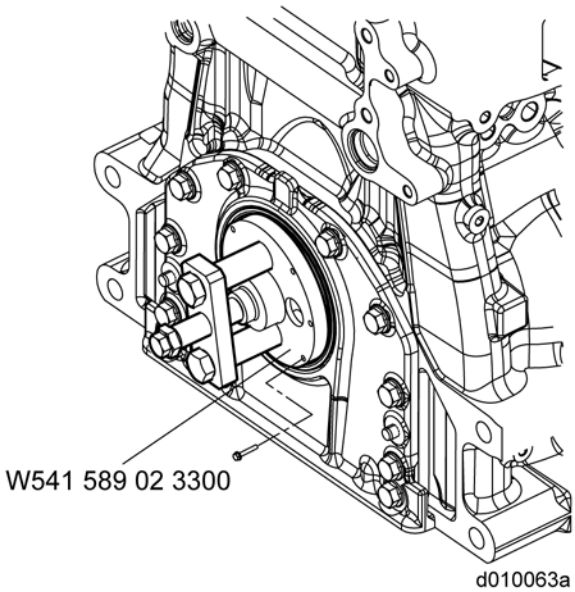

 Copyright © 2010 DETROIT DIESEL CORPORATION

https://truckmanualshub.com/

17.8 INSTALLATION OF THE CRANKSHAFT FRONT OIL SEAL

Install as follows:

NOTE:
The standard size front seal has an inside diameter of 100 mm (3.937 in.).

NOTE:
Handle the new seal with care. Do not bend the seal lip; bending the lip will damage the seal and cause it to leak.

WARNING:
EYE INJURY
To avoid injury from flying debris when using compressed air, wear adequate eye protection (face shield or safety goggles) and do not exceed 276 kPa (40 psi) air pressure.

1. Use air to clean the sealing surfaces on the cover and crankshaft.

NOTE:
Seal lip should face outward for proper installation.

NOTE:
For ease of installation into the front cover, apply a light coating of a soapy water solution to the outer diameter (1) of the seal.

2. Install a new seal onto plastic seal installation tool.

NOTE:
The plastic seal installation tool is a one time use item; discard after using.

All information subject to change without notice.
DDC-SVC-MAN-0081 2010 Copyright © 2010 DETROIT DIESEL CORPORATION

https://truckmanualshub.com/

3. Install seal (1) and plastic installation tool (2) into the front cover (3) and crankshaft; remove plastic seal installation tool (2) and discard.

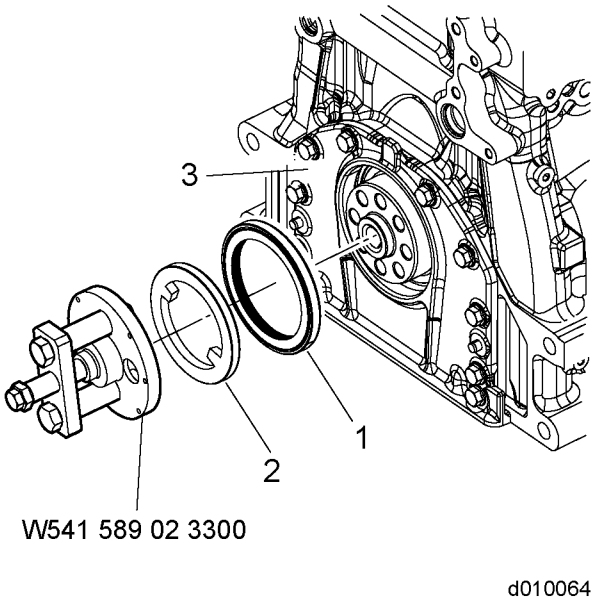

4. Install Front Crankshaft Seal Installer/Remover tool (W541589023300) to the crankshaft.

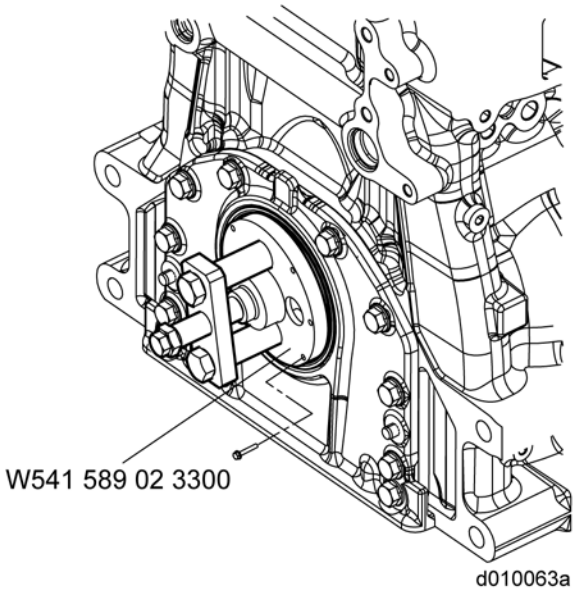

5. Install the seal by turning the forcing screw until the tool bottoms out on the end of the crankshaft.
6. Remove the tool and visually check the seal and sealing lip for correct installation. The seal lip should face outward when installed correctly.

 Copyright © 2010 DETROIT DIESEL CORPORATION

https://truckmanualshub.com/

7. Install the vibration damper pulley and torque the eight bolts to 200 N·m (147.5 lb·ft). Refer to section 36.2.
8. Install the poly-V belts. Refer to section 40.3.

All information subject to change without notice.
DDC-SVC-MAN-0081 2010 Copyright © 2010 DETROIT DIESEL CORPORATION

https://truckmanualshub.com/

18 LUBRICATION SYSTEM

Section **Page**

18.1 DESCRIPTION AND OPERATION OF THE LUBRICATION SYSTEM AND RELATED COMPONENTS 18-3

https://truckmanualshub.com/

All information subject to change without notice.
DDC-SVC-MAN-0081 2010 Copyright © 2010 DETROIT DIESEL CORPORATION

18.1 DESCRIPTION AND OPERATION OF THE LUBRICATION SYSTEM AND RELATED COMPONENTS

A schematic of the lubrication system in the following illustration shows the oil flow to the engine components. For the DD13 engine, see Figure18-1. For the DD15 engine, see Figure 18-2.

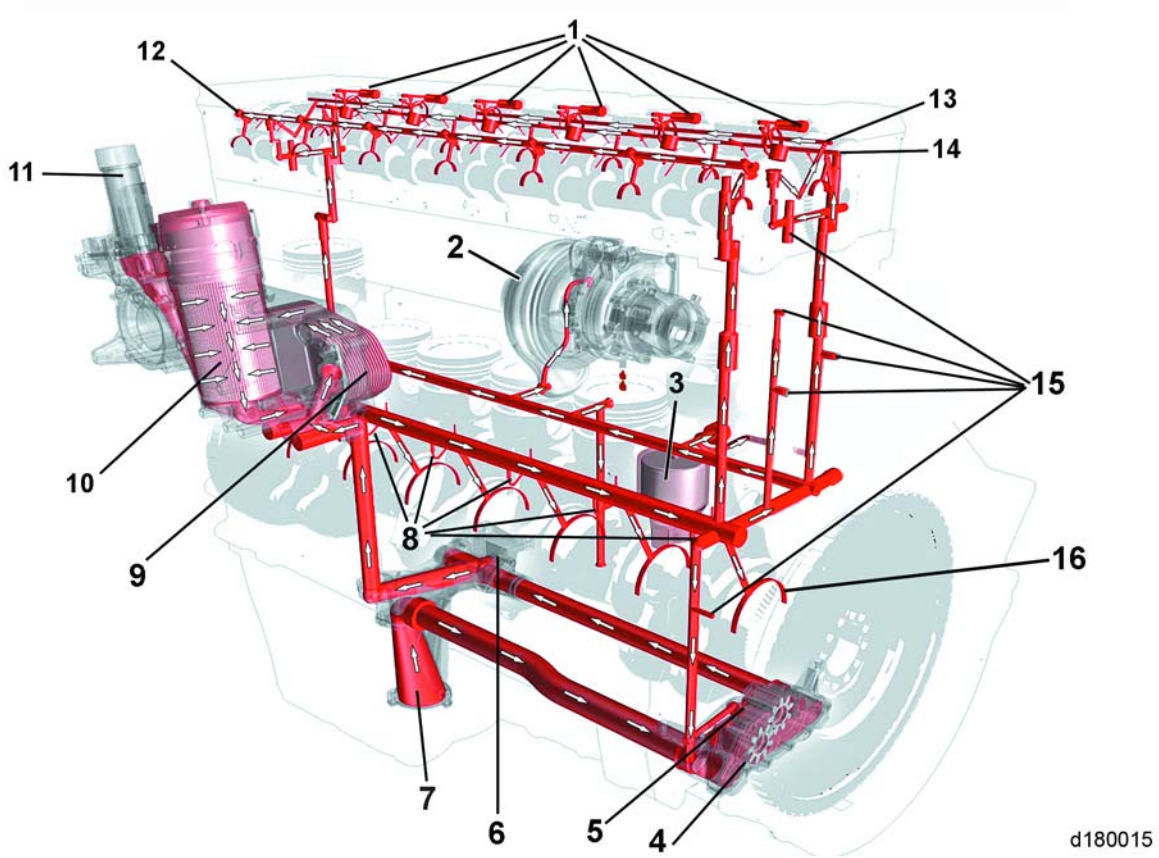

1. Engine Brake
2. Turbocharger
3. Crankcase Breather
4. Oil Pump
5. Pressure Valve
6. Backflow Valve
7. Suction Pipe
8. Oil Spray Nozzle
9. Oil Cooler and Housing
10. Oil Filter
11. Oil Refill
12. Intake Rocker Arm Supply Spindle
13. Engine Brake Supply
14. Exhaust Rocker Arm Supply Spindle
15. Gear Train Oil Supply
16. Main Bearing Supply

Figure 18-1 DD13 Oil Flow Schematic

 Copyright © 2010 DETROIT DIESEL CORPORATION

https://truckmanualshub.com/

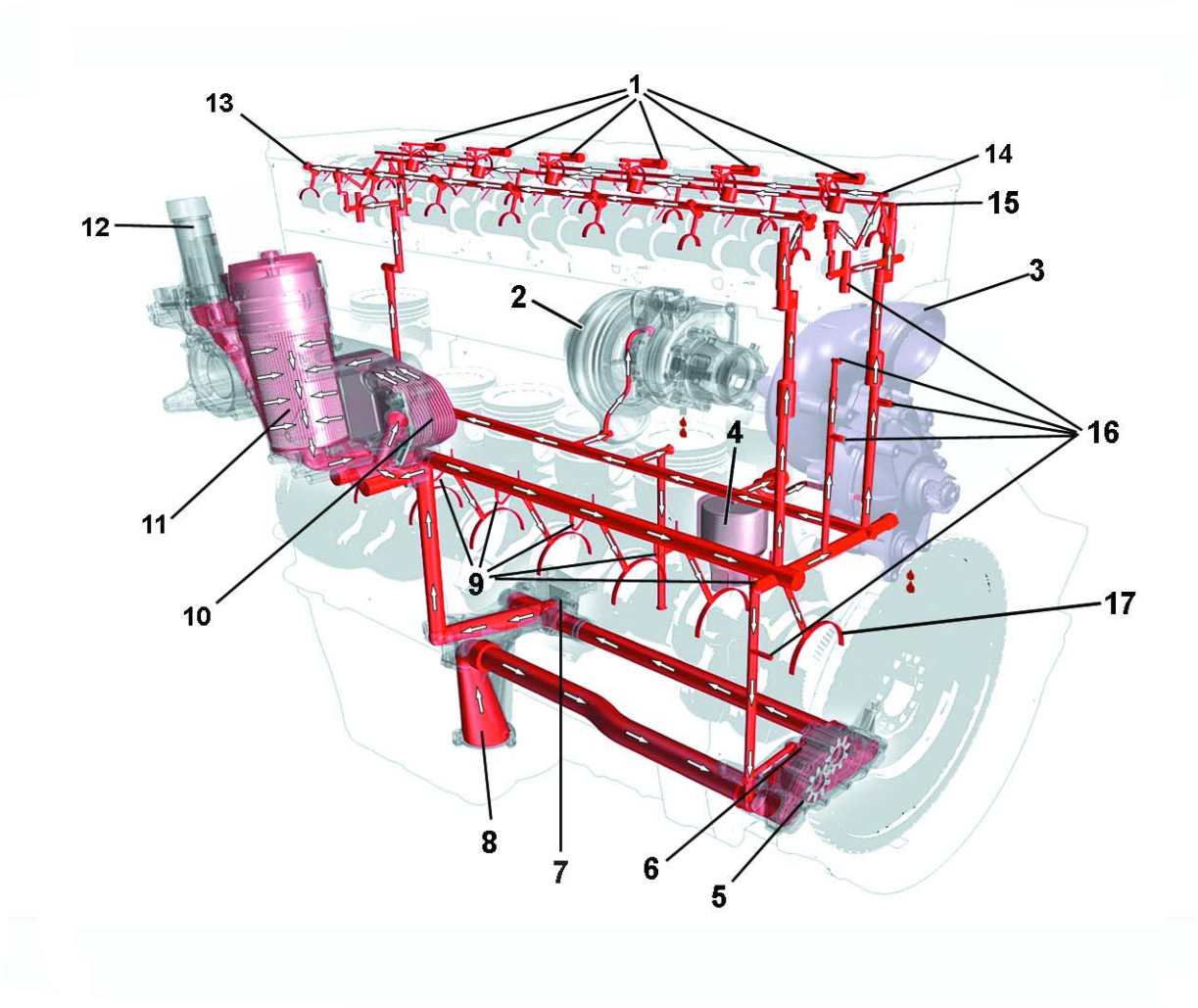

1. Engine Brake
2. Turbocharger
3. Axial Power Turbine
4. Crankcase Breather
5. Oil Pump
6. Pressure Valve
7. Backflow Valve
8. Suction Pipe
9. Oil Spray Nozzle
10. Oil Cooler and Housing
11. Oil Filter
12. Oil Refill
13. Intake Rocker Arm Spindle Supply
14. Engine Brake Supply
15. Exhaust Rocker Arm Spindle Supply
16. Gear Train Oil Supply
17. Main Bearing Supply

Figure 18-2 DD15 Oil Flow Schematic

All information subject to change without notice.
DDC-SVC-MAN-0081 2010 Copyright © 2010 DETROIT DIESEL CORPORATION

https://truckmanualshub.com/

19 OIL PAN

Section **Page**

19.1 DESCRIPTION AND OPERATION OF OIL PAN AND RELATED COMPONENTS 19-3
19.2 REMOVAL OF OIL PAN 19-4
19.3 CLEANING OF OIL PAN 19-5
19.4 INSPECTION OF OIL PAN 19-6
19.5 REMOVAL OF THREADED INSERT — PLASTIC OIL PAN ONLY 19-7
19.6 INSTALLATION OF THREADED INSERT — PLASTIC OIL PAN ONLY . 19-8
19.7 INSTALLATION OF OIL PAN 19-9

https://truckmanualshub.com/

All information subject to change without notice.
DDC-SVC-MAN-0081 2010 Copyright © 2010 DETROIT DIESEL CORPORATION

https://truckmanualshub.com/

19.1 DESCRIPTION AND OPERATION OF OIL PAN AND RELATED COMPONENTS

Depending on manufacturer, the oil pan is either glass fiber reinforced plastic or aluminum. Sealing of the oil pan takes place using a metal elastomer pre-formed gasket for the aluminum pan or an elastomer gasket for the plastic pan. The oil pan seal has high sealing reliability and noise reduction. In order to determine the engine oil level, there is a conventional oil dipstick.

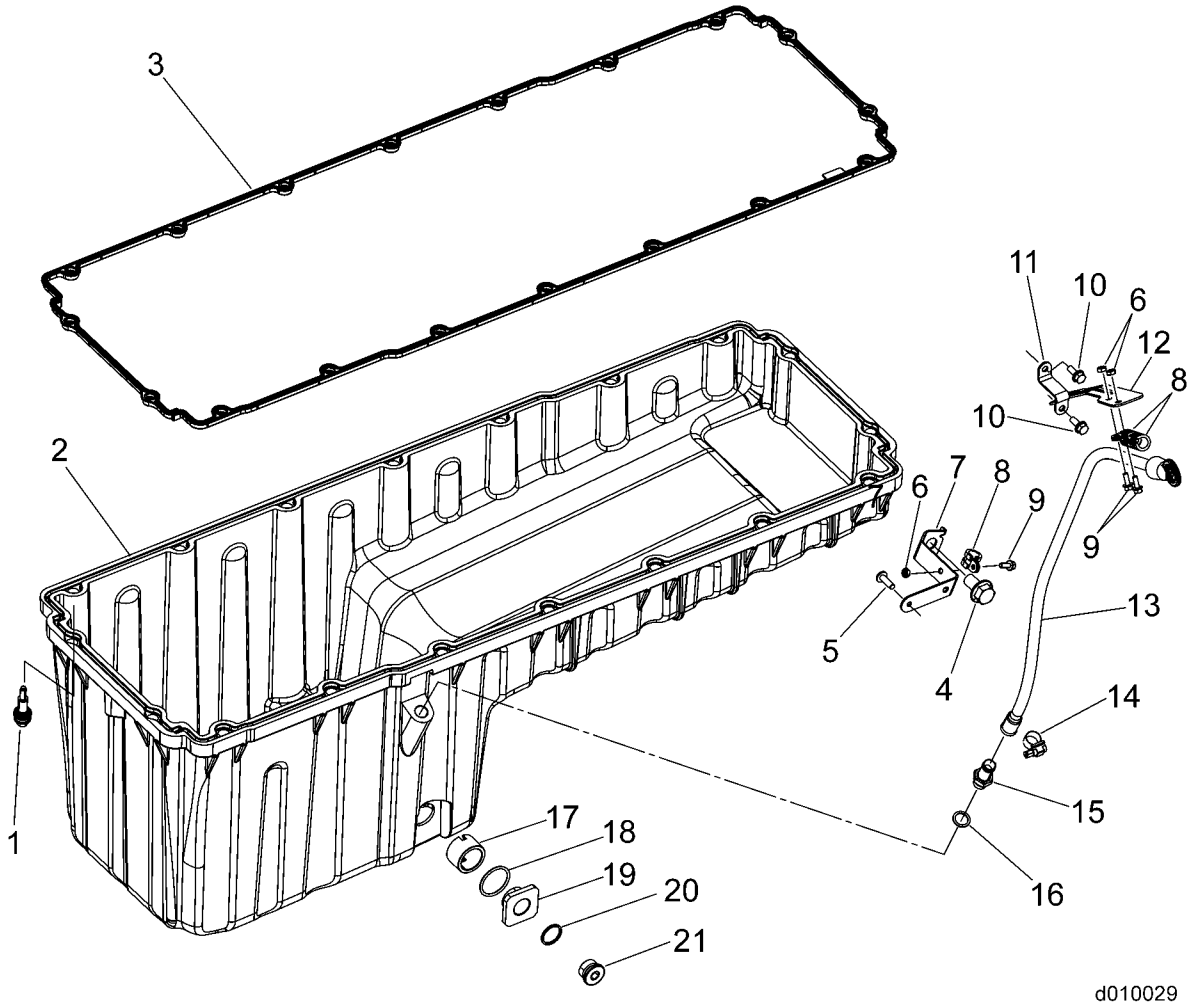

1. Bolt & Isolator	5. Bolt	9. Bolt	13. Dipstick & Tube	17. Threaded Insert
2. Oil Pan	6. Nut	10. Bolt	14. Clamp	18. Seal Ring
3. Gasket	7. Bracket	11. Bracket	15. Adapter	19. Connecting Nut
4. Bolt	8. Clamp	12. Bracket	16. Seal	20. Seal Ring
				21. Drain Plug

Figure 19-1 Oil Pan and Related Parts

 Copyright © 2010 DETROIT DIESEL CORPORATION

https://truckmanualshub.com/

19.2 REMOVAL OF OIL PAN

Remove as follows:

1. Open the oil filter and cap.
2. Remove the drain plug and drain the engine oil.
3. Remove the dipstick.
4. Loosen the dipstick tube on the oil pan. Refer to section 20.2.
5. Remove bolt at harness P-clamp on front center of oil pan.
6. Loosen the eighteen oil pan bolts. Bolts will remain installed to the pan.
7. Remove the oil pan, taking care not to damage the oil pump inlet pipe and screen.
8. Remove the oil pan seal and check for damage.

All information subject to change without notice.
DDC-SVC-MAN-0081 2010 Copyright © 2010 DETROIT DIESEL CORPORATION

https://truckmanualshub.com/

19.3 CLEANING OF OIL PAN

Clean as follows:

1. Clean the oil pan and attaching hardware with clean fuel oil or solvent.

CAUTION:
To avoid injury from flying debris when using compressed air, wear adequate eye protection (face shield or safety goggles) and do not exceed 40 psi (276 kPa) air pressure.

2. Dry with compressed air.

NOTICE:
Do not use solvents to clean gaskets. Damage to the gasket will result.

3. Clean the surfaces the cylinder block, all four T-joints, front cover, oil pan, and flywheel housing where they mate.

 Copyright © 2010 DETROIT DIESEL CORPORATION

https://truckmanualshub.com/

19.4 INSPECTION OF OIL PAN

Inspect as follows:

1. Check bolts and isolator assemblies for dryness, tears, or damage. Replace as necessary.
2. Check oil pan for dents, cracks or damage. Replace as necessary.
3. Inspect threaded inserts for cracks or damage. Replace as necessary.
4. Clean seals and lubricate seal grooves (if applicable) with clean fuel oil and inspect for cracks or tears. If damage is found, replace oil pan.

All information subject to change without notice.
DDC-SVC-MAN-0081 2010 Copyright © 2010 DETROIT DIESEL CORPORATION

https://truckmanualshub.com/

19.5 REMOVAL OF THREADED INSERT — PLASTIC OIL PAN ONLY

Remove as follows:

1. Remove oil pan. Refer to section 19.2.
2. Remove threaded insert using Snap-On® tool GLD139, or equivalent. Discard O-ring.

 Copyright © 2010 DETROIT DIESEL CORPORATION

https://truckmanualshub.com/

19.6 INSTALLATION OF THREADED INSERT — PLASTIC OIL PAN ONLY

Install as follows:

1. Install new O-ring on threaded insert.
2. Install threaded insert into oil pan.
3. Install threaded insert connecting nut and torque to 100 N·m (73 lb·ft).
4. Install the oil pan. Refer to section 19.7.

All information subject to change without notice.
DDC-SVC-MAN-0081 2010 Copyright © 2010 DETROIT DIESEL CORPORATION

https://truckmanualshub.com/

19.7 INSTALLATION OF OIL PAN

Install as follows:

1. When a plastic pan is used, insert the raised lip portion of the seal into the groove in the oil pan. Press down on the isolator seal and insert it completely around the oil pan. Be careful not to stretch or bunch the seal. For best results, install the seal at each corner, then at points half way between the corners. Continue in this manner, halving the distance and seating the seal.
2. For the aluminum pan, place the gasket on the top of the pan.
3. Reapply Loctite® 5970 or equivalent to the four corner squares in gasket.

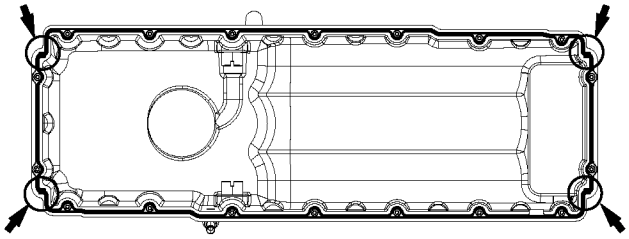

d010069

4. Install the eighteen oil pan bolts and sleeve assemblies through the pan rail into the holes in the gasket.
5. Ensure the joint surfaces of the gear case, the cylinder block, and front cover are cleaned and there is no damage that could prevent sealing.
6. Install the oil pan assembly in position on the cylinder block.

 Copyright © 2010 DETROIT DIESEL CORPORATION

https://truckmanualshub.com/

7. Ensure that the seal has not been disturbed. Torque the eighteen oil pan bolt assemblies to 20 N·m (15 lb·ft) using the proper sequence.

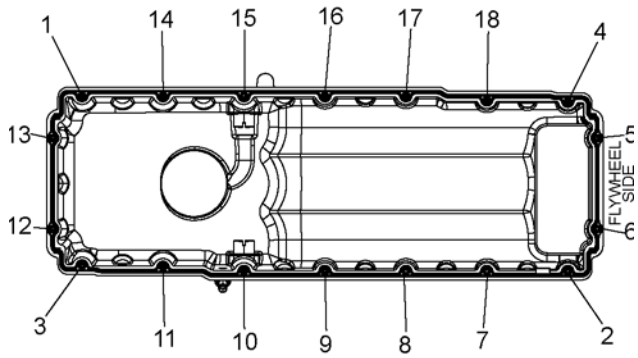

8. Install the oil pan drain plug and torque the plug to 45 N·m (33 lb·ft).
9. Install bolt at harness P-clamp on front center of oil pan.
10. Install dipstick tube fitting if removed from pan and torque to specification listed in Table 19-1.

Fitting	Thread Size	Torque Spec
Fitting to pan	M20x1.5	60 N·m (44 lb·ft)
Fitting to pan	M22x1.5	70 N·m (51 lb·ft)
Fitting to pan	M27x1.5	90 N·m (66 lb·ft)
Fitting to pan	M30x1.5	100 N·m (73 lb·ft)

Table 19-1 Torque Specs for Pan Fittings

11. Install dipstick tube on fitting and tighten clamp. Refer to section 20.3.
12. Install dipstick.
13. Install oil filter and cap. Torque to 55 N·m (40 lb·ft).
14. If oil pump was removed, follow section 21.4.
15. Prime the lubrication system. Refer to section 27.1.
16. Refill the oil pan with lubricating oil. (refer to specs for oil quantities).

All information subject to change without notice.
DDC-SVC-MAN-0081 2010 Copyright © 2010 DETROIT DIESEL CORPORATION

https://truckmanualshub.com/

WARNING:

ENGINE EXHAUST

To avoid injury from inhaling engine exhaust, always operate the engine in a well-ventilated area. Engine exhaust is toxic.

17. Start the engine and inspect for leaks.

 Copyright © 2010 DETROIT DIESEL CORPORATION

https://truckmanualshub.com/

All information subject to change without notice.
DDC-SVC-MAN-0081 2010 Copyright © 2010 DETROIT DIESEL CORPORATION

https://truckmanualshub.com/

20 OIL DIPSTICK TUBE

Section **Page**

20.1 DESCRIPTION AND OPERATION OF OIL DIPSTICK TUBE AND RELATED COMPONENTS 20-3
20.2 REMOVAL OF THE OIL DIPSTICK TUBE 20-4
20.3 INSTALLATION OF THE OIL DIPSTICK TUBE 20-5

https://truckmanualshub.com/

All information subject to change without notice.
DDC-SVC-MAN-0081 2010 Copyright © 2010 DETROIT DIESEL CORPORATION

https://truckmanualshub.com/

20.1 DESCRIPTION AND OPERATION OF OIL DIPSTICK TUBE AND RELATED COMPONENTS

DD Platform engines share a similar oil dipstick tube design. The dipstick inserts into the oil pan through the dipstick guide tube and oil pan adaptor. A lower dipstick bracket and hose clamp secure the assembly to the cylinder block. The oil dipstick tube and oil pan adaptor allow the dipstick to extend into the oil. The oil level is observed by removing the dipstick and reading the oil level.

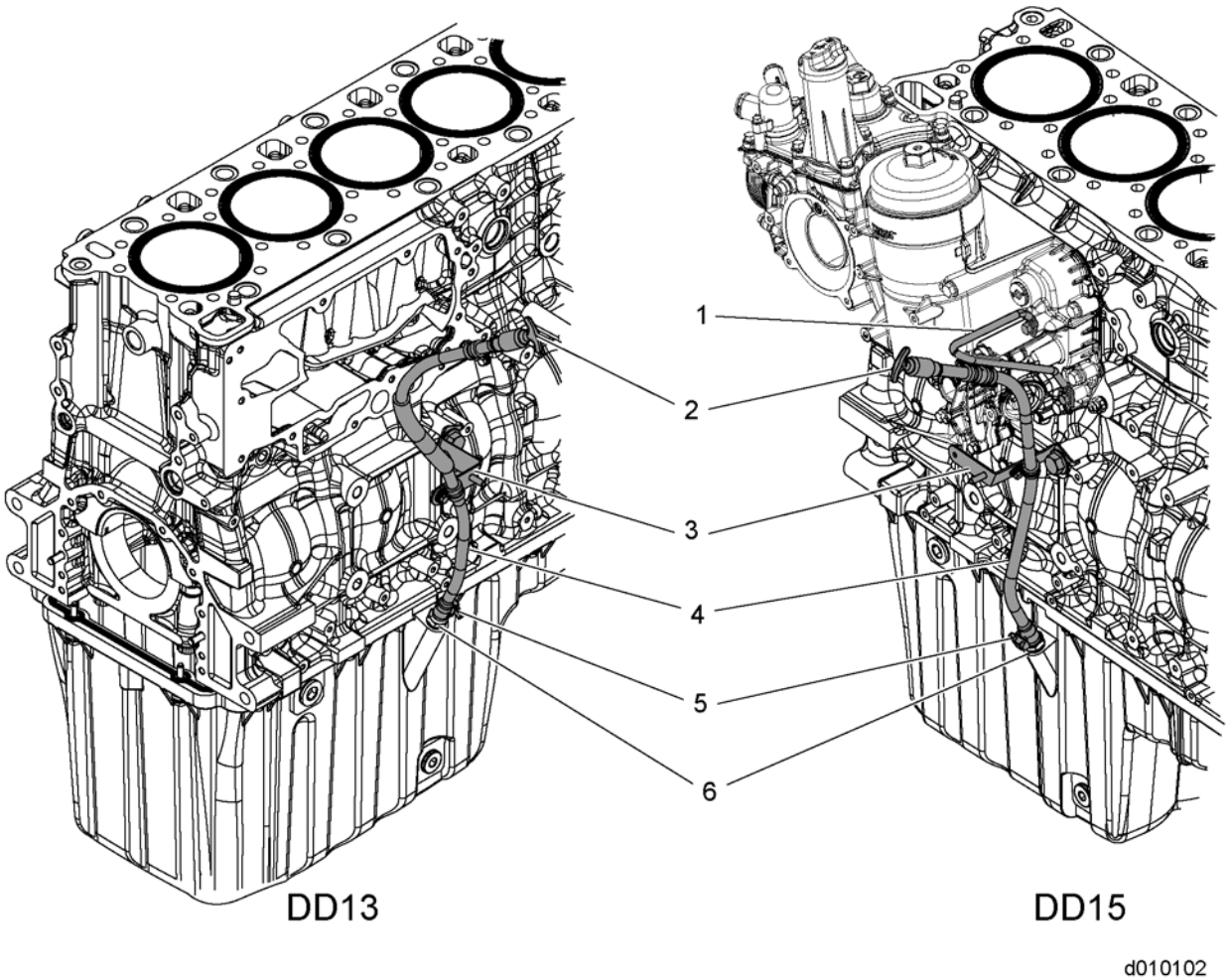

1. Upper Dipstick Stabilizing Bracket (DD15 only)
2. Dipstick
3. Lower Dipstick Bracket
4. Oil Dipstick Tube
5. Hose Clamp
6. Oil Pan Adaptor

 Copyright © 2010 DETROIT DIESEL CORPORATION

https://truckmanualshub.com/

20.2 REMOVAL OF THE OIL DIPSTICK TUBE

Remove as follows:

1. Loosen the hose clamp (6) attaching oil dipstick tube (2) to the oil pan adaptor.
2. Remove all P-clips (4) attaching oil dipstick tube to bracket (1) and upper bracket on the DD15 and DD16.
3. Remove oil dipstick tube from engine.

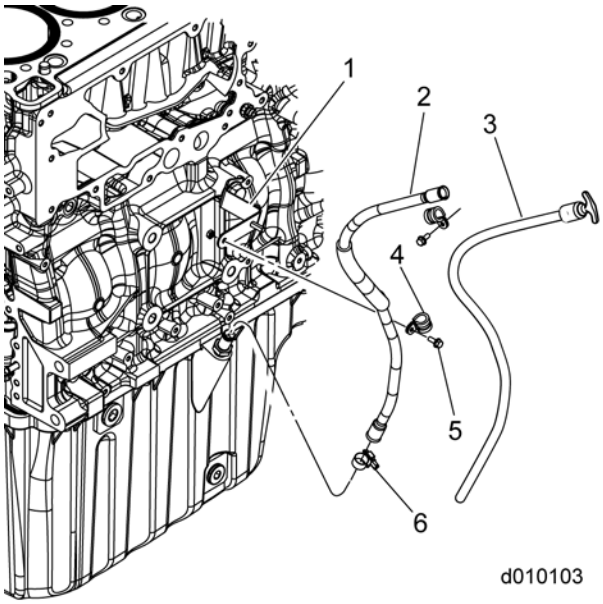

All information subject to change without notice.
DDC-SVC-MAN-0081 2010 Copyright © 2010 DETROIT DIESEL CORPORATION

https://truckmanualshub.com/

20.3 INSTALLATION OF THE OIL DIPSTICK TUBE

1. Install oil dipstick tube (2) onto the oil pan adaptor.
2. Attach all P-clips (4) to the bracket (1) and upper bracket on DD15 and DD16.
3. Tighten the hose clamp (6) attaching the oil dipstick tube to the adaptor.

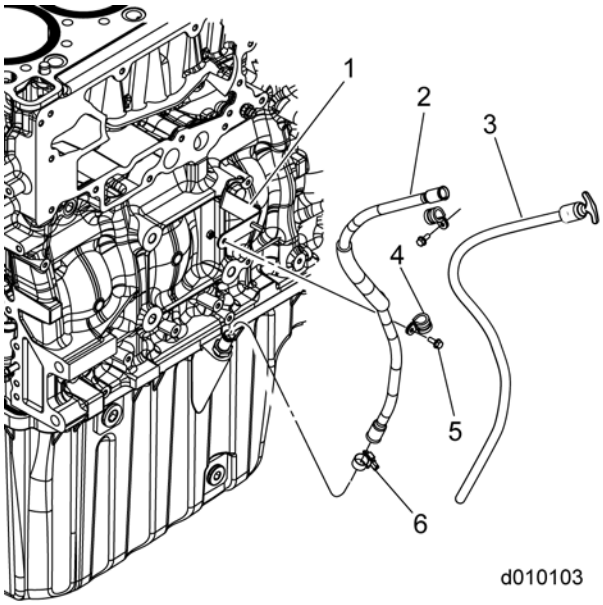

 Copyright © 2010 DETROIT DIESEL CORPORATION

https://truckmanualshub.com/

All information subject to change without notice.
DDC-SVC-MAN-0081 2010 Copyright © 2010 DETROIT DIESEL CORPORATION

https://truckmanualshub.com/

21 OIL PUMP

Section **Page**

21.1 DESCRIPTION AND OPERATION OF OIL PUMP AND RELATED COMPONENTS 21-3

21.2 REMOVAL OF THE OIL PUMP, OIL SUCTION MANIFOLD, AND OIL LINES 21-4

21.3 INSPECTION OF THE OIL PUMP, OIL SUCTION MANIFOLD, AND OIL LINES 21-5

21.4 INSTALLATION OF THE OIL PUMP, OIL SUCTION MANIFOLD, AND OIL LINES 21-6

https://truckmanualshub.com/

All information subject to change without notice.
DDC-SVC-MAN-0081 2010 Copyright © 2010 DETROIT DIESEL CORPORATION

https://truckmanualshub.com/

21.1 DESCRIPTION AND OPERATION OF OIL PUMP AND RELATED COMPONENTS

The oil pump supplies all of the engine oil circuits with engine oil. The oil pump ensures that engine oil is available under all operating conditions, in adequate quantities, at the required pressure, and to the respective locations.

A crankshaft drive gear drives the oil pump drive gear. The oil pump drive gear drives the two impellers within the oil pump housing. The rotational movement of the impellers and the design of the pump chamber suctions the engine oil from the oil pan, through oil strainer to the oil pump inlet. The engine oil is delivered under pressure to the oil pump outlet, to the oil pump pressure line and then through the return flow check valve to the main oil duct, into the engine oil circuit. The pressure regulator valve regulates engine oil pressure. The pressure regulator valve has the oil pressure applied to it from the engine oil in the main oil duct. Excess engine oil is fed by the pressure regulator valve to the suction side according to the oil pressure in the main oil duct. This regulates the engine oil pressure and reduces the operating energy input of the oil pump. High pressures in the oil circuit are avoided using the safety valve. High pressure can occur in the cold start phase of the engine if the engine oil is not yet of sufficient viscosity. The safety valve opens at a pressure >10 bar and directs part of the engine oil back into oil pan.

 Copyright © 2010 DETROIT DIESEL CORPORATION

https://truckmanualshub.com/

21.2 REMOVAL OF THE OIL PUMP, OIL SUCTION MANIFOLD, AND OIL LINES

Remove as follows:

1. Remove oil drain plug from the oil pan and drain the oil.
2. Remove the oil pan. Refer to section 19.2.
3. Remove the four bolts (2) securing the oil suction manifold (1) to the engine block (3).
4. Remove the oil suction manifold (1), oil lines (6 and 11) and O-rings (5 and 10). Discard the O-rings.
5. Remove the three bolts (7) securing the oil pump (9) to the engine block (3) and remove the oil pump assembly (8 and 9) from the engine block.

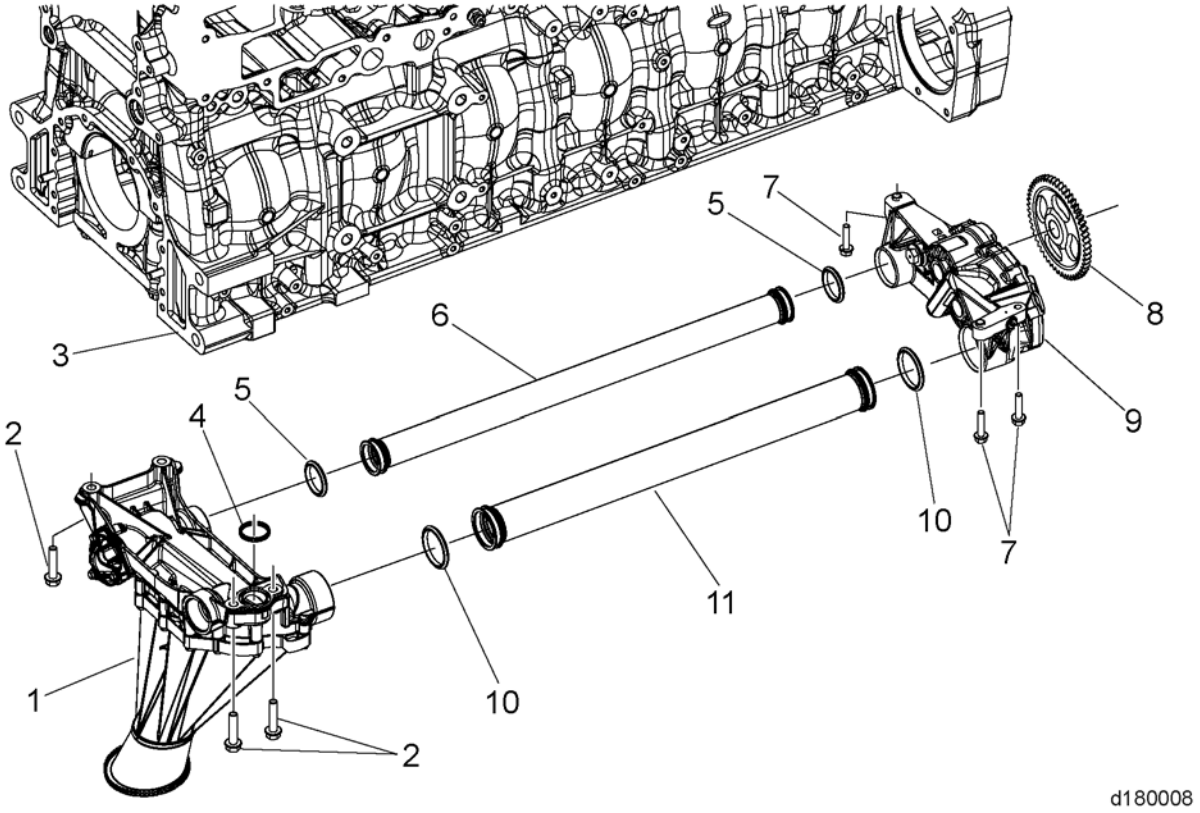

All information subject to change without notice.
DDC-SVC-MAN-0081 2010 Copyright © 2010 DETROIT DIESEL CORPORATION

https://truckmanualshub.com/

21.3 INSPECTION OF THE OIL PUMP, OIL SUCTION MANIFOLD, AND OIL LINES

Inspect as follows:

CAUTION:

To avoid injury from flying debris when using compressed air, wear adequate eye protection (face shield or safety goggles) and do not exceed 40 psi (276 kPa) air pressure.

1. Wash all parts in clean fuel oil and dry them with compressed air.
2. Clean the suction and pressure pipe and screen in clean fuel oil and blow dry with compressed air.

 Copyright © 2010 DETROIT DIESEL CORPORATION

https://truckmanualshub.com/

21.4 INSTALLATION OF THE OIL PUMP, OIL SUCTION MANIFOLD, AND OIL LINES

Install as follows:

1. Check the oil pump part number to be sure it is correct for this application.
2. Position the oil pump on the cylinder block so that the drive gear of the oil pump meshes with the crankshaft gear.
3. Install oil pump with three bolts. Torque the bolts to 30 N·m (22 lb·ft).
4. Install oil lines with new O-rings on each end.
5. Install four bolts and secure the oil intake manifold to the cylinder block. Torque the bolts to 60 N·m (44 lb·ft).
6. Install the oil pan. Refer to section 19.7.

All information subject to change without notice.
DDC-SVC-MAN-0081 2010 Copyright © 2010 DETROIT DIESEL CORPORATION

https://truckmanualshub.com/

22 CRANKCASE BREATHER

Section **Page**

22.1 DESCRIPTION AND OPERATION OF CRANKCASE BREATHER 22-3
22.2 REMOVAL OF THE CRANKCASE BREATHER 22-5
22.3 INSPECTION OF THE CRANKCASE BREATHER 22-6
22.4 INSTALLATION OF THE CRANKCASE BREATHER 22-7

https://truckmanualshub.com/

All information subject to change without notice.
DDC-SVC-MAN-0081 2010 Copyright © 2010 DETROIT DIESEL CORPORATION

https://truckmanualshub.com/

22.1 DESCRIPTION AND OPERATION OF CRANKCASE BREATHER

The crankcase breather is located below the turbocharger on DD Platform engines, next to the starter on the right hand side of the cylinder block. The crankcase breather has the primary task of regulating the pressure in the crankcase as well as cleaning discharged blow-by gases. The gases from the crankcase contain engine oil that can lead to adverse effects on engine emission levels.

The blow-by gas produced by the engine passes into the blow-by gas inlet in the crankcase breather housing. In the housing, the blow-by gas flows to the centrifuge. The centrifuge drive gear is driven by pressurized engine oil, causing the centrifuge to turn. The centrifugal force that is created causes the blow-by gas to be pushed against the inside wall of the housing. The engine oil contained in the blow-by gas runs along the inside wall downwards and flows to the outlet for the engine oil that has been separated back into the oil pan. The cleaned blow-by gas flows to the outlet for blow-by gas to the atmosphere. The crankcase breather is maintenance free for the working life of the component.

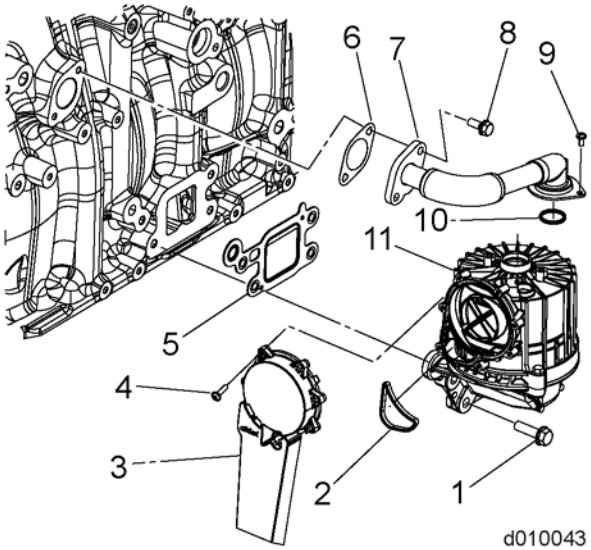

1. Bolt
2. Gasket
3. Outlet Tube
4. Bolt
5. Gasket
6. Gasket
7. Inlet Tube
8. Bolt
9. Bolt
10. Seal
11. Crankcase Breather

Figure 22-1 EPA07 Crankcase Breather and Related Parts

 Copyright © 2010 DETROIT DIESEL CORPORATION

https://truckmanualshub.com/

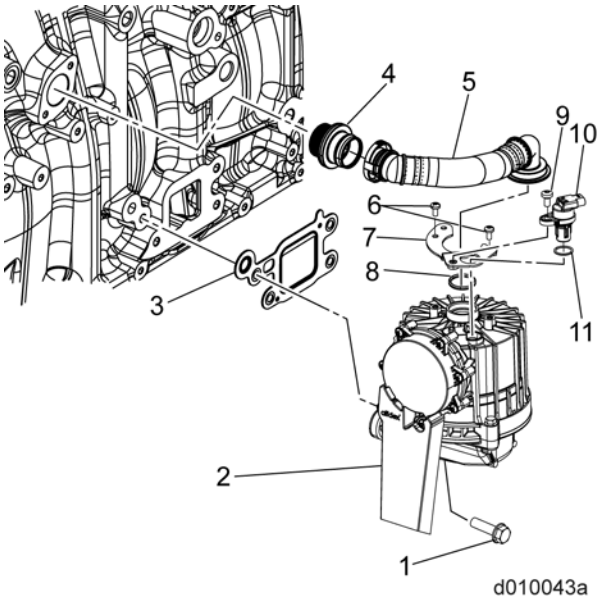

1. Bolt
2. Crankcase Breather Housing
3. Gasket
4. Threaded Fitting
5. Breather Pipe
6. Screw
7. Bracket
8. O-ring
9. Screw
10. Speed Sensor
11. O-ring

Figure 22-2 EPA10 Crankcase Breather and Related Parts

All information subject to change without notice.
DDC-SVC-MAN-0081 2010 Copyright © 2010 DETROIT DIESEL CORPORATION

https://truckmanualshub.com/

22.2 REMOVAL OF THE CRANKCASE BREATHER

Remove as follows:

1. Disconnect speed sensor electrical harness connection, on EPA10 engines, from the crankcase breather and unclip the electrical harness from the crankcase breather assembly.

NOTE:
Note orientation of bracket located on top bolt.

2. ***On EPA07 engines,*** remove the two bolts and gasket from the breather pipe. Discard gasket.
3. ***On EPA10 engines,*** disconnect the quick-connect fitting at the cylinder block.
4. Remove the four bolts and gasket from the crankcase breather and remove crankcase breather from the cylinder block. Discard the gasket.

 Copyright © 2010 DETROIT DIESEL CORPORATION

https://truckmanualshub.com/

22.3 INSPECTION OF THE CRANKCASE BREATHER

Inspect as follows:

1. Clean the gasket surface of the engine block prior to installation of crankcase breather.
2. Inspect the tubes, clamps and hoses for wear or damage; replace if necessary.
3. Inspect the crankcase breather for cracks or damage; replace if necessary.
4. Inspect the sensor and replace, if necessary.

All information subject to change without notice.
DDC-SVC-MAN-0081 2010 Copyright © 2010 DETROIT DIESEL CORPORATION

https://truckmanualshub.com/

22.4 INSTALLATION OF THE CRANKCASE BREATHER

Install as follows:

1. Install the crankcase breather to the engine block with a new gasket and four bolts. Torque the bolts to 60 N·m (44 lb·ft).

NOTE:
Bracket is installed on top bolt.

2. ***On EPA07 engines,*** install the breather pipe and new gasket to the engine block. Torque the two bolts to 30 N·m (22 lb·ft).
3. ***On EPA10 engines,*** snap the breather pipe to the fitting on the cylinder block.

WARNING:

ENGINE EXHAUST

To avoid injury from inhaling engine exhaust, always operate the engine in a well-ventilated area. Engine exhaust is toxic.

WARNING:

PERSONAL INJURY

Diesel engine exhaust and some of its constituents are known to the State of California to cause cancer, birth defects, and other reproductive harm.

- **Always start and operate an engine in a well ventilated area.**
- **If operating an engine in an enclosed area, vent the exhaust to the outside.**
- **Do not modify or tamper with the exhaust system or emission control system.**

4. Connect electrical harness, if equipped.
5. Start the engine and check for leaks.

 Copyright © 2010 DETROIT DIESEL CORPORATION

https://truckmanualshub.com/

All information subject to change without notice.
DDC-SVC-MAN-0081 2010 Copyright © 2010 DETROIT DIESEL CORPORATION

https://truckmanualshub.com/

23 OIL FILTER

Section **Page**

23.1 REPLACEMENT OF THE OIL FILTER 23-3

https://truckmanualshub.com/

All information subject to change without notice.
DDC-SVC-MAN-0081 2010 Copyright © 2010 DETROIT DIESEL CORPORATION

https://truckmanualshub.com/

23.1 REPLACEMENT OF THE OIL FILTER

"Oil Filter Removal Video"

Remove as follows:

1. Using a 36-mm socket, unscrew the oil filter cap (1) and filter (3), and allow the oil to drain into the housing. After draining is complete, remove the assembly from the housing (4).

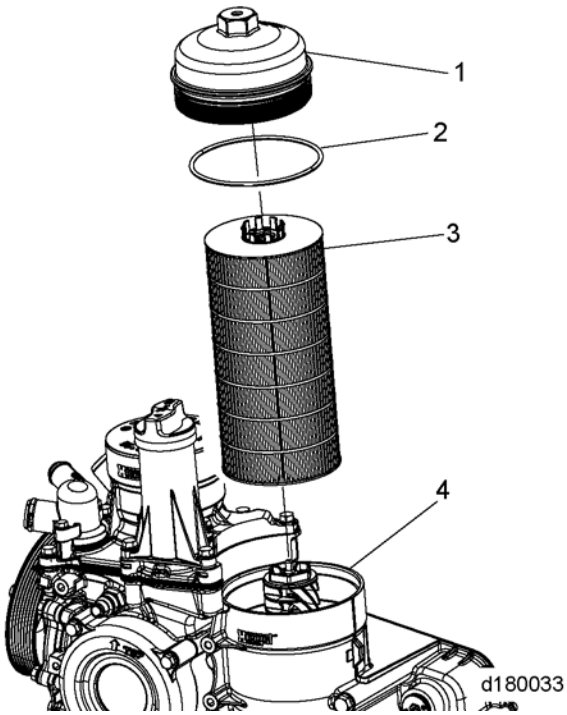

NOTE:
For EVO Bus, when removing the filter, separate the cap from the filter before pulling out of the module. Remove as two separate components.

NOTE:
Use care to prevent foreign objects from entering the filter housing.

2. Remove the filter element by pressing and twisting the side and detaching it from the cap. Discard the filter element.
3. Remove the oil filter O-ring and discard. Lightly coat a new O-ring with clean engine oil and install it on the filter cap.
4. Check the filter housing for any debris and remove if necessary.
5. Insert a new filter element into the oil filter cap.
6. Insert the filter element and cap assembly into the housing. Torque the cap to 40-50 N·m (30-37 lb·ft).

 Copyright © 2010 DETROIT DIESEL CORPORATION

https://truckmanualshub.com/

All information subject to change without notice.
DDC-SVC-MAN-0081 2010 Copyright © 2010 DETROIT DIESEL CORPORATION

https://truckmanualshub.com/

24 OIL SAMPLE VALVE

Section **Page**

24.1 REPLACING OIL PLUG WITH OIL SAMPLE VALVE 24-3
24.2 REMOVAL OF OIL SAMPLE VALVE 24-4
24.3 INSTALLATION OF OIL SAMPLE VALVE 24-5

https://truckmanualshub.com/

All information subject to change without notice.
DDC-SVC-MAN-0081 2010 Copyright © 2010 DETROIT DIESEL CORPORATION

https://truckmanualshub.com/

24.1 REPLACING OIL PLUG WITH OIL SAMPLE VALVE

Replace oil plug with oil sample valve as follows:

1. Using a 17 mm Allen tool remove the Allen head plug from the oil priming port on the oil coolant module.

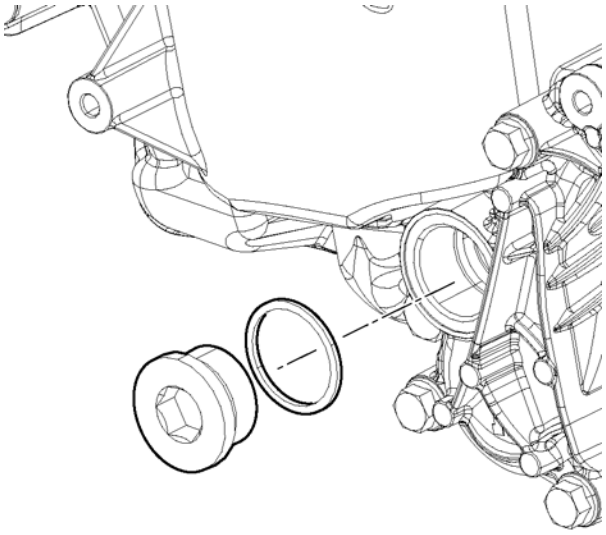

d180025

2. Install the oil sample valve onto the oil coolant module. Torque to 80 N·m (59 lb·ft).

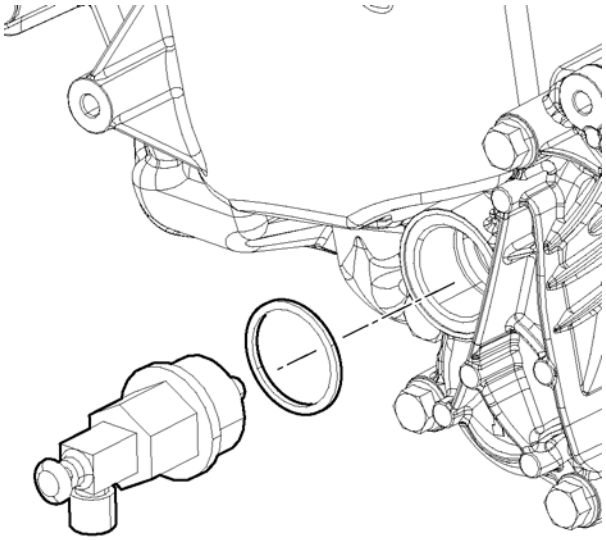

d180026

 Copyright © 2010 DETROIT DIESEL CORPORATION

https://truckmanualshub.com/

24.2 REMOVAL OF OIL SAMPLE VALVE

Remove as follows:

Remove the oil sample valve and washer from the oil coolant module.

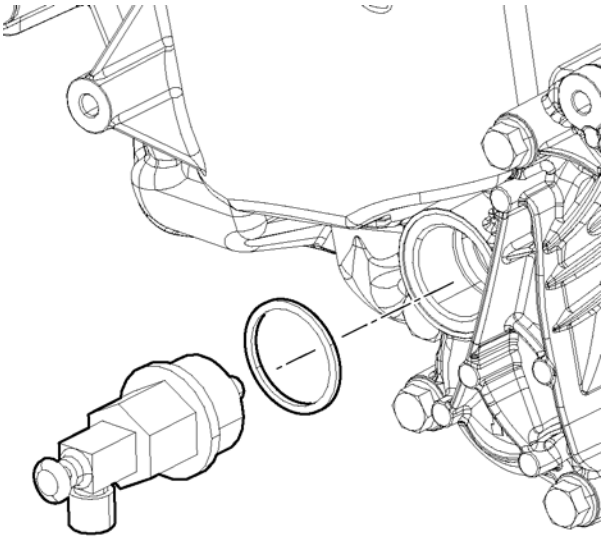

d180026

All information subject to change without notice.
DDC-SVC-MAN-0081 2010 Copyright © 2010 DETROIT DIESEL CORPORATION

https://truckmanualshub.com/

24.3 INSTALLATION OF OIL SAMPLE VALVE

Install as follows:

Install the oil sample valve and washer onto the oil coolant module and torque to 80 N·m (59 lb·ft).

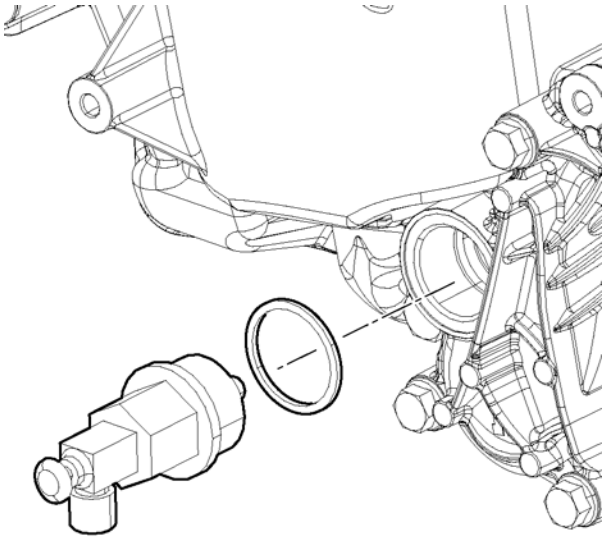

d180026

 Copyright © 2010 DETROIT DIESEL CORPORATION

https://truckmanualshub.com/

All information subject to change without notice.
DDC-SVC-MAN-0081 2010 Copyright © 2010 DETROIT DIESEL CORPORATION

https://truckmanualshub.com/

25 OIL FILLER NECK

Section **Page**

25.1 REMOVAL OF THE OIL FILLER NECK 25-3
25.2 INSTALLATION OF THE OIL FILLER NECK 25-4

https://truckmanualshub.com/

All information subject to change without notice.
DDC-SVC-MAN-0081 2010 Copyright © 2010 DETROIT DIESEL CORPORATION

https://truckmanualshub.com/

25.1 REMOVAL OF THE OIL FILLER NECK

1. Remove three bolts (5) from the oil filler neck (2).
2. Remove oil filler neck (2) from the oil coolant module (6).
3. Discard O-ring (1).

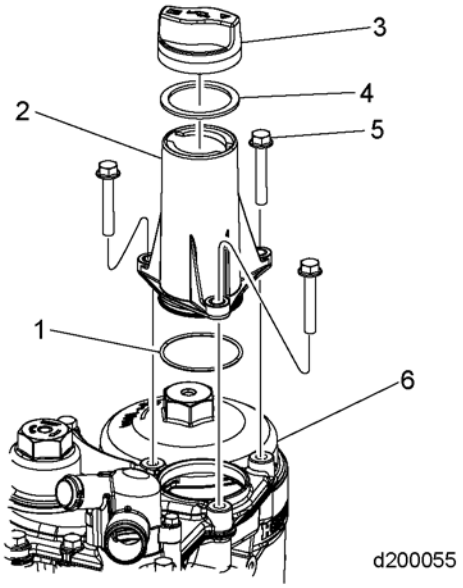

 Copyright © 2010 DETROIT DIESEL CORPORATION

https://truckmanualshub.com/

25.2 INSTALLATION OF THE OIL FILLER NECK

1. Install new O-ring (1).
2. Install oil filler neck (2) on the oil coolant module (6).
3. Install three bolts (5) and torque to 27-31 N·m (20-22 lb·ft).

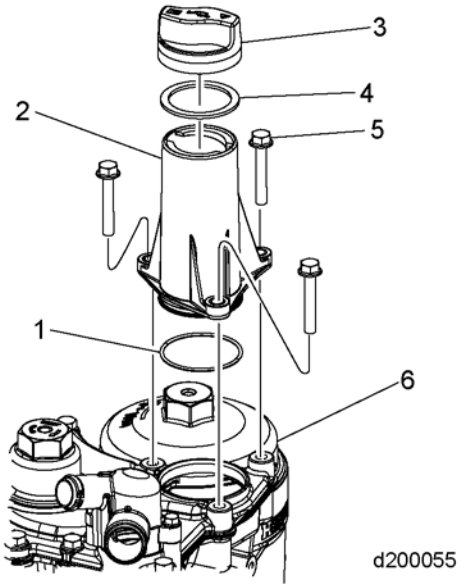

All information subject to change without notice.
DDC-SVC-MAN-0081 2010 Copyright © 2010 DETROIT DIESEL CORPORATION

https://truckmanualshub.com/

26 OIL COOLANT MODULE

Section **Page**

26.1 DESCRIPTION AND OPERATION OF THE OIL COOLANT MODULE .. 26-3
26.2 REMOVAL OF THE OIL COOLANT MODULE 26-5
26.3 INSTALLATION OF THE OIL COOLANT MODULE 26-7
26.4 REMOVAL OF THE OIL THERMOSTAT 26-9
26.5 INSTALLATION OF THE OIL THERMOSTAT 26-11

https://truckmanualshub.com/

All information subject to change without notice.
DDC-SVC-MAN-0081 2010 Copyright © 2010 DETROIT DIESEL CORPORATION

26.1 DESCRIPTION AND OPERATION OF THE OIL COOLANT MODULE

The oil filter unit is an integral part of the oil coolant module. The oil coolant module is located on the left side of the engine. The oil filter unit ensures engine oil filtering.

Engine oil flows through the oil water heat exchanger and then to the main oil stream feed into the oil filter unit. Oil flows into the oil filter unit from outside of the oil coolant module through the oil filter element to the support dome where it is cleaned. The cleaned engine oil flows to the support dome and main oil flow drain back into the oil circuit.

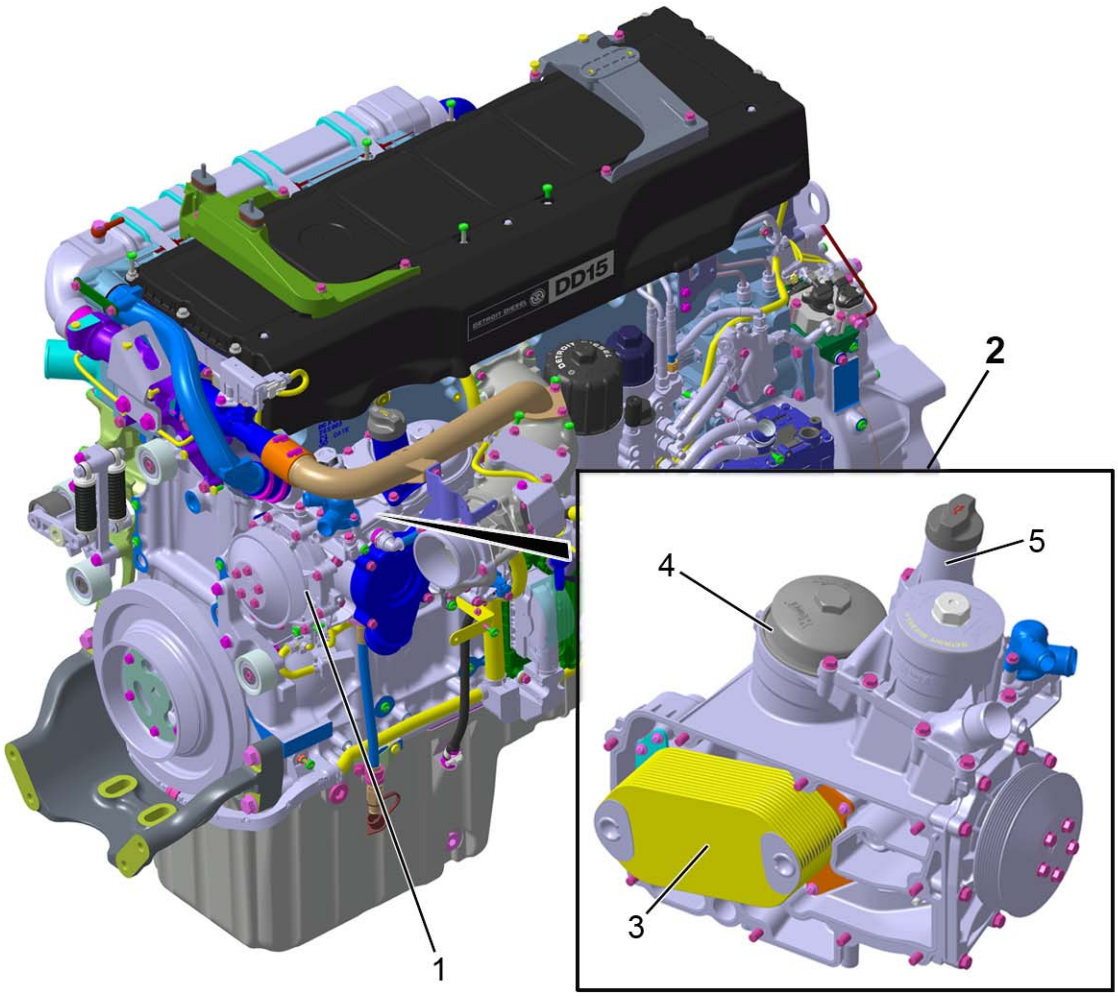

d180002a

1. Coolant Pump
2. Oil Coolant Module
3. Oil Water Heat Exchanger
4. Oil Filter Unit
5. Oil Fill

Figure 26-1 Oil Coolant Module Location

 Copyright © 2010 DETROIT DIESEL CORPORATION

https://truckmanualshub.com/

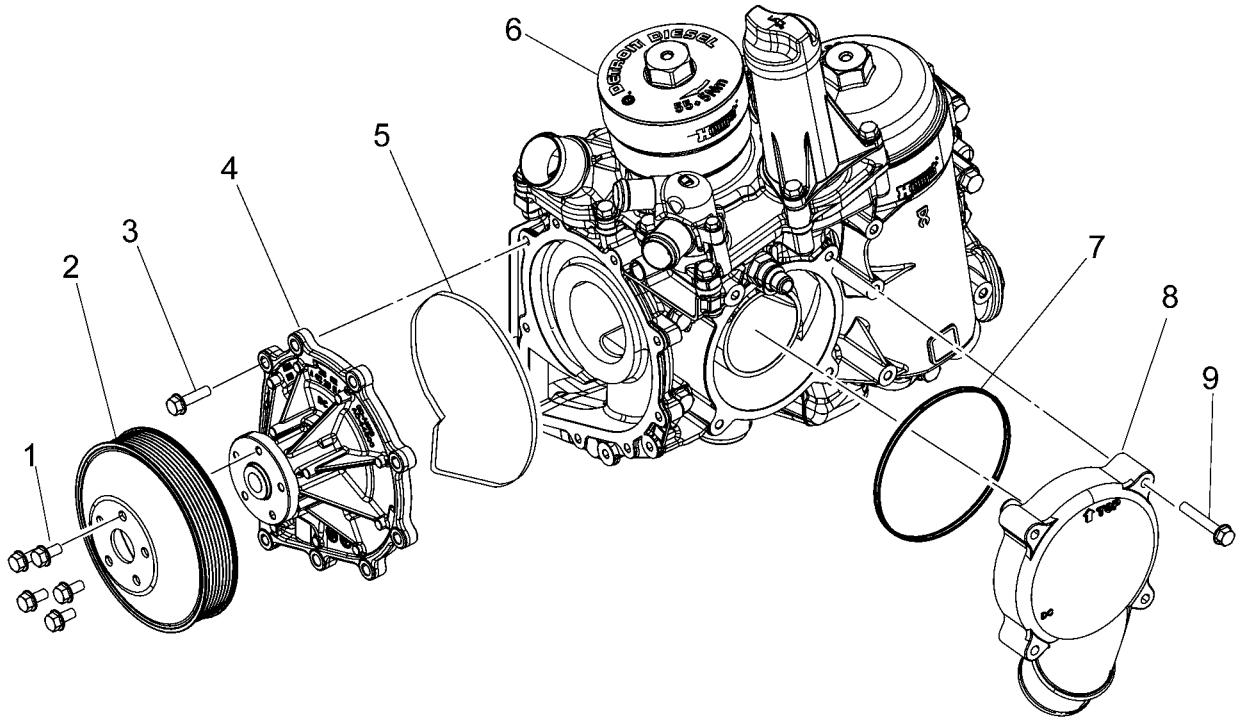

1. Bolt
2. Pulley
3. Bolt
4. Water Pump
5. Water Pump Seal
6. Oil Cooler Module
7. Thermostat Seal
8. Thermostat
9. Bolt

Figure 26-2 Oil Coolant Module and Related Parts

All information subject to change without notice.
DDC-SVC-MAN-0081 2010 Copyright © 2010 DETROIT DIESEL CORPORATION

https://truckmanualshub.com/

26.2 REMOVAL OF THE OIL COOLANT MODULE

Remove as follows:

1. Drain coolant from the radiator. Refer to OEM procedures.
2. Open the drain plug (1) on the cylinder block located next to the oil coolant module and t.

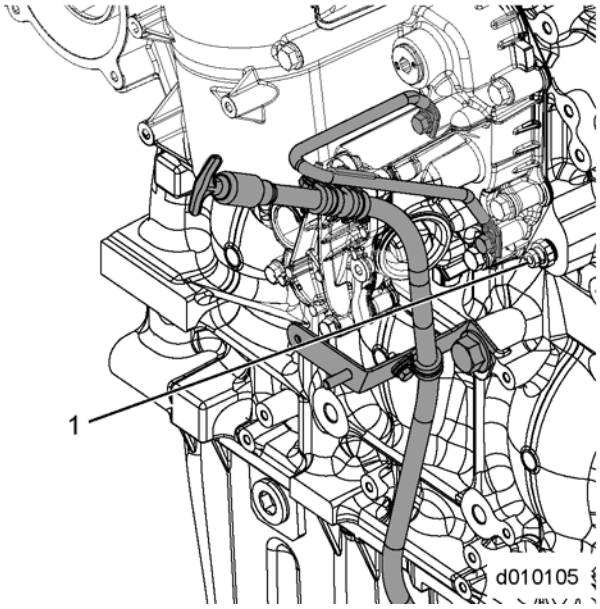

3. Remove engine harness connectors from the coolant temperature sensor, Intake Air Temperature Sensor, and Throttle Valve. Unclip the harness from the oil coolant module.
4. Remove the coolant delivery pipe, mixer pipe, cold boost pipe and throttle valve assembly. Refer to section 7.2.
5. Remove the heater, coolant recovery, and EGR coolant supply hoses from oil coolant module. Inspect the coolant coupler hose for damage. Discard if damage is found.
6. Disconnect the coolant line from the fuel module to the oil coolant module.
7. Remove the poly-V-belt from the water pump pulley. Refer to section 40.1.
8. Remove the radiator hose from the thermostat housing.

NOTE:
Ensure any remaining coolant is drained from the oil coolant module and from the cylinder block to prevent coolant from contaminating the engine oil.

9. Remove the radiator support rod and bracket.
10. Remove the oil dipstick tube by removing the two bolts and bracket attaching it to the cylinder block.
11. Remove eleven bolts securing oil coolant module to engine block and remove oil coolant module.

 Copyright © 2010 DETROIT DIESEL CORPORATION

https://truckmanualshub.com/

12. Remove and discard the gasket.

All information subject to change without notice.
DDC-SVC-MAN-0081 2010 Copyright © 2010 DETROIT DIESEL CORPORATION

https://truckmanualshub.com/

26.3 INSTALLATION OF THE OIL COOLANT MODULE

Install as follows:

1. Install thermostat to oil coolant module with four bolts. Torque to 20-25 N·m (15-19 lb·ft).
2. Install Exhaust Manifold Guide Studs tool (J–36107) into the cylinder block to assist in guiding the oil coolant module onto the cylinder block.
3. Install new gasket.
4. Install the oil coolant module onto the guide studs and cylinder block.
5. Install eleven bolts and torque to the following:
   - 10 N·m (7 lb·ft)
   - Final torque the bolts to 60-65 N·m (44-47 lb·ft)

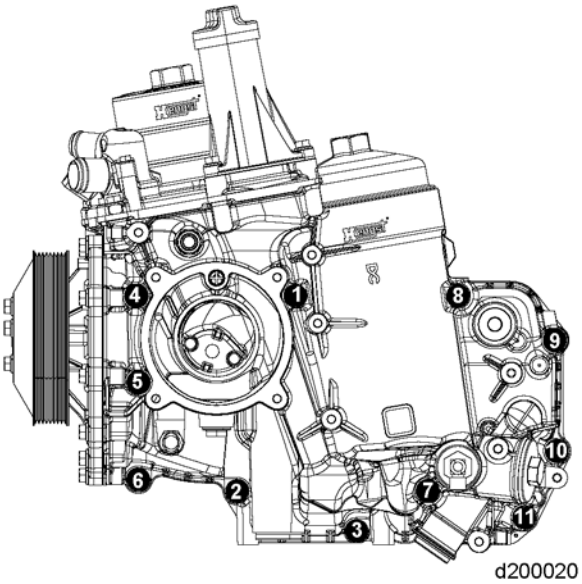

6. Remove tool (J–36107). Install the remaining two bolts into the oil cooler module. Torque the bolts to the following:
   - 10 N·m (7 lb·ft)
   - Final torque the bolts to 60-65 N·m (44-47 lb·ft)
7. Install the dipstick tube and two bolts and torque to 15 N·m (11 lb·ft).
8. Install the radiator support strut bracket. Torque to 100 N·m (74 lb·ft).
9. Install water pump if removed. Refer to section 29.4.
10. Install poly-V-belt to water pump pulley. Refer to section 40.3.
11. Install electrical engine harness to the sensor.
12. Connect coolant line to fuel module and oil coolant module.
13. Install heater hose to oil coolant module.

 Copyright © 2010 DETROIT DIESEL CORPORATION

https://truckmanualshub.com/

14. If open, close the drain plug on the cylinder block located next to the oil coolant module.

NOTE:
Before installing coolant crossover pipe, check the coupler hose for damage. Replace as necessary.

15. Install EGR coolant delivery pipe and hose to oil coolant module and tighten the two hose clamps.
16. Install the two EGR coolant delivery pipe bolts to the oil coolant module and torque to 30 N·m (22 lb·ft).
17. Install cold boost pipe and four bolts to intake manifold. Torque bolts to 12 N·m (9 lb·ft).
18. If removed, install mixer tube to cold boost pipe with three bolts. Torque 30 N·m (22 lb·ft).
19. If removed, install the intake throttle valve to cold boost pipe. Torque bolts to 30 N·m (22 lb·ft).
20. Fill the coolant system.
21. Prime engine lubrication system. Refer to section 27.1.

All information subject to change without notice.
DDC-SVC-MAN-0081 2010 Copyright © 2010 DETROIT DIESEL CORPORATION

https://truckmanualshub.com/

26.4 REMOVAL OF THE OIL THERMOSTAT

Remove as follows:

1. Place a suitable oil capturing device under the oil coolant module.
2. Unclip electrical harness from the oil thermostat cover.
3. Remove four bolts (2) attaching the oil thermostat cover (1) to the oil coolant module (3).

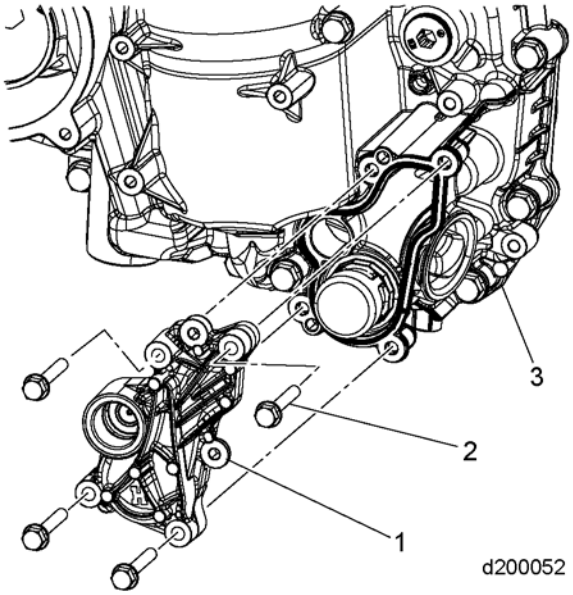

4. Using tool W470589030900, remove the thermostat from the oil coolant module housing.

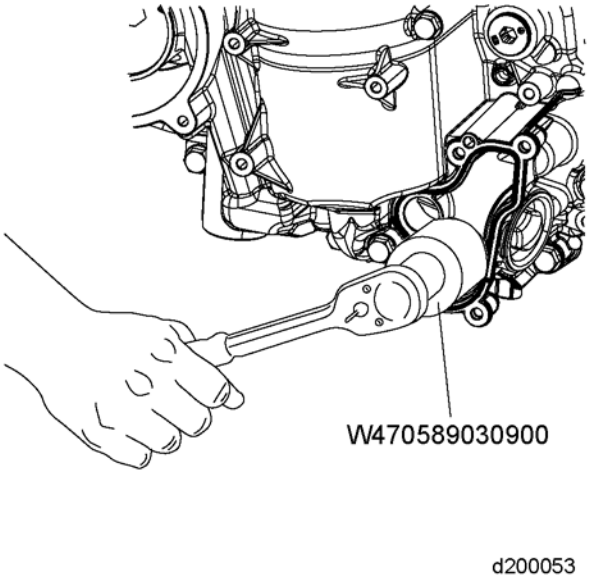

 Copyright © 2010 DETROIT DIESEL CORPORATION

https://truckmanualshub.com/

5. Discard the seal (3) and the O-ring (4).

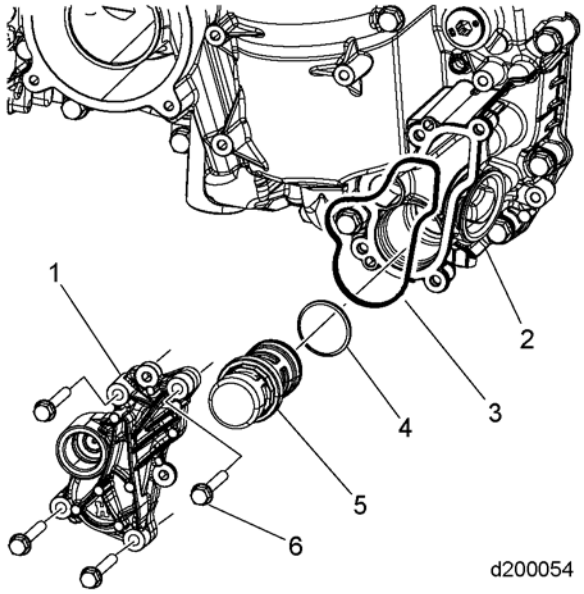

All information subject to change without notice.
DDC-SVC-MAN-0081 2010 Copyright © 2010 DETROIT DIESEL CORPORATION

https://truckmanualshub.com/

26.5 INSTALLATION OF THE OIL THERMOSTAT

Install as follows:

1. Install a new O-ring (4) on the oil thermostat (5).

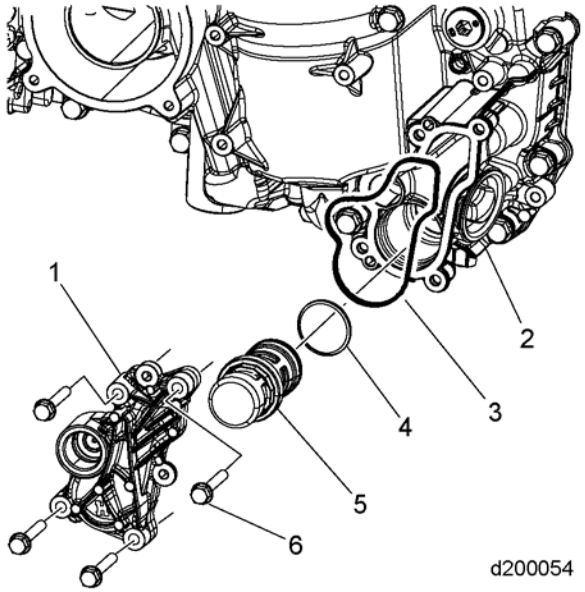

2. Using tool W470589030900, install the thermostat to the oil coolant module housing. Torque to 50 N·m (37 lb·ft).

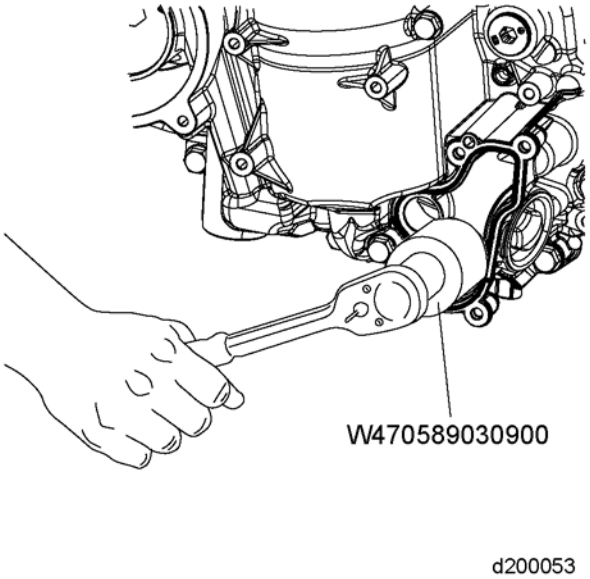

 Copyright © 2010 DETROIT DIESEL CORPORATION

https://truckmanualshub.com/

3. Install new seal, install the oil thermostat cover (1) to the oil coolant module (3) using four bolts (2). Torque the bolts to 30 N·m (22 lb·ft).

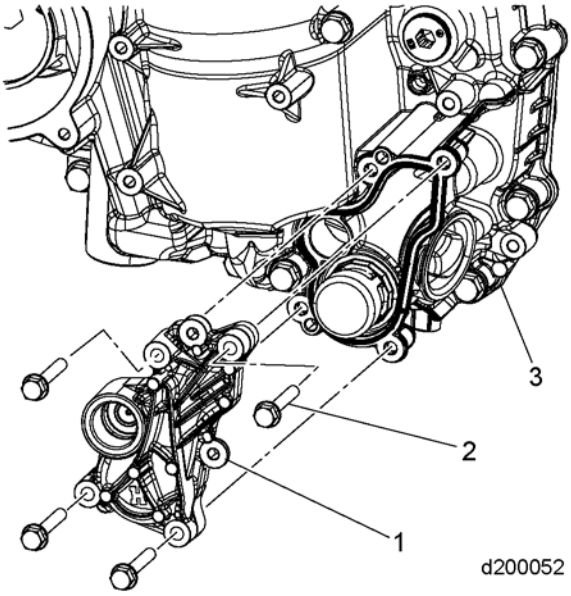

4. Connect the electrical harness to the sensor.
5. Clip electrical harness to the oil thermostat cover.

All information subject to change without notice.
DDC-SVC-MAN-0081 2010 Copyright © 2010 DETROIT DIESEL CORPORATION

https://truckmanualshub.com/

27 PRIMING THE LUBRICATION SYSTEM

Section **Page**

27.1 PRIMING THE ENGINE LUBRICATION SYSTEM 27-3

https://truckmanualshub.com/

All information subject to change without notice.
DDC-SVC-MAN-0081 2010 Copyright © 2010 DETROIT DIESEL CORPORATION

https://truckmanualshub.com/

27.1 PRIMING THE ENGINE LUBRICATION SYSTEM

Prime the oil system as follows:

1. Using a 17 mm Allen tool, remove the Allen head plug from the oil priming port on the oil coolant module.

NOTE:
Tool J–49181 is used to adapt the J–45299 priming pump.

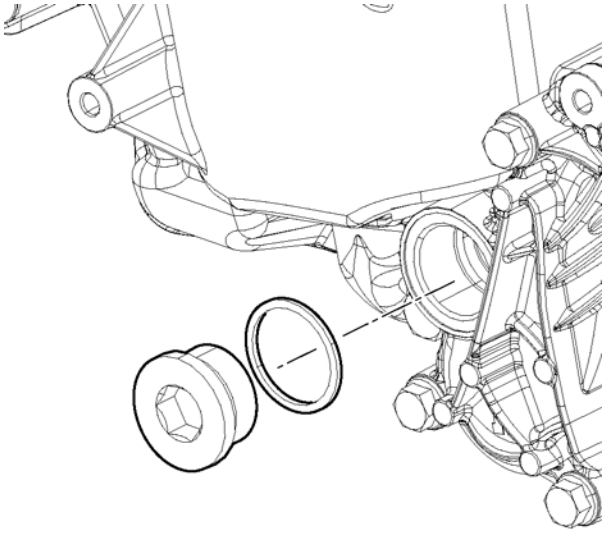

d180025

2. If equipped with an oil sample valve, remove the valve and washer.

 Copyright © 2010 DETROIT DIESEL CORPORATION

https://truckmanualshub.com/

3. Install Oil System Priming Adaptor tool (J–49181) into the oil priming port (1) in the oil coolant module.

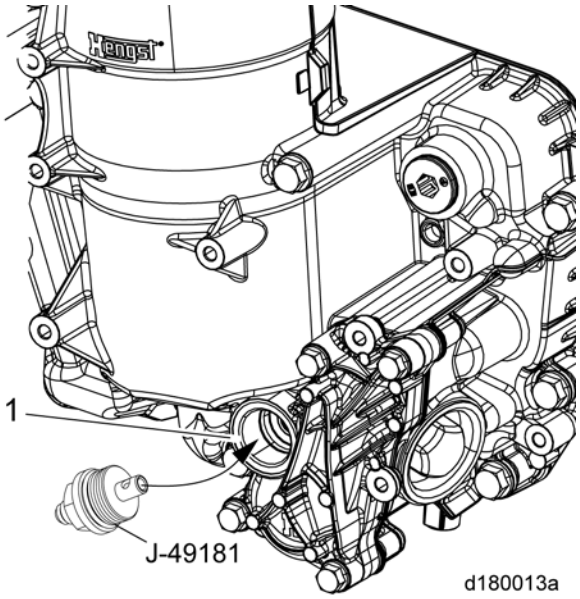

4. Install Engine Preluber Kit (J–45299) to the fitting adaptor (1).

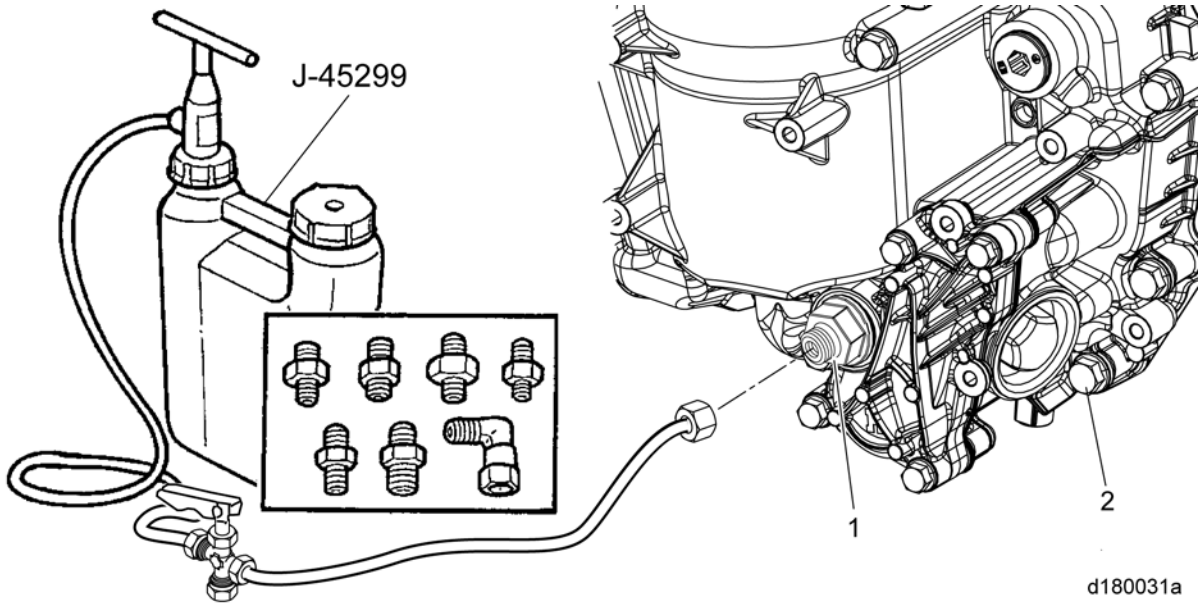

5. Fill the canister with eight quarts of oil.
6. Open the valve on the primer and start pumping until the container is empty.
7. Fill the container with an additional eight quarts of oil and pump until the canister is empty.
8. The oil system is now primed with sixteen quarts of oil. Pour the remaining oil into the oil filler until the correct full level is obtained.

All information subject to change without notice.
DDC-SVC-MAN-0081 2010 Copyright © 2010 DETROIT DIESEL CORPORATION

https://truckmanualshub.com/

9. Close the valve and loosen the fitting; do not completely remove it from the adaptor.
10. Remove the priming adaptor (1) from the oil coolant module (2) with the line attached to keep the oil from flowing out of the module.
11. Install the allen head plug or oil sample valve to the module and torque to 70-80 N·m (51-59 lb·ft).

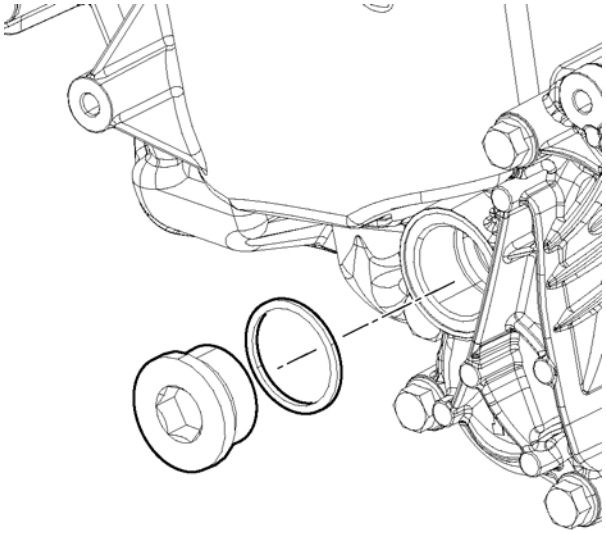

d180025

WARNING:

ENGINE EXHAUST

To avoid injury from inhaling engine exhaust, always operate the engine in a well-ventilated area. Engine exhaust is toxic.

12. Start the engine and monitor the oil pressure.
13. After the engine oil pressure stabilizes, shut the engine down and check the oil per the oil check guidelines.

 Copyright © 2010 DETROIT DIESEL CORPORATION

https://truckmanualshub.com/

All information subject to change without notice.
DDC-SVC-MAN-0081 2010 Copyright © 2010 DETROIT DIESEL CORPORATION

https://truckmanualshub.com/

28 COOLING SYSTEM

Section **Page**

28.1 DESCRIPTION AND OPERATION OF COOLING SYSTEM AND RELATED COMPONENTS 28-3

https://truckmanualshub.com/

All information subject to change without notice.
DDC-SVC-MAN-0081 2010 Copyright © 2010 DETROIT DIESEL CORPORATION

28.1 DESCRIPTION AND OPERATION OF COOLING SYSTEM AND RELATED COMPONENTS

A schematic of the cooling system in the following illustration shows the coolant flow to the engine components.

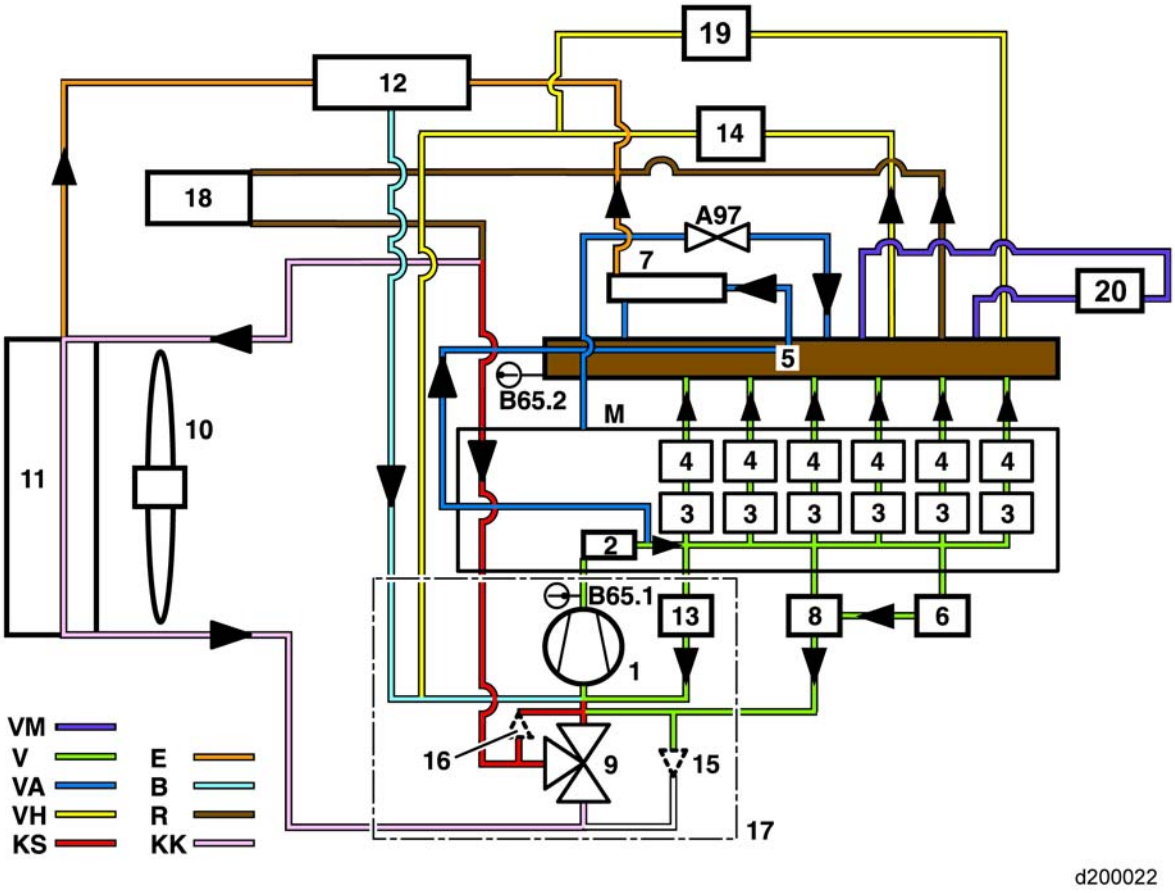

1. Coolant Pump	10. Fan	19. Heat Exchanger	M. Engine
2. Oil Cooler	11. Radiator	20. Doser	R. Auto Trans Cooler Flow
3. Crankcase	12. Reservoir	A97. EGR Actuator	V. Coolant Feed
4. Cylinder Head	13. Coolant Filter	B65. 1 Inlet Temp Sensor	VA.Clt EGR to Clr Actuator
5. Water Manifold	14. Heat Exchanger	B65. 2 Outlet Temp Sensor	VH. Clt Heat Exchanger
6. Compressor	15. Filling Valve	B. Coolant Fill Line	VM. Clt to Doser
7. EGR Cooler	16. Pressure Control Valve	E. De-aeration	
8. Fuel Cooler	17. Oil/Coolant Module	KK. Radiator Circuit	
9. Thermostat	18. Trans Cooler	KS. Bypass Line	

Figure 28-1 Cooling System

 Copyright © 2010 DETROIT DIESEL CORPORATION

https://truckmanualshub.com/

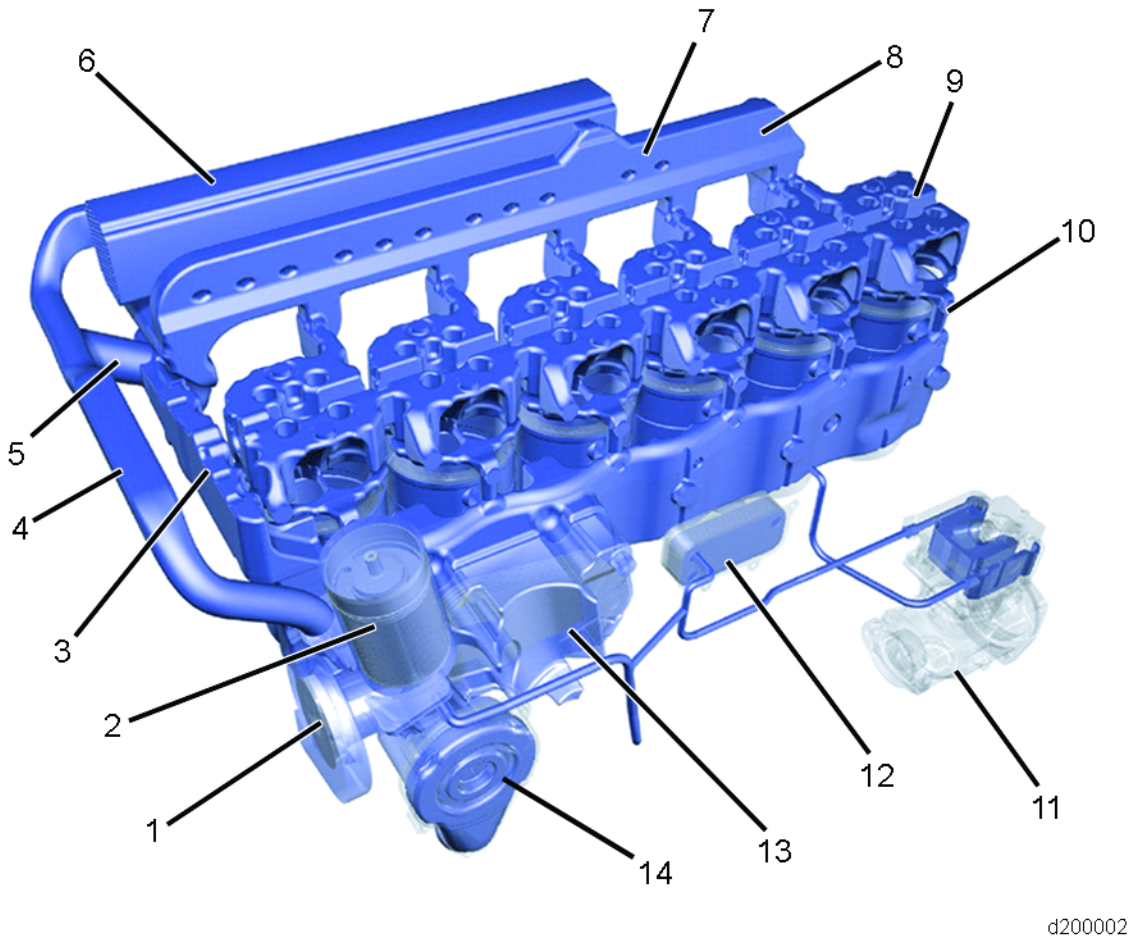

1. Water Pump
2. Coolant Filter
3. Short Circuit Line
4. Coolant Return Flow
5. Coolant Outlet to Cooler Circuit
6. Exhaust Gas Recirculation Cooler
7. Coolant Return Flow
8. Water Manifold
9. Cylinder Head
10. Cylinder Block
11. Air Compressor
12. Fuel Cooler
13. Oil/Water Heat Exchanger
14. Thermostat

Figure 28-2 Cooling System Components

All information subject to change without notice.
DDC-SVC-MAN-0081 2010 Copyright © 2010 DETROIT DIESEL CORPORATION

https://truckmanualshub.com/

29 ENGINE WATER PUMP

Section **Page**

29.1 DESCRIPTION AND OPERATION OF ENGINE WATER PUMP 29-3
29.2 REMOVAL OF THE WATER PUMP 29-4
29.3 INSPECTION OF THE WATER PUMP 29-5
29.4 INSTALLATION OF THE WATER PUMP 29-6

https://truckmanualshub.com/

All information subject to change without notice.
DDC-SVC-MAN-0081 2010 Copyright © 2010 DETROIT DIESEL CORPORATION

29.1 DESCRIPTION AND OPERATION OF ENGINE WATER PUMP

The water pump is located on the left side of the engine, mounted on the front of the oil coolant module. The water pump circulates the coolant in the cooling circuit.

The water pump pulley is mounted to the water pump with five bolts. The water pump is driven by the poly-V-belt that is installed onto the water pump pulley. The rotary motion of the pulley is transmitted by the hub to the shaft. The shaft drives the impeller which causes the coolant to circulate in the coolant circuit.

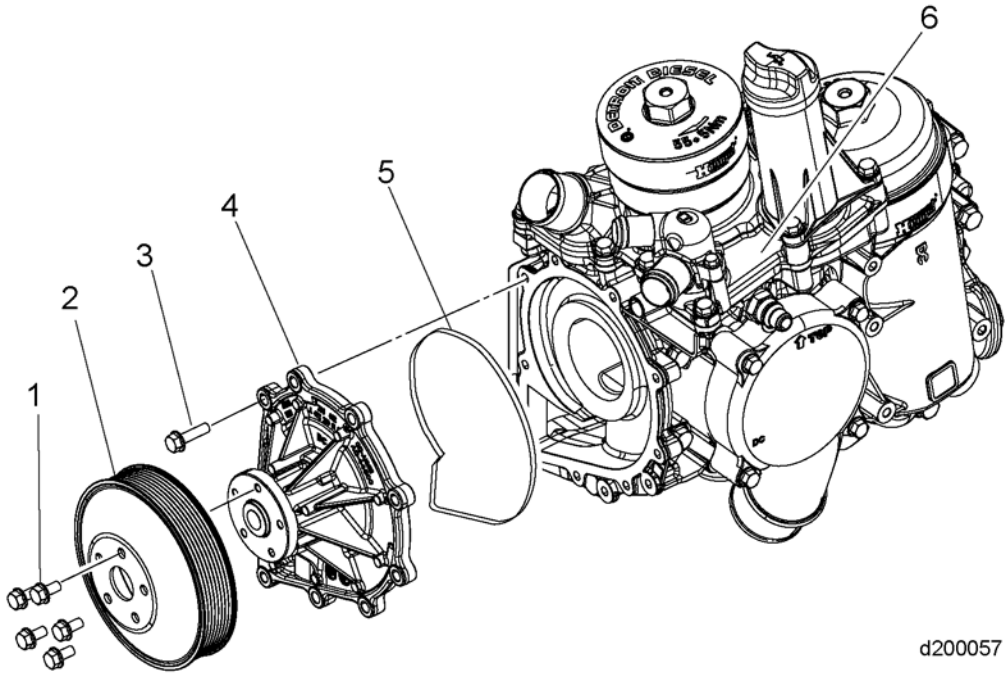

1. Bolt
2. Water Pump Pulley
3. Bolt
4. Water Pump
5. Water Pump Seal
6. Oil Coolant Module

Figure 29-1 Water Pump and Related Parts

 Copyright © 2010 DETROIT DIESEL CORPORATION

https://truckmanualshub.com/

29.2 REMOVAL OF THE WATER PUMP

Remove as follows:

1. Drain the coolant from radiator. Refer to OEM procedures.
2. Disconnect the batteries.
3. Loosen the five bolts securing the water pump pulley to the water pump.

WARNING:

PERSONAL INJURY

To avoid injury to hands and fingers from the spring-loaded auto belt tensioner violently snapping back, do not cut the belt to remove it.

4. Remove the accessory drive belt. Refer to section 40.1.
5. Remove the five bolts (1) securing the coolant pulley (2) to the water pump (4); and remove pulley from water pump.
6. Remove nine bolts (3) from the water pump and remove from the oil coolant module (6).

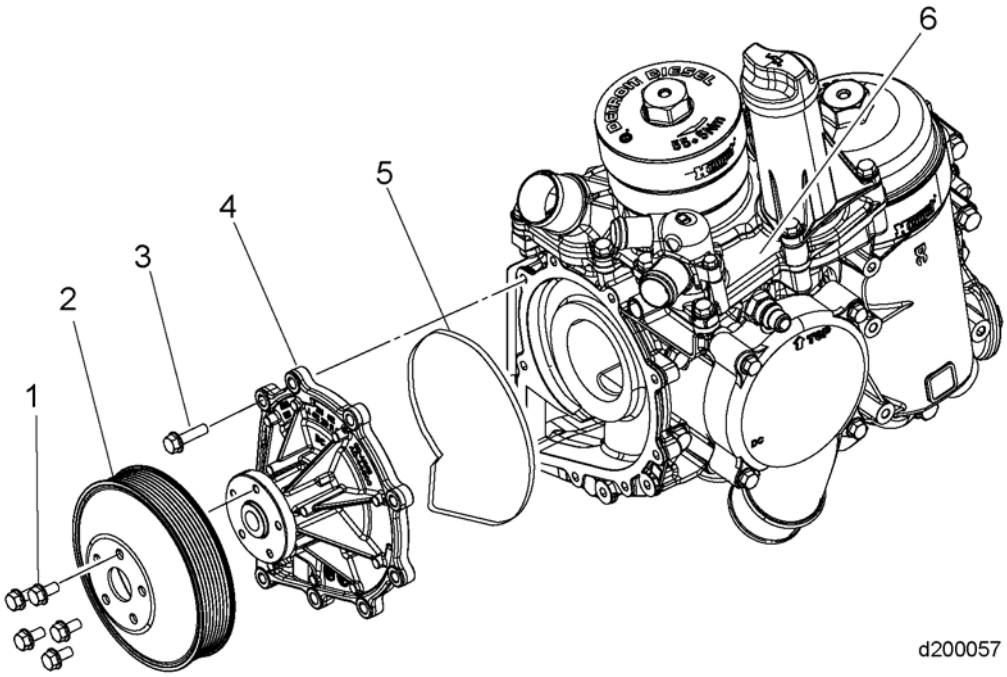

All information subject to change without notice.
DDC-SVC-MAN-0081 2010 Copyright © 2010 DETROIT DIESEL CORPORATION

https://truckmanualshub.com/

29.3 INSPECTION OF THE WATER PUMP

Slight weeping from the weep hole in the bottom of water pump is normal. The water pump should only be replaced if there is a heavy leak from the weep hole. The water pump should only be replaced after all of the following inspections have been performed.

Inspect as follows:

NOTICE:
Before replacing the water pump for a belt noise there are some basic checks that need to be done. Refer to the “Belt Noise” section in the Troubleshooting Manual to correctly determine the cause of the belt noise.

1. Clean the water pump and surrounding area.
2. Drain the cooling system.
3. Remove the water pump.
4. Inspect the inside of the water pump (1) for cavitations or corrosion, replace pump if damaged.
5. Inspect the blades (3) on the water pump for cracks or damage; replace the pump if damaged.
6. Inspect the bearings in the pump for slop, tight, or a choppy feeling; replace the pump if damaged.
7. Inspect the water pump seal (2) for damage. Replace the seal if damaged.

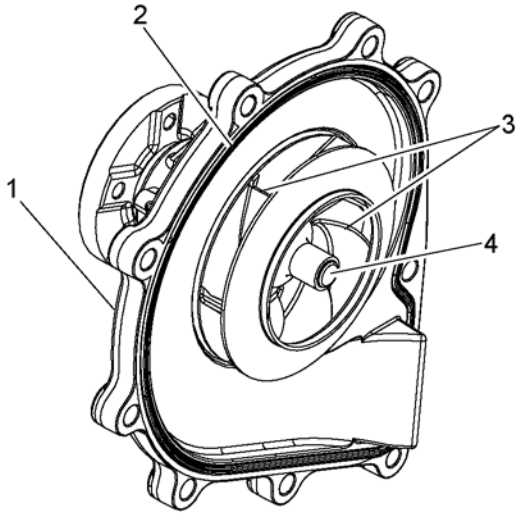

d200058

 Copyright © 2010 DETROIT DIESEL CORPORATION

https://truckmanualshub.com/

29.4 INSTALLATION OF THE WATER PUMP

Install as follows:

1. Install the water pump seal (5) to the water pump (4).
2. Install the water pump (4) to the oil coolant module (6) with nine bolts (3) and torque to 30 N·m (22 lb·ft).
3. Install the water pump pulley (2) to the water pump with five bolts (1) and finger tighten and install belt.

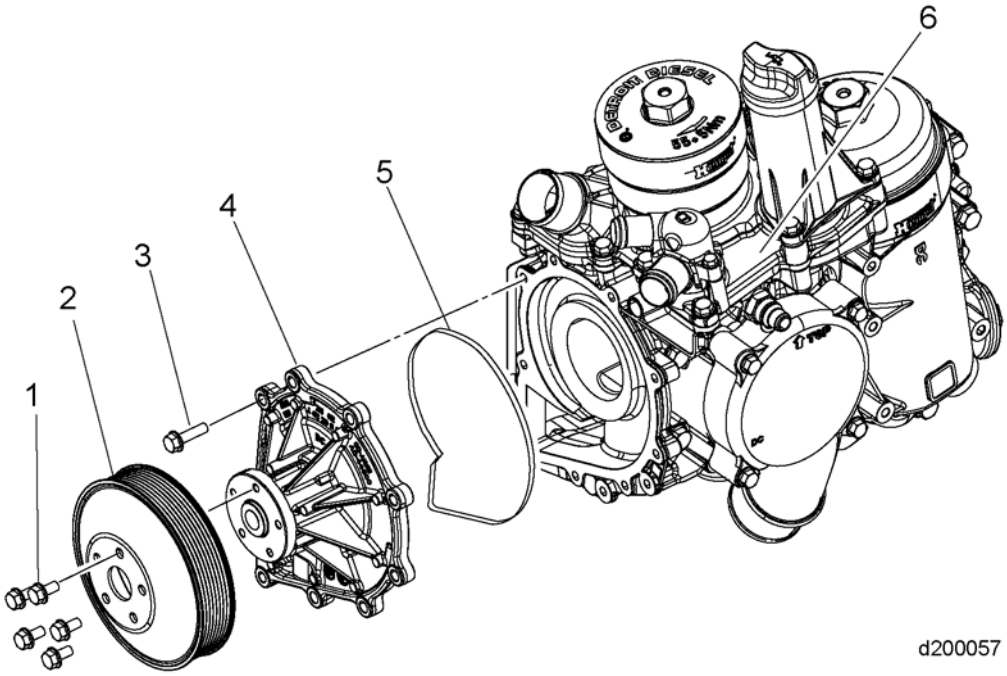

4. Install the poly-V-belt. Refer to section 40.3.
5. Torque the water pump pulley bolts to 25 N·m (18 lb·ft).
6. Fill the coolant system.
7. Reconnect the batteries.

WARNING:

ENGINE EXHAUST

To avoid injury from inhaling engine exhaust, always operate the engine in a well-ventilated area. Engine exhaust is toxic.

8. Start the engine and inspect for leaks.

All information subject to change without notice.
DDC-SVC-MAN-0081 2010 Copyright © 2010 DETROIT DIESEL CORPORATION

https://truckmanualshub.com/

30 COOLANT THERMOSTAT

Section **Page**

30.1 DESCRIPTION AND OPERATION OF COOLANT THERMOSTAT 30-3
30.2 REMOVAL OF COOLANT THERMOSTAT AND SEAL 30-5
30.3 INSPECTION OF COOLANT THERMOSTAT AND SEAL 30-6
30.4 INSTALLATION OF COOLANT THERMOSTAT AND SEAL 30-7

https://truckmanualshub.com/

All information subject to change without notice.
DDC-SVC-MAN-0081 2010 Copyright © 2010 DETROIT DIESEL CORPORATION

30.1 DESCRIPTION AND OPERATION OF COOLANT THERMOSTAT

The coolant thermostat is located on the left side of the engine on the oil coolant module. The coolant thermostat regulates the coolant inlet temperature in a range from 87°C (188° F) to 95°C (203°F).

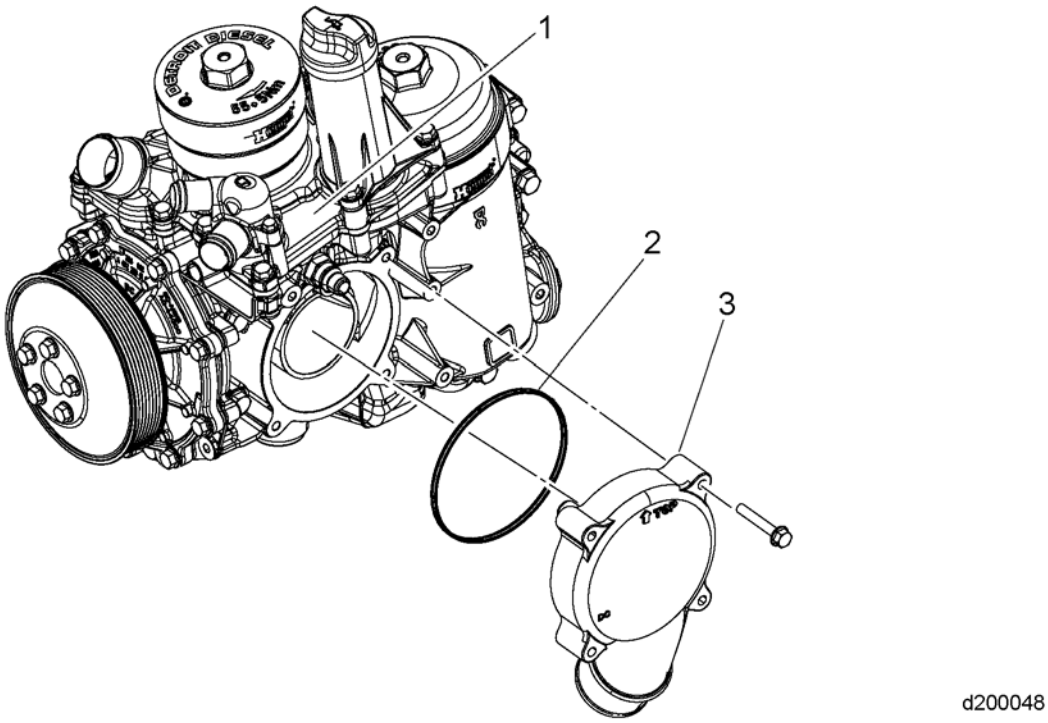

1. Oil Coolant Module
2. Seal
3. Thermostat

Figure 30-1 Thermostat and Related Parts

The coolant thermostat regulates coolant flow from the engine to the radiator. The thermostat regulates coolant flow to control the temperature of the coolant within the coolant circuit.

The following benefits result from regulating the coolant at the inlet temperature of the engine:

- Reduced thermal cycling of the engine
- Operating temperature is reached faster
- Emissions are reduced
- Improved vehicle heating

 Copyright © 2010 DETROIT DIESEL CORPORATION

https://truckmanualshub.com/

Thermostat Operating Modes

The coolant from the radiator and the radiator bypass mix in the thermostat housing. The thermostat regulates the temperature of this mixed flow circuit.

Three different operating conditions occur due to the coolant mixed flow temperature:

- **Bypass mode:** When the coolant mixed flow temperature is below 87°C (188°F), the circulating thermostat is closed. The coolant circulates through the radiator bypass to the coolant thermostat. None of the flow passes through the radiator.
- **Mixed mode:** For a coolant mixed flow temperature above 87°C (188°F) to and less than 95°C (203°F), the circulating thermostat opens partially and the coolant flows at the same time through the engine radiator and the radiator bypass to the coolant thermostat .
- **Radiator operation:** When the coolant inlet temperature is above 95°C (203°F) the circulating thermostat is completely open. The coolant flows through the radiator to the coolant thermostat. None of the flow passes through the radiator bypass.

Other minor coolant loops exist in addition to those described above. The flow through these loops are unaffected by the position of the coolant thermostat. These loops include the flow through the vehicle cab heater, vehicle bunk heater, the EGR actuator, and the doser.

All information subject to change without notice.
DDC-SVC-MAN-0081 2010 Copyright © 2010 DETROIT DIESEL CORPORATION

30.2 REMOVAL OF COOLANT THERMOSTAT AND SEAL

Remove as follows:

WARNING:

HOT COOLANT

To avoid scalding from the expulsion of hot coolant, never remove the cooling system pressure cap while the engine is at operating temperature. Wear adequate protective clothing (face shield, rubber gloves, apron, and boots). Remove the cap slowly to relieve pressure.

1. Drain the cooling system.
2. Remove the plug on the cylinder block below the oil coolant module to drain the remaining coolant.
3. Loosen hose clamp at the thermostat.
4. Remove the four thermostat housing-to-oil cooler module attaching bolts.
5. Remove the thermostat housing assembly from the oil coolant module and hose.
6. Remove the thermostat housing seal.

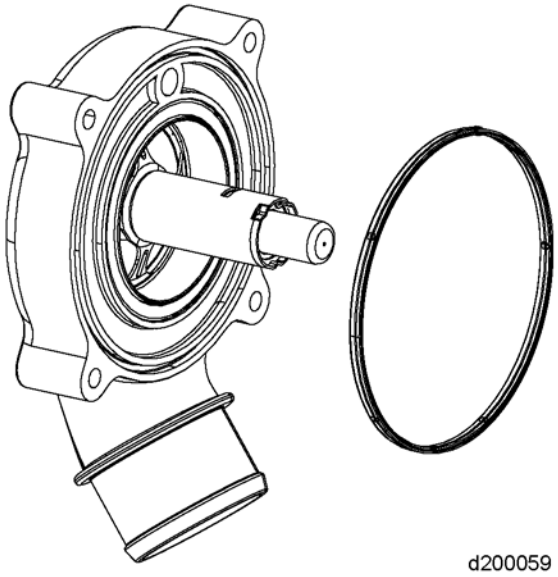

 Copyright © 2010 DETROIT DIESEL CORPORATION

https://truckmanualshub.com/

30.3 INSPECTION OF COOLANT THERMOSTAT AND SEAL

Inspect thermostat as follows:

1. Visually inspect all parts for wear or damage.
   [a] If wear or damage is found, replace parts.
   [b] If wear or damage is not found, reuse parts.
2. Visually inspect thermostat body seal for damage, cracks or nicks.
   [a] If any damage is noted, replace seal.
   [b] If no damage is found, reuse parts.
3. Visually inspect the tip of the thermostat for wear or damage.
   [a] If wear or damage is found, replace parts.
   [b] If wear or damage is not found, reuse parts.

All information subject to change without notice.
DDC-SVC-MAN-0081 2010 Copyright © 2010 DETROIT DIESEL CORPORATION

https://truckmanualshub.com/

30.4 INSTALLATION OF COOLANT THERMOSTAT AND SEAL

Install as follows:

1. Install seal (2) onto thermostat housing (3).
2. Install thermostat into hose and onto oil cooler module (1).
3. Torque four bolts to 30 N·m (22 lb·ft).
4. Tighten clamp at the hose.

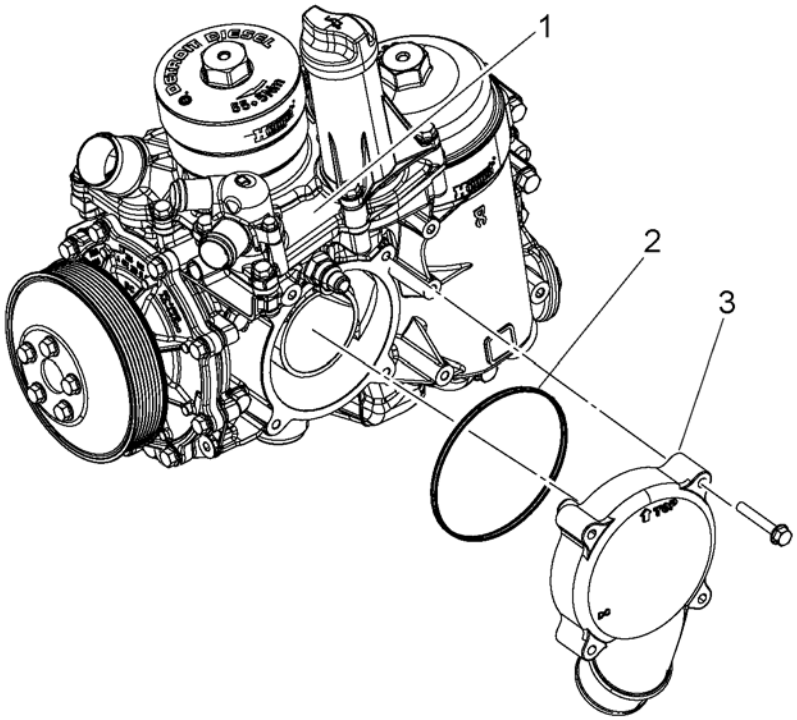

5. Fill engine with coolant to the correct level.

WARNING:
ENGINE EXHAUST
To avoid injury from inhaling engine exhaust, always operate the engine in a well-ventilated area. Engine exhaust is toxic.

6. Start the engine and check for leaks.

 Copyright © 2010 DETROIT DIESEL CORPORATION

https://truckmanualshub.com/

All information subject to change without notice.
DDC-SVC-MAN-0081 2010 Copyright © 2010 DETROIT DIESEL CORPORATION

https://truckmanualshub.com/

31 COOLANT FILTER

Section **Page**

31.1 DESCRIPTION AND OPERATION OF COOLANT FILTER 31-3
31.2 REMOVAL OF THE COOLANT FILTER 31-4
31.3 INSTALLATION OF THE COOLANT FILTER 31-5

https://truckmanualshub.com/

All information subject to change without notice.
DDC-SVC-MAN-0081 2010 Copyright © 2010 DETROIT DIESEL CORPORATION

https://truckmanualshub.com/

31.1 DESCRIPTION AND OPERATION OF COOLANT FILTER

DD Platform engine cooling systems are protected by a coolant filter element that may contain supplemental corrosion inhibitors.

 Copyright © 2010 DETROIT DIESEL CORPORATION

https://truckmanualshub.com/

31.2 REMOVAL OF THE COOLANT FILTER

Remove as follows:

1. Using a 36 mm wrench, remove the cap (1) from the oil coolant module (4).
2. Pull the coolant filter (3) out of the oil coolant module.
3. Discard the O-ring (2) in the cap.

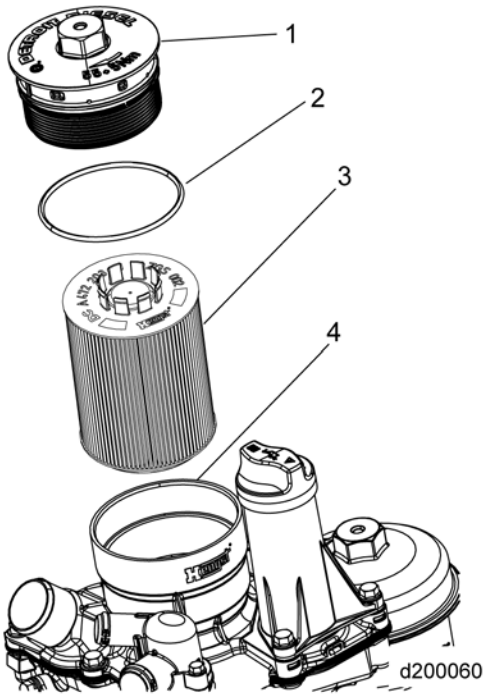

All information subject to change without notice.
DDC-SVC-MAN-0081 2010 Copyright © 2010 DETROIT DIESEL CORPORATION

https://truckmanualshub.com/

31.3 INSTALLATION OF THE COOLANT FILTER

Install as follows:

1. Install a new O-ring (2) onto the cap.
2. Install a new coolant filter (3) into the cap (1).
3. Install coolant filter and cap into the oil coolant module (4). Torque cap to 55-60 N·m (41-44 lb·ft).

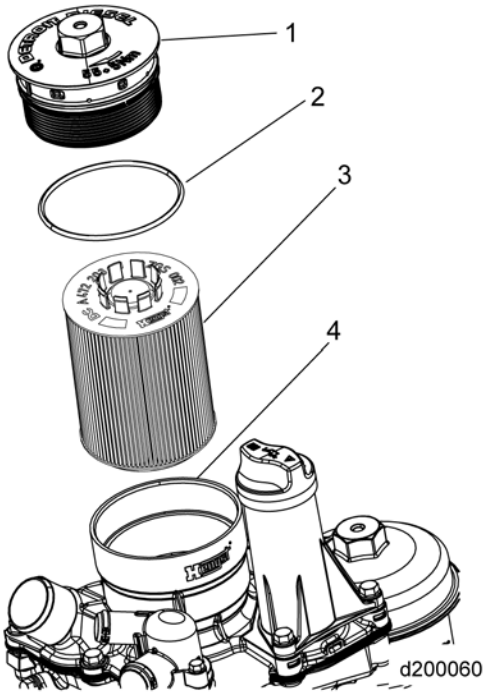

 Copyright © 2010 DETROIT DIESEL CORPORATION

https://truckmanualshub.com/

All information subject to change without notice.
DDC-SVC-MAN-0081 2010 Copyright © 2010 DETROIT DIESEL CORPORATION

https://truckmanualshub.com/

32 COOLANT FILTER SERVICE MODULE

Section **Page**

32.1 REMOVAL OF COOLANT FILTER SERVICE MODULE 32-3
32.2 INSTALLATION OF COOLANT FILTER SERVICE MODULE 32-4

https://truckmanualshub.com/

All information subject to change without notice.
DDC-SVC-MAN-0081 2010 Copyright © 2010 DETROIT DIESEL CORPORATION

https://truckmanualshub.com/

32.1 REMOVAL OF COOLANT FILTER SERVICE MODULE

Remove as follows:

1. Drain coolant.
2. Remove hose clamps and remove hoses.
3. Remove ten bolts from the Coolant Filter Service Module and remove service module from engine.
4. Discard the O-rings (3 and 4) and the seals (5).

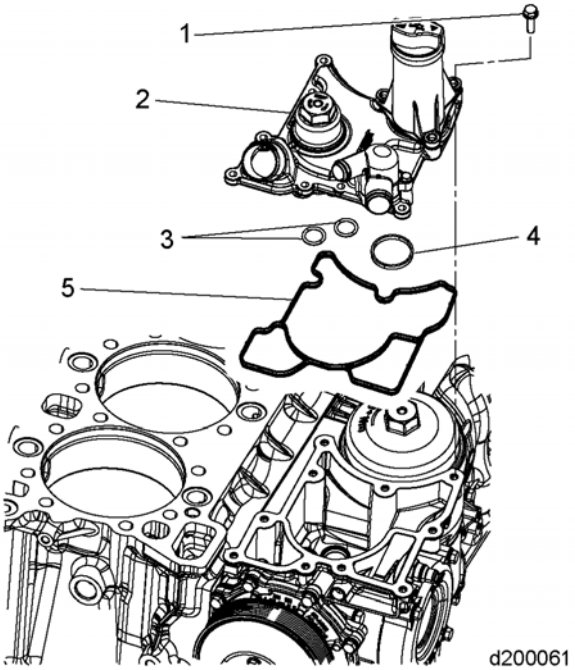

 Copyright © 2010 DETROIT DIESEL CORPORATION

32.2 INSTALLATION OF COOLANT FILTER SERVICE MODULE

Install as follows:

1. Install new O-rings and seals. Lubricate with clean coolant.
2. Install Coolant Filter Service Module on the oil cooler module.
3. Install the ten bolts and torque to 37 N·m (27 lb·ft).

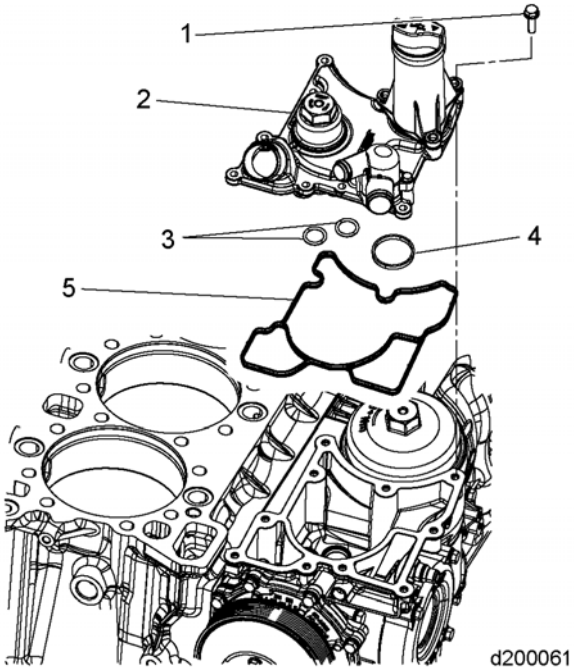

4. Install hoses and hose clamps.
5. Fill coolant to appropriate level.

WARNING:
ENGINE EXHAUST
To avoid injury from inhaling engine exhaust, always operate the engine in a well-ventilated area. Engine exhaust is toxic.

6. Start engine and check for leaks.

All information subject to change without notice.
DDC-SVC-MAN-0081 2010 Copyright © 2010 DETROIT DIESEL CORPORATION

https://truckmanualshub.com/

33 COOLANT INLET ELBOW

Section **Page**

33.1 REMOVAL OF THE COOLANT INLET ELBOW 33-3
33.2 INSTALLATION OF THE COOLANT INLET ELBOW 33-4

https://truckmanualshub.com/

All information subject to change without notice.
DDC-SVC-MAN-0081 2010 Copyright © 2010 DETROIT DIESEL CORPORATION

https://truckmanualshub.com/

33.1 REMOVAL OF THE COOLANT INLET ELBOW

Remove as follows:

1. Drain coolant.
2. Remove two bolts from the coolant inlet elbow.
3. Remove the coolant inlet elbow from the coolant service filter module.
4. Remove and discard the O-ring.

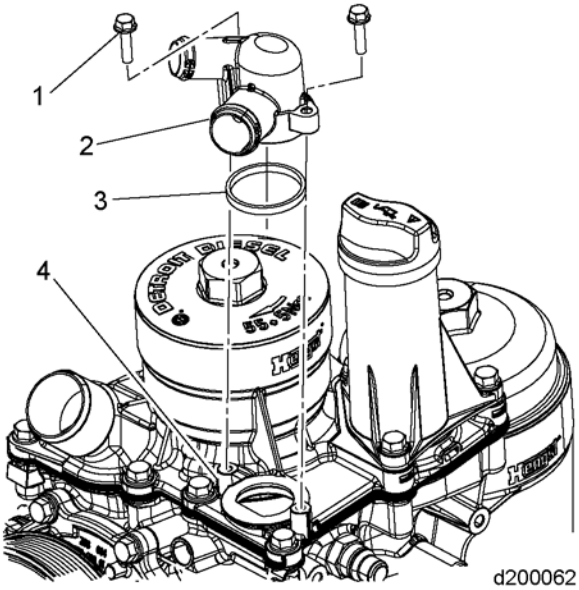

 Copyright © 2010 DETROIT DIESEL CORPORATION

https://truckmanualshub.com/

33.2 INSTALLATION OF THE COOLANT INLET ELBOW

Install as follows:

1. Install new O-ring.
2. Install the coolant inlet elbow to the coolant filter service module with two bolts.
3. Torque bolts to 30 N·m (22 lb·ft).

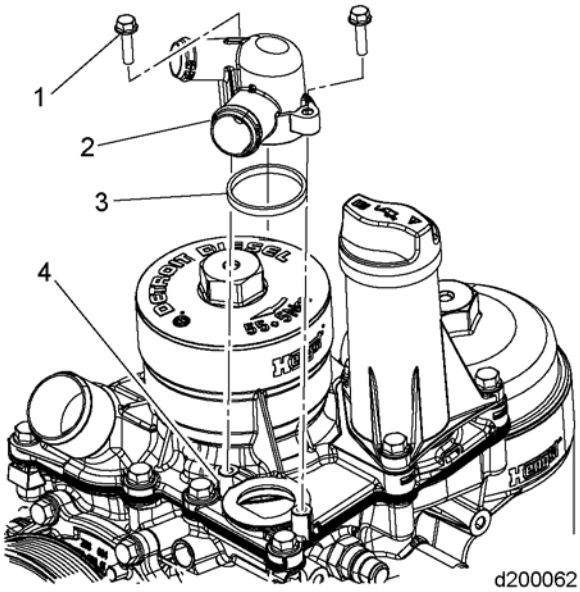

4. Fill coolant to appropriate level.

WARNING:

ENGINE EXHAUST

To avoid injury from inhaling engine exhaust, always operate the engine in a well-ventilated area. Engine exhaust is toxic.

5. Start engine and check for leaks.

All information subject to change without notice.
DDC-SVC-MAN-0081 2010 Copyright © 2010 DETROIT DIESEL CORPORATION

https://truckmanualshub.com/

34 FLYWHEEL AND FLYWHEEL HOUSING

Section **Page**

34.1 DESCRIPTION AND OPERATION OF FLYWHEEL, FLYWHEEL HOUSING AND RELATED PARTS 34-3
34.2 REMOVAL OF FLYWHEEL HOUSING 34-6
34.3 INSTALLATION OF FLYWHEEL HOUSING 34-7
34.4 REMOVAL OF THE FLYWHEEL 34-9
34.5 INSPECTION OF FLYWHEEL 34-10
34.6 INSTALLATION OF FLYWHEEL 34-11
34.7 INSPECTION OF FLYWHEEL HOUSING AND REAR OIL SEAL AREA OF CRANKSHAFT 34-12
34.8 REMOVAL OF RING GEAR 34-13
34.9 INSTALLATION OF RING GEAR 34-14

https://truckmanualshub.com/

All information subject to change without notice.
DDC-SVC-MAN-0081 2010 Copyright © 2010 DETROIT DIESEL CORPORATION

https://truckmanualshub.com/

34.1 DESCRIPTION AND OPERATION OF FLYWHEEL, FLYWHEEL HOUSING AND RELATED PARTS

This section explains the description(s) and operation(s) of the following components:

- □ Flywheel
- □ Ring Gear
- □ Flywheel Housing

34.1.1 Flywheel

The flywheel is attached to the rear end of the crankshaft with twelve bolts. The bolt holes in the crankshaft and flywheel are equally spaced.

34.1.2 Ring Gear

The steel ring gear and flywheel is a two-piece assembly. Prior to assembly, the ring gear is heated to expand its diameter. It is then installed onto the flywheel and allowed to cool. After the ring gear cools, it contracts onto the flywheel, locking it in place.

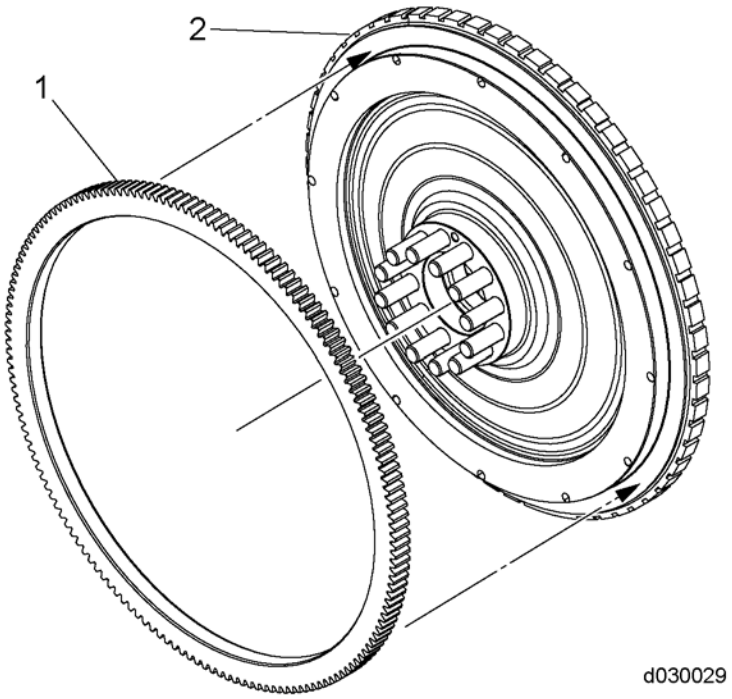

1. Steel Ring Gear
2. Flywheel

 Copyright © 2010 DETROIT DIESEL CORPORATION

https://truckmanualshub.com/

34.1.3 Flywheel Housing

The flywheel housing is a one-piece aluminum casting mounted against the rear of the engine. It provides a cover for the gear drive and houses the flywheel. The crankshaft rear oil seal, which is pressed into the housing, may be removed or installed without removing the housing.

The power steering pump on some applications may be mounted on the flywheel housing. An engine barring or locking device can be attached at the opening on the bottom of the flywheel housing. This allows the engine to be barred or locked for maintenance or repair work.

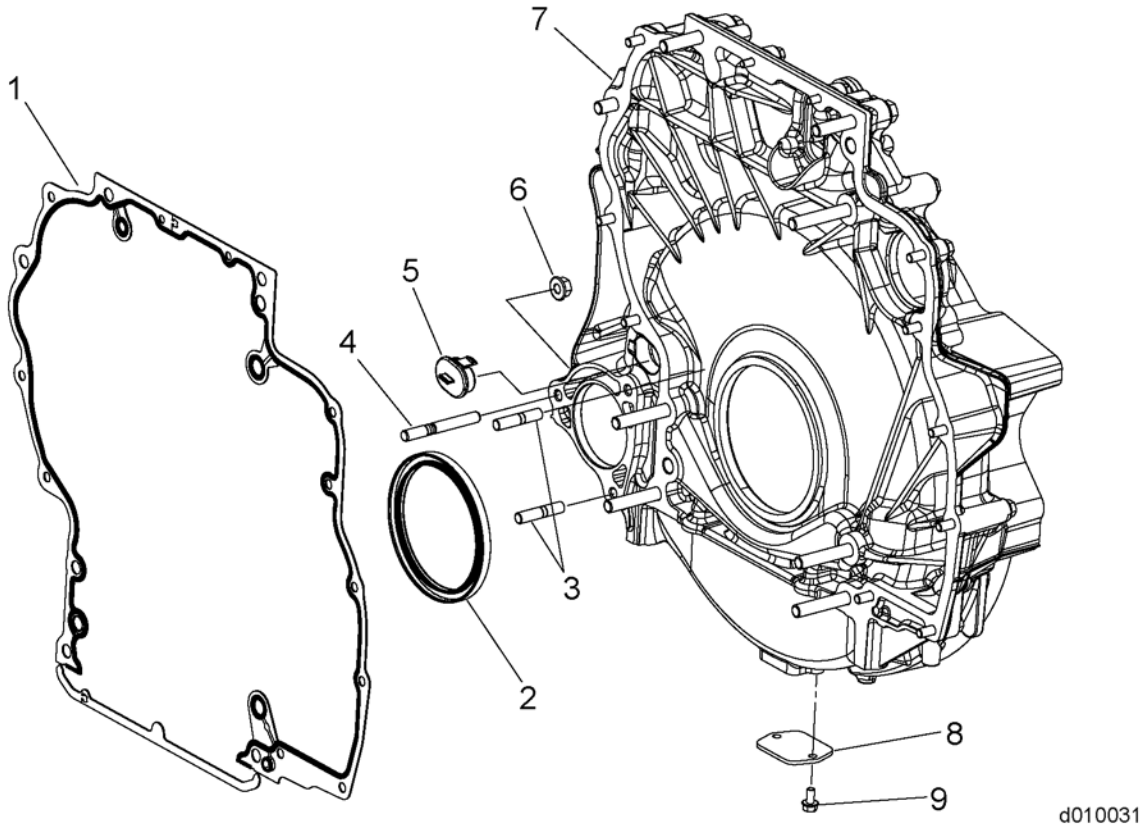

1. Gasket
2. Seal
3. Stud
4. Stud
5. Access Hole Cover
6. Nut
7. Flywheel Housing
8. Cover
9. Bolt (2)

Figure 34-1 Rear of Flywheel Housing and Related Parts

All information subject to change without notice.
DDC-SVC-MAN-0081 2010 Copyright © 2010 DETROIT DIESEL CORPORATION

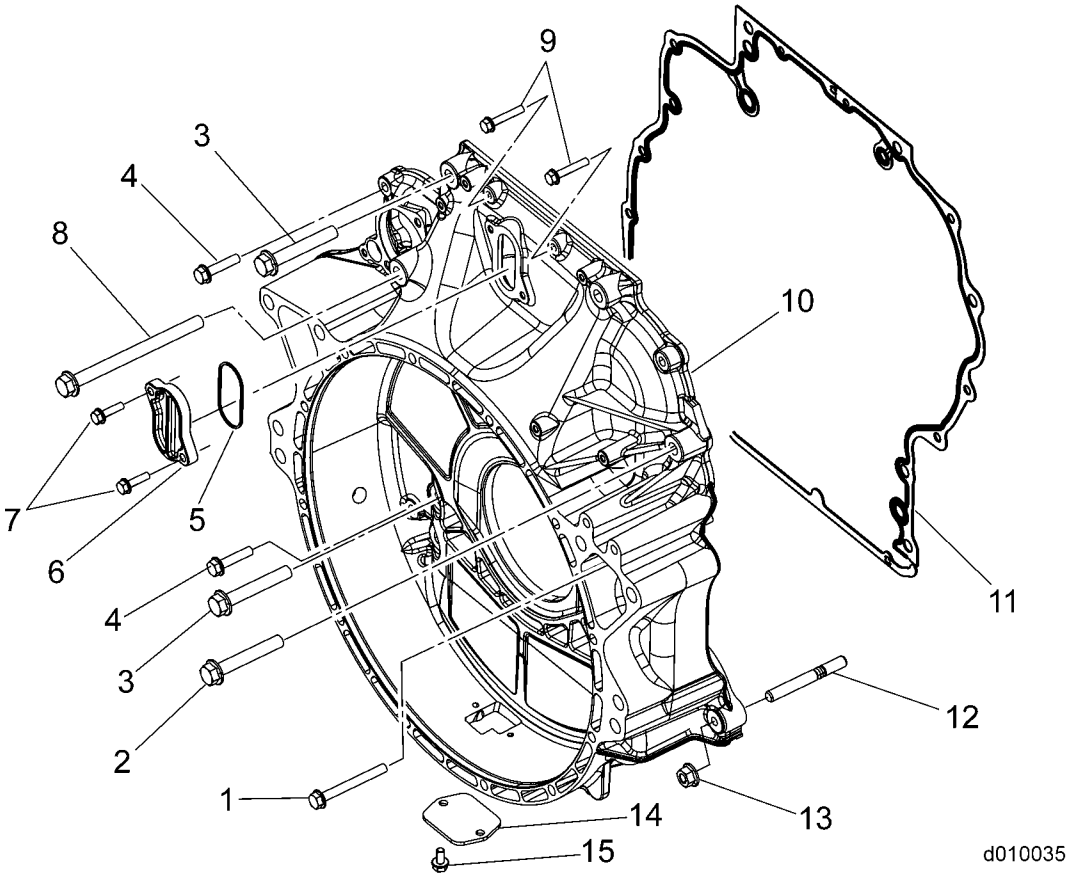

1. Bolt M10 x 90 (3 qty.)
2. Bolt M14 x 1.5 x 70 (1 qty.)
3. Bolt M14 x 1.5 x 90 (6 qty.)
4. Bolt M10 x 45 (6 qty.)
5. Gasket (1 qty.)
6. Cover (1 qty.)
7. Bolt M8 x 30 (2 qty.)
8. Bolt M14 x 1.5 x 180 (1 qty.)
9. Bolt M8 x 45 (2 qty.)
10. Flywheel Housing
11. Gasket
12. Stud (1 qty.)
13. Nut M12-10 (1 qty.)
14. Cover
15. Bolt (2 qty.)

Figure 34-2 Front of Flywheel Housing and Related Parts

 Copyright © 2010 DETROIT DIESEL CORPORATION

https://truckmanualshub.com/

34.2 REMOVAL OF FLYWHEEL HOUSING

Remove as follows:

1. If the engine is removed from the vehicle, mount the engine on an overhaul stand.
2. Drain engine oil and remove the oil pan.
3. Remove the doser injector feed line.
4. Remove the Crankshaft Position Sensor (CKP). Refer to section .
5. Remove the flywheel. Refer to section 34.4.
6. Remove two bolts securing exhaust pipe bracket to flywheel housing.
7. ***For the DD15;*** remove the clamp from the exhaust pipe and the axial power turbine and then remove exhaust pipe.
8. Thread eye bolts into the tapped holes in the side of the flywheel housing and attach a suitable lifting sling to the eye bolts.
9. Thread two guide stud tools (J-43431) for the 14 mm bolts, into the cylinder block.
10. Remove the remainder of the bolts that secure the flywheel housing to the cylinder block.

DANGER:

BODILY INJURY

To avoid injury from a falling component, ensure a proper lifting device is used. Never stand beneath a suspended load.

11. Strike the front face of the housing alternately on each side with a soft hammer to loosen and work it off the dowel pins.
12. Remove and discard the flywheel housing gasket.
13. Remove all sealing material from the flywheel housing.

All information subject to change without notice.
DDC-SVC-MAN-0081 2010 Copyright © 2010 DETROIT DIESEL CORPORATION

34.3 INSTALLATION OF FLYWHEEL HOUSING

Install as follows:

1. Thread two guide studs (J–43431) for 14 mm bolts, into the cylinder block to guide the housing in place.
2. Install a new gasket.

DANGER:

BODILY INJURY

To avoid injury from a falling component, ensure a proper lifting device is used. Never stand beneath a suspended load.

3. Using a lifting sling support the flywheel housing and position it onto the cylinder block.
4. Install all of the housing bolts in their proper location; finger-tighten them.

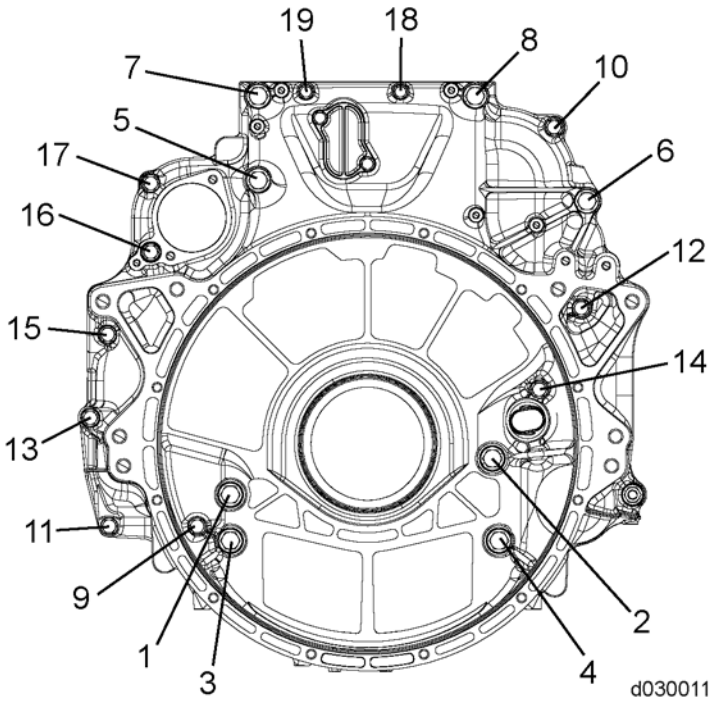

 Copyright © 2010 DETROIT DIESEL CORPORATION

https://truckmanualshub.com/

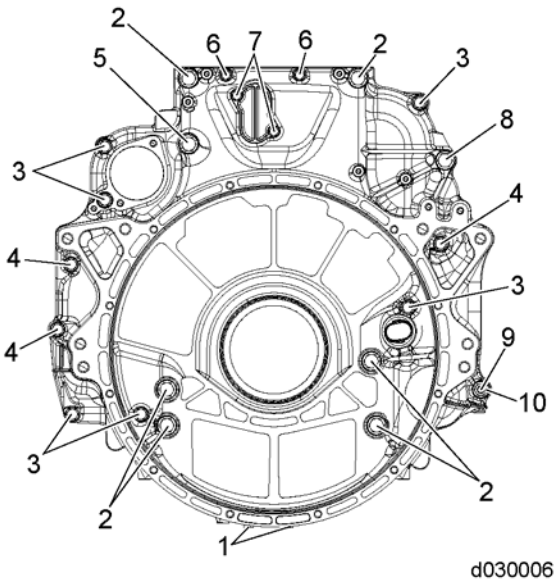

1. Bolt, M8 x 16 (2 qty.) 30 N·m (22 lb·ft)
2. Bolt, M14 x 1.5 x 90 (6 qty.) 120 N·m (88 lb·ft)
3. Bolt, M10 x 45 (6 qty.) 60 N·m (44 lb·ft)
4. Bolt, M10 x 90 (3 qty.) 60 N·m (44 lb·ft)
5. Bolt, M14 x 1.5 x 180 (1 qty.) 120 N·m (88 lb·ft)
6. Bolt, M8 x 45 (2 qty.) 30 N·m (22 lb·ft)
7. Bolt, M8 x 30 (2 qty.) 30 N·m (22 lb·ft)
8. Bolt, M14 x 1.5 x 70 (1 qty.) 120 N·m (88 lb·ft)
9. Stud, (1 qty.)
10. Nut, M12-10 (1 qty.) 100 N·m (74 lb·ft)

5. Remove the guide studs.
6. Torque the flywheel housing bolts using the sequence and torque shown.
7. Inspect the crankshaft rear main oil seal. If any damage is found, replace as necessary.
8. Install the flywheel. Refer to section 34.6.
9. ***For the DD15;*** install the exhaust pipe and bracket to the flywheel housing and axial power turbine. Install two bolts into the bracket and flywheel housing. Install a clamp onto the exhaust pipe and axial power turbine. Refer to section 12.4.
10. Install the crankshaft position sensor. Refer to section .
11. Install the oil pan and fill the engine with new oil.
12. Prime the lubrication system. Refer to section 27.1

All information subject to change without notice.
DDC-SVC-MAN-0081 2010 Copyright © 2010 DETROIT DIESEL CORPORATION

https://truckmanualshub.com/

34.4 REMOVAL OF THE FLYWHEEL

Pre-cleaning is not necessary.

Remove as follows:

1. Remove the crankshaft position sensor (CKP). Refer to section .
2. Remove eleven of the twelve flywheel attaching bolts, leaving one bolt at the 12 o'clock position.
3. Install two flywheel guide studs (J–41672) through the flywheel and into the crankshaft at the 3 and 9 o'clock positions.
4. Attach the flywheel lifting tool (J–25026) or some other suitable lifting device, to the flywheel.
5. Attach a chain hoist to the lifting tool.
6. Loosen, but do not remove the last flywheel attaching bolt.

CAUTION:

FALLING FLYWHEEL

To avoid injury from a falling flywheel when removing the last bolt, hold the flywheel against the crankshaft by hand to prevent it from slipping off the crankshaft. The flywheel is not doweled to the crankshaft.

7. Lift lightly on flywheel using lifting device and remove last bolt.

DANGER:

BODILY INJURY

To avoid injury from a falling component, ensure a proper lifting device is used. Never stand beneath a suspended load.

8. Remove flywheel.

 Copyright © 2010 DETROIT DIESEL CORPORATION

https://truckmanualshub.com/

34.5 INSPECTION OF FLYWHEEL

Inspect as follows:

1. Inspect the clutch contact base of the flywheel.
   [a] Check clutch contact base for scoring, wear, or cracks.
   [b] The flywheel may be re-faced if the clutch contact face is scored or worn.
   [c] The flywheel must be replaced if the clutch contact face shows cracks.
2. Inspect the ring gear.
   [a] Check ring gear for excessively worn or damaged gear teeth.
   [b] If damaged gear teeth are detected, replace the ring gear.
3. Inspect crankshaft and flywheel contact surface.
   [a] Check the butt end of the crankshaft and flywheel contact surface for damage.
   [b] Lightly stone the contact surface to remove any fretting, brinelling, or burrs.

All information subject to change without notice.
DDC-SVC-MAN-0081 2010 Copyright © 2010 DETROIT DIESEL CORPORATION

https://truckmanualshub.com/

34.6 INSTALLATION OF FLYWHEEL

Install as follows:

1. Install two flywheel guide studs (J–36235) into two of the tapped holes in the crankshaft at the 3 and 9 o'clock position.

NOTICE:
Maximum flywheel bolt length for reuse is 88mm, if bolt length exceeds this, replace the used bolts with new bolts.

2. Properly attach the flywheel lifting tool to the flywheel and, using a chain hoist, position the flywheel in the flywheel housing.
   - Align the flywheel bolt holes with the crankshaft bolt holes.
   - Be sure to line up the locating pin hole with the pin on the crankshaft.
3. Remove the flywheel lifting tool and guide studs.
4. Apply clean engine oil to the threads and to the bolt head contact area (underside) of the remaining bolts. Any excess must be wiped off.

NOTE:
Clean engine oil must never be used between two surfaces where maximum friction is desired, as between the crankshaft and the flywheel.

5. Install the flywheel lock J-46392 or W470589046300.
6. Install the bolts and torque them to 200-220 N·m (147-162 lb·ft) and then an additional 90° to 100° torque turn.

 Copyright © 2010 DETROIT DIESEL CORPORATION

https://truckmanualshub.com/

34.7 INSPECTION OF FLYWHEEL HOUSING AND REAR OIL SEAL AREA OF CRANKSHAFT

Inspect as follows:

1. Inspect flywheel housing for cracks and any other damage.
   [a] Check sealing surface for damage.
   [b] Check flywheel housing for cracks.
   [c] If damaged or cracked, repair is not possible; replace the part.
2. Inspect the flywheel where the rear oil seal makes contact. Check for groove in flywheel; if grooved, replace flywheel.

All information subject to change without notice.
DDC-SVC-MAN-0081 2010 Copyright © 2010 DETROIT DIESEL CORPORATION

https://truckmanualshub.com/

34.8 REMOVAL OF RING GEAR

Remove the ring gear as follows:

1. Shut off the engine, apply the parking brake, chock the wheels, and perform any other applicable safety steps.
2. Remove the transmission.
3. Remove the flywheel.
4. Using an acetylene torch, cut the ring gear 1/2 to 3/4 of the way through, without allowing the flame to touch the flywheel.
5. The uncut portion will now yield. Tap the ring gear to remove it from the flywheel.

 Copyright © 2010 DETROIT DIESEL CORPORATION

https://truckmanualshub.com/

34.9 INSTALLATION OF RING GEAR

Install the ring gear as follows:

1. Support the flywheel, ring gear side up, on a solid flat surface.

WARNING:

BURNS

To avoid injury from burning, use lifting tools and heat-resistant gloves when handling heated components.

NOTICE:

Do not, under any circumstances, heat the gear over 204°C (399°F). Excessive heat may destroy the original heat treatment. Heat treating “crayons” which are placed on the ring gear and melt at a predetermined temperature, may be obtained from most tool vendors. Use of these “crayons” will ensure against overheating the gear.

2. Rest the gear on a flat metal surface. Heat the gear uniformly with an acetylene torch, keeping the torch moving around the gear to avoid hot spots.
3. Use a pair of tongs to place the gear on the flywheel with the chamfer, if any, facing the same direction as on the gear just removed.
4. Tap the gear in place against the shoulder of the flywheel. If the gear cannot be tapped into place readily so that it is seated all the way around, remove it, and apply additional heat.
5. Once the ring gear is installed, install the flywheel.
6. Install the transmission.

All information subject to change without notice.
DDC-SVC-MAN-0081 2010 Copyright © 2010 DETROIT DIESEL CORPORATION

https://truckmanualshub.com/

35 FRONT ENGINE MOUNT/RADIATOR SUPPORT

Section **Page**

35.1 DESCRIPTION AND OPERATION OF FRONT ENGINE MOUNT/RADIATOR SUPPORT AND RELATED PARTS 35-3
35.2 REMOVAL OF THE FRONT ENGINE MOUNT/RADIATOR SUPPORT .. 35-4
35.3 INSPECTION OF THE FRONT ENGINE MOUNT/RADIATOR SUPPORT 35-5
35.4 INSTALLATION OF THE FRONT ENGINE MOUNT/RADIATOR SUPPORT 35-6

https://truckmanualshub.com/

All information subject to change without notice.
DDC-SVC-MAN-0081 2010 Copyright © 2010 DETROIT DIESEL CORPORATION

https://truckmanualshub.com/

35.1 DESCRIPTION AND OPERATION OF FRONT ENGINE MOUNT/RADIATOR SUPPORT AND RELATED PARTS

The front engine mount/radiator support is mounted to the cylinder block with four bolts.

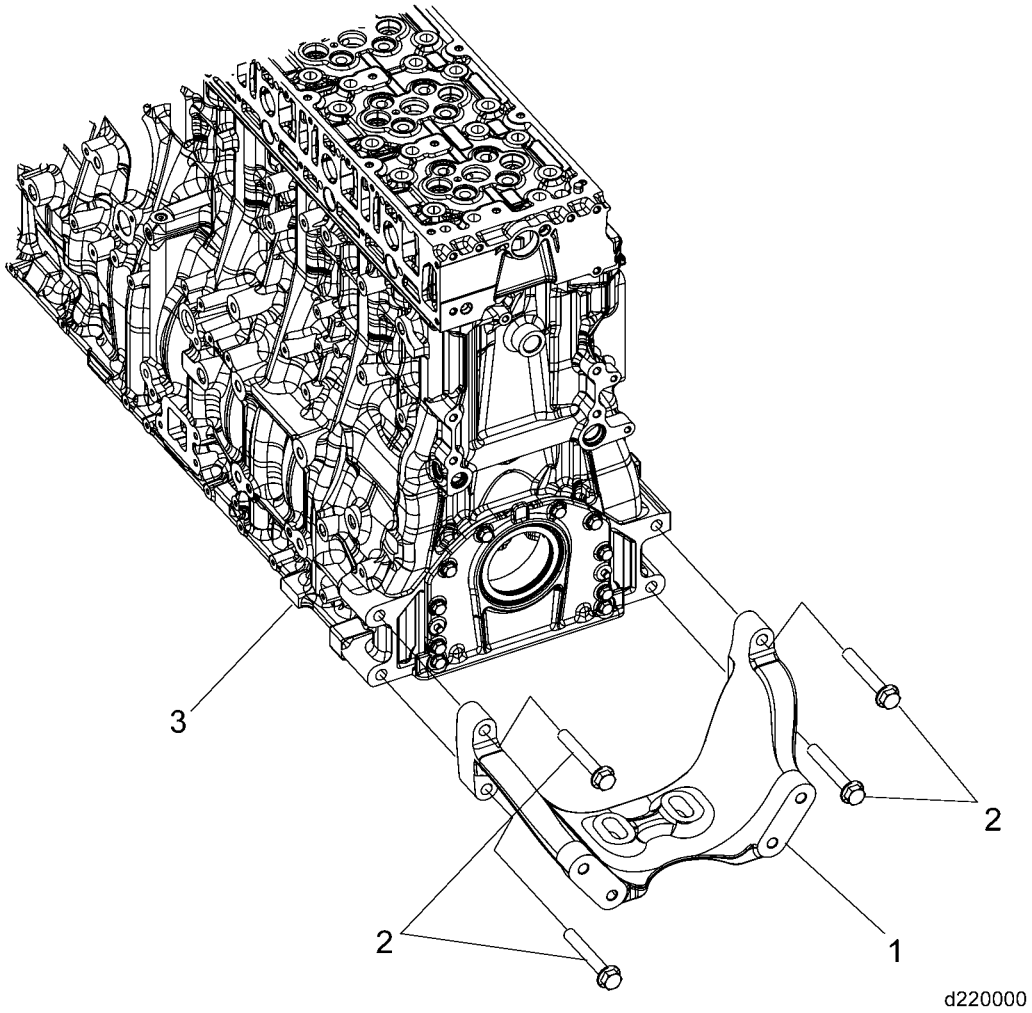

1. Front Engine Mount/Radiator Support
2. Bolts
3. Engine Block

Figure 35-1 Front Engine Mount/Radiator Support and Related Parts

 Copyright © 2010 DETROIT DIESEL CORPORATION

https://truckmanualshub.com/

35.2 REMOVAL OF THE FRONT ENGINE MOUNT/RADIATOR SUPPORT

Remove as follows.

1. Drain the coolant from radiator. Refer to OEM procedures.
2. Remove the charge air cooler (CAC) hoses.
3. Remove the air cooling components. Refer to OEM guidelines.
4. Remove the four bolts securing the front engine mount/radiator support and remove front engine mount/radiator support.

All information subject to change without notice.
DDC-SVC-MAN-0081 2010 Copyright © 2010 DETROIT DIESEL CORPORATION

https://truckmanualshub.com/

35.3 INSPECTION OF THE FRONT ENGINE MOUNT/RADIATOR SUPPORT

Inspect the front engine mount/radiator support for damage; replace as necessary.

 Copyright © 2010 DETROIT DIESEL CORPORATION

https://truckmanualshub.com/

35.4 INSTALLATION OF THE FRONT ENGINE MOUNT/RADIATOR SUPPORT

Install as follows:

1. Install the front engine mount/radiator support to the cylinder block with four bolts. Torque bolts to 250 N·m (184 lb·ft).
2. Install CAC hoses.
3. Install air cooling components refer to OEM guidelines.
4. Fill with coolant to the appropriate levels.

All information subject to change without notice.
DDC-SVC-MAN-0081 2010 Copyright © 2010 DETROIT DIESEL CORPORATION

https://truckmanualshub.com/

36 VIBRATION DAMPER

Section **Page**

36.1 REMOVAL OF THE VIBRATION DAMPER 36-3
36.2 INSTALLATION OF THE VIBRATION DAMPER 36-4

https://truckmanualshub.com/

All information subject to change without notice.
DDC-SVC-MAN-0081 2010 Copyright © 2010 DETROIT DIESEL CORPORATION

https://truckmanualshub.com/

36.1 REMOVAL OF THE VIBRATION DAMPER

Remove as follows:

1. Remove the poly-V-belt. Refer to section 40.1.
2. Remove the eight bolts (1) attaching the vibration damper (2) to the crankshaft (4).
3. Using guide studs tool J-43431, remove the vibration damper.
4. Remove the splash ring (3).

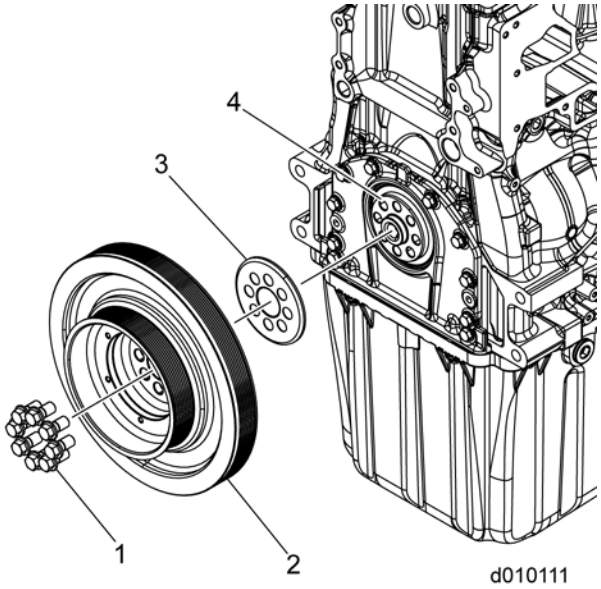

 Copyright © 2010 DETROIT DIESEL CORPORATION

https://truckmanualshub.com/

36.2 INSTALLATION OF THE VIBRATION DAMPER

Install as follows:

1. Install the splash ring (1) with cup-side (2) toward end of crankshaft.

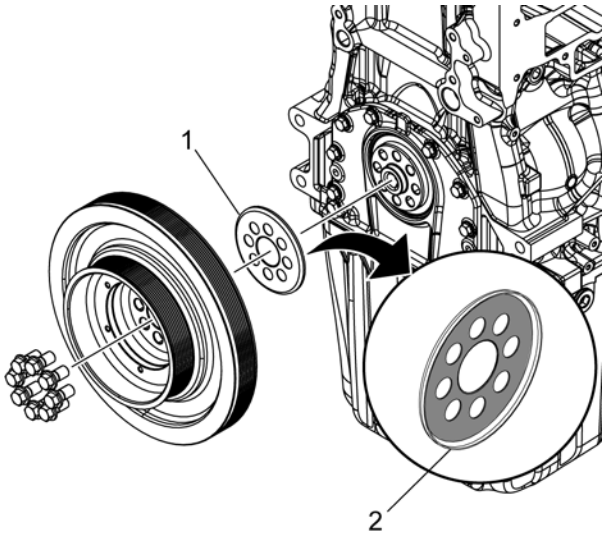

d010112

2. Using guide studs tool (J-43431), install the vibration damper onto the crankshaft.
3. Install the eight bolts attaching the vibration damper to the crankshaft. Torque to 200 N·m (147.5 lb·ft). Refer to section 36.2.
4. Install the poly-V-belt. Refer to section 40.3.

All information subject to change without notice.
DDC-SVC-MAN-0081 2010 Copyright © 2010 DETROIT DIESEL CORPORATION

https://truckmanualshub.com/

37 FRONT ENGINE COVER

Section **Page**

37.1 DESCRIPTION AND OPERATION OF THE FRONT ENGINE COVER .. 37-3
37.2 REMOVAL OF THE FRONT ENGINE COVER 37-4
37.3 INSPECTION OF THE FRONT ENGINE COVER 37-5
37.4 INSTALLATION OF THE FRONT ENGINE COVER 37-6

https://truckmanualshub.com/

All information subject to change without notice.
DDC-SVC-MAN-0081 2010 Copyright © 2010 DETROIT DIESEL CORPORATION

37.1 DESCRIPTION AND OPERATION OF THE FRONT ENGINE COVER

The front cover housing seals the cylinder block to the oil pan, while also holding the front radial seal to the machined surface of the crankshaft nose. The front radial seal prevents oil leaks at the crankshaft.

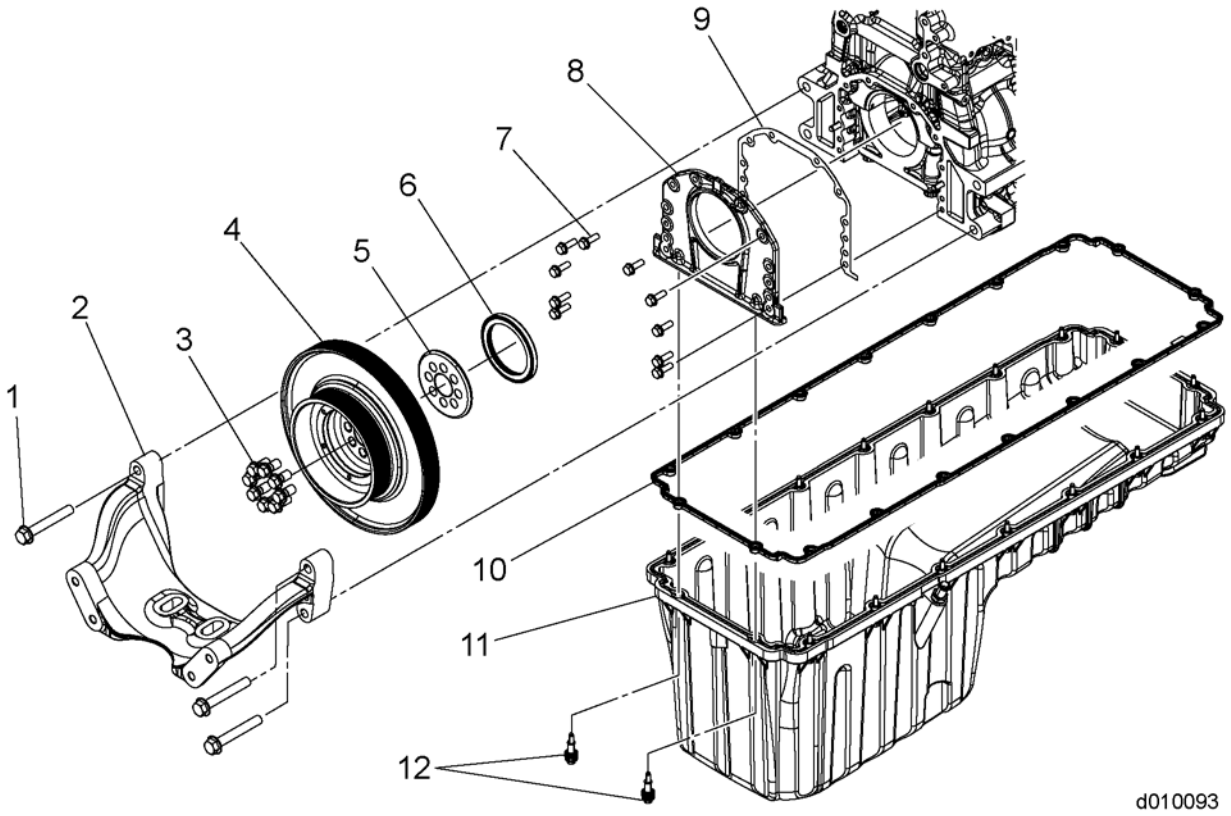

1. Front Mounting Bracket Bolt (4 qty.)
2. Front Mounting Bracket
3. Vibration Damper Mounting Bolts (8 qty.)
4. Vibration Damper
5. Splash Ring
6. Front Radial Seal
7. Front Cover Mounting Bolts (10 qty.)
8. Front Cover
9. Front Cover Gasket
10. Oil Pan Gasket
11. Oil Pan
12. Oil Pan Mounting Bolts (18 qty.)

Figure 37-1 Front Engine Cover and Related Components

 Copyright © 2010 DETROIT DIESEL CORPORATION

https://truckmanualshub.com/

37.2 REMOVAL OF THE FRONT ENGINE COVER

Remove as follows:

1. Shut off engine, apply the parking brake, chock the wheels, and perform any other applicable safety steps.
2. Remove the poly-V-belt. Refer to section 40.1.
3. Remove the eight bolts attaching the vibration damper to the crankshaft. Refer to section 36.1.
4. Remove the splash ring.

NOTE:
The oil pan must be completely removed to clean the gasket and groove to prevent potential oil leaks.

5. Remove the oil pan. Refer to section 19.2.
6. Remove the ten mounting bolts attaching the front engine cover to the cylinder block and remove the front engine cover.

All information subject to change without notice.
DDC-SVC-MAN-0081 2010 Copyright © 2010 DETROIT DIESEL CORPORATION

https://truckmanualshub.com/

37.3 INSPECTION OF THE FRONT ENGINE COVER

Inspect as follows:

1. Inspect the front cover housing for leaks, cracks or any other signs of damage. Replace as necessary.
2. Clean the front engine cover with clean engine oil.

 Copyright © 2010 DETROIT DIESEL CORPORATION

https://truckmanualshub.com/

37.4 INSTALLATION OF THE FRONT ENGINE COVER

Install as follows:

1. Install a new front cover housing gasket on the cylinder block.
2. Install the front cover housing to the cylinder block. Torque the front cover mounting bolts to 60 N·m (44 lb·ft) in the sequence shown.

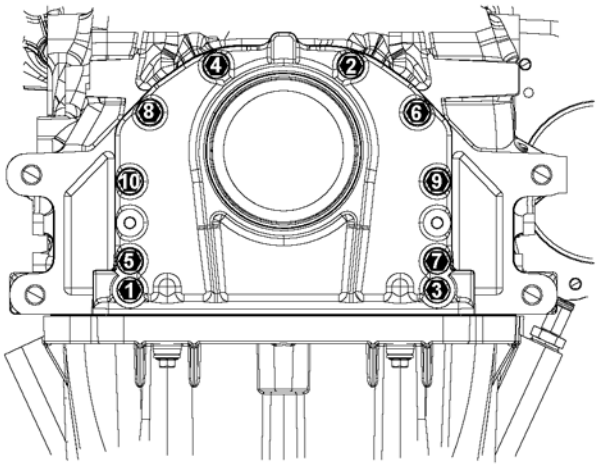

d010094

3. Install the oil pan to cylinder block. Refer to section 19.7.
4. Install the splash ring on the front of the crankshaft.
5. If the front crankshaft seal is damaged and requires replacement, replace as necessary. Refer to section 17.8.
6. Install the vibration damper and pulley to the crankshaft. Refer to section 36.2.
7. Install the poly-V-belt. Refer to section 40.3.

All information subject to change without notice.
DDC-SVC-MAN-0081 2010 Copyright © 2010 DETROIT DIESEL CORPORATION

https://truckmanualshub.com/

38 ENGINE LIFTER BRACKETS

Section **Page**

38.1 DESCRIPTION AND OPERATION OF ENGINE LIFTER BRACKETS AND RELATED PARTS 38-3
38.2 REMOVAL OF THE FRONT ENGINE LIFTER BRACKET WITHOUT FRONT ENGINE POWER TAKE-OFF 38-8
38.3 REMOVAL OF THE FRONT ENGINE LIFTER BRACKET WITH FRONT ENGINE POWER TAKE-OFF 38-9
38.4 REMOVAL OF THE REAR ENGINE LIFTER BRACKETS 38-10
38.5 INSPECTION OF THE ENGINE LIFTER BRACKETS 38-11
38.6 INSTALLATION OF THE REAR ENGINE LIFTER BRACKETS 38-12
38.7 INSTALLATION OF THE FRONT ENGINE LIFTER BRACKET WITHOUT FRONT ENGINE POWER TAKE-OFF 38-13
38.8 INSTALLATION OF THE FRONT ENGINE LIFTER BRACKET WITH FRONT ENGINE POWER TAKE-OFF 38-14

https://truckmanualshub.com/

All information subject to change without notice.
DDC-SVC-MAN-0081 2010 Copyright © 2010 DETROIT DIESEL CORPORATION

38.1 DESCRIPTION AND OPERATION OF ENGINE LIFTER BRACKETS AND RELATED PARTS

The engine lifter brackets on the DD Platform engines are utilized when removing or replacing an engine. All DD Platform engines have two lifting brackets that are located on the rear of the engine, bolted to the cylinder head. A third engine lifter bracket is located on the front which is part of the Exhaust Gas Recirculation (EGR) system crossover tube.

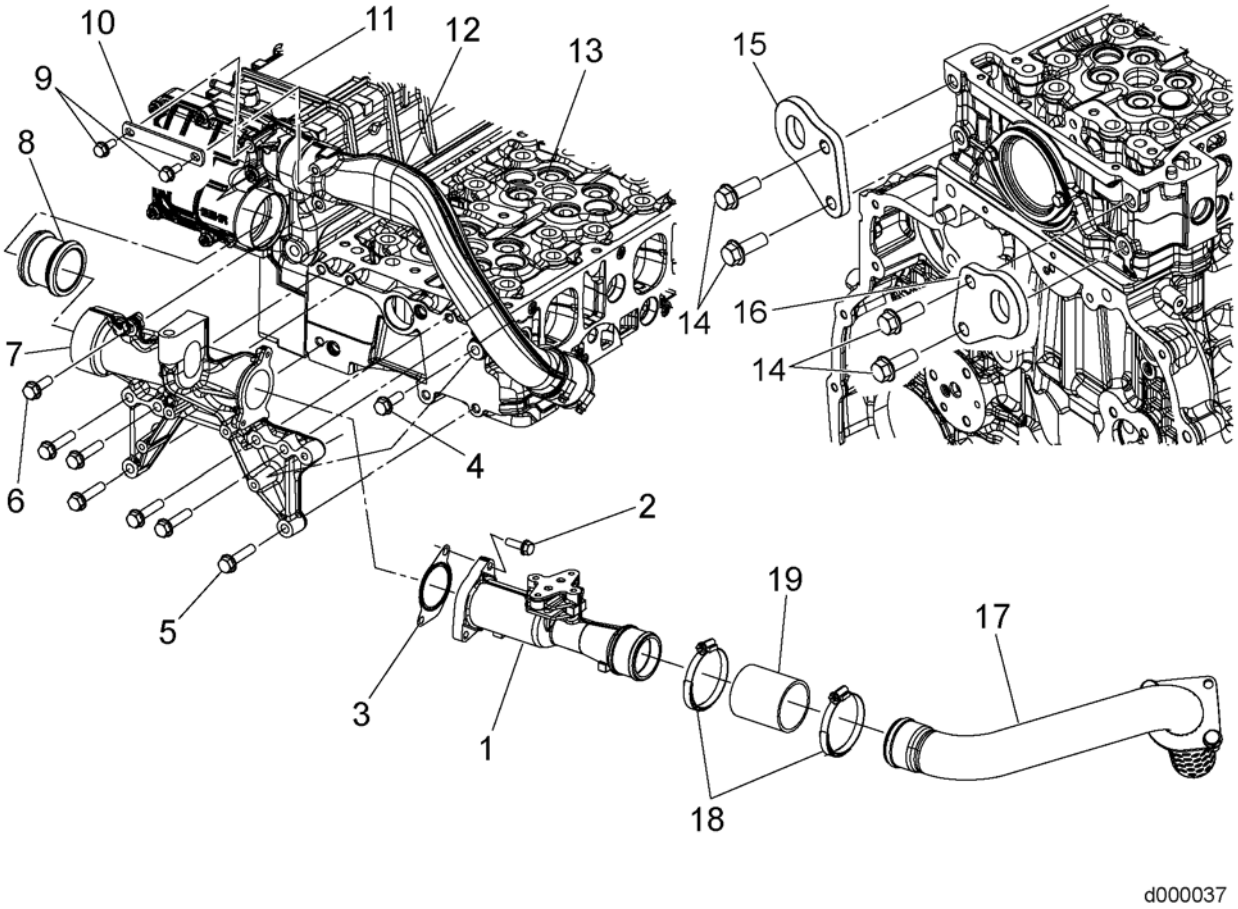

1. Venturi
2. Bolt
3. Gasket
4. Mounting Bolt
5. Bolt (6 qty.)
6. Bolt
7. Exhaust Gas Crossover Tube/Lifting Eye
8. Exhaust Gas Connecting Tube
9. Bolt
10. Plate
11. EGR Cooler / Water Manifold Assembly
12. Coolant Crossover Tube
13. Cylinder Head
14. Bolt
15. Rear Lifting Bracket — Left Side
16. Rear Lifting Bracket — Right Side
17. Mixer Pipe
18. Clamp
19. Connector Hose

Figure 38-1 DD13 EPA07 Lifting Bracket Locations

 Copyright © 2010 DETROIT DIESEL CORPORATION

https://truckmanualshub.com/

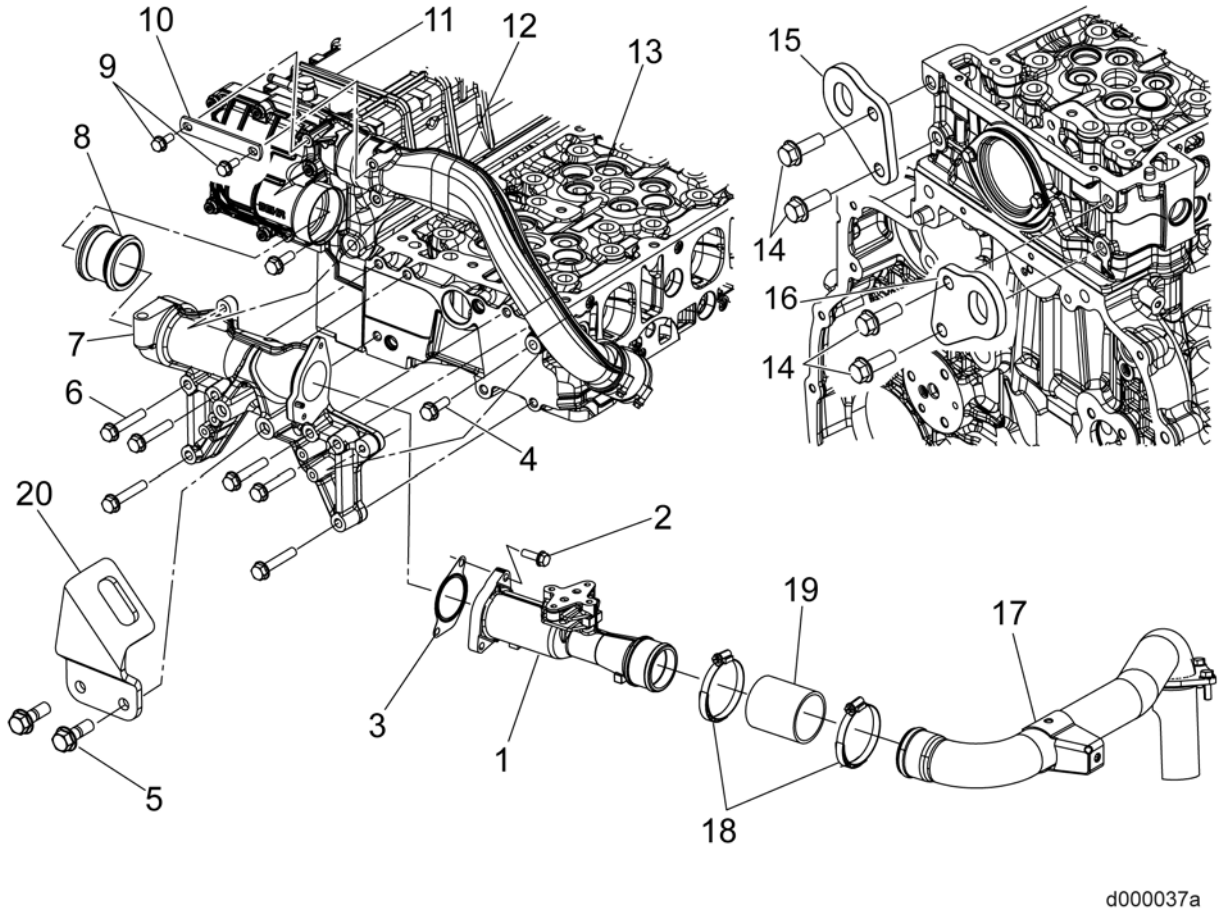

1. Venturi
2. Bolt
3. Gasket
4. Mounting Bolt
5. Bolt
6. Bolt (6 qty.)
7. Exhaust Gas Crossover Tube
8. Exhaust Gas Connecting Tube
9. Bolt
10. Plate
11. EGR Cooler / Water Manifold Assembly
12. Coolant Crossover Tube
13. Cylinder Head
14. Bolt
15. Rear Lifting Bracket — Left Side
16. Rear Lifting Bracket — Right Side
17. Mixer Pipe
18. Clamp
19. Connector Hose
20. Lifting Bracket

Figure 38-2 DD13 EPA10 Lifting Bracket Locations

All information subject to change without notice.
DDC-SVC-MAN-0081 2010 Copyright © 2010 DETROIT DIESEL CORPORATION

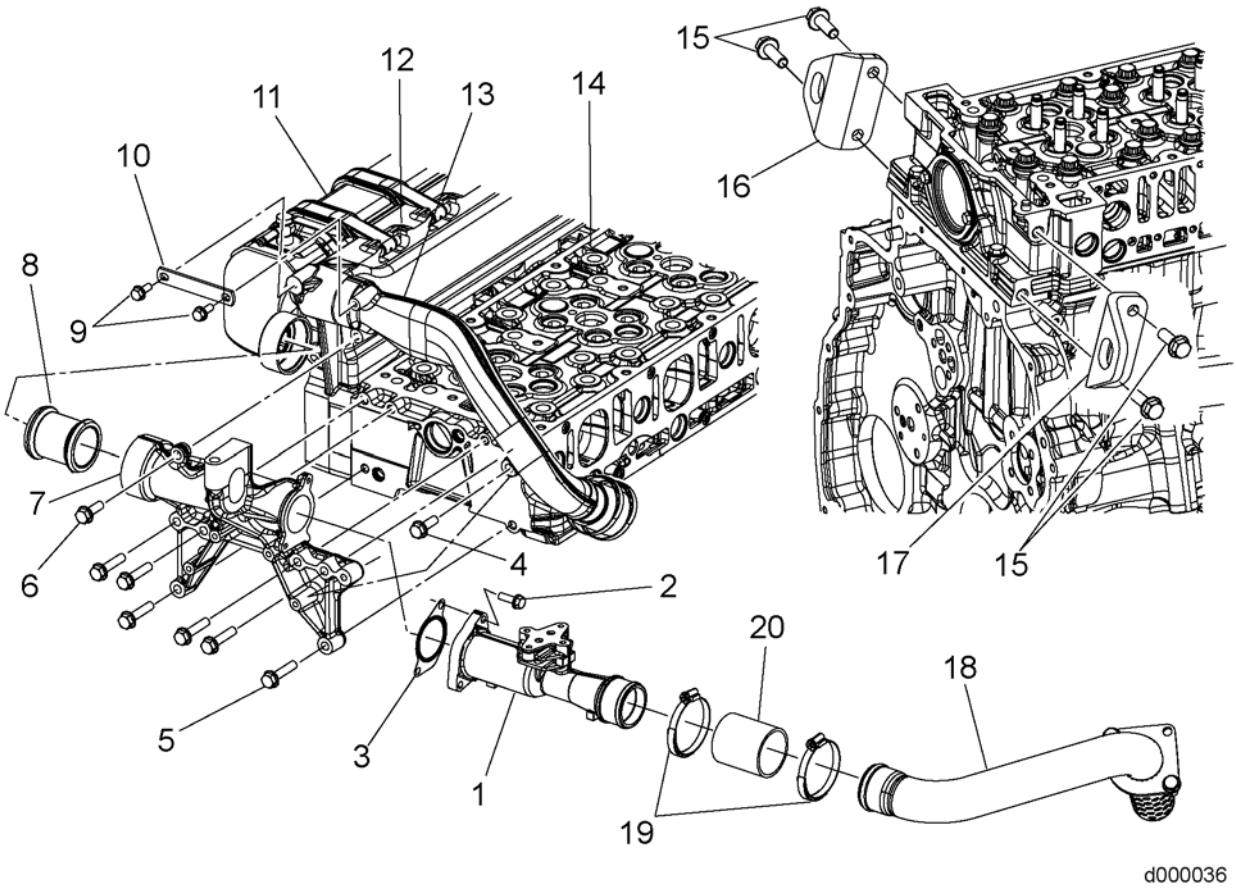

1. Venturi
2. Bolt
3. Gasket
4. Bolt
5. Bolt (6 qty.)
6. Bolt
7. Exhaust Gas Crossover Tube/Lifting Eye
8. Exhaust Gas Connector Tube
9. Bolt
10. Plate
11. Exhaust Gas Recirculation Cooler
12. Water Manifold
13. Coolant Crossover Tube
14. Cylinder Head
15. Bolt
16. Rear Lifter Bracket — Left Side
17. Rear Lifter Bracket — Right Side
18. Mixer Pipe
19. Clamp
20. Connector Hose

Figure 38-3 DD15 EPA07 Lifting Bracket Location

 Copyright © 2010 DETROIT DIESEL CORPORATION

https://truckmanualshub.com/

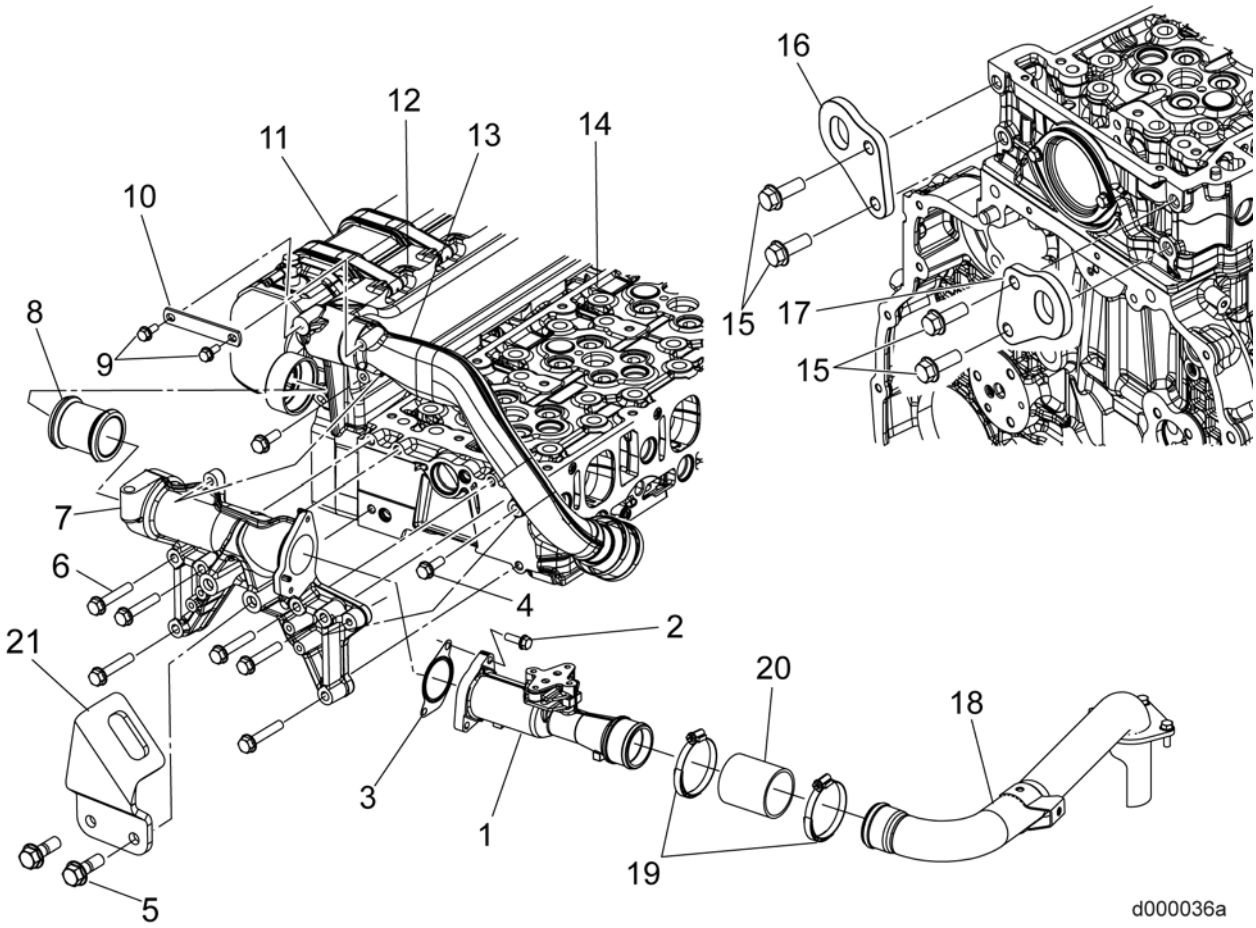

1. Venturi
2. Bolt
3. Gasket
4. Bolt
5. Bolt
6. Bolt (6 qty.)
7. Exhaust Gas Crossover Tube
8. Exhaust Gas Connector Tube
9. Bolt
10. Plate
11. Exhaust Gas Recirculation Cooler
12. Water Manifold
13. Coolant Crossover Tube
14. Cylinder Head
15. Bolt
16. Rear Lifter Bracket — Left Side
17. Rear Lifter Bracket — Right Side
18. Mixer Pipe
19. Clamp
20. Connector Hose
21. Lifter Bracket

Figure 38-4 DD15 EPA10 Lifting Bracket Location

All information subject to change without notice.
DDC-SVC-MAN-0081 2010 Copyright © 2010 DETROIT DIESEL CORPORATION

https://truckmanualshub.com/

CAUTION:

To avoid injury from a falling engine, do not use a damaged lifter bracket when lifting the engine.

CAUTION:

To avoid injury from a falling engine, ensure the engine is securely attached to the engine overhaul stand before releasing the lifting sling.

 Copyright © 2010 DETROIT DIESEL CORPORATION

https://truckmanualshub.com/

38.2 REMOVAL OF THE FRONT ENGINE LIFTER BRACKET WITHOUT FRONT ENGINE POWER TAKE-OFF

For EPA10 engines, remove as follows:

1. Remove the two bolts (1) from the front engine lifter bracket.

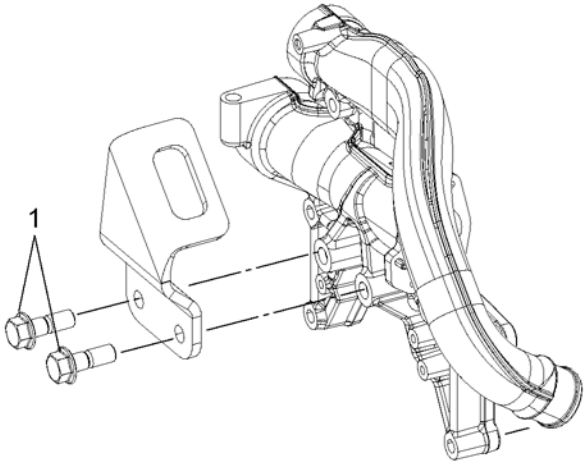

d140249

2. Remove the front engine lifter bracket.

All information subject to change without notice.
DDC-SVC-MAN-0081 2010 Copyright © 2010 DETROIT DIESEL CORPORATION

https://truckmanualshub.com/

38.3 REMOVAL OF THE FRONT ENGINE LIFTER BRACKET WITH FRONT ENGINE POWER TAKE-OFF

For EPA07 engines, remove as follows:

1. Loosen the two hose clamps on the venturi to mixer pipe hose.
2. Slide the connector hose fully on the mixer pipe. If hose is cut, torn, or cracked, then remove and discard it.
3. Remove the two bolts attaching the venturi to the exhaust gas crossover tube/lifting eye.
4. Remove the six bolts attaching the exhaust gas crossover tube/lifting eye to the cylinder head.
5. Remove the bolt attaching the exhaust gas crossover tube/lifting eye to the coolant crossover tube.
6. Remove the bolt attaching the coolant crossover tube to the exhaust gas crossover tube/lifting eye.
7. Slide the exhaust gas crossover tube/lifting eye off the exhaust gas connector tube and remove from engine.
8. Remove the exhaust gas connector tube from the EGR cooler.
   - □ Inspect the exhaust gas connector tube for cuts, tears, or cracks or other signs of damage.
   - □ If damage is found, replace connector tube.

 Copyright © 2010 DETROIT DIESEL CORPORATION

https://truckmanualshub.com/

38.4 REMOVAL OF THE REAR ENGINE LIFTER BRACKETS

Remove as follows:

1. Remove the bolts securing the lifter brackets to the engine.
2. Remove lifter bracket.

All information subject to change without notice.
DDC-SVC-MAN-0081 2010 Copyright © 2010 DETROIT DIESEL CORPORATION

https://truckmanualshub.com/

38.5 INSPECTION OF THE ENGINE LIFTER BRACKETS

Inspect the lifter brackets for cracks, bending, or other damage. Replace the bracket if any of these conditions exist.

 Copyright © 2010 DETROIT DIESEL CORPORATION

https://truckmanualshub.com/

38.6 INSTALLATION OF THE REAR ENGINE LIFTER BRACKETS

Install the rear lifter brackets as follows:

1. Install the two rear lifter brackets with four bolts to the cylinder head.
2. Torque the bolts to 180 N·m (132 lb·ft).

All information subject to change without notice.
DDC-SVC-MAN-0081 2010 Copyright © 2010 DETROIT DIESEL CORPORATION

https://truckmanualshub.com/

38.7 INSTALLATION OF THE FRONT ENGINE LIFTER BRACKET WITHOUT FRONT ENGINE POWER TAKE-OFF

For EPA10 engines, install as follows:

1. Install the front engine lifter bracket to the engine.
2. Install the two bolts. Torque to 160 N·m (110 lb·ft).

 Copyright © 2010 DETROIT DIESEL CORPORATION

https://truckmanualshub.com/

38.8 INSTALLATION OF THE FRONT ENGINE LIFTER BRACKET WITH FRONT ENGINE POWER TAKE-OFF

For EPA07 engines, install as follows:

1. Install a new EGR connector tube, if needed, onto EGR cooler and install EGR exhaust gas crossover tube/lifting eye to cylinder head.
2. Loosely install six bolts to exhaust gas crossover tube/lifting eye.
3. Install bolt attaching the exhaust gas crossover tube/lifting eye to the coolant crossover tube. Torque to 30 N·m (22 lb·ft).
4. Install bolt attaching the coolant crossover tube to the exhaust gas crossover tube/lifting eye. Torque to 30 N·m (22 lb·ft).
5. Tighten six exhaust gas crossover tube/lifting eye bolts to cylinder head. Torque to 60 N·m (44 lb·ft).
6. Slide mixer pipe onto hose with soap and water for ease of installation.
7. Install venturi to exhaust gas crossover tube/lifting eye with a new gasket and two bolts; torque bolts to 30 N·m (22 lb·ft).
8. Slide hose onto venturi using soap and water for ease of installation.
9. Install two clamps onto hose and tighten.

All information subject to change without notice.
DDC-SVC-MAN-0081 2010 Copyright © 2010 DETROIT DIESEL CORPORATION

https://truckmanualshub.com/

39 BELT DRIVE TENSIONER SYSTEM

Section **Page**

39.1 DESCRIPTION AND OPERATION OF BELT DRIVE TENSIONER AND RELATED PARTS 39-3
39.2 REMOVAL OF THE BELT TENSIONER 39-5
39.3 INSTALLATION OF THE BELT TENSIONER 39-6
39.4 REMOVAL OF THE IDLER PULLEY AND IDLER PULLEY BRACKET .. 39-7
39.5 INSTALLATION OF THE IDLER PULLEY AND IDLER PULLEY BRACKET 39-8
39.6 REMOVAL OF NON-BRACKETED IDLER PULLEY 39-9
39.7 INSTALLATION OF NON-BRACKETED IDLER PULLEY 39-10
39.8 REMOVAL OF THE ACCESSORY MOUNTING BRACKET 39-11
39.9 INSTALLATION OF THE ACCESSORY MOUNTING BRACKET 39-12

https://truckmanualshub.com/

All information subject to change without notice.
DDC-SVC-MAN-0081 2010 Copyright © 2010 DETROIT DIESEL CORPORATION

https://truckmanualshub.com/

39.1 DESCRIPTION AND OPERATION OF BELT DRIVE TENSIONER AND RELATED PARTS

The engine uses two poly-V-belts. Since this type of belt is very flexible, a number of major assemblies can be driven by one poly-V-belt. The alternator, refrigerant compressor, and coolant pump are driven by one eight-ribbed poly-V-belt. The fan clutch and the engine fan are driven by one ten-ribbed poly-V-belt.

The belt tensioners are firmly bolted onto the accessory bracket. The tensioning arms with tensioner pulleys are turned counterclockwise by the force of the springs to provide the required tension in the belts.

 Copyright © 2010 DETROIT DIESEL CORPORATION

https://truckmanualshub.com/

There is a square hole in each tensioning arm to install a 1/2 in socket tool for removal and installation of the poly-V-belts. The outer poly-V-belt must be removed before removing the inner poly-V-belt.

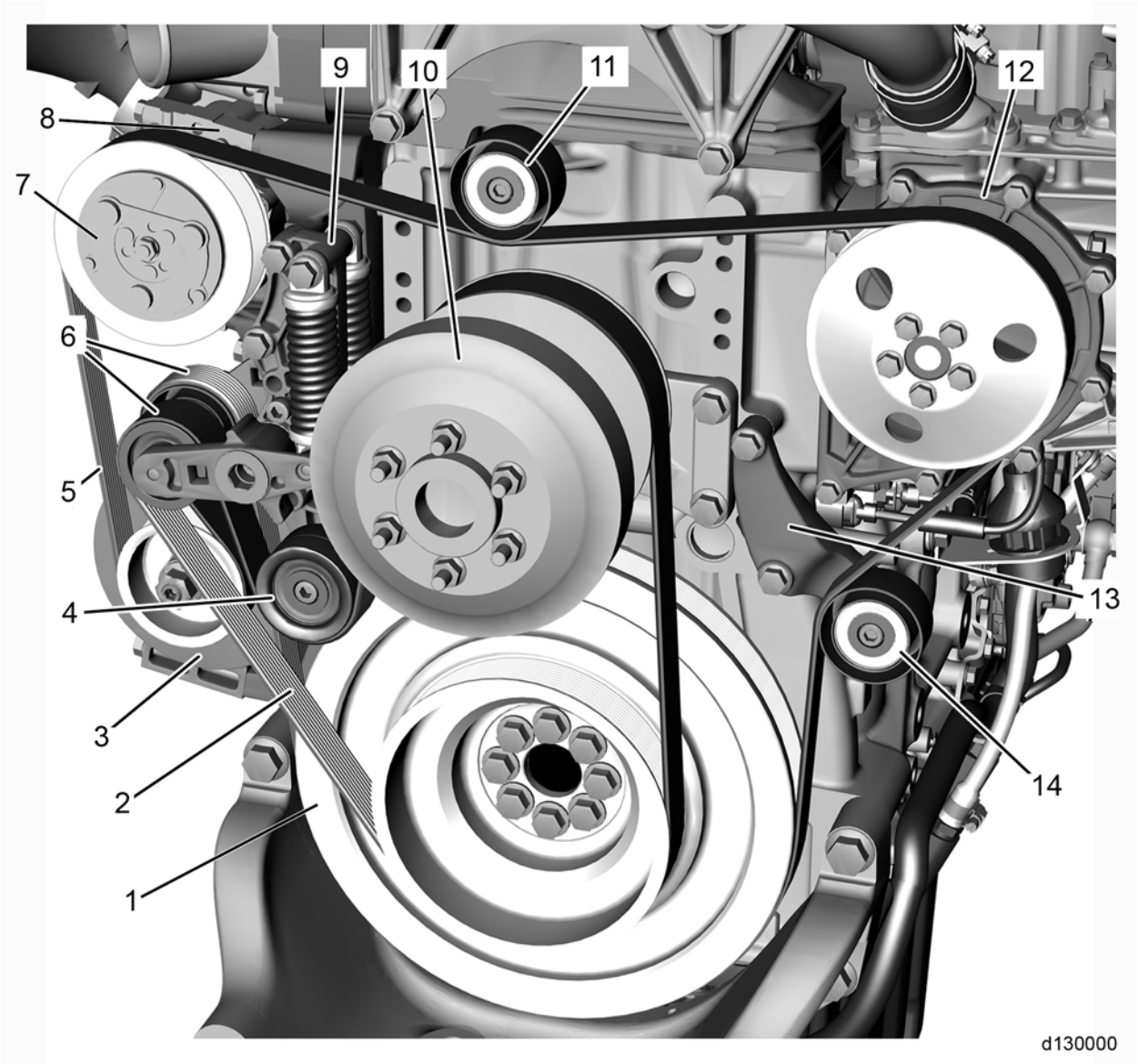

1. Crankcase Damper
2. Poly-V-Belt for the Fan
3. Alternator
4. Pulley
5. Poly-V-Belt for Alternator, Refrigerant Compressor and Coolant Pump
6. Tensioner Pulley
7. Refrigerant Compressor
8. Accessory Mounting Bracket
9. Belt Tensioner
10. Fan Clutch
11. Pulley and Spacer
12. Water Pump
13. Idler Pulley Bracket
14. Idler Pulley

All information subject to change without notice.
DDC-SVC-MAN-0081 2010 Copyright © 2010 DETROIT DIESEL CORPORATION

https://truckmanualshub.com/

39.2 REMOVAL OF THE BELT TENSIONER

Remove as follows:

1. Remove the two poly-V-belts. Refer to section 40.1.
2. Remove the three bolts from the tensioner.
3. Remove the tensioner from the bracket.

 Copyright © 2010 DETROIT DIESEL CORPORATION

https://truckmanualshub.com/

39.3 INSTALLATION OF THE BELT TENSIONER

Install as follows:

1. Install the tensioner to the bracket.
2. Install the three bolts attaching the tensioner to the bracket. Torque to 60 N·m (44 lb·ft).
3. Install the two poly-V-belts. Refer to section 40.3.

All information subject to change without notice.
DDC-SVC-MAN-0081 2010 Copyright © 2010 DETROIT DIESEL CORPORATION

https://truckmanualshub.com/

39.4 REMOVAL OF THE IDLER PULLEY AND IDLER PULLEY BRACKET

Remove as follows:

1. Remove the two poly-V-belts. Refer to section 40.1.
2. Remove the idler pulley from the idler pulley bracket.
3. Remove the two bolts from the idler pulley bracket and remove the idler pulley bracket from the engine.

 Copyright © 2010 DETROIT DIESEL CORPORATION

https://truckmanualshub.com/

39.5 INSTALLATION OF THE IDLER PULLEY AND IDLER PULLEY BRACKET

Install as follows:

1. Install the idler pulley bracket to the engine.
2. Install the two bolts to the idler pulley bracket. Torque to 60 N·m (44 lb·ft).
3. Install the idler pulley to the idler pulley bracket. Torque to 60 N·m (44 lb·ft).
4. Install the two poly-V-belts. Refer to section 40.3.

All information subject to change without notice.
DDC-SVC-MAN-0081 2010 Copyright © 2010 DETROIT DIESEL CORPORATION

https://truckmanualshub.com/

39.6 REMOVAL OF NON-BRACKETED IDLER PULLEY

Remove as follows:

1. Remove the two poly-V-belts. Refer to section 40.1.
2. Remove the bolt from the idler pulley. Remove the idler pulley and spacer from the engine block.

 Copyright © 2010 DETROIT DIESEL CORPORATION

https://truckmanualshub.com/

39.7 INSTALLATION OF NON-BRACKETED IDLER PULLEY

Install as follows:

1. Insert bolt through idler pulley and spacer.
2. Install bolt to engine block. Torque to 60 N·m (44 lb·ft).
3. Install the two poly-V-belts. Refer to section 40.3.

All information subject to change without notice.
DDC-SVC-MAN-0081 2010 Copyright © 2010 DETROIT DIESEL CORPORATION

https://truckmanualshub.com/

39.8 REMOVAL OF THE ACCESSORY MOUNTING BRACKET

Remove as follows:

1. Remove the two poly-V-belts. Refer to section 40.1.
2. Remove the three bolts from the belt tensioner.
3. Remove the belt tensioner from the accessory mounting bracket.
4. Remove the air conditioner compressor. Refer to OEM procedures.
5. Remove the alternator. Refer to OEM procedures.
6. Remove the six bolts attaching the accessory mounting bracket to the engine.
7. Remove the accessory mounting bracket.

 Copyright © 2010 DETROIT DIESEL CORPORATION

https://truckmanualshub.com/

39.9 INSTALLATION OF THE ACCESSORY MOUNTING BRACKET

Install as follows:

1. Install the accessory mounting bracket to the engine.
2. Install the six bolts attaching the accessory mounting bracket to the engine. Torque to 60 N·m (44 lb·ft).
3. Install the alternator. Refer to OEM procedures.
4. Install the air conditioner compressor. Refer to OEM procedures.
5. Install the accessory mounting to the belt tensioner bracket.
6. Install the three bolts to the belt tensioner. Torque to 60 N·m (44 lb·ft).
7. Install the two poly-V-belts. Refer to section 40.3.

All information subject to change without notice.
DDC-SVC-MAN-0081 2010 Copyright © 2010 DETROIT DIESEL CORPORATION

https://truckmanualshub.com/

40 POLY-V-BELTS

Section **Page**

40.1 REMOVAL OF THE POLY-V-BELTS 40-3
40.2 INSPECTION OF THE POLY-V-BELTS 40-6
40.3 INSTALLATION OF THE POLY-V-BELTS 40-9

https://truckmanualshub.com/

All information subject to change without notice.
DDC-SVC-MAN-0081 2010 Copyright © 2010 DETROIT DIESEL CORPORATION

https://truckmanualshub.com/

40.1 REMOVAL OF THE POLY-V-BELTS

Remove as follows:

NOTICE:
Use a half-inch socket tool (with extension) is used. Do not use more than a 6 inch extension on the socket tool to reduce the danger of cracking the tensioner. Apply smooth pressure to tensioner. Jerking or sudden pressure could cause damage to tensioner.

NOTE:
Never pre-tension the non-grooved pulley idler arm before the grooved idler pulley arm is pre-tensioned.

NOTE:
Never turn the pulley idler arms clockwise.

NOTE:
When removing the poly-V-belts always remove the belt driving the fan first and then remove the belt driving the alternator, refrigerant compressor and coolant pump.

NOTE:
Do not use any type of cleaning solvent to the rubber parts on the tensioner.

1. Install a half-inch extension tool into the square hole (2) on the grooved pulley idler arm (1).

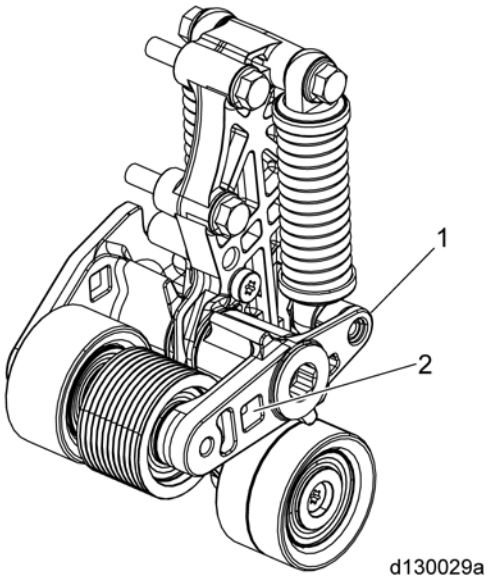

 Copyright © 2010 DETROIT DIESEL CORPORATION

https://truckmanualshub.com/

2. Turn the grooved pulley idler arm counterclockwise. Maximum allowable torque is 90-100 N·m (66-73 lb·ft).
3. Insert an M10x80 bolt (or equivalent pin), into the bracket hole (2) in the idler arm.

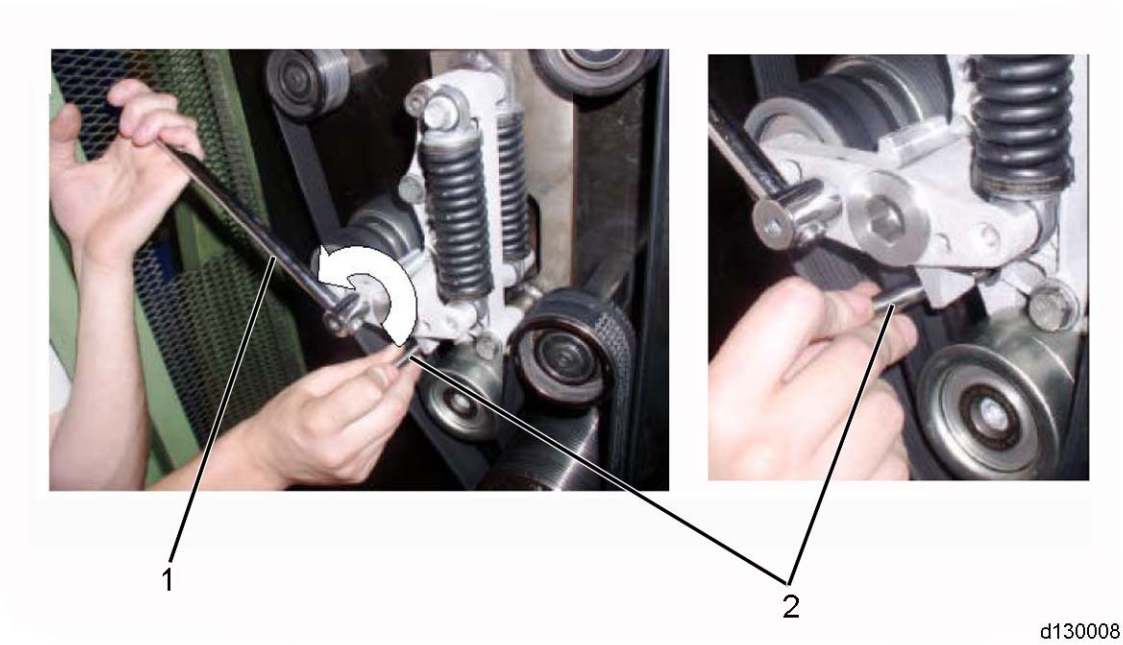

4. Release the idler arm. The grooved pulley idler arm is now locked in a pre-tensioned position.
5. Remove the belt.
6. Install a half-inch extension into the square hole (V) on the non-grooved pulley idler arm (1).
7. Turn the non-grooved pulley idler arm counterclockwise. Maximum allowable torque is 90-100 N·m (66-73 lb·ft).

All information subject to change without notice.
DDC-SVC-MAN-0081 2010 Copyright © 2010 DETROIT DIESEL CORPORATION

https://truckmanualshub.com/

8. Insert an M10x80 bolt (or equivalent pin), into the bracket hole in the non-grooved pulley idler arm (2).

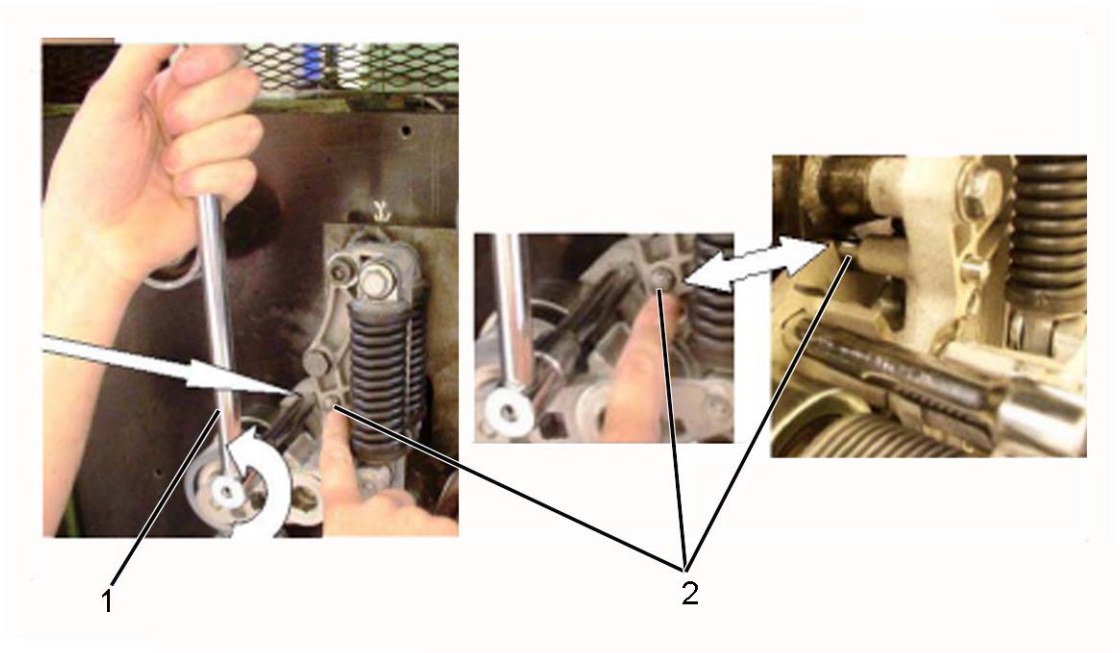

9. Release the idler arm. The non-grooved pulley idler arm is now locked in a pre-tensioned position.
10. Remove the belt from the pulleys, then remove the alternator and refrigerant compressor.

 Copyright © 2010 DETROIT DIESEL CORPORATION

https://truckmanualshub.com/

40.2 INSPECTION OF THE POLY-V-BELTS

Inspect as follows:

1. Inspect the belt contact surfaces for chips, flaking, cracks and discoloration.

ABRASION

d130019

CHUNK-OUT

d130020

IMPROPER INSTALL

d130021

CRACKING

d130022

PILLING

d130023

UNEVEN RIB WEAR

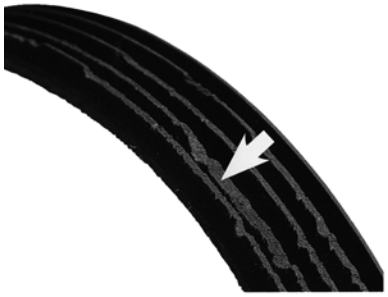

d130024

All information subject to change without notice.
DDC-SVC-MAN-0081 2010 Copyright © 2010 DETROIT DIESEL CORPORATION

MISALIGNMENT

d130025

GRAVEL PENETRATION

d130026

2. Inspect the bearings in the idler pulleys and accessories by rotating the pulleys to look for bearing slop or choppy feeling bearings.

NOTE:
Inspect the area for oil leaking at the spring area. Change the assembly if oil is present.

3. Inspect the springs on the tensioner. If the rubber is damaged or if the spring is damaged, change the assembly.
4. Inspect the pulleys for damage and excessive wear. If pulleys or the belts are damaged, change the damaged pulley and the belt.

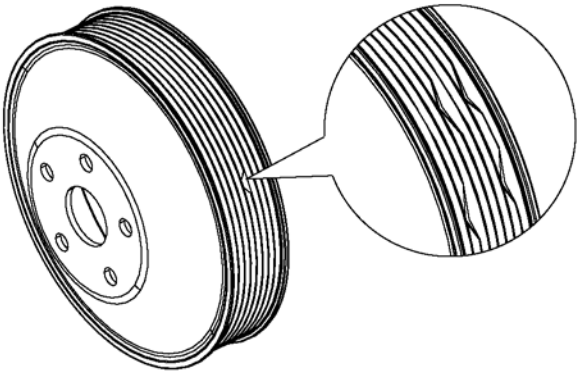

d130027

 Copyright © 2010 DETROIT DIESEL CORPORATION

https://truckmanualshub.com/

5. Check wear pattern on all idler pulleys.
   [a] If wear pattern location is incorrect (A), change the pulley and bracket.
   [b] If wear pattern location is correct (B), idler and bracket can be reused.

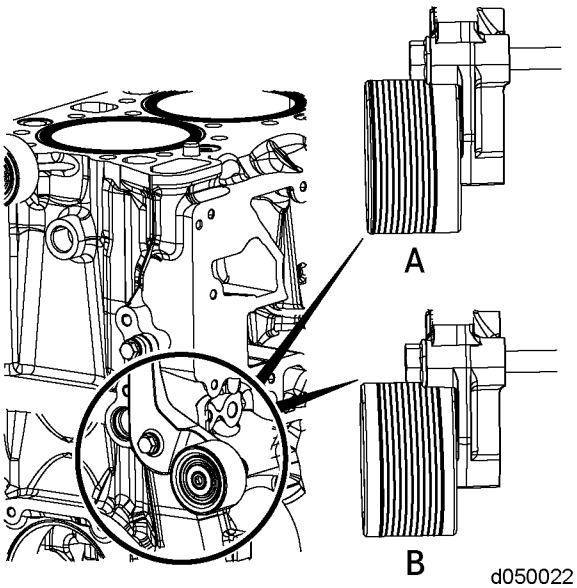

All information subject to change without notice.
DDC-SVC-MAN-0081 2010 Copyright © 2010 DETROIT DIESEL CORPORATION

https://truckmanualshub.com/

40.3 INSTALLATION OF THE POLY-V-BELTS

Install as follows:

NOTE:
If tensioners are pre-tensioned, start at step 9.

1. Install a half-inch extension into the square hole on the grooved pulley idler arm.
2. Turn the grooved pulley idler arm counterclockwise. Maximum allowable torque is 90-100 N·m (66-73 lb·ft).
3. Insert an M10x80 bolt (or equivalent pin), into the bracket hole in the grooved pulley idler arm.
4. Release the idler arm. The grooved pulley idler arm is now locked in a pre-tensioned position.
5. Install a half-inch extension into the square hole in the non-grooved pulley idler arm bracket.
6. Turn the non-grooved pulley idler arm counterclockwise. Maximum allowable torque is 90-100 N·m (66-73 lb·ft).
7. Insert an M10x80 bolt (or equivalent pin), into the bracket hole on the non-grooved pulley idler arm.
8. Release the idler arm. The non-grooved pulley idler arm is now locked in a pre-tensioned position.
9. Install the poly-V-belts onto the pulleys.
10. Ensure the belts are properly installed on the pulleys.
11. Install a half-inch extension into the square hole (V) on the non-grooved idler arm.
12. Turn the non-grooved pulley idler arm counterclockwise until the pin holding the idler arm can be removed. Remove the pin.
13. Install a half-inch extension into the square hole in the grooved pulley idler arm.
14. Turn the grooved pulley idler arm counterclockwise until the pin holding the grooved pulley idler arm can be removed. Remove the pin.

All information subject to change without notice.
DDC-SVC-MAN-0081 2010 Copyright © 2010 DETROIT DIESEL CORPORATION

https://truckmanualshub.com/

All information subject to change without notice.
DDC-SVC-MAN-0081 2010 Copyright © 2010 DETROIT DIESEL CORPORATION

https://truckmanualshub.com/

41 AIR COMPRESSOR

Section **Page**

41.1 DESCRIPTION AND OPERATION OF THE AIR COMPRESSOR 41-3
41.2 REMOVAL OF THE AIR COMPRESSOR 41-5
41.3 INSPECTION OF THE AIR COMPRESSOR 41-6
41.4 INSTALLATION OF THE AIR COMPRESSOR 41-8

https://truckmanualshub.com/

All information subject to change without notice.
DDC-SVC-MAN-0081 2010 Copyright © 2010 DETROIT DIESEL CORPORATION

41.1 DESCRIPTION AND OPERATION OF THE AIR COMPRESSOR

The air compressor is mounted to the rear of the cylinder block on the left side of the engine.

The engine provides a continuous supply of oil to the compressor. Oil is routed from the oil passage in the gear case to the compressor oil inlet. The air compressor is designed to permit direct installation of the compressor onto the gear case.

Detroit Diesel offers two sizes of air compressors. The single cylinder has a displacement 360 cm^3 and the twin cylinder has a displacement 650 cm^3. Both compressors are installed with an Energy Saving System (ESS) to save fuel.

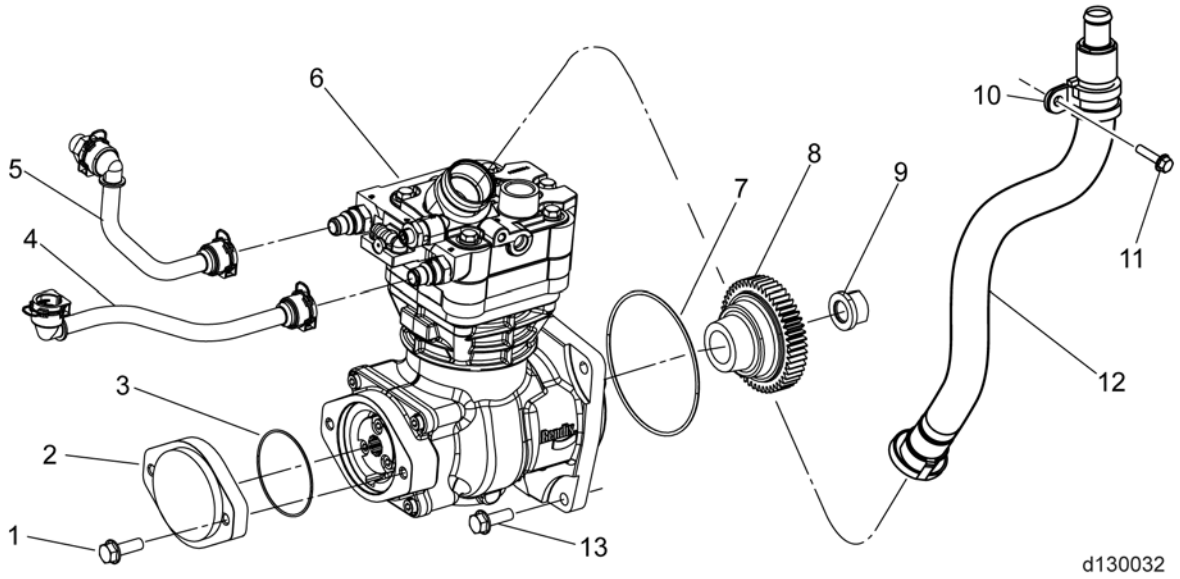

1. Bolt
2. Cover
3. O-ring
4. Coolant Return Line Assembly
5. Coolant Inlet Line Assembly
6. Single Cylinder Air Compressor
7. O-ring
8. Gear
9. Nut
10. Clamp (OEM provided)
11. Bolt (OEM provided)
12. Intake Line (OEM provided)
13. Bolt

Figure 41-1 Single Cylinder Air Compressor and Related Parts

 Copyright © 2010 DETROIT DIESEL CORPORATION

https://truckmanualshub.com/

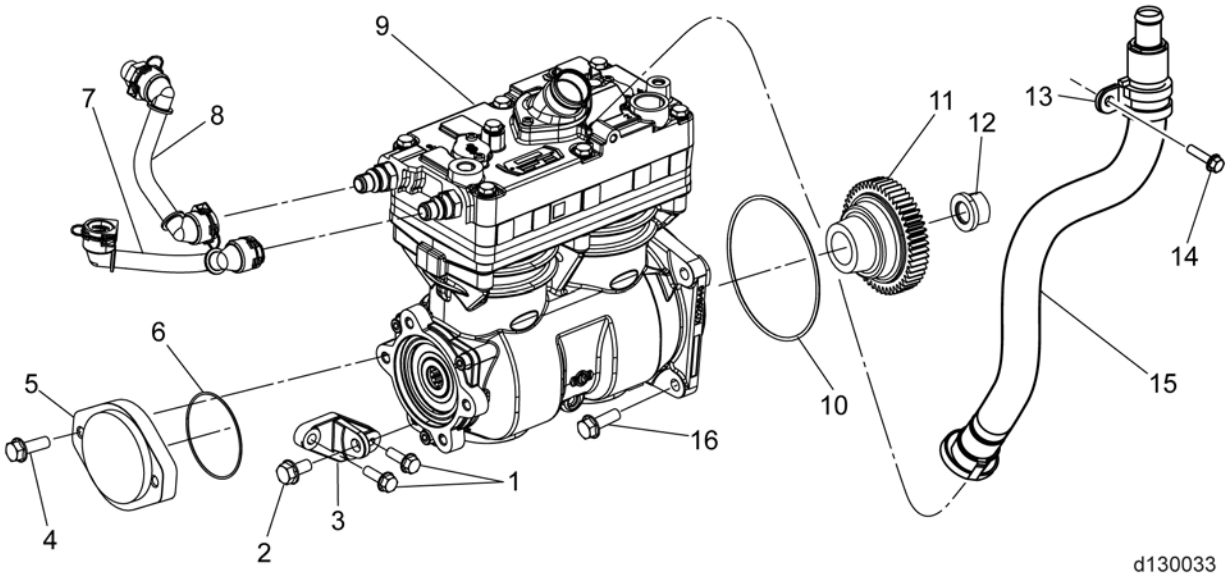

1. Bolt
2. Bolt
3. Bracket
4. Bolt
5. Cover
6. O-ring
7. Coolant Return Line Assembly
8. Coolant Inlet Line Assembly
9. Two Cylinder Air Compressor
10. O-ring
11. Gear
12. Nut
13. Clamp (OEM provided)
14. Bolt (OEM provided)
15. Intake Line (OEM provided)
16. Bolt

Figure 41-2 Two Cylinder Air Compressor and Related Parts

All information subject to change without notice.
DDC-SVC-MAN-0081 2010 Copyright © 2010 DETROIT DIESEL CORPORATION

https://truckmanualshub.com/

41.2 REMOVAL OF THE AIR COMPRESSOR

1. Disconnect the batteries.
2. Drain the coolant from radiator. Refer to OEM procedures.

NOTICE:
Ensure the air pressure has been released from the air lines before removing the lines from the air compressor.

3. Relieve air pressure from tanks.
4. Disconnect the air lines to and from the compressor.
5. Disconnect and drain the coolant supply and return lines at the air compressor.
6. Remove the four bolts that secure the air compressor to the cylinder block.

NOTICE:
Do not contact the drive gear to the engine block during removal; damage to the seal surface will cause oil leaks.

7. Slide the air compressor forward and remove from engine.
8. Discard air compressor gasket.

 Copyright © 2010 DETROIT DIESEL CORPORATION

https://truckmanualshub.com/

41.3 INSPECTION OF THE AIR COMPRESSOR

Troubleshooting information for the Bendix® air compressor can be found on the Bendix web site at http:\\www.bendix.com or call the Bendix Technical Assistance Center at 1-800-AIR-BRAKE, (1-800-247-2725).

Check as follows:

1. Check for oil present in the air dryer or air tanks.
   [a] If no oil is present, check for a worn or damaged valve guide/seal or cylinder kit. Refer to section 14.13.
   [b] If oil is present, go to step 2.
2. Perform a crankcase pressure test and record the test results using the following test procedure, refer to section .

Crankcase pressure — Full load, maximum KPa (in. H_2O) operating limits @ Rated speed = 1.25 KPa (5.0 in. H_2O column)

3. Disconnect the air outlet line (2) from the air compressor.

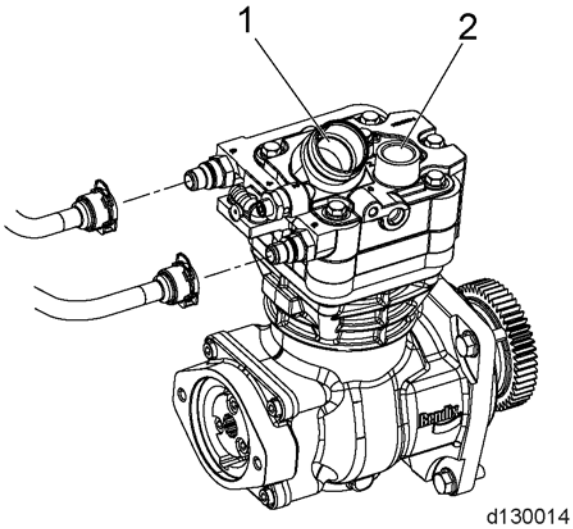

4. Repeat the first step and record the test results.
5. Compare the results of test one with test two.
   [a] If the engine crankcase pressure remained the same, check for a defective turbocharger. Refer to section .
   [b] If the engine crankcase pressure decreased, replace the air compressor. Refer to section 41.2.

All information subject to change without notice.
DDC-SVC-MAN-0081 2010 Copyright © 2010 DETROIT DIESEL CORPORATION

https://truckmanualshub.com/

6. Remove the air compressor from the engine. Refer to section 41.2.

CAUTION:

To avoid injury before starting and running the engine, ensure the vehicle is parked on a level surface, parking brake is set, and the wheels are blocked.

7. Start and run the engine.
8. Perform a crankcase pressure test. Refer to section .
   [a] If the engine crankcase pressure exceeds 1.25 kPa (5 in. H_2O), check for a defective turbocharger. Refer to section . Shut down the engine.
   [b] If the engine crankcase pressure is less than 1.25 kPa (5 in. H_2O), shut down the engine; no further troubleshooting is required.

 Copyright © 2010 DETROIT DIESEL CORPORATION

https://truckmanualshub.com/

41.4 INSTALLATION OF THE AIR COMPRESSOR

1. Clean all foreign material from the mating surfaces of the air compressor and the cylinder block.
2. Install a new O-ring on the air compressor hub and a new O-ring on the oil supply and then install the air compressor on the cylinder block. Torque the four bolts to 60 N·m (44 lb·ft).

NOTICE:
Ensure the correct bolt length is used when the air compressor is installed. If an incorrect bolt length (too long) is used, the cup plugs installed in the cylinder block can be pushed out into the gear train causing severe damage to the gear train. The correct bolt length is 35 mm (1.37 in).

NOTICE:
Ensure when the air compressor coolant lines are installed that there is an O-ring and an O-ring retainer installed on both ends of the coolant lines. Ensure that the air compressor retainer is installed on the coolant line and is pushed down to lock the lines onto the inlet and outlet ports to the cylinder block, fuel filter module and air compressor. A leak will occur if the lines are incorrectly installed and the coolant line retainer is not engaged in the locked position. If the O-ring or the coolant line retainers are missing, or removed, replace the coolant line.

3. Install the coolant supply and return lines to the air compressor.
4. Install the air lines to and from the air compressor. Refer to OEM specifications.
5. Fill the cooling system. Refer to OEM specifications.
6. Start the engine and check for leaks.

All information subject to change without notice.
DDC-SVC-MAN-0081 2010 Copyright © 2010 DETROIT DIESEL CORPORATION

https://truckmanualshub.com/

42 CYLINDER BLOCK

Section **Page**

42.1 DESCRIPTION AND OPERATION OF CYLINDER BLOCK AND RELATED PARTS 42-3
42.2 REMOVAL AND DISASSEMBLY OF ENGINE FROM THE VEHICLE 42-9
42.3 CLEANING THE CYLINDER BLOCK 42-12
42.4 REASSEMBLY AND INSTALLATION OF CYLINDER BLOCK 42-16

https://truckmanualshub.com/

All information subject to change without notice.
DDC-SVC-MAN-0081 2010 Copyright © 2010 DETROIT DIESEL CORPORATION

42.1 DESCRIPTION AND OPERATION OF CYLINDER BLOCK AND RELATED PARTS

The cylinder block is the basic engine structure, establishing and maintaining the alignment of all engine working parts. The cylinder block is made from an iron material. High strength and low noise are features of the cylinder block, and is a result of the vertical and horizontal reinforcements and the design of the oil return ducts.

The cylinder block lower collar design allows for a shorter distance between cylinders and a more compact design for the cylinder block. Each cylinder bore is sealed to a cylinder liner with two sealing rings: the upper sealing ring seals the upper coolant jacket to the cylinder block bore, and the lower sealing ring seals the lower coolant jacket to the cylinder block bore.

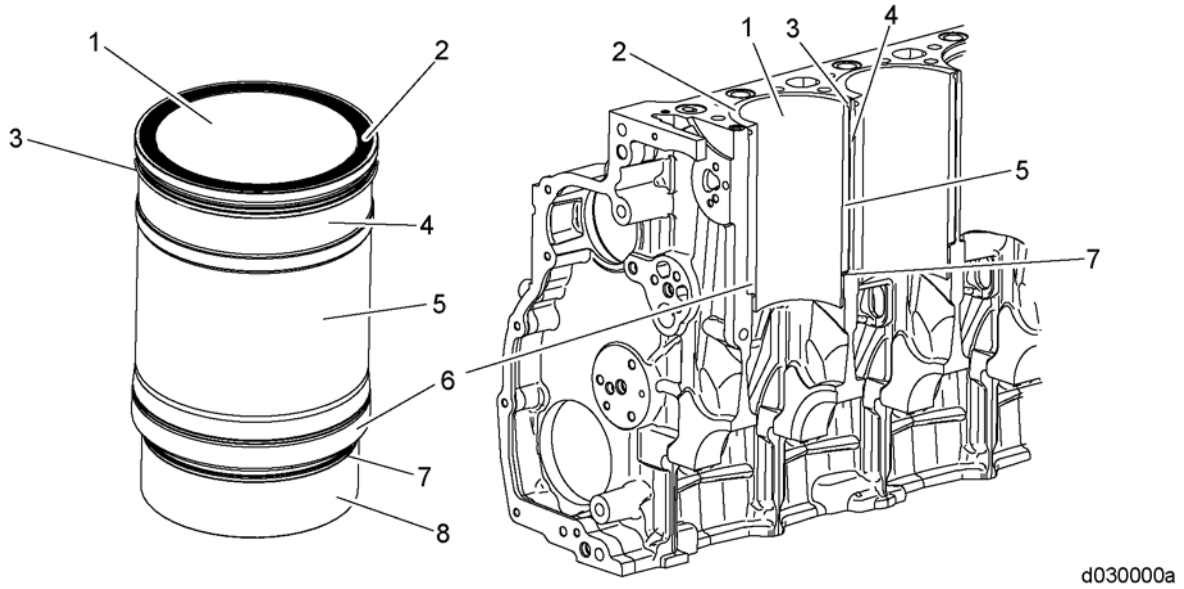

1. Cylinder Liner
2. Top of Cylinder Liner
3. Upper Sealing Ring
4. Upper Coolant Jacket
5. Lower Coolant Jacket
6. Lower Collar
7. Lower Sealing Ring
8. Bottom of Cylinder Liner

Figure 42-1 Cylinder Liner

 Copyright © 2010 DETROIT DIESEL CORPORATION

https://truckmanualshub.com/

The cylinder liners are designed as "bottom stop" cylinder liners which means that the cylinder liners are installed with a lower collar in the cylinder block. This design allows for a shorter distance between cylinders and a more compact design for the cylinder block. Each cylinder liner has two sealing rings: the upper sealing ring seals the upper coolant jacket to the cylinder block bore; the lower sealing ring seals the lower coolant jacket to the cylinder block bore.

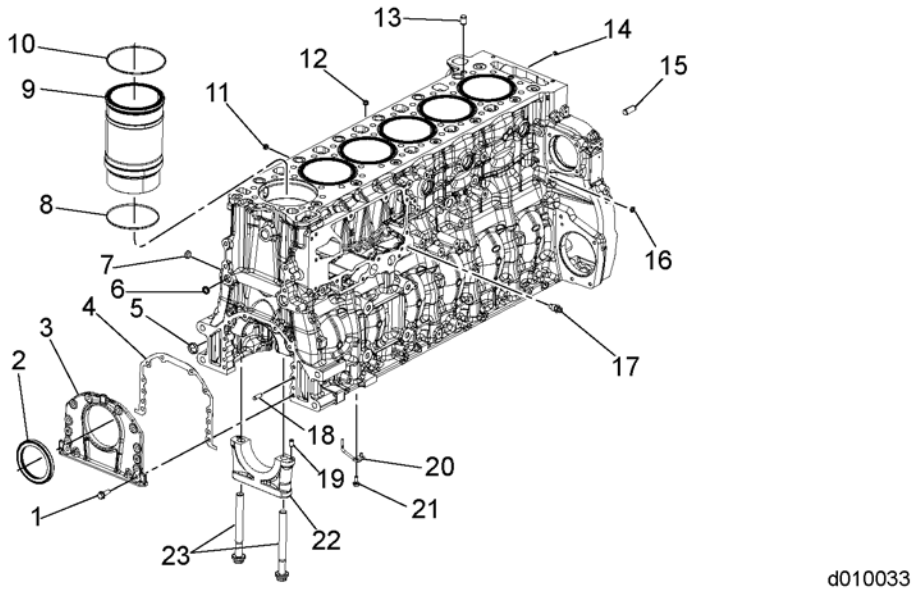

1. Bolt, Front Cover to Cylinder Block
2. Front Crankshaft Seal
3. Front Cover
4. Gasket, Front Cover to Cylinder Block
5. Expansion Plug, Front Oil Duct Intake
6. Expansion Plug, Front Oil Duct Outlet
7. Expansion Plug, Connector Front Oil Duct Outlet
8. Bottom Cylinder Liner Seal Ring
9. Cylinder Liner
10. Top Cylinder Liner Seal Ring
11. Expansion Plug, Connector Crankcase Ventilation
12. Plug
13. Dowel Pin
14. Expansion Plug, Cooling Water Duct
15. Pin
16. Expansion Plug
17. Coolant Drain Plug
18. Dowel Pin
19. Dowel Pin, Crankshaft Bearing Cap
20. Piston Oil Spray Nozzle
21. Bolt, Oil Spray Nozzle
22. Main Bearing Cap
23. Bolt, Crankshaft Bearing Cap to Cylinder Block.

Figure 42-2 Cylinder Block, Cylinder Liners and Related Parts

The cylinder block has 1.5 mm counterbores machined on top for the cylinder head to cylinder block sealing surface. The lubrication and coolant holes in the cylinder block supply the cylinder head with oil and coolant. This allows for a superior sealing pressure between the gasket, cylinder head and cylinder block.

The cylinder block uses replaceable, wet-type cylinder liners.

All information subject to change without notice.
DDC-SVC-MAN-0081 2010 Copyright © 2010 DETROIT DIESEL CORPORATION

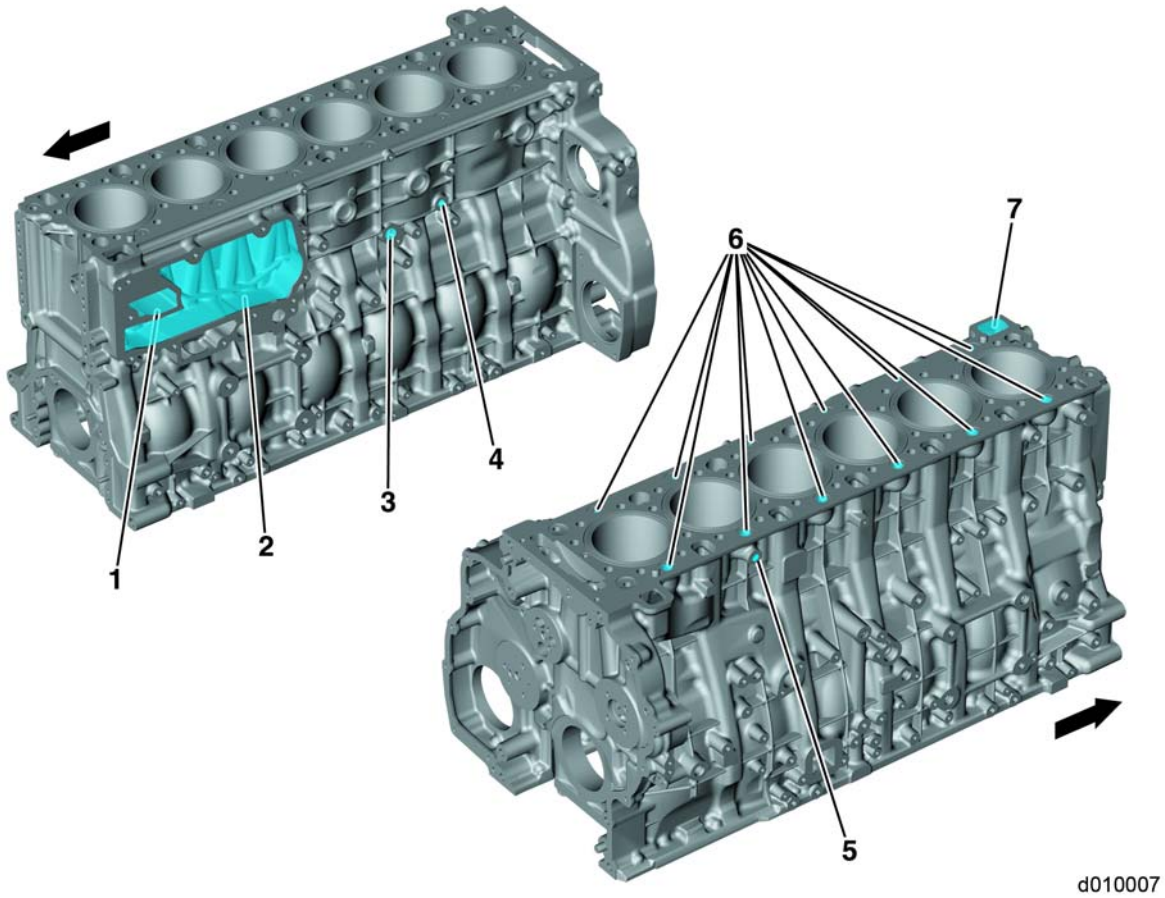

1. Coolant Return for Cylinder Head Coolant Manifold
2. Coolant Feed for Oil Water Heat Exchanger
3. Coolant Connection for Fuel Heat Exchanger
4. Coolant Connection for Air Compressor
5. Coolant Connection for EGR Cooler
6. Coolant Transfer Hole to Cylinder Head
7. Coolant Return from Cylinder Head

Figure 42-3 Cylinder Block

 Copyright © 2010 DETROIT DIESEL CORPORATION

https://truckmanualshub.com/

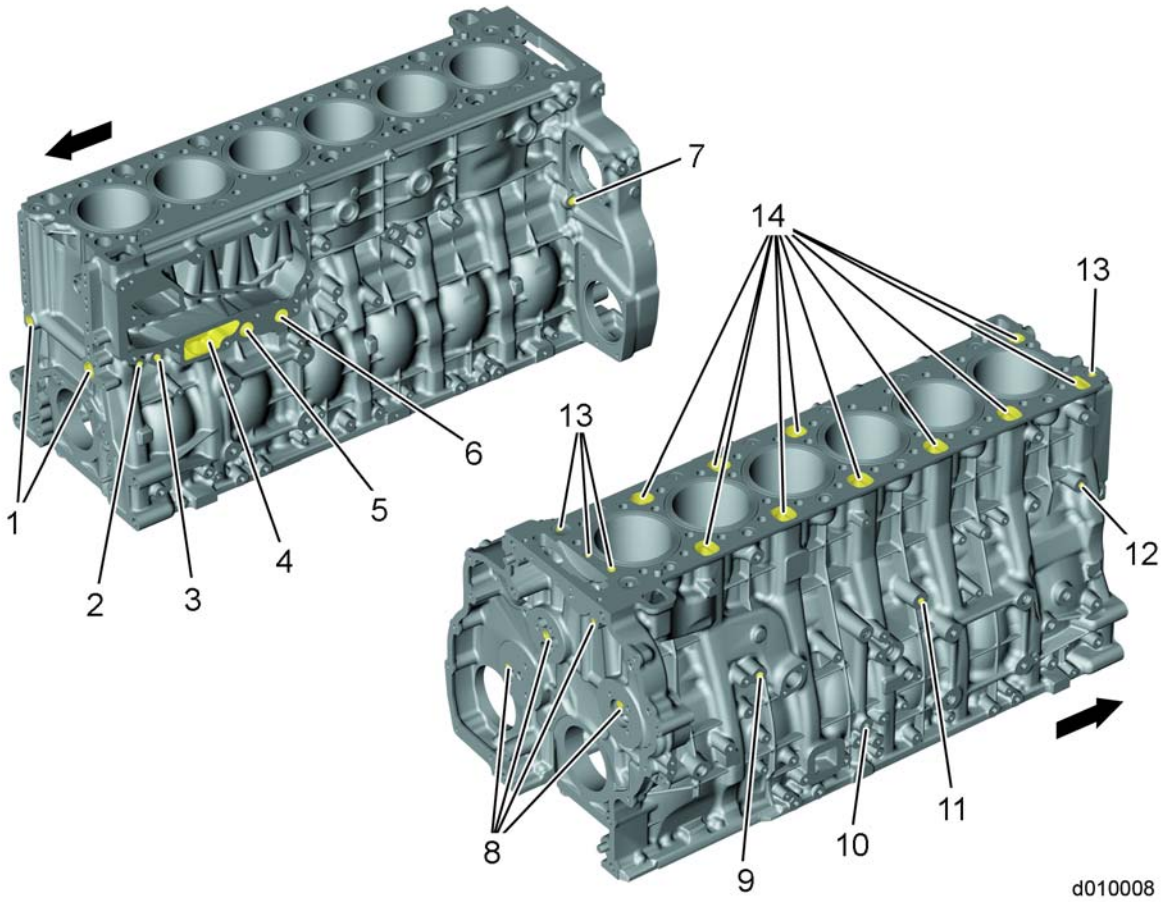

1. Oil Holes
2. Connection for Oil Pressure Sensor
3. Connection for Engine Oil Temperature Sensor
4. Oil Return for Oil Filter Change
5. Oil Return Connection from Oil Water Heat Exchanger
6. Oil Feed Connection to Oil Water Heat Exchanger
7. Oil Hole
8. Holes for Feed Gear Drive
9. Connection for Oil Feed to Axial Power Turbine
10. Oil Feed Connection for Cylinder Block Ventilation
11. Oil Feed Connection Turbocharger
12. Oil Hole
13. Oil Transfer Holes to the Cylinder Head
14. Oil Return from Cylinder Head

Figure 42-4 Cylinder Block

All information subject to change without notice.
DDC-SVC-MAN-0081 2010 Copyright © 2010 DETROIT DIESEL CORPORATION

https://truckmanualshub.com/

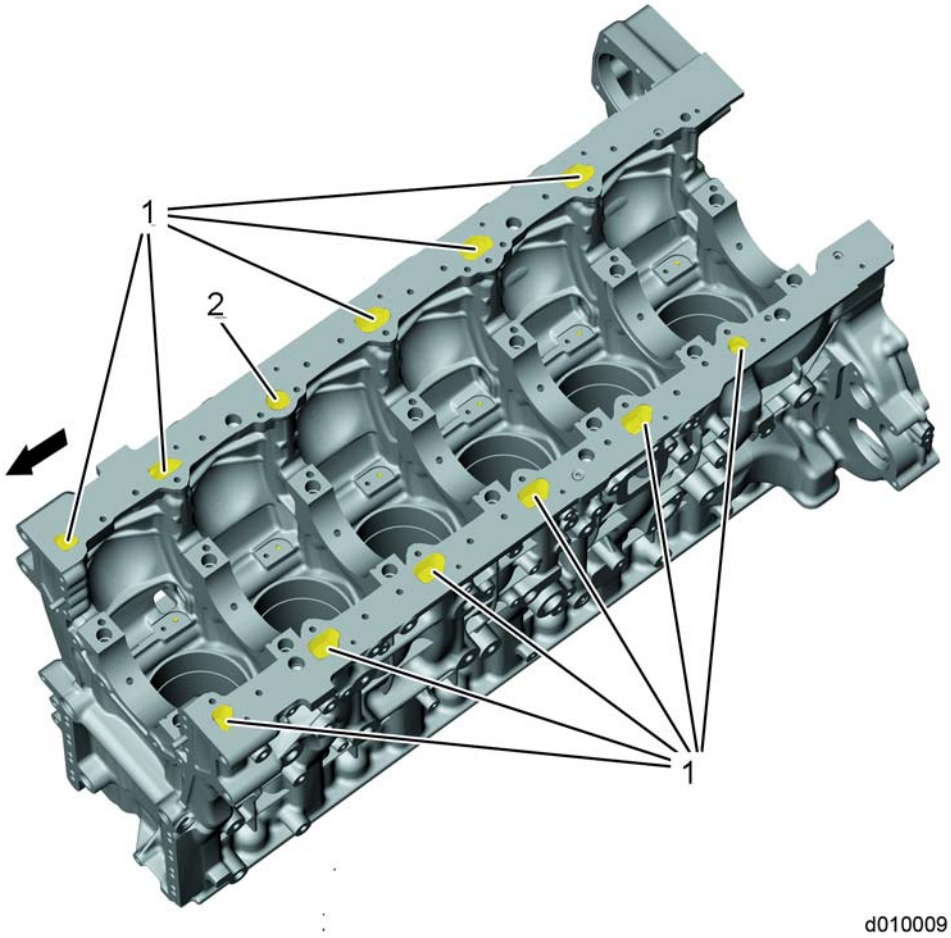

1. Oil Return to Oil Pan
2. Oil Feed Bore

Figure 42-5 Bottom of Cylinder Block Oil Hole Location

 Copyright © 2010 DETROIT DIESEL CORPORATION

https://truckmanualshub.com/

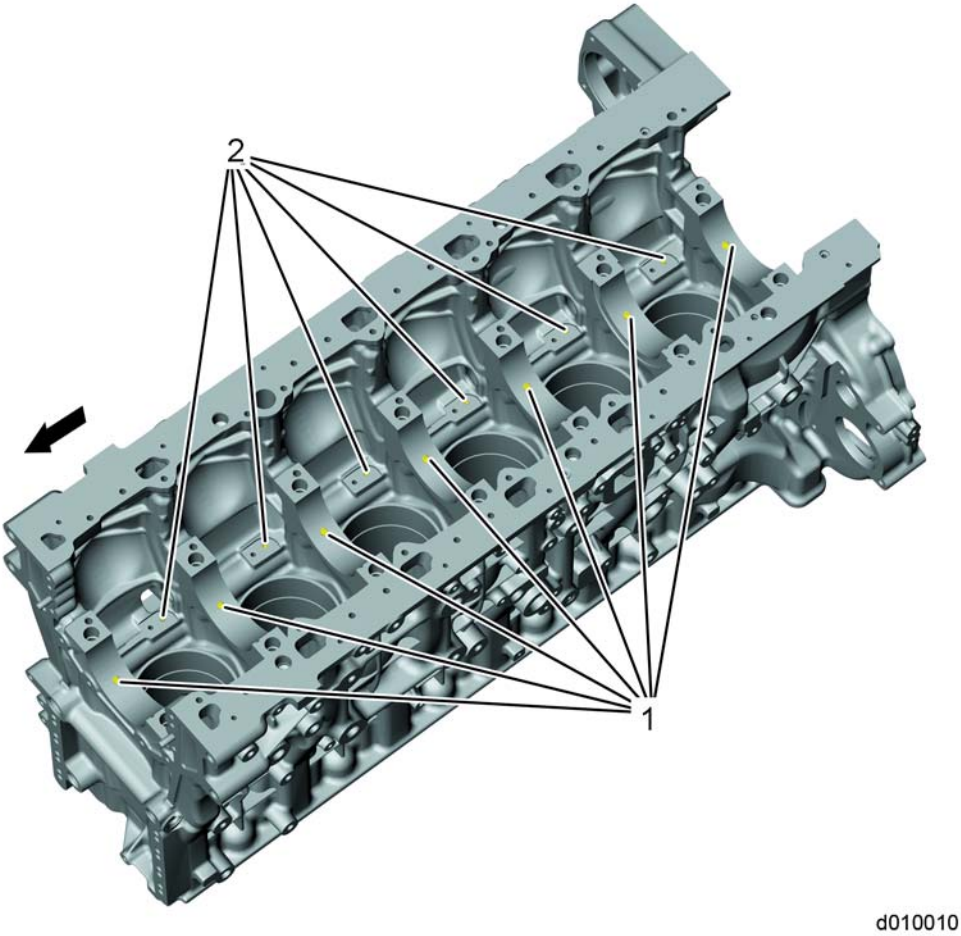

1. Oil Feed Hole for Main Bearing and Connecting Rod Bearing
2. Oil Feed Hole for Oil Spray Nozzles

Figure 42-6 Bottom of Cylinder Block Oil Hole Location

All information subject to change without notice.
DDC-SVC-MAN-0081 2010 Copyright © 2010 DETROIT DIESEL CORPORATION

https://truckmanualshub.com/

42.2 REMOVAL AND DISASSEMBLY OF ENGINE FROM THE VEHICLE

Before mounting an engine on an overhaul stand, it must be disconnected from the transmission. Details for removing an engine will vary from one application to another. However, the following steps will be necessary, regardless of application:

1. Steam clean the engine.
2. Disconnect the battery cable(s) from the battery(s).
3. Drain the cooling system. Refer to OEM procedures.
4. Drain the lubricating oil.
5. Disconnect the lines on the fuel filter module from the fuel tank.
6. Remove the air cleaner ducting as necessary for engine removal. Refer to OEM guidelines.
7. Remove the charge air cooler ducting from the turbocharger and intake manifold.
8. Disconnect the exhaust piping from the engine.
9. Remove the 21-pin connector from the MCM.
10. Disconnect wiring from the cranking motor and remove cranking motor.
11. Disconnect the alternator and other electrical equipment, as necessary.
12. Disconnect the air compressor air lines, as necessary.
13. Disconnect and remove the coolant hoses.
14. Remove the charge air cooler, radiator, fan guard and other cooling system related parts as necessary to remove the engine.
15. Connect Cylinder Head/Engine Lifting Bar tool (W470589006200) to the engine using all three lifting brackets (two at the rear and one at the front).
16. Remove the engine mounting bolts.

DANGER:

FALLING ENGINE

To avoid injury from a falling engine, an adequate lifting device with a spreader bar and sling should be used to lift the engine. The sling and spreader bar should be adjusted so the lifting hooks are vertical to prevent bending the lifter brackets. To ensure proper weight distribution, all provided lifter brackets must be used.

17. Lift the engine from its mounts using W470589006200.

 Copyright © 2010 DETROIT DIESEL CORPORATION

https://truckmanualshub.com/

WARNING:

FALLING ENGINE

To avoid injury from a falling engine, ensure the engine is securely attached to the engine overhaul stand before releasing the lifting sling.

18. Separate the engine from the transmission.
19. Remove the fuel filter module. Refer to section .
20. Remove high pressure pump. Refer to section .
21. Use engine overhaul stand (J–29109) for support when stripping an engine cylinder block.
22. Rotate engine in either direction and lock it into position.
23. Remove the inlet and outlet fuel lines connected to the Motor Control Module (MCM), if equipped.
24. Remove any electrical components, accessories, connectors or wiring looms from the engine.

All information subject to change without notice.
DDC-SVC-MAN-0081 2010 Copyright © 2010 DETROIT DIESEL CORPORATION

25. With the engine mounted on the overhaul stand, remove all of any remaining subassemblies and parts from the cylinder block.
    - [a] Remove the rocker cover. Refer to section 1.2.
    - [b] Remove the engine lifter brackets. Refer to section 38.2.
    - [c] Remove the vibration damper. Refer to section 36.1.
    - [d] Remove the flywheel. Refer to section 34.4.
    - [e] Remove flywheel housing. Refer to section 34.2.
    - [f] Remove idler gears. Refer to section 5.2.
    - [g] Remove camshaft housing. Refer to section 3.1.
    - [h] Remove the cylinder head. For DD13, refer to section 14.2. For DD15, refer to section 14.4.
    - [i] Remove the oil pan. Refer to section 19.2.
    - [j] Remove the piston and connecting rod assembly. Refer to section 15.2.
    - [k] Remove cylinder liners. Refer to section 16.2.
    - [l] Remove the crankshaft. Refer to section 17.2.

NOTICE:
Before removing main bearing caps, be sure each is stamped or punch-marked in numerical order, beginning with No. 1 at the front, to ensure installation in their original position. Mark all caps on the oil cooler side (left side) of the engine to prevent reversal at assembly. Failure to mark numerical order may result in the caps being put back in incorrect order, improper crankshaft support and severe crankshaft or bearing damage or both.

    - [m] Remove the crankshaft main bearings.

 Copyright © 2010 DETROIT DIESEL CORPORATION

https://truckmanualshub.com/

42.3 CLEANING THE CYLINDER BLOCK

Before removing cylinder liners for block cleaning, the liner bores should be gauged to determine whether liner replacement is necessary. Refer to section 42.3.1.

Remove cylinder liners with the cylinder liner removal tool (J–45876) before putting the block in cleaning or de-scaling baths, to avoid trapping cleaning agents in block liner seating bores.

Clean the cylinder block as follows:

1. Remove all oil and water gallery plugs to allow the cleaning solution to enter the inside of the oil and water passages. Remove piston oil spray nozzles at the base of each cylinder bore.
2. Immerse and agitate the block in a hot bath of a commercial, heavy-duty alkaline solution.
3. Wash the block in hot water or steam clean it to remove the alkaline solution.
4. If the water jackets are heavily scaled, proceed as follows:
   [a] Immerse and agitate the block in a bath of inhibited phosphoric acid.
   [b] Allow the block to remain in the acid bath until the bubbling action stops (approximately 30 minutes).
   [c] Lift the block, drain it and immerse it again in the same acid solution for 10 more minutes. Repeat until all scale is removed from the water jacket area.
   [d] Rinse the block in clear, hot water to remove the acid solution.
   [e] Neutralize the acid that may cling to the casting by immersing the block in an alkaline bath.
   [f] Wash the block in clean water and dry it.

WARNING:

EYE INJURY

To avoid injury from flying debris when using compressed air, wear adequate eye protection (face shield or safety goggles) and do not exceed 276 kPa (40 psi) air pressure.

5. Dry the cylinder block with compressed air. Blow out all of the bolt holes and passages with compressed air.

NOTE:
The above cleaning procedure may be used on all ordinary cast iron and steel parts for the engine. Aluminum parts, such as flywheel housing, air intake manifold, oil filter adaptor and the camshaft gear access cover should NOT be cleaned in this manner. Mention will be made of special procedures when necessary.

All information subject to change without notice.
DDC-SVC-MAN-0081 2010 Copyright © 2010 DETROIT DIESEL CORPORATION

6. Be certain that all water passages and oil galleries have been thoroughly cleaned and dried. Install new cup plugs using a coating of good grade non-hardening sealant such as Loctite® 620 or equivalent."

42.3.1 Inspection of the Cylinder Block

Perform the following for cylinder block inspection:

1. Remove the cylinder liners and check to determine whether liner replacement is necessary. Refer to section 16.2.
2. Measure the bore of each cylinder with cylinder bore gauge (J–5347–B) which has a dial indicator calibrated in 0.0001 in increments.
3. Measure cylinder block bore, at the positions on axis 90 degrees apart. If the diameter does not exceed the dimensions, the block may be reused.

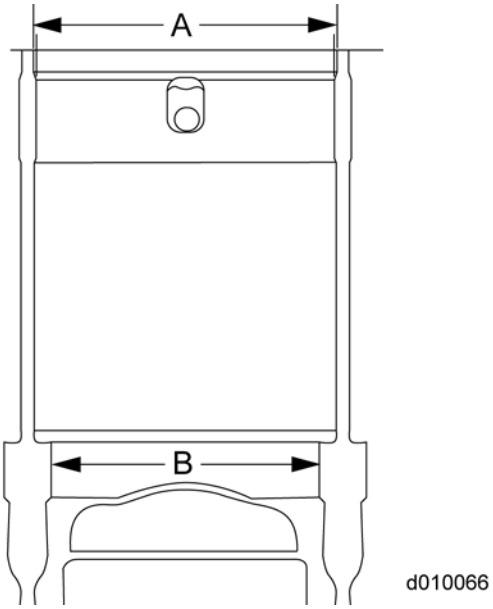

NOTE:
The above measurements are average gauge readings at each position. Also, the out-of-round must not exceed 0.0254 mm (0.001 in).

Location	DD13	DD15	DD16
A	159 mm to 159.04 mm (6.259 to 6.261 in.)	167 to 167.04 mm (6.5748 to 6.5763 in.)	167 to 167.04 mm (6.5748 to 6.5763 in.)
B	142 to 142.02 mm 58 (5.590 5.591 in.)	149 to 149.04 mm (5.866 to 5.8677 in.)	149 to 149.04 mm (5.866 to 5.8677 in.)

Table 42-1 Acceptable Cylinder Bore Diameters

 Copyright © 2010 DETROIT DIESEL CORPORATION

https://truckmanualshub.com/

42.3.2 Inspection of Main Bearing Bores

Perform the following steps for main bearing bore inspection:

1. Install the main bearing caps in their original positions. Lubricate the cap bolt threads and head contact surfaces with a small quantity of clean engine oil

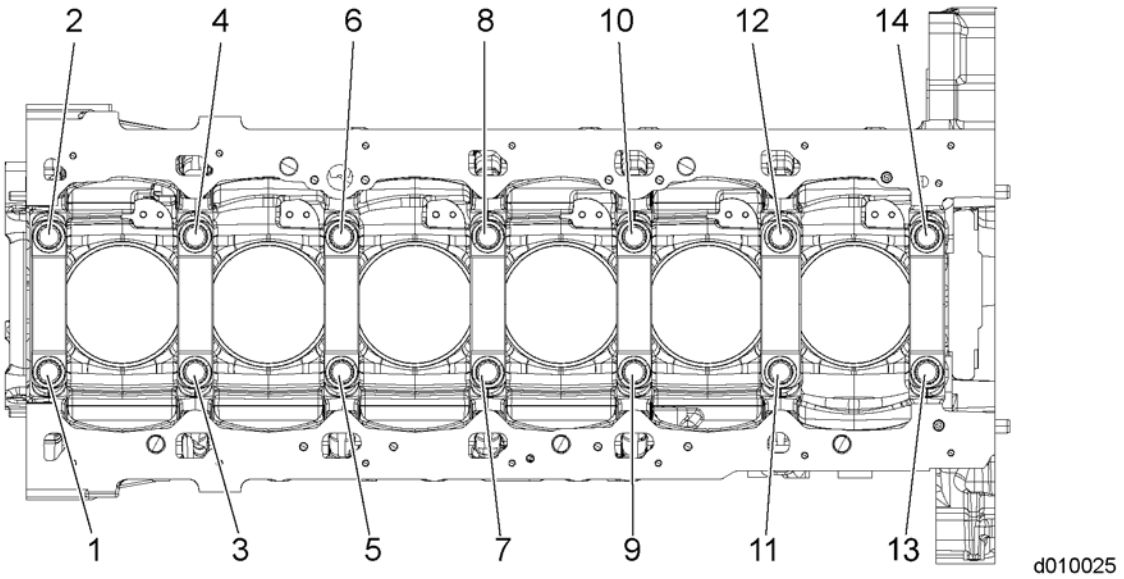

Figure 42-7 Main Bearing Cap Torque Sequence

Bolt Length	DD13	DD15	DD16
Main Bearing Cap Bolt	175.5 mm (6.909 in.)	200.5 mm (7.894 in.)	200.5 mm (7.894 in.)

Table 42-2 Main Bearing Cap Bolt Length

2. Install the main cap bolts and torque bolts to 50 N·m (37 lb·ft).
3. Torque the main cap bolts again to 150 N·m (103 lb·ft).
4. ***For the DD13,*** final torque the main cap bolts to 300 N·m (221 lb·ft). Then, torque turn the bolts an additional 90°.
5. ***For the DD15,*** final torque the main cap bolts to 250 N·m (184 lb·ft). Then, torque turn the bolts an additional 90° and again torque turn the bolts an additional 90°.
6. Measure the main bearing bores using dial bore gauge which has a dial indicator calibrated in 0.0001 in increments. Set the cylinder bore gauge on zero in master setting fixture.

NOTE:
Dial bore master setting fixture should be used to zero the cylinder bore gauge.

All information subject to change without notice.
DDC-SVC-MAN-0081 2010 Copyright © 2010 DETROIT DIESEL CORPORATION

https://truckmanualshub.com/

42.3.3 General Inspection

Check all machined surfaces for nicks or burrs that could affect the fit of mating parts. Clean up as necessary by stoning. Also inspect all tapped holes for thread damage and re-tap or install helical thread inserts as necessary. Replace any loose or damaged dowel pins.

42.3.4 Rust Prevention

After inspection, if the cylinder block is not to be used immediately, spray the machined surfaces with engine oil.

NOTICE:
Castings free of grease or oil will rust when exposed to the atmosphere. Rust on machined surfaces may result in leakage.

If the block is to be stored for an extended period of time, spray or dip it in a polar-type rust preventive such as "Tectyl® 502-C" from Valvoline Oil Company (or equivalent).

Tectyl® is a registered trademark of Ashland Oil, Inc.

 Copyright © 2010 DETROIT DIESEL CORPORATION

https://truckmanualshub.com/

42.4 REASSEMBLY AND INSTALLATION OF CYLINDER BLOCK

After the cylinder block has been cleaned and inspected, assemble the engine as follows:

WARNING:

EYE INJURY

To avoid injury from flying debris when using compressed air, wear adequate eye protection (face shield or safety goggles) and do not exceed 276 kPa (40 psi) air pressure.

1. Before a reconditioned or new service replacement cylinder block is used, steam clean it to remove the rust preventive and blow out the oil galleries with compressed air.
2. If a new service replacement block is used, stamp the engine serial number and model number on the pad provided on the front left side of the block.
3. Also stamp the position numbers on the main bearing caps and the position of the No. 1 bearing on the cooler side of the oil pan mounting flange of the block.

All information subject to change without notice.
DDC-SVC-MAN-0081 2010 Copyright © 2010 DETROIT DIESEL CORPORATION

4. Install the main bearing caps in their original positions.

NOTICE:
Always check to make sure cooling nozzles are open and aligned after piston installation. An obstructed, misaligned, bent, or damaged nozzle may not provide proper piston cooling. A loosened nozzle may cause a loss of main gallery oil pressure. In either case, piston overheating or lack of adequate lubrication may result in severe engine damage.

NOTICE
When installed, ensure the spray nozzles are aligned.

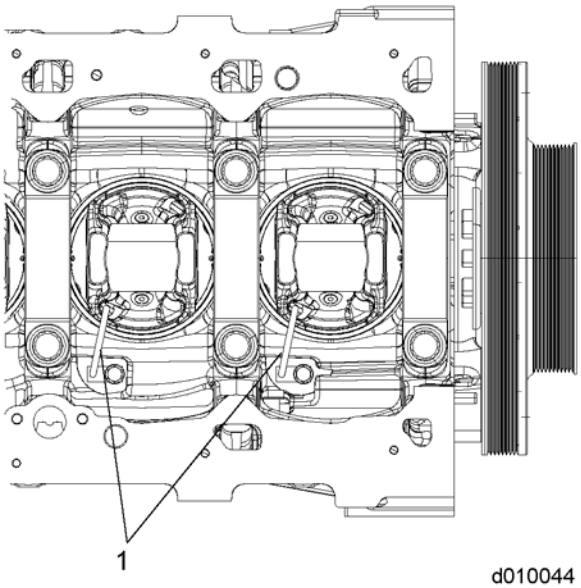

5. Install all of the required cup plugs. Use a good grade of non-hardening sealant such as Loctite® 620 (or equivalent). Apply a thin coat of sealant just inside the chamfer where the plug is to be installed and install using cup plug installation tool set (J–35653).
6. With the engine mounted on the overhaul stand, install all of any remaining subassemblies and parts on the cylinder block.
   [a] Install the crankshaft main bearings. Refer to section 17.4.
   [b] Install the crankshaft. Refer to section 17.4.
   [c] Install the cylinder liner. Refer to section 16.5.
   [d] Install the piston and connecting rod assembly. Refer to section 15.6.
   [e] Install the gear train. Refer to section 5.2.
   [f] Install the flywheel housing. Refer to section 34.3.
   [g] Install the oil pan. Refer to section 19.7.

 Copyright © 2010 DETROIT DIESEL CORPORATION

[h] Install the flywheel. Refer to section 34.6.

[i] Install the cylinder head. For DD13, refer to section 14.3. For DD15, refer to section 14.7.

[j] Install camshaft housing. Refer to section 3.3.

[k] Install the vibration damper. Refer to section 36.2.

[l] Install the crankshaft pulley.

[m] Install the engine lifter brackets. Refer to section 38.7.

[n] Install the rocker cover. Refer to section 1.4.

[o] Install any electrical components, accessories, connectors or wiring looms that were removed during disassembly.

[p] Install the Motor Control Module (MCM).

[q] Install Cylinder Head/Engine Lifting Bar tool (W470589006200) to the engine.

DANGER:

FALLING ENGINE

To avoid injury from a falling engine, an adequate lifting device with a spreader bar and sling should be used to lift the engine. The sling and spreader bar should be adjusted so the lifting hooks are vertical to prevent bending the lifter brackets. To ensure proper weight distribution, all provided lifter brackets must be used.

[r] Remove the engine from the overhaul stand.

[s] Prime engine lubrication system. Refer to section 27.1.

7. Transfer the engine to a suitable engine dynamometer test stand. Operate the engine on a dynamometer following the Run-in procedure.
8. Install the engine in the equipment from which it was removed.

All information subject to change without notice.
DDC-SVC-MAN-0081 2010 Copyright © 2010 DETROIT DIESEL CORPORATION