https://truckmanualshub.com/

MICHI

Operation Manual

with Maintenance Information

Models SV06CNL
SV08CNL

NOTICE

- Read this manual before operating.
- Use the machine only indoors.

CE

https://truckmanualshub.com/

Serial Number Range: after 716125 - Current
Part Number: FS-339BS
June 2008

Copyright

© AICHI CORPORATION. All rights reserved.

No part of this manual may be reproduced in any form, in an electronic retrieval system or otherwise, without the written permission from AICHI, except for personal use or other cases permitted by copyright laws.

Contact us:

Head office
AICHI CORPORATION
1152 Ryoke Ageo Saitama 362-8550 Japan
TEL: +81-48-781-1111
http://www.aichi-corp.co.jp

This machine has been manufactured to conform to European Standard EN280.

https://truckmanualshub.com/

Important Information

Thank you very much for making your purchase from AICHI.

Please operate and use the machine correctly.

- Operation of the machine not in accordance with this manual, incorrect operation, incorrect checking, and incorrect maintenance may lead to injuries, death, and may damage the machine.
- Please make sure to read and understand this manual before using, checking or maintaining the machine.
- The machine is designed to lift people and equipment. It is designed for use in assembly and repair work in high places (work on ceilings, roofs, buildings, etc.). It is strictly prohibited to use the machine for other purposes.
- This manual describes only what can be foreseen.
- AICHI does not accept responsibility for direct or indirect losses, damages, or expenses incurred through the abuse, misuse or misapplication of the machine, or through any other cause.
- Only appropriately trained and qualified people may operate the machine. The operator must be certified.
- Replace parts and grease, etc. that have reached the end of their service lives, are worn out, or have suffered wear and tear. Refer to the separate service manual and follow the replacement standards of that manual. Contact AICHI or AICHI's dealer to do the replacement.
- Only AICHI's genuine spare parts must be used for parts important for the safety and stability of the machine.
- It is strictly forbidden to make modifications to the machine without obtaining AICHI's written approval.
- Make sure to perform all maintenance described in this manual and in the designated service manual for the machine.
- Constant improvement of its products is AICHI's policy. Therefore, specifications of the machine are subject to change without prior notice.
- The figures illustrate the cautions listed in this manual. The purpose of the figures is to identify important points. In some cases the shapes may be different from those of the product you have purchased.
- This manual must be kept with the machine at all times. Always keep it with the machine, and make sure it is immediately available for use.
- When you transfer the use or ownership of the machine, please attach this manual to the machine for the next user.
- This manual includes optional devices. There is a case that the option is illustrated in figures of this manual.
- This manual is written in English. If the machine is to be operated, checked, or maintained by people who do not read English, please translate this manual into a suitable language, and make sure that the users understand this manual. In case of discrepancy between the English manual and the translated manual, the English manual prevails.

https://truckmanualshub.com/

Safety alert symbol and Signal Words

This is the safety alert symbol. It is used to alert you to potential personal injury hazards. Obey all safety messages that follow this symbol to avoid possible injury or death.

The safety signal words, “DANGER,” “WARNING,” and “CAUTION” identify the degree of latent hazard and its level of seriousness.

DANGER

Indicates a hazardous situation which, if not avoided, will result in death or serious injury.

WARNING

Indicates a hazardous situation which, if not avoided, could result in death or serious injury.

CAUTION

Indicates a hazardous situation which, if not avoided, could result in minor or moderate injury.

NOTICE

Indicates a hazardous situation which, if not avoided, could result in property damage. It may also be used to provide special information to assist in the machine operation.

Owner and User Responsibilities

All owners and users of the machine must read, understand, and comply with all applicable regulations. Ultimate compliance to national safety regulations is the responsibility of the user and their employer.

https://truckmanualshub.com/

Table of Contents

Chapter 1 **Safety Rules 1**
1. Electrocution Hazards 1
2. Tip Over Hazards 1
3. Fall Hazards 2
4. Collision Hazards 3
5. Crushing Hazards 3
6. Damaged Machine Hazards 4
7. Fire Hazards 4
8. Battery Safety 4
9. Personal Safety 4

Chapter 2 **Decals 5**
1. Symbol and Pictorials Definitions 5
2. Safety signs and locations 7

Chapter 3 **Safety Systems 10**
1. Emergency Stop Device 10
2. Emergency Lowering 10
3. Pothole Protector 10
4. Pothole Protector Interlock 10
5. Guardrail 10
6. Safety Prop 10
7. Battery Disconnect System 11
8. Lanyard Anchorage Point 11
9. Overload Sensing System 11
10. Platform Lift up Limit System 11

Chapter 4 **Part Name 12**
1. Part names 12
2. Upper control panel 13
   - 2–1 Standard specifications 13
   - 2–2 Optional devices 14
3. Lower control panel 14

Chapter 5 **Workplace Check 16**

Chapter 6 **Pre-Start Check 17**
1. Visual check 17
2. Function check 17
   - 2–1 Preparations for function check 17
   - 2–2 Battery level check 18
   - 2–3 Raising and lowering platform check 18
   - 2–4 Emergency stop check 18
   - 2–5 Pothole protector check 18
   - 2–6 Upper control check 19
   - 2–7 Natural lowering check 19
   - 2–8 Tilt warning check 19
   - 2–9 Limited travel speed check 20
   - 2–10 Last check 20

Chapter 7 **Maintenance 21**
1. Storage method 21
2. Daily Maintenance 21
   - 2–1 Hydraulic oil level check 21
   - 2–2 Battery liquid level check 21
   - 2–3 Battery charging 21
3. Periodic Maintenance 21

Chapter 8 **Operation 22**
1. Lower Control (from ground) 22
   - 1–1 Raising and Lowering Platform 22
2. Upper Control (from platform) 22
   - 2–1 Raising and Lowering Platform 23
   - 2–2 Traveling 23
   - 2–3 Steering with Steering Switch 23
   - 2–4 Steering with Steering Dial (option) 23
3. Extension Deck 24
   - 3–1 Extending 24
   - 3–2 Retracting 24
4. Fold Down Guardrail (if equipped) 24
   - 4–1 Folding Down Guardrails 24
   - 4–2 Raising Guardrails 25

Chapter 9 **Emergency Operation 26**
1. Emergency Stop 26
2. Emergency Lowering 26

Chapter 10 **Transporting 27**
1. Preparation before loading 27
2. Loading the machine 27
3. Hoisting the machine 28
4. Lifting with forklift 28

Chapter 11 **Storage 29**

Chapter 12 **Specifications 31**

https://truckmanualshub.com/

This page intentionally left blank.

https://truckmanualshub.com/

Chapter 1

Safety Rules

1. Electrocution Hazards

⚠ DANGER

- The machine is not electrically insulated. Do not use the machine near electric power lines.
- Keep a safe distance from electric power lines and apparatus. For safe distance, check your national or local regulations. If no national or local regulation is available, use the table below.

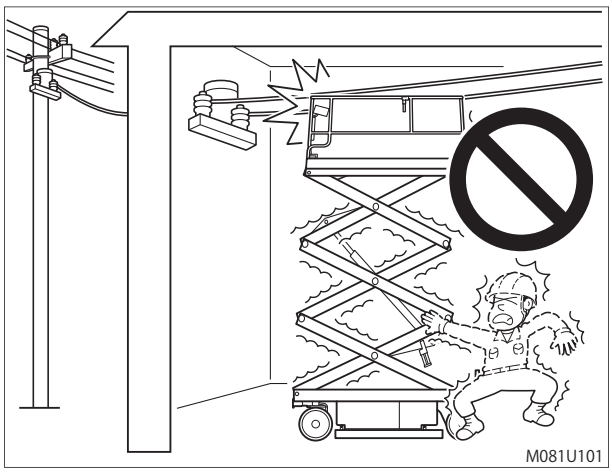

fig. 1–1

Voltage (Phase to Phase)	Minimum Safe Approach Distance	
0 to 300 V	Avoid Contact	
over 300 V to 50 kV	10 ft	3.05 m
over 50 kV to 200 kV	15 ft	4.60 m
over 200 kV to 350 kV	20 ft	6.10 m
over 350 kV to 500 kV	25 ft	7.62 m
over 500 kV to 750 kV	35 ft	10.67 m
over 750 kV to 1000 kV	45 ft	13.72 m

table 1–1

- Keep away from the machine if it contacts energized power lines. Until energized power lines are shut down, any persons in the platform must not operate the machine and any persons on the ground must not touch the machine.
- Do not use the machine as a ground for welding.

2. Tip Over Hazards

⚠ DANGER

- Do not exceed the platform capacity as indicated on the serial number plate.
- Do not hang or attach loads to the machine. Spread loads evenly on the platform.
- Do not use the machine as a crane or lift.
- Do not use the machine on sloped, soft or uneven surfaces, or surfaces with bumps larger than 30 mm.
- Use the machine only on a firm, level surface. When the tilt alarm buzzer sounds, immediately lower the platform and move to a firm, level surface.

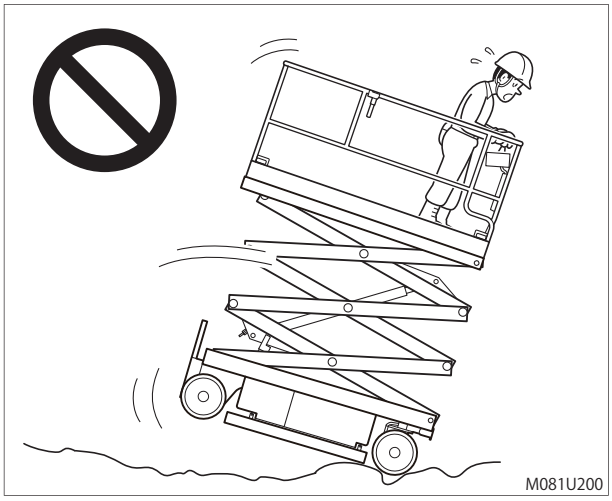

fig. 1–2

- Do not disable or alter the switch.
- Do not touch or be attached the platform to any nearby structures.

https://truckmanualshub.com/

- Do not put side loads on the machine.

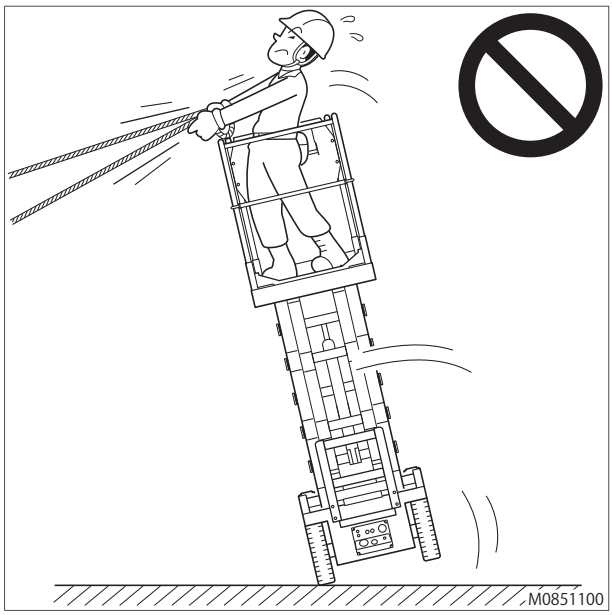

fig. 1–3

- The machine is intended for indoor use only. Do not use the machine outdoors. Do not operate the machine where there are strong winds or gusts. Do not increase the surface area that can catch wind, such as covering the worktable with a sheet. The stability of the machine will decrease, and the potential for fall hazards will increase, which could result in death or serious injury.
- The machine is not allowed to travel on public roads.

3. Fall Hazards

⚠ DANGER

- Do not use a stepladder or stool on the platform of the machine.

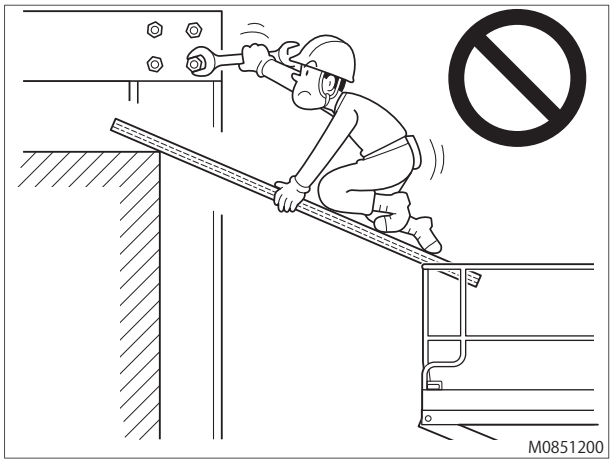

fig. 1–4

- Do not climb on the guardrail, stand on top of the guardrail, or jump from the platform to another structure.

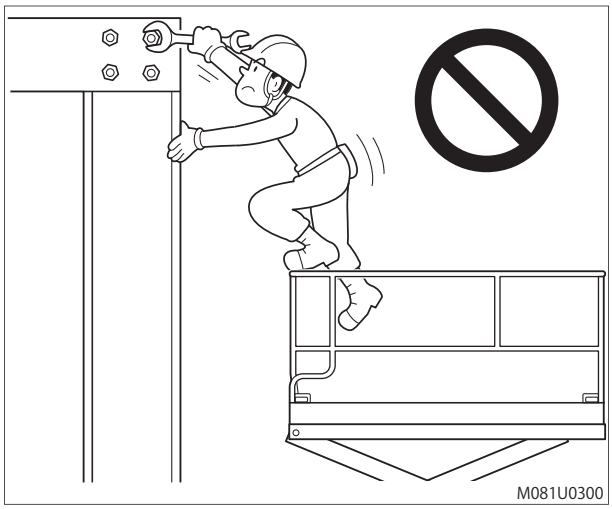

fig. 1–5

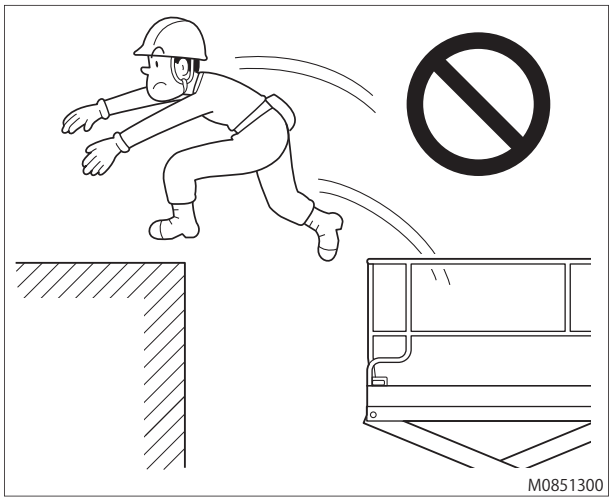

fig. 1–6

- When the platform is raised, do not climb up to it or down from it.
- Be especially careful when getting on or getting off the platform. When getting on or getting off, lower the platform to the lowest position, face the machine, and always use three-point support (for example, two arms and one leg, or one arm and two legs).
- After getting on the platform, close the entry gate without fail. Do not operate the machine with the gate open.

https://truckmanualshub.com/

4. Collision Hazards

⚠WARNING

- Before traveling, check the surroundings and make sure that no person or obstacle is in the traveling direction. If your vision is poor, have a guide to assist you.

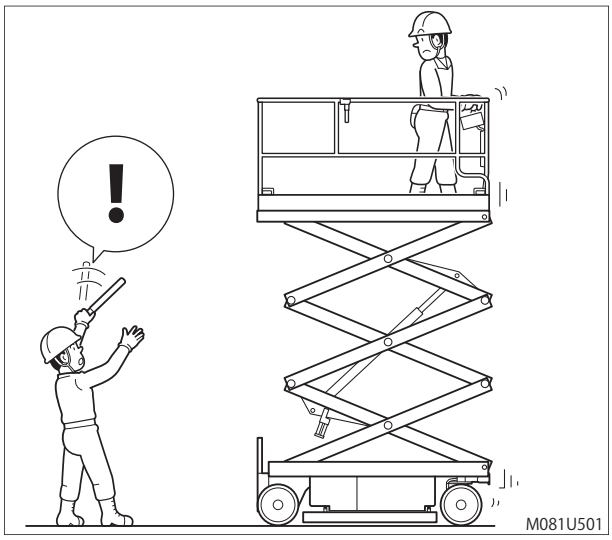

fig. 1–7

- When traveling, be aware of obstacles around and above the machine. When raising or lowering the platform, check that there is enough space above, below, and on all sides of the machine.

5. Crushing Hazards

⚠WARNING

- Once the platform is raised, do not allow people or things under the platform.

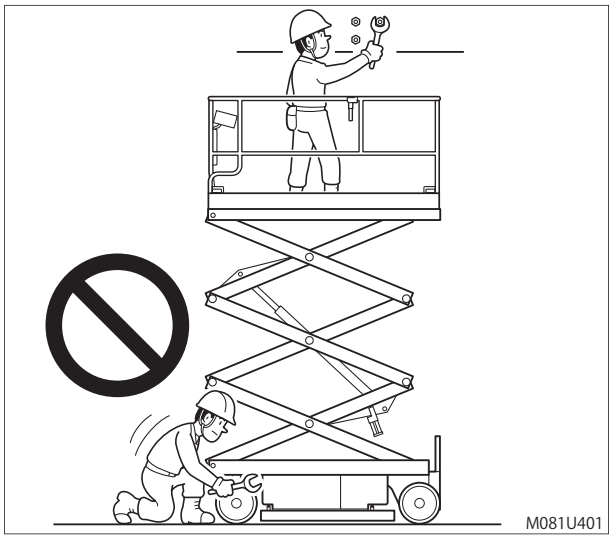

fig. 1–8

- If you go under the platform for checks, you must remove any load from the platform, and support the scissors arm with the included safety prop (red colored) so that the scissors arm does not come down.
- Stow the safety prop in its stowage position when it is not used.

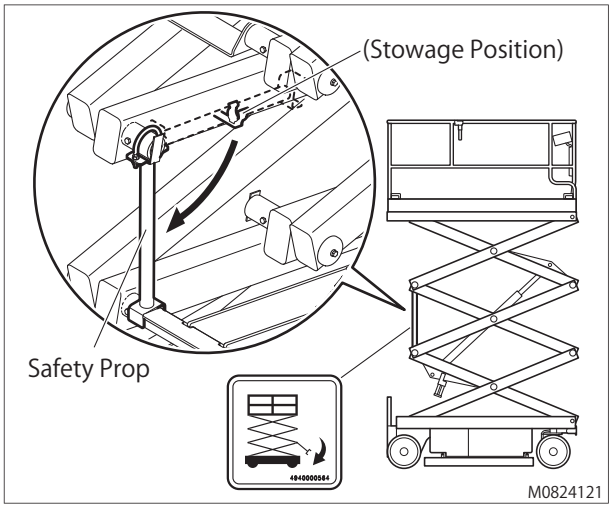

fig. 1–9

- Take care that your hands on the guardrails are not caught in other obstacles.
- Do not drop things from the platform. There is a hazard that falling objects will hit cars, or people that are passing by.

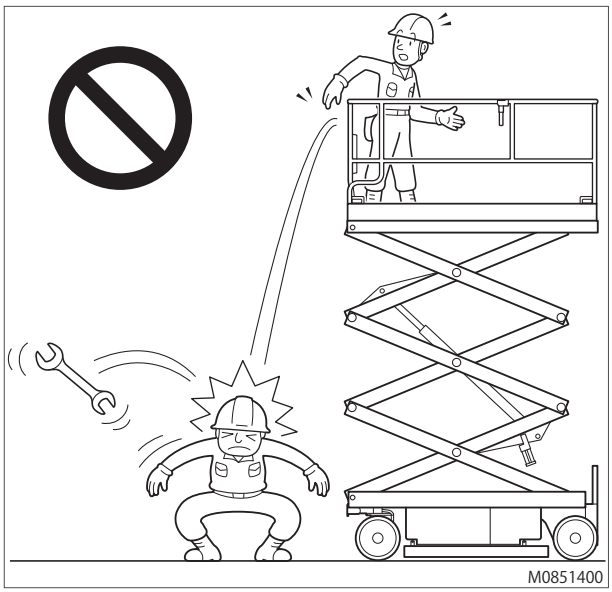

fig. 1–10

https://truckmanualshub.com/

6. Damaged Machine Hazards

⚠WARNING

- Do not use a damaged or malfunctioning machine. Have it checked and repaired immediately.
- When operators are changed by work shift, perform the pre-start checks at every change. Perform the pre-start checks on the operator's responsibility.
- Perform the pre-start checks on a firm, level surface, with the platform lowered, and the extension deck retracted.
- If the pre-start checks reveal any abnormalities, immediately put an "Out of Order" sign on the machine, and stop using the machine.
- Make sure to perform all maintenance described in this manual and in the designated service manual for the machine.
- Be sure all decals are in place and that no decal has a loss and damage. Any decal loss or damage is one of the machine malfunction.

7. Fire Hazards

⚠WARNING

- When handling flammables (fuel, oil, etc.), be aware of anything that can cause fire.
- Have a first-aid kit and a fire extinguisher ready in case of an accident or fire.
- If the machine is to be used in a location where flammable gas is produced, only use the machine after sufficient ventilation.

8. Battery Safety

⚠WARNING

- The battery liquid contains corrosive acid. When dealing with the battery, always wear appropriate protective clothing and equipments to protect your hands, eyes, face and body, and avoid contacting battery liquid.
- If battery liquid gets on the skin or on clothing, wash it away immediately with cold water. If it gets into the eye, wash immediately with cold water, and seek ophthalmologic treatment immediately.
- The battery produces flammable hydrogen gas, and there is a possibility of explosion. Never allow anything that can cause fire close to the battery. Charge the battery only under good ventilation.
- The battery also acts as a counterweight, so it is essential for the stability of the machine. If the battery is changed, use one designated by AICHI.

9. Personal Safety

- When working, wear appropriate protective clothing and equipments. All persons in the platform must comply with employer, work area, and local and national safety regulations regarding the use of a personal protective equipment. All personal protective equipments must comply with applicable regulations, and must be inspected and used in accordance with their manufacturer's instructions.
- All personal fall protective equipments must be attached to only the authorized lanyard anchorage points provided in the platform.

https://truckmanualshub.com/

Chapter 2
Decals

1. Symbol and Pictorials Definitions

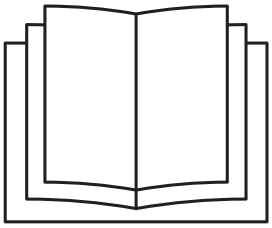 Read operator's manual.	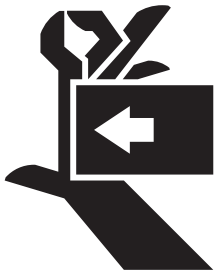 Crush Hazard	Crush Hazard	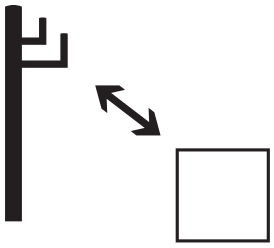 Maintain required clearance.
Do not wash by high pressure.	Do not step. Keep off.	No smoking. No open flame.	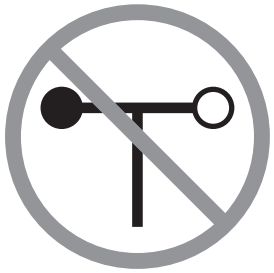 Do not use outdoors.
Keep away. Do not touch.	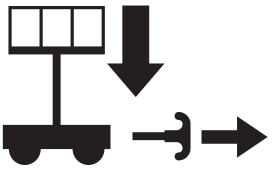 Emergency Lowering Lever	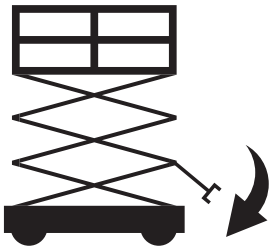 Safety Prop	Pre-start Check
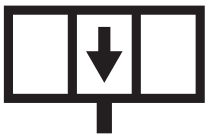 Main Platform Capacity	Extension Deck Capacity	Maximum Manual Force	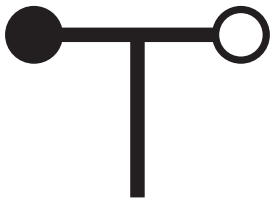 Maximum Wind Speed

M07X0100

https://truckmanualshub.com/

Platform Over Load	System Failure	Charge Failure	Maximum Wheel Load
Folklift Point	Lanyard Anchorage Point	Lift Point	Tie-down Point
Loads (personnel and tools)	Battery Disconnect	100% Charging (blinking) Full Charge (lighting)	ON and OFF
Maximum Slope Rating	Maximum Side Slope Rating	Horn	Enable Switch
Steer: Left / Right	Travel: Forward / Backward	Lift: Raise / Lower	Upper control / Off / Lower control Selection

M07X0221

https://truckmanualshub.com/

2. Safety signs and locations

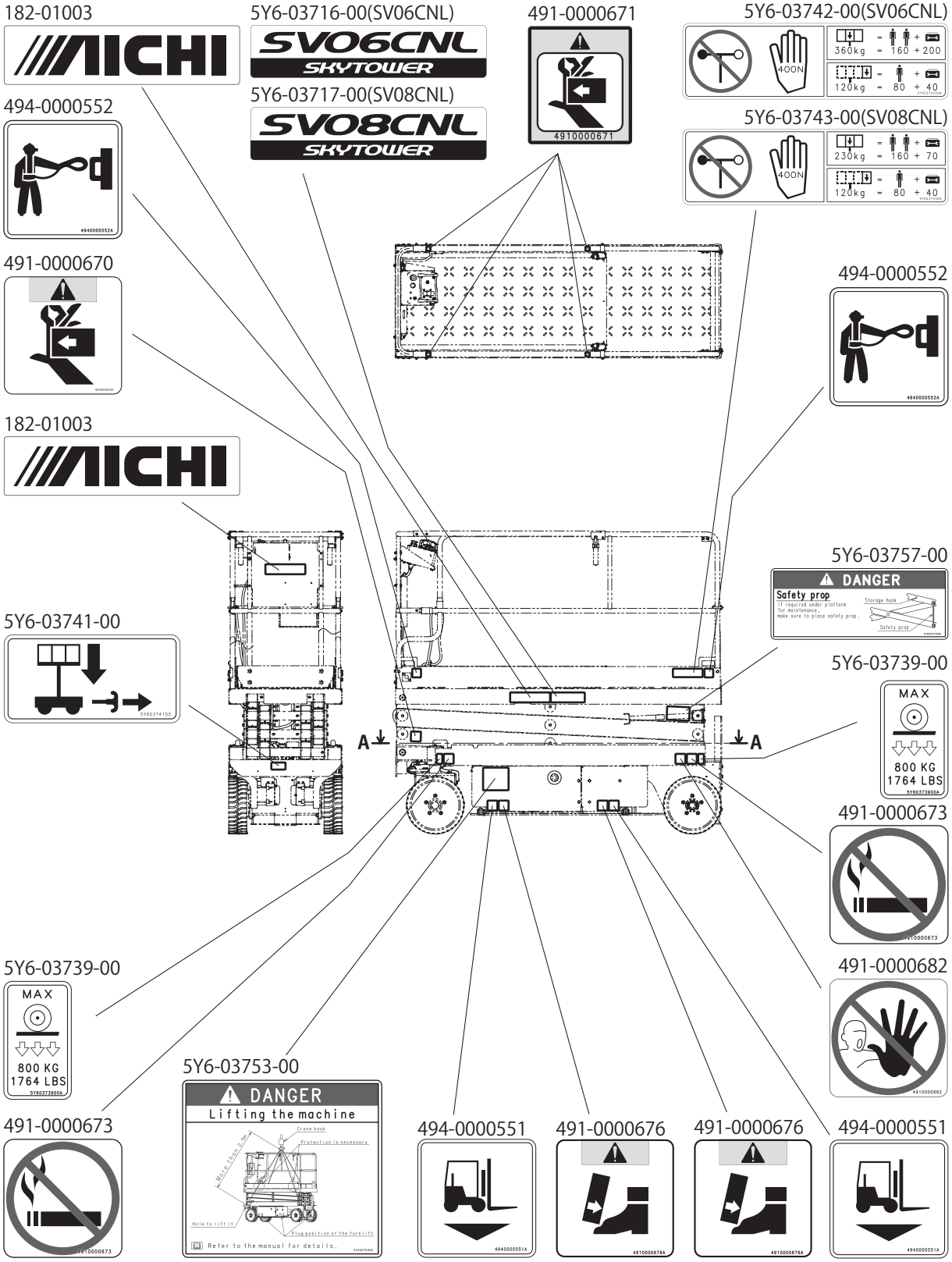

M07ZO121

https://truckmanualshub.com/

494-0000552

5Y6-03742-00(SV06CNL)

5Y6-03743-00(SV08CNL)

5Y6-03716-00(SV06CNL)

5Y6-03717-00(SV08CNL)

182-01003

491-0000669

494-0000552

491-0000670

5Y6-03756-00

CAUTION

Limited operations

When machine is at a slope, buzzer will sound and operation will be limited.

- If platform is down:
  It will not be possible to raise platform or drive at high speed.
- If platform is partially raised:
  It will not possible to raise platform further, and it will not possible to drive machine.
  When moving machine from one location to another, platform must be down.

DANGER

Electrocution hazard

- Stay away from power lines.
- Maintain minimum safe distance.

Voltage range (Phase to phase)	Minimum safe approach distance (Feet)	(Meters)
0 to 300 V	Avoid contact	
Over 300 V to 50KV	10	3.05
Over 50KV to 200KV	15	4.60
Over 200KV to 350KV	20	6.10
Over 350KV to 500KV	25	7.62
Over 500KV to 750KV	35	10.67
Over 750KV to 1000KV	45	13.72

494-0000557

491-0000670

491-0000669

494-0000551

5Y6-03739-00

MAX

800 KG
1764 LBS

5Y6-03739-00

MAX

800 KG
1764 LBS

491-0000673

5Y6-03732-00

NOTICE

- When removing the battery, make sure to remover the ground first.
- When connecting the battery, connect the ground last.

ground

494-0000551

5Y6-03755-00

CAUTION

Charging the battery

- Use only an AC 100-230 V power source, otherwise that equipment may be damaged.
- If voltage is less than 90 V, battery cannot be charged normally.
- Before charging battery, check battery fluid is within specified range.
- Charge battery in a well-ventilated location.
- Never allow fire or burning materials close to battery.

Refer to the manual for details.

491-0000673

491-0000682

494-0000551

491-0000676

491-0000676

M07ZO221

https://truckmanualshub.com/

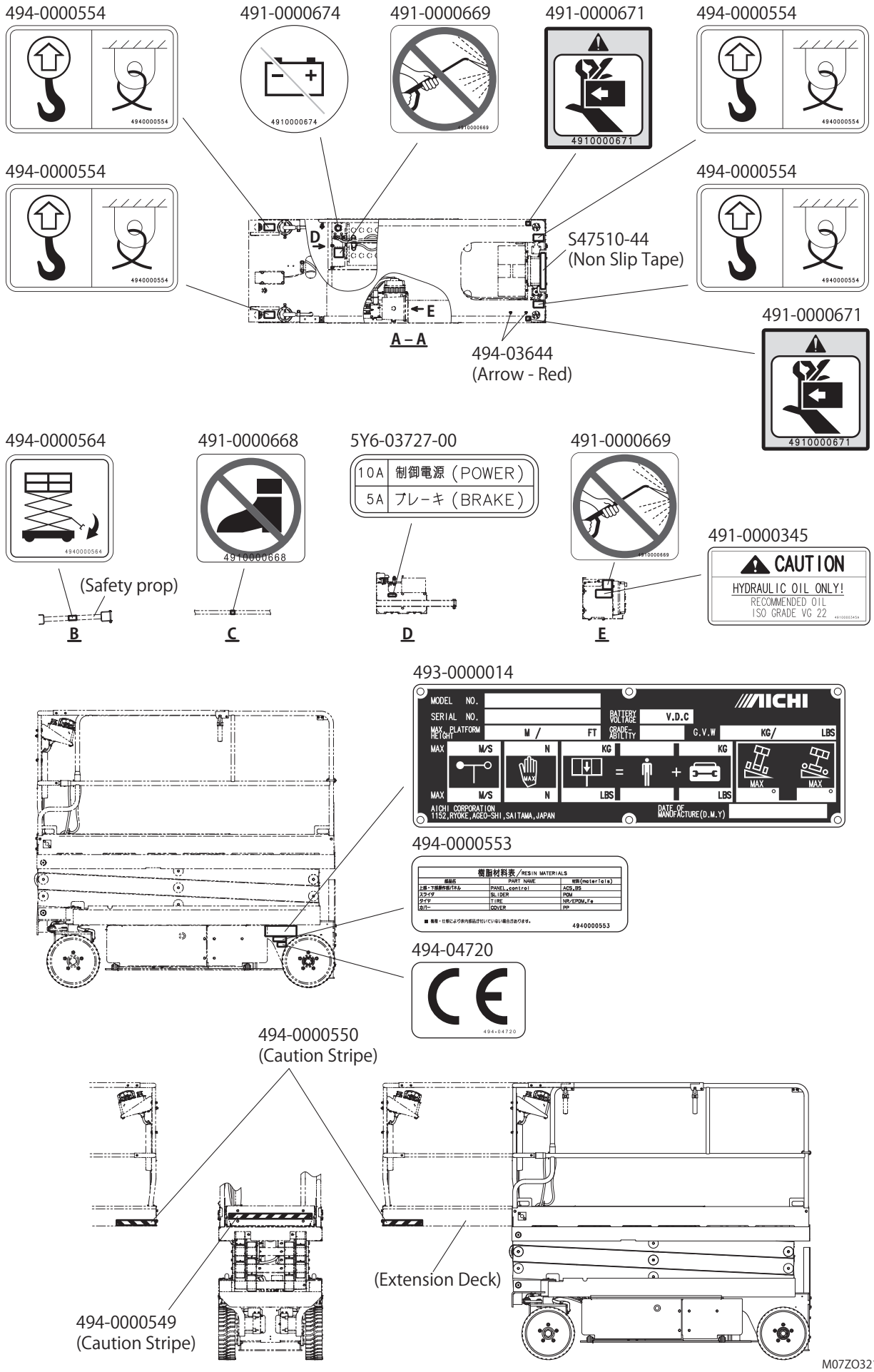

https://truckmanualshub.com/

Chapter 3

Safety Systems

1. Emergency Stop Device

The machine is equipped with readily identifiable emergency stop buttons, located at both the upper and lower control panels.

It stops all of the movements of the machine when this button is pressed.

2. Emergency Lowering

This is an emergency lowering device for when the platform has been raised, and cannot be lowered because of problems with the power source.

The emergency lowering handle (fig. 3–1, A) is located at the front of the machine.

The handle is connected, by a cable, to the holding valve on the lift cylinder.

Pulling the handle opens the valve spool, lowering the platform.

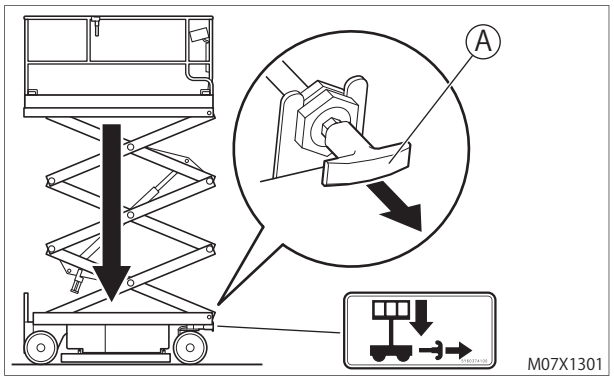

fig. 3–1

3. Pothole Protector

When the platform has been raised, the pothole protectors come down automatically.

It provides pothole protection for traveling raised platform.

4. Pothole Protector Interlock

If the pothole protectors are unable to lock in position because an object is caught under it, the machine will not travel and the platform will not be raised.

5. Guardrail

There are guardrails on all sides of the platform to prevent persons in the platform from falling off the platform.

The entry gate is part of the guardrail system and must be securely fastened after entering the platform.

6. Safety Prop

The safety prop is a support pole that prevents the scissors arm from lowering when it is necessary to do maintenance work under the scissors arm or platform.

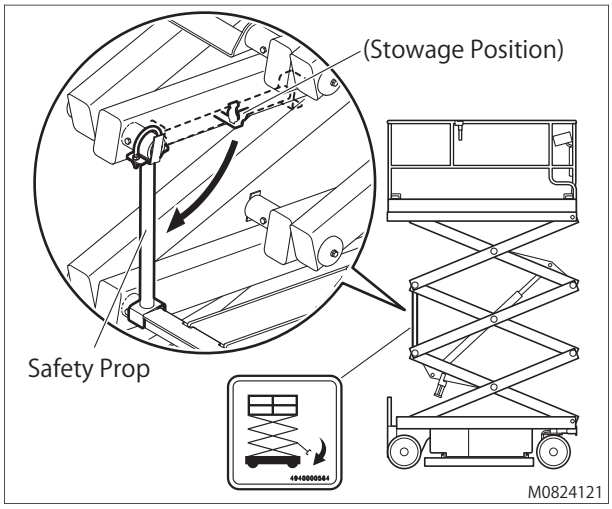

fig. 3–2

How to Use the Safety Prop

(1) Remove all materials from the platform.

(2) Raise the platform about 2.5 m (SV06CNL) / 3 m (SV08CNL) from the ground.

(3) Rotate the safety prop and hang it down below.

⚠WARNING

Keep a safe distance from scissors arm when lowering the platform.

(4) Lower the platform carefully until the safety prop rests safety on the scissors arm.

(5) Stow the safety prop in its stowage position when it is not used.

https://truckmanualshub.com/

7. Battery Disconnect System

The battery disconnect switch cut off the battery electrically. When electrical maintenance is performed, push in the switch marked with " ".

8. Lanyard Anchorage Point

If the personal fall protective equipment is used to prevent persons in the platform from falling off the platform, attach to only the authorized lanyard anchorage points provided in the platform.

9. Overload Sensing System

This system disables all of the functions, overload warning light blinks and overload warning buzzer sounds when the platform is overloaded.

When overload warning buzzer sound starts, immediately reduce the load on the platform.

10. Platform Lift up Limit System

This system disables platform lift up function, tilt light goes on and tilt alarm buzzer sounds when the machine tilts more than approx. 3 degrees longitudinally / 1.5 degrees laterally.

When tilt alarm buzzer sound starts, immediately lower the platform and move to a firm, level surface.

https://truckmanualshub.com/

Chapter 4
Part Name

1. Part names

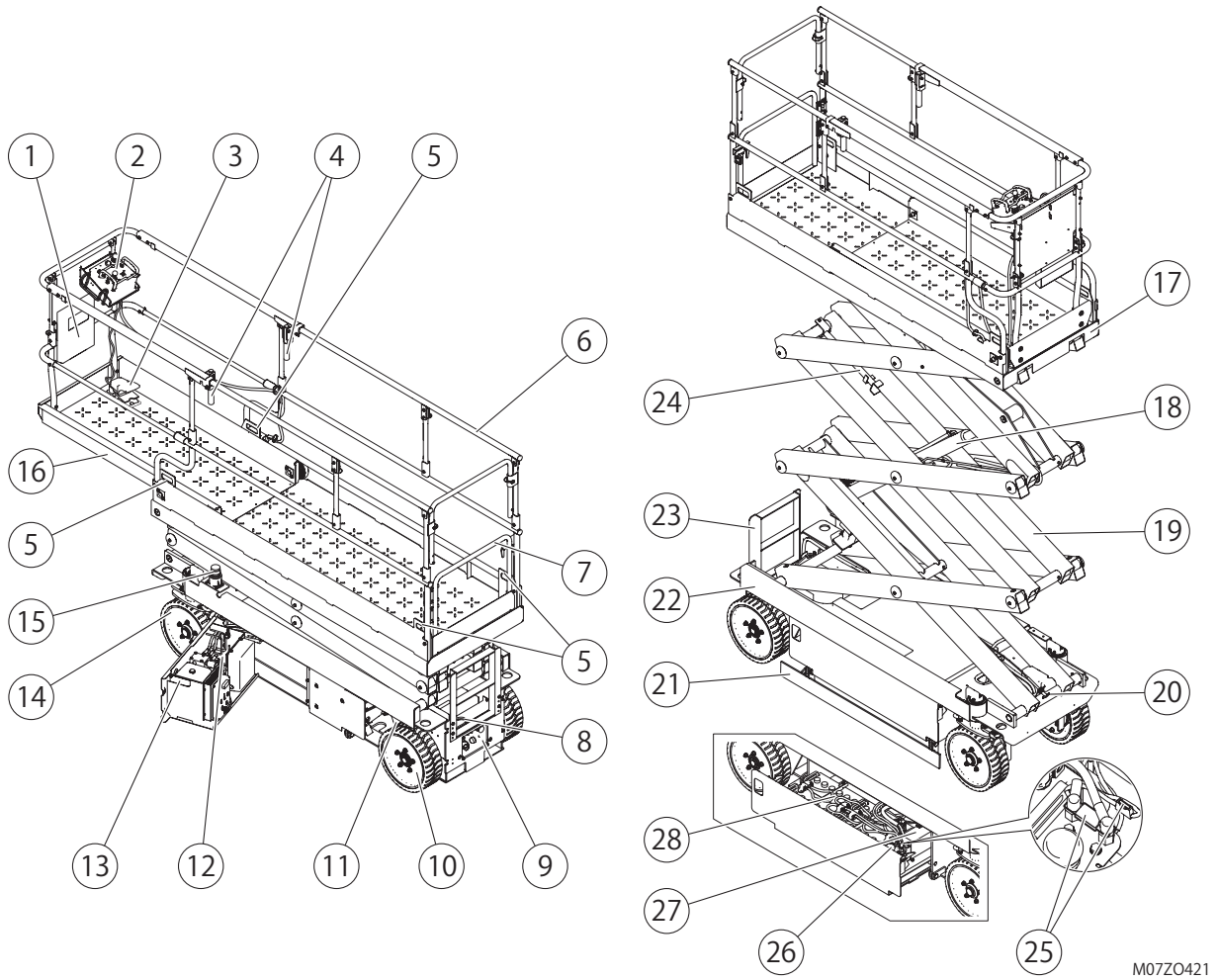

fig. 4-1

(1) Manual Holder
(2) Upper Control Panel
(3) Foot Switch (option)
(4) Handle
(5) Lanyard Ancorage Point
(6) Guardrails
(7) Entry Gate
(8) Battery Charger Cable
(9) Lower Control Panel
(10) Rear Wheel
(11) Serial Number Plate
(12) Hydraulic Oil Tank
(13) Power Unit
(14) Steering Wheel
(15) Flash beacon (option)
(16) Extension Deck
(17) Platform
(18) Lift Cylinder
(19) Scissors Arm
(20) Emergency Lowering Lever
(21) Pothole Protector
(22) Chassis
(23) Step
(24) Safety Prop
(25) Fuse
(26) Battery Disconnect Switch
(27) Battery Charger
(28) Battery

https://truckmanualshub.com/

2. Upper control panel

2–1 Standard specifications

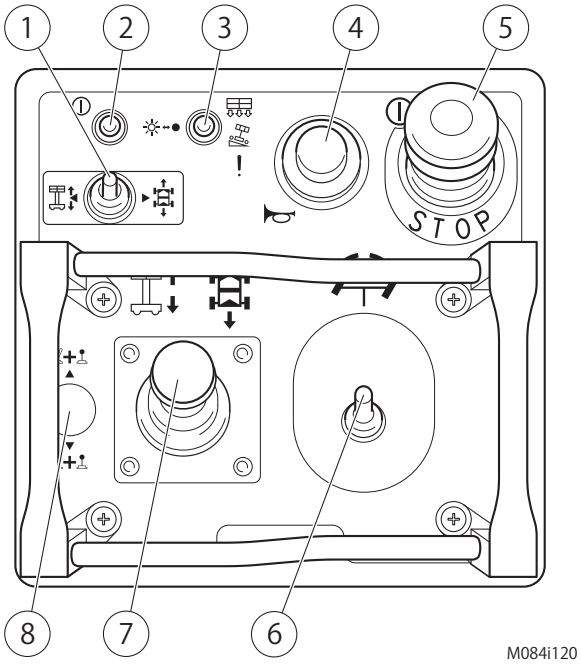

fig. 4-2

(1) Lift/travel select switch

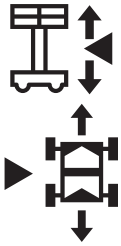

Select the lift/travel select switch to either "LIFT" or "TRAVEL." Hold it more than 0.3 second and then release the switch, the power indicator light goes on and the alarm buzzer sounds. Start operation within 3 seconds after releasing the switch.

NOTICE

- This switch is canceled if any of the upper control function is not operated more than 3 seconds after releasing the switch.
- This switch is canceled, even if the switch is selected and held, if any of the upper control function is not operated more than 20 seconds.

(2) Power indicator light

When the power indicator light goes on, the upper controls are available, and the alarm buzzer sounds. When this light is going off or blinking, release all function switches once, then select the lift/travel select switch again.

(3) Overload warning light / Tilt light / System failure light

- Overload warning light: When the platform is overloaded, this light blinks, the alarm buzzer sounds and all of the functions are disabled.

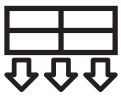

- Tilt light: When the machine is on a slope, this light goes on, the alarm buzzer sounds and platform lift up function is disabled.

- System failure light: This light goes on or blinks, in the event of a computer control system failure.

(4) Horn switch

Push the horn button and the alarm horn will sound. Release the horn button and the alarm horn will stop.
Before moving the machine, sound the horn to warn the personnel around the machine.

(5) Emergency stop button

Push down the Emergency stop button to its "OFF" position to stop all functions. Pull up the Emergency stop button to its "ON" position to operate the machine.

(6) Steering switch

While the power indicator light goes on by selecting the lift/travel select switch to "TRAVEL," operate the steering switch to right or left and the steering wheels will turn right or left. This operation is possible even when traveling. Even when the steering switch is returned to neutral, the steering wheels will not return to neutral.

(7) Lift/travel joystick controller

- While the power indicator light goes on by selecting the lift/travel select switch to "LIFT," operate this joystick controller to raise or lower the platform.

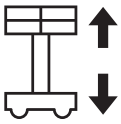

- While the power indicator light goes on by selecting the lift/travel select switch to "TRAVEL," operate this joystick controller to the traveling direction.

(8) Not use.

https://truckmanualshub.com/

2–2 Optional devices

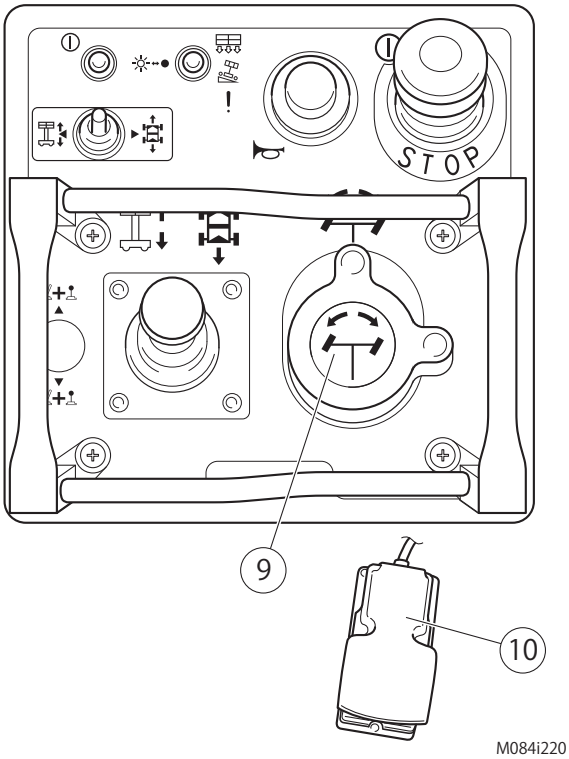

fig. 4-3

(9) Steering dial (option)
While the power indicator light goes on by selecting the lift/ travel select switch to "TRAVEL," turn the steering dial to right or left and the steering wheels will turn right or left. This operation is possible even when traveling. By returning the steering dial to neutral, the steering weels will return to neutral automatically.

(10) Foot switch (option)
Press down the foot switch to operate the machine on the platform.
The foot switch is canceled if any of the upper control function is not operated more than 20 seconds after pressing down the foot switch. Release the switch once, then operate again to enable the functions.

3. Lower control panel

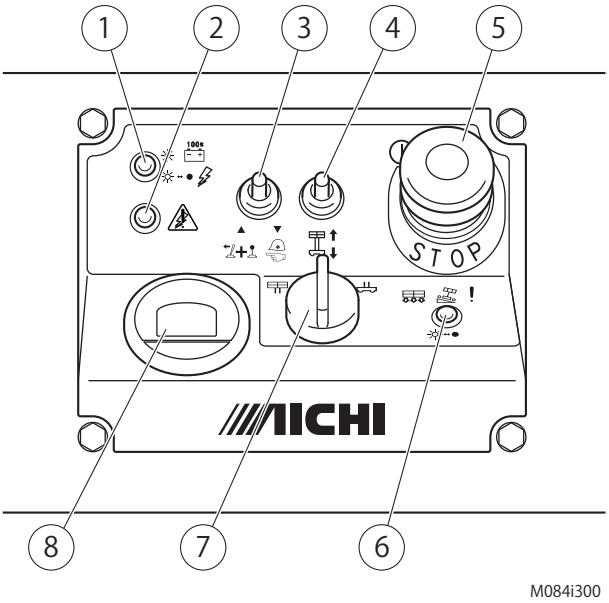

fig. 4-4

(1) Battery charger indicator light (green)
This light goes on when charging is finished. This light blinks when the battery charger is charging batteries.

(2) Battery charger failure indicator light (red)
This light goes on or blinks, in the event of battery charger failures.

(3) Enable switch / Pre-start check switch

- Hold this switch up, to operate the machine on the ground.

The enable switch is canceled if any of platform lift function is not operated more than 20 seconds after holding the enable switch to its "ON" position. Release the switch once, then operate again to enable the functions.

- Follow the instruction and hold this switch to lower position when the pre-start check is performed.

(4) Lift switch
Operate this switch up and the platform will lift up.
Operate this switch down and the platform will lift down.

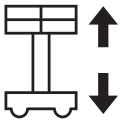

https://truckmanualshub.com/

(5) Emergency stop button

Push down the emergency stop button to its "OFF" position to stop all functions. Pull up the emergency stop button to its "ON" position to operate the machine.

(6) Overload warning light / Tilt light / System failure light

- Overload warning light: When the platform is overloaded, this light blinks, the alarm buzzer sounds and all of the functions are disabled.

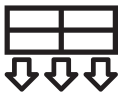

- Tilt light: When the machine is on a slope, this light goes on, the alarm buzzer sounds and platform lift up function is disabled.

- System failure light: This light goes on or blinks, in the event of a computer control system failure.

(7) Key switch for Upper control / Off / Lower control selection

Turn the key switch to the left and the upper controls will operate.

Turn the key switch to center position and the machine will be off.

Turn the key switch to the right and the lower controls will operate.

(8) Battery level indicator / Hour meter

- This indicator displays the battery charge level.
- The hour meter works only when the machine is in motion.

https://truckmanualshub.com/

Chapter 5
Workplace Check

WARNING

Do not move the machine to the workplace until the workplace check is performed.

- Make sure to check the workplace before starting operation. Make sure there are no following hazards:
  - near electric power lines and apparatus
  - holes
  - sloped surfaces
  - slippery or icy surfaces
  - soft ground
  - bumps
  - curbs
  - debris
  - strong winds or gusts
  - other hazardous situations
- Remove the hazards, if any, after the workplace check. If it is not possible to remove them, do not move the machine to the workplace.
- The machine can be used only on level surfaces which are firm and for which all 4 wheels can maintain contact evenly with the ground.

https://truckmanualshub.com/

Chapter 6
Pre-Start Check

WARNING

- Do not operate the machine before pre-start checks described in this manual.
- Perform the pre-start checks on a firm, level surface. Begin the checks with the platform lowered, and the extension deck retracted.
- If the pre-start checks reveal any abnormalities, immediately put an "Out of Order" sign on the machine, and stop using the machine. The use of the machine not repaired can cause a serious accident.
  After repairs are completed, perform the pre-start checks again from the beginning.
- If there is damage, such as cracks, on the welds of the platform guardrails, or on the guardrail pipes, replace the guardrails immediately.
- Damage and stains to the decals will obstruct correct handling. Immediately remove the stain, or replace the decals.
- Make sure to perform the checks with no load on the platform.

NOTICE

While the machine is being moved, or the platform is being raised or lowered, the motion alarm buzzer produces a warning sound for personnel to stand away from the machine.

1. Visual check

Step 1

Circle the machine once and check visually that there are no oil leaks, and no damage to the decals or to the machine.

Step 2

Make sure there is no damage, looseness, or missing parts in the wiring, bolts, each switch and the guardrail. Make sure all the guardrails are attached properly, and all the bolts, etc. are tightly fastened.

Step 3

Make sure all decals are in place, legible and no damage. Replace any lost or damaged decals. Use mild soap and water to clean decals. Refer to section 2 of chapter 2 for decals and their locations.

Step 4

Check the hydraulic oil level when the platform is fully lowered and the extension deck is retracted. Refer to section 2–1 of chapter 7 for details.

Step 5

Check for battery leaks, and check that there is sufficient battery solution.
Refer to section 2–2 of chapter 7 for details.

2. Function check

2–1 Preparations for function check

Step 6

Put the machine in the following state
– Put the machine on a firm, level surface.
– Lower and retract the platform fully.
– Operate the machine from the lower control.
– Unload the platform.

https://truckmanualshub.com/

Step 7

After charging the battery, remove the charging plug from the socket, and store in the designated place.

2–2 Battery level check

Step 8

Turn the key switch to “LOWER CONTROL." Make sure the battery level indicator is in the green range.

2–3 Raising and lowering platform check

Step 9

(1) Hold the pre-start check switch down.
(2) Hold the lift switch "UP" and raise the platform. The alarm buzzer sounds just after operating both switches.

Step 10

Make sure that the wear pad stops between the red arrows on the chassis.

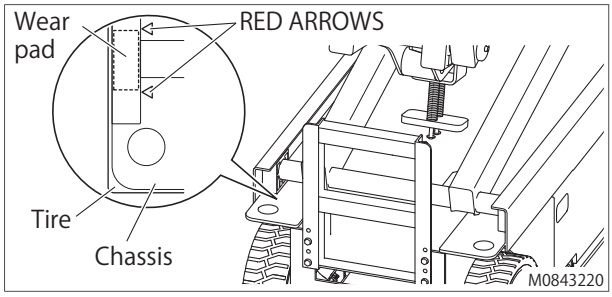

fig. 6–1

Step 11

(1) Keep holding the pre-start check switch and the lift switch. Make sure that the alarm buzzer stops sounding about 5 seconds after the wear pad stopped.
(2) At that time, make sure the error indicator light is going off.

NOTICE

If the buzzer does not stop sounding, the platform lift up function is disabled and the error indicator light goes on or blinks.

Step 12

(1) Hold the enable switch up. Raise and lower the platform completely a few times, and make sure the platform operates smoothly (no strange noises, vibrations, or rattling).
(2) The platform lowering will stop when the platform is 1.4 m (SV06CNL) / 1.6 m (SV08CNL) above the ground. To lower the platform fully, check that there are no people and/or objects under the platform, release the lift switch once, wait 2 seconds and then operate again to lower the platform fully.

2–4 Emergency stop check

Step 13

Push the emergency stop button.

Step 14

Attempt to raise and lower the platform. Make sure that these functions are disabled.

Step 15

Pull the emergency stop button up to release the stop state.

2–5 Pothole protector check

Step 16

(1) Raise the platform. When the pothole protectors are fully come down, the platform is raised approx. 1.2 m (SV06CNL) / 1.4 m (SV08CNL) from ground, stop the platform.
(2) Push the pothole protectors, and make sure it does not move.
(3) Lower the platform completely.
(4) Remove the upper control panel from the guardrails of the platform.
(5) Place a piece of wood 40 mm thick under the pothole protector.

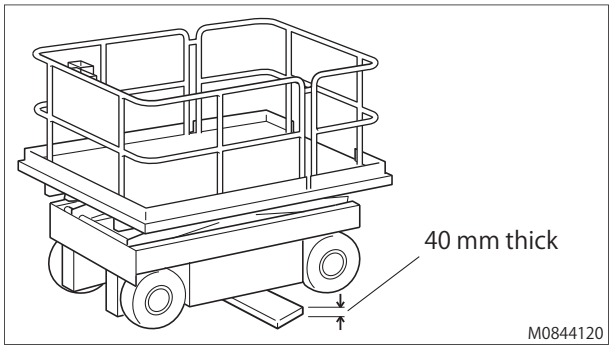

fig. 6–2

(6) Raise the platform to about the same height as in (1).

https://truckmanualshub.com/

(7) Make sure the pothole protectors are not fully come down when it comes in contact with the piece of wood.
(8) Attempt to raise the platform. Make sure the raise function is disabled.
(9) Turn the key switch to "UPPER CONTROL."
(10) Attempt to travel using the upper control panel. Make sure the travel function is disabled.
(11) Lower the platform fully.
(12) Return the upper control panel to its original position and remove the piece of wood which was placed in (5).

2–6 Upper control check

Step 17

Turn the key switch to "UPPER CONTROL."

Step 18

Get on the platform. When getting on or off the platform, use three-point support (for example, 2 arms and 1 leg, or 1 arm and 2 legs).

Step 19

Select the lift/travel select switch to either "LIFT" or "TRAVEL," operate each joystick and switch on the upper control panel. Make sure each function operates normally, and does not make strange noises.

Step 20

(1) Select the lift/travel select switch to "LIFT."
(2) Hold the switch more than 0.3 second and then release it, the power indicator light goes on and the alarm buzzer sounds.
(3) Raise and lower the platform completely a few times, and make sure the platform operates smoothly (no strange noises, vibrations, or rattling).
(4) The platform lowering will stop when the platform is 1.4 m (SV06CNL) / 1.6 m (SV08CNL) above the ground. To lower the platform fully, check that there are no people and/or objects under the platform, release the lift/travel joystick controller once, wait 2 seconds and then operate again to lower the platform fully.

Step 21

(1) Select the lift/travel select switch to "TRAVEL."
(2) Hold the switch more than 0.3 second and then release it, the power indicator light goes on and the alarm buzzer sounds.
(3) Operate the lift/travel joystick controller slightly and slowly to "FORWARD" and "BACKWARD." Make sure the machine travels forward and backward correspondingly.
(4) Return the lift/travel joystick controller to neutral. Make sure the machine stops.

Step 22

Travel a few meters, and make sure the machine operates smoothly (no strange noises, vibrations, or rattling). Repeat a few times.

Step 23

Steer and make sure the steering is smooth (no strange noises, vibrations, or rattling).

Step 24

(1) Push the emergency stop button.
(2) Attempt to raise and lower the platform, to travel forward and backward, and to steer left and right. Make sure that these operations are disabled.
(3) Pull the emergency stop button up to release the stop state.

2–7 Natural lowering check

Step 25

Raise the platform to its highest, and leave it there for a few minutes. Then try to raise the platform more. Make sure it does not raise at all (or go down naturally).

2–8 Tilt warning check

Step 26

(1) Lower and retract the platform fully.
(2) Remove the upper control panel from the guardrails of the platform.
(3) Place a piece of wood 40 mm thick under both wheels on one side.
(4) Travel the machine up onto these pieces from the ground with the upper control panel.
(5) Make sure that the tilt light goes on and the alarm buzzer sounds.
(6) Attempt to raise the platform. Make sure the raise function is disabled.

https://truckmanualshub.com/

2–9 Limited travel speed check

Step 27

(1) Raise the platform about 2 m. Travel the machine forward or backward and make sure the machine travels at slow speed.
(2) Some machines should not move at all unless the platform is lowered and the extension deck retracted. If this is the case, make sure the machine cannot travel when the platform is not in this state.

2–10 Last check

Step 28

Lower the platform fully and turn the key switch to "OFF."

Step 29

Circle the machine and check visually that there are no oil leaks.

https://truckmanualshub.com/

Chapter 7
Maintenance

1. Storage method

After each use, store the machine as follows:

(1) Park the machine on a firm, level surface.
(2) Lower and retract the platform fully.
(3) Turn the key switch to "OFF," and remove the key to prevent using the machine without permission, and store it suitably.
(4) Chock the wheels.
(5) Perform the daily maintenance.

2. Daily Maintenance

Only maintenance items that described in this manual can be done by the operator.

2–1 Hydraulic oil level check

- Maintaining the hydraulic oil at sufficient level is very important for the machine operation. Deficient of the hydraulic oil level can damage hydraulic parts.
- Daily checks from the oil level gauge (fig. 7-1, A) can confirm the change of the hydraulic oil level that might show the hydraulic system problems.

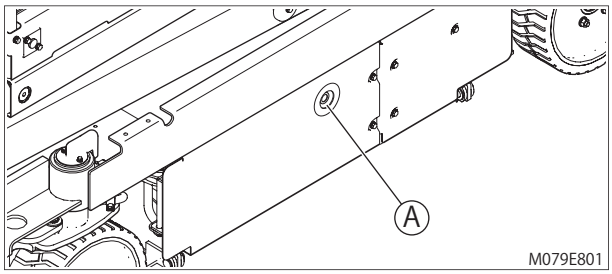

fig. 7–1

2–2 Battery liquid level check

- Check the battery liquid levels every day (especially when using the machine in warm and dry climates).
- When the battery liquid level has dropped more than 10 mm, add distilled water only. The battery life will be shortened if anything other than distilled water is added.
- Keep the terminals and the upper surface of the battery clean.

2–3 Battery charging

⚠WARNING

- Charge in a well-ventilated, open area, away from open flames.
- Do not charge the battery when it has too little battery liquid, otherwise it will produce a poisonous gas, and there is possibility of damage to people and things, such as poisoning or metal corrosion. In this case, stop charging immediately.
- The battery needs charging when battery level indicator is in the red range or a day's work is finished.
- Charge the battery before discharging fully, otherwise the battery will be damaged permanently.
  – Do not charge the battery continuously for more than two days.
  – Do not disconnect the cable while charging.
  – Always keep the charger dry.

3. Periodic Maintenance

- Perform a monthly and annual inspection referring to the separate service manual.
  – Depending on the laws of the country in which the machine is being used, keep the records of the checks for the required number of years.
  – For any doubts you may have about handling, inspection or spare parts, contact AICHI, AICHI's dealer, or the authorized service shop nearest to you.
  – Refer to the separate service manual for what must be checked regularly.
- If the machine has not been used for over one month, make sure to perform the monthly inspection before use.

https://truckmanualshub.com/

Chapter 8
Operation

NOTICE

While the machine is being traveled, or the platform is being raised or lowered, the motion alarm buzzer produces a warning sound for personnel to stand away from the machine.

1. Lower Control (from ground)

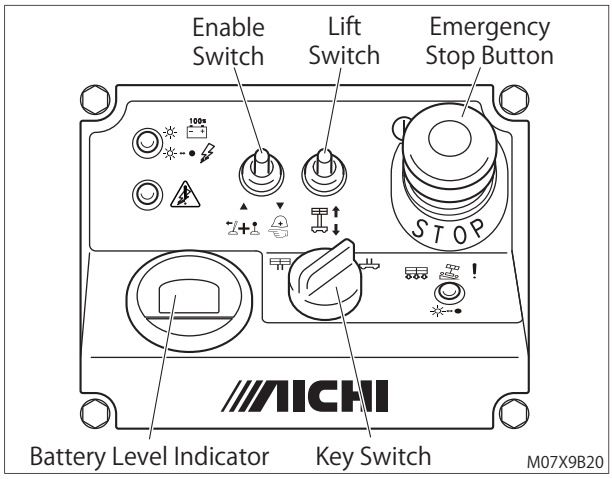

fig. 8–1

(1) Turn the key switch to "LOWER CONTROL."
(2) Check that the battery level indicator is in the green range, and that the battery is sufficiently charged.
(3) Pull the emergency stop button on both the lower control panel and the upper control panel.

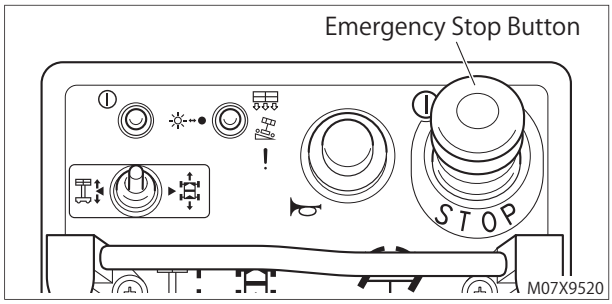

fig. 8–2

1–1 Raising and Lowering Platform

(1) Hold the enable switch up.
(2) Operate the lift switch to "RAISE" or "LOWER."
(3) Immediately reduce the load if the overload warning light turned on when raising the platform.

NOTICE

The lowering of the platform will stop when the platform is 1.4 m (SV06CNL) / 1.6 m (SV08CNL) above the ground. To lower the platform fully, check that there are no people and/or objects under the platform, release the lift switch once, wait 2 seconds and then operate again to lower the platform fully.

2. Upper Control (from platform)

(1) Turn the key switch to "UPPER CONTROL."
(2) Check that the battery level indicator is in the green range, and that the battery is sufficiently charged.
(3) Pull the emergency stop button on both the lower control panel and the upper control panel.

https://truckmanualshub.com/

2–1 Raising and Lowering Platform

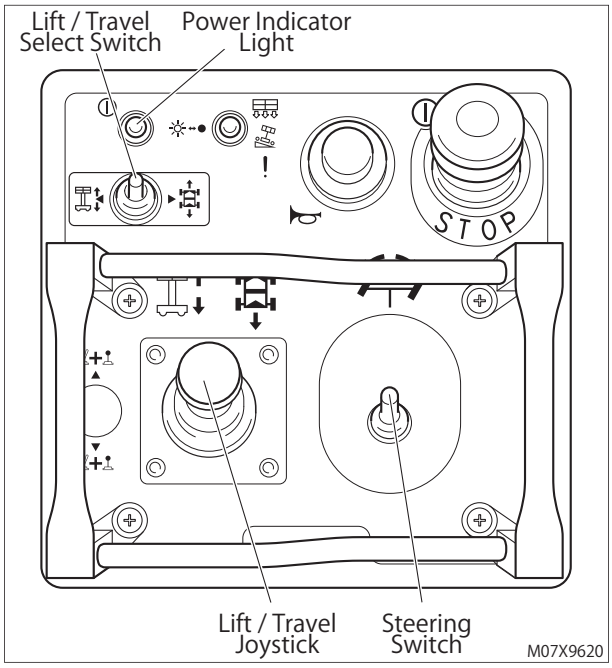

fig. 8–3

(1) Select the lift/travel select switch to "LIFT."
(2) Hold the lift/travel select switch more than 0.3 second and then release it, the power indicator light goes on and the alarm buzzer sounds.
(3) Operate the lift/travel joystick controller to “RAISE” or “LOWER” within 3 seconds after releasing the lift/travel select switch.

NOTICE

If the power indicator light goes off or blinks, release all function switches and then operate again from (1).

(4) Immediately reduce the load if the overload warning light turned on when raising the platform.

NOTICE

The lowering of the platform will stop when the platform is 1.4 m (SV06CNL) / 1.6 m (SV08CNL) above the ground. To lower the platform fully, check that there are no people and/or objects under the platform, release the joystick controller once, wait 2 seconds and then operate again to lower the platform fully.

2–2 Traveling

(1) Select the lift/travel select switch to "TRAVEL."
(2) Hold the switch more than 0.3 second and then release it, the power indicator light goes on and the alarm buzzer sounds.
(3) Operate the lift/travel joystick controller to “FORWARD” or “BACKWARD” within 3 seconds after releasing the lift/travel select switch.

NOTICE

If the power indicator light goes off or blinks, release all function switches and then operate again from (1).

2–3 Steering with Steering Switch

(1) Select the lift/travel select switch to "TRAVEL."
(2) Hold the switch more than 0.3 second and then release it, the power indicator light goes on and the alarm buzzer sounds.
(3) Operate the steering switch to “RIGHT” or “LEFT” within 3 seconds after releasing the lift/travel select switch. Then steering wheels should turn right or left. This operation is possible even when traveling.

NOTICE

If the power indicator light goes off or blinks, release all function switches and then operate again from (1).

(4) Even when the steering switch is returned to neutral, steering will not return to neutral.

2–4 Steering with Steering Dial (option)

(1) Select the lift/travel select switch to "TRAVEL."
(2) Hold the switch more than 0.3 second and then release it, the power indicator light goes on and the alarm buzzer sounds.
(3) Turn the steering dial to “RIGHT” or “LEFT” within 3 seconds after releasing the lift/travel select switch. Then steering wheels should turn right or left. This operation is possible even when traveling.

NOTICE

If the power indicator light goes off or blinks, release all function switches and then operate again from (1).

https://truckmanualshub.com/

(4) By returning the steering dial to neutral, steering will return to neutral automatically.

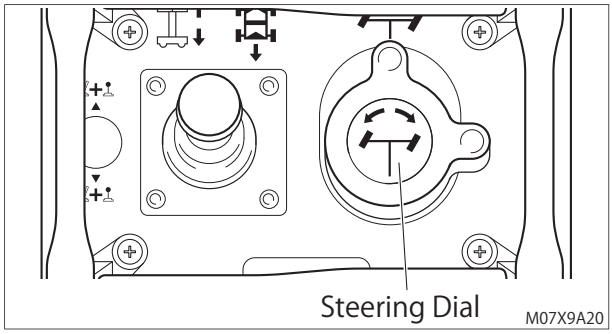

fig. 8–4

3. Extension Deck

⚠ DANGER

Make sure the extension deck has extended or retracted fully and lock it, before operating the machine.
The extension deck which is not locked may move accidentally. Such an accident increases the potential of fall hazards.

3–1 Extending

(1) Get on the side of the platform that does not have the extension deck.
(2) Turn the handles (fig. 8-5, A), which are on the left and right guardrails, towards the inside until it stops. (fig. 8-5, 1)
(3) The lock of the extension deck will be released.

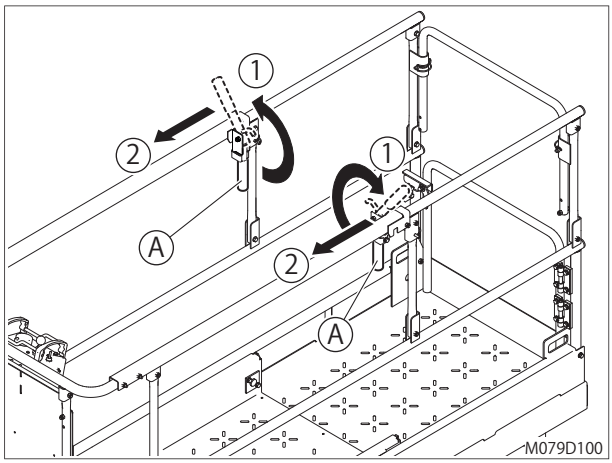

fig. 8–5

(4) While holding the handles, push the deck forwards until it stops. (fig. 8-5, 2)
(5) Turn the handles (fig. 8-6, A) to their original positions. The extension deck is now locked. (fig. 8-6, 3)

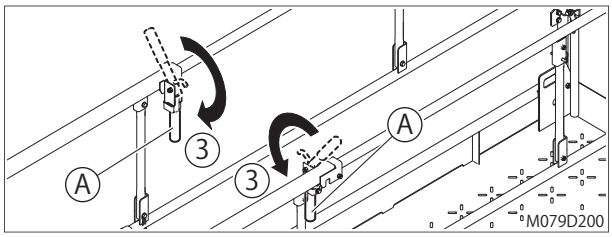

fig. 8–6

3–2 Retracting

(1) Get on the side of the platform that does not have the extension deck.
(2) Turn the handles, which are on the left and right guardrails, towards the inside until it stops. The lock of the extension deck will be released.
(3) While holding the handles, pull the deck towards you until it stops.
(4) Turn the handles to their original positions. The extension deck is now locked.

4. Fold Down Guardrail (if equipped)

The platform guardrails may be lowered approx. 45 cm, which is useful for limited head clearance or transportation.

⚠ DANGER

Using the machine with the guardrails folded increases the potential for hazards, which could result in death or serious injury. Do not raise the platform with the guardrails folded. Take extreme care when traveling the machine with the guardrails folded.

4–1 Folding Down Guardrails

Fold down the platform guardrails according to the following procedure. It should be done with two or more people.

(1) Lower the platform in the down position and lock the extension deck.
(2) Close and lock the platform gate.
(3) Remove the lock pin A (see fig. 8-7) that which locks the upper controls (fig. 8-7, B) to the guardrails. Remove the controls from the guardrails and lay them on the platform floor.

https://truckmanualshub.com/

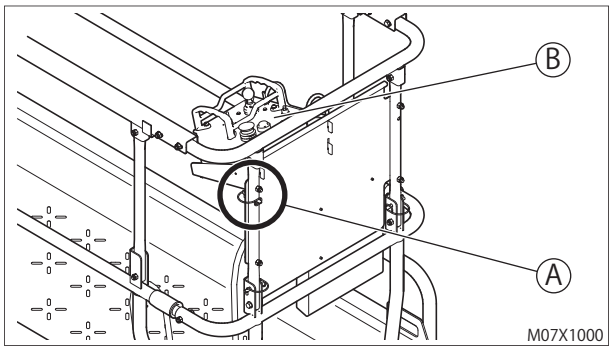

fig. 8–7

(4) Hold the areas B (see fig. 8-8) of the guardrails so that they do not fall down. Remove the lock pins A (see fig. 8-8), which lock the guardrails.

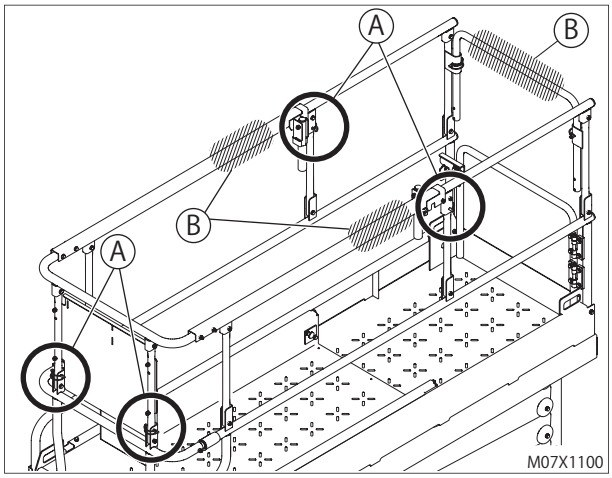

fig. 8–8

(5) Keep holding the parts B, slowly push down the guardrails forward until the top rails rest on the middle rails (see fig. 8-9).

⚠CAUTION

Do not hold guardrails except the areas B (see fig. 8-9) when the guardrails fold down. Your hands might be pinched between the rails.

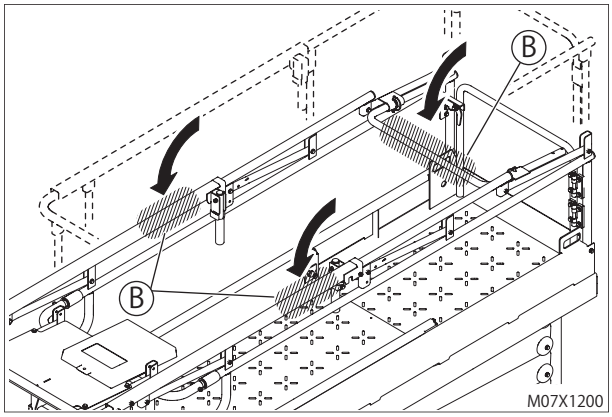

fig. 8–9

4–2 Raising Guardrails

In order to put the guardrails back to the original position, perform the procedure backwards.

⚠DANGER

Make sure the fold down guardrail has raised and lock it by pins, before operating the machine. The folding down guardrails which is not locked may move accidentally. Such an accident increases the potential of fall hazards.

⚠CAUTION

Take extreme care when getting on and off the platform after the guardrails have been folded down.

https://truckmanualshub.com/

Chapter 9

Emergency Operation

NOTICE

If the emergency operation was done because of a malfunction, immediately stop the operation, and have the machine checked and repaired.

1. Emergency Stop

Use the emergency stop button. When the emergency stop button is pressed and all of the functions are disabled. Press the emergency stop button in the following cases:

(1) When personnel on board the platform stops all of the machine movements to avoid danger.

(2) When the personnel on the ground judges that the operation from the upper control is unsafe.

(3) When the machine is uncontrollable due to malfunction.

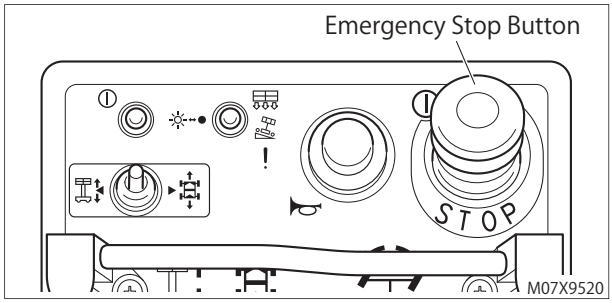

fig. 9–1

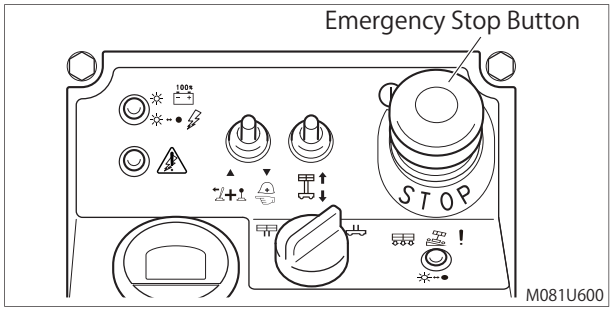

fig. 9–2

2. Emergency Lowering

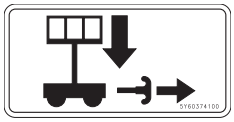

If the platform has been raised, and it is not possible to lower it because of power source failure, for example, a dead battery, or because the upper stop switch has been pressed, do the following:

(1) The emergency lowering handle is located at the front side of the machine (fig. 9-3, A). Pull the handle outward and lower the platform.

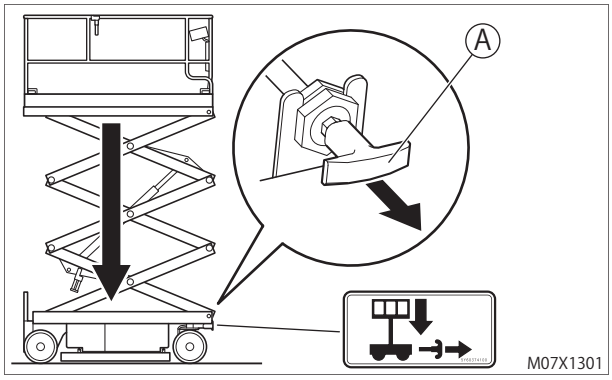

fig. 9–3

(2) To stop lowering, release the emergency lowering handle.

⚠WARNING

Do not put your body or any object between scissors arms. Failure to avoid this hazard could result in serious injury or property damage.

https://truckmanualshub.com/

Chapter 10
Transporting

NOTICE

- This information about transporting is offered as a recommendation.
- Only the qualified persons shall use the transport vehicle, crane, forklift, and the machine.
- All persons on transportation must comply with employer, work area, and local and national safety regulations regarding the use of these machinery.
- Each machinery must comply with all applicable regulations, and must be inspected and used in accordance with their manufacturer's instructions.

1. Preparation before loading

When transporting the machine by a transport vehicle, beware of the following.

(1) The transport vehicle must be loaded and unloaded on a firm, level surface.
(2) The platform must be lowered fully, and retract and lock the extension deck.
(3) Make sure the bolts and pins for holding the guardrail are tight.
(4) Check the entire machine for loose bolts, and unfastened locks.

2. Loading the machine

⚠WARNING

- Do not travel the machine on a slope that exceeds the machine gradeability. The wheels of the machine could fall off, if the transport vehicle or the loading ramps incline excessively.
- Do not turn the steering of the machine while it is on the ramps, because of the possibility of a fall.
- Use a winch for loading/unloading, if the ramp is too steep or slippery.
- When loading/unloading, be sure to have a guide assist you so that the wheels do not fall off the ramps and the transport vehicle bed.
- Failure to avoid these fall hazards could result in death or serious injury.

Step 1

Chock the wheels of the transport vehicle. (fig. 10–1, A)

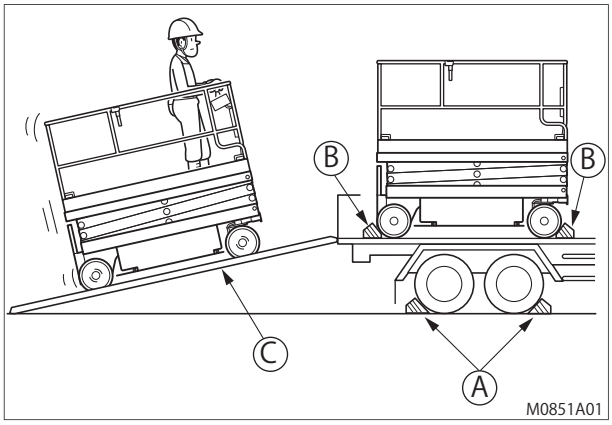

fig. 10–1

Step 2

Attach the loading ramps at as small an angle as possible.(fig. 10–1, C)

Step 3

Travel the machine forward at low speed onto the ramps, and load the machine onto the transport vehicle.

Step 4

Stop the machine and chock the wheels of the machine.(fig. 10–1, B)

Step 5

Pass the chains or wire ropes through all the hoisting rings and tie down the machine on the vehicle bed securely. (Refer to fig. 10–2)

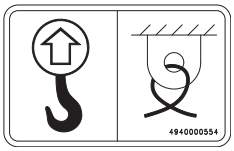

https://truckmanualshub.com/

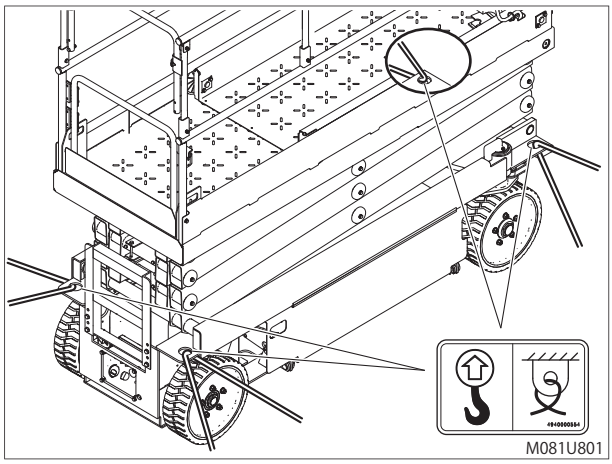

fig. 10–2

3. Hoisting the machine

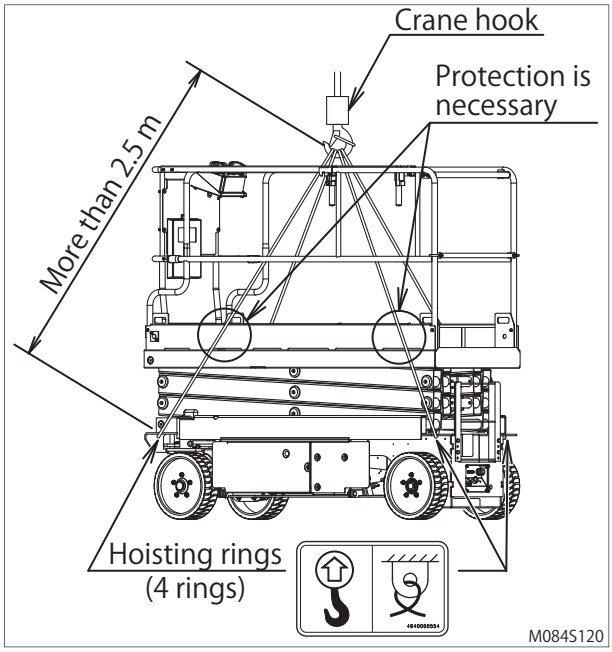

fig. 10–3

WARNING

- Be sure the crane capacity, loading surfaces, sling wires or chains are strong enough to support the machine weight. See the serial number plate for the machine weight.
- Pass the sling chains or wire ropes through the hoisting rings. There is the possibility that the machine will break, and fall. Such accidents could result in death or serious injury.

Step 1

Use 4 sling chains or wire ropes of the same length. (Refer to fig. 10–3 for length)

Step 2

Attach the sling chains or wire ropes firmly, for example, with shackles, to all the hoisting rings.

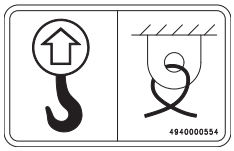

NOTICE

If sling chains or wire ropes contact the platform, place pads on the platform to protect it.

Step 3

Place the sling wires or chains according to the fig. 10–3 and hoist the machine.

4. Lifting with forklift

If a forklift is used, there are marks on the machine. Adjust the 2 forklift forks to the marks and insert.

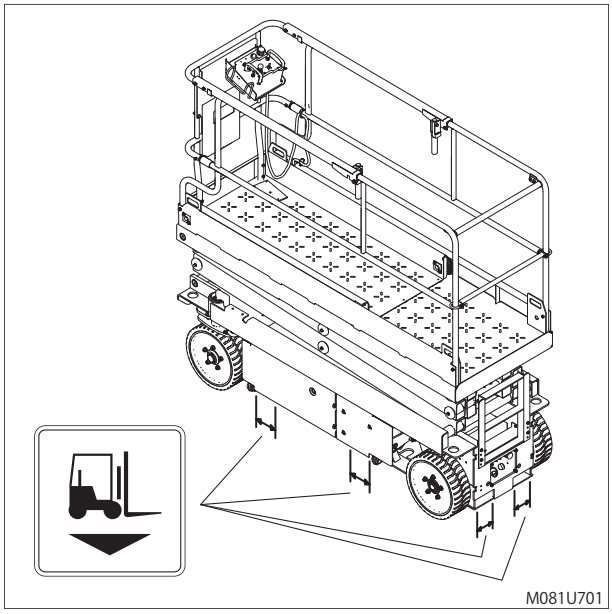

fig. 10–4

WARNING

Insert the forklift forks at the marks. There is hazard of the machine falling, and of damage to the machine. Such accidents could result in death or serious injury.

https://truckmanualshub.com/

Chapter 11
Storage

(1) Clean each part.

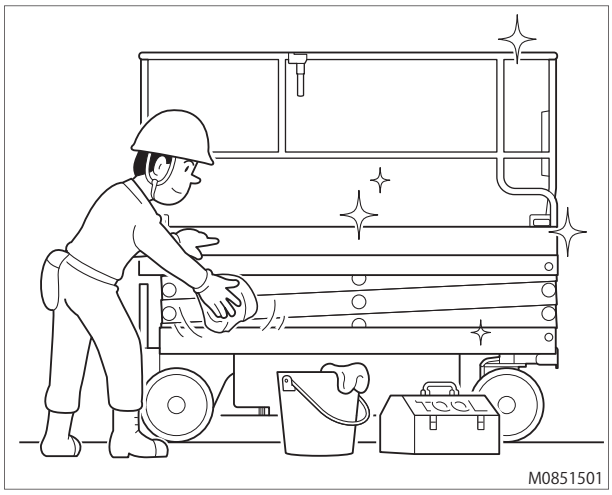

fig. 11–1

NOTICE

Be careful about freezing in winter.

(2) Wipe away dirt from around the electrical parts with a dry cloth.

NOTICE

Do not wash, particularly high-pressure washing, around the electrical parts.

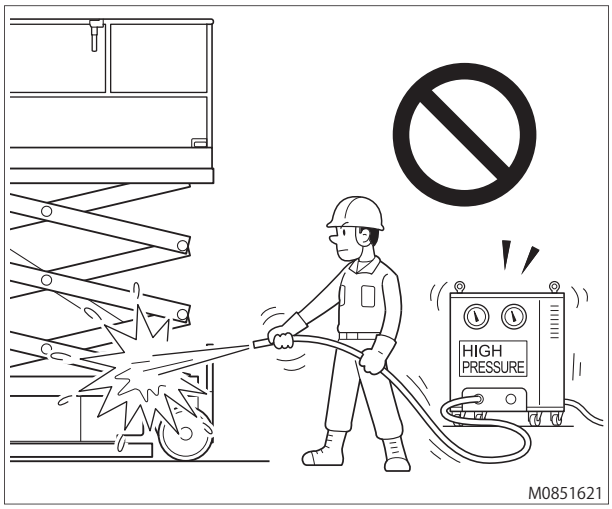

fig. 11–2

(3) Grease each part.
Apply enough rust-prevention oil to the cylinder rod of the steering cylinder.

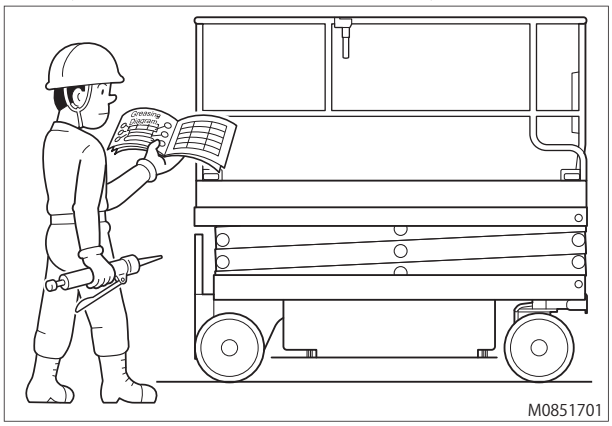

fig. 11–3

(4) Disconnect the minus terminal (anode) of the battery. Cover the batteries, or remove them from the machine.

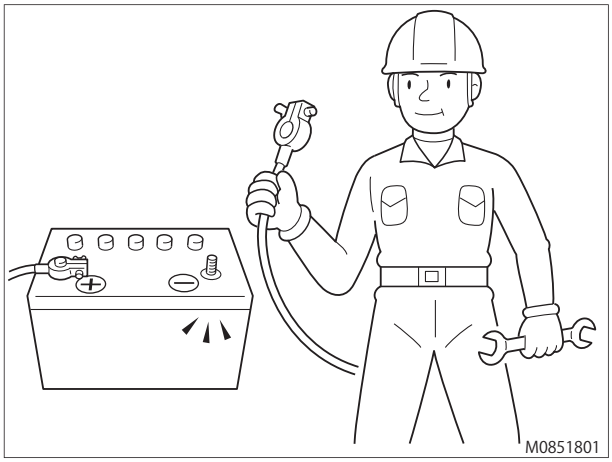

fig. 11–4

NOTICE

- When removing the battery, disconnect the minus terminal (anode) first.
- When reattaching the battery, connect the minus terminal (anode) last.

https://truckmanualshub.com/

(5) To prevent overdischarging, charge the battery every month.

NOTICE

The battery will self-discharge little by little even when it is not in use. If it is not charged for a long time, it will become over-discharged, and this will shorten the battery life.

(6) In order to prevent rust when the machine is stored for a long time, operate the machine every month to prevent the loss of the oil layer on lubricated parts.

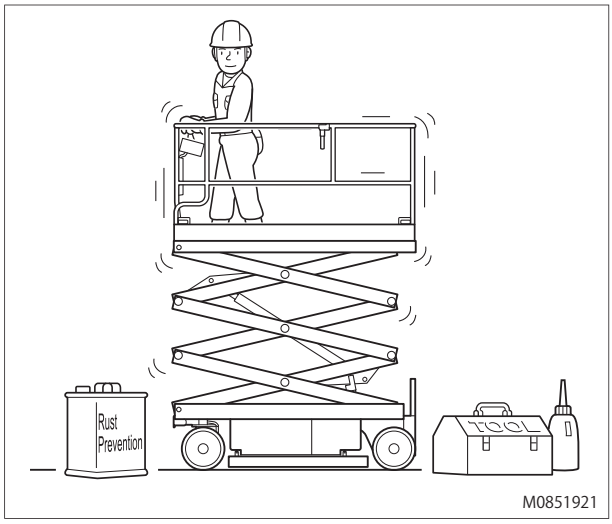

fig. 11–5

NOTICE

Before operating the machine, wipe off the rustprevention oil that had been applied to the cylinder rod.

https://truckmanualshub.com/

Chapter 12
Specifications

Model				SV06CNL	SV08CNL
Performance	Work floor height		Max.	6,100 mm	7,770 mm
			Min.	1,025 mm	1,155 mm
	Rated working load (Evenly distributed)		Total	360 kg (2 persons+tools: 200 kg)	230 kg (2 persons+tools: 70 kg)
			Extension deck	120 kg (1 person + tools: 40 kg)	
	Maximum allowable tilt angle			Front-to-back: 3.0 ° Left-to-right: 1.5°	
	Maximum travel speeds (Level surface)		Stowed	4.5 km/h	
			Elevated	1.0 km/h	
	Platform lift speeds		Up	24–36 s / 5.1 m	32–48 s / 6.8 m
			Down	24–36 s / 5.1 m	32–48 s / 6.8 m
	Gradeability (Stowed)			14 ° (25 %)	
	Minimun turning radius		Inside	0 mm	
			Outside	2,240 mm	
Measurements	Overall length	Folding down guardrails	Raised	2,345 mm	
			Folded	2,795 mm	
	Overall width			800 mm	
	Overall height	Folding down guardrails	Raised	2,125 mm	2,255 mm
			Folded	1,720 mm	1,845 mm
	Wheelbase			1,815 mm	
	Tread			673 mm	
	Platform inner dimensions (length × width × height)			2,210 × 710 × 1,100 mm	
	Extension length			1,000 mm	
	Tires (Diameter × Width)			406 × 127 mm	
Weight	Gross weight			1,810 kg	2,140 kg
	Maximum tire loading force			800 kg	
Power source	AC motor power output (Travel)			0.7 kW (JIS)	
	DC motor power output (Platform lift, Steering)			2.2 kW (JIS)	
	Battery model			GS Yuasa EB100	
	Battery capacity			200 Ah	
	Battery voltage			12 V × 2 (× 2 Parallel)	
	Charger	Charging method		Fixed current, fixed voltage	
		Input voltage		AC 100–240 V	
		Frequency		50 or 60 Hz	
		Max. output current		25 A	
	System voltage			DC 24 V	
Rated hydraulic pressure				18.1 MPa (185 kg/cm^2)	
Hydraulic oil tank capacity				5.3 L	

* These machine are intended for indoor use only.
* The limit deviation tolerance without the instruction depends on AICHI's own standard.
* Travel speed, function speed, and gradeability assume there is 1 person on the platform and the battery is fully charged.
* Travel speed and gradeability are subject to surface conditions and sufficient traction.
* Advisable atmospheric temperature range: -20℃ to +40℃

https://truckmanualshub.com/

This page intentionally left blank.

https://truckmanualshub.com/

https://truckmanualshub.com/

MICHI