https://truckmanualshub.com/

Service and Maintenance Manual

Model
40H
40H+6

3120240
October 11, 2001

ANSI

https://truckmanualshub.com/

https://truckmanualshub.com/

SECTION A. INTRODUCTION - MAINTENANCE SAFETY PRECAUTIONS

A.A GENERAL

This section contains the general safety precautions which must be observed during maintenance of the aerial platform. It is of utmost importance that maintenance personnel pay strict attention to these warnings and precautions to avoid possible injury to themselves or others, or damage to the equipment. A maintenance program must be followed to ensure that the machine is safe to operate.

⚠ WARNING

MODIFICATION OF THE MACHINE WITHOUT CERTIFICATION BY A RESPONSIBLE AUTHORITY THAT THE MACHINE IS AT LEAST AS SAFE AS ORIGINALLY MANUFACTURED, IS A SAFETY VIOLATION.

The specific precautions to be observed during maintenance are inserted at the appropriate point in the manual. These precautions are, for the most part, those that apply when servicing hydraulic and larger machine component parts.

Your safety, and that of others, is the first consideration when engaging in the maintenance of equipment. Always be conscious of weight. Never attempt to move heavy parts without the aid of a mechanical device. Do not allow heavy objects to rest in an unstable position. When raising a portion of the equipment, ensure that adequate support is provided.

⚠ WARNING

SINCE THE MACHINE MANUFACTURER HAS NO DIRECT CONTROL OVER THE FIELD INSPECTION AND MAINTENANCE, SAFETY IN THIS AREA RESPONSIBILITY OF THE OWNER/OPERATOR.

A.B HYDRAULIC SYSTEM SAFETY

It should be noted that the machines hydraulic systems operate at extremely high potentially dangerous pressures. Every effort should be made to relieve any system pressure prior to disconnecting or removing any portion of the system.

Relieve system pressure by cycling the applicable control several times with the engine stopped and ignition on, to direct any line pressure back into the reservoir. Pressure feed lines to system components can then be disconnected with minimal fluid loss.

A.C MAINTENANCE

⚠ WARNING

FAILURE TO COMPLY WITH SAFETY PRECAUTIONS LISTED IN THIS SECTION MAY RESULT IN MACHINE DAMAGE, PERSONNEL INJURY OR DEATH AND IS A SAFETY VIOLATION.

- NO SMOKING IS MANDATORY. NEVER REFUEL DURING ELECTRICAL STORMS. ENSURE THAT FUEL CAP IS CLOSED AND SECURE AT ALL OTHER TIMES.
- REMOVE ALL RINGS, WATCHES AND JEWELRY WHEN PERFORMING ANY MAINTENANCE.
- DO NOT WEAR LONG HAIR UNRESTRAINED, OR LOOSE-FITTING CLOTHING AND NECKTIES WHICH ARE APT TO BECOME CAUGHT ON OR ENTANGLED IN EQUIPMENT.
- OBSERVE AND OBEY ALL WARNINGS AND CAUTIONS ON MACHINE AND IN SERVICEMANUAL.
- KEEP OIL, GREASE, WATER, ETC. WIPED FROM STANDING SURFACES AND HAND HOLDS.
- USE CAUTION WHEN CHECKING A HOT, PRESSURIZED COOLANT SYSTEM.
- NEVER WORK UNDER AN ELEVATED BOOM UNTIL BOOM HAS BEEN SAFELY RESTRAINED FROM ANY MOVEMENT BY BLOCKING OR OVERHEAD SLING, OR BOOM SAFETY PROP HAS BEEN ENGAGED.
- BEFORE MAKING ADJUSTMENTS, LUBRICATING OR PERFORMING ANY OTHER MAINTENANCE, SHUT OFF ALL POWER CONTROLS.
- BATTERY SHOULD ALWAYS BE DISCONNECTED-DURING REPLACEMENT OF ELECTRICAL COMPONENTS.
- KEEP ALL SUPPORT EQUIPMENT AND ATTACHMENTS STOWED IN THEIR PROPER PLACE.
- USE ONLY APPROVED, NONFLAMMABLE CLEANING SOLVENTS.

https://truckmanualshub.com/

REVISON LOG

Aug, 1985	-Original Issue
Nov. 1985	-Revised
Oct. 1998	-Revised
Aug. 1999	-Revised
October 11, 2001	-Revised

https://truckmanualshub.com/

SUBJECT - SECTION, PARAGRAPH **PAGE NO.**

SECTION A - INTRODUCTION - MAINTENANCE SAFETY PRECAUTIONS

A.A General . . . . . a
A.B Hydraulic System Safety . . . . . a
A.C Maintenance . . . . . a
EFFECTIVITY CHANGES . . . . . b
TABLE OF CONTENTS I
LIST OF ILLUSTRATIONS II
LIST OF TABLES III

SECTION 1 - SPECIFICATIONS

1.1 Capacities. 1-1
1.2 Component Data. 1-1
1.3 Performance Data.. 1-3
1.4 Torque Requirements.. 1-3
1.5 Lubrication. 1-3
1.6 Pressure Settings. 1-8
1.7 Cylinder Specifications 1-9
1.8 Boom Tape 1-9
1.9 Major Components Weights 1-10
1.10 Critical Stability Weights 1-10
1.11 Serial Number Location (See Figure 1-4.) 1-10

SECTION 2 - PROCEDURES

2.1 General. 2-1
2.2 Servicing And Maintenance Guidelines. 2-1
2.3 Lubrication Information. 2-2
2.4 Cylinders - Theory Of Operation. 2-3
2.5 Valves - Theory Of Operation. 2-3
2.6 Boom Chains. (See Figure 2-1) 2-4
2.7 Wear Pads. 2-6
2.8 Cylinder Checking Procedure. 2-7
2.9 Cylinder Repair. 2-9
2.10 Cylinder Removal And Installation. 2-12
2.11 Boom Maintenance. 2-14
2.12 Tilt Alarm Switch.. 2-19
2.13 Horizontal High Speed Cutout Switch Adjustment Procedure. 2-19
2.14 Governor Checks And Addco Adjustment, Ford. 2-20
2.15 Throttle Checks And Precision Governor Adjustments, Addco (See Figure 2-6.) 2-21
2.16 Electric Governor And Adjustments - Ford Engines. 2-22
2.17 Throttle Checks And Adjustments - Deutz F2l511 Engine. (See Figure 2-8.) 2-29
2.18 Throttle Checks And Adjustments Wisconsin Engine. (See Figure 2-9.) 2-33
2.19 Throttle Checks And Adjustments - Deutz F3l912 Engine. (See Figure 2-10.) 2-35
2.20 Throttle Checks And Adjustments - Deutz Engine F3l1011. (See Figure 2-11.) 2-35
2.21 Pressure Setting Procedures. 2-38
2.22 Racine Proportional Air Gap Adjustment. 2-58
2.23 Swing Bearing. 2-59
2.24 Torque Hub, 2w/d. (See Figure 2-36.) 2-63
2.25 Torque Hub 4wd. (See Figure 2-37.) 2-66
2.26 Swing Drive Brake, Mico (Machines Built Prior To May 1992). (See Figure 2-39.) 2-71
2.27 Drive Brake, Mico. (Machines Built Prior To May 1992)(See Figure 2-40.) 2-72
2.28 Swing Drive Brake, Ausco (Machines Built Prior To May 1992). (See Figure 2-41.) 2-75
2.29 Drive Brake, Ausco. (Machines Built Prior To May 1992) (See Figure 2-43.). 2-77
2.30 Drive Brake, Mico. (Machines Built From May 1992 To S/n 33476) (See Figure 2-44.) 2-79
2.31 Swing Brake, Mico. (Machines Built From May 1992 To S/n 33476) (See Figure 2-45.). 2-81

https://truckmanualshub.com/

2.32 Drive Brake, Mico. (Machines Built From S/n 33476 To Present) (See Figure 2-46.) 2-83
2.33 Swing Brake, Mico.(Machines Built From S/n 33476 To Present) (See Figure 2-46.) 2-85
2.34 Controllers 2-87
2.35 Oscillating Axle Bleeding Procedure. 2-87
2.36 Oscillating Axle Lockout Test. 2-88
2.37 Basket Rotator Brake. (See Figure 2-48.) 2-89
2.38 Free Wheeling Option. 2-89
2.39 Spark Arrestor Mufflers.. 2-89
2.40 Footswitch Adjustment.. 2-89
2.41 Hydraulic Pump W/hayes Pump Drive Coupling Lubrication. 2-89
2.42 Dual Fuel System. 2-89
2.43 Preventive Maintenance And Inspection Schedule. 2-90
2.44 Capacity Indicator 2-92

SECTION 3 - TROUBLESHOOTING

3.1 General. 3-1
3.2 Troubleshooting Information. 3-1
3.3 Hydraulic Circuit Checks. 3-1

LIST OF FIGURES

FIGURE NO.	TITLE	PAGE NO.
1-1.	Torque Chart.	1-5
1-2.	Lubrication Chart. (Sheet 1 of 2)	1-6
1-2.	Lubrication Chart. (Sheet 2 of 2)	1-7
1-3.	Serial Number Locations.	1-11
2-1.	Typical Three Section Boom Assembly..	2-5
2-2.	Boom Positioning and Support, Cylinder Repair..	2-8
2-3.	Poly-Pak Seal Installation..	2-11
2-4.	Governor Adjustment, Ford with Addco.	2-20
2-5.	Addco Adjustment, Ford.	2-21
2-6.	Precision Governor Adjustment, Ford. (Sheet 1 of 2).	2-30
2-7.	Precision governor Adjustment, Ford. (Sheet 2 of 2)	2-31
2-8.	Addco Actuator Adjustments, F2L511.	2-32
2-9.	Addco Actuator Adjustments, VG4D.	2-34
2-10.	Addco Actuator Adjustments, F3L912.	2-36
2-11.	Addco Actuator Adjustments, F3L1011.	2-37
2-12.	Racine Proportional Valve Pressure Setting.(Machines Built Prior To Mid 1987) (Sheet 1 of 2)	2-39
2-13.	Racine Proportional Valve Setting.(Machines Built Prior To Mid 1967) (Sheet 2 of 2)	2-40
2-14.	Vickers Proportional Valve Pressure Setting, Machines Built To Present (Sheet 1 of 4)	2-41
2-15.	Vickers Proportional Valve Pressure Setting, Machines Built To Present. (Sheet2 of 4)	2-42
2-16.	Vickers Proportional Valve Pressure Setting, Machines Built To Present. (Sheet 3 Of 4)	2-43
2-17.	Vickers Proportional Valve Pressure Setting, Machines Built To Present. (Sheet 4 of 4)	2-44
2-18.	Vickers Proportional Valve Pressure Setting, Machines Built Prior To 1989 With Accessory Valve. (Sheet 1 of 4).	2-45
2-19.	Vickers Proportional Valve Pressure Setting, Machines Built Prior To 1989 With Accessory Valve. (Sheet 2 of 4)	2-46
2-20.	Vickers Proportional Valve Pressure Setting, Machines Built Prior To 1989 With Accessory Valve. (Sheet 3 Of 4)	2-47
2-21.	Vickers Proportional Valve Pressure Setting, Machines Built Prior To 1989 With Accessary Valve. (Sheet 4 Of 4)	2-48
2-22.	Solenoid Valve Pressure Settings. (Machines Built Prior To 1992 With Steering Wheel)	2-49
2-23.	Pressure And Flow Settings (Machines Built Prior To May 1992 With Steering Wheel)..	2-50
2-24.	Vickers All Hydraulic Machines Pressure Settings (Sheet 1 of 4).	2-51

https://truckmanualshub.com/

2-25. Vickers All Hydraulic Machines Pressure Settings (Sheet 2 of 4) 2-52
2-26. Vickers All Hydraulic Machines Pressure Settings (Sheet 3 of 4) 2-53
2-27. Vickers All Hydraulic Machines Pressure Settings (Sheet 4 of 4) 2-54
2-28. Solenoid Valve Pressure Settings, Machines Built Before 1995. (Sheet 1 of 2) 2-55
2-29. Solenoid Valve Pressure Settings, Machines Built from 1995 To Present. (Sheet 2 of 2) 2-56
2-30. Extend-A-Reach Valve Pressure and Speed Settings Model 40+6. 2-57
2-31. Racine Proportional Air Gap Adjustment, Machines Built Prior To Mid 1987. 2-58
2-32. Swing Bearing Tolerance Boom Placement. 2-59
2-33. Swing Bolt Feeler Gauge Check. 2-59
2-34. Swing Bearing Tolerance Measuring Point. 2-61
2-35. Swing Bearing Torquing Sequence. 2-63
2-36. Torque Hub Assembly, 2/WD.. 2-64
2-37. Torque Hub 4/WD. 2-68
2-38. Torque Hub Carrier Timing. 2-70
2-39. Swing Brake Assembly - Mico (Machines Built Prior To May 1992). 2-71
2-40. Drive Brake Assembly - Mico (Machines Built Prior To May 1992). 2-73
2-41. Swing Brake Assembly - Ausco (Machines Built Prior to May 1992). 2-76
2-42. Drive Brake, (machines Built Prior to May 1992). 2-78
2-43. Drive Brake, Mico. (Machines Built From May 1992 To Machine S/N 33476) 2-80
2-44. Swing Brake, Mico. (Machines Built From May 1992 To Machine S/N 33476) 2-82
2-45. Drive Brake, Mico. (Machines Built From S/N 33476 To Present) 2-84
2-46. Swing Brake, Mico. (Machines Built From S/N 33476 to Present) 2-86
2-47. Basket Rotator Brake. 2-88
2-48. Boom Tape Replacement Chart 2-92
2-49. Capacity Indicator Dial 2-92
3-1. Wiring Diagram - Dual Fuel (Ford Or Wisconsin) 3-20
3-2. Wiring Diagram - 110v Generator (Ford). 3-21
3-3. Wiring Diagram - 110v Generator (Deutz). 3-22
3-4. Wiring Diagram - Platform Console (W/all Hydraulic Controls).. 3-23
3-5. Wiring Diagram - Platform Console Standard (Sheet 1 Of 2). 3-24
3-6. Wiring Diagram - Platform Console Standard (Sheet 2 Of 2). 3-25
3-7. Wiring Diagram - Standard (Deutz F2l511/f3l912 & Wisconsin
Engine W/ Standard Controls) (Sheet 1 Of 2). 3-26
3-8. Wiring Diagram - Standard (Deutz F2l4511/f3l912 & Wisconsin
Engine W/ Standard Controls) (Sheet 2 Of 2). 3-27
3-9. Wiring Diagram - Standard (Deutz F2l511/f3l912 &
Engine W/ Hydraulic Controls) (Sheet 1 Of 2). 3-28
3-10. Wiring Diagram - Standard (Deutz F2l511/f3l912 & Wisconsin
Engine W/ Hydraulic Controls) (Sheet 2 Of 2). 3-29
3-11. Wiring Diagram - Standard (Deutz F3l1011 Engine W/ Standard Controls) (Sheet 1 Of 2). 3-30
3-12. Wiring Diagram - Standard (Deutz F3l1011 Engine W/ Standard Controls) (Sheet 2 Of 2). 3-31
3-13. Wiring Diagram - Standard (Deutz F3l1011 Engine W/ Hydraulic Controls) (Sheet 1 Of 2). 3-32
3-14. Wiring Diagram - Standard (Deutz F3l1011 Engine W/ Hydraulic Controls) (Sheet 2 Of 2). 3-33
3-15. Wiring Diagram - Standard (Ford Lrg425 Dis Engine W/ Standard Controls) (Sheet 1 Of 2).. . . . 3-34
3-16. Wiring Diagram - Standard (Ford Lrg425 Dis Engine W/ Standard Controls) (Sheet 2 Of 2).. . . . 3-35
3-17. Wiring Diagram - Standard (Ford Dis Engine W/ Hydraulic Controls) (Sheet 1 Of 2).. 3-36
3-18. Wiring Diagram - Standard (Ford Dis Engine W/ Hydraulic Controls) (Sheet 2 Of 2).. 3-37

LIST OF TABLES

TABLE NO.	TITLE	PAGE NO.
2-1	Chain Stretch Tolerance..	2-7
2-2	Cylinder Piston Nut Torque Specification	2-12
2-3	Holding Valve Torque Specifications.	2-12
2-4	Preventive Maintenance and Inspection Schedule.	2-91
3-1	Platform Assembly Troubleshooting.	3-2

https://truckmanualshub.com/

3-2 Boom Assembly Troubleshooting. 3-3
3-3 Turntable Assembly Troubleshooting. 3-7
3-4 Chassis Assembly Troubleshooting. 3-9
3-5 Hydraulic Assembly Troubleshooting. 3-14
3-6 Electrical Assembly Troubleshooting. 3-16

(INTENTIONAL BLANK PAGE)

https://truckmanualshub.com/

SECTION 1. SPECIFICATIONS

1.1 CAPACITIES.

Fuel Tank - 37 Gallons (140.2 L)

Hydraulic Oil Tank - 37 U.S. Gallons (104.2 L).

Hydraulic System (Including Tank) - 70 U.S. Gallons (264.95 L).

Torque Hub Drive - 2.5 Pints (1.18 L).

Torque Hub Swing - 2.0 Pints (1.18 L).

NOTE: *Torque Hubs should be one - half full of lubricant. (EPGL-90)*

Engine Crankcase (Ford LSG423) w/Filter 5 quarts (4.73 L).

Engine Crankcase (Ford LRG423) w/Filter 5 quarts (4.73 L).

Engine Crankcase (Deutz F3L912) w/Filter 9.5 quarts (8.99 L).

Engine Crankcase (Deutz F3L1011) w/Filter 6.34 quarts (6 0 L).

Engine Crankcase (Deutz F2L511) w/Filter 3.5 quarts

Engine Crankcase (Wisconsin VG4D) w/Filter 5.0 quarts (4.73 L).

NOTE: *Tolerance on all engine rpm settings is plus or minus 10%.*

1.2 COMPONENT DATA.

Engine - Ford LSG423/Lrg423.

Oil capacity - 5 quarts (4.73 L) w/Filter, 4 quarts (3.79 L) w/o Filter.

Cooling System - 16 quarts (15.14 L).

Low RPM - 1000, no load.

Mid RPM - 1800, no load.

High RPM - 3000, no load.

Alternator - 40 Amp, belt drive.

Battery - 1000 cold cranking Amps, 210 minutes reserve capacity,12 VDC.

Fuel Consumption Low RPM - 2.03 GPH (7.68 LPH).

Fuel Consumption High RPM - 2.73 GPH (10.33 LPH).

Horsepower - 63 @ 2800 RPM, no load.

Engine -Ford LRG-425 D.I.S.

Oil Capacity.

4.50 Quarts (4.25 1) w/Filter.

3.50 Quarts (3.31 1) w/o Filter.

Idle RPM - 1000.

Low RPM - 1800.

High RPM - 2800.

Alternator - 95 Amp, Belt Drive.

Battery - 1000 Cold Cranking Amps, 210 minute reserve Capacity, 12 VDC.

Fuel Consumption.

Low RPM - 3.45 GPH (13.06 lph).

High RPM - 4.60 GPH (17.41 lph).

Horsepower - 74 @ 3000 RPM, full load.

Cooling System - 16 Quarts (15.14 l.).

Engine - Deutz F3L912.

Oil capacity - 9.5 quarts (8.99L) w/Filter, 8.5 quarts (8.04 L) w/o Filter.

Low RPM 1800.

High RPM 2400.

Alternator - 85 Amp, belt drive.

Battery - 1000 cold cranking Amps, 210 minutes reserve capacity, 12VDC.

Fuel Consumption Low RPM - 2.03 GPH (7.68 LPH).

Fuel Consumption High RPM - 2.73 GPH (10.33 LPH).

Horsepower - 47 @ 2800 RPM, no load.

Engine - Deutz F3L1011.

Oil Capacity - 6.34 quarts (6.0 L) w/Filter, 5.8 quarts (5.5 L) w/0 Filter.

Low RPM 2000.

High RPM 3000.

Alternator - 60 Amp, belt drive.

https://truckmanualshub.com/

Battery - 1000 cold cranking Amps, 210 minutes reserve capacity, 12VDC.

Fuel Consumption Low RPM - 1.9 GPH (7.19 LPH).

Fuel Consumption High RPM - 2.5 GPH (9.46 LPH).

Horsepower - 42@ 3000 RPM, no load.

Engine - Deutz F2L511.

Oil Capacity - 3.5 quarts (3.31 L) w/Filter, 3.0 quarts (2.84 L) w/o Filter.

Low RPM 1800.

High RPM 2500.

Alternator - 33 Amp, belt drive.

Battery - 1000 cold cranking Amps, 210 minutes reserve capacity, 12 VDC.

Fuel Consumption Low RPM - 2.03 GPH (7.68 LPH).

Fuel Consumption High RPM - 2.73 GPH (10.34 LPH).

Horsepower - 47 @ 2300 RPM, full load.

Engine - Wisconsin VG4D.

Oil Capacity - 5 quarts (4.73 L) w/Filter, 4.5 quarts (4.26 L) w/o Filter.

Low RPM 1800, no load.

High RPM 2400, no load.

Alternator - 35 Amp, belt drive.

Battery - 1000 cold cranking Amps, 210 minutes reserve capacity, 12 VDC.

Fuel Consumption Low RPM - 3.21 GPH (12.15 LPH).

Fuel Consumption High RPM - 3.89 GPH (14.72 LPH).

Horsepower - 37 @ 2500 RPM, full load.

Drive System.

Tires - 12.5 x 15, 12 ply rating, 72 PSI. (5 Bar) (4 WD Same).

Tires - 14 x 17.5, 8 ply rating, 45 PSI. (3 Bar) (4 WD Same).

Drive Motor Displacement - 2.48 in**3**/Rev.

Drive Hub Ratio - 49.29:1.

Steer System.

Tires - 12.5 x 15, 12 ply rating, 72 PSI. (5 Bar).

Toe-in, adjust for 1/4 in. (6.35 mm) overall.

Swing System.

Swing Motor - Displacement - 3.0 in**3**/Rev.

Swing Hub - Ratio - 69:1.

Swing Brake - Automatic spring applied, hydraulically released disc brakes.

Hydraulic Pump.

Ford LSG423, Deutz F3L912, Wisconsin VG4D with Racine Valves (Single Speed Drive Motors).

First Section to Proportional Valve-Drive, Lift, Swing - 14.5 GPM (54.88 LPM).

Second Section to High Drive - 9.5 GPM (35.96 LPM).

Third Section to Bang-Bang valve level, Telescope, Steer, Rotate - 9.5 GPM (35.96 LPM).

Clockwise Rotation.

Ford LSG423, Deutz F3L912, Wisconsin VG4D with Racine Valves (2 Speed Drive Motors).

First Section to Proportional Valve-Drive, Lift, Swing - 10.8 GPM (40.88 LPM).

Second Section to High Drive - 6.3 GPM (23.85 LPM).

Third Section to Bang-Bang valve level, Telescope, Steer, Rotate - 6.3 GPM (23.85 LPM).

Clockwise Rotation.

Ford LSG423, Ford LRG423, Deutz F3L912, Deutz F3L1011, Wisconsin VG4D with Vickers Valves (2 Speed Drive Motors).

First Section to Proportional Valve-Drive, Lift, Swing - 15 GPM (56.78 LPM).

Second Section to High Drive - 9 GPM (34.07 LPM).

Third Section to Bang-Bang Valve Level, Telescope, Steer, Rotate - 9 GPM (34.07 LPM).

Clockwise Rotation.

Auxiliary Power Pump.

Two section, 3.75 GPM (14.19 lpm) each section, 12 VDC motor, clockwise rotation.

Hydraulic Filter - Tank.

Return - Bypass Type.

10 Microns Nominal.

Hydraulic Filter - On-line (Racine Valve Only).

Return - Non-Bypass Type.

https://truckmanualshub.com/

10 Microns Nominal.

1.3 PERFORMANCE DATA.

Travel Speed.

2WD- 4.5 MPH (7.2 KM/HR).

4WD - 4.0 MPH (6.4 KM/HR).

Gradeability.

2WD- 25% or 14°slope, hard surface.

4WD - 40% or 22°slope, hard surface.

Turning Radius.

2WS/2WD- 16 ft. 6 in. (5.1 m).

2WS/4WD - 16 ft. 6 in. (5.1 m).

Boom Speed Lift.

Up 25 - 40 Seconds.

Down 20 - 30 Seconds.

Telescope Speed.

Extend 50 - 80 Seconds.

Retract 40 - 60 Seconds.

Swing Speed 360°.

Left 61 - 92 Seconds.

Right 61 - 92 Seconds.

Boom Elevation.

+74° (above horizontal).

-22° (below horizontal).

Mod**el 40H+6.**

74° +15° ART. (above horizontal)

-22° -80° ART. (below horizontal)

Machine Weight.

Model 40H (2WD) - 11,600 LBS. (5,266 KG.).

Model 40H (4WD) - 12,000 LBS. (5,448 KG.).

Model 40H+6 - 13,350 LBS. (6,005 KG.).

Machine Stowed Height.

Model 40H (2WD) - 7 ft., 10 in. (2.39 M).

Model 40H (4WD) - 7 ft., 10 in. (2.39 M).

Machine Stowed Length.

Model 40H (2WD) - 25 ft.,2 in. (7.67 M).

Model 40H (4WD) - 25 ft.,2 in. (7.67 M).

Model 40H+6 (4WD) - 26 ft., 10 in. (8.18 M).

Machine Width.

Model 40H/40H+6(2WD/4WD) - 7 ft.,11 in. (2.41 M).

Wheelbase.

Model 40H/40H+6 (2WD/4WD) - 92 in. (2.34 M).

1.4 TORQUE REQUIREMENTS.

Description	Torque Value (Dry)	Interval Hours
A. Bearing To Chassis	110 lbs. (149 Nm)	*200/500
B. Bearing To Turntable	220 lbs. (298 Nm)	*200/500
C. Wheel Lugs	90 lbs. (122 Nm)	100
D. Drive Hub	150 lbs. (204 Nm)	*200/500
E. Swing Hub	110 lbs. (149 Nm)	*200/500

NOTE: **Retorque after first 200 hours of operation and every 500 hours thereafter.*

NOTE: *See Procedure Section for tightening sequence of turntable bearing bolts.*

NOTE: *When maintenance becomes necessary or a fastener has loosened, refer to the Torque Chart to determine proper torque value.*

1.5 LUBRICATION.

Ford LSG423/LRG423/LRG425 Engine.

Single Viscosity Oils (SF, SF-SE, SF-CC, SF-CD).

When Outside Temp is Consistently	Use SAE Viscosity Number

https://truckmanualshub.com/

-10° F - +60° F.	*10W
(-24°C. to +16°C.)	
+10° F - + 90° F.	20W-20
(+12°C. to +32°C.)	
Above +32° F. (+0°C.)	30
Above + 50° F. (+10°C.)	40

Multi-Viscosity Oils (SF, SF-SE, SF-CC, SF-CD).

When Outside Temp is Consistently	Use SAE Viscosity Number
Below +10° F. (+12°C.)	*5W-20
Below +60° F. (+16°C.)	5W-30
-10° F - +90° F.	10W-30
(-23°C. to+32°C>)	
Above -10° F. (23°C.)	10W-40 or 10W-50
Above +20° F. (-23°C.)	20W-40 or 20W-50

* Not recommended for severe service - including high RPM operation.

Deutz F3L912/F3L1011 Engine.

Single Viscosity Oils (CD-SE, CD-SF).

When Outside Temp is Consistently	Use SAE Viscosity Number
-20° F - +25° F.	*10W
(-29°C. to +4°C.)	
+5° F - + 50° F.	20W-20
(+15°C. to +10°C.)	
+40° F - +85° F.	30
(+4°C. to +30°C.)	
Above 75° F. (24°C.)	40

Multi-Viscosity Oils (CD-SE, CD-SF).

When Outside Temp is Consistently	Use SAE Viscosity Number
-40° F - +75° F.	*5W-20 (Synthetic)
(-40°C, to +24°C.)	
-15° F - +70° F.	10W-30
(-26°C. to +21°C.)	
-15° F - +85° F.	10W-40
(-26°C. to +30°C.)	
+5° F - +75° F.	15W-30
(-21°C. to +24°C.)	
Above +5° F. (-21°C.)	15W-40

* This viscosity can be used at colder temperatures only with engine oil preheating.

Wisconsin VG4D Engine.

Single Viscosity Oils (MS or SD).

When Outside Temp is Consistently	Use SAE Viscosity Number
+15° F - 0° F.	10W
+40° F - + 15° F.	20-20W
+120° F - + 40° F.	30

Multi-Viscosity Oils (MS, SD, SE).

When Outside Temp is Consistently	Use SAE Viscosity Number
Below Zero.(	5W-20

NOTE: *Crankcase oil should meet one of the following API classification grades: SE/CC, SE/CD, SF/CC, SF/CD.*

Table 1-1. Hydraulic Oil.

Hydraulic System Operating Temperature Range	**SAE Viscosity Grade**
0° F to +180° F (-18°C. to 83°C.)	10W
0° F to +210° F (-18° C to 99° C)	10W-20/10W-30
50° F to 210° F (10° C to 99° C)	20W-20

NOTE: *Hydraulic oils must have anti-wear qualities at least to API Service Classification GL-3, and sufficient chemical stability for mobile hydraulic system service. JLG Industries recommends Mobilfluid 424 hydraulic oil, which has an SAE viscosity of 10W-30 and viscosity index of 152.*

When temperatures remain consistently below +20° F. (-7° C.), an amount of no. 2 diesel fuel, not to exceed 20% of system capacity, may be added to the hydraulic oil reservoir. This diesel fuel will "thin" the hydraulic oil for easier cold weather operation, and will almost completely dissipate from the hydraulic system over a several month period of time. When cold weather is past, it may be necessary to drain and refill the hydraulic system to rid the system of any remaining diesel fuel.

Aside from JLG recommendations, it is not advisable to mix oils of different brands or types, as they may not contain the same required additives or be of comparable viscosities. If use of hydraulic oil other than Kendall Hyken 052 is desired or Mobilfluid 424, contact JLG Industries for proper recommendations.

https://truckmanualshub.com/

SIZE	THD	BOLT DIA. (IN.)	THREAD STRESS AREA (SQ. IN.)	VALUES FOR ZINC PLATED BOLTS ONLY: SAE GRADE 5 BOLTS & GRADE 2 NUTS					SAE GRADE 8 BOLTS & GRADE 8 NUTS					UNPLATED CAP SCREWS: UNBRAKO 1960 SERIES SOCKET HEAD CAP SCREW WITH LOC-WEL PATCH	
				CLAMP LOAD (LB.)	TORQUE (DRY OR LOC. 263)	TORQUE (LUB.)	TORQUE (LOCTITE 262)	TORQUE (LOCTITE 242 OR 271)	CLAMP LOAD (LB.)	TORQUE (DRY OR LOC. 263)	TORQUE (LUB.)	TORQUE (LOCTITE 262)	TORQUE (LOCTITE 242 OR 271)	CLAMP LOAD (LB.)	TORQUE (as received)
					LB. IN.	LB. IN.	LB. IN.	LB. IN.		LB. IN.	LB. IN.	LB. IN.	LB. IN.		LB. FT.
4	40	0.1120	0.00604	380	8	6	—	—	540	12	9	—	—	—	—
	48		0.00661	420	9	7	—	—	600	13	10	—	—	—	—
6	32	0.1380	0.00909	580	16	12	—	—	820	23	17	—	—	—	—
	40		0.01015	610	18	13	—	—	920	25	19	—	—	—	—
8	32	0.1640	0.01400	900	30	22	—	—	1260	41	31	—	—	—	—
	36		0.01474	940	31	23	—	—	1320	43	32	—	—	—	—
10	24	0.1900	0.01750	1120	43	32	—	—	1580	60	45	—	—	—	—
	32		0.02000	1285	49	36	—	—	1800	68	51	—	—	—	—
1/4	20	0.2500	0.0318	2020	96	75	—	105	2860	144	108	—	160	3180	13
	28		0.0364	2320	120	86	—	135	3280	168	120	—	185	3640	14
					LB. FT.	LB. FT.	LB. FT.	LB. FT.		LB. FT.	LB. FT.	LB. FT.	LB. FT.		
5/16	18	0.3125	0.0524	3340	17	13	16	19	4720	25	18	22	30	5240	25
	24		0.0580	3700	19	14	17	21	5220	25	20	25	30	5800	27
3/8	16	0.3750	0.0775	4940	30	23	28	35	7000	45	35	40	50	7750	45
	24		0.0878	5600	35	25	32	40	7900	50	35	45	55	8780	50
7/16	14	0.4375	0.1063	6800	50	35	45	55	9550	70	55	63	80	10630	70
	20		0.1187	7550	55	40	50	60	10700	80	60	70	90	11870	75
1/2	13	0.5000	0.1419	9050	75	55	68	85	12750	110	80	96	120	14190	110
	20		0.1599	10700	90	65	80	100	14400	120	90	108	135	15990	115
9/16	12	0.5625	0.1820	11600	110	80	98	120	16400	150	110	139	165	18200	155
	18		0.2030	12950	120	90	109	135	18250	170	130	154	190	20300	165
5/8	11	0.6250	0.2260	14400	150	110	135	165	20350	220	170	180	240	22600	210
	18		0.2560	16300	170	130	153	190	23000	240	180	204	265	25600	220
3/4	10	0.7500	0.3340	21300	260	200	240	285	30100	380	280	301	420	33400	365
	16		0.3730	23800	300	220	268	330	33600	420	320	336	465	37300	400
7/8	9	0.8750	0.4620	29400	430	320	386	475	41600	600	460	485	660	46200	585
	14		0.5090	32400	470	350	425	520	45800	660	500	534	725	50900	635
1	8	1.000	0.6060	38600	640	480	579	675	51500	900	680	687	990	60600	865
	12		0.6630	42200	700	530	633	735	59700	1000	740	796	1100	66300	915
1-1/8	7	1.1250	0.7630	42300	800	600	714	840	68700	1280	960	1030	1400	76300	1240
	12		0.8560	47500	880	660	802	925	77000	1440	1080	1155	1575	85600	1380
1-1/4	7	1.2500	0.9690	53800	1120	840	1009	1175	87200	1820	1360	1453	2000	96900	1750
	12		1.0730	59600	1240	920	1118	1300	96600	2000	1500	1610	2200	107300	1880
1-1/2	6	1.500	1.1550	64100	1460	1100	1322	1525	104000	2380	1780	1907	2625	115500	2320
	12		1.3150	73000	1680	1260	1506	1750	118100	2720	2040	2165	3000	131500	2440
1-1/2	6	1.500	1.4050	78000	1940	1460	1755	2025	126500	3160	2360	2530	3475	140500	3040
	12		1.5800	87700	2200	1640	1974	2300	142200	3560	2660	2844	3925	158000	3270

Note: These torque values do not apply to cadium plated fasteners.

SAE GRADE 5

SAE GRADE 8

Figure 1-1. Torque Chart.

https://truckmanualshub.com/

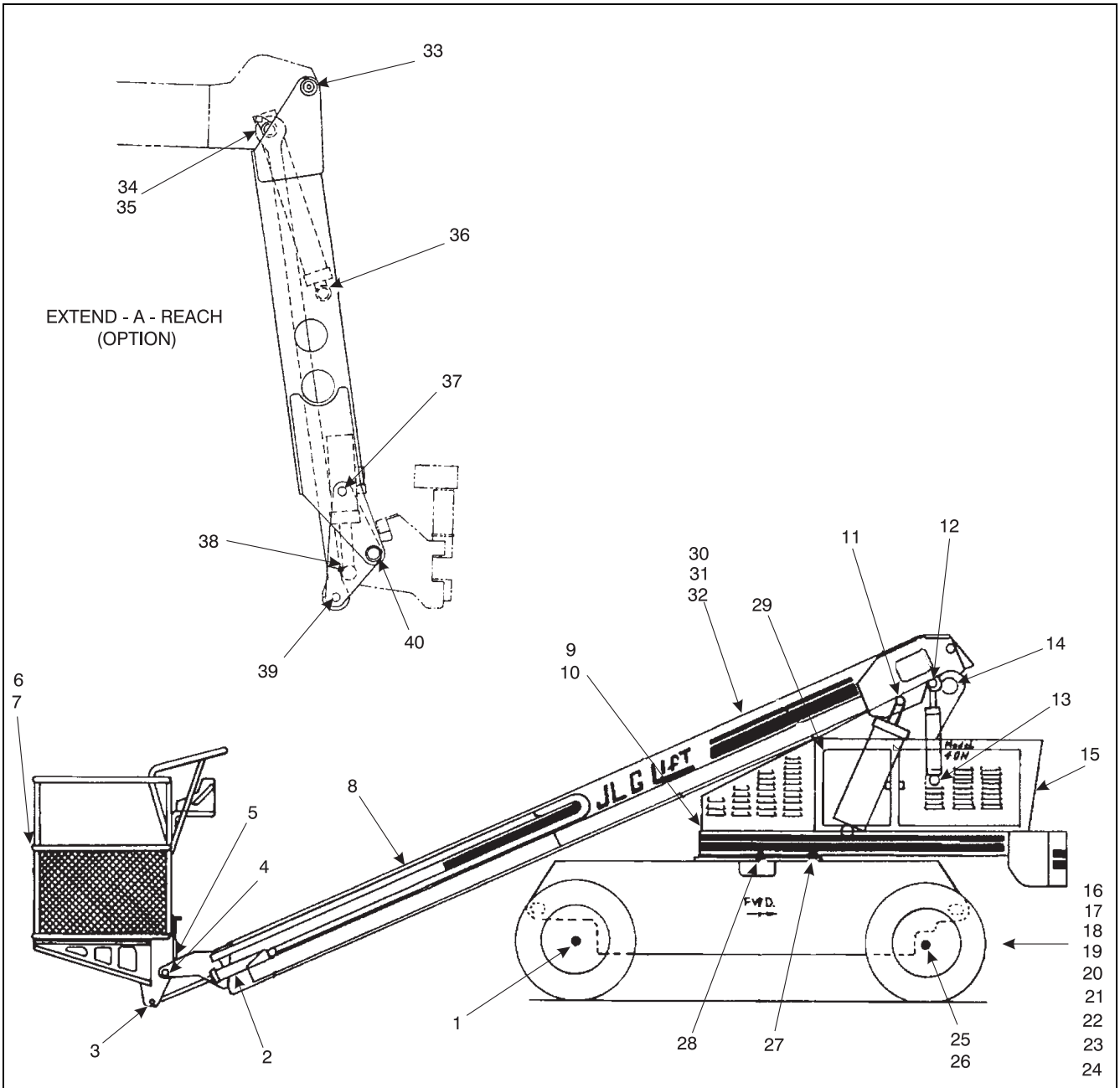

30, 31, 32, ENGINE OIL, HYDRAULIC FILTER ELEMENTS, HYDRAULIC FLUID SIGHT GAUGE ARE ON OPPOSITE SIDE OF MACHINE.

Key to Lubrication:

MPG --- Multi - Purpose Grease
EPGL –- Extreme Pressure Gear Lubricant
EO --- Engine Oil
E.A.R. –- Extend - A - Reach

NOTE: IT WILL BE NECESSARY TO SWING BOOM OVER SIDE OF THE FRAME AND REMOVE FRAME SHIELD TO GAIN ACCESS TO GREASE FITTING #18.

Figure 1-2. Lubrication Chart. (Sheet 1 of 2)

https://truckmanualshub.com/

INDEX NO.	COMPONENT	NUMBER/TYPE LUBE POINTS	LUBE & METHOD	INTERVAL (HOURS)
1.	Wheel Drive Hub	Fill Plug/1/2 Full	EPGL (SAE - 90)	*50/2 years
2.	Slave Leveling Cylinder - Barrel End	1 Grease Fitting	MPG - Pressure Gun	150
3.	Slave Leveling Cylinder - Rod End	1 Grease Fitting	MPG - Pressure Gun	150
4.	Rotary Platform Control Stand **(If Equipped)** Platform Pivot	2 Grease Fittings 1 Grease Fitting	MPG - Pressure Gun MPG - Pressure Gun	150 150
5.	Rotary Worm Gear **(If Equipped)**	1 Grease Fitting	MPG - Pressure Gun	150
6.	Platform Hinges	2 Grease Fittings	MPG - Pressure Gun	150
7.	Platform Latch & Control Handle Slide Locks	N/A	SAE 10 - Oil Can	A/R
8.	Telescope Cylinder Sheave **(If Equipped)**	1 Grease Fitting	MPG - Pressure Gun	150
9.	Swing Bearing (Remote Access)	2 Grease Fittings	MPG - Pressure Gun	150
10.	Lift Cylinder - Barrel End (Remote Access)	1 Grease Fitting	MPG - Pressure Gun	150
11.	Lift Cylinder - Rod End	2 Grease Fittings	MPG - Pressure Gun	150
12.	Master Level Cylinder - Rod End	1 Grease Fitting	MPG - Pressure Gun	150
13.	Master Level Cylinder - Barrel End	1 Grease Fitting	MPG - Pressure Gun	150
14.	Boom Pivot Bushings	2 Grease Fittings	MPG - Pressure Gun	150
15.	Engine Crankcase	Fill Cap/Drain Plug	EO (Refer to end. manual)	**10/150
16.	Lockout Cylinder - Barrel End **(If Equipped)**	1 Grease Fittings	MPG - Pressure Gun	100
17.	Lockout Cylinder - Rod End **(If Equipped)**	2 Grease Fittings	MPG - Pressure Gun	150
18.	Oscillating Axle Pivot Pin **(If Equipped)**	1 Grease Fitting	MPG - Pressure Gun	*****150
19.	Steer Cylinder	2 Grease Fittings	MPG - Pressure Gun	150
20.	Steer Spindle	2 Grease Fittings	MPG - Pressure Gun	150
21.	Steer Spindle - 4WD **(If Equipped)**	4 Grease Fittings	MPG - Pressure Gun	150
22.	Tie Rod Ends	2 Grease Fittings	MPG - Pressure Gun	150
23.	Tie Rods - Two Hitch **(If Equipped)**	4 Grease Fittings	MPG - Pressure Gun	150
24.	Towing Hitch **(If Equipped)**	1 Grease Fitting	MPG - Pressure Gun	150
25.	Wheel Bearings	N/A	MPG - Repack	500
26.	Wheel Drive Hubs - 4WD **(If Equipped)**	Fill Plug/1/2 Full	EPGL (SAE - 90)	*50/2 yrs.
27.	Swing Hub	Fill Plug	EPGL (SAE - 90)	*50/2 yrs.
28.	Swing Bearing & Pinion Gear Teeth	N/A	MPG - Brush	100
29.	Door & Access Panel Hinges	N/A	SAE 10 - Oil Can	A/R
30.	Hydraulic Filter Element, Return	N/A	Replacement Element	***40/300
31.	Hydraulic Filter Element, Inline	N/A	Replacement Element	***40/300
32.	Hydraulic Fluid (Oil)	Fill Plug/1/2 Full	HO	****10/2 yrs.
33.	E.A.R. Pivot **(If Equipped)**	2 Grease Fittings	MPG - Pressure Gun	150
34.	E.A.R. Lift Cylinder Barrel End **(If Equipped)**	1 Grease Fitting	MPG - Pressure Gun	150
35.	E.A.R. Link Boom End **(If Equipped)**	2 Grease Fittings	MPG - Pressure Gun	150
36.	E.A.R. Lift Cylinder Rod End **(If Equipped)**	1 Grease Fitting	MPG - Pressure Gun	150
37.	E.A.R. Slave Cylinder Pivot Points **(If Equipped)**	2 Grease Fittings	MPG - Pressure Gun	150
38.	E.A.R. Slave Cylinder Rod End **(If Equipped)**	1 Grease Fitting	MPG - Pressure Gun	150
39.	E.A.R. Link Platform End **(If Equipped)**	1 Grease Fitting	MPG - Pressure Gun	150
40.	E.A.R. Platform Pivot **(If Equipped)**	1 Grease Fitting	MPG - Pressure Gun	150

*Check oil level after every 50 hours of operation. Change oil after every 2 years (1200 hrs.) of operation.
**Check oil level after every 10 hours of operation. Change oil after every 3 months (150 hrs.) of operation.
***Replace filter element after first 40 hours of operation, then after every 6 months (300 hrs.) of operation thereafter.
****Check oil level after every 10 hours of operation.Change oil after every 2 years(1200 hrs.) of operation.
*****It will be necessary to swing the boom over side of frame and remove the frame shield to gain access to the grease fitting.

NOTE: *Lubrication intervals are based on machine operations under normal conditions. for machines used in multi shift operations and /or exposed to hostile environments or conditions, lubrication frequencies must be increased accordingly.*

Figure 1-2. Lubrication Chart. (Sheet 2 of 2)

https://truckmanualshub.com/

Lubrication Specifications.

Table 1-2. Lubrication Specifications.	
KEY	SPECIFICATIONS
MPG	Multipurpose Grease having a minimum dripping point of 350 degrees F. Excellent water resistance and adhesive qualities; and being of extreme pressure type (Timken OK 40 pounds minimum).
EPGL	Extreme Pressure Gear Lube (oil) meeting API Service Classification GL-5 or Mil-Spec Mil-L-2105.
HO	Hydraulic Oil. API Service Classification GL-3, SAE 10W-20, Viscosity Index 152, e.g. Kendall Hyken 052 or Mobilfluid 424.
EO	Engine (crankcase) Oil. Gas - API SF/SG class, MIL-L-2104. Diesel - API CC/CD class, MIL-L-2104B/MIL-L-2104C.

NOTE: *Refer to Lubrication Chart, Figure 1-2, for specific lubrication procedures.*

1.6 PRESSURE SETTINGS.

NOTE: *All pressure are given in pounds per square inch (psi), with the metric equivalent, Bar, in parentheses.*

Racine Proportional Valve.

Racine.

Main Relief - 2800 psi. (193.06 Bar).

Drive - 2800 psi. (193.06 Bar).

Lift Up - 2800 psi. (193.06 Bar).

Lift Down - 1100 psi. (75.85 Bar).

Swing - 1000 psi. (68.95 Bar).

Vickers - Proportional Valve w/o Tele.

Vickers.

Drive - 3000 psi. (206.85 Bar).

Lift Up - 2500 psi. (172.38 Bar).

Lift Down - 1200 psi. (82.74 Bar).

Swing - 1100 psi. (75.85 Bar).

Accessory.

Main Relief - 3200 psi. (220.64 Bar).

Sequence Cartridge - 450 psi. (31.03 Bar).

Pressure Reducing - 600 psi. (41.37 Bar).

Solenoid Valve.

Main Relief - 2500 psi. (172.38 Bar).

Telescope In.

a. 2 Section Boom - 2000 psi (137.9 Bar).

b. 3 Section Boom - 2500 psi. (172.38 Bar).

Telescope Out - 1500 psi (103.43 Bar).

Rotate - 2500 psi (172.38 Bar).

Level Up - 2500 psi (172.38 Bar).

Level Down - 1500 psi (103.43 Bar).

Steer.

a. Without Wheel - 1500 psi.(103.43 Bar).

b. Without Wheel - 2500 psi.(172.38 Bar).

Vickers Proportional Valve.

Vickers.

Drive - 3000 psi.(206.85 Bar).

Lift Up - 2500 psi.(172.38 Bar).

Lift Down - 1500 psi. (103.43 Bar).

Telescope In - 2500 psi. (172.38 Bar).

Telescope Out - 1500 psi. (103.43 Bar).

Swing - 1200 psi. (82.74 Bar).

Main Relief - 3200 psi (220.64 Bar).

Sequence Cartridge - 400 psi. (27.58 Bar).

Pressure Reducing - 600 psi. (41.37 Bar).

https://truckmanualshub.com/

3 Stack Racine Bang-Bang Valve.

Main Relief - 2500 psi. (172.38 Bar).

Steer - 2000 psi. (137.9 Bar).

4WD Steer Pressure - 2000 psi. (137.9 Bar).

Extend-A-Reach Racine Valve.

Extend Up - 2500 psi. (172.38 Bar).

Extend Down - 800 psi. (55.16 Bar).

NOTE: *Refer to Section 2 for pressure setting procedures.*

1.7 CYLINDER SPECIFICATIONS

Table 1-3. CYLINDER SPECIFICATIONS.

DESCRIPTION	BORE	STROKE	ROD DIA.
Master Level	2.50	15.25	1.25
Slave Level	2.50	15.21	1.25
Lift	6.00	23.50	2.50
Lockout (Oscillating Axle)	3.00	4.56	1.25
Lock-out (4WD)	3.00	4.06	1.25
Telescope (2 Section Boom)	3.00	174.18	2.00
Telescope (3 Section Boom)	3.00	110.31	2.00
Steer (2WD)	3.00	8.06	1.25
Steer (4WD)	3.00	9.81	1.50
Extend-A-Reach			
Lift	3.00	12.687	2.00
Slave	3.50	7.25	1.75

1.8 BOOM TAPE

Two Section Boom (American Standard).

Red - 64 in. (162.56 cm).

Yellow - 41 in. (104.14 cm).

Blue - 71.50 in. (181.61 cm).

Three Section Boom (American Standard).

Red - 24.06 in. (61.11 cm).

Yellow - 20.50 in. (52.07 cm).

Blue - 70.75 in. (179.70 cm).

Two Section Boom (Canadian Standard).

Red - 70.75 in. (179.71 cm).

Yellow - 46.24 in. (117.47 cm).

Blue - 59.49 in. (151.12 cm).

https://truckmanualshub.com/

1.9 MAJOR COMPONENTS WEIGHTS

TABLE 1-4. COMPONENT WEIGHTS.				
	MODEL40H		MODEL 40H+6	
	LBS.	KG	LBS.	KG
Platform - 36" x 48" (91.4 cm x 122 cm) w/Control Box.	170	78	170	78
Platform - 36" x 60" (91.4 cm x 152 cm) w/Control Box.	185	84	185	84
Platform - 36" x 72" (91.4 cm x 182.88 cm) w/Control Box.	200	90	200	90
Platform - 36" x 96" (91.4 cm x 243.84 cm) w/Control Box.	240	109	- - -	- - -
2 Section Boom (Includes Boom Lift Cylinder, Rotator and Support).	1795	814	2165	982
3 Section Boom (Includes Boom Lift Cylinder, Rotator and Support).	2275	1032	2645	1200
Turntable Complete.	4687	2126	5925	2688
Frame Complete (Includes Pneumatic Tires and Wheels). (2WD)	5020	2277	5020	2277
Frame Complete (Includes Pneumatic Tires and Wheels). (4WD)	5420	2458	5420	2458
Complete Machine - 2WD.	11,600	5,266	13,350	6,055
Complete Machine - 4WD.	12,000	5,448	13,750	6,237

1.10 CRITICAL STABILITY WEIGHTS

TABLE 1-5.CRITICAL STABILITY WEIGHTS.					
		MODEL 40H		MODEL 40H+6	
		LBS.	KG	LBS.	KG
Counterweight (If Removable)	1.5:1	910	412.8	2490	1129.5
	2:1	1075	487.6	2690	1220.2
Tires (ballasted Only)	sIZE	12.5L -15		12.5L -15	
	Weight	305	138.4	305	138.4
Engine	Ford	525	238.1	525	238.1
	Deutz	600	272.2	600	272.2
	Wisconsin	- - -	- - -	- - -	- - -

1.11 SERIAL NUMBER LOCATION (SEE FIGURE 1-4.)

A serial number plate is affixed to the left rear front of the turntable. If the serial number plate is damaged or missing, the machine serial number is stamped on the left side of the frame between front and rear wheels, below turntable bearing. In addition, the last five digits of the serial number are stamped on top of the fly and base end of the boom and on the left side of the turntable.

https://truckmanualshub.com/

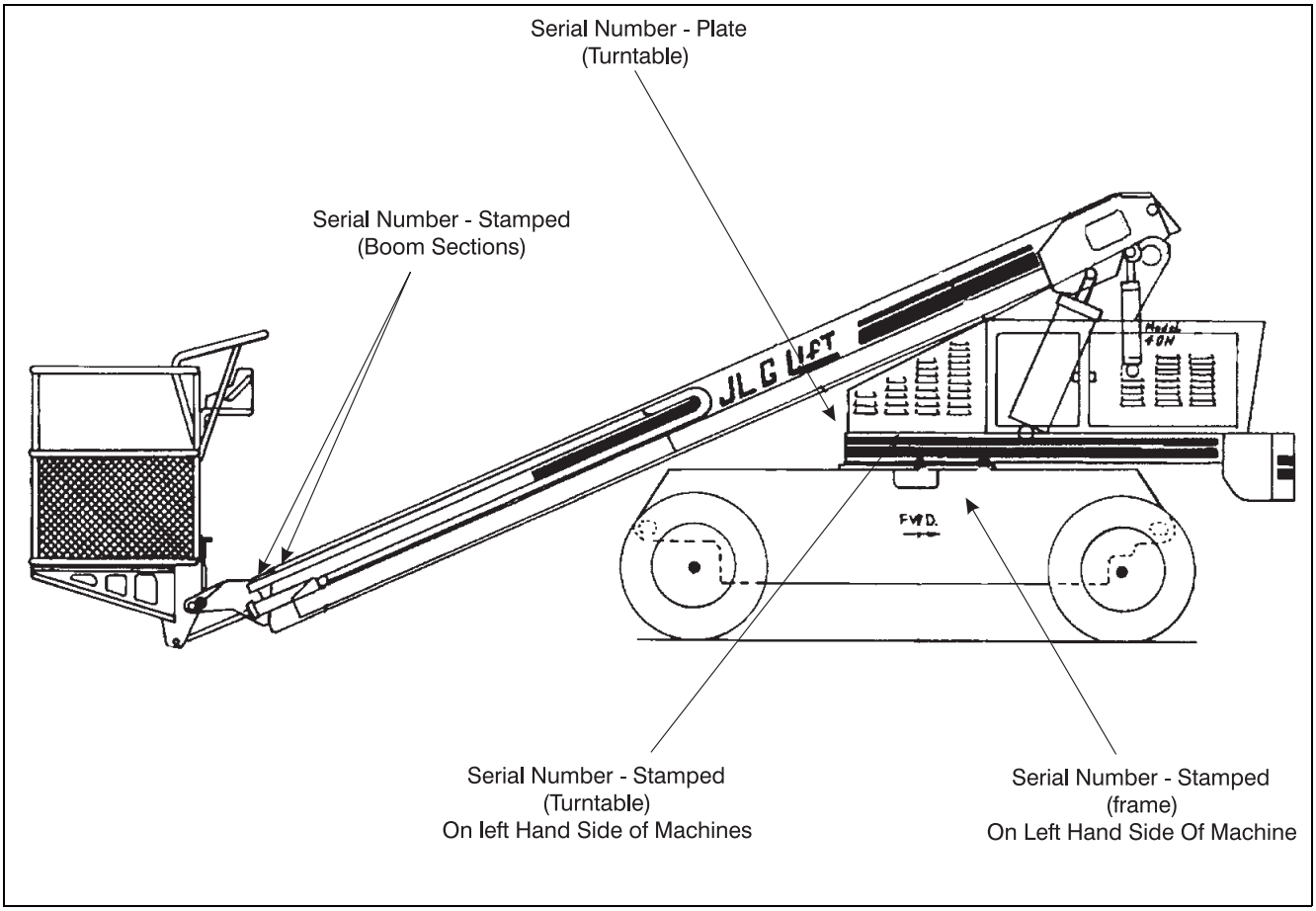

Figure 1-3. Serial Number Locations.

https://truckmanualshub.com/

intentional blank page

https://truckmanualshub.com/

SECTION 2. PROCEDURES

2.1 GENERAL.

This section provides information necessary to perform maintenance on the aerial platform. Descriptions, techniques and specific procedures are designed to provide the safest and most efficient maintenance for use by personnel responsible for ensuring the correct installation and operation of machine components and systems.

⚠ CAUTION

WHEN AN ABNORMAL CONDITION IS NOTED AND PROCEDURES CONTAINED HEREIN DO NOT SPECIFICALLY RELATE TO THE NOTED IRREGULARITY, WORK SHOULD BE STOPPED AND TECHNICALLY QUALIFIED GUIDANCE OBTAINED BEFORE WORK IS RESUMED.

The maintenance procedures included consist of servicing and component removal and installation, disassembly and assembly, inspection, lubrication and cleaning. Information on any special tools or test equipment is also provided where applicable.

2.2 SERVICING AND MAINTENANCE GUIDELINES.

General.

The following information is provided to assist you in the use and application of servicing and maintenance procedures contained in this chapter.

Safety and Workmanship.

Your safety, and that of others, is the first consideration when engaging in the maintenance of equipment. Always be conscious of weight. Never attempt to move heavy parts without the aid of a mechanical device. Do not allow heavy objects to rest in an unstable position. When raising a portion of the equipment, ensure that adequate support is provided.

Cleanliness.

1. The most important single item in preserving the long service life of a machine is to keep dirt and foreign materials out of the vital components. Precautions have been taken to safeguard against this. Shields, covers, seals, and filters are provided to keep air, fuel, and oil supplies clean; however, these items must be maintained on a scheduled basis in order to function properly.
2. At any time when air, fuel, or oil lines are disconnected, clear adjacent areas as well as the openings and fittings themselves. As soon as a line or component is disconnected, cap or cover all openings to prevent entry of foreign matter.
3. Clean and inspect all parts during servicing or maintenance, and assure that all passages and openings are unobstructed. Cover all parts to keep them clean. Be sure all parts are clean before they are installed. New parts should remain in their containers until they are ready to be used.

Components Removal and Installation.

4. Use adjustable lifting devices, whenever possible, if mechanical assistance is required. All slings (chains, cables, etc.) should be parallel to each other and as near perpendicular as possible to top of part being lifted.
5. Should it be necessary to remove a component on an angle, keep in mind that the capacity of an eyebolt or similar bracket lessens, as the angle between the supporting structure and the component becomes less than 90 degrees.
6. If a part resists removal, check to see whether all nuts, bolts, cables, brackets, wiring, etc., have been removed and that no adjacent parts are interfering.

Component Disassembly and Reassembly.

When disassembling or reassembling a component, complete the procedural steps in sequence. Do not partially disassemble or assemble one part, then start on another. Always recheck your work to assure that nothing has been overlooked. Do not make any adjustments, other than those recommended, without obtaining proper approval.

Pressure-Fit Parts.

When assembling pressure-fit parts, use an “anti-seize” or molybdenum disulfide base compound to lubricate the mating surface.

Bearings.

1. When a bearing is removed, cover it to keep out dirt and abrasives. Clean bearings in nonflammable cleaning solvent and allow to drip dry. Compressed air can be used but do not spin the bearing.
2. Discard bearings if the races and balls (or rollers) are pitted, scored, or burned.
3. If bearing is found to be serviceable, apply a light coat of oil and wrap it in clean (waxed) paper. Do not

https://truckmanualshub.com/

unwrap reusable or new bearings until they are ready to install.

4. Lubricate new or used serviceable bearings before installation. When pressing a bearing into a retainer or bore, apply pressure to the outer race. If the bearing is to be installed on a shaft, apply pressure to the inner race.

Gaskets.

Check that holes in gaskets align with openings in the mating parts. If it becomes necessary to hand-fabricate a gasket, use gasket material or stock of equivalent material and thickness. Be sure to cut holes in the right location, as blank gaskets can cause serious system damage.

Bolt Usage and Torque Application.

1. Use bolts of proper length. A bolt which is too long will bottom before the head is tight against its related part. If a bolt is too short, there will not be enough thread area to engage and hold the part properly. When replacing bolts, use only those having the same specifications of the original, or one which is equivalent.

2. Unless specific torque requirements are given within the text, standard torque values should be used on heat-treated bolts, studs, and steel nuts, in accordance with recommended shop practices.
(See Figure 1-1.)

Hydraulic Lines and Electrical Wiring.

Clearly mark or tag hydraulic lines and electrical wiring, as well as their receptacles, when disconnecting or removing them from the unit. This will assure that they are correctly reinstalled.

Hydraulic System.

1. Keep the system clean. If evidence of metal or rubber particles are found in the hydraulic system, drain and flush the entire system.

2. Disassemble and reassemble parts on clean work surface. Clean all metal parts with non-flammable cleaning solvent. Lubricate components, as required, to aid assembly.

Lubrication.

Service applicable components with the amount, type, and grade of lubricant recommended in this manual, at the specified intervals. When recommended lubricants are not available, consult your local supplier for an equivalent that meets or exceeds the specifications listed.

Battery.

Clean battery, using a non-metallic brush and a solution of baking soda and water. Rinse with clean water. After cleaning, thoroughly dry battery and coat terminals with an anti corrosion compound.

Lubrication and Servicing.

Components and assemblies requiring lubrication and servicing are shown in Figures 1-2.

2.3 LUBRICATION INFORMATION.

Hydraulic System.

1. The primary enemy of a hydraulic system is contamination. Contaminants enter the system by various means, e.g., using inadequate hydraulic oil, allowing moisture, grease, filings, sealing components, sand, etc., to enter when performing maintenance, or by permitting the pump to cavitate due to insufficient system warm-up or leaks in the pump supply (suction) lines.

2. The design and manufacturing tolerances of the component working parts are very close, therefore, even the smallest amount of dirt or foreign matter entering a system can cause wear or damage to the components and generally results in faulty operation. Every precaution mst be taken to keep hydraulic oil clean, including reserve oil in storage. Hydraulic system filters should be checked, cleaned, and/or replaced as necessary, at the specified intervals required in Figure 1-2. Always examine filters for evidence of metal particles.

3. Cloudy oils indicate a high moisture content which permits organic growth, resulting in oxidation or corrosion. If this condition occurs, the system must be drained, flushed, and refilled with clean oil.

4. It is not advisable to mix oils of different brands or types, as they may not contain the same required additives or be of comparable viscosities. Good grade mineral oils, with viscosities suited to the ambient temperatures in which the machine is operating, are recommended for use.

NOTE: *Metal particles may appear in the oil or filters of new machines due to the wear-in of meshing components.*

https://truckmanualshub.com/

Hydraulic Oil.

5. Refer to Table 1-1 for recommendations for viscosity ranges.
6. JLG recommends Mobilfluid 424 hydraulic oil, which has an SAE viscosity of 10W-30 and a viscosity index of 152.

NOTE: *Start-up of hydraulic system with oil temperatures below -15° F. is not recommended. If it is necessary to start the system in a sub-zero environment, it will be necessary to heat the oil with a low density, 100VAC heater to a minimum temperature of -15° F.*

7. The only exception to the above is to drain and fill the system with Mobil DTE 11 oil or its equivalent. This will allow start up at temperatures down to -20°F. However, use of this oil will give poor performance at temperatures above 120° F. Systems using DTE 11 oil should not be operated at temperatures above 200°F. under any condition.

Changing Hydraulic Oil.

8. Use of any of the recommended crankcase or hydraulic oils eliminates the need for changing the oil on a regular basis. However, filter elements must be changed after the first 40 hours of operation and every 250 hours thereafter. If it is necessary to change the oil, use only those oils meeting or exceeding the specifications appearing in this manual. If unable to obtain the same type of oil supplied with the machine, consult local supplier for assistance in selecting the proper equivalent. Avoid mixing petroleum and synthetic base oils. JLG Industries recommends changing the hydraulic oil annually.
9. Use every precaution to keep the hydraulic oil clean. If the oil must be poured from the original container into another, be sure to clean all possible contaminants from the service container. Always clean the mesh element of the filter and replace the cartridge any time the system oil is changed.
10. While the unit is shut down, a good preventive maintenance measure is to make a thorough inspection of all hydraulic components, lines, fittings, etc., as well as a functional check of each system, before placing the machine back in service.

Lubrication Specifications.

Specified lubricants, as recommended by the component manufacturers, are always the best choice, however, multi-purpose greases usually have the qualities which meet a variety of single purpose grease requirements. Should any question arise, regarding the use of greases in maintenance stock, consult your local supplier for evaluation. Refer to Table 1-2 for an explanation of the lubricant key designations appearing in the Lubrication Chart.

2.4 CYLINDERS - THEORY OF OPERATION.

Systems Incorporating Double Acting Cylinders:

Cylinders are of the double-acting type. Systems incorporating double-acting cylinders are as follows: Lift, Telescope, Platform Leveling, Steer and Lockout. A double acting cylinder is one that requires oil flow to operate the cylinder rod in both directions. Directing oil (by actuating the corresponding control valve to the piston side of the cylinder) forces the piston to travel toward the rod end of the barrel, extending the cylinder rod (piston attached to rod). When the oil flow is stopped, movement of rod will stop. By directing oil to the rod side of the cylinder, the piston will be forced in the opposite direction and the cylinder rod will retract.

Holding valves are used in the Lift, Telescope, Slave Level and lockout circuits to prevent retraction of the cylinder rod, should a hydraulic line rupture or a leak develop between the cylinder and its related control valve.

2.5 VALVES - THEORY OF OPERATION.

Solenoid Control Valves (Bang-Bang).

Control valves used are four-way three-position solenoid valves of the sliding spool design. When a circuit is activated and the control valve solenoid energizes, the spool is shifted and the corresponding work port opens to permit oil flow to the component in the selected circuit with the opposite work port opening to reservoir. Once the circuit is deactivated (control returned to neutral) the valve spool returns to neutral (center) and oil flow is then directed through the valve body and returns to reservoir. A typical control valve consist of the valve body, sliding spool, and two solenoid assemblies. The spool is machine fitted in the bore of the valve body. Lands on the spool divide the bore into various chambers, which when the spool is shifted, align with corresponding ports in the valve body open to common flow. At the same time other ports would be blocked to flow. The spool is spring loaded to center position, therefore when the control is released, the spool automatically returns to neutral, prohibiting any flow through the circuit.

https://truckmanualshub.com/

Proportional Control Valve - Vickers.

CMX series valves provide a power output matching that required by the load. A small line connected to a load-sensing port feeds load pressure back to the pump. The pump senses the difference between the load and pump outlet pressures, and varies the pump displacement to keep the difference constant. This differential pressure is applied across the valves meter-in spool, with the effect that pump flow is determined by the degree of spool opening, independent of load pressure. Return lines are connected together simplifying routing of return flow and to help reduce cavitation. Load sensing lines connect through shuttle valves to feed the highest load signal back to the pump. Integral actuator port relief valves, anti cavitation check valves, and load check valves are standard. The load drop check prevents any drop of a suspended load before upward movement.

Relief Valves.

Main relief valves are installed at various points with the hydraulic system to protect associated systems and components against excessive pressure. Excessive pressure can be developed when a cylinder reaches its limit of travel and the flow of pressurized fluid continues from the system control. The relief valve provides an alternate path for the continuing flow from the pump, thus preventing rupture of the cylinder, hydraulic line or fitting. Complete failure of the system pump is also avoided by relieving circuit pressure. The relief valve is installed in the circuit between the pump outlet (pressure line) and the cylinder of the circuit, generally as an integral part of the system valve bank. Relief pressures are set slightly higher than the load requirement, with the valve diverting excess pump delivery back to the reservoir when operating pressure of the component is reached.

Relief Valves.

Crossover relief valves are used in circuits where the actuator requires an operating pressure lower than that supplied to the system. When the circuit is activated and the required pressure at the actuator is developed, the crossover relief diverts excess pump flow to the reservoir, individual, integral reliefs are provided for each side of the circuits.

2.6 BOOM CHAINS. (SEE FIGURE 2-1)

Adjusting Procedures.

⚠ WARNING

ENSURE MACHINE IS ON A FIRM AND LEVEL SURFACE.

1. Fully retract boom in the horizontal position.
2. Torque fly boom retract chains, adjust to 28 ft. lbs. (38 NM).
3. Torque fly boom extend chains, adjust to 28 ft. lbs. (38 NM).
4. Cycle boom (extend at least three feet and return to the fully retracted position).
5. Recheck fly boom retract chains (28 ft. lbs. (38 NM) required).
6. Recheck fly boom extend chains (28 ft. lbs. (38 NM) required).
7. Repeat steps #2, #3 and #4 if necessary.
8. Check for proper operation of boom.

JLG Industries, Inc. requires a complete boom disassembly, per instructions outlined in the 2-11 boom disassembly, every two years. All boom chains and related components (i.e., sheaves, pins, sprockets, wear pads, etc.) must also be inspected and replaced (as necessary) during this disassembly.

A more frequent disassembly of the boom assembly and inspection of the boom chains and related components is required if machine is exposed to hostile environments or conditions (i.e. extreme cold, dust, sand, blasting grit, salt, chemicals, etc.), which could adversely affect boom operation. Such a disassembly is required if either debris has accumulated inside the boom assembly or an inspection of the boom chain and related components, in accordance with the INSPECTION PROCEDURES in this section, reveals any discrepancies to the boom chain or related components.

An immediate disassembly of the boom assembly and inspection of the boom chains and related components is required if any of the following conditions occur:

1. Erratic boom operation or unusual noise exists, due to discrepancies listed in the INSPECTION PROCEDURES in this section, to the boom chains or related components. See troubleshooting section in Service Manual for probable causes.
2. Chain adjustment is required more often than specified in Service Manual or links need to be removed (chain shortened) to make adjustment.
3. Machine is idle for an extended period (6 months or longer.)
4. Boom is overloaded or sustained a shock load.

⚠ WARNING

FAILURE TO DISASSEMBLE THE BOOM ASSEMBLY AND PROPERLY INSPECT AND/OR REPLACE THE BOOM CHAINS AND RELATED COMPONENTS (I.E., SHEAVES, PINS, SPROCKETS, WEAR PADS, ETC.) COULD RESULT IN THE DAMAGE AND/OR BREAKAGE OF THE BOOM CHAINS AND/OR RELATED COMPO-

https://truckmanualshub.com/

NENTS. DAMAGE AND/OR BREAKAGE OF THESE ITEMS COULD RESULT IN UNCONTROLLED EXTENSION OR RETRACTION OF THE BOOM ASSEMBLY AND COULD CAUSE SERIOUS INJURY OR DEATH TO PERSONNEL OPERATING THE JLG BOOM LIFT.

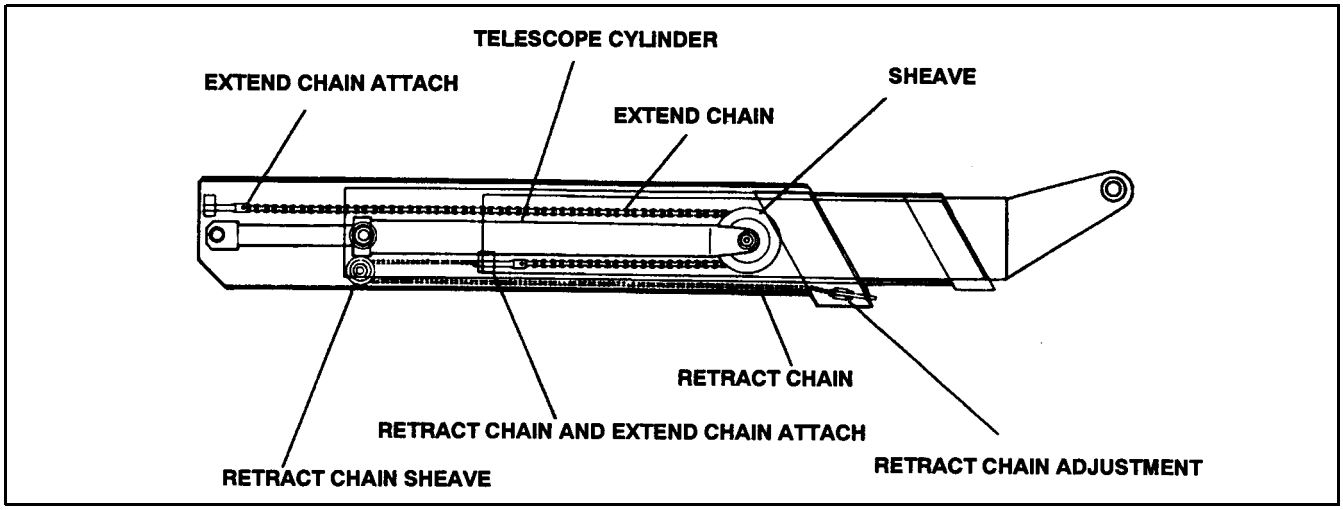

Figure 2-1. Typical Three Section Boom Assembly.

Inspection Procedures.

5. Inspect boom chains for the following condition:

Wear: Always inspect that segment of chain that operates over a sheave. As the chain flexes over the extend/retract sheaves, joints and plate edges very gradually wear. Chain "stretch" can be measured using a manufacturers wear scale or steel tape. When chains have elongated 3% they must be removed and replaced. Refer to Table 1 for proper chain specifications and allowable stretch tolerances. Peening and wear of chain plate edges are caused by sliding over a chain worn contact face of a sheave, or unusually heavy loads. All of the above require replacement of the chain and correction of the cause. Chain side wear, noticeable when pin heads and outside plates show a definite wear pattern, is caused by misalignment of the sheave/chain anchors and must be corrected promptly. Do not repair chains; if a section of chain is damaged, replace the entire chain set.

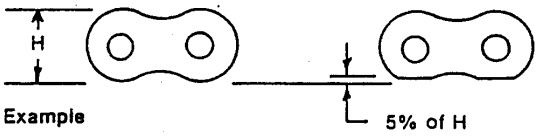

H for a 1" chain	= .950"
Maximum wear	= 5% of .950" = .047"
Minimum plate depth	= .950" - .047" = .903"

Lubrication: One of the most important but often overlooked factors is adequate lubrication. In addition to reducing internal friction, maintaining a film of oil on all chain surfaces will inhibit rusting and corrosion. This is important as corrosion of highly stressed, hardened steel chain components can cause a major reduction in the load capacity of leaf chain and result in link plate cracking.

NOTE: *The need for lubrication can be determined by the presence of rust on the exposed portions of chain.*

Rust and Corrosion: Rust and corrosion will cause a major reduction in the load carrying capacity of the chain, because these are primary reasons for side plate cracking. The initial lubrication at the factory is applied in a hot dip tank to assure full penetration into the joint. Do not steam clean or degrease this lubricant on chains. A grade of SAE 30 or 40 weight, non detergent motor oil should be used as a supplemental lubricant and a film of this oil should be constantly maintained on the surfaces and internal joints. At time of chain installation, factory Lube must be supplemented by a maintenance program to provide a film of oil on the chains at all times. If chains are corroded, they must be inspected, especially the outside plates, for cracks in-line with the pins. If cracks are found, replace the chain; if no cracks are discovered, lubricate the chains by dipping in heated oil, and reinstall on the machine. Keep chains lubricated.

Fatigue Cracks: Fatigue is a phenomenon that affects most metals, and is the most common cause of chain plate failures. Fatigue cracks are found through the link holes, perpendicular (90 degrees) from the

https://truckmanualshub.com/

pin in-line position. Inspect chains carefully after long time use and heavy loading for this type of crack. If any cracks are discovered, replace all chains, as seemingly sound plates are on the verge of cracking. Fatigue and ultimate strength failures on JLG Lifts are incurred as a result of severe abuse as design specs are well within the rated lifting capacity of these chains.

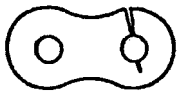

Tight Joints: All joints in the roller chain should flex freely. On roller chain, tight joints are usually caused by rust/corrosion, or the inside plates "walking" off the bushing. Limber up rusty/corroded chains (after inspecting care fully) with a heavy application of oil (preferably a hot oil dip). Tap inside "walking" plates inward; if "walking" persists, replace the chain. This type of problem is accelerated by poor lubrication maintenance practice, and most tight joint chains have been operated with little or no lubrication. Tight joints on leaf chain are generally caused by:

1. Bent pins or plates.
2. Rusty joints.
3. Peened plate edges.

Oil rusty chains, and replace chains with bent or peened chain components. Keep chains lubricated.

TIGHT JOINTS

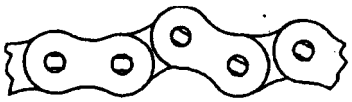

Protruding or **Turned Pins:** Chains operating with inadequate lube generate tremendous friction between the pin and plates (pin and bushing on roller chain). In extreme cases, this frictional torque can actually turn the pins in the outside press-fit plates. Inspect for turned pins, which can be easily spotted as the "V" flats on the pin heads are no longer in line. Replace all chains showing evidence of turned or protruding pins. Keep chains lubricated.

Stress Corrosion Cracking: The outside link plates, which are heavily press-fitted to the pins, are particularly susceptible to stress corrosion cracking. Like fatigue cracks, these initiate at the point of highest stress (aperture) but tend to extend in an arc-like path, often parallel to the rolling grain of the material.

ABNORMAL PROTRUSION
OR TURNED PINS

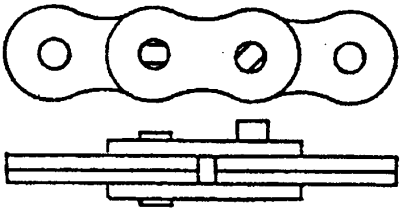

Also, more then one crack can often appear on a link plate. In addition to rusting, this condition can be caused by exposure to an acidic or caustic medium or atmosphere. Stress corrosion is an environmentally assisted failure. Two conditions must be present - corrosive agent and static stress. In the chain, static stress is present at the aperture due to the press fit pin.

ARC-LIKE CRACKED PLATES
(STRESS CORROSION)

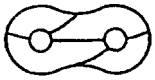

No cycle motion is required and the plates can crack during idle periods. The reactions of many chemical agents (such as battery acid fumes) with hardened metals liberate hydrogen which attacks and weakens the metal grain structure.

Chain Anchors, Sheaves and Pins: An inspection of the chain must include a close examination of chain anchors, sheaves and pins. Check chain anchors for wear breakage and misalignment. Anchors with worn or broken fingers should be replaced. They should also be adjusted to eliminate twisting the chain for an even load distribution.

Sheaves should be inspected for worn flanges, which would indicate misalignment, and wear on the outside diameter of the sheave. A worn sheave can mean several problems, as follows:

1. Chains too tight.
2. Sheave bearings/pin bad.
3. Bent/misaligned chains.

2.7 WEAR PADS.

1. Shim up wear pads within 1/16 in. (1.59 mm) tolerance between wear pad and adjacent surface.
2. Replace wear pads when worn within 1/8 in. (3.18 mm) of threaded insert.

https://truckmanualshub.com/

Table 2-1. Chain Stretch Tolerance.

Chain Size	Pin To Pin Measurement	Allowable Stretch
0.50 in. (1.27 cm) pitch	14 in. (36 cm) or 28 pitches	0.42 in. (1.07 cm)
0.625 in. (1.59 cm) pitch	15 in. (38 cm) or 24 pitches	0.45 in. (1.14 cm)
0.75 in. (1.91 cm) pitch	15 in. (38 cm) or 20 pitches	0.45 in. (1.14 cm)
1 in. (2.54 cm) pitch	14 in. (36 cm) or 14 pitches	0.42 in. (1.07 cm)
1.25 in. (3.18 cm) pitch	15 in. (38 cm) or 12 pitches	0.45 in. (1.14 cm)
1.75 in. (4.45 cm) pitch	14 in. (36 cm) or 8 pitches	0.42 in. (1.07 cm)
2 in. (5.08 cm) pitch	14 in. (36 cm) or 7 pitches	0.42 in. (1.07 cm)

2.8 CYLINDER CHECKING PROCEDURE.

NOTE: *Cylinder checks must be performed any time a cylinder component is replaced or when improper system operation is suspected.*

Cylinders Without Counterbalance Valves. Steer Cylinder and Master Cylinder.

3. Using all applicable safety precautions, activate engine and fully extend cylinder to be checked. Shut down engine.
4. Carefully disconnect hydraulic hose from retract port of cylinder. There will be initial weeping of hydraulic fluid which can be caught in a suitable container. After the initial discharge there should be no further leakage from the retract port.
5. Activate engine and extend cylinder.
6. If cylinder retract port leakage is less than 6-8 drops per minute, carefully reconnect hose to port and retract cylinder. If leakage continues at a rate of 6-8 drops per minute or more, cylinder repairs must be made.
7. With cylinder fully retracted, shut down engine and carefully disconnect hydraulic hose from cylinder extend port.
8. Activate engine and retract cylinder. Check extend port for leakage.
9. If extend port leakage is less than 6-8 drops per minute, carefully reconnect hose to extend port, then activate cylinder through one complete cycle and check for leaks. If leakage continues at a rate of 6-8 drops per minute or more, cylinder repairs must be made.

Cylinders With Single Counterbalance Valve.

Lift Cylinder, Telescope Cylinder and Extend- A-Reach Lift Cylinder.

⚠ IMPORTANT

OPERATE ALL FUNCTIONS FROM GROUND CONTROLS.

1. Using all applicable safety precautions, activate hydraulic system.

⚠ WARNING

WHEN WORKING ON THE LIFT CYLINDER, RAISE THE BOOM TO HORIZONTAL AND PLACE A BOOM PROP APPROXIMATELY 1 INCH (2.50 CM) BELOW THE BOOM. DO NOT WORK ON THE CYLINDER WITHOUT A SUITABLE PROP IN PLACE. REFER TO FIGURE 2-2.

2. After completing the above, shut down hydraulic system and allow machine to sit for 10-15 minutes. Turn IGNITION SWITCH to ON, move control switch or lever for applicable cylinder in each direction, then turn IGNITION SWITCH to OFF. This is done to relieve pressure in the hydraulic lines. Carefully remove hydraulic hoses from appropriate cylinder port block.
3. There will be initial weeping of hydraulic fluid, which can be caught in a suitable container. After the initial discharge, there should not be any further leakage from the ports. If leakage continues at a rate of 6-8 drops per minute or more, the following cylinder repairs must be made. If the retract port is leaking, the piston seals are defective and must be replaced. If the extend port is leaking, the counterbalance valve is defective and must be replaced.
4. If no repairs are necessary or when repairs have been made, carefully reconnect hydraulic hoses to the appropriate ports.

https://truckmanualshub.com/

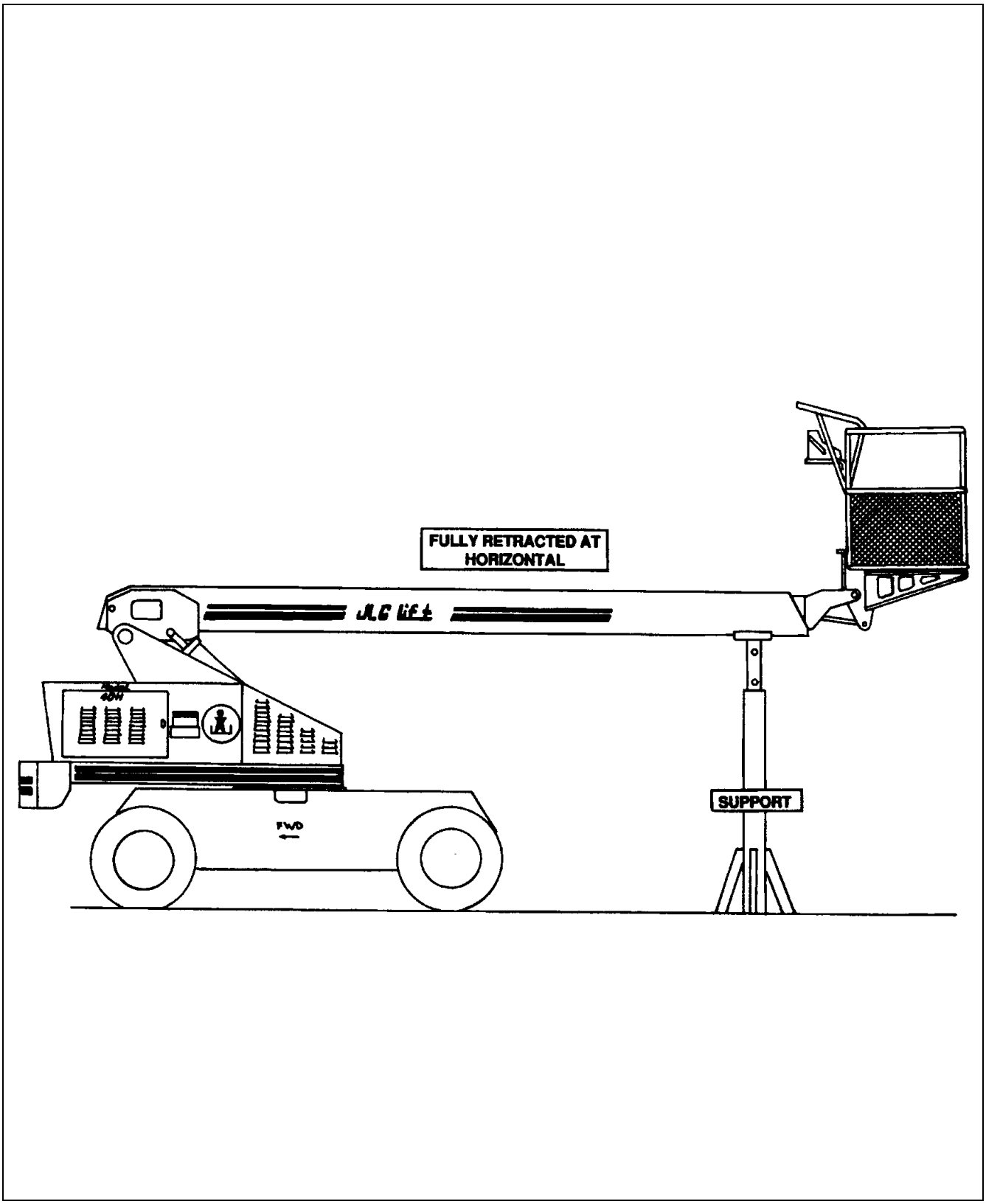

Figure 2-2. Boom Positioning and Support, Cylinder Repair.

https://truckmanualshub.com/

5. If used, remove boom prop from beneath boom, activate hydraulic system and run cylinder through one complete cycle to check for leaks.

Cylinders With Dual Counterbalance Valves.

Platform Slave Level Cylinder, Lockout Cylinder and Extend-A-Reach Level Cylinder.

IMPORTANT

OPERATE ALL FUNCTIONS FROM GROUND CONTROL STATION ONLY.

1. Using all applicable safety precautions, activate hydraulic system.
2. When working on the platform slave level cylinder, stroke platform slave level cylinder forward until platform sits at a 45° angle.
3. Shut down hydraulic system and allow machine to sit for 10-15 minutes. If machine is equipped with a bang-bang or proportional control valves, turn IGNITION SWITCH to ON, move control switch or lever for applicable cylinder in each direction, then turn IGNITION SWITCH to OFF. If machine is equipped with hydraulic control valves, move control lever for applicable cylinder in each direction. This is done to relieve pressure in the hydraulic lines. Carefully remove hydraulic hoses from appropriate cylinder port block.
4. There will be initial weeping of hydraulic fluid which can be caught in a suitable container. After the initial discharge, there should not be any further leakage from the ports. If leakage continues at a rate of 6-8 drops per minute or more, the counterbalance valve is defective and must be replaced.
5. To check piston seals, carefully remove the counterbalance valve from the retract port. After initial discharge there should not be any further leakage from the ports. If leakage occurs at a rate of 6-8 drops per minute or more, the piston seals are defective and must be replaced.
6. If no repairs are necessary or when repairs have been made, replace counterbalance valve and carefully connect hydraulic hoses to cylinder port block.
7. If used, remove lifting device from upright or remove prop from below boom, activate hydraulic system and run cylinder through one complete cycle to check for leaks.

2.9 CYLINDER REPAIR.

NOTE: *The following are general procedures that apply to all of the cylinders on this machine. Procedures that apply to a specific cylinder will be so noted.*

Disassembly.

IMPORTANT

DISASSEMBLY OF THE CYLINDER SHOULD BE PERFORMED ON A CLEAN WORK SURFACE IN A DIRT FREE WORK AREA.

1. Connect a suitable auxiliary hydraulic power source to the cylinder port block fitting.

WARNING

DO NOT FULLY EXTEND CYLINDER TO THE END OF STROKE. RETRACT CYLINDER SLIGHTLY TO AVOID TRAPPING PRESSURE.

2. Operate the hydraulic power source and extend the cylinder. Shut down and disconnect the power source. Adequately support the cylinder rod, if applicable.

CAUTION

CYLINDERS WITH DOUBLE HOLDING VALVES. BEFORE REMOVING HOLDING VALVES CRACK BLEEDERS TO RELEASE PRESSURE.

3. If applicable, remove the cartridge-type holding valve and fittings from the cylinder port block. Discard o-rings.
4. Place the cylinder barrel into a suitable holding fixture. Tap around outside of cylinder head retainer with a suitable hammer to shatter loctite.
5. Using a suitable spanner wrench, loosen the cylinder head retainer, if applicable, and/or cylinder head gland, and remove from cylinder barrel.
6. Attach a suitable pulling device to the cylinder rod port block end or cylinder rod end, as applicable.

IMPORTANT

EXTREME CARE SHOULD BE TAKEN WHEN REMOVING THE CYLINDER ROD, HEAD, AND PISTON. AVOID PULLING THE ROD OFF-CENTER, WHICH COULD CAUSE DAMAGE TO THE PISTON AND CYLINDER BARREL SURFACES.

https://truckmanualshub.com/

7. With the barrel clamped securely, apply pressure to the rod pulling device and carefully withdraw the complete rod assembly from the cylinder barrel.
8. Using suitable protection, clamp the cylinder rod in a vise or similar holding fixture as close to the piston as possible.
9. Remove the set screw (s), if applicable, and nut which attach the piston to the rod, and remove the piston. Discard self-locking set screws.
10. Remove the piston rings.
11. Remove and discard the piston o-rings, seal rings, and backup rings.
12. Remove the set screw, if applicable, piston spacer, and wear ring, if applicable, from the rod.
13. Remove the rod from the holding fixture. Remove the cylinder head gland and retainer, if applicable. Discard the o-rings, back-up rings, rod seals, and wiper seals.

Cleaning and Inspection.

1. Clean all parts thoroughly in an approved cleaning solvent.
2. Inspect the cylinder rod for scoring, tapering, ovality, or other damage. If necessary, dress rod with Scotch Brite or equivalent. Replace rod if necessary.
3. Inspect threaded portion of rod for excessive damage. Dress threads as necessary.
4. Inspect inner surface of cylinder barrel tube for scoring or other damage. Check inside diameter for tapering or ovality. Replace if necessary.
5. Inspect threaded portion of barrel for damage. Dress threads as necessary.
6. Inspect piston surface for damage and scoring and for distortion. Dress piston surface or replace piston as necessary.
7. Inspect seal and o-ring grooves in piston for burrs and sharp edges. Dress applicable surfaces as necessary.
8. Inspect cylinder head inside diameter for scoring or other damage and for ovality and tapering. Replace as necessary.
9. Inspect seal and o-ring grooves in head for burrs and sharp edges. Dress applicable surfaces as necessary.
10. If applicable, inspect cylinder head retainer or end cap for surface or thread damage. Repair or replace as necessary.
11. Inspect cylinder head outside diameter for scoring or other damage and ovality and tapering. Replace as necessary.
12. If applicable, inspect thread ring for scoring or other damage. Dress threads or applicable surfaces as necessary.
13. If applicable, inspect seal grooves in thread ring for burrs and sharp edges. Dress applicable surfaces as necessary.
14. If applicable, inspect rod and barrel bushings for signs of correct lubrication and excessive wear. Replace as necessary.
15. Inspect travel limiting collar or spacer for burrs and sharp edges. If necessary, dress inside diameter surface with Scotch Brite or equivalent.
16. If applicable, inspect port block fittings and holding valve. Replace as necessary.
17. Inspect the oil ports for blockage or the presence of dirt or other foreign material. Repair as necessary.
18. If applicable, inspect piston rings for cracks or other damage. Replace as necessary.

NOTE: *Steps (19) through (22) apply to the 3 Section Boom telescope cylinder only.*

19. Inspect chain sheave bushings for scoring, tapering, ovality and for excessive wear and evidence of correct lubrication. Replace bushing as necessary.
20. Inspect sheave chain groove for damage. Replace sheave assembly as necessary.
21. Inspect sheave attach pin for scoring or other damage and for evidence of correct lubrication. Dress pin surface with Scotch Brite or equivalent or replace pin as necessary.
22. Inspect sheave pin lubrication drilling and fitting for blockage or the presence of dirt or other foreign material. Repair as necessary.

Assembly.

NOTE: *Prior to cylinder assembly, ensure that the proper cylinder seal kit is used. See your JLG Parts Manual.*

Apply a light film of hydraulic oil to all components prior to assembly.

⚠ IMPORTANT

WHEN INSTALLING 'POLY-PAK' PISTON SEALS, ENSURE SEALS ARE INSTALLED PROPERLY. REFER TO FIGURE 2-3 FOR CORRECT SEAL ORIENTATION. IMPROPER SEAL INSTALLATION COULD RESULT IN CYLINDER LEAKAGE AND IMPROPER CYLINDER OPERATION.

https://truckmanualshub.com/

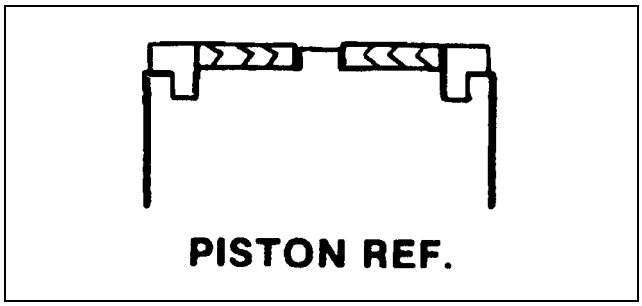

Figure 2-3. Poly-Pak Seal Installation.

1. Place a new wiper seal and rod seal into the applicable cylinder head gland grooves.
2. Carefully install the head gland on the rod, ensuring that the wiper and rod seals are not damaged or dislodged. Push the head along the rod to the rod end, as applicable.
3. Carefully slide the piston spacer on the rod. If applicable, align the oil holes in the rod and the spacer. Secure the spacer, if applicable.
4. If applicable, correctly place a new o-ring and back-up rings in the inner piston diameter groove.
5. Carefully place the piston on the cylinder rod, ensuring that the o-ring and back-up rings are not damaged or dislodged.
6. Using suitable protection, clamp the cylinder rod in a vise or similar holding fixture as close to the piston as possible.
7. Push the piston onto the rod until it abuts the spacer end and install the attaching nut.

⚠ WARNING

WHEN REBUILDING THE LIFT, SLAVE LEVEL, TELESCOPE, STEER (SINGLE ROD), AND EXTEND-A-REACH SLAVE AND LIFT CYLINDERS, APPLY LOCTITE #242 TO PISTON NUT, THEN TIGHTEN BOTH SECURELY. (SEE TABLE 2-2 FOR TORQUE SPECIFICATIONS).

NOTE: *These cylinders use self-locking knurled cup point setscrews which should be discarded and replaced whenever they are removed.*

After torquing piston nut spot drill cylinder rod for setscrews.

8. If applicable, install the setscrew (s) which secure the piston attaching nut to the diameter groove. (See Table 2-2 for Torque Specifications).
9. Remove the cylinder rod from the holding fixture.
10. Place new o-rings and seals in the applicable outside diameter grooves of both the piston and the cylinder head.
11. Position the cylinder barrel in a suitable holding fixture.

⚠ IMPORTANT

EXTREME CARE SHOULD BE TAKEN WHEN INSTALLING THE CYLINDER ROD, HEAD, AND PISTON. AVOID PULLING THE ROD OFF-CENTER, WHICH COULD CAUSE DAMAGE TO THE PISTON AND CYLINDER BARREL SURFACES.

12. With barrel clamped securely, and while adequately supporting the rod, insert the piston end into the barrel cylinder. Ensure that the piston loading o-ring and seal ring are not damaged or dislodged.
13. Continue pushing the rod into the barrel until the cylinder head gland can be inserted into the barrel cylinder or, if applicable, until the cylinder threads engage the threads of the barrel.
14. If applicable, secure the cylinder head gland using a suitable spanner type wrench in the holes provided.
15. If applicable, secure the cylinder head retainer using a suitable spanner type wrench in the holes provided.
16. After the cylinder has been reassembled, the rod should be pushed all the way in (fully retracted) prior to the reinstallation of any holding valve or valves.
17. If applicable, install the cartridge-type holding valve and fittings in the rod port block using new o-rings as applicable. (See Table 2-2. Holding Valve Torque Specifications).

⚠ CAUTION

IF THE CYLINDER IS TO BE TESTED PRIOR TO INSTALLATION ON THE MACHINE, EXTREME CARE SHOULD BE USED TO INSURE THAT THE OUTER END OF THE ROD IS SUPPORTED. USE EITHER A TRAVELING OVERHEAD HOIST, FORKLIFT, OR OTHER MEANS TO SUPPORT THE OVERHANGING WEIGHT OF THE EXTENDING ROD.

NOTE: *Steps 18 through 21 apply to the Boom Telescope Cylinders.*

18. Elevate the barrel end of the cylinder to a work bench or other suitable device.
19. Plug the retract port and supply hydraulic power to the extend port.
20. Open the bleeder port plug (TP) venting all trapped air to atmosphere. Retighten the bleeder port plug. Disconnect the hydraulic power source and remove plug from retract port.

https://truckmanualshub.com/

21. An alternative to steps (18) through (20) is to position the barrel horizontally in a suitable holding device, attach a hydraulic power source to both extend and retract ports, while supporting the cylinder rod, cycle the cylinder a minimum of 5 times with the bleeder port unplugged venting all trapped air to atmosphere. A suitable hose may be attached to the bleeder port with the end in a container suitable to contain the hydraulic fluid. After all air is vented remove all attached hoses, and install the bleeder port plug. Also plug the extend and retract ports until cylinder is installed in boom.

Table 2-2. Cylinder Piston Nut Torque Specification

Description	Nut Torque Value (Wet)	Setscrew Torque Value (Dry)
Lift Cylinder	600 ft. lbs. (814 Nm)	200 in. lbs. (23 Nm)
Slave Cylinder	80 ft. lbs. (109 Nm)	100 in. lbs. (12 Nm)
Master Cylinder	80 ft. lbs. (109 Nm)	100 in. lbs. (12 Nm)
Steer Cylinder	80 ft. lbs. (109 Nm)	100 in. lbs. (12 Nm)
Lockout Cylinder	80 ft. lbs. (109 Nm)	100 in. lbs. (12 Nm)
Telescope Cylinder	600 ft. lbs. (814 Nm)	200 in. lbs. (23 Nm)
Extend-A-Reach		
Lift Cylinder	200 ft. lbs. (271 Nm)	100 in. lbs. (12 Nm)
Slave Cylinder	200 ft. lbs. (271 Nm)	100 in. lbs. (12 Nm)

NOTE: *After torquing piston nut spot drill cylinder rod for setscrews.*

Table 2-3. Holding Valve Torque Specifications.

Description	Torque Value
SUN - 7/8 HEX M20 X 1.5 THDS.	30-35 ft. lbs. (41-48 NM)
SUN - 1 1/8 HEX 1 -14 UNS THDS.	45-50 ft. lbs. (61-68 NM)
SUN - 1 1/4 HEX M36 X 2 THDS.	150-160 ft. lbs. (204-217 NM)
RACINE - 1 1/8 HEX 1 1/16 - 12 THDS.	50-55 ft. lbs. (68-75 NM)
RACINE - 1 3/8 HEX 1 3/16 - 12 THDS.	75-80 ft. lbs. (102-109 NM)
RACINE - 1 7/8 HEX 1 5/8 - 12 THDS.	100-110 ft. lbs. (136-149 NM)

2.10 CYLINDER REMOVAL AND INSTALLATION.

Telescope Cylinder Removal.

1. Be sure boom is fully retracted and in a horizontal position.
2. Shut down engine. Support boom basket end with a prop. (See Figure 2-2.)
3. Remove boom end-cover.

⚠ CAUTION

HYDRAULIC LINES AND PORTS SHOULD BE CAPPED IMMEDIATELY AFTER DISCONNECTING LINES TO AVOID THE ENTRY OF CONTAMINANTS INTO THE SYSTEM.

4. Tag and disconnect hydraulic lines to telescope cylinder. Use suitable container to retain any residual hydraulic fluid. Cap hydraulic lines and ports.
5. Remove the two setscrews that retain the telescope cylinder pin to the base boom.
6. Using a suitable brass drift, carefully drive the telescope cylinder pin from the base boom.

NOTE: *Steps 7, 8 and 9 apply to 3 Section Boom Only.*

7. Remove the telescope cylinder trunnion pin covers from each side of the base boom.
8. Remove the cap screws securing the trunnion pins from each side of the boom.
9. Using a suitable slide hammer, remove the trunnion pins attaching the telescope cylinder to the mid boom.

https://truckmanualshub.com/

NOTE: *Steps 10 and 11 apply to 2 Section Boom Only.*

10. Remove the capscrews and washers holding the telescope cylinder rod pin to the fly boom.
11. Using a suitable brass drift, carefully drive the telescope cylinder pin from the fly boom.
12. Attach a suitable sling to the telescope cylinder. Support with an overhead crane or other suitable lifting device.

NOTE: *Steps 13, 14, 15 and 16 apply to 3 Section Boom Only.*

13. Remove the two (2) extension chain adjusting nuts from the eyebolt through the chain adjust assembly.
14. Remove the four (4) bolts and lock washers attaching the chain attach block to the base boom section and remove block.
15. Attach a suitable lifting device to the extension chain adjusting eyebolt above the cylinder rod.

NOTE: *The extension chain will come out of the boom twice as far as the telescope cylinder.*

16. Using both lifting devices, carefully pull the cylinder from the boom assembly.

NOTE: *Step 17 applies to 2 Section Boom Only.*

17. Using the lifting device, carefully pull the cylinder from the boom assembly.

NOTE: *Steps 18 and 19 apply to 3 Section Boom Only.*

18. As the cylinder is removed from the boom, lay the extension chain on top of the base boom.
19. Using another lifting device, support the sheave wheel end of the cylinder and remove the cylinder from the boom assembly.

NOTE: *Step 20 applies to 2 Section Boom Only.*

20. Using another lifting device, support the rod end of the cylinder and remove the cylinder from the boom assembly.
21. Carefully lift the cylinder clear of the boom assembly and lower to the ground or suitably supported work area.

Telescope Cylinder Installation.

1. Using suitable lifting equipment, carefully lower the cylinder to the boom assembly.
2. Using another lifting device, support the sheave wheel, or rod end, of the cylinder and install the cylinder into the boom assembly.
3. Slide the cylinder into boom, sliding the extension chain (3 Section Boom Only) in place as the cylinder is moving in.

NOTE: *Steps 4, 5 and 6 apply to 3 Section Boom Only.*

4. Attach a suitable lifting device to the extension chain adjusting eyebolt.
5. Install chain adjust block with four 4 lock washer and bolts to base boom section.
6. Install the two (2) extension chain adjusting nuts that attach the eyebolt to the chain adjust block.
7. Remove the lifting device from the telescope cylinder.

NOTE: *Steps 8, 9 and 10 apply to 3 Section Boom Only.*

8. Using a suitable brass drift install the trunnion pins attaching the telescope cylinder to the mid boom section.
9. Install the capscrews securing the trunnion pins to each side of the boom. Note that loctite 242 is required on the cap screw threads.
10. Install trunnion pin covers on each side of boom.

NOTE: *Steps 11 and 12 apply to 2 Section Boom Only.*

11. Carefully install the telescope cylinder rod pin through the fly boom.
12. Install the capscrews and washers holding the telescope cylinder rod pin to the fly boom. Note that loctite 242 is required on the capscrew threads.
13. Carefully install the telescope cylinder barrel attach pin into base boom.
14. Install the setscrews that retain the telescope cylinder pin to the base boom.
15. Remove applicable hydraulic line and port caps and correctly connect the hydraulic lines to the telescope cylinder. Ensure all hoses are correctly routed.
16. Install boom end cover.
17. Activate hydraulic system.
18. Using all applicable safety precautions, operate the boom functions. Check for correct operation and hydraulic leaks. Secure as necessary.

NOTE: *Step 19 applies to 3 Section Boom Only.*

19. Cycle (extend/retract) boom several times, then torque boom chains to 40 ft. lbs. (2.76 Bar). See Section 2-6 Boom Chains for correct torquing procedure.

https://truckmanualshub.com/

20. Check fluid level of hydraulic tank and adjust as necessary.

Boom Lift Cylinder Removal.

1. Place the machine on a flat and level surface. Start the engine and place the boom in a horizontal position. Shut down the engine and prop the boom. (See Figure 2-2.)
2. Remove the hardware retaining the cylinder rod attach pin to the boom. Using a suitable brass drift, drive out the cylinder rod attach pin.
3. Using auxiliary power, retract the lift cylinder rod completely.
4. Disconnect, cap and tag the boom lift cylinder hydraulic lines and ports.
5. Remove barrel end attach pin retaining hardware. Using a suitable brass drift drive out the barrel end attach pin from the turntable upright.
6. Remove the cylinder from the boom and place in a suitable work area.

Boom Lift Cylinder Installation.

1. Install lift cylinder in place using suitable slings or supports, aligning attach pin mounting holes on the turntable upright.
2. Using a suitable drift, drive the barrel end attach pin through the mounting holes in the lift cylinder and the turntable upright. Secure in place with the pin retaining hardware.
3. Remove cylinder port plugs and hydraulic line caps and correctly attach lines to cylinder ports.
4. Using auxiliary power extend the cylinder rod until the attach pin hole aligns with those in the boom. Using a suitable drift drive the cylinder rod attach pin through the aligned holes, taking care to align the grooved pin holes. Secure the pin in place with attaching hardware.
5. Remove boom prop and overhead crane. Activate hydraulic system.
6. Using all applicable safety precautions, operate the boom functions. Check for correct operation and hydraulic leaks. Secure as necessary.
7. Check fluid level of hydraulic tank and adjust as necessary.

2.11 BOOM MAINTENANCE.

Removal.

1. Remove the platform from boom assembly.
2. Remove the slave leveling cylinder from boom assembly.

NOTE: *Boom Assembly weighs approximately:*

Two Section Boom - 1795 lbs. (814 kg).
Three Section Boom - 2275 lbs. (1032 kg).

3. Using suitable lifting equipment, adequately support boom weight along entire length of retracted boom.

⚠ CAUTION

HYDRAULIC LINES AND PORTS SHOULD BE CAPPED IMMEDIATELY AFTER DISCONNECTING LINES TO AVOID ENTRY OF CONTAMINANTS INTO SYSTEM.

4. Tag and disconnect hydraulic lines that run along the side of the boom.
5. Remove hardware attaching upper lift cylinder attach pin to boom.
6. Using a slide hammer or similar tool, and taking care not to damage pin, remove pin from boom.
7. Using all applicable safety precautions, and only if necessary, operate crane and fully retract lift cylinder.
8. Shut down machine systems.
9. Tag and disconnect all wiring to ground control box.
10. Loosen and remove hardware securing boom pivot pin.
11. Ensuring that boom is adequately supported and using a suitable slide hammer, carefully remove pivot pin from boom and turntable structure. Ensure that boom and turntable structure are not damaged.
12. Carefully lift boom assembly clear of turntable and lower to ground or suitably supported work surface.

Disassembly.

⚠ CAUTION

HYDRAULIC LINES AND PORTS SHOULD BE CAPPED IMMEDIATELY AFTER DISCONNECTING LINES TO AVOID ENTRY OF CONTAMINANTS INTO SYSTEM.

1. Remove hydraulic lines, electrical cables, carrier tube, power track from right side of boom assembly.

NOTE: *Step (2) applies to 3 Section Boom Only.*

2. Remove the telescope cylinder, extension chain assembly

https://truckmanualshub.com/

3. Remove control console from the platform.
4. Remove platform from fly boom assembly.
5. Remove carrier tube and power track from right side of the boom assembly.

NOTE: *Steps 6 and 7 apply to 3 Section Boom Only.*

6. Removal and disassemble of the extension chain attachment and adjustment assembly (mounted at aft of boom base section) as follows:
   a. Remove jam nut and nut which secures the chain attachment clevis bolt to the chain adjustment block.
   b. Remove the bolts and washer which secure the extension chain attachment, assembly to the base boom section; remove chain attachment assembly from the base boom section mounting point.
   c. Remove the cotter pins from the clevis pins. Remove clevis pins and washers from the chain attachment clevis bolt; remove the chain attachment clevis from the chain.
7. Removal and disassemble of the retraction chain attachment and adjustment assembly as follows:
   a. Remove nuts and washers from the chain attachment shield, and remove shield from the boom base section.
   b. Remove the jam nut and nut from the threaded end of the tension-adjusting clevis bolt. Remove the entire tension-adjusting assembly from the boom-mounted bracket.
   c. Remove the cotter pins from the clevis pins which secure the retraction chains, to the clevis bolt assembly.
   d. Remove cotter pins, nuts and bolts securing chain attach blocks to clevis bolt assembly. Remove attach blocks.
   e. Separate top and bottom clevis bolt assembly plates. Remove clevis bolt from bottom plate.
8. Remove the setscrews from the pin which attaches the telescope cylinder rod end to the boom base section; use a brass drift to remove the pin.

NOTE: *Note and record the number and thickness of any wear pad shims during wear pad removal.*

9. Remove bolts which secure the wear pads to the inner forward surfaces of the boom base section. Remove the wear pads from the top, sides and bottom of the boom base section.

NOTE: *Steps 10, thru 15 apply to 3 Section Boom Only.*

10. Using suitable lifting equipment, carefully slide the assembled mid and fly sections from the base section. Place the mid and fly sections on a suitable trestle.
11. Remove the setscrew which secures the sheave pin at the aft end of the midsection. Use a suitable brass drift to remove pin. Remove sheave assembly.
12. Remove the bolts, washers and bar from the trunnion pins which secure the cylinder base to the boom mid section; use a suitable slide hammer to remove the pins.

⚠ CAUTION

WHEN REMOVING THE TELESCOPE CYLINDER FROM THE BOOM, IT MAY BE NECESSARY AT SOME POINT TO TURN THE CYLINDER SLIGHTLY IN ORDER TO CLEAR ASSEMBLIES MOUNTED WITHIN THE BOOM CARE MUST BE TAKEN TO MOVE THE CYLINDER SLOWLY FROM THE BOOM, DAMAGE TO COMPONENTS MAY RESULT FROM FORCIBLE IMPACT WITH THESE ASSEMBLIES.

13. Pull the cylinder partially from the rear of the boom mid section; secure the cylinder with a suitable sling and lifting device at approximately the center of gravity.
14. Carefully remove the telescope cylinder and sheave assembly. Place the cylinder on a suitable trestle.
15. Remove bolts and washers from the sheave pin; remove the pin and the sheave assembly.

NOTE: *Steps 16, thru 19 apply to 2 Section Boom Only.*

16. Remove bolts and washers from the pin securing telescope cylinder to fly boom; use a brass drift to remove the pin.
17. Pull the cylinder partially from the rear of the boom mid section; secure the cylinder with a suitable sling and lifting device at approximately the center of gravity.
18. Using suitable lifting equipment, carefully slide the fly section from the base section. Place the fly sections on a suitable trestle.
19. Remove the bolts which secure the wear pads to the aft ends of the fly and mid sections; remove the wear pads from the boom sections.

NOTE: *Steps 20, thru 28 apply to 3 Section Boom Only.*

20. Remove the setscrew which secures the sheave pin at the aft end of the midsection. Use a suitable brass drift to remove pin. Remove sheave assembly.
21. Remove the bolts, washers and bar from the trunnion pins which secure the cylinder base to the

https://truckmanualshub.com/

boom mid section; use a suitable slide hammer to remove the pins.

⚠ CAUTION

WHEN REMOVING THE TELESCOPE CYLINDER FROM THE BOOM, IT MAY BE NECESSARY AT SOME POINT TO TURN THE CYLINDER SLIGHTLY IN ORDER TO CLEAR ASSEMBLIES MOUNTED WITHIN THE BOOM CARE MUST BE TAKEN TO MOVE THE CYLINDER SLOWLY FROM THE BOOM, DAMAGE TO COMPONENTS MAY RESULT FROM FORCIBLE IMPACT WITH THESE ASSEMBLIES.

22. Pull the cylinder partially from the rear of the boom mid section; secure the cylinder with a suitable sling and lifting device at approximately the center of gravity.
23. Carefully remove the telescope cylinder and sheave assembly. Place the cylinder on a suitable trestle.
24. Remove bolts and washers from the sheave pin; remove the pin and the sheave assembly.

NOTE: *Note and record the number and thickness of any wear pad shims during wear pad removal.*

25. Remove the bolts which secure the wear pads to the inner surfaces of the boom mid section; remove the wear pads from the top, sides and bottom of the mid section.
26. Remove bolts and lock washers which secure the chain block weldment to the aft end of the fly section. Remove the cotter pins from the clevis pins which secure the extension chain and retraction chains to the block; remove the clevis pin, washers and chains from the block.
27. Using suitable lifting equipment, remove the fly section from the mid section; place the fly section on a suitable trestle.
28. Remove the bolts which secure the wear pads to the aft ends of the fly and mid sections; remove the wear pads from the boom sections.

Inspection.

NOTE: *Steps 1, thru 4 apply to 3 Section Boom Only.*

1. Inspect all sheaves (extend chains, retract chains and telescope cylinder) for excessive groove wear, burrs or other damage. Replace sheaves as necessary.
2. Inspect extend chain and retract chain sheave bearings for wear, scoring, or other damage, and for ovality. Replace bearings as necessary, ensuring they are installed flush with sheave surface.
3. Inspect extend chain and retract chain sheave pins for scoring, tapering, ovality and evidence of correct lubrication. Replace pins as necessary.
4. Inspect telescope cylinder sheave pin for tapering, scoring, ovality and evidence of correct lubrication. Replace pin as necessary.
5. Inspect boom pivot pin for wear, scoring or other damage, and for tapering or ovality. Replace pin as necessary.
6. Inspect upper lift cylinder attach pin for tapering, ovality, scoring, wear, or other damage. Ensure pin surfaces are protected prior to installation. Replace pin as necessary.

NOTE: *Steps 7 and 8 apply to 3 Section Boom Only.*

7. Inspect telescope cylinder trunnion attach pin for tapering, ovality, scoring, wear, or other damage. Replace pin as necessary.
8. Inspect extend chain attach clevis pins for wear, scoring, or other damage. Replace pins as necessary.
9. Inspect telescope cylinder rod attach pin for scoring, wear, or other damage. Replace pin as necessary.
10. Inspect inner diameter of boom pivot bushing for scoring, distortion, wear, or other damage. Replace bushing as necessary.
11. Inspect all wear pads for excessive wear or damage. Replace pads when worn to within 1/8 inch (3.2 mm) of insert.

NOTE: *Step 12 applies to 3 Section Boom Only.*

12. Inspect extend and retract chains and chain attach components for cracks, stretching, distortion, or other damage. Replace components as necessary.
13. Inspect all threaded components for damage such as stretching, thread deformation, or twisting. Replace as necessary.
14. Inspect structural units of boom assembly for bending, cracking, separation of welds, or other damage. Replace boom sections as necessary.

Assembly.

NOTE: *When installing fly section wear pads, install same number and thickness of shims as were removed during disassembly.*

1. Measure the inside dimensions of the base and mid sections to determine the number of shims required for proper lift.

NOTE: *Step 2 applies to 2 Section Boom Only.*

https://truckmanualshub.com/

2. Measure the inside dimensions of the base section to determine the number of shims required for proper lift.

3. Install side wear pads to the aft end of the fly section; shim evenly to the measurements of the inside of the mid section.

NOTE: *Step 4 applies to 2 Section Boom Only.*

4. Install side wear pads to the aft end of the fly section; shim evenly to the measurements of the inside of the base section.

5. Install the side wear pads to the aft end of the mid section; shim evenly to the measurement of the inside of the base section.

6. Shim the insides of the boom sections for a total of 1/16 inch (.062) clearance (if the action is centered, there will be 1/32 clearance on each side).

NOTE: *Steps 7 and 8 apply to 2 Section Boom Only.*

7. Slide fly section into the base section a distance of approximately one foot; measurement of the inside of the base section top wear pad clearance and fabricate shim packs.

8. Remove the fly section from the base section and install two top wear pads and a shim pack. Shim the top of the fly section for a total of 1/16 inch (.062) clearance.

9. Slide fly section into the mid section a distance of approximately one foot; measurement of the inside of the mid section top wear pad clearance and fabricate shim packs.

10. Remove the fly section from the mid section and install two top wear pads and a shim pack. Shim the top of the fly section for a total of 1/16 inch (.062) clearance.

11. Slide the mid section into the base section a distance of approximately one foot; measurement top wear pad clearance and fabricate shim packs.

12. Remove the mid section from the base section and install two top wear pads and a shim pack. Shim the top of the mid section for a total of 1/16 inch (.062) clearance.

13. Attach the extension chain to the appropriate clevis attachment point of the chain block weldment by installing the clevis pin and washer through the attach holes; secure the clevis pin with a new cotter pin. Place the chain block weldment in position at the aft end of the fly section; secure the weldment by installing the bolts and washers.

⚠ CAUTION

WHEN ASSEMBLING BOOM SECTIONS, ENSURE THAT THE BOOM SLIDING TRAJECTORIES HAVE BEEN CLEARED OF CHAINS, TOOLS, AND OTHER OBSTRUCTIONS.

14. mid section. Shim boom, if necessary, for a total of 1/16 inch (.062) clearance.

NOTE: *Step 15 applies to 2 Section Boom Only.*

15. Install wear pads into the forward portion of the base section. Shim boom, if necessary, for a total of 2/10 inch (.20) clearance.

16. Install wear pads into the forward portion of the mid section. Shim boom, if necessary, for a total of 2/10 inch (.20) clearance.

17. Align the attach points of the retraction chains with those of the chain attachment block, located at the aft end of the fly section. Install the clevis pins and washers through the attaching holes of the chains and block; secure the clevis pins by installing new cotter pins.

18. Properly position the retraction chain sheave assemblies at the aft end of the mid section; ensure all sheave-to-mounting block attachment holes align. Install the sheave pin and secure by installing the s setscrews. Position the retraction chains onto the sheaves.

19. Align the telescope cylinder base-to-sheave attachment points. Install the sheave pin through the cylinder base and sheave assembly; secure the pin with bolt and washer.

20. Secure the sling and lifting device at the telescope cylinder's approximate center of gravity, and lift the cylinder to the aft end of the boom assembly.

⚠ CAUTION

WHEN INSERTING THE TELESCOPE CYLINDER INTO THE BOOM, IT MAY BE NECESSARY AT SOME POINT TO TURN THE CYLINDER SLIGHTLY IN ORDER TO CLEAR ASSEMBLIES MOUNTED WITHIN THE BOOM. CARE MUST BE TAKEN TO MOVE THE CYLINDER SLOWLY INTO POSITION: DAMAGE TO COMPONENTS MAY RESULT FROM FORCIBLE IMPACT WITH THESE ASSEMBLIES.

21. Position the free end of the extension chain around and over the sheave; slowly slide the cylinder into the boom while maintaining tension on the chain. (This will keep the chain properly seated in the sheave groove throughout installation).

NOTE: *Step 22 apply to 2 Section Boom Only.*

https://truckmanualshub.com/

22. Align the cylinder rod-end attachment holes with the boom fly section attachment holes; install the pin and secure the pin by installing washers and bolts.

23. Align the cylinder base-end attachment holes with the boom mid section attachment holes; install the trunnion pins and secure the pins by installing bars, washers and bolts.

24. Slide the mid section into the base section. Allow the retraction chains to trail between the bottom surfaces of boom sections; ensure that no twists exist in chains. Shim the top of the mid section for a total of 1/16 inch (.062) clearance.

25. Install wear pads into the forward portion of the base section. Shim boom, if necessary, for a total of 2/10 inch (.20) clearance.

26. Assemble the extension chain attachment and adjustment assembly (mounted at aft of boom base section) as follows:

    a. Align the attaching holes of the chain attachment clevis bolt with those of the extension chain end; install the clevis pin through the attaching holes. Install the washer and cotter pin which secures the clevis pin through the chain attachment assembly.

NOTE: *Step 27 applies to 2 Section Boom Only.*

27. Align the cylinder base-end attachment point with those of the boom base section. If necessary, use an auxiliary hydraulic power source to extend and retract the cylinder rod for alignment. Install the cross pin through the base boom section and cylinder rod. Secure pin by installing setscrew.

28. Align the cylinder rod-end attachment point with those of the boom base section. If necessary, use an auxiliary hydraulic power source to extend and retract the cylinder rod for alignment. Install the cross pin through the base boom section and cylinder rod. Secure pin by installing setscrew.

29. Align the chain attachment assembly holes with the threaded mounting holes at the aft end of the boom by installing the bolts and washers.

30. Insert the threaded end of the chain attachment clevis bolt through the large hole of the chain attachment weldment. Loosely install the jam nut and nut onto the threaded end of clevis bolt.

31. Assemble and install the retraction chain attachment and adjustment assembly as follows:

    a. Place clevis bolt on bottom plate and place top plate onto clevis assembly. Secure clevis bolt with clevis pins, washers and new cotter pins.

    b. Insert chain attach blocks between clevis plates ensuring attachment points are properly aligned. Secure block in position with bolts, nuts and new cotter pins.

    c. Align retraction chains with clevis attach blocks; secure chains with clevis pins, washers and new cotter pins.

    d. Position the bolt end of the extension-adjustment clevis into the boom mounted bracket. Secure the chain-adjusting assembly by installing the jam nut and nut.

    e. Position the chain adjustment shield over the chain adjustment assembly; secure the shield by installing the bolts and washers.

32. Adjust retract and extend chains to the proper torque. (See step a. adjusting procedures of paragraph 2-6).

33. Install the hydraulic hoses, electrical cables, and the harnessing power track components as follows:

    a. Properly position the fly section carrier tube with carrier tube bracket installed at the side of the boom. Align the attachment holes the forward end of the carrier tube with those of the fly section mounting plate. Secure the carrier tube by installing the bolts, washers, lock washers and nuts. Align the support bracket with attachment holes in the mid boom and secure with bolts and washers.

    b. Properly position the assembled hoses, electrical cable, and the harnessing powertrack onto the base section carrier tube. Carefully feed the proper hose and cable ends through the fly section carrier tube and into the hole in the boom fly section. Properly align the powertrack end with the attachment point of the fly section carrier tube; install the bolts, washers, lock washers and nuts which secure the powertrack to the carrier tube.

    c. Carefully feed the remaining hose and cable ends aft through the base section carrier tube. Properly align the remaining powertrack end with the attachment point of the base section carrier tube; install the bolts, washers, lockwashers and nuts which secure the powertrack to carrier tube.

    d. Ensure all hoses and cables are properly routed through the carrier tube and powertrack. Tighten or install all clamping or securing apparatus to the hoses or cables, as necessary.

https://truckmanualshub.com/

Installation.

1. Using suitable lifting equipment, position assembled boom on turntable so that boom pivot holes in both boom and turntable are aligned.
2. Insert boom pivot pin, ensuring that locating slots in pin are aligned with setscrew locating holes in pin bushings.
3. If necessary, gently tap pin into position with a soft headed mallet. Secure pin with setscrews.
4. Connect all wiring to ground control box.
5. Using all applicable safety precautions, operate lifting equipment in order to position boom lift cylinder so that holes in cylinder rod end and boom structure are aligned. Insert lift cylinder pin.
6. If necessary, gently tap pin into position with a soft headed mallet, ensuring that pin plate holes are aligned with attach holes in boom structure. Install pin attaching bolts, washers and lockwashers.
7. Shut down machine systems.
8. Connect hydraulic lines running along side of boom.
9. Using all applicable safety precautions, operate machine systems and raise and extend boom fully, noting the performance of the extension cycle. If chattering is apparent, extend chain system requires adjustment.
10. Retract and lower boom, noting performance of retraction cycle. If chattering is apparent, retract chain system requires adjustment.
11. Shut down machine systems.
12. Adjust extend and retract chain systems as required and secure adjustment recounts.
13. As necessary, lubricate all points requiring lubrication.

2.12 TILT ALARM SWITCH.

NOTE: *There are two methods of adjustment, a manual adjustment and an adjustment using a voltmeter.*

⚠ CAUTION

PERFORM TILT ALARM SWITCH LEVELING PROCEDURE A MINIMUM OF EVERY SIX MONTHS TO ENSURE PROPER OPERATION AND ADJUSTMENT OF SWITCH.

Manual Adjustment.

1. Park the machine on a flat, level surface. Ensure machine is level and tires are filled to rated pressure.

NOTE: *Ensure switch mounting bracket is level and securely attached.*

2. Level the base of the indicator by tightening the three flange nuts through approximately one half of its spring travel. DO NOT ADJUST THE “X” NUT DURING THE REMAINDER OF THE PROCEDURE.
3. With the electrical connections complete, slowly tighten one of the “Y” nuts until the circuit is closed and the light on the Platform Control Console illuminates.
4. Slowly back off the nut, counting the number of turns, until the circuit is again closed and the light again illuminates.
5. Divide the number of turns determined in step d. in half. Tighten the nut this many turns. The line determined by this nut and the “X” nut is now parallel to the ground.
6. Repeat steps 3. through 5. for the remaining “Y” nut. The switch is now level.
7. Individually push down on one corner at a time; there should be enough travel to cause the switch to trip. If the switch does not trip in all three tests, the flange nuts have been tightened too far. Loosen the “X” nut and repeat steps 3. through 7.

Voltmeter Adjustment.

1. Park machine on a flat, level surface. Ensure machine is level and tires are filled to rated pressure.
2. If engine is not running, turn ignition switch to ON.
3. Connect black lead of voltmeter to ground and red lead to yellow wire protruding from pot on bottom of sensor.
4. Adjust leveling nuts to obtain the highest possible voltage reading.
5. Check Voltage at trip point in all four directions. If voltage reading is not symmetrical, repeat step (4) above.

2.13 HORIZONTAL HIGH SPEED CUTOUT SWITCH ADJUSTMENT PROCEDURE.

Adjust switch to trip when boom reaches 0 degrees +0 degrees /-3 degrees.

https://truckmanualshub.com/

2.14 GOVERNOR CHECKS AND ADDCO ADJUSTMENT, FORD.

Checks. (Refer to Figure 2-4)

1. Check governor drive belt tension. A belt in operation for 10 minutes or more should be set at 100 ft. lbs. (135 Nm).
2. Check length of spring spreader adjustment from centerline of eye to centerline of eye. Dimension should be 1 5/8 inch.
3. Manually move the governor throttle lever to maximum high speed position. (The Addco actuator must be disconnected to accomplish this.) The carburetor throttle lever should have 1/32 to 1/16 inch travel remaining to stop. The governor high speed stop screw was removed at the factory.

NOTE: *All governor adjustments must be made with Addco throttle actuator disconnected.*

Adjustments. (Refer to Figure 2-5, 2-6, and 2-7)

1. With the throttle rod and Addco actuator disconnected from governor, advance governor arm to high speed position. This should advance governor throttle lever to maximum wide open position. Verify wide open position of lever by checking governor spring for tension. Reconnect throttle rod.
2. From ground control, start engine. Allow engine to come up to normal operating temperature. Advance governor arm to wide open position. Set high engine speed at 2400 RPM by making adjustments at throttle rod. Return engine to low speed.

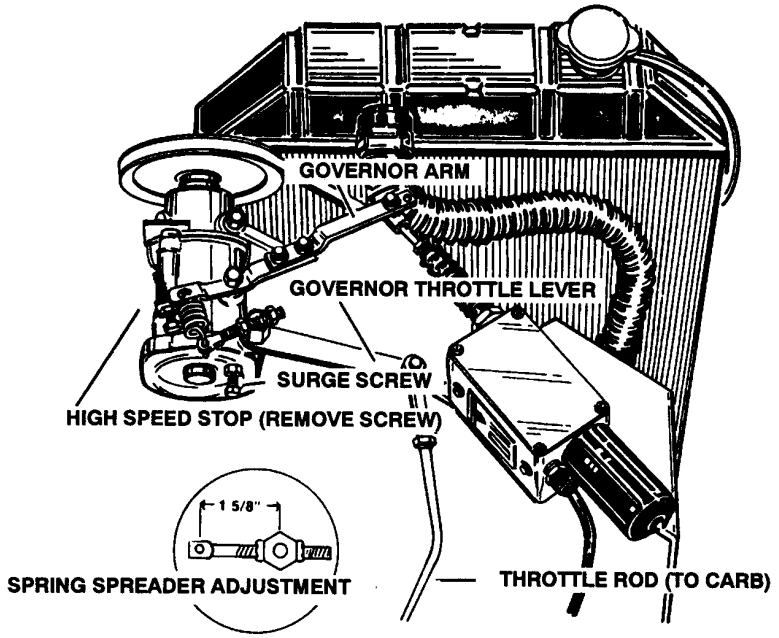

Figure 2-4. Governor Adjustment, Ford with Addco.

3. If the engine hunts or surges in the maximum speed no load condition, decrease engine speed until surging stops. Increase speed slowly to 2325 RPM. Slowly turn governor surge screw clockwise until no load engine speed increases to 2400 RPM. Lock surge screw in position. Shut off engine.

NOTE: *Do not turn surge screw in any further than necessary or governor performance will be affected.*

4. From basket (for idle) start engine and allow engine to come up to operating temperature. Set idle speed at 1000 RPM using idle adjustment screw on carburetor. Shut off engine.
5. Remove cover on Addco actuator. With no function activated, actuator should be fully extended. Hold governor arm in idle position. Adjust slide pin (1) to contact idle limit switch at output rod end of actuator. Adjust actuator rod until you can hook up to governor arm.
6. With the aid of an assistant, start engine from basket and allow to come to operating temperature. Disconnect proportional dump valve wire. Activate footswitch. Turn high engine switch on. Hold drive controller in full drive position. Adjust slide pin (2) to contact high engine limit switch at 2400 RPM. Shut off all switches and controllers. Reconnect proportional dump valve wire.

https://truckmanualshub.com/

7. With the aid of a assistant, start engine from basket and allow to come to operating temperature. Disconnect bang-bang dump valve wire. Activate footswitch. Operate a bang-bang function switch to increase RPM to low engine. Using a small screwdriver set low engine at 1800 RPM at the Addco electronic module.

NOTE: *Early machines are at idle until a function is activated. Later machines are at idle only at platform without footswitch activated. Therefore when setting low engine speed on later machines it will not be necessary to disconnect bang-bang dump valve wire or operate a bang-bang function. Just activate footswitch to get low engine.*

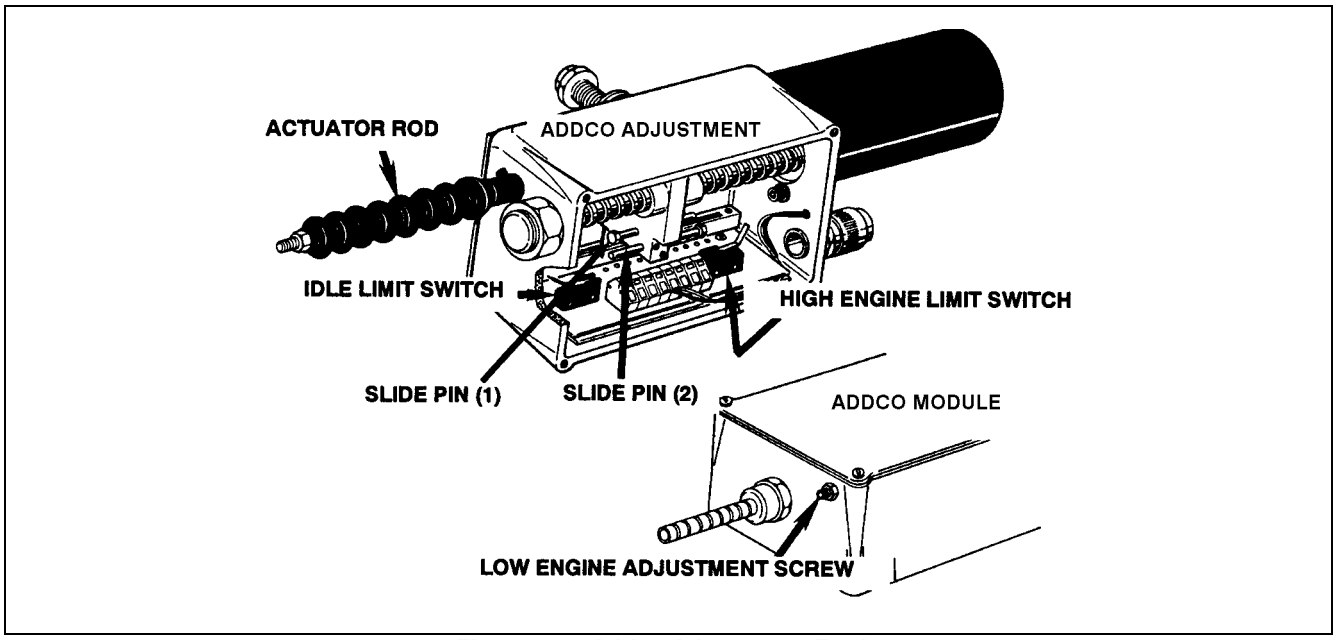

Figure 2-5. Addco Adjustment, Ford.

2.15 THROTTLE CHECKS AND PRECISION GOVERNOR ADJUSTMENTS, ADDCO (SEE FIGURE 2-6.)

NOTE: *Never run fuel tank dry. Diesel engines cannot be restarted after running out of fuel until fuel system has been air-vented or 'bled' of air. See Deutz Instruction Manual for procedure.*

Checks.

1. Check that anti-dieseling solenoid is operating. If solenoid is operating, an audible click at the carburetor should be heard when ignition is switched on.

2. Check throttle linkage for smooth operation by rotating throttle lever by hand to full throttle position then slowly back to idle position feeling closely for sticking or binding. To accomplish this the throttle rod must first be disconnected.

Choke Adjustments.

NOTE: *Automatic choke and vacuum pulloff adjustment procedure to be made only on a cold engine.*

1. Make sure choke body and mounting bracket are positioned so that choke rod moves freely with no binding anywhere through its stroke.

2. The choke spring should hold the choke plate firmly closed but require only slight finger pressure to open at 70 degrees F. (21.28 degrees C.)

3. Retract pulloff shaft until it bottoms (as if under engine vacuum). Bend pulloff rod until a 3/8" (9.53mm) rod just fits between choke plate and carburetor body.

4. The above procedure outlines the correct choke system adjustment for most conditions. Some environments such as high altitude, very warm or very cold temperatures may require that the choke cover be set richer or leaner, or the amount of putoff may need to be varied somewhat.

https://truckmanualshub.com/

Carburetor and Governor Adjustment.

1. With the aid of an assistant, start the engine at the platform console and allow it to come up to operating temperature with air cleaner installed. Adjust carburetor idle screw until engine idles at 1000 RPM. Shut down engine.

NOTE: *Steps 2 and 3 are preliminary settings.*

2. On controller (in ground control box) turn 'high engine' (P1) adjusting screw 25-30 turns CCW, then 10 turns CW.
3. On controller (in ground control box) turn 'gain' (P2) adjusting screw CCW to the stop, then CW until screw slot is vertical (approximately 1/4 turn).
4. On controller (in ground control box) turn 'droop' (P3) adjusting screw CCW to the stop, then CW until screw slot is vertical (approximately 1/4 turn). No further adjustment should be necessary to 'droop' (P3).
5. With the aid of an assistant at platform console start the engine and allow to come up to operating temperature. Then have assistant depress footswitch and place engine speed switch to HIGH ENGINE.
6. If engine surging occurs at this point, turn 'gain' (P2) adjusting screw CCW until surging ceases. Turn 'high engine' (P1) adjusting screw until engine runs at 2400 RPM. Turning the screw CW increases RPM. Turning the screw CCW decreases RPM.
7. While your assistant continues to depress the footswitch, have him place engine speed switch to LOW ENGINE. Turn 'low (mid) engine' adjusting screw until engine runs at 1800 RPM. Turning the screw CW increases RPM. Turning the screw CCW decreases RPM. Shut down engine. Seal all trim pots when finished with finger nail polish.

NOTE: *If engine surges under no load, on HIGH ENGINE and you cannot get enough response from adjusting 'gain' (P2), try adjusting surge screw on actuator. Loosen surge screw locknut. Disconnect throttle linkage. Turn surge screw CW until linkage arm moves. Manually stroke the linkage fully and allow to return slowly until it stops. Try to move linkage towards return position. If linkage moves, turn surge screw CCW 1/2 turn. Again stroke linkage and allow to return slowly until it stops. Try to move linkage towards return position. If linkage moves, turn surge screw CCW 1/2 turn. Repeat this procedure until linkage does not move after stroking. Do not turn any more. This will set buffer spring tension properly. Reconnect throttle linkage.*

8. With engine speed switch set to LOW ENGINE, when footswitch is depressed engine should immediately respond, if response time lags, turn 'gain' (P2) adjusting screw CW to improve response time. Turn adjusting screw in small increments only until response time is correct. Turning adjusting screw too far CW can cause surging. (See 6 above)

2.16 ELECTRIC GOVERNOR AND ADJUSTMENTS - FORD ENGINES.

General.

These instructions presume no electrical test equipment other than a multimeter for making the electrical measurements called for on the following pages. If no suitable meter is available, an inexpensive but adequate meter, part number 22-188 is available from any local Radio Shack store.

Many "governor problems" are due to installation problems, particularly in first time applications. Careful attention to the directions provided will result in a successful installation made in the least amount of time.

Quick-start Installations.

If you are experienced in installing and adjusting Electric Governor, follow these steps. Otherwise refer to the more detailed instructions starting with "Mounting-Actuator".

1. Mount Actuator rigidly to engine location which will permit a short, straight linkage to the carburetor or fuel valve. Avoid very hot areas.
2. Mount controller in a dry, fairly cool location. Accessibility for adjusting is required
3. Wire per appropriate included schematic, using #16 wire.
4. Set up fuel linkage. This is critical, so review the section titled "LINKAGE".
5. Hold linkage for safety, and start the engine.
6. Adjust engine speed to desired valve using High Engine pot. (See diagram on page 43 E-331 Electronics - Adjustment Locations.)

Mounting-Actuator.

The Actuator may be mounted in any attitude - there is no preferred orientation

With no power applied, the actuator is spring loaded to the minimum fuel position. The Actuator output shaft rotates toward the maximum fuel position against this spring through electrical power from the controller. This rotation is CW (clockwise) on one side of the Actuator, and CCW (counterclockwise) on the other. If necessary, reverse the Actuator on its mounting plate so that the desired direction of rotation is on the desired side to match the fuel system direction of travel.

https://truckmanualshub.com/

Before selecting the mounting location, consider the linkage that will be required to connect the Actuator output arm to the butterfly or fuel valve. Read the following section on linkages before deciding on a mounting location.

1. Mount Actuator rigidly to the engine location witch will permit a short, straight linkage to the carburetor or fuel valve. Avoid very hot areas.

Linkage.

1/4 -28 threaded rod and low friction rod-end bearings are recommended for linkage materials.

Keep the linkage as short and as straight as possible.

The linkage must not rub against the engine, brackets, hoses, etc. The linkage must be free of friction and lost motion or "slop"

The following sketch indicates the proper linkage geometry for most installations.

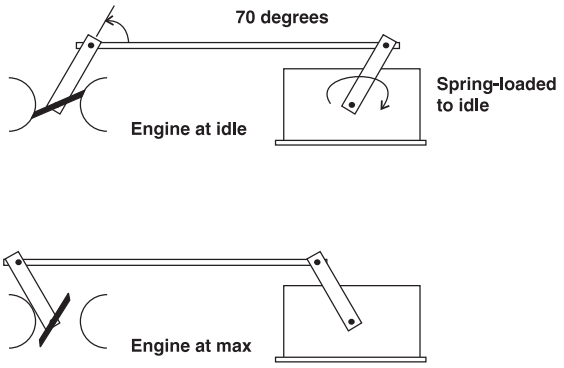

Note that the angle between the carburetor arm and the rod is 70 degrees with the engine at idle.This is very desirable! Note also that the Actuator arm travels equally on either side of a 90 degree angle with the rod. This angular arrangement will give the proper mechanical gain for good stability and performance. It may be necessary to rotate the carburetor arm relative to the butterfly to achieve this. This can usually be done, and is usually worth the effort! Below are some workable installations, with good linkages. Remember, the Actuator can be turned 180 degrees on its mounting to "reverse" the spring-loaded direction. Also the Actuator can be Mounted in any attitude.

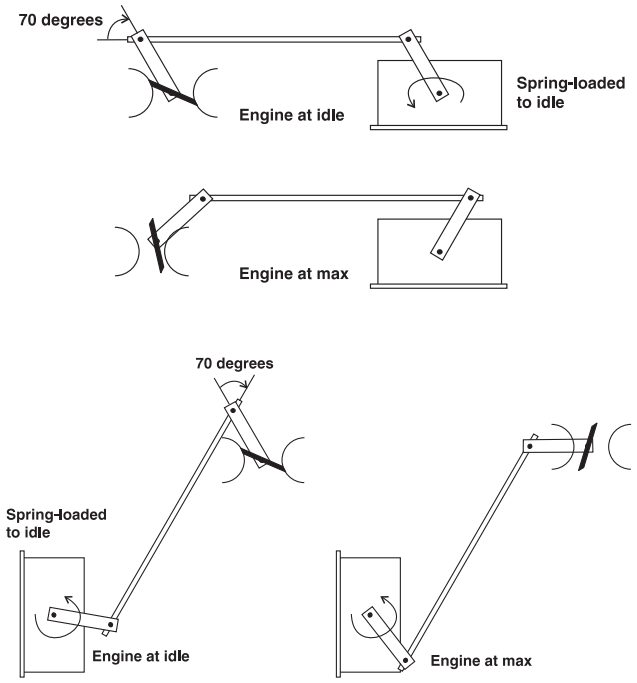

The needed travel of the carburetor determines how far out the Actuator arm the rod is to be attached. Inmost cases, The carburetor should be moved from closed to above 10 degrees from full open as the Actuator is moved min. to max. THEN ALTER THE LENGTH OF THE ROD SLIGHTLY (PERHAPS.030"), SO THAT THE ACTUATOR IS JUST OFF ITS INTERNAL STOP, AND IS PULLING THE BUTTER-FLY AGAINST ITS STOP. This insures that the carburetor can fully close to idle on load dumps, minimizing over speeds.

Examine the system for springs, such as carburetor return springs. These should be removed. Some automotive carburetors (as opposed to industrial carburetors) contain internal springs for accelerator pumps, etc. These may make good governing difficult, or even impossible. For this and other reasons, industrial carburetors are preferred.

Move the linkage slowly through its travel, and look for any binding or unexplained forces. Correct any before going further.

Many “governing” problems are really caused by binding of the butterfly and its shaft in the carburetor. This is caused by loading due to vacuum under the butterfly and atmospheric pressure above when the engine is running. These forces cannot be felt when the engine is not running. Therefore, start the engine while carefully controlling the speed by hand, and feel for binding or air load forces. Needle bearings on the butterfly shaft are available on many industrial carburetors to deal with this problem. Any tendency on the butterfly stick must be corrected.

https://truckmanualshub.com/

Mounting-Controller.

Select a reasonably cool, dry, and vibration free location.

The rear cover will probably need to be removed during set-up in order to make adjustments for speed setting and gain. You may wish to defer final installation until this is done.

After completing these adjustments, replace cover. Mount so that water cannot pool on this cover. Always mount the controller with the strain relief down. This will prevent water from entering thru the cable, also place the vent hole in the bottom of the controller down.

Wiring.

See wiring diagram for details of hook-up.

Use #16 wire minimum.

Keep all wiring to the Governor as short as is practical.

Go directly from the controller ground terminal (B of the 8 pin connector) by dedicated wire, to the battery “minus” terminal. If this cannot be done, for some reason, go by dedicated wire to a very good engine ground.

A properly functioning engine electrical system will supply 13.5 - 14.8 VDC when the engine is running. If wiring size is adequate, with good connections and proper grounds, you will get this reading between the wires terminals A & B of the 8 pin connector when the Governor is controlling engine speed. Verify this. Improper hook-up can damage electronics. Re-check wiring before applying power.

Power Distribution.

8 Pin Connector

Pin:

a. 12 VDC from the make before break oil pressure switch. This switch provides power to pin A when the ignition is on and the engine is running (no oil pressure), or when the engine is off when the engines running (has oil pressure).
b. Ground.
c. Tach signal from the engine ignition system.
d. Tach signal from the engine ignition system.
e. Control signal to operate the Actuator.
f. Control signal to operate the Actuator.
g. Removes ground from the start lock out relay when the engine is running above the start lock out set point. A 20 turn pot is provided to adjust this set point. (usually around 500 RPM)
h. Removes ground from the overspeed relay if this point is exceeded. A 20 turn pot is provided to adjust this set point.(usually around 5000 RPM)

4 Pin Connector

Pin:

a. Input from the elevation limit switches to allow high engine to operate.
b. Input from the high engine switch.
c. Input for mid engine from one of the following: The engine low coolant temperature switch, platform footswitch, or a ground control directional switch.
d. Provides ground to lockout start when the engine RPMS exceed the set point.

Check-Out and Initial Start-Up Procedures.

Before proceeding, familiarize yourself with the locations of the various adjustment pots.

Adjustments

High engine
Mid engine
Start lockout
Over speed lockout
Factory adjust Gain

High Engine:
This adjustment is made by turning the 1/8" brass screw clockwise (CW) to increase speed, and counterclockwise (CCW)to decrease speed. The adjustment range of the high engine pot is 25 turns, each turn will change engine speed by about 100 to 200 RPMS. This pot is protected by a slip clutch at each end and will not be harmed by moderate over-adjustment. However the governor will not function when the pot is past full travel. If you suspect that you may have over-adjusted the high engine pot, or have lost track of where you are, turn the pot 25 to 30 turns out (CCW), then turn in (CW) 10 turns. This will get you back into the range you should be in. Make the high engine adjustment first, then gain, then reset high engine.

Gain:
This adjustment is made by turning the plastic screw clockwise (CW to increase governor sensitivity, counterclockwise (CCW) to decrease sensitivity. The adjustment range of the Factory pot is about 3/4 of a turn, AND OVERTURNING WILL BREAK THE INTERNAL STOPS, making further adjustments impossible. Too much gain will cause instability and the engine will pulsate, Not enough gain will make the engine slow to respond to load requirements, and at first appears to be a good setting when operating directional functions other than drive. The engine will accelerate right up to the set RPMS and stop at that point.The problem with this type of gain setting is that when a large load is applied (usually thru drive) and then suddenly unloaded, the engine will be slow to respond in decreasing RPMS. This will cause the engine to over rev and then at times, will activate the over speed cutout and shut the engine off. The ideal gain setting will provide a compromise between quick response and good stability. This will usually show up as 1 to 3 engine pulsation’s

https://truckmanualshub.com/

before leveling out at the set RPMS when going from idle to high engine.

Mid engine:
This adjustment is made by turning the 1/8" brass screw clockwise (CW)to increase speed, and counterclockwise (CCW) to decrease speed. The adjustment range of the Mid engine pot is about 25 turns, each turn will change engine speed by about 100 to 200 RPMS. THE pot is protected by an slip clutch at each end and will not be harmed by moderate over adjustment. However, the governor will not function when the pot is past full travel. If you suspect that you have over adjusted the Mid engine pot, or have lost track of where you are, turn the pot 25 turns out (CCW), then turn in (CW), 15 turns. This will get you back into the range you should be in. Make all adjustments before setting the mid engine.

Start lockout:
This adjustment is made by turning the 1/8" brass screw clockwise (CW) to increase speed and counterclockwise (CCW) to decrease speed. The adjustment range of the Start lockout pot is about 25 turns, each turn will change engine speed by about 100 to 200 RPMS. This pot is protected by a slip clutch at each end and will not be harmed by moderate over-adjustment. However, the governor will not function when the pot is past full travel. If you suspect that you may have over-adjusted the Start lockout pot, or have lost track of where you are, turn the pot to 25 to 30 turns in (CW), Then turn out (CCW) 8 1/2 turns. This will get you back into the range you should be in. Start lockout should normally not have to be adjusted. Normally startout should occur at around 500 RPM. If while cranking the engine seems to stop momentarily then reengages the starter, turn the adjustment in (CW) 1/4 to 1/2 turn at a time until the engine will crank with out locking out start. If the starter engages while the engine is running, check the idle RPMS before adjusting the governor. On the 800 series, this should be 1000 RPMS. Do not set the RPMS above 1100 RPMS as this will cause engine shut down problems that will be similar to dieseling

Over speed:
This adjustment is made by turning the 1/8" brass screw clockwise (CW) to increase speed, and counterclockwise (CCW) to decrease speed. The adjustment range of the Over speed pot is about 25 turns, each turn will change engine speed about 100 to 200 RPMS. This pot is protected by a slip clutch at each end and will not be harmed by moderate over-adjustment. However the governor will not function when the pot is past full travel. If you suspect that you have over-adjusted the Over speed pot, or have lost track of where you are, turn the pot 25 turns in (CW), then turn out (CCW) 5 1/2 turns. This will get you back into the range you should be in. Over speed should normally not have to be adjusted. When adjusting Over speed make sure other adjustments have been made correct.

Factory:
This adjustment is made by turning the plastic screw clockwise (CW) to increase governor sensitivity, counterclockwise (CCW) to decrease sensitivity. The adjustment range of the Factory range of the pot is about 3/4 of a turn, AND OVERTURNING WILL BREAK THE INTERNAL STOPS, making further adjustments impossible. The Factory setting normally will not have to be adjusted.

https://truckmanualshub.com/

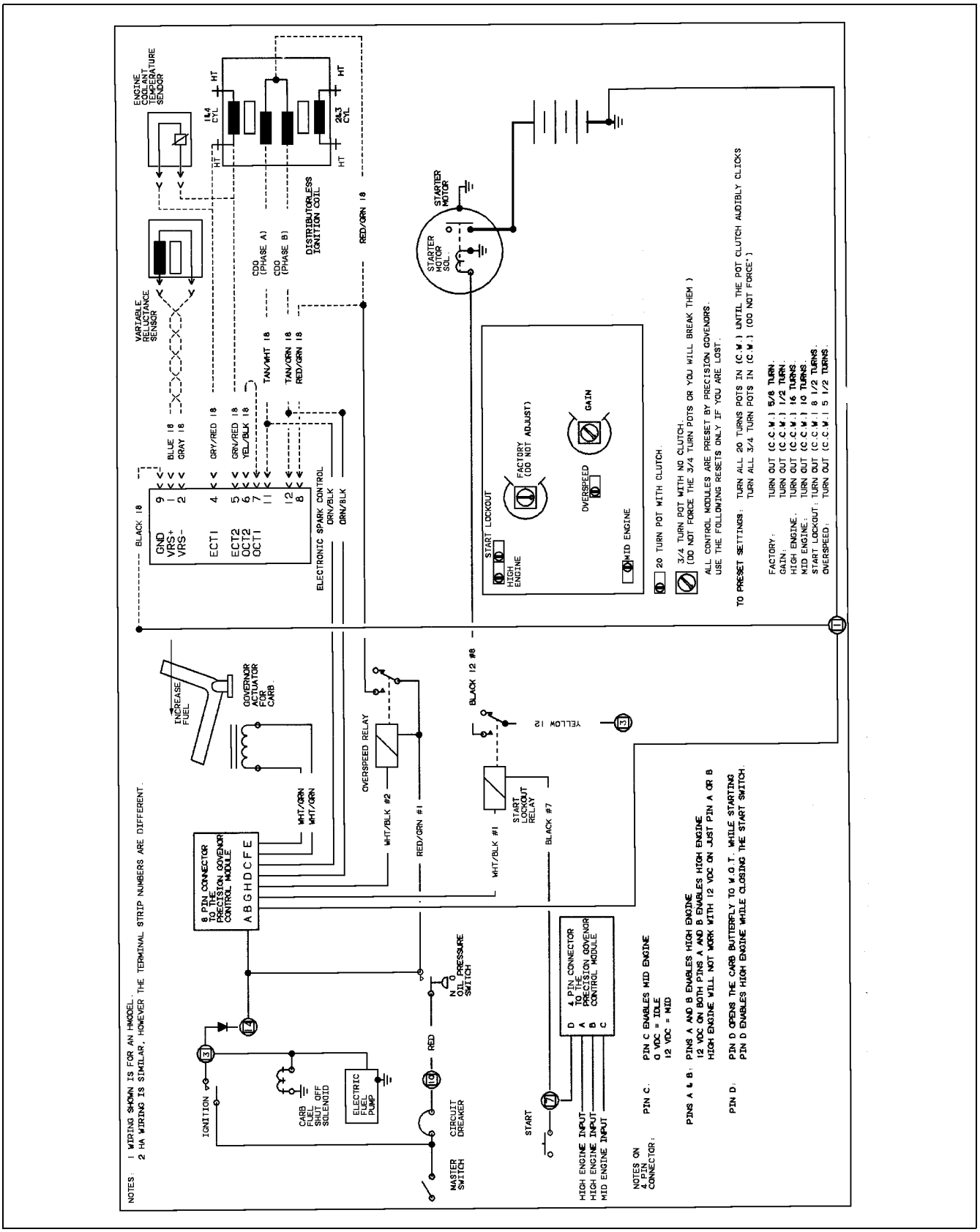

https://truckmanualshub.com/

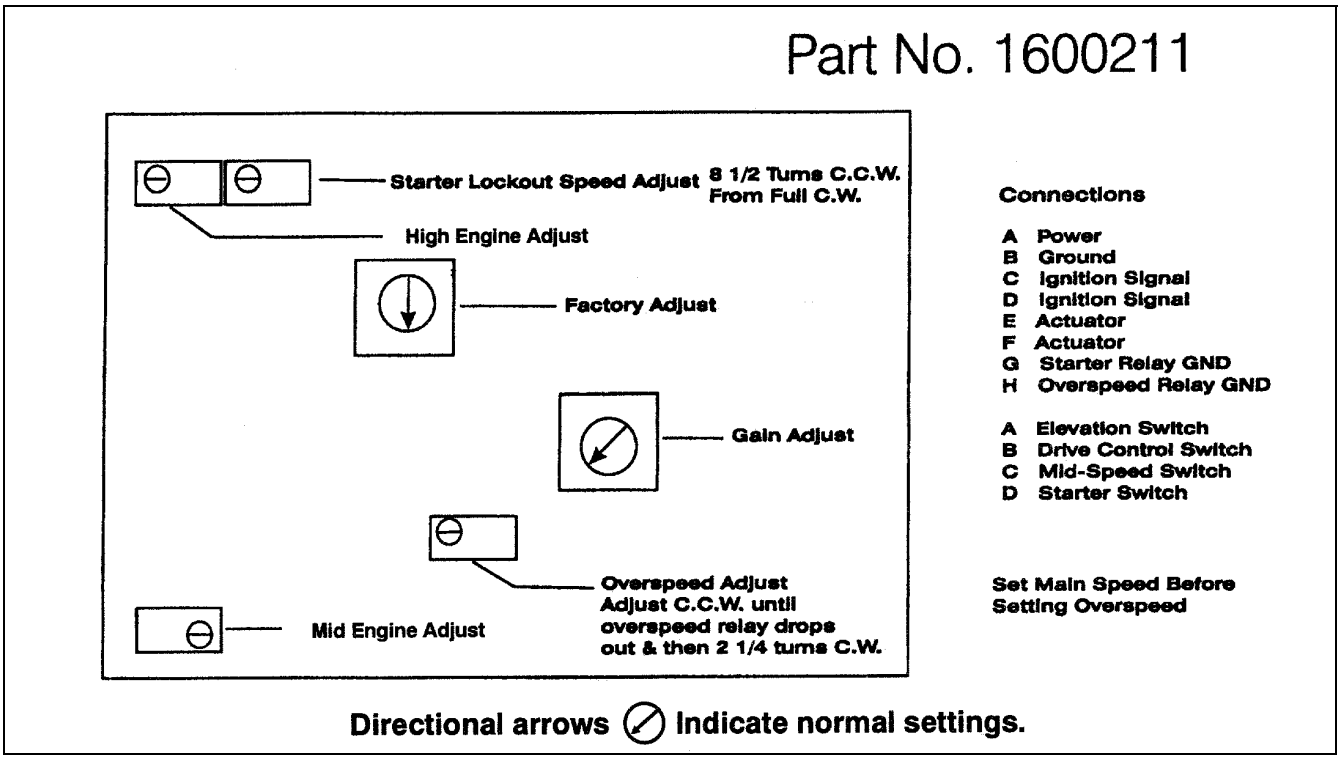

NOTE: *These settings are factory set, Start Lockout, Factory Adjust and Overspeed. They are conformally coated by P.G. and should not need to be reset.*

Assuming that the Actuator and Controller are mounted, the wiring is run and checked, and that the linkage is properly installed, proceed as follows:

1. Turn ignition switch on. Do not start engine. Actuator should kick toward max. fuel once, and then immediately return to min. fuel. If not, see Troubleshooting.
2. Use multimeter to check battery voltage at battery terminals, and record. Now check voltage at the machine connection points for terminals A & B of the 8 pin connector on the E-331 (A is +, B is -). Voltage reading should be the same as at battery. If not, shut down, and correct wiring.
3. Hold the linkage back by hand, so as to control engine speed manually. Start engine, set vehicle controls to obtain High Engine speed, gradually release the linkage, and adjust the speed-set as needed to set the speed as desired. If engine speed surges, reduce Gain a little, as required (CCW).
4. Re-check voltage between terminal A & B as in step 2. Voltage reading should be between 13.5 - 14.6 VDC.
5. Carefully adjust Gain. You are looking for the best compromise between quick response and good stability. Make very small adjustments, then load and unload engine, or pull linkage back slightly and release. Usually, a good set-up is one that makes 1 to 3 small bounces and then steadies down after a large change. Too much Gain shows up as a rapid (once per second) instability, most commonly at light loads. Too little Gain shows up in large overshoots on start-up or large load changes, and generally sluggish operation.
6. Make final adjustment to the High Engine Pot.
7. Set machine controls to obtain the mid-engine speed. Adjust the mid-engine pot as needed to obtain the speed desired.
8. The start lockout adjustment is factory set. If necessary, he starter lockout pot may be adjusted to obtain dropout of the starter as the engine attains running speed. Normally this is around 500 RPM.
9. The overspeed adjustment is factory set. If necessary, it may be readjusted to shut off ignition power at a different engine speed by means of the overspeed adjustment pot. The overspeed is simply to shut down an over revving engine.

NOTE: *Overspeed to be set at 4000 - 4500 RPM's. This is not a function we test for correct settings. The High Engine speed must be set before setting the overspeed.*

https://truckmanualshub.com/

10. Re-install the back cover on the E-331. Final mount the controller.

Troubleshooting

We will discuss Troubleshooting in two general categories:

- Governor won't work.
- Governor works, but can't be set up to give satisfactory performance.

There is, of course, some overlap between these categories. Read both sections and apply the fixes that seem appropriate.

NOTE: *During troubleshooting, be prepared to control the engine manually to prevent overspeeds, etc.*

- Governor won't work.

No reaction from Governor. Actuator output arm never moved, engine off or engine running. Can be caused by:

1. No power.
2. Incorrect linkage, preventing movement.
3. Incorrect electrical hook-up.
4. No speed signal to Governor.
5. Damaged Controller or Actuator.

(1.) No power - Use a multimeter to check for 12-15 VDC between terminals A & B on the controller. Check during engine off and engine running conditions. If voltage is absent or low, check for:

a. Wiring error.
b. Hook-up on wrong side of ballast resistor.
c. Low battery.
d. Bad voltage regulator.
e. Bad ground connection.
f. corroded terminals.
g. Undersized wiring.

(2.) Incorrect Linkage - Re-check linkage as discussed on page 40 and 41. Freedom of movement and lack of play are important.

(3.) Incorrect Electrical Hook-up - Re-check all wiring and connections to the Actuator and Controller against the supplied schematic.

(4.) No speed signal to Controller.

a. Check the voltage between terminals C and ground and D and ground of the 8 pin connector with the engine running. You should see 5 - 30 VDC.
b. The above checks do not guarantee a good speed signal, but their absence proves that there is a problem.

(5.) Incorrect Electrical Hook-up - If steps 1 - 4 above have not revealed the problem, the governor may have been damaged, either in shipping or during hook-up and test.

- Governor reacts, but can't be set up to give proper performance.

This kind of trouble usually falls into three main categories:

1. Actual Governor malfunction.
2. Governor installation problems and improper adjustment.
3. Governor not tuned or adjusted for engine/application.

NOTE: *Assure the engine is operating properly by running engine manually. The Governor will not control any poor running engine.*

(1.) Actual Governor Malfunction - The Governor was engine-tested for proper operation just prior to being shipped. Unless damaged in shipment or by improper handing, it should be serviceable. To check for proper operation proceed as follows:

a. Once again, disconnect fuel system linkage from Governor output arm and control engine manually.
b. Start engine, hold at a low speed, Governor arm should move to full-fuel position.
c. Increase engine speed carefully. At some engine speed, Governor arm should move to low-fuel position.
d. By carefully varying engine speed, you should be able to cause the Governor arm to pause momentarily near the middle of its travel. This engine speed is the speed for which the Governor is adjusted. If grossly incorrect, reset High Engine Pot.
e. With the engine running at low speed, move the Governor arm throughout its stroke by hand. You should feel a constant smooth force in the on direction. No binding or rubbing should be felt within the Governor.

If steps 1a. thru 1e. can be accomplished as described, the Governor is probably OK. It recognizes underspeed, overspeed, onspeed and is not binding internally.

If the above steps cannot be accomplished satisfactorily, there is probably an actual Governor malfunction.

a. Governor is unable to move fuel system freely (not enough Actuator force available). If Governor doesn't move fuel system to on far enough

https://truckmanualshub.com/

to provide sufficient fuel but Governor arm moves far enough when disconnected look for:

1. Linkage binding or misadjusted.
2. Low voltage at Governor during operation.

NOTE: **Measure the voltage as discussed previously and observe voltage during operation. If Governor fails to move full on and voltage dips over 1 volt, check for undersize wire (should be #16 minimum).*

3. Excessive force at Governor during engine running, particularly on carbureted engines.

NOTE: **Carburetor butterfly valves are loaded by engine vacuum during running, which can add considerable force not present when engine isn't running.*

NOTE: **Springs in the system; carburetor return springs, acceleration pump springs, etc., are not usually needed and can cause governing problems.*

b. Governor is unstable at light-load or no-load. See "Linkage" for carburetor engines.

c. Governor experiences sudden, momentary spikes toward max. at random intervals, then recovers.

1. Look for loose wiring or momentary shorts in wiring. Noise or occasionally missing speed signal.

d. Speed seems to slowly wander (5-15 second periods) around at speed, particularly at higher loads. See item 2a. 3 concerning excessive on Governor.

(3.) Governor not tuned or adjusted for engine/application.

The basic adjustment to set sensitivity/stability is the Gain pot. A good starting point for many engines is full CCW, then CW 1/3 turn. (See "Governor adjustment" section). To increase stability, turn CCW. If satisfactory governing cannot be achieved with this one adjustment, the factory adjustment may be needed. Normal starting point for this adjustment is fully CCW, then CW 1/4 turn. (Before changing this pot, mark the original position).

NOTE: *If problems occurs with the Governor overshooting when a large load is released from the engine, such as driving up a hill and stopping. There is usually one of two things:*

a. Gain adjustment is to far CCW.

Mechanical preload between the carburetor and actuator is to large, this should be no greater than 1/2 to 1 ball dia. (Ref. to page 43 par. 1).

Automatic Choke Adjustment Procedure

(For all JLG 1.IL and 2.3L Ford carbureted engines)

1. At 70°F the choke plate should be open 1/3" (not touching the choke bore).

2. If the ambient temperature is not 7o°F, an additional adjustment is required:

   a. Loosen the three cover plate screws.

   b. Adjust the cover to open the choke plate 1/32".

   c. Readjust for ambient temperature by rotating the cover one (1) mark per 5°F from 70°. Rotate CCW (lean) if warmer than 70°, CW (rich)if colder than 70°.
   (If actual temperature is 80°, set at 1/32" and rotate two (2) marks CCW (lean) direction.)

Tighten the three cover plate screws and check for free rotation (no sticking or binding) of the choke shaft.

2.17 THROTTLE CHECKS AND ADJUSTMENTS - DEUTZ F2L511 ENGINE. (SEE FIGURE 2-8.)

NOTE: *Never run fuel tank dry. Diesel engines cannot be restarted after running out of fuel until fuel system has been air-vented or 'bled' of air. See Deutz Instruction Manual for procedure.*

Disconnect actuator cable from throttle lever. With the aid of an assistant, start the engine and allow it to come up to operating temperature. Adjust throttle lever stop until engine runs at 1800 RPM. Shut down engine. Reattach actuator cable to throttle lever making sure that low engine setting remains the same. If necessary, adjust slide pin to contact low engine limit switch at 1800 RPM. Shut down engine.

With the aid of an assistant, start engine from basket and allow to come up to operating temperature. Disconnect proportional dump valve wire. Activate footswitch. Turn on HIGH ENGINE switch. Hold drive controller in full drive position. Adjust slide pin to contact high engine limit switch at 3000 RPM. Shut off all switches and controllers. Reconnect proportional dump valve wire.

NOTE: *Actuator cable travel must stop slightly before lever makes contact with throttle lever stop. Failure to do so will burn out actuator.*

NOTE: *Early machines are at idle until a function is activated. Later machines are at idle only at platform without footswitch activated. Therefore when setting low engine speed on later machines it will not be necessary to disconnect bang-bang dump valve wire or operate a bang-bang function. Just activate footswitch to get low engine.*

https://truckmanualshub.com/

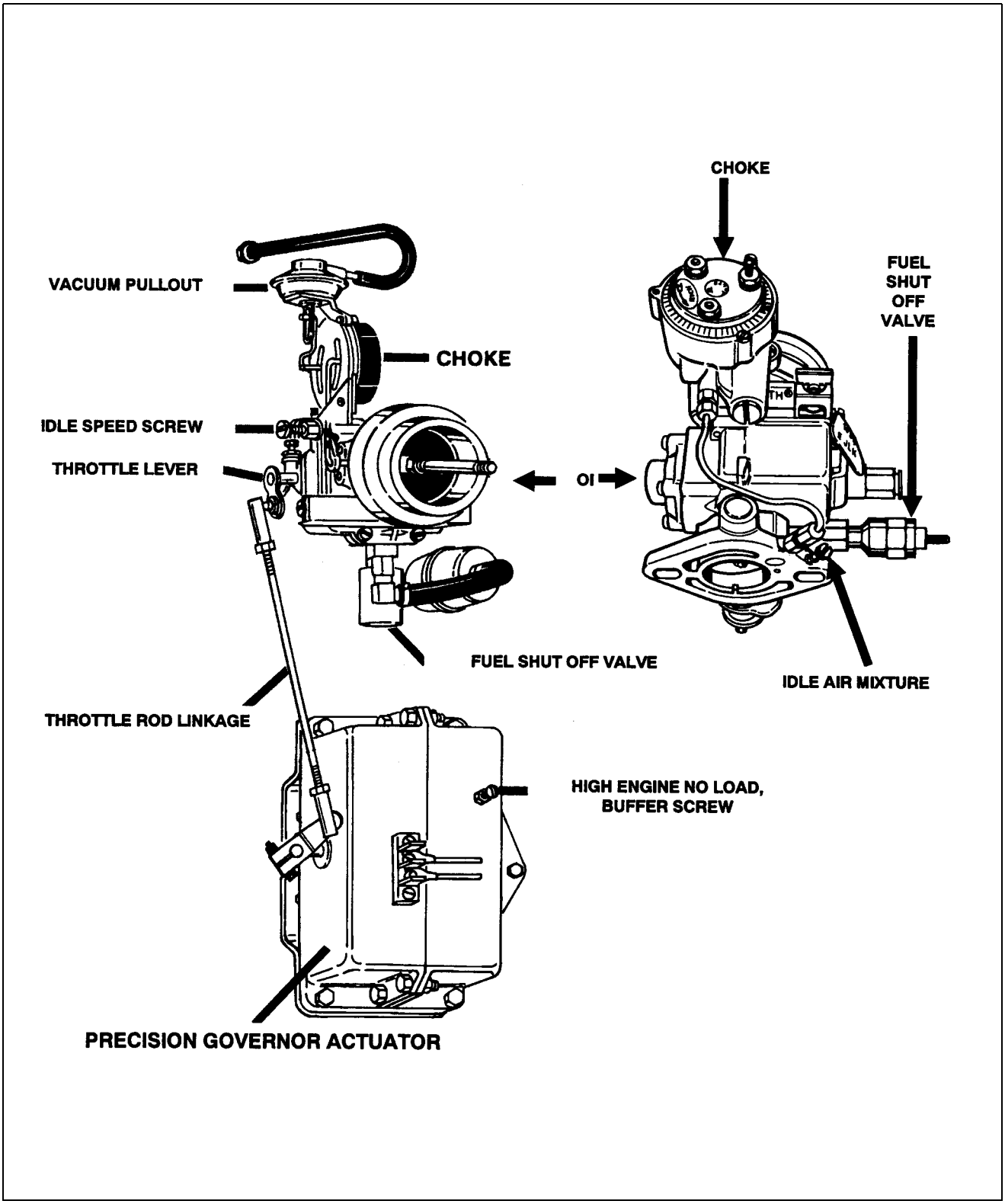

Figure 2-6. Precision Governor Adjustment, Ford. (Sheet 1 of 2).

https://truckmanualshub.com/

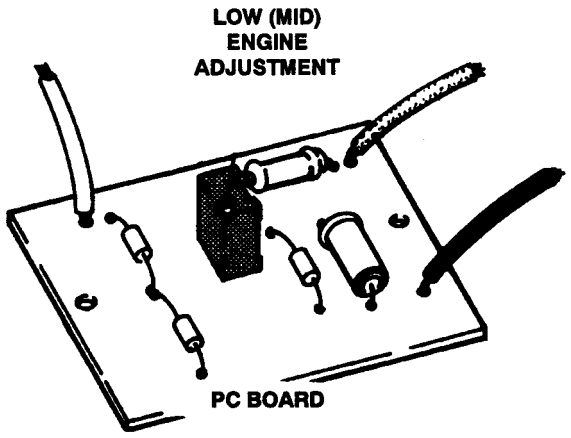

Note

All pots should be sealed with finger nail polish, after all adjustment are completed.

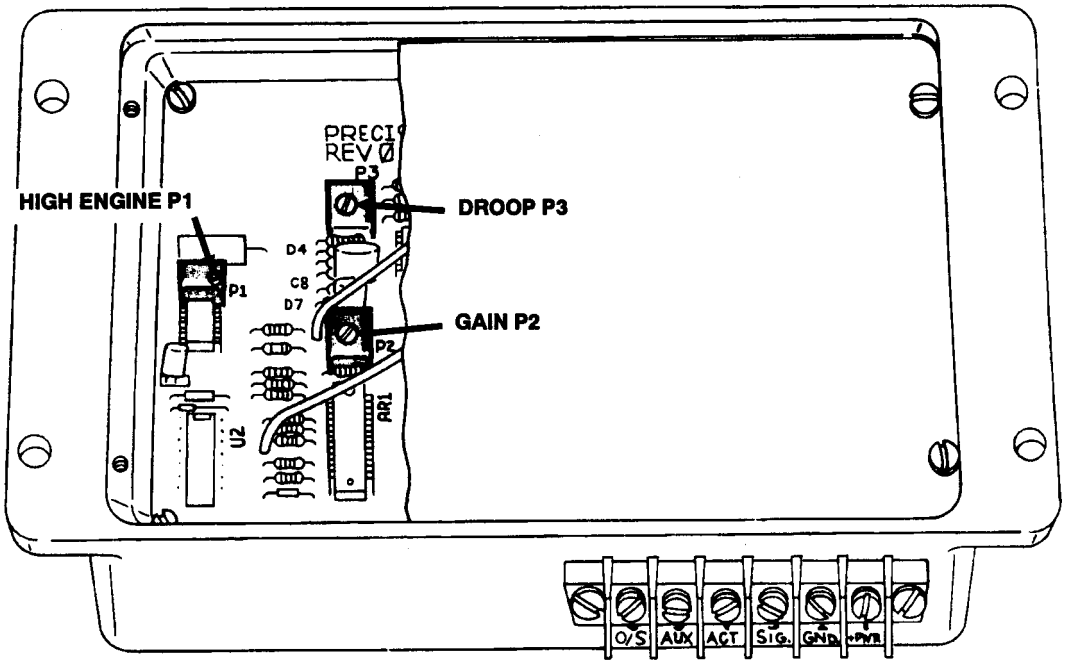

PRECISION GOVERNOR CONTROLLER

Figure 2-7. Precision governor Adjustment, Ford. (Sheet 2 of 2)

https://truckmanualshub.com/

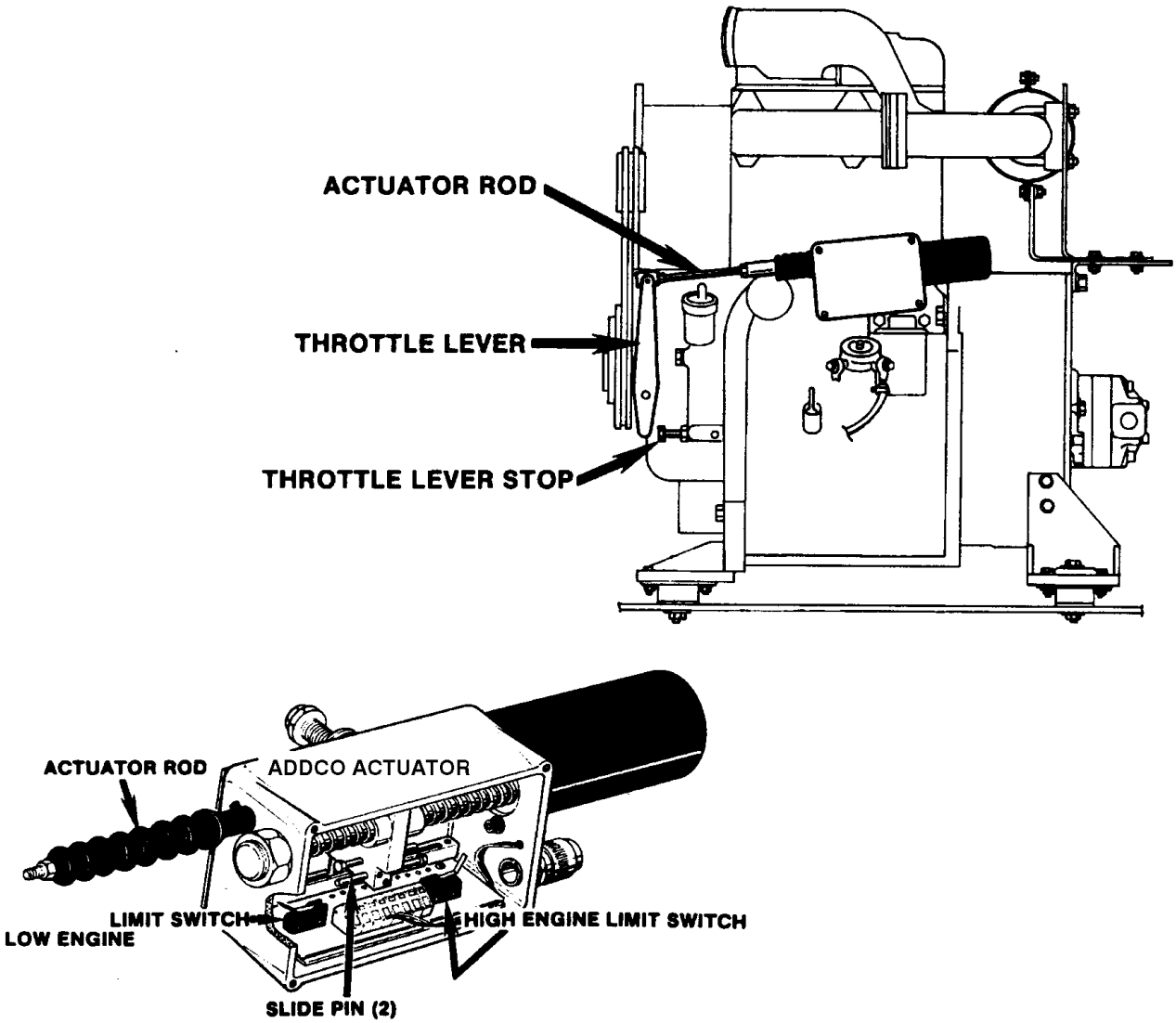

Figure 2-8. Addco Actuator Adjustments, F2L511.

https://truckmanualshub.com/

2.18 THROTTLE CHECKS AND ADJUSTMENTS WISCONSIN ENGINE. (SEE FIGURE 2-9.)

Checks.

1. Check that carburetor throttle link is located at top of governor arm.
2. Check that spring is located at first or second spring hole from top of governor arm. First hole is preferable. Second hole can be used when trying to stop surging.

Adjustments.

1. Disconnect the actuator rod from the arm. With the aid of an assistant, start the engine from platform and allow it to come up to operating temperature. Adjust carburetor idle screw until engine runs at 1800 RPM. Shut down engine. Reattach actuator rod to arm making sure that low engine setting remains the same. If necessary, adjust slide pin to contact low engine limit switch at 1800 RPM. Shut down engine.
2. With the aid of an assistant, start engine from platform and allow to come up to operating temperature. Disconnect proportional dump valve wire. Activate footswitch. Turn on HIGH ENGINE switch. Hold drive controller in full drive position. Adjust slide pin to contact high engine limit switch at 2400 RPM. Shut off all switches and controllers. Reconnect proportional dump valve wire.

NOTE: *Early machines are at idle until a function is activated. Later machines are at idle only at platform without footswitch activated. Therefore when setting low engine speed on later machines it will not be necessary to disconnect bang-bang dump valve wire or operate a bang-bang function. Just activate footswitch to get low engine.*

3. If the engine hunts or surges in the maximum speed no load condition, shut off engine. Disconnect carburetor throttle link from governor arm. Turn carburetor throttle link (clockwise) one turn. Start engine and activate HIGH ENGINE as in step 2. Be sure to disconnect proportional dump valve wire.
4. If surging continues, repeat step 3. Do not turn carburetor throttle link in any further than necessary or governor performance will be affected.
5. When surging is under control, check HIGH ENGINE RPM. If necessary reset to 2400 RPM as in step 2. Shut down engine.

https://truckmanualshub.com/

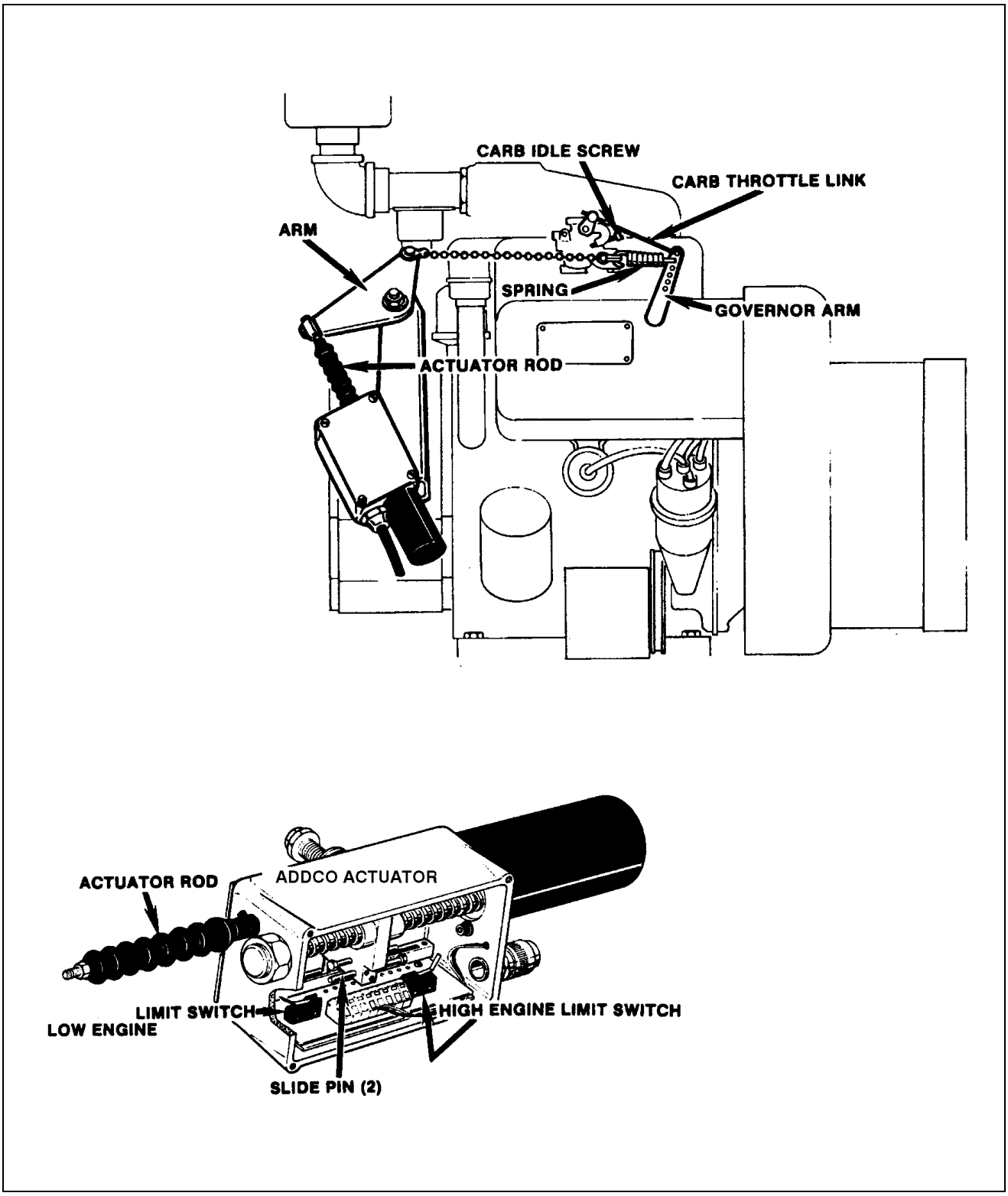

Figure 2-9. Addco Actuator Adjustments, VG4D.

https://truckmanualshub.com/

2.19 THROTTLE CHECKS AND ADJUSTMENTS - DEUTZ F3L912 ENGINE. (SEE FIGURE 2-10.)

NOTE: *Never run fuel tank dry. Diesel engines cannot be restarted after running out of fuel until fuel system has been air-vented or 'bled' of air. See Deutz Instruction Manual for procedure.*

a. Disconnect actuator cable from throttle lever. With the aid of an assistant, start the engine and allow it to come up to operating temperature. Adjust throttle lever stop until engine runs at 2000 RPM. Shut down engine. Reattach actuator cable to throttle lever making sure that low engine setting remains the same. If necessary, adjust slide pin to contact low engine limit switch at 2000 RPM. Shut down engine.

b. With the aid of an assistant, start engine from basket and allow to come up to operating temperature. Disconnect proportional dump valve wire. Activate footswitch. Turn on HIGH ENGINE switch. Hold drive controller in full drive position. Adjust slide pin to contact high engine limit switch at 3000 RPM. Shut off all switches and controllers. Reconnect proportional dump valve wire.

NOTE: *Actuator cable travel must stop slightly before lever makes contact with throttle lever stop. Failure to do so will burn out actuator.*

Early machines are at idle until a function is activated. Later machines are at idle only at platform without footswitch activated. Therefore when setting low engine speed on later machines it will not be necessary to disconnect bang-bang dump valve wire or operate a bang-bang function. Just activate footswitch to get low engine.

2.20 THROTTLE CHECKS AND ADJUSTMENTS - DEUTZ ENGINE F3L1011. (SEE FIGURE 2-11.)

NOTE: *Never run fuel tank dry. Diesel engines cannot be restarted after running out of fuel until fuel system has been air-vented or 'bled' of air. See Deutz Instruction Manual for procedure.*

a. Disconnect actuator cable from throttle lever. With the aid of an assistant, start the engine and allow it to come up to operating temperature. Adjust throttle lever stop until engine runs at 1800 RPM. Shut down engine. Reattach actuator cable to throttle lever making sure that low engine setting remains the same. If necessary, adjust slide pin to contact low engine limit switch at 1800 RPM. Shut down engine.

b. With the aid of an assistant, start engine from basket and allow to come up to operating temperature. Disconnect proportional dump valve wire. Activate footswitch. Turn on HIGH ENGINE switch. Hold drive controller in full drive position. Adjust slide pin to contact high engine limit switch at 3000 RPM. Shut off all switches and controllers. Reconnect proportional dump valve wire.

NOTE: *Actuator cable travel must stop slightly before lever makes contact with throttle lever stop. Failure to do so will burn out actuator.*

Early machines are at idle until a function is activated. Later machines are at idle only at platform without footswitch activated. Therefore when setting low engine speed on later machines it will not be necessary to disconnect bang-bang dump valve wire or operate a bang-bang function. Just activate footswitch to get low engine.

https://truckmanualshub.com/

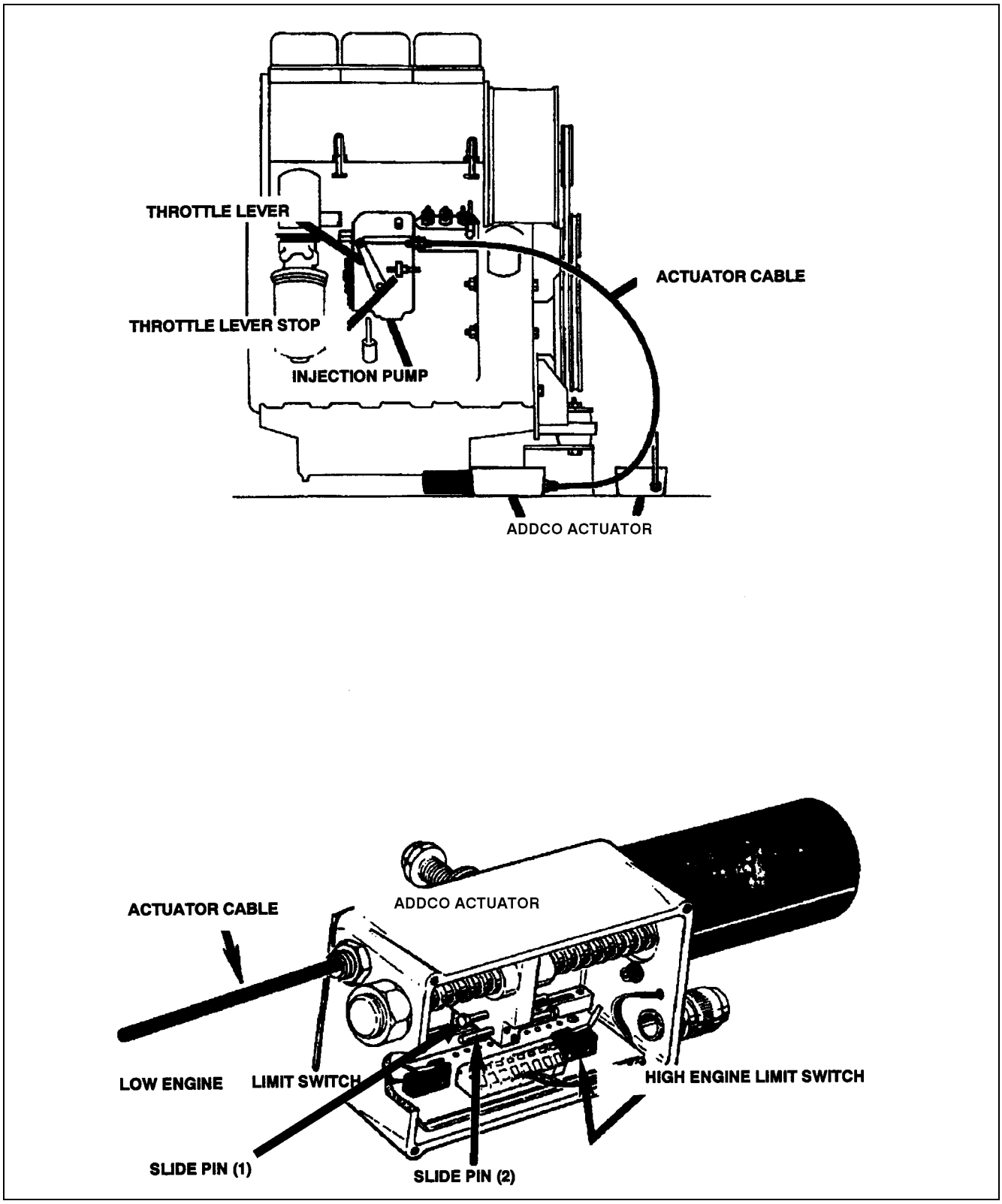

Figure 2-10. Addco Actuator Adjustments, F3L912.

https://truckmanualshub.com/

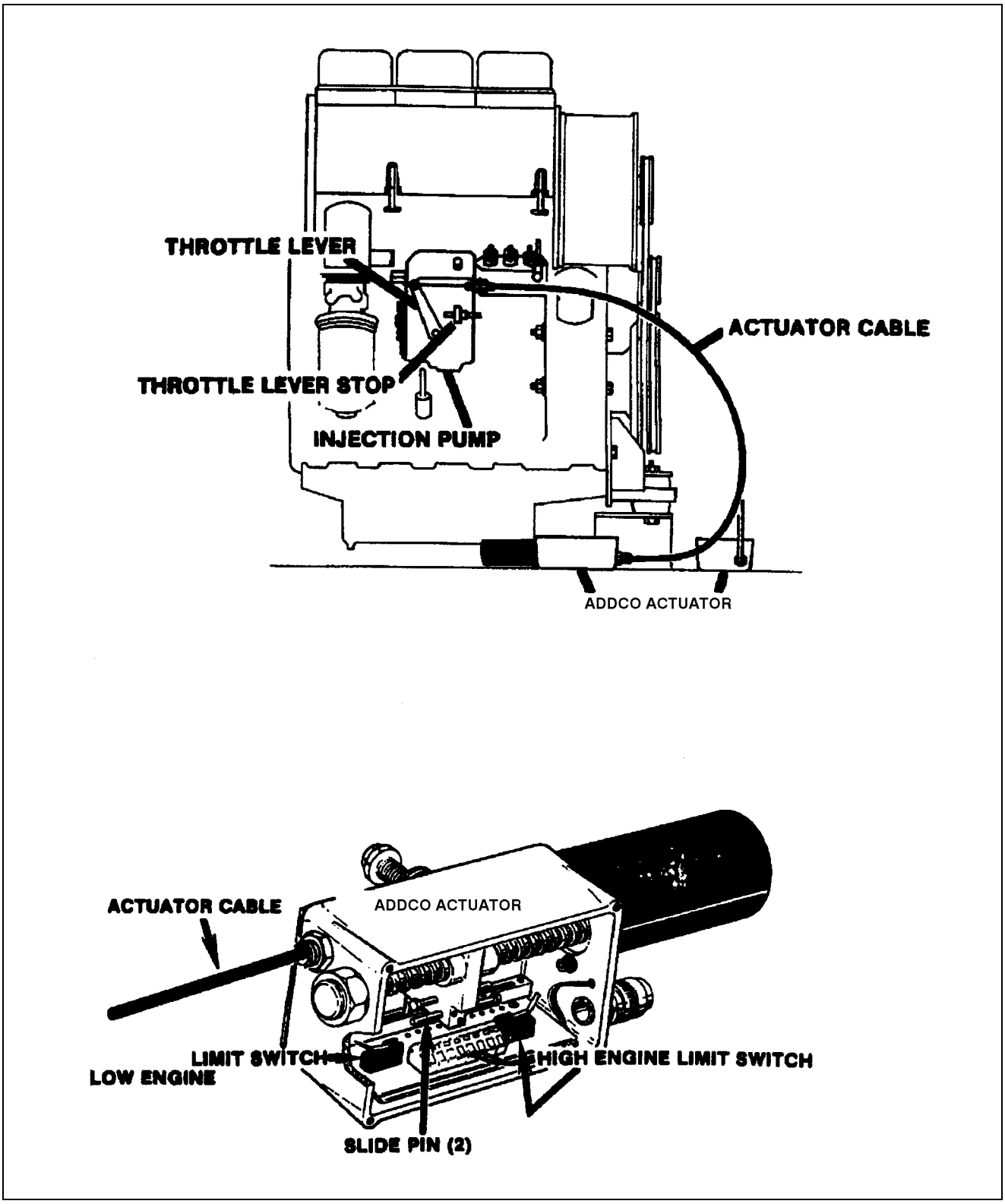

Figure 2-11. Addco Actuator Adjustments, F3L1011.

https://truckmanualshub.com/

2.21 PRESSURE SETTING PROCEDURES.

a. Racine Proportional Valve Pressure Setting, Machines Built Prior To Mid 1987 are shown in Figure 2-12, and 2-13.

b. Vickers Proportional Valve Pressure Setting, Machines Built To Present are shown in Figure 2-14, 2-15, 2-16, and 2-17.

c. Vickers Proportional Valve Pressure Setting, Machines Built Prior To 1989 With Accessory Valve are shown in Figure 2-18, 2-19, 2-20, and2-21.

d. Solenoid Valve Pressure Settings Machines Built Prior To May 1992 With Steer Wheel are shown in Figure 2-22.

e. Pressure And Flow Settings Machines Built Prior To May 1992 With Steering Wheel are shown in Figure 2-23.

f. Vickers All Hydraulic Pressure Setting are shown in Figure 2-24, 2-25, 2-26, and 2-27.

g. Solenoid Valve Pressure Settings Machines Built To Present are shown in Figure 2-28,and 2-29.

h. Extend - A - Reach Valve Pressure and Speed Settings Model 40H+6 are shown in Figure 2-30.

https://truckmanualshub.com/

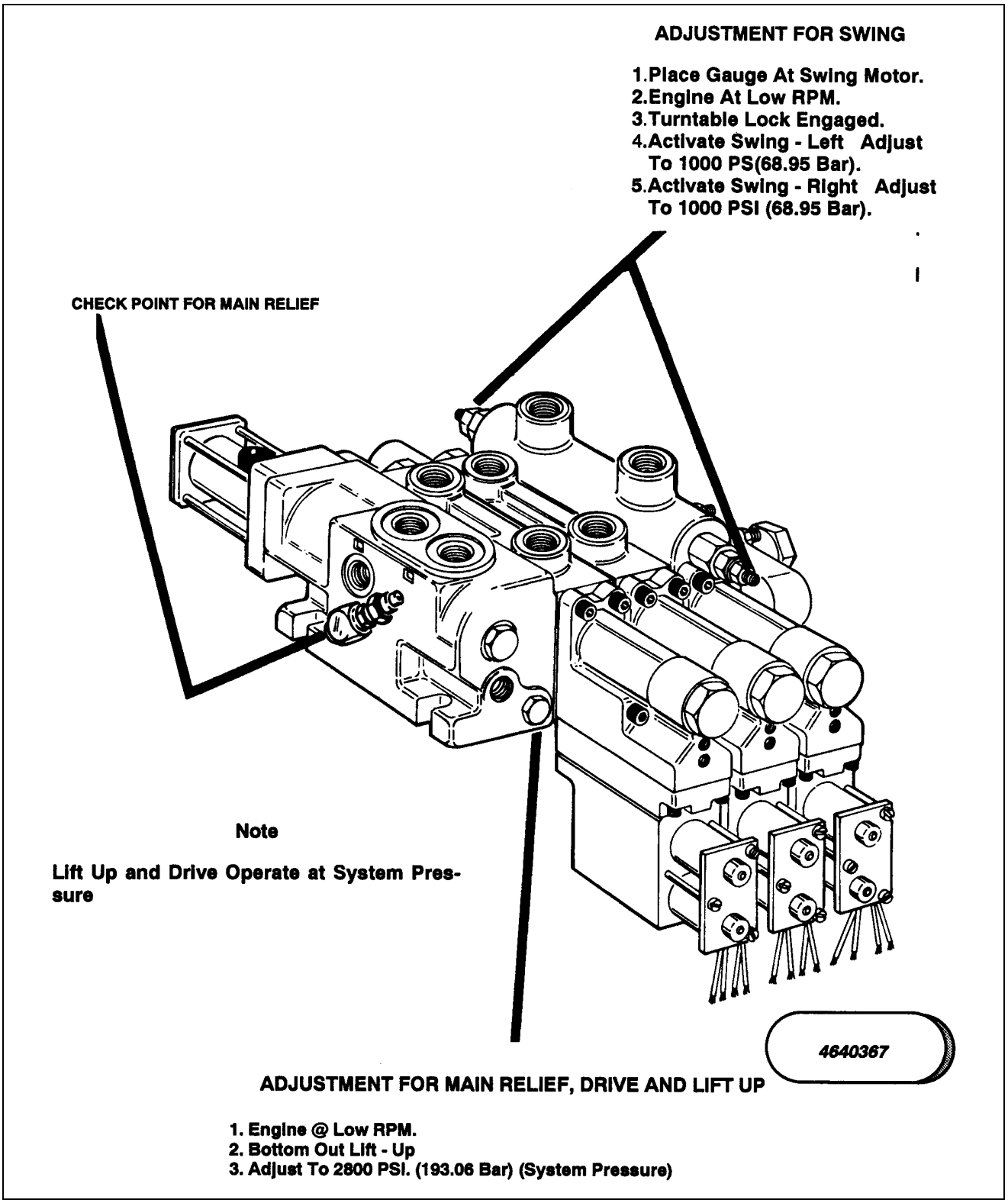

Figure 2-12. Racine Proportional Valve Pressure Setting.(Machines Built Prior To Mid 1987) (Sheet 1 of 2)

https://truckmanualshub.com/

• ADJUSTMENT FOR PILOT PRESSURE

1. Engine @ low RPM.
2. Connect 12 volt jumper wire to dump valve solenoid.
3. Pressure gauge should read between 250 - 400 PSI (17.2 - 31 Bar).
4. Shut down system, remove cap plug and shim up spring to increase pressure, shorten spring to decrease pressure.
5. Install cap plug and repeat steps 1 thru 3.

⚠ IMPORTANT

Take pilot pressure reading before attempting to make adjustment. Do not adjust if pilot pressure is between 250 - 400 PSI (17.2 - 31 Bar).

Note

The pilot pressure is factory set and normally should not require adjusting. Adjust only if you notice poor or sluggish response to proportional functions or loss of auxiliary power.

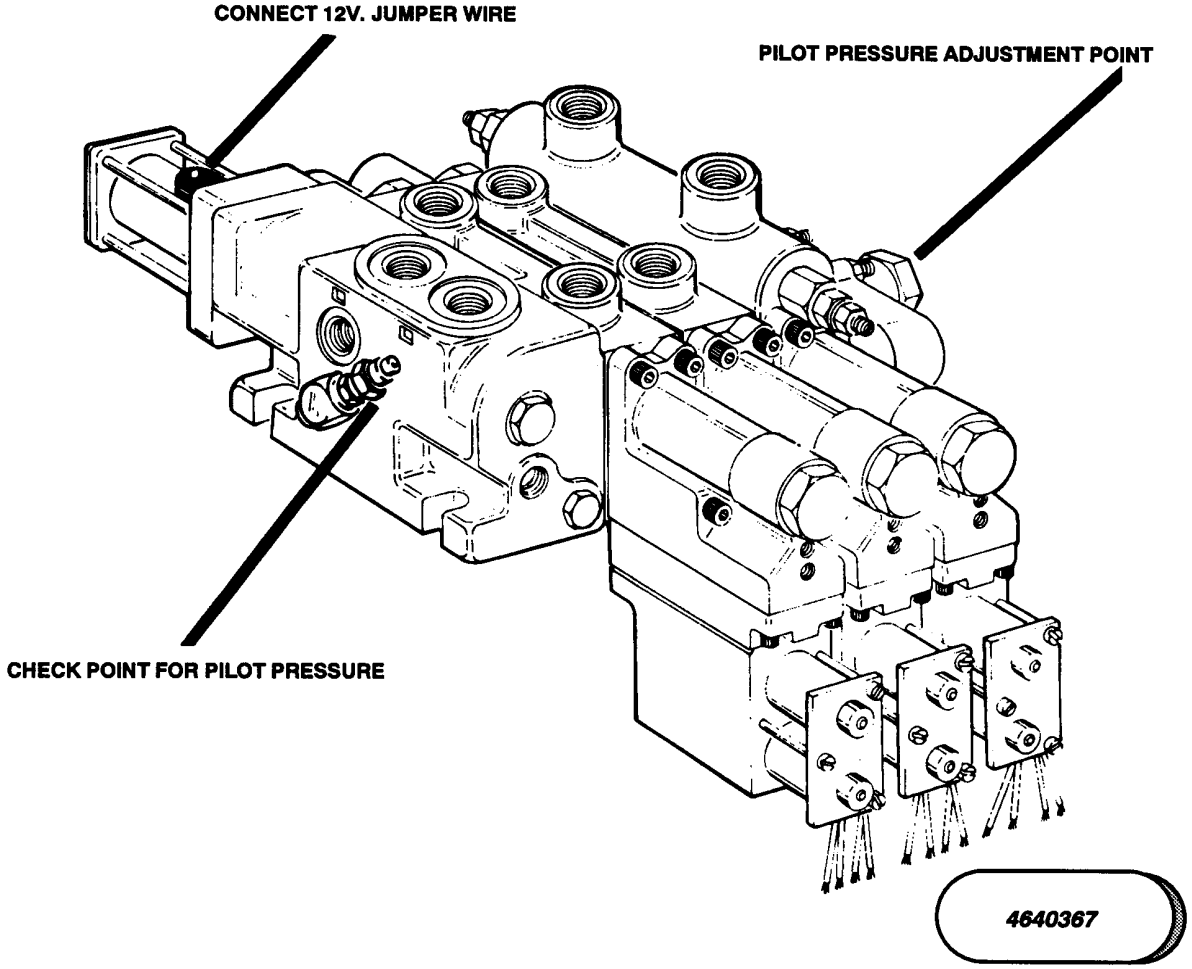

Figure 2-13. Racine Proportional Valve Setting.(Machines Built Prior To Mid 1967) (Sheet 2 of 2)

https://truckmanualshub.com/

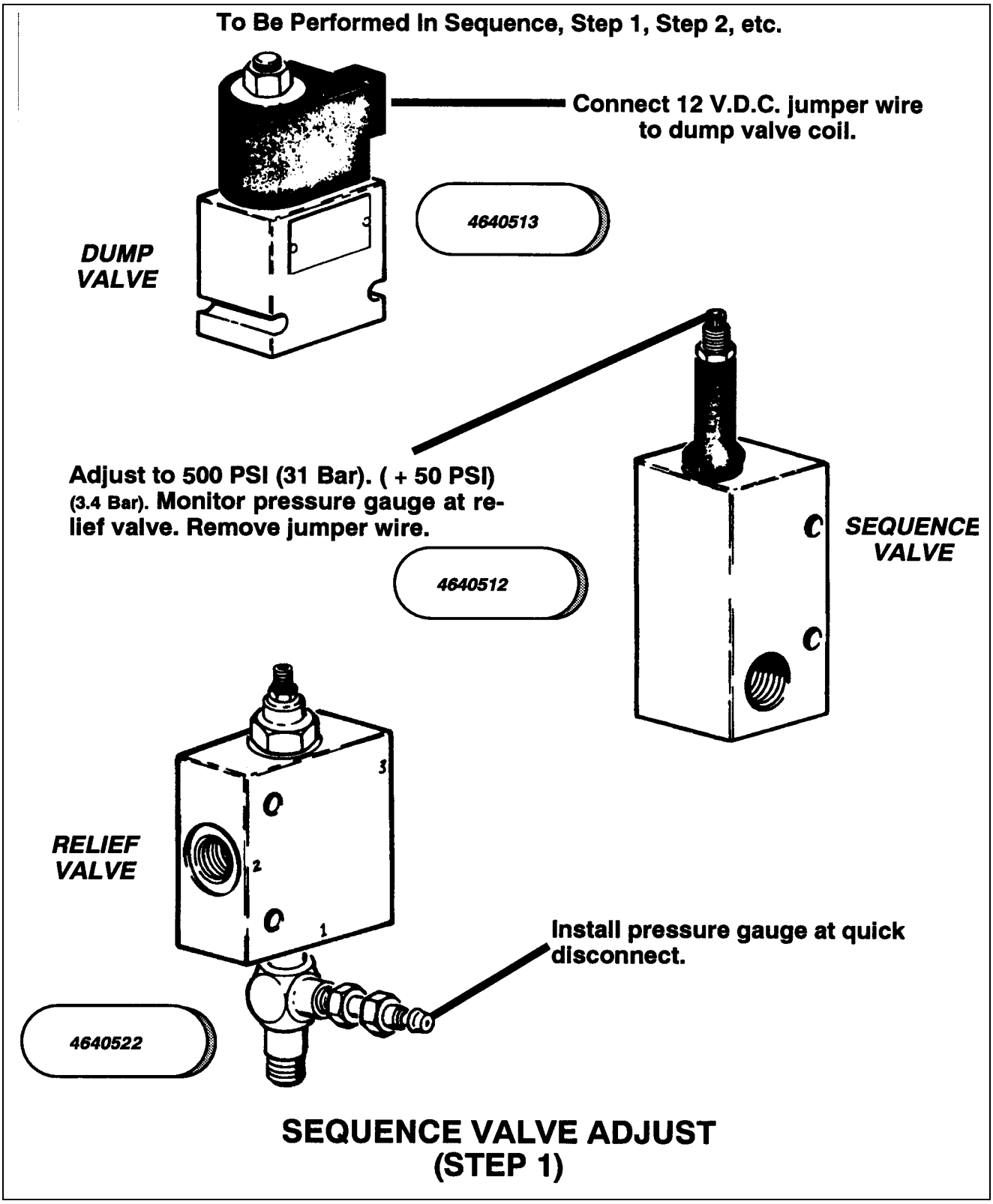

Figure 2-14. Vickers Proportional Valve Pressure Setting, Machines Built To Present (Sheet 1 of 4)

Updated 9/15/00

https://truckmanualshub.com/

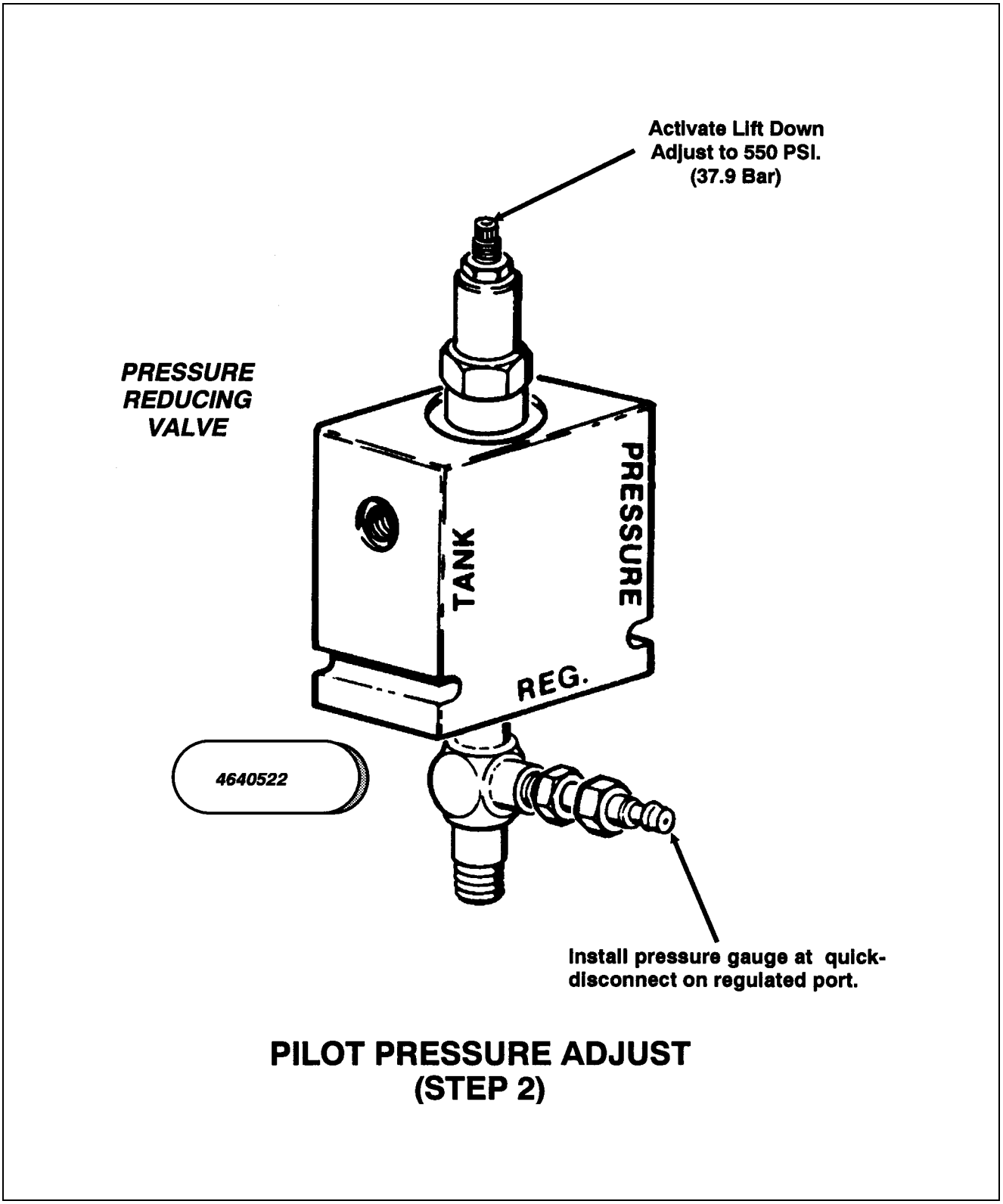

Figure 2-15. Vickers Proportional Valve Pressure Setting, Machines Built To Present. (Sheet2 of 4)

https://truckmanualshub.com/

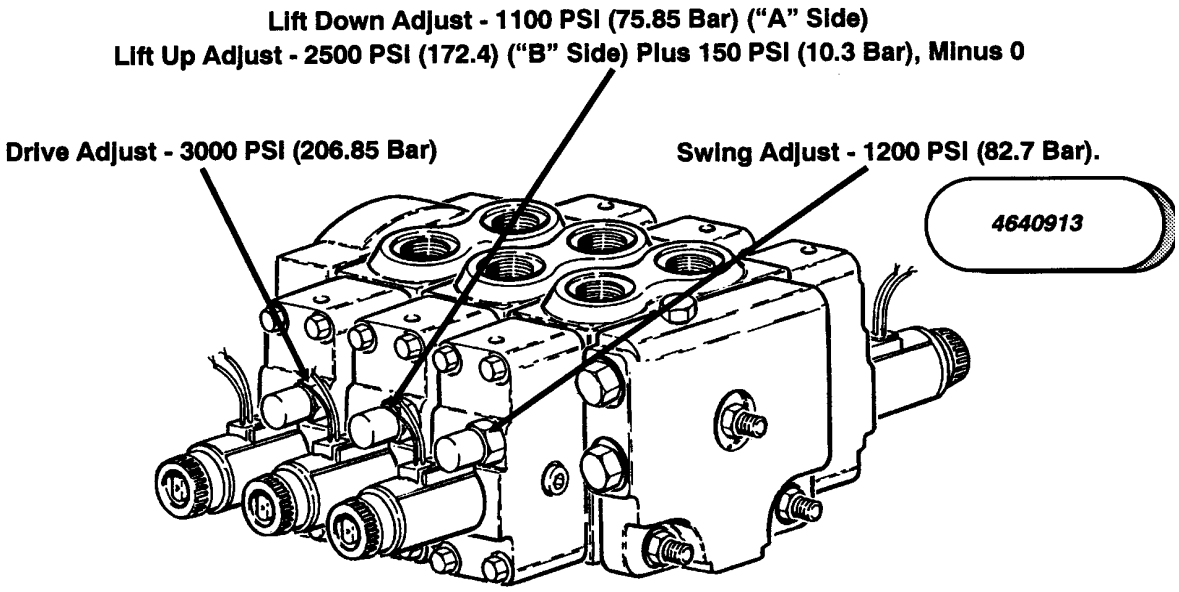

Control Valve Assembly - Vickers 3 Section.

Swing Adjust - Right and Left - Monitor gauge at quick connect on relief valve. Lock turntable and activated Swing Right. Turn adjustment screw CW to increase pressure, CCW to decrease pressure. Early Machines add shims to increase pressure, remove shims to decrease. Same applies to Swing Left.

Lift Adjust - Lift Down - Monitor gauge at quick connect on relief valve. Bottom out Lift Down. Turn adjustment screw CW to increase pressure, CCW to decrease pressure. Early Machines add shims to increase pressure, remove shims to decrease.

Lift Up - Bottom out Lift Up, turn adjustment screw CW to increase pressure, CCW to decrease pressure. Early Machines add shims to increase pressure, remove shims to decrease.

Drive Adjust - Disconnect and cap hose to drive motor, also plug port in valve. Have assistant activate drive forward. Monitor gauge at quick connect on relief valve. Turn adjustment screw CW to increase pressure, CCW to decrease pressure. Early Machines add shims to increase pressure, remove shims to decrease.

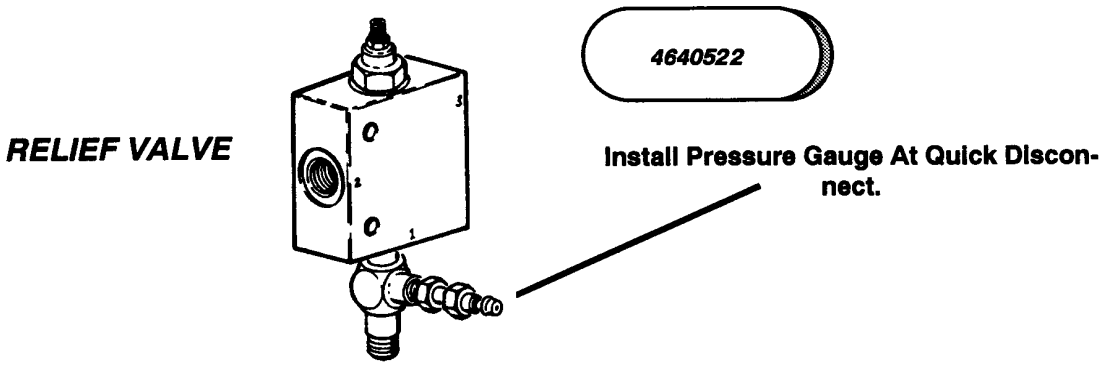

PROPORTIONAL VALVE ADJUST (STEP 3)

Figure 2-16. Vickers Proportional Valve Pressure Setting, Machines Built To Present. (Sheet 3 Of 4)

https://truckmanualshub.com/

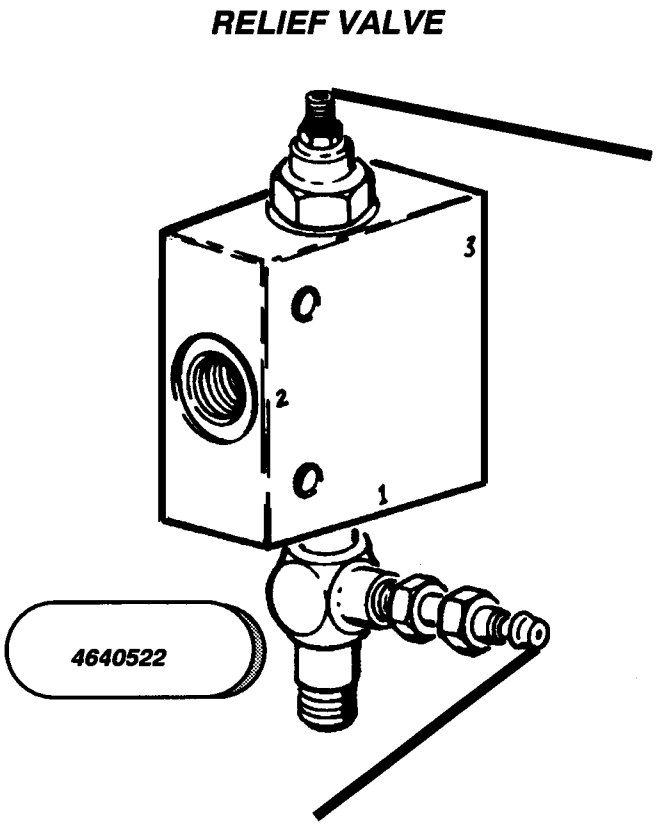

Install Pressure Gauge At Quick Disconnect.

Note:
This adjustment to be made after all proportional functions are set.

Disconnect and cap hose to brake line at counterbalance valve also plug port in valve. Back out adjustment 2 turns (counter-clockwise). Have assistant activate drive. Slowly turn adjustment in (clockwise) and watch pressure gauge. Continue turning until gauge stops moving (approximately 3000 PSI) (206.8 Bar). Turn adjustment in an additional 1/2 turn, this will result in approximately 200 PSI (13.8 Bar) higher than Drive relief setting.

MAIN RELIEF ADJUST (PROPORTIONAL FUNCTIONS) (STEP 4)

Figure 2-17. Vickers Proportional Valve Pressure Setting, Machines Built To Present. (Sheet 4 of 4)

https://truckmanualshub.com/

To Be Performed In Sequence, Step 1, Step 2, ect.

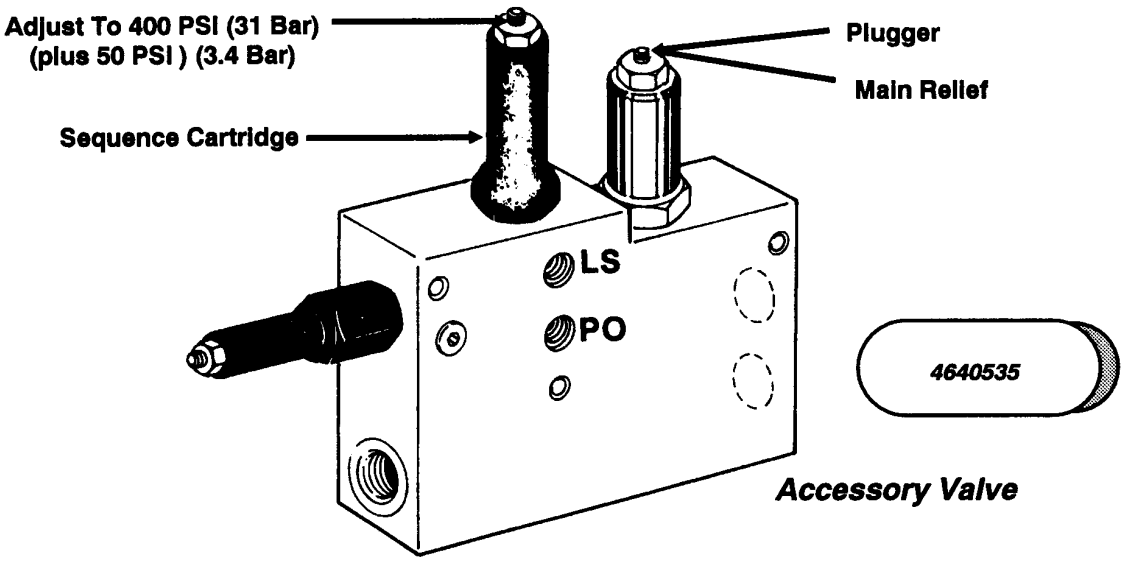

STEP 1

To Set Sequence Pressure

1. Plug pressure gauge into quick-disconnect on Vickers Valve.
2. Loosen nut at main relief and depress plugger.
3. Monitor pressure gauge while making adjustments at sequence cartridge to 400 PSI (31 Bar) (plus or minus 50 PSI) (3.4 Bar).
4. Release plugger and tighten nut at main relief.
5. Remove pressure gauge.

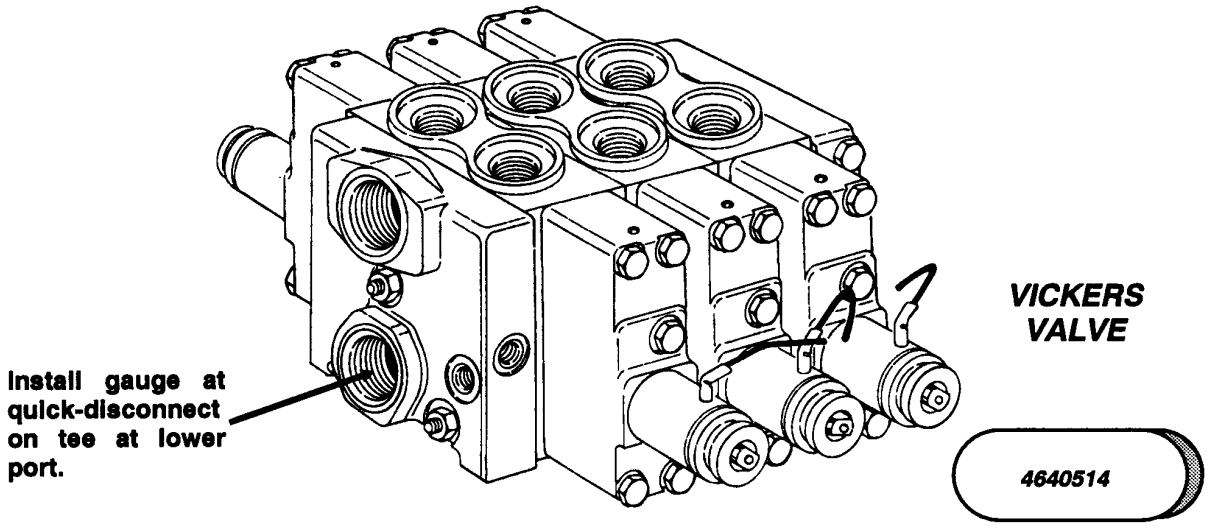

Figure 2-18. Vickers Proportional Valve Pressure Setting, Machines Built Prior To 1989 With Accessory Valve. (Sheet 1 of 4).

https://truckmanualshub.com/

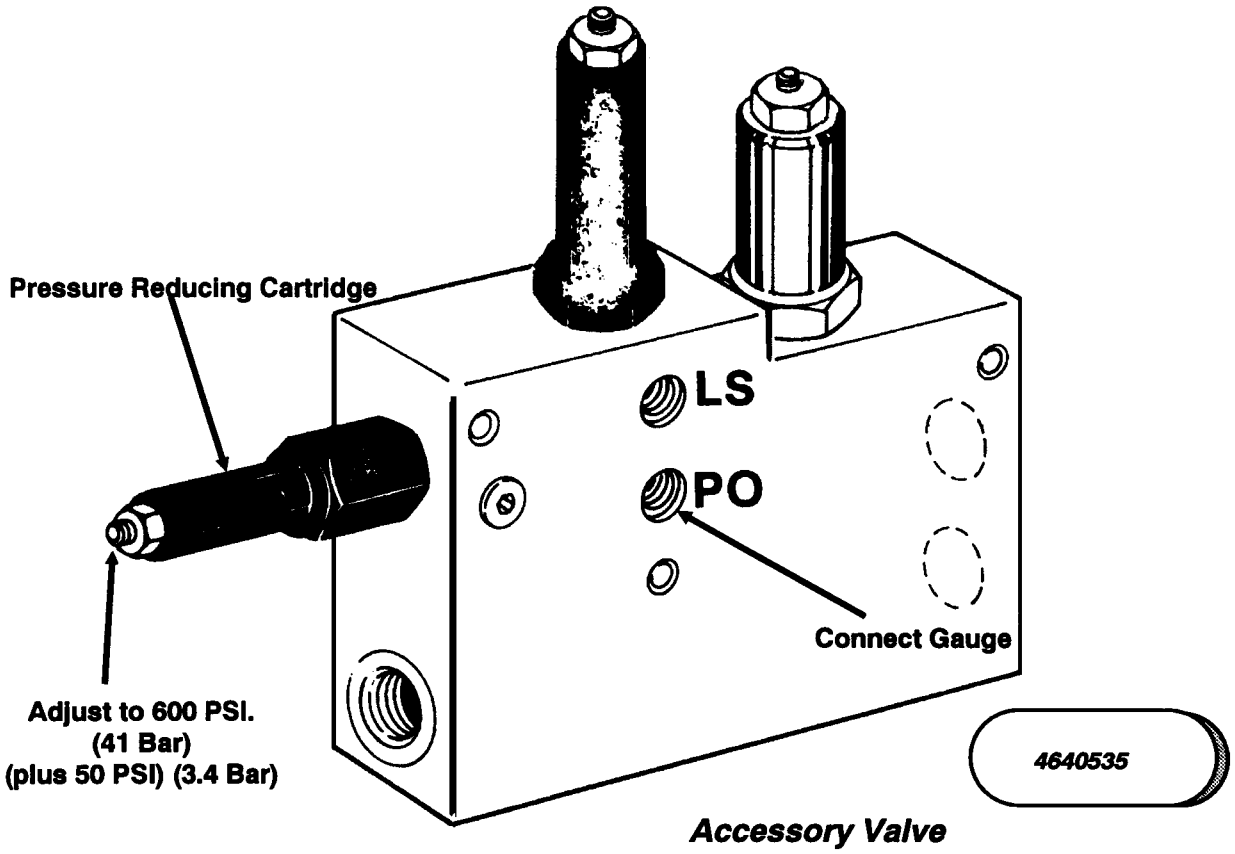

STEP 2

To Set Pilot Pressure

1. **Plug pressure gauge into quick-disconnect on Accessory Valve.**
2. **Activate Lift Down.**
3. **While monitoring pressure gauge, adjust reducing cartridge to 600 PSI (41 Bar) (plus 50 PSI)(3.4 Bar).**
4. **Remove pressure gauge.**

Figure 2-19. Vickers Proportional Valve Pressure Setting, Machines Built Prior To 1989 With Accessory Valve. (Sheet 2 of 4)

https://truckmanualshub.com/

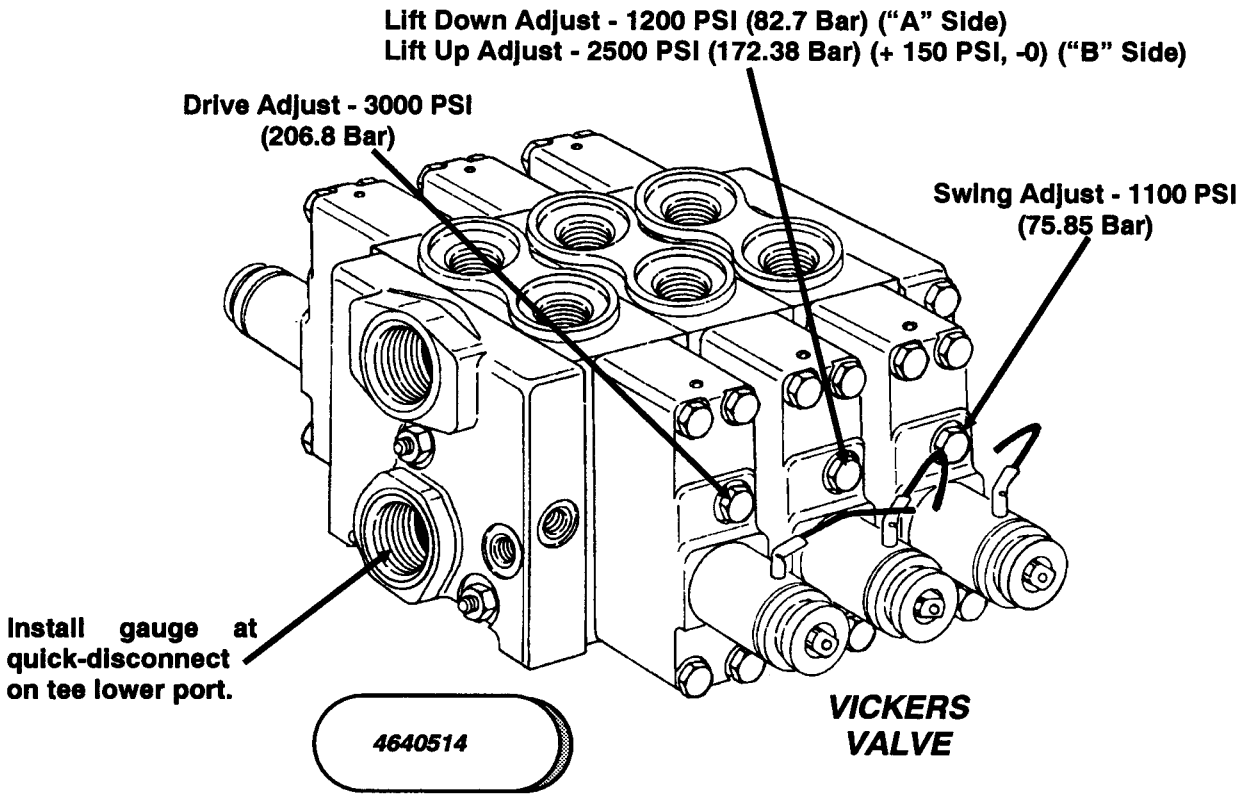

Note: All Pressure Plus or Minus 150 PSI (10.34 Bar), Except Where Noted.

STEP 3.

Swing Adjust - Right and Left - Monitor gauge at quick disconnect on relief valve. Lock turntable and activate Swing Right. Add shims to increase pressure, remove shims to decrease pressure. Same procedure applies to Swing Left.

Lift Adjust - Lift Down - Monitor gauge at quick disconnect on relief valve. Bottom out Lift Down. Add shims to increase pressure, remove shims to decrease pressure.

Lift Up - Bottom out Lift Up, add shims to increase pressure, remove shims to decrease pressure.

Drive Adjust - Disconnect and cap brake line at counterbalance valve, also plug port in valve. Have assistant activate Drive Forward. Monitor gauge at quick disconnect on relief valve. Add shims to increase pressure, remove shims to decrease pressure. Same procedure applies to Drive Reverse.

Figure 2-20. Vickers Proportional Valve Pressure Setting, Machines Built Prior To 1989 With Accessory Valve. (Sheet 3 Of 4)

https://truckmanualshub.com/

STEP 4

To Set Main Relief (Proportional Functions).

Note:
This adjustment to be made after all proportional functions are set.

Disconnect and cap hoses to drive motor, also plug ports on drive section of proportional valve. Back out adjustment 2 turns (counter-clockwise). Have assistant activate drive. Slowly turn adjustment in (clockwise) and watch pressure gauge. Continue turning until gauge stops moving (approximately 3000 PSI) (206.8 Bar). Turn adjustment in and additional 1/2 turn, this will result in approximately 200 PSI (13.8 Bar) higher than Drive relief setting.

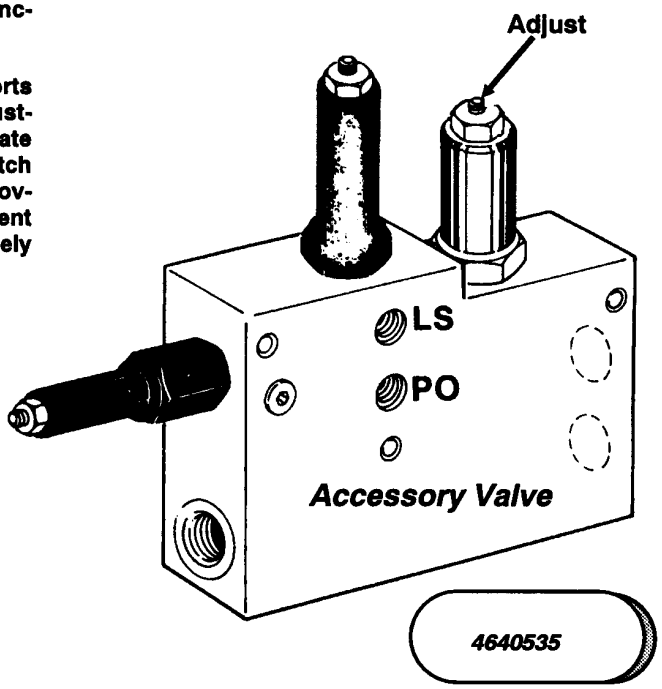

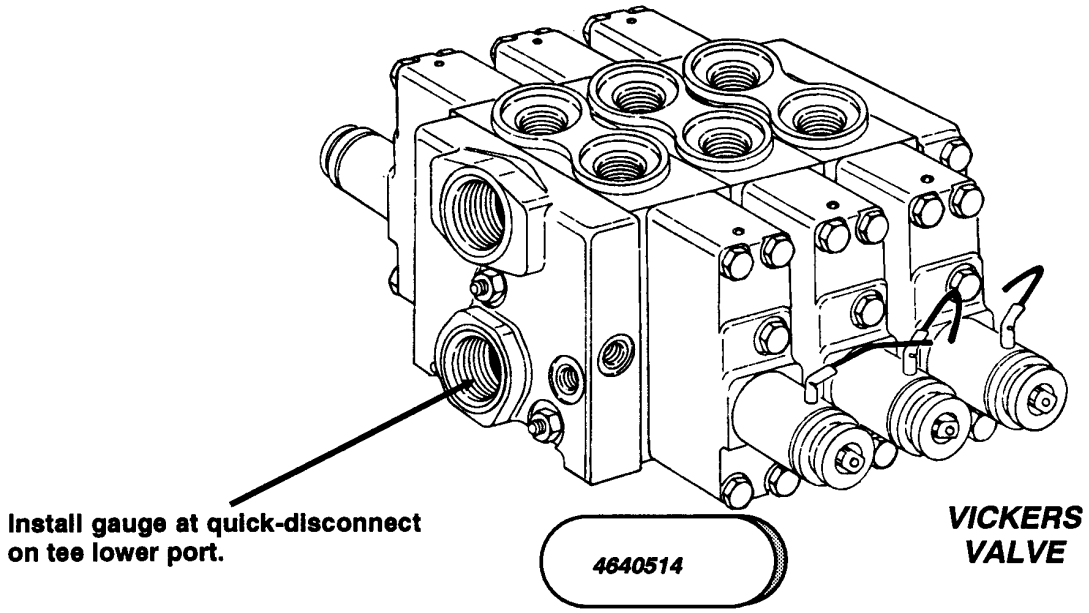

Figure 2-21. Vickers Proportional Valve Pressure Setting, Machines Built Prior To 1989 With Accessary Valve. (Sheet 4 Of 4)

https://truckmanualshub.com/

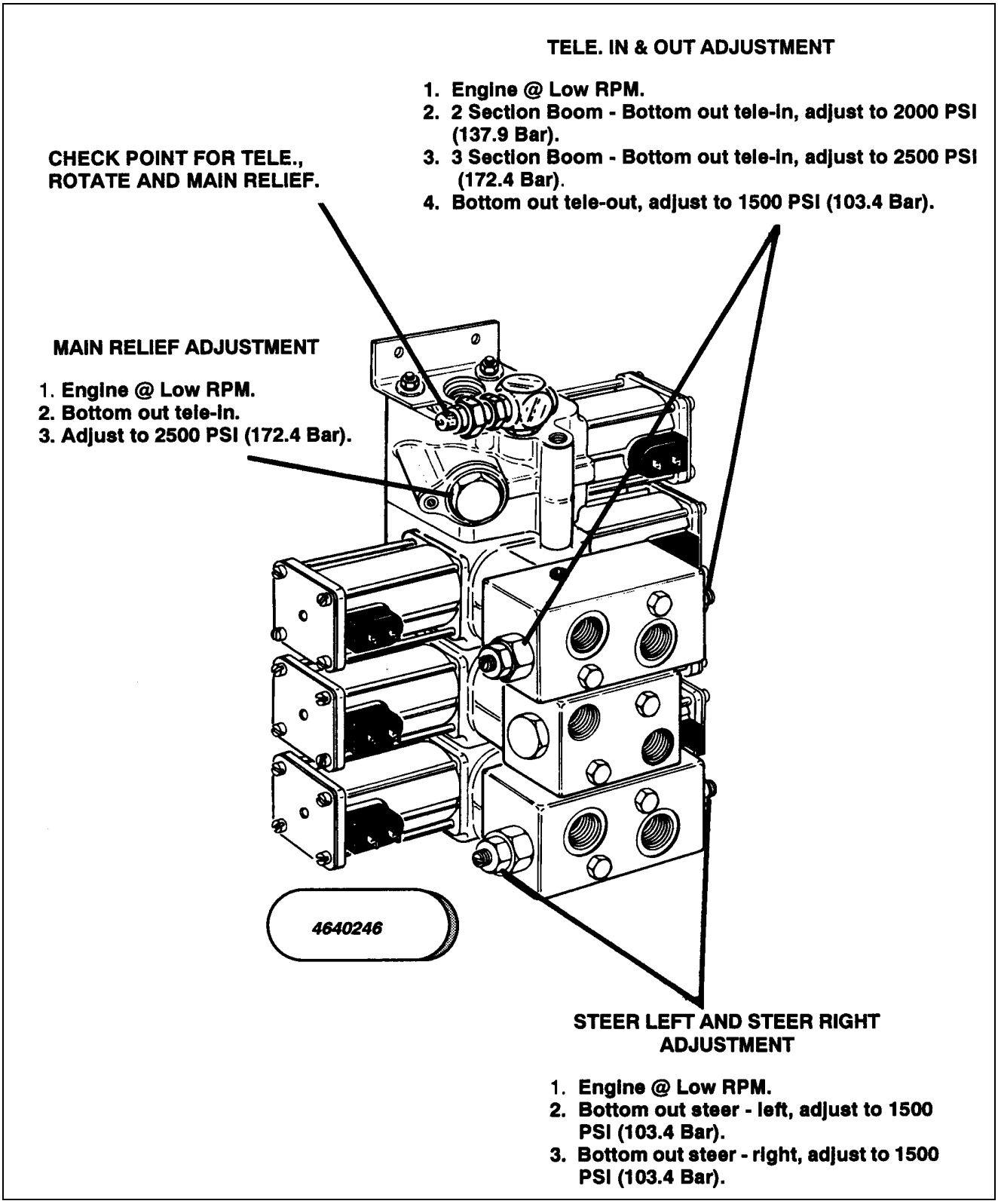

Figure 2-22. Solenoid Valve Pressure Settings. (Machines Built Prior To 1992 With Steering Wheel)

https://truckmanualshub.com/

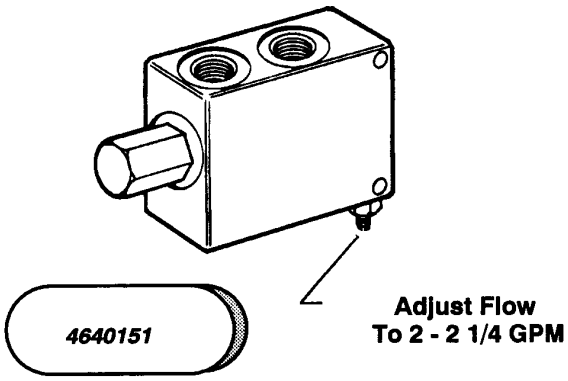

PRIORITY FLOW CONTROL VALVE

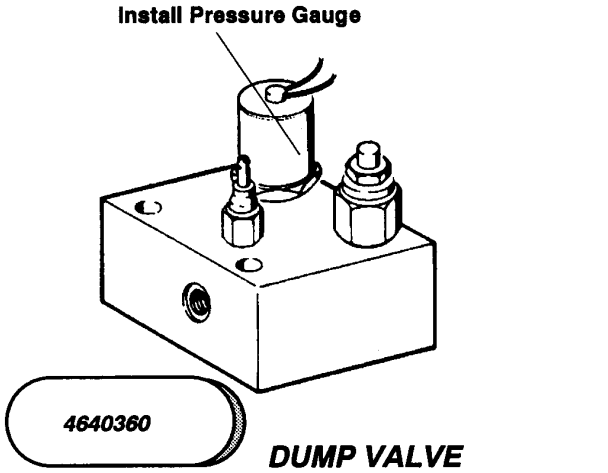

DUMP VALVE

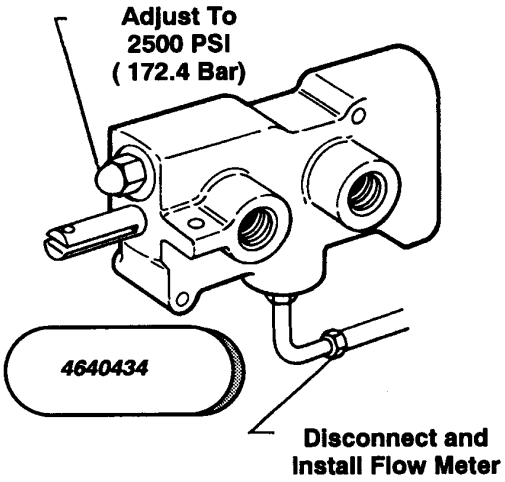

ROTATOR VALVE

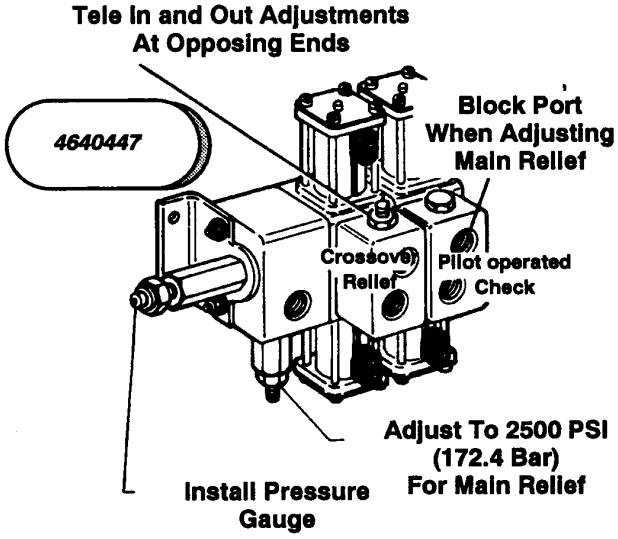

2 STACK VALVE

- **ROTATE AND STEERING**

a. **TO SET FLOW.** Install a flow gauge inline at rotate valve. With the aid of an assistant, make adjustments at the priority flow control valve for 2 - 2 1/4 GPM.

b. **TO SET PRESSURE.** Install pressure gauge at quick disconnect on dump valve. With the aid of an assistant, make adjustments at rotator valve to 2500 PSI (172.4 Bar). Set with engine at low RPM and bottom out rotate left or right.

- **TELESCOPE AND MAIN RELIEF**

a. **TO SET MAIN RELIEF PRESSURE.** Install pressure gauge at quick disconnect on 2 stack valve. Disconnect level hose, plug hose and block on valve. Make adjustments at 2 stack to 2500 PSI (172.4 Bar) with engine at low RPM, activate level function.

b. **TO SET TELESCOPE PRESSURE.** With a pressure gauge at quick disconnect, and engine at low RPM, bottom out tele-in and adjust to 2000 PSI (137.9 Bar) for 2 Section Boom 2500 PSI (172.4 Bar) for 3 Section Boom. Then bottom out tele-out and adjust to 1500 PSI (103.4 Bar).

Figure 2-23. Pressure And Flow Settings (Machines Built Prior To May 1992 With Steering Wheel).

https://truckmanualshub.com/

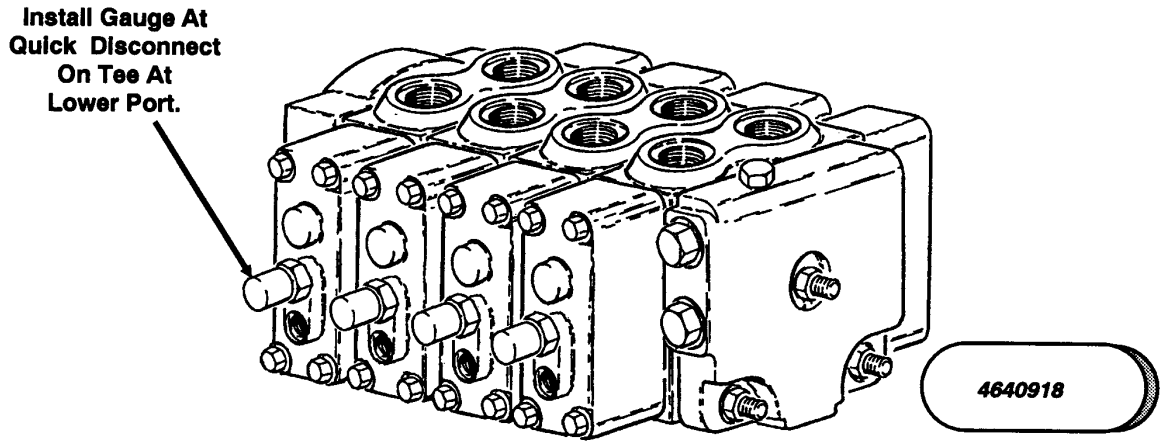

CONTROL VALVE ASSEMBLY - VICKERS 4 SECTION

STEP 1. SETTING SEQUENCE PRESSURE

1. Plug pressure gauge into quick disconnect on Vickers Valve.
2. Start engine from ground control, this will energize dump valve.
3. Monitor pressure gauge while making adjustment at sequence cartridge (400-600 PSI) (27.6-41.4 Bar).
4. Remove pressure gauge.

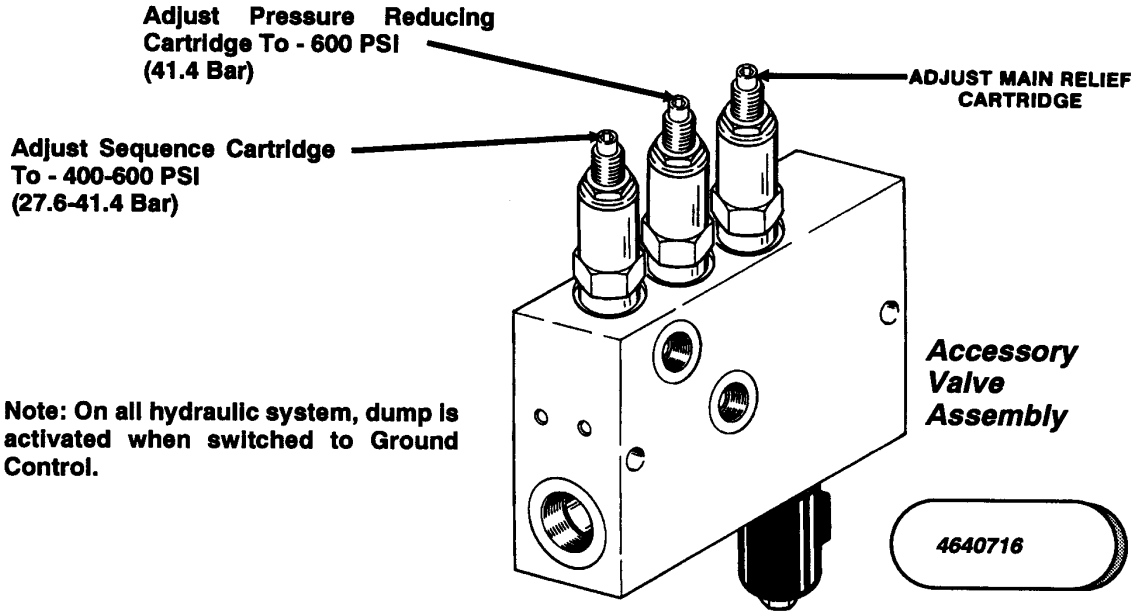

Note: On all hydraulic system, dump is activated when switched to Ground Control.

STEP 2. SETTING PILOT PRESSURE

1. Plug pressure gauge into quick disconnect on Accessory Valve.
2. Activate Lift Down.
3. While monitoring pressure gauge, adjust pressure reducing cartridge to 600 PSI (41.4 Bar).
4. Remove pressure gauge.

Figure 2-24. Vickers All Hydraulic Machines Pressure Settings (Sheet 1 of 4).

https://truckmanualshub.com/

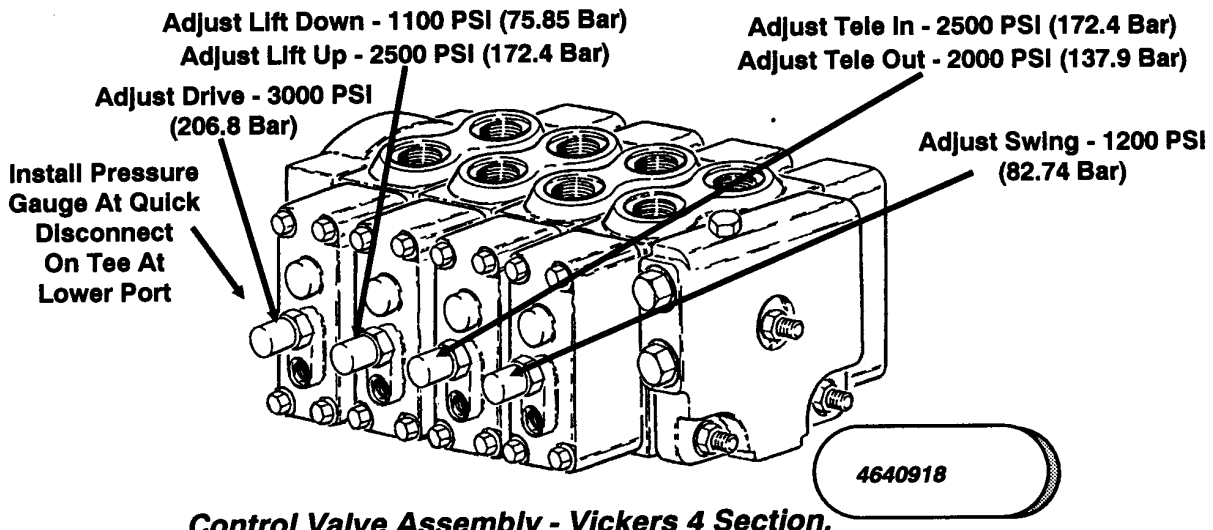

Control Valve Assembly - Vickers 4 Section.

STEP 3. SETTING DRIVE, SWING, LIFT AND TELE ADJUSTMENTS.

⚠ CAUTION

AFTER BRAKE LINES ARE DISCONNECTED AND PRIOR TO MAKING ADJUSTMENTS, ACTIVATE DRIVE WITH NO PERSONNEL IN VICINITY OF TRAVEL PATH TO ENSURE BRAKES ARE HOLDING

Drive Adjust

1. Disconnect and cap brake line at counterbalance valve also plug port in valve.
2. Have assistant activate Drive Forward.
3. Monitor gauge. Turn adjustment screw CW to increase pressure, CCw to decrease. Early machines add shims to increase pressure, remove shims to decrease.
4. Same procedure applies to Drive Reverse. Make note of pressures. Leave brake line capped, until all adjustments are complete.

Swing Adjust Right and Left

1. Lock turntable. Monitor gauge at quick disconnect.
2. Turn adjustment screw CW to increase pressure, CCw to decrease. Early machines add shims to increase pressure, remove shims to decrease.
3. Activate Swing Right.
4. Same procedure applies to Swing Left.

Lift Adjust - Lift Down

1. Bottom out Lift Down.
2. Monitor gauge at quick disconnect.
3. Turn adjustment screw CW to increase pressure, CCw to decrease. Early machines add shims to increase pressure, remove shims to decrease.

Lift Adjust - Lift Up

1. Bottom out Lift Up.
2. Monitor gauge at quick disconnect.
3. Turn adjustment screw CW to increase pressure, CCw to decrease.
4. Early machines add shims to increase pressure, remove shims to decrease.

Tele Adjust - Tele In

1. Bottom out Tele In.
2. Monitor gauge at quick disconnect.
3. Turn adjustment screw CW to increase pressure, CCw to decrease.
4. Early machines add shims to increase pressure, remove shims to decrease.

Tele Adjust - Tele Out

1. Bottom out Tele Out.
2. Monitor gauge at quick disconnect.
3. Turn adjustment screw CW to increase pressure, CCw to decrease. Early machines add shims to increase pressure, remove shims to decrease.

Figure 2-25. Vickers All Hydraulic Machines Pressure Settings (Sheet 2 of 4).

https://truckmanualshub.com/

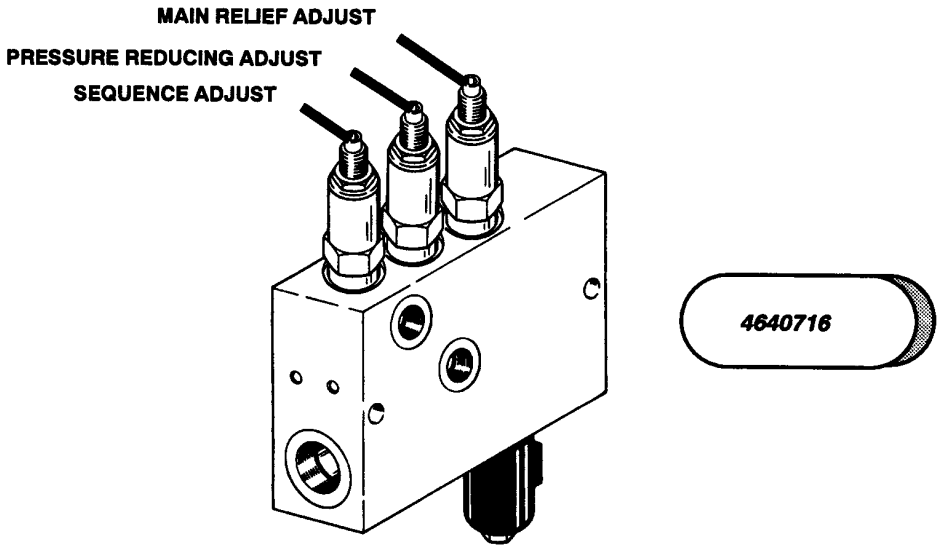

Accessory Valve Assembly

STEP 4. SETTING MAIN RELIEF (PROPORTIONAL FUNCTIONS)

Note: This adjustment to be made after all proportional functions are set.

1. Disconnect and cap hoses to brakes and cap port at counterbalance valve.
2. Back out adjustment 2 turns (counterclockwise).
3. Have assistant activate drive.
4. Slowly turn adjustment in (clockwise) and watch pressure gauge. Continue turning until gauge stops moving (approximately 3000 PSI) (206.8 Bar).
5. Turn adjustment in an additional 1/2 turn, this will result in approximately 200 PSI (13.8 Bar) higher than the highest Drive relief setting.

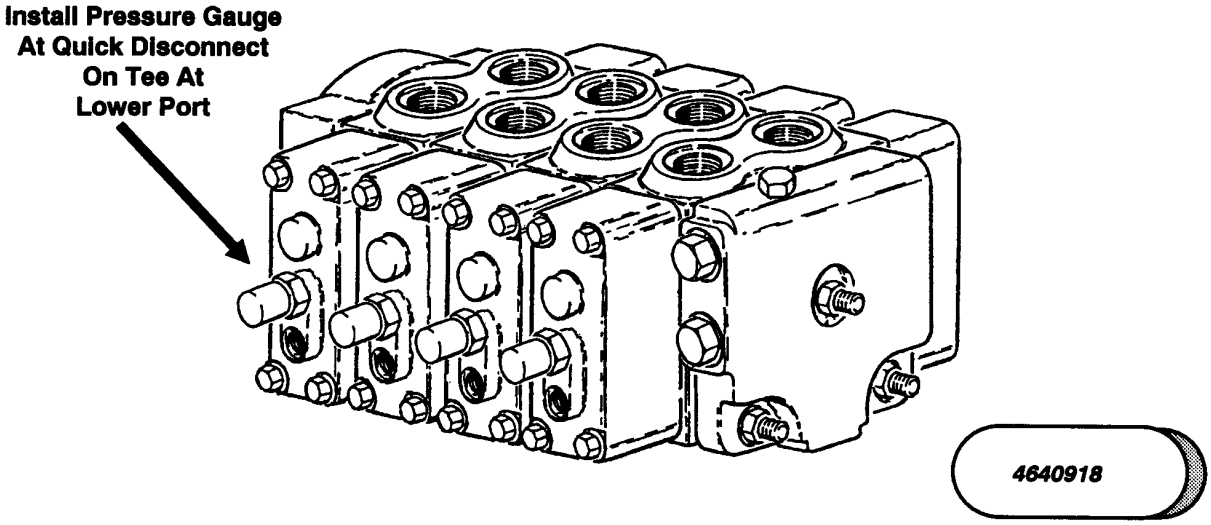

Control Valve Assembly - Vickers 4 Section.

Figure 2-26. Vickers All Hydraulic Machines Pressure Settings (Sheet 3 of 4).

https://truckmanualshub.com/

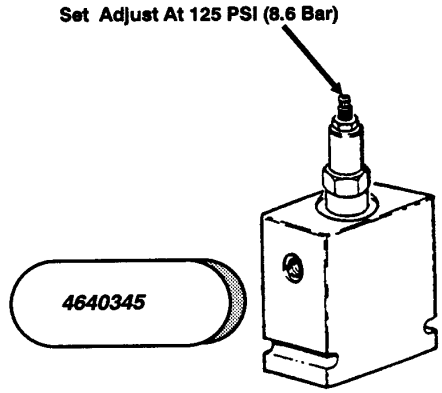

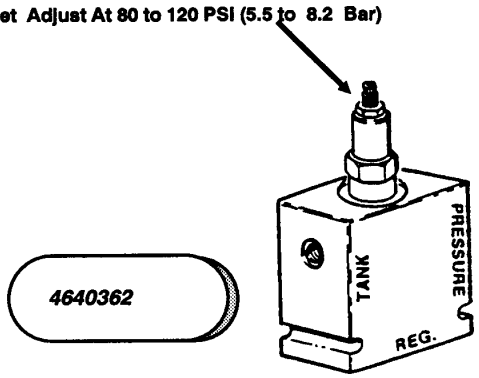

Relief Valve Assembly ***Pressure Reducing Valve Assembly***

STEP 5. SETTING RELIEF AND PRESSURE REDUCING VALVES

1. **Plug a low pressure gauge into quick disconnect on Vickers Valve Pressure drain port at end cap.**
2. **Adjust relief all the way in "temporary".**
3. **Set pressure reducing valve to 150 PSI (10.34 Bar) temporary.**
4. **Reset relief valve pressure to 140 PSI (9.6 Bar) and lock.**
5. **Reset pressure reducing valve to 80 to 120 PSI (5.5 to 8.2 Bar) and lock.**
6. **Remove pressure gauge.**

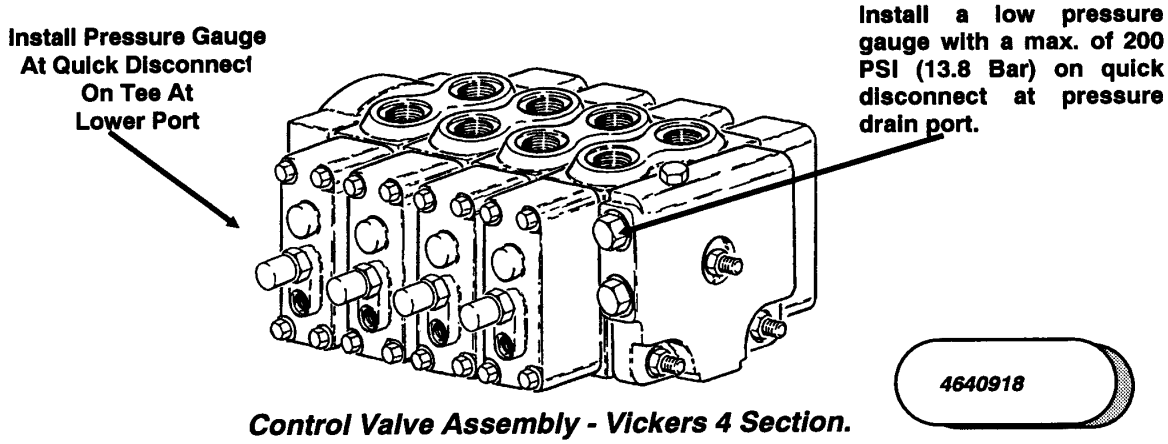

Control Valve Assembly - Vickers 4 Section.

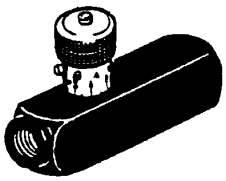

4640128 AND 4640216 COLOR FLOW VALVES

STEP 6. SETTING FLOW CONTROL VALVES

Adjust out - for faster start response to control. Adjust in - for slower start response to control.

Figure 2-27. Vickers All Hydraulic Machines Pressure Settings (Sheet 4 of 4).

https://truckmanualshub.com/

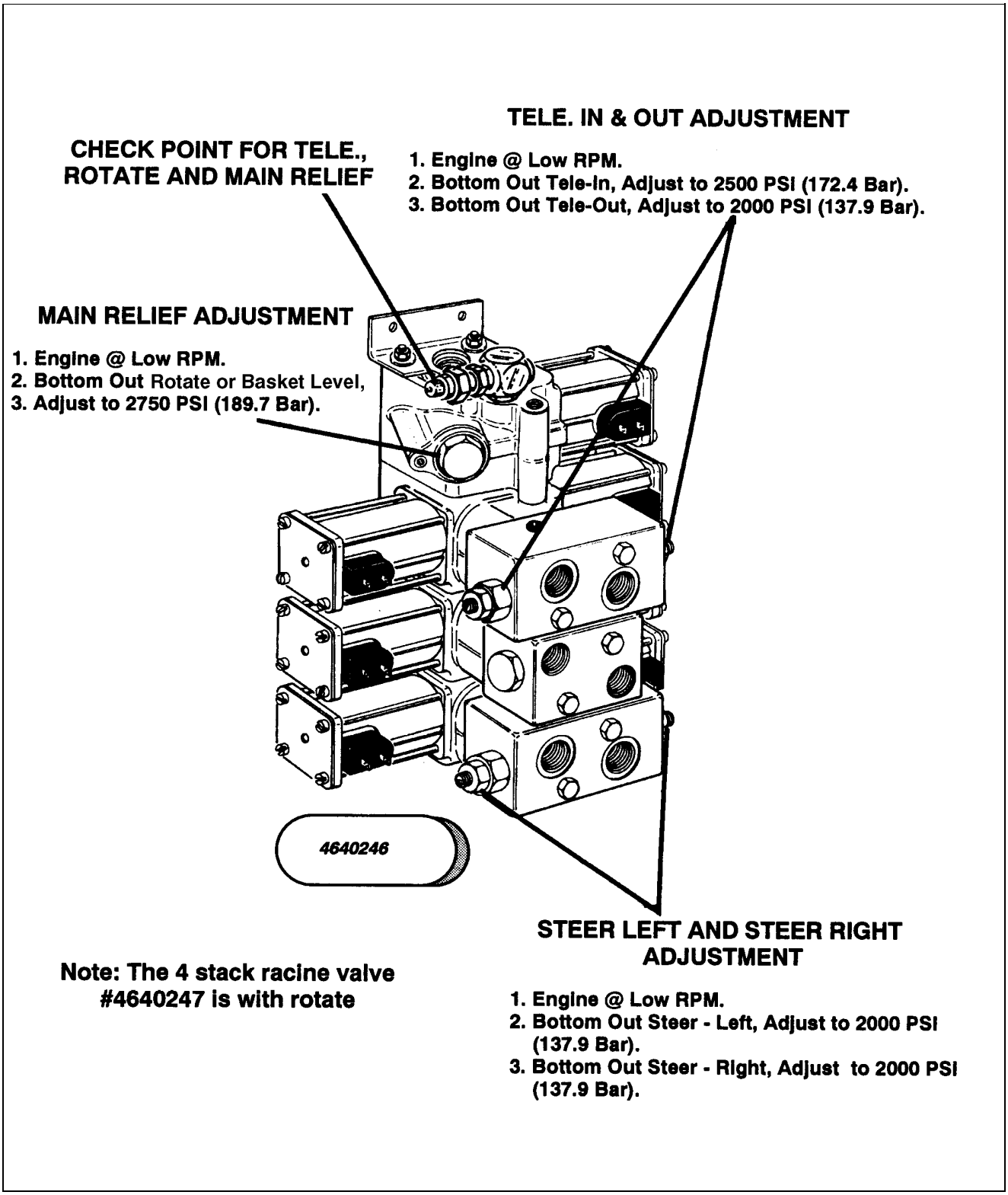

Figure 2-28. Solenoid Valve Pressure Settings, Machines Built Before 1995. (Sheet 1 of 2)

https://truckmanualshub.com/

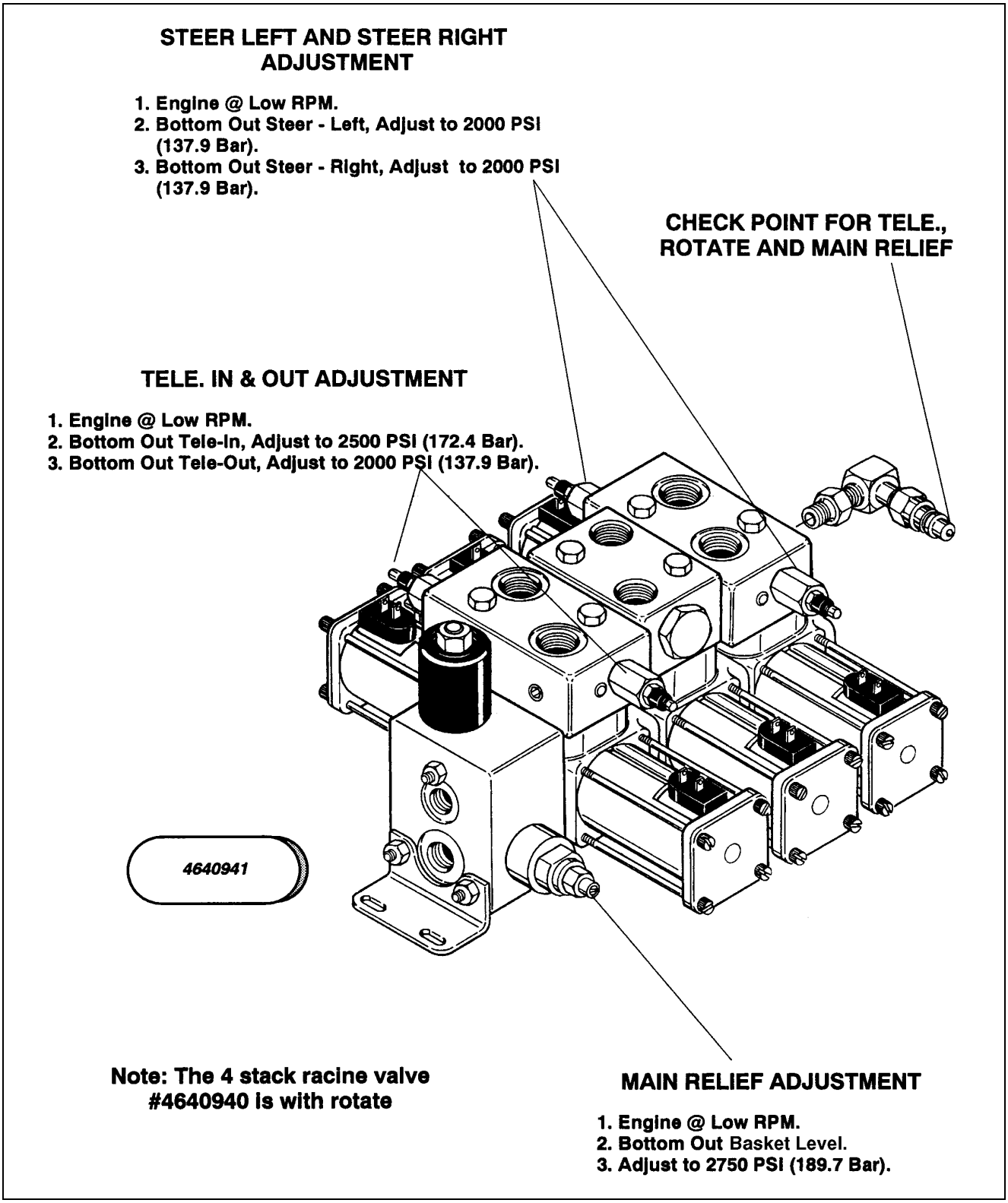

Figure 2-29. Solenoid Valve Pressure Settings, Machines Built from 1995 To Present. (Sheet 2 of 2)

https://truckmanualshub.com/

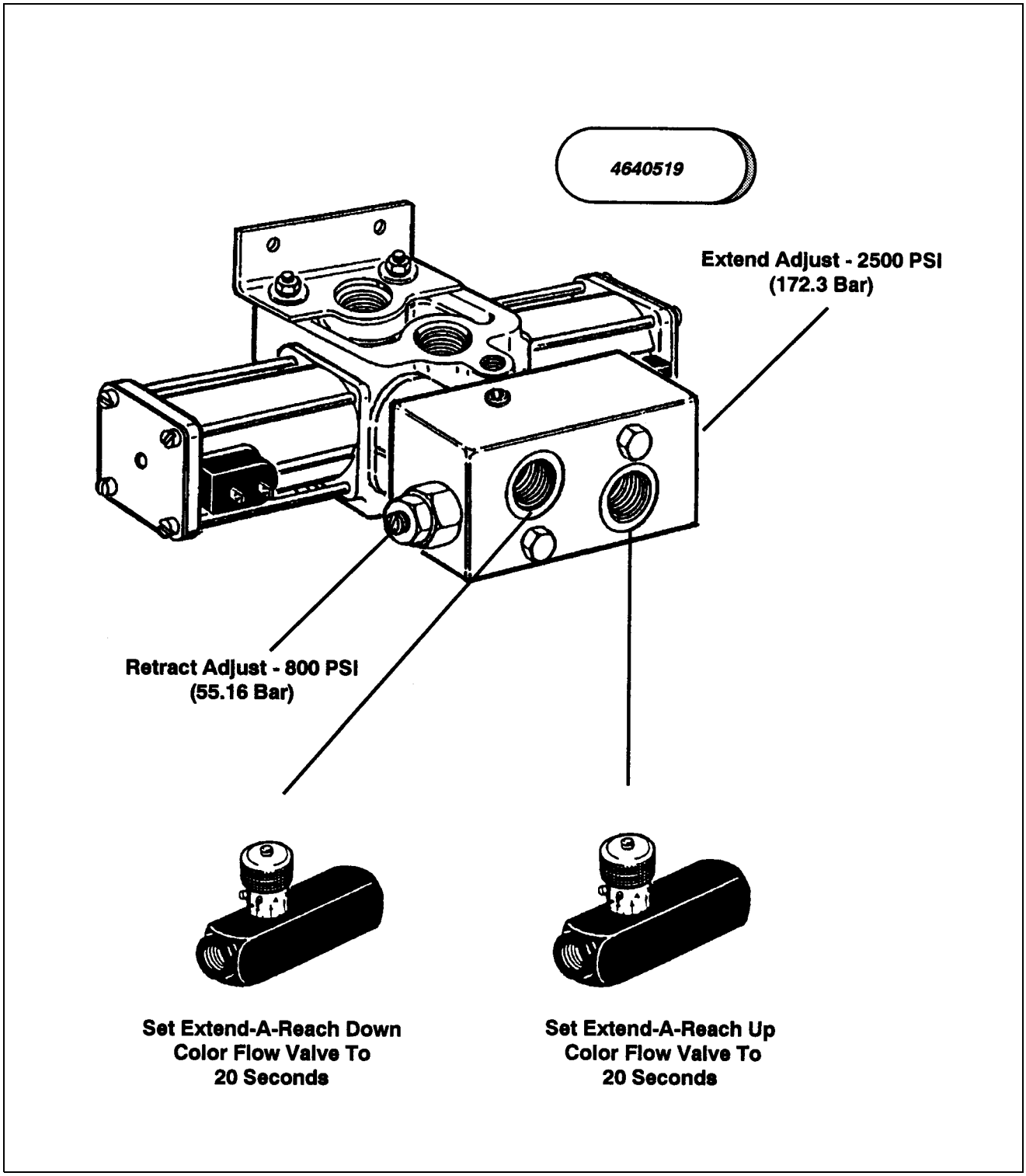

Figure 2-30. Extend-A-Reach Valve Pressure and Speed Settings Model 40+6.

https://truckmanualshub.com/

2.22 RACINE PROPORTIONAL AIR GAP ADJUSTMENT.

NOTE: *The assembly in Figure 2-31 includes select fit parts in order to maintain a proper air gap. These parts must remain as an assembly or if disassembled, controlled to insure that these component parts are not intermixed with similar parts.*

NOTE: *In the event that parts do become exchanged or you suspect the air gap to be incorrect (Too much air gap will result in loss of auxiliary power operation and less than full spool shift; too little air will result in erratic operation.), it may be checked and adjusted using the procedure below.*

a. *With all parts assembled as shown in Figure 2-31, use a depth mike or other measuring instrument to determine the distance from the end of the guide tube to the exposed end of the plunger. Record this dimension.

b. Remove plunger and poppet. With poppet removed, install plunger and check distance from the end of the guide tube to the exposed end of the plunger.

c. Subtract the first dimension from the second dimension, this will be the amount of air gap.

d. Correct air gap is.018"-.020" with.018" preferred. If air gap is excessive, it may be reduced by using a brass drift and hammer. Lightly tap end of plunger with all parts assembled. Recheck air gap.

e. If air gap is less than recommended, replace nose cone assembly.

* All parts must be clean and properly assembled before making these checks.

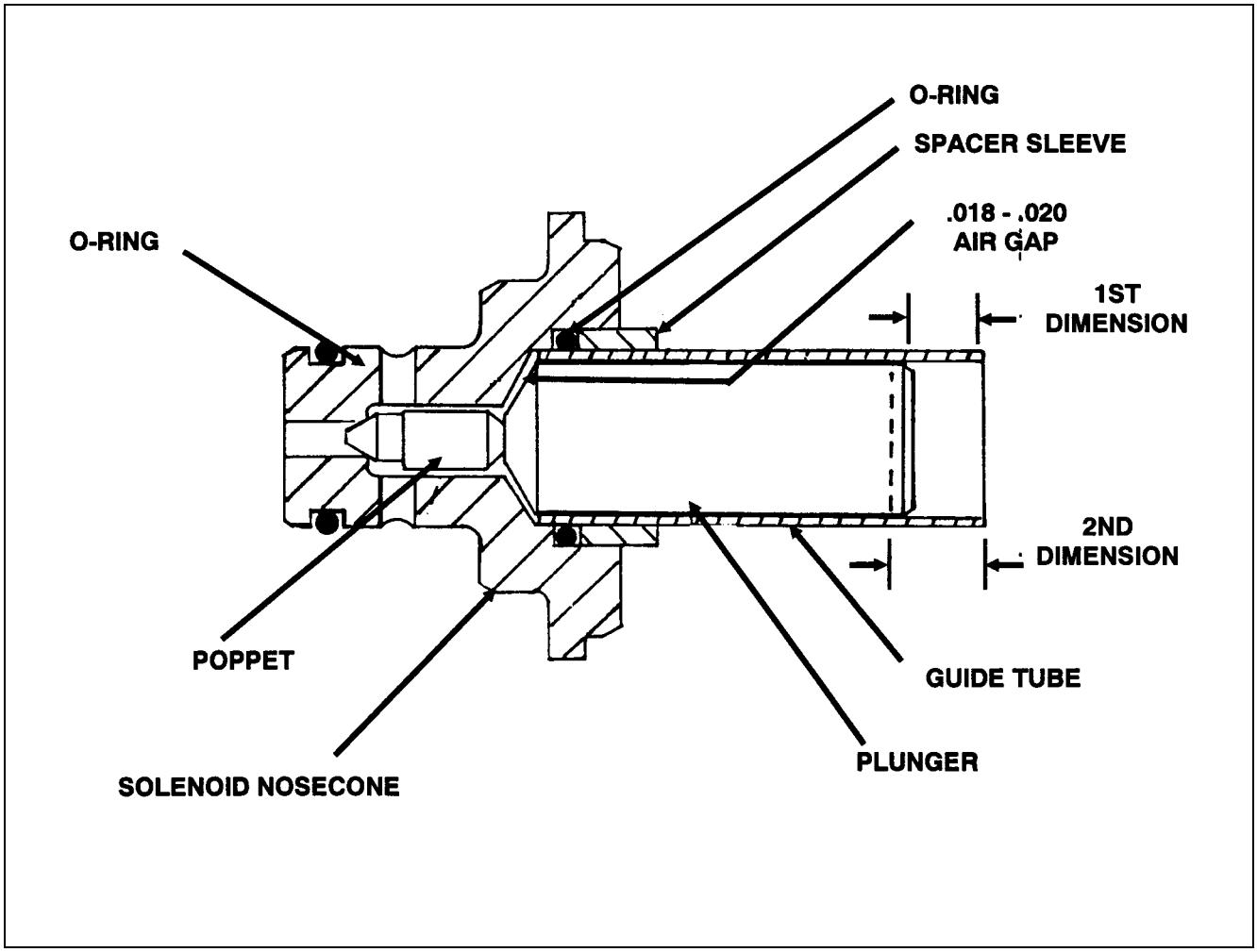

Figure 2-31. Racine Proportional Air Gap Adjustment, Machines Built Prior To Mid 1987.

https://truckmanualshub.com/

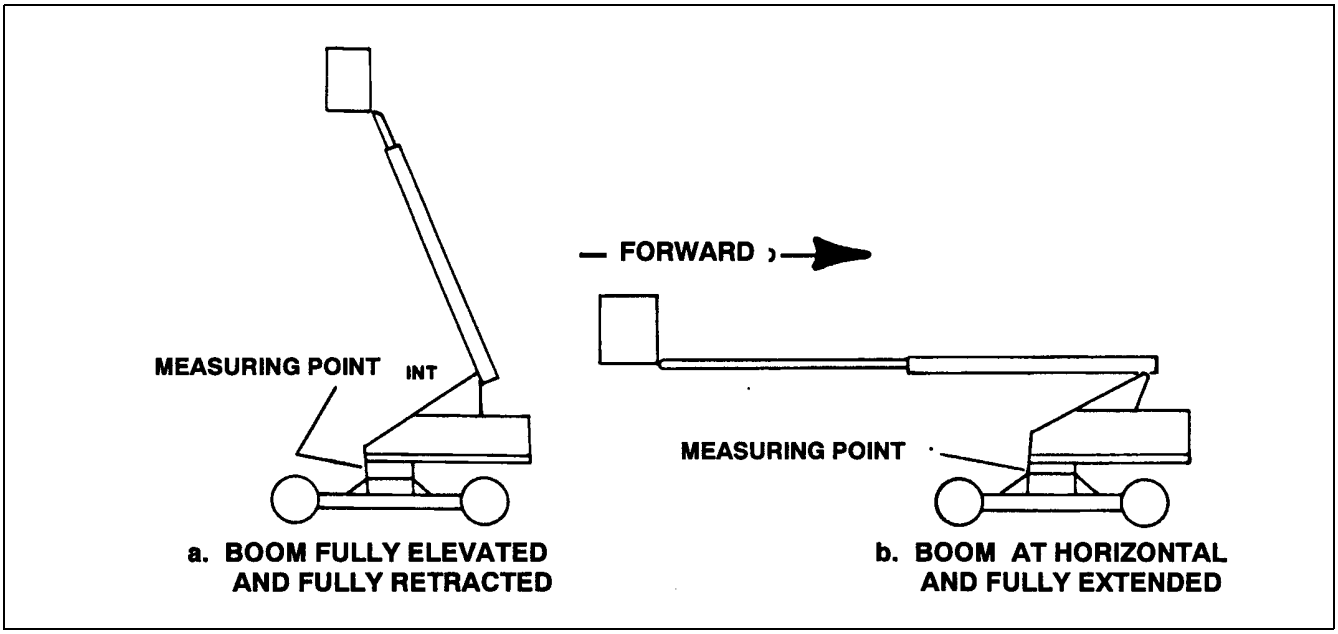

Figure 2-32. Swing Bearing Tolerance Boom Placement.

2.23 SWING BEARING.

Turntable Bearing Mounting Bolt Condition Check.

NOTE: *This check is designed to replace the existing bearing bolt torque checks on JLG Lifts in service. This check must be performed after the first 50 hours of machine operation and every 600 hours of machine operation thereafter. If during this check any bolts are found to be missing or loose, replace missing or loose bolts with new bolts and torque to the value specified in the torque chart, after lubricating the bolt threads with loctite #271. After replacing and retorquing bolt or bolts recheck all existing bolts for looseness.*

1. Check the frame to bearing attach bolts as follows:
   a. Fully elevate the retracted boom.
   b. At the position indicated on "a" of Figure 2-32, try to insert a.0015 feeler gauge between the bolt and hardened washer at the arrow indicated position.
   c. Ensure that the.0015” feeler gauge will not penetrate under the bolt head to the bolt shank.
   d. Swing the turntable 90 degrees, and check some selected bolts at the new position.
   e. Continue rotating the turntable at 90 degrees intervals until a sampling of bolts have been checked in all quadrants
2. Check the turntable to bearing Attach bolts as follows:
   a. Fully extend boom at horizontal.
   b. At the position indicated on "b" of Figure 2-32, try to insert the.0015” feeler gauge between the bolt head and hardened washer at the arrow indicated position.

At the position indicated on Figure 2-33, try and insert the.0015” feeler gauge between the bolt head and hardened washer at the arrow indicated position.

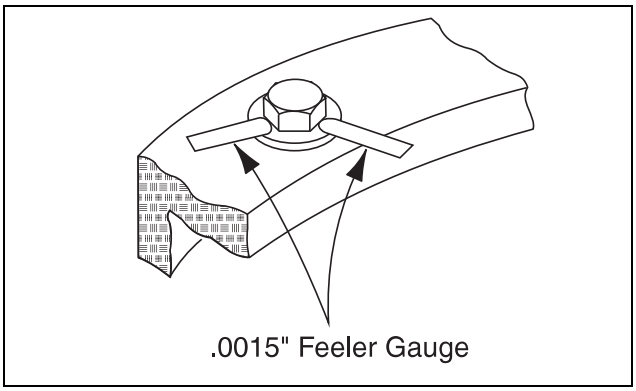

Figure 2-33. Swing Bolt Feeler Gauge Check.

https://truckmanualshub.com/

Wear Tolerance.

1. From the underside of the machine, at rear center, with the boom fully elevated and fully retracted (See Figure 2-32a.), using a magnetic base dial indicator, measure and record the distance between the swing bearing and frame. (See figure 2-34.)
2. At the same point, with the boom at horizontal and fully extended (See Figure 2-32b.), using a magnetic base dial indicator, measure and record the distance between the swing bearing and frame. (See Figure 2-34.)
3. If a difference greater than.057" (1.45 mm) is determined, the swing bearing should be replaced.
4. If a difference less than.057" (1.45 mm) is determined, and any of the following conditions exist, the bearing should be removed, disassembled, and inspected for the following:
   - **a.** Metal particles in the grease.
   - **b.** Increased drive power required.
   - **c.** Noise.
   - **d.** Rough rotation.
5. If bearing inspection shows no defects, reassemble and return to service.

IMPORTANT

THE SWING BEARING IS ONE OF THE MOST CRITICAL POINTS ON AN AERIAL LIFT. IT IS HERE THAT THE STRESSES OF LIFTING ARE CONCENTRATED, AT THE CENTER OF ROTATION. BECAUSE OF THIS, PROPER MAINTENANCE OF THE SWING BEARING BOLTS IS A MUST FOR SAFE OPERATION.

Replacement and Devcon Application Procedures on Machines Built Prior to Mid of 1991.

1. Removal.
   - **a.** From Ground Control station, operate the boom adequately to provide access to frame opening or, if equipped, to rotary coupling.

WARNING

NEVER WORK BENEATH THE BOOM WITHOUT FIRST ENGAGING BOOM SAFETY PROP OR PROVIDING ADEQUATE OVERHEAD SLING SUPPORT AND/OR BLOCKING.

   - **b.** Attach an adequate support sling to the boom and draw all slack from sling. Prop or block the boom if feasible.
   - **c.** From underside of the machine frame, remove bolts and lockwashers which attach the retaining yoke of the rotary coupling to the coupling housing.

IMPORTANT

HYDRAULIC LINES AND PORTS SHOULD BE CAPPED IMMEDIATELY AFTER DISCONNECTING LINES TO AVOID THE ENTRY OF CONTAMINANTS INTO THE SYSTEM.

   - **d.** Tag and disconnect the hydraulic lines from the fittings on the top and sides of the rotary coupling. Use a suitable container to retain any residual hydraulic fluid. Immediately cap lines and ports.
   - **e.** If machine is not equipped with a rotary coupling, tag and disconnect hydraulic lines running through center of turntable and frame. Use a suitable container to retain any residual hydraulic fluid. Immediately cap lines and ports.
   - **f.** Attach suitable overhead lifting equipment to the base of the turntable weldment.
   - **g.** Use a suitable tool to scribe a line on the inner race of the swing bearing and on the underside of the turntable. This will aid in aligning the bearing upon installation. Remove the bolts, nuts and washers which attach the turntable to the bearing inner race. Discard the nuts and bolts.
   - **h.** Use the lifting equipment to carefully lift the complete turntable assembly from the bearing. Ensure that no damage occurs to the turntable, bearing or frame-mounted components.
   - **i.** Carefully place the turntable on a suitably supported trestle.
   - **j.** Use a suitable tool to scribe a line on the outer race of the swing bearing and the frame. This line will aid in aligning the bearing upon installation. Remove the bolts and washers which attach the outer race of the bearing to the frame. Discard the bolts. Use suitable lifting equipment to remove the bearing from the frame, move the bearing to a clean, suitably supported work area.

https://truckmanualshub.com/

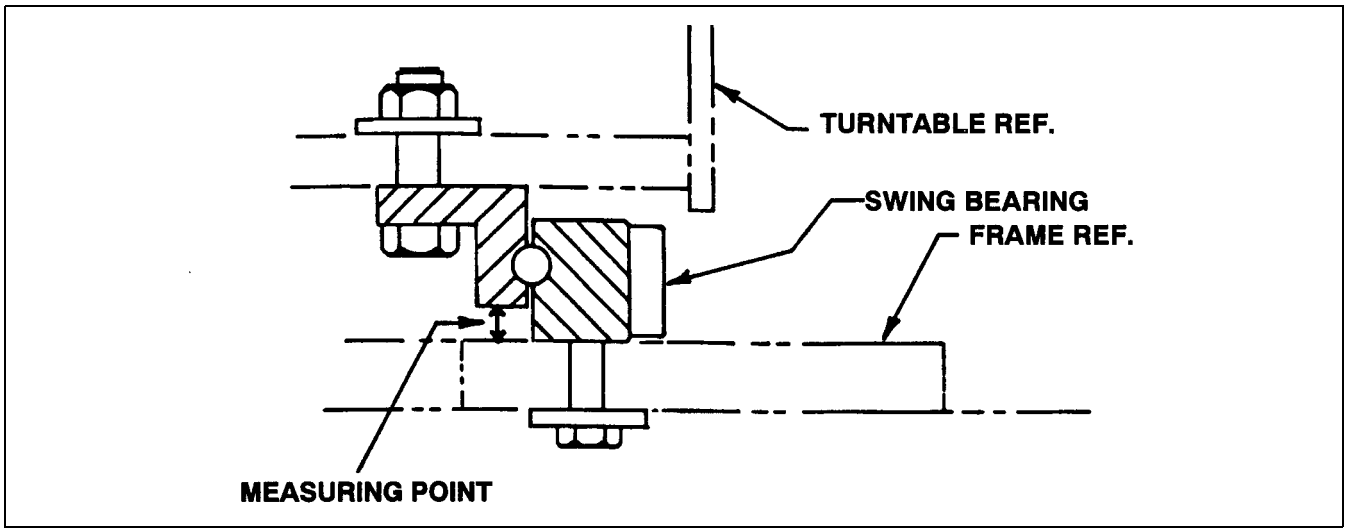

Figure 2-34. Swing Bearing Tolerance Measuring Point.

Installation.

NOTE: *A thru M only apply to machines built prior to mid of 1991.*

NOTE: *Manufacturing tolerances of frames and turntables are inspected prior to the factory installation of swing bearings to determine the need for use of Devcon filler. When servicing machine swing bearing, apply Devcon filler only to those machines having Devcon previously applied at the factory. If new turntable or frame is being installed, contact manufacturer for procedures to determine the need for Devcon application.*

a. Use suitable standard tools and equipment to carefully remove any hardened epoxy residue from the bearing mounting area of frame and turntable.

b. Apply a layer of Devcon (or equivalent) filler approximately 0.125 inches (0.318 cm) thick on the bearing mounting plate on the frame.

c. Use suitable lifting equipment to carefully lower the swing bearing into position on the frame. Ensure that the scribed line of the outer race of the bearing aligns with the scribed mark on the frame. If a new swing bearing is used, ensure that the filler plug fitting is at 90 degrees from the fore and aft centerline of the frame.

d. Ensure that all frame and bearing attachment holes are aligned, and install four diametrically opposed bolts or clamps to secure the bearing to the frame. Tighten the bolts or clamps evenly in a diametrically opposed pattern to a torque of 20 ft. lbs. (2.77 kgm).

e. Allow Devcon filler to cure at room temperature (approximately 70 degrees F., 21 degrees C.) for 10 to 16 hours.

f. After the appropriate interval, release the clamps or remove the bolts. Use a suitable lifting device to carefully remove the bearing from the frame.

g. Carefully remove any excess filler from the frame mounting area, from the bearing attachment holes, and from between the gear teeth.

⚠ WARNING

ENSURE THAT TURNTABLE IS ADEQUATELY SUPPORTED WHILE APPLYING DEVCON AND WHILE INSTALLING THE BEARING. EXTREME CARE MUST BE TAKEN DURING THE FOLLOWING STEPS TO AVOID SERIOUS OR FATAL INJURY TO PERSONNEL.

h. Apply a layer of Devcon (or equivalent) filler approximately 0.125 inches (0.318 cm) thick to the underside of the bearing mounting area of the turntable base plate.

i. Use suitable hydraulic jacks to carefully raise the swing bearing to the underside of the turntable mounting plate. Ensure that the scribed line of the inner race of the bearing aligns with the scribed mark on the turntable (if a new swing bearing is used, ensure that the filler plug fitting is at 90 degrees from the fore and aft centerline of the turntable).

j. Ensure that all turntable and bearing attachment holes are aligned, and install four diametrically opposed clamps or bolts and nuts to secure the

https://truckmanualshub.com/

bearing to the turntable. Tighten the nuts and bolts or clamp evenly in a diametrical pattern to a torque of 20 ft. lbs. (2.78 kgm).

k. Allow Devcon filler to cure at room temperature (approximately 70 degrees F., 21 degrees C.) for 10 to 16 hours.

l. After the appropriate time interval, place a suitable hydraulic jack under the bearing and release the clamps or remove the nuts and bolts, use the hydraulic jack to carefully remove the bearing from the turntable.

m. Carefully remove excess filler from the turntable mounting area, from the bearing attachment holes and from between gear teeth.

n. Position the bearing on the machine frame in the same position as noted in step (c) above.

⚠ CAUTION

JLG INDUSTRIES RECOMMENDS THAT ALL REMOVED BEARING NUTS AND BOLTS BE DISCARDED AND REPLACED WITH NEW NUTS AND BOLTS. SINCE THE SWING BEARING IS THE ONLY STRUCTURAL LINK BETWEEN THE FRAME AND TURNTABLE, IT IS IMPERATIVE THAT SUCH REPLACEMENT HARDWARE MEETS JLG SPECIFICATIONS. USE OF GENUINE JLG HARDWARE IS HIGHLY RECOMMENDED.

o. Spray a light coat of Safety Solvent 13 to the new bearing bolts. Then apply a light coating of Loctite #271 to the new bearing bolts, and loosely install the bolts and washers through the frame and outer race of bearing.

⚠ CAUTION

IF COMPRESSED AIR OR ELECTRICALLY OPERATED IMPACT WRENCH IS USED FOR TIGHTENING THE BEARING ATTACHMENT BOLTS, THE TORQUE SETTING ACCURACY OF THE TOOL SHOULD BE CHECKED PRIOR TO USE.

p. Following the Torque Sequence diagram shown in Figure 2-35, tighten the bolts an torque bolts to 80 ft. lbs. (109 NM) wet.

q. remove the lifting equipment from the bearing.r.

r. Use suitable lifting equipment to carefully position the turntable assembly above the machine frame.

s. Carefully lower the turntable onto the swing bearing, ensuring that the turntable and bearing align as noted in step (i) above.

⚠ CAUTION

IF COMPRESSED AIR OR ELECTRICALLY OPERATED IMPACT WRENCH IS USED FOR TIGHTENING THE BEARING ATTACHMENT BOLTS, THE TORQUE SETTING ACCURACY OF THE TOOL SHOULD BE CHECKED PRIOR TO USE.

t. Spray a light coat of Safety Solvent 13 to the new bearing bolts. Then apply a light coating of Loctite #271 to the new bearing bolts, and install the bolts, washers and nuts through the turntable and inner race of the bearing.

u. Following the Torque Sequence diagram shown in Figure 2-35, tighten the bolts an torque bolts to 170 ft. lbs. (231NM) wet.

v. Remove the lifting equipment.

w. Install the rotary coupling retaining yoke, apply a light coating of Loctite Sealant #TL277-41 to the attaching bolts and secure the yoke to the rotary coupling with the bolts and lockwasher.

x. Connect the hydraulic lines to the rotary coupling as tagged prior to removal.

y. At ground control station, use boom lift control to lower boom to stowed position0.

z. Using all applicable safety precautions, activate the hydraulic system and functionally check the swing system for proper and safe operation.

Swing Bearing Torque Values.

1. Outer Race - 80 ft. lbs. (109 NM) wet.
2. Inner Race - 170 ft. lbs. (231 NM) wet.
3. Swing Bearing Torquing Sequence, see Figure 2-35.

⚠ WARNING

RETORQUE THE INNER AND OUTER SWING BEARING BOLTS AFTER FIRST 200 HOURS OF OPERATION, AND EVERY 500 HOURS THEREAFTER.

https://truckmanualshub.com/

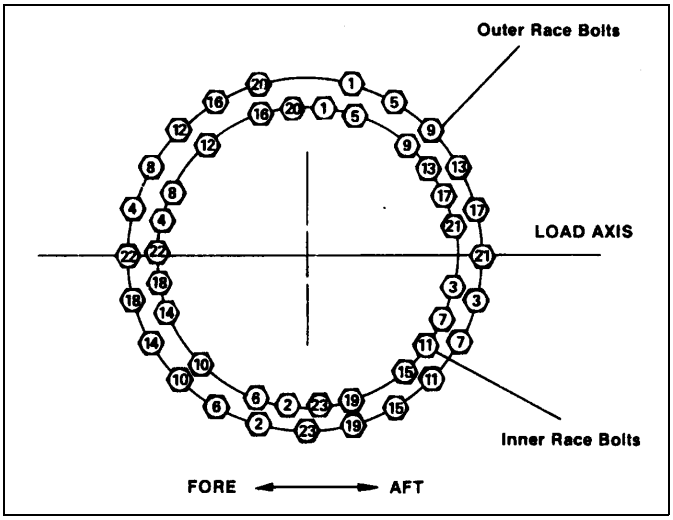

Figure 2-35. Swing Bearing Torquing Sequence.

2.24 TORQUE HUB, 2W/D. (SEE FIGURE 2-36.)

Disassembly.

1. Position hub over suitable container and remove drain plugs 7 from unit. Allow oil to completely drain, then replace drain plugs.
2. Remove eight bolts 40 and four shoulder bolts 41 securing cover assembly to hub 8. Remove cover assembly and discard o-ring seal 29.
3. Lift carrier assembly and top thrust washer 31 from hub. Thrust washer may stick inside cover.
4. Pry ring gear 30 loose from hub and remove it. Remove o-ring seal 29 from hub counterbore and discard it.
5. Remove input gear 20 and thrust washers 19,21 from input shaft assembly and remove input shaft assembly from hub.
6. Lift internal gear 13 and thrust washer 18 from hub. Thrust washer may stick to bottom of carrier.
7. Remove retaining ring 12 from spindle 2 and lift hub from spindle.

⚠ CAUTION

EYE PROTECTION SHOULD BE WORN DURING RETAINING RING REMOVAL.

8. Remove inside bearing cone 10 and bearing shim 11.
9. If necessary, pry seal 3 out of hub using screwdriver or pry bar. With seal removed, outside bearing cone 4 can be removed.
10. If necessary, remove inner and outer bearing cones 5, 9 using a suitable slide hammer puller.

⚠ CAUTION

WHEN REBUILDING TORQUE HUB, REMOVE AND REPLACE ALL O-RINGS AND RETAINING RINGS.

Cleaning and Inspection.

1. Thoroughly clean all parts in an approved cleaning solvent.
2. Inspect bearing cups and cones for damage, pitting, corrosion, or excessive wear. If necessary, replace bearings as a complete set ensuring that they remain covered until use.
3. Inspect bearing mounting surfaces on spindle, hub, input shaft and carrier. Replace components as necessary.
4. Inspect all geared components for chipped or broken teeth and for excessive or uneven wear patterns.
5. Inspect carrier for damage, especially in anti-roll pin and planet shaft hole areas.
6. Inspect all planet shafts for scoring or other damage.
7. Inspect all threaded components for damage including stretching, thread deformation, or twisting.
8. Inspect seal mounting area in hub for burrs or sharp edges. Dress applicable surfaces or replace components as necessary.
9. Inspect cover for cracks or other damage, and o-ring sealing area for burrs or sharp edges. Dress applicable surfaces or replace cover as necessary.

https://truckmanualshub.com/

1. Coupling
2. Spindle
3. Seal
4. Bearing Cone
5. Bearing Cup
6. Wheel Bolt
7. Pipe Plug
8. Hub
9. Bearing Cup
10. Bearing Cone
11. Spacer
12. Retaining Ring
13. Internal Gear
14. Shaft
15. Spacer
16. Spring
17. Retaining Ring
18. Thrust Washer
19. Spacer
20. Input Gear
21. Spacer
22. Carrier
23. Shaft
24. Roll Pin
25. Thrust Washer
26. Needle Roller
27. Spacer
28. Cluster Gear
29. O-Ring
30. Ring Gear
31. Thruat Washer
32. Cover
33. O-Ring
34. Cover Cap
35. O-Ring
36. Disconnect Rod
37. Disconnect Cap
38. Bolt
39. Pipe Plug
40. Bolt
41. Shoulder Bolt
42. Flatwasher

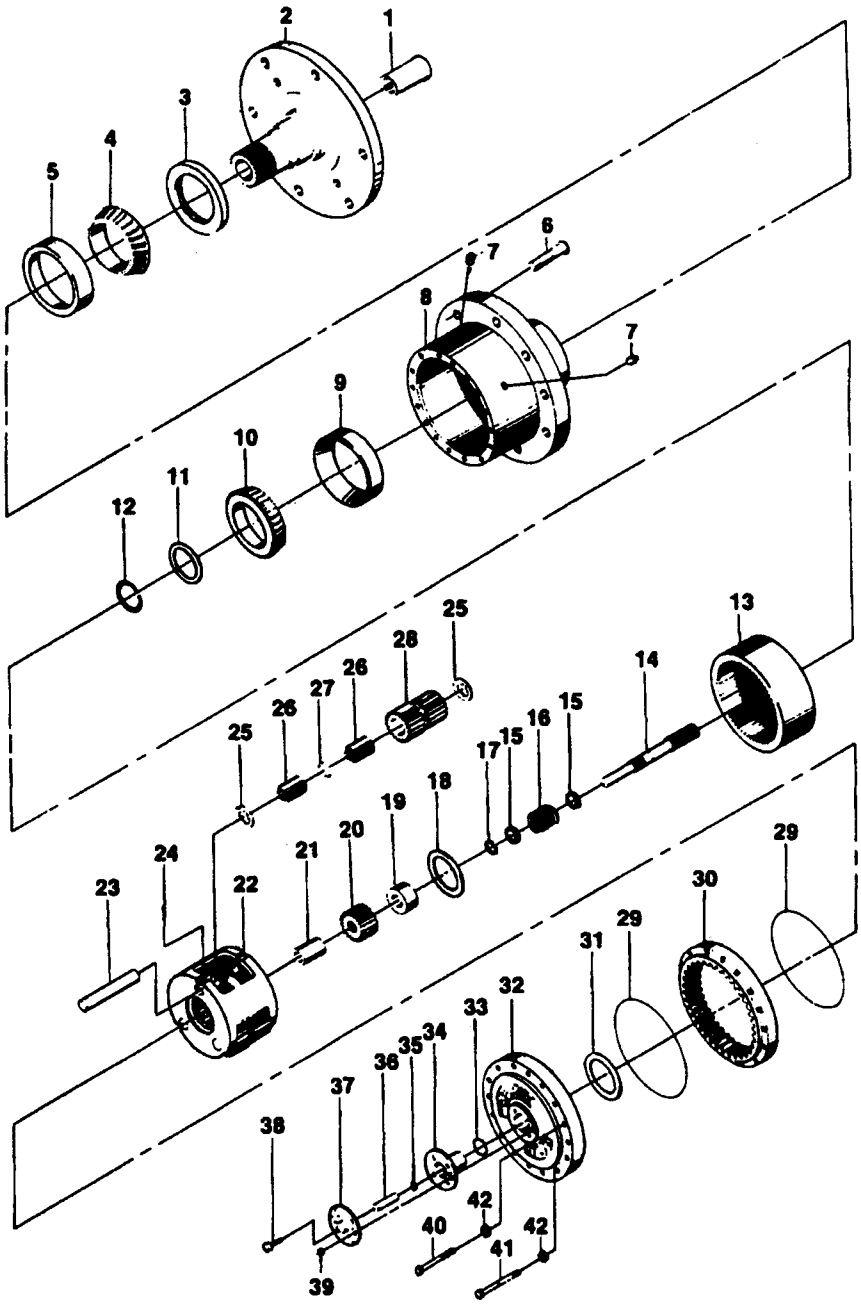

Figure 2-36. Torque Hub Assembly, 2/WD.

https://truckmanualshub.com/

Repair.

1. Cover Assembly.
   a. Remove two bolts (38) securing disconnect cap (37) to cover (32) and remove cap.
   b. Remove two bolts (38) securing cover cap (34) to cover and remove cap.
   c. Remove disconnect rod (36) from cap and remove o-rings (33,35) from cover cap. Discard o-rings.
   d. If necessary, remove pipe plug (39) from cover.
   e. Clean and inspect parts in accordance with paragraph b. Replace parts as necessary.
   f. If removed, screw pipe into cover.
   g. Slip o-ring (33) over cover cap and against face.
   h. Place o-ring (35) into cover cap internal groove. Disconnect rod may be used to push o-ring into groove.
   i. Place cover cap into cover with large hole located over pipe plug. Secure cover cap to cover with two bolts.Torque bolts to 70-80 in. lbs. (7.9-9.0 NM).
   j. Place disconnect cap over cover cap with nipple facing out and secure with two bolts. Torque bolts to 70-80 in. lbs. (7.9-9.0 NM).
   k. Turn cover over and push disconnect rod into cover cap. Rod will be held in place by friction from o-ring.
2. Carrier Assembly.
   a. Drive anti-roll pin (24) into planet (23) using a suitable punch.
   b. Using a suitable press, press planet shaft from carrier (22). After planet shaft is removed, drive anti-roll pin from shaft.
   c. Remove cluster gear (28) and thrust washers (25) from carriers.
   d. Remove sixteen needle rollers (26) from cluster gear bore.
   e. Remove spacer (27) from cluster gear bore and remove second set of sixteen needle rollers (26).
   f. Repeat steps (a) through (e) for remaining two cluster gears.
   g. Clean and inspect all parts in accordance with paragraph b. Replace parts as necessary.
   h. Apply a coat of grease or petroleum jelly to cluster gear bore.
   i. Place sixteen needle rollers into cluster gear bore.
   j. Place spacer into opposite side of cluster gear and against needle rollers.
   k. Place second set of sixteen needle rollers into cluster gear.
   l. Apply grease or petroleum jelly to tang side of two thrust washers. Place thrust washers against bosses in carrier with washer tang fitting into slot in carrier outside diameter.
   m. While keeping thrust washers in place, slide cluster gear into carrier with larger gear on side with small pin hole.
   n. Line up cluster gear and thrust washers with hole in carrier and slide planet shaft through. Ensure chamfered side of hole in planet shaft is lined up with pin hole in carrier.
   o. Drive anti-roll pin flush into carrier hole, locking planet shaft into place.
   p. Repeat steps h through o for remaining two cluster gears.
3. Input Shaft Assembly.

⚠ CAUTION

EYE PROTECTION SHOULD BE WORN DURING RETAINING RING REMOVAL AND INSTALLATION.

   a. Carefully remove retaining ring 17 from input shaft 14 and discard retaining ring.
   b. Remove two spacers 17 and spring 16 from input shaft.
   c. Clean and inspect all parts in accordance with paragraph b. Replace parts as necessary.
   d. Place washer 15, spring 16, and washer 15, in that order, onto input shaft.
   e. Install retaining ring into input shaft groove to secure spacers and spring to shaft.

Assembly.

1. Using a suitable press, press new bearing cups 5,9, with large inside diameters facing out, into hub 8 counterbores.
2. Place bearing cone 4 into bearing cup 5 in small end of hub.
3. Press new seal 3 into hub counterbore with flat metal side facing in. Use a flat object to ensure that seal is pressed evenly and is flush with hub face.
4. Lower hub onto spindle 2 with large open end up.
5. Place bearing cone 10 over end of spindle and into bearing cup 9.
6. Place bearing shim 11 over end of spindle and against bearing cone.

https://truckmanualshub.com/

⚠ CAUTION

EYE PROTECTION SHOULD BE WORN DURING RETAINING RING INSTALLATION.

7. Install new retaining ring 12 completely into spindle groove and against bearing shim. Ensure retaining ring is entirely in groove.
8. Place internal gear 13 onto end of spindle.
9. Place input shaft assembly into spindle bore with unsplined end facing out.
10. Place narrow thrust washer 19 over input shaft 14 with counterbore side facing spindle.
11. Place o-ring 29 into hub counterbore. Use petroleum or grease to hold o-ring in place. Slight stretching of o-ring may be necessary to insure proper seating.
12. Place carrier assembly on a flat surface with large gears up and positioned as shown in Figure 2-26. Find punch marked tooth on each large gear and locate at 12 o'clock (straight up) from each planet pin. Marked tooth will be located just under carrier on upper two gears.
13. With shoulder side of ring gear 30 facing down, place ring gear over (into mesh with) large gears. Ensure punch marks remain in correct location during ring gear installation.
14. Install input gear 20 into carrier, meshing with small diameter cluster gears 28. Counterbore in bore of input gear must be to outside of carrier assembly.
15. Turn over carrier assembly and ring gear while keeping gears in mesh. Place thrust washer 18 into carrier counterbore. Use petroleum jelly or grease to hold washer in place.
16. While holding ring gear, input gear, and cluster gears in mesh, place small side of cluster gears into mesh with internal gear. On ring gear, locate hole marked 'X' over one of counterbored holes in hub. Mark counterbored holes on outside diameter for later use.

NOTE: *If gears do not mesh easily or carrier assembly does not rotate freely, then remove carrier and ring gear and check cluster gear timing.*

17. Slide thrust spacer 21 over end of input shaft.
18. Place thrust washer 31 into carrier counterbore.
19. Place o-ring 29 into cover assembly counterbore. Use petroleum jelly or grease to hold o-ring in place.
20. Pace cover assembly over ring gear with oil level check plug in cover located approximately 90 degrees from oil fill plug in hub.
21. Locate four shoulder bolts 41 and flat washers 42 90 degrees apart into counterbored holes in hub marked in step 16. Torque shoulder bolts to 23-27 ft. lbs. (31-36 NM).
22. Install bolts 41 in remaining holes. Torque bolts to 23-27 ft. lbs. (31-36 NM).
23. Place coupling 1 into spindle and onto input shaft.
24. Fill hub one-half full of EPGL 90 lubricant before operation.

2.25 TORQUE HUB 4WD. (SEE FIGURE 2-37.)

Disassembly.

1. Position hub over suitable container and remove drain plugs 12 from unit. Allow oil to completely drain, then replace drain plugs.
2. Remove eight bolts 40 and four shoulder bolts 41 securing cover assembly to hub 24. Remove cover assembly and discard o-ring seal 23.
3. Remove top thrust washer 39 from hub. Thrust washer may stick inside cover.
4. Remove top thrust spacer 38 from input shaft subassembly.
5. Pry ring gear 22 loose from hub and remove it.
6. Lift carrier assembly 15 from hub.
7. Remove input gear 36 and thrust spacer 37 from input shaft assembly and remove input shaft assembly from hub.
8. Remove input shaft 32 and thrustwasher 16 from hub. Thrust washer may stick to bottom of carrier.
9. Remove internal gear 15 from hub.
10. Using a screwdriver or chisel and hammer straighten out the tang on lockwasher 9 which has been bent into the notch in locknut 10.

⚠ CAUTION

EYE PROTECTION SHOULD BE WORN DURING RETAINING RING REMOVAL.

11. Using an N-13 locknut wrench (tool #T-141863), loosen locknut 10. Remove the locknut 10 from spindle/brake and lockwasher 9 and discard.
12. Remove the tongued washer 8 from spindle/brake 1.
13. Remove bearing cone 6 from hub 7.
14. Remove hub 7 from spindle/brake 1.

https://truckmanualshub.com/

15. Using a slide hammer, remove seal 2 from the small end of hub 7. Discard the seal.
16. Remove bearing cone 4 from spindle/brake 1.
17. Using a soft punch and hammer, remove bearing cup 5 from the deep end of hub 7.

NOTE: *Be very careful not to strike the counterbore of the hub where the cup is located when using the punch.*

18. Using a soft punch and hammer, remove bearing cup 3 from the shallow end of hub 7.

NOTE: *This cup can be reach by putting the punch into the small access hole in the bottom of the hub's deep end.*

⚠ IMPORTANT

WHEN REBUILDING TORQUE HUB, REMOVE AND REPLACE ALL O-RINGS AND RETAINING RINGS.

Cleaning and Inspection.

1. Thoroughly clean all parts in an approved cleaning solvent.
2. Inspect bearing cups and cones for damage, pitting, corrosion, or excessive wear. If necessary, replace bearings as a complete set ensuring that they remain covered until use.
3. Inspect bearing mounting surfaces on spindle, hub, input shaft and carrier. Replace components as necessary.
4. Inspect all geared components for chipped or broken teeth and for excessive or uneven wear patterns.
5. Inspect carrier for damage, especially in anti-roll pin and planet shaft hole areas.
6. Inspect all planet shafts for scoring or other damage.
7. Inspect all threaded components for damage including stretching, thread deformation, or twisting.
8. Inspect seal mounting area in hub for burrs or sharp edges. Dress applicable surfaces or replace components as necessary.
9. Inspect cover for cracks or other damage, and o-ring sealing area for burrs or sharp edges. Dress applicable surfaces or replace cover as necessary.

https://truckmanualshub.com/

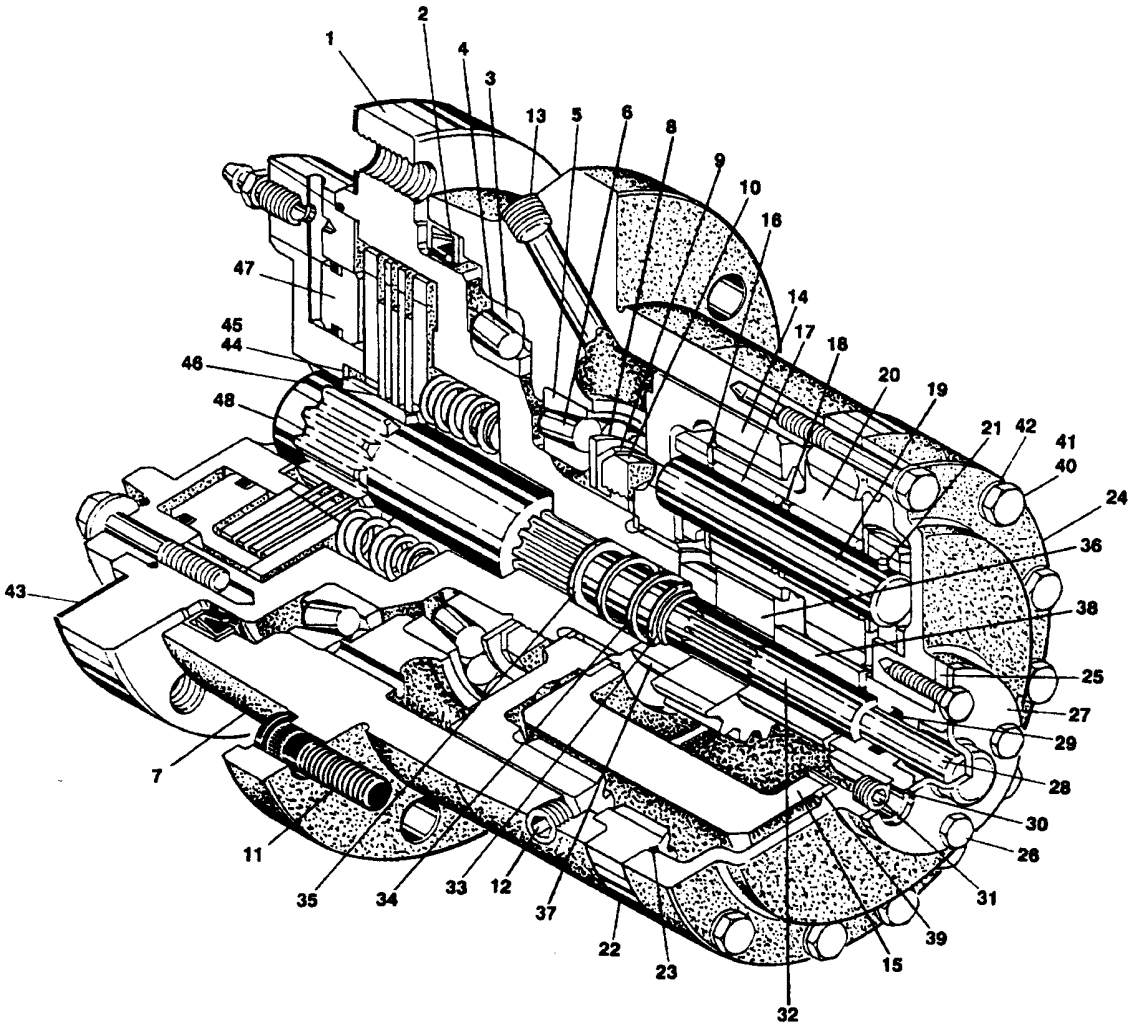

1. Brake/Spindle Assembly	16. Washer, Thrust	31. Plug, Pipe
2. Seal	17. Roller, Needle	32. Shaft, Input
3. Cup, Bearing	18. Spacer	33. Ring, Retaining
4. Cone, Bearing	19. Shaft, Planet	34. Spring
5. Cup, Bearing	20. Gear, Cluster	35. Spacer
6. Cone, Bearing	21. Pin, Roll	36. Gear, Input
7. Hub	22. Gear, Ring	37. Spacer, Thrust
8. Washer, Tongued	23. O-Ring	38. Not Used
9. Lockwasher	24. Cover	39. Washer, Thrust
10. Locknut	25. Cap, Cover	40. Bolt
11. Stud	26. Bolt	41. Bolt, Shoulder
12. Plug, Pipe	27. Cap, Disconnect	42. Flatwasher
13. Plug, Magnetic	28. Rod, Disconnect	43. Gasket
14. Gear, Internal	29. O-Ring	44. Washer, Thrust
15. Carrier Assembly	30. O-Ring	45. Ring, Retaining

Figure 2-37. Torque Hub 4/WD.

https://truckmanualshub.com/

Repair.

1. Cover Assembly.
   a. Remove two bolts 26 securing disconnect cap 27 to cover 25 and remove cap.
   b. Remove two bolts 26 securing cover cap 25 to cover and remove cap.
   c. Remove disconnect rod 28 from cap and remove o-rings 29,30 from cover cap. Discard o-rings.
   d. f necessary, remove pipe plug 31 from cover.
   e. Clean and inspect parts in accordance with paragraph," Cleaning and Inspection". Replace parts as necessary.
   f. If removed, screw pipe into cover.
   g. Slip o-ring 30 over cover cap and against face.
   h. Place o-ring 29 into cover cap internal groove. Disconnect rod may be used to push o-ring into groove.
   i. Place cover cap into cover with large hole located over pipe plug. Secure cover cap to cover with two bolts. Torque bolts to 70-80 in. lbs. (7.9-9.0 NM).
   j. Place disconnect cap over cover cap with nipple facing out and secure with two bolts. Torque bolts to 70-80 in. lbs. (7.9-9.0 NM).
   k. Turn cover over and push disconnect rod into cover cap. Rod will be held in place by friction from o-ring.
2. Carrier Assembly.
   a. Drive anti-roll pin 21 into planet 19 using a suitable punch.
   b. Using a suitable press, press planet shaft from carrier 15. After planet shaft is removed, drive anti-roll pin from shaft.
   c. Remove cluster gear 20 and thrust washers 16 from carriers.
   d. Remove sixteen needle rollers 17 from cluster gear bore.
   e. Remove spacer 18 from cluster gear bore and remove second set of sixteen needle rollers 17.
   f. Repeat steps a through e for remaining two cluster gears.
   g. Clean and inspect all parts in accordance with paragraph, "Cleaning and Inspection". Replace parts as necessary.
   h. Apply a coat of grease or petroleum jelly to cluster gear bore.
   i. Place sixteen needle rollers into cluster gear bore.
   j. Place spacer into opposite side of cluster gear and against needle rollers.
   k. Place second set of sixteen needle rollers into cluster gear.
   l. Apply grease or petroleum jelly to tang side of two thrust washers. Place thrust washers against bosses in carrier with washer tang fitting into slot in carrier outside diameter.
   m. While keeping thrust washers in place, slide cluster gear into carrier with larger gear on side with small pin hole.
   n. Line up cluster gear and thrust washers with hole in carrier and slide planet shaft through. Ensure chamfered side of hole in planet shaft is lined up with pin hole in carrier.
   o. Drive anti-roll pin flush into carrier hole, locking planet shaft into place.
   p. Repeat steps h through o for remaining two cluster gears.
3. Input Shaft Assembly.

⚠ CAUTION

EYE PROTECTION SHOULD BE WORN DURING RETAINING RING REMOVAL AND INSTALLATION.

   a. Carefully remove retaining ring 33 from input shaft 32 and discard retaining ring.
   b. Remove two spacers 35 and spring 34 from input shaft.
   c. Clean and inspect all parts in accordance with paragraph, “Cleaning and Inspection”. Replace parts as necessary.
   d. Place washer 35, spring 34, and washer 35, in that order, onto input shaft.
   e. Install retaining ring into input shaft groove to secure spacers and spring to shaft.

Assembly.

1. 1. Using a suitable press, press new bearing cups 3,5, with large inside diameters facing out, into hub 7 counterbores.
2. Place bearing cone 4 into bearing cup 3 in small end of hub.
3. Press new seal 2 into hub counterbore with flat metal side facing in. Use a flat object to ensure that seal is pressed evenly and is flush with hub face.
4. Lower hub onto spindle 1 with large open end up.

https://truckmanualshub.com/

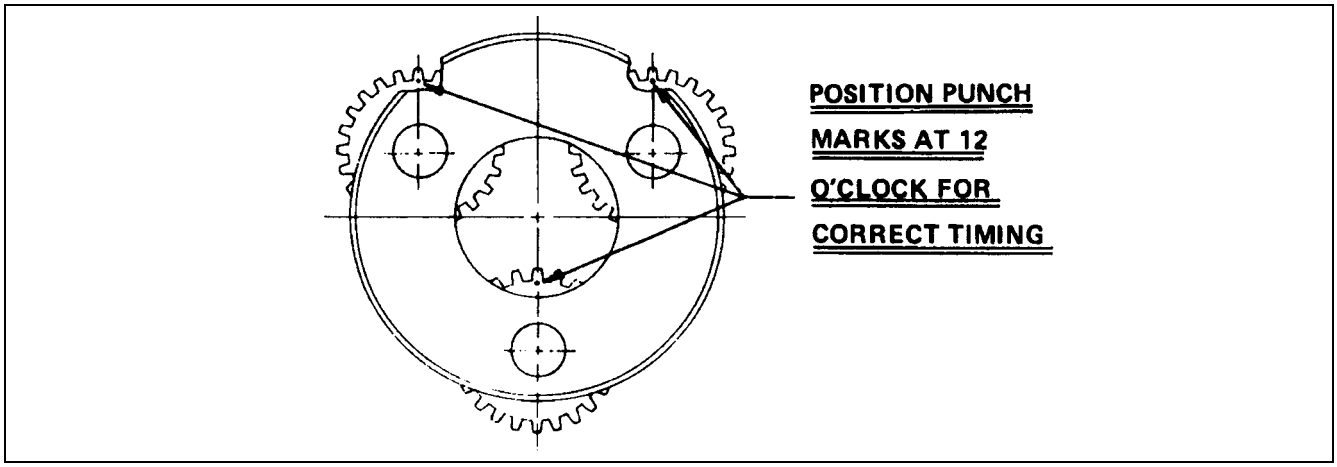

Figure 2-38. Torque Hub Carrier Timing.

5. Place bearing cone 6 over end of spindle and into bearing cup 5.
6. Place tongued washer 8 over end of spindle and against bearing cone.

⚠ CAUTION

EYE PROTECTION SHOULD BE WORN DURING RETAINING RING INSTALLATION.

7. Install new lockwasher 9 on top of tongued washer 8. Insert the tab on lockwasher 9 into the slot in spindle/brake 1.
8. Apply loctite #277 to the second screw thread from the bottom of locknut 10. The bottom of the locknut (10) has a chamfered or sloped edge.
9. Place locknut 10 onto spindle/brake 1. Use an N-13 locknut wrench (tool no. T-141863) to tighten the locknut.
10. Using a torque wrench and the locknut wrench, apply 50 ft.-lbs. (68 NM) of torque to locknut 10, then rotate the hub in both clockwise and counterclockwise directions. Repeat this step two more times.

⚠ IMPORTANT

ONE TANG ON LOCKWASHER 9 MUST LINE UP WITH ONE NOTCH ON LOCKNUT 10. IF ON TANG AND NOTCH ARE NOT ALIGNED, APPLY SUFFICIENT INCREASED TORQUE UNTIL THEY ARE. NEVER LOOSEN THE LOCKNUT.

11. Bend the aligned tang on lockwasher 9 up into the notch on locknut 10.
12. Using a center punch and hammer, stake locknut 10 at four equally spaced points around the locknut and at a distance of 1/8 in. from its inside edge.
23. Place o-ring 23 into cover assembly counterbore.
13. Mark the four shoulder bolt holes on hub 7 so they can be aligned with the shoulder bolt holes in the ring gear and cover in a later step.
14. Place internal gear 14 into hub 7 so that its internal splines mesh with the external splines of the spindle/brake 1. Apply oil to internal gear 14.
15. Place thrust washer 39 onto spindle/brake 1 so that it rests on the bottom of internal gear 14.
16. With large, splined end down, place input shaft assembly 32 into spindle/brake 1.
17. Place thrust spacer 37 onto input shaft 32.
18. With internal splines facing up, place input gear 36 into mesh with input shaft sub-assembly 32.
19. Place carrier assembly 15 on a flat surface with large ends of cluster gears 20 face up and positioned as shown in Figure 2-38. Find punch marked tooth on each large gear and locate at 12 o'clock (straight up) from each planet pin. Marked tooth will be located just under carrier on upper two gears.
20. With shoulder side of ring gear 22 facing down, place ring gear over (into mesh with) large gears 20. Ensure punch marks remain in correct location during ring gear installation.
21. Place carrier assembly 15 and ring gear 22 together into mesh with internal gear 14. Align the shoulder bolt hole in ring gear 22 marked with an "X" over one of the shoulder bolt holes in the hub.

NOTE: *If gears do not mesh easily or carrier assembly does not rotate freely, then remove carrier and ring gear and check cluster gear timing.*

22. Place thrust spacer 38 onto input shaft assembly 32. Install thrust waster 39 into counterbore 15.

    Use petroleum jelly or grease to hold o-ring in place.

https://truckmanualshub.com/

24. Install cover assembly 24 onto ring gear 22. With oil level check plug in cover located approximately 90 degrees from oil fill plug in hub.
25. Locate four shoulder bolts 41 90 degrees apart into counterbored holes in hub marked in step 13. Torque shoulder bolts to 18-25 ft. lbs. (25-34 NM).
26. Install bolts 40 in remaining holes. Torque bolts to 18-25 ft. lbs. (25-34 NM).
27. Place coupling 48 into spindle and onto input shaft.
28. Fill hub one-half full of EPGL 90 lubricant before operation.

2.26 SWING DRIVE BRAKE, MICO (MACHINES BUILT PRIOR TO MAY 1992). (SEE FIGURE 2-39.)

Disassembly.

1. Separate end cover 4 from housing 26 by removing capscrews 1 and lockwashers 2.

⚠ WARNING

END COVER IS UNDER SPRING TENSION OF APPROXIMATELY 1500 POUNDS (681 KG). THE FOUR CAPSCREWS SHOULD BE LOOSENED EVENLY TO RELIEVE THIS FORCE. IF A HYDRAULIC PRESS IS AVAILABLE (3000 LBS (1362 KG) MINIMUM), THE COVER CAN BE HELD IN POSITION WHILE REMOVING THE CAPSCREWS AND LOCKWASHERS.

2. Tap cover with a soft mallet in order to dislodge bearing 7 from cover.
3. Remove o-ring 6, square-ring 5, pipe plug 3, and bleeder screw 13, from end cover.
4. Remove piston 10 from end cover by inserting two 1/4-20 UNC bolts into threaded holes in piston. By turning and pulling, piston can be removed from bore.
5. Remove o-ring 8, and back-up ring 9, o-ring 11 and back-up ring 12 from piston.
6. Remove separators 19 from housing 26.
7. Remove shaft assembly, consisting of shaft 15, discs 16, 20, and friction plates 18, springs 17, snap ring 14 and bearings 7, 24 from housing by pressing or using a soft mallet on male end of shaft.
8. Remove springs 17 from between tabs of discs 16,20.
9. Remove bearing 7,24 from shaft 15 with appropriate bearing puller. The discs and friction discs will then slide off male end of shaft. Remove snap ring and shaft.
10. Remove dowel pins 23, springs 21,22 and o-ring 25 from housing.

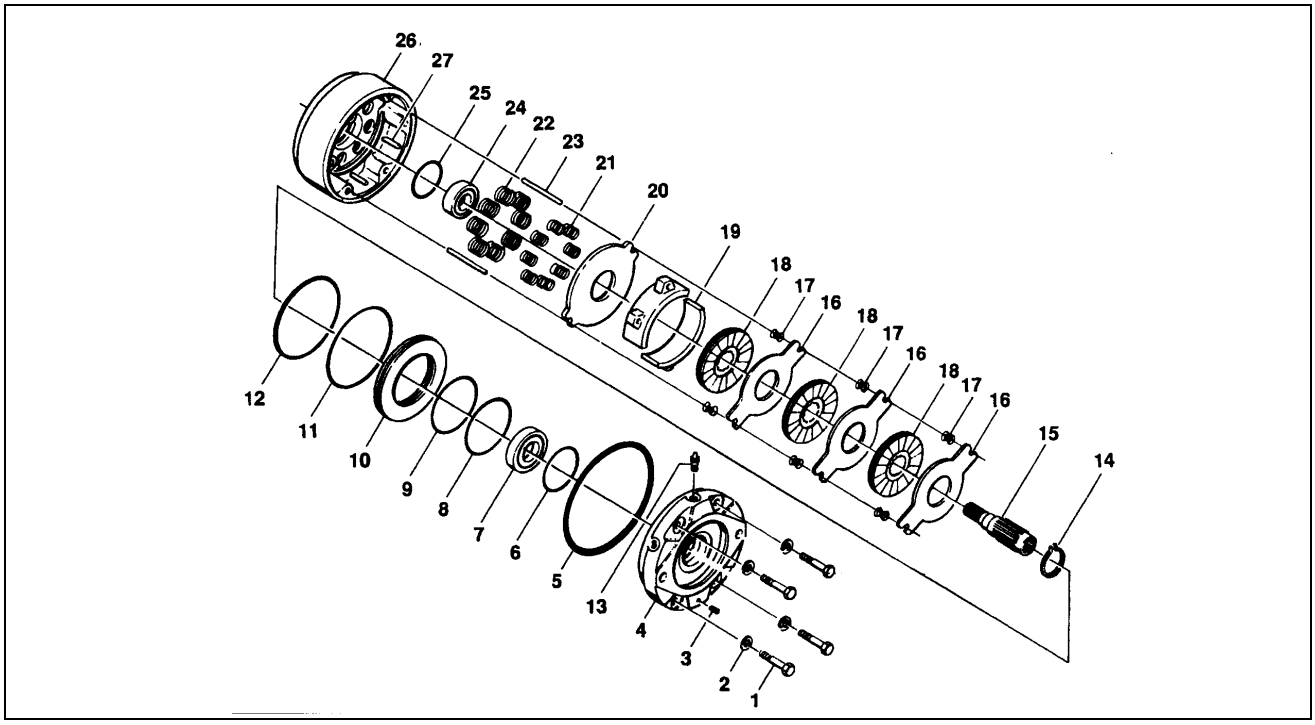

Figure 2-39. Swing Brake Assembly - Mico (Machines Built Prior To May 1992).

https://truckmanualshub.com/

Cleaning and Inspection.

1. Clean all parts thoroughly.
2. Closely inspect all parts for excessive wear, cracks, and chips. Replace parts as necessary.
3. Discard seals and o-rings.
4. Closely inspect bearings and bearing contact surfaces. Replace as necessary.

NOTE: *Bearings may be reused if, after thorough inspection, they are found to be in good condition.*

Assembly.

NOTE: *Lubricate all seals and o-rings with clean hydraulic oil prior to assembly.*

1. Insert new o-ring 25, dowel pins 23, and springs 21,22 in housing 26.
2. Install new bearing 24 in housing and press until bearing bottoms on shoulder in housing.
3. Position new large diameter disc 20 in housing with tabs guided by dowel pins 23 until disc rests on springs 21,22.

IMPORTANT

DISCS 16 & 20 AND FRICTION DISCS 18 SHOULD REMAIN DRY DURING INSTALLATION. NO OIL RESIDUE SHOULD BE ALLOWED TO CONTAMINATE DISC SURFACES.

4. Place a new friction disc 18 on bottom disc 20 centering it as closely as possible. Insert one spring 17 on each dowel pin 23.
5. Add additional new disc 16, and friction disc 18 and springs 17 as required for specific model.
6. Install snap ring 14 on shaft 15. Insert shaft 15 thru friction discs 18 until shaft contacts bearing 24. Press shaft 15 until it shoulders on inner race of bearing 24. A small preload will exist on snap ring 14 at this point.
7. Insert separators 19 over spiral pins in housing 26. Separators will contact top of bottom disc 20 when properly installed.
8. Install new o-ring 8, new back-up ring 9, new o-ring 11 and new back-up ring 12 on piston 10. Insert piston 10 into end cover 4 being careful not to shear o-rings or back-up rings. Inserting 1/4-20UNC bolts in piston may simplify installation.
9. Install new o-ring 6, new bearing 7, new square ring, pipe plug 3, and bleeder screw 13 in end cover.
10. Position end cover 4 on housing, aligning dowel pins 23 with holes in end cover.
11. Install capscrews 1 and lockwashers 2. Tighten evenly to draw end cover 4 to housing and bearing 7 onto shaft 15. Torque capscrews to 55 ft. lbs. (75 NM).

NOTE: *If available, a hydraulic press will simplify installation of end cover on housing. Clamp cover in position while tightening capscrews.*

12. Press on inner ring of bearing 7 until it shoulders on shaft 15 to eliminate binding on bearings. Be certain to restrain opposite end of shaft to avoid excessive thrust loading on bearing 24.

IMPORTANT

PRESS FORCE SHOULD BE LIMITED TO 2000 LBS (907.2 KG) MAXIMUM TO AVOID POSSIBLE DAMAGE TO SNAP RING 14.

IMPORTANT

IF HYDROSTATIC BENCH TESTING IS PERFORMED ON THE BRAKE ASSEMBLY. RELEASE PRESSURE SHOULD NOT EXCEED 2000 PSI (137.9 BAR) UNLESS TWO ADDITIONAL BOLTS ARE USED FOR SUPPLEMENTAL CLAMPING.

Bleeding.

1. Install brake and connect pressure lines.
2. Bleed pressure release section of brake by pressurizing side inlet port and allowing air to escape from top port. Pressure should not exceed 100 psi (6.9 Bar) during bleeding.
3. Apply sufficient pressure to release brake and check for proper operation.

2.27 DRIVE BRAKE, MICO. (MACHINES BUILT PRIOR TO MAY 1992)(SEE FIGURE 2-40.)

Disassembly.

1. Remove end cover 29 from housing 50 by removing capscrews 26 and lockwashers 27.

WARNING

END COVER IS UNDER SPRING TENSION OF APPROXIMATELY 1500 POUNDS (681 KG). THE FOUR CAPSCREWS SHOULD BE LOOSENED EVENLY TO RELIEVE THIS FORCE. IF A HYDRAULIC PRESS IS AVAILABLE (3000 LBS (1362 KG) MAXIMUM), THE COVER CAN BE HELD IN POSITION WHILE REMOVING THE CAPSCREWS AND LOCKWASHERS.

2. Tap cover with a soft mallet in order to dislodge bearing 32 from cover.

https://truckmanualshub.com/

3. Remove o-ring 31, square ring 30, pipe plug 28 and bleeder screw 38 from end cover.
4. Remove piston 35 from end cover by inserting two 1/4-20 UNC bolts into threaded holes in piston. By turning and pulling, piston can be removed from bore.
5. Remove o-ring 33, back-up ring 34, o-ring 36 and back-up ring 37 from piston 35.
6. Remove separators 43 from housing 50.
7. Remove shaft assembly, consisting of shaft 39, discs 40,44, friction discs 42,springs 41, and bearings 32,48,from housing by pressing or using a soft mallet on male end of shaft.
8. Remove springs 41 from between tabs of discs 40,44.
9. Remove bearings 32,48 from shaft using an appropriate bearing puller. The discs and friction discs will then slide off either end of shaft.
10. Remove dowel pins 47, springs 45,46 and oil seal 49 from housing 50.

Inspection.

1. Clean all parts thoroughly.
2. Closely inspect all parts for excessive wear, cracks and chips. Replace parts as necessary.
3. Discard seals and o-rings.
4. Closely inspect bearings and bearing contact surfaces. Replace as necessary.

NOTE: *Bearings may be re-used if, after thorough inspection, they are found to be in good condition.*

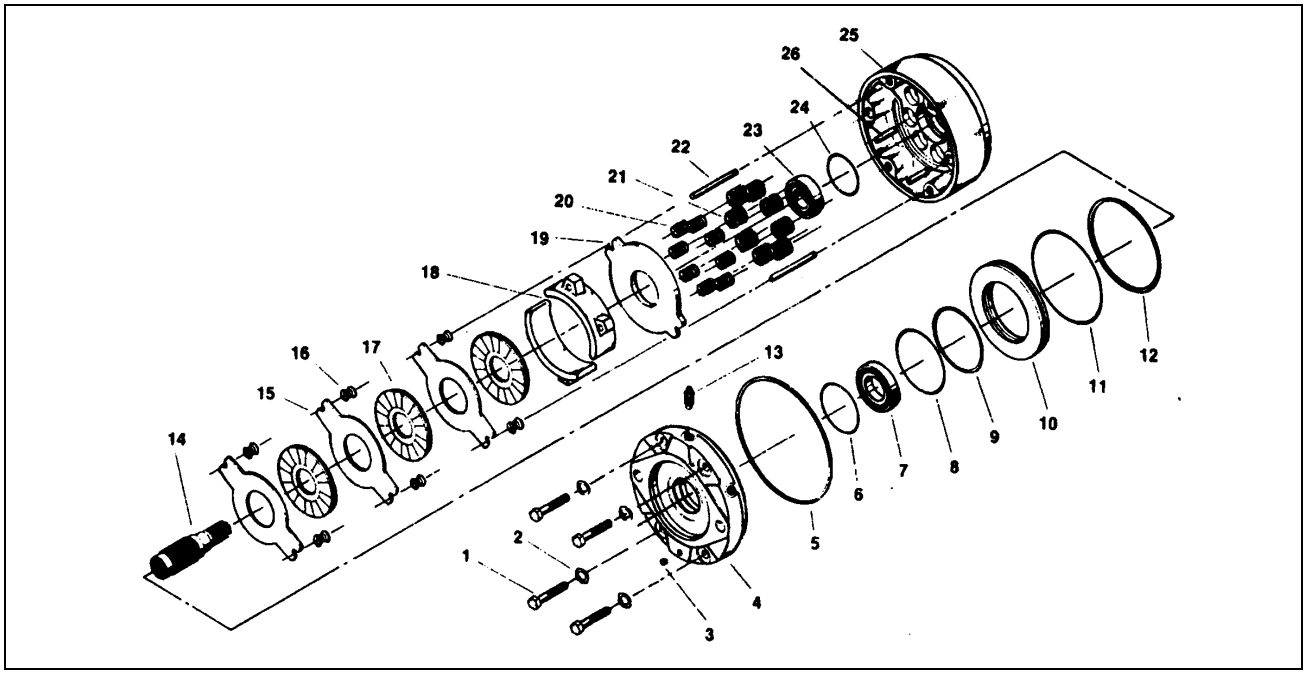

Figure 2-40. Drive Brake Assembly - Mico (Machines Built Prior To May 1992).

Assembly.

NOTE: *Lubricate all seals and o-rings with clean hydraulic oil prior to assembly.*

1. Insert new oil seal 49, dowel pins 47 and springs 45,46 in housing 50.
2. Install new bearing 48 on male end of shaft 39 and press until it shoulders on shaft.
3. Insert shaft and bearing on housing 50 and press until bearing bottoms on shoulder in housing.
4. Position large diameter disc 44 in housing, with tabs guided by dowel pins 47, until disc rests on springs 45,46.

IMPORTANT

DISC 15,19 AND FRICTION DISCS 17 SHOULD REMAIN DRY DURING INSTALLATION. NO OIL RESIDUE SHOULD BE ALLOWED TO CONTAMINATE DISC SURFACES.

https://truckmanualshub.com/

5. Place friction disc 42 on shaft until it contacts bottom disc 44. Insert one spring 41 on each dowel pin 47.
6. Add additional discs 40, friction discs 42, and springs 41 as required to complete assembly. Alternate discs and friction discs during assembly.
7. Insert separators 43 over spiral pins in housing. When properly installed, separators will contact top of bottom disc.
8. Install o-ring 33, back-up ring 34, o-ring 36 and back-up ring 37 on piston 35. Insert piston into end cover 29, being careful not to shear o-rings or back-up rings. Inserting 1/4-20 UNC bolts in piston may simplify installation.
9. Install o-ring 31, bearing 32, square ring 30, pipe plug 28 and bleeder screw 38 in end cover.
10. Position end cover on housing, aligning dowel pins with holes in cover, and push end cover until top friction disc aligns with spline shaft.
11. Install capscrew 26 and lockwashers 27. Tighten evenly to draw end cover to housing and bearing onto shaft. Torque capscrews to 55 ft. lbs. (75 NM).

NOTE: *If available, a hydraulic press will simplify installation of end cover on housing. Clamp cover in position while tightening capscrews.*

12. To eliminate binding on bearings, press on inner ring of bearing 32 until it shoulders on shaft. Restrain opposite end of shaft to avoid excessive thrust loading of bearing 49.

⚠ IMPORTANT

IF HYDROSTATIC BENCH TESTING IS PERFORMED ON THE BRAKE ASSEMBLY. RELEASE PRESSURE SHOULD NOT EXCEED 2000 PSI (137.9 BAR) UNLESS TWO ADDITIONAL BOLTS ARE USED FOR SUPPLEMENTAL CLAMPING.

Bleeding

1. Install brake and connect pressure lines.
2. Bleed pressure release section of brake by pressurizing side inlet port and allowing air to escape from top port. Pressure should not exceed 100 psi (6.9 Bar) during bleeding.
3. Apply sufficient pressure to release brake and check for proper operation.

https://truckmanualshub.com/

2.28 SWING DRIVE BRAKE, AUSCO (MACHINES BUILT PRIOR TO MAY 1992). (SEE FIGURE 2-41.)

Disassembly.

1. With shaft protruding downward, remove bolts 22 alternately and evenly to reduce spring tension.
2. Remove power plate 21 and gasket 2.
3. Bearing 18 is pressed onto shaft 7 and must be removed before removal of rotating discs 11 and stationary discs 12.
4. Further disassembly is not recommended unless necessary for the replacement of specific parts.
5. If further disassembly is required, remove shaft 7 and stack sub-assembly from housing 1 by lightly tapping or pressing on the small external spline end of the shaft and removing the shaft, bearings and stack from housing.
6. Remove bearing 18, stationary disc 12, rotating disc 11, springs 10 and primary disc 9.
7. Remove bearing 3 from shaft using care not to damage seal 4. Remove seal 4.
8. Remove springs 6 and spring retainer 5 from housing.
9. Remove piston 13 from power plate by introducing low pressure air (15 PSI) into hydraulic inlet. Direct piston away from operator.
10. Remove o-rings 15,17 and back-up rings 14,16 from piston O.D. and I.D. grooves. Back-up rings will be damaged and should not be removed if replacement is not planned.
11. Pressure relief valve 23 can be removed and inspected to assure spring loaded ball moves freely and is contamination free.

Cleaning and Inspection.

1. Clean all parts thoroughly.
2. Closely inspect all parts for excessive wear, cracks, and chips. Replace parts as necessary.
3. Discard seals and o-rings.
4. Closely inspect bearings and bearing contact surfaces. Replace as necessary.

NOTE: *Bearings may be reused if, after thorough inspection, they are found to be in good condition.*

Assembly.

NOTE: *Lubricate all seals, o-rings, cylinder of the power plate and piston with clean hydraulic oil prior to assembly.*

1. Assemble piston 13 into power plate 21 using a shop press, being careful not to damage the o-rings or back-up rings. Visually align the center of the cutouts in piston 13 with torque pin 8 holes in power plate 21. Avoid pushing the piston all the way to the bottom of the cylinder in the power plate. Try to keep the top surface of the piston flush to 1/8"(0.32 cm) elow the machined surface of the power plate.
2. When pressing the bearing onto the shaft, press on the inner race of the bearing and support the shaft properly.
3. Rotating discs must be clean and dry. Worn or heavily scored rotating discs must be replaced.
4. Press bearings 3 into housing 1. Bearing must be seated against shoulder in housing.
5. Using a shop press install seal 4 by pressing evenly around O.D. of seal. Use care to avoid cocking.
6. Install shaft 7 into housing. Support the inner race of bearing 3 when pressing shaft into bearing.
7. Install gasket 2. Align properly. After installing all the remaining internal components of the brake, install bearing 18. Properly support the shaft when pressing the bearing onto shaft.

https://truckmanualshub.com/

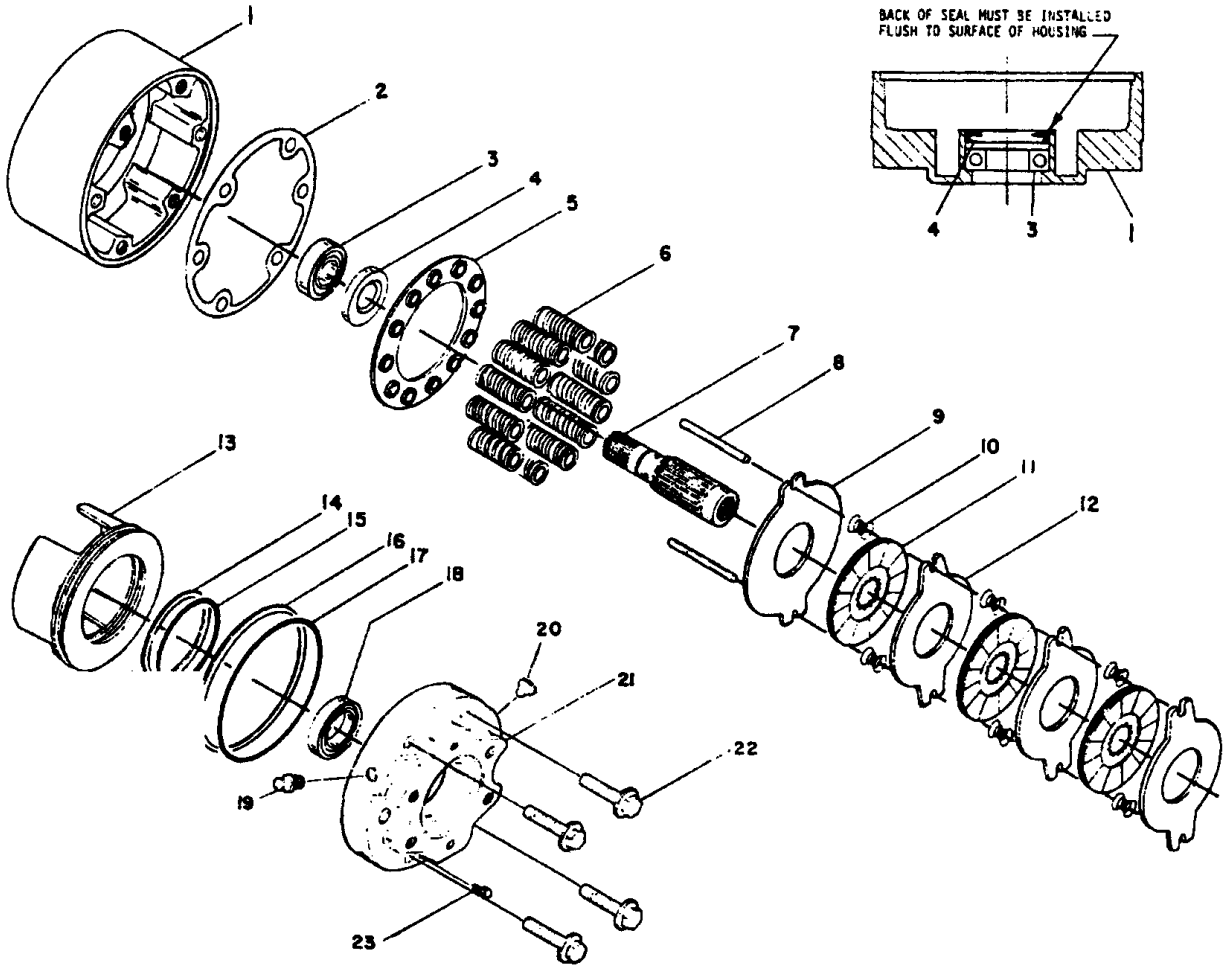

1. Housing
2. Gasket
3. Bearing
4. Seal
5. Spring Retainer
6. Springs
7. Shaft
8. Torque Pin
9. Primary Disc
10. Springs
11. Rotating Discs
12. Stationary Discs
13. Piston
14. Back-Up Ring
15. O-Ring
16. Back-Up Ring
17. O-Ring
18. Bearing
19. Bleeder Screw
20. Plug
21. Power Plate
22. Bolts
23. Pressure Relief Valve

Figure 2-41. Swing Brake Assembly - Ausco (Machines Built Prior to May 1992).

https://truckmanualshub.com/

8. Install the power plate sub-assembly. Use a shop press to evenly lower plate into position. There should be no gap at the O.D. when the power plate is properly seated against housing. If a shop press is not available, use the assembly bolts 22. Tighten sequentially one turn at a time until the power plate is properly seated. Torque to 50-60 ft. lbs. (68-81 NM).
9. If replacement of pressure relief valve is necessary, install 1/2 to 3/4 turns beyond finger tight.
10. Bleed air from brake via bleeder screw.

2.29 DRIVE BRAKE, AUSCO. (MACHINES BUILT PRIOR TO MAY 1992) (SEE FIGURE 2-43.)

Disassembly.

1. When shaft protruding downward, remove bolts 23 alternately and evenly to reduce spring tension.
2. Remove power plate 20, o-ring 5, stationary discs 13, springs 11, rotating discs 12, primary disc 10, pins 9, springs 6,7 and spring retainer (if so equipped).
3. Further disassembly is not recommended unless necessary for the replacement of specific parts.
4. If further disassembly is required, remove snap rings 1,2, then remove shaft 8 from bearing 3 by lightly tapping shaft with a plastic mallet.
5. Remove bearing from housing.
6. Remove piston 14 from the power plate 20 by introducing low pressure air (15 PSI) into hydraulic inlet. Make sure piston is directed away from operator. Remove o-rings 15,17 from the piston O.D. and I.D. grooves. Back-up rings will be damaged and should not be removed if replacement is not planned.
7. Bleeder 19 can be removed and inspected to assure spring loaded ball moves freely and is free of contamination.

Cleaning and Inspection.

1. Clean all parts thoroughly.
2. Closely inspect all parts for excessive wear, cracks, and chips. Replace parts as necessary.
3. Discard seals and o-rings.
4. Closely inspect bearings and bearing contact surfaces. Replace as necessary.

NOTE: *Bearings may be reused if, after thorough inspection, they are found to be in good condition.*

Assembly.

NOTE: *Lubricate all seals, o-rings, cylinder of power plate and piston with clean hydraulic oil prior to assembly.*

1. Use the reverse of the disassembly procedure with the following notes and additions.
2. Worn o-rings and damaged or worn teflon back-up rings must be replaced prior to assembly.
3. If replacement of bleeder 19 is necessary, install 1/2 to 3/4 turns beyond finger tight.
4. Assemble piston 14 into power plate 20 using a shop press, being careful not to damage the o-rings or teflon back-up rings. Visually align the center of the cutouts in the piston with the torque pin 9 holes in the power plate.
5. Rotating discs 12 must be clean and dry, with no presence of oil on any lining material or mating surface or the stationary discs 13.
6. Install bolts 23. Tighten sequentially one turn at a time, until power plate 20 is properly seated. Torque to 50-60 ft. lbs. (68-81 NM).

https://truckmanualshub.com/

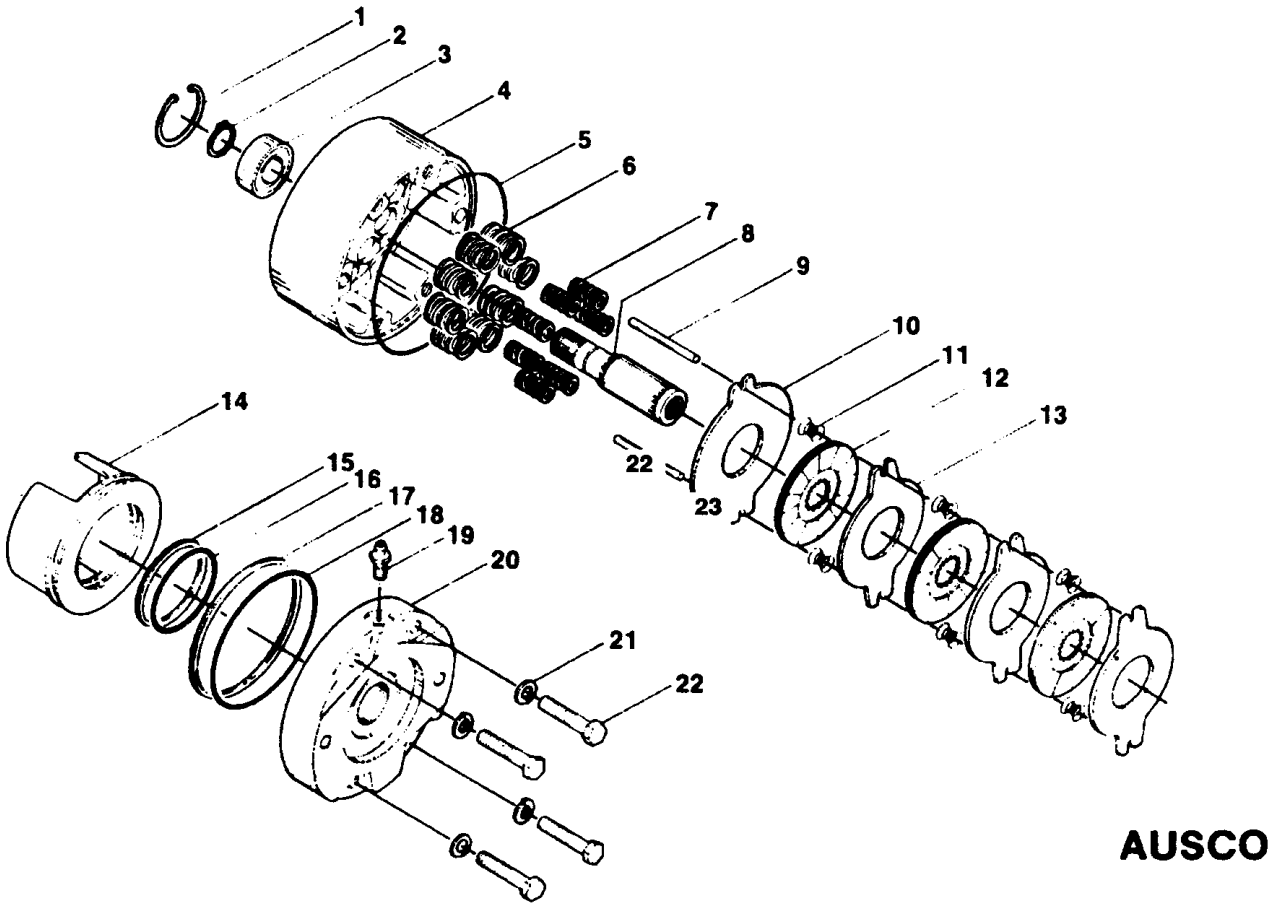

1. Snap Ring
2. Snap Ring
3. Bearing
4. Housing
5. O-Ring
6. Spring
7. Spring
8. Shaft
9. Pins
10. Primary Disc
11. Springs
12. Rotating Discs
13. Stationary Discs
14. Piston
15. Back-Up Ring
16. O-Ring
17. Back-Up Ring
18. O-Ring
19. Bleeder
20. Power Plate
21. Not Used
22. Lockwasher
23. Bolts

Figure 2-42. Drive Brake, (machines Built Prior to May 1992).

https://truckmanualshub.com/

2.30 DRIVE BRAKE, MICO. (MACHINES BUILT FROM MAY 1992 TO S/N 33476) (SEE FIGURE 2-44.)

Disassembly.

1. Remove end cover 2 from housing 21 by removing capscrews 1.

WARNING

END COVER IS UNDER SPRING TENSION OF APPROXIMATELY 2000 POUNDS (907 KG). THE FOUR CAPSCREWS SHOULD BE LOOSENED EVENLY TO RELIEVE THIS FORCE. IF A HYDRAULIC PRESS IS AVAILABLE (3000 LBS (1362 KG) MAXIMUM), THE COVER CAN BE HELD IN POSITION WHILE REMOVING THE CAPSCREWS.

2. Remove case seal 4 from housing 21 then remove bleeder screw 3 from end cover 2.
3. Remove piston 7 from end cover 2.
4. Remove o-ring 5, back-up ring 6, o-ring 8 and back-up ring 9 from piston 7.
5. Remove separators 13 from housing 21.
6. Remove stack assembly, consisting of shaft 11, return plate 14, and friction discs 12, from housing 21.
7. Remove dowel pins 20, springs 15,16 and spring retainer 17 from housing 21.
8. Remove retaining ring 18 from housing 21.
9. Remove shaft by pressing or using a soft mallet on male end of shaft 10.
10. Remove retaining ring 22 and bearing 19 from shaft 10.
11. Press rotary oil seal 23 from housing 21.

Inspection.

1. Clean all parts thoroughly.
2. Closely inspect all parts for excessive wear, cracks and chips. Replace parts as necessary.
3. Discard seals and o-rings.
4. Closely inspect bearings and bearing contact surfaces. Replace as necessary.

NOTE: *Bearings may be re-used if, after thorough inspection, they are found to be in good condition.*

Assembly.

NOTE: *Lubricate all seals and o-rings with clean hydraulic oil prior to assembly.*

1. Clean all parts thoroughly before assembly.
2. Press new rotary oil seal 23 into housing 21. Note direction of seal.
3. Install new bearing 19 and retaining ring 22 on shaft 10.
4. Insert shaft assembly and retaining ring 18 in housing 21.
5. Insert dowel pins 20, spring retainer 17 and springs 15,16 in housing 21.
6. Position new large diameter return plate 14 in housing with tab guided by dowel pins 20 until disc rests on springs 15,16.

IMPORTANT

DISC 15,19 AND FRICTION DISCS 17 SHOULD REMAIN DRY DURING INSTALLATION. NO OIL RESIDUE SHOULD BE ALLOWED TO CONTAMINATE DISC SURFACES.

7. Place a new friction disc 12 on shaft 10 until it contacts return plate 14.
8. Add additional new discs 11 and new friction discs 12 as required to complete assembly.
9. Insert separators 13 in holes of return plate 14.
10. Install new o-ring 5, new back-up ring 6, new o-ring 8 and new back-up ring 9 on piston 7. Note order of o-rings and back-up rings. Insert piston 7 into end cover 2 being careful not to shear o-rings or back-up rings.
11. Install new case seal 4 in housing 21 then install bleeder screw 3 in end cover 2.
12. Position end cover 2 on housing 21 aligning dowel pins 20 with holes in end cover.
13. Install capscrews 1 and tighten evenly to draw end cover 2 to housing 21. Torque capscrews to 55 ft. lbs. (75 NM).

NOTE: *If available a hydraulic press will simplify installation of end cover on housing. Clamp cover in position while tightening the capscrews.*

14. If hydrostatic bench testing is performed on the brake assembly, release pressure should not exceed 2000 psi (137 Bar) unless two additional bolts are used for supplemental clamping.

https://truckmanualshub.com/

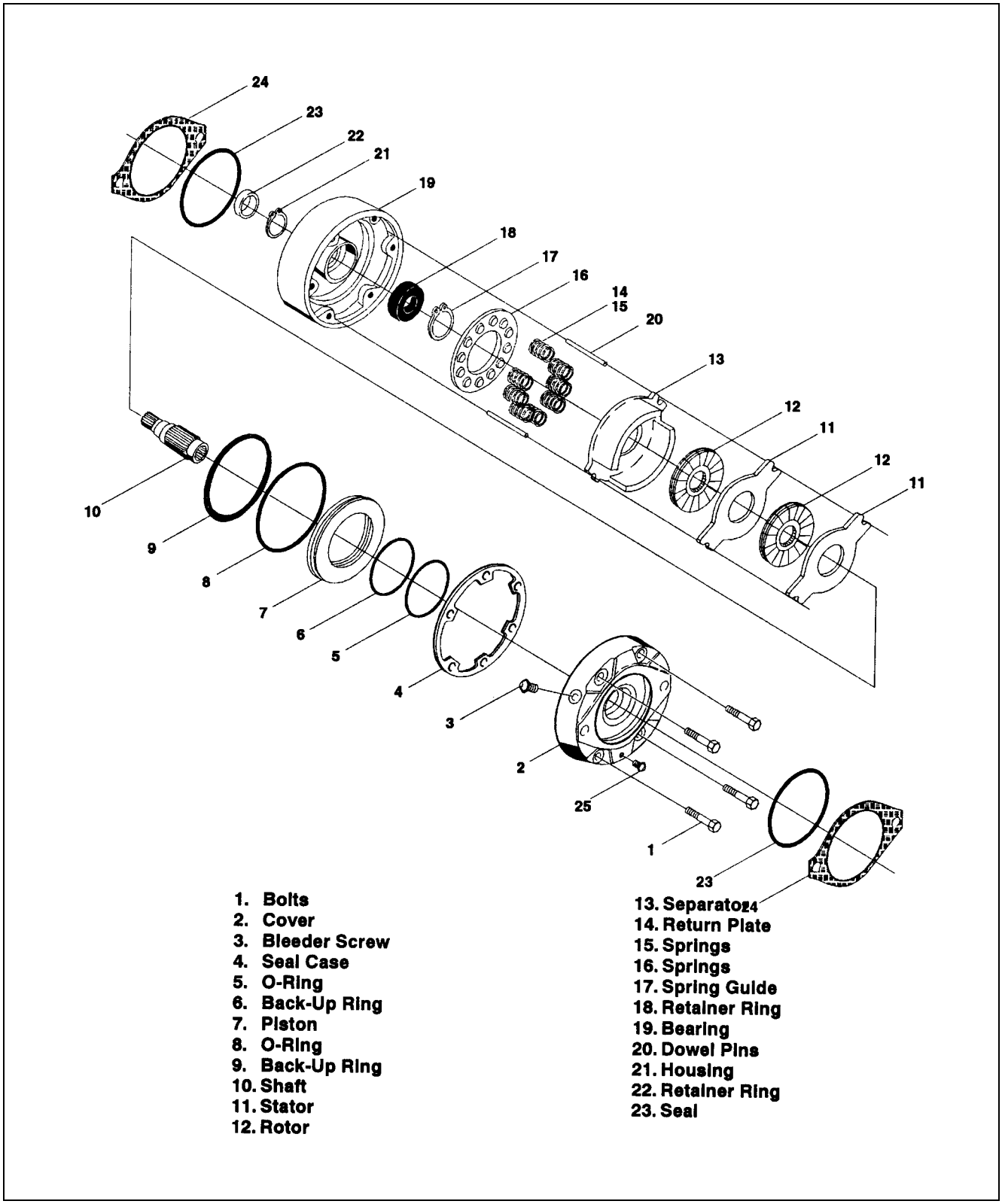

Figure 2-43. Drive Brake, Mico. (Machines Built From May 1992 To Machine S/N 33476)

https://truckmanualshub.com/

2.31 SWING BRAKE, MICO. (MACHINES BUILT FROM MAY 1992 TO S/N 33476) (SEE FIGURE 2-45.)

Disassembly.

1. Remove end cover 2 from housing 21 by removing capscrews 1.

WARNING

END COVER IS UNDER SPRING TENSION OF APPROXIMATELY 2000 POUNDS (907 KG). THE FOUR CAPSCREWS SHOULD BE LOOSENED EVENLY TO RELIEVE THIS FORCE. IF A HYDRAULIC PRESS IS AVAILABLE (3000 LBS (1362 KG) MAXIMUM), THE COVER CAN BE HELD IN POSITION WHILE REMOVING THE CAPSCREWS.

2. Remove case seal 4 from housing 21 then remove bleeder screw 3 from end cover 2.
3. Remove piston 7 from end cover 2.
4. Remove o-ring 5, back-up ring 6, o-ring 8 and back-up ring 9 from piston 7.
5. Remove separators 13 from housing 21.
6. Remove stack assembly, consisting of shaft 11, return plate 14, and friction discs 12, from housing 21.
7. Remove dowel pins 20, springs 15,16 and spring retainer 17 from housing 21.
8. Remove retaining ring 18 from housing 21.
9. Remove shaft by pressing or using a soft mallet on male end of shaft 10.
10. Remove retaining ring 22 and bearing 19 from shaft 10.
11. Press rotary oil seal 23 from housing 21.

Inspection.

Clean all parts thoroughly.

1. Closely inspect all parts for excessive wear, cracks and chips. Replace parts as necessary.
2. Discard seals and o-rings.
3. Closely inspect bearings and bearing contact surfaces. Replace as necessary.

NOTE: *Bearings may be re-used if, after thorough inspection, they are found to be in good condition.*

Assembly.

NOTE: *Lubricate all seals and o-rings with clean hydraulic oil prior to assembly.*

1. Clean all parts thoroughly before assembly.
2. Press new rotary oil seal 23 into housing 21. Note direction of seal.
3. Install new bearing 19 and retaining ring 22 on shaft 10.
4. Insert shaft assembly and retaining ring 18 in housing 21.
5. Insert dowel pins 20, spring retainer 17 and springs 15,16 in housing 21.
6. Position new large diameter return plate 14 in housing with tab guided by dowel pins 20 until disc rests on springs 15,16.

IMPORTANT

DISC 15,19 AND FRICTION DISCS 17 SHOULD REMAIN DRY DURING INSTALLATION. NO OIL RESIDUE SHOULD BE ALLOWED TO CONTAMINATE DISC SURFACES. PLACE A NEW FRICTION DISC 12 ON SHAFT 10 UNTIL IT CONTACTS RETURN PLATE 14.

7. Place a new friction disc 12 on shaft 10 until it contacts return plate 14.
8. Add additional new discs 11 and new friction discs 12 as required to complete assembly.
9. Insert separators 13 in holes of return plate 14.
10. Install new o-ring 5, new back-up ring 6, new o-ring 8 and new back-up ring 9 on piston 7. Note order of o-rings and back-up rings. Insert piston 7 into end cover 2 being careful not to shear o-rings or back-up rings.
11. Install new case seal 4 in housing 21 then install bleeder screw 3 in end cover 2.
12. Position end cover 2 on housing 21 aligning dowel pins 20 with holes in end cover.
13. Install capscrews 1 and tighten evenly to draw end cover 2 to housing 21. Torque capscrews to 55 ft. lbs. (75 NM).

NOTE: *If available a hydraulic press will simplify installation of end cover on housing. Clamp cover in position while tightening the capscrews.*

14. If hydrostatic bench testing is performed on the brake assembly, release pressure should not exceed 2000 psi (137 Bar) unless two additional bolts are used for supplemental clamping.

https://truckmanualshub.com/

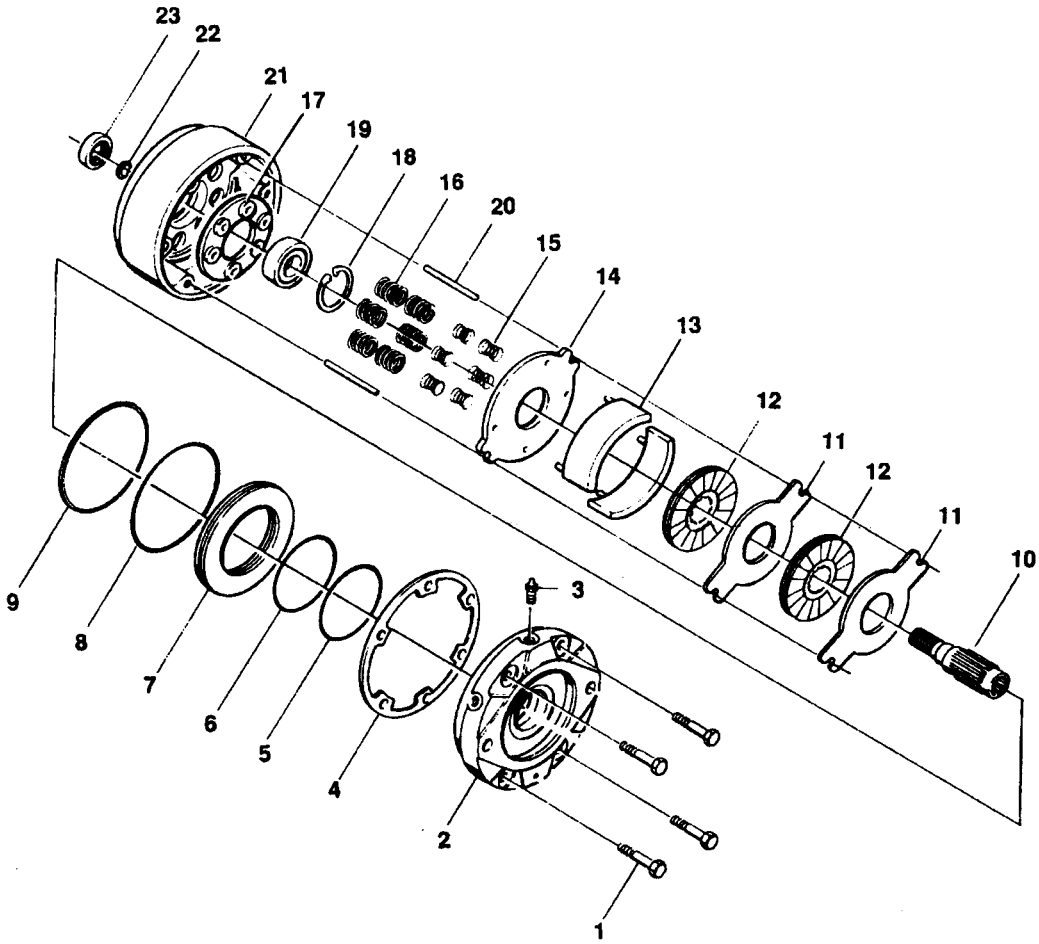

1. Bolts
2. Cover
3. Bleeder Screw
4. Seal Case
5. O-Ring
6. Back-Up Ring
7. Piston
8. O-Ring
9. Back-Up Ring
10. Shaft
11. Stator
12. Rotor
13. Separator
14. Return Plate
15. Springs
16. Springs
17. Spring Guide
18. Retainer Ring
19. Bearing
20. Dowel Pins
21. Housing
22. Retainer Ring
23. Seal

Figure 2-44. Swing Brake, Mico. (Machines Built From May 1992 To Machine S/N 33476)

https://truckmanualshub.com/

2.32 DRIVE BRAKE, MICO. (MACHINES BUILT FROM S/N 33476 TO PRESENT) (SEE FIGURE 2-46.)

Disassembly.

1. Remove end cover 2 from housing 19 by removing capscrews 1.

WARNING

END COVER IS UNDER SPRING TENSION OF APPROXIMATELY 2000 POUNDS (907 KG). THE FOUR CAPSCREWS SHOULD BE LOOSENED EVENLY TO RELIEVE THIS FORCE. IF A HYDRAULIC PRESS IS AVAILABLE (3000 LBS (1362 KG) MAXIMUM), THE COVER CAN BE HELD IN POSITION WHILE REMOVING THE CAPSCREWS.

2. Remove case seal 4 from housing 19 then remove bleeder screw 3 from end cover 2.
3. Remove piston 7 from end cover 2.
4. Remove o-ring 5, back-up ring 6,o-ring 8,and back-up ring 9 from piston 7.
5. Remove stack assembly, consisting of shaft 10, stators 11,return plate 13, and rotors 12, from housing 19.
6. Remove dowel pins 20, springs 14,15 and spring retainer 16 from housing 19.
7. Remove retaining ring 17 from housing 19.
8. Remove shaft by pressing or using a soft mallet on male end of shaft 10.
9. Remove retaining ring 21 and bearing 18 from shaft 10.
10. Press rotary oil seal 22 from housing 19.

Inspection.

1. Clean all parts thoroughly.
2. Closely inspect all parts for excessive wear, cracks and chips. Replace parts as necessary.
3. Discard seals and o-rings.
4. Closely inspect bearings and bearing contact surfaces. Replace as necessary.

NOTE: *Bearings may be re-used if, after thorough inspection, they are found to be in good condition.*

Assembly.

NOTE: *Lubricate all seals and o-rings with clean hydraulic oil prior to assembly.*

1. Clean all parts thoroughly before assembly.
2. Press new rotary oil seal 22 into housing 19. Note direction of seal.
3. Install new bearing 18 and retaining ring 21 on shaft 10.
4. Insert shaft assembly and retaining ring 17 in housing 19.
5. Insert dowel pins 20, spring retainer 16 and springs 14,15 in housing 19.
6. Position new large diameter return plate 13 in housing with tab guided by dowel pins 20 until disc rests on springs 14,15.

IMPORTANT

DISC 11,12 AND RETURN PLATE 13 SHOULD REMAIN DRY DURING INSTALLATION. NO OIL RESIDUE SHOULD BE ALLOWED TO CONTAMINATE DISC SURFACES.

7. Place a new friction disc 12 on shaft 10 until it contacts return plate 13.
8. Add additional new discs 11 and new friction discs 12 as required to complete assembly.
9. Install new o-ring 5, new back-up ring 6, new o-ring 8 and new back-up ring 9 on piston 7. Note order of o-rings and back-up rings. Insert piston 7 into end cover 2 being careful not to shear o-rings or back-up rings.
10. Install new case seal 4 in housing 19 then install bleeder screw 3 in end cover 2.
11. Position end cover 2 on housing 19 aligning dowel pins 20 with holes in end cover.
12. Install capscrews 1 and tighten evenly to draw end cover 2 to housing 19. Torque capscrews to 55 ft. lbs. (75 NM).

NOTE: *If available a hydraulic press will simplify installation of end cover on housing. Clamp cover in position while tightening the capscrews.*

13. If hydrostatic bench testing is performed on the brake assembly, release pressure should not exceed 2000 psi (137 Bar) unless two additional bolts are used for supplemental clamping.

https://truckmanualshub.com/

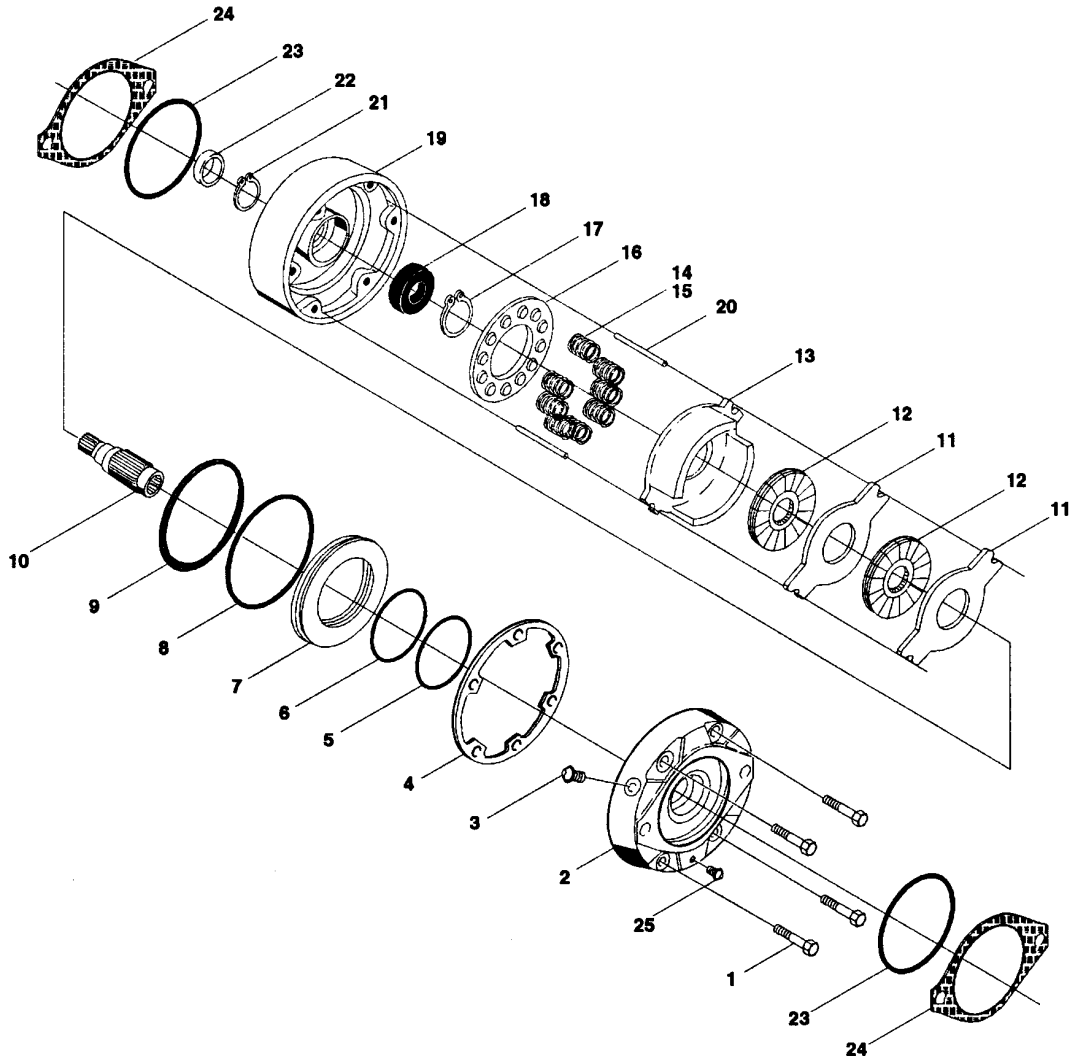

1. Bolts
2. Cover
3. Bleeder Screw
4. Seal Case
5. O-Ring
6. Back-Up Ring
7. Piston
8. O-Ring
9. Back-Up Ring
10. Shaft
11. Stator
12. Rotor
13. Return Plate
14. Springs
15. Springs
16. Spring Guide
17. Retainer Ring
18. Bearing
19. Housing
20. Pins,Dowel
21. Retainer Ring
22. Seal,Oil
23. O-Ring
24. Gasket
25. Plug,Pipe

Figure 2-45. Drive Brake, Mico. (Machines Built From S/N 33476 To Present)

https://truckmanualshub.com/

2.33 SWING BRAKE, MICO.(MACHINES BUILT FROM S/N 33476 TO PRESENT) (SEE FIGURE 2-46.)

Disassembly.

14. Remove end cover 2 from housing 19 by removing capscrews 1.

WARNING

END COVER IS UNDER SPRING TENSION OF APPROXIMATELY 2000 POUNDS (907 KG). THE FOUR CAPSCREWS SHOULD BE LOOSENED EVENLY TO RELIEVE THIS FORCE. IF A HYDRAULIC PRESS IS AVAILABLE (3000 LBS (1362 KG) MAXIMUM), THE COVER CAN BE HELD IN POSITION WHILE REMOVING THE CAPSCREWS.

15. Remove case seal 4 from housing 19 then remove bleeder screw 3 from end cover 2.
16. Remove piston 7 from end cover 2.
17. Remove o-ring 5, back-up ring 6,o-ring 8,and back-up ring 9 from piston 7.
18. Remove stack assembly, consisting of shaft 10, stators 11,return plate 13, and rotors 12, from housing 19.
19. Remove dowel pins 20, springs 14,15 and spring retainer 16 from housing 19.
20. Remove retaining ring 17 from housing 19.
21. Remove shaft by pressing or using a soft mallet on male end of shaft 10.
22. Remove retaining ring 21 and bearing 18 from shaft 10.
23. Press rotary oil seal 22 from housing 19.

Inspection.

1. Clean all parts thoroughly.
2. Closely inspect all parts for excessive wear, cracks and chips. Replace parts as necessary.
3. Discard seals and o-rings.
4. Closely inspect bearings and bearing contact surfaces. Replace as necessary.

NOTE: *Bearings may be re-used if, after thorough inspection, they are found to be in good condition.*

Assembly.

NOTE: *Lubricate all seals and o-rings with clean hydraulic oil prior to assembly.*

1. Clean all parts thoroughly before assembly.
2. Press new rotary oil seal 22 into housing 19. Note direction of seal.
3. Install new bearing 18 and retaining ring 21 on shaft 10.
4. Insert shaft assembly and retaining ring 17 in housing 19.
5. Insert dowel pins 20, spring retainer 16 and springs 14,15 in housing 19.
6. Position new large diameter return plate 13 in housing with tab guided by dowel pins 20 until disc rests on springs 14,15.

IMPORTANT

DISC 11,12 AND RETURN PLATE 13 SHOULD REMAIN DRY DURING INSTALLATION. NO OIL RESIDUE SHOULD BE ALLOWED TO CONTAMINATE DISC SURFACES.

7. Place a new friction disc 12 on shaft 10 until it contacts return plate 13.
8. Add additional new discs 11 and new friction discs 12 as required to complete assembly.
9. Install new o-ring 5, new back-up ring 6, new o-ring 8 and new back-up ring 9 on piston 7. Note order of o-rings and back-up rings. Insert piston 7 into end cover 2 being careful not to shear o-rings or back-up rings.
10. Install new case seal 4 in housing 19 then install bleeder screw 3 in end cover 2.
11. Position end cover 2 on housing 19 aligning dowel pins 20 with holes in end cover.
12. Install capscrews 1 and tighten evenly to draw end cover 2 to housing 19. Torque capscrews to 55 ft. lbs. (75 NM).

NOTE: *If available a hydraulic press will simplify installation of end cover on housing. Clamp cover in position while tightening the capscrews.*

13. If hydrostatic bench testing is performed on the brake assembly, release pressure should not exceed 2000 psi (137 Bar) unless two additional bolts are used for supplemental clamping.

https://truckmanualshub.com/

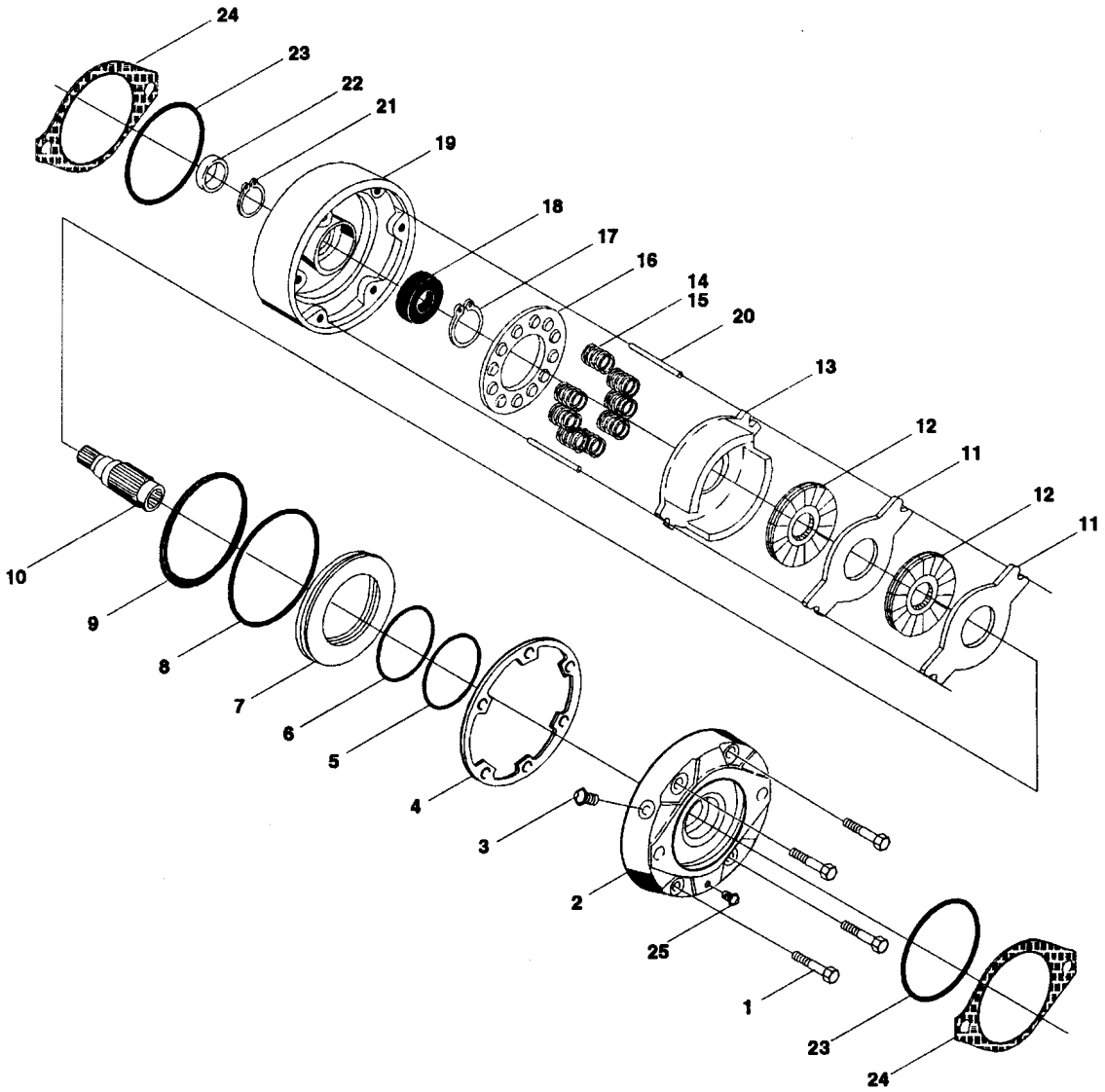

1. Bolts
2. Cover
3. Bleeder Screw
4. Seal Case
5. O-Ring
6. Back-Up Ring
7. Piston
8. O-Ring
9. Back-Up Ring
10. Shaft
11. Stator
12. Rotor
13. Return Plate
14. Springs
15. Springs
16. Spring Guide
17. Retainer Ring
18. Bearing
19. Housing
20. Pins,Dowel
21. Retainer Ring
22. Seal,Oil
23. O-Ring
24. Gasket
25. Plug,Pipe

Figure 2-46. Swing Brake, Mico. (Machines Built From S/N 33476 to Present)

https://truckmanualshub.com/

2.34 CONTROLLERS

PQ.

Refer to separate publication (3120351) for complete troubleshooting, wiring and replacement parts.

OEM.

Refer to separate publication (3120344) for description troubleshooting, wiring and replacement parts.

VICKERS (All Hydraulic).

Refer to separate publication (3120335) for complete troubleshooting, wiring and replacement parts.

2.35 OSCILLATING AXLE BLEEDING PROCEDURE.

Lockout Cylinder Bleeding (Without Holding Valves).

1. Make a hydraulic hose using approximately 6 feet of 1/4 in. wire braid hose with quick connect fitting on one end and a 1/4 in. JIC female fitting on the other.
2. Swing the boom over the front of the machine and engage the turntable lock. Using ground control raise the boom out of the way.
3. Remove the cover between frame slabs through which the cam valve wheel protrudes.
4. Remove cap from fitting on cam valve and connect your hose (see 1 above) at this point.
5. Attach the other end of the hose to the quick connect on the swing brake.
6. Using a floor jack (or overhead crane) raise one front wheel approximately 6 inches (15.2 cm) off the ground.
7. Use a bar as a lever to press down on the cam valve plunger which will allow the axle to fully oscillate against the stop.
8. With the aid of an assistant, start the engine from ground control.

⚠ WARNING

ENSURE TURNTABLE LOCK IS ENGAGED.

9. While your assistant activates swing from ground control, depress plunger on cam valve and open both bleeders on the lockout cylinder of the elevated wheel purging any air.
10. Remove the jack from the elevated wheel and using the bar again press down on the cam valve plunger allowing the axle to center.
11. Next raise the other front wheel as you did in step 6 and repeat steps 7 thru 10.
12. Shut down the engine, remove the hose, and replace the cap on the cam valve fitting. Install frame cover over cam valve and disengage turntable lock.
13. The boom can now be returned to its normal position.

Lockout Cylinder Bleeding (With Holding Valves).

⚠ IMPORTANT

ENSURE PLATFORM IS FULLY LOWERED AND BOOM IS CENTERED OVER REAR AXLE PRIOR TO BEGINNING BLEEDING PROCEDURE.

MAKING SURE MACHINE IS ON A LEVEL SURFACE AND REAR WHEELS ARE BLOCKED, DISENGAGE DRIVE HUBS. OPTIONAL 4WD ALL HUBS MUST BE DISENGAGED.

1. Making sure machine is on a level surface and rear wheels are blocked, disengage drive hubs. Optional 4WD all hubs must be disengaged.
2. Make up an adapter with an air regulator, remove filler cap on hydraulic tank and install regulator.
3. Attach air supply to the regulator and set regulator to 2 - 5 psi (0.14-0.34 Bar).

⚠ CAUTION

DO NOT EXCEED 5 PSI (0.34 BAR) INTO HYDRAULIC TANK. MORE THAN 5 PSI (0.34 BAR) WILL CAUSE DAMAGE TO THE HYDRAULIC TANK.

4. Activate machine hydraulic system from platform control station.
5. Place LOW ENGINE, HIGH DRIVE SPEED and HIGH WHEEL MOTOR SPEED control switches to their respective HIGH positions.
6. Depress footswitch and activate DRIVE CONTROLLER to “FORWARD” position.
7. Using a suitable lifting equipment lift front of machine and place a 6 in. (15.2 cm) high block under right front wheel.
8. Lower machine so both of the lockout cylinders are oscillated; one extended, the other retracted.
9. Use suitable containers to retain any residual hydraulic fluid, place containers under each lockout cylinder.

https://truckmanualshub.com/

10. With DRIVE CONTROLLER activated and engine at idle, open all four bleeder screws (two on each lockout cylinder), one at a time, then close bleeder screws when all air is dissipated (bled).
11. Using a suitable lifting equipment lift front of machine and remove the 6 in. (15.2 cm) high block.
12. Transfer the 6 in. (15.2 cm) high block to the left front wheel and repeat steps 2 thru 7, substituting the word “right” for “left” in step 5.
13. Perform oscillating axle lockout test.

2.36 OSCILLATING AXLE LOCKOUT TEST.

IMPORTANT

LOCKOUT SYSTEM TEST MUST BE PERFORMED QUARTERLY, ANY TIME A SYSTEM COMPONENT IS REPLACED, OR WHEN IMPROPER SYSTEM OPERATION IS SUSPECTED.

NOTE: *Ensure boom is fully retracted, lowered, and centered between drive wheels prior to beginning lockout cylinder test.*

1. Place a 6 in. (15.2 cm) high block with ascension ramp in front of left front wheel.
2. From platform control station, activate machine hydraulic system.
3. Place HIGH ENGINE, DRIVE SPEED and WHEEL MOTOR SPEED control switches to their respective LOW positions.
4. Place DRIVE control lever to FORWARD position and carefully drive machine up ascension ramp until left front wheel is on top of block.
5. Carefully activate SWING control lever and position boom over right side of machine.
6. With boom over right side of machine, place DRIVE control lever to REVERSE and drive machine off of block and ramp.
7. Have an assistant check to see that left front wheel remains locked in position off of ground.
8. Carefully activate SWING control lever and return boom to stowed position (centered between drive wheels). After boom reaches stowed position, activate DRIVE and lockout cylinders should release and allow wheel to rest on ground.
9. Place the 6 in. (15.2 cm) high block with ascension ramp in front of right front wheel.
10. Place DRIVE control lever to FORWARD and carefully drive machine up ascension ramp until right front wheel is on top of block.
11. Carefully activate SWING control lever and position boom over left side of machine.
12. With boom over left side of machine, place DRIVE control lever to REVERSE and drive machine off of block and ramp.
13. Have an assistant check to see that right front wheel remains locked in position off of ground.
14. Carefully activate SWING control lever and return boom to stowed position (centered between drive wheels). After boom reaches stowed position, activate DRIVE and lockout cylinders should release and allow wheel to rest on ground.
15. If lockout cylinders do not function properly, have qualified personnel correct the malfunction prior to any further operation.

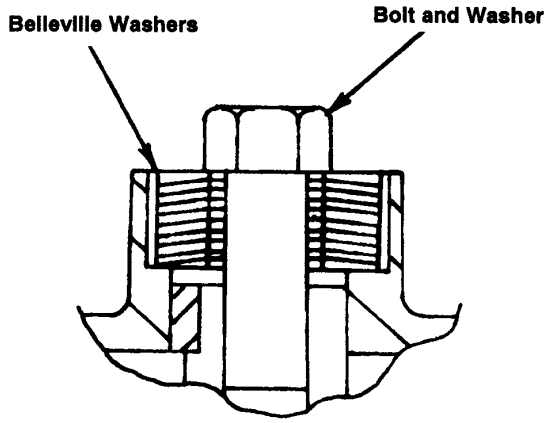

Install Belleville Washers as shown
Torque Bolt To 140 ft. lbs. (190 NM).

Figure 2-47. Basket Rotator Brake.

https://truckmanualshub.com/

2.37 BASKET ROTATOR BRAKE. (SEE FIGURE 2-48.)

Torque belleville washers (4160026) to 140 ft. lbs. (190 NM).

2.38 FREE WHEELING OPTION.

To Disengage Drive Motors and Brakes (Free Wheel) for Towing, etc.

1. Chock wheels securely if not on flat level surface.
2. Disconnect both drive hubs by inverting disconnect caps in center of hubs.
3. If equipped, move steer/tow selector valve to float (tow) position by pulling valve knob out.

To Engage Drive Motors and Brakes (Normal Operation).

1. If equipped, move steer/tow valve to steer position by pushing valve knob in.
2. Connect both drive hubs by inverting disconnect cap in center of hub.
3. Remove chocks from wheels as required.

2.39 SPARK ARRESTOR MUFFLERS.

The multiple discs on these mufflers will require frequent cleaning if used with oily or sooty exhaust (diesel), or on malfunctioning engines (as evidenced by visible exhaust.

2.40 FOOTSWITCH ADJUSTMENT.

Adjust so that functions will operate when pedal is at center of travel. If switch operates within last 1/4 in. (6.35 mm) of travel, top or bottom, it should be adjusted.

2.41 HYDRAULIC PUMP W/HAYES PUMP DRIVE COUPLING LUBRICATION.

TO INSURE PROPER OPERATION AND LONG SERVICE LIFE FOR THE HAYES PUMP COUPLING, IT IS NECESSARY TO LUBRICATE THE SPLINES OF THE COUPLING ANY TIME THE COUPLING IS DISASSEMBLED OR REPLACED. LUBRICATE THE SPLINES WITH TEXACO CODE 1912 PUMP COUPLING GREASE ONLY. NO OTHER LUBRICANT IS RECOMMENDED.

2.42 DUAL FUEL SYSTEM.

⚠ CAUTION

IT IS POSSIBLE TO SWITCH FROM ONE FUEL SOURCE TO THE OTHER WITHOUT ALLOWING THE ENGINE TO STOP. EXTREME CARE MUST BE TAKEN AND THE FOLLOWING INSTRUCTIONS MUST BE FOLLOWED.

Changing from gasoline to LP-Gas.

1. Start the engine from the ground control station.
2. Open the hand valve on the LP gas supply tank by turning counterclockwise.

⚠ CAUTION

BE SURE ALL GASOLINE IS EXHAUSTED BEFORE SWITCHING TO LP GAS.

3. While the engine is operating, place the three position LP/Gasoline switch at the ground control station to the center “off” position. Allow the engine to operate, without load, until the engine begins to “stumble” from lack of gasoline.
4. As the engine begins to “stumble” place the switch to the “LPG” position, allowing the LP fuel to be sent to the fuel regulator.

Changing from LP Gas to Gasoline.

1. 1. With engine operating on LP under no load condition, throw the “LP/Gasoline” switch at the ground control station across to the “Gasoline” position.
2. If engine “stumbles” because of lack of gasoline, place the switch to the “LPG” position until engine regains smoothness, then return the switch to the “Gasoline” position. Repeat as necessary until engine runs smoothly on gasoline.
3. Close the hand valve on the LP gas supply tank by turning clockwise.

https://truckmanualshub.com/

2.43 PREVENTIVE MAINTENANCE AND INSPECTION SCHEDULE.

The preventive maintenance and inspection checks are listed and defined in the following table. This table is divided into two basic parts, the “AREA” to be inspected, and the “INTERVAL” at which the inspection is to take place. Under the “AREA’ portion of the table, the various systems along with the components that make up that system are listed. The INTERVAL portion of the table is divided into five columns representing the various inspection time periods. The numbers listed within the interval column represent the applicable inspection code for which that component is to be checked.

The checks and services listed in this schedule are not intended to replace any local or regional regulations that may pertain to this type of equipment, nor should the lists be considered as all inclusive. Variances in interval times may occur due to climate and/or conditions and depending on the location and use of the machine.

JLG Industries requires that a complete annual inspection be performed in accordance with the “Annual Machine Inspection Report” form. Forms are supplied with each new machine and are also available from JLG Customer Service. Form must be completed and returned to JLG Industries.

⚠ IMPORTANT

JLG INDUSTRIES REQUIRES THAT A COMPLETE ANNUAL INSPECTION BE PERFORMED IN ACCORDANCE WITH THE “ANNUAL MACHINE INSPECTION REPORT” FORM.

NOTE: *This machine requires periodic safety and maintenance inspection by a JLG Dealer. A decal located on the turntable affords a place to record (stamp) Inspection dates. Notify dealer if Inspection is overdue.*

The inspection and maintenance code numbers are as follows:

1. Check for proper and secure installation.
2. Check for visible damage and legibility.
3. Check for proper fluid level.
4. Check for any structural damage; cracked or broken welds; bent or warped surfaces.
5. Check for leakage.
6. Check for presence of excessive dirt or foreign material.
7. Check for proper operation and freedom of movement.
8. Check for excessive wear or damage.
9. Check for proper tightness and adjustment.
10. Drain, clean and refill.
11. Check for proper operation while engine is running.
12. Check for proper lubrication.
13. Check for evidence of scratches, nicks or rust and for straightness of rod.
14. Check for condition of element; replace as necessary.
15. Check for proper inflation.
16. Clean or replace suction screen.

* To Be Performed Quarterly.

** Inspection and Maintenance Code 10 to be performed every two years.

*** Axle Lockout Test to be performed quarterly.

****Inspection and Maintenance Code 8 to be performed every two years.

https://truckmanualshub.com/

Table 2-4. Preventive Maintenance and Inspection Schedule.

AREA		INTERVAL					
BOOM		**DAILY**	**WEEKLY**	**MONTHLY**	**3 MONTH**	**6 MONTH**	**YEARLY**
1.	Platform	1, 4					
2.	Platform Gate	1, 4		12			
3.	Platform Rotator		5, 11				
4.	Footswitch	1, 11					
5.	Controllers	1, 11					
6.	Switches	1, 11					
7.	Placards and Decals	1, 2					
8.	Control Tags	1, 2					
9.	Valves	1, 11	5, 6				
10.	Carrier (Hoses and Tubing)	1	4, 8				
11.	Hydraulic Hoses and Tubing	1	5				
12.	Chains****						8
13.	Chain Adjusters			9			
14.	Sheaves****		12				8
15.	Pins+			8			
16.	Bushings			8			
17.	Wear Pads			8			
18.	Cylinders		1, 5, 6, 13				
TURNTABLE							
1.	Engine Oil (See MFG. Manual)	3	5				
2.	Battery	3	5				
3.	Radiator (If Equipped)	3	5				
4.	Air Cleaner	1	14				
5.	Exhaust System	1		1, 5			
6.	Spark Arrester	1		1, 5	17		
7.	Engine Mounts			1			
8.	Ground Controls	1, 2, 11					
9.	Main Hydraulic Pump	1	5				
10.	Auxiliary Power Pump	1	5				
11.	Valves	1, 11	5				
12.	Hydraulic Filters	14	5				
13.	Hydraulic Hoses and tubing	1	5				
14.	Hydraulic Oil Tank **	3	5	4			
15.	Breather Hydraulic Tank		6, 14				
16.	Fuel Tank	3, 5		4			
17.	Cylinders		1, 5, 6, 13	4			
18.	Hood Doors & Sields	1					
19.	Turntable Locking Pin	1, 7					
20.	Horizontal Limit Switch	1, 7					
21.	Oil Coupling		5				
22.	Placards and Decals	1, 2					
23.	Swing Bearing		1		9, 12		
24.	Swing Brake		1, 5, 6	8			
25.	Swing Hub				3, 9		
CHASSIS							
1.	Wheel and Tires Assembly	1	8, 9, 15				
2.	Drive Motors		1, 5, 6				
3.	Drive Torque Hubs **		1, 5, 6		3		
4.	Drive Brakes		1, 5, 6				
5.	Steer Cylinders	1	1, 5, 6, 13				
6.	Steer Components	1	4, 6	8			
7.	Lockout Cell. (If Equipped) ***	1	5, 13	8			
8.	Front Axle Pin (If Equipped)	1		8			
9.	Hydraulic Hoses	1					
10.	Placards and Decals	1, 2					
11.	Wheel Bearings **			8			
12.	Swing Bearing/Pinion Gear				9, 12		

https://truckmanualshub.com/

2.44 CAPACITY INDICATOR

The capacity indicator is a mechanical gage that indicates the allowable maximum weight in the platform in reference to the angle of the boom.

WARNING

THE CABLE ADJUSTMENT AND DECAL REPLACEMENT ARE CRITICAL TO INSURE AN ACCURATE READING OF THE CAPACITY INDICATOR.

Capacity Indicator Cable Adjustment.

1. Position main boom top plate and platform to be parallel to the floor.
2. Adjust the cable to locate the dial in the capacity indicator box so that the indicator line and calibration arrows on the nameplate are aligned.

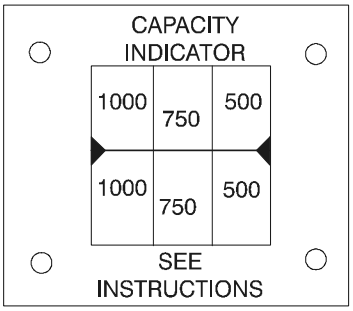

Capacity Indicator Boom Tape Replacement

Replacement of boom tape is required when tape is illegible or missing.

WARNING

THE LOCATION DIMENSIONS AND COLORS ARE CRITICAL FOR AN ACCURATE READING OF THE CAPACITY INDICATOR GAGE.

Installation Procedure

1. Clean and dry fly boom top surface before installing the tape.
2. install tape on center of fly boom to dimensions shown in table.

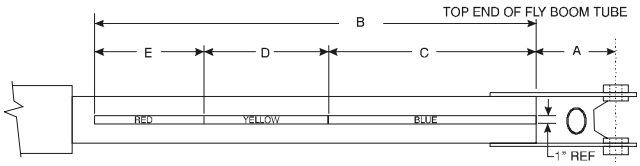

BOOM TAPE CHART					
DESCRIPTION	DIM. "A"	DIM."B"	DIM. "C"	DIM."D"	DIM. "E"
2 Section (CSA App.)	12"	180-1/4"	63-1/4"	46-1/4"	70-3/4"
2 Section (Dom)	12"	180-1/4"	75-1/4"	41"	64"
3 Section (Dom)	12"	115-5/16"	70-3/4"	20-1/2"	24-1/16"
3 Section CSA)	12"	115-5/16"	63-1/4"	20-1/2"	31-9/16"
2 Section (CSA App.)	12"	180-1/4"	51-7/8"	49-12"	78-1/8"
2 section (Dom)	12"	180-1/4"	63-1/4"	46-1/4"	70-3/4"
3 Section (Dom)	12"	115-5/16"	56-1/4"	23"	36-1/16"

Figure 2-48. Boom Tape Replacement Chart

Capacity Indicator Dial Decal Replacement.

Dial decal is required to be replaced when illegible or missing.

WARNING

DECAL LOCATION DIMENSIONS ARE CRITICAL FOR ACCURATE READING OF CAPACITY INDICATOR.

Indicator Decal Installation

1. Clean and dry wheel surface before installing decal.
2. Locate bottom of dial decal 1/16" from 1/8" dia. hole on face of gage wheel.

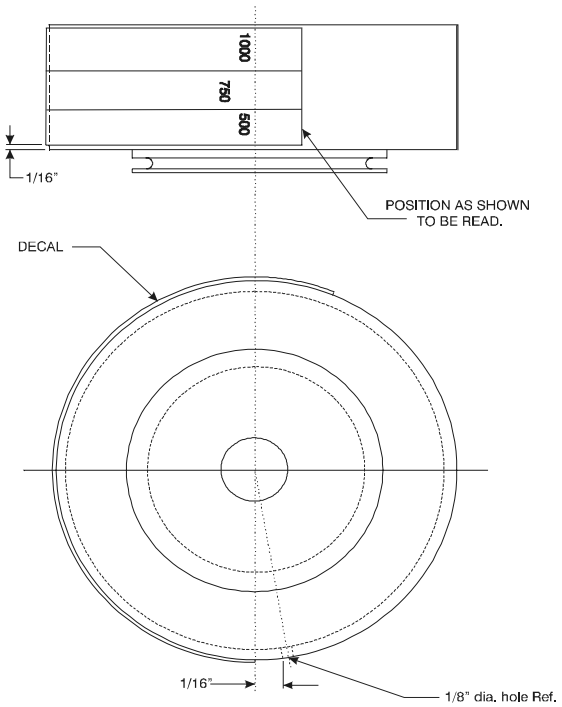

Figure 2-49. Capacity Indicator Dial

https://truckmanualshub.com/

SECTION 3. TROUBLESHOOTING

3.1 GENERAL.

This section contains troubleshooting information to be used for locating and correcting most of the operating problems which may develop in the aerial platform. If a problem should develop which is not presented in this section or which is not corrected by listed corrective actions, technically qualified guidance should be obtained before proceeding with any maintenance.

Troubleshooting and maintenance information pertaining to the prime mover (engine) that are not contained in this manual are contained in the applicable engine maintenance manual.

3.2 TROUBLESHOOTING INFORMATION.

The troubleshooting procedures are listed and defined in Table 3-1 through 3-6. As an aid to table use, the aerial platform is divided into six major groups, each covered separately within this section. These groups are as follows: platform assembly, boom assembly, turntable assembly, chassis assembly, hydraulic system and electrical system.

Each malfunction within an individual group or system is followed by a listing of probable causes which will enable determination of the applicable remedial action. The probable causes and the remedial action should, where possible, be checked in order listed in the tables.

It should be noted that there is no substitute for a thorough knowledge of the equipment and related systems.

It should also be recognized that the majority of the problems arising in the machine will be centered in the hydraulic and electrical systems. For this reason, every effort has been made to ensure that all likely problems in these areas are given the fullest possible treatment. In the remaining machine groups only those problems which are symptomatic of greater problems of which have more than one probable cause and remedy are included. This means that problems for which the probable cause and remedy may be immediately obvious are not listed in this section.

The first rule for troubleshooting and circuit that is hydraulically operated and electrically controlled is to determine if the circuit is lacking hydraulic oil or electrical control power. This can be ascertained by overriding the bypass valve (mechanically or electrically) so that oil is available to the function valve, then overriding the function valve mechanically. If the function performs satisfactorily, the problem exists with the control circuit.

3.3 HYDRAULIC CIRCUIT CHECKS.

The first reference for improper function of a hydraulic system, where the cause is not immediately apparent, should be the Troubleshooting Chart. The best place to begin the problem analysis is at the power source (pump). Once it is determined that the pump is serviceable, then a systematic control of the circuit components, beginning with the control would follow. For aid in troubleshooting, refer to the illustrated parts manual for hydraulic diagrams of the various circuits.Troubleshooting

https://truckmanualshub.com/

Table 3-1. Platform Assembly Troubleshooting.

TROUBLE	PROBABLE CAUSE	REMEDY
	PLATFORM LEVELING SYSTEM	
Automatic Leveling Inoperative	Hydraulic system oil low.	Replenish oil as necessary.
	Dual check valves dirty/inoperative.	Clean or replace as necessary.
	Restricted or broken hydraulic line or fitting on slave cylinder or lift cylinder.	Clean, repair, or replace line or fitting.
	Spit valve(s) leaking.	Clean, repair, or replace spit valve(s).
	Worn seal(s) in slave level or lift cylinder.	Replace seal(s).
	Counterbalance valves in slave cylinder defective.	Replace counterbalance valve.
	Slave level or lift cylinder not functioning properly.	Repair or replace cylinder.
Platform Will Not Maintain Level Attitude.	Counterbalance valve on slave leveling cylinder improperly adjusted or not functioning properly.	Replace valve.
	Worn seal(s) in slave level or lift cylinder.	Replace seal(s).
	Damaged slave level or lift cylinder.	Repair or replace cylinder.
No Response To Platform Leveling Controls.	Level control inoperative.	Repair or replace control valve.
	Hydraulic system oil low.	Replenish oil as necessary.
	System orifice plugged/dirty.	Clean orifice.
	Restricted or broken hydraulic line or fitting.	Clean, repair, or replace line or fitting.
	Control valve not functioning properly.	Repair or replace valve.
	No electric to dump or control valve.	See proper wiring diagram.
	Slave cylinder not functioning properly.	Repair or replace pump.
Platform Will Not Adjust "Up" To Level.	Hydraulic pump not functioning properly.	Repair or replace pump.
	Restricted or broken hydraulic line or fitting.	Clean, repair, or replace line or fitting.
	Slave cylinder not functioning properly.	Repair or replace cylinder.
	Electrical failure.	See proper wiring diagram.
	Orifice plugged.	Clean orifice.
Platform Will Not Adjust "Down" To Level.	See: Platform will not adjust "up" to level.	

https://truckmanualshub.com/

Table 3-2. Boom Assembly Troubleshooting.

TROUBLE	PROBABLE CAUSE	REMEDY
	BOOM ELEVATION SYSTEM.	
No response to control.	Lift control inoperative.	Repair or replace control lever.
	Lift cylinder holding valve inoperative.	Repair or replace holding valve.
	Dump valve (bypass) not operating.	Determine cause and repair or replace valve.
	Electrical malfunction.	See wiring diagram.
	Hydraulic system oil low.	Replenish oil as necessary.
	Restricted or broken supply line on valve bank or hydraulic pump.	Clean or replace line.
	Control valve not functioning properly.	Repair or replace valve.
	Lift cylinder not functioning properly.	Repair or replace cylinder.
	Hydraulic pump not functioning properly.	Repair or replace pump.
Boom will not raise.	Load capacity exceeded (personnel or equipment on platform).	Reduce load. (Refer to capacity placard.)
	Hydraulic system oil low.	Replenish oil as necessary.
	Electrical failure to valves.	See wiring diagram.
	Restricted or broken supply line on fitting.	Clean, repair, or replace line or fitting.
	Control valve not functioning properly.	Repair or replace valve.
	Pressure relief valve not functioning properly.	Re-adjust or replace valve.
	Bypass valve (dump) not functioning.	Repair or replace valve.
	Lift cylinder not functioning properly.	Repair or replace cylinder.
	Binding lift cylinder or boom pivot pin.	Repair or replace cylinder or pin.
Boom will not lower.	See: Boom will not raise.	
	Pressure relief valve not functioning properly.	Re-adjust or replace valve.
	Holding valve not functioning properly.	Re-adjust or replace valve.

https://truckmanualshub.com/

TROUBLE	PROBABLE CAUSE	REMEDY
Boom raises and lowers erratically.	Hydraulic system oil low.	Replenish oil as necessary.
	Restricted or broken supply line on fitting.	Clean, repair, or replace line or fitting.
	Lack of lubricant on cylinder shafts and/or boom pivot.	Lubricate as required. (Refer to Lubrication Chart.)
	Counterbalance valve on lift cylinder improperly adjusted or not functioning properly.	Replace valve.
	Control valve not functioning properly.	Repair or replace valve.
	Worn seal(s) in lift cylinder.	Replace seal(s).
	Cylinder not functioning properly.	Repair or replace cylinder.
Boom drifts down.	Worn seal(s) in lift cylinder.	Replace seal(s).
	Manual lowering valve not functioning properly.	Repair or replace valve.
	Holding valve on cylinder not functioning properly.	Repair or replace valve.
Pump Volume, Wheel Motor Speed, High Engine dose not operate below horizontal.	Damaged wiring on level limit switch.	Repair or replace wiring.
	Solenoid failure.	Replace solenoid.
	Tripped circuit breaker.	Reset circuit breaker.
	Damaged level switch.	Replace switch, repair or replace holder.
	Defective relay, main terminal box.	Replace relay.
	Defective platform switch.	Replace switch.
	TELESCOPE SYSTEM.	
No response to control.	Telescope control inoperative.	Repair or replace control valve.
	Hydraulic system oil low.	Replenish oil as necessary.
	Damaged wiring on control switch or solenoid valve.	Repair or replace wiring.
	Control valve not functioning properly.	Repair or replace valve.
	Restricted or broken supply line on valve bank or hydraulic pump.	Clean or replace line.
	Telescope cylinder not functioning properly.	Repair or replace cylinder.
	Hydraulic pump not functioning properly.	Repair or replace pump.

https://truckmanualshub.com/

TROUBLE	PROBABLE CAUSE	REMEDY
Boom will not extend.	Control valve not functioning properly.	Repair or replace control valve.
	Damaged wiring on control switch or solenoid valve.	Repair or replace wiring.
	Restricted or broken supply line on fitting.	Clean, repair, or replace line or fitting.
	Pressure setting incorrect.	Check pressure/readjust as necessary.
	Telescope cylinder not functioning properly.	Repair or replace cylinder.
Boom extends and retracts erratically.	Hydraulic system oil low.	Replenish oil as necessary.
	Wear pads worn.	Replace pads as required.
	Restricted or broken supply line on fitting.	Clean, repair, or replace line or fitting.
	Control valve not functioning properly.	Repair or replace valve.
	Worn seal(s) in telescope cylinder.	Replace seal(s).
	Cylinder not functioning properly.	Repair or replace cylinder.
	Distorted boom section (s).	Replace distorted section (s).
	Counterbalance valve not functioning properly.	Replace counterbalance valve.
	BOOM SWING SYSTEM.	
No response to control.	Hydraulic system oil low.	Replenish oil as necessary.
	Swing control lever not functioning.	Repair or replace swing control lever.
	Restricted or broken supply line on valve bank or hydraulic pump.	Clean or replace line.
	Control valve not functioning properly.	Repair or replace valve.
	Swing motor not functioning properly.	Repair or replace motor.
	Swing brake not releasing.	Repair or replace brake.
	Restrictor valve(s) plugged.	Clean or replace restrictor valve.
	Foreign objects wedged between swing motor pinion and swing gear.	Remove objects, check for damage, and repair or replace component (s) as required.
	Sheared shaft on swing motor/brake.	Repair or replace motor/brake.
	Pressure reducing valve in swing circuit malfunctioning.	Repair or replace pressure reducing valve.
	No electric power to valve.	See proper wiring diagram.

https://truckmanualshub.com/

TROUBLE	PROBABLE CAUSE	REMEDY
Boom will swing in only one direction.	Restricted or broken hydraulic line on fitting.	Clean, repair, or replace line or fitting.
	Control valve not functioning properly.	Repair or replace valve.
	Foreign objects wedged between swing motor pinion and swing gear.	Remove objects, check for damage, and repair or replace component (s) as required.
	Swing control lever not functioning.	Repair or replace swing control lever.
	Brake shuttle valve defective.	Replace shuttle valve.
Boom swings erratically in either direction.	Hydraulic system oil low.	Replenish oil as necessary.
	Lack of lubricant on swing gear or speed reducer pinion.	Lubricate as required. (See Lubrication Chart.)
	Swing motor not functioning properly.	Repair or replace swing control lever.
	Worn or broken teeth on swing gear or swing motor pinion.	Replace gear(s) as required.
	Swing brake not functioning properly.	Repair or replace swing brake.
	Restrictor valves plugged.	Clean or replace restrictor valve.

https://truckmanualshub.com/

Table 3-3. Turntable Assembly Troubleshooting.

TROUBLE	PROBABLE CAUSE	REMEDY
	POWER PLANT.	
Engine will not start.	Station power selector switch not in required position.	Actuate switch as required.
	Circuit breaker open.	Determine and correct cause; reset circuit breaker.
	Defective starter motor.	Replace starter motor.
	Damaged wiring in ignition circuit (broken wire on starter).	Repair, replace wiring.
	Ignition switch not functioning properly.	Replace switch.
	Ignition relay not functioning properly.	Replace relay.
	Ignition circuit shorted to ground.	See proper wiring diagram.
	Battery cable(s) not making contact.	Clean and tighten cable(s).
Engine will not start. (Ignition O.K.)	No fuel.	Replenish fuel as necessary.
	Clogged fuel filter.	Replace fuel filter.
	Restricted or broken fuel line.	Clean or replace fuel line.
	Automatic choke out of adjustment.	Adjust choke.
	Battery discharged.	Charge battery, replace if defective.
	Fuel pump not working.	Replace fuel pump.

https://truckmanualshub.com/

TROUBLE	PROBABLE CAUSE	REMEDY
Engine will not accelerate above low speed.	Damaged wiring on speed control switch or high engine solenoid.	Repair, replace wiring.
	Speed control switch not functioning properly.	Replace switch.
	High engine solenoid not functioning properly.	Repair or replace solenoid.
	High engine circuit breaker not functioning properly.	Replace circuit breaker.
	Switch not functioning properly or improperly adjusted.	Adjust, repair, or replace horizontal limit switch.
	Excessive load on engine.	Reduce load.
	Engine worn badly.	Rebuild engine.
	Engine improperly timed.	Time engine.
	Dirty fuel filter (diesel).	Replace filter.
	Fuel line pinched (diesel).	Replace fuel line.
	Throttle governor not working properly.	Repair or replace governor.
Engine surges.	Governor not adjusted properly.	Correctly adjust governor.

https://truckmanualshub.com/

Table 3-4. Chassis Assembly Troubleshooting.

TROUBLE	PROBABLE CAUSE	REMEDY
	CONTROL VALVES.	
Valve spool sticking.	Dirt in oil causing excessive temperature build-up.	Change oil using recommended viscosity and flush system.
	Incorrect valve mounting causing warping of the unit.	Loosen valve and check mounting. Repair as necessary.
	Valve spool scored.	Remove valve and repair or replace as necessary.
	Return spring weak or broken.	Remove valve and repair or replace as necessary.
	Relief valve malfunctioning causing excessive pressure within valve.	Check pressure delivery to and from valve and repair or replace as necessary.
Valve leaking.	Dirt or other foreign material under seal.	Remove and repair valve as necessary.
	Valve spool scored.	Repair or replace valve.
	Excessive back pressure caused by restricted return line to reservoir.	Remove line and clean obstruction or replace line as necessary.
	Damaged valve seal(s).	Repair or replace valve as necessary.
	FUEL SYSTEM.	
Strong fuel odor during machine operation.	Fuel tank overfilled.	Check fuel tank and immediately wipe up any spilled fuel.
	Fuel tank damaged.	Drain all fuel from tank and remove tank for replacement or repair.
	Fuel line from tank damaged.	Replace fuel line.
	Filter or carburetor fuel leak.	Determine cause of leak and make appropriate repairs.
	FRONT FRAME AXLE AREA.	
One or both front wheels will not steer.	Steering link or tie rod broken or attaching hardware missing.	Replace steering link, tie rod or hardware as necessary.
One or both front wheels will not rotate or rotate erratically.	Wheel hub or bearings damaged or not lubricated.	Replace hub or bearings as necessary and repack bearings with approved grease.
	Hub attachment nut loose or missing.	Secure or replace hub attachment nut and cotter pin as necessary.
Oscillating Axle will not hold properly.	Air in oscillating axle hydraulic system.	See bleeding procedure in section 2.
	Cam Valve Stuck or leaking.	Repair or replace cam valve.
	Lockout cylinder leaking.	Repair or replace cylinder.

https://truckmanualshub.com/

TROUBLE	PROBABLE CAUSE	REMEDY
	REAR FRAME AXLE AREA.	
Difficulty encountered when moving machine.	Load capacity exceeded.	Reduce load. Apply loads only in accordance with load capacity indicator.
	Flow divider sticking.	Repair or replace flow divider.
	Machine being moved up too steep a grade.	Remove machine from grade and check that drive system operates correctly.
	Grade too steep.	See Caution Placard on platform for specified grades and sideslips.
	Drive wheel tire treads worn smooth.	Replace tires as necessary and inflate to specified pressure.
	Drive brakes “dragging”.	Re-adjust pressure.
	System pressure too low.	Re-adjust pressure.
	Drive hub(s) defective.	Repair or replace hub.
	Engine RPM not set.	Correctly set engine RPM.
	Counterbalance valve defective.	Replace counterbalance valve.
	Accessory valve not adjusted properly.	Correctly adjust accessory valve.
	Low amperage on controller.	Correctly adjust controller.
	DRIVE SYSTEM.	
No response to control.	Hydraulic system oil low.	Replenish oil as necessary.
	Hydraulic pump not functioning properly.	Repair or replace pump.
	Restricted or broken pump supply line.	Clean, repair or replace line.
	Restricted or broken line on valve bank or rotary coupling.	Clean, repair or replace line.
	Drive hub(s) disconnected.	Reconnect disconnect cap on hub.
	Rotary coupling leaking internally. (Seal(s) worn.)	Repair or replace coupling.
	Drive motor(s) not functioning properly.	Repair or replace motor(s).
	Air in wheel brake circuit.	Bleed circuit. determine and correct cause.
	Damaged wiring on control switch.	Repair or replace wiring.
	Control switch not functioning properly.	Replace switch.
	Brake(s) not releasing.	Determine cause and repair or replace.

https://truckmanualshub.com/

TROUBLE	PROBABLE CAUSE	REMEDY
Machine will not travel in forward.	Hydraulic system oil low.	Replenish oil as necessary.
	Restricted or broken hydraulic line or fitting.	Clean, repair or replace line or fitting.
	Control valve not functioning properly.	Repair or replace valve.
	Drive motor(s) not functioning properly.	Repair or replace motor(s).
	Circuit breaker open.	Determine and correct cause; reset circuit breaker.
	No power to wheel motor speed switch.	See proper wiring diagram.
	Two speed valve sticking.	Repair or replace valve.
	Counterbalance valve sticking on return side.	Adjust return counterbalance out 3 turns - cycle drive - return to original position.
Machine over speeds when descending a grade.	Counterbalance valve improperly adjusted or defective.	Adjust or replace valve.
Motor turns slowly in the direction of the last command.	Valve not returning to neutral.	Check neutral springs.
	Function speed switch malfunction.	Replace function switch.
	Sticking spool due to contamination.	Remove end cap and check spool freedom. Repair as necessary.
Motor turns slowly at maximum command.	Valve spool is not traveling far enough due to:	
	Worn, leaking drive motor(s).	Repair or replace drive motor(s).
	Engine speed too low.	Properly adjust engine speed.
	Low control pressure supply.	Replace pressure regulator if necessary.
	Function speed switch malfunction.	Replace switch.
	Amperage too low on controller.	Correctly adjust controller.
	Defective pump, low oil volume.	Repair or replace pump.
Poor response, function shuts off slowly when command is removed.	Low spool spring preload.	Check for correct spring and shims in end cap.
	Sticking spool due to contamination.	Remove end cap and check spool freedom.
	Ramp set too high in controller.	Adjust controller.
	Sticking control handle.	Repair or replace controller.

https://truckmanualshub.com/

TROUBLE	PROBABLE CAUSE	REMEDY
	STEERING SYSTEM.	
No response to control.	Circuit breaker open.	Determine and correct cause; reset circuit breaker.
	If equipped, steer/tow selector in “tow” position.	Actuate control to “steer” position. (Valve knob “in”.)
	Hydraulic system oil low.	Replenish oil as necessary.
	Hydraulic system pressure too low.	Adjust pressure.
	Damaged wiring on control switch or solenoid valve.	See proper wiring diagram.
	Control switch not functioning properly.	Replace switch.
	Restricted or broken hydraulic line on valve bank, hydraulic pump or rotary coupling.	Clean, repair or replace line.
	Swivel coupling leaking internally. (Seal(s) defective.)	Repair or replace coupling.
	Control valve not functioning properly.	Repair or replace valve.
	Steer cylinder not functioning properly.	Repair or replace cylinder.
Machine hard to steer or steering is erratic.	Hydraulic system oil low.	Replenish oil as necessary.
	Restricted hydraulic line or fitting.	Clean,repair or replace line or fitting.
	Lack of lubrication.	Lubricate as required. (Refer to Lubrication Chart.)
	Restricted crossover relief valve.	Clean or replace valve.
	Steer system pressure low.	Adjust pressure.
	Bent linkage (tie rod(s) or steering hitch.)	Repair or replace linkage as required.
	Hydraulic pump not functioning properly.	Repair or replace pump.
	Steer cylinder not functioning properly.	Repair or replace cylinder.
	Spindle pins tight or need lubrication.	Repair or lubricate spindles.

https://truckmanualshub.com/

TROUBLE	PROBABLE CAUSE	REMEDY
Steering inoperative.	Circuit breaker open.	Determine and correct cause; reset circuit breaker.
	Damaged wiring on control switch or solenoid valve.	See proper wiring diagram.
	Solenoid valve not functioning properly.	Repair or replace valve.
	Control switch not functioning properly.	Replace switch.
	Relief valve improperly set or not functioning properly.	Reset, repair or replace valves as required.
	Steer cylinder not functioning properly.	Repair or replace cylinder.
Machine will not steer left or to the right.	Wiring on control switch is damaged.	See proper wiring diagram.
	Wiring on solenoid valve damaged.	Repair or replace wiring.
	Coil in solenoid is damaged.	Replace coil.
	No oil flow or pressure to steer circuit.	Take pressure reading at steer valve and adjust as necessary.
	Bent cylinder rod.	Repair or replace cylinder.
	Damaged tie rod.	Replace tie rod.
	Crossover relief valve sticking.	Repair crossover relief valve.
	Cylinder packing defective.	Repair or replace cylinder.
Machine wanders; steering not firm.	Crossover relief valve set too low or not functioning properly.	Reset, repair or replace valves as required.
	Steer linkages loose/spindle bushings worn.	Tighten linkage/replace bushing.
	Steer wheel toe-in not set properly.	Adjust toe-in for 1/4 in. (6.35 mm) overall.
	Swivel coupling leaking.	Repair or replace swivel coupling.

https://truckmanualshub.com/

Table 3-5. Hydraulic Assembly Troubleshooting.

TROUBLE	PROBABLE CAUSE	REMEDY
	HYDRAULIC SYSTEM - GENERAL.	
Hydraulic pump noisy.	Air entering system through broken line or fitting. (Suction side.)	Repair or replace line or fitting.
	Air bubbles in oil. (Reservoir oil level too low.)	Replenish oil as necessary.
	Suction filter dirty.	Clean or replace filter.
	Oil filter dirty.	Replace hydraulic filter.
	Restricted suction line.	Clean, repair or replace line.
Pump cavitation. (Vacuum in pump due to oil starvation.)	Restricted suction line.	Clean, repair or replace line.
	Restricted reservoir air vent.	Clean or replace air vent.
	Oil viscosity too high.	Drain system and replace with recommended oil. (Refer to Hydraulic Oils.)
	Air leak on suction side of tank.	Repair leak.
	Suction filter dirty.	Clean or replace filter.
System overheating.	Oil viscosity too high.	Drain system and replace with recommended oil. (Refer to Hydraulic Oils.)
	Bypass valve not operating properly.	Repair or replace valve.
	Main relief valve set too high. (Racine)	Reset valve as required.
	Main relief valve set too low. (Vickers)	Reset valve as required.
	Hydraulic system oil low.	Replenish oil as necessary.
Pump not delivering oil.	Restricted suction line.	Clean, repair or replace line.
	Air entering system through broken line or fitting.	Repair or replace line or fitting.
	Broken pump drive shaft/pump coupling.	Repair or replace pump/pump coupling.
	Splines worn in drive disc.	Replace drive disc.

https://truckmanualshub.com/

TROUBLE	PROBABLE CAUSE	REMEDY
	HYDRAULIC SYSTEM - GENERAL.	
Function sluggish during operation. (System pressure too low.)	Main relief valve set too low.	Reset valve as required.
	Pump section not delivering sufficient oil.	Repair or replace pump section or pump.
	Main relief valve stuck in open position.	Clean, repair, or replace valve. (Check system oil for contamination)
	Oil viscosity too low.	Drain system and replace with recommended oil. (Refer to Hydraulic Oils.)
	Leak in component, line or fitting.	Repair or replace component, line or fitting.
	Scored valve spool; scored cylinder.	Replace valve; replace cylinder.
	Amperage too low on controller.	Correctly adjust controller.
	Low sequence pressure.	Reset valve as required.
	Low pilot pressure.	Reset valve as required.
	Wrong/defective spool in drive section.	Repair or replace drive section.
	Low voltage in electrical system.	Correct low voltage problem.
System(s) operate erratically.	Sticking or binding valve spool, pistons, rods, etc.	Clean, repair, or replace components as required.
	AUXILIARY HYDRAULIC SYSTEM.	
Auxiliary hydraulic pump inoperable.	Circuit breaker open.	Determine and correct cause; reset circuit breaker.
	Check valve in system leaking.	Repair or replace valve.
	Battery requires charging or will not hold a charge.	Charge or replace battery as required.
	Damaged wiring on control switch or auxiliary pump.	See proper wiring diagram.
	Control switch not functioning properly.	Replace switch.
	Restricted or broken hydraulic line or fitting.	Clean, repair, or replace line or fitting.
	Pump motor solenoid not functioning properly.	Replace solenoid.
	Pump motor not functioning properly.	Repair or replace motor.
	Low pilot pressure.	Reset valve as required.

https://truckmanualshub.com/

Table 3-6. Electrical Assembly Troubleshooting.

TROUBLE	PROBABLE CAUSE	REMEDY
	PLATFORM CONTROLS.	
No power to platform controls.	Self-reset circuit breaker open.	Check footswitch to ensure that both switches are making contact when pedal is depressed. Repair or replace footswitch as required.
	Contact block in footswitch malfunctioning.	Repair, replace or adjust contact block as required.
	Faulty power circuit wiring.	Check wiring continuity. Refer to proper wiring diagram.
	Select switch in wrong position.	Place select switch to correct position.
	ENGINE STARTER SYSTEM.	
Starter will not crank.	Discharged battery or loose battery terminals.	Check and charge battery or replace battery as necessary. Clean and secure battery terminals.
	Starter relay faulty or faulty relay connections.	Using a test meter, check relay coil terminals for presence of electrical power and for energizing of relay coil. Also check relay terminals for correct switching of contacts. Replace relay as necessary.
	Malfunctioning starter solenoid or motor.	Replace solenoid or motor in accordance with applicable manufacturer's manual.
	Malfunctioning ignition switch.	Using a test meter, check ignition switch for correct switching of contacts. Replace switch as necessary.
	Faulty ignition and/or starter circuit wiring.	Check wiring continuity. See proper wiring diagram.
	Faulty starter lockout system.	See correct wiring diagram.
	Faulty starter switch.	Replace switch.
Engine continues to crank.	Faulty ignition and/or starter circuit wiring.	Check wiring continuity. See proper wiring diagram.
	Malfunctioning starter solenoid or motor.	Replace solenoid or motor in accordance with applicable manufacturer's manual.
	Faulty starter switch.	Replace switch.
	INSTRUMENTS AND INDICATORS.	
Travel warning horn inoperative.	Circuit breaker open.	Determine and correct cause; reset circuit breaker.
	Damaged wiring in horn circuit.	Repair or replace wiring.
	Damaged horn.	Replace horn.

https://truckmanualshub.com/

TROUBLE	PROBABLE CAUSE	REMEDY
Hourmeter inoperative.	Damaged wiring in hourmeter circuit.	Repair or replace wiring.
	Defective vacuum switch.	Replace vacuum switch.
	Inoperative hourmeter.	Replace hourmeter.
Tilt alarm circuit.	Damaged wiring in tilt alarm circuit.	Repair or replace wiring. See proper wiring diagram.
	Tilt alarm inoperative.	Replace tilt alarm.
	Tilt alarm not adjusted properly.	Re-adjust tilt alarm.
	Defective bulb in tilt light.	Replace bulb.
Wheel motor speed circuit.	Switch damaged or inoperative.	Replace switch.
	Damaged or disconnected wiring circuit.	See proper wiring diagram.
	Plugged orifice in shifter valve.	Clean orifice.
	Faulty shifter valve.	Repair or replace valve.
High engine speed will not function.	Boom above horizontal.	Lower boom.
	Horizontal limit switch out of adjustment.	Adjust limit switch to activate (close) with boom at horizontal and below.
	High engine solenoid malfunctioning.	Repair or replace solenoid valve.
	Drive pressure switch malfunctioning.	Replace pressure switch.
	Electrical malfunctioning.	See proper wiring diagram.
	Defective engine governor.	Repair or replace governor.

https://truckmanualshub.com/

TROUBLE	PROBABLE CAUSE	REMEDY
High pump volume will not function.	Boom above horizontal.	Lower boom.
	Horizontal limit switch out of adjustment.	Adjust limit switch to activate (close) with boom at horizontal and below.
	Defective pump section.	Repair or replace pump section.
	Oil by-passing in step valve.	Repair or replace step valve.
	Electrical malfunction.	See proper wiring diagram.
High wheel motor speed will not function.	Boom above horizontal.	Lower boom.
	Horizontal limit switch out of adjustment.	Adjust limit switch to activate (close) with boom at horizontal and below.
	Two speed drive solenoid valve malfunctioning.	Repair or replace solenoid valve.
	Drive pressure switch malfunctioning.	Replace pressure switch.
	Valve orifice plugged.	Unplug valve orifice.
	Defective drive motor.	Repair or replace motor.
	Grade too steep.	Check tractability of machine.

https://truckmanualshub.com/

INTENTIONAL BLANK PAGE

https://truckmanualshub.com/

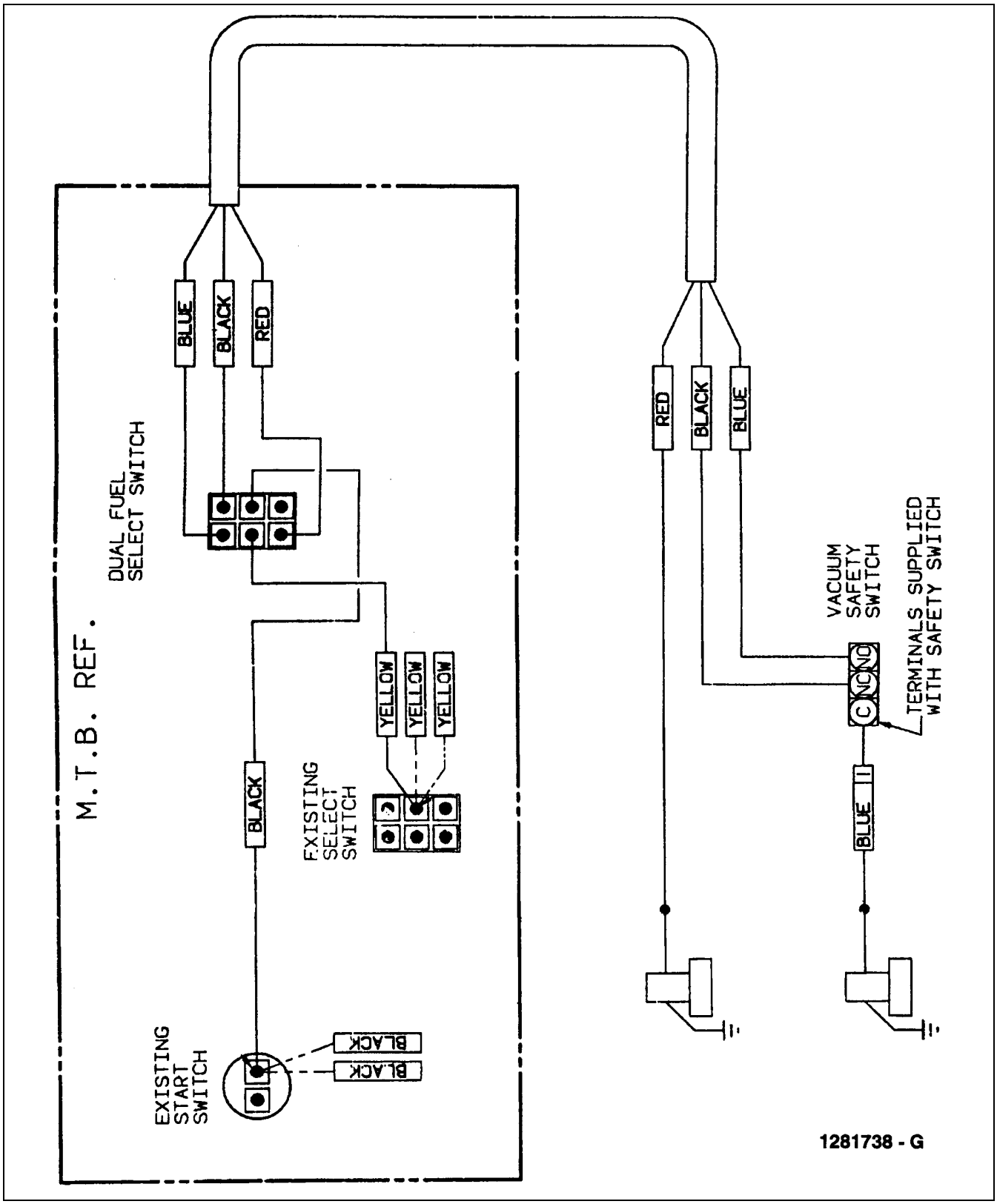

Figure 3-1. Wiring Diagram - Dual Fuel (Ford Or Wisconsin)

https://truckmanualshub.com/

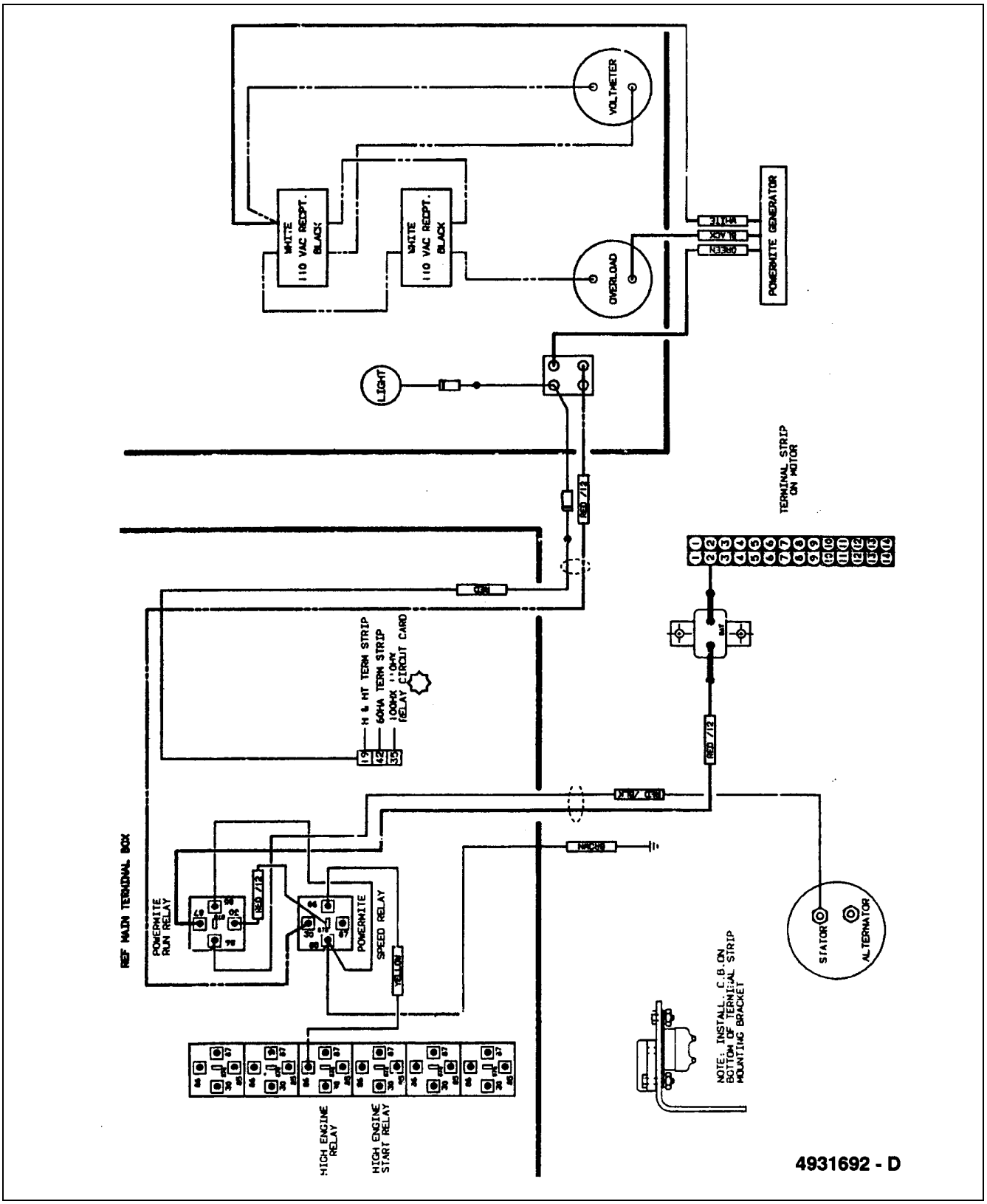

Figure 3-2. Wiring Diagram - 110v Generator (Ford).

https://truckmanualshub.com/

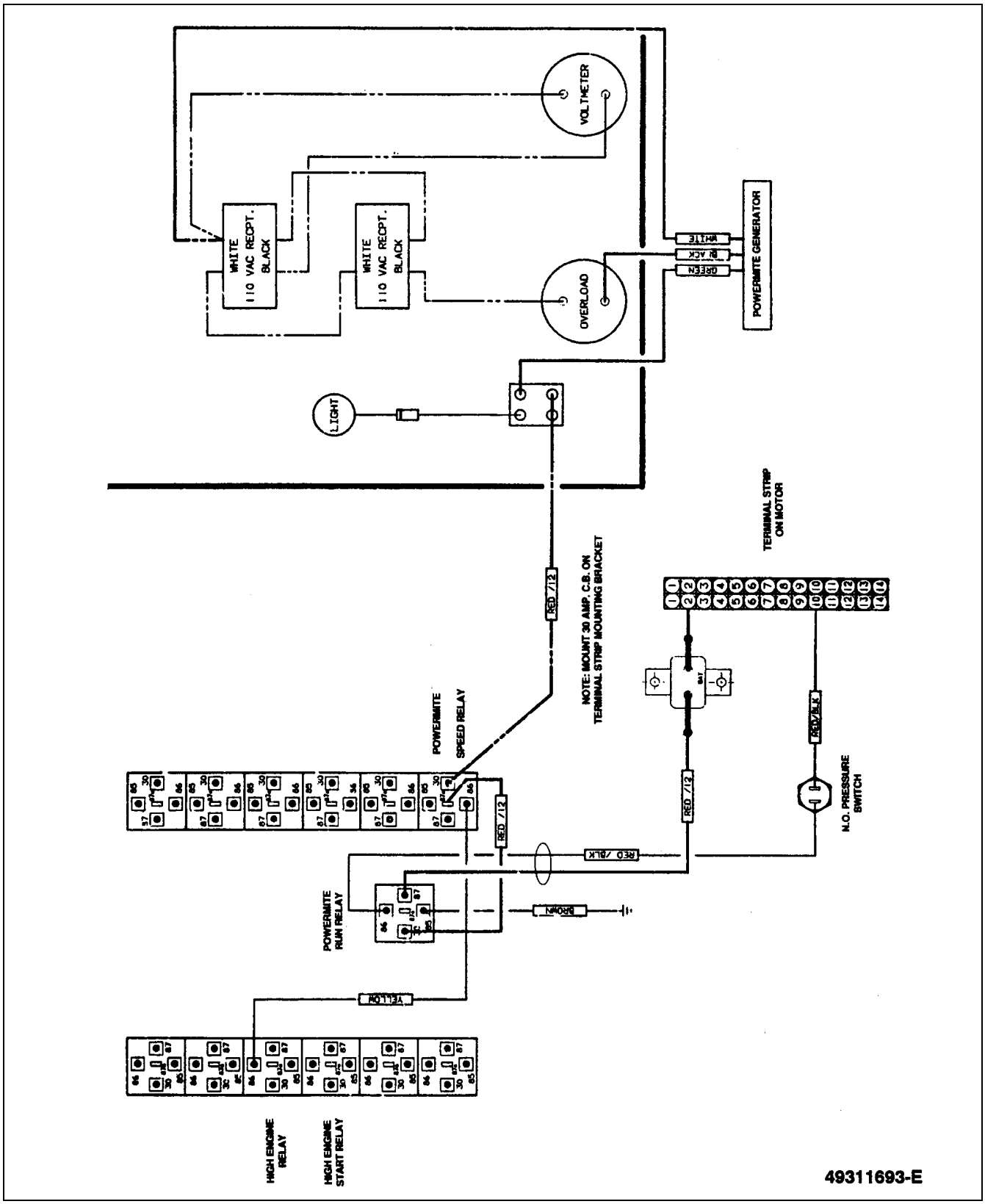

Figure 3-3. Wiring Diagram - 110v Generator (Deutz).

https://truckmanualshub.com/

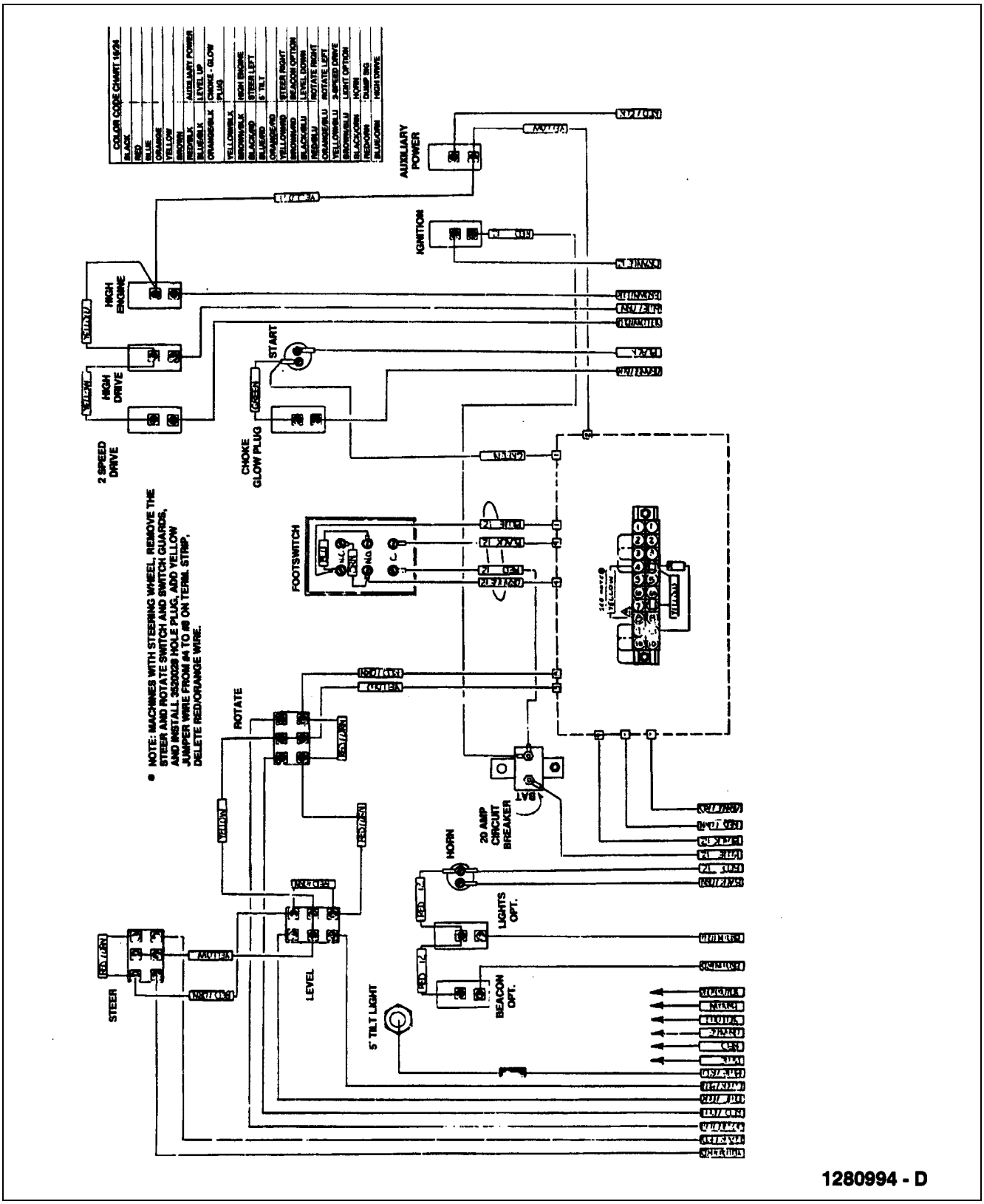

Figure 3-4. Wiring Diagram - Platform Console (W/all Hydraulic Controls).

https://truckmanualshub.com/

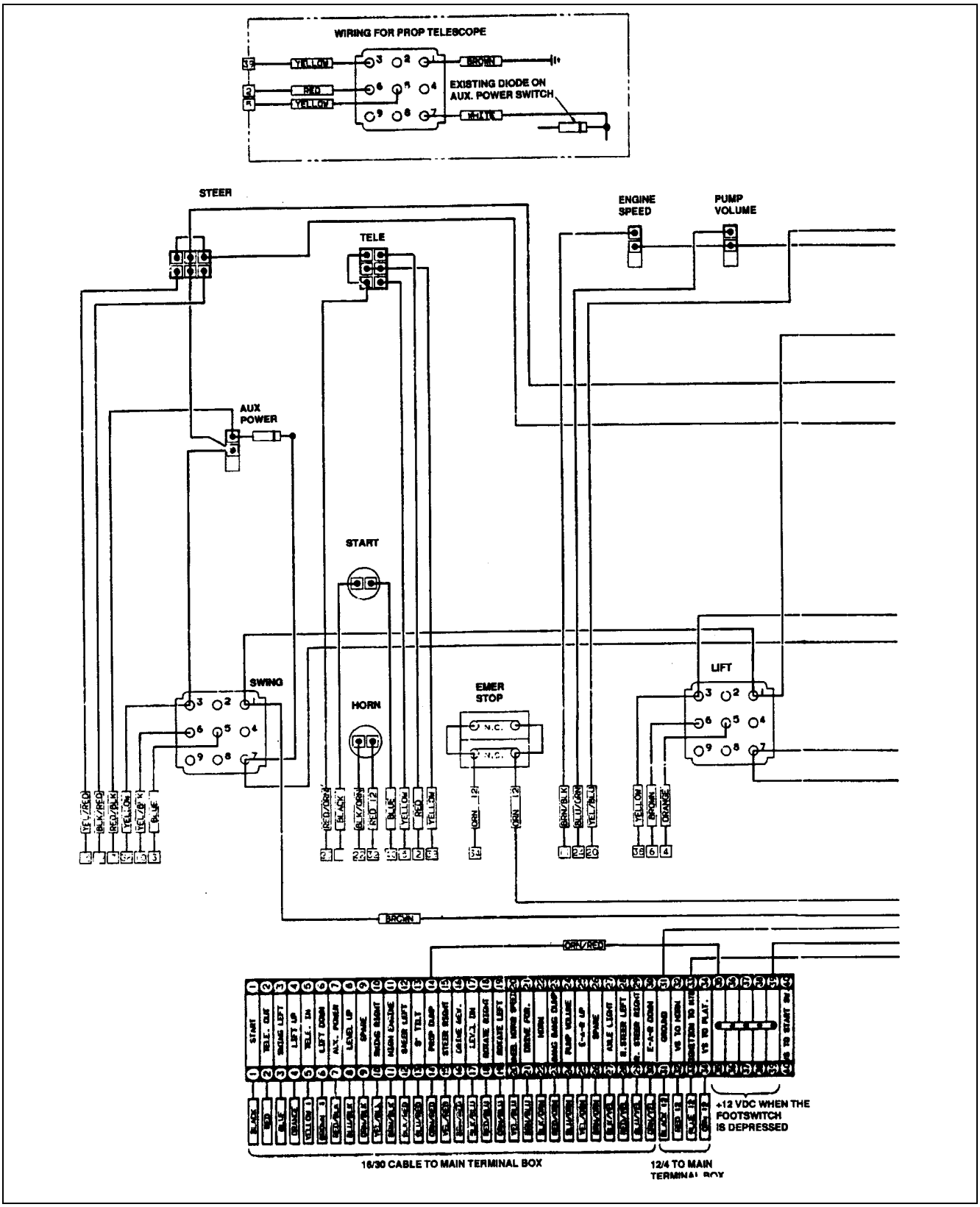

Figure 3-5. Wiring Diagram - Platform Console Standard (Sheet 1 Of 2).

https://truckmanualshub.com/

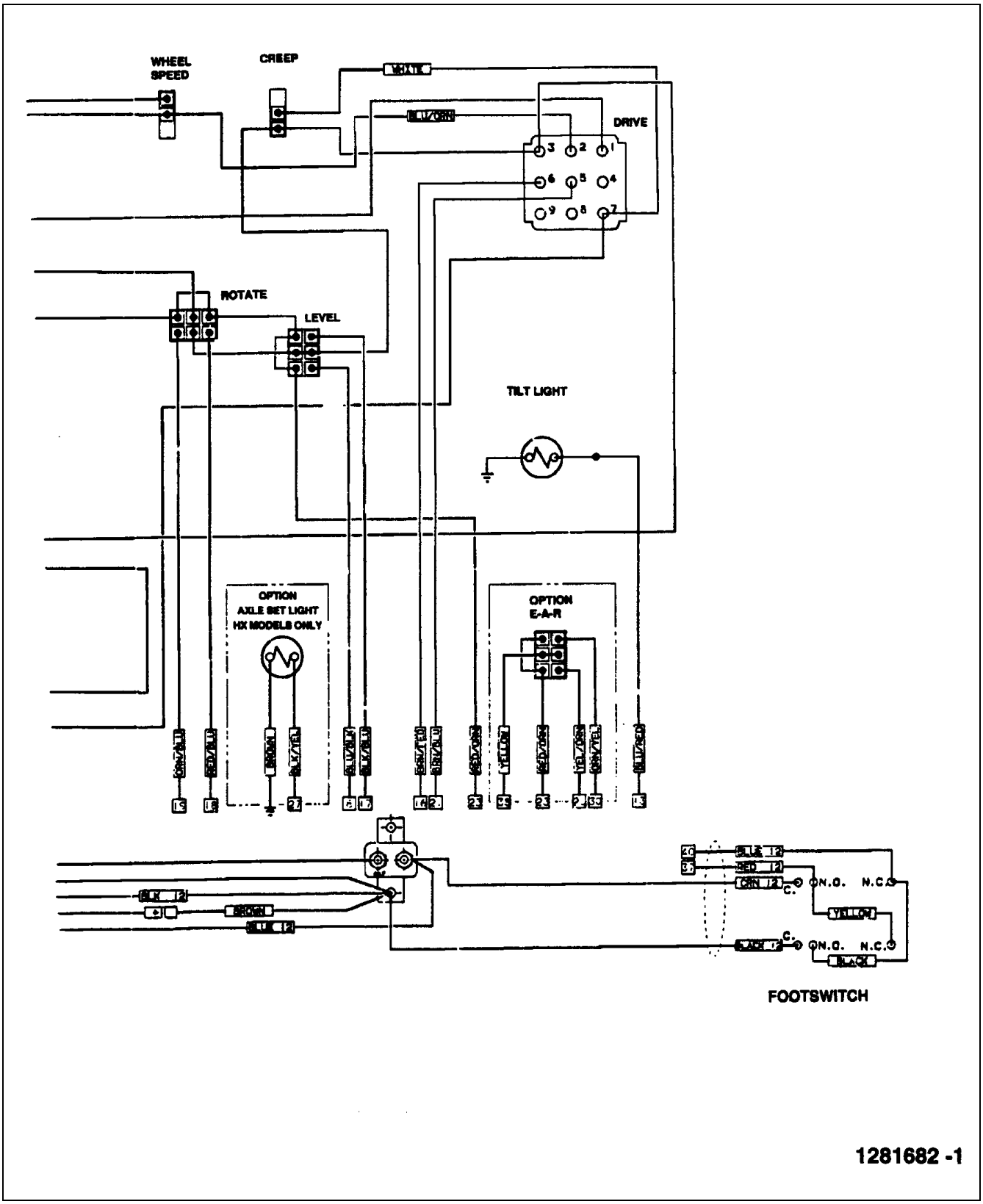

Figure 3-6. Wiring Diagram - Platform Console Standard (Sheet 2 Of 2).

https://truckmanualshub.com/

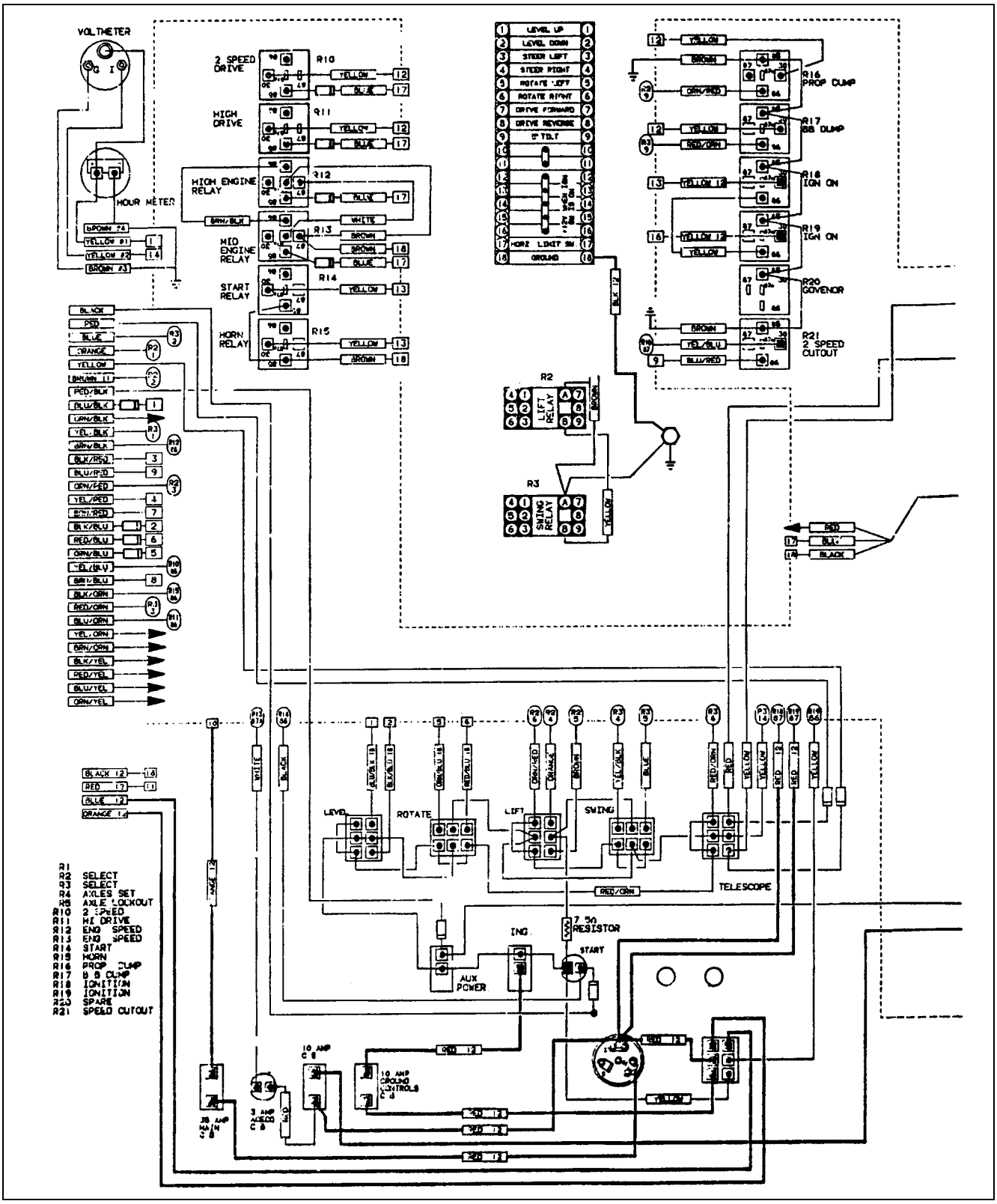

Figure 3-7. Wiring Diagram - Standard (Deutz F2l511/f3l912 & Wisconsin Engine W/ Standard Controls) (Sheet 1 Of 2).

https://truckmanualshub.com/

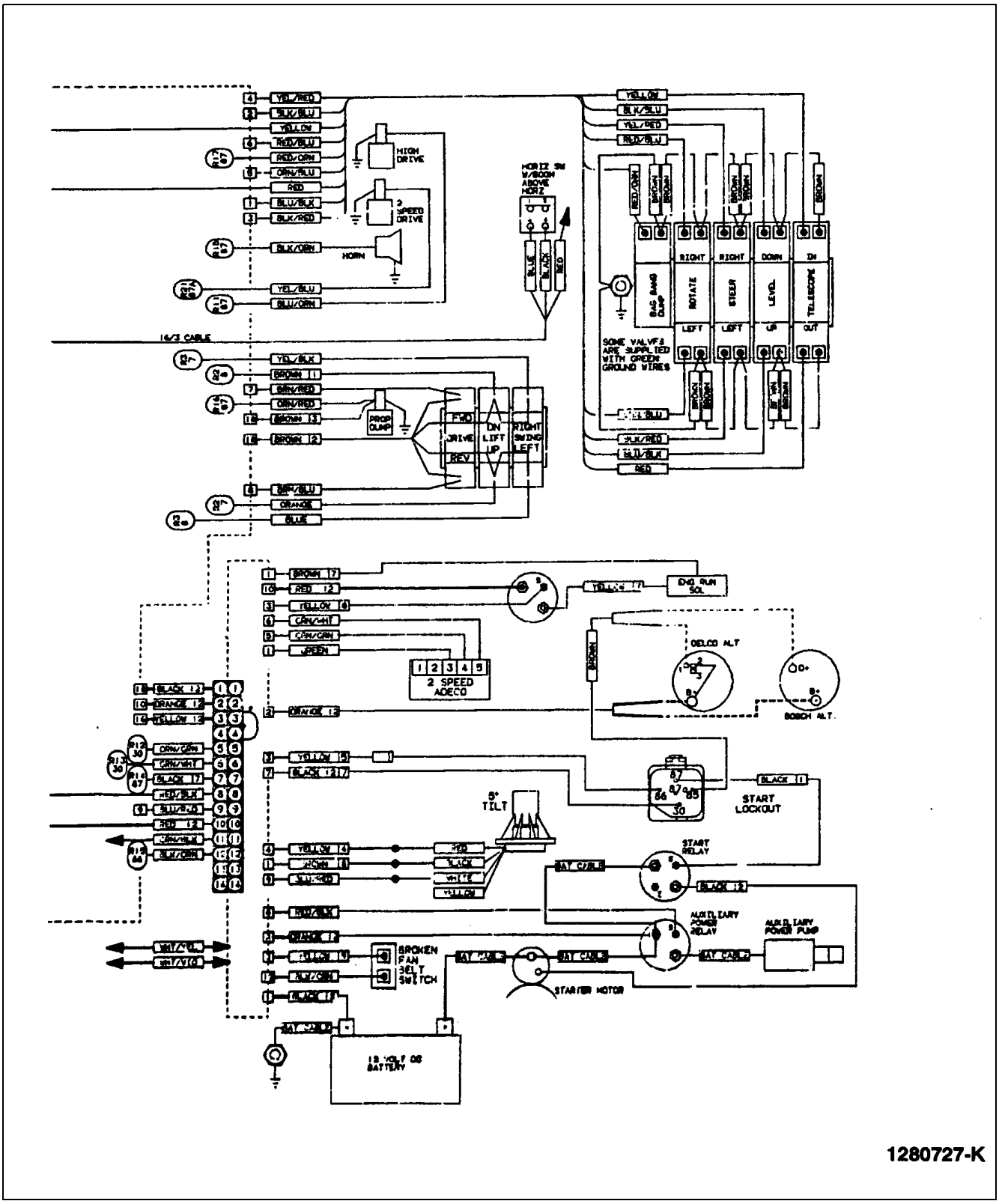

Figure 3-8. Wiring Diagram - Standard (Deutz F2l4511/f3l912 & Wisconsin Engine W/ Standard Controls) (Sheet 2 Of 2).

https://truckmanualshub.com/

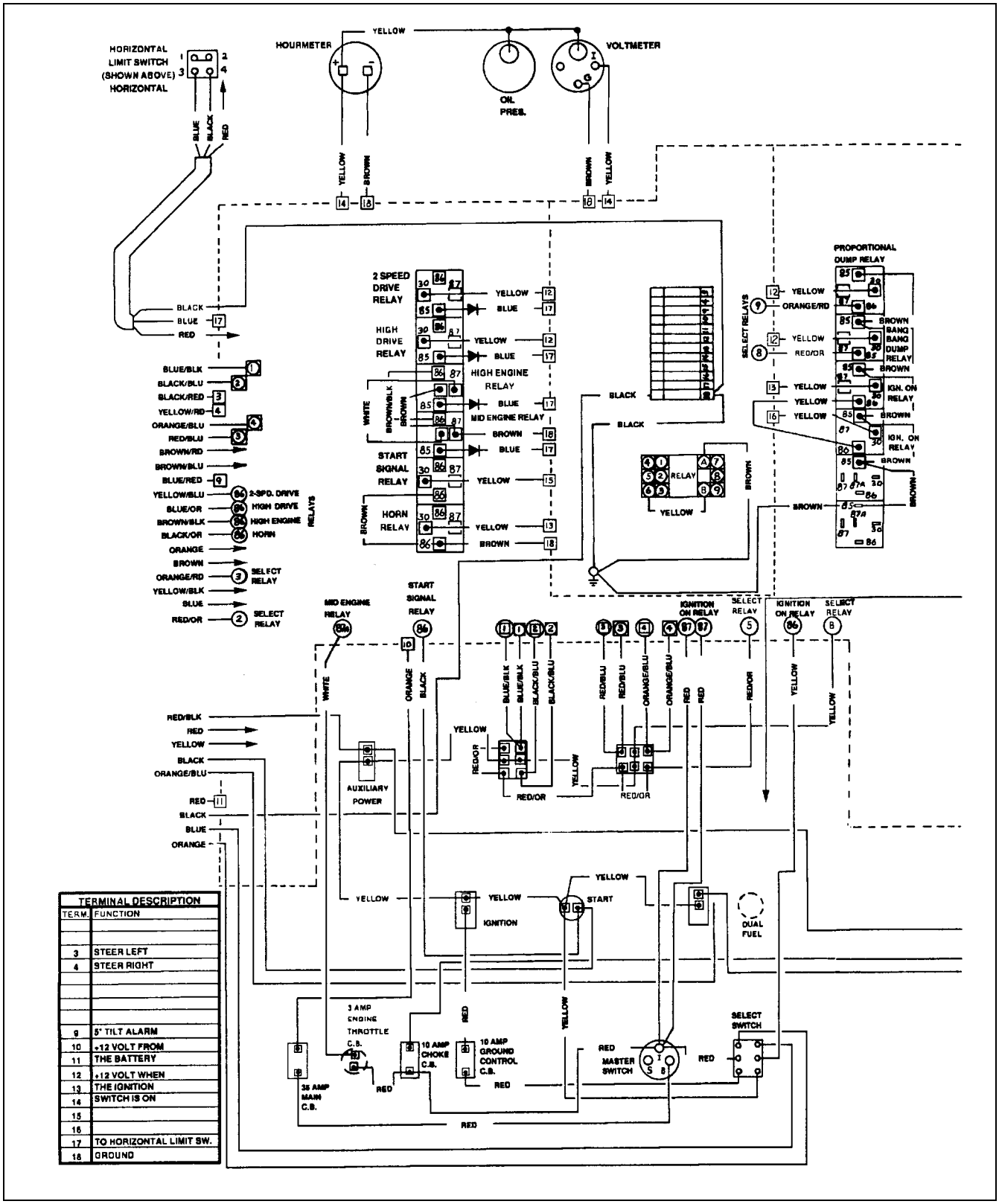

Figure 3-9. Wiring Diagram - Standard (Deutz F2l511/f3l912 & Engine W/ Hydraulic Controls) (Sheet 1 Of 2).

https://truckmanualshub.com/

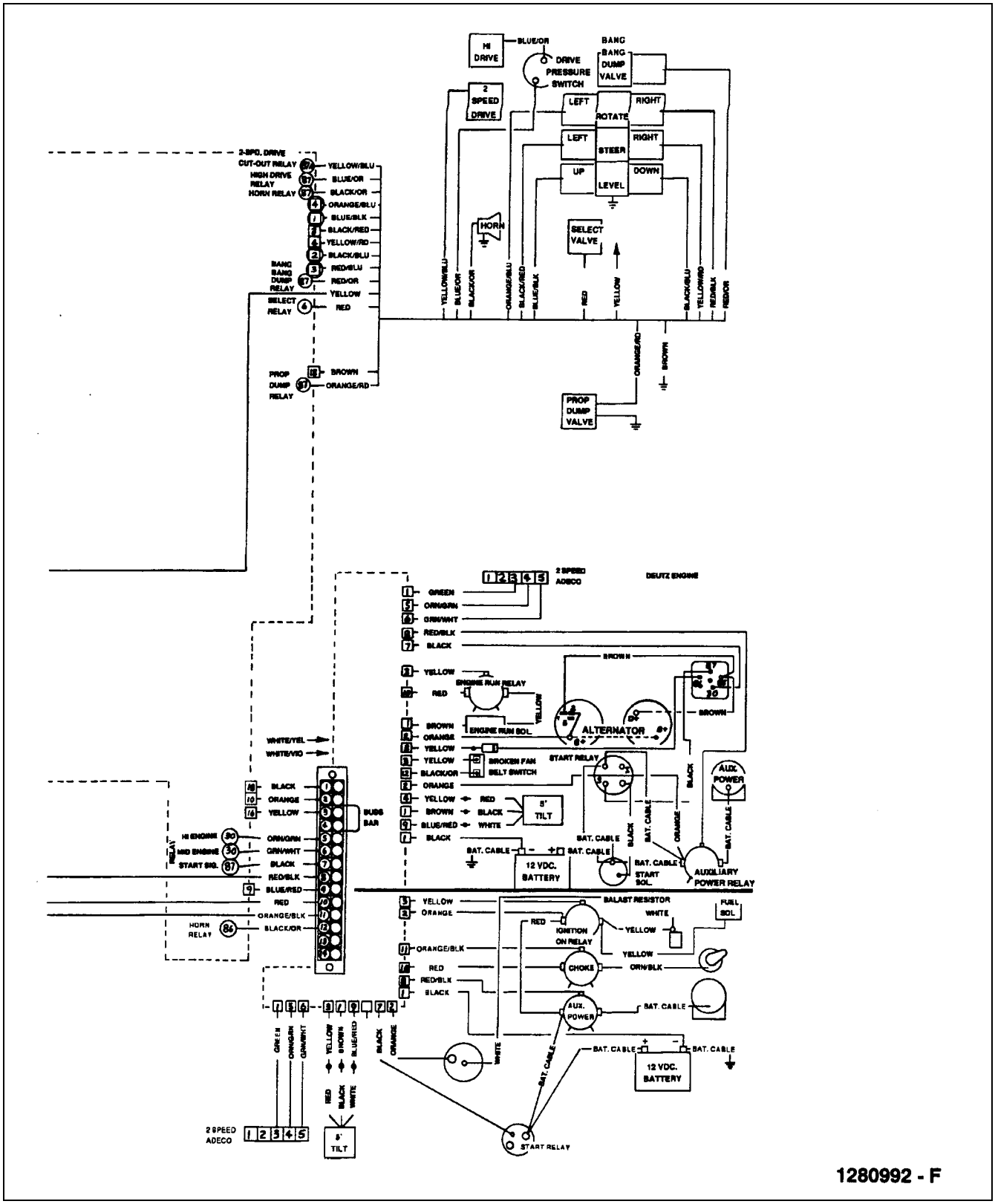

Figure 3-10. Wiring Diagram - Standard (Deutz F2l511/f3l912 & Wisconsin Engine W/ Hydraulic Controls) (Sheet 2 Of 2).

https://truckmanualshub.com/

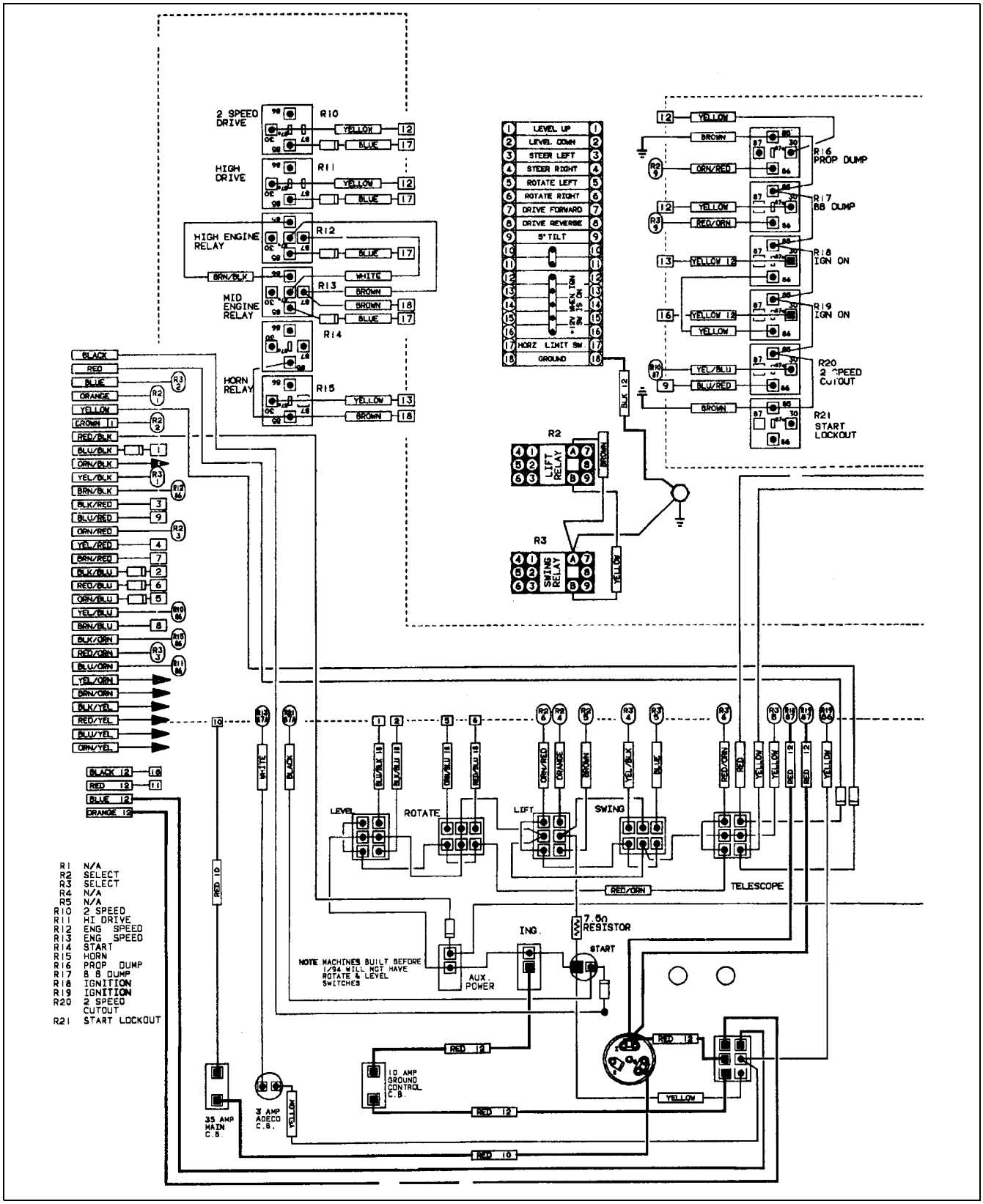

Figure 3-11. Wiring Diagram - Standard (Deutz F3l1011 Engine W/ Standard Controls) (Sheet 1 Of 2).

https://truckmanualshub.com/

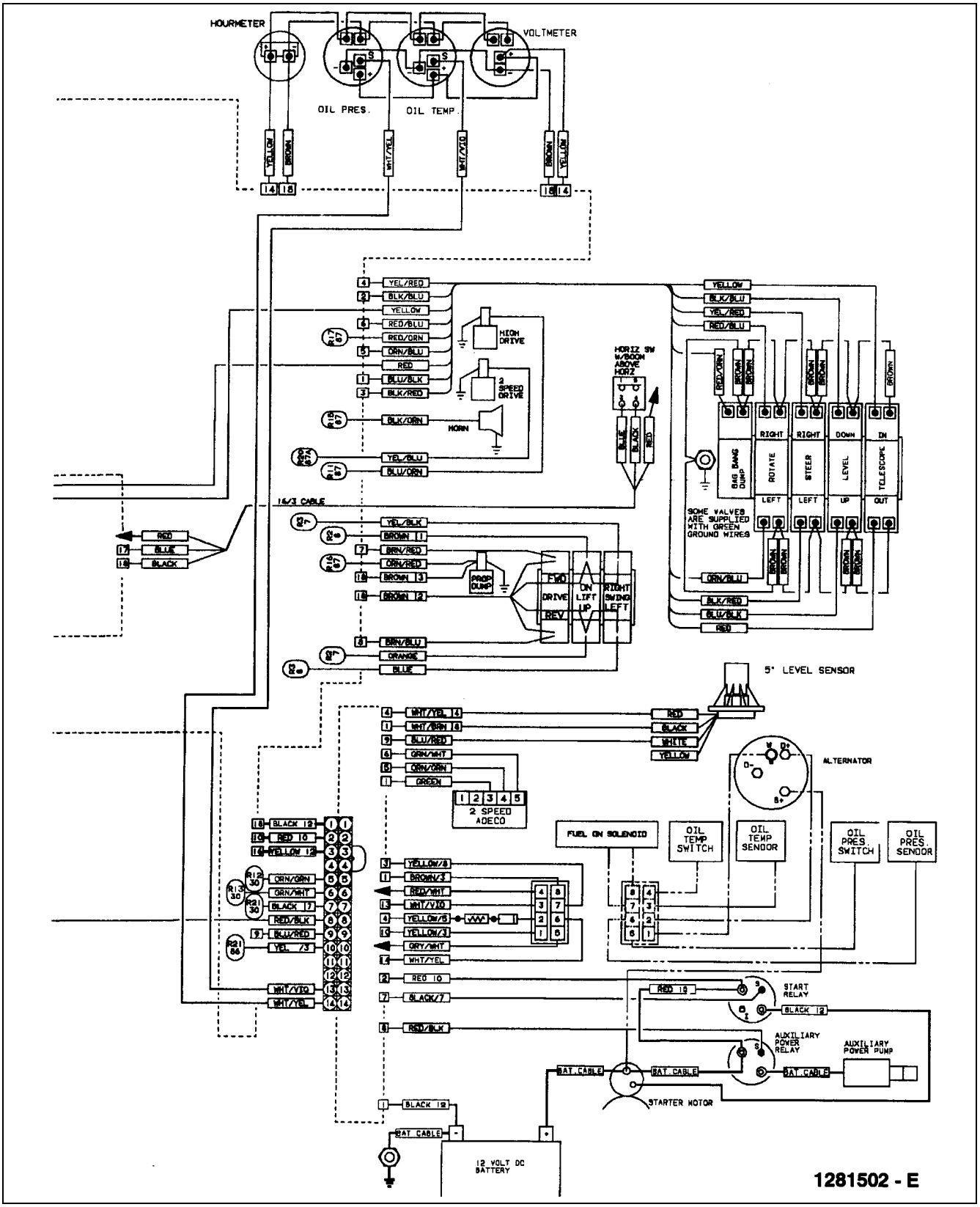

Figure 3-12. Wiring Diagram - Standard (Deutz F3l1011 Engine W/ Standard Controls) (Sheet 2 Of 2).

https://truckmanualshub.com/

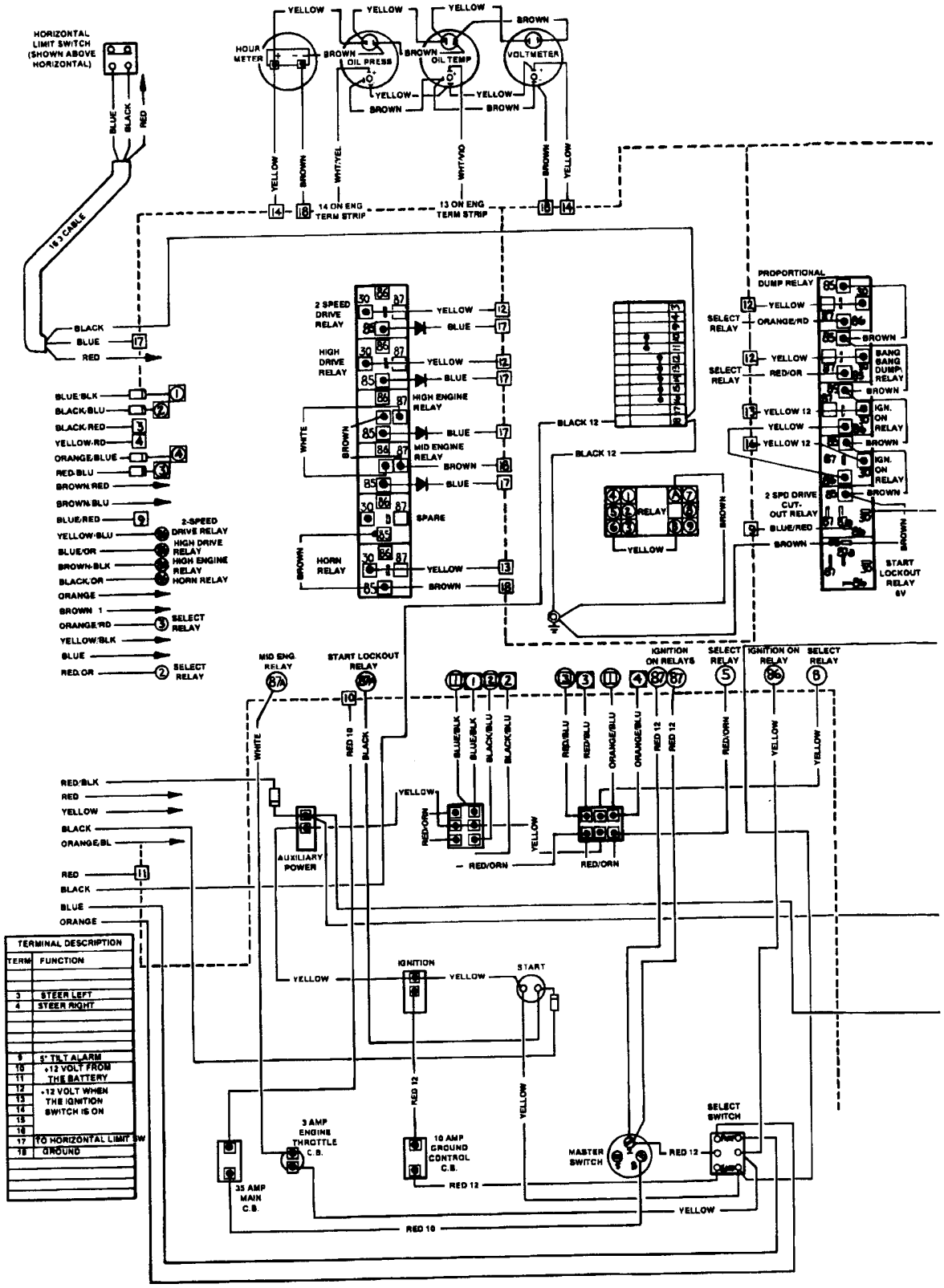

Figure 3-13. Wiring Diagram - Standard (Deutz F3I1011 Engine W/ Hydraulic Controls) (Sheet 1 Of 2).

https://truckmanualshub.com/

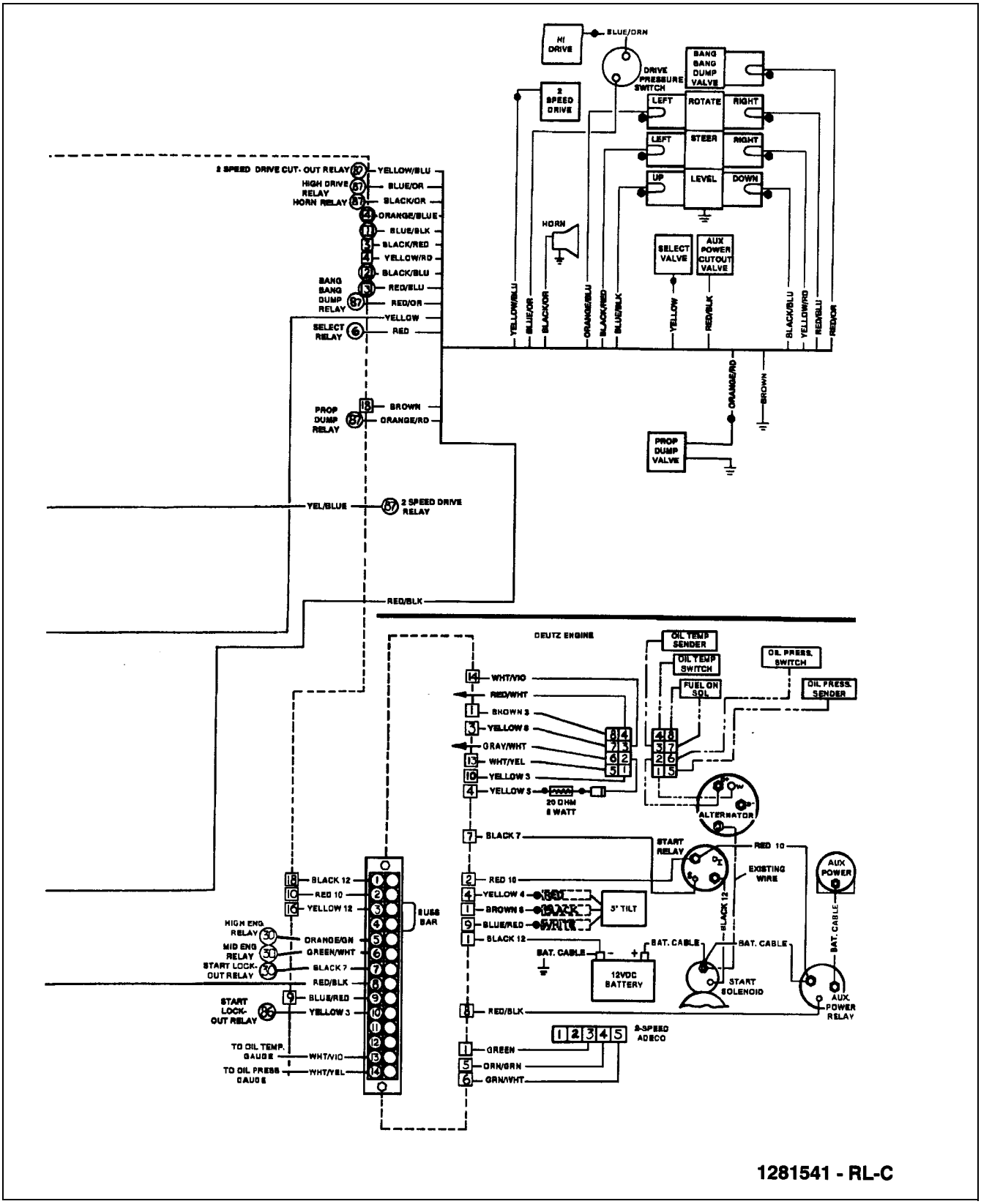

Figure 3-14. Wiring Diagram - Standard (Deutz F3I1011 Engine W/ Hydraulic Controls) (Sheet 2 Of 2).

https://truckmanualshub.com/

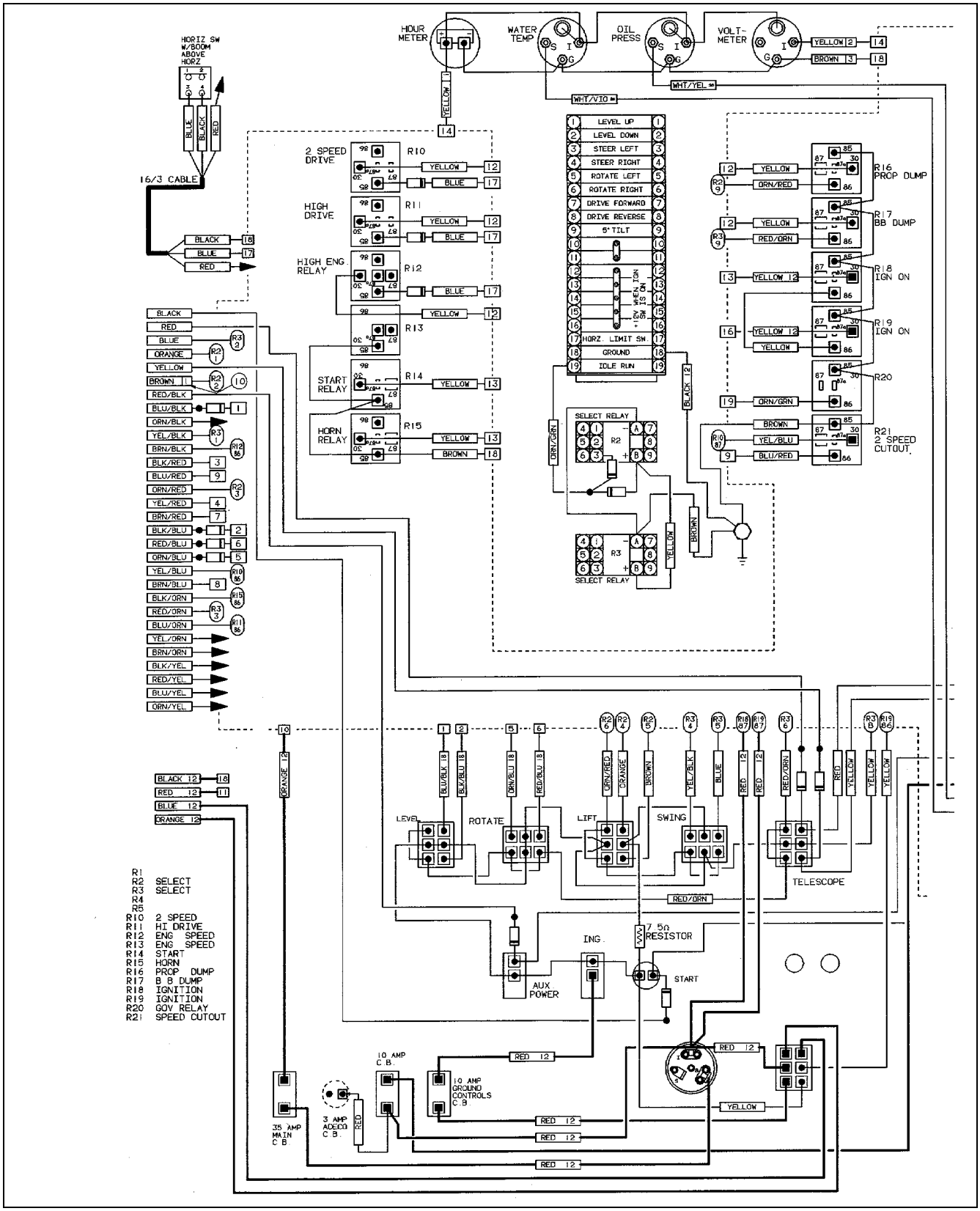

Figure 3-15. Wiring Diagram - Standard (Ford Lrg425 Dis Engine W/ Standard Controls) (Sheet 1 Of 2).

https://truckmanualshub.com/

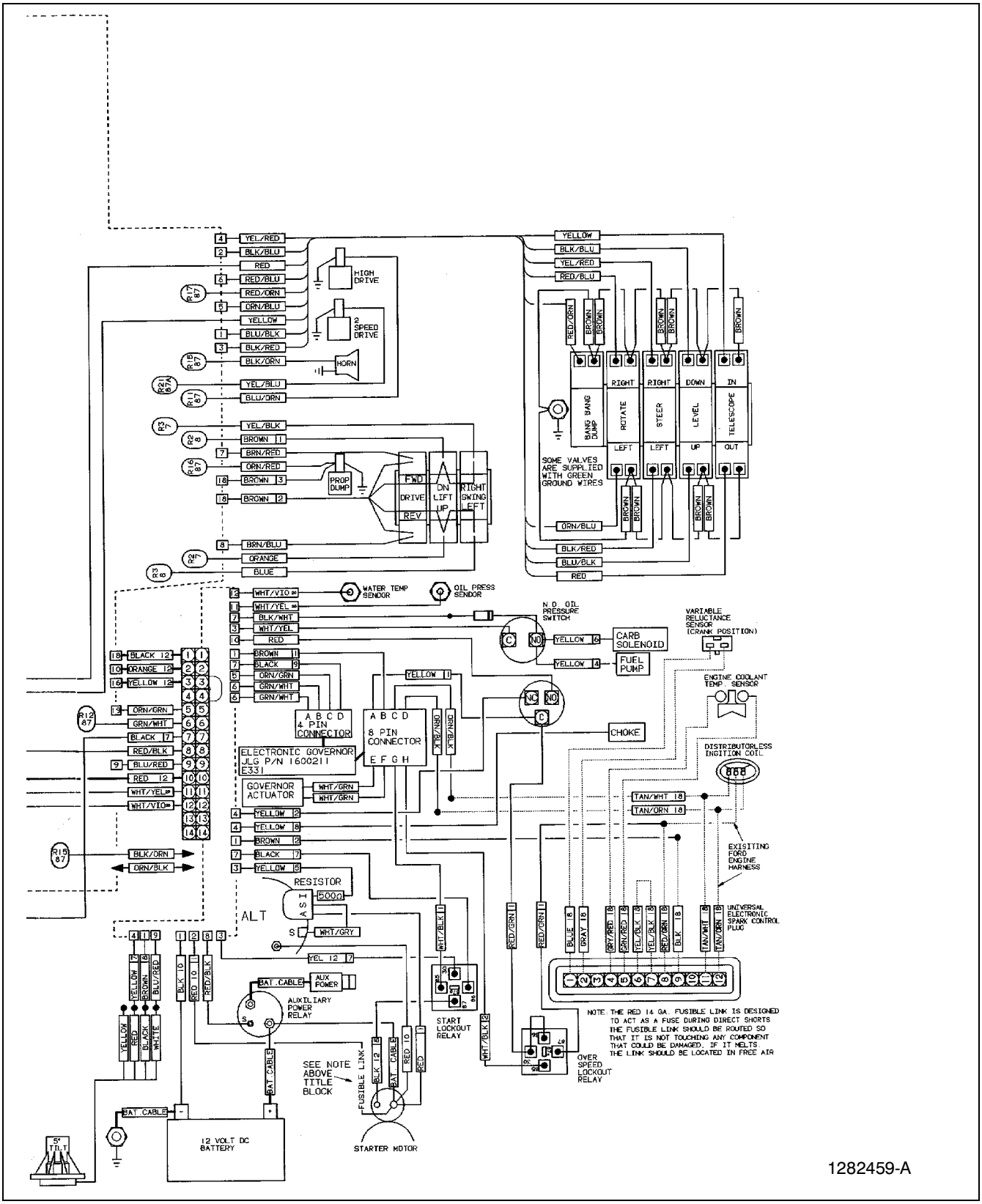

Figure 3-16. Wiring Diagram - Standard (Ford Lrg425 Dis Engine W/ Standard Controls) (Sheet 2 Of 2).

https://truckmanualshub.com/

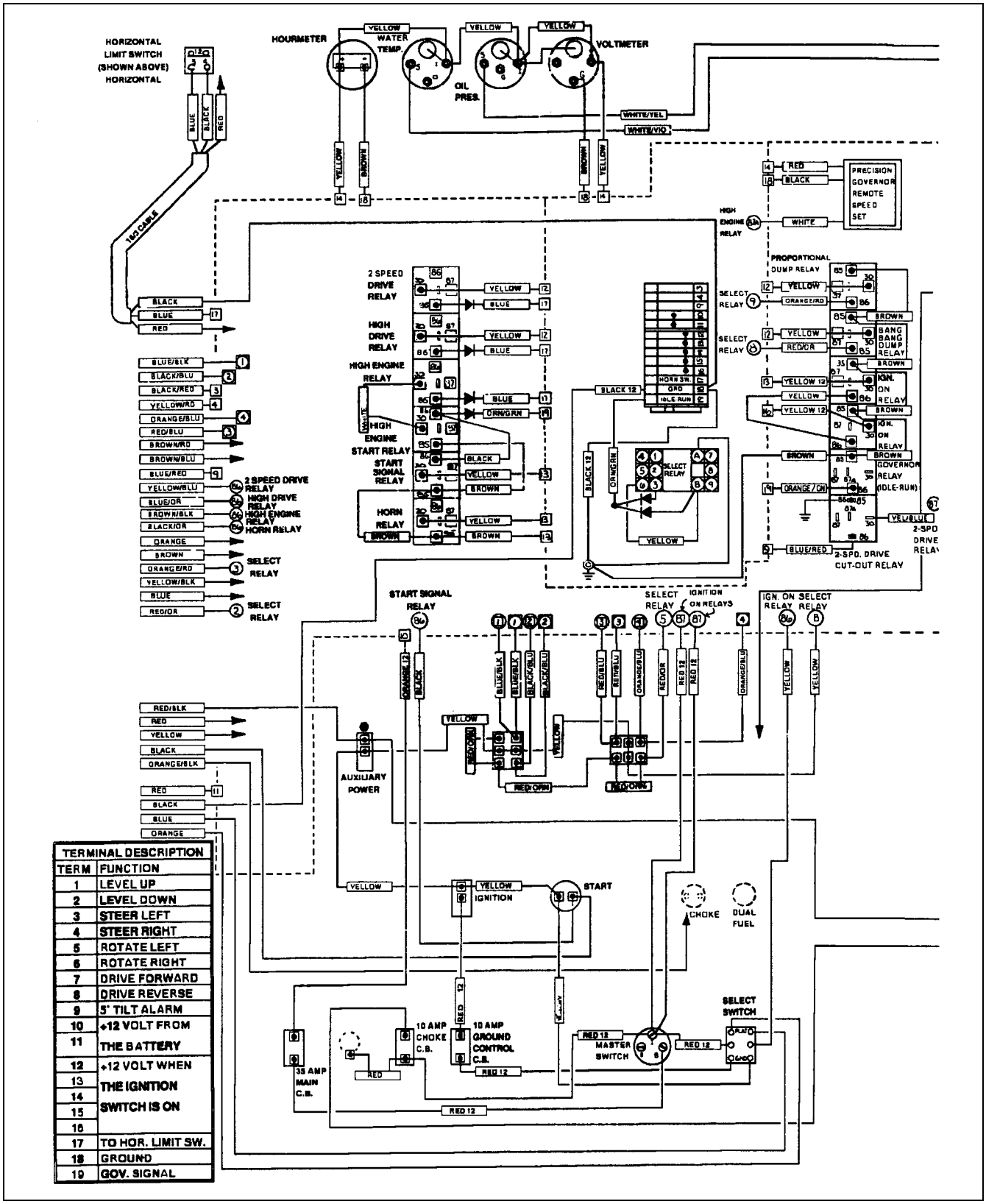

Figure 3-17. Wiring Diagram - Standard (Ford Dis Engine W/ Hydraulic Controls) (Sheet 1 Of 2).

https://truckmanualshub.com/

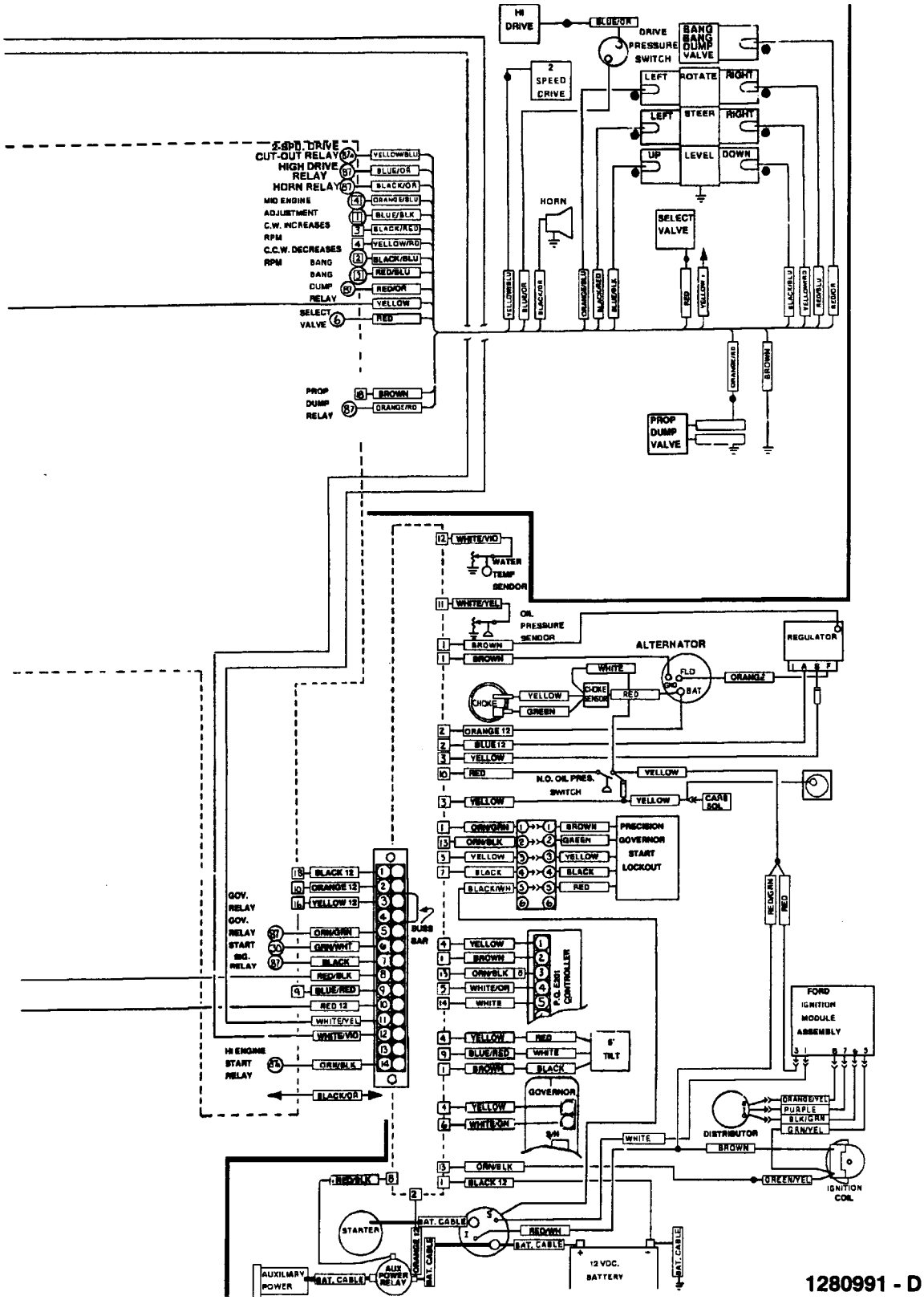

Figure 3-18. Wiring Diagram - Standard (Ford Dis Engine W/ Hydraulic Controls) (Sheet 2 Of 2).

https://truckmanualshub.com/

INTENTIONAL BLANK PAGE

https://truckmanualshub.com/

https://truckmanualshub.com/

Corporate Office
JLG Industries, Inc.
1 JLG Drive
McConnellsburg PA. 17233-9533
USA
Phone: (717) 485-5161
Fax: (717) 485-6417

JLG Worldwide Locations

JLG Industries (Australia)
P.O. Box 5119
11 Bolwarra Road
Port Macquarie
N.S.W. 2444
Australia
Phone: (61) 2 65 811111
Fax: (61) 2 65 810122

JLG Industries (UK)
Unit 12, Southside
Bredbury Park Industrial Estate
Bredbury
Stockport
SK6 2sP
England
Phone: (44) 870 200 7700
Fax: (44) 870 200 7711

JLG Deutschland GmbH
Max Planck Strasse 21
D-27721 Ritterhude/lhlpohl
Bei Bremen
Germany
Phone: (49) 421 693 500
Fax: (49) 421 693 5035

JLG Industries (Italia)
Via Po. 22
20010 Pregnana Milanese - MI
Italy
Phone: (39) 02 9359 5210
Fax: (39) 02 9359 5845

JLG Latino Americana Ltda.
Rua Eng. Carlos Stevenson,
80-Suite 71
13092-310 Campinas-SP
Brazil
Phone: (55) 19 3295 0407
Fax: (55) 19 3295 1025

JLG Europe B.V.
Jupiterstraat 234
2132 HJ Foofddorp
The Netherlands
Phone: (31) 23 565 5665
Fax: (31) 23 557 2493

JLG Industries (Norge AS)
Sofeimyrveien 12
N-1412 Sofienyr
Norway
Phone: (47) 6682 2000
Fax: (47) 6682 2001

JLG Polska
Ul. Krolewska
00-060 Warsawa
Poland
Phone: (48) 91 4320 245
Fax: (48) 91 4358 200

JLG Industries (Europe)
Kilmartin Place,
Tannochside Park
Uddingston G71 5PH
Scotland
Phone: (44) 1 698 811005
Fax: (44) 1 698 811055

JLG Industries (Pty) Ltd.
Unit 1, 24 Industrial Complex
Herman Street
Meadowdale
Germiston
South Africa
Phone: (27) 11 453 1334
Fax: (27) 11 453 1342

Plataformas Elevadoras
JLG Iberica, S.L.
Trapadella, 2
P.I. Castellbisbal Sur
08755Castellbisbal
Spain
Phone: (34) 93 77 24700
Fax: (34) 93 77 11762

JLG Industries (Sweden)
Enkopingsvagen 150
Box 704
SE - 175 27 Jarfalla
Sweden
Phone: (46) 8 506 59500
Fax: (46) 8 506 59534