https://truckmanualshub.com/

ISUZU

2008-2011MY F&G SERIES

WORKSHOP MANUAL

GENERAL INFORMATION

https://truckmanualshub.com/

This Workshop Manual deals only with the screen toned section(s) in the table below.

Section		Sub Section	
0	GENERAL INFORMATION	0A	General Information
1	ENGINE	1A	Engine Control System
		1B	Engine Mechanical
		1C	Engine Cooling
		1D	Engine Fuel
		1E	Engine Electrical
		1F	Emission Control
		1G	Engine Exhaust
		1H	Engine Lubrication
		1I	Engine Speed Control System
		1J	Induction
		1K	Pre-Heating System
		1L	Power Take-Off (PTO)
2	SUSPENSION	2A1	Air Suspension Control System
		2B	Front Suspension
		2C	Rear Suspension
		2D	Wheel and Tire System
3	DRIVELINE/AXLE	3A1	Front Differential
		3A2	Rear Differential
		3C1	Propeller Shaft
		3C2	Front Axle
		3C3	Rear Axle
		3D	Transfer Case
4	BRAKES	4A2	Brake Control System (Air Over)
		4A3	Brake Control System (Full Air)
		4B2	Brake (Air Over)
		4B3	Brake (Full Air)
		4C	Anti-Lock Brake (ABS)
		4C1	Anti-Lock Brake (ABS)/Anti-Slip Regulator (ASR)
		4D	Parking Brake
		4E	Hill Start Aid (HSA)
		4F	Speed Retarder System
		4G	Trailer Brake
5	TRANSMISSION/TRANSAXLE	5A	Transmission Control System
		5B	Automatic Transmission
		5C	Manual Transmission
		5E	Clutch
		5G	Power Take-Off (PTO)
		5G1	Side Power Take-Off
6	STEERING	6B	Power Steering
7	HVAC	7A	Heating and Ventilation
		7B	Manual Air Conditioning
		7C	Automatic Air Conditioning
8	RESTRAINTS	8A	Seat Belt
		8B	Supplemental Restraint System (SRS)
		8C	SRS Control System
9	BODY, CAB AND ACCESSORIES	9A	Lighting System
		9B	Wiper/Washer System
		9C	Entertainment
		9D	Wiring System
		9E	Instrumentation/Driver Info.
		9F	Body Structure
		9G	Cab
		9H	Seats
		9I	Security and Lock
		9K	Exterior/Interior Trim
		9L	Cab Mounting
10	CONTROL SYSTEMS	10B	Vehicle Control
11	FRAME AND FRAME ACCESSORIES	11A	Frame

https://truckmanualshub.com/

https://truckmanualshub.com/

GENERAL INFORMATION

General Information

TABLE OF CONTENTS

General Information 0A-2
General Repair Instructions 0A-2
Identification 0A-3
Chassis Number/Engine Number Stamping Position 0A-3
Option Code List 0A-4
Vehicle Identification Number (VIN) 0A-11
General Precaution 0A-15
General Precautions 0A-15
Lifting Instruction 0A-17
Lifting Instruction 0A-17
Caution for The Maintenance of Electrical Parts 0A-20
Battery Cable 0A-20
Connector Handling Requirements 0A-20
Handling Electronic Parts 0A-23
Cable Harness 0A-23
Regarding The Scan Tool. 0A-25
Trouble Diagnosis Using The Scan Tool 0A-25
Recommended Liquid Gasket 0A-31
Recommended Liquid Gasket. 0A-31
Recommended Thread Locking Agent. 0A-33
Recommended Thread Locking Agent 0A-33
Maintenance Schedule. 0A-34
Introduction 0A-34
Maintenance Schedule (for Euro4 specification except Europe) 0A-35
Maintenance Schedule (for Euro2, Euro3 specification). 0A-41
Maintenance Schedule (for Europe) 0A-45
Maintenance Schedule (CNG engine for Australia) 0A-50
Maintenance Schedule (CNG engine for Thailand) 0A-54
Transmission Oil - ZF6S1000/ZF9S1110 Type 0A-58
Transmission Oil - FS8209A/FSO5206B Type 0A-65
RS23/RS40 Type Axle 0A-67
RS25 Type Axle 0A-68
Maintenance Schedule for Severe-condition . . . 0A-69
Introduction 0A-69
Maintenance Schedule for Severe-condition . 0A-69
Recommended Fluids, Lubricants and Diesel Fuels (except Europe). 0A-73
Introduction 0A-73
Diesel Engine Crankcase with DPD (Low Ash Oil). 0A-73
Diesel Engine Crankcase without DPD. 0A-74
CNG Engine Crankcase (for Australia) 0A-74
CNG Engine Crankcase (for Thailand) 0A-74
Manual Transmission (MZX/MZW/MLD models), Transfer Case, Differential (without LSD) and Oil Lubricated Hub Bearing 0A-75
Manual Transmission (MZZ models). 0A-75
Differential (with LSD) 0A-75
Smoother Clutch Oil (Smoother). 0A-75
Automatic Transmission, Power Steering 0A-76
Center Bearing, Clutch Shift Block, Grease Lubricated Hub, Water Pump, Propeller Shaft Sliding Yoke, Universal Joint (Multi Purpose Grease) 0A-76
Multi-Purpose Grease Containing Molybdenum 0A-76
Engine Cooling System. 0A-76
Electric-hydraulic Cab Tilt Pump 0A-77
Clutch and Brake Fluid Reservoir 0A-77
Diesel Fuel / Applicable Standard 0A-77
Diesel Fuel / Applicable Standard (Sulfur content below 50 ppm) 0A-78
Recommended Fluids, Lubricants and Diesel Fuels (for Europe) 0A-79
Introduction 0A-79
Diesel Engine Crankcase with DPD (Low Ash Oil). 0A-79
Diesel Engine Crankcase without DPD. 0A-79
Manual Transmission (MZX/MZW/MZZ/MLD models), Differential (without LSD) and Oil Lubricated Hub Bearing 0A-80
Differential (with LSD) 0A-80
Smoother Clutch Oil (Smoother). 0A-80
Power Steering 0A-80
Center Bearing, Clutch Shift Block, Grease Lubricated Hub, Water Pump, Propeller Shaft Sliding Yoke, Universal Joint (Multi Purpose Grease) 0A-81
Engine Cooling System. 0A-81
Electric-hydraulic Cab Tilt Pump 0A-81
Clutch and Brake Fluid Reservoir 0A-82
Diesel Fuel / Applicable Standard 0A-82
Diesel Fuel / Applicable Standard (Sulfur content below 50 ppm) 0A-82
Oil Viscosity Chart 0A-83
Oil Viscosity Chart. 0A-83
Lubrication Chart 0A-84
Lubrication Chart. 0A-84
Greasing Point 0A-97
Greasing Point 0A-97

https://truckmanualshub.com/

General Information

General Repair Instructions

1. Park the vehicle on level ground and chock the front or rear wheels before lifting the vehicle.
2. Use covers on the vehicle body, seats, and floor to prevent damage and/or contaminations.
3. Disconnect the grounding cable from the battery before performing service operations.
   This will prevent cable damage or burning due to shortcircuiting.
4. Raise the vehicle with a jack set against the axle or the frame.
5. Support the vehicle on chassis stands.
6. Handle brake fluid and antifreeze solution with great care.
   Spilling these liquids on painted surfaces will damage the paint.
7. The use of the proper tool(s) and special tool(s) where specified is efficient, reliable, and safe service operations.
8. Always use genuine ISUZU replacement parts.
9. Discard used cotter pins, gasket, O-rings, oil seals, lock washers, and self-locking nuts at disassembly. Normal function of these parts cannot be guaranteed if they are reused.
10. Keep the disassembled parts neatly in groups.
    This will facilitate smooth and correct reassembly.
11. Keep fixing nuts and bolts separate.
    Fixing nuts and bolts vary in hardness and design according to installation positions.
12. Clean all parts before inspection or reassembly.
13. Clean the oil ports and other openings with compressed air to make certain that they are free of dirt and obstructions.
14. Lubricate the rotating and sliding faces of all moving parts with oil or grease before installation.
15. Use the recommended liquid gasket to prevent leakage.
16. Be sure to tighten nuts and bolts to the specified torque, using a properly maintained torque wrench.
17. When service operation is completed, male a final check to be sure service has been done properly and problem has been corrected.
18. When removing or replacing parts that require refrigerant to the discharged from the Air conditioning system, be sure to use the ACR4 or equivalent to recover and recycle Refrigerant -134a (HFC-134a), to promote the movement for the protection of the ozone layer covering the earth.
19. To assure safety, always slowly release air pressure from the air tanks before disconnecting pipes, hoses or other parts from any unit under pressure.
20. Prior to start the welding work, the following operations are required:
    - Disconnect all connectors of electronic control unit.
    - Disconnect battery ground terminal.
    - Welding machine ground cable must be connected near the welding point.
    - Turn off the all switches.

https://truckmanualshub.com/

Identification

Chassis Number/Engine Number Stamping Position

Chassis number

It is stamped on the front right-hand side face of the chassis side member.

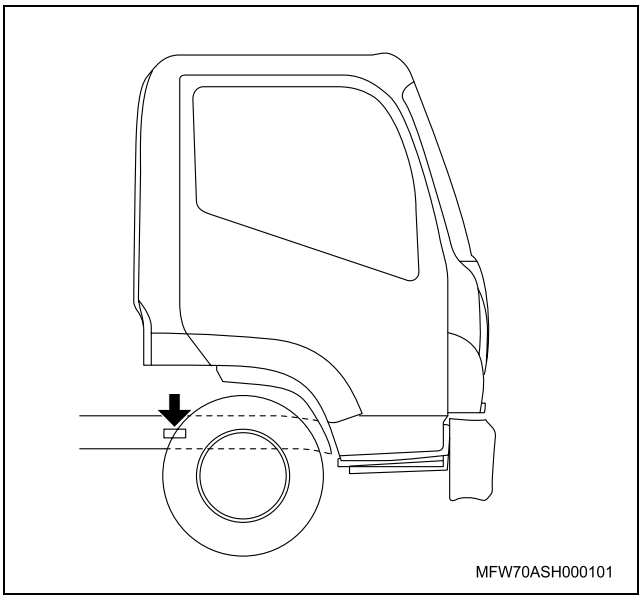

Engine number (4HK1 Engine)

The engine number is stamped on the right side of the cylinder body.

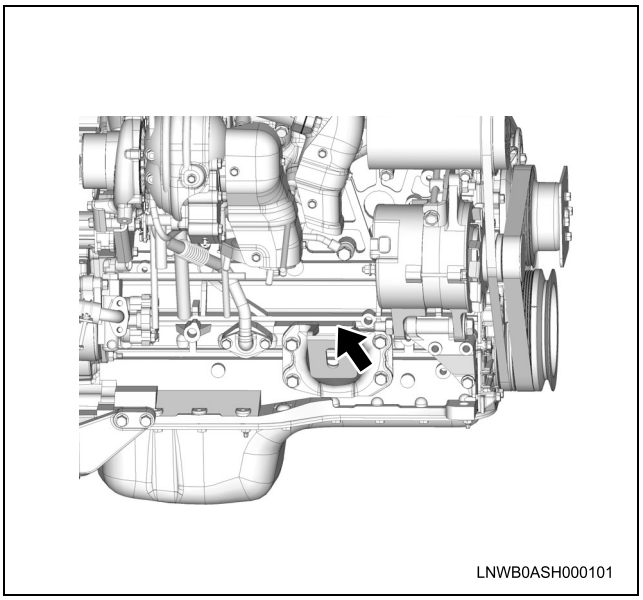

Engine number (6HF1 Engine)

The engine number (1) is stamped on the right side of the cylinder body.

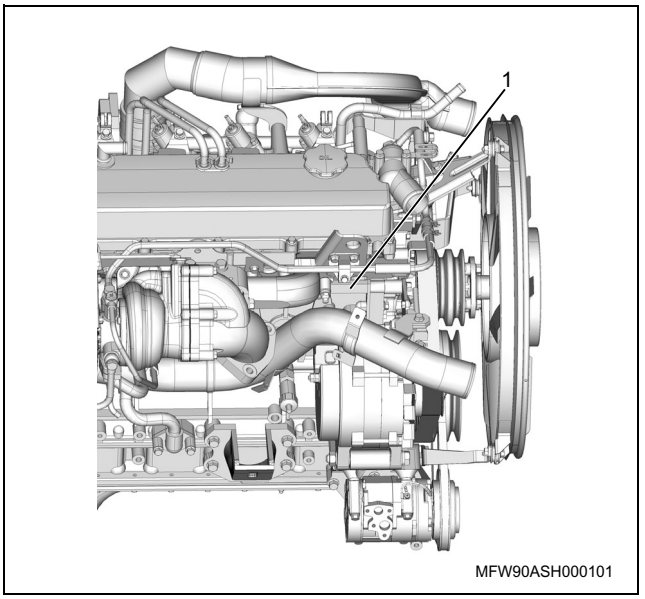

Engine number (6HK1 Engine)

The engine number is stamped on the right side of the cylinder body.

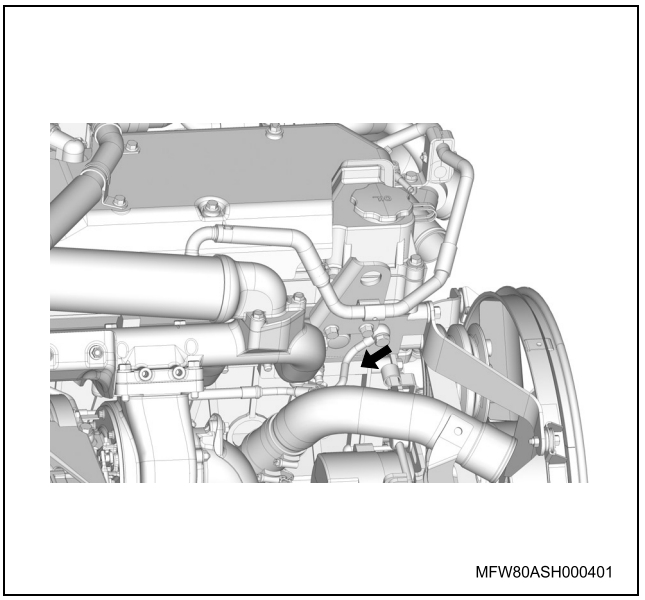

Service Parts ID Plate

The service parts ID plate is attached to the passenger side lower dashboard.
The service parts ID plate has the following information;

- Vehicle identification number (VIN)
- Wheelbase dimensions
- Paint information
- Production options or special equipment installed on the vehicle at the factory

https://truckmanualshub.com/

Refer to the service parts ID plate when ordering replacement parts.

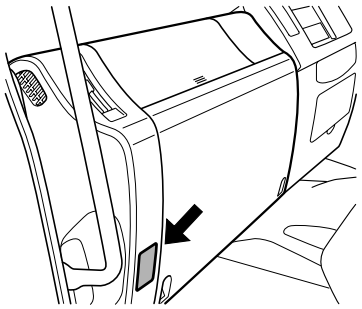

MFU8Z0SH043301

Option Code List

Option Code	Option Description
AJ3	Driver side air bag
AK3	Front seat belt & shoulder with retractor
AK5	Driver and passenger side air bag
AU4	Automatic door lock
A31	Power window - front & rear door
A32	Power window - front door
A56	Driver seat - air suspension
A83	Vinyl seat with reclining
BDM	Power take off - transmission rear
BFK	Transfer TF56
BHW	Power take off - engine rear, electromagnetic clutch
BJR	Brake adjuster - manual
B02	South Africa equipment
B03	Thailand equipment
B04	Taiwan equipment
B1S	Parking brake drum - 8.5 inch
B1T	Parking brake drum - 10 inch
B10	Malaysia equipment
B12	Russia equipment
B13	Australia equipment

Option Code	Option Description
B14	Hong Kong equipment
B3A	Rear wheel parking brake - air control
B30	Floor carpet - vinyl
B84	Body side molding
CB7	Colombia equipment
CE4	Head lamp washer
CGA	Morocco equipment
CJ6	Country - Ireland
CK1	Pakistan equipment
CL1	Kenya equipment
CT6	Country - Italy
CU9	Country - United Kingdom
CV4	Country - Israel
CX6	Country - New Zealand
C13	Wiper with intermittent
C2C	Transmission oil cooler
C2M	Propeller shaft - P60 type
C3N	Final differential lock
C3U	Air suspension - high control
C4M	Air breather with flex hose
C4Z	Propeller shaft - P46 type
C41	Heater & defroster
C5K	Hub lubrication - oil bath
C5T	Propeller shaft - P90 type
C60	Manual air conditioning
C65	Manual air conditioning without heater core
C68	Automatic air conditioning
DH2	O/S rear view mirror - long arm
DL8	O/S rear view mirror - remote control with heated
DNB	O/S rear view mirror - pillar mounted
D20	Assist side sun visor
D31	Rear view mirror
D37	Mirror - Outside rear view
D6M	User - export government
D8T	Iran equipment
D94	Touch-up paint

https://truckmanualshub.com/

Option Code	Option Description
EAK	Disc wheel - 6 studs 19.5x6.75 (136-12)
EBB	Digital tachograph
EBE	Front under run protector
ECF	Speed limiter - 60km/h
ECY	Speed limiter - 70km/h
EDG	Header console - driver & assist
EDH	Round curtain rail
EDW	Speed limiter - 80km/h
EDX	Speed limiter - 85km/h
EFE	Regulation ECE R29
EFK	Floor mat - vinyl mat Var.2
E09	Europe equipment
E11	Mexico equipment
E13	New Zealand equipment
E2N	Fuel pipe - steel
E29	Auxiliary steps
E40	Sleeper cab with mattress
E46	Ecuador equipment
FJC	Disc wheel - 10 studs 20x8.50V (138-13)
F59	Front stabilizer
GH3	Saudi Arabia equipment
GL6	Rear shock absorber
GN1	Rear stabilizer
G86	Limited slip differential - no spin
JAQ	Lighting system - Saudi Arabia
JBF	Tire - KD special
JBZ	Lighting system - Japanese standard
JCA	Anti-noise equipment - ECE R51.02
JDN	Compartment - I/P assist side with lid
JDP	Compartment - I/P assist side without lid
JE5	Anti-lock brake system
J55	Brake system - heavy duty Var.1
J91	Trailer brake control
KC5	Receptacle - accessory
KE1	Chile equipment
KF0	Fuel filter - low quality
KG2	Generator 24V60A

Option Code	Option Description
K30	Auto cruise
K44	Generator 24V-90A
K89	Generator 24V-50A
M9A	Owners manual - Not required
NCR	Memory system - Runnig condition
NF7	Fuel tank 200L + 200L
NJW	Ireland KD special
NMJ	Speed limiter - 90km/h
NMU	Speed limiter - 100km/h
NNR	3 speaker system
NT2	Emission system - Euro2
NT3	Emission system - Euro3
NT4	Emission system - Euro4
N02	Fuel tank 100L - frame side mount
N05	Fuel tank cap with key lock
N19	Fuel tank - 140L frame side
N20	Fuel tank 200L - frame side mount
N79	Spare disc wheel
PM1	Rear hook - double
PP7	Pintle hook
PR2	Driving position - wide leg space
PS7	Air dryer
PT1	Disc wheel - 8 studs 22.5x6.75 (145-11)
PT6	Thailand KD special
P10	Spare tire carrier - frame rear mount
P13	Spare tire carrier - frame side mount
P38	Tire delete
QM8	Disc wheel - 10 studs 22.5 x 8.25 (165-13)
Q47	Disc wheel - 8 studs 20x6.50T (145-10)
Q87	Disc wheel - 10 studs 22.5x7.50 (162-12)
Q5T	Turbo - conventional
Q50	Disc wheel - 8 studs 20x6.50T (152-11)
Q54	Disc wheel - 8 studs 20x7.00T (162-12)
Q58	Disc wheel - 10 studs 20x7.00T

https://truckmanualshub.com/

Option Code	Option Description
Q62	Disc wheel - 8 studs 20x7.50V (165-13)
Q64	Disc wheel - 10 studs 20 x 7.50V
Q87	Disc wheel - 10 studs 22.5x7.50 (162-12)
RC4	Dump control lever
RC5	Tool box with key lock
RE3	Spare tire fixing
RE9	Clutch - 15 inch single plate strap drive
RDV	4HK1-TCC engine
RJS	4HK1-TCS engine
RQZ	G.V.W. - 8.0-11.0 ton
RRA	G.V.W. - 11.0-14.0 ton
RR9	O/S rear view mirror - under
RSA	Manual transmission - MZZ6W
RSW	Manual transmission - MZX6P
RSZ	Manual transmission - MZW6P
RWE	Chevrolet brand
R32	KD frame
R46	Spare tire & disc wheel
R9A	Service cab with electric
R9B	Service cab without electric
R9C	Deletion - service cab with electric
R9D	Deletion - service cab without electric
R9E	Service cab conversion with electric
R9F	Deletion - service cab conversion without electric
R9Z	Thailand localization spec.
SAQ	Front suspension - multi leaf spring
SAR	Front suspension - taper leaf spring
SAS	Rear suspension - multi leaf spring
SAU	Rear helper suspension - taper leaf spring
SAY	Standard cab
SAZ	Ventilator & defroster
SBB	Disc wheel - 8 studs 20x6.00S (135-10)
SBG	Disc wheel - 6 studs 17.5x6.00 (135-9)

Option Code	Option Description
SDF	Room lamp with all door switch
SDH	Fuel tank 400L
SDK	Cab suspension - semi floating type
SDP	Disc wheel - 8 studs 20x7.00T (152-12)
SEG	Disc wheel - 8 studs 205x7.50V (130-13)
SFC	Disc wheel - 6 studs 17.5x6.75 (137-10)
SFT	Electric outlet - one
SGA	Front under spoiler delete
SGX	Vietnam equipment
SG4	Tire inflator device
SG7	Disc wheel - 6 studs 16x6.00GS (135-9)
SH5	Power take off - transmission side without lever
SJA	Driver seat - Isringhausen
SKU	Disc wheel - 8 studs 22.5x7.50 (162-13)
SKV	Disc wheel - 8 studs 22.5 x 8.25 (165-13)
SK4	Engine overrun buzzer
SLB	Front bumper with headlamp
SLC	Lighting system - ECE
SLK	Anti-noise equipment - ECE
SMS	Rear bumper - steel wide
SP9	Assist seat without center seat
SR6	Rearward double tire
SV6	Power take off control
SY8	Spare tire carrier - lifting type
TAF	O/S rear view mirror - under & side under
TAK	Anti-noise equipment - Var.2
TAZ	Driver seat - rigid without arm rest
TDU	Brake regulation - ADR
TDV	Brake regulation - ECE
TEC	Roof marker lamp
TEE	Disc wheel - 8 studs 19.5x6.75 (147-12)
TFD	Cab all painting

https://truckmanualshub.com/

Option Code	Option Description
TFN	Driver's seat belt with pre-tension reducer
TGL	Anti corrosion package
TM1	Battery - 80D26L
TR6	Headlamp leveling system - manual
TR7	Headlamp leveling system - automatic
TT5	Halogen headlamp
TT6	High intensity discharge headlamp
T1A	Injection pump Q set - special +5%Q
T62	Battery - dry
T64	Battery delete
T79	Rear fog lamp
T87	Cornering lamp
T96	Front fog lamp
UC1	Speedometer - miles per hour (MPH)
UC9	Tachograph- Kienzle
UF3	Map lamp
UG3	Engine oil temperature gauge
UL5	Radio delete
UT3	AM/FM radio with CD player
U01	Roof marker - 5 lamps
U18	Speedometer - kilometer
U69	AM/FM radio
U95	2 speaker system
VG7	Front bumper reinforcement - heavy duty
VP1	Front under spoiler
VR7	Two eye rear hook
VTK	Owners manual - Arabic language
VTL	Owners manual - French language
VTS	Owners manual - Spanish language
VT7	Owners manual - English language
VZA	VIN model year - 2010
VZB	VIN model year - 2011
V22	Radiator grille - chrome
V4F	Chassis for fire car
V76	Hook - tow
WB7	Electrical horn

Option Code	Option Description
WC7	Tachograph - 140km/h
WF6	Clutch - 14 inch single plate strap drive
WG3	Brake system - heavy duty Var.2
WH2	Spare tire - front tire
WJ7	Cautions - Arabian
WJ8	Cautions - French
WL5	Inspection lamp
WM3	Interior trim - full trimming
WV2	Automatic cab tilt
WX8	Shift control - assister
W02	Highland zone package
W1G	Final drive gear ratio - 6.143 (43/7) 14.5 inch hypoid
W1H	Final drive gear ratio - 5.571 (39/7) 14.5 inch hypoid
W1J	Final drive gear ratio - 6.500 (39/6) 14.5 inch hypoid
W1K	Final drive gear ratio - 6.833 (41/6) 14.5 inch hypoid
W1L	Final drive gear ratio - 6.500 (39/6) 16.5 inch hypoid
W1R	Final drive gear ratio - 6.143 (43/7) 15.5 inch hypoid
W1T	Final drive gear ratio - 6.500 (39/6) 15.5 inch hypoid
W1U	Final drive gear ratio - 4.875 (39/8) 14.5 inch hypoid
W12	Front locking hub - manual
W14	Deluxe cab
W16	Cab suspension - full floating
W18	Transfer TF36
W20	Disc wheel special painted (white)
W3B	Final drive gear ratio - 5.571 (39/7) 16.5 inch hypoid
W3D	Final drive gear ratio - 4.875 (39/8) 18.5 inch hypoid
W3F	Final drive gear ratio - 6.167 (37/6) 18.5 inch hypoid
W3G	Final drive gear ratio - 6.667 (40/6) 18.5 inch hypoid
W3K	Final drive gear ratio - 5.571 (39/7) 15.5 inch hypoid

https://truckmanualshub.com/

Option Code	Option Description
W3L	Final drive gear ratio - 6.143 (43/7) 16.5 inch hypoid
W3M	Final drive gear ratio - 5.125 (41/8) 18.5 inch hypoid
W3N	Final drive gear ratio - 4.556 (41/9) 18.5 inch hypoid
W3P	Final drive gear ratio - 5.125 (41/8) 16.5 inch hypoid
W3S	Final drive gear ratio - 5.857 (41/7) 15.5 inch hypoid
W3U	Final drive gear ratio - 7.167 (43/6) 17.5 inch hypoid
W3X	Final drive gear ratio - 6.429 (45/7) 17.5 inch hypoid
W3Y	Final drive gear ratio - 6.143 (43/7) 17.5 inch hypoid
W3Z	Final drive gear ratio - 5.571 (39/7) 17.5 inch hypoid
W4A	Final drive gear ratio - 5.125 (41/8) 17.5 inch hypoid
W4B	Final drive gear ratio - 4.875 (39/8) 17.5 inch hypoid
W4C	Final drive gear ratio - 4.556 (41/9) 17.5 inch hypoid
W4F	Final drive gear ratio - 5.125 (41/8) 14.5 inch hypoid
W4H	Final drive gear ratio - 5.125 (41/8) 15.5 inch hypoid
W4T	Final drive gear ratio - 4.333 (39/9) 18.5 inch hypoid
W4W	Final drive gear ratio - 6.833 (41/6) 17.5 inch hypoid
W4X	Final drive gear ratio - 4.333 (39/9) 14.5 inch hypoid
W5M	Final drive gear ratio - 4.100 (41/10) 14.5 inch hypoid
W5V	Final drive gear ratio - 6.833 (41/6) 16.5 inch hypoid Rockwell
W5Z	Final drive gear ratio - 4.89 (44/9) 18.0 inch hypoid Rockwell
W6A	Final drive gear ratio - 5.38 (43/8) 18.0 inch hypoid Rockwell
W6B	Final drive gear ratio - 5.63 (45/8) 18.0 inch hypoid Rockwell
W6C	Final drive gear ratio - 6.14 (43/7) 18.0 inch hypoid Rockwell

Option Code	Option Description
W6M	Final drive gear ratio - 6.43 (45/7) 18.0 inch hypoid Rockwell
W6N	Final drive gear ratio - 6.83 (41/6) 18.0 inch hypoid Rockwell
W6R	Final drive gear ratio - 4.30 (43/10) 18.0 inch hypoid Rockwell
W6S	Final drive gear ratio - 6.14 (43/7) 15.0 inch hypoid Rockwell
W66	Disc wheel with step
W71	Cab suspension - rigid type
W8C	Final drive gear ratio - 4.56 (41/9) 18.0 inch hypoid Rockwell
W8D	Final drive gear ratio - 6.43 (45/7) 15.0 inch hypoid Rockwell
W8F	Final drive gear ratio - 4.555 (41/9) 14.5 inch hypoid
W8L	Final drive gear ratio - 6.83 (41/6) 15.0 inch hypoid Rockwell
X5J	Manual transmission - MLD6Q
X7W	Manual transmission - MLD6S
X9C	Transmission - manual
X9D	Transmission - automatic
YC4	Injection pump - high altitude compensator, aneroid type
YK3	Rearward single tire
YM9	Reversing warning buzzer
YN1	Caution - Spanish
YS1	O/S rear view mirror - flat type
YT9	Pakistan KD special
Y2C	Manual transmission - MLD6W
Y21	Light duty package truck
Y3A	Manual transmission - Fuller FS8209
Y3B	Automatic transmission - Allison MD3560P
Y4F	Automatic transmission - Allison LCT2000
Y4G	Automatic transmission - Allison MD3060P
Y4V	Manual transmission - Fuller FSO5206B
Y48	Heavy duty package truck
Y5D	Manual transmission - ZF 6S1000

https://truckmanualshub.com/

Option Code	Option Description
Y5E	Manual transmission - ZF 9S1110
Z05	Brake system - air over hydraulic dual circuit
Z06	Brake system - full air dual circuit
Z1V	Equipment - additional key
01D	KD package - South Africa
01R	Tire - front & rear 8.25-20-14 lug
02E	KD package - Taiwan
05R	Tire - front & rear 8.25R20-14 rib
09X	Tire - front 8.25-20-14 rib, rear 8.25-20-14 lug
1D7	6HF1-TCN engine
1D9	6HF1-TCC engine
10T	Tire - front & rear 9.00-20-14 rib
10X	Tire - front 9.00-20-14 rib, rear 9.00-20-14 lug
11X	Tire - front 10.00-20-14 rib, rear 10.00-20-14 lug
12X	Tire - front 10.00-20-16 rib, rear 10.00-20-16 lug
15N	Tire - front & rear 9R22.5-14 rib
155	Interior color - Charcoal gray
2G0	Singapore equipment
20D	Thailand KD deletion parts
21R	Tire - front & rear 9.00-20-14 lug
25R	Tire - front & rear 9.00R20-14 rib
27X	Tire - front 11.00-20-16 rib, rear 11.00-20-16 lug
30T	Tire - front & rear 10.00-20-14 rib
34W	Wheel base 3,400mm
35N	Tire - front & rear 10R22.5-14 rib
36W	Wheel base 3,600mm
37W	Wheel base 3,700mm
38W	Wheel base 3,800mm
39W	Wheel base 3,900mm
40S	Tire - front & rear 8.25-16-14 rib
40T	Tire - front & rear 10.00-20-16 rib
40W	Wheel base 4,000mm
41R	Tire - front & rear 10.00-20-14 lug
41W	Wheel base 4,100mm

Option Code	Option Description
42W	Wheel base 4,200mm
43P	Tire - front & rear 9R22.5-14
43W	Wheel base 4,300mm
45N	Tire - front & rear 11R22.5-14 rib
45P	Tire - front & rear 275/70R22.5
45R	Tire - front & rear 10.00R20-14 rib
46W	Wheel base 4,600mm
48W	Wheel base 4,800mm
49W	Wheel base 4,900mm
49P	Tire - front & rear 8.25R20-14 exp block
5D9	Tire - front & rear 295/80R22.5-152/148K rib/lug
5E0	Tire - front & rear 295/80R22.5-152/148J rib
5E1	Tire - front & rear 10R22.5-14
5G2	Tire - front 295/80R22.5, rear 11R22.5-16
5H1	Tire - front 10.00-20-16 rib, rear 10.00-20-16 lug
5J6	Tire - front 9.5R17.5 129/127L rib, rear 9.5R17.5 129/127L traction
5J7	Tire - front & rear 11R22.5 148/145L rib
5J8	Tire - front & rear 245/70R19.5 rib
5J9	Tire - front & rear 235/75R17.5 rib
5K0	Tire - front & rear 265/70R19.5 rib
5K4	Tire - front & rear 11R22.5 148/145K rib/lug
5K5	Tire - front & rear 12R22.5 152/148K rib/lug
5L1	Tire - front & rear 12.00R20-18
5L4	Tire - front & rear 275/70R22.5 148/145M rib
5L7	Tire - front & rear 9.00R-20-14 exp lug
5L8	Tire - front & rear 10.00R-20-16 lug
5N5	Tire - front & rear 265/70R19.5 140/138M rib (BS brand)
5N6	Tire - front & rear 235/75R17.5 132/130M rib (BS brand)
5P0	Tire - front & rear 235/75R17.5 132/130M rib (BS brand)

https://truckmanualshub.com/

Option Code	Option Description
5P1	Tire - front 295/80R22.5, rear 11R22.5-16 (6x2, BS brand)
5P2	Tire - front 295/80R22.5, rear 11R22.5-16 (BS brand)
5P3	Tire - front & rear 10R22.5-14 exp rib/lug (BS brand)
5P6	Tire - front & rear 225/70R19.5
5P7	Tire - front & rear 8.25R16 128/126L exp rib/lug
50W	Wheel base 5,000mm
51R	Tire - front & rear 10.00-20-16 lug
51W	Wheel base 5,100mm
517	Body color - AL. gray
53W	Wheel base 5,300mm
538	Body color - Tool-IPEC yellow
55N	Tire - front & rear 11R22.5-16 rib
55P	Tire - front & rear 295/80R22.5 152/148M rib
55R	Tire - front & rear 10.00R20-16 rib
55W	Wheel base 5,500mm
58N	Tire - front & rear 11.00R20-16 rib
58W	Wheel base 5,800mm
59W	Wheel base 5,900mm
6DY	Rear under run protector
6EP	HSA system
6HF	KD preparatory package
6KK	Horn - heavy duty (dual)
6ND	OK window
6NF	Remote control door lock
6PH	LSPV - Load sensing proportioning valve
6SZ	Power take off - flywheel
6UC	Fluorescent lamp
6UH	O/S rear view mirror - assist side short stay
6VE	O/S rear view mirror - door mount
6WX	Floor mat - vinyl
6XH	ASR system
60W	Wheel base 6,000mm
609	Body color - FT orange

Option Code	Option Description
61P	Tire - front & rear 225/90R17.5
63E	KD package - Italy
63W	Wheel base 6,300mm
64E	KD package - Vietnam
64N	Tire - front & rear 8.25R20-14 rib
65W	Wheel base 6,500mm
668	Body color - Purplish blue
681	Body color - Geranium red
695	Body color - Dark blue
7BC	Assist seat with center seat
7DM	Tuner band - Latin America
7FL	Seat material - cloth
7HZ	Rear bumper
7KC	Immobilizer system
7NY	Multi information display
7SV	O/S rear view mirror - heated
7TV	KD preparatory package
70T	Tire - front & rear 11.00-20-14 rib
71R	Tire - front & rear 11.00-20-14 lug
71S	Tire - front & rear 7.50-20-12 lug
71W	Wheel base 7,100mm
729	Body color - Arc white
736	Body color - Cardinal red
78N	Tire - front & rear 8.25R16
79R	Tire - front & rear 11.00R20-14
8AA	Good quality ethylene glycol antifreeze 50%
8AC	Good quality ethylene glycol antifreeze 30%
8EJ	Battery - 65D23L
8GF	Transmission with Smoother
8GJ	Transmission without Smoother
8JM	Diesel particulate diffuser
8LF	Rear window glass
8LX	Ash tray - assist side
8MA	Battery 115E41L
8MH	Fuel tank 370L
8ML	O/S rear view mirror - middle arm

https://truckmanualshub.com/

Option Code	Option Description
8MV	O/S rear view mirror - extended long arm
8NG	Decal - vehicle & pet name
8NH	Decal - pet name
8NV	Bio diesel fuel B10
80L	6HK1-TCS engine
80R	Tire - front & rear 11.00-20-16 rib
800	Body color - In white
807	Body color - Woodland green
81L	6HK1-TCC engine
81R	Tire - front & rear 11.00-20-16 lug
81U	Tire - front & rear 8.25-16-14 lug
812	Body color - Wheatland yellow
82L	6HK1-TCN engine
829	Body color - Sahara beige
83N	Tire - front & rear 9.5R17.5
84D	Colombia Var.2
85N	Tire - front & rear 11R22.5-16
85R	Tire - front & rear 11.00R20-16 rib
85U	Tire - front & rear 8.25R16-14 rib
87N	Tire - front & rear 10.00R20-14PR rib
89N	Tire - front & rear 9.00R20-14PR rib
89R	Tire - front & rear 11.00R20-16PR
89T	Tire - front & rear 11.00R20-16
890	Body color - Marine blue
90S	Tire - front & rear 8.25-20-14 rib
904	Body color - golden yellow
91D	KD package - Philippine Var.2
915	Body color - fire red
92N	Tire - front & rear 8.25R16-14PR rib
93N	Tire - front 12.00R20-18, rear 12.00R20-18 lug
94K	Tire - front & rear 10.00R20-16
94N	Tire - front & rear 12.00R20-16
944	Body color - Highway orange
95D	KD package - Ireland
951	Body color - arc white
97N	Tire - front 295/80R22.5, rear 11R22.5-16

Option Code	Option Description
982	Body color - Polar white
989	Body color - Sunbelt green
99D	KD package - United Kingdom
99N	Tire - front & rear 11R22.5-16
909	Body color - middle bronze green
919	Body color - olive drab
999	Body color - trans blue

Vehicle Identification Number (VIN)

The ID plate indicates the vehicle identification number (VIN).
This single number contains multiple pieces of information including the vehicle and engine model codes as shown below.

https://truckmanualshub.com/

Type 1

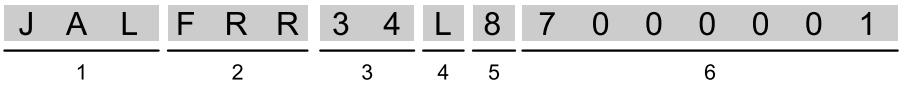

MFW80ASF000201

Legend

1. World manufacturer identifier (WMI)
2. Vehicle model code
3. Engine code
4. Wheel base code
5. Model year code
6. Chassis number

1. World manufacturer identifier (WMI)

Code	
JAL	ISUZU BRAND Medium & Heavy Duty Incomplete Vehicle

2. Vehicle model code

Code	
FRR	4x2 Truck FRR model
FSR	4x2 Truck FSR model
FTR	4x2 Truck FTR model
FVR	4x2 Truck FVR model
FVZ	6x4 Truck FVZ model
FVM	6x2 Truck FVM model
GVR	4x2 Tractor GVR model
FSS	4x4 Truck FSS model
FTS	4x4 Truck FTS model

3. Engine code

Code	
34	6HK1 Engine
86	6HF1 Engine
90	4HK1 Engine

4. Wheel base code

Code	
H	3,201 - 3,500 mm (126.02 - 137.80 in)
J	3,501 - 3,800 mm (137.83 - 149.61 in)
K	3,801 - 4,100 mm (149.65 - 161.42 in)
L	4,101 - 4,400 mm (161.46 - 173.23 in)
M	4,401 - 4,700 mm (173.27 - 185.04 in)
N	4,701 - 5,000 mm (185.08 - 196.85 in)
P	5,001 - 5,300 mm (196.89 - 208.66 in)
7	5,301 - 5,600 mm (208.70 - 220.47 in)
R	5,601 - 5,900 mm (220.51 - 232.28 in)
S	5,901 - 6,200 mm (232.32 - 244.09 in)
T	6,201 - 6,500 mm (244.13 - 255.91 in)

https://truckmanualshub.com/

Code	
U	6,501 - 6,800 mm (255.94 - 267.72 in)
V	6,801 - 7,100 mm (267.76 - 279.53 in)
W	7,101 - 7,400 mm (279.57 - 291.34 in)

5. Model year code

Code	
8	2008MY
9	2009MY
A	2010MY
B	2011MY

Type 2

MFW80ASF000301

Legend

1. World manufacturer identifier (WMI)
2. Gross vehicle weight (GVW) and brake system
3. Series code
4. Line/Cab type code
5. Chassis code
6. Engine code
7. Check digit
8. Model year code
9. Plant code
10. Production sequential number

1. World manufacturer identifier (WMI)

Code	
JAL	ISUZU BRAND Medium & Heavy Duty Incomplete Vehicle

2. Gross vehicle weight (GVW) and brake system

Code	
H	8,846 - 10,659 kg (19,501 - 23,500 lb)
K	10,660 - 11,793 kg (23,501 - 26,000 lb)
M	11,794 - 14969 kg (26,001 - 33,000 lb)
P	14,970 - 18,370 kg (33,001 - 40,500 lb)

3. Series code

Code	
5	FRR
6	FSR
7	FTR, FTS, FVR

4. Line/Cab type code

Code	
K	Tilt cab, BBC = 1,726 mm (67.95 in), Narrow Cab
M	Tilt cab, BBC = 2,066 mm (81.34 in), Narrow Cab
S	Tilt cab, BBC = 2,066 mm (81.34 in), Wide Cab

https://truckmanualshub.com/

5. Chassis code

Code	
1	4x2, 2 Axles, 1 driving
2	4x4, 2 Axles, 1 driving
4	6x4, 3 Axles, 2 driving

6. Engine code

Code	
3	6HK1-TC
6	4HK1-TC

8. Model year code

Code	
8	2008MY
9	2009MY
A	2010MY
B	2011MY

9. Plant code

Code	
7	Fujisawa

Type 3

MFWB0ASF000101

Legend

1. World manufacturer identifier (WMI)
2. General attributes
3. Check digit
4. Model year code
5. Plant code
6. Production sequential number

1. World manufacturer identifier (WMI)

Code	
3MG	ISUZU BRAND Medium & Heavy Duty Incomplete Vehicle

2. General attributes

Code	
FRR90	FRR90
FTR34	FTR34
FVR34	FVR34

4. Model year code

Code	
A	2010MY
B	2011MY

5. Plant code

Code	
M	Mexico (IMEX)

https://truckmanualshub.com/

General Precaution

General Precautions

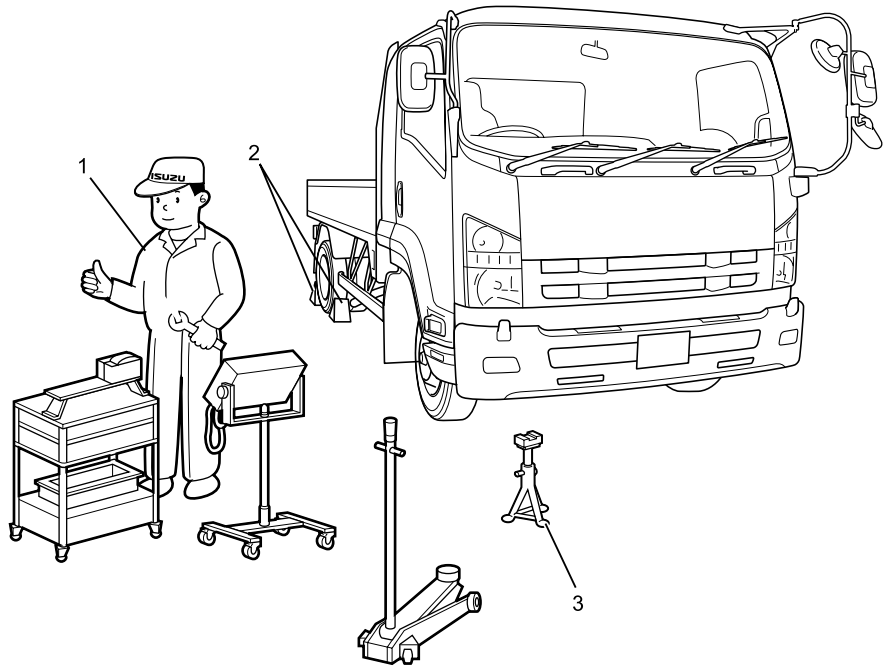

MFW70AMF000201

Legend

1. Clean and safe costume
2. Installation of Chock blocks
3. Support by stand after jack up

Work preparations

- Prepare the tools, instruments, and special tools in advance.
- Prepare the parts that require replacement and parts that cannot be re-used in advance.

Clothing

- The service technician must wear a clean service technician uniform, hat, and safety footwear.

Protect the vehicle.

- Make sure to use a seat cover, etc.
- Disconnect the terminal of the battery (–) in advance.

Always focus on safety

- Make sure to use chock block when the vehicle is jacked up.
- After jacking up, make sure to support the specified position using a stand.
- When lifting up the vehicle using a lift, make sure to set the safety device.
- When performing a procedure with two or more people, make sure to ensure each other's safety before performing an action.
- Do not leave the engine running for an extended period of time or perform painting in a poorly ventilated working environment.
- Make sure to use only the special tools if the procedure requires them for the work. Performing the procedure using other tools may cause damage to parts or personal injury.
- Do not use tools such as a wrench that has lost its edges, a hammer with frayed edges, or a chipped chisel.
- When performing work using a device such as a grinder, crane, or welder, make sure that a qualified technician performs the procedure while paying sufficient attention to the handling precautions.

https://truckmanualshub.com/

- When performing maintenance on fuel systems, make sure that there is no fuel leakage. (may possibly catch fire)
- When handling volatile materials, take care that they do not catch fire.
  Also make sure to wipe away any oil that sticks to rubber parts, as it can cause deterioration.

Work Precaution

- Arrange removed parts in the correct order and ensure they do not get mixed up with parts that cannot be re-used.
- Perform sufficient cleaning and washing when performing assembly / installation.
  Also perform sufficient grease removal for areas to apply liquid gasket, etc.

After-procedure check

- After completing the procedure, perform a final check to confirm that the problem has been solved.
- Check that there is no fuel, oil, or coolant leakage.

https://truckmanualshub.com/

Lifting Instruction

Lifting Instruction

If it necessary to use a lifting device other than the original equipment jack, see illustration for acceptable lifting points.
Lifting should only be done at the positions indicated to prevent possible damage to the vehicle.

CAUTION:
Failure to observe the acceptable lift points may result in unsatisfactory vehicle performance or a durability failure which may result in loss of control of the vehicle.

Garage Jack and Safety Stand

Lifting Point and Supportable Point Location

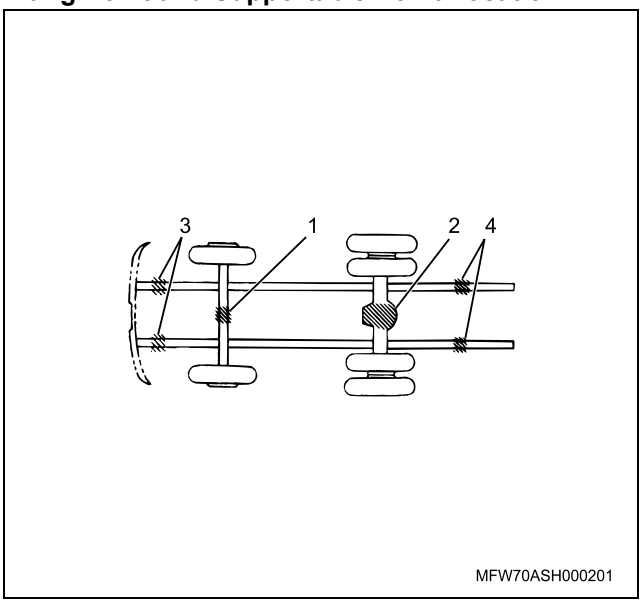

Legend

1. Front axle
2. Rear axle center
3. Side member front side
4. Side member rear side

Lifting Point Positions - Front side

CAUTION:
Do not lift or support on engine oil pan.

F*R/FVM/FVZ/GVR models

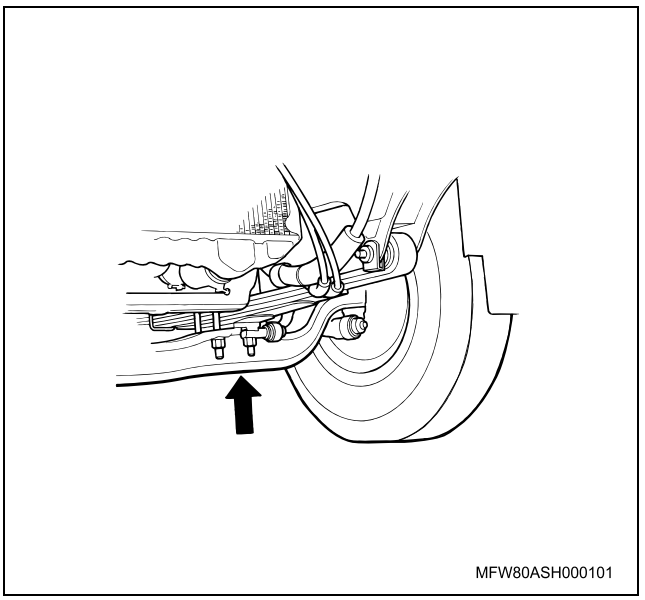

FSS model

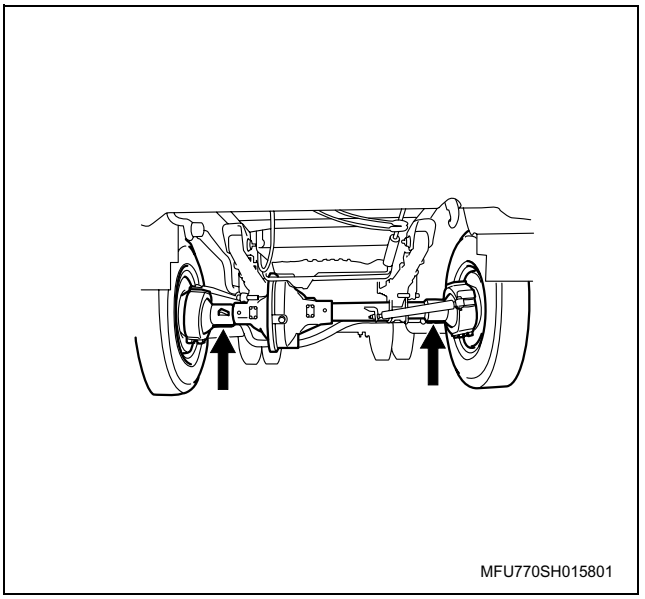

https://truckmanualshub.com/

FTS model

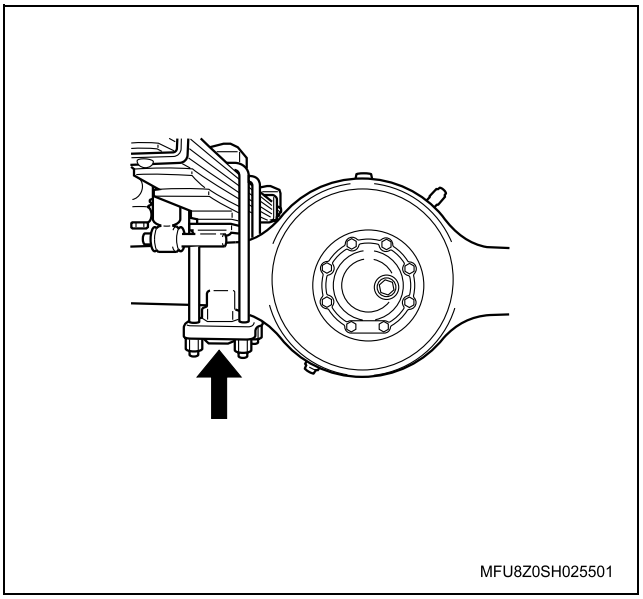

Lifting Point Positions - Rear side

CAUTION:
Do not lift or support on rear axle tube.

FRR/FSR models (with air suspension)

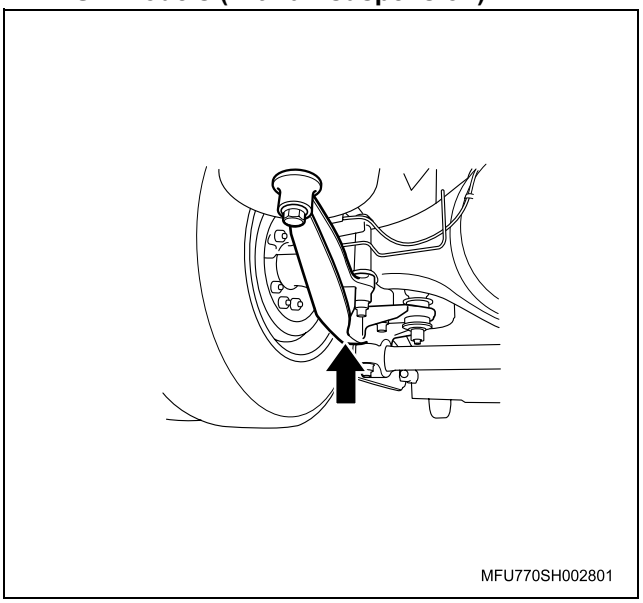

FRR/FSR/FTR/FVR/GVR models (with leaf spring suspension), FSS/FTS models (except rear single-tire model)

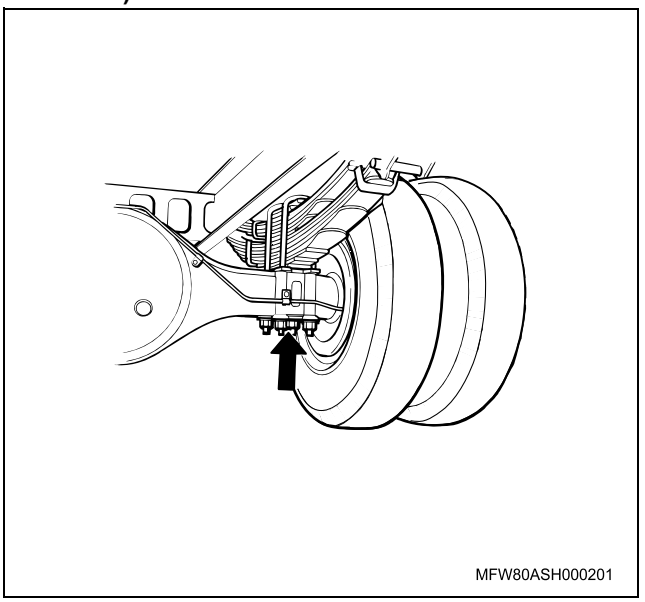

FSS/FTS models (rear single-tire model)

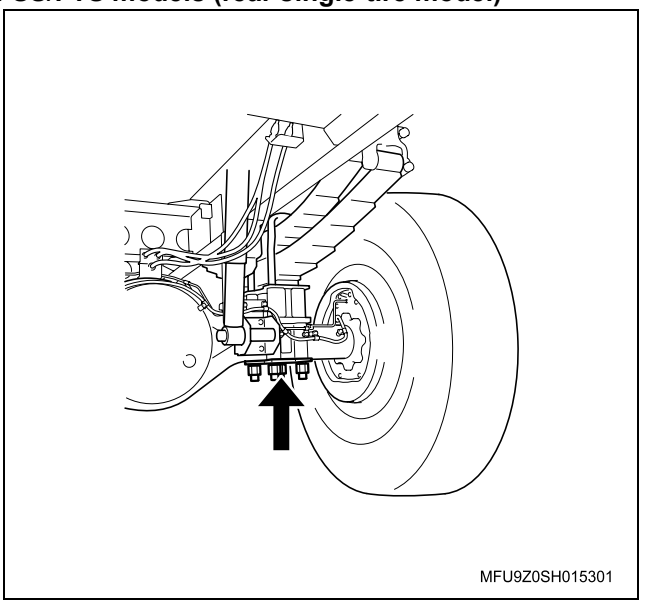

https://truckmanualshub.com/

NOTE:
Let the tire run over a piece of block, etc., and apply the jack.

FTS model(rear single-tire model)

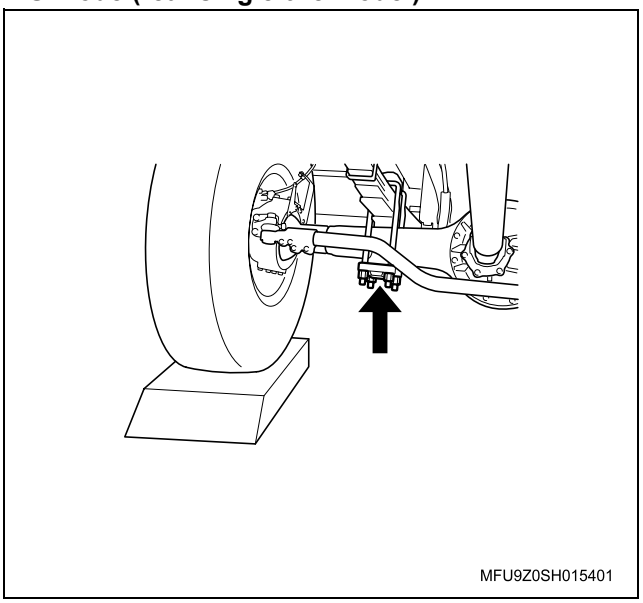

FVR/FVM/FVZ/GVR models (with air suspension, except Europe)

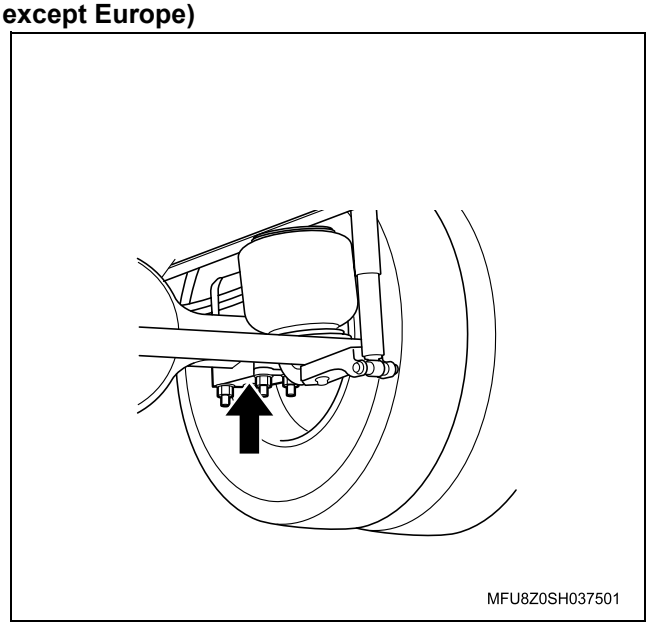

FVR model (with air suspension, for Europe)

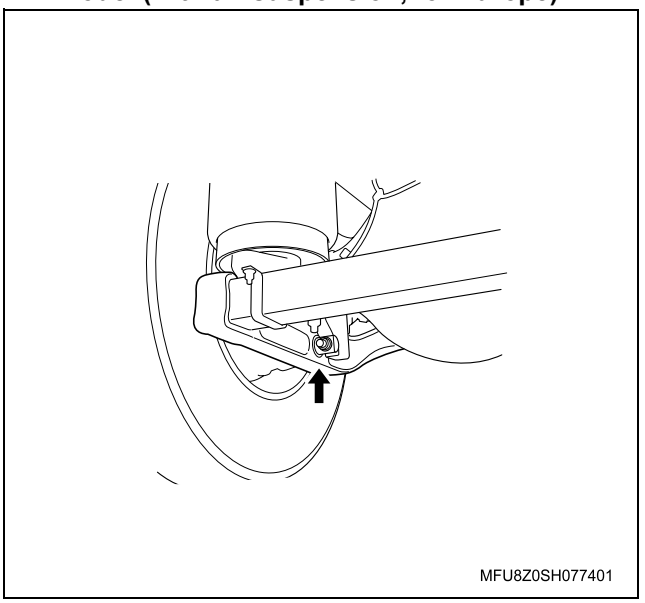

FVM/FVZ models (with leaf spring suspension)

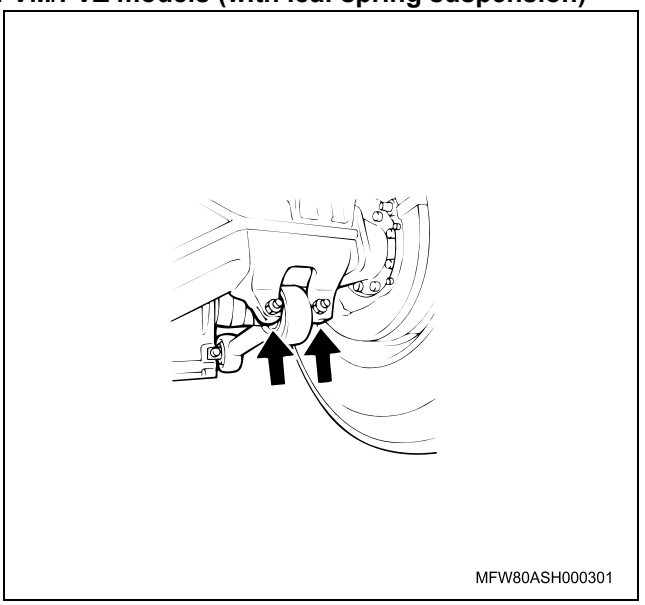

https://truckmanualshub.com/

Caution for The Maintenance of Electrical Parts

Battery Cable

Disconnecting the battery cables

1. Turn all the switches "OFF".
2. Disconnect the battery ground cable (1).
3. Disconnect the battery plus cable (3).
4. Disconnect the battery cable (2).

CAUTION:
Make sure to disconnect the battery ground cable first. Disconnecting the plus cable first may cause a short circuit.

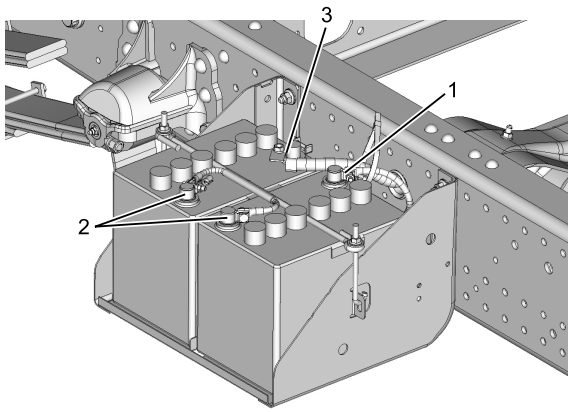

MFW70ASH000401

Connecting the battery cables

Connect the battery cables in the reverse order of the disconnection procedure.

CAUTION:
Clean the area surrounding the battery terminal, and apply a thin layer of grease to the terminal to prevent corrosion.

Connector Handling Requirements

Visual inspection

With the male and female connectors connected

- Gently pull the connector and check whether the connector becomes disconnected or partially disconnected, and that the lock is properly set.
  If a problem is found, reconnect the connectors.
- Check that there is no damage to the connector housing.
  If a problem is found, perform replacement.

With the male and female connectors disconnected

- Check that no foreign material or water has entered the inside of the connectors.
  Remove any foreign material or water that has entered the connector using an air brush, etc. If the material cannot be removed, replace them.
- Check that no foreign material is stuck to the terminals, and there is no corrosion or deformation.
  Remove any foreign material by cleaning with an air brush, or clean rag, etc. If the material cannot be removed by cleaning, or there is corrosion or deformation, replace them.
- Gently pull the wires to check that no terminals are missing from the connector and there is no breakage in the terminal area.
  If a terminal is missing, reinsert it until it locks into place. If you find a disconnection, replace them.
- Insert the male connector into the same female connector, and check that there is no abnormality in the terminal contact pressure.
  If you find an abnormality, replace them.
- For waterproof connectors, check that there is no damage or foreign material stuck to the seal parts (wire seal of wiring, O-ring or waterproofing seal of connector, etc.) or seal area of the connector housing.
  Remove any foreign material by cleaning with an air brush, or clean rag, etc. If the material cannot be removed by cleaning, or there is damage, replace them.

CAUTION:

- Do not perform polishing that would remove the plating of the terminals, nor wash the inside of the connector. If there is dirt that requires washing, replace them.
- Be careful when attaching the seal areas of waterproof connectors, as some have specific positions and directions they must be attached. Also do not attach them in a twisted state.

Regarding vehicle washing

Even for electric parts that are installed outside the cab and are waterproofed, try to avoid exposing them directly to high pressure water when washing the vehicle (cover them with plastic sheets, etc.) as much as possible.

https://truckmanualshub.com/

Disconnecting the connector

Many connectors have a lock to ensure secure connections.
The two types of locks generally used are those that open by lifting the release area of the lock (1), and those that open by pressing the release area (2). Before disconnecting the connector, determine in advance which type of lock the connector is using.

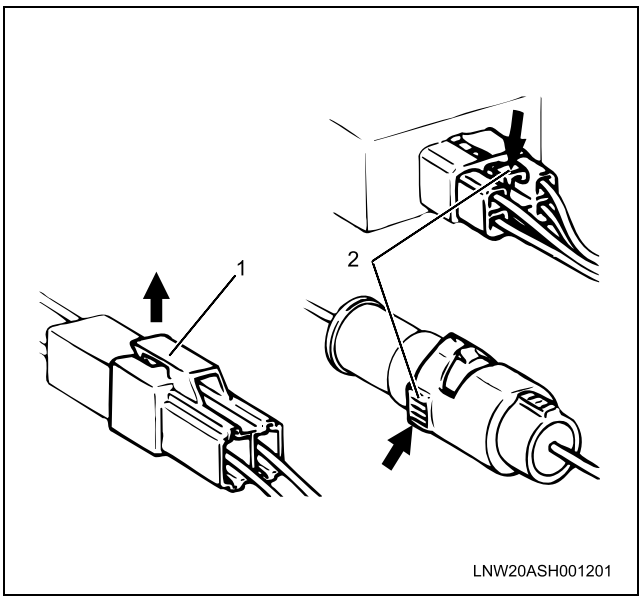

When disconnecting the connector, first securely grasp the male side and female side of the connector.
Release the lock, and carefully disconnect the connector.
Do not pull the harness when disconnecting the connector, as this may cause wires to come out or break.

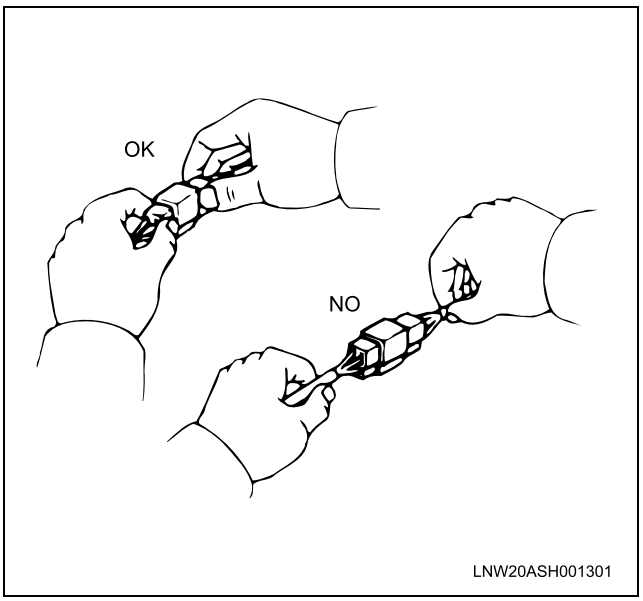

Connecting the connector

Securely grasp the female side and male side of the connector, and align them correctly.
Firmly push them together until both sides click into place.

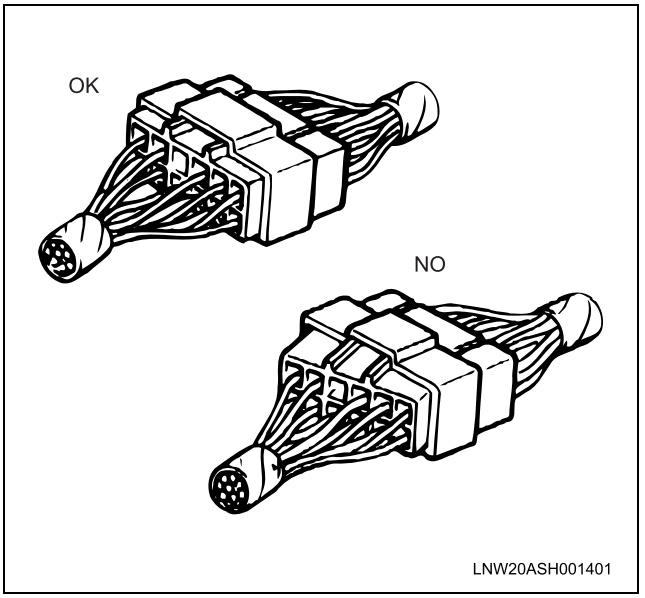

Connector circuit inspection requirements

Check the continuity of the connector using a circuit tester. Insert the probes (1) of the tester from the harness side of the connector, as indicated in the diagram.

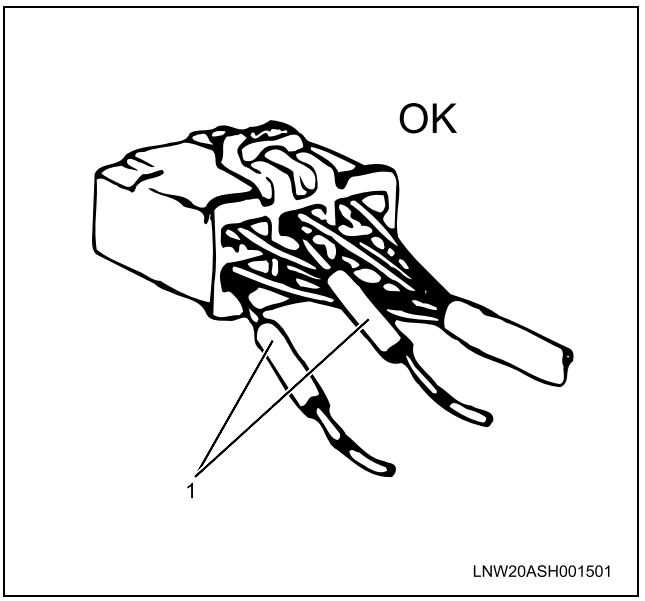

https://truckmanualshub.com/

Never insert the probes (1) from the connection closure area of the connector, as this will cause the connector terminals to break.

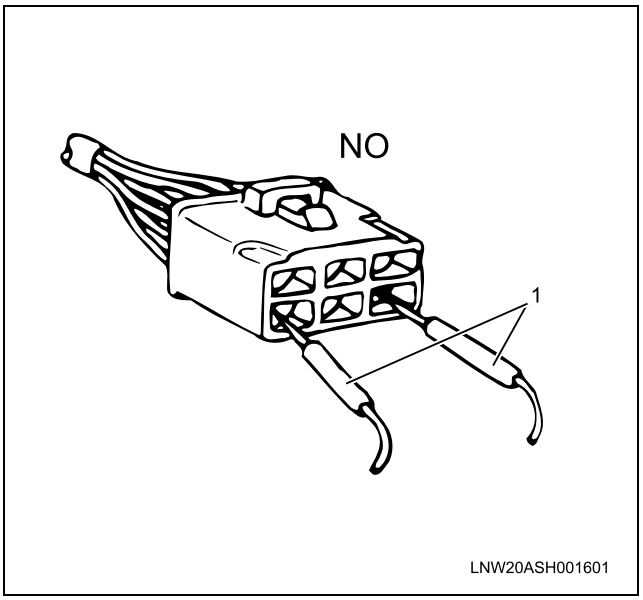

Inspection requirements for waterproof connector circuit

For waterproof connectors, the probes of the tester cannot be inserted from the wiring side, due to the structure of the connectors.
Therefore, perform the continuity inspection as indicated in the diagram, by connecting a testing connector (1) prepared in advance to the connector (2) to test, and connect the probes (3) of the tester to the harness of the testing connector.

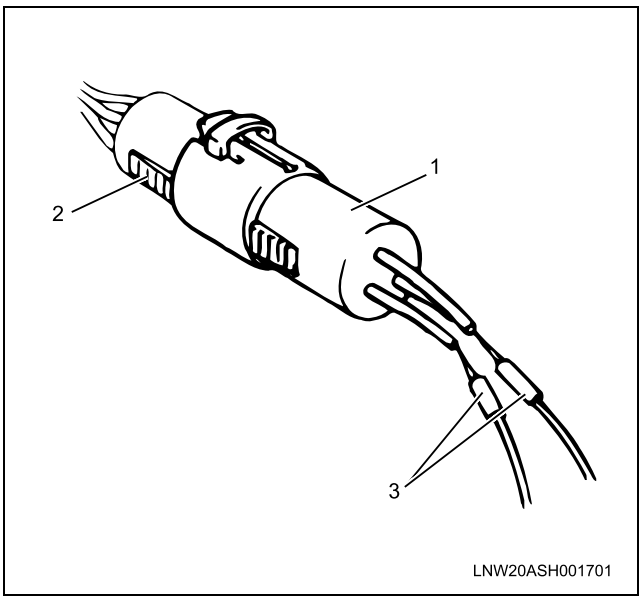

Disconnecting connector terminals

—Built-in lock type

1. As indicated in the diagram, insert a thin screwdriver-shaped metal rod (1) from the connector closure area (5).
2. Push the lock (2) up in the direction of the arrow using the metal rod to release the lock. In that state, pull out the harness (3) together with the terminal (4).

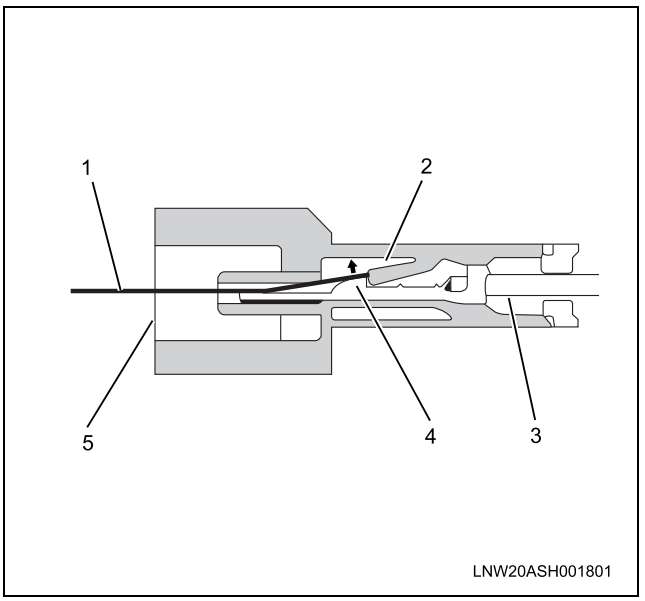

—Terminal lock type

1. Insert a metal rod (1) from the connector closure area (5).
2. As indicated in the diagram, release the terminal lock (2) by pushing it to the harness side, pull out the harness (3) together with the terminal (4).

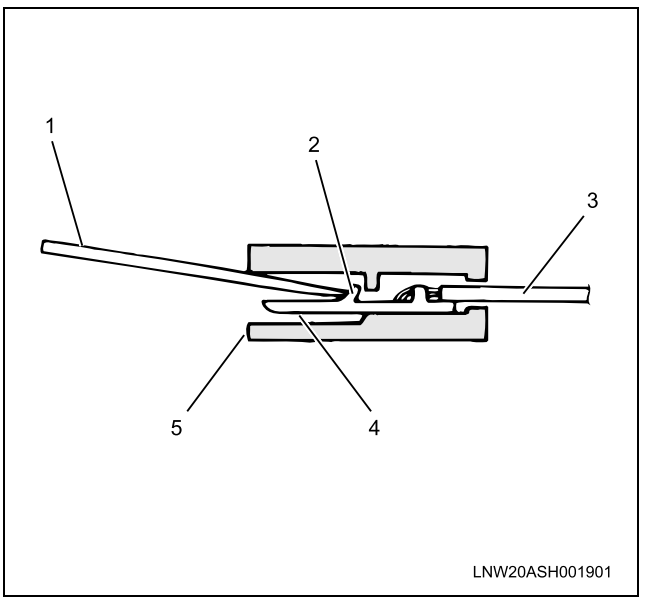

Connecting connector terminals

1. Check that the terminal lock (1) area is raised fully and can be locked.
2. Insert the terminal (3) from the harness (2) side of the connector, and push it in until the lock area clicks.

https://truckmanualshub.com/

3. Gently pull the harness and check whether the terminal is completely locked inside the connector.

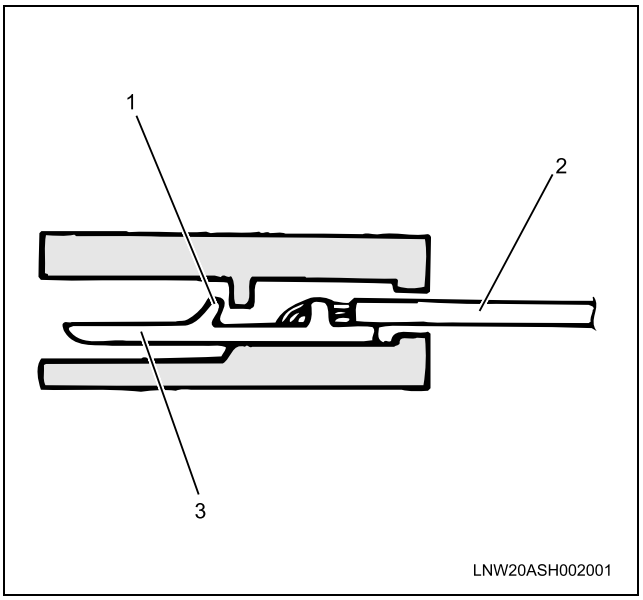

Replacing the fuse

WARNING:
If a fuse melts down, make sure to replace it with a non-defective fuse of the same capacity, after identifying the cause of the melt down.
If you use a fuse with high capacity, the fuse will not perform its function when excess current flows. This may cause parts or wires, etc. to burn, and can result in a vehicle fire.

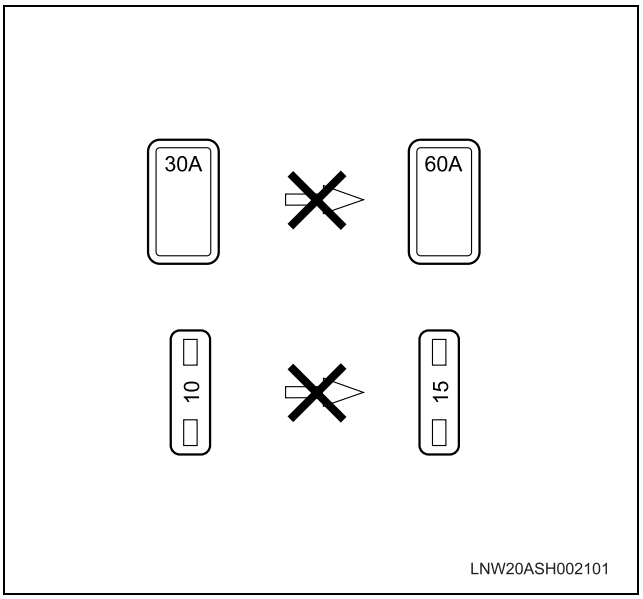

Handling Electronic Parts

Handle electronic parts with sufficient care, and do not damage the parts by dropping or throwing them.

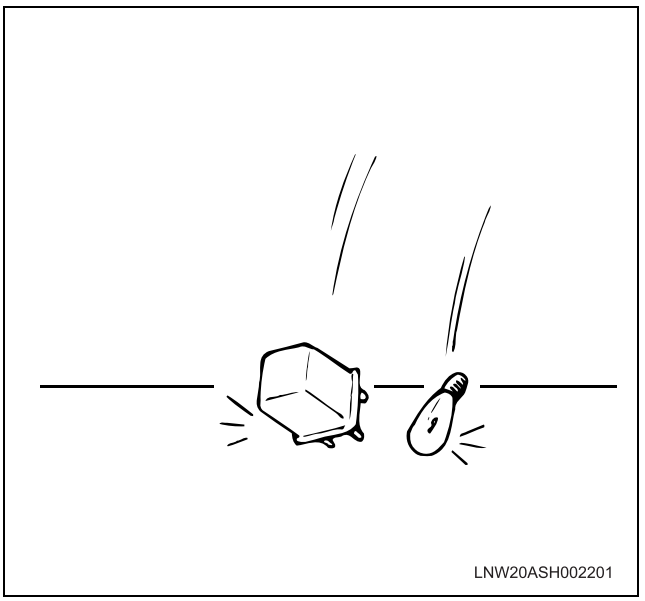

Cable Harness

1. When installing electronic parts, take care to ensure the harness does not get stuck and do not forcibly push the harness in.

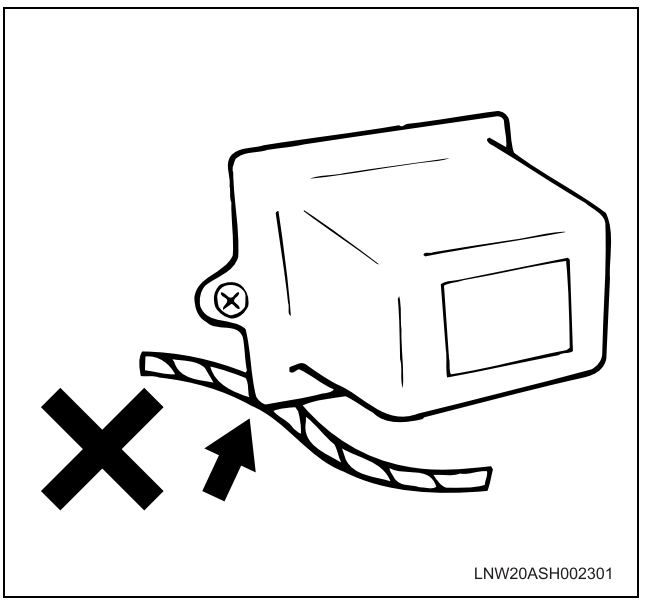

2. Make sure that all connections are clean and secure.

https://truckmanualshub.com/

3. When the harness will be contacting sharp edges or surfaces of other parts, protect the harness using a grommet or tube to prevent damage due to the contact.

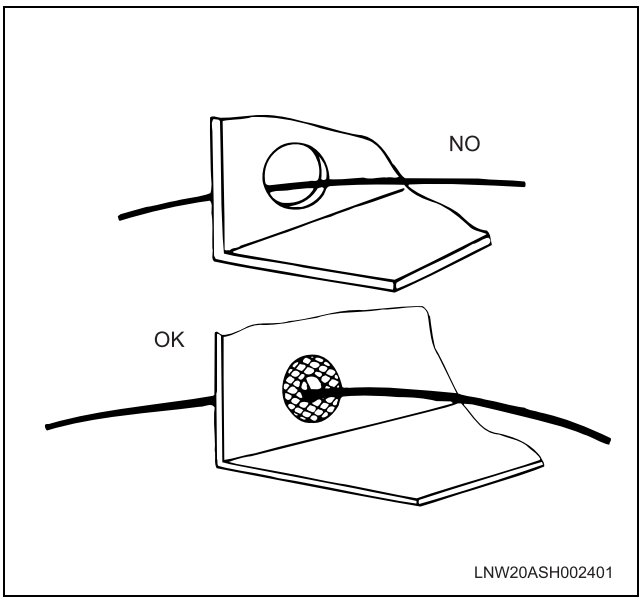

4. When wiring the harness by diverting it around other parts, give the harness a sufficient amount of free length, and use a protective tube (2) and clip (1) to ensure it does not contact surrounding parts.

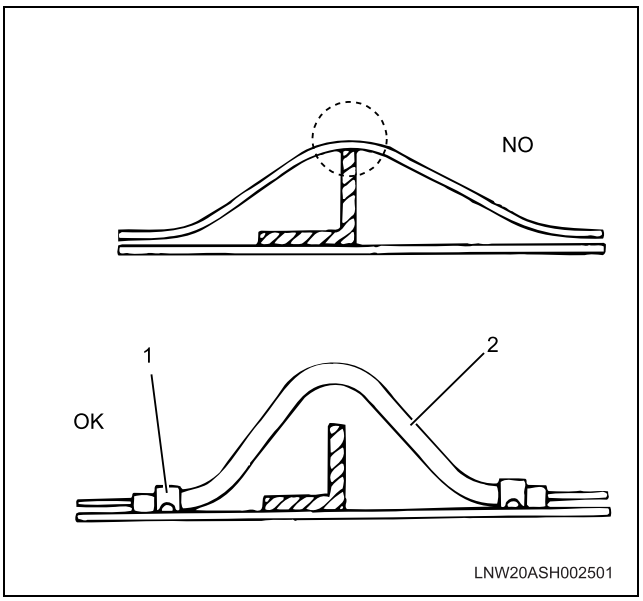

5. For wiring between the engine and chassis, give the wiring sufficient free length to prevent wear and damage caused by vibrations.

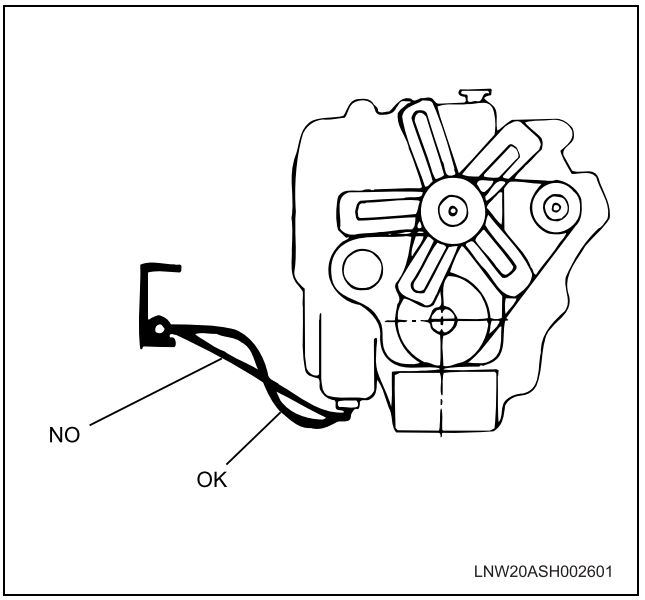

https://truckmanualshub.com/

Regarding The Scan Tool

Trouble Diagnosis Using The Scan Tool

Regarding the scan tool (Tech2) / Tech2 24 volt adaptor 2 /CAN-di module

This tool is effective for diagnosing electrical failures in electronic control units and performing system checks. If you connect the Tech2 to the DLC installed in the vehicle, it performs communication with the control units of the vehicle, and enables various diagnoses and tests to be performed.

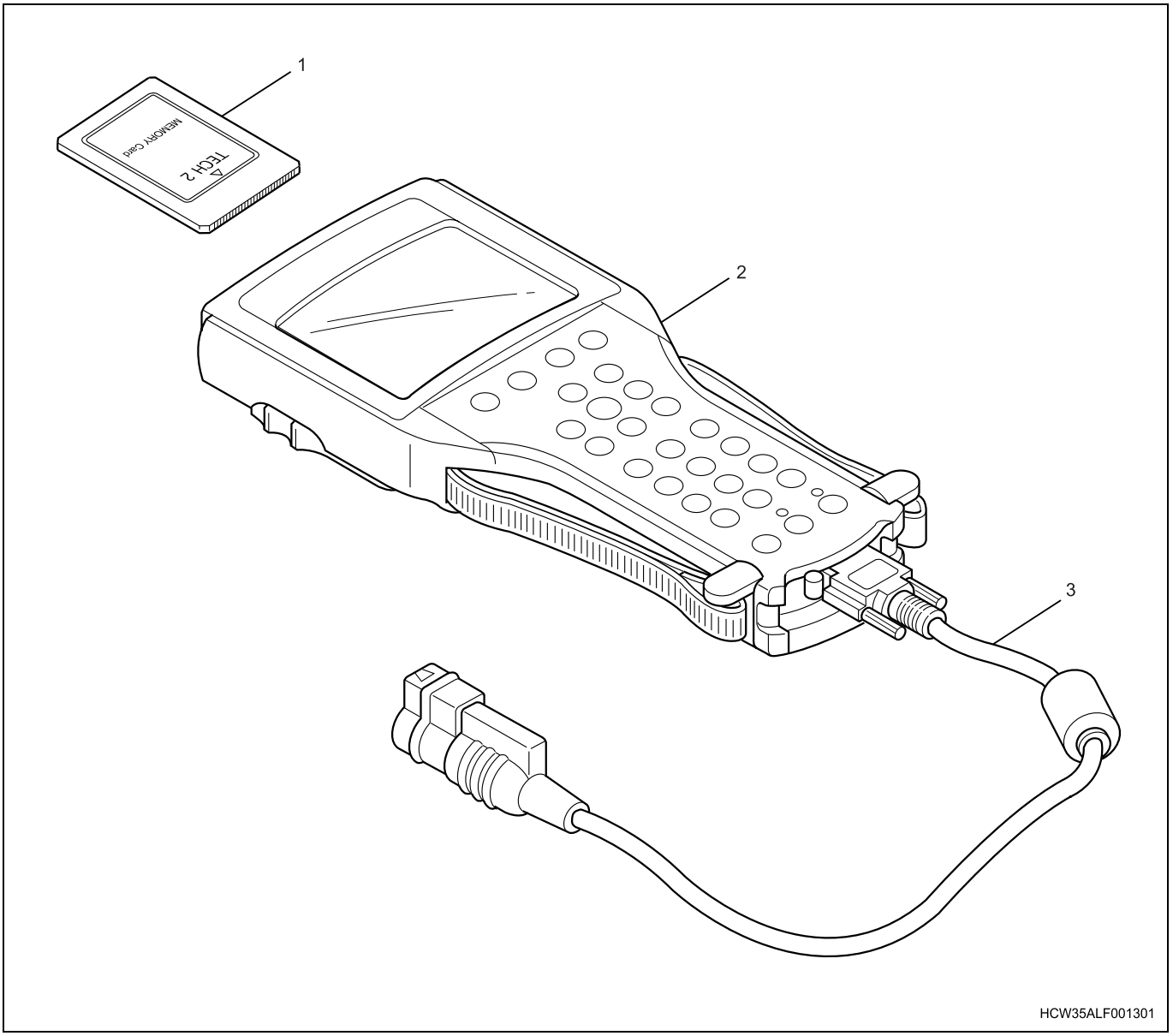

Legend

1. PCMCIA card (dedicated)
2. Tech2 (body)
3. DLC cable

https://truckmanualshub.com/

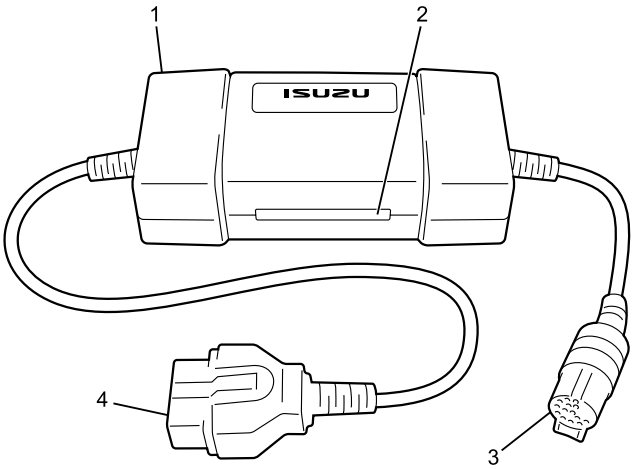

LNW7Z0SF000101

Legend

1. Tech2 24V adaptor 2 (body)
2. Signal change switch
3. Tech2 connecting cable
4. DLC connecting cable

[Euro4 specification]

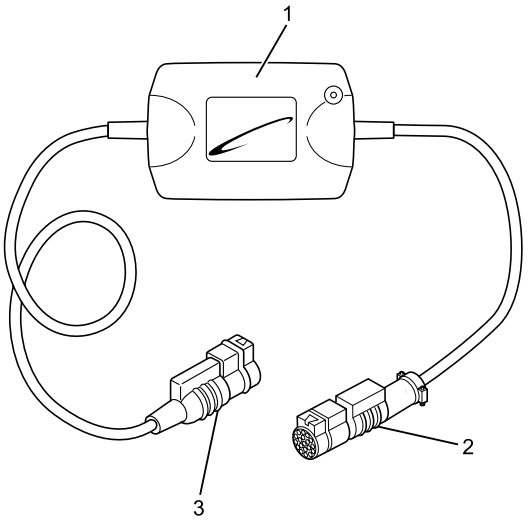

LNW7Z0SF000401

Legend

1. CAN-di module (body)
2. Tech2 connecting cable
3. DLC connecting cable

Features and cautions regarding the scan tool (Tech2) / Tech2 24 volt adaptor 2 / CAN-di module [Euro4 specification]

- The Tech2 has a 12 V power system. Do not directly use 24 V power. Do not directly supply power from the cigar lighter.
- Remove/install the PCMCIA card after turning the power off.
- The Tech2 has the capacity for two snapshots.
- As the PCMCIA card is sensitive to magnetism and static electricity, take care when handling it.
- The Tech2 is able to draw graphs of snapshots.
- To select a menu, press the selection key or choose a menu with a function key and press the ENTER key.
- You can return to the main menu at any time by pressing the EXIT key.
- To clear the diagnostic trouble codes (DTC), open the application menu and select "Clear DTC Information".
- The Tech2 adaptor 2 has a built-in DC to DC converter (that converts 24 V to 12 V).

https://truckmanualshub.com/

- The Tech2 adaptor 2 has a selector for switching signals (the signals for each electronic control unit (ECU)).
- The CAN-di module has a built-in signal converter (that converts CAN serial data to keyword serial data)

Parts of the Tech2

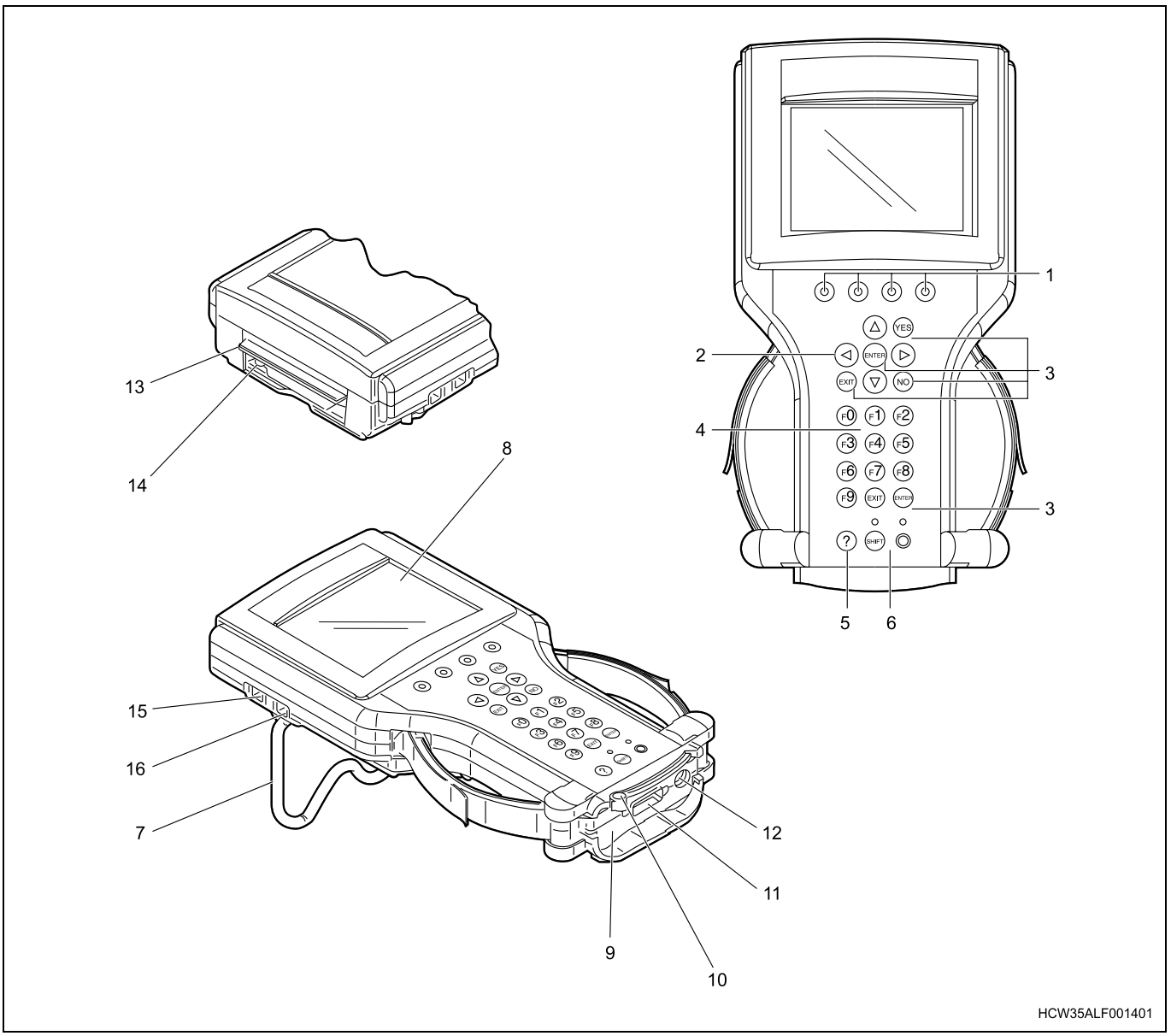

Legend

1. Soft key
2. Selection key (arrow key)
3. Action keys (YES, NO, ENTER, EXIT)
4. Function key (F0 – F9)
5. Help key (?)
6. Control key (PWR or SHIFT)
7. Wide stand
8. Display (liquid crystal display)
9. Vehicle communication interface (VCI) Module
10. VCI module fastening bar
11. DLC cable connecting connector
12. AC adaptor connector
13. PCMCIA card insertion opening (with cover)
14. PCMCIA card release (removal) button
15. Connector for external communication (RS-485 port)
16. Connector for external communication (RS-232 port)

1. Soft keys
   When operating the Tech2, the selection box is displayed on the top of the screen. The soft keys correspond to that selection box. The soft keys cannot be used unless the selection box is displayed on the screen.
2. Selection key (arrow key)
   Selects menu items on the Tech2 screen, and switches the display. The highlighted area of the screen display indicates what is being selected.

https://truckmanualshub.com/

3. Action keys (YES, NO, ENTER, EXIT)
   Confirm Tech2 operations, respond to screen instructions/questions, switch/move to the various menu screens.
4. Function keys (F0 - F9)
   Confirm menu functions displayed on the screen. Also when "F0" etc., is displayed on the menus on the screen, the keys correspond to that display.
5. Help key (?)
   Displays a screen explaining the Tech2 function being used.
6. Control key (PWR or SHIFT)
   The PWR key turns the power of the Tech2 ON/OFF. The SHIFT key is used when adjusting the screen contrast. The LED (orange) lights up when the SHIFT key is available. At this time, the key and functions other than the selection key are locked. The LED (green) lights up when the power is turned ON.
7. Wide stand
   Used as a stand. The operating angle of the stand is 0 to 180°.
8. Display (liquid crystal display)
   The liquid crystal display has a contrast adjustment function. Displays the ECM information and the various instruction screens.
9. Vehicle communication interface (VCI) module
   The module that enables communication between the vehicle and Tech2.
10. VCI module fastening bar
    Operate the bar to attach/fix, or remove the VCI.
11. DLC cable connecting connector
    Connector for using (connecting) the Tech2 with the vehicle. Connect the DLC cable.
12. AC adaptor connector
    Connector for connecting the included AC adaptor. Enables the Tech2 to be used away from the vehicle.
13. PCMCIA card insertion opening (with cover)
    Open the cover to insert a PCMCIA card into the Tech2. Insert the PCMCIA card with the cover opened. Never insert/remove the PCMCIA card with the Tech2 turned ON.
14. PCMCIA card release (removal) button
    Used when removing the PCMCIA card from the Tech2. The PCMCIA card can be removed when the button is pressed. Never remove the PCMCIA card with the Tech2 turned ON.
15. Connector for external communication (RS-485 port)
    This port is for connecting to a telephone line, but is currently not used for the Tech2. Do not connect a telephone line, etc., to this port.
16. Connector for external communication (RS-232 port)
    This port is for connecting the Tech2 to another computer.

Parts of the Tech2 24 V adaptor 2

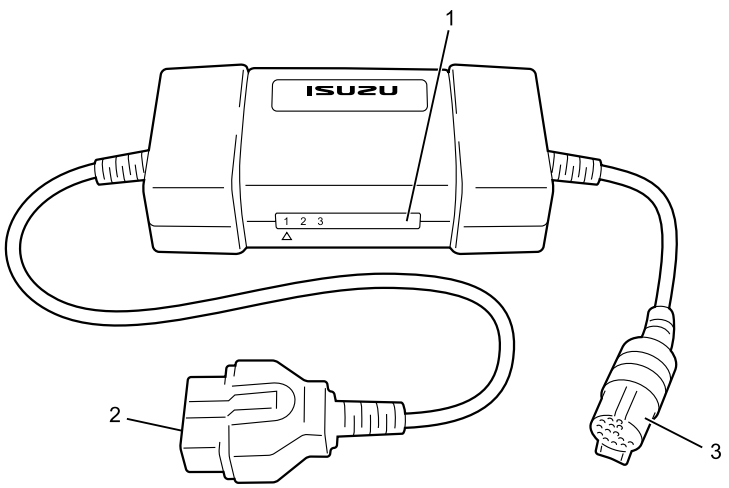

LNW7Z0SF000301

1. Signal change switch
   The Tech2 adaptor 2 has a selector for switching signals (the signals for each electronic control unit (ECU)).
   (The position of the switch is free for other than the following device)
   - “1” : —
   - “2” : HSA
   - “3” : —
2. DLC connecting cable
   Connects the Tech2 adaptor 2 to the vehicle DLC (pole 16, blue).
3. Tech2 connecting cable
   Connects the Tech2 adaptor 2 to the Tech2.

https://truckmanualshub.com/

Parts of the CAN-di module [Euro4 specification]

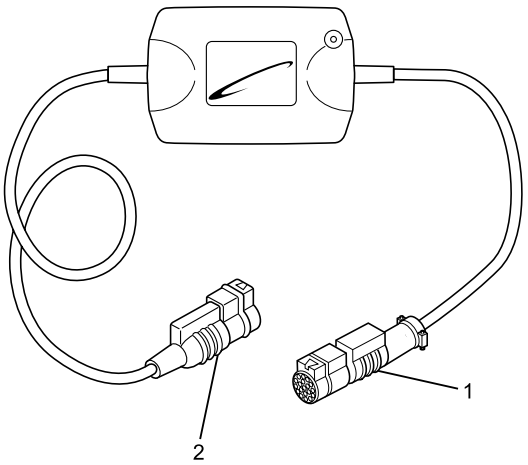

LNW7Z0SF000501

1. Tech2 connecting cable
   Connects the CAN-di module to the Tech2.
2. DLC connecting cable
   Connects the CAN-di module to the Tech2 adaptor 2.

Connection method

1. Insert the ISUZU system PCMCIA card into the Tech2 unit.
2. Connect the DLC cable to the Tech2 unit.
3. Connect the CAN-di module to the DLC cable. [Euro4 specification]
4. Connect the Tech2 24 V adaptor 2 to the CAN-di module. [Euro4 specification]
   Connect the Tech2 24 V adaptor 2 to the DLC cable. [Except Euro4 specification]
5. Confirm that the ignition is turned "OFF".
6. Connect the Tech2 24 V adaptor 2 to the vehicle side DLC connector (pole 16, blue).

RHD model

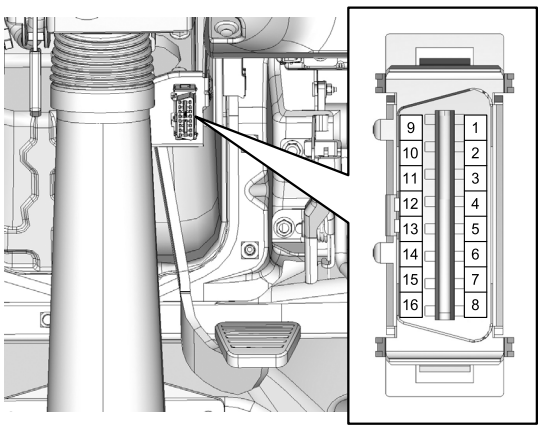

MFA7Z0SH000201

LHD model

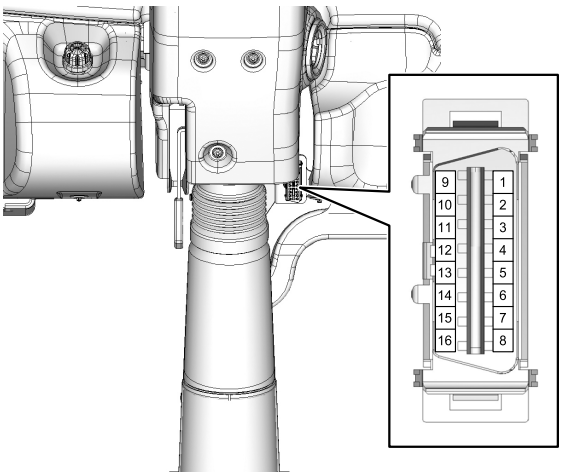

MFW82ASH000401

NOTE:
The CNG engine becomes sensitive to fluctuation of the power voltage when the temperature of ECM unit is high while or after driving, and communication failures may occur.
To avoid this situation, input 12 V power supply from a 12 V battery using a battery power cable, separately from the power for the Tech2 24 V adaptor 2.

- Do not input 24 V battery power supply to the Tech2 unit. Do not use the cigar lighter power supply on the vehicle side, which is also 24 V.

https://truckmanualshub.com/

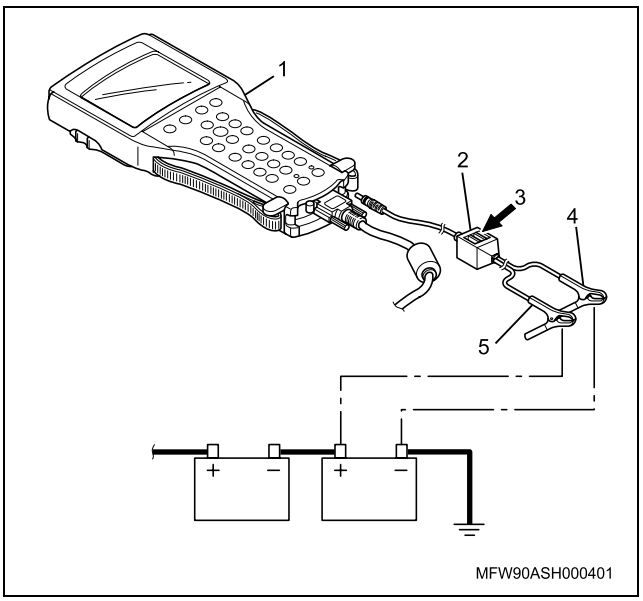

Legend

1. Tech2
2. Battery power cable
3. 3 A fuse
4. Clip (black)
5. Clip (red)

- If the power supply is not input, check the 3 A fuse.

7. Turn the ignition "ON", and press the "PWR" key of the Tech2.
8. Confirm the display of the Tech2.

CAUTION:
Remove/install the PCMCIA card after confirming that power is not being supplied to the Tech2.

https://truckmanualshub.com/

Recommended Liquid Gasket

Recommended Liquid Gasket

Type	Product name	Manufacturer name	Area used (reference)
Silicon type (Room temperature vulcanization process)	ThreeBond 1207B ThreeBond 1207C ThreeBond 1215 ThreeBond 1216 ThreeBond 1281	ThreeBond ThreeBond ThreeBond ThreeBond ThreeBond	Engine oil seal retainer Engine oil pan Timing gear case Cylinder head cover Fuel pump Water pump Rear axle Etc.
Water Base	ThreeBond 1141E	ThreeBond	
Solvent	ThreeBond 1102 ThreeBond 1104 ThreeBond 1194	ThreeBond ThreeBond ThreeBond	
Anaerobic	LOCTITE 515 LOCTITE 518 LOCTITE 17430 FMD127	LOCTITE LOCTITE LOCTITE LOCTITE	Engine oil seal retainer Water pump Transaxle Etc.

- Make sure to use a liquid gasket with the above product name or equivalent.
- Do not use LOCTITE 515, 518 or FMD 127, as they are anaerobic, and do not provide sufficient effect when there is a gap larger than 0.25 mm (0.010 in) between the contact surfaces of metals.
- Use an appropriate amount of liquid gasket. Follow the handling precautions for the product.

Application method

1. Wipe any water or oil from the contact surface. Make sure the contact surface is dry.
2. Apply liquid gasket of the specified bead width to one side of the contact surface. Make sure there are no cuts in the beads.

1. Completely remove lubricant and moisture from the connecting surfaces. The surfaces must be perfectly dry.
2. Apply specified bead width of liquid gasket to one of the connecting surfaces. There must be no gaps in the bead.

mm (in)

SCREW HOLE	DEPRESSION	JUDGE MENT
1~3 (0.04~0.12)		OK
1~3 (0.04~0.12)	More than 2 (0.08)	OK
		NG

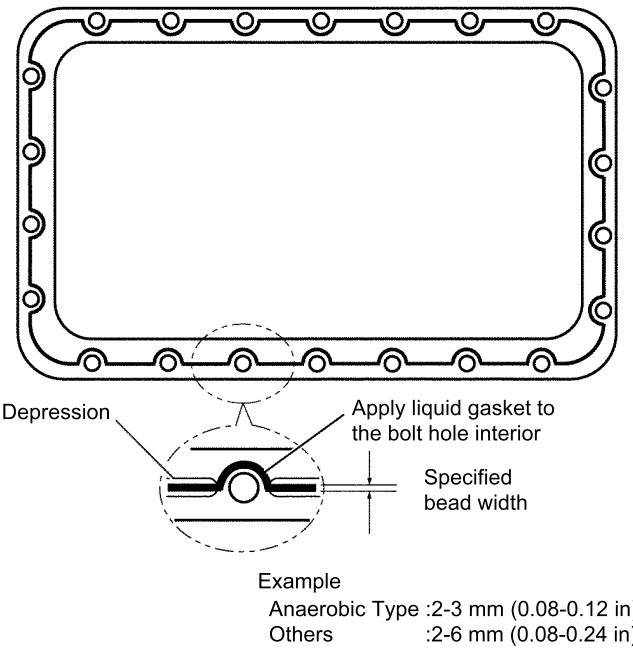

MFW70AMF000101

https://truckmanualshub.com/

NOTE:
If the repair manual specifies an application method, follow that method.

https://truckmanualshub.com/

Recommended Thread Locking Agent

Recommended Thread Locking Agent

Type	Color
LOCTITE 242	Blue
LOCTITE 262	Red
LOCTITE 271	Red

Work procedure

1. Completely wipe off any water or oil from the contact surface of the bolt and bolt hole, and the threaded portion of nut. Make sure the contact surface is dry.
2. Apply LOCTITE to the end 1/3 of the screw.

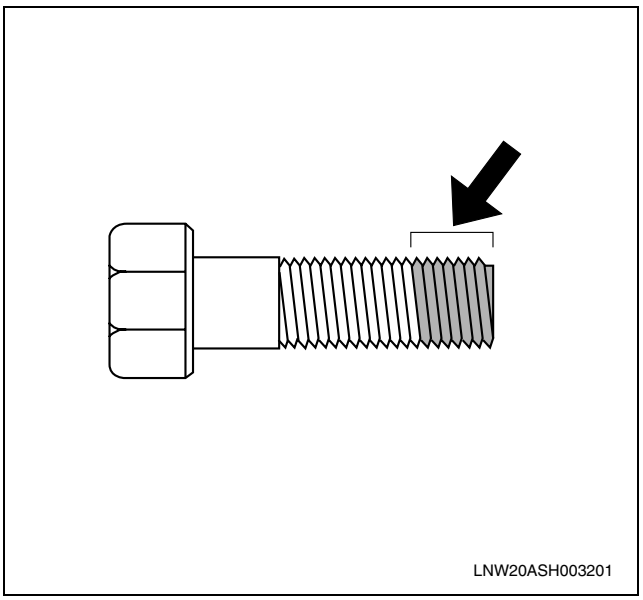

3. Tighten the bolt at the specified torque.

CAUTION:
After tightening, do not apply excessive torque or vibrations for at least an hour until the Loctite hardens.

https://truckmanualshub.com/

Maintenance Schedule

Introduction

When performing the checks on the following items, regular inspection items should also be checked.

Abbreviations Used in This Manual

I : Inspect, clean, or repair or replace as required
A : Adjust
R : Replace
T : Tighten to the specified torque
L : Add lubricant

https://truckmanualshub.com/

Maintenance Schedule (for Euro4 specification except Europe)

for Euro4 specification except Europe (1/6)

I : Inspect, clean, or repair or replace as required A : Adjust R : Replace T : Tighten to the specified torque L : Lubricate

Service Interval x1,000 km	1	5	8	10	15	20	25	30	35	40	45	50	55	60	65	70	75	80	85	90	95	100	105	Odometer reading or months, whichever comes first
x1,000 miles	0.6	3	5	6	9	12	15	18	21	24	27	31	34	37	40	43	46	49	52	55	59	62	65	
Engine startability and abnormal noise	-	-	-	I	-	I	-	I	-	I	-	I	-	I	-	I	-	I	-	I	-	I	-	or every 3 months
Idling speed and acceleration	-	-	-	I	-	I	-	I	-	I	-	I	-	I	-	I	-	I	-	I	-	I	-	or every 3 months
∗ Air cleaner element	-	-	-	-	-	-	-	-	-	-	-	R	-	-	-	-	-	-	-	-	-	R	-	or every 15 months or after 6th cleaning : R Every 6 months : I
Intake and exhaust manifolds	T	-	-	-	-	-	-	-	-	-	-	T	-	-	-	-	-	-	-	-	-	T	-	or every 15 months
Valve clearance	A	-	-	-	-	-	-	-	-	-	-	A	-	-	-	-	-	-	-	-	-	A	-	or every 15 months
Compression pressure for each cylinder	-	-	-	-	-	-	-	-	-	-	-	I	-	-	-	-	-	-	-	-	-	I	-	or every 15 months
Oil contamination	-	-	-	I	-	I	-	I	-	I	-	I	-	I	-	I	-	I	-	I	-	I	-	or every 3 months
∗ Engine oil	R	-	-	I	-	R	-	I	-	R	-	I	-	R	-	I	-	R	-	I	-	R	-	or every 3 months : I every 6 months : R
∗ Engine oil (main and partial) filter (combined type)	-	-	-	-	-	R	-	-	-	R	-	-	-	R	-	-	-	R	-	-	-	R	-	or every 6 months
∗ Engine oil main filter (separate type)	-	-	-	-	-	R	-	-	-	R	-	-	-	R	-	-	-	R	-	-	-	R	-	or every 6 months
∗ Engine oil partial filter (separate type)	-	-	-	-	-	R	-	-	-	R	-	-	-	R	-	-	-	R	-	-	-	R	-	or every 6 months
∗ Engine oil separator (4HK1 engine model)	-	-	-	-	-	R	-	-	-	R	-	-	-	R	-	-	-	R	-	-	-	R	-	
Engine oil separator (6HK1 engine model)	Every 12 months : R																							
Fuel filter	-	-	-	-	-	-	-	R	-	-	-	-	-	R	-	-	-	-	-	R	-	-	-	or every 9 months
Fuel tank strainer	-	-	-	I	-	I	-	I	-	I	-	I	-	I	-	I	-	I	-	I	-	I	-	or every 3 months
Inside fuel tank	-	-	-	I	-	I	-	I	-	I	-	I	-	I	-	I	-	I	-	I	-	I	-	or every 3 months
Fuel injection pressure and spray pattern	-	-	-	-	-	-	-	-	-	-	-	I	-	-	-	-	-	-	-	-	-	I	-	or every 15 months
Fuel injection timing	-	-	-	-	-	-	-	-	-	-	-	I	-	-	-	-	-	-	-	-	-	I	-	or every 15 months
Air compressor, governor and unloader valve functions	-	-	-	-	-	-	-	-	-	-	-	I	-	-	-	-	-	-	-	-	-	I	-	or every 15 months
Radiator cap or radiator sub-tank cap function	-	-	-	I	-	I	-	I	-	I	-	I	-	I	-	I	-	I	-	I	-	I	-	or every 3 months
Damage to fan belt	I	-	-	I	-	I	-	I	-	I	-	I	-	I	-	I	-	I	-	I	-	I	-	or every 3 months
∗ Loose or otherwise improper installation of exhaust pipe	I	-	-	I	-	I	-	I	-	I	-	I	-	I	-	I	-	I	-	I	-	I	-	or every 3 months
Cooling circuit and radiator	Every 24 months : I																							
Engine coolant	Every 24 months : R (When Isuzu recommended coolant is used)																							
Turbocharger to air duct connection and gasket	-	-	-	I	-	I	-	I	-	I	-	I	-	I	-	I	-	I	-	I	-	I	-	or every 3 months
∗ Clutch fluid (manual transmission)	-	-	-	I	-	I	-	I	-	I	-	R	-	I	-	I	-	I	-	I	-	R	-	or every 3 months : I every 15 months : R
Clutch system function (manual transmission)	-	-	-	I	-	I	-	I	-	I	-	I	-	I	-	I	-	I	-	I	-	I	-	or every 3 months
Clutch pedal free play and stroke (manual transmission)	-	-	-	I	-	I	-	I	-	I	-	I	-	I	-	I	-	I	-	I	-	I	-	or every 3 months
Rubber parts and gaskets of clutch booster (manual transmission)	Every 48 months : R																							
Clutch booster exhaust cover (manual transmission)	-	-	-	I	-	I	-	I	-	I	-	I	-	I	-	I	-	I	-	I	-	I	-	or every 3 months

∗ : The vehicle needs to be maintained more often if it is driven in severe condition. Refer to "Maintenance Schedule for Severe-condition" in this section.

MFWB0AXF002001

https://truckmanualshub.com/

for Euro4 specification except Europe (2/6)

I : Inspect, clean, or repair or replace as required A : Adjust R : Replace T : Tighten to the specified torque L : Lubricate

Service Interval x1,000 km / x1,000 miles	1 / 0.6	5 / 3	8 / 5	10 / 6	15 / 9	20 / 12	25 / 15	30 / 18	35 / 21	40 / 24	45 / 27	50 / 31	55 / 34	60 / 37	65 / 40	70 / 43	75 / 46	80 / 49	85 / 52	90 / 55	95 / 59	100 / 62	105 / 65	Odometer reading or months, whichever comes first
∗ Transmission oil (MZX/MZW/MZZ model)	R	-	-	I	-	I	-	I	-	I	-	R	-	I	-	I	-	I	-	I	-	R	-	or every 3 months : I every 15 months : R
∗ Transmission oil (MLD model)	R	-	-	I	-	I	-	I	-	I	-	R	-	I	-	I	-	I	-	I	-	R	-	or every 3 months : I every 15 months : R
∗ Transmission oil (ZF6S1000 model)	Refer to Maintenance Schedule (Transmission Oil - ZF6S1000/ZF9S1110 Type)																							
∗ Transmission oil (ZF9S1110 model)	Refer to Maintenance Schedule (Transmission Oil - ZF6S1000/ZF9S1110 Type)																							
∗ Transmission oil (FSO5206B model)	Refer to Maintenance Schedule (Transmission Oil - FS8209A/FSO5206B Type)																							
∗ Transmission oil (FS8209A model)	Refer to Maintenance Schedule (Transmission Oil - FS8209A/FSO5206B Type)																							
∗ Transmission fluid (ALLISON2500 model)	-	-	-	-	-	-	-	-	-	-	-	-	-	-	-	-	-	R	-	-	-	-	-	or every 24 months
∗ Transmission main filter (ALLISON2500 model)	-	-	R	-	-	-	-	-	-	-	-	-	-	-	-	-	-	R	-	-	-	-	-	or 2,000 hours or 24 months : R
∗ Transmission cooling system filter (ALLISON2500 model)	-	-	-	-	-	-	-	-	-	-	-	-	-	-	-	-	-	R	-	-	-	-	-	or 2,000 hours or 24 months : R
Transmission internal filter (ALLISON2500 model)	Replace the filter at overhaul																							
∗ Transmission fluid (ALLISON3000/3500 models)	-	-	R	-	-	-	-	-	-	R	-	-	-	-	-	-	-	R	-	-	-	-	-	or every 12 months
∗ Transmission main filter (ALLISON3000/3500 models)	-	-	R	-	-	-	-	-	-	R	-	-	-	-	-	-	-	R	-	-	-	-	-	or 1,000 hours or 12 months : R
∗ Transmission cooling system filter (ALLISON3000/3500 models)	-	-	-	-	-	-	-	-	-	R	-	-	-	-	-	-	-	R	-	-	-	-	-	or 1,000 hours or 12 months : R
Transmission internal filter (ALLISON3000/3500 models)	Replace the filter at overhaul																							
∗ Smoother clutch oil (Vehicle equipped with the Smoother system)	R	-	-	I	-	I	-	I	-	I	-	R	-	I	-	I	-	I	-	I	-	R	-	or every 3 months : I every 15 months : R
Loose gear control mechanism	-	-	-	I	-	I	-	I	-	I	-	I	-	I	-	I	-	I	-	I	-	I	-	or every 3 months
∗ Transfer gear case oil (F∗S models)	R	-	-	I	-	I	-	I	-	I	-	R	-	I	-	I	-	I	-	I	-	R	-	or every 3 months : I every 15 months : R
Function of transfer gear control mechanism (F∗S models)	-	-	-	-	-	-	-	-	-	-	-	I	-	-	-	-	-	-	-	-	-	I	-	or every 15 months
Loose propeller shaft joints	-	-	-	-	-	-	-	-	-	-	-	I	-	-	-	-	-	-	-	-	-	I	-	or every 15 months
∗ Worn propeller shaft universal joint and splines	-	-	-	-	-	-	-	-	-	-	-	I	-	-	-	-	-	-	-	-	-	I	-	or every 15 months
Loose propeller shaft bearing and related parts	-	-	-	-	-	-	-	-	-	-	-	I	-	-	-	-	-	-	-	-	-	I	-	or every 15 months
∗ Rear axle differential gear oil (Vehicle equipped with Isuzu production axle)	R	-	-	I	-	I	-	I	-	I	-	R	-	I	-	I	-	I	-	I	-	R	-	or every 3 months : I every 15 months : R
∗ Rear axle differential gear oil (Vehicle equipped with Arvin Meritor production axle)	Refer to Maintenance Schedule (RS23/RT40 type Axle)																							
∗ Rear wheel hub bearing oil (FVM model-Vehicle equipped with Arvin Meritor production axle)	R	-	-	I	-	I	-	I	-	I	-	R	-	I	-	I	-	I	-	I	-	R	-	or every 3 months : I every 15 months : R
∗ Inter-differential gear oil (FVZ model)	R	-	-	I	-	I	-	I	-	I	-	R	-	I	-	I	-	I	-	I	-	R	-	or every 3 months : I every 15 months : R
Rear wheel hub bearing grease	-	-	-	-	-	-	-	-	-	-	-	R	-	-	-	-	-	-	-	-	-	R	-	or every 15 months

∗ : The vehicle needs to be maintained more often if it is driven in severe condition. Refer to "Maintenance Schedule for Severe-condition" in this section.

MFWB0AXF002601

https://truckmanualshub.com/

for Euro4 specification except Europe (3/6)

I : Inspect, clean, or repair or replace as required A : Adjust R : Replace T : Tighten to the specified torque L : Lubricate

Service Interval x1,000 km / x1,000 miles	1 / 0.6	5 / 3	8 / 5	10 / 6	15 / 9	20 / 12	25 / 15	30 / 18	35 / 21	40 / 24	45 / 27	50 / 31	55 / 34	60 / 37	65 / 40	70 / 43	75 / 46	80 / 49	85 / 52	90 / 55	95 / 59	100 / 62	105 / 65	Odometer reading or months, whichever comes first
Damaged or distorted rear axle case	-	-	-	-	-	-	-	-	-	-	-	I	-	-	-	-	-	-	-	-	-	I	-	or every 15 months
∗ Front axle differential gear oil (F∗S models)	R	-	-	I	-	I	-	I	-	I	-	R	-	I	-	I	-	I	-	I	-	R	-	or every 3 months : I every 15 months : R
Front wheel hub bearing grease	-	-	-	-	-	-	-	-	-	-	-	R	-	-	-	-	-	-	-	-	-	R	-	or every 15 months
∗ Front wheel hub bearing oil (Vehicle equipped with Arvin Meritor production axle)	R	-	-	I	-	I	-	I	-	I	-	R	-	I	-	I	-	I	-	I	-	R	-	or every 3 months : I every 15 months : R
Damaged or distorted front axle case	-	-	-	-	-	-	-	-	-	-	-	I	-	-	-	-	-	-	-	-	-	I	-	or every 15 months
∗ Leaf spring U-bolt nuts	T	-	-	-	-	-	-	-	-	-	-	T	-	-	-	-	-	-	-	-	-	T	-	or every 15 months
∗ Air suspension's beam bolt nuts/U-bolt nuts (Air suspension model)	T	-	-	-	-	-	-	-	-	-	-	T	-	-	-	-	-	-	-	-	-	T	-	or every 15 months
Damaged leaf spring	-	-	-	I	-	I	-	I	-	I	-	I	-	I	-	I	-	I	-	I	-	I	-	or every 3 months
Uneven suspension due to leaf spring fatigue	-	-	-	-	-	-	-	-	-	-	-	I	-	-	-	-	-	-	-	-	-	I	-	or every 15 months
Loose or damaged leaf spring mounting	-	-	-	-	-	-	-	I	-	-	-	-	-	I	-	-	-	-	-	I	-	-	-	or every 9 months
Spring leaves for misalignment	-	-	-	-	-	-	-	I	-	-	-	-	-	I	-	-	-	-	-	I	-	-	-	or every 9 months
Oil leaks from or damage to shock absorbers	-	-	-	-	-	-	-	I	-	-	-	-	-	I	-	-	-	-	-	I	-	-	-	or every 9 months
Loose shock absorber mounting	-	-	-	-	-	-	-	I	-	-	-	-	-	I	-	-	-	-	-	I	-	-	-	or every 9 months
∗ Loose or damaged air suspension main support members (Air suspension model)	-	-	-	-	-	-	-	-	-	-	-	I	-	-	-	-	-	-	-	-	-	I	-	or every 15 months
Damaged air spring (Air suspension model)	-	-	-	I	-	I	-	I	-	I	-	I	-	I	-	I	-	I	-	I	-	I	-	or every 3 months
Air leaks from air suspension (Air suspension model)	-	-	-	I	-	I	-	I	-	I	-	I	-	I	-	I	-	I	-	I	-	I	-	or every 3 months
Loose or damaged air suspension mounting (Air suspension model)	-	-	-	I	-	I	-	I	-	I	-	I	-	I	-	I	-	I	-	I	-	I	-	or every 3 months
Air spring height (Air suspension model)	-	-	-	-	-	-	-	-	-	-	-	I	-	-	-	-	-	-	-	-	-	I	-	or every 15 months
Function of height sensor or leveling valve (Air suspension model)	-	-	-	-	-	-	-	-	-	-	-	I	-	-	-	-	-	-	-	-	-	I	-	or every 15 months
Loose or damaged torque rod (if so equipped)	-	-	-	-	-	-	-	-	-	-	-	I	-	-	-	-	-	-	-	-	-	I	-	or every 15 months
Loose or damaged traverse rod (if so equipped)	-	-	-	-	-	-	-	-	-	-	-	I	-	-	-	-	-	-	-	-	-	I	-	or every 15 months
Loose or damaged V-rod (if so equipped)	-	-	-	-	-	I	-	-	-	I	-	-	-	I	-	-	-	I	-	-	-	I	-	or every 6 months
Foreign object in wheels	-	-	-	I	-	I	-	I	-	I	-	I	-	I	-	I	-	I	-	I	-	I	-	or every 3 months
Wheel nuts	T	-	-	T	-	T	-	T	-	T	-	T	-	T	-	T	-	T	-	T	-	T	-	or every 3 months
Damaged disc wheels	-	-	-	I	-	I	-	I	-	I	-	I	-	I	-	I	-	I	-	I	-	I	-	or every 3 months
Loose front wheel hub bearings	-	-	-	-	-	-	-	-	-	-	-	I	-	-	-	-	-	-	-	-	-	I	-	or every 15 months
Loose rear wheel hub bearings	-	-	-	-	-	-	-	-	-	-	-	I	-	-	-	-	-	-	-	-	-	I	-	or every 15 months
Power steering fluid	-	-	-	I	-	I	-	I	-	I	-	R	-	I	-	I	-	I	-	I	-	R	-	or every 3 months : I every 15 months : R

∗ : The vehicle needs to be maintained more often if it is driven in severe condition. Refer to "Maintenance Schedule for Severe-condition" in this section.

MFWB0AXF005001

https://truckmanualshub.com/

for Euro4 specification except Europe (4/6)

I : Inspect, clean, or repair or replace as required A : Adjust R : Replace T : Tighten to the specified torque L : Lubricate

Service Interval x1,000 km / x1,000 miles	1 / 0.6	5 / 3	8 / 5	10 / 6	15 / 9	20 / 12	25 / 15	30 / 18	35 / 21	40 / 24	45 / 27	50 / 31	55 / 34	60 / 37	65 / 40	70 / 43	75 / 46	80 / 49	85 / 52	90 / 55	95 / 59	100 / 62	105 / 65	Odometer reading or months, whichever comes first
Power steering fluid filter	-	-	-	-	-	-	-	-	-	-	-	I	-	-	-	-	-	-	-	-	-	I	-	or every 15 months
Loose power steering system mounting	-	-	-	I	-	I	-	I	-	I	-	I	-	I	-	I	-	I	-	I	-	I	-	or every 3 months
Excessive play in power steering bearing	-	-	-	-	-	-	-	-	-	-	-	I	-	-	-	-	-	-	-	-	-	I	-	or every 15 months
* Damage to, loose or excessive play in power steering joints	I	-	-	I	-	I	-	I	-	I	-	I	-	I	-	I	-	I	-	I	-	I	-	or every 3 months
Knuckle-to-front axle clearance	-	-	-	-	-	-	-	-	-	-	-	I	-	-	-	-	-	-	-	-	-	I	-	or every 15 months
Wheel alignment	-	-	-	-	-	-	-	-	-	-	-	I	-	-	-	-	-	-	-	-	-	I	-	or every 15 months
Steering angle range for right and left turns	-	-	-	-	-	-	-	-	-	-	-	I	-	-	-	-	-	-	-	-	-	I	-	or every 15 months
King pin-to-bearing clearance	-	-	-	-	-	-	-	-	-	-	-	I	-	-	-	-	-	-	-	-	-	I	-	or every 15 months
Brake fluid (Vehicle equipped with the air-over hydraulic brake system)	-	-	-	I	-	I	-	I	-	I	-	R	-	I	-	I	-	I	-	I	-	R	-	or every 3 months : I every 12 months : R
* Brake lining wear	-	-	-	I	-	I	-	I	-	I	-	I	-	I	-	I	-	I	-	I	-	I	-	or every 3 months
* Brake drum wear or damage	-	-	-	-	-	-	-	-	-	-	-	I	-	-	-	-	-	-	-	-	-	I	-	or every 12 months
Brake hose	-	-	-	I	-	I	-	I	-	I	-	R	-	I	-	I	-	I	-	I	-	R	-	or every 3 months : I every 24 months : R
Function of brake valves (Vehicle equipped with the air-over hydraulic brake system)	-	-	-	-	-	-	-	-	-	-	-	I	-	-	-	-	-	-	-	-	-	I	-	or every 12 months
Brake booster exhaust cover (Vehicle equipped with the air-over hydraulic brake system)	-	-	-	I	-	I	-	I	-	I	-	I	-	I	-	I	-	I	-	I	-	I	-	or every 12 months
Leaks from, damage to, or loose connection of brake hose or pipe	-	-	-	I	-	I	-	I	-	I	-	I	-	I	-	I	-	I	-	I	-	I	-	or every 3 months
Excessively worn cams and wheel brakes (Vehicle equipped with Arvin Meritor production axle)	-	-	-	-	-	-	-	-	-	-	-	I	-	-	-	-	-	-	-	-	-	I	-	or every 15 months
Brake chamber rod stroke (Vehicle equipped with the full-air brake system)	-	I	-	I	-	I	-	I	-	I	-	I	-	I	-	I	-	I	-	I	-	I	-	or every 3 months
Function of brake chamber (Vehicle equipped with the full-air brake system)	-	-	-	-	-	-	-	-	-	-	-	I	-	-	-	-	-	-	-	-	-	I	-	or every 12 months
Functions of brake and relay valves (Vehicle equipped with the full-air brake system)	-	-	-	-	-	-	-	-	-	-	-	I	-	-	-	-	-	-	-	-	-	I	-	or every 12 months
Air dryer	Change the desiccant, filter and rubber parts of air dryer at 100,000 km (62,000 miles) or every 12 months.																							
ABS modulator (Vehicle equipped with ABS)	Every 24 months : R																							
Rubber parts of wheel cylinder	Every 12 months : R																							
Rubber parts of HSA valve (Vehicle equipped with HSA)	Every 24 months : R																							
Rubber parts of brake valve, relay valve, parking brake valve, quick release valve, reducing valve, double check valve, multi-protection valve, AIR MASTER, TCV, LSPV	Every 24 months : R																							
Rubber parts of brake chamber	Every 3 months : I Every 24 months : R																							

* : The vehicle needs to be maintained more often if it is driven in severe condition. Refer to "Maintenance Schedule for Severe-condition" in this section.

MFWB0AXF001901

https://truckmanualshub.com/

for Euro4 specification except Europe (5/6)

I : Inspect, clean, or repair or replace as required A : Adjust R : Replace T : Tighten to the specified torque L : Lubricate

Service Interval x1,000 km	1	5	8	10	15	20	25	30	35	40	45	50	55	60	65	70	75	80	85	90	95	100	105	Odometer reading or months, whichever comes first
x1,000 miles	0.6	3	5	6	9	12	15	18	21	24	27	31	34	37	40	43	46	49	52	55	59	62	65	
Brake chamber piggy-bag	Every 36 months : R																							
Brake expander	Every 12 months : I Every 36 months : overhaul																							
Worn parking brake lining (center parking brake model)	-	-	-	-	-	-	-	-	-	-	-	I	-	-	-	-	-	-	-	-	-	I	-	or every 12 months
Worn or damaged parking brake drum (center parking brake model)	-	-	-	-	-	-	-	-	-	-	-	I	-	-	-	-	-	-	-	-	-	I	-	or every 12 months
Loose parking brake system mounting	-	-	-	I	-	-	-	I	-	-	-	-	-	I	-	-	-	-	-	I	-	-	-	or every 3 months
Damaged or loosely connected rod or cable	-	I	-	I	-	I	-	I	-	I	-	I	-	I	-	I	-	I	-	I	-	I	-	or every 3 months
Function of parking brake control valve system (wheel parking brake model)	-	I	-	I	-	I	-	I	-	I	-	I	-	I	-	I	-	I	-	I	-	I	-	or every 3 months
Function of brake chamber (wheel parking brake model)	-	-	-	-	-	-	-	-	-	-	-	I	-	-	-	-	-	-	-	-	-	I	-	or every 12 months
Brake chamber rod stroke (wheel parking brake model)	-	I	-	I	-	I	-	I	-	I	-	I	-	I	-	I	-	I	-	I	-	I	-	or every 3 months
Electro-hydraulic cab tilt pump oil (Electro-hydraulic cab tilt model)	-	-	-	-	-	-	-	I	-	-	-	-	-	I	-	-	-	-	-	I	-	-	-	or every 9 months : I every 24 months : R
Function of cab tilt system	-	-	-	-	-	-	-	-	-	-	-	I	-	-	-	-	-	-	-	-	-	I	-	or every 15 months
Specific gravity of battery fluid	-	-	-	-	-	-	-	I	-	-	-	-	-	I	-	-	-	-	-	I	-	-	-	or every 9 months
Function of starter motor	-	-	-	-	-	-	-	I	-	-	-	-	-	I	-	-	-	-	-	I	-	-	-	or every 9 months
Wear of starter motor brushes	-	-	-	-	-	-	-	-	-	-	-	I	-	-	-	-	-	-	-	-	-	I	-	or every 15 months
Function of generator	-	-	-	I	-	I	-	I	-	I	-	I	-	I	-	I	-	I	-	I	-	I	-	or every 3 months
Damage to or loose connection of wiring harness terminals	-	-	-	I	-	I	-	I	-	I	-	I	-	I	-	I	-	I	-	I	-	I	-	or every 3 months
Exhaust pressure check or filter cleaning	-	-	-	-	-	-	-	-	-	-	-	-	-	-	-	-	-	-	-	-	-	I	-	or every 12 months
Exhaust differential pressure sensor rubber piece	-	-	-	-	-	-	-	-	-	R	-	-	-	-	-	-	-	R	-	-	-	-	-	or every 12 months

https://truckmanualshub.com/

for Euro4 specification except Europe (6/6)

I : Inspect, clean, or repair or replace as required A : Adjust R : Replace T : Tighten to the specified torque L : Lubricate

Service Interval x1,000 km / x1,000 miles	1 / 0.6	5 / 3	8 / 5	10 / 6	15 / 9	20 / 12	25 / 15	30 / 18	35 / 21	40 / 24	45 / 27	50 / 31	55 / 34	60 / 37	65 / 40	70 / 43	75 / 46	80 / 49	85 / 52	90 / 55	95 / 59	100 / 62	105 / 65	Odometer reading or months, whichever comes first
Engine water pump bearing (6HK1 engine model)	-	-	-	-	-	-	L	-	-	-	-	L	-	-	-	-	L	-	-	-	-	L	-	or every 6 months
Front spring pins	-	L	-	L	L	L	L	L	L	L	L	L	L	L	L	L	L	L	L	L	L	L	L	or every month
Front spring shackles	-	L	-	L	L	L	L	L	L	L	L	L	L	L	L	L	L	L	L	L	L	L	L	or every month
King pin (Vehicle equipped with Isuzu production axle)	-	L	-	L	L	L	L	L	L	L	L	L	L	L	L	L	L	L	L	L	L	L	L	or every month
King pin (Vehicle equipped with Arvin Merltor production axle)	Every 80,000 km (50,000 miles) or every 12 months: L																							
Tie rod ends (FTR/FVR/FVM/FVZ models-Vehicle equipped with Isuzu production axle)	-	-	-	-	-	-	L	-	-	-	-	L	-	-	-	-	L	-	-	-	-	L	-	or every 6 months
Tie rod ends (Vehicle equipped with Arvin Merltor production axle)	Every 80,000 km (50,000 miles) or every 12 months: L																							
Drag link (maintenace type)	-	-	-	-	-	-	L	-	-	-	-	L	-	-	-	-	L	-	-	-	-	L	-	or every 6 months
Shimmy damper (F∗S models)	-	L	-	L	L	L	L	L	L	L	L	L	L	L	L	L	L	L	L	L	L	L	L	or every month
Transfer input flange (F∗S models)	-	L	-	L	L	L	L	L	L	L	L	L	L	L	L	L	L	L	L	L	L	L	L	or every month
Propeller shaft universal joints and sliding sleeves	-	L	-	L	L	L	L	L	L	L	L	L	L	L	L	L	L	L	L	L	L	L	L	or every month
Propeller shaft center bearing	-	L	-	L	L	L	L	L	L	L	L	L	L	L	L	L	L	L	L	L	L	L	L	or every month
Rear spring pins	-	L	-	L	L	L	L	L	L	L	L	L	L	L	L	L	L	L	L	L	L	L	L	or every month
Rear spring shackle pins or rear spring sliding shackles	-	L	-	L	L	L	L	L	L	L	L	L	L	L	L	L	L	L	L	L	L	L	L	or every month
Trunnion shaft (FVM/FVZ models, with leaf spring suspension)	-	L	-	L	L	L	L	L	L	L	L	L	L	L	L	L	L	L	L	L	L	L	L	or every month
Rear spring pads (FVM/FVZ models, with leaf spring suspension)	-	L	-	L	L	L	L	L	L	L	L	L	L	L	L	L	L	L	L	L	L	L	L	or every month
Front wheel brake cam shaft and slack adjuster (Vehicle equipped with Arvin Meritor production axle)	-	L	-	L	L	L	L	L	L	L	L	L	L	L	L	L	L	L	L	L	L	L	L	or every month
Rear wheel brake cam shaft and slack adjuster (Vehicle equipped with Arvin Meritor production axle)	-	L	-	L	L	L	L	L	L	L	L	L	L	L	L	L	L	L	L	L	L	L	L	or every month
Steering shaft sliding sleeve	-	L	-	L	L	L	L	L	L	L	L	L	L	L	L	L	L	L	L	L	L	L	L	or every month
Clutch shift block (FSO5206B/ZF9S1110/MLD transmission)	-	L	-	L	L	L	L	L	L	L	L	L	L	L	L	L	L	L	L	L	L	L	L	or every month
Clutch booster joint pin (except ZF6S1000 transmission)	-	L	-	L	L	L	L	L	L	L	L	L	L	L	L	L	L	L	L	L	L	L	L	or every month
Cab mounting (if so equipped)	-	L	-	L	L	L	L	L	L	L	L	L	L	L	L	L	L	L	L	L	L	L	L	or every month

MFWB0AXF002701

https://truckmanualshub.com/

Maintenance Schedule (for Euro2, Euro3 specification)

for Euro2, Euro3 specification (1/4)

I : Inspect, clean, or repair or replace as required A : Adjust R : Replace T : Tighten to the specified torque L : Lubricate

Service Interval x1,000 km / x1,000 miles	1 / 0.6	5 / 3	8 / 5	10 / 6	15 / 9	20 / 12	25 / 15	30 / 18	35 / 21	40 / 24	45 / 27	50 / 31	55 / 34	60 / 37	65 / 40	70 / 43	75 / 46	80 / 49	85 / 52	90 / 55	95 / 59	100 / 62	105 / 65	Odometer reading or months, whichever comes first
Engine startability and abnormal noise	-	-	-	I	-	I	-	I	-	I	-	I	-	I	-	I	-	I	-	I	-	I	-	or every 3 months
Idling speed and acceleration	-	-	-	I	-	I	-	I	-	I	-	I	-	I	-	I	-	I	-	I	-	I	-	or every 3 months
∗ Air cleaner element	-	-	-	I	-	I	-	I	-	I	-	R	-	I	-	I	-	I	-	I	-	R	-	or every 3 months : I every 12 months : R after 6th cleaning : R
Intake and exhaust manifolds	T	-	-	-	-	-	-	-	-	-	-	T	-	-	-	-	-	-	-	-	-	T	-	or every 15 months
Valve clearance	A	-	-	-	-	-	-	-	-	-	-	A	-	-	-	-	-	-	-	-	-	A	-	or every 15 months
Compression pressure for each cylinder	-	-	-	-	-	-	-	-	-	-	-	I	-	-	-	-	-	-	-	-	-	I	-	or every 15 months
Oil contamination	-	-	-	I	-	I	-	I	-	I	-	I	-	I	-	I	-	I	-	I	-	I	-	or every 3 months
∗ Engine oil	R	-	-	I	-	R	-	I	-	R	-	I	-	R	-	I	-	R	-	I	-	R	-	or every 3 months : I every 6 months : R
∗ Engine oil (main and partial) filter (combined type)	-	-	-	-	-	R	-	-	-	R	-	-	-	R	-	-	-	R	-	-	-	R	-	or every 6 months
∗ Engine oil main filter (separate type)	-	-	-	-	-	R	-	-	-	R	-	-	-	R	-	-	-	R	-	-	-	R	-	or every 6 months
∗ Engine oil partial filter (separate type)	-	-	-	-	-	R	-	-	-	R	-	-	-	R	-	-	-	R	-	-	-	R	-	or every 6 months
∗ Engine oil separator (Euro3 specification)	Every 12 months : R																							
Fuel filter	-	-	-	-	-	-	-	R	-	-	-	-	-	R	-	-	-	-	-	R	-	-	-	or every 9 months
Fuel tank strainer	-	-	-	I	-	I	-	I	-	I	-	I	-	I	-	I	-	I	-	I	-	I	-	or every 3 months
Inside fuel tank	-	-	-	I	-	I	-	I	-	I	-	I	-	I	-	I	-	I	-	I	-	I	-	or every 3 months
Fuel injection pressure and spray pattern	-	-	-	-	-	-	-	-	-	-	-	I	-	-	-	-	-	-	-	-	-	I	-	or every 15 months
Fuel injection timing	-	-	-	-	-	-	-	-	-	-	-	I	-	-	-	-	-	-	-	-	-	I	-	or every 15 months
Air compressor, governor and unloader valve functions	-	-	-	-	-	-	-	-	-	-	-	I	-	-	-	-	-	-	-	-	-	I	-	or every 15 months
Radiator cap or radiator sub-tank cap function	-	-	-	I	-	I	-	I	-	I	-	I	-	I	-	I	-	I	-	I	-	I	-	or every 3 months
Damage to fan belt	I	-	-	I	-	I	-	I	-	I	-	I	-	I	-	I	-	I	-	I	-	I	-	or every 3 months
∗ Loose or otherwise improper installation of exhaust pipe	I	-	-	I	-	I	-	I	-	I	-	I	-	I	-	I	-	I	-	I	-	I	-	or every 3 months
Cooling circuit and radiator	Every 24 months : I																							
Engine coolant	Every 24 months : R (When Isuzu recommended coolant is used)																							
Turbocharger to air duct connection and gasket	-	-	-	I	-	I	-	I	-	I	-	I	-	I	-	I	-	I	-	I	-	I	-	or every 3 months
∗ Clutch fluid (manual transmission)	-	-	-	I	-	I	-	I	-	I	-	R	-	I	-	I	-	I	-	I	-	R	-	or every 3 months : I every 15 months : R
Clutch system function (manual transmission)	-	-	-	I	-	I	-	I	-	I	-	I	-	I	-	I	-	I	-	I	-	I	-	or every 3 months
Clutch pedal free play and stroke (manual transmission)	-	-	-	I	-	I	-	I	-	I	-	I	-	I	-	I	-	I	-	I	-	I	-	or every 3 months
Rubber parts and gasket of clutch booster (manual transmission)	Every 48 months : R																							
Clutch booster exhaust cover (manual transmission)	-	-	-	I	-	I	-	I	-	I	-	I	-	I	-	I	-	I	-	I	-	I	-	or every 3 months

∗ : The vehicle needs to be maintained more often if it is driven in severe condition. Refer to "Maintenance Schedule for Severe-condition" in this section.

MFWB0AXF002801

https://truckmanualshub.com/

for Euro2, Euro3 specification (2/4)

I : Inspect, clean, or repair or replace as required A : Adjust R : Replace T : Tighten to the specified torque L : Lubricate

Service Interval x1,000 km	1	5	8	10	15	20	25	30	35	40	45	50	55	60	65	70	75	80	85	90	95	100	105	Odometer reading or months, whichever comes first
x1,000 miles	0.6	3	5	6	9	12	15	18	21	24	27	31	34	37	40	43	46	49	52	55	59	62	65	
∗ Transmission oil (MZX/MZW/MZZ models)	R	-	-	I	-	I	-	I	-	I	-	R	-	I	-	I	-	I	-	I	-	R	-	or every 3 months : I every 15 months : R
∗ Transmission oil (MLD model)	R	-	-	I	-	I	-	I	-	I	-	R	-	I	-	I	-	I	-	I	-	R	-	or every 3 months : I every 15 months : R
∗ Transmission oil (ZF6S1000 model)	Refer to Maintenance Schedule (Transmission Oil - ZF6S1000/ZF9S1110 Type)																							
∗ Transmission oil (ZF9S1110 model)	Refer to Maintenance Schedule (Transmission Oil - ZF6S1000/ZF9S1110 Type)																							
∗ Transmission oil (FSO5206B/FS8209A models)	Refer to Maintenance Schedule (Transmission Oil - FS8209A/FSO5206B Type)																							
Loose gear control mechanism	-	-	-	I	-	I	-	I	-	I	-	I	-	I	-	I	-	I	-	I	-	I	-	or every 3 months
∗ Transfer gear case oil (F∗S models)	R	-	-	I	-	I	-	I	-	I	-	R	-	I	-	I	-	I	-	I	-	R	-	or every 3 months : I every 15 months : R
Function of transfer gear control mechanism	-	-	-	-	-	-	-	-	-	-	-	I	-	-	-	-	-	-	-	-	-	I	-	or every 15 months
Loose propeller shaft joints	-	-	-	-	-	-	-	-	-	-	-	I	-	-	-	-	-	-	-	-	-	I	-	or every 15 months
∗ Worn propeller shaft universal joint and splines	-	-	-	-	-	-	-	-	-	-	-	I	-	-	-	-	-	-	-	-	-	I	-	or every 15 months
Loose propeller shaft bearing and related parts	-	-	-	-	-	-	-	-	-	-	-	I	-	-	-	-	-	-	-	-	-	I	-	or every 15 months
∗ Rear axle differential gear oil	R	-	-	I	-	I	-	I	-	I	-	R	-	I	-	I	-	I	-	I	-	R	-	or every 3 months : I every 15 months : R
∗ Inter-differential gear oil (FVZ model)	R	-	-	I	-	I	-	I	-	I	-	R	-	I	-	I	-	I	-	I	-	R	-	or every 3 months : I every 15 months : R
Rear wheel hub bearing grease	-	-	-	-	-	-	-	-	-	-	-	R	-	-	-	-	-	-	-	-	-	R	-	or every 15 months
Damaged or distorted rear axle case	-	-	-	-	-	-	-	-	-	-	-	I	-	-	-	-	-	-	-	-	-	I	-	or every 15 months
∗ Front axle differential gear oil (F∗S models)	R	-	-	I	-	I	-	I	-	I	-	R	-	I	-	I	-	I	-	I	-	R	-	or every 3 months : I every 15 months : R
Front wheel hub bearing grease	-	-	-	-	-	-	-	-	-	-	-	R	-	-	-	-	-	-	-	-	-	R	-	or every 15 months
Damaged or distorted front axle case	-	-	-	-	-	-	-	-	-	-	-	I	-	-	-	-	-	-	-	-	-	I	-	or every 15 months
∗ Leaf spring U-bolt nuts	T	-	-	-	-	-	-	-	-	-	-	T	-	-	-	-	-	-	-	-	-	T	-	or every 15 months
Damaged leaf spring	-	-	-	I	-	I	-	I	-	I	-	I	-	I	-	I	-	I	-	I	-	I	-	or every 3 months
Uneven suspension due to leaf spring fatigue	-	-	-	-	-	-	-	-	-	-	-	I	-	-	-	-	-	-	-	-	-	I	-	or every 15 months
Loose or damaged leaf spring mounting	-	-	-	-	-	-	-	I	-	-	-	-	-	I	-	-	-	-	-	I	-	-	-	or every 9 months
Spring leaves for misalignment	-	-	-	-	-	-	-	I	-	-	-	-	-	I	-	-	-	-	-	I	-	-	-	or every 9 months
Oil leaks from or damage to shock absorbers	-	-	-	-	-	-	-	I	-	-	-	-	-	I	-	-	-	-	-	I	-	-	-	or every 9 months
Loose shock absorber mounting	-	-	-	-	-	-	-	I	-	-	-	-	-	I	-	-	-	-	-	I	-	-	-	or every 9 months
Foreign object in wheels	-	-	-	I	-	I	-	I	-	I	-	I	-	I	-	I	-	I	-	I	-	I	-	or every 3 months
Wheel nuts	T	-	-	T	-	T	-	T	-	T	-	T	-	T	-	T	-	T	-	T	-	T	-	or every 3 months
Damaged disc wheels	-	-	-	I	-	I	-	I	-	I	-	I	-	I	-	I	-	I	-	I	-	I	-	or every 3 months
Loose front wheel hub bearings	-	-	-	-	-	-	-	-	-	-	-	I	-	-	-	-	-	-	-	-	-	I	-	or every 15 months
Loose rear wheel hub bearings	-	-	-	-	-	-	-	-	-	-	-	I	-	-	-	-	-	-	-	-	-	I	-	or every 15 months
Power steering fluid	-	-	-	I	-	I	-	I	-	I	-	R	-	I	-	I	-	I	-	I	-	R	-	or every 3 months : I every 15 months : R

∗ : The vehicle needs to be maintained more often if it is driven in severe condition. Refer to "Maintenance Schedule for Severe-condition" in this section.

MFWB0AXF002901

https://truckmanualshub.com/

for Euro2, Euro3 specification (3/4)

I : Inspect, clean, or repair or replace as required A : Adjust R : Replace T : Tighten to the specified torque L : Lubricate

Service Interval x1,000 km	1	5	8	10	15	20	25	30	35	40	45	50	55	60	65	70	75	80	85	90	95	100	105	Odometer reading or months, whichever comes first
x1,000 miles	0.6	3	5	6	9	12	15	18	21	24	27	31	34	37	40	43	46	49	52	55	59	62	65	
Power steering fluid filter	-	-	-	-	-	-	-	-	-	-	-	I	-	-	-	-	-	-	-	-	-	I	-	or every 15 months
Loose power steering system mounting	-	-	-	I	-	I	-	I	-	I	-	I	-	I	-	I	-	I	-	I	-	I	-	or every 3 months
Excessive play in power steering bearing	-	-	-	-	-	-	-	-	-	-	-	I	-	-	-	-	-	-	-	-	-	I	-	or every 15 months
* Damage to, loose or excessive play in power steering joints	I	-	-	-	-	-	-	I	-	-	-	-	-	I	-	-	-	-	-	I	-	-	-	or every 9 months
Knuckle-to-front axle clearance	-	-	-	-	-	-	-	-	-	-	-	I	-	-	-	-	-	-	-	-	-	I	-	or every 15 months
Wheel alignment	-	-	-	-	-	-	-	-	-	-	-	I	-	-	-	-	-	-	-	-	-	I	-	or every 15 months
Steering angle range for right and left turns	-	-	-	-	-	-	-	-	-	-	-	I	-	-	-	-	-	-	-	-	-	I	-	or every 15 months
King pin-to-bearing clearance	-	-	-	-	-	-	-	-	-	-	-	I	-	-	-	-	-	-	-	-	-	I	-	or every 15 months
Brake fluid (Vehicle equipped with the air-over hydraulic brake system)	-	-	-	I	-	I	-	I	-	I	-	R	-	I	-	I	-	I	-	I	-	R	-	or every 3 months : I every 12 months : R
* Brake lining wear	-	-	-	I	-	I	-	I	-	I	-	I	-	I	-	I	-	I	-	I	-	I	-	or every 3 months
* Brake drum wear or damage	-	-	-	-	-	-	-	-	-	-	-	I	-	-	-	-	-	-	-	-	-	I	-	or every 12 months
Brake hose (Vehicle equipped with the air-over hydraulic brake system)	-	-	-	I	-	I	-	I	-	I	-	R	-	I	-	I	-	I	-	I	-	R	-	or every 3 months : I every 15 months : R
Function of brake valves (Vehicle equipped with the air-over hydraulic brake system)	-	-	-	-	-	-	-	-	-	-	-	I	-	-	-	-	-	-	-	-	-	I	-	or every 12 months
Brake booster exhaust cover (Vehicle equipped with the air-over hydraulic brake system)	-	-	-	I	-	I	-	I	-	I	-	I	-	I	-	I	-	I	-	I	-	I	-	or every 12 months
Leaks from, damage to, or loose connection of brake hose or pipe	-	-	-	I	-	I	-	I	-	I	-	I	-	I	-	I	-	I	-	I	-	I	-	or every 3 months
Brake chamber rod stroke (Vehicle equipped with the full-air brake system)	-	I	-	I	-	I	-	I	-	I	-	I	-	I	-	I	-	I	-	I	-	I	-	or every 3 months
Function of brake chamber (Vehicle equipped with the full-air brake system)	-	-	-	-	-	-	-	-	-	-	-	I	-	-	-	-	-	-	-	-	-	I	-	or every 12 months
Functions of brake and relay valves (Vehicle equipped with the full-air brake system)	-	-	-	-	-	-	-	-	-	-	-	I	-	-	-	-	-	-	-	-	-	I	-	or every 12 months
Air dryer	Change the desiccant, filter and rubber parts of air dryer at 100,000 km (62,000 miles) or every 12 months.																							
Rubber parts of wheel cylinder	Every 12 months : R																							
Rubber parts of HSA valve	Every 24 months : R																							
Rubber parts of brake valve, relay valve, parking brake valve, quick release valve, reducing valve, double check valve, multi-protection valve, AIR MASTER, trailer control valve, LSPV	Every 24 months : R																							
Rubber parts of brake chamber	Every 3 months : I Every 24 months : R																							

* : The vehicle needs to be maintained more often if it is driven in severe condition. Refer to "Maintenance Schedule for Severe-condition" in this section.

MFWA0AXF004601

https://truckmanualshub.com/

for Euro2, Euro3 specification (4/4)

I : Inspect, clean, or repair or replace as required A : Adjust R : Replace T : Tighten to the specified torque L : Lubricate

Service Interval x1,000 km	1	5	8	10	15	20	25	30	35	40	45	50	55	60	65	70	75	80	85	90	95	100	105	Odometer reading or months, whichever comes first
x1,000 miles	0.6	3	5	6	9	12	15	18	21	24	27	31	34	37	40	43	46	49	52	55	59	62	65	
Brake chamber piggy-bag	Every 36 months : R																							
Brake expander	Every 12 months : I Every 36 months : overhaul																							
Worn parking brake lining (center parking brake model)	-	-	-	-	-	-	-	-	-	-	-	I	-	-	-	-	-	-	-	-	-	I	-	or every 12 months
Worn or damaged parking brake drum (center parking brake model)	-	-	-	-	-	-	-	-	-	-	-	I	-	-	-	-	-	-	-	-	-	I	-	or every 12 months
Loose parking brake system mounting	-	-	-	I	-	-	-	I	-	-	-	-	-	I	-	-	-	-	-	I	-	-	-	or every 3 months
Damaged or loosely connected rod or cable	-	I	-	I	-	I	-	I	-	I	-	I	-	I	-	I	-	I	-	I	-	I	-	or every 3 months
Function of parking brake control valve system (wheel parking brake model)	-	I	-	I	-	I	-	I	-	I	-	I	-	I	-	I	-	I	-	I	-	I	-	or every 3 months
Function of brake chamber (wheel parking brake model)	-	-	-	-	-	-	-	-	-	-	-	I	-	-	-	-	-	-	-	-	-	I	-	or every 12 months
Brake chamber rod stroke (wheel parking brake model)	-	I	-	I	-	I	-	I	-	I	-	I	-	I	-	I	-	I	-	I	-	I	-	or every 3 months
Function of cab tilt system	-	-	-	-	-	-	-	-	-	-	-	I	-	-	-	-	-	-	-	-	-	I	-	or every 15 months
Specific gravity of battery fluid	-	-	-	-	-	-	-	I	-	-	-	-	-	I	-	-	-	-	-	I	-	-	-	or every 9 months
Function of starter motor	-	-	-	-	-	-	-	I	-	-	-	-	-	I	-	-	-	-	-	I	-	-	-	or every 9 months
Wear of starter motor brushes	-	-	-	-	-	-	-	-	-	-	-	I	-	-	-	-	-	-	-	-	-	I	-	or every 15 months
Function of generator	-	-	-	I	-	I	-	I	-	I	-	I	-	I	-	I	-	I	-	I	-	I	-	or every 3 months
Damage to or loose connection of wiring harness terminals	-	-	-	I	-	I	-	I	-	I	-	I	-	I	-	I	-	I	-	I	-	I	-	or every 3 months
Engine water pump bearing (6HK1 engine model)	-	-	-	-	-	-	L	-	-	-	-	L	-	-	-	-	L	-	-	-	-	L	-	or every 6 months
Front spring pins	-	L	-	L	L	L	L	L	L	L	L	L	L	L	L	L	L	L	L	L	L	L	L	or every month
Front spring shackles	-	L	-	L	L	L	L	L	L	L	L	L	L	L	L	L	L	L	L	L	L	L	L	or every month
King pin	-	L	-	L	L	L	L	L	L	L	L	L	L	L	L	L	L	L	L	L	L	L	L	or every month
Shimmy damper (F∗S models)	-	L	-	L	L	L	L	L	L	L	L	L	L	L	L	L	L	L	L	L	L	L	L	or every month
Transfer input shaft (F∗S models)	-	L	-	L	L	L	L	L	L	L	L	L	L	L	L	L	L	L	L	L	L	L	L	or every month
Propeller shaft universal joints and sliding sleeves	-	L	-	L	L	L	L	L	L	L	L	L	L	L	L	L	L	L	L	L	L	L	L	or every month
Propeller shaft center bearing	-	L	-	L	L	L	L	L	L	L	L	L	L	L	L	L	L	L	L	L	L	L	L	or every month
Rear spring pins	-	L	-	L	L	L	L	L	L	L	L	L	L	L	L	L	L	L	L	L	L	L	L	or every month
Rear spring shackle pins or rear spring sliding shackles	-	L	-	L	L	L	L	L	L	L	L	L	L	L	L	L	L	L	L	L	L	L	L	or every month
Trunnion shaft (FVM/FVZ models, with leaf spring suspension)	-	L	-	L	L	L	L	L	L	L	L	L	L	L	L	L	L	L	L	L	L	L	L	or every month
Rear spring pads (FVM/FVZ models, with leaf spring suspension)	-	L	-	L	L	L	L	L	L	L	L	L	L	L	L	L	L	L	L	L	L	L	L	or every month
Steering shaft sliding sleeve	-	L	-	L	L	L	L	L	L	L	L	L	L	L	L	L	L	L	L	L	L	L	L	or every month
Drag link (maintanance type)	-	-	-	-	-	-	L	-	-	-	-	L	-	-	-	-	L	-	-	-	-	L	-	or every 6 months
Clutch shift block (MLD/FSO5206B/ZF9S1110 model transmissions)	-	L	-	L	L	L	L	L	L	L	L	L	L	L	L	L	L	L	L	L	L	L	L	or every month
Clutch booster joint pin (manual transmission)	-	L	-	L	L	L	L	L	L	L	L	L	L	L	L	L	L	L	L	L	L	L	L	or every month
Cab mounting	-	L	-	L	L	L	L	L	L	L	L	L	L	L	L	L	L	L	L	L	L	L	L	or every month

MFWB0AXF006401

https://truckmanualshub.com/

Maintenance Schedule (for Europe)

for Europe (1/5)

I : Inspect, clean, or repair or replace as required A : Adjust R : Replace T : Tighten to the specified torque L : Lubricate

Service Interval x1,000 km	1.1	5.5	11	16.5	22	27.5	33	38.5	44	49.5	55	60.5	66	71.5	77	82.5	88	93.5	99	104.5	110	115.5	Odometer reading or months, whichever comes first
x1,000 miles	0.6	3.4	6.8	10.2	13.6	17.0	20.5	23.9	27.3	30.7	34.1	37.5	41.0	44.4	47.8	51.2	54.6	58.1	61.5	64.9	68.3	71.7	
Engine startability and abnormal noise	-	-	I	-	I	-	I	-	I	-	I	-	I	-	I	-	I	-	I	-	I	-	or every 3 months
Idling speed and acceleration	-	-	I	-	I	-	I	-	I	-	I	-	I	-	I	-	I	-	I	-	I	-	or every 3 months
∗ Air cleaner element	-	-	-	-	-	-	-	-	-	R	-	-	-	-	-	-	-	-	R	-	-	-	or every 15 months or after 6th cleaning : R every 6 months : I
Intake and exhaust manifolds	T	-	-	-	-	-	-	-	-	T	-	-	-	-	-	-	-	-	T	-	-	-	or every 15 months
Valve clearance	A	-	-	-	-	-	-	-	-	A	-	-	-	-	-	-	-	-	A	-	-	-	or every 15 months
Compression pressure for each cylinder	-	-	-	-	-	-	-	-	-	I	-	-	-	-	-	-	-	-	I	-	-	-	or every 15 months
Oil contamination	-	-	I	-	I	-	I	-	I	-	I	-	I	-	I	-	I	-	I	-	I	-	or every 3 months
∗ Engine oil	R	-	I	-	R	-	I	-	R	-	I	-	R	-	I	-	R	-	I	-	R	-	or every 3 months : I or every 6 months : R
∗ Engine oil (main and partial) filter (combined type)	-	-	-	-	R	-	-	-	R	-	-	-	R	-	-	-	R	-	-	-	R	-	or every 6 months
∗ Engine oil main filter (separate type)	-	-	-	-	R	-	-	-	R	-	-	-	R	-	-	-	R	-	-	-	R	-	or every 6 months
∗ Engine oil partial filter (separate type)	-	-	-	-	R	-	-	-	R	-	-	-	R	-	-	-	R	-	-	-	R	-	or every 6 months
∗ Engine oil separator (4HK1 engine model)	-	-	-	-	R	-	-	-	R	-	-	-	R	-	-	-	R	-	-	-	R	-	
Engine oil separator (6HK1 engine model)	Every 12 months : R																						
Fuel filter	-	-	-	-	-	-	-	-	R	-	-	-	-	-	-	-	R	-	-	-	-	-	or every 9 months
Fuel hose	Every 3 months : I Every 48 months : R																						
Fuel tank strainer	-	-	I	-	I	-	I	-	I	-	I	-	I	-	I	-	I	-	I	-	I	-	or every 3 months
Inside fuel tank	-	-	I	-	I	-	I	-	I	-	I	-	I	-	I	-	I	-	I	-	I	-	or every 3 months
Fuel injection pressure and spray pattern	-	-	-	-	-	-	-	-	-	I	-	-	-	-	-	-	-	-	I	-	-	-	or every 15 months
Fuel injection timing	-	-	-	-	-	-	-	-	-	I	-	-	-	-	-	-	-	-	I	-	-	-	or every 15 months
Air compressor, governor and unloader valve functions	-	-	-	-	-	-	-	-	-	I	-	-	-	-	-	-	-	-	I	-	-	-	or every 15 months
Radiator cap or radiator sub-tank cap function	Every 48 months : I																						
Damage to fan belt	I	-	I	-	I	-	I	-	I	-	I	-	I	-	I	-	I	-	I	-	I	-	or every 3 months
∗ Loose or otherwise improper installation of exhaust pipe	I	-	I	-	I	-	I	-	I	-	I	-	I	-	I	-	I	-	I	-	I	-	or every 3 months
Cooling circuit and radiator	Every 24 months : I																						
Engine coolant	Every 24 months : R																						
Turbocharger to air duct connection and gasket	-	-	I	-	I	-	I	-	I	-	I	-	I	-	I	-	I	-	I	-	I	-	or every 3 months
∗ Clutch fluid (manual transmission)	-	-	I	-	I	-	I	-	I	-	R	-	I	-	I	-	I	-	I	-	R	-	or every 3 months : I every 15 months : R
Clutch system function (manual transmission)	-	-	I	-	I	-	I	-	I	-	I	-	I	-	I	-	I	-	I	-	I	-	or every 3 months
Clutch pedal free play and stroke (manual transmission)	-	-	I	-	I	-	I	-	I	-	I	-	I	-	I	-	I	-	I	-	I	-	or every 3 months
Clutch booster exhaust cover (manual transmission)	-	-	I	-	I	-	I	-	I	-	I	-	I	-	I	-	I	-	I	-	I	-	or every 3 months
Clutch hose (manual transmission)	Every 3 months : I Every 48 months : R																						
Rubber parts and gaskets of clutch booster (manual transmission)	Every 48 months : R																						

∗ : The vehicle needs to be maintained more often if it is driven in severe condition. Refer to "Maintenance Schedule for Severe-condition" in this section.

MFWB0AXF004401

https://truckmanualshub.com/

for Europe (2/5)

I : Inspect, clean, or repair or replace as required A : Adjust R : Replace T : Tighten to the specified torque L : Lubricate

Service Interval x1,000 km / x1,000 miles	1.1 / 0.6	5.5 / 3.4	11 / 6.8	16.5 / 10.2	22 / 13.6	27.5 / 17.0	33 / 20.5	38.5 / 23.9	44 / 27.3	49.5 / 30.7	55 / 34.1	60.5 / 37.5	66 / 41.0	71.5 / 44.4	77 / 47.8	82.5 / 51.2	88 / 54.6	93.5 / 58.1	99 / 61.5	104.5 / 64.9	110 / 68.3	115.5 / 71.7	Odometer reading or months, whichever comes first
∗ Transmission oil (MZW model)	R	-	I	-	I	-	I	-	I	-	R	-	I	-	I	-	I	-	I	-	R	-	or every 3 months : I every 15 months : R
∗ Transmission oil (MLD model)	R	-	I	-	I	-	I	-	I	-	R	-	I	-	I	-	I	-	I	-	R	-	or every 3 months : I every 15 months : R
∗ Transmission oil (ZF9S1110 model)	Refer to Maintenance Schedule (Transmission Oil - ZF6S1000/ZF9S1110 Type)																						
∗ Transmission oil (FSO5206B model)	Refer to Maintenance Schedule (Transmission Oil - FS8209A/FSO5206B Type)																						
∗ Smoother clutch oil (Vehicle equipped with the Smoother system)	R	-	I	-	I	-	I	-	I	-	R	-	I	-	I	-	I	-	I	-	R	-	or every 3 months : I every 15 months : R
Loose gear control mechanism	-	-	I	-	I	-	I	-	I	-	I	-	I	-	I	-	I	-	I	-	I	-	or every 3 months
Loose propeller shaft joints	-	-	-	-	-	-	-	-	-	-	I	-	-	-	-	-	-	-	-	-	I	-	or every 15 months
∗ Worn propeller shaft universal joint and splines	-	-	-	-	-	-	-	-	-	-	I	-	-	-	-	-	-	-	-	-	I	-	or every 15 months
Loose propeller shaft bearing and related parts	-	-	-	-	-	-	-	-	-	-	I	-	-	-	-	-	-	-	-	-	I	-	or every 15 months
∗ Rear axle differential gear oil (Vehicle equipped with Isuzu production axle)	R	-	I	-	I	-	I	-	I	-	R	-	I	-	I	-	I	-	I	-	R	-	or every 3 months : I every 15 months : R
∗ Rear axle differential gear oil (Vehicle equipped with Arvin Meritor production axle)	Refer to Maintenance Schedule (RS25 Type Axle)																						
Rear wheel hub bearing grease	-	-	-	-	-	-	-	-	-	-	R	-	-	-	-	-	-	-	-	-	R	-	or every 15 months
Damaged or distorted rear axle case	-	-	-	-	-	-	-	-	-	-	I	-	-	-	-	-	-	-	-	-	I	-	or every 15 months
Front wheel hub bearing grease	-	-	-	-	-	-	-	-	-	-	R	-	-	-	-	-	-	-	-	-	R	-	or every 15 months
∗ Front wheel hub bearing oil (Vehicle equipped with Arvin Meritor production axle)	R	-	I	-	I	-	I	-	I	-	R	-	I	-	I	-	I	-	I	-	R	-	or every 3 months : I every 15 months : R
Damaged or distorted front axle case	-	-	-	-	-	-	-	-	-	-	I	-	-	-	-	-	-	-	-	-	I	-	or every 15 months
∗ Leaf spring U-bolt nuts	T	-	-	-	-	-	-	-	-	-	T	-	-	-	-	-	-	-	-	-	T	-	or every 15 months
∗ Air suspension's beam bolt nuts/U-bolt nuts (Air suspension models)	T	-	-	-	-	-	-	-	-	-	T	-	-	-	-	-	-	-	-	-	T	-	or every 15 months
Damaged leaf spring	-	-	I	-	I	-	I	-	I	-	I	-	I	-	I	-	I	-	I	-	I	-	or every 3 months
Uneven suspension due to leaf spring fatigue	-	-	-	-	-	-	-	-	-	-	I	-	-	-	-	-	-	-	-	-	I	-	or every 15 months
Loose or damaged leaf spring mounting	-	-	-	-	-	-	I	-	-	-	-	-	I	-	-	-	-	-	I	-	-	-	or every 9 months
Spring leaves for misalignment	-	-	-	-	-	-	I	-	-	-	-	-	I	-	-	-	-	-	I	-	-	-	or every 9 months
Oil leaks from or damage to shock absorbers	-	-	-	-	-	-	I	-	-	-	-	-	I	-	-	-	-	-	I	-	-	-	or every 9 months
Loose shock absorber mounting	-	-	-	-	-	-	I	-	-	-	-	-	I	-	-	-	-	-	I	-	-	-	or every 9 months

∗ : The vehicle needs to be maintained more often if it is driven in severe condition. Refer to "Maintenance Schedule for Severe-condition" in this section.

MFWB0AXF004501

https://truckmanualshub.com/

for Europe (3/5)

I : Inspect, clean, or repair or replace as required A : Adjust R : Replace T : Tighten to the specified torque L : Lubricate

Service Interval x1,000 km	1.1	5.5	11	16.5	22	27.5	33	38.5	44	49.5	55	60.5	66	71.5	77	82.5	88	93.5	99	104.5	110	115.5	Odometer reading or months, whichever comes first
x1,000 miles	0.6	3.4	6.8	10.2	13.6	17.0	20.5	23.9	27.3	30.7	34.1	37.5	41.0	44.4	47.8	51.2	54.6	58.1	61.5	64.9	68.3	71.7	
* Loose or damaged air suspension main support members (Air suspension models)	-	-	-	-	-	-	-	-	-	-	I	-	-	-	-	-	-	-	-	-	I	-	or every 15 months
Damaged air spring (Air suspension models)	-	-	I	-	I	-	I	-	I	-	I	-	I	-	I	-	I	-	I	-	I	-	or every 3 months
Air leaks from air suspension (Air suspension models)	-	-	I	-	I	-	I	-	I	-	I	-	I	-	I	-	I	-	I	-	I	-	or every 3 months
Loose or damaged air suspension mounting (Air suspension models)	-	-	I	-	I	-	I	-	I	-	I	-	I	-	I	-	I	-	I	-	I	-	or every 3 months
Air spring height (Air suspension models)	-	-	-	-	-	-	-	-	-	-	I	-	-	-	-	-	-	-	-	-	I	-	or every 15 months
Loose or damaged torque rod (if so equipped)	-	-	-	-	-	-	-	-	-	-	I	-	-	-	-	-	-	-	-	-	I	-	or every 15 months
Loose or damaged traverse rod (if so equipped)	-	-	-	-	-	-	-	-	-	-	I	-	-	-	-	-	-	-	-	-	I	-	or every 15 months
Loose or damaged V-rod (if so equipped)	-	-	-	-	I	-	-	-	I	-	-	-	I	-	-	-	I	-	-	-	I	-	or every 6 months
Foreign object in wheels	-	-	I	-	I	-	I	-	I	-	I	-	I	-	I	-	I	-	I	-	I	-	or every 3 months
Wheel nuts	T	-	T	-	T	-	T	-	T	-	T	-	T	-	T	-	T	-	T	-	T	-	or every 3 months
Damaged disc wheels	-	-	I	-	I	-	I	-	I	-	I	-	I	-	I	-	I	-	I	-	I	-	or every 3 months
Loose front wheel hub bearings	-	-	-	-	-	-	-	-	-	-	I	-	-	-	-	-	-	-	-	-	I	-	or every 15 months
Loose rear wheel hub bearings	-	-	-	-	-	-	-	-	-	-	I	-	-	-	-	-	-	-	-	-	I	-	or every 15 months
Power steering fluid	-	-	I	-	I	-	I	-	I	-	R	-	I	-	I	-	I	-	I	-	R	-	or every 3 months : I every 15 months : R
Power steering fluid filter	-	-	-	-	-	-	-	-	-	-	I	-	-	-	-	-	-	-	-	-	I	-	or every 15 months
Power steering hose	Every 3 months : I Every 48 months : R																						
Loose power steering system mounting	-	-	I	-	I	-	I	-	I	-	I	-	I	-	I	-	I	-	I	-	I	-	or every 3 months
Excessive play in power steering bearing	-	-	-	-	-	-	-	-	-	-	I	-	-	-	-	-	-	-	-	-	I	-	or every 15 months
* Damage to, loose or excessive play in power steering joints	I	-	I	-	I	-	I	-	I	-	I	-	I	-	I	-	I	-	I	-	I	-	or every 3 months
Knuckle-to-front axle clearance	-	-	-	-	-	-	-	-	-	-	I	-	-	-	-	-	-	-	-	-	I	-	or every 15 months
Wheel alignment	-	-	-	-	-	-	-	-	-	-	I	-	-	-	-	-	-	-	-	-	I	-	or every 15 months
Steering angle range for right and left turns	-	-	-	-	-	-	-	-	-	-	I	-	-	-	-	-	-	-	-	-	I	-	or every 15 months
King pin-to-bearing clearance	-	-	-	-	-	-	-	-	-	-	I	-	-	-	-	-	-	-	-	-	I	-	or every 15 months
Brake fluid (Vehicle equipped with the air-over hydraulic brake system)	-	-	I	-	I	-	I	-	I	-	R	-	I	-	I	-	I	-	I	-	R	-	or every 3 months : I every 12 months : R
* Brake lining wear	-	-	I	-	I	-	I	-	I	-	I	-	I	-	I	-	I	-	I	-	I	-	or every 3 months
* Brake drum wear or damage	-	-	-	-	-	-	-	-	-	I	-	-	-	-	-	-	-	-	I	-	-	-	or every 12 months
* Brake pad wear (Vehicle equipped with disc brake)	-	I	I	I	I	I	I	I	I	I	I	I	I	I	I	I	I	I	I	I	I	I	or every month
Clearance between brake pad and brake disc (Vehicle equipped with disc brake)	-	I	I	I	I	I	I	I	I	I	I	I	I	I	I	I	I	I	I	I	I	I	or every month
* Brake disc wear or damage (Vehicle equipped with disc brake)	-	-	-	-	-	-	-	I	-	-	-	-	-	-	I	-	-	-	-	-	-	-	or every 12 months

* : The vehicle needs to be maintained more often if it is driven in severe condition. Refer to "Maintenance Schedule for Severe-condition" in this section.

MFWB0AXF004601

https://truckmanualshub.com/

for Europe (4/5)

I : Inspect, clean, or repair or replace as required A : Adjust R : Replace T : Tighten to the specified torque L : Lubricate

Service Interval x1,000 km	1.1	5.5	11	16.5	22	27.5	33	38.5	44	49.5	55	60.5	66	71.5	77	82.5	88	93.5	99	104.5	110	115.5	Odometer reading or months, whichever comes first
x1,000 miles	0.6	3.4	6.8	10.2	13.6	17.0	20.5	23.9	27.3	30.7	34.1	37.5	41.0	44.4	47.8	51.2	54.6	58.1	61.5	64.9	68.3	71.7	
Brake hose	-	I	I	I	I	I	I	I	I	R	I	I	I	I	I	I	I	I	R	I	I	I	or every 3 months : I every 24 months : R
Function of brake valves (Vehicle equipped with the air-over hydraulic brake system)	-	-	-	-	-	-	-	-	-	I	-	-	-	-	-	-	-	-	I	-	-	-	or every 12 months
Brake booster exhaust cover (Vehicle equipped with the air-over hydraulic brake system)	-	-	I	-	I	-	I	-	I	-	I	-	I	-	I	-	I	-	I	-	I	-	or every 12 months
Leaks from, damage to, or loose connection of brake hose or pipe	-	I	I	I	I	I	I	I	I	I	I	I	I	I	I	I	I	I	I	I	I	I	or every 3 months
Brake chamber rod stroke (Vehicle equipped with the full-air brake system)	-	I	I	-	I	-	I	-	I	-	I	-	I	-	I	-	I	-	I	-	I	-	or every 3 months
Function of brake chamber (Vehicle equipped with the full-air brake system)	-	-	-	-	-	-	-	-	-	I	-	-	-	-	-	-	-	-	I	-	-	-	or every 12 months
Functions of brake and relay valves (Vehicle equipped with the full-air brake system)	-	-	-	-	-	-	-	-	-	I	-	-	-	-	-	-	-	-	I	-	-	-	or every 12 months
Desiccant, filter and rubber parts of air dryer	-	-	-	-	-	-	-	-	-	-	-	-	-	-	-	-	-	-	R	-	-	-	or every 12 months
Rubber parts of wheel cylinder	Every 12 months : R																						
Rubber parts of HSA valve (Vehicle equipped with HSA)	Every 24 months : R																						
Rubber parts of brake valve, relay valve, parking brake valve, quick release valve, reducing valve, double check valve,multi-protection valve, AIR MASTER, TCV	Every 24 months : R																						
Rubber parts of brake chamber	Every 3 months : I Every 24 months : R																						
Brake chamber piggy-bag	Every 36 months : R																						
Brake expander	Every 12 months : I Every 36 months : overhaul																						
Worn parking brake lining (center parking brake model)	-	-	-	-	-	-	-	-	-	I	-	-	-	-	-	-	-	-	I	-	-	-	or every 12 months
Worn or damaged parking brake drum (center parking brake model)	-	-	-	-	-	-	-	-	-	I	-	-	-	-	-	-	-	-	I	-	-	-	or every 12 months
Loose parking brake system mounting	-	-	I	-	-	-	I	-	-	-	-	I	-	-	-	-	I	-	-	-	-	I	or every 3 months
Damaged or loosely connected rod or cable	-	I	I	-	I	-	I	-	I	-	I	-	I	-	I	-	I	-	I	-	I	-	or every 3 months

https://truckmanualshub.com/

for Europe (5/5)

I : Inspect, clean, or repair or replace as required A : Adjust R : Replace T : Tighten to the specified torque L : Lubricate

Service Interval x1,000 km / x1,000 miles	1.1 / 0.6	5.5 / 3.4	11 / 6.8	16.5 / 10.2	22 / 13.6	27.5 / 17.0	33 / 20.5	38.5 / 23.9	44 / 27.3	49.5 / 30.7	55 / 34.1	60.5 / 37.5	66 / 41.0	71.5 / 44.4	77 / 47.8	82.5 / 51.2	88 / 54.6	93.5 / 58.1	99 / 61.5	104.5 / 64.9	110 / 68.3	115.5 / 71.7	Odometer reading or months, whichever comes first
Function of parking brake control valve system (wheel parking brake model)	-	I	I	-	I	-	I	-	I	-	I	-	I	-	I	-	I	-	I	-	I	-	or every 3 months
Function of brake chamber (wheel parking brake model)	-	-	-	-	-	-	-	-	-	I	-	-	-	-	-	-	-	-	I	-	-	-	or every 12 months
Brake chamber rod stroke (wheel parking brake model)	-	I	I	-	I	-	I	-	I	-	I	-	I	-	I	-	I	-	I	-	I	-	or every 3 months
Electro-hydraulic cab tilt pump oil (Electro-hydraulic cab tilt model)	-	-	-	-	-	-	I	-	-	-	-	-	I	-	-	-	-	-	I	-	-	-	or every 9 months : I every 24 months : R
Specific gravity of battery fluid	-	-	-	-	-	-	I	-	-	-	-	-	I	-	-	-	-	-	I	-	-	-	or every 9 months
Function of starter motor	-	-	-	-	-	I	-	-	-	-	I	-	-	-	-	I	-	-	-	-	I	-	or every 9 months
Wear of starter motor brushes	-	-	-	-	-	-	-	-	-	I	-	-	-	-	-	-	-	-	I	-	-	-	or every 15 months
Function of generator	-	-	I	-	I	-	I	-	I	-	I	-	I	-	I	-	I	-	I	-	I	-	or every 3 months
Damage to or loose connection of wiring harness terminals	-	-	I	-	I	-	I	-	I	-	I	-	I	-	I	-	I	-	I	-	I	-	or every 3 months
Exhaust pressure check or filter cleaning	-	-	-	-	-	-	-	-	-	-	-	-	-	-	-	-	-	-	I	-	-	-	or every 12 months
Exhaust differential pressure sensor rubber piece	-	-	-	-	-	-	-	-	R	-	-	-	-	-	-	-	R	-	-	-	-	-	or every 12 months
Engine water pump bearing (6HK1 engine model)	-	-	-	-	-	L	-	-	-	-	L	-	-	-	-	L	-	-	-	-	L	-	or every 6 months
Front spring pins	-	L	L	L	L	L	L	L	L	L	L	L	L	L	L	L	L	L	L	L	L	L	or every month
Front spring shackles	-	L	L	L	L	L	L	L	L	L	L	L	L	L	L	L	L	L	L	L	L	L	or every month
King pins (Vehicle equipped with Isuzu production axle)	-	L	L	L	L	L	L	L	L	L	L	L	L	L	L	L	L	L	L	L	L	L	or every month
King pins (Vehicle equipped with Arvin Meritor production axle)	-	-	-	-	-	-	-	-	-	-	-	-	-	-	L	-	-	-	-	-	-	-	or every 12 months
Tie rods (Vehicle equipped with Arvin Meritor production axle)	-	-	-	-	-	-	-	-	-	-	-	-	-	-	L	-	-	-	-	-	-	-	or every 12 months
Drag link (maintenance type)	-	-	-	-	-	L	-	-	-	-	L	-	-	-	-	L	-	-	-	-	L	-	or every 6 months
Propeller shaft universal joints and sliding sleeves	-	L	L	L	L	L	L	L	L	L	L	L	L	L	L	L	L	L	L	L	L	L	or every month
Propeller shaft center bearing	-	L	L	L	L	L	L	L	L	L	L	L	L	L	L	L	L	L	L	L	L	L	or every month
Rear spring pins	-	L	L	L	L	L	L	L	L	L	L	L	L	L	L	L	L	L	L	L	L	L	or every month
Rear spring shackle pins or rear spring sliding shackles	-	L	L	L	L	L	L	L	L	L	L	L	L	L	L	L	L	L	L	L	L	L	or every month
Steering shaft sliding sleeve	-	L	L	L	L	L	L	L	L	L	L	L	L	L	L	L	L	L	L	L	L	L	or every month
Clutch shift block (manual transmission)	-	L	L	L	L	L	L	L	L	L	L	L	L	L	L	L	L	L	L	L	L	L	or every month
Clutch booster joint pin (manual transmission)	-	L	L	L	L	L	L	L	L	L	L	L	L	L	L	L	L	L	L	L	L	L	or every month
Function of cab tilt system	-	-	-	-	-	-	-	-	-	-	I	-	-	-	-	-	-	-	-	-	I	-	or every 15 months
Cab mounting (if so equipped)	-	L	L	L	L	L	L	L	L	L	L	L	L	L	L	L	L	L	L	L	L	L	or every month

MFWB0AXF004801

https://truckmanualshub.com/

Maintenance Schedule (CNG engine for Australia)

CNG engine for Australia (1/4)

I : Inspect, clean, or repair or replace as required A : Adjust R : Replace T : Tighten to the specified torque L : Lubricate

Service Interval x1,000 km / x1,000 miles	1 / 0.6	5 / 3	8 / 5	10 / 6	15 / 9	20 / 12	25 / 15	30 / 18	35 / 21	40 / 24	45 / 27	50 / 31	55 / 34	60 / 37	65 / 40	70 / 43	75 / 46	80 / 49	85 / 52	90 / 55	95 / 59	100 / 62	105 / 65	Odometer reading or months, whichever comes first
Engine startability and abnormal noise	-	-	-	I	-	I	-	I	-	I	-	I	-	I	-	I	-	I	-	I	-	I	-	or every 3 months
Idling speed and acceleration	-	-	-	I	-	I	-	I	-	I	-	I	-	I	-	I	-	I	-	I	-	I	-	or every 3 months
∗ Air cleaner element	-	-	-	-	-	-	-	-	-	-	-	R	-	-	-	-	-	-	-	-	-	R	-	or every 15 months or after 6th cleaning : R Every 3 months : I
Valve clearance	Check the valve clearances every 100,000 km (62,000 miles) or 36 months. If the valve clearances are not the specified value, make adjustment them.																							
∗ Engine oil (When using ISUZU genuine)	-	-	-	-	-	R	-	-	-	R	-	-	-	R	-	-	-	R	-	-	-	R	-	or every 6 months
∗ Engine oil (When using FUCHS)	-	-	-	R	-	R	-	R	-	R	-	R	-	R	-	R	-	R	-	R	-	R	-	or every 3 months
∗ Engine oil filter (When using ISUZU genuine engine oil)	-	-	-	-	-	R	-	-	-	R	-	-	-	R	-	-	-	R	-	-	-	R	-	or every 6 months
∗ Engine oil filter (When using FUCHS engine oil)	-	-	-	R	-	R	-	R	-	R	-	R	-	R	-	R	-	R	-	R	-	R	-	or every 3 months
Damage to CNG container (CNG cylinder)	Every 3 years : I Every 15 years : R																							
Leaks from, damage to rigid fuel line, flexible fuel line and fitting	Every 3 months : I																							
Loose or damaged CNG container mounting	Every 12 months : I																							
Pressure regulator	Every 250,000 km (155,000 miles) : R																							
Automatic valve	Every 24 months : R																							
Air compressor, governor and unloader valve functions	-	-	-	-	-	-	-	-	-	-	-	I	-	-	-	-	-	-	-	-	-	I	-	or every 15 months
Radiator sub-tank cap function	-	-	-	I	-	I	-	I	-	I	-	I	-	I	-	I	-	I	-	I	-	I	-	or every 3 months
Damage to fan belt	I	-	-	I	-	I	-	I	-	I	-	I	-	I	-	I	-	I	-	I	-	I	-	or every 3 months
∗ Loose or otherwise improper installation of exhaust pipe	I	-	-	I	-	I	-	I	-	I	-	I	-	I	-	I	-	I	-	I	-	I	-	or every 3 months
Cooling circuit and radiator	Every 24 months : I																							
Engine coolant	Every 24 months : R																							
Turbocharger	Every 250,000 km (155,000 miles) : R																							
Spark plug	-	-	-	-	-	-	-	-	-	-	-	-	-	-	-	-	-	-	-	-	-	R	-	

∗ : The vehicle needs to be maintained more often if it is driven in severe condition. Refer to "Maintenance Schedule for Severe-condition" in this section.

https://truckmanualshub.com/

CNG engine for Australia (2/4)

I : Inspect, clean, or repair or replace as required A : Adjust R : Replace T : Tighten to the specified torque L : Lubricate

Service Interval x1,000 km / x1,000 miles	1 / 0.6	5 / 3	8 / 5	10 / 6	15 / 9	20 / 12	25 / 15	30 / 18	35 / 21	40 / 24	45 / 27	50 / 31	55 / 34	60 / 37	65 / 40	70 / 43	75 / 46	80 / 49	85 / 52	90 / 55	95 / 59	100 / 62	105 / 65	Odometer reading or months, whichever comes first
∗ Clutch fluid	-	-	-	I	-	I	-	I	-	I	-	R	-	I	-	I	-	I	-	I	-	R	-	or every 3 months : I every 15 months : R
Clutch system function	-	-	-	I	-	I	-	I	-	I	-	I	-	I	-	I	-	I	-	I	-	I	-	or every 3 months
Clutch pedal free play and stroke	-	-	-	I	-	I	-	I	-	I	-	I	-	I	-	I	-	I	-	I	-	I	-	or every 3 months
Clutch booster exhaust cover	-	-	-	I	-	I	-	I	-	I	-	I	-	I	-	I	-	I	-	I	-	I	-	or every 3 months
∗ Transmission oil	R	-	-	I	-	I	-	I	-	I	-	R	-	I	-	I	-	I	-	I	-	R	-	or every 3 months : I every 15 months : R
Loose gear control mechanism	-	-	-	I	-	I	-	I	-	I	-	I	-	I	-	I	-	I	-	I	-	I	-	or every 3 months
Loose propeller shaft joints	-	-	-	-	-	-	-	-	-	-	-	I	-	-	-	-	-	-	-	-	-	I	-	or every 15 months
∗ Worn propeller shaft universal joint and splines	-	-	-	-	-	-	-	-	-	-	-	I	-	-	-	-	-	-	-	-	-	I	-	or every 15 months
Loose propeller shaft bearing and related parts	-	-	-	-	-	-	-	-	-	-	-	I	-	-	-	-	-	-	-	-	-	I	-	or every 15 months
∗ Rear axle differential gear oil	R	-	-	I	-	I	-	I	-	I	-	R	-	I	-	I	-	I	-	I	-	R	-	or every 3 months : I every 15 months : R
Rear wheel hub bearing grease	-	-	-	-	-	-	-	-	-	-	-	R	-	-	-	-	-	-	-	-	-	R	-	or every 15 months
Damaged or distorted rear axle case	-	-	-	-	-	-	-	-	-	-	-	I	-	-	-	-	-	-	-	-	-	I	-	or every 15 months
Front wheel hub bearing grease	-	-	-	-	-	-	-	-	-	-	-	R	-	-	-	-	-	-	-	-	-	R	-	or every 15 months
Damaged or distorted front axle case	-	-	-	-	-	-	-	-	-	-	-	I	-	-	-	-	-	-	-	-	-	I	-	or every 15 months
∗ Leaf spring U-bolt nuts	T	-	-	-	-	-	-	-	-	-	-	T	-	-	-	-	-	-	-	-	-	T	-	or every 15 months
Damaged leaf spring	-	-	-	I	-	I	-	I	-	I	-	I	-	I	-	I	-	I	-	I	-	I	-	or every 3 months
Uneven suspension due to leaf spring fatigue	-	-	-	-	-	-	-	-	-	-	-	I	-	-	-	-	-	-	-	-	-	I	-	or every 15 months
Loose or damaged leaf spring mounting	-	-	-	-	-	-	-	I	-	-	-	-	-	I	-	-	-	-	-	I	-	-	-	or every 9 months
Spring leaves for misalignment	-	-	-	-	-	-	-	I	-	-	-	-	-	I	-	-	-	-	-	I	-	-	-	or every 9 months
Oil leaks from or damage to shock absorbers	-	-	-	-	-	-	-	I	-	-	-	-	-	I	-	-	-	-	-	I	-	-	-	or every 9 months
Loose shock absorber mounting	-	-	-	-	-	-	-	I	-	-	-	-	-	I	-	-	-	-	-	I	-	-	-	or every 9 months
Foreign object in wheels	-	-	-	I	-	I	-	I	-	I	-	I	-	I	-	I	-	I	-	I	-	I	-	or every 3 months
Wheel nuts	T	-	-	T	-	T	-	T	-	T	-	T	-	T	-	T	-	T	-	T	-	T	-	or every 3 months
Damaged disc wheels	-	-	-	I	-	I	-	I	-	I	-	I	-	I	-	I	-	I	-	I	-	I	-	or every 3 months
Loose front wheel hub bearings	-	-	-	-	-	-	-	-	-	-	-	I	-	-	-	-	-	-	-	-	-	I	-	or every 15 months
Loose rear wheel hub bearings	-	-	-	-	-	-	-	-	-	-	-	I	-	-	-	-	-	-	-	-	-	I	-	or every 15 months

∗ : The vehicle needs to be maintained more often if it is driven in severe condition. Refer to "Maintenance Schedule for Severe-condition" in this section.

https://truckmanualshub.com/

CNG engine for Australia (3/4)

I : Inspect, clean, or repair or replace as required A : Adjust R : Replace T : Tighten to the specified torque L : Lubricate

Service Interval x1,000 km / x1,000 miles	1 / 0.6	5 / 3	8 / 5	10 / 6	15 / 9	20 / 12	25 / 15	30 / 18	35 / 21	40 / 24	45 / 27	50 / 31	55 / 34	60 / 37	65 / 40	70 / 43	75 / 46	80 / 49	85 / 52	90 / 55	95 / 59	100 / 62	105 / 65	Odometer reading or months, whichever comes first
Power steering fluid	-	-	-	I	-	I	-	I	-	I	-	R	-	I	-	I	-	I	-	I	-	R	-	or every 3 months : I every 15 months : R
Power steering fluid filter	-	-	-	-	-	-	-	-	-	-	-	I	-	-	-	-	-	-	-	-	-	I	-	or every 15 months
Loose power steering system mounting	-	-	-	I	-	I	-	I	-	I	-	I	-	I	-	I	-	I	-	I	-	I	-	or every 3 months
Excessive play in power steering bearing	-	-	-	-	-	-	-	-	-	-	-	I	-	-	-	-	-	-	-	-	-	I	-	or every 15 months
* Damage to, loose or excessive play in power steering joints	I	-	-	I	-	I	-	I	-	I	-	I	-	I	-	I	-	I	-	I	-	I	-	or every 3 months
Knuckle-to-front axle clearance	-	-	-	-	-	-	-	-	-	-	-	I	-	-	-	-	-	-	-	-	-	I	-	or every 15 months
Wheel alignment	-	-	-	-	-	-	-	-	-	-	-	I	-	-	-	-	-	-	-	-	-	I	-	or every 15 months
Steering angle range for right and left turns	-	-	-	-	-	-	-	-	-	-	-	I	-	-	-	-	-	-	-	-	-	I	-	or every 15 months
King pin-to-bearing clearance	-	-	-	-	-	-	-	-	-	-	-	I	-	-	-	-	-	-	-	-	-	I	-	or every 15 months
Brake fluid	-	-	-	I	-	I	-	I	-	I	-	R	-	I	-	I	-	I	-	I	-	R	-	or every 3 months : I every 12 months : R
* Brake lining wear	-	-	-	I	-	I	-	I	-	I	-	I	-	I	-	I	-	I	-	I	-	I	-	or every 3 months
* Brake drum wear or damage	-	-	-	-	-	-	-	-	-	-	-	I	-	-	-	-	-	-	-	-	-	I	-	or every 12 months
Brake hose	-	-	-	I	-	I	-	I	-	I	-	R	-	I	-	I	-	I	-	I	-	R	-	or every 3 months : I every 15 months : R
Function of brake valves	-	-	-	-	-	-	-	-	-	-	-	I	-	-	-	-	-	-	-	-	-	I	-	or every 12 months
Brake booster exhaust cover	-	-	-	I	-	I	-	I	-	I	-	I	-	I	-	I	-	I	-	I	-	I	-	or every 12 months
Leaks from, damage to, or loose connection of brake hose or pipe	-	-	-	I	-	I	-	I	-	I	-	I	-	I	-	I	-	I	-	I	-	I	-	or every 3 months
Air dryer	Change the desiccant, filter and rubber parts of air dryer at 100,000 km (62,000 miles) or every 12 months.																							
Rubber parts of wheel cylinder	Every 12 months : R																							
Rubber parts of HSA valve	Every 24 months : R																							
Rubber parts of brake valve, parking brake valve, quick release valve, multi-protection valve, AIR MASTER	Every 24 months : R																							
Rubber parts of brake chamber	Every 3months : I Every 24 months : R																							
Brake chamber piggy-bag	Every 36 months : R																							
Brake expander	Every 12 months : I Every 36 months : overhaul																							
Loose parking brake system mounting	-	-	-	I	-	-	-	I	-	-	-	-	-	I	-	-	-	-	-	I	-	-	-	or every 3 months
Damaged or loosely connected rod or cable	-	I	-	I	-	I	-	I	-	I	-	I	-	I	-	I	-	I	-	I	-	I	-	or every 3 months
Function of parking brake control valve system (wheel parking brake model)	-	I	-	I	-	I	-	I	-	I	-	I	-	I	-	I	-	I	-	I	-	I	-	or every 3 months
Function of brake chamber (wheel parking brake model)	-	-	-	-	-	-	-	-	-	-	-	I	-	-	-	-	-	-	-	-	-	I	-	or every 12 months
Brake chamber rod stroke (wheel parking brake model)	-	I	-	I	-	I	-	I	-	I	-	I	-	I	-	I	-	I	-	I	-	I	-	or every 3 months

* : The vehicle needs to be maintained more often if it is driven in severe condition. Refer to "Maintenance Schedule for Severe-condition" in this section.

MFW90AXF001601

https://truckmanualshub.com/

CNG engine for Australia (4/4)

I : Inspect, clean, or repair or replace as required A : Adjust R : Replace T : Tighten to the specified torque L : Lubricate

Service Interval x1,000 km	1	5	8	10	15	20	25	30	35	40	45	50	55	60	65	70	75	80	85	90	95	100	105	Odometer reading or months, whichever comes first
x1,000 miles	0.6	3	5	6	9	12	15	18	21	24	27	31	34	37	40	43	46	49	52	55	59	62	65	
Function of cab tilt system	-	-	-	-	-	-	-	-	-	-	-	I	-	-	-	-	-	-	-	-	-	I	-	or every 15 months
Specific gravity of battery fluid	-	-	-	-	-	-	-	I	-	-	-	-	-	I	-	-	-	-	-	I	-	-	-	or every 9 months
Function of starter motor	-	-	-	-	-	-	-	I	-	-	-	-	-	I	-	-	-	-	-	I	-	-	-	or every 9 months
Wear of starter motor brushes	-	-	-	-	-	-	-	-	-	-	-	I	-	-	-	-	-	-	-	-	-	I	-	or every 15 months
Function of generator	-	-	-	I	-	I	-	I	-	I	-	I	-	I	-	I	-	I	-	I	-	I	-	or every 3 months
Damage to or loose connection of wiring harness terminals	-	-	-	I	-	I	-	I	-	I	-	I	-	I	-	I	-	I	-	I	-	I	-	or every 3 months
Engine water pump bearing	-	-	-	-	-	-	L	-	-	-	-	L	-	-	-	-	L	-	-	-	-	L	-	or every 6 months
Front spring pins	-	L	-	L	L	L	L	L	L	L	L	L	L	L	L	L	L	L	L	L	L	L	L	or every month
Front spring shackles	-	L	-	L	L	L	L	L	L	L	L	L	L	L	L	L	L	L	L	L	L	L	L	or every month
King pin	-	L	-	L	L	L	L	L	L	L	L	L	L	L	L	L	L	L	L	L	L	L	L	or every month
Propeller shaft universal joints and sliding sleeves	-	L	-	L	L	L	L	L	L	L	L	L	L	L	L	L	L	L	L	L	L	L	L	or every month
Propeller shaft center bearing	-	L	-	L	L	L	L	L	L	L	L	L	L	L	L	L	L	L	L	L	L	L	L	or every month
Rear spring pins	-	L	-	L	L	L	L	L	L	L	L	L	L	L	L	L	L	L	L	L	L	L	L	or every month
Rear spring shackle pins	-	L	-	L	L	L	L	L	L	L	L	L	L	L	L	L	L	L	L	L	L	L	L	or every month
Steering shaft sliding sleeve	-	L	-	L	L	L	L	L	L	L	L	L	L	L	L	L	L	L	L	L	L	L	L	or every month
Cab mounting	-	L	-	L	L	L	L	L	L	L	L	L	L	L	L	L	L	L	L	L	L	L	L	or every month

∗ : The vehicle needs to be maintained more often if it is driven in severe condition. Refer to "Maintenance Schedule for Severe-condition" in this section.

https://truckmanualshub.com/

Maintenance Schedule (CNG engine for Thailand)

CNG engine for Thailand (1/4)

I : Inspect, clean, or repair or replace as required A : Adjust R : Replace T : Tighten to the specified torque L : Lubricate

Service Interval x1,000 km	1	5	8	10	15	20	25	30	35	40	45	50	55	60	65	70	75	80	85	90	95	100	105	Odometer reading or months, whichever comes first
x1,000 miles	0.6	3	5	6	9	12	15	18	21	24	27	31	34	37	40	43	46	49	52	55	59	62	65	
Engine startability and abnormal noise	-	-	-	I	-	I	-	I	-	I	-	I	-	I	-	I	-	I	-	I	-	I	-	or every 3 months
Idling speed and acceleration	-	-	-	I	-	I	-	I	-	I	-	I	-	I	-	I	-	I	-	I	-	I	-	or every 3 months
∗ Air cleaner element	-	-	-	-	-	-	-	-	-	-	-	R	-	-	-	-	-	-	-	-	-	R	-	or every 15 months or after 6th cleaning : R Every 6 months : I
Valve clearance	Check the valve clearances every 100,000 km (62,000 miles) or 36 months. If the valve clearances are not the specified value, make adjustment them.																							
∗ Engine oil	-	-	-	R	-	R	-	R	-	R	-	R	-	R	-	R	-	R	-	R	-	R	-	or every 3 months
∗ Engine oil filter	-	-	-	R	-	R	-	R	-	R	-	R	-	R	-	R	-	R	-	R	-	R	-	or every 3 months
Fuel filter	Drain oil every 5,000 km (3,100 miles) Every 10,000 km (6,200 miles)																							
Damage to CNG container (CNG cylinder)	Every 5 years : I Every 20 years : R																							
Pressure regulator	Every 250,000 km (155,000 miles) : R																							
Air compressor, governor and unloader valve functions	-	-	-	-	-	-	-	-	-	-	-	I	-	-	-	-	-	-	-	-	-	I	-	or every 15 months
Radiator cap function	-	-	-	I	-	I	-	I	-	I	-	I	-	I	-	I	-	I	-	I	-	I	-	or every 3 months
Damage to fan belt	I	-	-	I	-	I	-	I	-	I	-	I	-	I	-	I	-	I	-	I	-	I	-	or every 3 months
∗ Loose or otherwise improper installation of exhaust pipe	I	-	-	I	-	I	-	I	-	I	-	I	-	I	-	I	-	I	-	I	-	I	-	or every 3 months
Cooling circuit and radiator	Every 24 months : I																							
Engine coolant	Every 24 months : R																							
Turbocharger	Every 250,000 km (155,000 miles) : R																							
VSV	Every 250,000 km (155,000 miles) : R																							
Spark plug	-	-	-	-	-	-	-	-	-	-	-	-	-	-	-	-	-	-	-	-	-	R	-	

∗ : The vehicle needs to be maintained more often if it is driven in severe condition. Refer to "Maintenance Schedule for Severe-condition" in this section.

https://truckmanualshub.com/

CNG engine for Thailand (2/4)

I : Inspect, clean, or repair or replace as required A : Adjust R : Replace T : Tighten to the specified torque L : Lubricate

Service Interval x1,000 km	1	5	8	10	15	20	25	30	35	40	45	50	55	60	65	70	75	80	85	90	95	100	105	Odometer reading or months, whichever comes first
x1,000 miles	0.6	3	5	6	9	12	15	18	21	24	27	31	34	37	40	43	46	49	52	55	59	62	65	
∗ Clutch fluid	-	-	-	I	-	I	-	I	-	I	-	R	-	I	-	I	-	I	-	I	-	R	-	or every 3 months : I every 15 months : R
Clutch system function	-	-	-	I	-	I	-	I	-	I	-	I	-	I	-	I	-	I	-	I	-	I	-	or every 3 months
Clutch pedal free play and stroke	-	-	-	I	-	I	-	I	-	I	-	I	-	I	-	I	-	I	-	I	-	I	-	or every 3 months
Clutch booster exhaust cover	-	-	-	I	-	I	-	I	-	I	-	I	-	I	-	I	-	I	-	I	-	I	-	or every 3 months
∗ Transmission oil	R	-	-	I	-	I	-	I	-	I	-	R	-	I	-	I	-	I	-	I	-	R	-	or every 3 months : I every 15 months : R
Loose gear control mechanism	-	-	-	I	-	I	-	I	-	I	-	I	-	I	-	I	-	I	-	I	-	I	-	or every 3 months
Loose propeller shaft joints	-	-	-	-	-	-	-	-	-	-	-	I	-	-	-	-	-	-	-	-	-	I	-	or every 15 months
∗ Worn propeller shaft universal joint and splines	-	-	-	-	-	-	-	-	-	-	-	I	-	-	-	-	-	-	-	-	-	I	-	or every 15 months
Loose propeller shaft bearing and related parts	-	-	-	-	-	-	-	-	-	-	-	I	-	-	-	-	-	-	-	-	-	I	-	or every 15 months
∗ Rear axle differential gear oil	R	-	-	I	-	I	-	I	-	I	-	R	-	I	-	I	-	I	-	I	-	R	-	or every 3 months : I every 15 months : R
Rear wheel hub bearing grease	-	-	-	-	-	-	-	-	-	-	-	R	-	-	-	-	-	-	-	-	-	R	-	or every 15 months
Damaged or distorted rear axle case	-	-	-	-	-	-	-	-	-	-	-	I	-	-	-	-	-	-	-	-	-	I	-	or every 15 months
Front wheel hub bearing grease	-	-	-	-	-	-	-	-	-	-	-	R	-	-	-	-	-	-	-	-	-	R	-	or every 15 months
Damaged or distorted front axle case	-	-	-	-	-	-	-	-	-	-	-	I	-	-	-	-	-	-	-	-	-	I	-	or every 15 months
∗ Leaf spring U-bolt nuts	T	-	-	-	-	-	-	-	-	-	-	T	-	-	-	-	-	-	-	-	-	T	-	or every 15 months
Damaged leaf spring	-	-	-	I	-	I	-	I	-	I	-	I	-	I	-	I	-	I	-	I	-	I	-	or every 3 months
Uneven suspension due to leaf spring fatigue	-	-	-	-	-	-	-	-	-	-	-	I	-	-	-	-	-	-	-	-	-	I	-	or every 15 months
Loose or damaged leaf spring mounting	-	-	-	-	-	-	-	I	-	-	-	-	-	I	-	-	-	-	-	I	-	-	-	or every 9 months
Spring leaves for misalignment	-	-	-	-	-	-	-	I	-	-	-	-	-	I	-	-	-	-	-	I	-	-	-	or every 9 months
Oil leaks from or damage to shock absorbers	-	-	-	-	-	-	-	I	-	-	-	-	-	I	-	-	-	-	-	I	-	-	-	or every 9 months
Loose shock absorber mounting	-	-	-	-	-	-	-	I	-	-	-	-	-	I	-	-	-	-	-	I	-	-	-	or every 9 months
Foreign object in wheels	-	-	-	I	-	I	-	I	-	I	-	I	-	I	-	I	-	I	-	I	-	I	-	or every 3 months
Wheel nuts	T	-	-	T	-	T	-	T	-	T	-	T	-	T	-	T	-	T	-	T	-	T	-	or every 3 months
Damaged disc wheels	-	-	-	I	-	I	-	I	-	I	-	I	-	I	-	I	-	I	-	I	-	I	-	or every 3 months
Loose front wheel hub bearings	-	-	-	-	-	-	-	-	-	-	-	I	-	-	-	-	-	-	-	-	-	I	-	or every 15 months
Loose rear wheel hub bearings	-	-	-	-	-	-	-	-	-	-	-	I	-	-	-	-	-	-	-	-	-	I	-	or every 15 months

∗ : The vehicle needs to be maintained more often if it is driven in severe condition. Refer to "Maintenance Schedule for Severe-condition" in this section.

https://truckmanualshub.com/

CNG engine for Thailand (3/4)

I : Inspect, clean, or repair or replace as required A : Adjust R : Replace T : Tighten to the specified torque L : Lubricate

Service Interval x1,000 km	1	5	8	10	15	20	25	30	35	40	45	50	55	60	65	70	75	80	85	90	95	100	105	Odometer reading or months, whichever comes first
x1,000 miles	0.6	3	5	6	9	12	15	18	21	24	27	31	34	37	40	43	46	49	52	55	59	62	65	
Power steering fluid	-	-	-	I	-	I	-	I	-	I	-	R	-	I	-	I	-	I	-	I	-	R	-	or every 3 months : I every 15 months : R
Power steering fluid filter	-	-	-	-	-	-	-	-	-	-	-	I	-	-	-	-	-	-	-	-	-	I	-	or every 15 months
Loose power steering system mounting	-	-	-	I	-	I	-	I	-	I	-	I	-	I	-	I	-	I	-	I	-	I	-	or every 3 months
Excessive play in power steering bearing	-	-	-	-	-	-	-	-	-	-	-	I	-	-	-	-	-	-	-	-	-	I	-	or every 15 months
* Damage to, loose or excessive play in power steering joints	I	-	-	-	-	-	-	I	-	-	-	-	-	I	-	-	-	-	-	I	-	-	-	or every 9 months
Knuckle-to-front axle clearance	-	-	-	-	-	-	-	-	-	-	-	I	-	-	-	-	-	-	-	-	-	I	-	or every 15 months
Wheel alignment	-	-	-	-	-	-	-	-	-	-	-	I	-	-	-	-	-	-	-	-	-	I	-	or every 15 months
Steering angle range for right and left turns	-	-	-	-	-	-	-	-	-	-	-	I	-	-	-	-	-	-	-	-	-	I	-	or every 15 months
King pin-to-bearing clearance	-	-	-	-	-	-	-	-	-	-	-	I	-	-	-	-	-	-	-	-	-	I	-	or every 15 months
Brake fluid	-	-	-	I	-	I	-	I	-	I	-	R	-	I	-	I	-	I	-	I	-	R	-	or every 3 months : I every 12 months : R
* Brake lining wear	-	-	-	I	-	I	-	I	-	I	-	I	-	I	-	I	-	I	-	I	-	I	-	or every 3 months
* Brake drum wear or damage	-	-	-	-	-	-	-	-	-	-	-	I	-	-	-	-	-	-	-	-	-	I	-	or every 12 months
Brake hose	-	-	-	I	-	I	-	I	-	I	-	R	-	I	-	I	-	I	-	I	-	R	-	or every 3 months : I every 15 months : R
Function of brake valves	-	-	-	-	-	-	-	-	-	-	-	I	-	-	-	-	-	-	-	-	-	I	-	or every 12 months
Brake booster exhaust cover	-	-	-	I	-	I	-	I	-	I	-	I	-	I	-	I	-	I	-	I	-	I	-	or every 12 months
Leaks from, damage to, or loose connection of brake hose or pipe	-	-	-	I	-	I	-	I	-	I	-	I	-	I	-	I	-	I	-	I	-	I	-	or every 3 months
Air dryer	Change the desiccant, filter and rubber parts of air dryer at 100,000 km (62,000 miles) or every 12 months.																							
Rubber parts of wheel cylinder	Every 12 months : R																							
Rubber parts of brake valve,multi-protection valve, AIR MASTER	Every 24 months : R																							
Worn parking brake lining (center parking brake model)	-	-	-	-	-	-	-	-	-	-	-	I	-	-	-	-	-	-	-	-	-	I	-	or every 12 months
Worn or damaged parking brake drum (center parking brake model)	-	-	-	-	-	-	-	-	-	-	-	I	-	-	-	-	-	-	-	-	-	I	-	or every 12 months
Loose parking brake system mounting	-	-	-	I	-	-	-	I	-	-	-	-	-	I	-	-	-	-	-	I	-	-	-	or every 3 months
Damaged or loosely connected rod or cable	-	-	-	I	-	I	-	I	-	I	-	I	-	I	-	I	-	I	-	I	-	I	-	or every 3 months

* : The vehicle needs to be maintained more often if it is driven in severe condition. Refer to "Maintenance Schedule for Severe-condition" in this section.

https://truckmanualshub.com/

CNG engine for Thailand (4/4)

I : Inspect, clean, or repair or replace as required A : Adjust R : Replace T : Tighten to the specified torque L : Lubricate

Service Interval x1,000 km	1	5	8	10	15	20	25	30	35	40	45	50	55	60	65	70	75	80	85	90	95	100	105	Odometer reading or months, whichever comes first
x1,000 miles	0.6	3	5	6	9	12	15	18	21	24	27	31	34	37	40	43	46	49	52	55	59	62	65	
Function of cab tilt system	-	-	-	-	-	-	-	-	-	-	-	I	-	-	-	-	-	-	-	-	-	I	-	or every 15 months
Specific gravity of battery fluid	-	-	-	-	-	-	-	I	-	-	-	-	-	I	-	-	-	-	-	I	-	-	-	or every 9 months
Function of starter motor	-	-	-	-	-	-	-	I	-	-	-	-	-	I	-	-	-	-	-	I	-	-	-	or every 9 months
Wear of starter motor brushes	-	-	-	-	-	-	-	-	-	-	-	I	-	-	-	-	-	-	-	-	-	I	-	or every 15 months
Function of generator	-	-	-	I	-	I	-	I	-	I	-	I	-	I	-	I	-	I	-	I	-	I	-	or every 3 months
Damage to or loose connection of wiring harness terminals	-	-	-	I	-	I	-	I	-	I	-	I	-	I	-	I	-	I	-	I	-	I	-	or every 3 months
Engine water pump bearing	-	-	-	-	-	-	L	-	-	-	-	L	-	-	-	-	L	-	-	-	-	L	-	or every 6 months
Front spring pins	-	L	-	L	L	L	L	L	L	L	L	L	L	L	L	L	L	L	L	L	L	L	L	or every month
Front spring shackles	-	L	-	L	L	L	L	L	L	L	L	L	L	L	L	L	L	L	L	L	L	L	L	or every month
King pin	-	L	-	L	L	L	L	L	L	L	L	L	L	L	L	L	L	L	L	L	L	L	L	or every month
Propeller shaft universal joints and sliding sleeves	-	L	-	L	L	L	L	L	L	L	L	L	L	L	L	L	L	L	L	L	L	L	L	or every month
Propeller shaft center bearing	-	L	-	L	L	L	L	L	L	L	L	L	L	L	L	L	L	L	L	L	L	L	L	or every month
Rear spring pins	-	L	-	L	L	L	L	L	L	L	L	L	L	L	L	L	L	L	L	L	L	L	L	or every month
Rear spring shackle pins or rear spring sliding shackles	-	L	-	L	L	L	L	L	L	L	L	L	L	L	L	L	L	L	L	L	L	L	L	or every month
Steering shaft sliding sleeve	-	L	-	L	L	L	L	L	L	L	L	L	L	L	L	L	L	L	L	L	L	L	L	or every month
Clutch shift block (MLD model transmission)	-	L	-	L	L	L	L	L	L	L	L	L	L	L	L	L	L	L	L	L	L	L	L	or every month
Cab mounting	-	L	-	L	L	L	L	L	L	L	L	L	L	L	L	L	L	L	L	L	L	L	L	or every month

∗ : The vehicle needs to be maintained more often if it is driven in severe condition. Refer to "Maintenance Schedule for Severe-condition" in this section.

https://truckmanualshub.com/

Transmission Oil - ZF6S1000/ZF9S1110

Type

The transmission of the vehicle can stay in good condition through regular maintenance. Above all, make sure to replace the transmission oil regularly in accordance with the specified maintenance schedule.

Driving Condition	Oil Class			
	02A	02B	02D/02L	02E (ZF-Ecofluid M)
Service condition (local/long-haul transport, tough operating conditions)	60,000 km (36,000 miles) or 12 months	120,000 km (72,000 miles) or 12 months	240,000 km (144,000 miles) or 24 months	
Normal condition (long-haul goods transport)	90,000 km (54,000 miles) or 12 months	160,000 km (96,000 miles) or 12 months	300,000 km (180,000 miles) or 24 months	

Change oil at the above-indicated distance or time, whichever comes first.

Low Temperature Limits

Oil Pan Temperature	SAE Viscosity Rating	Oil Type
- 25°C (- 13°F) or above	80W/80W-85/80W-90	02A/02B
- 40°C (- 40°F) or above	75W/75W-80/75W-85/75W-90	02E (ZF-Ecofluid M)/02D/02L

Oil Classes and Approved Trade Products (except Europe)

Oil Class 02A

- Gear oil of viscosity grades: SAE 80W/80W-85 /80W-90/85W-90/90

NOTE:
In moderate climate zones, shift quality is impaired if viscosity grades higher than SAE 80W are used.

Manufacturer (02A)	Trade name (02A)
ADDINOL LUBE OIL GMBH, LEUNA/D	ADDINOL GETRIEBEÖL GS 80W
ADDINOL LUBE OIL GMBH, LEUNA/D	ADDINOL GETRIEBEÖL GS 80W-90
AGIP SCHMIERTECHNIK GMBH, WÜRZBURG/D	AUTOL GETRIEBEÖL 80W-90
ARAL AG, BOCHUM/D	ARAL GETRIEBEOL EP 80W
ARAL AG, BOCHUM/D	ARAL GETRIEBEOL EP 85W-90
AVIA MINERALÖL-AG, MÜNCHEN/D	AVIA GEAR OIL MZ 80
AVIA MINERALÖL-AG, MÜNCHEN/D	AVIA GEAR OIL MZ 90
BAYWA AG, MÜNCHEN/D	BAYWA MEHRZWECKGETRIEBEÖL SAE 80
BAYWA AG, MÜNCHEN/D	TECTROL UNIGEAR 80
BEHRAN OIL CO., TEHRAN/IR	BEHRAN SAMAND MB 80W-90
BELGIN MADENI YAGLAR, GEBZE KOCAELI/TR	BELGEAR EP MB 80
BLASER SWISSLUBE AG, HASLE-RÜEGSAU/CH	EP-GETRIEBEÖL 80W-100
BLASER SWISSLUBE AG, HASLE-RÜEGSAU/CH	EP-GETRIEBEÖL 80W-68
BLASER SWISSLUBE AG, HASLE-RÜEGSAU/CH	EP-GETRIEBEÖL 80W90
BP INTERNATIONAL, PANGBOURNE, READING/GB	BP ENERGEAR EP 80W
BP INTERNATIONAL, PANGBOURNE, READING/GB	BP ENERGEAR EP 80W-90
BP INTERNATIONAL, PANGBOURNE, READING/GB	OJS FRONTOL MEHRZWECK-GETRIEBEÖL MZ 80W-90
BP INTERNATIONAL, PANGBOURNE, READING/GB	OJS FRONTOL MEHRZWECKGETRIEBEÖL MZ 80
BUCHER AG LANGENTHAL, LANGENTHAL/CH	MOTOREX GEAR OIL EP 80W
BUCHER AG LANGENTHAL, LANGENTHAL/CH	MOTOREX GEAR OIL EP 80W/90

https://truckmanualshub.com/

Manufacturer (02A)	Trade name (02A)
CASTROL INTERNATIONAL, PANGBOURNE READING/GB	CASTROL EP 80W
CASTROL INTERNATIONAL, PANGBOURNE READING/GB	CASTROL EP 80W90
CEPSA LUBRICANTS S.A., MADRID/E	CEPSA TRANSMISIONES 80W-90
CEPSA LUBRICANTS S.A., MADRID/E	ERTOIL TRANSMISIONES 80W-90
CEPSA LUBRICANTS S.A., MADRID/E	ERTOIL TRANSMISIONES F SAE 80
CHEVRON BRASIL LTDA., RIO DE JANEIRO/BRAZIL	UNIVERSAL EP SAE 80W
CHEVRONTEXACO, GHENT/B	GEARTEX EP-A 80W
CHEVRONTEXACO, GHENT/B	GEARTEX EP-A 80W-90
CHEVRONTEXACO, GHENT/B	GEARTEX EP-A 85W-90
CLAAS KGAA MBH, HARSEWINKEL/D	CLAAS AGRISHIFT 4SC 80W90
COMP.BRASIL. D. PETRO. IPIRANGA, RIO DE JANEIRO/BR	IPIRGEROL EP 80W
CONDAT LUBRIFIANTS, CHASSE SUR RHONE/F	GEAR A (80W)
DE OLIEBRON B.V., ZWIJNDRECHT/NL	TOR MULTIPURPOSE GEAR OIL SAE 80W90
EKOIL LTD, UFA/RUS	EKOIL ECO TRANS SAE 80W-85 API GL-4
ENI S.P.A. REFINING & MARKETING DIVISION, ROME/I	ROTRA HY 80W-90
ENI S.P.A. REFINING & MARKETING DIVISION, ROME/I	ROTRA HY DB 80W
EXXON MOBIL CORPORATION, FAIRFAX, VIRGINIA/USA	ESSO GEAR OIL GP-D 80W
EXXON MOBIL CORPORATION, FAIRFAX, VIRGINIA/USA	MOBILUBE GX-A 80W
FUCHS PETROLUB AG, MANNHEIM/D	TITAN GEAR MP SAE 80W
GAZPROMNEFT-ONPZ, OMSK/RUS	TRANS KP-2 (SAE 80W85)
GAZPROMNEFT-ONPZ, OMSK/RUS	TRANS KP-4 (SAE 80W-90)
GULF OIL INTERNATIONAL, PITTSBURG/USA	GULF GEAR XP 80W
GULF OIL INTERNATIONAL, PITTSBURG/USA	GULF GEAR XP 80W-90
HUILES BERLIET S.A., SAINT PRIEST/F	RTO EP 80W
HUILES BERLIET S.A., SAINT PRIEST/F	RTO EP 80W-90
IGOL FRANCE SA, AMIENS/F	TRANS EPA SAE80W-85W
INDIAN OIL CORPORATION LTD., MUMBAI/IND	SERVO GEAR HP 80W(T)
INDIAN OIL CORPORATION LTD., MUMBAI/IND	SERVO GEAR HP 80W-90(T)
INDIAN OIL CORPORATION LTD., MUMBAI/IND	SERVO GEAR HP 90(T)
KOMPRESSOL-OEL VERKAUFS GMBH, KÖLN/D	KOMPRESSOL-MEHRZWECK-GETRIEBEOEL SAE 80W-90
KRAFFT S.L., ANDOAIN/E	HIDROIL SAE 80W90
KROON-OIL B.V., ALMELO/NL	GEARLUBE GL-4 80W-90
KUWAIT PETROLEUM R&T B.V., EUROPOORT RT/NL	Q8 T 35 SAE 80 W
KUWAIT PETROLEUM R&T B.V., EUROPOORT RT/NL	Q8 T 35 SAE 80W-90
KUWAIT PETROLEUM R&T B.V., EUROPOORT RT/NL	Q8 T 35 SAE 90
LIQUI MOLY GMBH, ULM/D	LIQUI MOLY GETRIEBEÖL GL 4 SAE 80W
LIQUI MOLY GMBH, ULM/D	LIQUI MOLY GETRIEBEÖL GL 4 SAE 85W-90
LLK FINLAND OY, HAMINA/FIN	TEBOIL EP SAE 80W
LLK FINLAND OY, HAMINA/FIN	TEBOIL EP SAE 80W-90
MAZIVA ZAGREB D.O.O, ZAGREB/HR	INA TRANSMOL DB 80W
MAZIVA ZAGREB D.O.O, ZAGREB/HR	INA TRANSMOL HD 80W-90
MEGUIN GMBH & CO. KG MINERALOELWERKE, SAARLOUIS/D	MEGOL MEHRZWECKGETRIEBEOEL GL 4 SAE 80W

https://truckmanualshub.com/

Manufacturer (02A)	Trade name (02A)
MEGUIN GMBH & CO. KG MINERALOELWERKE, SAARLOUIS/D	MEGOL MEHRZWECKGETRIEBEOEL GL 4 SAE 85W-90
MOL-LUB KFT., ALMÁSFÜZITÖ/H	MOL HYKOMOL 80W
MOTUL SA, AUBERVILLIERS CEDEX/F	MOTUL GEAR MB 80W
NESTE MARKKINOINTI OY, ESPOO/FIN	NESTE GEAR EP 80W-90
NEW PROCESS AG, TÜBACH/CH	EP GEAROIL SAE 80W
OEST, GEORG MINERALÖLWERK, FREUDENSTADT/D	OEST MEHRZWECK-GETRIEBEÖL SAE 80W
OEST, GEORG MINERALÖLWERK, FREUDENSTADT/D	OEST MEHRZWECK-GETRIEBEÖL SAE 80W-90
OMV REFINING & MARKETING GMBH, WIEN/A	OMV GEAR OIL MP SAE 80W-85
OMV REFINING & MARKETING GMBH, WIEN/A	OMV GEAR OIL MP SAE 85W-90
OOO LUKOIL-VOLGOGRADNEFTEPERERABOTKA, VOLGOGRAD/RUS	LUKOIL TRANSMISSION TM-4 SAE 80W-85
OOO LUKOIL-VOLGOGRADNEFTEPERERABOTKA, VOLGOGRAD/RUS	LUKOIL TRANSMISSION TM-4 SAE 80W-90
OPET PETROLCÜLÜK A.S., IZMIR/TR	ORSA EP MT 80W
ORLEN OIL SP. Z O.O., KRAKOW/PL	HIPOL SUPER GL-4 80W/90
ORLEN OIL SP. Z O.O., KRAKOW/PL	PLATINUM GEAR GL-4 80W
ORLEN OIL SP. Z O.O., KRAKOW/PL	PLATINUM GEAR GL-4 80W/90
PAKELO MOTOR OIL S.R.L, SAN BONIFACIO (VR)/I	PAKELO GEAR OIL EP/FZ SAE 80W
PAKELO MOTOR OIL S.R.L, SAN BONIFACIO (VR)/I	PAKELO GEAR OIL EP/FZ SAE 80W/90
PANOLIN AG, MADETSWIL/CH	PANOLIN EP GEAR 80W
PANOLIN AG, MADETSWIL/CH	PANOLIN EP GEAR 80W/90
PETROGAL S.A., LISBOA/P	GALP TRANSOIL 80W90
PETROGAL S.A., LISBOA/P	GALP TRANSOIL 80W
PRISTA OIL EAD, ROUSSE/BG	PRISTA EP 80W
PT PERTAMINA (PERSERO), JAKARTA/RI	RORED EP-A SAE80W-90
PT PERTAMINA (PERSERO), JAKARTA/RI	RORED EP-A SAE90
PTT PUBLIC COMPANY LIMITED, BANGKOK/TH	PTT EUROTRAN 341 SAE 80W-90
REPSOL YPF LUBRICANTES Y ESPECIALIDADES, MADRID/E	CS EP M SAE 80W
S-OIL CORPORATION, SEOUL/KOREA	DRAGON GEAR TM 80W
S-OIL TOTAL LUBRICANTS CO. LTD., SEOUL/ROK	TOTAL EP 80W-90
S.A.E.L., MADRID/E	GULF GEAR LUBRICANT 80W-85
SHELL BRASIL, BARRA DA TIJUCA - RIO DE JANEIRO/BR	SHELL SPIRAX G 80W (IN BRASIL ONLY)
SHELL INTERNATIONAL PETROLEUM COMP LTD, LONDON/GB	SEHLL SPIRAX EP 80
SHELL INTERNATIONAL PETROLEUM COMP LTD, LONDON/GB	SHELL SPIRAX MA 80W
SRS SCHMIERSTOFF VERTRIEB GMBH, SALZBERGEN/D	SRS WIOLIN MEHRZWECK-GETRIEBEÖL 80
SRS SCHMIERSTOFF VERTRIEB GMBH, SALZBERGEN/D	SRS WIOLIN MEHRZWECK-GETRIEBEÖL 80W-90
SRS SCHMIERSTOFF VERTRIEB GMBH, SALZBERGEN/D	SRS WIOLIN MEHRZWECK-GETRIEBEÖL 90
TOTAL LUBRIFIANTS S.A., PARIS/F	FINA PONTONIC N 80W-85
TOTAL LUBRIFIANTS S.A., PARIS/F	FINA PONTONIC N 80W-90
TOTAL LUBRIFIANTS S.A., PARIS/F	TOTAL EP 80W-85
TOTAL LUBRIFIANTS S.A., PARIS/F	TOTAL EP 80W-90
TOTAL LUBRIFIANTS S.A., PARIS/F	TRANSELF EP 80W
TOTAL LUBRIFIANTS S.A., PARIS/F	TRANSELF EP 80W-90
UNIL OPAL, SAUMUR CEDEX/F	UNIL OPAL GEAR EP SAE 80W85W
YACCO, ST PIERRE LES ELBEUF/F	BVX M 100 80W85

https://truckmanualshub.com/

Manufacturer (02A)	Trade name (02A)
YPF S.A., ENSAENADA/RA	HELICOIDAL M (80W)

Oil Class 02B

- Gear oil of viscosity grades: SAE 75W-80 /75W-85/75W-90/80W/80W-85/80W-90 /85W-90/90

NOTE:
In moderate climate zones, shift quality is impaired if viscosity grades higher than SAE 80W are used.

Manufacturer (02B)	Trade name (02B)
ADDINOL LUBE OIL GMBH, LEUNA/D	ADDINOL GETRIEBEÖL GX 80 W 90 ML
AGIP SCHMIERTECHNIK GMBH, WÜRZBURG/D	AGIP ROTRA TRUCK GEAR S, SAE 75W-90
ARAL AG, BOCHUM/D	ARAL GETRIEBEOL EP PLUS 80W-90
ARAL AG, BOCHUM/D	ARAL GETRIEBEÖL SNA-E 75W-90
AVIA MINERALÖL-AG, MÜNCHEN/D	AVIA SYNTOGEAR FE 75W-90 EP
AVIA MINERALÖL-AG, MÜNCHEN/D	AVIA SYNTOGEAR FE 80W-90
BAYWA AG, MÜNCHEN/D	BAYWA SUPER 8090 MC
BAYWA AG, MÜNCHEN/D	TECTROL MULTIGEAR PLUS 8090
BEHRAN OIL CO., TEHRAN/IR	BEHRAN SAMAND OEM 1 80W-90
BP INTERNATIONAL, PANGBOURNE, READING/GB	BP ENERGEAR DL 80W-90
BP INTERNATIONAL, PANGBOURNE, READING/GB	BP ENERGEAR HT 80W-90
BP INTERNATIONAL, PANGBOURNE, READING/GB	ENERGEAR SHX-M SAE 75W-90
BUCHER AG LANGENTHAL, LANGENTHAL/CH	GEAR ZX TP SAE 80W/90 GL4/5
BUCHER AG LANGENTHAL, LANGENTHAL/CH	MOTOREX UNISYNT TX
CASTROL INTERNATIONAL, PANGBOURNE READING/GB	CASTROL DYNADRIVE 80W-90
CASTROL INTERNATIONAL, PANGBOURNE READING/GB	CASTROL DYNADRIVE PLUS 75W90
CASTROL INTERNATIONAL, PANGBOURNE READING/GB	CASTROL MULTIDRIVE 80W90
CEPSA LUBRICANTS S.A., MADRID/E	CEPSA TRANSMISIONES EP FE+LD 75W-90
CHEVRONTEXACO, GHENT/B	MULTIGEAR 80W-90
CHEVRONTEXACO, GHENT/B	MULTIGEAR S 75W-90
CHEVRONTEXACO, SYDNEY/AUS	CALTEX TRANSLUBE LD SAE 80W
CHEVRONTEXACO, SYDNEY/AUS	CALTEX TRANSLUBE LD SAE 90
DAF TRUCKS N.V., EINDHOVEN/NL	DAF SUPER 80W90
DE OLIEBRON B.V., ZWIJNDRECHT/NL	TOR UNIGEAR 75W90 LD
ENI S.P.A. REFINING & MARKETING DIVISION, ROME/I	ROTRA LSX 75W-90
ENI S.P.A. REFINING & MARKETING DIVISION, ROME/I	ROTRA TRUCK GEAR 80W-90
EXXON MOBIL CORPORATION, FAIRFAX, VIRGINIA/USA	MOBILUBE 1 SHC 75W-90
EXXON MOBIL CORPORATION, FAIRFAX, VIRGINIA/USA	MOBILUBE S 80W-90
FALCON OIL COMPANY LTD., SHARJAH/UAE	FALCON SUPER EP GEAR OIL 80W/90 GL-4
FINKE MINERALÖLWERK GMBH, VISSELHÖVEDE/D	AVIATICON FINKOGEAR SUPER 80W-90
FUCHS PETROLUB AG, MANNHEIM/D	TITAN SUPERGEAR MC 80W-90
GENOL GMBH & CO., WIEN/A	GENOL GEAR-SYN 80W-90
GINOUVES GEORGES SA, LA FARLEDE/F	YORK 793 80W90
GINOUVES GEORGES SA, LA FARLEDE/F	YORK 896
GRUPA LOTOS SA, GDANSK/PL	TITANIS SUPER GL-5 80W/90
GULF OIL INTERNATIONAL, PITTSBURG/USA	GULF GEAR MZ 80W
GULF OIL INTERNATIONAL, PITTSBURG/USA	GULF GEAR MZ 80W-90
GULF OIL INTERNATIONAL, PITTSBURG/USA	GULF GEAR MZ 85W-90

https://truckmanualshub.com/

Manufacturer (02B)	Trade name (02B)
GULF OIL INTERNATIONAL, PITTSBURG/USA	GULF GEAR MZ 90
GULF OIL INTERNATIONAL, PITTSBURG/USA	GULF GEAR TDL 80W-90
GULF OIL INTERNATIONAL, PITTSBURG/USA	GULF SYNGEAR 75W-90
HANDEL MIJ NOVIOL B.V., NIJMEGEN/NL	KENDALL TOTAL DRIVE LINE ED 75W90
HUILES BERLIET S.A., SAINT PRIEST/F	RTO LONGEVIA P ECO 80W-90
HUILES BERLIET S.A., SAINT PRIEST/F	RTO LONGEVIA TCX ECO 75W-90
IGOL FRANCE SA, AMIENS/F	GEAR M 80W90
IGOL FRANCE SA, AMIENS/F	SYNTHEGEAR SAE75W90
KROON-OIL B.V., ALMELO/NL	TRANSMISSION OIL SP 1011
KUWAIT PETROLEUM R&T B.V., EUROPOORT RT/NL	Q8 GEAR OIL XG SAE 80W-90
KUWAIT PETROLEUM R&T B.V., EUROPOORT RT/NL	Q8 TRANS XGS SAE 75W-90
LIQUI MOLY GMBH, ULM/D	HYPOID GETRIEBEÖL TDL SAE 80W-90
MAZIVA ZAGREB D.O.O, ZAGREB/HR	INA HIPENOL SHD 75W-90
MAZIVA ZAGREB D.O.O, ZAGREB/HR	INA HIPENOL TDL 80W-90
MEGUIN GMBH & CO. KG MINERALOELWERKE, SAARLOUIS/D	MEGOL GETRIEBEOEL TRUCK-SYNTH SAE 75W-90
MEGUIN GMBH & CO. KG MINERALOELWERKE, SAARLOUIS/D	MEGOL HYPOID-GETRIEBEOEL TDL SAE 80W-90
MILLERS OILS LIMITED, BRIGHOUSE/GB	SYNTRAN FE
MINERALÖL-RAFFIN. DOLLBERGEN, UETZE-DOLLBERGEN/D	PENNASOL MEHRZWECK-GETRIEBEOEL GL 4 SAE 80W
MINERALÖL-RAFFIN. DOLLBERGEN, UETZE-DOLLBERGEN/D	PENNASOL MEHRZWECK-GETRIEBEOEL GL 4 SAE 85W-90
MINERALÖL-RAFFIN. DOLLBERGEN, UETZE-DOLLBERGEN/D	PENNASOL MEHRZWECK-GETRIEBEOEL GL 4 SAE 90
MODRICA OIL REFINERY, MODRICA/BIH	TRANSLUBE GL-4 SAE 80W
MODRICA OIL REFINERY, MODRICA/BIH	TRANSLUBE GL-4 SAE 90
MORRIS LUBRICANTS, SHREWSBURY/GB	LODEXOL SS 80W
MORRIS LUBRICANTS, SHREWSBURY/GB	SERVOL EP 80W/90
MOTUL SA, AUBERVILLIERS CEDEX/F	MOTUL GEAR SYNT TDL 75W-90
NESTE MARKKINOINTI OY, ESPOO/FIN	NESTE HYPOIDI TDL S 75W-90
NEW PROCESS AG, TÜBACH/CH	GEAROIL SYNTH
OEST, GEORG MINERALÖLWERK, FREUDENSTADT/D	OEST MEHRZWECK-GETRIEBEÖL FE SAE 80W-90
OEST, GEORG MINERALÖLWERK, FREUDENSTADT/D	OEST SYNTH GETRIEBEÖL SAE 75W-90
OK NEDERLAND, STAPHORST/NL	OK UNI-CARDAN OIL LD-SAE 75W/90
OK NEDERLAND, STAPHORST/NL	QUINTOL TRANSMISSION OIL VS-45 SAE 75W/90
OMV REFINING & MARKETING GMBH, WIEN/A	OMV GEAR OIL XD-4 SAE 80W-85
OMV REFINING & MARKETING GMBH, WIEN/A	OMV UNIGEAR S SAE 75W-90
OMV REFINING & MARKETING GMBH, WIEN/A	OMV UNIGEAR SAE 80W-90
PAKELO MOTOR OIL S.R.L, SAN BONIFACIO (VR)/I	PAKELO GLOBAL GEAR CBS SAE 75W/85
PAKELO MOTOR OIL S.R.L, SAN BONIFACIO (VR)/I	PAKELO GLOBAL GEAR SA SAE 80W
PAKELO MOTOR OIL S.R.L, SAN BONIFACIO (VR)/I	PAKELO GLOBAL GEAR SA SAE 80W/85
PAKELO MOTOR OIL S.R.L, SAN BONIFACIO (VR)/I	PAKELO GLOBAL GEAR SA SAE 80W/90
PAKELO MOTOR OIL S.R.L, SAN BONIFACIO (VR)/I	PAKELO GLOBAL GEAR SA SAE 85W/90
PAKELO MOTOR OIL S.R.L, SAN BONIFACIO (VR)/I	PAKELO GLOBAL MULTIGEAR TS SAE 75W/90
PANOLIN AG, MADETSWIL/CH	PANOLIN SUPER DUTY SYNTH 75W/90
PANOLIN AG, MADETSWIL/CH	PANOLIN TOPGEAR 80W/90
PETROGAL S.A., LISBOA/P	GALP TRANSVEX TDL 75W90
REPSOL YPF LUBRICANTES Y ESPECIALIDADES, MADRID/E	CARTAGO FE LD 75W90
S.A.E.L., MADRID/E	GULF SYTHETIC GEAR LUBRICANT 75W-90

https://truckmanualshub.com/

Manufacturer (02B)	Trade name (02B)
SHARJAH NATIONAL LUBE OIL CO. LTD., SHARJAH/UAE	SHARLU EP GEAR LUBE 80W/90 (GL-4)
SHELL INTERNATIONAL PETROLEUM COMP LTD, LONDON/GB	SHELL SPIRAX GX 80W
SHELL INTERNATIONAL PETROLEUM COMP LTD, LONDON/GB	SHELL SPIRAX GX 80W-90
SHELL INTERNATIONAL PETROLEUM COMP LTD, LONDON/GB	SHELL SPIRAX MX 80W-90
SRS SCHMIERSTOFF VERTRIEB GMBH, SALZBERGEN/D	SRS GETRIEBEFLUID SML 80W-90
SRS SCHMIERSTOFF VERTRIEB GMBH, SALZBERGEN/D	SRS WIOLIN RSG 80
STATOIL LUBRICANTS, STOCKHOLM/S	GEARWAY G4 80W
STRUB + CO AG, REIDEN/CH	STRUB MULTIGEAR SGO 80W-90
STRUB + CO AG, REIDEN/CH	VULCOGEAR SYNT SGX 75W-90
TEDEX PRODUCTION SP.Z.O.O., TOMASZOW MAZOWIECKI/PL	TEDEX GEAR OIL SAE 80W
TEDEX PRODUCTION SP.Z.O.O., TOMASZOW MAZOWIECKI/PL	TEDEX SUPER GEAR OIL (3343M) SAE 80W90
TOTAL LUBRIFIANTS S.A., PARIS/F	FINA PONTONIC FDL 75W-90
TOTAL LUBRIFIANTS S.A., PARIS/F	TOTAL TRANSMISSION MDL 80W-90
TOTAL LUBRIFIANTS S.A., PARIS/F	TOTAL TRANSMISSION RS FE 80W-90
TOTAL LUBRIFIANTS S.A., PARIS/F	TOTAL TRANSMISSION SYN FE 75W-90
TOTAL LUBRIFIANTS S.A., PARIS/F	TRANSELF SYNTHESE FE 75W-90
TOTAL LUBRIFIANTS S.A., PARIS/F	TRANSELF UNIVERSAL FE 80W-90
VALVOLINE EUROPE, DORDRECHT/NL	SYNPOWER GEAR OIL TDL 75W-90
VIAL OIL LTD., MOSCOW/RUS	CONSOL TRANS LUX SAE 75W-90
VIAL OIL LTD., MOSCOW/RUS	CONSOL TRANS LUX SAE 80W-90
YACCO, ST PIERRE LES ELBEUF/F	BVX 1000
ZELLER + GMELIN GMBH & CO., EISLINGEN/D	DIVINOL GEAR OIL STO SAE 80W-90
ZF FRIEDRICHSHAFEN AG, FRIEDRICHSHAFEN/D	ZF-ECOFLUID X

Oil Class 02D

- Gear oil of viscosity grades: SAE 75W-80 (semi-synthetic, synthetic)

Manufacturer (02D)	Trade name (02D)
AGIP SCHMIERTECHNIK GMBH, WÜRZBURG/D	AUTOL GETRIEBEÖL VSL-4 75W-80
ARAL AG, BOCHUM/D	ARAL GETRIEBEÖL SNS SAE 75W-80
AVIA MINERALÖL-AG, MÜNCHEN/D	AVIA MULTIGEAR SL 75W-80W
BP INTERNATIONAL, PANGBOURNE, READING/GB	CASTROL SYNTRANS Z
BUCHER AG LANGENTHAL LANGENTHAL/CH	MOTOREX PRISMA TF 75W/80
CEPSA LUBRICANTS S.A., MADRID/E	CEPSA TRANSMISIONES FE+LD 75W-80
CHEVRONTEXACO, GHENT/B	MULTIGEAR MTF 75W-80W
COMERCIAL ROSHFRANS, S.A. DE C.V., MEXICO, D.F/MEX	GEAR OIL EUROFLEET® SAE 75W-80
DAF TRUCKS N.V., EINDHOVEN/NL	DAF PREMIUM 75W80W
DE OLIEBRON B.V., ZWIJNDRECHT/NL	TOR MT/LD GEAR OIL 75W80
ENI S.P.A. REFINING & MARKETING DIVISION, ROME/I	ROTRA MULTIGEAR 75W-80
EXXON MOBIL CORPORATION, FAIRFAX, VIRGINIA/USA	MOBILUBE XHP 75W-80
FUCHS PETROLUB AG, MANNHEIM/D	TITAN CYTRAC LD 75W-80
GINOUVES GEORGES SA, LA FARLEDE/F	YORK 894 75W-80
GULF OIL INTERNATIONAL, PITTSBURG/USA	GULF GEAR TX 75W-80

https://truckmanualshub.com/

Manufacturer (02D)	Trade name (02D)
HANDEL MIJ NOVIOL B.V., NIJMEGEN/NL	KENNOCO FLEET TRANSMISSION LUBE ED SAE 75W-80W
HUILES BERLIET S.A., SAINT PRIEST/F	RTO LONGEVIA ECO 75W-80
IGOL FRANCE SA, AMIENS/F	TRANS GEAR ZF 75W80
KROON-OIL B.V., ALMELO/NL	GEAR SYNTH MT/LD 75W-80
KUWAIT PETROLEUM R&T B.V., EUROPOORT RT/NL	Q8 T 60 SAE 75W-80
LIQUI MOLY GMBH, ULM/D	HOCHLEISTUNGS-GETRIEBEÖL GL 3+ SAE 75W-80
MAZIVA ZAGREB D.O.O, ZAGREB/HR	INA TRANSMOL HD 75W-80
MEGUIN GMBH & CO. KG MINERALOELWERKE, SAARLOUIS/D	MEGOL HOCHLEISTUNGSGETRIEBEOEL GL 4 SAE 75W-80
MOTUL SA, AUBERVILLIERS CEDEX/F	MOTUL MOTYLGEAR 75W-80
OK NEDERLAND, STAPHORST/NL	OK CARDAN OIL MT/LD SAE 75W/80
OMV REFINING & MARKETING GMBH, WIEN/A	OMV GEAR OIL LDI SAE 75W-80
PAKELO MOTOR OIL S.R.L, SAN BONIFACIO (VR)/I	PAKELO GOLDENGEAR LD SAE 75W/80
PANOLIN AG, MADETSWIL/CH	TRANSGEAR 75W/80W
PETROGAL S.A., LISBOA/P	GALP TRANSVEX TDL ULTRA 75W80
PETRONAS LUBRICANTS INTERN., KUALA LUMPUR/MAL	TUTELA TRUCK GEAR FE (SAE 75W80)
PETRONAS LUBRICANTS INTERN., KUALA LUMPUR/MAL	TUTELA TRUCK GEARLITE SAE 75W80
RALOY LUBRICANTES S.A. DE C.V., TIANGUISTENCO/MEX	NEW EXPERIENCE SYNTHETIC OIL 341
REPSOL YPF LUBRICANTES Y ESPECIALIDADES, MADRID/E	REPSOL CARTAGO FE LD 75W-80
S.A.E.L., MADRID/E	GULF INTARDER GEAR OIL 75W-80
SHELL INTERNATIONAL PETROLEUM COMP LTD, LONDON/GB	SHELL TRANSMISSION OIL ZFLD 75W-80
TOTAL LUBRIFIANTS S.A., PARIS/F	FINA PONTONIC TI 75W-80
TOTAL LUBRIFIANTS S.A., PARIS/F	TOTAL TRANSMISSION TI 75W-80
TOTAL LUBRIFIANTS S.A., PARIS/F	TRANSELF LD 75W-80
UNIL OPAL, SAUMUR CEDEX/F	GERION LD 75W80
VALVOLINE EUROPE, DORDRECHT/NL	DURABLEND GEAR OIL GL-4 SAE 75W-80
YACCO, ST PIERRE LES ELBEUF/F	BVX Z-500 75W-80

Oil Class 02E

- Gear oil of viscosity grades: SAE 75W-80 (synthetic)

Manufacturer (02E)	Trade name (02E)
CASTROL INTERNATIONAL, PANGBOURNE READING/GB	CASTROL SYNTRANS MAX 75W-80
ZF FRIEDRICHSHAFEN AG, FRIEDRICHSHAFEN/D	ZF-ECOFLUID M

Oil Class 02L

- Gear oil of viscosity grades: SAE 75W-80 (semi-synthetic, synthetic)

Manufacturer (02L)	Trade name (02L)
BAYWA AG, MÜNCHEN/D	TECTROL SYNTOGEAR MA 7580
FUCHS PETROLUB AG, MANNHEIM/D	FUCHS TITAN CYTRAC MAN SYNTH 75W-80
HUILES BERLIET S.A., SAINT PRIEST/F	RTO LONGEVIA BZV ECO 75W-80
TOTAL LUBRIFIANTS S.A., PARIS/F	TOTAL TRANSMISSION XS FE 75W-80

https://truckmanualshub.com/

About Oil Types (for Europe)

- Oil Class 02A
  Oils with a viscosity corresponding to any of the following numbers :
  SAE 80W/80W-85/80W-90/85W-90/90

NOTE:
If you use a transmission oil with a viscosity number of SAE 80W or above in a moderate ambient temperature condition, gears will become difficult engage.

- Oil Class 02B
  Oils with a viscosity corresponding to any of the following numbers :
  SAE 75W-80/75W-85/75W-90/80W/80W-85/80W-90/85W-90/90

NOTE:
If you use a transmission oil with a viscosity number of SAE 80W or above in a moderate ambient temperature condition, gears will become difficult engage.

- Oil Class 02D
  Semi-synthetic and synthetic oils with a viscosity corresponding to the following number :
  SAE 75W-80
- Oil Class 02L
  Semi-synthetic and synthetic oils with a viscosity corresponding to any of the following number :
  SAE 75W-80
- Oil Class 02E (ZF-Ecofluid M)
  Synthetic oils with a viscosity corresponding to any of the following number :
  SAE 75W-80

Transmission Oil - FS8209A/FSO5206B Type

Carry out periodic maintenance on the transmission in order to maintain its original performance. It is particularly important to replace the transmission oil according to the Maintenance Schedule.
The Maintenance Schedule varies according to the type of oil used.

Mineral Oil

Operating conditions	Replacement interval	Inspection and replacement item
Highway use	First 5,000 to 10,000 km (3,000 to 6,000 miles)	Change transmission oil at the driver's discretion
	Every 20,000 km (12,000 miles)	Check oil level and inspect for leakage
	Every 100,000 km (62,000 miles) or every 12 months	Change transmission oil
Off-highway use	First 30 hours	Change transmission oil at the driver's discretion
	Every 40 hours	Check oil level and inspect for leakage
	Every 500 hours	Change transmission oil (driving on unpaved roads)
	Every 1,000 hours	Change transmission oil (driving on normal paved roads)

Recommended lubricants

Type	Grade (SAE)	Outside temperature
Heavy Duty Engine Oil API-CD	50	- 12°C (10°F) or higher
	40	- 12°C (10°F) or higher
	30	Up to - 12°C (10°F)
Mild EP Gear Oil API-GL-4	90	- 12 to 38°C (10 to 100°F)
	80W	- 26 to 21°C (-15 to 70°F)

https://truckmanualshub.com/

Synthetic Oil

Operating conditions	Replacement interval	Inspection and replacement item
Highway use	Every 20,000 km (12,000 miles)	Check oil level and inspect for leakage (all recommended oils)
	Every 500,000 km (300,000 miles) or 36 months	Change transmission oil [when COGNIS (HENKEL/EMERY)MTF4200 is used]
	Every 400,000 km (240,000 miles) or 36 months	Change transmission oil [when CASTROL SYNTRANS is used]
	Every 300,000 km (180,000 miles) or 36 months	Change transmission oil [when MOBILUBE 1 SHC is used]
Off-highway use	Every 40 hours	Check oil level and inspect for leakage (all recommended oils)
	Every 500 hours	Change transmission oil (all recommended oils; driving on unpaved roads)
	Every 36 months	Change transmission oil (all recommended oils; driving on normal paved roads)

Recommended oil

- COGNIS (HENKEL/EMERY)MTF4200
- CASTROL SYNTRANS
- MOBILUBE 1 SHC

Semi-Synthetic Oil

Operating conditions	Replacement interval	Inspection and replacement item
Highway use	Every 20,000 km (12,000 miles)	Check oil level and inspect for leakage (all recommended oils)
	Every 300,000 km (180,000 miles) or 36 months	Change transmission oil (all recommended oils)
Off-highway use	Every 40 hours	Check oil level and inspect for leakage (all recommended oils)
	Every 500 hours	Change transmission oil (all recommended oils; driving on unpaved roads)
	Every 36 months	Change transmission oil (all recommended oils; driving on normal paved roads)

Recommended oil

- ELF TRANSELF 75W/80W (known as RVI Longevia)
- MOBIL MOBILUBE XHP
- KUWAIT Q8 T 60
- FUCHS DEA DEAGEAR LD & TITAN CYTRAC LD
- FIAT LUBRIFICANTI TUTELA TRUCK GEAR FE
- DE OLIEBRON TOR MT/LD GEAR OIL
- OMV AKTIENGESELLCHAFT OMVLDL 75W-80
- PAKELO MOTOR OIL PAKELO GOLDENGEAR LD
- TEXACO MULTIGEAR MTF 75W/80W

NOTE:

- When an oil filter elements is installed, replace it when changing the oil.
- If your vehicle is used under service conditions, change the oil accordingly.

https://truckmanualshub.com/

RS23/RS40 Type Axle

The differential gear of your vehicle can stay in good conditions through regular maintenance. Above all, make sure to replace the differential oil and filter element regularly in accordance with the specified maintenance schedule.

Driving conditions	Inspection and refilling (as required)	Differential oil change	Differential oil change and filter element replacement
Off-highway use	Every 5,000 km (3,000 miles)	After first 5,000 km (3,000 miles) or first regular service time (whichever is earlier)	Every 80,000 km (50,000 miles) or 6 months (whichever is earlier)
Highway use	Every 5,000 km (3,000 miles)	After first 5,000 km (3,000 miles) or first regular service time (whichever is earlier)	Every 160,000 km (100,000 miles) or 6 months (whichever is earlier)

Recommended Oil

Type	API/MIL rating	SAE viscosity rating
Mineral oil (O-76A)	GL5/MIL-L-2105D	SAE 85W-140
Synthetic oil (O-76M)	GL5/MIL-L-2105D (if approved by the body manufacturer)	SAE 75W-140/75W-90

https://truckmanualshub.com/

RS25 Type Axle

The differential gear of your vehicle can stay in good conditions through regular maintenance. Above all, make sure to replace the differential oil and filter element regularly in accordance with the specified maintenance schedule.

Check and Replacement Interval

Vocation or Vehicle Operation	Line-haul	City Delivery	Construction, Refuse, Yard Tractor, Logging, Heavy Haul, Mining, Oil Field, Rescue
Initial Oil Change	Not required	Not required	Not required
Check Oil Level Add the correct type and amount of oil as required.	Every 40,000 km (25,000 miles) or the fleet maintenance interval, whichever comes first	Every 16,000 km (10,000 miles), once a month or the fleet maintenance interval, whichever comes first	Every 8,000 km (5,000 miles), once a month or the fleet maintenance interval, whichever comes first [1]
Petroleum-Based Oil Change on Axles	Every 160,000 km (100,000 miles) or annually, whichever comes first	Every 80,000 km (50,000 miles) or annually, whichever comes first	Every 40,000 km (25,000 miles) or annually, whichever comes first
Synthetic Oil Change on Axles [2]	Every 800,000 km (500,000 miles) or every 4 years, whichever comes first	Every 400,000 km (250,000 miles) or every 3 years, whichever comes first	Every 160,000 km (100,000 miles) or every 2 years, whichever comes first

[1] For continuous heavy-duty operation, check the oil level every 1,600 km (1,000 miles).

[2] These intervals apply to approved semi-synthetic and full-synthetic oils only. For a list of approved extended-drain axle oils, refer to TP-9539, Approved Rear Drive Axle Lubricants.

Recommended Oil

Type	API/MIL rating	SAE viscosity rating
Mineral oil (O-76A)	GL5/MIL-L-2105D	SAE 85W-140
Synthetic oil (O-76M)	GL5/MIL-L-2105D (if approved by the body manufacturer)	SAE 75W-140/75W-90

https://truckmanualshub.com/

Maintenance Schedule for Severe-condition

Introduction

The vehicle needs to be maintained more often if it is driven in severe condition.

A : Driving with a trailer
B : Operation involving frequent starts and stops
C : Driving on rough roads, mountain roads or uphill roads
D : Driving in dusty areas
Driving on snowy roads or along the seashore

Maintenance Schedule for Severe-condition

Item		Distance covered	Condition					
			A	B	C	D	E	B+E
Air Cleaner Element		Replace every 24,000 km (15,000 miles) or after 6th cleaning				D		
Engine Oil	4HK1 Engine model 6HK1 Engine model (Except 6HK1-TCN/TCC Engine model for Australia)	Change every 10,000 km (6,000 miles)	A			D		B+E
	6HK1-TCN/TCC Engine model for Australia	Change every 10,000 km (6,000 miles) [Engine oil SAE 10W-40 is recommended for use]	If one of the following applies to the usage conditions. • The length of time for PTO use is 20% or longer of the engine operating time. • The length of time for idling is 50% or longer of the engine operating time. • The average vehicle speed is 10 km/h(6 MPH) or slower.					
	6HF1 Engine model for Thailand	Change every 5,000 km (3,000 miles)	A			D		B+E
	6HF1 Engine model (When using ISUZU genuine for Australia)	Change every 10,000 km (6,000 miles)	A			D		B+E
	6HF1 Engine model (When using FUCHS for Australia)	Change every 5,000 km (3,000 miles)	A			D		B+E

https://truckmanualshub.com/

Item		Distance covered	Condition					
			A	B	C	D	E	B+E
Engine Oil Filter	4HK1 Engine model 6HK1 Engine model	Change every 10,000 km (6,000 miles)	A			D		B+E
	6HF1 Engine model for Thailand	Change every 5,000 km (3,000 miles)	A			D		B+E
	6HF1 Engine model (When using ISUZU genuine engine oil for Australia)	Change every 10,000 km (6,000 miles)	A			D		B+E
	6HF1 Engine model (When using FUCHS engine oil for Australia)	Change every 5,000 km (3,000 miles)	A			D		B+E
Engine Oil Separator (6HK1 Engine model for Euro3 specification) (4HK1 Engine model for Euro4 / Euro3 specification)		Change every 10,000 km (6,000 miles)	A			D		B+E
Loose or otherwise improper installation of Exhaust Pipe		Inspect every 2,000 km (1,250 miles)	A	B	C		E	
Transmission Oil	MZX/MZW/MZZ model	Replace every 24,000 km (15,000 miles)	A		C			
	MLD model	Replace every 24,000 km (15,000 miles)	A		C			
	ZF6S1000 model	Refer to “Maintenance Schedule” in this section.						
	ZF9S1110 model	Refer to “Maintenance Schedule” in this section.						
	FSO5206B model	Refer to “Maintenance Schedule” in this section.						
	FS8209A model	Refer to “Maintenance Schedule” in this section.						
Transmission Fluid	ALLISON2500 model	Replace every 20,000 km (12,000 miles)	A	B	C			
	ALLISON3000/3500 model	Replace every 20,000 km (12,000 miles)	A	B	C			
Transmission Main Filter	ALLISON2500 model	Replace every 20,000 km (12,000 km), 500 hours or 6 months	A	B	C			
	ALLISON3000/3500 model	Replace every 20,000 km (12,000 km), 500 hours or 6 months	A	B	C			

https://truckmanualshub.com/

Item		Distance covered	Condition					
			A	B	C	D	E	B+E
Transmission Cooling System Filter	ALLISON2500 model	Replace every 20,000 km (12,000 km), 500 hours or 6 months	A	B	C			
	ALLISON3000/3500 model	Replace every 20,000 km (12,000 km), 500 hours or 6 months	A	B	C			
Clutch fluid	Manual Transmission Vehicle	Change every 24,000 km (15,000 miles)		B				
Smoother Clutch Oil	Vehicle equipped with the Smoother System	Change every 24,000 km (15,000 miles)	A		C			
Transfer Gear Case Oil	4WD model	Replace every 12,000 km (7,500 miles)	A		C			
Worn Propeller Shaft Universal Joints and Splines		Inspect every 24,000 km (15,000 miles)			C			
Rear Axle Differential Gear Oil	Vehicle equipped with ISUZU produced Axle	Change every 24,000 km (15,000 miles)	A		C			
Rear Axle Differential Oil	FVR model with ARVIN MERITOR produced Axle	Refer to “Maintenance Schedule” in this section for RS25 type axle.						
Rear Wheel Hub Bearing Oil	FVM model with ARVIN MERITOR produced Axle	Change every 24,000 km (15,000 miles)	A		C			
Inter-differential Gear Oil	FVZ model	Change every 24,000 km (15,000 miles)	A		C			
Front Axle Differential Gear Oil	4WD model	Change every 24,000 km (15,000 miles)	A		C			
Front Wheel Hub Bearing Oil	Vehicle equipped with ARVIN MERITOR produced Axle	Replace every 24,000 km (15,000 miles)	A		C			
Leaf Spring U-bolt Nuts		Tighten to the Specified Torque every 24,000 km (15,000 miles)			C			

https://truckmanualshub.com/

Item		Distance covered	Condition					
			A	B	C	D	E	B+E
Air Suspension's Beam Bolt Nuts/U-bolt Nuts	Air Suspension model	Tighten to the Specified Torque every 24,000 km (15,000 miles)			C			
Loose or damaged air suspension main support members	Air Suspension model	Inspect every 24,000 km (15,000 miles)			C			
Damage to, or Looseness or Excessive Play in Power Steering Joint	except Europe	Inspect every 6,000 km (3,750 miles)			C			
	for Europe	Inspect every 2,500 km (1,500 miles)			C			
Brake Lining Wear		Inspect every 2,500 km (1,500 miles)	A	B	C	D		
Brake Drum Wear or Damage		Inspect every 20,000 km (12,000 miles)	A	B	C	D		
Brake Pad Wear (Vehicle equipped with Disc Brake)		Inspect every 2,500 km (1,500 miles)	A	B	C	D		
Brake Disc Wear or Damage (Vehicle equipped with Disc Brake)		Inspect every 20,000 km (12,000 miles) or every 6 months	A	B	C	D		

https://truckmanualshub.com/

Recommended Fluids, Lubricants and Diesel Fuels (except Europe)

Introduction

In order to obtain the maximum performance and the longest service life from your ISUZU vehicles, it is very important to select and use correctly best lubricant and diesel fuels.
When lubricating, be sure to use ISUZU genuine lubricants or recommended lubricants listed below, according to the maintenance schedule for each vehicle model.
The lubrication intervals in the maintenance schedule and the coverage and period of new vehicle warranty are based on the use of ISUZU genuine lubricants or recommended lubricants as given in the chart which will serve as a guide for selecting lubricants of proper brand name.

Diesel Engine Crankcase with DPD (Low Ash Oil)

MAKE	BRAND	GRADE		
		API	ACEA	JASO
ISUZU GENUINE	**BESCO CLEAN SUPER (10W-40)**			**DH-2**
ISUZU GENUINE	**BESCO CLEAN (10W-30, 40)**			**DH-2**
Shell	Rimula R6 LM (10W-40)	CI-4/CH-4/ CG-4/CF-4/ CF	E7/E6/E4	DH-2
ExxonMobil	Delvac XHP LE (10W-40)		E6	
ExxonMobil	Delvac MX ESP (15W-40)	CJ-4		DH-2
ExxonMobil	Delvac 1300 Super (15W-40)	CJ-4		DH-2
Castrol	Tection Global ES (15W-40)	CJ-4		
BP	Vanellus Eco (10W-40)		E6	
BP	Vanellus Multi Fleet Eco (15W-40)	CJ-4		
Caltex/Chevron/ Texaco	Delo 400 LE (15W-40)	CJ-4	E9	DH-2
Caltex/Chevron/ Texaco	Delo XLE Multigrade (10W-40)		E6/E7	
Caltex/Chevron/ Texaco	Ursa Ultra X (10W-40)		E6/E7	

NOTE:
The oils recommended in the "Diesel Engine Crankcase" list can also be used for DPD-equipped vehicles.
If you use a low ash content engine oil, increased exhaust pressure may extend the required distance between DPD filter cleanings.

https://truckmanualshub.com/

Diesel Engine Crankcase without DPD

MAKE	BRAND	GRADE		
		API	ACEA	JASO
ISUZU GENUINE	**BESCO MULTI-Z TYPE CF-4 (10W-30)**	**CF-4**		
ISUZU GENUINE	**BESCO S-3 (10W), (20W), (30), (40)**	**CD**		
Shell	Rimula R3X (15W-40)	CH-4/CG-4 CF-4/CF	E5/E3	DH-1
Shell	Rimula R2 Extra (15W-40)	CF-4/CF	E2	
Shell	Rimula R2 (30), (40)	CF		
Shell	Rimula Ultra XT (5W-40)	CH-4/CG-4/ CF-4/CF		
ExxonMobil	Mobil Delvac MX (15W-40)	CI-4		
Castrol	Tection J-Max (15W-40)	CH-4	E3	DH-1
BP	Vanellus C6 Extra (15W-40)	CH-4	E3/E5	
Caltex/Chevron	Delo Gold (30), (40)	CF	E2	
Caltex/Chevron	Delo Gold Multigrade (15W-40)	CH-4/CF	E3	
Caltex/Chevron	Delo 400 Multigrade (15W-40)	CI-4 Plus	E7	DH-1

CNG Engine Crankcase (for Australia)

MAKE	BRAND	GRADE		
		API	ACEA	JASO
ISUZU GENUINE	**BESCO CNG ENGINE OIL (10W-30)**			
FUCHS	TITAN CNG MC (10W-40)			

CNG Engine Crankcase (for Thailand)

MAKE	BRAND	GRADE		
		API	ACEA	JASO
ISUZU GENUINE	**BESCO CNG ENGINE OIL (10W-30)**			
PTT	DYNAMIC LA (15W-40)			

https://truckmanualshub.com/

Manual Transmission (MZX/MZW/MLD models), Transfer Case, Differential (without LSD) and Oil Lubricated Hub Bearing

MAKE	BRAND	GRADE		
		API	ACEA	JASO
ISUZU GENUINE	**BESCO GEAR OIL SH (80W-90), (90), (140)**	**GL-5**		
ExxonMobil	Mobilube HD (80W-90)	GL-5		
Castrol	Dynadrive (80W-90)	GL-5		
BP	Hypogear (80W-90)	GL-5		
Caltex	Thuban GL-5 EP (80W-90), (85W-140)	GL-5		

Manual Transmission (MZZ models)

MAKE	BRAND	GRADE		
		API	ACEA	JASO
ISUZU GENUINE	**BESCO GEAR OIL SH (80W-90), (90)**	**GL-5**		
ExxonMobil	Mobilube HD (80W-90)	GL-5		
Castrol	Dynadrive (80W-90)	GL-5		
BP	Hypogear (80W-90)	GL-5		
Caltex	Thuban GL-5 EP (80W-90)	GL-5		

Differential (with LSD)

MAKE	BRAND	GRADE		
		API	ACEA	JASO
Shell	Spirax A LS 90 (90)	GL-5		
ExxonMobil	Mobilube LS (85W-90)	GL-5		
Castrol	LSX (85W-140)	GL-5		
BP	Limslip (85W-140)	GL-5		
Caltex	Gear Oil LSD (90)	GL-5		

Smoother Clutch Oil (Smoother)

MAKE	BRAND	GRADE		
		API	ACEA	JASO
ISUZU GENUINE	**BESCO ATF III**			

https://truckmanualshub.com/

Automatic Transmission, Power Steering

MAKE	BRAND	GRADE		
		API	ACEA	JASO
ISUZU GENUINE	**BESCO ATF II (Power Steering only)**			
ISUZU GENUINE	**BESCO ATF III**			
Shell	Donax TG (Dexron® III)			
Castrol	TQ DIII (Dexron® III)			
BP	Autoran DXIII (Dexron® III)			
Caltex/Texaco	Texamatic 1888 (Dexron® III)			

Center Bearing, Clutch Shift Block, Grease Lubricated Hub, Water Pump, Propeller Shaft Sliding Yoke, Universal Joint (Multi Purpose Grease)

MAKE	BRAND	GRADE		
		API	ACEA	JASO
ISUZU GENUINE	**BESCO L-2 GREASE (No.2)**			
ISUZU GENUINE	**BESCO L-3 GREASE (No.3)**			
Shell	Retinax LX2 (No.2)			
ExxonMobil	Mobilgrease XHP 222/223 (No.2), (No.3)			
Caltex/Texaco	Starplex-2 (No.2)			

Multi-Purpose Grease Containing Molybdenum

MAKE	BRAND	GRADE		
		API	ACEA	JASO
Shell	Retinax HDX2 (No.2)			
Caltex	Molytex Grease EP2 (No.2)			

Engine Cooling System

MAKE	BRAND
ISUZU GENUINE	**BESCO LLC SUPER TYPE E, AS**
Caltex/Texaco/Chevron	Extended Life Coolant
Caltex/Texaco/Chevron	Havoline XLC
Caltex/Texaco/Chevron	Delo ELC

https://truckmanualshub.com/

Engine coolant prevents engine damage due to freezing and protects the cooling system from corrosion. Use a mixture of the engine coolant concentrate solution and distilled water or deionized water as the engine coolant. Use only an Isuzu-recommended engine coolant solution. Mix with for 30 or 50% solution and the rest water.

Usage region	Outside temperature	Coolant concentration	
		Isuzu genuine coolant	Other than Isuzu genuine coolant*
Warm region	Up to -12°C(10°F)	30%	50%
Cold region	Up to -30°C(-22°F)	50%	50%

*For other than Isuzu genuine coolant(TEXACO/ CALTEX/CHEVRON, etc.), it is recommended to use directly " 50/50 Pre-diluted" product which is already diluted to 50% concentration.

If the mixture contains over 60% engine coolant, the possibility of overheating increases; conversely, if the mixture contains less than 30%, protection against corrosion will be inadequate. Accordingly, the mixture should contain between 30% and 50% engine coolant.

NOTE:

- If the engine or vehicle is used at -30°C(-22°F) or below, the coolant concentration of 55% is recommended.
- Using coolant at any coolant concentration other than that specified may reduce anti-freezing performance, and engine coolant may freeze.

Electric-hydraulic Cab Tilt Pump

GRADE
MIL-H-5606E aviation oil or equivalent

Clutch and Brake Fluid Reservoir

MAKE	BRAND	GRADE*
ISUZU GENUINE	**BESCO brake fluid super**	**DOT 3**
AC Delco™	Delco supreme11	DOT 3

* : This material meets GENERAL MOTORS ENGINEERING STANDARDS GM4653M,FMVSS 116 or SAE J1703 requirements.

Diesel Fuel / Applicable Standard

Japanese Industrial Standards (JIS)	Based on K2204 : 1997 Diesel Fuel
Deutsche Industrie Normen (DIN)	Based on EN590 : 1997
American Society for Testing and Materials (ASTM)	Based on D975-04c NO.1-D S500 or NO.2-D S500 (below 500 ppm)
British Standards (BS)	Based on EN590 : 1997

https://truckmanualshub.com/

Diesel Fuel / Applicable Standard (Sulfur content below 50 ppm)

Japanese Industrial Standards (JIS)	Based on K2204 : 2007 Diesel Fuel
Deutsche Industrie Normen (DIN)	Based on EN590 : 2004
American Society for Testing and Materials (ASTM)	Based on D975-04c NO.1-D S15 or NO.2-D S15 (below 15 ppm)
British Standards (BS)	Based on EN590 : 2004

CAUTION:
Be sure to use low-sulfur diesel fuel (with sulfur content no higher than 50 ppm) or extra-low-sulfur diesel fuel (with sulfur content no higher than 10 ppm).
If you supply the vehicle with poor-quality fuel, water-removal additive or other additive, gasoline, kerosene or alcohol-based fuel, it could harm the fuel filter, prevent proper movement of fuel-lubricated parts in the injectors and adversely affect engine components, possibly resulting in a breakdown.
If you accidentally put the wrong fuel in the tank, drain it all out. Starting the engine with the wrong fuel in the tank could result in a fire and engine damage.

https://truckmanualshub.com/

Recommended Fluids, Lubricants and Diesel Fuels (for Europe)

Introduction

In order to obtain the maximum performance and the longest service life from your ISUZU vehicles, it is very important to select and use correctly best lubricant and diesel fuels.
When lubricating, be sure to use lubricants listed below, according to the maintenance schedule for each vehicle model.
The lubrication intervals in the maintenance schedule and the coverage and period of new vehicle warranty are based on the use of lubricants whose grade is listed in the chart which will serve as a guide for selecting lubricants of proper brand name.

Diesel Engine Crankcase with DPD (Low Ash Oil)

GRADE			
API	ACEA	JASO	OTHER
CJ-4	E6 E9	DH-2	

NOTE:
The oils recommended in the "Diesel Engine Crankcase" list can also be used for DPD-equipped vehicles.
If you use a low ash content engine oil, increased exhaust pressure may extend the required distance between DPD filter cleanings.

Diesel Engine Crankcase without DPD

GRADE			
API	ACEA	JASO	OTHER
CF CF-4 CH-4 CI-4	E4 E7	DH-1	

https://truckmanualshub.com/

Manual Transmission (MZX/MZW/MZZ/MLD models), Differential (without LSD) and Oil Lubricated Hub Bearing

GRADE			
API	ACEA	JASO	OTHER
GL-5			BESCO GEAR OIL SH (80W-90), (90), (140) (ISUZU GENUINE) Mobilube HD (80W-90) (ExxonMobil) Dynadrive (80W-90) (Castrol) Hypogear (80W-90) (BP) Thuban GL-5 EP (80W-90), (85W-140) (Caltex)

Differential (with LSD)

GRADE			
API	ACEA	JASO	OTHER
GL-5			BESCO GEAR OIL LSD (140) (ISUZU GENUINE) Spirax A LS 90 (90) (Shell) Mobilube LS (85W-90) (ExxonMobil) LSX (90) (Castrol) Limslip (85W-140) (BP) Gear Oil LSD (90) (Caltex)

Smoother Clutch Oil (Smoother)

GRADE			
API	ACEA	JASO	OTHER
			BESCO ATF III (ISUZU GENUINE)

Power Steering

GRADE			
API	ACEA	JASO	OTHER
			BESCO ATF III (ISUZU GENUINE) Dexron® III or equivalent

https://truckmanualshub.com/

Center Bearing, Clutch Shift Block, Grease Lubricated Hub, Water Pump, Propeller Shaft Sliding Yoke, Universal Joint (Multi Purpose Grease)

GRADE			
API	ACEA	JASO	OTHER
			NLGI #2 or #3 multi purpose type grease

Engine Cooling System

OTHER
GENERAL MOTORS ENGINEERING STANDARDS GM 6277-M or equivalent

Engine coolant prevents engine damage due to freezing and to protects the cooling system from corrosion. Use a mixture of the engine coolant concentrate solution and distilled water or deionized water as the engine coolant. Use only an Isuzu-recommended engine coolant solution. Mix with for 50% solution and the rest water.

Usage region	**Outside temperature**	Coolant concentration*
Warm region	Up to -12°C(-10°F)	50%
Cold region	Up to -30°C(-22°F)	50%

*Direct use of “ 50/50 Pre-diluted” product which is already diluted to 50% concentration is recommended.

NOTE:

- If the engine or vehicle is used at -30°C(-22°F) or below, the coolant concentration of 55% is recommended.
- Using coolant at any coolant concentration other than that specified may reduce anti-freezing performance, and engine coolant may freeze.

Electric-hydraulic Cab Tilt Pump

GRADE
MIL-H-5606E aviation oil or equivalent

https://truckmanualshub.com/

Clutch and Brake Fluid Reservoir

MAKE	BRAND	GRADE*
ISUZU GENUINE	**BESCO brake fluid super**	**DOT 3**
AC Delco™	Delco supreme11	DOT 3

* : This material meets GENERAL MOTORS ENGINEERING STANDARDS GM4653M,FMVSS 116 or SAE J1703 requirements.

Diesel Fuel / Applicable Standard

Japanese Industrial Standards (JIS)	Based on K2204 : 1997 Diesel Fuel
Deutsche Industrie Normen (DIN)	Based on EN590 : 1997
American Society for Testing and Materials (ASTM)	Based on D975-04c NO.1-D S500 or NO.2-D S500 (below 500 ppm)
British Standards (BS)	Based on EN590 : 1997

Diesel Fuel / Applicable Standard (Sulfur content below 50 ppm)

Japanese Industrial Standards (JIS)	Based on K2204 : 2007 Diesel Fuel
Deutsche Industrie Normen (DIN)	Based on EN590 : 2004
American Society for Testing and Materials (ASTM)	Based on D975-04c NO.1-D S15 or NO.2-D S15 (below 15 ppm)
British Standards (BS)	Based on EN590 : 2004

CAUTION:
Be sure to use low-sulfur diesel fuel (with sulfur content no higher than 50 ppm) or extra-low-sulfur diesel fuel (with sulfur content no higher than 10 ppm).
If you supply the vehicle with poor-quality fuel, water-removal additive or other additive, gasoline, kerosene or alcohol-based fuel, it could harm the fuel filter, prevent proper movement of fuel-lubricated parts in the injectors and adversely affect engine components, possibly resulting in a breakdown.
If you accidentally put the wrong fuel in the tank, drain it all out. Starting the engine with the wrong fuel in the tank could result in a fire and engine damage.

https://truckmanualshub.com/

Oil Viscosity Chart

Oil Viscosity Chart

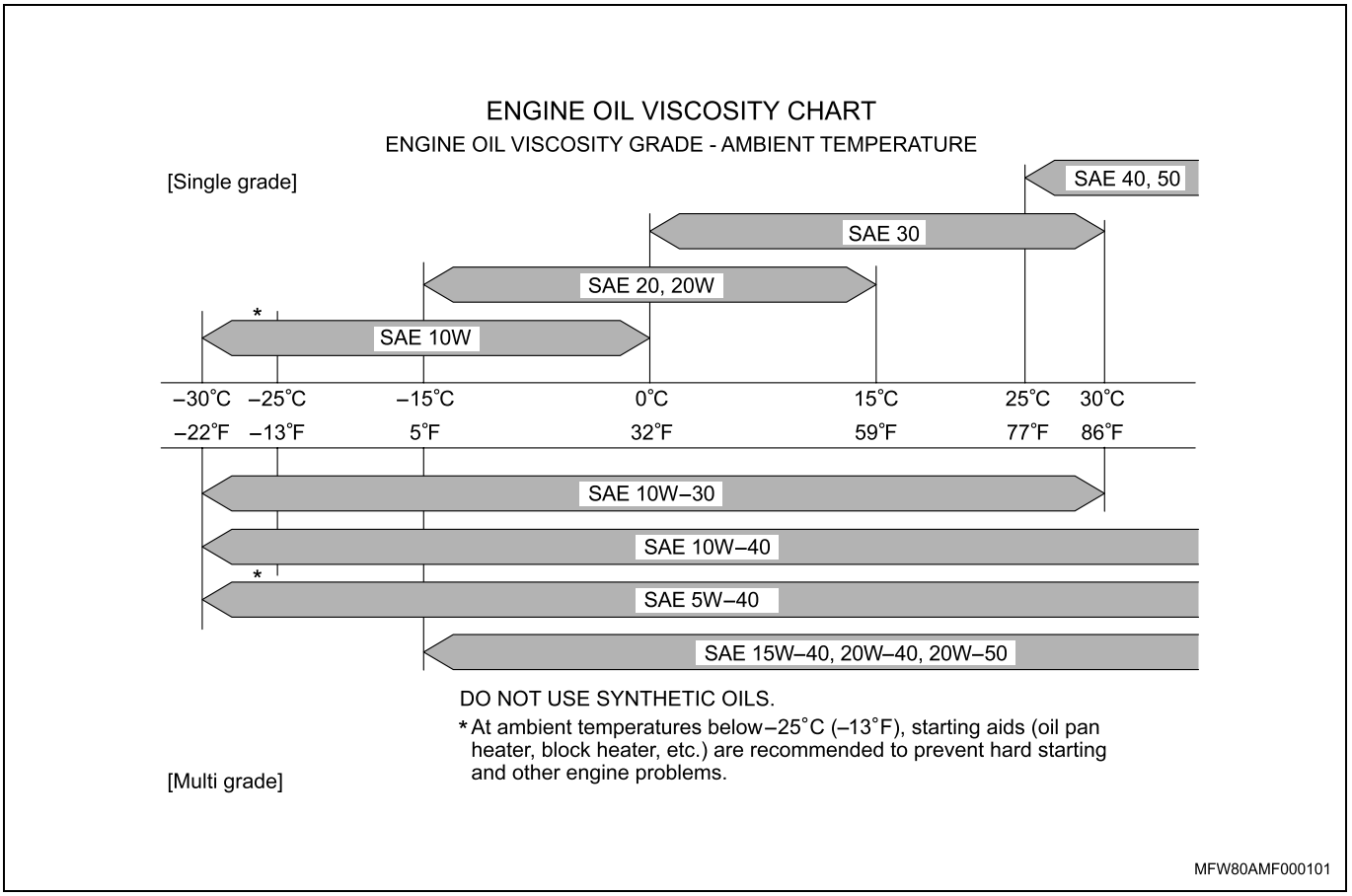

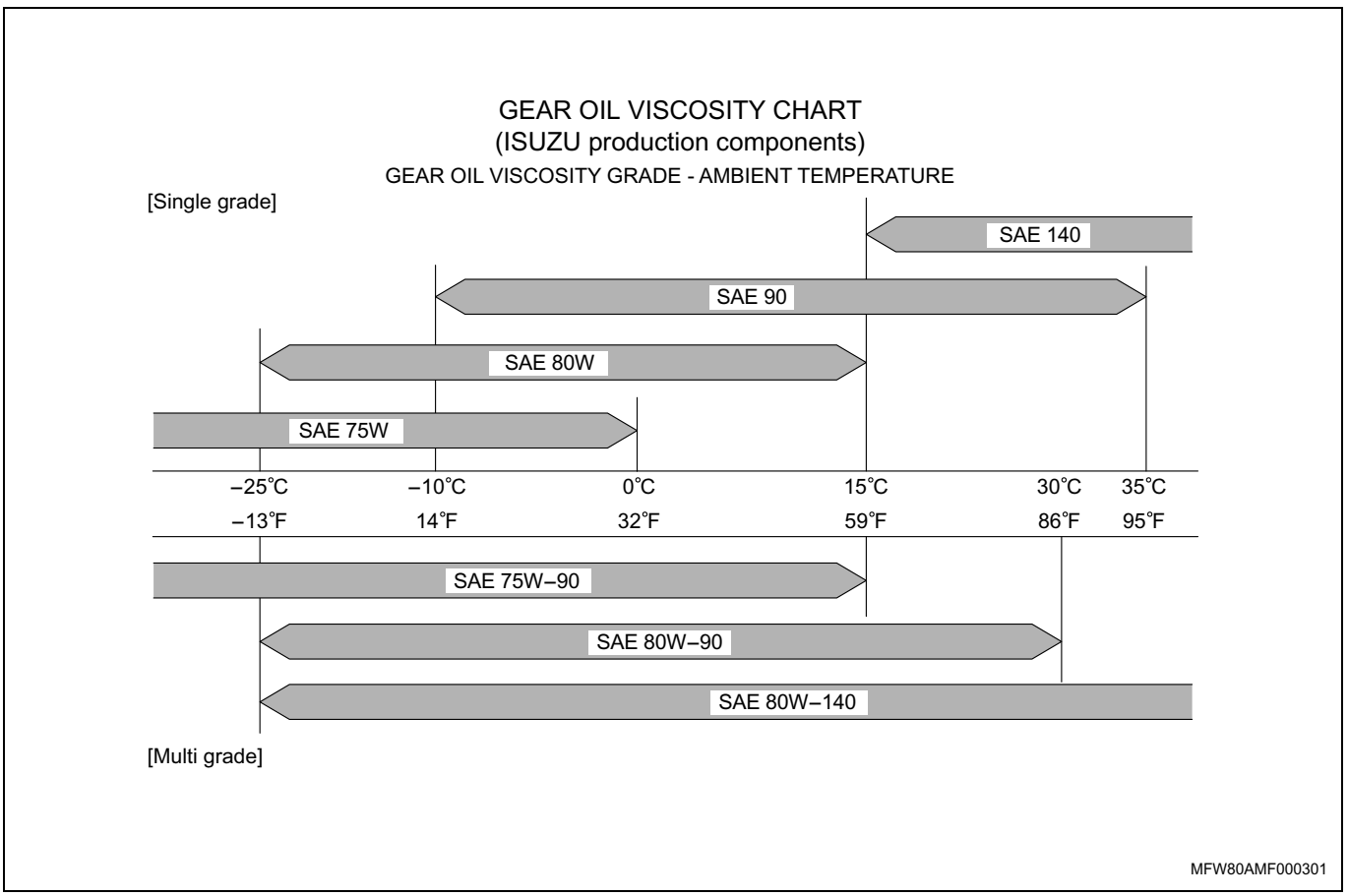

https://truckmanualshub.com/

Lubrication Chart

Lubrication Chart

FRR/FSR/FTR/FVR/GVR models without FG941 (MFS66) Type Axle (for Euro4 specification except Europe)

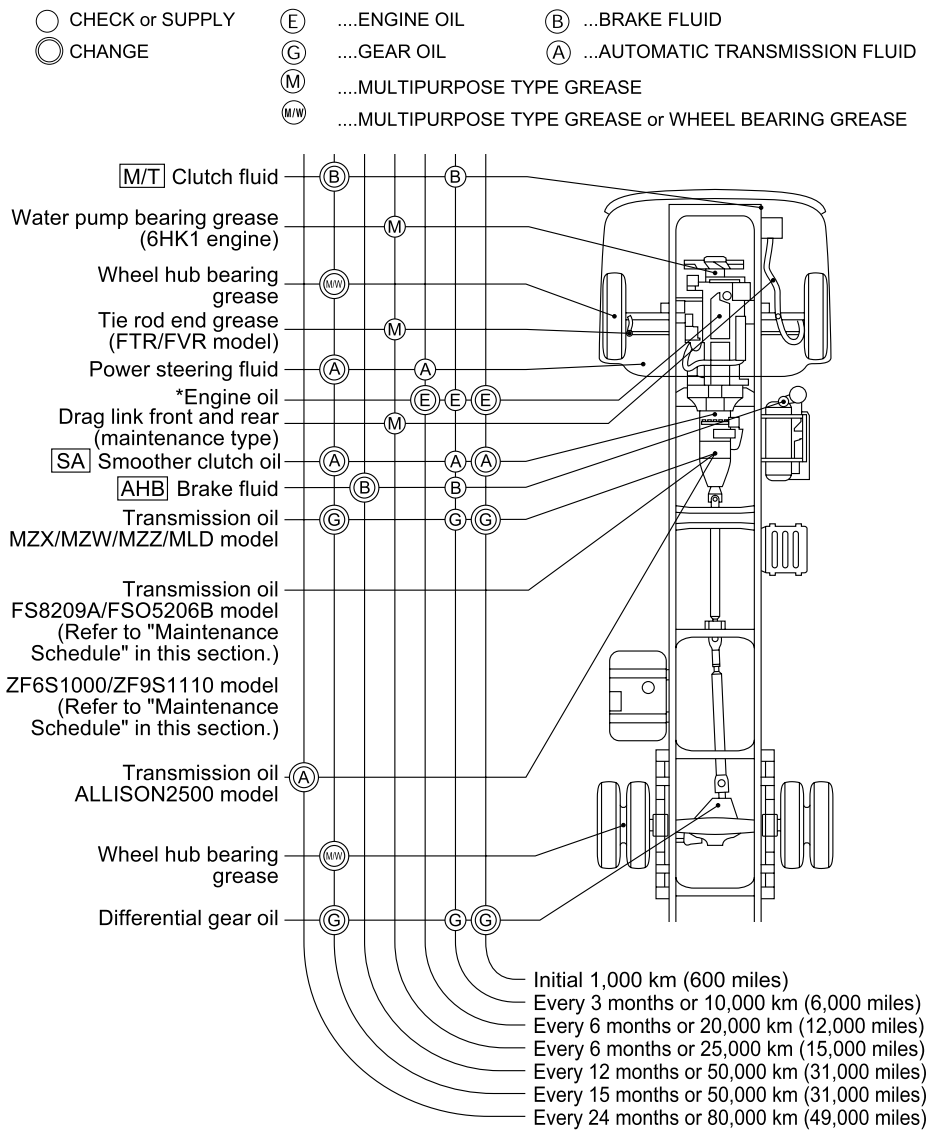

**** Items with an asterisk, check oil and fluid level daily.***

M/T : Manual transmission vehicle

SA : Vehicle equipped with the Smoother system

AHB : Vehicle equipped with the air-over hydraulic brake system

MFWB0AXF003001

https://truckmanualshub.com/

FVR model with FG941 (MFS66) Type Axle (for Euro4 specification except Europe)

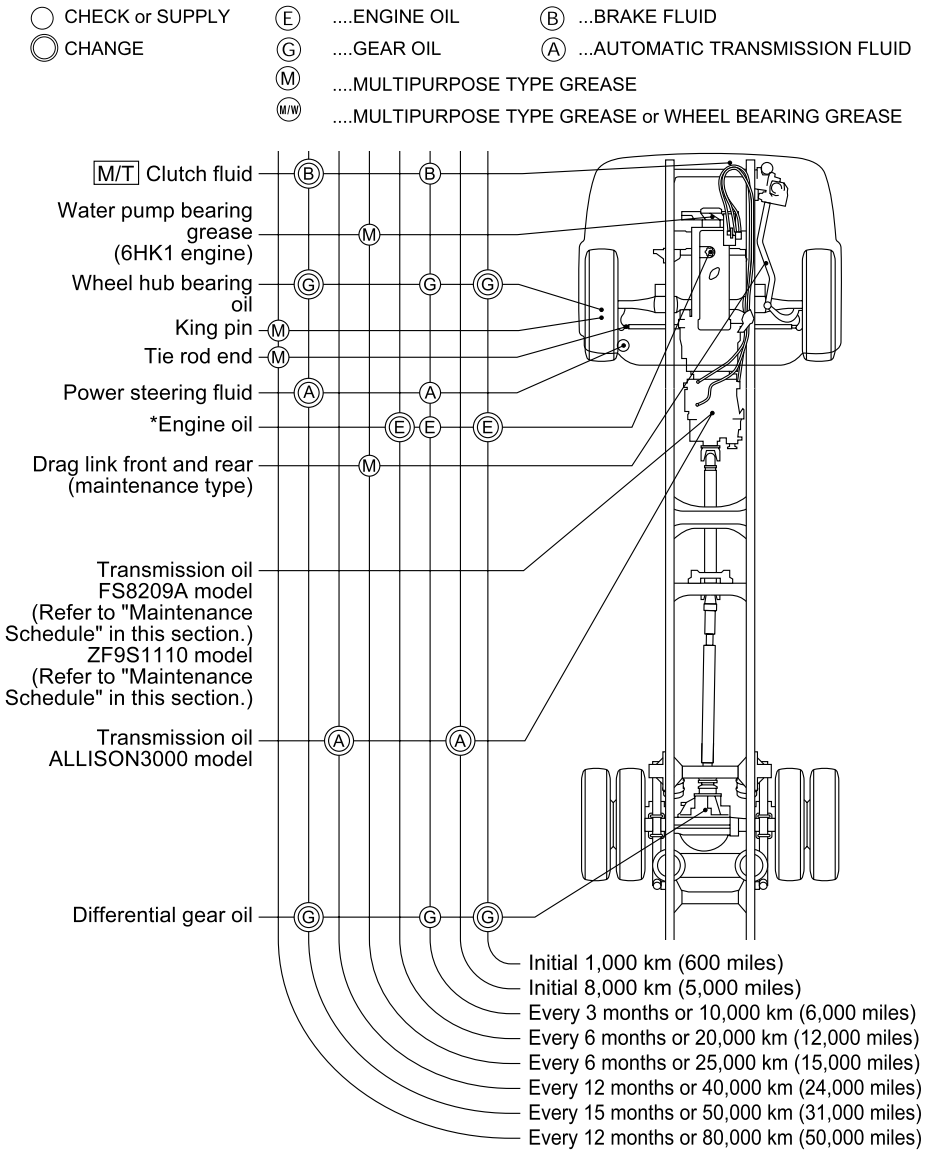

**** Items with an asterisk, check oil and fluid level daily.***

M/T : Manual transmission vehicle

MFWB0AXF004901

https://truckmanualshub.com/

FRR/FSR/FTR/FVR/GVR models (for Euro3 specification and Euro2 specification)

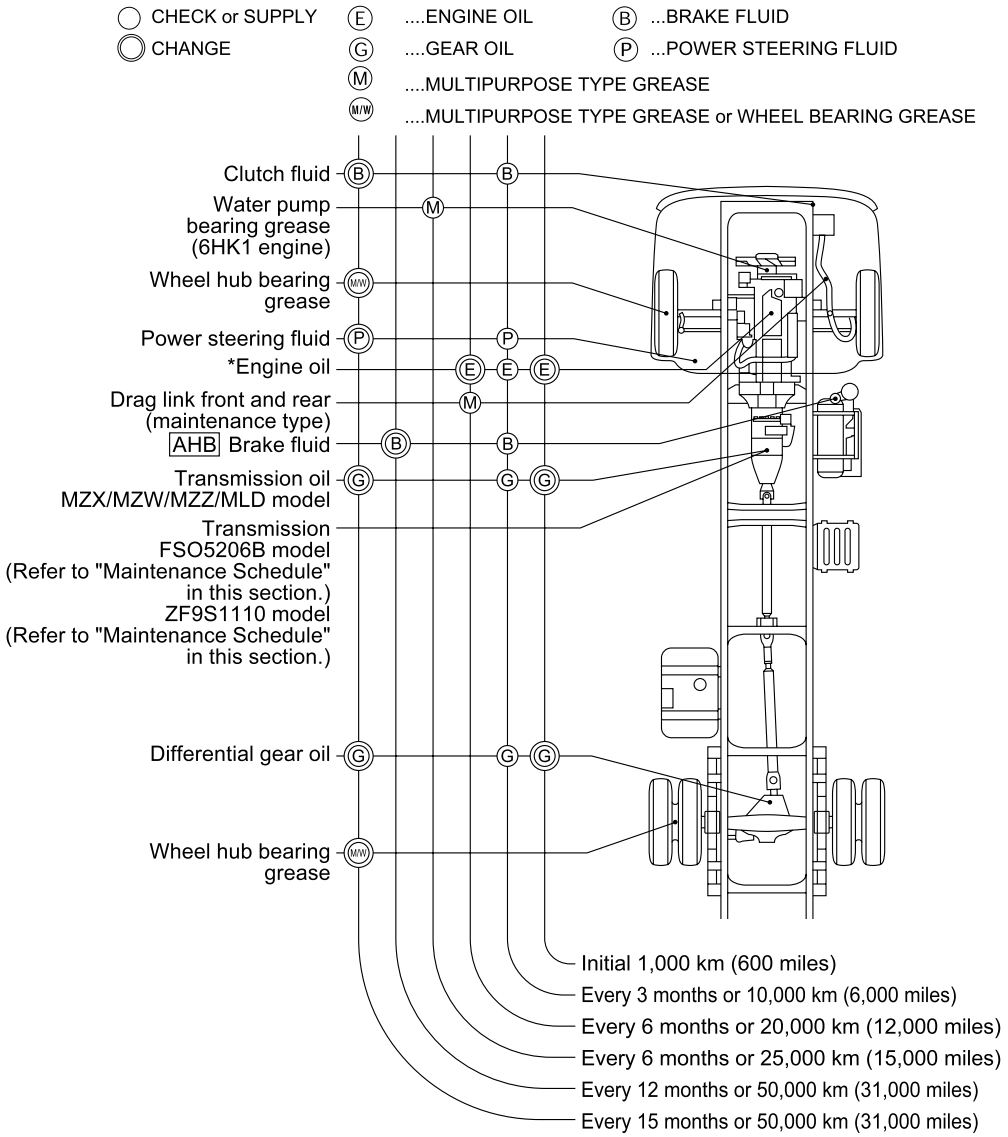

**** Items with an asterisk, check oil and fluid level daily.***

AHB : Vehicle equipped with the air-over hydraulic brake system

MFWB0AXF003201

https://truckmanualshub.com/

FVM/FVZ models (for Euro4 specification)

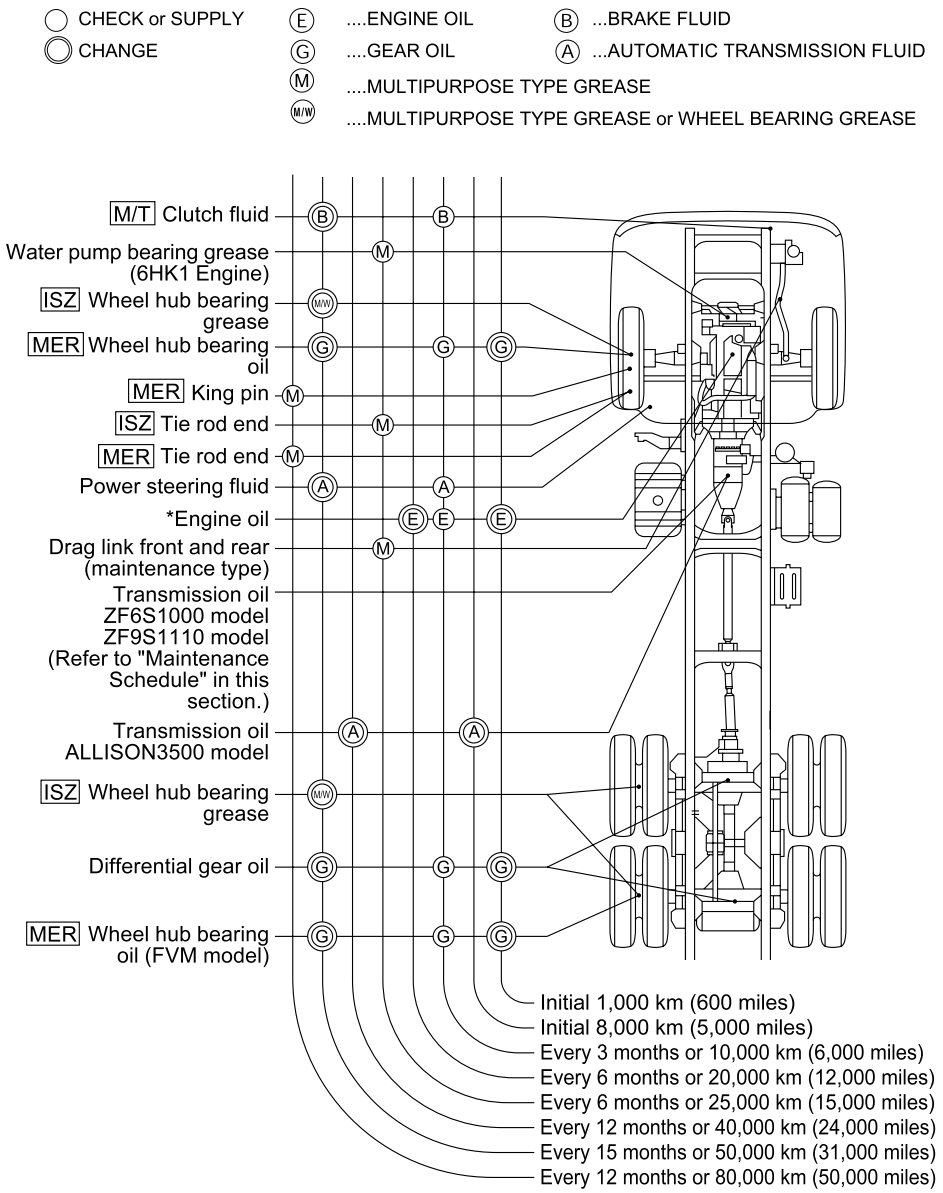

**** Items with an asterisk, check oil and fluid level daily.***

M/T : Manual transmission vehicle

ISZ : Vehicle equipped with Isuzu production transmission or axle

MER: Vehicle equipped with Arvin Meritor production axle

MFWB0AXF004201

https://truckmanualshub.com/

FVM/FVZ models (for Euro3 specification and Euro2 specification)

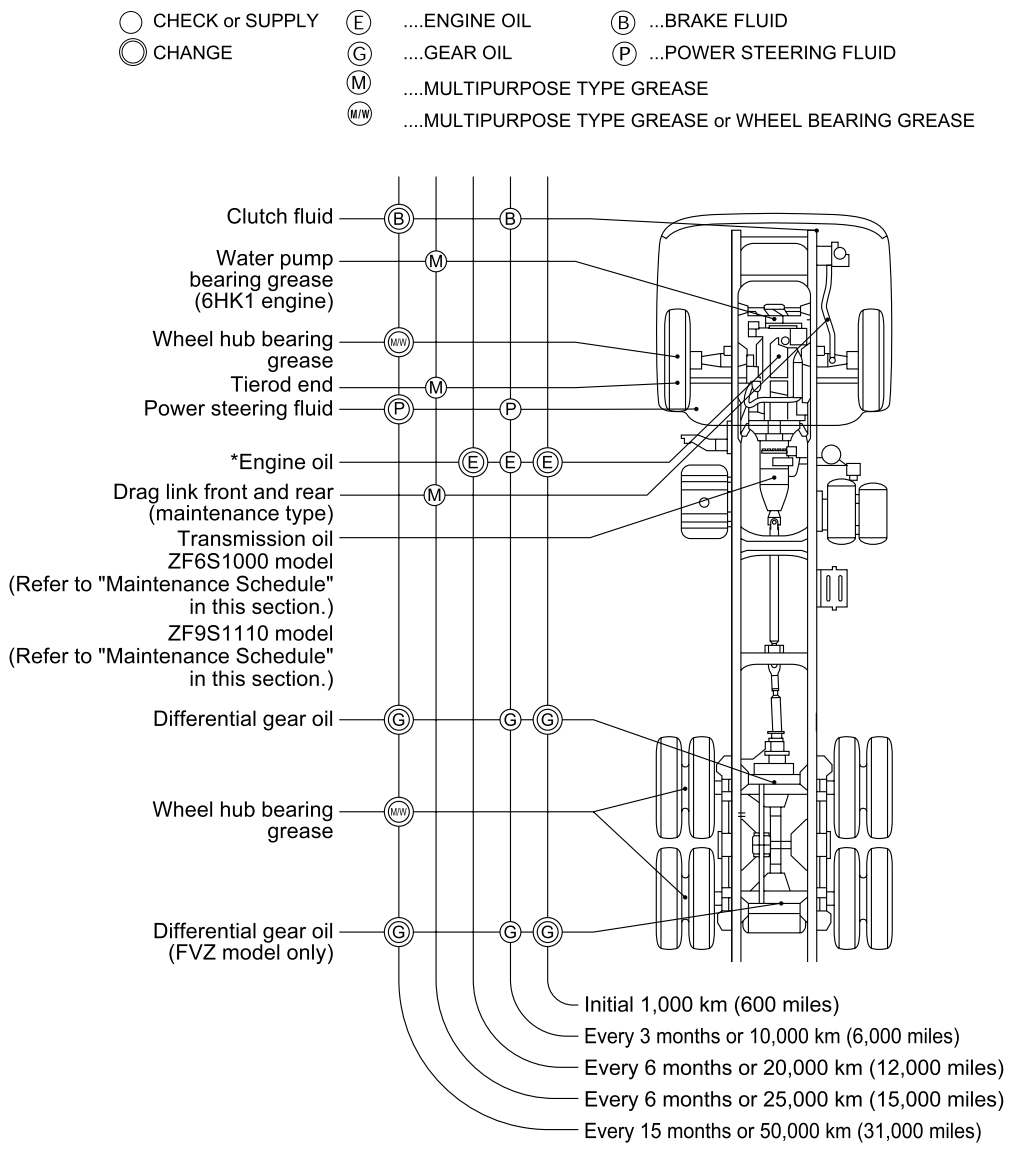

**** Items with an asterisk, check oil and fluid level daily.***

MFWB0AXF004301

https://truckmanualshub.com/

FSS/FTS models (for Euro4 specification)

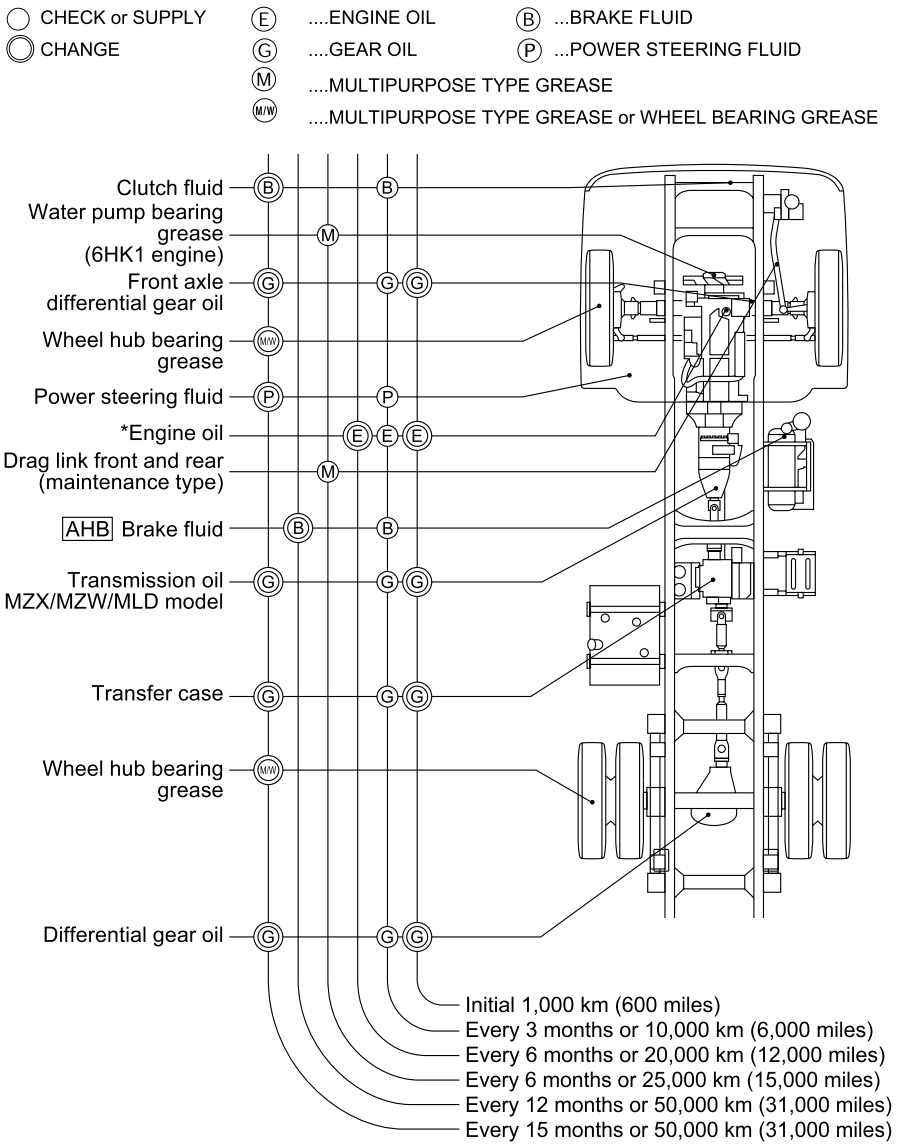

**** Items with an asterisk, check oil and fluid level daily.***

AHB : Vehicle equipped with the air-over hydraulic brake system

MFWB0AXF005101

https://truckmanualshub.com/

FSS/FTS models (for Euro2 specification)

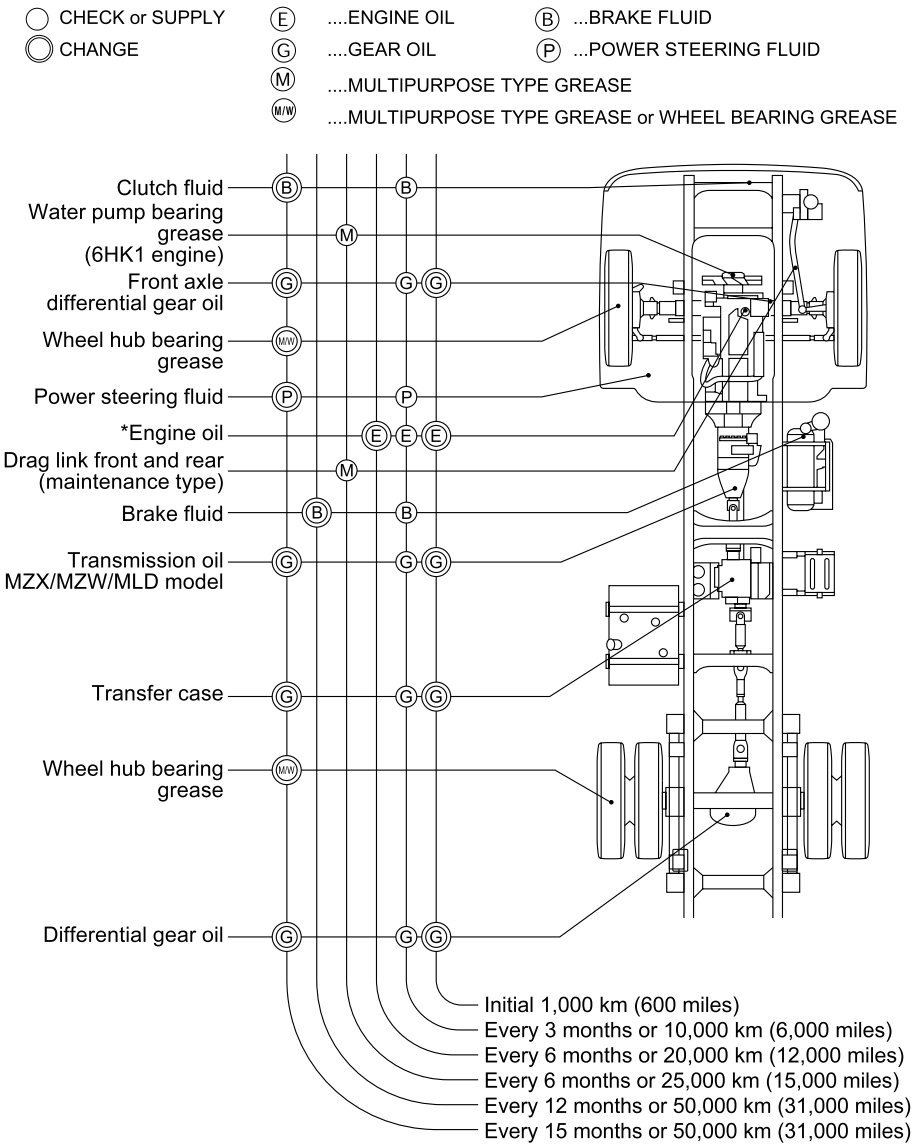

**** Items with an asterisk, check oil and fluid level daily.***

MFWB0AXF004101

https://truckmanualshub.com/

FRR/FSR models with leaf suspension (for Europe)

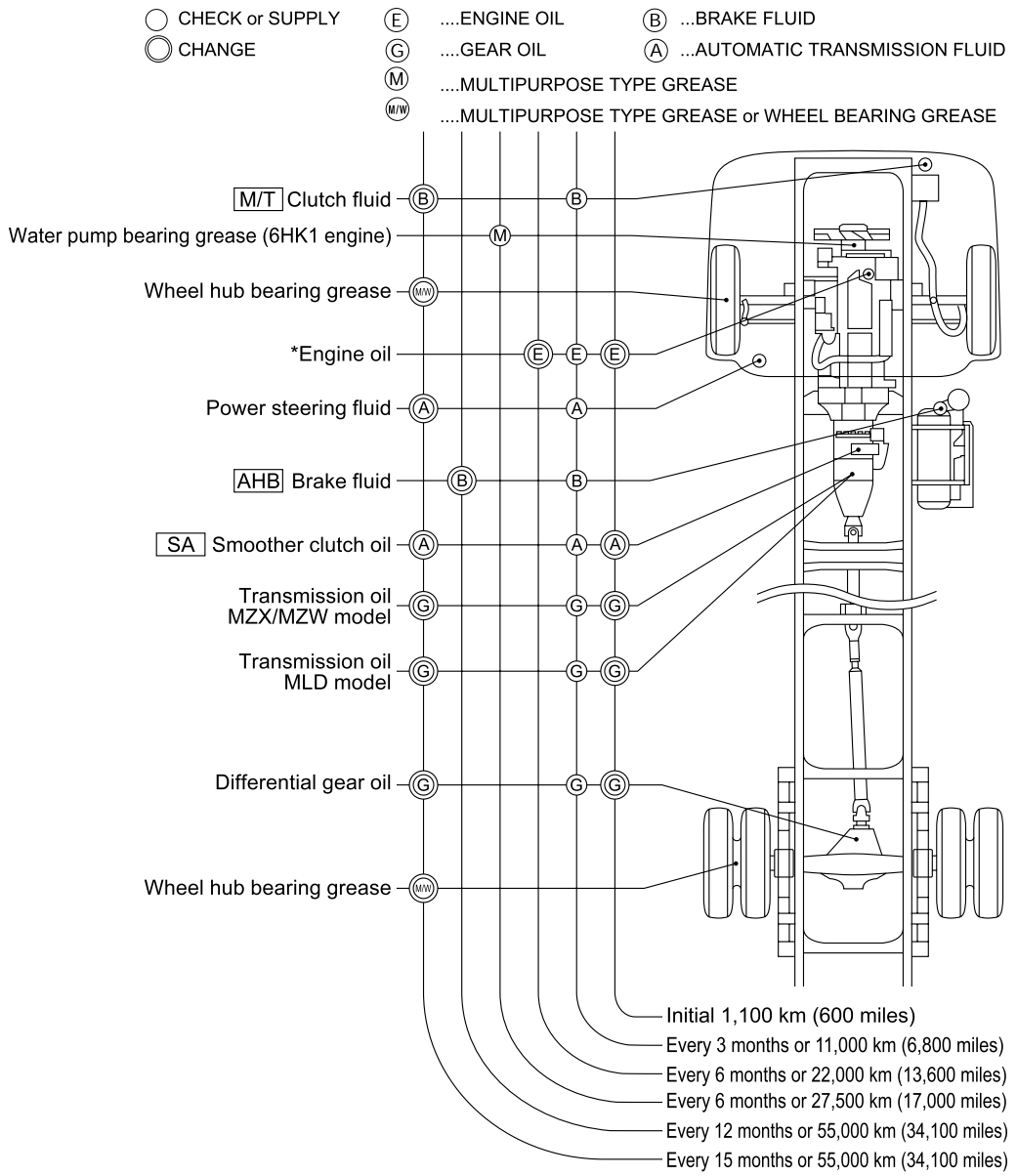

**** Items with an asterisk, check oil and fluid level daily.***

M/T : Manual transmission vehicle

SA : Vehicle equipped with the Smoother system

AHB : Vehicle equipped with the air-over hydraulic brake system

MFWB0AXF003701

https://truckmanualshub.com/

FRR/FSR models with air suspension (for Europe)

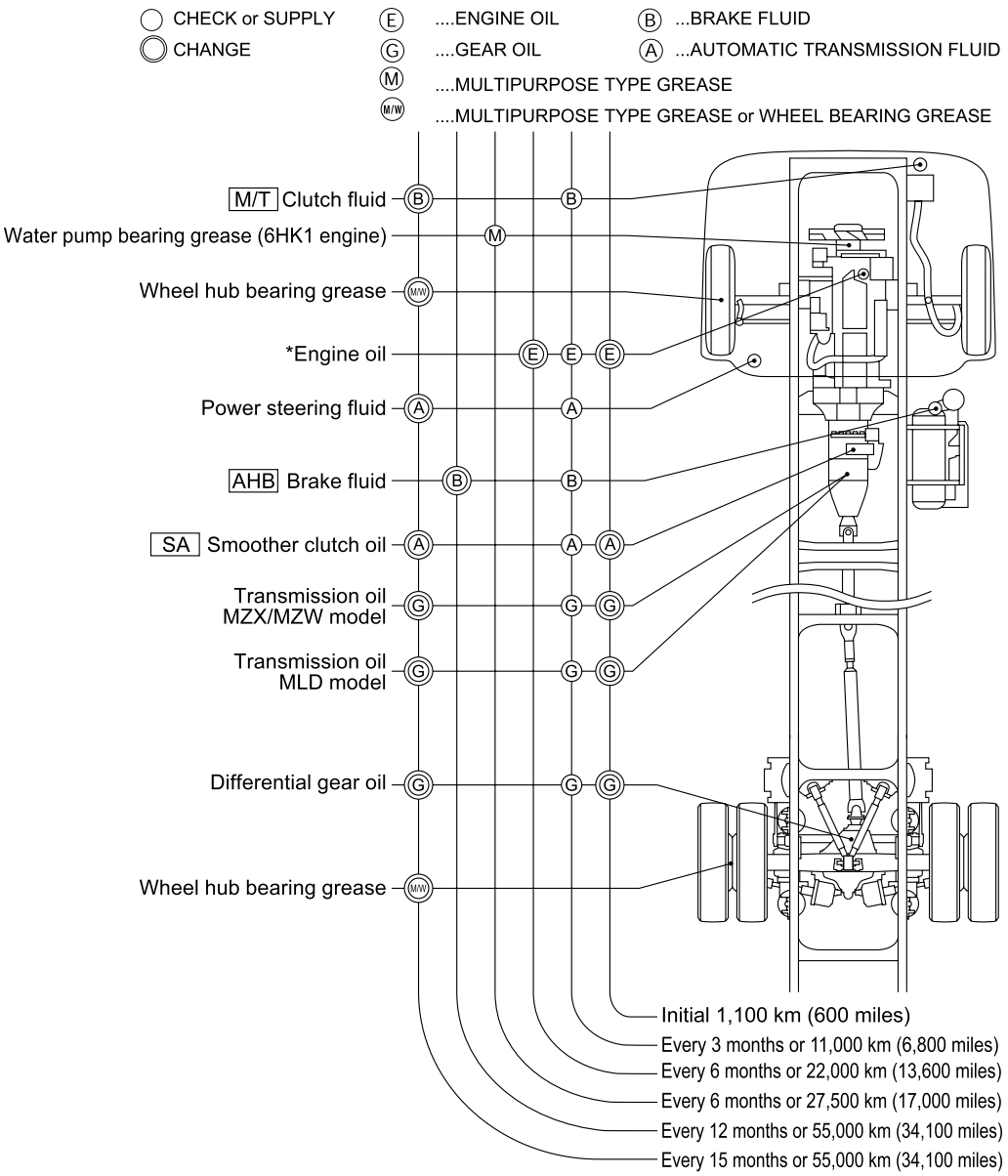

**** Items with an asterisk, check oil and fluid level daily.***

M/T : Manual transmission vehicle

SA : Vehicle equipped with the Smoother system

AHB : Vehicle equipped with the air-over hydraulic brake system

MFWB0AXF003801

https://truckmanualshub.com/

FVR model with leaf suspension (for Europe)

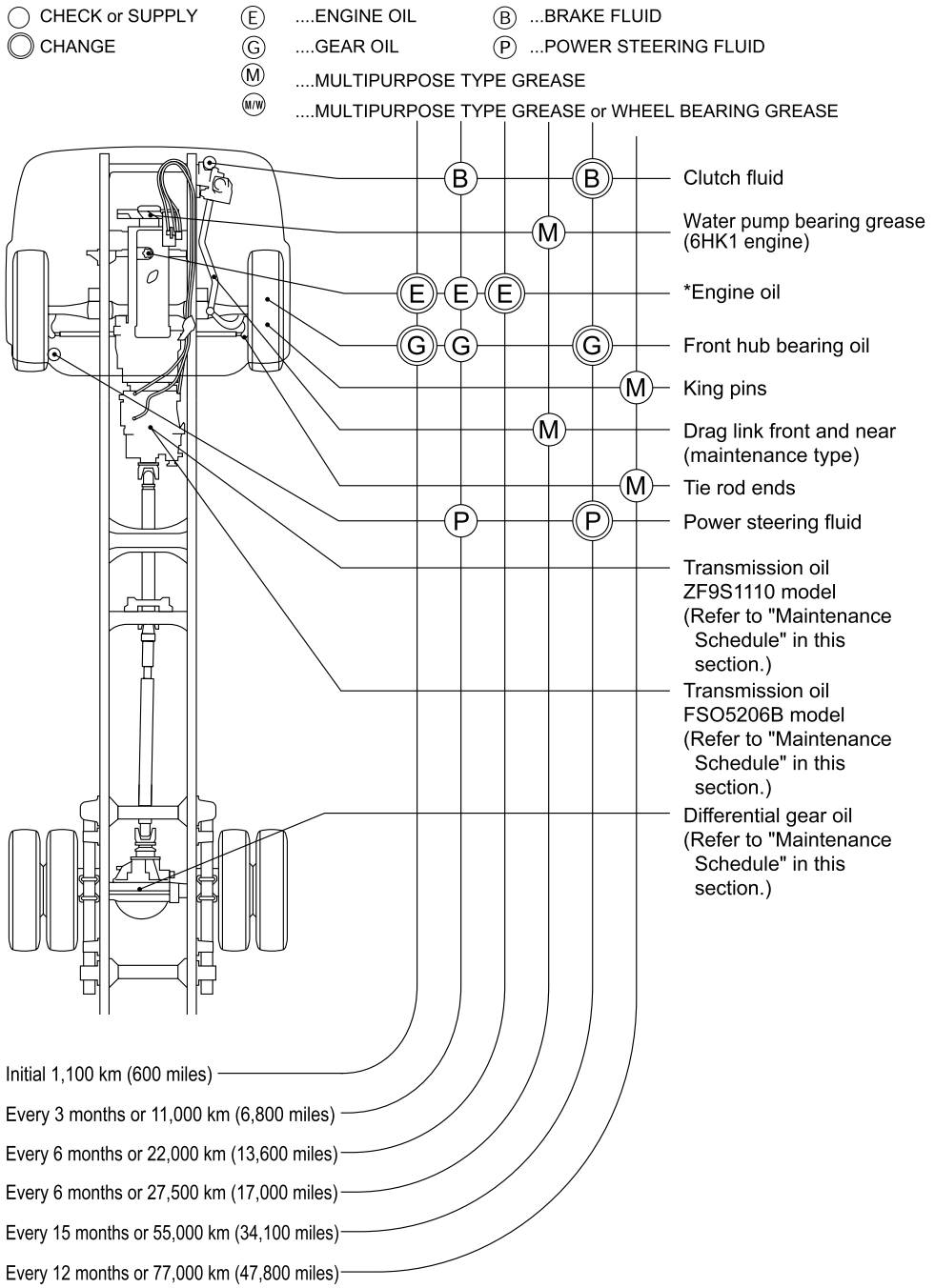

Items with an asterisk, check oil and fluid level daily.

MFWB0AXF003901

https://truckmanualshub.com/

FVR model with air suspension (for Europe)

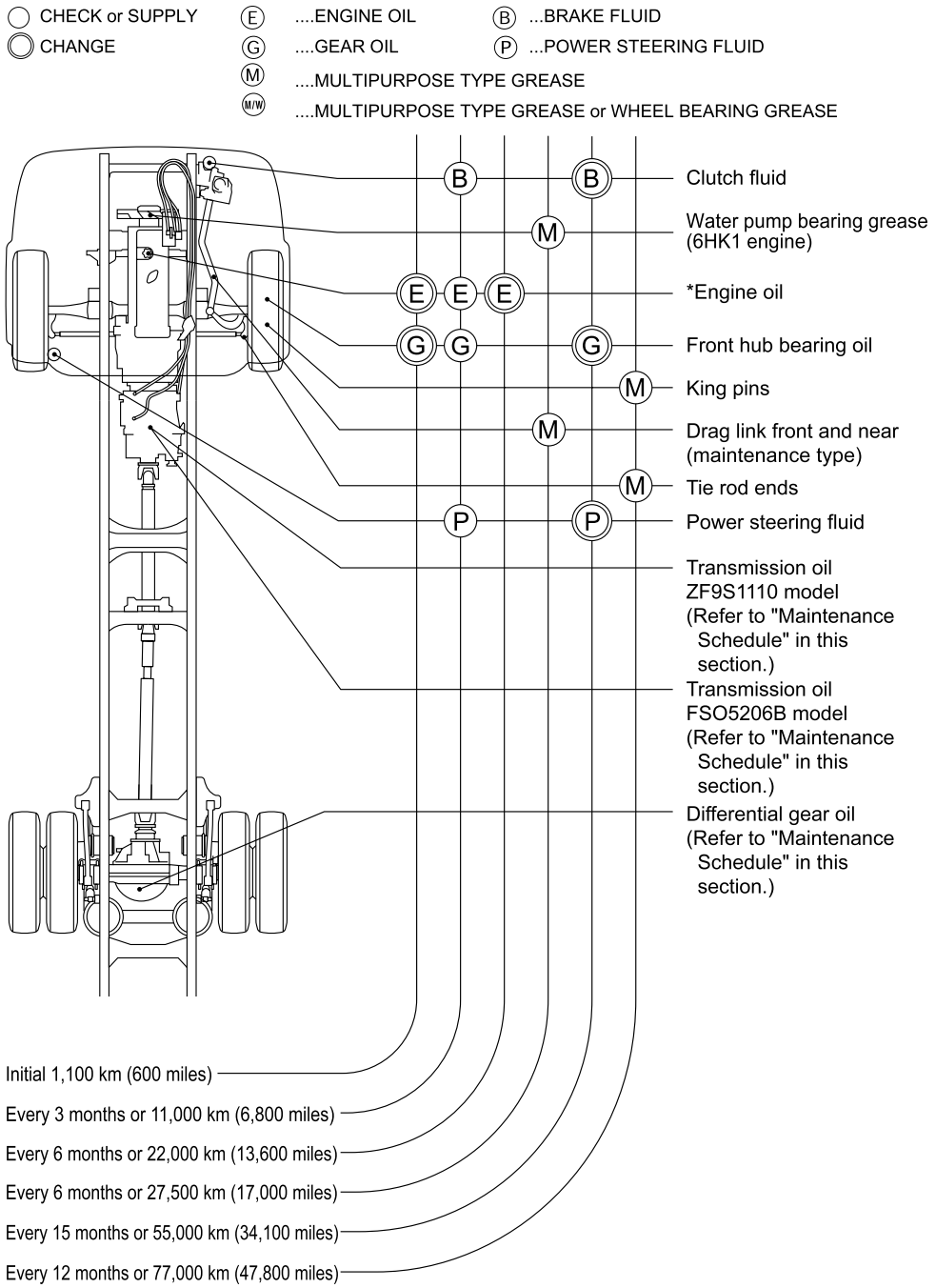

Items with an asterisk, check oil and fluid level daily.

MFWB0AXF004001

https://truckmanualshub.com/

FSR model (CNG engine for Australia)

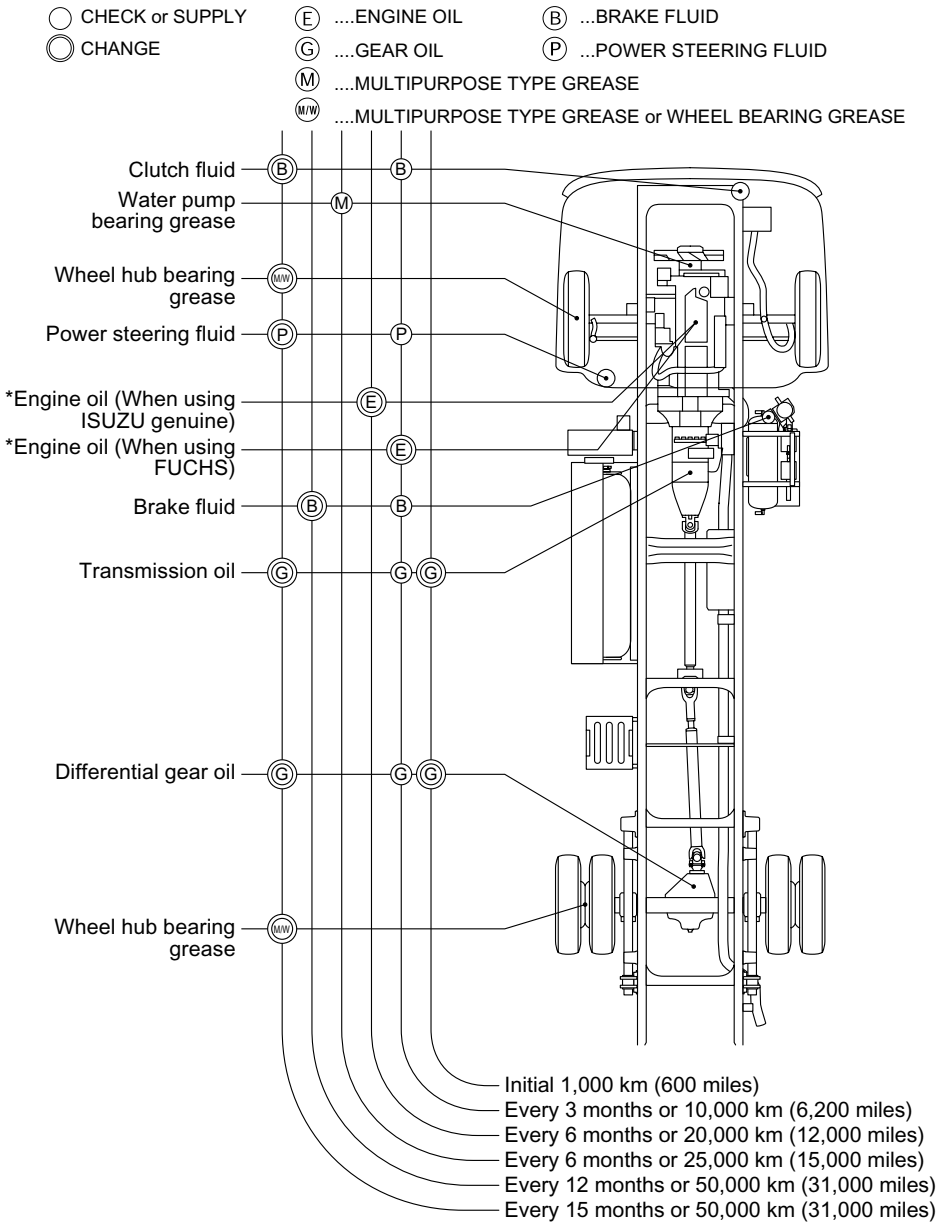

**** Items with an asterisk, check oil and fluid level daily.***

MFW90AXF002101

https://truckmanualshub.com/

FTR model (CNG engine for Thailand)

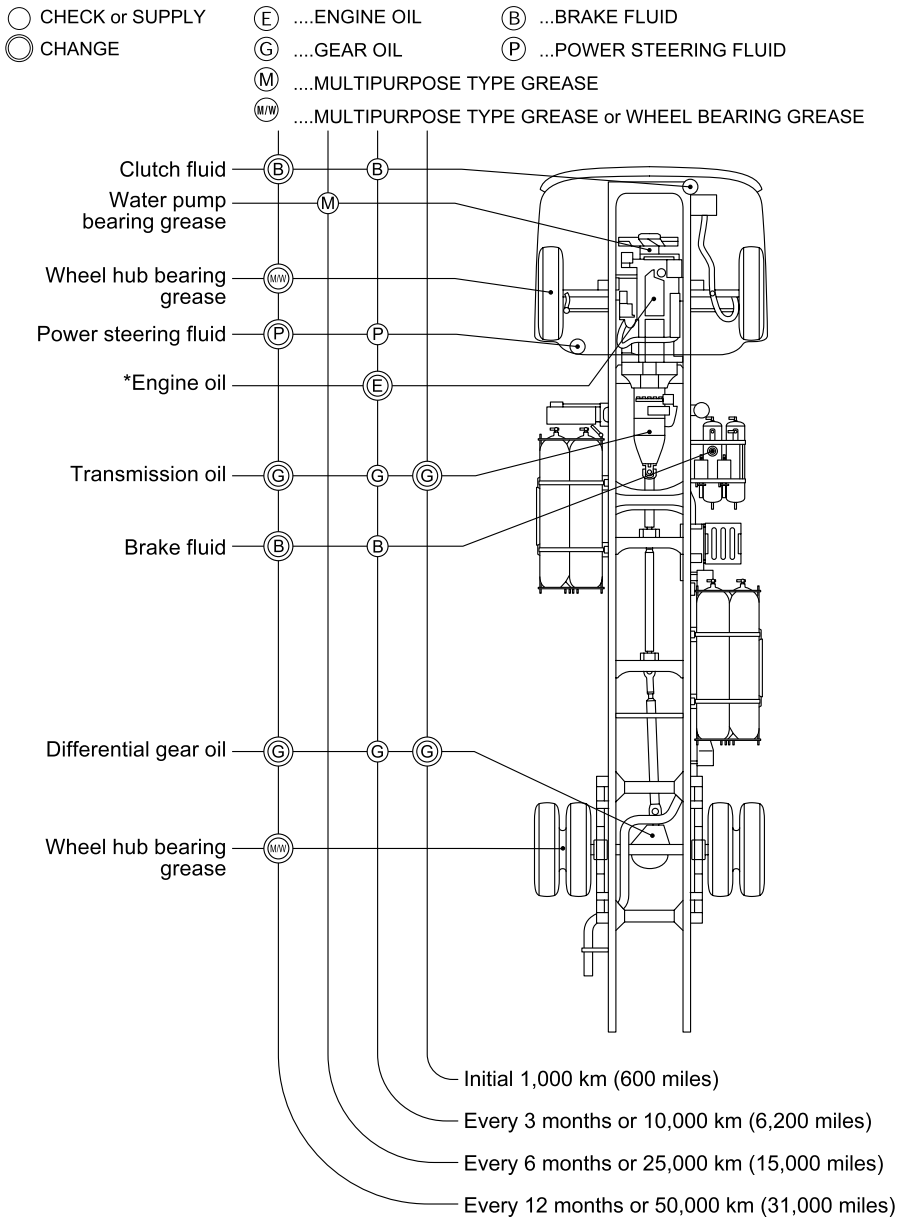

**** Items with an asterisk, check oil and fluid level daily.***

MFU9Z0XF000101

https://truckmanualshub.com/

Greasing Point

Greasing Point

FRR/FSR/FTR/FVR/GVR models with leaf suspension (except Europe)

Every month or every 5,000km (3,000miles)

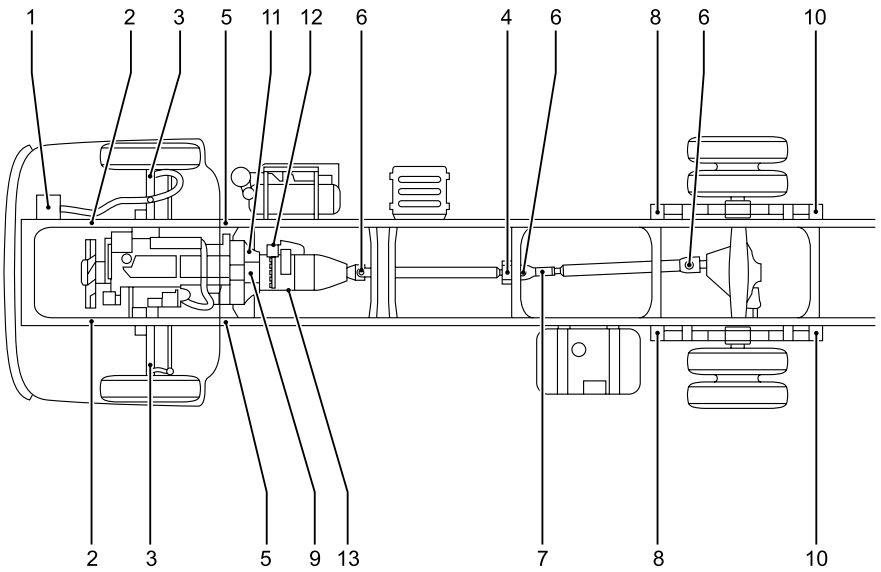

1. Steering shaft sliding sleeve
2. Front spring pin
3. Kingpin
4. Propeller shaft center bearing
5. Front shackle pin
6. Propeller shaft universal joint
7. Propeller shaft sliding yoke
8. Rear spring pin
9. Clutch shift block (MLD, FSO 5206B transmission)
10. Rear shackle pin or Rear spring sliding pad
11. Clutch shift block (ZF9S1110 transmission)
12. Clutch booster joint pin (MZW, MLD, FSO 5206B transmission)
13. Clutch booster joint pin (ZF9S1110 transmission)

MFWB0AXF001301

https://truckmanualshub.com/

FRR/FSR/FTR/FVR/GVR models with air suspension (except Europe)

Every month or every 5,000km (3,000miles)

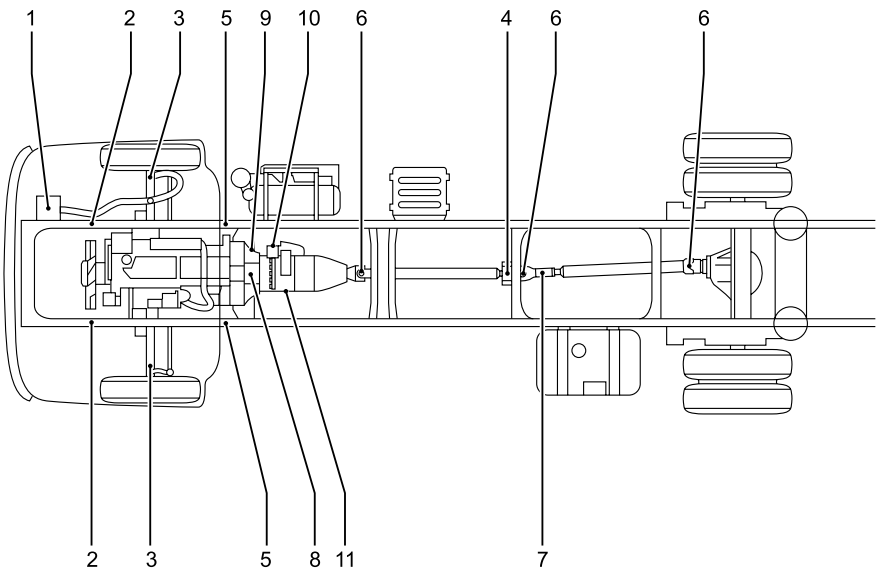

1. Steering shaft sliding sleeve
2. Front spring pin
3. Kingpin
4. Propeller shaft center bearing
5. Front shackle pin
6. Propeller shaft universal joint
7. Propeller shaft sliding yoke
8. Clutch shift block (MLD, FSO 5206B transmission)
9. Clutch shift block (ZF9S1110 transmission)
10. Clutch booster joint pin (MZW, MLD, FSO 5206B transmission)
11. Clutch booster joint pin (ZF9S1110 transmission)

MFWB0AXF001401

https://truckmanualshub.com/

FVM/FVZ models with leaf suspension

Every month or every 5,000km (3,000miles)

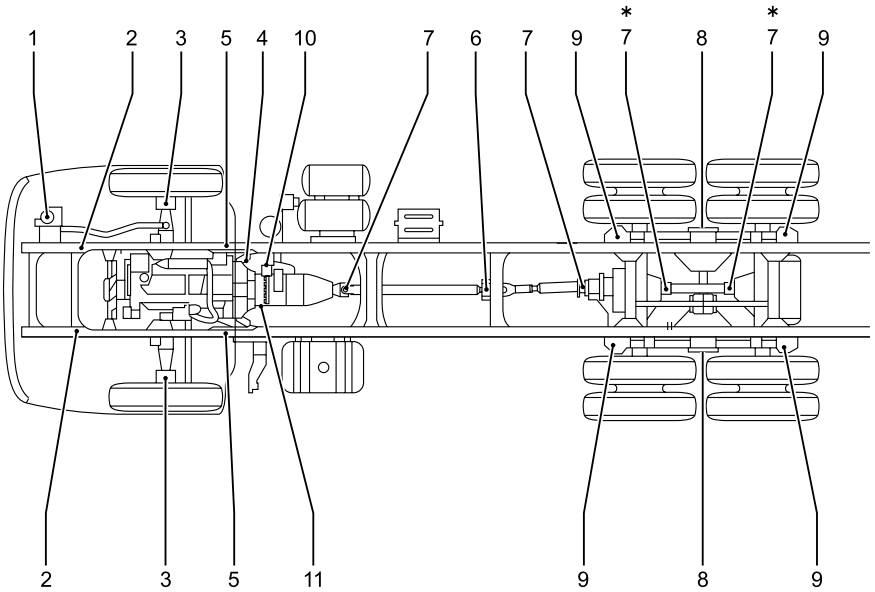

∗ : For FVZ model only

1. Steering shaft sliding sleeve
2. Front spring pin
3. Kingpin
4. Clutch shift block (ZF9S1110 transmission)
5. Front spring pin and shackle pin
6. Propeller shaft center bearing
7. Propeller shaft universal joint and sliding sleeve
8. Trunnion shaft
9. Rear spring sliding pad
10. Clutch booster joint pin (MZW transmission)
11. Clutch booster joint pin (ZF9S1110 transmission)

MFWB0AXF001501

https://truckmanualshub.com/

FVM/FVZ models with air suspension

Every month or every 5,000km (3,000miles)

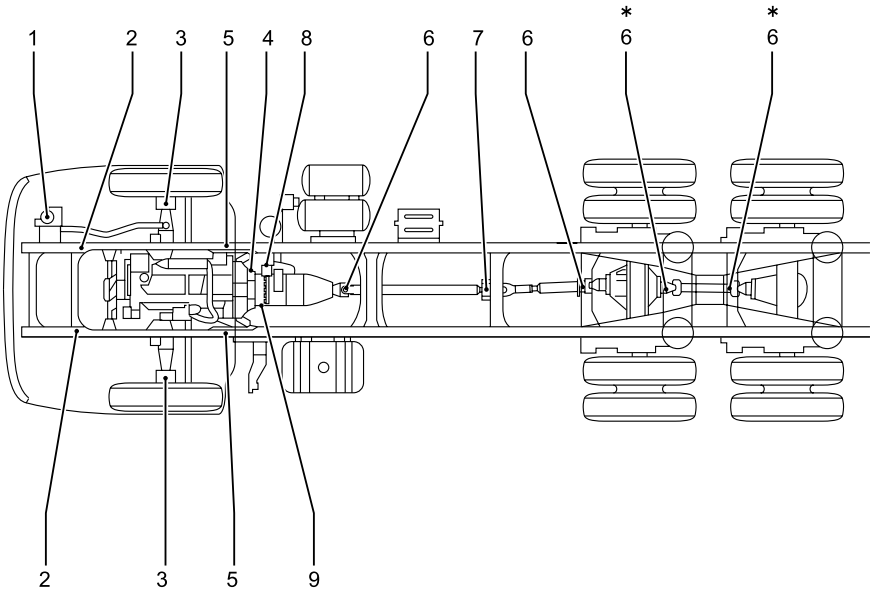

∗ : For FVZ model only

1. Steering shaft sliding sleeve
2. Front spring pin
3. Kingpin
4. Clutch shift block (ZF9S1110 transmission)
5. Front spring pin and shackle pin
6. Propeller shaft universal joint, sliding sleeve and center bearing
7. Propeller shaft center bearing
8. Clutch booster joint pin (MZW transmission)
9. Clutch booster joint pin (ZF9S1110 transmission)

MFWB0AXF001601

https://truckmanualshub.com/

FSS/FTS models

Every month or every 5,000km (3,000miles)

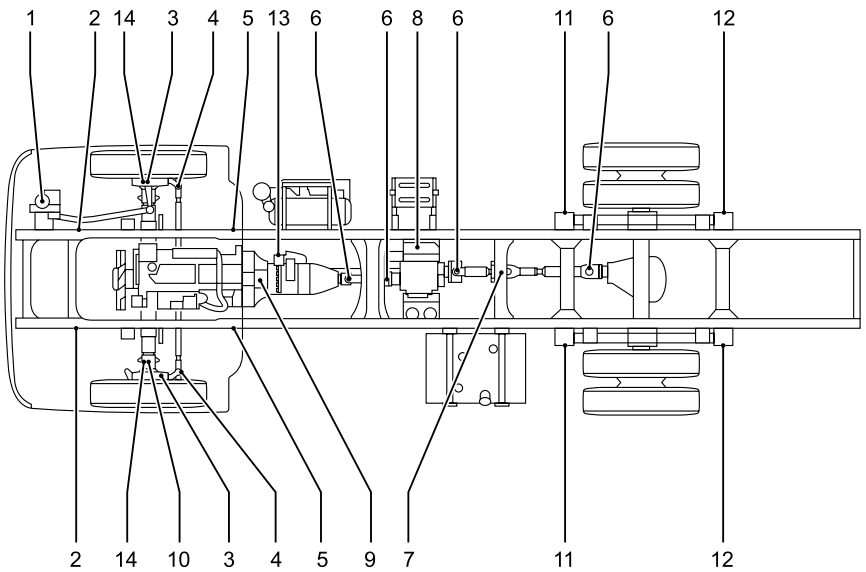

1. Steering shaft sliding sleeve
2. Front spring pin
3. Kingpin
4. Tie rod end
5. Front shackle pin
6. Propeller shaft universal joint and sliding sleeve
7. Propeller shaft center bearing
8. Parking brake relay lever
9. Clutch shift block (MLD transmission)
10. Shimmy damper
11. Rear spring pin
12. Rear shackle pin
13. Clutch booster joint pin (MLD, MZW transmission)
14. CV (Constant velocity) joint

MFWB0AXF001701

https://truckmanualshub.com/

FRR/FSR models with leaf suspension (for Europe)

Every month or every 5,500km (3,400miles)

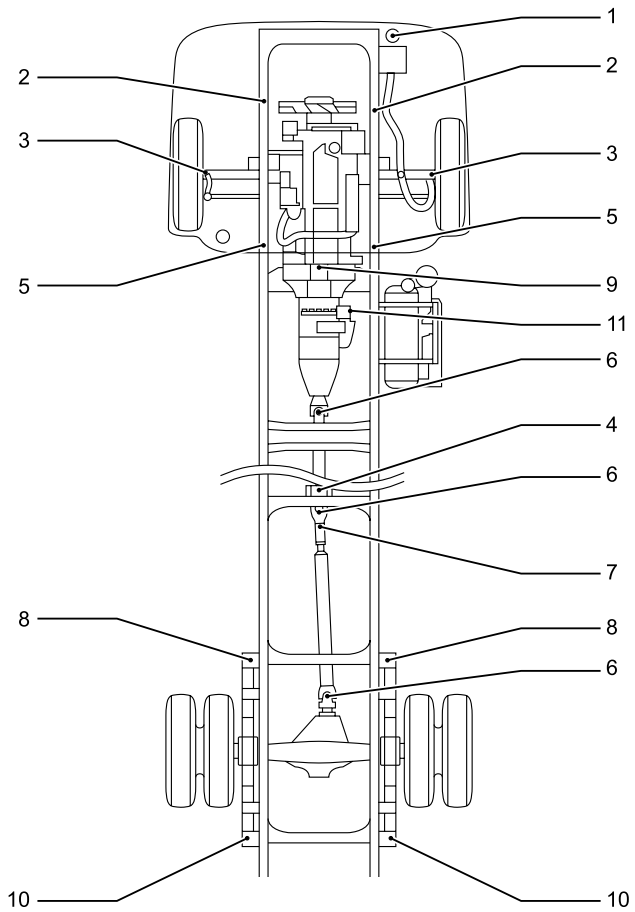

1. Steering shaft sliding sleeve
2. Front spring pin
3. Kingpin
4. Propeller shaft center bearing
5. Front spring shackle pin
6. Propeller shaft universal joint
7. Propeller shaft sliding yoke
8. Rear spring pin
9. Clutch shift block (if so equipped)
10. Rear spring shackle pin or Rear spring sliding pad
11. Clutch booster joint pin (manual transmission)

MFWB0AXF003301

https://truckmanualshub.com/

FRR/FSR models with air suspension (for Europe)

Every month or every 5,500km (3,400miles)

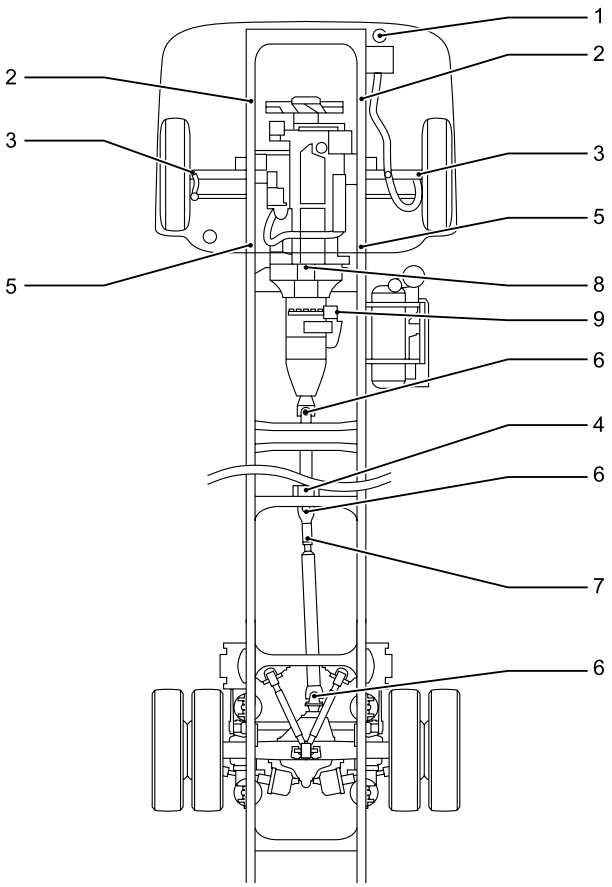

1. Steering shaft sliding sleeve
2. Front spring pin
3. Kingpin
4. Propeller shaft center bearing
5. Front spring shackle pin
6. Propeller shaft universal joint
7. Propeller shaft sliding yoke
8. Clutch shift block (if so equipped)
9. Clutch booster joint pin (manual transmission)

MFWB0AXF003401

https://truckmanualshub.com/

FVR models with leaf suspension (for Europe)

Every month or every 5,500km (3,400miles)

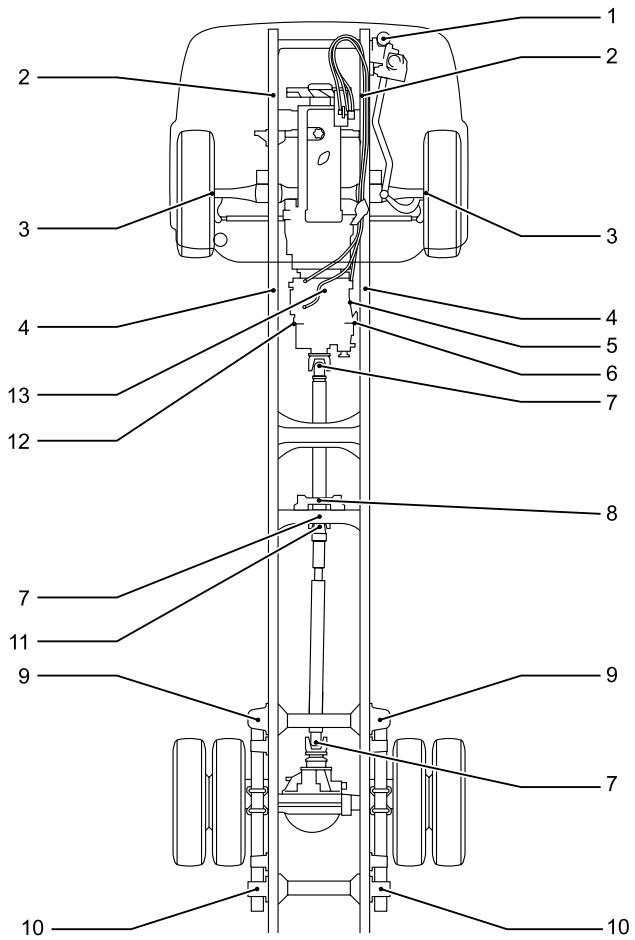

1. Steering shaft sliding sleeve
2. Front spring pin
3. Kingpin
4. Front spring shackle pin
5. Clutch shift block (ZF9S1110 transmission)
6. Clutch booster joint pin (MZW, FSO5206B transmission)
7. Propeller shaft universal joint
8. Propeller shaft center bearing
9. Rear spring pin
10. Rear spring sliding shackle
11. Propeller shaft sliding yoke
12. Clutch booster joint pin (ZF9S1110 transmission)
13. Clutch shift block (FSO5206B transmission)

MFWB0AXF003601

https://truckmanualshub.com/

FVR models with air suspension (for Europe)

Every month or every 5,500km (3,400miles)

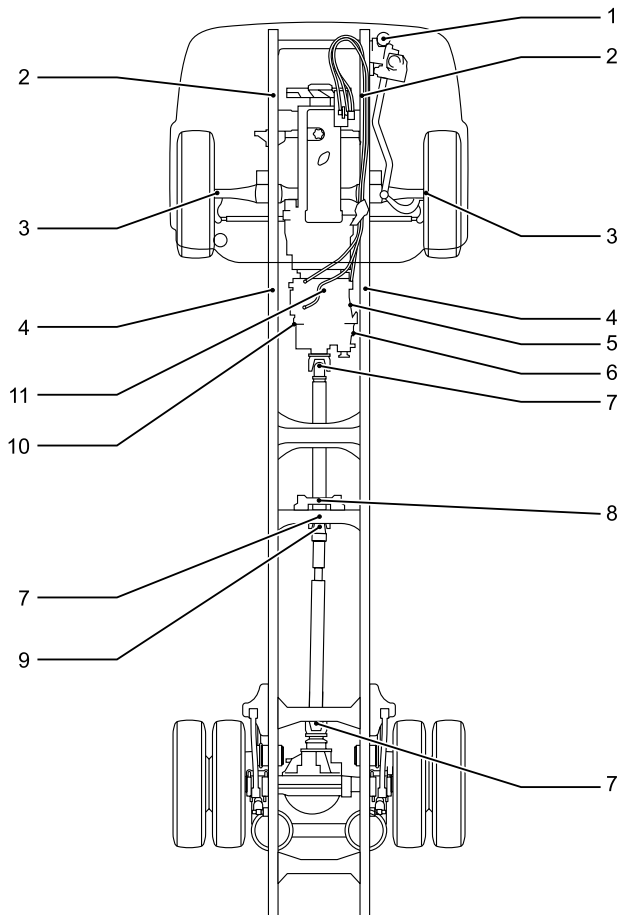

1. Steering shaft sliding sleeve
2. Front spring pin
3. Kingpin
4. Front spring shackle pin
5. Clutch shift block (ZF9S1110 transmission)
6. Clutch booster joint pin (MZW, FSO5206B transmission)
7. Propeller shaft universal joint
8. Propeller shaft center bearing
9. Propeller shaft sliding yoke
10. Clutch booster joint pin (ZF9S1110 transmission)
11. Clutch shift block (FSO5206B transmisson)

MFWB0AXF003501

https://truckmanualshub.com/

FSR model (CNG engine for Australia)

Every month or every 5,000km (3,000miles)

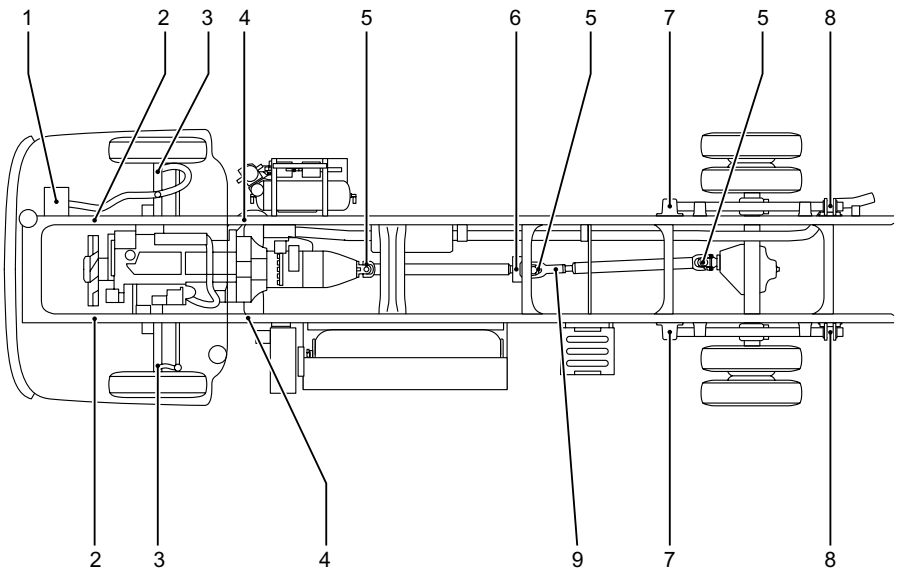

1. Steering shaft sliding sleeve
2. Front spring pin
3. Kingpin
4. Front shackle pin
5. Propeller shaft universal joint
6. Propeller shaft center bearing
7. Rear spring pin
8. Rear shackle pin
9. Propeller shaft sliding yoke

MFU9Z0XF001901

https://truckmanualshub.com/

FTR model (CNG engine for Thailand)

Every month or every 5,000km (3,000miles)

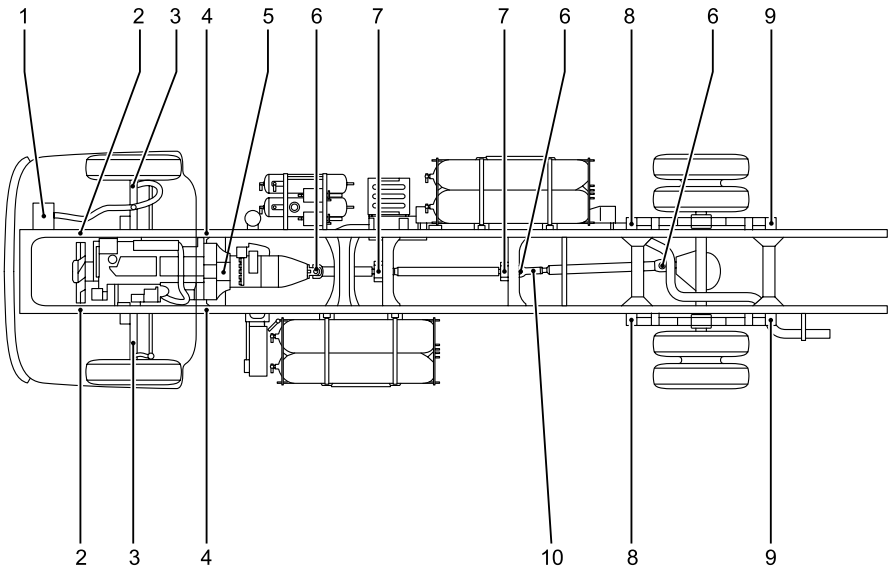

1. Steering shaft sliding sleeve
2. Front spring pin
3. Kingpin
4. Front shackle pin
5. Clutch shift block
6. Propeller shaft universal joint
7. Propeller shaft center bearing
8. Rear spring pin
9. Rear shackle pin
10. Propeller shaft sliding yoke

MFU9Z0XF001701

https://truckmanualshub.com/

MEMO

https://truckmanualshub.com/

Published: Feb., 2011
Seventh Edition

All rights reserved.

ISUZU

F&G SERIES

WORKSHOP MANUAL

GENERAL INFORMATION

Issued by ISUZU MOTORS LIMITED
E-Solutions & Service Marketing Dept.
Shinagawa-ku, Tokyo, 140-8722 Japan

0-XXXKI

https://truckmanualshub.com/

https://truckmanualshub.com/