https://truckmanualshub.com/

Preface

This instruction book briefly introduces the structure, performance, operation, and maintenance of the 957H-type loader, as a reference for drivers, maintenance personnel and relevant technical management personnel.

As to detail instruction for mating power, please refer to the instruction book of the diesel manufacturer.

957H type wheel load are continuously improved. Individual content in this instruction may be slightly different with delivered product; the customer is kindly advised to pay attention to during application. In case spare parts are necessary for order, please write drawing number, name and quantity clearly according to parts category and inform ex-work number, ex-work year and month, type of engine of whole machine order to avoid delivering parts by mistake and affecting maintenance work of customer.

We truly hope users will propose your opinions to the errors and shortages of this instruction book, and to the quality of our products, and inform us at any time, so that we can further improve our products and better serve our uses.

This product measures are up to the Q/CHL01.015-2012 standards wheel loader.

Changlin Company Ltd.

Changlin Company Limited

Add: No.898 West Huang He Road, Xinbei District, Changzhou City, Jiangsu Province

Zip:213136

Website: **www.changlin.com.cn**

Rest Day: Saturday and Sunday

Customer Service Hotline:4008600710

After-sales service:

Tel: 0519-86781012　86760000（domestic）

Fax: 0159-86751597（domestic）

Tel: 0086-519-86781288　0086-519-86752400（export）

Fax: 0086-519-86781537（export）

Supplier of the Company’s Accessories:

Tel: 0519-86781017　86753324　86754849　86755924（domestic）

Fax: 0519-86752938（domestic）

Tel: 0086-519-86781535（export）

Fax: 0086-519-86781533（export）

Changlin Co., Ltd Environmental Protection Initiatives

Dear users,

Thank you for the Changlin products. Changlin Company Ltd. has passed through the ISO14001 Environment Management System Authentication on June 7, 2002. Changlin Company Ltd. became the first green manufacturing enterprise passing through the authentication in the China construction machinery industry. In order to reduce the impact of the products on the surrounding environment as far as possible and better serve you, we sincerely ask you and supervise our maintenance personnel to strictly observe the following regulations during the use and maintenance process:

I. During the use process of the product, when the product has the abnormal noise, excessive tail gas emission, continuous soot emission, excessive oil consumption, vehicle-use oil leakage and other abnormal phenomena, you should immediately stop operating or contact our maintenance personnel. The roller shall be stared after check and troubleshooting. Strictly prohibit the faulted roller to operate. The trouble operation will make the trouble aggravated so that not only is it difficult to maintain to induce the unnecessary economic loss, but also the resource waste as well as local air and soil pollution are caused.

II. When the product is maintained, and the vehicle fuel, lubricating oil and hydraulic oil are required to be drained, please collect the waste oil with the oil receiver. Don’t drain the oil onto the ground directly. The replaced wasted parts and components shall be classified for collection according to the material. The steel wasted parts can be recycled, and shall be delivered to the recycling station to treat. The rubber parts and the plastic parts can not be recycled, and shall be delivered to the local hazardous waste treatment center for recovery processing. Don’t dispose them to pollute the environment.

Protecting the environment is to protect our homeland; maintaining the ecological environment is to maintain our life. If the entire earth is regarded as the trash can, will our homeland be the pure land? When the green mountains and ground, blue sky and water on the earth disappear gradually, will we leave our descendants what kind of living environment? Never sacrifice the environment to develop the economy. We have the duty and responsibility to transform the nature and protect the environment, and have ability and confidence to conquer the nature and improve the environment, but have no right to destroy the ecology and environment. Do not do evil things though they may be insignificant. Do not give up good things though they may be minor matters. For the protection environment, everyone shall do everything no matter how it is small.

Changlin Company Ltd., Changzhou, China

https://truckmanualshub.com/

Content

Fig. 0-1 Diagram of 957H Transmission System **1**

Fig. 0-2 957H Overall Size of Loader with bucket **2**

I. Application and Characteristics **3**

II. Main Technical Performance and Parameters **4**

III. Operating Devices and Meters **8**

IV. Operation of Loader **15**

(I) Safety Operation Rule: 15

(II) Term of Trial Operation 16

(III) Driving of Loader: 17

V. Lubrication **23**

(I) Notice for Feeding the Lubricant: 23

(II) Lubricating Location and Feeding Periodic Chart 23

VI. Interval Technical Maintenance **28**

(I) Daily Technical Maintenance: 28

(II) Weekly Technical Maintenance: 28

(III) Every Month Technical Maintenance 28

(IV) Every Season Technical Maintenance 29

(V) Semiannually Technical Maintenance 29

(VI) Annually Technical maintenance 29

VII. Structure, Adjustment and Maintenance of Main Components **30**

(I) Engine System: 30

(II) Hydraulic Torque Converter and its Hydraulic Circuit System 30

(III) Transmission 32

(IV) Drive Axle 39

(V) Steering System 40

(VI) Brake System 45

(VII) Operating Device and its Hydraulic System 50

(VIII) Electricity System 53

(IX) Air-condition system 56

VIII. General Fault and Elimination **59**

IX. Transportation and Storage **64**

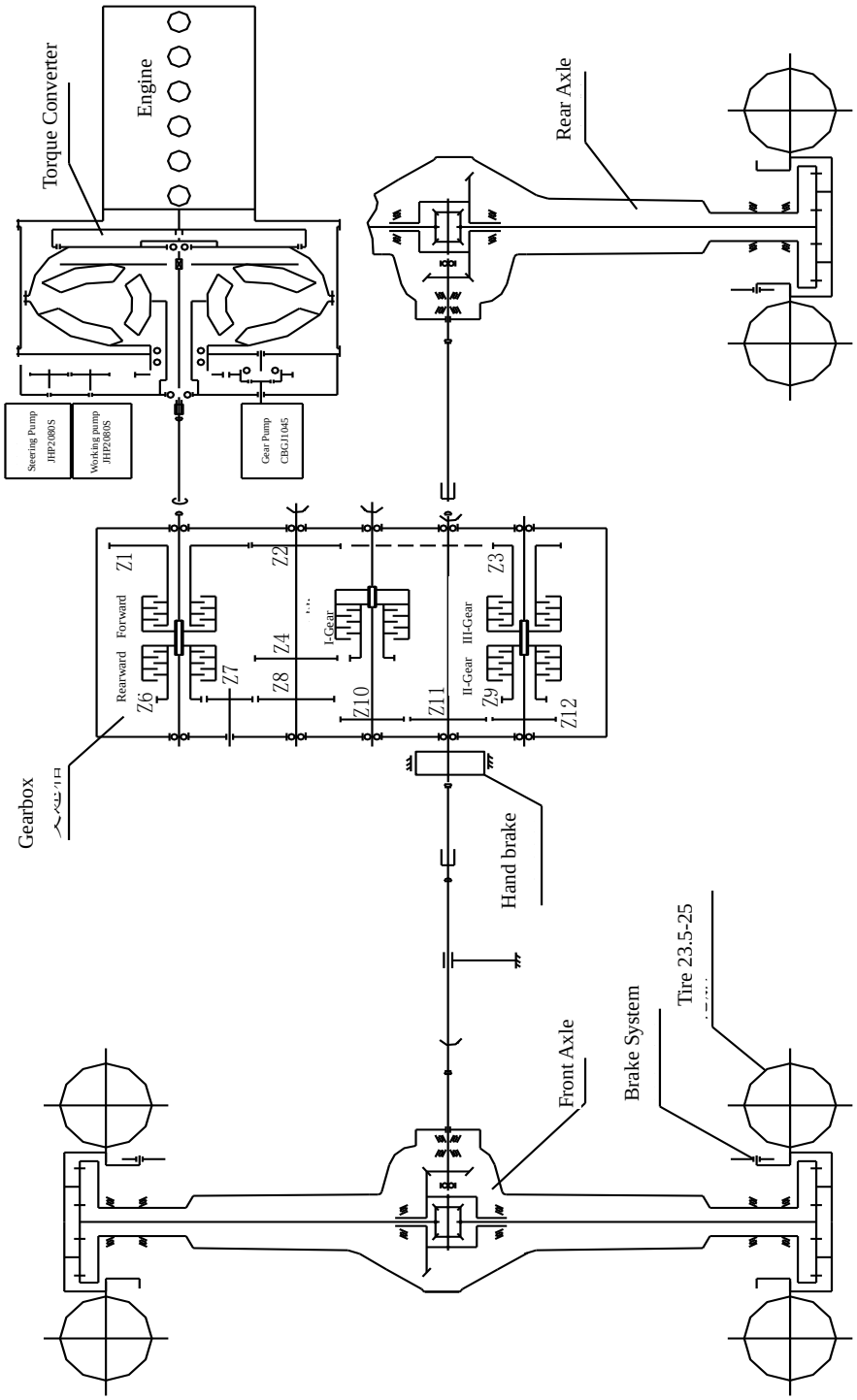

Fig. 0-1 Diagram of 957H Transmission System

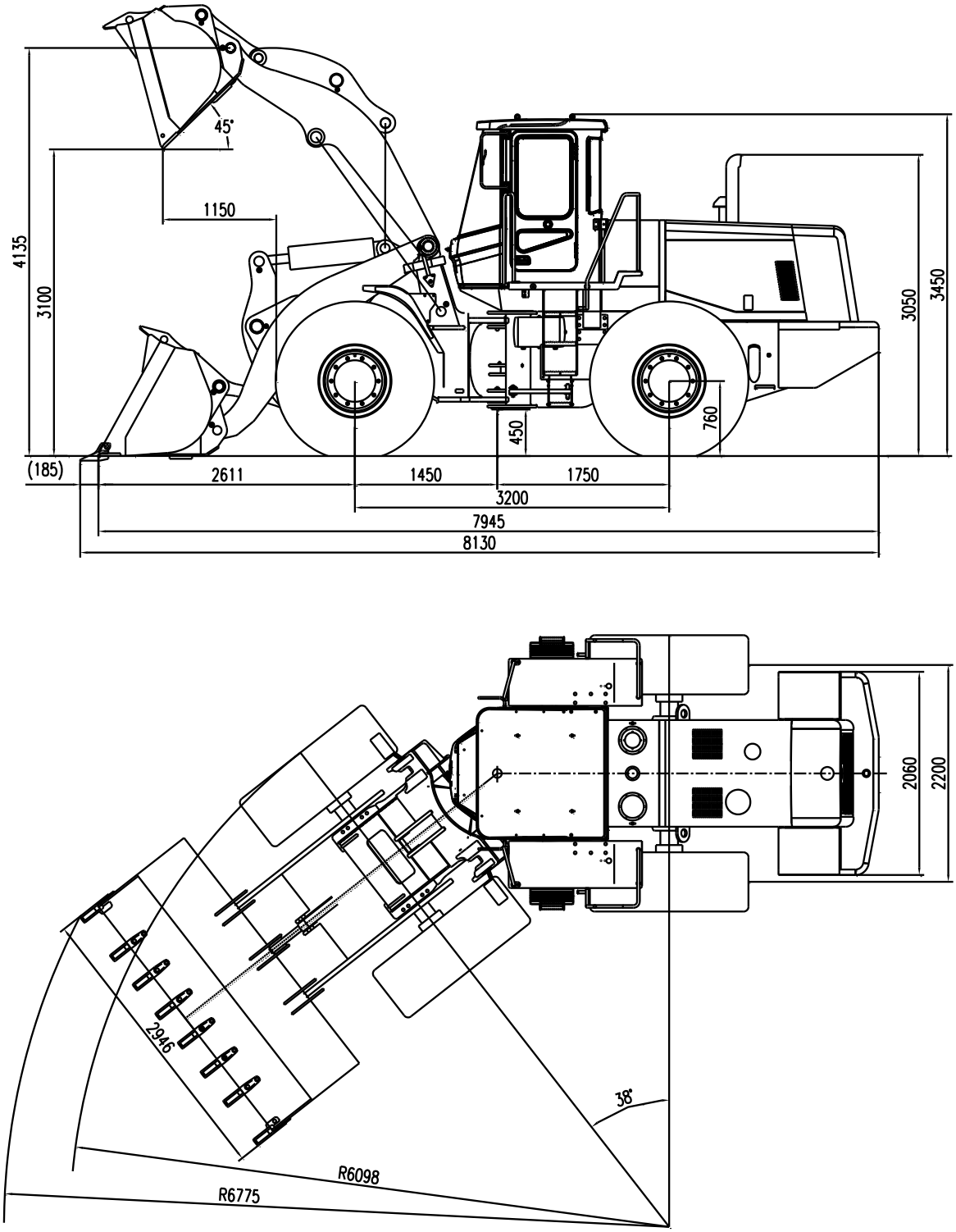

Fig. 0-2 957H Overall Size of Loader with bucket

I. Application and Characteristics

1. Application:

Model 957H Loader is a kind of middle-and-large-sized, multi-purposed and high efficient engineering machinery equipped with operating units, such as grab, bucket, fork, etc. It is widely applied for loading and unloading log, shoveling, loading and unloading sand, earth, coal and short-distance transportation in construction engineering, road construction and road maintenance and repair, and the operations such as earth moving, land leveling, craning, traction, etc. and applied in the mine, factory, railway station, wharf, freight yard, warehouse, etc.

2. Characteristics:

Model 957H Loader, with front-end loading, four-wheel driven, articulated frame and hydraulic transmission, has the following characteristics:

1. With famous engine, power reserve, it has a good operation performance and long service-life.
2. With hydrodynamic machinery transmission, double-axle driving, wheel reduction, it has a stable and reliable transmission system.
3. With balloon, wide and off-road pattern tire, it has the strong adhesive force to ground, less specific pressure, high cross-country ability and grade ability. It can operate under bad ground conditions.
4. Hinged frame and hydraulic-operated steering, small turning radius, flexible operation, safety and reliability, compact structure and convenient maintenance.
5. With dual-pipeline and gas-oil disk brake, it has a strong retarding force and is easy for dismounting and mounting.
6. With the newly-designed Z-type counter-rotation connection rod, single rocker arm and high-pivoted operating device, it has a strong shoveling force and a high efficiency.
7. The operating device, equipped with guide control and hydraulic control, operates flexibly.
8. Spacious and bright fully closed cab with wide sight, shock reduction performance of seat is good, seating is comfortable.
9. The appearance of the whole machine applies design with own intellectual property patent, which complies with international tide, the appearance of the whole machine is beauty and coordinative.

II. Main Technical Performance and Parameters

1. Technical Performance

Rated loading capacity		5 t
Rated bucket cubic content		2.2-4.5 m^3
Minimum claming diameter of grab (general grab)		∅350mm
Maximum loading height: Grab (slope angle 46º)		3063 mm
Bucket (slope angle 45º)		3100 mm
Loading distance at maximum loading height:	Grab	1433 mm
	Bucket	1150 mm
Boom lifting time		5.6s
Boom lowering time		3.7s
Front titling time for bucket or grab (no-load)		1.7s
Speed	Forward	Backward
First gear	0-6.8km/h	0-8.km/h
Second gear	0-10.8 km/h	0-14.3km/h
Third gear	0-32km/h	0-34.1km/h
Minimum radium of turn (front wheel outside)		6098 mm
(bucket outside)		6775 mm
Maximum gradeability		30º
Peak traction		150kN
Maximum excavating force		165kN

2. Main Size and Weight

Length of loader (from grab put on ground)		8155mm
(from bucket put on ground)	8130mm（C6121）	8270 mm（CUMMINS）
Width of loader (from outside of wheel)		2800mm
Height of loader (from top of cab)		3450mm
Width of bucket		2946mm
Width of grab		2100mm
Axle-base		3200mm
Wheel tread		2200mm
Minimum clearance from ground (lower hinged point)		450 mm
Center height of traction hook		1200mm
Weight of loader: with full of oil and water and grab		17.0(±5%) t
with full of oil and water and bucket		16.7(±5%) t

3. Engine

Manufacturer	CUMMINS ENGINE COMPANY	Shanghai Diesel Engine Co., Ltd
Model	6CTAA8.3-C215	SC11CB220G2B1
Type	Vertical, 4-stroke, direct injection, turbocharged, air/air intercooler	Vertical, 4-stroke, direct injection, water cooled, turbocharged,
Number of cylinder - Diameter × stroke (mm)	6 – 114 × 135	6-120.65×152.4
Total piston displacement (L)	8.3	10.45
Compression ratio	18:1	15：1
Rated rotational speed (r/min)	2200	2200
Rated power (1 hour power, kW)	160	162
Maximum torque (N·m)	998	843
Fuel consumption (g/KW·h)	207	≤235
Starting mode	24V starting	24V starting
Weight (kg)	617	960

Note: 957H may select other engine on basis of performance guarantee of whole machine according to requirements of different areas and different customers, the customer is kindly advised to refer to engine instruction with machine.

4. Transmission System

Hydraulic Torque Converter

Type — Single-step and single phase three operating wheel

Cooling mode — Oil cooling and pressure cycle

Outlet oil pressure — 0.245 ~ 0.343 MPa (2.5 ~ 3.5 kgf/cm^2)

Transmission gear

Type — Cylindrical spur-gear parallel-axis non-clashing gear

Speed oil pump — CBGj1045 gear pump (left handed)

Clutch — Multiply-disk, oil cooling, pressure cycle

Operating oil pressure of clutch — 1.47 ~ 1.86MPa (15 ~ 19kgf.cm^2)

Front and Rear Axle Driving

Type — Spiral bevel gear, first-reduction

Hunting angle of rear axle — 11° for upward and downward

Hub Reduction Gear

Type — Cylindrical spur gear planetary driving

Wheel and tire (same for four wheels)

Tire size — 23.5 - 25 - 16PR

Tire pressure 0.294 ~ 0.314 MPa (3.0 ~ 3.2 kgf/cm^2)

Rim 19.50/2.5 - 25 (TB)

5. Brake System

Foot brake

Type Dual-pipeline, gas-oil, caliper-disk four-wheel brake

Retarding disk diameter ∅466mm

Brake gas pressure 0.6 ~ 0.75 MPa

Hand Brake

Type Pneumatic internal expansion shoe type

6. Steering System

Model	957H
Type	Hinged frame, loading sensor, full-hydraulic steering
Hydraulic steering gear displacement	1000 ml/r
Model of steering pump	JHP2080S（C6121），CBGj2080/2040-XF(CUMMINS)
Steering pump - cylinder diameter x stroke	2 - ∅90 × 435 mm
Maximum operating pressure	16 Mpa
Steering angle of hinged frame	about 38°

7. Hydraulic System

Model	957H
Type	Proportion guide control
Model of operating oil pump	JHP3160
Lifting cylinder	2 - ∅160 x 810 mm
Bucket-turning cylinder	1 - ∅180 x 528 mm
Working pressure	18 MPa
Reversal valve	7130-B109 hydraulic control multiple-circuit reversal valve

8. Electric System

System voltage 24V

Storage battery 115E41R two-series

Earth-grounding Negative

Model of generator Silicon rectifier generator

Power 1000W

Power 8.2 kW (CUMMINS) 7.5kW(C6121)

9. Refueling Capacity

Crankshaft box of engine	20L((CUMMINS) 42L(C6121)
Fuel chamber	250L
Hydraulic torque converter and gear box	42L
Hydraulic oil tank	180L
Front and rear axle driving	2 ×18L
Hub reduction gear	4 × 3.0L
Brake system	4 × 1.5L

10. Air-condition system

The system applies cooling system and warm wind facilities

Type of air conditioner:	**BKG08G**
Cooling capacity:	**4300W**
Type of compressor:	**TL-508 or SD5H14**
Heating capacity:	**7500W**
Voltage:	**24V.DC**
Electric power consumption:	**<360W**
Manufacturer:	**Bogesizhong (Changzhou) Air-condition System Co., Ltd**

III. Operating Devices and Meters

Before driving, it is necessary to know the location and function of each operating device, meter and indicating light. The arrangement of devices and meters in cab is shown in Fig. 3 - 1. The operator falls into the habit of watching the instrument board always in operation and discovers any abnormal condition on time.

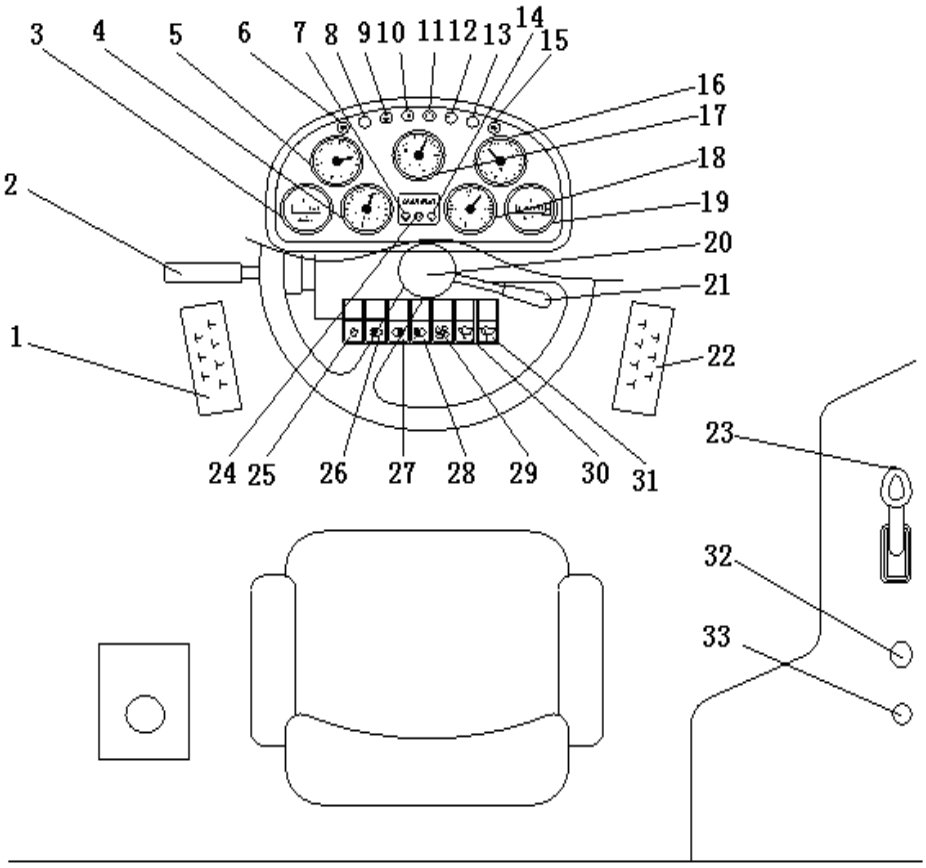

Fig. 3 – 1 Operation equipments and instruments in cab

1.	Travel brake pedal	2.	Forward and backward handle	3.	Voltmeter	4.	Engine oil pressure meter
5.	Fuel level meter	6.	Left turning indication lamp	7.	Low brake pressure indication lamp	8.	Charging indication lamp
9.	Low engine oil pressure indication lamp	10.	Low transmission oil pressure indication lamp	11.	Parking brake indication lamp	12.	Headlight indication lamp
13.	Level shifting indication lamp	14.	Emergency brake indication lamp	15.	Right turning indication lamp	16.	Torque converter oil temperature meter
17.	Engine water pressure meter	18.	Brake air pressure meter	19.	Hour meter	20.	Horn button
21.	Steering lamp switch	22.	Oil valve pedal	23.	Guiding operation level	24.	Parking brake indication lamp
25.	Instrument lamp switch	26.	Headlight lamp switch	27.	Rear lamp switch	28.	Working lamp switch
29.	Fan switch	30.	Wiper switch	31.	Rear wiper switch	32.	Parking brake handle
33.	Gear disengagement selection handle						

1. Instrument and indication lamp:

Function and application scope of each instrument are listed as following:

(1) Voltmeter

Indicate voltage of system. Power supply voltage which is input into instrument is used to display system voltage, indication scope: 16~36Vdc.

(2) Hour meter:

Indicate accumulated working times of engine. Liquid crystal screen digital display. Display scope: 0.0 ~ 99999.9H; automatically memorize local data in case of power off. Working hours meter will accumulate on current accumulated data when engine operates; hopper sign flashes; accumulate 0.1 hour every 6 minutes. Working hour meter stop accumulating when engine doesn't operate, display total accumulated hours, hopper sign doesn't flash.

(3) Engine oil pressure meter:

Indicate engine oil pressure of engine. Display with resistance value of pressure sensor placed on engine oil system of engine. Indication scope: 0MPa～1MPa; ≤0.1MPa is red zone, ＞0.1 is white zone. When needle enters into red zone, low engine oil pressure alarm indication lamp is lit; in case engine operates, the instrument will send out alarm sound.

(4) Torque converter oil temperature meter

Indicate oil temperature of torque converter. Display through inspection of resistance value of temperature sensor placed in transmission gear. Total rotation angle of needle is 270°, stepping angle is 2°, indication scope: 60℃(C)～120℃(H); ≥110℃ is red zone, ＜110℃ is white zone. When the needle enters into red zone and engine operates, the instrument will send out alarm sound. When temperature exceeds normal scope and approximates to maximum value, change transmission handle to lower level, reduce rotation speed of engine or stop operation until oil temperature is reduced to normal scope.

(5) Engine water pressure meter:

Indicate cooling water temperature of engine. Display through inspection of resistance value of cooling water circulation system placed in engine. Total rotation angle of needle is 270°, stepping angle is 2°, indication scope: 60℃(C)～140℃(H); ≥110℃ is red zone, ＜110℃ is white zone. When the needle enters into red zone and engine operates, the instrument will send out alarm sound. When the needle enters into red zone and the instrument sends out alarm sound, immediately stop operation and driving, engine operates at idle speed and stop after water temperature is dropped down. Check whether there is fault in engine system under low water temperature. Then carry out normal operation and travel after fault is excluded.

(6) Brake air pressure meter

Display through inspection of resistance value of pressure sensor placed on air pressure system. Total rotation angle of needle is 270°, stepping angle is 2°, indication scope: 0MPa～1MPa; ≤0.45MPa is red zone, ＞0.45 is white zone. When the needle enters into red zone, low brake air pressure alarm indication lamp is lit, when engine operates, the instrument will send out alarm sound.

(7) Fuel level meter

Indicate fuel oil level. Display through inspection of resistance value of fuel sensor placed in fuel tank. Total rotation angle of needle is 270°, stepping angle is 2°, indication scope: 0(E)～1(F); ≤1/8 is red zone, ＞1/8 is white zone.

2. Indication lamp and switch:

(1) Charging indication lamp

If the indication lamp is lit, it means charging the battery.

(2) Low transmission oil pressure indication lamp:

When oil pressure of the transmission gear is less than 1.2MPa, this indication lamp is lit.

(3) Left and right turning indication lamp (green):

When the switch handle is pushed forward, the left turning indication lamp and front and rear turning indication lamp at left side continue flash;

When the switch handle is drawn backward, the right turning indication lamp and front and rear turning indication lamp at right side continue flash;

(4) Parking brake indication lamp:

When hand brake handle is pressed down, this indication lamp is lit.

(5) Service brake indication lamp:

When the brake pedal is stepped down, the indication lamp is lit.

(6) High beam indication lamp:

When the high beam lamp is switched on, this indication lamp is lit.

(7) Low engine oil pressure alarm indication lamp is lit:

When engine oil pressure of the engine is in red alarm zone, this indication lamp is lit.

(8) Level shifting indication lamp:

When the level selection handle is on upper position, this indication lamp isn’t lit, it means power of the transmission is cut off when the brake pedal is stepped down; when the level selection handle is pressed down, this indication lamp is lit, it means power of the transmission isn’t cut off when the brake pedal is stepped down.

Note: Unless operate or travel on slope, and the level selection handle is selected to be pressed down, the level shifting indication lamp is lit; otherwise the level selection handle must be placed on upper position and the level shifting indication lamp isn’t lit, then carry out normal operation or travel.

(9) Emergency brake indication lamp: Standby.

(10) Low brake pressure indication lamp:

When this indication lamp is lit, it means brake air pressure is lower than 0.45MPa, don't travel and operate. When this indication lamp isn't lit, it means brake air pressure rise up 0.45MPa, then travel and carry out operation.

(11) Starting switch of electronic door key:

Plug the key into the switch of the electronic door as figure 3 – 2, turn clockwise the key to connection position, then turn clockwise to starting position, connect the starting motor and start up the diesel engine. When weather is cold, turn the starting switch anti-clockwise to pre-heat position, then start after air incoming for preheating.

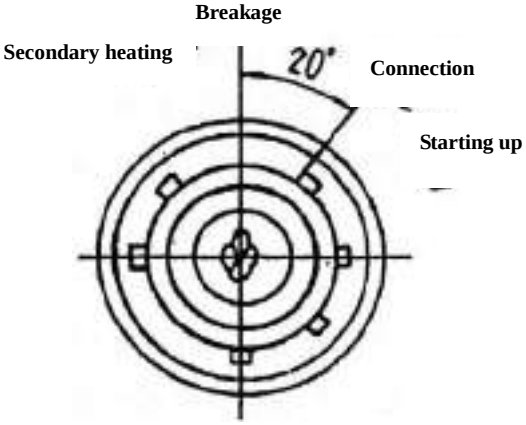

Fig. 3-2 Key preheat starting switch

Note: When it is turn to starting and turn to connection, the key switch is self-locked; it can't be directly turn to starting position. It can be started again only after it is turn to stop in order to protect starter against damage caused by repeated starting.

Each starting time shall not exceed 10 seconds. Interval time between two starting shall not be shorter than 1 minute.

(12) Switch components

- Front Lamp Switch

When the switch is pushed in the middle, the front lamp lights with near light;

When the switch is pushed down, the front lamp lights with far light.

- Rear Lamp Switch

When the switch is pushed in the middle, the rear lamp lights with near light;

When the switch is pushed down, the rear lamp lights with far light.

- Work Lamp Switch

When the switch is pushed down, the top working lamp in the driving cab lights.

- Instrument lamp Switch

When the switch is pushed down, all instrument lamps as well as front and rear width lamps light.

- Fan Switch

When the switch is in middle position, fan will run in low speed.

When the switch is in lower position, fan will run in high speed.

- Wiper Switch

When the switch is pushed in the middle, the rain brush runs at low speed;

When the switch is pushed down, the rain brush runs at high speed;

When the switch is pushed up, the rain brush resets and stops running.

(13) Rear wiper switch

When the switch is placed at middle position, the wiper operates at low speed;

When the switch is placed at lower position, the wiper operates at high speed;

When the switch is placed at upper position, the wiper resets and stops operating.

(14) General switch of power supply (it is located below left protection door of engine, which isn't indicated in figure)

When the switch is turn left, the power supply is on; when the switch is turn right, the power supply is off.

Note: Power supply shall be switch off when it doesn't operate for long time or stops for maintenance.

(15) Trumpet Button

When the button in the middle of the steering wheel is pushed down, the trumpet sounds.

(16) Steering Light Switch

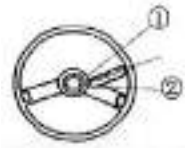

This handle is used to operate the steering signal lamp.

① Turn to left: push up the operating lever;

② Turn to right: push down the operate lever.

Note: When the steering wheel returns to the middle, the steering signal does not be removed, you should let the operating lever reset.

(17) Mp3 player

Play mp3.

(18) Safety pipe case

When the fuse is replaced, the type shall be same as that of original fuse (it isn't indicated in figure 3.1-1).

(19) Air-condition system:

The cab is equipped with air-condition system. When strong cooling is required, the switch of the air conditioner shall be turn to cooling position, the cooling degree can be suitably adjusted. The switch of air conditioner can be turn to warm air position during cold winter time in order to improve temperature of the cab. It greatly improves the working environment. The cab is equipped with the fan. When the switch of the fan is drawn out, the fan immediately operates.

3. Control Lever and Pedal:

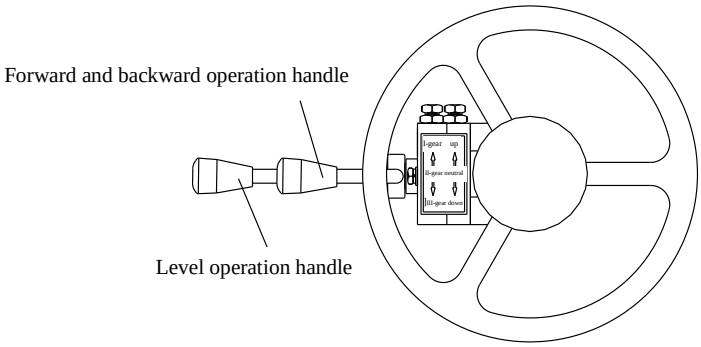

Fig. 3-3 Gear shift lever

(1) Gear shift lever: (See Fig. 3 - 3)

Steering lever pushed forward, move forward

Steering lever pulled backward, move backward

Steering lever in middle position, stop

Gear shift lever in I, the first gear

Gear shift lever in II, the second gear

Gear shift lever in III, the third gear

(2) Accelerator pedal:

It is used for control the fuel-supply for engine. When the pedal is loosened, engine is under idle operation and when the pedal is depressed, the revolution of engine is increased with fuel-supply increasing.

(3) Retarding pedal:

When the pedal is depressed, the loader is retarded, valve is cut off and the clutch is left off the gear box to cut off the transmission system. At this time, rail braking light is lit.

(4) Hand brake control lever:

It is used for parking brake. Pulling up is to brake and pushing down is to loosen. Before don't forget to loose the hand brake control lever.

(5) Control lever of operating device:

Bucket control lever.

Rearward: If the lever is push to the left from neutral position, it will rest at this place till the bucket reach to the position that is set in advance, then the lever reverts the neutral position. ② Position in right figure.

Rest: The bucket keeps in a certain place. ① Position in right figure.

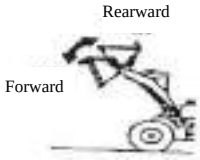

Forward: Unloading. ③ Position in right figure.

Booms control lever.

Lifting: If this lever is put from rest position to up, it will rest till the booms reach to the position that is set, and then the lever reverts the neutral position. ① Position in right figure.

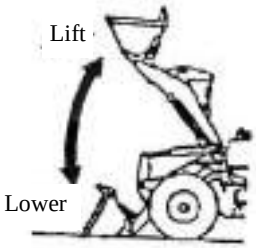

Neutral**:** The booms keep in a certain place. ② Position in right figure.

Lowering：Boom drops down. ③ Position in right figure.

Floating: The booms move freely by force. ④ Position in right figure.

IV. Operation of Loader

(I) Safety Operation Rule:

1. It is not permitted for unqualified driver to drive the loader. The driving trainee drives the loader under the instruction of the qualified driver.
2. Before driving, the driver should understand the performance, structural characteristics, operation essentials and maintenance and service method as well as the necessary traffic regulations.
3. Before starting, vehicle examination and preparation shall be made according to the stipulations. Once the problems are discovered, it shall not be operated until the failure is removed.
4. Before starting and operating, observe whether or not there are any persons and barriers around the loader and horn the signals.
5. When the engine operates, it is not permitted that any persons stand or walk between front tire and rear tire, in the front of frame, on the boom, bucket and grab and no permission for any persons stand or walk under the operating device.
6. It is necessary to avoid maintenance and service under the operation of engine. If it is required, it should be operated by the qualified driver.
7. In running, it is not permitted for any persons to go up and down from the loader. No person is permitted to sit on the loader except in cab.
8. In running, improper high speed and turning rapidly should be avoided.
9. In going downhill, it is not permitted to drive without gear on to prevent the engine from extinction. The revolution of engine should be kept in minimum operating speed. Especially in steep slope and abrupt turning, it shall run with low speed gear and in 1000 rpm and keep the steering system in good performance. The extinction shall result in steering fault and accident.
10. When passing through bridge, the driver shall pay attention to the bearing capability of the bridge.
11. In operating, it loads the materials with bucket inserting in first gear and without shocking in high-speed and inertia force.
12. In shifting forward and backward gear, the brake pedal is depressed at first and then the steering control lever is pulled.
13. The materials are evenly loaded with grab and bucket. It is necessary to avoid the material not balanced in grab and bucket. It is not permitted for grab or bucket lifting high position to run. If there are any obstacles in the way and it is required to lift in high position, the driver shall drive carefully and lower the boom about 40 cm from the ground after passing the obstacles.
14. When the gas pressure is below 0.6 Mpa. (6 kg/m^2), it is not permitted to drive the loader.
15. In maintenance and service of engine or electrical system, the mass power switch should be shut-off.
16. Before leaving cab after working off, the bucket and grab should be laid down on the ground with shutting off engine and switching off power.
17. When opening the cover of heat water tank or cover of hydraulic oil tank, the grooves should be put on with slowing opening to prevent from burning the people.
18. No smoke is allowed in feeding fuel or maintenance and service.
19. The fuel or oil should be clean in conformity with the stipulated brand and quality standard.
20. In cold winter weather, the loader should be stayed in warm house not in the open air in night to prevent

storage battery and parts from damaging. The fuel or oil suitable for winter weather should be used.

21. All damages resulting from operating, driving and maintenance and service not conforming to these operation regulations shall not be covered in “Three Guarantees – guaranteed repairs, guaranteed returns, and guaranteed exchanges that factories apply to their products in order to gain the trust of customers.”

22. The other safety regulations refer to “Safety Manual”.

(II) Term of Trial Operation

Before the new loader brings into formal operation, one-hundred term of trial operation shall be carried out. It is very important for the service life of loader. During the period of trial operation term, the loader shall be carefully driven and the loading shall be gradually increased. With run-in wear of parts and components in engine and several replacements of fuel and oil, the loader shall bring its full technical performance into play and lengthen the service life as longer as possible.

The trial-operation term is also suitable for the loader after overhaul.

i. Preparation:

(1) Check if every part of the machine is installed firmly, if bolts and nuts are fixed， if accessories are complete, and if there it is disabled.

(2) Check that all control levers of instruments are fixed and fastened without any damages.

(3) Check that all pipelines and connections for fuel, cooling, brake, steering, torque converter, gearbox, hydraulic and pneumatic systems are fastened without any damages.

(4) Check that the belt of engine fan is properly tensioned.

(5) Check that the pressure of tires conform to the stipulated requirements.

(6) Check that electrolytic of storage battery is fully enough and connections are fastened.

(7) Check that the quantity and brand of lubricant, oil, water and fuel are conformity with the stipulations.

(8) Loosen the lock fixed with hinged frame before running.

ⅱ. No-load Trial Operation Term (10 hours)

(1) Place the control levers in neutral position, pull the hand brake and start the engine according to the starting method. The initial revolution is kept in 600 – 750 rpm for five-minute operation and then in 1000 – 1200 rpm for ten-minute operation. Check that the indication and sound of meters are normal.

(2) Lift and lower the boom, turn tool and open and close gripper-jaw for 5 – 10 times. Turn the steering wheel for several times. Check that all actions are correct without any abnormal conditions

(3) Loose the hand brake and drive the loader in first-gear, second-gear and third-gear. During the period of running, smoothly control the operating device and check that there are not any leakage in oil, water and gas, braking is reliable, steering is flexible and indictor lights and steering signals are normal (Caution: Revolution of engine doesn’t exceed to 1800 rpm).

(4) After ten-hour no-load running-in, check that all bolts and nuts are fastened, especially for bolts of engine cylinder head, in-let and exhaust pipe, front and real axles, rim, transmission shaft. The engine oil filter and fuel filter are cleaned.

ⅲ. 50% Rated Load Trial Operation Term (40 hours):

(1) Operate under loading weight not exceeding 2.5 ton and 1800 rpm.

(2) Smoothly operate lifting and shoveling.

(3) Make maintenance and service at regular interval in and after the trial operation term.

(4) Clean filter in hydraulic oil tank, rough filter in transmission system and air clearer.

(5) Replace engine oil and hydraulic torque converter oil.

ⅳ. 75% Rated Load Trial Operation Term (50 hours)

(1) After 50% rated load trial operation term and check that all are normal, the loading is increased to 75% and revolution to 2200 rpm.

(2) Make maintenance and service at regular interval in the term, after 100-hour operation, the loader shall be fully checked, all filters and clearer shall be cleaned and the hydraulic oil in hydraulic system of operating device and lubricants used for front and rear axle and hub reduction gear shall be replaced.

(3) In the trial operation term, if the overheating or other abnormal conditions are discovered, the loader can not operate until the fault is removed.

(4) The conditions in 100-hour operation should be recorded. If the unqualified parts and components are discovered and can not be solved, the recorded conditions are submitted to our company.

(5) After 100-hour trial operation, it is confirmed that all assemblies are operated normally and the loader can bring into normal operation according to the stipulated load.

(III) Driving of Loader

i. Preparation before Driving:

The following items should be checked before driving:

(1) Clean off the oil dirty and soil.

(2) Engine oil surface is within the level of oil dipstick

(3) Loose the drain plugs in fuel pump and fuel filter and make the fuel system discharge with hand pressing pump.

(4) Feed the radiator cooling water in proper level. When winter weather is below 0℃, it is necessary to feed warm water or ethylene glycol anti-freeze fluid.

(5) Check fuel tank. If required, feed the enough fuel filtered in full so as to prevent moisture from condensing.

(6) Check oil surface of transmission which shall approximate to upper scale line of oil gauge when the whole machine starts up.

(7) Check that oil surface in hydraulic oil tank is kept in the top of oil meter. Feed oil with same brand.

(8) Drain out the moisture in air storage reservoir with drain valve and after draining, it should be tightened again.

☆ **If water in air storage cylinder is not drained in line with the requirement, the performance of the entire machine would be reduced or disabled.**

(9) Check that tire pressure is normal. If tire pressure is too lower, the load capability is inadequate and tire has a short service life. If the tire pressure is too high, the vibration of vehicle increases and the center part of tire wears out rapidly.

(10) Check that all connections are fastened.

(11) Feed the lubricating oil and grease in each lubrication point according to the stipulations shown in the Lubrication Table.

The following items shall be check before starting:

(1) Check that each meter indicates normally and engine charges.

(2) Check that the sound of engine is normal in low speed or middle speed operation.

(3) Check that the electric units, such as steering indicator light, braking light and horn, are normal.

(4) Turn the steering wheel and check the reliability and tightness in steering system.

(5) Check the operation reliability of foot brake and hand brake.

(6) Check that hydraulic operating device operates normally.

(7) Check that there are not any leakages in oil and water pipes.

(8) Check oil gauge of transmission, height of oil surface shall approximate to upper scale line of oil gauge.

ii. Starting Engine

(1) Switch on the mass power switch.

(2) Place steering control lever and operating device control lever in the middle position and hand-brake control lever in retarding position.

(3) Cartridge the key in electric-switch and turn in clockwise to switching-on to make the meters operate.

(4) Depress the throttle pedal a half and turn the key to the starting position in clockwise and switching-on the starting motor to make engine start. The starting time does not exceed 10 seconds for each time. If it does not start in this way, start again one minute later. If it doest not start secondly and continue the above starting for four or five times, it is necessary to find the fault and remove it and then to start again.

(5) After starting, depress the throttle pedal continuously to make the engine preheat under 1000 – 1200 rpm and charge the air reservoir simultaneously.

Caution: ① When flywheel of engine and starting motor do not stop, it is not permitted to start, or it shall damage the starting motor and flywheel gear.

② When water temperature of engine is below 55℃ and oil temperature below 45℃, it is not permitted to run in high speed or in full load, especially in winter weather.

③ When the engine is operating, it is not permitted to shut off the power supply switch, or it shall damage the generator.

In order to ensure normal application of the machinery, please be sure to implement according to above regulations!

(6) If it is difficult to start in winter, the warm water in 90 – 95 ℃ can be fed into the radiator. If necessary, the winter lubricating oil in 70 – 80 ℃ can be fed into the lubrication system of engine and then start engine.

iii. Starting-up:

(1) After starting engine, it runs in idle-running to preheat the engine for five minutes. When water and oil temperature are above 45℃, braking air pressure is above 0.6Mpa. (6 kg/cm2) and all meters are under normal operation condition, the loader can start.

(2) Lift the bucket and grab to operation position (40 cm far from ground)

(3) According to the road, field and operation condition, gearshift control lever is put on the proper gear.

In general: First Gear – for loader operation and cross-country running.

Second Gear – for traction transport and running in slope and sharp turn road.

Third Gear – for running on good road without load.

(4) Shift the gearshift handle in Forward and Backward

(5) Loose the hand brake.

(6) Horn, depress the throttle pedal and increase the revolution of engine to start up.

iv. Shifting Gear:

(1) The loader is equipped with torque converter, which is used for controlling the throttle in stepless speed change and can decrease the speed automatically in slope road with increasing driving force, so it is unnecessary to shift the gear. In order to avoid the parts wear or interrupt the power, it is unnecessary to shift the gear with torque converter, except that the operation condition or the road is changed.

(2) The shifting-gear is carried out through the hydraulic control, so it is necessary to shift the gear without stopping. In order to shift the gear smoothly and reduce the shock force, when the low speed gear is changed to high speed gear, it is necessary to accelerate at first and slightly reduce the throttle with pulling handle. In contrast, when the high speed gear is changed to low speed gear, it is necessary to lower the speed and then increase the throttle with pulling handle.

(3) When shifting to Forward or Backward, it is necessary to depress the brake pedal at first. In retarding, shift brake and after shifting, loose the brake pedal or the gear box is shocked and it results in damage of parts or the clutch is held on because of heating parts.

(4) When shifting gear, it is noted that the pressure shown in the clutch manometer is normal. When operating the control lever, the pressure shall drop down instantaneously and then return the original position, which indicates that the clutch in the original is off and shifted to the new gear. If the indication of clutch is abnormal and the speed is not apparently changed when the gear is shifted, it is necessary to find the fault and remove it.

v. Steering:

The hydraulic steering gear equipped in the loader is similar with mechanical steering gear. Caution: when the revolution of engine is low, the steering pump shall supply less oil and the revolution shall be affected. Especially when the engine is extinct, the steering pump shall not supply oil. It is difficult for steering gear to turn and even not to turn. Therefore, when the loader turns sharply, it should run in low speed gear and the revolution of engine shall be in 1000 rpm simultaneously so as to keep the steering performance and prevent the engine from extinction.

vi. Shut-down and Extinction:

(1) Lower the revolution of engine and depress the retarding pedal to shut down.

(2) Place the steering lever in middle position.

(3) Loose the retarding pedal and pull brake control lever.

(4) Reduce the revolution of engine in 800 – 1000 rpm and run in idle operation for 3 – 5 minutes to make the engine cool down.

(5) Put the operating device down the ground and place the handle in middle position.

(6) Depress the extinction switch of engine to make the engine extinct.

(7) Shut off the mass power supply switch to cut off power. Pull out the key and close down door.

(8) In winter, after stopping, drain out the cooling water. If the anti-freezer is added in the water, it is unnecessary to drain out the cooling water. When air temperature is too low, the storage battery shall be dismounted and put in room to prevent it from frost crack.

vii. Operations of the Loader

Because working scope and operation object of the loader are very extensive, the instruction can't describe in detail, many experience shall be obtained from practical operation by the driving personnel. Hereby only some common samples are listed for information.

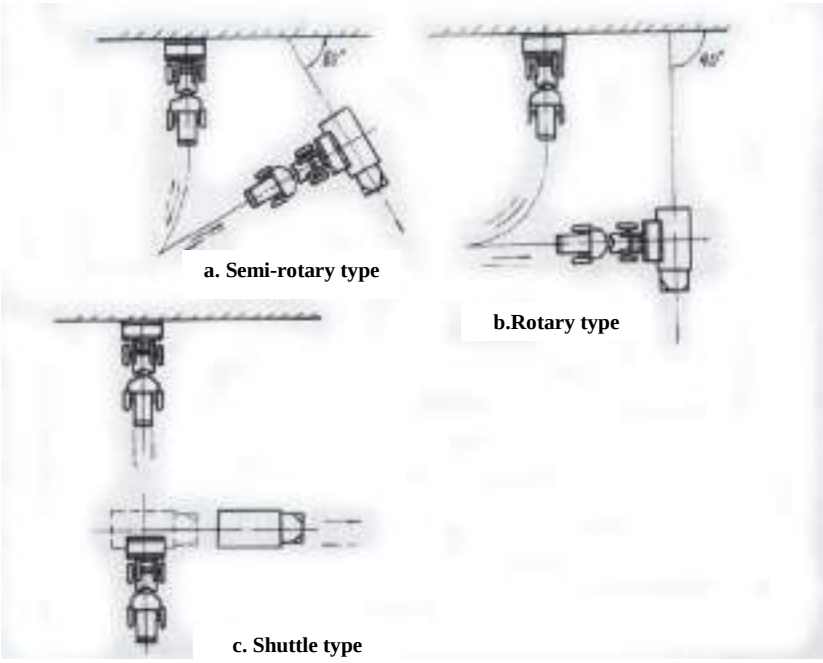

Fig 4-1 Operation way

Loading field shall be cleaned before operation of the loader, fill pit level, remove big stone block, make the working site clean and flat as possible, so that the loading work shall be carried out smoothly and safely.

1. Application of shovel loading

Select operation way shown in figure 4 – 1 according to field and road conditions, quantity and parking position of transportation vehicles and operation routine of the loader.

Shovel loading method as following:

(1) Single shovel run method (figure 4 – 2a)

The loader moves forward in line, the blade of the shovel is inserted into the material stock until the rear wall of the shovel contacts the material stock. The loader stop advancing, the shovel is rotated to full load position, and then lifts the boom to transportation height.

This shovel method is simple, but its operation resistance is big, which is only applicable for loose material with light shovel loading capacity.

(2) Conjugate shovel run method

Simultaneously conjugate with lifting action of shovel or boom to carry out shovel operation when the load moves forward, there is two methods:

a When the shovel is inserted into the material stock which depth isn't too big (shovel depth is about 0.2~0.5), intermittently operate the shovel turnover upward at same time when the loader moves forward, conjugate lifting of boom until the shovel is fully loaded (figure 4 – 2b).

b Conjugate lifting of boom at same time when the loader moves forward (figure 4 -2c), the shovel is rotated to transportationn position when the shovel edge leaves the material stock, this method is also called as "Excavator" shovel loading method.

When conjugate shovel run method is applied, its operation capacity is generally 1/2~1/3 of single shovel run method, the shovel is easily fully loaded. But the requirement on the operation level of the driver is higher, which is applicable to shovel load mine ore and uneven block materials.

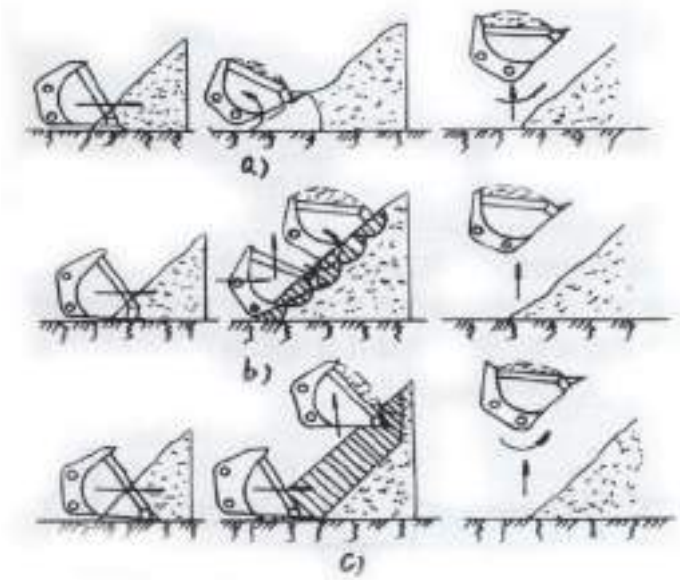

Fig. 4-2 Shovel loading method of loader

a）Single shovel run method　b）Conjugate shovel run method　c）　“Excavator” shovel run method

2. Shovel operation (figure 4 - 3)

(1) Place the shovel on the floor and make it slightly declined downward (3~5°)

(2) The loader moves forward, operate boom operation rod to decreasing position at same time, force the cutting edge of the shovel is cut into the floor.

(3) When the shovel reaches the cut depth, immediately draw the boom operation rod to “middle” position; continue to drive the loader forward. Adjust excavation depth through operation rod of the shovel at same time in order to suit to floor change.

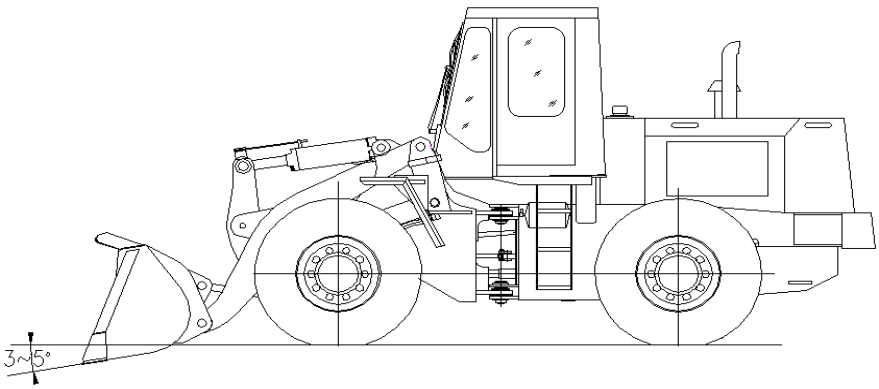

Fig. 4-3 Shovel operation figure

☆ Titling angle of the shovel shall not be more than 15° during shovel operation.

In order to ensure normal application of the machinery, please be sure to implement according to above regulations!

3. Other operations

Handling, lifting and traction for short distance and shovel soil and levelling on loose floor etc operation can refer to above various operations.

☆ Shovelling soil for long time and traction operation for long distance are prohibited.

In order to ensure service lift of the machinery, please be sure to implement according to above regulations!

V. Lubrication

The correct lubrication can reduce the frictional resistance between parts and wear-and-tear of parts to ensure the operation performance and lengthen the service life for loader. The oil in hydraulic transmission and hydraulic system simultaneously is used as lubricant and cooling oil. It is very important for feeding and replacing oil at regular interval to make the loader operate normally.

(I) Notice for Feeding the Lubricant:

1. When checking oil level, it is necessary to put the loader in horizontal position.
2. The lubricant and oil fed should be in conformity with kinds and brand stipulated in Operation Instruction. They should be clear. It is best way to deposit or filter for a proper time before use.
3. When the loader is under warm condition after operation, the dirty oil is drained out and the clear oil is added at same time. It is necessary to let the loader idle running for several minutes and drain out the oil after stopping. The new and clear oil is fed under low-speed running of engine until the new oil is added to the level stipulated in Operation Instruction.
4. When feeding lubricant or oil, not only the tools and vessel are cleaned, but also the feeding port and the surface near the port are cleaned to prevent moisture and dirty material into the tank.
5. The oil is fed according to the scale shown in oil dipstick or oil level indictor. The oil is added in front and rear axle until the oil overflows. As for feeding hub, the end cover is removed at first and the oil is fed until oil surface is flushed with the port. (See Fig. 5 - 1)

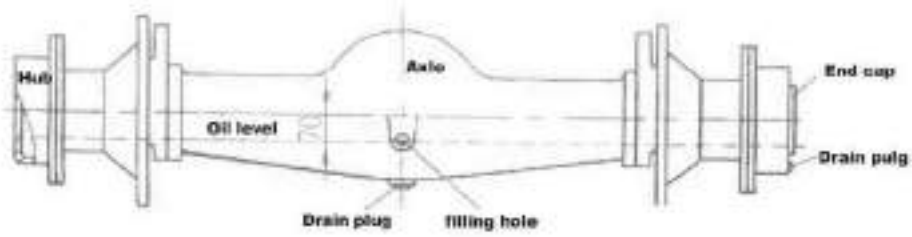

Fig. 5-1 Filling Port and Oil Level in Front and Rear Axle

6. When adding lubricant, it is added until overflowing from clearance. After adding, clean out the overflowed lubricant.

(II) Lubricating Location and Feeding Periodic Chart

Introductions:

1. Except for normal check and feeding before drawing out every day, oil-feeding and replacement shall be made according Feeding Periodic Chart - every week (50 hours), every month (200 hours), every season (600 hours and every half year (1200 hours). In accordance with the operating situation and environment condition, the oil-feeding period can be shortened or lengthened. The feeding location is shown in Fig. 5 - 2.
2. The lubrication of engine refers to Operation Instruction of Engine.
3. Designation:

Δ First lubricating for new loader after running-in

○ Check oil level

● Replacing new oil

◎ Replacement in Spring and Autumn

◆ Add lubricating grease

【 Add lubricating oil

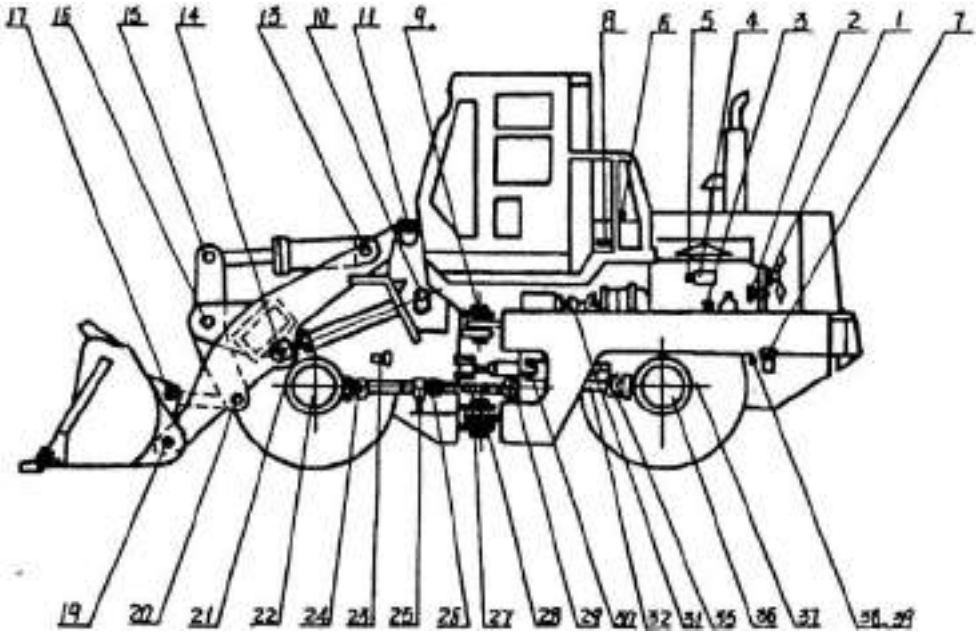

Fig. 5-2 Lubrication and Feeding Location

Table V – 1 Lubricant Feeding Periodic Chart

Location of Lubrication		Lubricating point	Kind of Lubricating Oil	Lubricating period				Series No. in Fig. 5-1
				Week in 50 h	Month in 200 h	Season in 600 h	Half year 1200 h	
Engine	Crank shaft chamber	1	Diesel engine oil	Δ	○	●	⊙	3
	Fuel injection pump	1				●		4
	Governor	1					●	5
	Water pump & fan bearing	1	Lubricating grease		◆			1
	Charged generator	2				◆		2
Hydraulic system of Torque converter & gearbox		1	Torque converter oil	Δ	○	●		8
F/R axle	Main driving	2	Gear oil	Δ	○		⊙	21, 37
	Hub reduction gear	4		Δ	○		⊙	22, 36
Bake pump in retarding system		4	Braking oil	○		●		23, 35
Steering and operating hydraulic system oil tank		1	Hydraulic oil	Δ	○		⊙	6
Fuel tank		1	Diesel					7
Support of operating device and cylinder	Boom front end sustainer	2	Lubricating grease	◆				19
	Boom rear end sustainer	2		◆				11
	Rocker arm	1		◆				16
	Both end hinging point of pulling rod	2		◆				17, 20
	Rear end support of hoisting cylinder	2		◆				10
	Front end support of hoisting cylinder	2		◆				14
	Both support of bucket cylinder	2		◆				13, 15
	Both support of grab cylinder	2		◆				None
	Front & rear support of steering cylinder	4		◆				30
Frame	Frame hinging point bearing	2	Lubricating grease	◆				9, 28
	Rear axle swing bracket support	2		◆				38, 39
Universal driving shaft	Main driving shaft	2	Lubricating grease		◆			31
	Front driving shaft	4			◆			24,25, 26,29
	Rear driving shaft	2			◆			32
	Transmission spline shaft	2				◆		27
Hinging pivot of all control lever		Several	Lubricating oil	【				

Δ First lubricating for new loader after running-in

○ Check oil level

● Replacing new oil

◎ Replacement in Spring and Autumn

◆ Add lubricating grease

【 Add lubricating oil

List of Oil and Water used for Loader

Type	Season and climate	Ambient temperature ℃	New standard oils and fluids		Remarks
			Standard code	Oil trademark	
Fuel	Extreme cold	-29～0/-44～0	GB252-2000 Light diesel	-35 -50	Fuel tank
	Winter	-14～10/-5～10		-20 *-10	
	Summer	4～40/12～40		*0 10	
Diesel engine oil	Extreme cold	-40～40	SAE API CF-4	Mobil Delvac 1	Engines of vehicles exported to cold regions
	Full year	-15～40		Mobil Delvac 1300	Imported engines
	Summer	0～40	SAE API CD	Mobil Delvac 1330	
	Extreme cold	-30～10	GB11122-1997 Diesel engine oil (CD)	5W/30	Domestic made engines
	Full year	-10～40		*15W/40	
	Summer	0～40		30	
Torque converter oil	Extreme cold	-40～40	Hydraulic drive oil	8D	Torque converter and transmission
	Full year	-15～40		*8#	Hydraulic system
	Extreme cold	-40～40		Mobil multi-functional ATF Dexron III	(Optional for export vehicles)
Hydraulic oil	Extreme cold	-38～0	L-HS	Kunlun anti-wear hydraulic oil 32	Working hydraulic system
		-38～0		Mobil DTE 11M ISO VG 15 (Optional for export vehicles)	
	Winter	-10～10	GB11118.1-94 Mineral oil type and synthetic hydrocarbon type hydraulic oil (L-HM)	*32	
	Summer	0～40		*46	
Gear oil	Extreme cold	-40～40	GB13895-1992 Gear oil for heavy-duty vehicles GL-5	75W/90	Domestic made axles
	Full year	-10～40		*85W/90	
	Summer	0～40		90	
	Extreme cold	-40～40	SAE API GL-5	Mobilube 1 SHC	Imported axles (Optional for export vehicles with domestic made axles)
	Full year	-20~40		Mobilube HD 80W/90	
Brake fluid	Full year	-20~40	GB10830-1998 (DOT-3, SAE J1703)	(719 synthetic brake fluid)	Brake system
	Extreme cold	-40～40	Mobil Universal Brake Fluid DOT 3	Mobil brake fluid DOT 3	Brake system of export vehicles
Lubricating grease	Full year	-20~40	SH/T0380-1992 Composite lithium-based lubricating grease	ZL-2H ZL-3H	Rolling bearings and various hinge pins
Anti-freeze	Full year	-40~40	SH/T0521-1999 Automotive glycol coolant	-45℃ full-functional anti-freeze	Export vehicles
		-15~40		-18℃ full-functional anti-freeze	Domestic vehicles with air conditioner or heater

Note: One with * marking is preferentially selected brand.

Note: Relevant cautions

1. The fuel in the tank must be filled up in time to avoid drying by absorption. The fuel should be checked once a month for contamination and sediment. The filter should be cleaned at the same time. The diesel engine oil must be changed regularly because mechanical debris in the oil will increase in amount with

the time. The increased debris may come from: the products from component oxidization and wear, the residues from combustion in the cylinder and the ingress of dust. When the content of these debris reaches 0.4~0.5%, the oil will become black in color and its physical and chemical properties will deteriorate. The oil should be changed when the engine is warm.

2. The hydraulic oil should be checked regularly for cleanliness with the following method: Take out oil from the oil tank and drop it on a piece of 240-mesh filter paper. If a circle in light yellow color appears on the paper, it indicates that the oil is still usable. If the yellow circle on the paper contains a significant outer ring and a center part in black, it indicates that the oil is contaminated and should be changed. When filling in new oil, a strainer must be used. It is not permitted to fill the oil directly into the oil tank. It is strictly prohibited to mix hydraulic oil of different grades.

3. If 719 synthetic braking oil is applied, the seal elements in the brake system are made of ethylene propylene rubber. If alcohol braking oil is applied, the seal elements in the brake system are made of natural rubber. It is not permitted to apply the different kind of braking oil.

4. If #8 transmission oil is short of supplying, GB11120-89L-TSA turbine oil can be used for substitution, #46 for summer and #32 for winter.

5. The anti-freeze fluid for the engine should be selected depending on regional differences in accordance with the engine instruction manual.

6. The operational performance and service life of the loader are closely related to the oil in use. It is so important that you can never adopt a casual attitude to abuse at will, especially for engine oil and torque converter oil that are used in the environment of high temperature and high speed.

VI. Interval Technical Maintenance

Under the general operation condition, the interval technical maintenance has six terms – daily (8 – 10 hours), weekly (about 50 hours), monthly (about 200 hours), every season maintenance (about 600 hours), Semiannually (about 1200 hours) and annually (about 2400 hours) or maintenance and service can be made by customers according to the detailed operation and actual situation.

(I) Daily Technical Maintenance:

1. Check the oil level in engine crankshaft box. Feed the oil to the scale if it is not enough. If the oil level is too high and oil becomes thin, it is necessary to find the fault and remove it.
2. Check the oil level in fuel tank and feed fuel in full.
3. Check that engine, torque converter, gear box, oil pump, hydraulic steering gear are fastened and tightened and if they are overheat.
4. Check that oil, water and gas pipelines are leaked.
5. Check that the connection bolts of transmission shaft and pin shaft are fastened.
6. Clean and remove the oil dirt, soil and sundries.
7. Check that all parts and components sound noise when they operate.

(II) Weekly Technical Maintenance:

The following items are checked except daily maintenance:

1. Feed and replace lubricating oil according to the Lubricant Feeding Periodic Chart.
2. Clean the oil filter, fuel filter and air clearer of engine.
3. Check the belts of fan and generator are tensioned and readjust.
4. Check the oil level of injection pump and feed the oil if required.
5. Check liquid level of storage battery and specific gravity of electro-hydraulic. The liquid level of electro-hydraulic should be between 10 – 15 mm shown in polar. If it is not enough, distilled water shall be added. The specific gravity of electro-hydraulic generally is not below 1.27 and the normal value is 1.28 ~ 1.29 at the weather temperature of 15℃.
6. Check that the control levers of the throttle, hand brake and gearshift system operate and the clearance of pedal is suitable. They are adjusted if required.

(III) Every Month Technical Maintenance:

The following items are checked except daily maintenance and weekly maintenance:

1. Clean the engine oil filter and fuel filter.
2. Check the pressure and wear of tires. The tire pressure normally is 0.294 ~ 3.136 Mpa (3.0 ~ 3.2 kgF/cm^2). The lower pressure is suitable for soft road.
3. Clean up the filters in hydraulic oil tank and gearbox.
4. Add the lubricating oil according to Lubricant Feeding Periodic Chart.
5. Check that the oil levels of the final transmission of front and rear axle and hub reduction gear are the level stipulated.
6. Check that the bolts of swinging bracket, front and rear axle hub and braking system are fastened.
7. Check that there are any cracks in the thrust area of all welds in front and rear frame and operating device.

8. ▲After 150-hour operation, check the piston and seal cup ring of brake pump. If there are any mechanical damages or scale in seal ring lip, they are replaced.

(IV) Every Season Technical Maintenance:

The following items are checked except daily maintenance, weekly maintenance and monthly maintenance:

1. Clean the cooling system of engine.
2. Lubricate the charging generator and starting motor and check the electric equipment and tailpieces. If there is any burned scale, it is necessary to clear up.
3. Check the clearance of air valve. If necessary, it should be adjusted.
4. Check the gas distribution timer and injection advance angle. If necessary, they should be adjusted.
5. Check the injection mass and pressure of injection nozzle. If necessary, they are cleaned and adjusted.
6. Check and clean the breather holes of brake pump, front and rear axle, gearbox and torque converter.
7. Apply the lubricating grease on transmission shaft.
8. Replace the engine oil in crankshaft chamber and injection pump.
9. Check the leakages in pressure pump, air reservoir, brake valve and air pipelines.
10. Check that there is or not a serious sedimentation in cylinder of operating device. It is necessary to troubleshoot the cylinder, piston and distribution valve and replace the damaged sealing parts if required.

(V) Semiannually Technical Maintenance:

The following items are checked except daily maintenance, weekly maintenance, monthly maintenance and season maintenance:

1. Clean the sump of engine, fuel tank and pipes.
2. Clean and replace the lubricating oil according to Lubricant Feeding Periodic Chart.
3. Check the wear of hand brake and replace it if required.
4. Check all the meters and lights.
5. Check and replace the sealing cup ring of brake pump.

(VI) Annually Technical Maintenance:

1. Make the overhaul of diesel engine according to Operation Instruction of Engine.
2. Dismount gearbox, torque converter, front and rear axle differential gear and hub reduction gear and inspect, repair or replace the damaged parts.
3. Check the steering gear and its steering angle and idle clearance and repair and replace the damaged parts.
4. Dismount the brake system and check, repair and replace the damaged parts.
5. Check if or not there are any deformation, crack and damage in operating device and frame and repair timely if required.

VII. Structure, Adjustment and Maintenance of Main Components

(I) Engine System:

The power system supporting the loader comes from different company. The detail maintenance and troubleshooting of engine refer to the Operation Instruction of Engine.

(II) Hydraulic Torque Converter and its Hydraulic Circuit System

1. Structure and Function

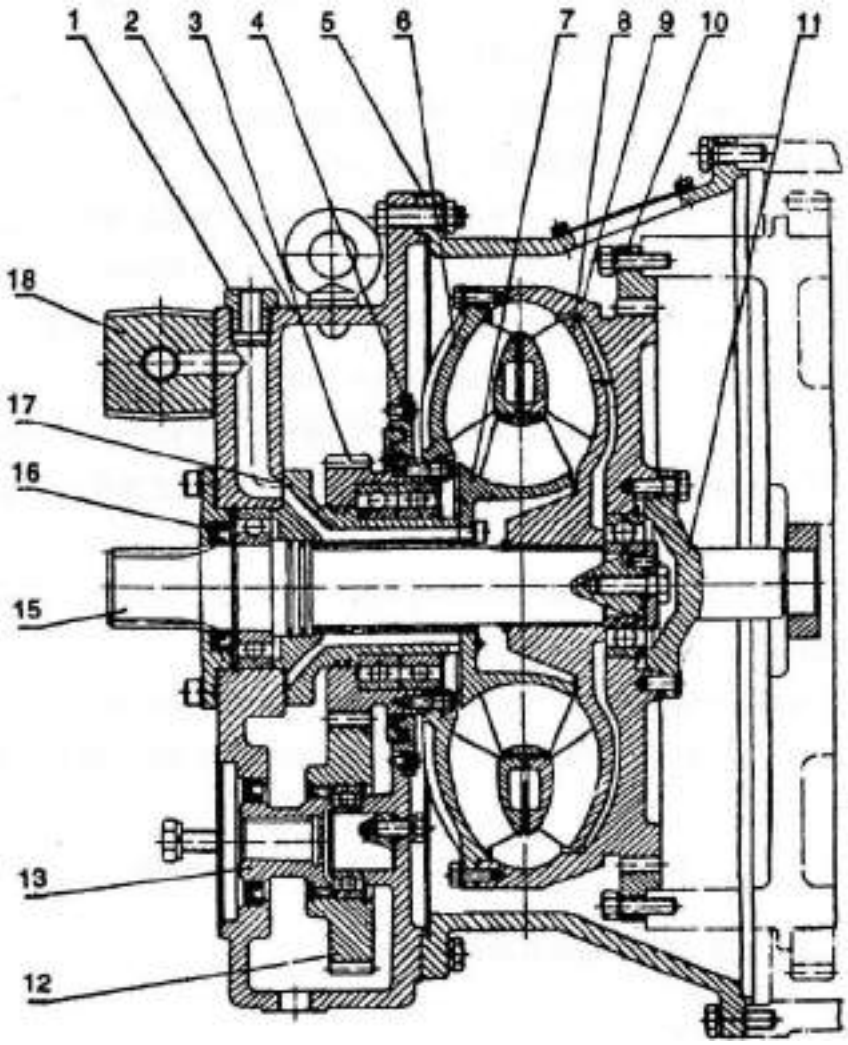

Fig. 7-5 Hydraulic Torque Converter

1. joint 2. case 3. gear 4. oil sump cover 5. housing 6. pump wheel
7. guide wheel 8. turbine 9. pump shell 10.gear ring 11. pump shell shaft
12. gear 13. coupling sleeve 15.turbine shaft 16. seal ring 17.guide wheel seat 18. return valve

The hydraulic torque converter mainly consists of pump wheel 6, guide wheel 7, turbine 8, pump shell 9 etc parts (refer to figure 7 - 5), all three service wheels (pump wheel, turbine and guide wheel) are installed in the pump shell full of oil liquid, the bending blade of each blade wheel is completely casted with aluminium alloy, the pump wheel is connected to the pump shell through bolts, the external tooth in the pump shell engages with gear ring 10, the gear ring is fixed on the fly wheel of the engine with bolts, the turbine is coupled on the turbine shaft 15 by spline, the guide wheel is connected to the guide wheel seat 17 by bolts, the guide wheel seat is connected with the case body 2, which is fixed.

When the hydraulic torque converter operates, impeller vanes of three operating wheels compose a closed

circulation hydraulic circuit. The power from engine is transmitted to pump wheel passing through geared ring and pump housing. When the operating hydraulic flows into pump wheel, it flows out along impeller vanes of pump wheel as the pump wheel rotate with centrifugation, flowing from the outlet of pump wheel to worm gear, shocking the worm gear vane, rotating the worm gear, bringing the worm shaft to rotate and transmitting the dynamic force. The liquid flows passing through the worm wheel and shocking the pilot wheel and it applies a reactive torque to the operating oil, as the pilot wheel is fixed. The torque is combined together with torque of operating oil, transmitting to the worm wheel; therefore, the torque from worm wheel is more than the torque transmitting from engine, which makes the loader automatically change speed and traction force according to the road situation and the dragging force when the loader operates. The speed decreases and the traction force increases as the dragging force increase, on the contrary, the speed increases and the traction force decreases as the speed increases. Meanwhile, the speed and the traction force can be controlled by the throttle in stepless regulation, stable starting and no shocking.

The torque converter plays the role as main clutch in mechanical transmission to prevent the engine and transmission system from shocking and extinction and prolong the service life of engine.

2. Oil Circuit System:

When the oil liquid is circulated and shocked in operating wheel, the liquid temperature increases and the operating wheel leaks and damages. It is necessary to input the proper pressured operating oil, entering into operating wheel to compensate. A part of the circulated operating oil is cooled passing through the return valve and radiator.

The compensating oil pump of torque converter is mounted on the torque converter box, driven by gear wheel 12 and coupling sleeve 13. The return valve18 controls the back pressure of torque converter and the joint is connected with the thermometer of torque converter.

A circulation oil circuit system is composed of torque converter and gearbox (See Fig. 7 - 6). The operating oil is pumped by oil pump 2 from the oil tank 1 (i.e. gearbox case) to the oil-in valve 4 through the filter 3. The oil-in valve controls the oil pressure of gearshift valve of gearbox. A part of the circulated oil liquid flows in radiator 7 through return valve 6. The cooled operating oil enters into each gearshift clutch of gearbox to cool the friction disk and then return to oil tank.

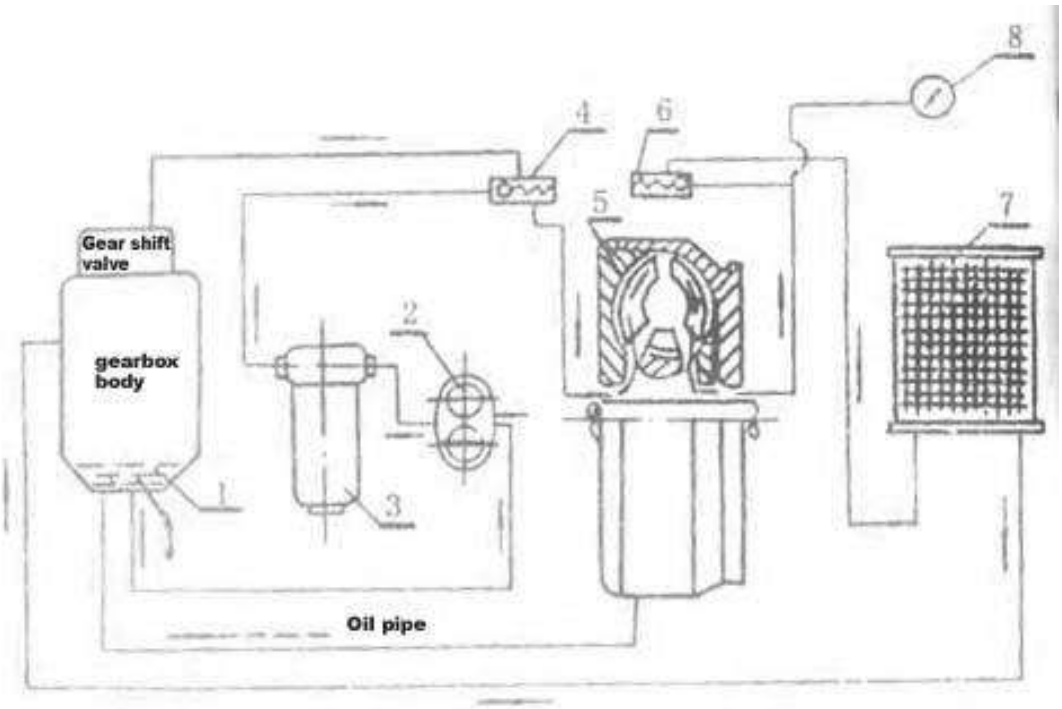

Fig. 7-6 Oil Circuit System of Torque Converter Gearbox

1. gearbox 2. compensating oil pump 3. fine filter 4. oil-in valve
5. torque converter 6. return valve 7. radiator 8. oil thermometer

3. Maintenance and Service:

(1) Often check the oil dipstick of gearbox to ensure the oil level is above the lowest scale. Add and replace oil strictly according to the stipulated oil.

(2) Keep the operating oil clean and prevent impurities or water from entering in. Clean up the filtering cartridge of fine filter at regular interval. Replace the oil timely within 500-hour operation to ensure the oil circuit system clean.

(3) Pay attention to the indicated reading on thermometer of torque converter. When the temperature exceeds 110℃, make the engine in idle operation or shut down for lowering the temperature.

(4) Compensate the oil pressure to ensure the pressure in operating wheel of torque converter in 0.245 ~ 0.343 MPa (2.5 ~ 3.5 kg/cm^2). If the pressure is too low, it brings about the cavitations corrosion in the operating wheel and if the pressure is too high, it results in leakage and heating, which effect the normal operation in torque converter. The pressure is controlled by the return valve. It has been adjusted in factory.

(5) Check the tightness in each connection to prevent the air from entering and the oil from leaking.

(6) Add the proper operating oil when remounting after dismounting for check. Screw off the plug near oil valve fixed on the top of torque converter and screw on the plug after adding oil.

(III) Transmission

1. Characteristic, Structure and Working Principle of Gearbox:

The gearbox is equipped with a parallel-axis, constant-mesh gear and hydraulic control. It has the characteristics of a long service life, compact structure, and fast gearshift with easy and stable operation without knocking sound.

The structure of gearbox is shown in Fig. 7 - 7. It is composed of forward- and backward-gear shaft, reverse shaft, immediate shaft, first gear shaft, second and third gear shaft, output shaft, gearshift valve and box-body.

When operating the gearshift valve, the pressure oil supplied by oil pump of hydraulic torque converter and oil circuit system of gearbox, through oil-in valve, has pressure of 1.47 ~ 1.80 MPa, passing through gearshift valve to each clutch to carry out the gearshift (See Fig. 7 - 8).

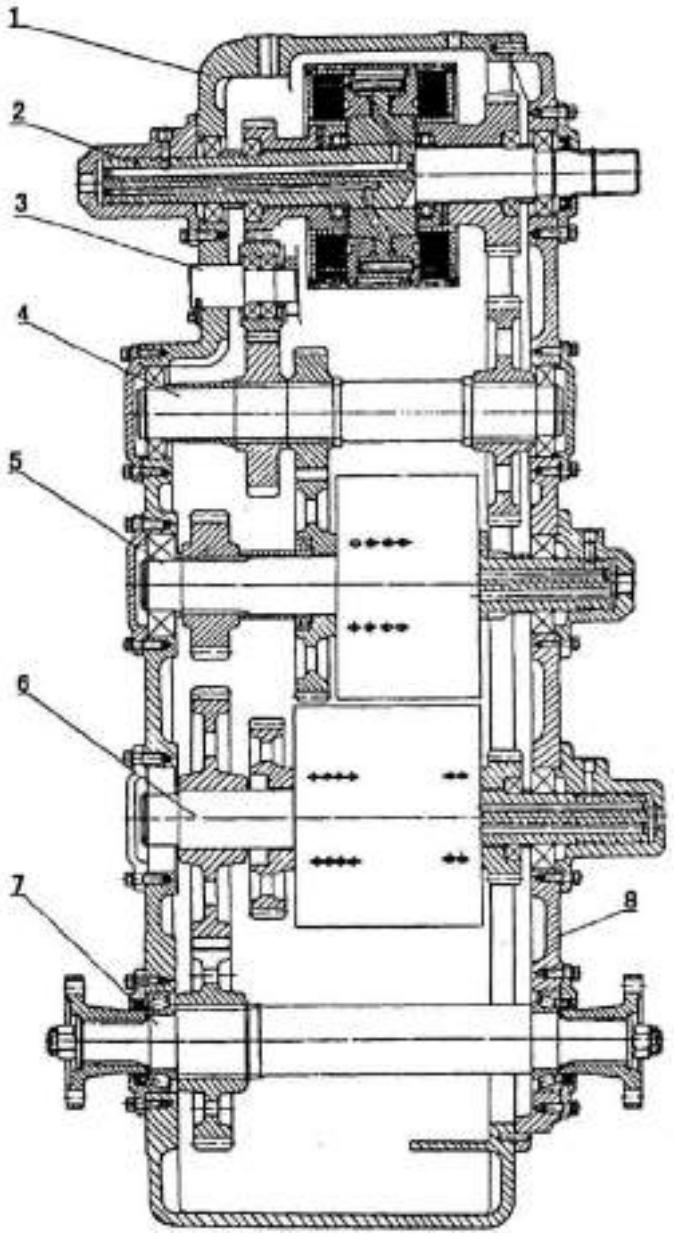

Fig.7-7 Structural Diagram of Gearbox

1. gearbox body 2. forward and backward gear assembly 3. reverse shaft 4. immediate shaft assembly 5. first-gear assembly 6. second- gear and third-gear assembly 7. output shaft assembly 8. gearbox cover

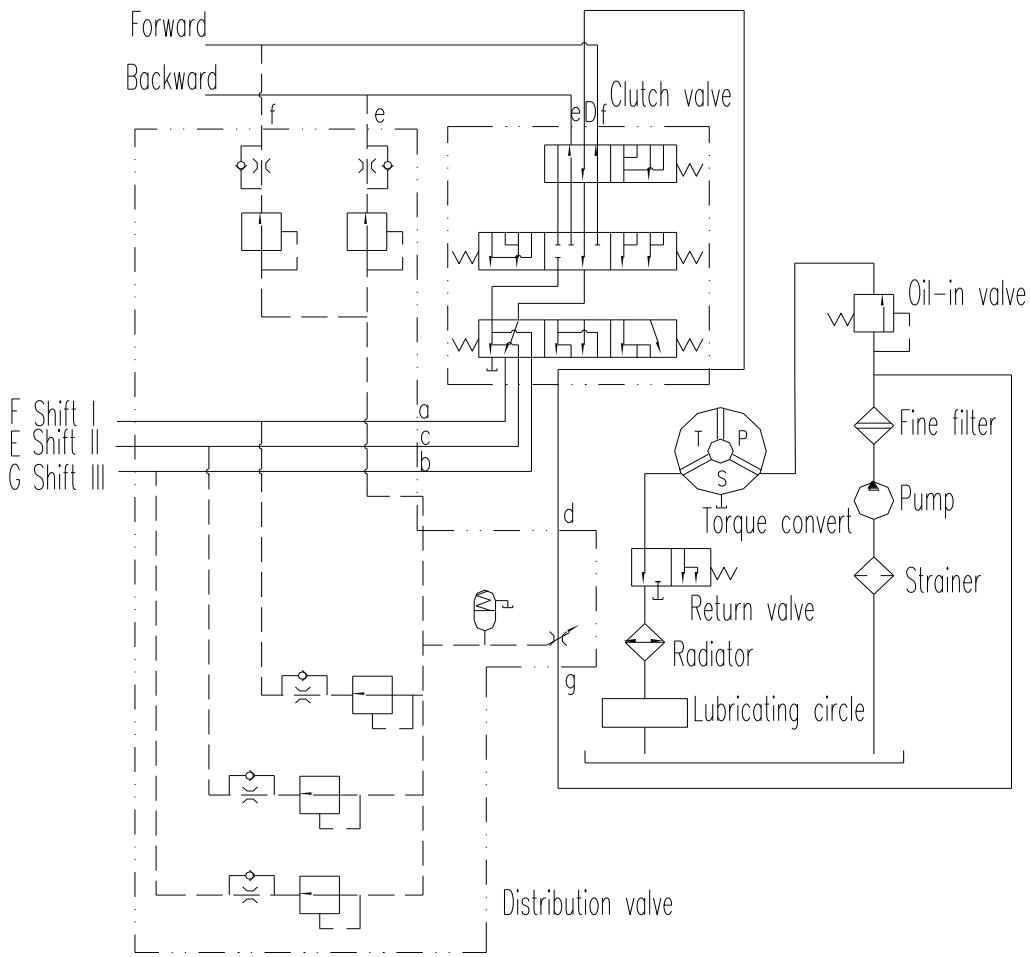

Fig. 7-8 Schematic Diagram of Torque Converter and Gearbox

2. Power Transmission Process of Gearbox:

The gearbox can control the speed of loader in three speeds for forward and three speeds for backward. The power transmission process is shown as follows (See Fig. 0 - 1 Transmission System Diagram):

Forward:

I-Gear: gearbox input shaft forward clutch-on F → Z_1→Z_2→Z_4→Z_5→ I-gear clutch-on→Z_{10}→Z_{11}

II-Gear: gearbox input shaft forward clutch-on F →Z_1→Z_2→Z_8→Z_9→ II-gear clutch-on →Z_{12}→Z_{11}

III-Gear: gearbox input shaft forward clutch-on F →Z_1→Z_2→ Z_3→III-gear clutch-on →Z_{12}→Z_{11}

Backward:

I-Gear: gearbox input shaft backward clutch-on R →Z_6→Z_7→Z_8→Z_4→Z_5→ I-gear clutch-on →Z_{10}→Z_{11}

II-Gear: gearbox input shaft backward clutch-on R →Z_6→Z_7→Z_8→Z_9→ II-gear clutch-on →Z_{12}→Z_{11}

III-Gear: gearbox input shaft backward clutch-on R →Z_8→Z_7→Z_8→ Z_2→Z_3→ III-gear clutch-on →Z_{12}→Z_{11}

3. Structure and Principle of Hydraulic Clutch:

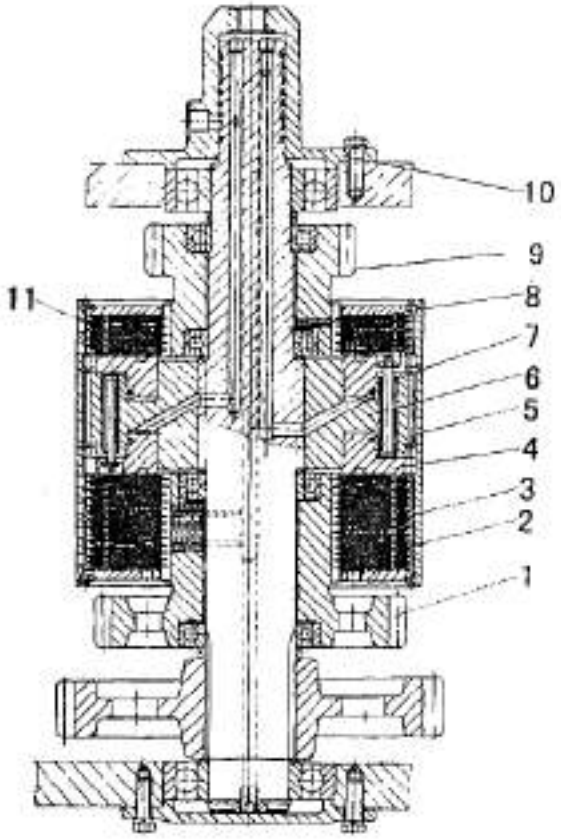

Fig. 7-9 Hydraulic Gearshift Clutch

1. gear 2. driving friction disk 3. driven friction disk 4. piston 5. gear ring
6. cylinder block 7. spring 8. shaft 9. gearwheel 10. bearing cover 11. wave spring

There are five hydraulic gearshift clutches with the same structure in gearbox (See Fig. 7 - 9)

The forward and backward gear clutch is mounted on the forward and backward shaft, I-gear on I-gear shaft and II- and III-gear on II- and III-gear shaft.

The clutch is composed of bearing cover 10, shaft 8, cylinder 6, gear ring 5, piston 4, driving friction disk 2, driven friction disk 3, gearwheel 1, 9 and spring 7.

The clutch is controlled by control lever gearshift valve. When the pressure oil flows from inlet of bearing cover (10) to cylinder (6) to push the piston (4) and make the clutch driving disk (2) and driven disk (3) combined. The torque and power is transmitted by gear. When the pressure oil is cut from the oil source, the piston (4) shall return the original position by spring (7) and the driving friction disk and driven friction disk shall be separated from each other. The forward and backward clutch has 7 driving disks and 6 driven disks respectively; I- and II-gear clutch has 14 driving disks and 13 driven disks; III-gear clutch has 6 driving disks and 5 driven disks. The copper base power metallurgy is made on the surface of driven disk with thickness of 0.5 mm and driving disk is made of steel 65Mn. There are cooling oil holes at the shaft and gear. The cooled oil from radiator flows to each friction disk group through the oil-line on bearing cover, shaft and gear to play the lubrication and cooling.

4. Gearshift Valve and Distribution Valve:

Refer to Fig. 7 – 8 Schematic Diagram of Torque Converter and Gearbox

Distribution valve together with gearshift is mounted on the right bottom plate above gearbox. The pressure oil

with 1.47 – 1.86 Mpa (15 – 19 kg/cm^2) from oil-in valve of torque converter enters into the distribution valve, which plays the role of flow-control and pressure regulation (See Fig. 7 – 10). The gearshift valve is composed of valve body, direction control valve stem, gearshift valve stem, braking relief valve stem, air intake connection cover (See Fig. 7 – 11). When controlling the direction or gearshift valve stem, in dependence with the position which valve stem is located at, the pressure oil entering in the valve body shall enters respectively into forward and backward gear clutch or each gearshift clutch, to push the piston so as to make the clutch combine together and loader move forward and backward or change speed. In braking, braking pressure is applied to the cylinder, oil line of direction gearshift clutch is cut off and connected with return oil line, the pressure of clutch disappears and friction disk is separated to carry out the power cut.

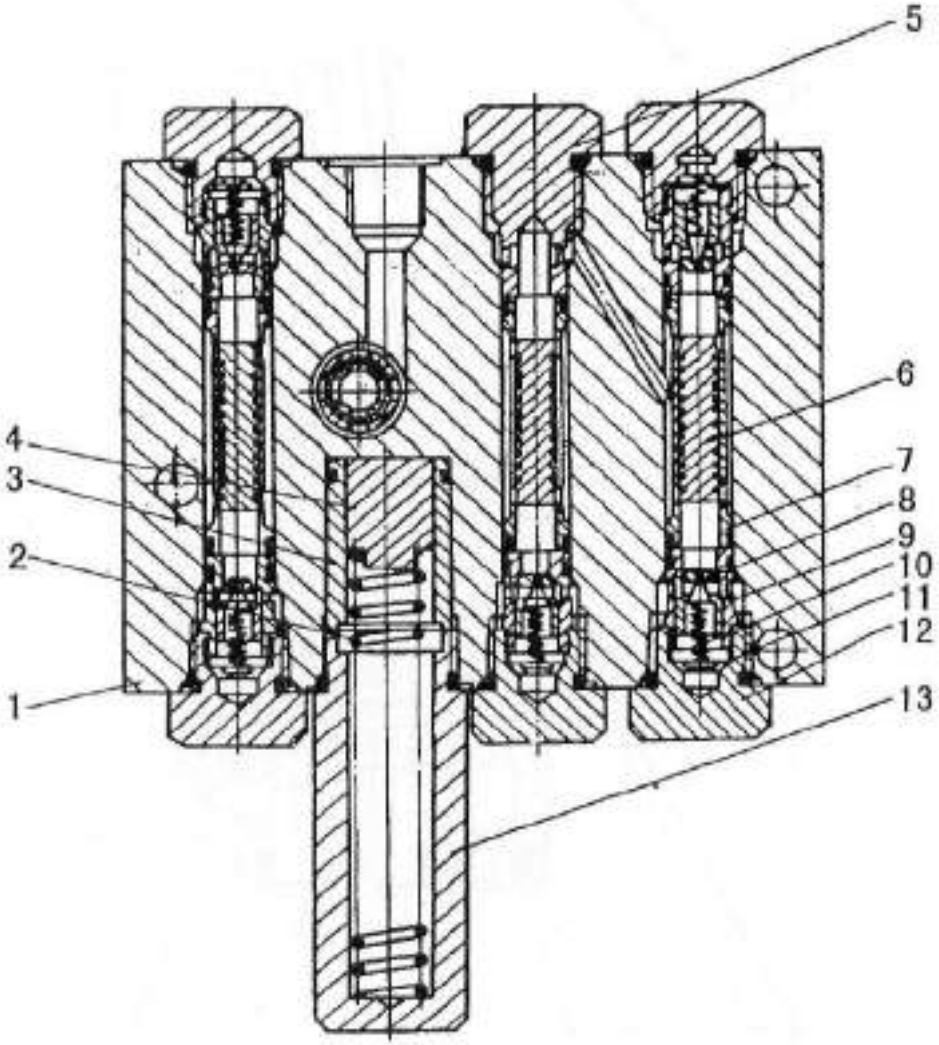

Fig. 7-10 Distribution Valve

1. valve body 2. spring 3. storage valve sleeve 4. storage valve core
5. fixed screw 6. valve 7. storage valve sleeve 8. check valve
9. check valve sleeve 10. spring 11. spring seat 12. fixed screw 13. storage valve cover

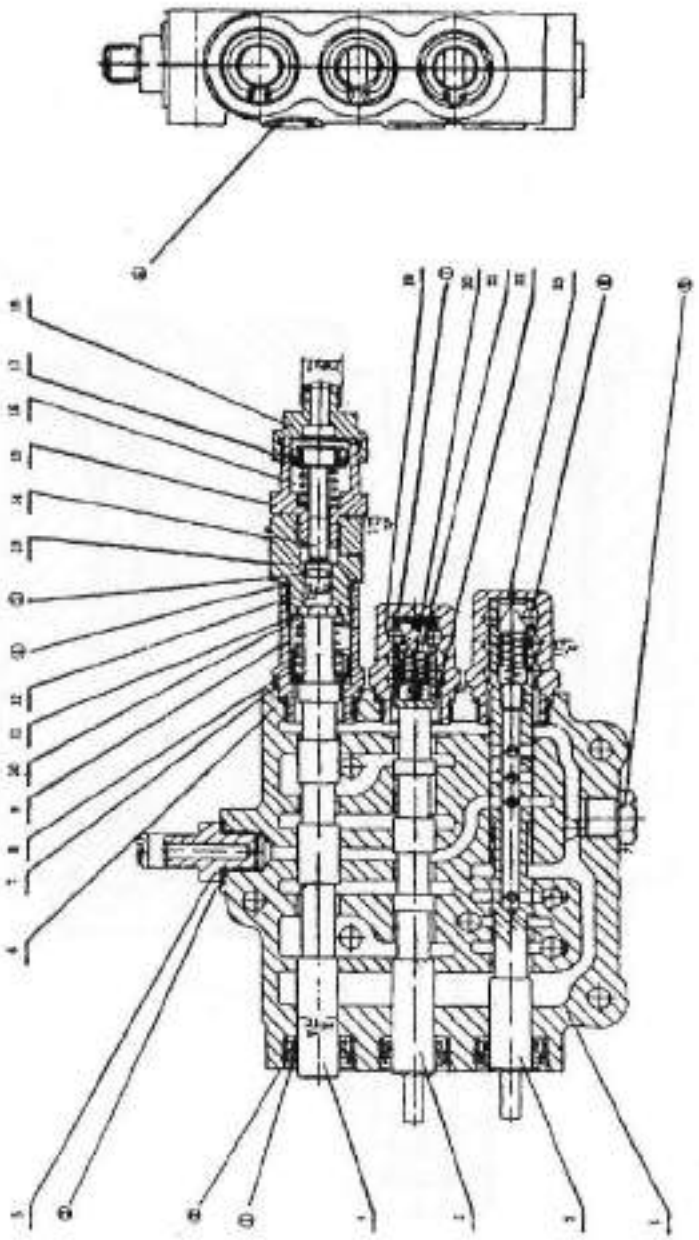

Fig. 7-11 Gearshift Valve

1. valve body 2. gearshift valve stem 3. direction valve stem 4. braking relief valve stem 5. manometer joint 6. washer 7. braking lever connection sleeve 8. limit sleeve 9. braking lever return spring 10. washer 11. screw 12.plunger 13. plunger sleeve 14. piston rod 15. guide sleeve of piston rod 16. piston rod release spring 17. rubber cut 18. air intake connection cover 19. steering rod gearshift body 20. gearshift spring 21. steel ball limit cone 22.baffle ring 23. gearshift lever body

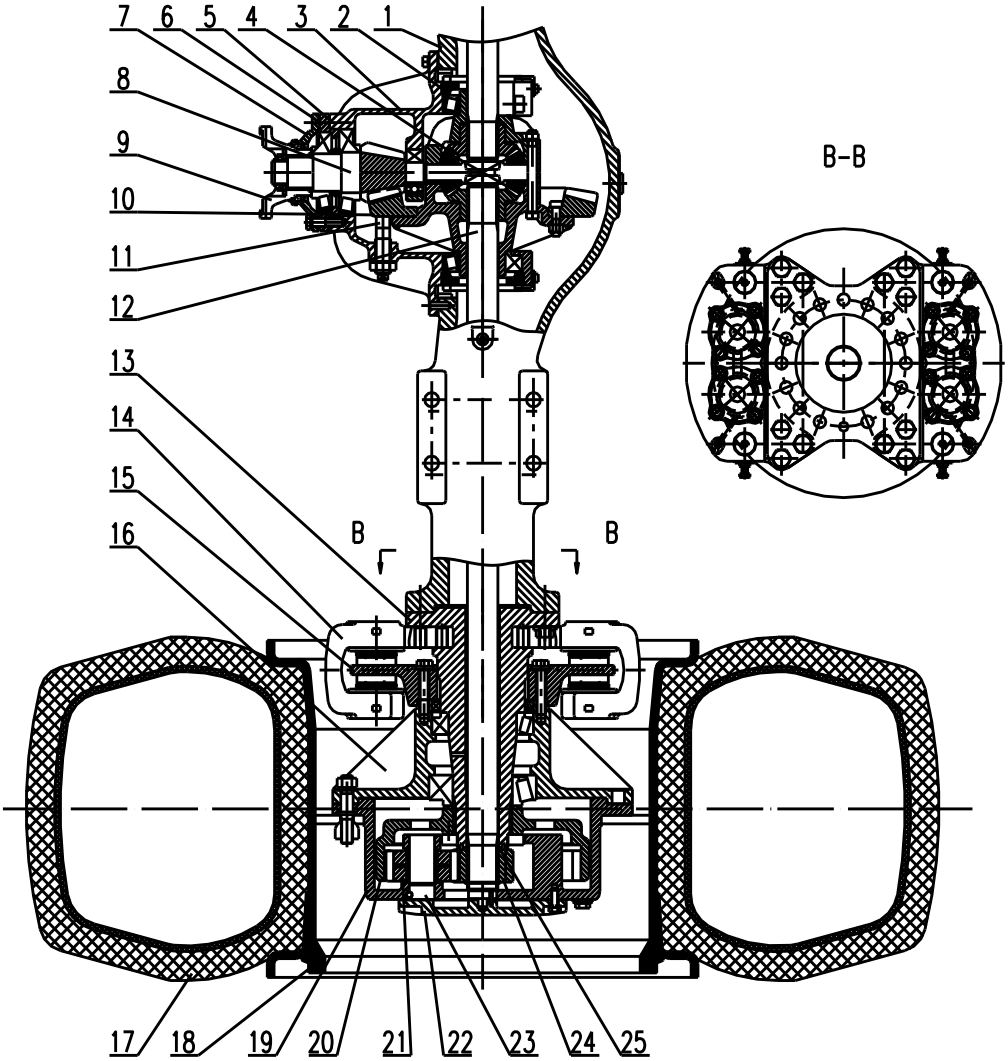

Fig. 7–12 Drive Axle

1. axle housing 2. regulating nut 3. bracket 4. differential 5. regulating shim 6. bearing block 7. pressure cover 8. driving spiral bevel gear 9. bull flange 10. bull spiral bevel gear 11. thrust bolt 12. semi-axle 13. hub support shaft 14. brake assembly 15. brake disk 16. hub 17. tire 18. rim assembly 19. pinion carrier 20. inner geared ring 21. planetary gear 22. cover plate 23. planetary shaft 24. central gear 25. central gear shim

5. Maintenance and Service of Gearbox:

(1) Check oil level of gearbox, add oil and replace oil according to the stipulations shown in VI. at regular interval. The oil used shall conform to the stipulated brand and number. No other engine oil can be substituted.

(2) Clean the oil filter at regular intervals and replace the dirt oil. If the impurities or metal are found, it is necessary to check that the parts are damaged.

(3) If the pressure is below 1.28 MPa (13kg/cm^2), it is necessary to check and remove fault, otherwise the friction disk shall be damaged.

(4) The power metallurgy layer shall be worn in operation. When the thickness is less than the limitation, the piston stroke shall be limited and the clutch shall be not combined. When the friction disk is worn and thickness is less than 2.7 mm, they shall be replaced.

(5) The separation of clutch shall be returned by the spring. If the spring force is not enough, it shall result in heating and worn damage. Caution: the spring force should be check in maintenance. If the spring is deformed, it shall be replaced.

(IV) Drive Axle

The power from the gearbox shall be transmitted to the front and rear axles to drive the loader wheels by front and rear transmission cardan axle. The special-purposed engineering key transmission shaft is used for the front transmission shaft and rear transmission shaft. The automobile general parts are used for the final transmission shaft. For the purpose of steering, the front and rear transmission shafts are equipped with extension transmission shaft.

This loader is driven by four wheels. The function and structure of the front axle are same as those of rear axle. The front axle is mounted on the frame with 8 bolts and rear axle is mounted on the swing frame with 8 bolts, which can swing in ± 15 degrees. When the loader runs on the rough road, it keeps four wheels on the ground. The front and rear axles are composed of axle housing, differential, and hub reduction gear and tires, hub braking unit (See Fig. 7 - 12). The retardation of main drive unit is carried out by means of the first-grade spiral bevel gear. The differential is composed of cross shaft, straight bevel gear and differential housing. The bull spiral bevel gear is mounted on the differential housing. The power is reduced through the first-grade retardation and transmitted to the hub reduction gear by means of right and left semi-shaft.

The hub reduction gear is the planetary wheel. The inner gear ring is connected with hub supporting shaft through the splined shaft and hub supporting shaft is mounted on the axle housing. The power is transmitted to central gear through the semi-shaft and makes the planetary wheel and planetary bracket rotate. The planetary bracket is mounted on hub, which makes the wheel rotate.

Maintenance and Adjustment of Front and Rear Axle:

1. Add or replace the oil to final transmission and hub reduction gear at regular intervals according to the stipulations shown in V. Lubrication and add the lubricating oil to universal joint and hinge pin of rear axle swing bracket at regular intervals. Especially, it is necessary to keep extension transmission shaft lubricating. Once the extension transmission shaft is stuck, it shall damage the gearbox, transmission shaft and driving axle.

2. When the universal joint is remounted or replaced after maintenance, it is noted that the universal joint folks of the both ends of transmission shaft are in the same plane. If the new universal joint folk are used, the inner side on the top of folk shall be corrected to ensure the swing angle in four directions is larger than 20 degrees.

3. When the front and rear axles are remounted after maintenance, it is necessary to ensure that the conical roller bearing has a proper pre-tension. The conical roller bearing in the final transmission has a 1 ~ 3.5 N·M torque after it is fastened and returns to bevel gear. When hub reduction gear is remounted, the lock nut on hub support shaft is fastened until the hub is rotated slightly and then the lock nut is loosened in one-tenth turn.

4. The clearance of spiral bevel gear is adjusted in 0.25 ~ 0.35 mm. The contact surface is larger than 60% along with length of tooth, most of it is in the middle of transverse pitch, not in the end or tooth crest. Adjustment of clearance and contact patch can be realized through regulating cushion 5 at bearing pedestal and regulating nut 2. Please refer to following table for adjustment method.

5. The differential rotates flexibly and the back lash of gear is 0.1 ~ 0.2 mm.

The incorrect print and its adjustment on driven spiral bevel gear

Print Position		Adjustment Method	Adjustment Direction
Forward	Backward		
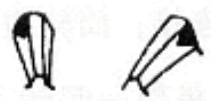		Move the driven bevel gear close to bevel gear. If the back lash is too small, move the driving bevel gear outward.	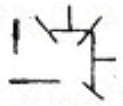
		Leave the driven bevel gear off from driving bevel gear. If the back lash is too large, move the driving bevel gear inward.	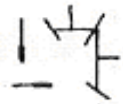
		Move the driving bevel gear close to driven bevel gear. If the running clearance is too small, move the driven bevel gear outward.	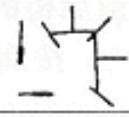
		Move the driving bevel gear off from driven bevel gear.If the running clearance is too large, move driven bevel gear inward.	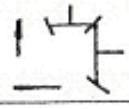

(V) Steering System

The left and right turn of wheel loader are controlled by the steering system, which ensures that the driver can drive the loader in straight or in turn.

Model 957H loader is equipped with full-hydraulic steering system consisting of hydraulic steering gear and priority valve. It has following advantages:

(1) According to the requirements of steering oil circuit, no matter what the load pressure and revolution of steering wheel, the adequate oil supply can be ensured by the priority valve, which makes the steering stable.

(2) Heat of the remained flow output by the oil circuit is dissipated through heat radiator besides flow necessary for maintaining normal operation is distributed to the steering oil circuit. Because most hydraulic oil passes through the heat radiator, so the head radiation efficiency of the system is improved, it has good effect on control of oil temperature.

(3) Small element size and compact structure.

(4) Self-lubrication by pressure oil and long service life.

Once the engine flames out, it is difficult to turn because of large mass for whole. Caution: It is not permitted to turn under the extinction condition.

The steering system is composed of steering pump, full-hydraulic steering gear, priority valve, one-way overflow valve block, steering cylinder and oil tank, cooler, pipelines, etc. (See Fig. 7 – 13)

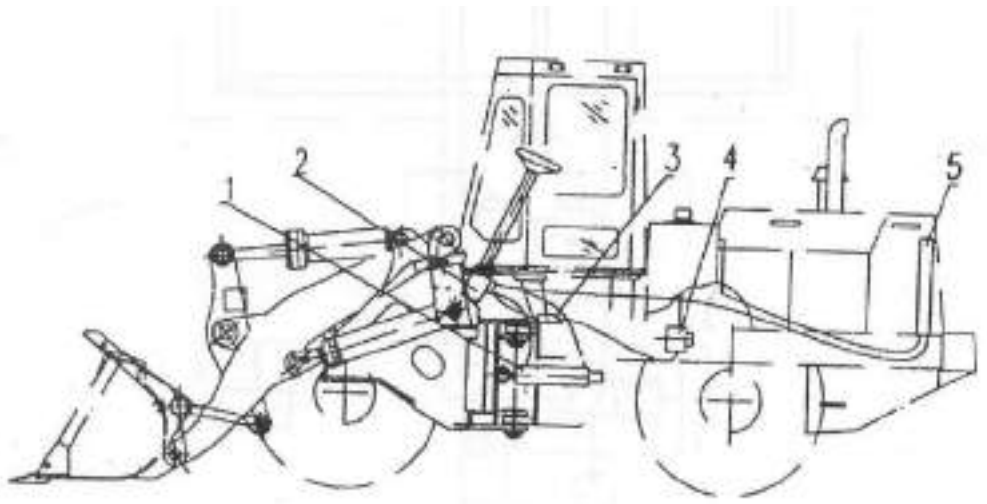

Fig. 7-13 Model 957H Steering System Layout Drawing

1. steering cylinder 2. TLF1-E1000B steering gear 3. priority valve 4. steering pump 5. cooler

1. Operation Principle and Structure:

Figure 7 -14 is hydraulic oil circuit figure of steering system, the priority valve 2 in figure and TLF1-E1000B wholly hydraulic steering gear consists of amplified hydraulic steering system, which can realize sensitive and stable steering, operation saves effort and efficiency of system is high.

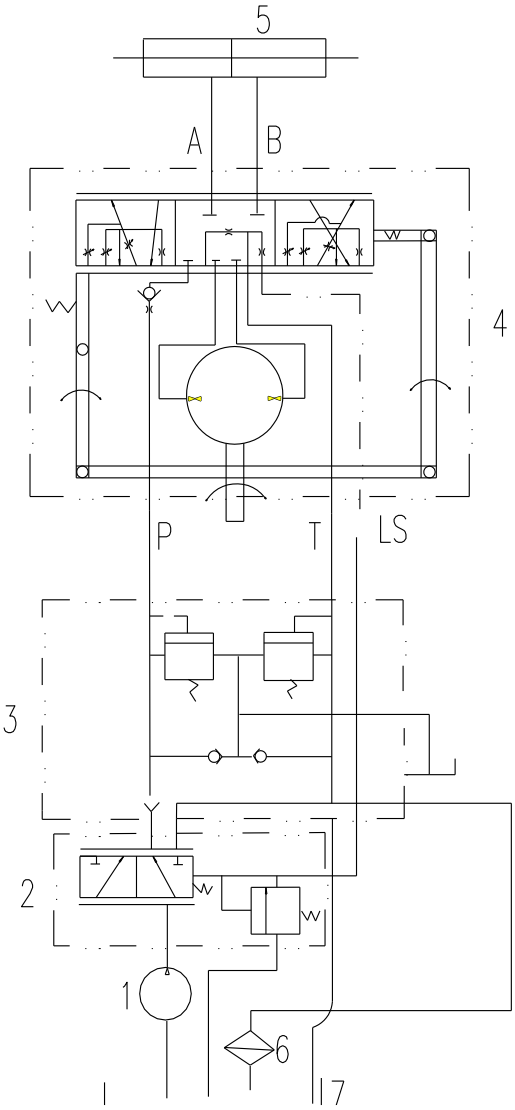

Fig. 7– 14 Oil Circuit Drawing of Model 957H Hydraulic Steering System

1. oil pump 2. priority valve 3. one-way overflow valve block
4. TLF1-E1000Bsteering gear 5. steering cylinder 6. cooler 7.oil tank

2. Layout Drawing of Steering System

The elements and pipes of steering system are shown in Fig. 7 – 16

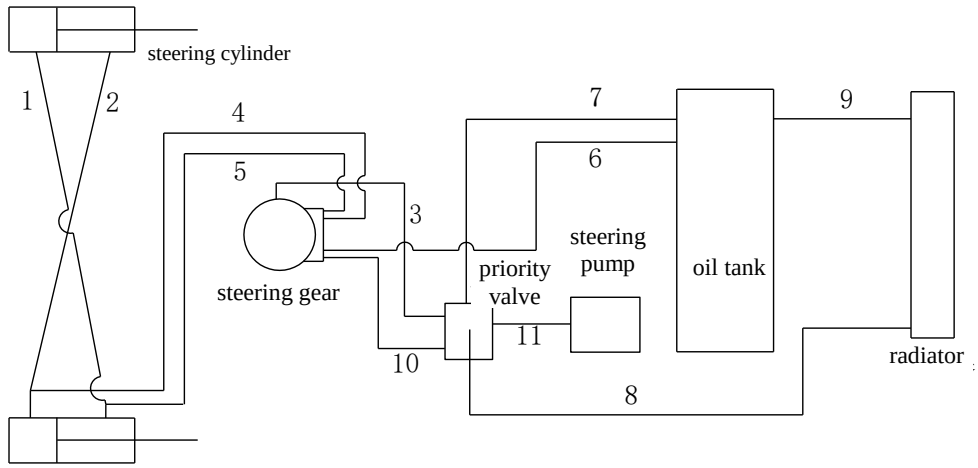

Fig. 7–16 Basic Layout Drawing of Model 957H Steering System

1. Pipeline between left and right oil cylinders 2. Pipeline between left and right oil cylinders 3. Control oil pipe
4. Pipeline between B port and oil cylinder 5. Pipeline between A port and oil cylinder 6. Steering gear oil-return pipe
7. Oil discharging pipe of priority valve 8. Pipeline between priority valve and heat radiator
9. Oil-return tank of heat radiator 10. Steering gear oil inlet pipe 11. Oil inlet pipe of priority valve

After the steering pump sucks oil from working oil tank and supplied oil through oil inlet pipe of priority valve 11. Because there is control oil pipe 3 between the priority valve and the steering gear (amplifier), so it can ensure that the priority valve can firstly meet oil supply of the steering gear, the residual oil will be heat dissipated through heat radiator.

The priority valve supplies oil to the steering gear through oil pipe 10, the steering gear will supply oil to large cavity (or small cavity) of the steering cylinder according to working demand (i.e. operation of steering disc) so that the oil cylinder can extend (or shorten) to realize steering of the whole machine.

3. Performance and parameter of main parts in steering hydraulic system

(1) Steering pump: Model JHP2080S (left-handed), displacement 80 ml/r(C6121),

CBGj2080/2040-XF(CUMMINS)

(2) Full-hydraulic steering gear: Model TLF1-E1000B displacement 1000 ml/r

(3) Priority valve: Model YXL-F250L-N7 (Fig. 7 – 17)

Starting pressure of relief valve assembly (1) of priority valve is 16 Mpa, the maximum operating, which has been adjusted in manufacturer. It is not permitted to adjust it in operation.

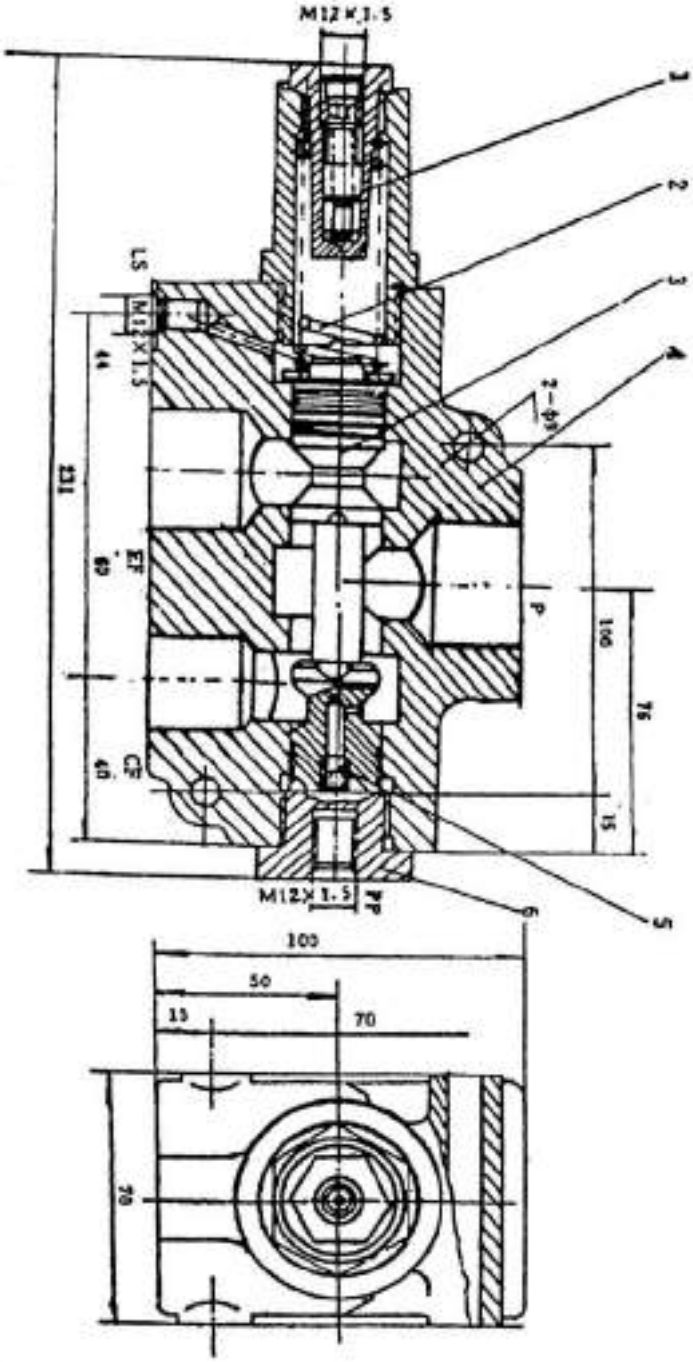

Fig. 7–17 Model YXL-F250L-N7 Priority Valve

1. Safety valve assembly 2. Control spring 3.valve core 5. valve block 6.plug

(4) Steering cylinder: cylinder diameterφ90mm, rod diameterφ45mm

min. installation size: 770mm, max. installation size: 1205mm, stroke: 435mm. The structure is shown in Fig. 7 – 18:

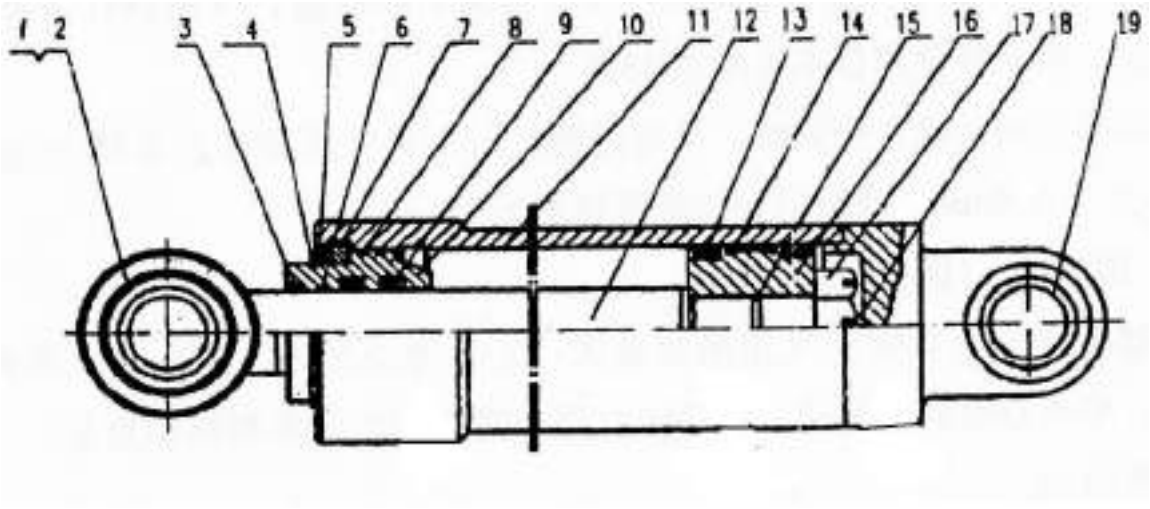

Fig. 7–18 Model 957H Steering Cylinder

1. baffle 2. knuckle-joint bearing 3. anti-dust ring 4. baffle 5. baffle
6. O-ring 7. key 8. O-ring 9. sealing ring 10. guide shell 11. cylinder block 12. piston rod
13. sealing ring 14. guide ring 15. O-ring 16. piston 17. nut 18. splint pin 19. shaft sleeve

(VI) Brake System

The brake system include the hand brake system and foot brake system

1. Parking Brake System: (See Fig. 7 –20)

This device is used for parking after shutdown and auto cutting shift when dangerous situation occurring because braking power is deficient. It is composed of hand-control braking valve, air-control braking valve, spring air cab and drum brake.

Hand-control braking valve is mounted in the control case of the cab, air-control stop valve is mounted under the board of the cab, spring air cab is leftward of transmission, and drum brake is front output shaft of transmission.

When the lever of hand-control brake valve is pull upward, shift cut valve is inlet. Transmission power output is cut, meanwhile the pressure in spring air cab disappear and the spring releases. Elasticity causes drum brake open by lever, then brake drum enclasps and parking brake is performed. When the lever is pull downward, air to shift cut valve is cut, transmission gear is in place, spring air cab bulges again, the spring is compressed, drum brake resets and parking brake relieves.

When the vehicle just starts and air pressure of the wheel brake system has not reached safe 0.6MPa and above, or air pressure of the wheel brake system is reduced below 0.4MPa and air pressure of the spring air chamber is insufficient during travel, so drum type brake expands, the air controlled stop valve returns under action of the spring because of insufficient air pressure, air enters into level shifting valve and shift level to realize parking brake. This is the characteristics of automatic protection and emergency brake of the system; it can effectively avoid operation of the loader on dangerous operation conditions.

The spring air chamber (refer to figure7– 19a) realizes brake through releasing spring force of the spring in the air chamber. When compressed air enters into the inlet port, the spring is compressed under action of the piston and the push rod extends, which drives the brake shoe return and release brake.

The system applies the drum type brake with self-adjusted clearance (refer to figure 7 – 19b). The clearance isn’t adjusted under normal application conditions; the brake base plate is installed on the front output interface of the transmission, which rotates following output shaft flange of the brake drum.

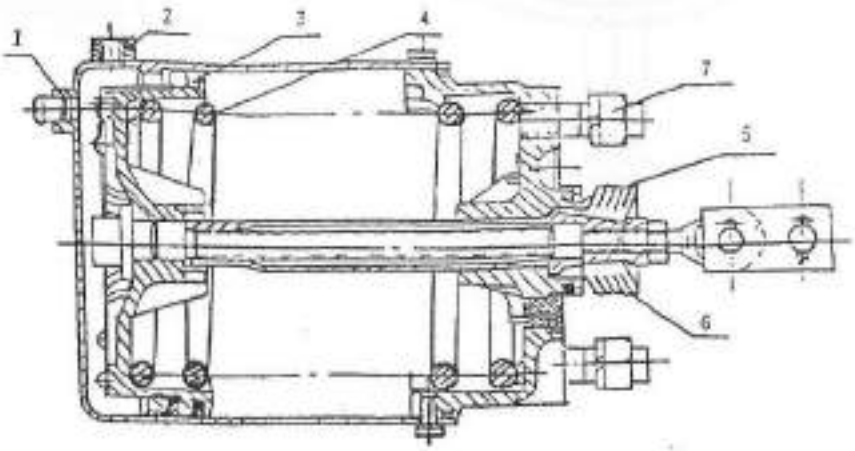

Fig.7-19a Spring air case

1. spare air inlet 2. air inlet 3. piston 4. drum spring
5.handspike 6.dust prevention cover 7. bolt

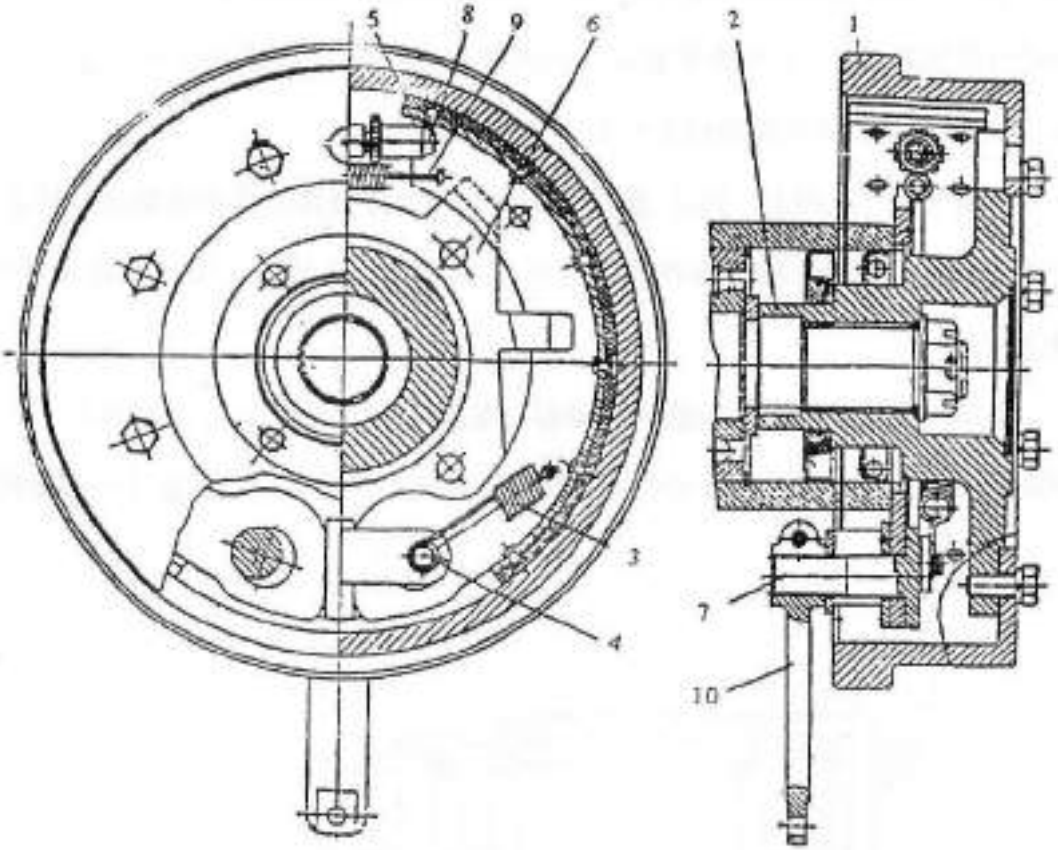

Fig.7-19b Drum brake

1. brake drum 2. flange 3. spring 4. screw 5. brake hoof 6. brake board
7. cam 8. adjusting pole 9. spring 10. lever

2. Foot Brake: (See Fig. 7 – 20)

The foot brake system with dual gas-oil caliber-disk brake is composed of air compressor pump, pressure-regulation pump, check valve, air reservoir, series double-cavity brake air valve, brake assistor, brake and pipeline.

Air compressor pump is installed at right side of engine. The engine drives the air compressor pump and makes the compressed air enter into the oil-water separator and into left and right air reservoir through the governor valve and check valve. The oil-water separator is used for removing the water and oil-dirty from the compressed air exhausted from air compressor pump. The air pressure in governor pump system is 0.75 Mpa. When the pressure exceeds the above value, the relief valve opens automatically and exhausts a part of compressed air.

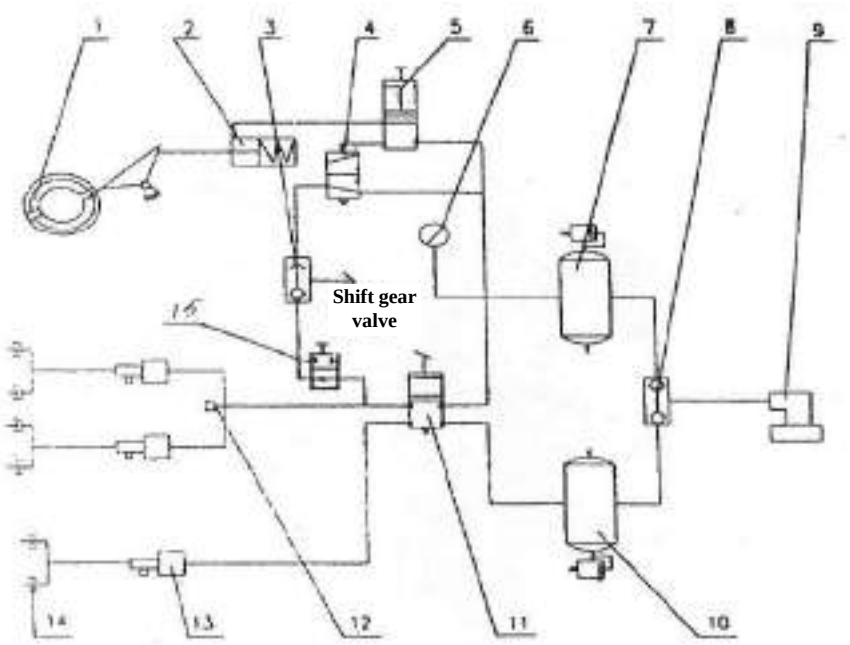

Fig. 7–20 Principle of Brake System

1. drum brake 2. spring air cab 3. double-way reversing valve 4. air-control stop valve 5. hand-control brake valve 6. barometer 7. right air reservoir 8. check valve 9. air compressor pump 10. left air reservoir 11. air brake valve 12. brake switch 13.air increase pump 14. jaw-type rail brake 15. choice valve

Double-cavity air-brake valve (See Fig. 7 - 21) is connected respectively with left and right air reservoir through pipelines. When depressing the brake pedal, the upper air cavity on air-brake valve is open at first, the compressed air from the air reservoir enters into the air cylinder of brake assistor installed on rear frame through upper cavity of air-brake valve and passing by rear axle brake pipeline, pushing air cylinder piston and pushing the piston of mass brake oil pump at same time, thus making the brake oil bring about high pressure and entering into rear axle brake. Meanwhile, the lower cavity of air-brake valve is open, the compressed air from the air reservoir enters into the pipeline of front axle through lower cavity of air-brake valve and into the air cylinder of brake assistor installed on front frame, pushing air cylinder piston and pushing the piston of mass brake oil pump through the crown bar, thus making the brake oil bring about high pressure and entering into the front axle brake. Since the area of air cylinder piston is larger than that of oil cylinder piston and when input air pressure is 0.8 MPa, output oil pressure to 12.2 MPa (122kg/cm^2), i.e. increasing 15.3 times, the compressed air from brake valve upper cavity enters into rear assistor and into the cut-off valve of gearbox through three-way. It makes the oil-supply of gearbox shut off with the action of cut-off valve and power output stops. The structure of assistor and mass brake pump is shown in Fig. 7 - 22.

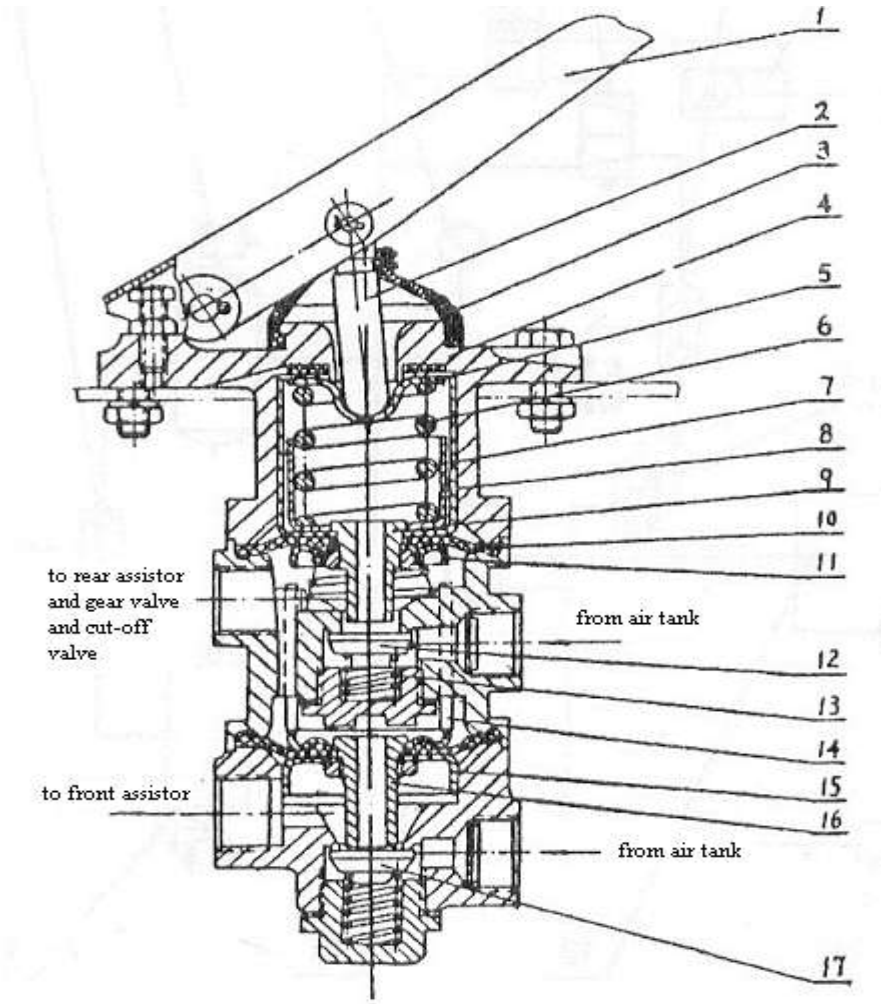

Fig. 7-21 Dual-pipe Air Brake Valve

1. braking pedal 2. crown bar 3. anti-dust sleeve 4. valve 5. crown bar seat
6. balance spring 7. major piston 8. spring seat 9. piston rod 10. diaphragm 11. diaphragm clamp plate
12. valve lead 13. Release spring of valve lead 14. Crown bar 15. Minor piston 16. Piston rod 17. Valve lead

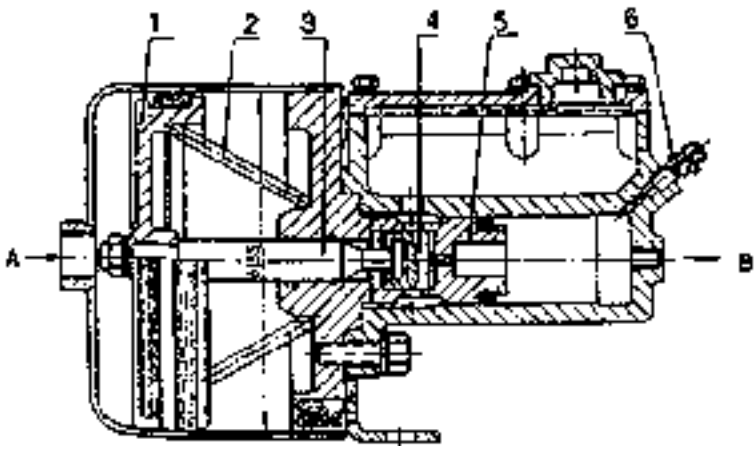

Fig. 7-22 Model LY70A-3510002 Assistor

1. piston 2. spring 3. push rod
4. return oil valve 5. piston 6. air relief valve

Eight pairs of brakes are mounted on the both ends of front and rear axles. They are composed of primary and secondary grips, piston, top cup, brake block (See Fig. 7-23). In braking, the high pressure from mass brake pump

enters into the oil cylinder of primary and secondary grips, pushing the piston and top cup to make the brake block griping the brake disk rotating together with wheel in order for braking.

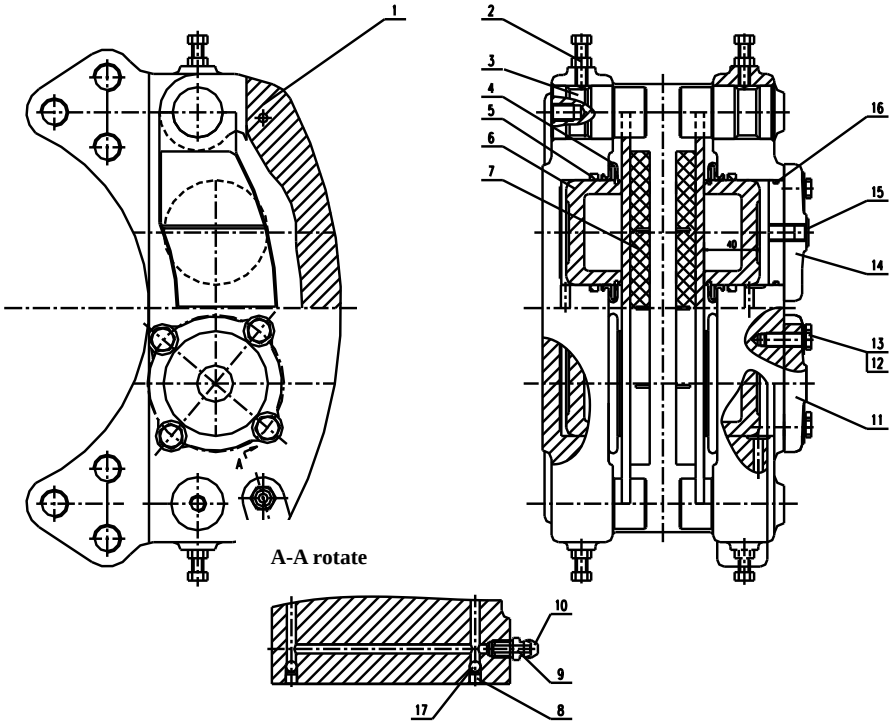

Fig.7-23 Assembly of Brake

1. Clamp body 2. Nut 3. Pin shaft 4. Dust proof ring 5. Rectangular sealing ring
6. Piston 7. Friction cushion block assembly 8. Inner hexagonal plug screw
9. Discharge nozzle 10. Brake pump discharge nozzle protection cover
11Sealing oil pump cover 12. Bolt 13. Washer 14. Oil inlet pump cover
15. Hole plug 16. O-ring 17. Steel ball

3. Maintenance and Adjustment of Brake System:

In order to keep the brake in reliable operation, it is necessary to make the maintenance and service including oil feeding and replacement and air relief in hydraulic system for brake system so as to prevent from leaking.

(1) Carefully check the leakage of brake system before driving, visually observing the manometer. If the air pressure rises slowly after starting engine and lowers after shutting off, it means it has serious leakage. Check the leaking point with soap water applying to the pipe joints and exhaust outlet of brake valve and remove the leakage.

(2) Fully fill the brake oil in mass brake pump. The brake oil should be kept in half level in whole operation. It is not permitted that the mineral oil or other oil is used for substituting the stipulated brake oil; otherwise it shall damage the rubber sealing parts of brake system. If the color of brake oil becomes dark, the brake oil contains water or the brake oil feels short of lubrication with hand, the brake oil should be replaced. In replacing the brake oil, the remained oil shall be drained out and all hydraulic pipes shall be cleaned. After draining, the brake hydraulic system shall be exhausted and the steppes are shown as follows:

a. Put the gearshift in neutral position, start engine and charge the air pressure in air reservoir in the rated pressure.

b. Depress the brake valve for many times, make the pressure in mass brake pump rise and then depress the brake pedal. Meanwhile, another person looses the release screw. If the brake liquid contains a large amount of bubbles flowing from the release screw. After draining the air, loose the brake pedal for many times.

c. When the clean brake liquid flows from the release screw without any bubbles, fasten the release screw, clean out the residuals, fill the brake liquid in full and remount the oil cover.

d. Repeat above air-exhausting steps b and c for other wheel brake caliper. In exhausting, pay attention to safety and ensure that the gearshift is placed in the neutral position with holding the handbrake. The brake shoe and brake disk should be kept in clean without any oil dirt. When the brake shoe is worn below 5mm, brake shoe gasket shall be replaced.

(3) Open the drain valve after working-off and empty the water in air reservoir. In case water isn't drained according to requirements, it will directly cause reduction of brake performance of the whole machine or invalid.

(VII) Operating Device and its Hydraulic System

1. Model 957H Working Principle of Operating Device and Hydraulic System

The proportional pilot control system is used in Model 957H loader. Its working principle is shown in Fig. 7 – 24.

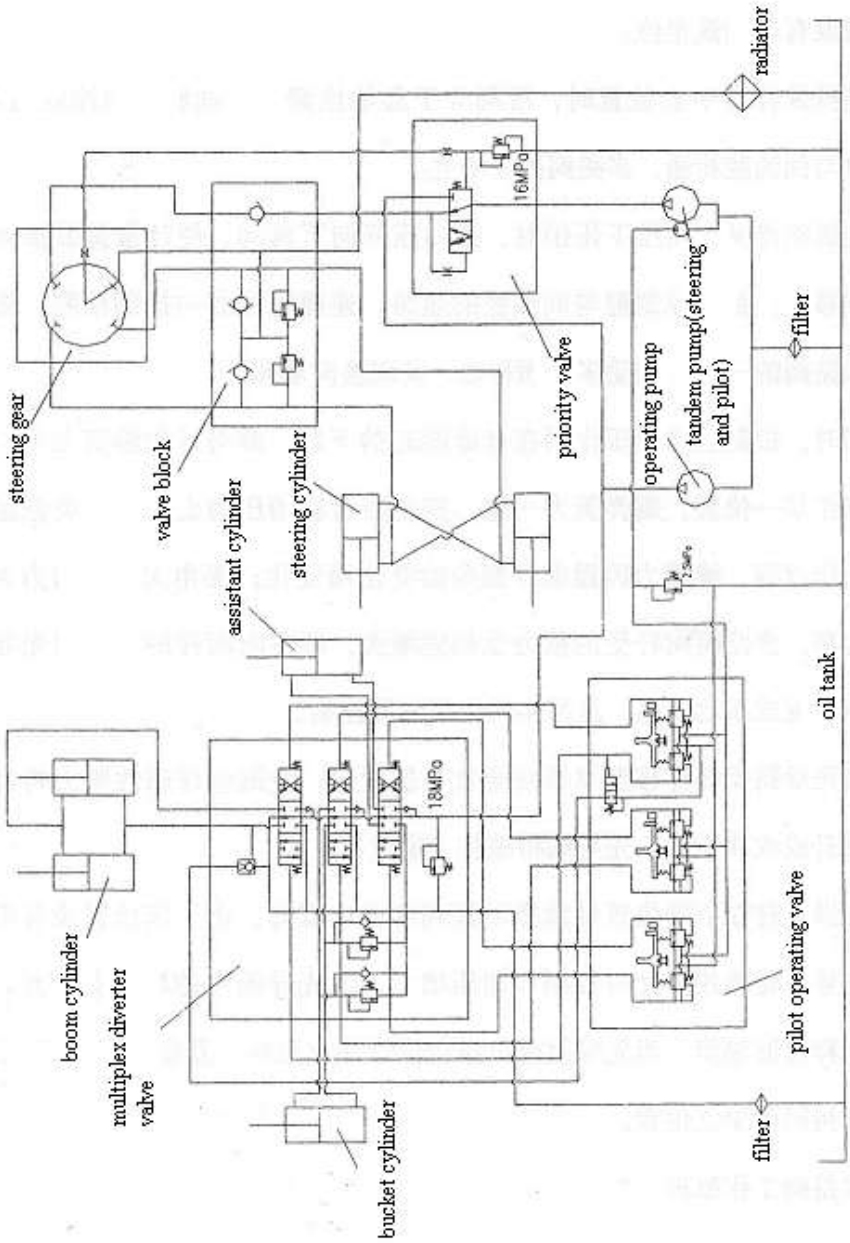

Fig. 7-24 Schematic Diagram – Model 957H Hydraulic Steering System

Pilot valve is composed of operating lever and boom lever. The bucket lever has three positions – front, neutral and rear and boom lever has four positions – lifting, neutral, lowering and floating. The positions for lifting, floating and rear are located with electromagnet.

When control level is in neutral position, the slide valve is in the starting position, the inlet oil chamber is not passing through the return oil chamber, the control orifice is not passing through the return oil chamber and multiplex valve is in neutral.

When depressing the control lever down to the pressure pin and pushing the pressure lever to make the measuring spring push the measuring core valve down, cutting off the passage-way from control chamber to returning oil chamber, connecting the inlet chamber to control oil chamber, piloting the pressure oil to the end of multiplex valve, pushing the multiplex valve moving so as to complete the direction changing.

Meanwhile, the pressure in control chamber applies on the lower end of the measuring valve core and balances the spring force. When the control lever is kept in a certain position, the spring force is fixed and the pressure in corresponding to the control chamber is fixed also, which are similar with the action to determine the value of pressure release valve. The spring force varies as the swinging angle of control lever changes: the larger the swing angle, the larger the spring force and higher the control chamber pressure, the stronger the pushing force that the multiplex valve stem bears, i.e. the stroke of main valve stem is in direct proportion to the angle of pilot valve handle, so as to carry out proportional pilot control.

When the lever of pilot valve is moved to the position of full-lifting or full lowering, the attraction of the magnetic wire coil for control lever causes lifting and lowering and the pilot valve plays the locking action (location).

When the control lever continues pushing to the floating position, the pilot shall be locked because of the location of electromagnet in the position. At the time, the oil pressure increases, which makes the sequential valve in pilot valve open and the oil pressure in discharging hole way is released to the oil- return tank. When the pilot valve pulls out floating position and leases, the reset spring pushes the press rod lifting and control lever returns to the neutral position.

The working principle of multiplex valve

The multiplex valve is composed of bucket valve rod and boom valve rod. The bucket valve rod has three positions – neutral, front and rear and boom valve rod has four positions – neutral, lifting, lowering and floating. The valve rod is moved by pilot oil and release spring.

(1) Neutral position

When the pilot valve is in neutral position, the pilot oil does not pass. When the multiplex valve is in neutral position, the oil from main pump shall return to oil tank through multiplex valve.

(2) Operating position

When the pilot valve is in operating position, the pilot oil enters into the end of the other valve rod of multiplex valve, pushing the valve to the operating position left or right and the pilot oil in the other end of the valve returns to oil tank of pilot valve.

When the pilot oil makes a valve rod of multiplex valve move to the operating position, the operating oil from main pump opens the check valve in multiplex valve, enters from outlet enters into a chamber of the bucket cylinder or the boom cylinder. The operating oil from the other chamber of cylinder returns to the other inlet of multiplex and flows in oil tank through oil way in valve. The pressure of operating oil is controlled by main relief valve.

(3) Floating position

At this time, the position of boom is the same as lowering position. Only because the pilot valve control lever is in floating position, the sequential valve in the pilot valve is opened. The oil in discharge hole way of multiplex valve flows into oil tank through discharge outlet in pilot valve, which makes the slippage valve in boom cylinder

of multiplex valve open, inlet port, oil return port and operating oil port are passing through. At this time, the piston rod of boom shall float freely under the action of external force.

(4) Action of overload valve and slippage valve

When the bucket meets the foreign striking load and other mechanisms interfere, the overload shall open, playing the protection action. The slippage valve is used for preventing the cylinder chamber from being absorbed to play the compensating action.

Performance and Parameter of Main Parts:

(1) Operating oil pump: JHP3160 (left-handed), displacement 160 ml/r

(2) Multiplex direction valve: 7130-B109 hydraulic multiplex direction valve, set pressure of main check valve 18 MPa

(3) Pilot valve: 406-1044-1145 proportional pilot control valve

(4) Pilot delivery valve:DGf-00，

(5) Boom cylinder: cylinder diameterΦ 160mm, rod diameterΦ 90mm, stroke810mm, installation size 1367mm (min.), installation size 2177mm (max.)

(1)

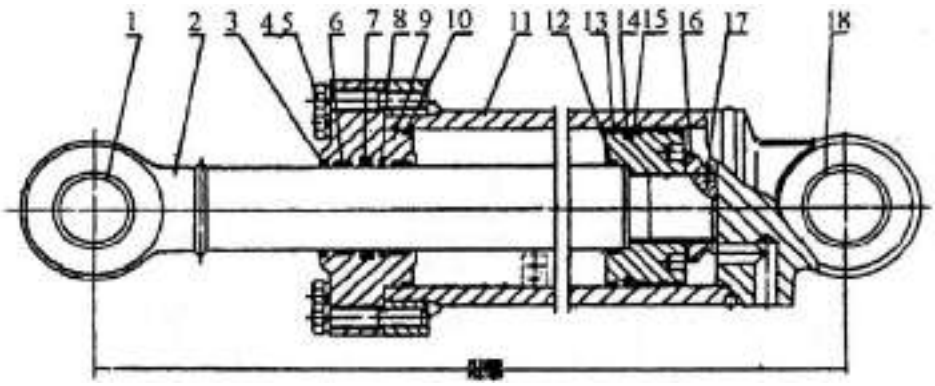

Fig. 7-25 Bucket Cylinder

1. shaft sleeve 2. piston rod 3. anti-dust ring 4. bolt 5. gasket 6. back-up ring
7. seal ring 8. seal ring 9. cylinder head 10. O-ring 11. cylinder block
12. O-ring 13. back-up ring 14. seal ring 15. piston 16. lock nut
17. steel wire ring 18. shaft sleeve

(2) Bucket cylinder (Fig. 7 – 25): cylinder diameter φ180mm,

rod diameterφ 90mm, stroke 528mm, installation size 1052mm (min.), installation size 1580mm (max.)

The boom cylinder and bucket cylinder are equipped with slug combined seals, having the resistant performances for high temperature, pressure, fouling and ageing.

(3) Operating oil tank (Fig. 7 – 26): the operating oil tank, mounted in the back of cab, is used for both operating hydraulic system and steering hydraulic system. The two oil filters are mounted in the oil tank to ensure the clearness of oil liquid.

4. Maintenance and Service:

The most of the fault in hydraulic system result from the dirt oil, thus it is very important for the oil liquid to be kept in cleanness

(1) Depending on the actual situation, the oil shall be replaced for each half year. The new oil shall be

precipitated and filtered for 48 hours before feeding in oil tank.

(2) The filter in oil tank shall be cleared for every month.

(3) Depending on the actual situation, the related hydraulic parts shall be cleared for one year within one year.

(4) When the steering hydraulic system and operating hydraulic system are maintained, the screw plug in the operating oil tank shall be loosened (See #3 in Fig. 7 – 26) to prevent the hydraulic oil from leaking out.

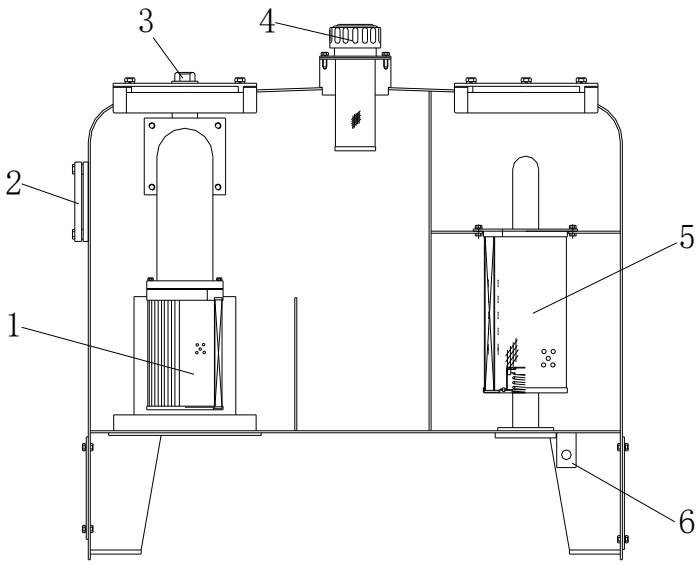

Fig. 7-26 Structure figure of hydraulic oil tank

1. outlet filter 2. ocular 3. screw plug
4. hydraulic air cleaner 5. oil-return filter 6. drain screw plug

(VIII) Electricity System

The electricity system is shown in Fig. 7 – 27.

The electricity system is equipped with 24V motor, generator rate power 1000 W, storage battery capability 195 amp/hour (AH)

Two storage batteries are mounted respectively in both sides of rear frame. The switch used for controlling power supply is mounted in the cab. The fuse box is mounted below the meter panel in left-hand. The power supply should be switched off before maintenance and service.

The earth return system is used for the electricity system with negative grounding.

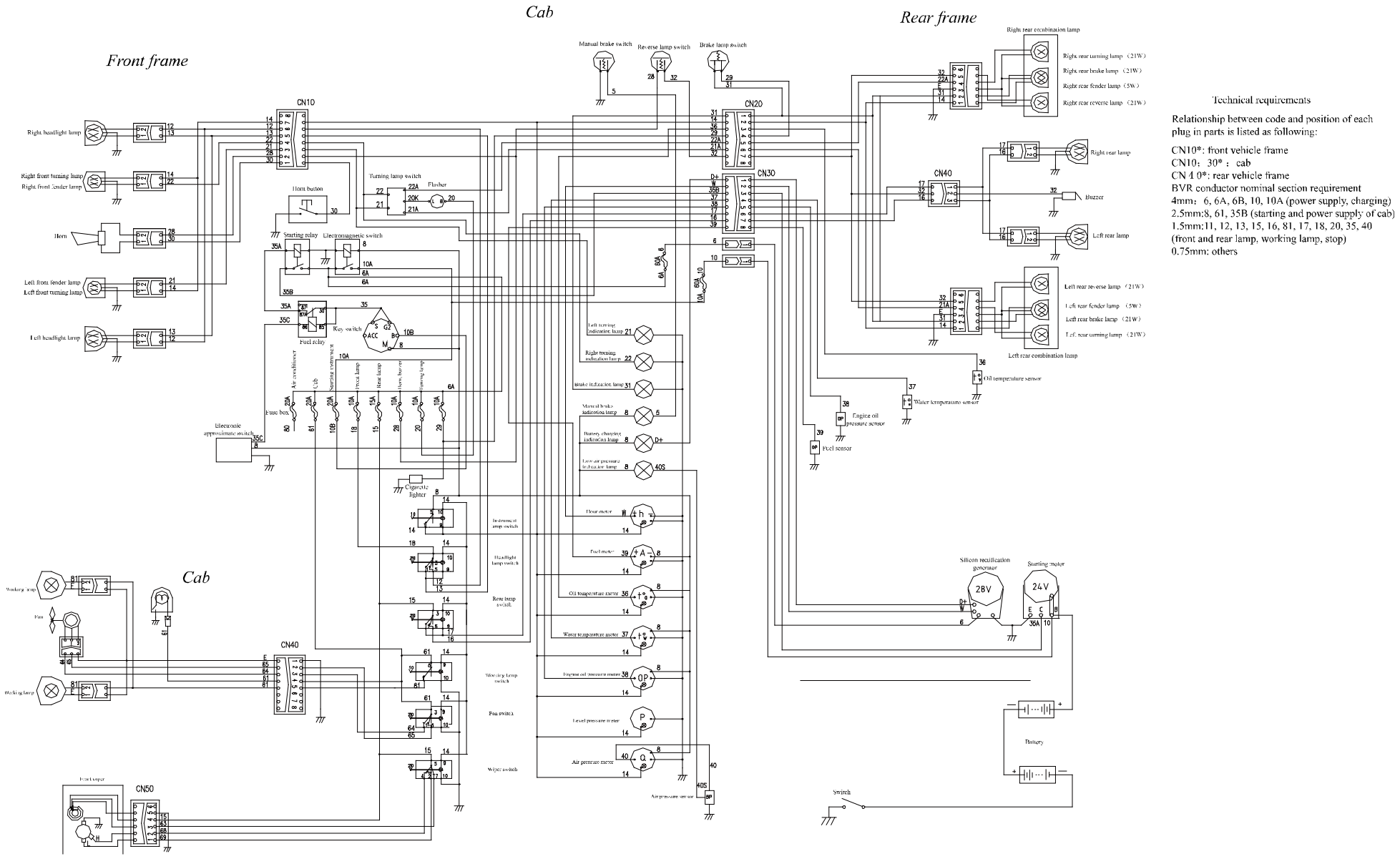

Fig. 7 – 27 Principle figure of electric system

System Specification:

1. Galvanic Battery (Accumulator Jar)

The machine applies two groups of 115E41R type 12 volts batteries which are connected in series. Negative pole of first group of battery is connected to positive pole of second group of battery, the negative pole of second group of battery is grounded through switch of the power supply, the positive pole (i.e. positive) of first group of battery is connected to the fuse box, then connected to power consumption device, the positive pole of the battery is directly connected to the starting motor through thick conductor, after switch of the power supply is on and electronic lock is started, it can supply power to the power consumption device.

The following items should be paid attention to during using of the galvanic battery:

(1) In order to avoid been damaged as the loader operation, the galvanic batteries installed on two sides of frame's rear should be fixed firm. Meanwhile, the adapter linked with the galvanic battery should be tight joined.

(2) The outside of galvanic batteries should be kept dry lest mass leakage of electricity.

(3) In order to avoid running over of electrolyte while vibrating, the plug of filling hole should be tightened and the ventilate hole of plug should be kept unblocked.

(4) Checking the height of electrolyte in galvanic battery once every 10-15 days. The liquid level should exceed 10-20 mm of the height of polar plates. If not, it should be supplied with distilled water instead of vitriolic electrolyte.

(5) If electricity consumption is too much and causing the specific gravity of electrolyte go down excessive and lower than 1.18, the galvanic battery should be charged immediately or removed to be charged, but it couldn't be laid long lest vulcanization and damage of polar plates.

(6) In order to avoid short circuit, the metal articles can't be placed on the galvanic battery. For fear the post been burn out and causing too much electricity loss, it is prohibited that use the method of short circuit and bringing cremation, with the screw-drive and any other metal tools or wire on the post of galvanic battery directly, to check whether the galvanic battery is live.

(7) In order to avoid short circuit or fire, we should usually turn off the power knife-blade switch to open circuit before any work operated on the electrical system or removing the galvanic battery line.

2. Silicon Rectifying Generator and Adjuster

The silicon rectifying generator installed in the loader is the mating product of diesel engine. The voltage is 28V, power is 1000 W. Please reference to attached wiring diagram for the wiring of the generator.

On the normal condition, the generator can supply power while it is charged.

Matters need attention when using and maintenance:

(1) The negative pole of the generator should be earth connection and can't be reversed connected. Otherwise the galvanic battery will be short circuit and discharged through diode. Then the diode in generator as well as relative line will be burned out soon.

(2) In order to avoid the diode to be burned out, it is forbidden during the operation of generator that use the wiring terminal of armature to short with shell to see if it will produce sparkle and then to decide whether the generator is alive.

(3) If using the 220V alternating current or megohmmeter to check the insulation function of generator, all joint with the down-lead of the diode should be disconnected. Otherwise we just can use the high resistance of the multimeter to check.

(4) The generator should be taken apart to have a reconditioning after operating about 1200 hrs. Including the following contents:

a. Cleaning the outer and inner of generator and wipe off the grease dirty.

b. Cleaning and examining the bearing and slip ring. If bearing become flexible, it should be replaced. The slip ring should be polished by “00” gauze.

c. Inspecting the wear of brush carbon, if wear too much it should be replaced.

d. Inspecting whether the brush holder is all right and whether it is isolated from shell. If the spring of brush carbon loses flexibility, it should be replaced.

e. Using the high resistance of the multimeter to inspect the diodes one by one. It is normal if the resistance number of positive direction is about 10 ohm and reversion direction is about 10 kilohm. If the resistance numbers of both directions are near or differed too much, it shows the diode has been damaged and need to be replaced.

f. Inspecting the inner connecting plugs is connected well.

3. Starter

Matters need attention when using:

(1) Regular inspecting the wirings if they are all right and wiring screws are tightened.

(2) Keeping the motor clean during operating and avoiding the moisture immerging.

(3) The starter should be periodic maintained. It could be done while the unit is repaired. Swabbing the inner grease dirty with gasoline and polishing the communtator and the tip of electromagnetic switch with ‘0’ sand paper.

4. Lighting Fittings

The loader is equipped with front and back headlights, working light, tail light, turning light, brake light, backing light, tip light of cage, spotlight of instrument panel, steering indicator, brake indicator and etc.

(IX) Air-condition system

This machine (957H) is equipped with an air-conditioner system, the type is BKG08G and the structure is shown in Fig.7-28. There are both functions of cooling and heating in this system. The whole system consists of the compressor, the condenser, the fluid reservoir, the evaporator and the connecting lines, etc.

Cooling function: Refer to figure 7 – 29 for principle figure, Freon (R-12) is taken as cooling medium, the compressor compress the sucked overheated Freon steam into high temperature and high pressure gas which enters into the condenser through pipe, it becomes overcooled liquid after sufficiently cooled, then enter into evaporator through expansion valve after pressure reduction, realize evaporation in inner area and absorb heat, the inner side of the evaporator is equipped with a fan which can exhaust wind through the evaporator, so wind blowing through the port is cold wind, heat is brought away by Freon gas, it is sucked by the compressor again and enters into circulation again, continuously repeat, temperature of the cab is finally reduced down so as to realize cooling purpose.

The function of heating: The heat energy comes from the circulating cooling water in the engine. The hot water from the engine water outlet flow into the cooling fin in the evaporator through the ball valve and the line. When the heating is in need, turn on the heat switch of the air-conditioner. The fan behind the cooling fin blow out the heat of hot water through the cooling fin. The cooled water flows into the line of the radiator to cool the oil through the line again, repeatedly, the heat wind is blowed out continually to get the heating.

When the engine just starts, the water temperature is lower. Only after the engine running for a while, the water temperature rises above 80-90℃, the heating can be normal.

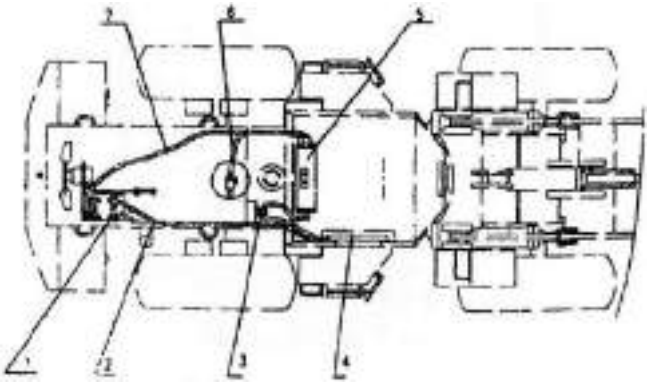

Fig.7-28 Air-conditioner system

1. compressor 2.water pipe 3.fluid reservoir 4. condenser
5.evaporator 6.water inlet pipe 7.water outlet pipe

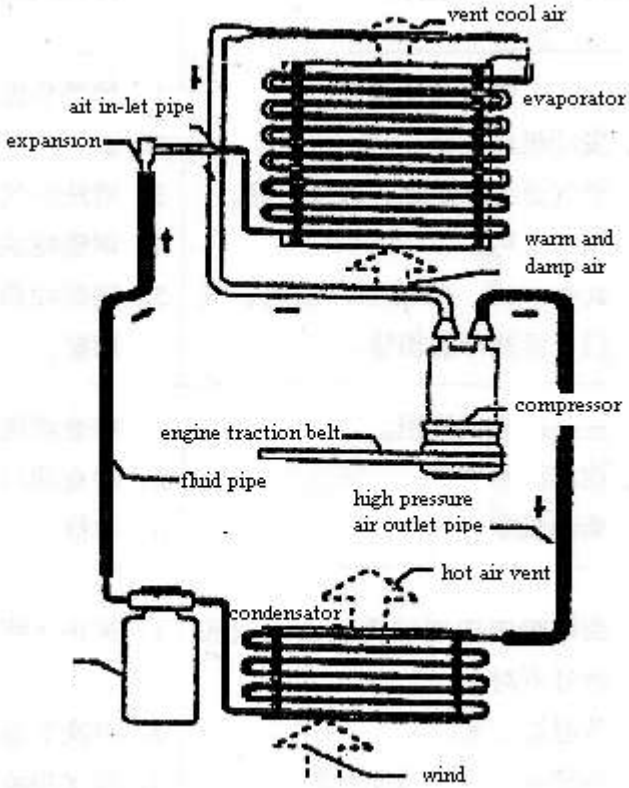

Fig. 7-29 The function of refrigerating

Maintenance and cautions:

1. Don’t disassemble the air-conditioner system at will to prevent the cold-producing from leaking.
2. Check the belt tension of the compressor periodically, the tension should be controlled about 11-15mm.
3. Clean the dirt on the surface of the condenser periodically to avoid the refrigerating effect failed.
4. When replacing parts, replenish the refrigerant with imported SUNISO5GS or No.25 made in China according to the table as follows.
5. If the lines of refrigerator are needed to be disassembled when repairing the loader, the refrigerant should be replenished in quantities.

Replaced part	Replenish(cc)
Condenser	40-50
Evaporator	40-50
Hose	10-20
Dry-fluid reservoir	10-25

VIII. General Fault and Elimination

Part	Fault Feature	Possible Reason	Elimination Method
Engine System.	Engine starting difficult or unable starting.	1. Electric power insufficiency 2. Adapter of starting circuit broken off or poor contacted. 3. Brush carbon of the starting motor is poor contacted with commutator. 4. The diesel oil in oil box is too little or bad quality. 5. Oil piping or cleaner is blocked. 6. Gas entered into oil fired system. 7. Any other fault of the diesel engine.	1. Charged. 2. Examining the wiring is connected correctly and fixed; besides clear away the dust and grease dirty on the interface. 3. Correcting and replacing brush carbon. Clearing the commutator surface with the wooden sand paper and also blowing off dust. 4. Appending qualified oil. 5. Cleaning filling piping and cleaner. 6. Inspecting leakage part and using the exhausting method. 7. Details as Diesel Engine Instruction Book.
	Heavy fuming during the operation of diesel engine.	1. Lower air temperature or bad quality of burnt oil. 2. The engine is over load operation. 3. Air cleaner is blocked and air inlet is not smooth. 4. Oil blooming is too late. 5. Other reasons, such as wear of oil pump, bean, air door and piston ring.	1. Selecting qualified diesel oil according to different season. 2. Removing overload. 3. Cleaning air cleaner. 4. Adjusting oil blooming advanced angle. 5. Examining and adjusting according to Diesel Engine Instruction.
	The diesel engine can't operate at rated speed.	1. Oil inlet or air inlet is blocked. 2. Accelerator can't be opened completely. 3 The fault of diesel engine itself.	1. Examining and cleaning. 2. Inspecting and adjusting the accelerator tie. 3. Examining and repairing the diesel engine.
	The temperature of water and oil in the diesel engine is too high.	1. The level of mobile oil in crankcase is too low or the shop sign of oil is incorrect. 2. Thermoscope doesn't work. 3. Cooling water is insufficient or circulation is bad. 4. Fan strap is loose, rotate speed brings down and air volume falls off. 5. Thermometer or sensor may be malfunction.	1. Using sufficient qualified engine oil. 2. Replacing. 3. Adding water and examining piping. 4. Adjusting strap tension or replacing strap. 5. Replacing thermometer or sensor.

Part	Fault Feature	Possible Reason	Elimination Method
Torque Converter and Gear-box.	Oil temperature is too high – gear-box system is superheating	1. Continuously heavy load operation or long time and high speed running. 2. Oil level of gear-box is too high or too low. 3. Oil radiator of converter is blocked. 4. The friction disc of clutch is distortion and warping and can't separate completely. 5. The oil cylinder piston of gear-box biting and can't returning after put out.	1. Unloaded temporarily or stopped to have a rest. 2. Appending oil according to the regulated oil level of dip stick. 3. Cleaning oil radiator. 4. Replacing the clutch friction disc. 5. Removing and cleaning or replacing if necessary.
	The pressure of clutch is too low or has no pressure and can't be put into gear.	1. The oil level of clutch is too low. 2. Oil route is unclean. Strainer and cleaning strainer are blocked. 3. The adjusting pressure of converter oil inlet valve is too low. 4. The oil sealing ring of clutch end is damaged. 5. The oil pump of geared system is damaged.	1. Appending new oil. 2. Removing and cleaning strainer and cleaning strainer or changing over oil if necessary. 3. Adjusting the pressure of oil inlet valve spring. 4. Replacing the oil sealing ring. 5. Replacing the oil pump.
	Engine is operating, clutch pressure is normal, but loader can't move or can't be shift.	1. Shift bar becomes flexible and can't be put into gear completely. 2. Clutch is blocked.	1. Adjusting shift bar to be put into gear correctly. 2. Removing and inspecting clutch.
	The power of loader is insufficient.	1. If oil bubbling, bad qualified oil. 2. Oil temperature is too high and the viscosity is too low. 3. Oil level is too low. 4. Oil pressure is low and clutch skids around. 5. Clutch can't be separated completely. 6. The brake can't be separated thorough-paced.	1. Replacing oil and inspecting if it is air leakage. 2. Replacing oil and then made it cooling. 3. Appending oil. 4. Inspecting and adjusting oil pressure. 5. Removing and examining. 6. Examining, adjusting and blowing off gas.
	The oil level of gear-box is increasing	1. The end of working oil pump or turning oil pump is oil leakage. 2. The end of multiway valve rod is oil leakage.	1. Replacing oil sealing of oil pump end. 2. Examining and replacing oil sealing.
Back axles and Driving Shaft.	The wheel is swinging while running	1. The gap between wheel cover and bearing is too big. 2. Tyre is installed badly. 3. The tightening bolt becomes flexible.	1. Adjusting gap. 2. Reinstalling correctly. 3. Tighten bolt.
	Generating heat.	1. The gap between bearing and gear is too small. 2. Lubricant is too much or too little. 3. Vent hole is blocked. 4. Damaged seal components result in oil leaking.	1. Readjusting. 2. Adding or draining oil properly. 3. Cleaning vent hole. 4. Replacing sealing components and adding oil.

Part	Fault Feature	Possible Reason	Elimination Method
Back axles and Driving Shaft.	Off-sound.	1. The connection bolt and tighten nut of axles and swing frame become flexible or even fallen off. 2. Insufficient of lubricating causing friction. 3. Incorrect type or lacking of lubricant.	1. Tightening or replacing. 2. Adding lubricating grease. 3. Adding sufficient qualified lubricant.
	Oil leakage.	1. Oil sealing damaged, aging and degenerative. 2. Bolt becomes flexible.	1. Replacing oil sealing. 2. Tightening
Steering system.	Unable turn.	1. The pin of steering gear broken off. 2. Spring disc of steering gear is damaged. 3. Steering oil pump is damaged.	1. Replacing. 2. Replacing. 3. Replacing.
	Number of steering increasing, steering moment of force insufficient.	1. Piping is Oil leakage, and sealing is damaged. 2. Inner oil cylinder is leakage. 3. Rotor is wear and output is decreasing 4. Pressure of steering valve is too low.	1. Replacing sealing and tightening connectors. 2. Replacing sealing components. 3. Replacing. 4. Adjusting the pressure to 140kg/cm2.
	It is normal when turning steering wheel slowly, but it is heavy when turning fast.	1. Oil pumps feeding insufficient. 2. The priority valve core is blocked. 3. The controlling oil route between priority valve and steering gear has air.	1. Examining oil box, repairing and replacing pump. 2. Removal of blocked reason. 3. Turing steering wheel to ultimate position and then continuing to turn, forcing relief valve to be opened and exhausted.
	There is bubble in oil and giving off irregular sound. The oil cylinder moving or unmoving inconstantly while turning steering wheel.	1. Having air in system.	1. Inspecting the height of oil level and examining oil-absorption pipe if it is air leakage and then removing system air.
	Light when unloading, heavy when loading.	1. The pressure of priority valve or double buffered valve is lower than working pressure. 2. Valve biting. 3. The viscosity of oil is too big.	1. Readjusting the pressure of priority valve (14Mpa) and double buffered valve (16.5-19Mpa). 2. Removing sundries. 3. Replacing oil.
	Turning steering wheel to ultimate, it is still easy to be turned.	1. The pressure of double buffered valve is lower than of relief valve.	1. Resetting up the pressure of double buffered valve (16.5-19Mpa).
	The steering wheel can’t be returned to middle self-acting and pressure swing increasing obviously and even can’t be turned.	1. Spring disc is broken off. 2. Pin or linkage axis gap is broken off or malformation.	1. Replacing spring disc. 2. Replacing.

Part	Fault Feature	Possible Reason	Elimination Method
Brake System	Brake power is insufficient.	1. Because of piping air leakage or using brake continuously result in air pressure is too low. 2. Assistor diaphragm wears result in air leakage. 3. The oil inlet hole of base pump is blocked. 4. Brake fluid of base pump is too little. 5. The brake hydraulic piping and plate brake are oil leakage. 6. There is gas in the brake hydraulic piping. 7. The brake liner is wear seriously or permeated by oil.	1. Removing the air leakage reason. 2. Replacing. 3. Cleaning it to be expedited. 4. Adding brake fluid to full. 5. Inspecting and repairing. 6. Blow-off gas. 7. Replacing with new liner.
	Brake unable to loosen automatic.	1. The air-bleed hole of brake valve is blocked and gas can't be returned. 2. Assistor operating badly. 3. The diaphragm of brake is folded and piston is biting. 4. The pin-hole of base pump is blocked and oil returning is not smooth.	1. Inspecting and repairing. 2. Examining assistor. 3. Checking and cleaning, then replacing oil sealing. 4. Opening pin-hole.
	Pressure increasing slowly when engine operating, but decreasing rapidly after stopped.	1. Piston of air compressor and air cylinder are wearing and can't work normally. 2. Piping adapter is loose result in air leakage. 3. Brake valve is air leakage	1. Checking and repairing or replacing. 2. Tightening and replacing oil sealing. 3. Inspecting and repairing.
	Go astray while braking.	1. One side of the left and right tyre brakes is out of order or bad effect. 2. One side of brake assistor is out of order.	1. Checking and repairing. 2. Checking and repairing.
	Brake doesn't work sometimes, but it will be come back later on.	1. The sealing edge of base pump diaphragm wear and groove comes into being. 2. Spring is insufficient and aging. 3. Diaphragm sealer folded.	1. Replacing sealing diaphragm. 2. Replacing. 3. Replacing.

Part	Fault Feature	Possible Reason	Elimination Method
Operating Hydraulic System	Lifting power is insufficient and speed is slow.	1. Adjusting pressure of relief valve is incorrect. 2. Gear oil pump wear and seriously inner leakage. 3. Oil filter of oil box is blocked. 4. Liquid level is low and shop sign is incorrect. 5. Oil cylinder is inner leakage. 6. Multitone swing valve rod is biting and can't work completely while operating priority valve.	1. Adjusting rated pressure 17.6Mpa. 2. Replacing working oil pump. 3. Cleaning. 4. Adding qualified oil to regulated oil level. 5. Checking settling volume and replacing sealing. 6. Checking multitone swing valve.
	The hydraulic oil has too much bubble.	1. Bad quality of oil. 2. Oil level is low.	1. Replacing oil. 2. Adding oil.
	Hydraulic oil reduced continuously, but the oil in gear-box increased.	1. The end oil sealing of working oil pump or steering oil pump are damaged.	1. Replacing oil sealing.
	The noise of oil pump is loud.	1. Oil inlet piping or oil filter is blocked. 2. Too much of bubble in oil. 3. Air absorbed in.	1. Cleaning oil box and oil absorption piping. 2. Adding oil or replacing oil. 3. The bolt on the oil box hasn't been tightened.
	The hydraulic oil cylinder moved unstably and shocking.	1. Oil level is low and air entered into system. 2. Oil filter of oil box is blocked.	1. Adding oil and blow-down gas. 2. Cleaning to be expedited.
Electrical System	The electricity of battery used up soon.	1. The key doesn't in "switch on" position for a long time while loader running and hasn't been charged. 2. The net cycle time of loader is too short and battery hasn't been charged completely. 3. Electrical system is short circuit. 4. The polar plate of battery has been vulcanized.	1. Turn to "switch on". 2. Do some accessory work and make battery been charged. 3. Finding and repairing. 4. Adjusting the proportion of electrolyte and recharging battery.
	Ampere meter finger waving.	1. The wiring adapter from battery to ampere meter is loose.	1. Finding the loosed adapter and then tightened it.
	Starting motor has no sufficient power.	1. Battery power is insufficient. 2. Adapter loosed.	1. Charging or replacing battery. 2. Tightening.
	Electrical instrument doesn't work.	1. The instrument or sensor is damaged. 2. Connection is loosed 3. Wire is cracked result in electrical leakage.	1. Replacing. 2. Tightening. 3. Repairing or replacing.

IX. Transportation and Storage

(I) Transportation

1. Long distance transportation can by train, large scale lorry or ship. Except abidance by rule of the traffic department, the following works need to be done well:

(1) The front and back of all wheels should be padded steady by triangle wood. Then locking the frame. In order to avoid rolling, the front and back of loader would better to be fixed by rope or iron wire.

(2) Tightening the handle brake bar and putting the bucket horizontal on the floor of wagon box.

(3) Turn off the main switch of power source and put all handle in the middle.

(4) The cooling water of engine system should be blown-down absolutely while transportation in winter or to any high cold zone.

(5) Bare and movable positions should be painted by rust preventing oil to avoid corrosion.

2. For intermediate transportation, the loader can travel itself. The running speed can't exceed 25km/hr. Pay attention to the oil temperature of converter not above 100℃, the water temperature and oil temperature of engine not above 95℃. If the temperature is too high, the loader should be stopped or running at low speed.

(II) Storage

If the loader should be stored for long time, various preparing work should be done to avoid any loss. The followings are main matters needed attention:

1. Select the storage: The loader should be stored at a dry and draught garage where floor is leveling. If the loader should be stored outdoor, it should be padded to let the tyres impending. It also should be covered by awning to avoid rainwater and dust into loader through air holes, piping holes.
2. The loader should be free of grease and dirt. It should be lubricated completely for one time and make the engine running with light load. Then blow-down the old oil, cooling water as it is heated and appending new lubricant.
3. All handles should be at middle and the bucket should be put horizontal on the ground.
4. The bare metal part should be painted by rust preventing oil.
5. Removing the battery to be stored at dry and warm room after charged completely. The anode and negative pole should be labeled.
6. Unloosing the triangular rubber belt and clipping a thick paper between the belt and pulley to avoid stick.
7. During storage, it should be examined to see if it is rust or damaged once every 10 days. It also should be starting and running free for 5-10 minutes once every month.

(III) Restarting:

1. Installed with charged battery and adjusting fan belt.
2. Removing all coverings of vents.
3. Inspecting and adding oil and water full and close all blow-off holes.
4. Inspecting whether the tyres are damaged and filling gas to regulated pressure.
5. Erasing the rust preventing oil of bare surface.
6. Starting and running the loader according to the Chapter – About the regulations of commissioning and dead work before dispatching.

(IV) Lifting:

1. Before lifting, the front and back frame should be locked by the frame lock on the left.
2. While using rope or steel wire rope to lift through front and back rings, the rope should be set on the position of center of gravity to avoid the rope been damaged or relative part of loader been scraped. As is shown in fig.9-1.

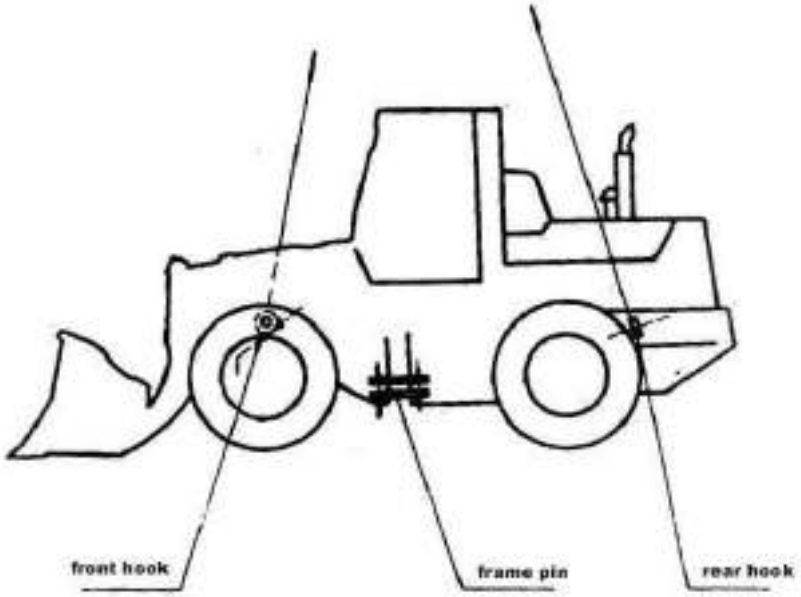

Fig.9-1 Hoisting schematic figure of loader

(V) Drag:

The loader can't be dragged unless any emergency accident happened. It should be cautious while loader was dragged. While engine is function, it should be kept on operation and ensure it can be turned and braked.

If engine isn't function, for there is no lubricant flowing in gear-box, the front and back driving shaft should be removed. As the steering system is malfunction, the steering oil cylinder should be removed. It is prohibited that drag the loader for a long distance.