Table of Contents

Foreword 1
Machine Description 3
Important Safety Information 4
Safety Notice 5
Parking of the Machine 11
Use of New Machine 12
Outside Views of the Machine 13
Facilities inside the Cab 15
Transmission and Torque Converter 16
Machine Control 28
Before Starting the Engine 31
Start of the Engine 32
After Starting the Engine 34
Machine Operation 35
Operating Techniques 36
Parking of the Machine 39
Long Period Storage of the Machine 40
Transportation Notice 41
Towing 43
Tire Inflation Information 45
General Torque Specifications 46
General Service Information 47
Cooling System Specification 48
Fuel Specifications 50
Scheduled Oil Sampling (S.O.S) 52
Specifications for Working Oils 53
Working Oil Viscosity and Full Capacity 55
Maintenance Interval 56
When Required 57
Every 10 Service Hours or Daily 60
Every 50 Service Hours or Weekly 62
Every 100 Service Hours or 2 Weeks 63
Every 200 Service Hours or Monthly 64
Every 600 Service Hours or Quarterly 69
Every 1000 Service Hours or 6 Months 71
Every 1500 Service Hours 72
Every 2000 Service Hours or 1 Year 73
Every 3000 Service Hours or 2 Years 74

https://truckmanualshub.com/

Foreword

You are welcome to choose our corporation's product.

For your safety and better use of our machine, before your operation begins, we would like to advise you to read the manual in detail carefully.

This manual contains the information concerning safety precautions, operation instructions, lubrication and maintenance.

Details or attachments shown in some photographs or illustrations of this publication may be different from your machine. Also, guards and covers may have been removed for illustrative purposes.

All the design changes under continuous improvement and advancement are not included in the manual.

Whenever a question arises regarding your machine or this publication, please consult Sichuan Chengdu Chenggong Construction Machinery Co.，Ltd. (hereinafter abbreviated as CHENGGONG) for the latest available information.

Operation

The operation section is a reference for the new operator and a refresher for the experienced one to read, study and keep it handy.

Photographs and illustrations are used for operators to familiarize the correct procedures of checking, starting, operating and stopping the machine.

These outlined in the publication are basic operating techniques. Skills and techniques of the operator develop as he gains more knowledge of the machine and its capabilities.

Maintenance

The maintenance section is a guide for maintenance of the machine. The illustrated, step-by-step instructions are grouped by service intervals. Items without specific intervals are listed under "When Required". All the items in "Maintenance Intervals" refer to the following detail descriptions.

Maintenance Intervals

Use the service hour meter to determine the service intervals. Calendar intervals shown (daily, weekly, monthly, etc.) may be used instead of service hour meter intervals if they provide more convenient service schedules and approximate the indicated service hour meter's readings. Recommended service should always be performed at the interval that occurs first.

Under extremely severe, dusty or wet operating conditions, more frequent lubrication than what is specified in the "Maintenance Intervals" may be necessary.

Perform repeatedly service on items. For example, at Every 600 Service Hours or Quarterly, those items listed under Every 200 Service Hours or Monthly, Every 50 Service Hours or Weekly and Every 10 Service Hours or Daily shall also be performed.

https://truckmanualshub.com/

Machine Description

This machine is equipped with C6121 diesel engine.

The main function of the machine is for material handling.

Main Technical Specifications & Overall Dimensions

Rated Engine Power: 162kW
Rated Engine Revolution: 2200r/min
Rated Bucket Capacity: $3.0m^3$
Rated Load: 5.0t
Dump Clearance: (Up to Tip/Up to Edge) 3051mm/3195mm
Dump Reach: (Up to Tip/Up to Edge) 1128mm/1033mm
Arm Lifting Time: 6.5s
Sum of Time for Three Implement Actions: 12.5s
Turning Angle: 35°
Turning Radius : 6570mm
Max. Speed: 36km/h
Length: 8020mm
Width: 3000mm
Height: 3470mm
Machine Weight: 16600kg
Working Hydraulic System Oil Pressure: 20MPa
Steering Hydraulic System Oil Pressure: 15.5MPa
Braking System Air Pressure: 0.69MPa

Important Safety Information

Most accidents involving product operation, maintenance and repair are caused by failure to observe basic safety rules or precautions. An accident can often be avoided by recognizing potential hazardous situations before an accident occurs. The personnel must be alert to potential hazards, and should also have the necessary training, skills and tools to perform these functions properly.

Improper operation, lubrication, maintenance or repair of this machine can be dangerous and could result in personal injury or death.

Do not operate or perform any lubrication, maintenance or repair on this machine until you have read and understood operation, lubrication, maintenance and repair information.

Safety precautions and warnings are provided in this manual. If these hazard warnings are not heeded, body injury or death could occur to you or other people.

Sichuan Chengdu Chenggong Construction Machinery Co.，Ltd. can not anticipate every possible circumstance that might involve potential hazard. The warnings in this publication or on the product are therefore not all inclusive. If a tool, procedure, work method or operating technique is not specially recommended by Sichuan Chengdu Chenggong Construction Machinery Co.，Ltd., you must make sure that it is safe for you and others. You should also ensure that the machine would not be damaged or made unsafe by the operation, lubrication, maintenance or repair procedures you choose.

The information, specification, and illustrations in this publication are on the basis of the information available at the time when it was written. The specifications, torques, measurements, adjustments, illustrations and other items can be changed at any time. These changes can affect the service given to the machine. Obtain the complete and most current information before starting any job. Sichuan Chengdu Chenggong Construction Machinery Co., Ltd. has the most current information available.

Safety Notice

There are several specific safety signs on your machine. Their exact locations and description of the hazard are viewed in this section. Please take the time to familiarize yourself with these safety signs before starting the machine.

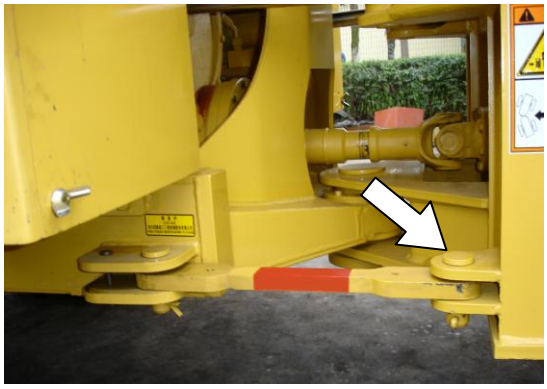

Warnings

Warning

Do not operate or work on this machine unless you have read and understood the instructions and warnings in both Operation and Maintenance Sections. Failure to follow the instructions or heed the warnings could result in personal injury or death. Proper care is your responsibility.

Warning

Improper jumper cable connections can cause an explosion resulting in personal injury.

Warning

While the machine is running, there is no space for man between the front and rear frames. If the machine is to be lifted and transported to the other machine or the service work is being performed near the center of the machine, a steering frame lock link should be installed between the front and rear frames to keep the machine in straight ahead position. Before operation and while operating, ensure the steering frame lock link is disconnected and pinned to the storage position.

Warning

During checking and repairing hydraulic elements inside the front frame and front axle, when the lift arm needs to be raised, the bucket should be placed on solid platform to prevent sudden fall of the arm, which might result in personal injury.

Warning

When the machine is under operation, repair, lubrication, maintenance and travel, only one authorized person is allowed to carry out all these operations. Do not allow unauthorized personnel on the machine.

When the machine is in operation, no other than the authorized operator can stay inside the cab.

General Hazard Information

Attach a **"DO NOT OPERATE"** or similar warning tag to the start switch of the engine or hydraulic controls before servicing or repairing the machine.

Wear a hard cover, protective glasses and other things required by job conditions.

Do not wear loose clothing or jewelry that can catch on controls or other parts of the machine.

Make certain that all the protective guards and covers are secured in place on the machine.

Keep the machine, especially the dashboard, walkways and steps, free of foreign materials, such as debris, oil, tools and other items that are not part of the machine.

Secure all loose items such as lunch boxes, tools and other items that are not part of the machine.

Know the appropriate work-site hand signals and who gives them. Accept signals from one person only.

Never put maintenance fluids into glass containers.

Use all cleaning solutions with care.

Report all the needed repairs.

Do not allow unauthorized personnel on the machine.

Unless otherwise specified, perform all the maintenance as follows:

- Park the machine on the level ground.
- Move the speed selector control lever to the neutral position.
- Put the bucket on the level ground.
- Move forward and backward hydraulic control lever to release system pressure. Place the control lever in neutral position.
- Shout down the engine.
- Turn off the start switch, that is, power is cut off automatically and remove the key.
- Engage the parking brake.
- Turn off the main power switch.

Compressed Air

Compressed air can cause personal injury. When using the compressed air for cleaning, wear a protective face shield, protective clothing and protective shoes.

The maximum pressure of compressed air for cleaning must be below 0.205MPa.

Fluid Penetration

Always use a board or cardboard when checking for leak. Escaping fluid under pressure, even a pinhole size leak, can penetrate body tissue, causing serious injury and possible death. If fluid injects into your skin, go to see a surgical doctor familiar with this type of injury within a few hours.

Asbestos

Cautions should be taken to avoid breathing asbestos-dust that can be harmful to your health when handling components containing asbestos fibers. Components in the machines made by CHENGGONG that may contain asbestos fibers are brake pads, brakes, brake plates and some gaskets. The asbestos used in these components is usually bound by a resin or sealed in some way. Normal handling is not hazardous as long as airborne dust containing asbestos is not generated.

If dust that may contain asbestos is present, the following precautions should be paid attention to:

- Never use compressed air for cleaning.

- Avoid brushing or grinding the materials containing asbestos.
- For cleaning thoroughly, use a wet cloth or vacuum equipment with a high efficient particular air (HEPA) filter.
- Use exhaust ventilation at permanent machining locations.
- Wear an approved respirator if there is no any other way to control the dust.
- Comply with the applicable rules and regulations for the working area.
- Follow environmental rules and regulations for disposal of asbestos.

Crushing or Cutting Prevention

Support the machine and attachments properly when working beneath them. Do not depend on hydraulic pressure to hold them up. Any attachment can fall if a control moves or a hydraulic line leaks.

Never attempt to make any adjustment while the machine is moving or the engine running unless otherwise specified.

Where there are implement linkages, the space in the linkage area will increase or decrease along with the movement of the implement.

Keep away from all the rotating and moving parts.

Make sure no any foreign objects between fan blades.

Do not use a twisted or worn wire and cable. Wear gloves when handling the wire and cable.

Wear protective glasses when removing a retainer ring or snap ring to avoid injury to your eyes and pay more attention to passers-by. Do not hurt any one nearby.

Chips or other debris may fly off while striking components. Make sure that no one will be hurt when any object is stricken.

Burn Prevention

Coolant

While the machine is operating or the operation is just finished, the engine coolant is hot under pressure. Any contact can cause severe burns.

Check the coolant level only after the engine has been stopped and the filler cover is cool enough to remove it with your bare hand slowly (remove the cooling system filler cover slowly to release pressure).

Keep the coolant to cool completely before draining it.

Oil

Hot oil or components can cause personal injury. Do not allow hot oil or components to contact the skin.

While the machine is operating or the operation is just finished, the hydraulic tank is hot and can be under pressure.

Remove the hydraulic tank filler cover only after the engine has been stopped and the filler cover is cool enough to remove it slowly with your bare hand (remove the filler cover slowly to release pressure).

Release all pressure in the lines, connectors or the related parts before they are disconnected or removed.

Batteries

Batteries may give off flammable fume that can explode.

Do not smoke when observing the battery electrolyte level.

Electrolyte is an acid substance and can cause personal injury if it contacts skin or eyes.

Always wear protective glasses when working with batteries.

Fire or Explosion Prevention

All fuels, most lubricants and some coolant mixtures are flammable.

Fuel leaked or spilled onto hot surfaces or electrical components can cause a fire.

Do not smoke while refueling or in a refueling area.

Do not smoke in the area where batteries are charged, or where flammable materials are

stored.

Two batteries in series are located in separate boxes. When using jumper cables, always connect electromagnetic switch of the starter with positive (+) terminal of the battery, while negative (-) terminal of the power relay with negative (-) terminal of the battery.

Please refer to the “Operation Section” of this manual for specific instructions.

Clean and tighten all electrical connections. Check daily for loose or worn electrical wires. Repair or replace the worn electrical wires before operating the machine.

Keep all fuel and lubricants stored in properly marked containers and away from all unauthorized people

Store all oily rags or other flammable materials in a protective container, and put it in a safe place.

Do not carry out operations of welding or flame cutting for pipes or tubes that contain flammable fluids. Clean them thoroughly with non-flammable solvent before welding or flame cutting.

Remove all flammable materials such as fuel, oil and other debris that accumulate on the machine.

Do not expose the machine to flames, burning bushes, etc., if possible.

A fire extinguisher shall be available and personnel shall know how to use it. Inspect and maintain it according to the instructions in its Service Manual.

Ether (If the machine is equipped with cold start device)

Ether is poisonous and flammable.

Breathing ether vapor or repeated contact of ether with skin can cause personal injury.

Use ether only in well-ventilated areas.

Do not smoke while changing ether cylinders.

Use ether with care to avoid fires.

Do not store replacement ether cylinders in living areas or in the operator’s compartment.

Do not store ether cylinders in direct sunlight or the area at the temperature above 39℃.

Put the discarded cylinders in a safe place. Do not puncture or burn cylinders.

Keep ether cylinders out of the reach of unauthorized personnel.

Lines, Tubes and Hoses

Do not bend or strike high-pressure lines. Do not install bent or damaged tubes or hoses in the machine.

When any loose or damaged fuel and lubricant tubes and hoses are repaired, leaks can cause fires. Please pay more attention to safety.

Check lines, tubes and hoses carefully. Do not use your bare hand to check for leaks. Use a board or cardboard to check for leaks. See “Fluid Penetration” in the “Safety Section” for more information in detail. Tighten all connections according to the recommended torque. Replace them if any of the following conditions is found.

1. Connectors damaged or leaking;
2. Outer covering worn or cut causing wires to expose;
3. Outer covering ballooning locally;
4. Evidence of kink or crushing of hoses;
5. Armor embedded in the outer covering;
6. End connectors displaced.

Make sure all clamps; guards, etc. are installed correctly to prevent vibration and excessive heat from rubbing against the other parts during operation.

Tire

Explosion of air-inflated tires results from the air inside the tires being heated and combusted. The heat is generated by welding, rim heating, external fire or air combustion that may be caused by excessive use of brakes.

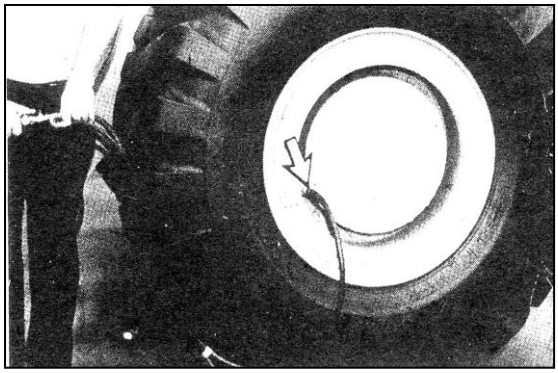

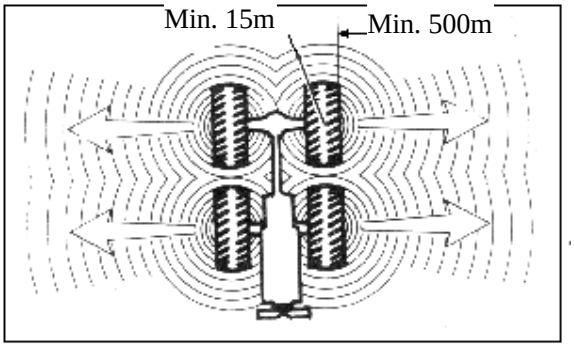

A tire explosion is much more violent than a blowout. The explosion can cause the tire, rim to fly off as far as 500m or more from the machine. Both force of the explosion and the flying debris can cause personal injury or death and property loss.

Do not approach a tire closer than the outside of the area represented by the shaded area in the drawing.

Dry nitrogen (N_2) gas is recommended for inflation of tires. If the tires were originally inflated with air, nitrogen is still preferred for adjusting the pressure. Nitrogen can mix with air.

Nitrogen inflated tires reduce the potential of a tire explosion, because nitrogen does not support combustion. Also, nitrogen helps prevent oxidation, deterioration of rubber and corrosion of rim components.

Proper nitrogen inflation equipment and training for operators in its use are necessary to avoid over inflation. A tire blowout or rim failure can result from improper or misused equipment.

Stand side of the tire and use an automatic self-attaching chuck when inflating a tire.

Servicing and changing tires and rims may be dangerous and should be done only by trained personnel using proper tools and procedures. If correct procedures are not followed while servicing tires and rims, the assembly could burst with explosive force and cause serious personal injury or death. Follow carefully the specific information provided by tire or rim service personnel or dealer.

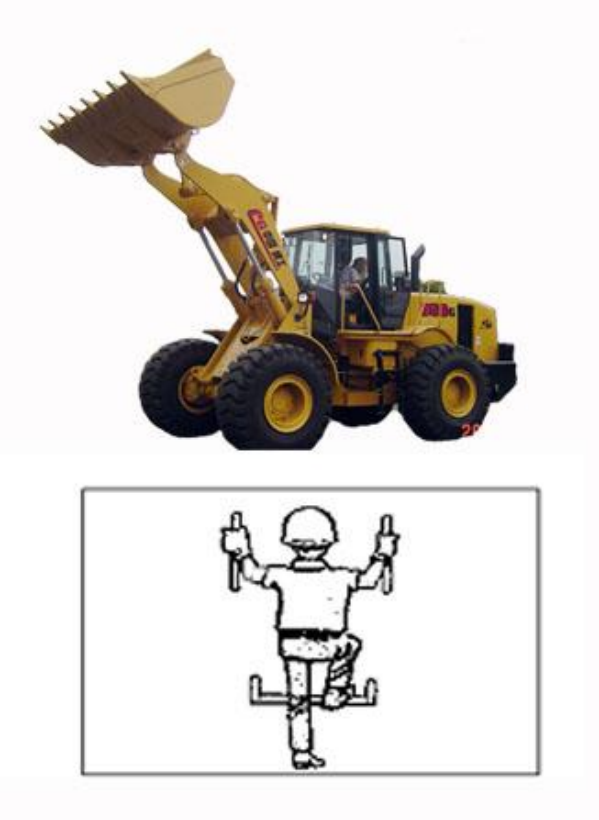

Going on and off the Machine

Climb up and down the machine only where steps and handholds are provided.

Use handholds by two hands and face the machine when mounting and dismounting.

Never get on or off a moving machine. Never jump off the machine.

Do not try to climb on or off the machine when carrying tools or other supplies. Use a rope to pull tools up onto the platform.

Before Starting the Engine

Start the engine only inside the operator’s cab. Never make the starting motor

terminal or the batteries in short circuit to start the engine, as this could damage the electrical system through the bypass starting system.

Adjust the seat until the operator can step down the pedal in full stroke with force while seating against the backrest.

Make sure the machine is equipped with a lighting system as required.

Make sure that all lights are working properly.

Make sure that no one is working on, underneath or close to the machine before starting the engine or beginning to move the machine. Be sure that the area is free of unauthorized personnel.

Start of Engine

Do not start the engine or move any of controls if there is a “ **Do Not Operate**” or similar warning tag attached to the start switch or controls.

Move all hydraulic controls to the **hold position** before starting the engine.

Set the transmission control lever in the **neutral position.**

Engage the parking brake.

Start and operate the engine in a good ventilated area only. In an enclosed area, vent the exhaust to the outside.

Before Operating Machine

Keep all personnel away from the machine and the area.

Clear all obstacles from the path of the machine. Beware of hazards such as wires, ditches, etc.

Be sure that all windows are clean and doors and windows must be in either open or shut down position.

Adjust the rear view mirrors for better vision.

Make sure that the machine horn, backup alarm and all other warning devices are working properly.

Move the machine slowly to an open area and check for proper operation of all controls and protective devices.

Machine Operation

Operate the machine only when seated.

Operate the controls only with the engine running.

The operator must make sure that no one will be endangered before moving the machine.

Others except the operator is not allowed on the machine while the machine is moving.

Report any needed repairs noticed during operation.

Carry attachments as close to the ground as possible, approximately 40cm above the ground level.

Stay a safe distance from the edge of cliffs, overhangs and slide areas.

Be careful of the tipping condition of the machine when working on hills, banks or slopes and when crossing ditches, ridges or other obstructions.

Work up and down slopes rather than sideways, whenever possible.

Keep the machine under control and do not work it over its capacity.

Be sure that hitch points and the towing device are in good conditions.

Trailer can only be connected to a drawbar or hitch.

Never straddle a towing rope or similar device.

No one is allowed to stand between the machine and trailing equipment whenever maneuvering to connect them. Align the hitch or hitching pin of the trailing equipment to the drawbar or hitch of the machine.

You should know the maximum height and reach of your machine.

Parking of the Machine

Park the machine on a level surface. If necessary, park it on a slope and use wooden wedges to block the machine.

Apply the pedal brake to stop the machine.

Move the transmission control lever to the neutral position.

Engage the parking brake.

Lower all attachments to the ground.

Shut down the engine. Then move the key to “0” position and remove the key (power is cut off automatically). Turn off the main power switch.

Use of New Machine

A new machine will not be delivered until it has been under strict examination and try-out operation. However, a new machine must have enough time to go through run-in period. This is the right key to long-term smooth operation and economical use of the machine.

When using a new machine, observe the following notice：

- Before begin to work, no matter in what season, there must be enough preheat operation of the machine.
- Never run the engine at high speed without load, especially when the engine has not been heated.
- Try to avoid hasty drive, sudden turn and unnecessary jerk brake.
- Carry out the inspection and service as specified.

Outside Views of the Machine

Engine (1), Fuel Tank (2), Hydraulic Oil Tank (3), Implement (4), Cab (5)

Radiator (6), Transmission (7), Drive Axle (8), Battery (9), Accumulator (10)

Facilities inside the Cab

Instrument, Control Switches and Indicators

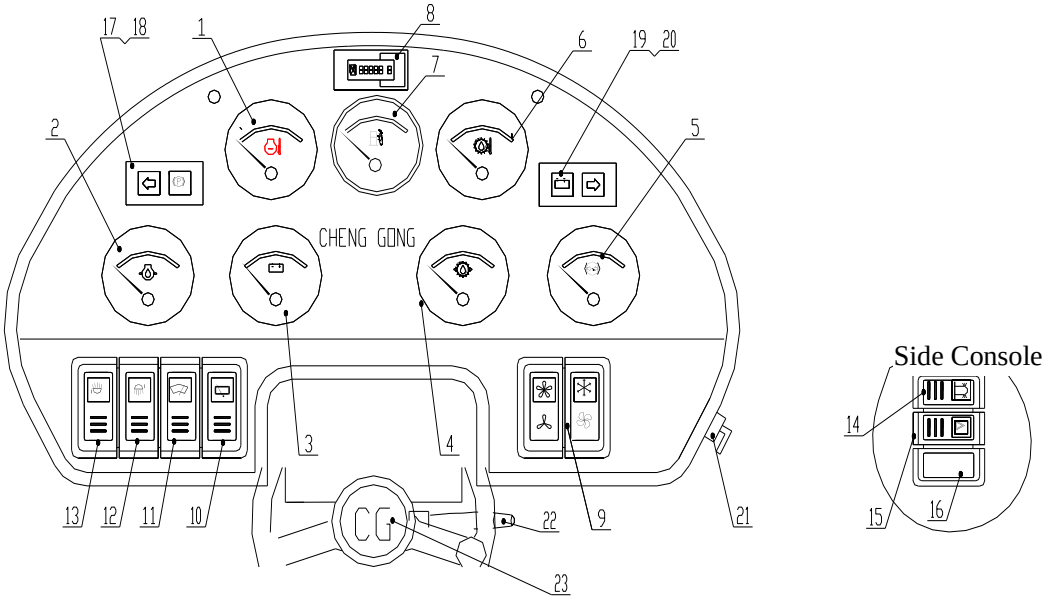

1. Engine water temperature gauge—indicates engine coolant temperature; the nominal value is 80℃~92℃.
2. Engine oil pressure gauge—indicates engine oil pressure; the nominal value is 0.25~0.45Mpa.
3. Battery voltmeter—indicates output voltage of the battery.
4. Transmission oil pressure gauge—indicates working transmission oil pressure; the nominal value is 1.2~1.5Mpa.
5. Braking pressure gauge—indicates air pressure of the braking system; the nominal value is 0.69Mpa.
6. Torque converter oil temperature gauge—indicates working oil temperature of torque converter; the nominal value is ≤120℃.
7. Fuel level gauge—Indicates fuel level.
8. Hour meter—— Indicates the total working time of engine.
9. Air-conditioning control panel
10. Rear wiper switch
11. Front wiper switch
12. Rear working light switch
13. Front working light switch
14. Working warning switch
15. Alarm switch
16. Blank
17. Left turning signal indicator
18. Parking brake indicator
19. Charging indicator
20. Right turning signal indicator
21. Start switch
22. Turning signal light switch; Horn button

Transmission and Torque Converter

Positions of Z50G02T21 Torque Converter and Z50G03T21 Transmission in driving system of the loader

Drive Line System can transfer the engine power to the wheel system by changing the original revolution, torque and direction.

It consists of Torque Converter, Transmission, front, intermediate & rear Drive Shafts, intermediate support, and front & rear axles. (See the Illustration below)

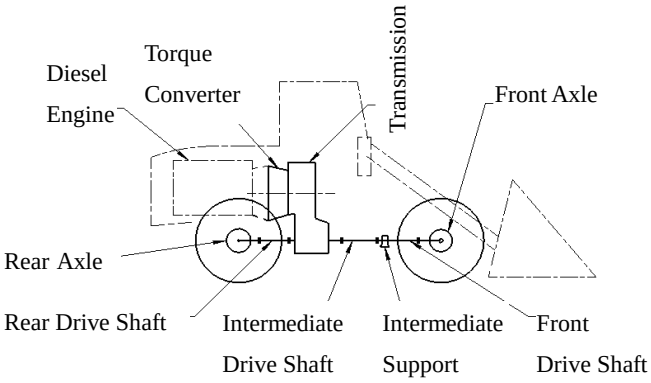

Drive Line System

Z50G02T21 Torque Converter and Z50G03T21 Transmission

1 Z50G02T21 Torque Converter and Z50G03T21 Transmission (counter shaft type electro-hydraulic power shift transmission newly developed by CHENGGONG, as shown in Illustration 1)

Refer to the following description for the structures and specifications.

SN 1. Torque Converter

Drawing No.	Z50G02T21
Structure:	3-element
Diameter (mm)	368
Max. torque ratio	2.42~2.68

SN 3. Transmission

Drawing No.	Z50G03T21
Structure:	Fixed-shaft Type Electro-hydraulic Power Shift
Forward/Reverse Gears:	4X3
Shift Oil Pressure（Mpa）	1.6-1.8

2 Outside structure of Z50G02T21 Torque Converter and Z50G03T21 Transmission (Illustration 1)

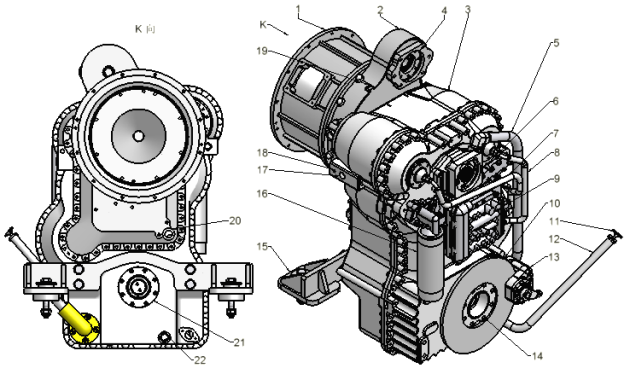

Illustration 1 50G02T21 Torque Converter and Z50G03T21 Transmission

1. Z50G02T21 Torque Converter 2. Z50G0201T18 Transfer Case 3. Z50G03T21 Transmission 4.PTO 5.Oil Suction Hose of Transmission 6. Transmission and PTO 7. Oil Inlet Hose of Reverse Clutch 8. Oil Inlet Hose of Forward Gear Clutch 9.Gear Shift Valve Assembly 10.Parking Brake Disc 11.Vernier Caliper 12.Oil Inlet Hose 13. Parking Brake 14.Front Flange 15. Support 16 Fine Oil Filter 17. Torque Converter Oil Outlet (to Radiator) 18. Oil Temperature Sensor Joint at Torque Converter Outlet 19. Air Exhaust Port 20.Lubricant Inlet (Connected to Radiator Inlet) 21. Rear Flange 22. Oil Drain Plug

3 Z50G02T21 Torque Converter Assembly

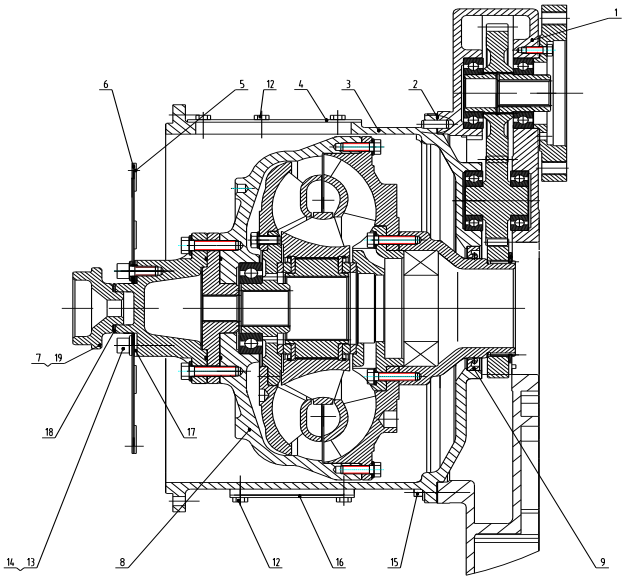

Illustration 2 Z50G02T21 Torque Converter Assembly and Structure Schematic Diagram

1. Transfer Case 2. Paper Gasket 3.Torque Converter Case 4.Upper Cover Plate 5. Shim 6. Elastic Plate 7.Axle Shaft and Gear Assembly 7. Sleeve 8. Torque Converter Element 9. Oil Seal 10. Driving Gear 11 Snap Ring 12. Bolt 13. Bolt 14. Washer 15. Bolt 16. Lower Cover Plate 17.Adjusting Washer 1 18. Adjusting Washer 2 19.Sleeve

The torque converter of this model adopts single-stage single-turbine three-element structure and makes up of hydro-mechanical speed-shifting mechanism together with the transmission. One end of the torque converter is connected to the elastic plate and then to the flywheel that is fixed on the rear frame with bolts to realize axial positioning; the other end is connected to the guide wheel seat on the transmission case with bolts to realize radial positioning and sealing. Thrust bearing and deep groove ball bearing are set among the impeller, turbine and guide wheel to realize axial and radial positioning. See Illustration 2 and Illustration 3.

1) Functions of Torque Converter

(1) Improve the dynamic performance of the loader: It has automatic adaptability and ability of stepless speed changing. As the external resistance increases (for example, when the loader is loading, climbing up slopes or when the road surface changes), the revolution of the wheels decreases with the changes, and the revolution of the torque converter turbine also decreases. At this time, the output torque of the turbine can increase automatically to supply the wheels higher driving force to overcome the external resistance and drive the loader; as the external resistance decreases, the revolution of the turbine gradually increases, and its output torque automatically decreases. The torque converter has the function of automatically regulating the speed and tractive force of the loader with the change of operations and road surface.

(2) Prolong service life of the machine: The torque converter adopts working oil to transfer the power, so it can absorb and remove the vibration and impact from the diesel engine and external resistance to protect the parts and prolong the service life of the machine. When the tractive force of the loader fails to overcome the external resistance, the diesel engine will not shut down.

(3) Increase the possibility of the loader passing through tough roads: It increases the possibility for the loader to go through tough road surfaces with stable tractive force and comparatively low traveling speed.

(4) Simplify the operation and improve the comfort for the driver: Since adopting the torque converter increases the engine power application range, the gears of the transmission can be reduced, and the labor intensity for operation is also reduced; for non-level speed changing and stable starting, it can absorb and remove the vibration and impact to provide more comfortable operation.

2) Structure of Torque Converter

The torque converter is composed of impeller, turbine, guide wheel, guide wheel seat, cover, case, etc. The impeller and the cover are assembled with bolts. See Illustration 2 for the structure schematic.

(1) Torque converter power transfer (Illustration 3)

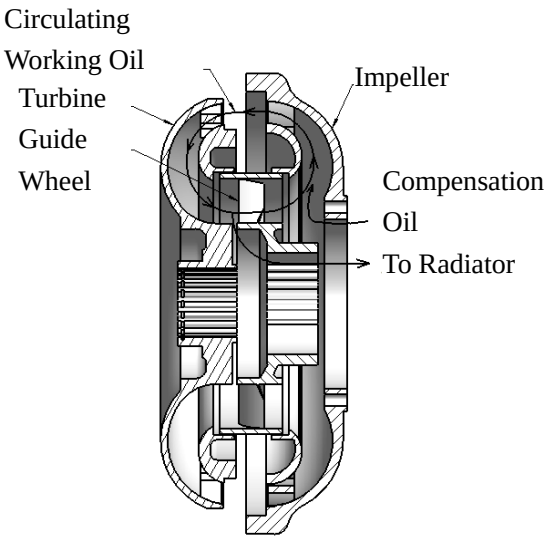

Illustration 3 Torque Converter Power Transfer Schematic

The diesel engine transfers the power to the impeller and makes it rotate at the same revolution with the engine through the flexible disc connecting the cover. The working oil in the impeller rotates with the impeller and flows towards the outer edge of the impeller along with the oil passage resulting from centrifugal force. After it flows out from the impeller, the flowing work oil at a high speed impacts the turbine blades to make the turbine rotate and transfers the power through the input shaft of the transmission connected with the turbine; after it flows through the turbine outlet, and enters into the guide wheel, the work oil changes its direction and flows out from the guide wheel along with the oil passage from the blades because the guide wheel is fixed, and then flows into the impeller. In this way, the working oil flows circularly within the three working wheels in the way of solenoid. The torque converter power transfer line: flexible disc→cover→impeller→turbine→turbine shaft →input gear of transmission

3) Working Principle of Torque Converter (Illustration 3)

When the diesel engine drives the impeller to rotate, the impeller attains the torque by the power of the diesel engine, i.e. impeller torque, also the input torque of the torque converter. This torque acts on the working oil within the impeller to make the working oil flow out of the impeller at a certain speed and in a certain direction. In this way, the mechanical energy of the impeller torque is converted into the liquid (working oil) kinetic energy. When it impacts the turbo blades, the working oil with kinetic energy makes the turbine rotate. Therefore, the turbine attains the torque equal to that of the impeller in the same direction. In this way, the liquid (working oil) kinetic energy is converted into the mechanical energy. When it flows into the guide wheel from the turbine, the working oil gives the guide wheel certain torque, and reactionary torque equal to this torque in a reserve direction will be produced because the guide wheel is fixed, and fed back to the turbine through the working oil. At this time, under the combined action of the impeller torque and reactionary torque of the guide wheel, the turbine attains and outputs the sum of the impeller torque and reactionary torque of the guide wheel The reason why the torque converter can increase the torque that the diesel engine inputs on the impeller is because the fixed guide wheel can give a reactionary torque to the working oil additionally and then feed back the turbine through the working oil.

When the revolution of the turbine is zero (that is, the external resistance torque is high), the direction of the reactionary torque of guide wheel is the same as that of the impeller torque. Therefore, the torque that the turbine outputs is equal to the impeller torque plus the reactionary torque of the guide wheel, i.e. the output torque of the torque converter exceeds the input torque.

When the revolution of the turbine gradually increases, the direction of the working oil that flows into the guide wheel from the turbine also changes gradually and the reactionary torque produced by the guide wheel also decreases gradually. When the revolution of the turbine reaches a certain numerical value,

the reactionary torque produced by the guide wheel is equal to zero. At this time, the torque that the turbine can attain and output is equal to the impeller torque, that is, the output torque is equal to input torque.

As the revolution of the turbine increases continuously, the direction of the working oil that flows into the guide wheel changes, i.e. on the back of the guide wheel blades. The reactionary torque produced by the guide wheel is contrary to the direction of the impeller torque. Therefore, partial impeller torque will be offset. At this time, the torque that the turbine can attain and output is less than the impeller torque.

The turbine revolution can be increased or decreased due to external resistance through wheels, driving axles and transmission or the turbine may stay still (when starting to travel or braking). Therefore the torque output by the turbine may be less than, equal to or more than the impeller torque, that is, the output torque of the turbine may change with the change of the turbine revolution (i.e. impacted by the external resistance). As the external resistance is small, the turbine revolution is high and output torque of the turbine is accordingly small; as the external resistance is large, the revolution of the turbine is low and the output torque of the turbine increases in order to overcome the external resistance.

4) Working Oil of Torque Converter

When the working oil of torque converter flow in the working chamber at high speed, the temperature will be increased and the viscosity decreased and then the working efficiency will be reduced. Therefore partial working oil flows to the radiator for cooling from the turbine outlet through the annular passage between the guide wheel seat and the transmission input shaft and the internal passage. In order to avoid cavitation erosion produced by the impeller blades and make up the working oil that flows out for cooling, some compensation oil is input into the impeller from the transmission oil pump. The compensation oil of the torque converter is supplied by the transmission oil pump. When the engine runs, the internal spline at the cover shaft shoulder will drive the oil pump shaft that extends into the transmission inside to rotate and drives the transmission oil pump to work. The pressure oil from the oil pump goes through the internal oil passage, oil filter and electro-hydraulic control valve into the internal oil passage and guide wheel seat to flow into the impeller inlet. The pressure valve of the torque converter inlet connected to the internal oil passage of the inlet controls the compensation oil pressure into the impeller (see Illustration 1, 2, 3 13).

5) Oil outlet of the radiator (Illustration 1, 2, 3 13)

To cool the heated working oil, partial working oil in the circulation will flow from turbine outlet through the annular passage between guide wheel seat and transmission shaft, internal passage, the pressure valve of the torque converter outlet and the oil outlet to the radiator. The above-mentioned working oil will flow into the lubricating port of transfer case after cooling and then into 6 clutch shafts through internal oil passage to lubricate all the revolving parts from radial holes on the clutch shafts.

4 Inside Structure of Transmission (Illustration 4)

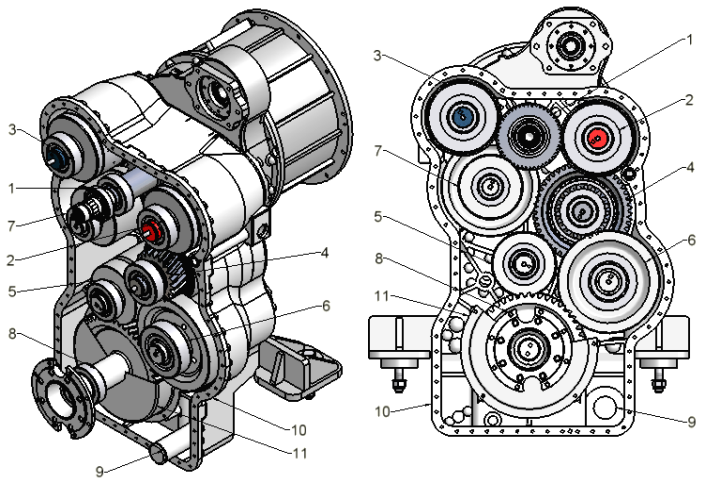

Illustration 4 Inside Structure of Z50G03T21 Transmission

1. Z50G0301T21 Input Shaft Assembly 2. Z50G0302T18 CF Clutch 3. Z50G0303T18 CR Clutch 4. Z50G0304T18 C1 Clutch 5. Z50G0305T18 C2 Clutch 6. Z50G0306T18 C3 Clutch 7. Z50G0307T18 C4 Clutch 8. Z50G0308T18 Output Shaft Assembly 9. Sucked Oil Filter 10. Z50G030000001T18 Case Ⅰ 11. Z50G030000008T18 Protective Cover

5 Clutch Shaft Structure

Take CF clutch as example (Illustration 4, 5 & 6). The structures and operating principles of other clutch shafts are similar.

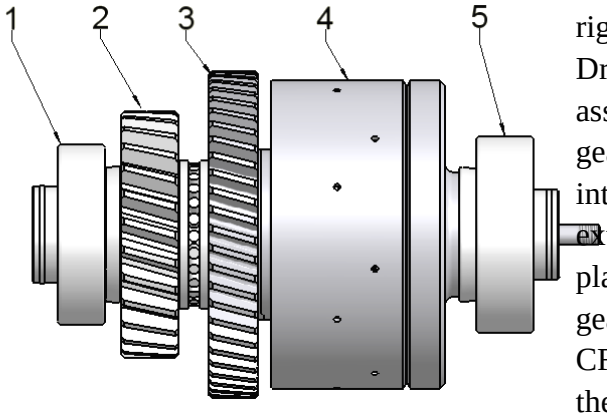

Illustration 5. Outside View of CF Clutch

1. Bearing 2. CF Shaft and Gear Assembly 3.CF Gear 4. CF Housing 5. Bearing

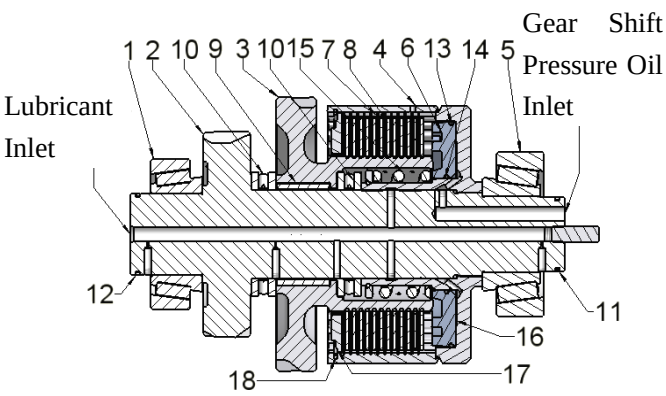

Illustration 6. Section View of CF Clutch

1. Bearing 2. CF Shaft and Gear Assembly 3. CF Gear 4. CF Housing 5. Bearing 6. Piston 7.Driving Friction Plate 8. Driven Friction Plate 9. Roller Bearing 10.Thrust Bearing 11. Rotating Seal 12. Rotating Seal 13.External Seal Ring of Piston 14. Internal Seal Ring of Piston 15.Return Spring of Piston 16. Cylinder (processed on the housing) 17. Bearing Plate 18. Snap Ring

Assembly Positions of Clutch Parts:

CF Shaft and Gear Assembly 2 (Illustration 6, 7) is assembled with bearing 1 at the left end and bearing 5 at the right end.

Roller bearing 9 is assembled in the inside hole of CF gear 3 (Illustration 6, 8) and the CF gear 3 is assembled on the right end of CF Shaft and Gear Assembly 2 to position CF gear 3 radially. Thrust bearings 10 are assembled at the left and right ends of CF gear 3 to position axially; Driven friction plate 8 (Illustration 9) is assembled at the right end external spline of CF gear 3. There is some clearance between the internal spline of driven friction plate 8 and external spline of CP gear 3. The driven friction plate 8 can slide on the external spline of CF gear 3 but can not rotate relatively.

CF housing 4 (Illustration 6, 11) is assembled at the right end of the CF Shaft and Gear Assembly 2 and contacts thrust bearing 10 through the inner hole of intermediate hollow shaft to position axially. The spline and the inner hole are positioned axially. The spline of inner hole mates with external spline of CF Shaft and Gear Assembly 2 to make CF housing 4 and CF Shaft and Gear Assembly 2 not rotate relatively. The right end of CF housing 4 is positioned axially by bearing 5. There is some clearance for the two thrust bearings to move. The major inner hole of the housing is assembled with several driving friction plates through internal spline (Illustration 10). There is some clearance between internal and external splines of the two parts. The driving friction plate can slide on the internal spline of CF housing 4 but can not rotate relatively.

Assembly positions of driving friction plate 7 and driven friction plate 8 (Illustration 6): The driving friction plates and the driven friction plates are assembled one by one alternatively.

All the friction plates shall be assembled according to the technical drawings. When the gear is engaged, the piston assembly moves to the friction plate under the oil pressure to press the driving and driven friction plates onto the bearing plate 17 that is fixed onto CF housing 4 axially by snap ring 18.

See Illustration 12 for piston assembly (SN. 6, 13, 14 in Illustration 4). The excircle of the piston is assembled with external seal ring and the inner hole is assembled with internal seal ring. The piston assembly is installed into the cylinder of CF housing 4. The internal and external seal rings can prevent the pressure oil leaking from the clearance between the CF housing 4 and piston assembly. After oil goes into the cylinder, piston assembly moves to the friction plate under oil pressure.

The right end of piston return spring 15 contacts with anti-wear shim at the left end of the piston. The left end is fixed on the bearing plate that is positioned axially by the snap ring on the excircle of the intermediate hollow shaft of CF housing 4.

CF clutch is assembled in the transmission case and positioned axially by bearing 1 and radially by bearing 5.

The two ends of CF Shaft and Gear Assembly 2 extend into the upper seal hole of the transmission case. The seal groove at the shaft end is assembled with rotating seal rings 11 and 12 to seal the gear shift pressure oil from the right and the lubricating oil from the left. The gear shift pressure oil goes into axial hole at the right end of CF Shaft and Gear Assembly 2 and then into the cylinder through the radial hole, annular groove on the housing and the slant hole. The lubricating oil goes into the axial hole at the left end of CF Shaft and Gear Assembly 2 and lubricates all the bearings, gears and friction plates through the axial holes. The small holes distributed at the external spline groove of CF gear 3 (Illustration 8) can make the lubricating oil flow to all the driving and driven friction plates evenly.

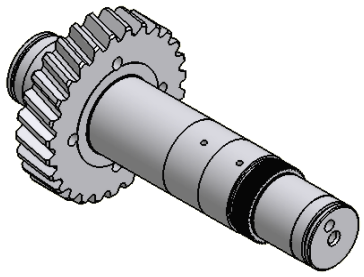

Illustration 7 CF Shaft and Gear Assembly

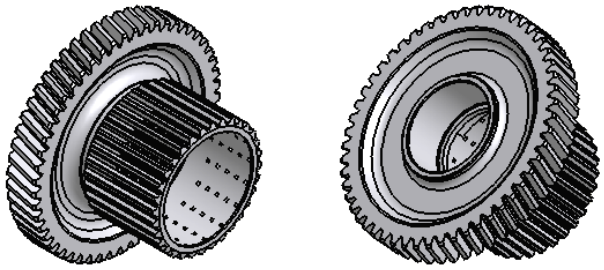

Illustration 8 CF Gear

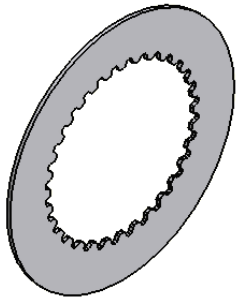

Illustration 9 Driven Friction Plate

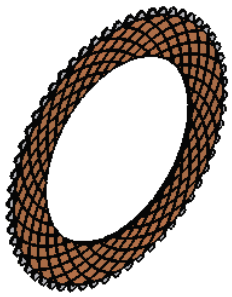

Illustration 10 Driving Friction Plate

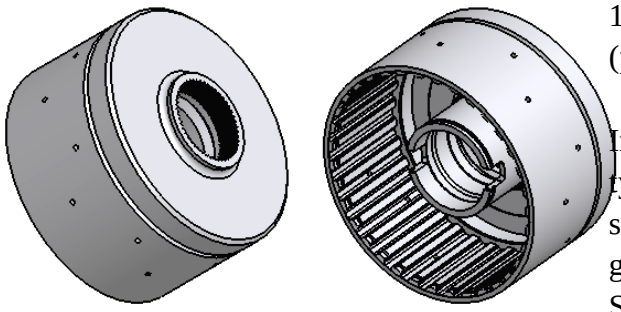

Illustration 11 Housing

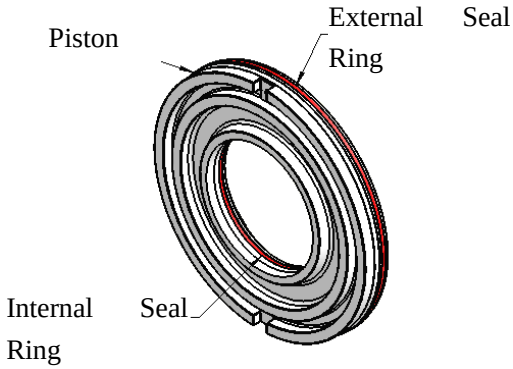

Illustration 12 Piston Assembly

6 Power Transfer of Clutches (Illustration 13)

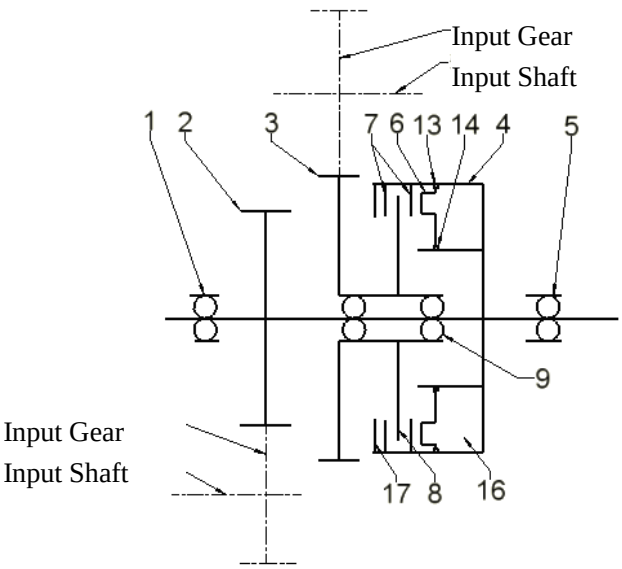

Illustration 13 Power Transfer of Clutch

1. Bearing 2. Shaft and Gear Assembly 3. Gear 4. Housing 5. Bearing 6. Piston 7. Driving Friction Plate 8. Driven Friction Plate 9. Bearing 13. External Seal Ring of Piston 14. Internal Seal Ring of Piston 16. Cylinder (processed on the housing) 17. Bearing Plate

In Illustration 13, the heavy lines outline the typical single clutch counter shaft type power shift structure. Gear 3 is engaged with input gear and is the power input gear for the clutch. Shaft and gear assembly 2 is engaged with output gear and is the power output gear for the clutch.

The power is transferred through input gear into gear 3. Gear 3 starts to rotate and drives the driven friction plates at the right end of the gear to rotate. When the gear is not engaged, since there is some clearance between driving friction plate and driven plate, the power can not be transferred down. Gear 3 can only rotate through bearing 9 freely on shaft and gear assembly 2. When the gear is engaged, pressure oil goes into cylinder 16 and piston 16 is pushed to the driving and driven friction plates at the left under oil pressure until there is no clearance between driving and driven friction plates and they are pressed onto bearing plate17. The power is then transferred from driven friction plate to driving friction plate. The driving friction plate transfers the power through spline to housing 4. Housing 4 is connected to shaft and gear assembly 2 with spline, so the power is transferred to the shaft and gear assembly 2. At this time, all the parts on the clutch is integrated and then rotates with gear 3 (at the same revolution). The power is transferred to output gear and output shaft.

6 Power Transfer of Transmission Gears (Illustration 14 Power System)

The Transmission is composed of six clutches including CF, CR, C1, C2, C3 and C4, input shaft assembly and output shaft assembly. Two different clutches can form a speed gear. See the following for details:

	Gear 1	Gear 2	Gear 3	Gear 4
Forward	CF+C1	CF+C2	CF+C3	C3+C4
Reverse	CR+C1	CR+C2	CR+C3	

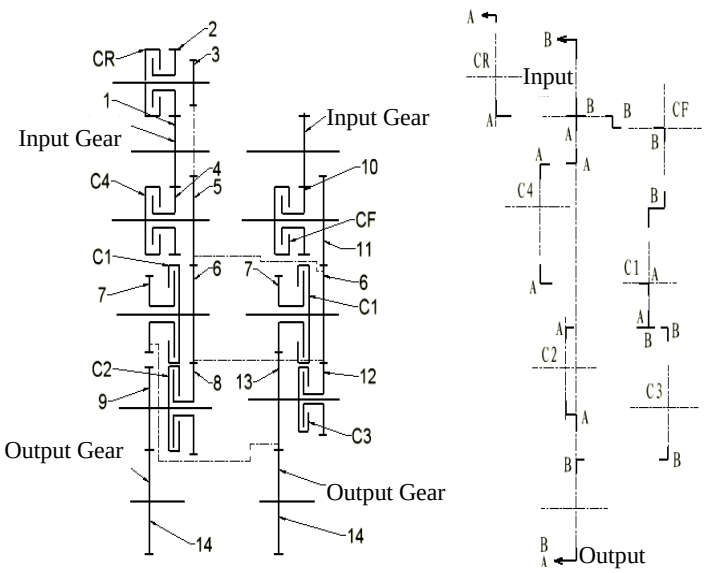

Illustration 14 Power Transfer System

1) Forward Gear 1: When the gear shift handle is positioned in Forward Gear 1, oil goes into the cylinder of CF and C1 to press the friction plates in each clutch tight to make all the parts in the clutch CF integrated and rotate with gear 10. The clutch C1 is integrated and rotates with gear 6 in the same way.

The power transfer line:

Input gear→ gear 10→ gear 11→gear 6→gear 7→gear 13→gear 14→output shaft

2) Forward Gear 2: When the gear shift handle is positioned in Forward Gear 2, oil goes into the cylinder of CF and C2 to press the friction plates in each clutch tight to make all the parts in the clutch CF integrated and rotate with gear 10. The clutch C2 is integrated and rotates with gear 8 in the same way.

The power transfer line:

Input gear→ gear 10→ gear 11→gear 6→gear 8→gear 9→gear 14→output shaft

3) Forward Gear 3: When the gear shift handle is positioned in Forward Gear 3, oil goes into the cylinder of CF and C3 to press the friction plates in each clutch tight to make all the parts in the clutch CF integrated and rotate with gear 10. The clutch C3 is integrated and rotates with gear 12 in the same way.

The power transfer line:

Input gear→ gear 10→ gear 11→gear 6→gear 12→gear 3→gear 14→output shaft

4) Forward Gear 4: When the gear shift handle is positioned in Forward Gear 4 oil goes into the cylinder of CF and C4 to press the friction plates in each clutch tight to make all the parts in the clutch CF integrated and rotate with gear 10. The clutch C4 is integrated and rotates with gear 12 in the same way.

The power transfer line:

Input gear→ gear 4→ gear 5→gear 6→gear 12→gear 13→gear 14→output shaft

5) Reverse Gear 1: When the gear shift handle is positioned in Reverse Gear 1 oil goes into the cylinder of CR and C1 to press the friction plates in each clutch tight to make all the parts in the clutch CR integrated and rotate with gear 2. The clutch C1 is integrated and rotates with gear 6 in the same way.

The power transfer line:

Input gear→ gear 2→ gear 3→gear 5→gear 6 →gear 7→gear 13→gear 14→output shaft

6) Reverse Gear 2: When the gear shift handle is positioned in Reverse Gear 2 oil goes into the cylinder of CR and C2 to press the friction plates in each clutch tight to make all the parts in the clutch CR integrated and rotate with gear 2. The clutch C2 is integrated and rotates with gear 8 in the same way.

The power transfer line:

Input gear→ gear 2→ gear 3→gear 5→gear 6 →gear 8→gear 9→gear 14→output shaft

7) Reverse Gear 3: When the gear shift handle is positioned in Reverse Gear 3 oil goes into the cylinder of CR and C3 to press the friction plates in each clutch tight to make all the parts in the clutch CR integrated and rotate with gear 2. The clutch C3 is integrated and rotates with gear 12 in the same way.

The power transfer line:

Input gear→ gear 2→ gear 3→gear 5→gear 6 →gear 12→gear 13→gear 14→output shaft

7 Oil Supply System of Torque Converter and Transmission (Illustration 15)

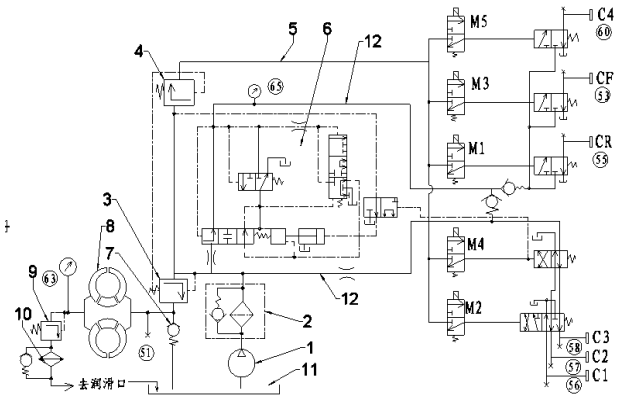

Illustration 15 Oil Supply System of Torque Converter and Transmission

1. Transmission Oil Pump 2. Fine Filter 3. Gear Shift Pressure Control Valve 4. Pressure Valve for Solenoid Valve Control Oil Line 5. Solenoid Valve Control Oil Line 6.Cushion Valve Block 7.Pressure Valve of Torque Converter Inlet 8. Torque Converter 9. Pressure Valve of Torque Converter Outlet 10. Radiator 11. Oil Tank （Lower Part of Transmission）12. Gear Shift Pressure Oil Line

8 The Functions of Gear Shift Valve Assembly Connection (Illustration 16)

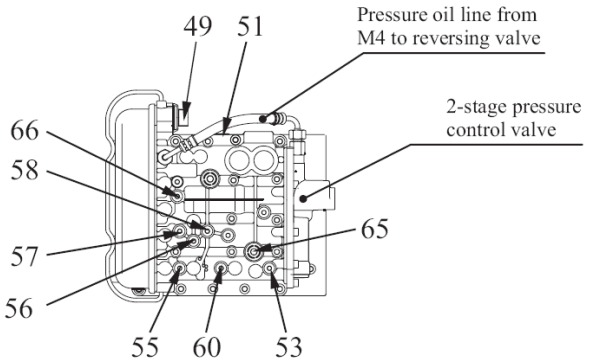

Illustration 16 Electric Control Valve

49. Socket 51. Pressure Tap at Torque Converter Inlet 53. Pressure Tap of CF Clutch 55. Pressure Tap of CR Clutch 56. Pressure Tap of Clutch C1 (1st gear) .57. Pressure Tap of Clutch C2 (2nd gear) 58. Pressure Tap of Clutch C3 (3rd gear) 60. Pressure Tap of Clutch C4 (4th gear) 65. Pressure Tap of the System

9 Maintenance for Transmission and Torque Converter

(1) Oil

Z50G02 Torque Converter and Z50G03T18 Transmission shall be filled with the oil recommended by CHENGGONG.

Recommendation: Mobile Delvac Super Oil 1300 (SAE15W-40 Grade) or Titan Universal HD15W-40 Oil of Fuchs Lubricants (China) LTD.

(2) Oil Level: Check the level once a week

Park the Loader on flat ground. Position the transmission control handle in “Neutral” and engage the parking brake. Keep the Engine at idle (about 1,000 rev/min). Remove the Oil Gauge. Clean and insert it into oil level tube and tighten up. Take it out when it reach the proper position (repeat the step at lease twice)

The indicated level should be between the middle and the lower ‘Cold’ gauge calibration lines when the oil temperature reaches 40℃.

The indicated level should be between the middle and the upper ‘Hot’ gauge calibration lines when the oil temperature reaches 80℃.

The oil level indicated when the engine is not started shows that there is sufficient circulation flow for the Transmission and the Torque Converter. However, it is the oil level of the running engine that counts.

Note:

If the oil level falls below the minimum level, the recommended lubricating oil must be filled until the level rises to the specified range (Illustration 17).

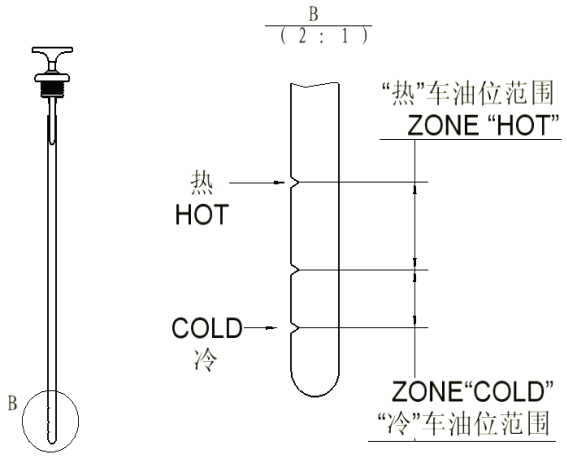

(3) Oil replacement and oil filling amount

The First Replacement shall be conducted after the First 100 Working Hours (and subsequent replacement shall be done every 1,000 working hours or at least once a year).

The following instructions must be followed during replacement:

- Park the Loader on flat ground. Position the transmission control handle in “Neutral” and engage the parking brake.
- Remove the Bleeder Plug and sealing parts to drain up the used oil.
- It is important to drain up the oil not only in the Transmission but also in the Torque Converter and the Radiator.
- Remove the flange of sucked oil hose. Take out the coarse filter. Clean the coarse filter, assembly face of sucked oil hose flange and sealing face of the case. Replace and reassemble the seal shim.
- Clean the Plug and the Case seal face and assemble the Plug with a new seal part.
- Replace the fine filter.

First fill 30L recommended oil and start the engine. Position the transmission control handle in “Neutral” and engage the parking brake. Keep the Engine at idle (about 1,000 rev/min). Remove the Oil Gauge by turning counter-clockwise. Clean and insert it into oil level tube and tighten up. Take it out when it reach the proper position (repeat the step at lease twice).

-

Tilting Adjustment of Steering Unit

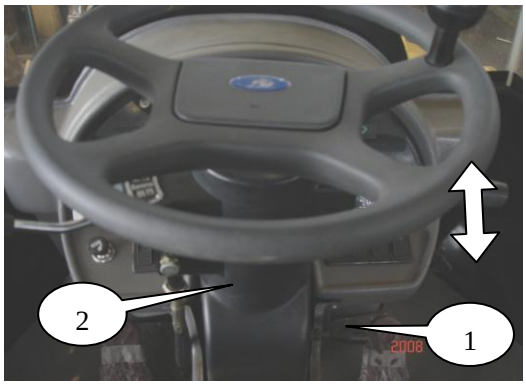

The steering device can be adjusted forward and backward according to the operator's requirement.

To adjust the steering device, move the steering device (2) forward or backward to proper position while pulling the adjusting lock rod (1) up and then release the adjusting lock rod (1) to lock the position of the steering device.

Seat Adjustment

The seat is adjustable, both forward and backward and so is the backrest.

The seat can be adjusted at the beginning of each shift or when changing operators.

Adjust the seat to allow full travel of the pedals when the operator is seated against the backrest.

While pulling up seat control lock lever

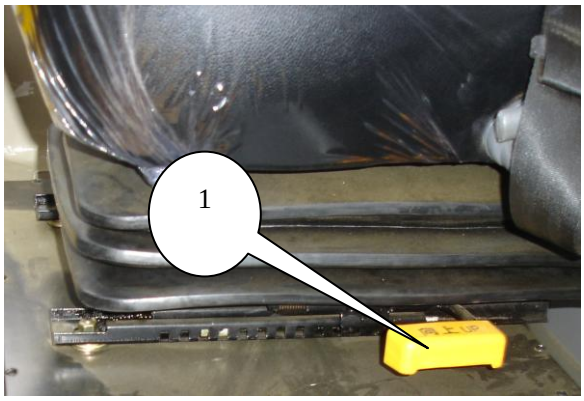

（1）, move the seat to desired location, and release the lever to lock the seat.

While pulling up backrest angle control lever (2), adjust the backrest to desired angle and then release the lever to lock the backrest.

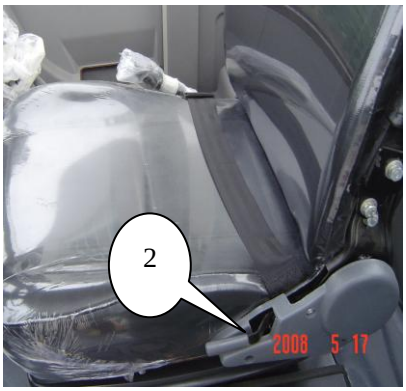

While pulling up seat control lever (3), adjust the seat to desired angle and then release the lever to lock the seat.

Right Side Door

The right side window is used as emergency exit; it can be open only inside the cab. Take out pin (1), and the window is opened. The opened window is held by lock (2) at right back corner outside the cab. If the window needs to be closed, it can be closed only by moving the pull rod at right back corner inside the cab for releasing the window.

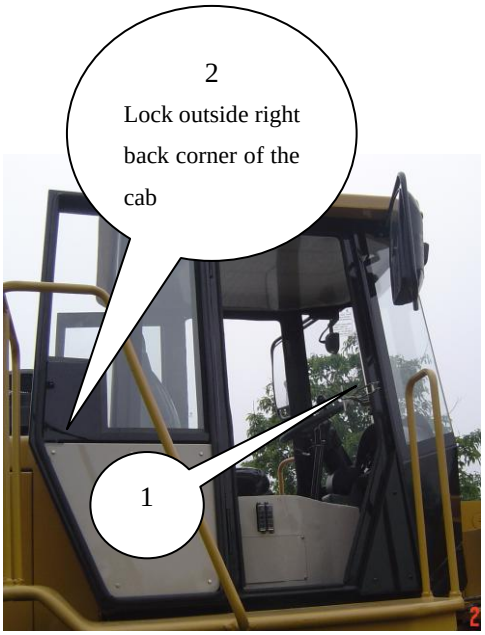

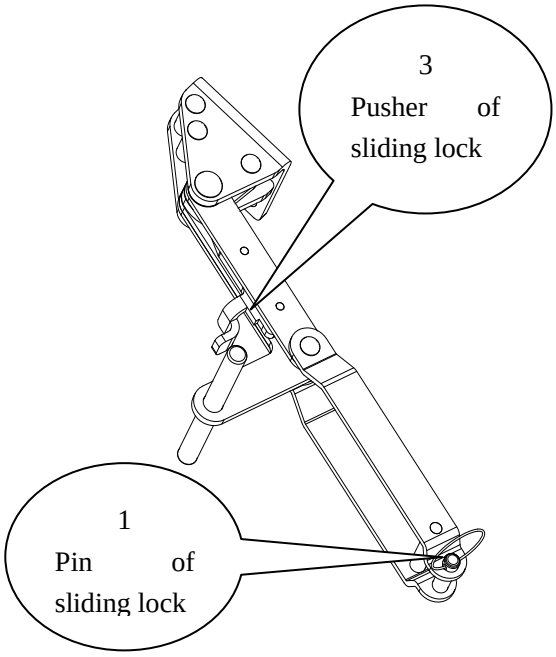

When fixing the right side window with the pin (1), the window can be opened and held in certain angle.

Note: when using sliding lock to open or close the window, move the pusher (3) to ensure flexible rotation.

When the machine is under operation, the window should be in fixed state no matter whether it is open or close.

Left Side Door

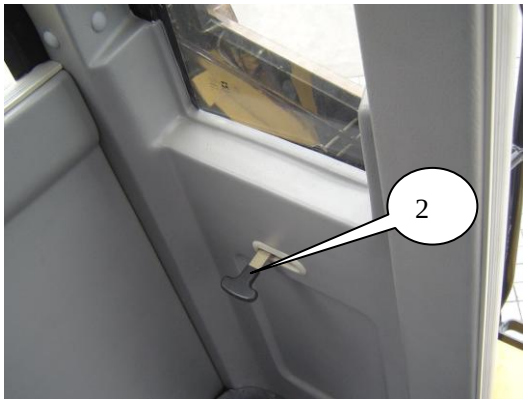

The left door of the cab can be either open or close. When it is open, it is held by lock (1) on the left back top outside the cab. If the door needs to be closed, it only can be done by moving lever (2) at the left back top corner inside the cab for releasing the door.

When the machine is working, the door can never be in unfixed state no matter whether it is open or close.

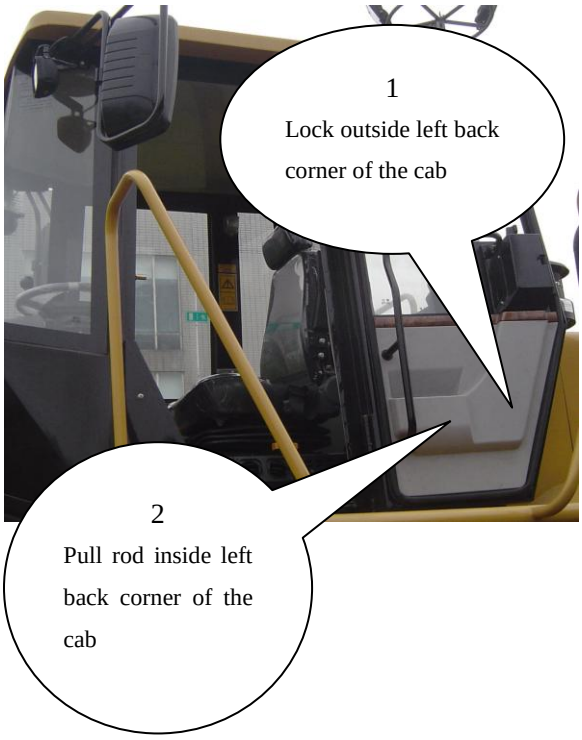

Machine Control

Speed Selector Control Lever, Steering Control Unit, Horn Switch

Speed selection

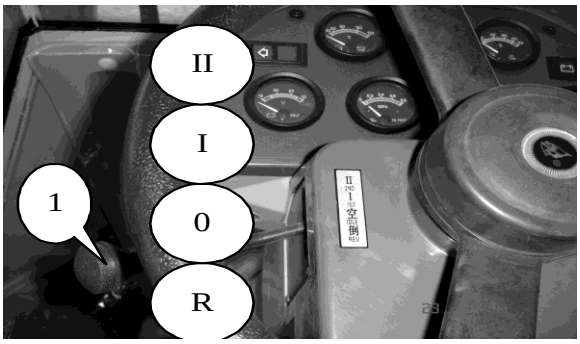

Neutral——he machine is at neutral when the speed selector lever (1) is in the position 0 shown in the above picture.

Forward I——The machine is at Forward I when the speed selector lever (1) is in the position I shown in the above picture.

Forward II——The machine is at Forward II when the speed selector lever (1) is in the position II shown in the above picture.

Reverse I——The machine is at reverse I when the speed selector lever (1) is in the position R shown in the above picture.

Steering Control

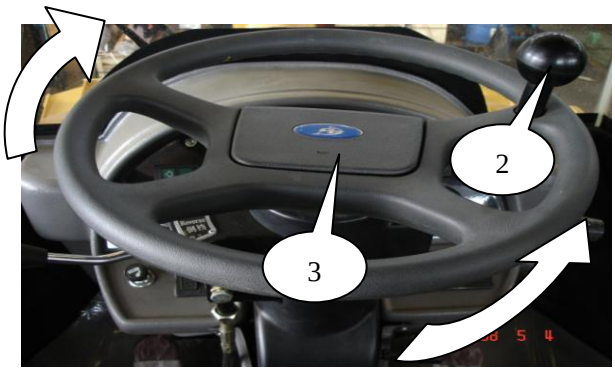

The directional steering of the machine is controlled by steering wheel (2). The direction of the steering wheel (2) turned is the direction that the machine turns.

Left turning——Move steering wheel (2) counterclockwise to steer the machine to the left. The faster the wheel (2) turns in counterclockwise direction, the sharper the left turn is.

Right turning——Move steering wheel (2) clockwise to steer the machine to the right. The faster the wheel (2) turns in clockwise direction, the sharper the right turn is.

Horn switch (3)——Once press the horn switch (3), the horn sounds.

Parking Brake Control

The parking brake control lever is located on the right side of the driver's seat.

Caution

Do not apply the parking brake when travelling unless under emergency situation, or the parking brake will be seriously damaged.

Engage the parking brake——Pull up parking brake control handle (1), the parking brake will be engaged.

Release the parking brake——Press down parking brake control handle (1) to disengage the parking brake.

Pedal Control

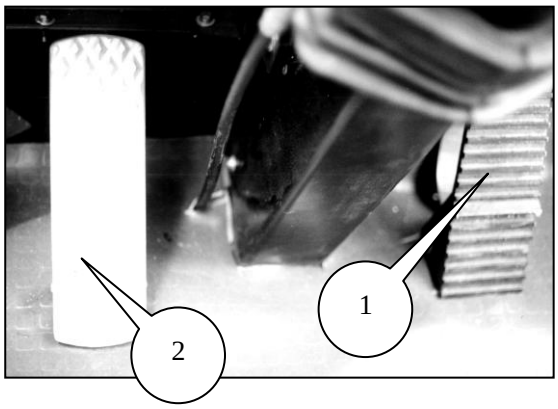

Governor pedal (1)——The fuel supply quantity depends on the stepping travel of the pedal.

Service brake pedal (2)——Reduce travel speed or stop the machine by stepping on pedal (2) while the machine is working or traveling.

Flameout Switch

Flameout switch is located on the operation box at right side of the driver's seat.

Pull up the flameout switch to stop the engine.

Implement Control

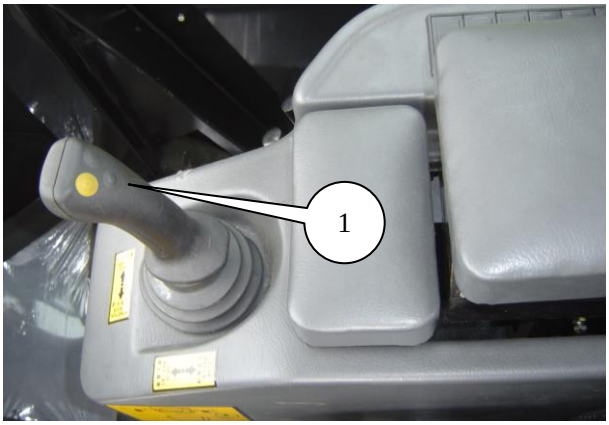

Bucket Lifting Control Lever (1)

Lower——Push the lever forward to lower the bucket.

Hold——Return the lever to the neutral position from raising or lowering position and the bucket will remain in the original position.

Lift——Pull the lever backward to lift the bucket.

Bucket Tilting Control Lever (2)

Tilt——Push the control lever forward and the bucket will tilt forward.

Hold——Release the control lever, which will return to the neutral position, the bucket will remain in the original position.

Roll-back——Pull the control lever backward, the bucket rolls back.

Air-conditioning System

The machine is equipped with air conditioning system.

Basic Operating Method

There are two operating switches and one indicator in the air-conditioning system, including air-conditioning mode switch, air-conditioning air volume switch, and refrigirating indicator. They are located on the front panel, as shown in the figure below:

Air-conditioning mode switch: There are three positions. Press the lower part for refrigerating; press the upper part for heating; press to the neutral position for turn-off.

Air-conditioning air volume switch: Air volume of the air-conditioning system is divided into three levels. The air-conditioner is at low level when air volume switch is positioned in "L"; at medium level when in "M"; at high level when in "H". The air volume increases gradually from low level to high level.

Refrigerating indicator: The air-conditioning system is working under refrigerating mode

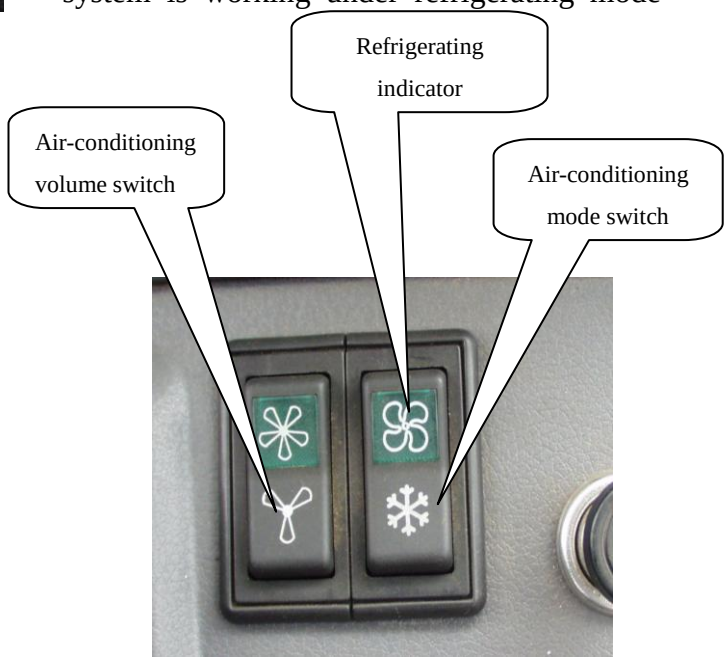

when the refrigerating indicator is on.

Refrigerating

(1) Press lower part of air-conditioning mode switch.

(2) When running refrigerating system for the first time, position the air-conditioning air volume switch in the high level (position the switch in "H") after starting the engine and run for 5 minutes.

(3) Door and windows shall be closed under high temperature, or else refrigerating effect will be weakened.

Note: Hot water valve shall be closed when

refrigerating (The water valve handle forms an angle of 90° with the hot water hose).

Heat supply

(1) Press the air-conditioning mode switch down. Turn on hot water valve. Adjust the air-conditioning air volume switch.

(2) Hot water valve can be adjusted to obtain proper temperature.

- When the environment temperature is lower than 0 ℃ and the engine is not running, the engine water tank shall be emptied or anti-freeze fluid shall be injected into water tank to prevent breakage of radiator tubes in heat supply system.
- The integral air-conditioning system shall not be disassembled without permission. If necessary, maintenance shall be conducted by professional personnel.
- The belts shall be inspected frequently for tightness to prevent them from being too loose or too tight.
- Crust on the condenser surface shall be cleaned in time to avoid affecting refrigerating effect.
- After discharge of refrigerant or maintenance, refrigeration oil shall be injected properly according to the amount discharged. Refrigerant shall be recycled through specific equipment.
- Refrigerating shall be carried out every month in the winter to guarantee normal operation of the system.

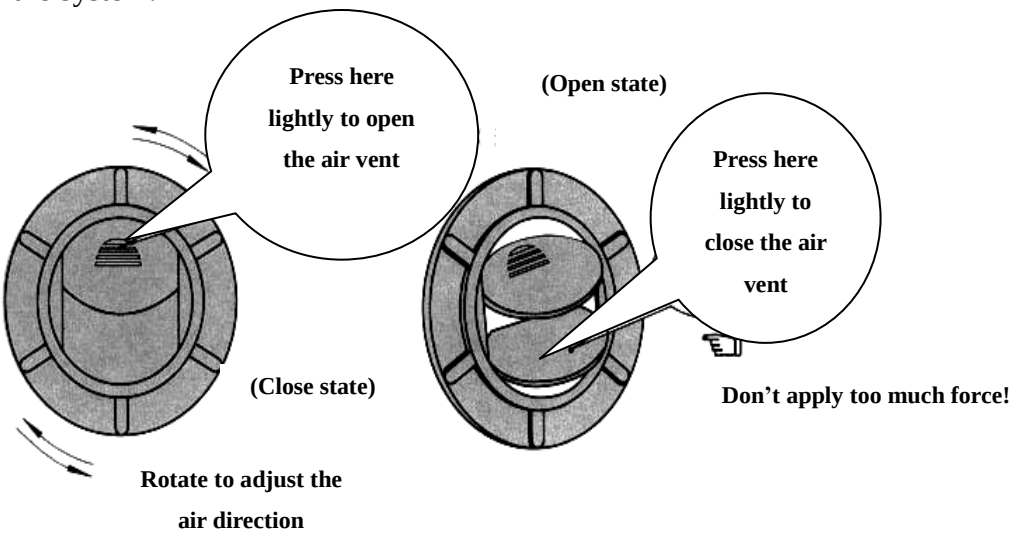

Before Starting the Engine

Walk-around Inspection

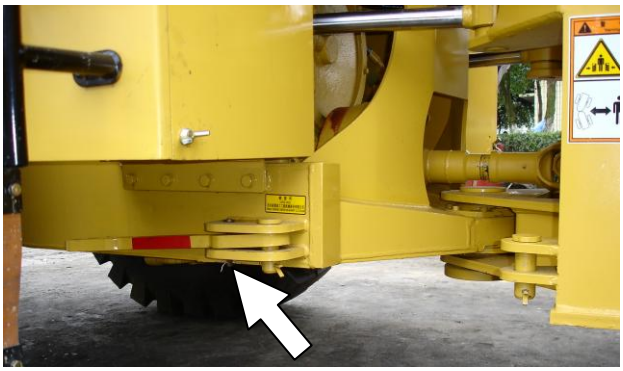

Remove the lock link connecting the front and rear frames, and store it in the rear frame. Never start the machine before disconnecting the lock link.

For your safety and maximum service life of the machine, make a thorough walk-around inspection before mounting the machine to start the engine.

Look around and under the machine for such items as loose bolts, trash build-up, oil or coolant leakage and broken or worn parts. Inspect the condition of the attachments and the hydraulic components.

Refer to “Every 10 Hours Service or Daily” in the “Maintenance Section” for the detailed information about “Walk-around Inspection”.

Check before Start

Check all levels of the hydraulic oil, engine oil, transmission oil, brake fluid, coolant and fuel oil.

Refer to **“**Every 10 Hours Service or Daily**”** in the “Maintenance Section” for the detailed information.

The adjustable seat allows the operator to apply full pedal travel while seated against the backrest.

Start of the Engine

Normal Start:

1. Move the speed selector control lever to neutral.
2. Pull up the parking brake control lever, that is, engage the parking brake.
3. Move the attachment control lever to hold position.
4. Insert the key and turn clockwise and turn on the power switch. At this time the charging indicator becomes bright. Then rotate the key switch to start the engine.

Caution

The time for starting the engine shall not be more than 15 seconds. Allow the starter to cool for 2 minutes before starting it again.

External Power Start

Warning

Electrolyte is an acid and can cause personal injury if it contacts skin or eyes.

Improper jump procedures can cause short circuit or even an explosion of battery.

The external power voltage shall be 24V.

Caution

When starting from another machine, make sure that the machines do not touch each other. This could prevent damages to the engine and electrical circuits.

Use of External Power Source

Make initial diagnose of the reason why the stalled machine failed to be cranked.

1. Place the transmission control lever to neutral on the stalled machine. Put down all attachments and controls to hold position.
2. Turn the start switch to neutral position on the stalled machine and turn off all accessories such as gages and air conditioner and so on.
3. Move the started machine near enough to the stalled machine for convenience of cable connection, but DO NOT ALLOW THE TWO MACHINES TO CONTACT.
4. Stop the engine on the boost start machine, or if using an auxiliary power source, turn off the charging system.
5. Make sure that battery caps are all in place and tightened on both machines.
6. Connect positive（+）jumper cable to positive（+）cable terminal of the discharged battery or of the battery on the stalled machine.

NOTE: Batteries in series may be located in separate compartments and use the terminal connected to the start motor. The battery set is normally located on the same side of the machine as the start motor.

Any metal is forbidden to touch positive cable clamps.

7. Connect the other end of the positive jumper cable to positive（+）terminal of the boost battery. Use Procedure Step 6 to determine the correct terminal.
8. Connect one end of the negative（-）jumper cable to the negative terminal of the boost battery.
9. Finally connect the other negative cable to the frame（not battery negative post）away from battery, fuel or hydraulic lines or moving parts.
10. Start the engine on the boost machine or, energize the charging system on the auxiliary power source. Wait at least two minutes for the battery in the stalled machine to be partially charged.
11. Attempt to start the stalled engine. Refer to the section of “Engine Start”.
12. Immediately after having started the stalled engine, disconnect the jumper cable in reverse order.

13. Conclude failure analysis on starting/charging system of the stalled machine as required now that the engine is running and charging system in operation.

After Starting the Engine

Caution

Keep low engine speed till the engine oil pressure on the gauge is in normal condition. If it does not register within 10 seconds, stop the engine and investigate the cause before starting again. Failure to do so can cause damage of the engine.

1. Allow a cold engine to warm up at low idle speed at least five minutes. Engage and disengage all attachment controls to help speed warm-up of hydraulic components.
2. Look at gauges frequently during operation to see if all readings are in normal range.

While idling the engine for warm-up, observe the following recommendations：

- At temperature above 0℃, warm-up requires approximately 15 minutes.
- At temperature below 0℃, warm-up requires approximately 30 minutes.
- When the temperature is below -18℃, or if hydraulic oil is sluggish, more time may be required.

Machine Operation

Be sure that no one is working on or near the machine to prevent personal injury. Keep the machine under control at any time.

Reduce the engine speed when maneuvering in tight quarters or when driving over a rise.

Select the necessary gear range before starting down a gradient. Do not change gears while going down hill. A good practice is to use the same gear range to go down a gradient as that to go up.

Do not allow the engine to speed up down hill, use the service brake pedal to reduce the over speed of the engine while going down.

As the load will push the machine down, put the speed selector control lever to the first speed before starting down hill.

Pay more attention to the following items during the machine operation：

1. Adjust the operator’s seat.
2. Raise the implement high enough to avoid any obstacles.
3. Disengage the parking brake when the braking oil pressure is at normal value.
4. Move the speed selector control lever to the desired speed with desired direction (the starting of the machine can only choose I, II speeds).
5. Step down the accelerator pedal to the desired engine speed.
6. Step down the service brake pedal to keep the machine from moving.
7. When driving the machine forward, you must have better vision and the feeling of good command of control.

Caution

For operator’s comfort and maximum service life of power train components, deceleration and/or braking is recommended before any directional shifts are made.

Caution

During travel, the use of the parking brake will cause serious wear and damage to the brake.

Operating Techniques

General

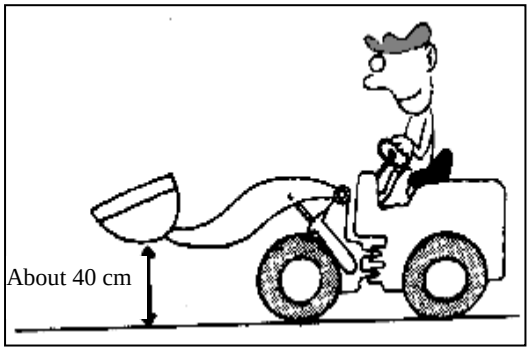

To provide wider vision for the operator and better stability of the machine, put the loader bucket low, approximately 40cm above

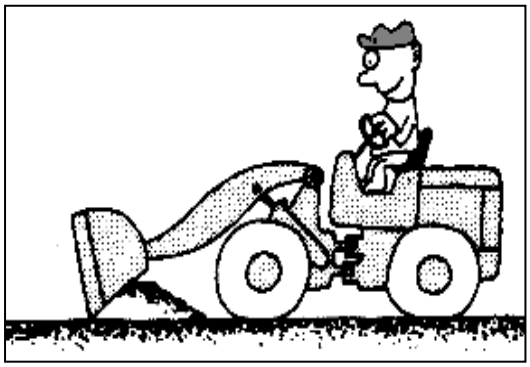

the ground.

Make use of the waiting time to clean and level the working area.

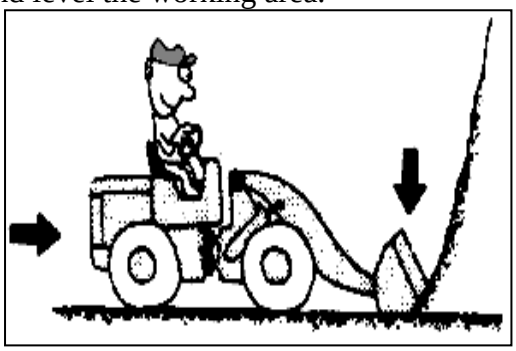

Maintain traction by avoiding excessive down pressure on the bucket.

When loading harder materials, use bucket teeth.

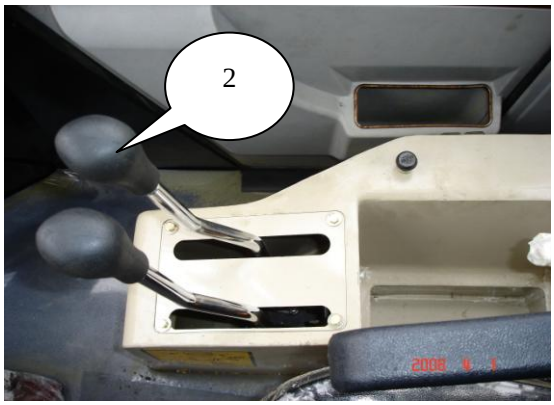

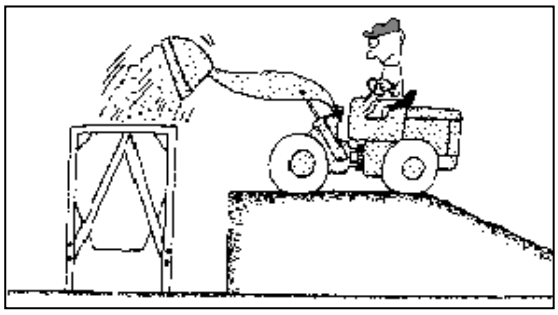

While tilting the bucket, move the lever (2) to dump position, then return it to neutral position and repeat the action until the bucket is empty.

To keep dust away from the engine and maintain visibility, dump with the tail wind to your bucket.

Ensure that the bucket used complies with the work requirement. The load surpassed the bucket capacity will shorten the machine's duration.

Dozing

Caution

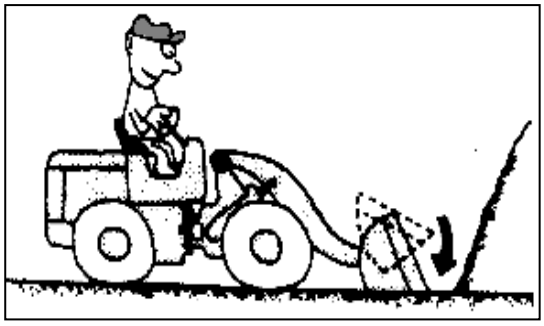

Do not doze with the bucket in the tilt forward position to avoid bucket damage.

When dozing, keep the bucket bottom parallel to the ground.

Dumping

Use the bucket stoppers for maximum dumping angle.

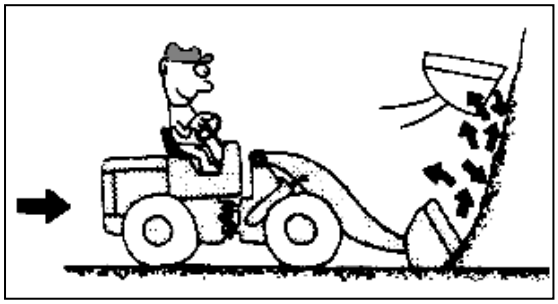

Caution

Striking the stops unnecessarily and repetitively can result in accelerated wear and high maintenance cost of the loader linkage.

Loading Stockpiles

1. Place the bucket parallel to, and just contact the ground. Drive the bucket with the first speed straight into the pile.
2. Move the boom control lever to the raise position and control the bucket lever to let the bucket slowly tilt back two or three times to load the bucket full.
3. When the bucket is full, move the bucket to full tilt back position and then place the control lever to the neutral position.
4. Raise the bucket high enough to clear the material pile, push the speed selector control lever to reverse and drive the machine back up.
5. When the machine backs up to certain distance, lower the bucket about 40cm above the ground, move the speed selector control lever to desired forward speed for transportation.
6. When reaching dump area, move the control lever to the raise position and raise the bucket high enough to dump emptily.

Loading a Truck

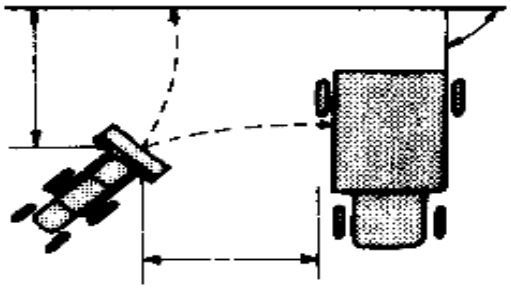

L-type Cycle

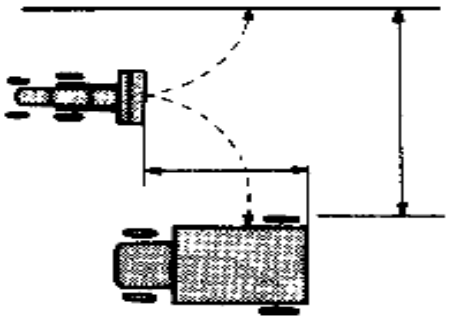

T-type Cycle

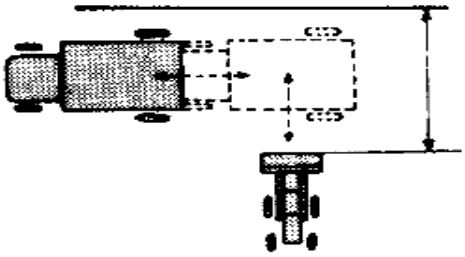

I-type Cycle

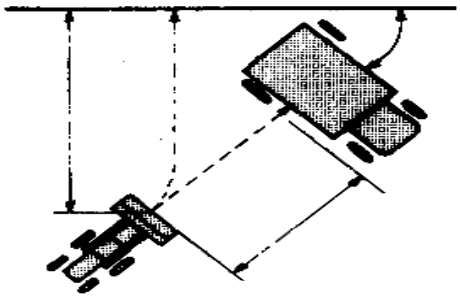

V-type Cycle

Of the four loading methods mentioned above, one can choose the shortest working cycle (loading for one time) according to the site condition.

1. The travel distance should be long enough

to make the bucket reach the lift height before the machine reduces its speed.

2. Position the loader to dump the load in the center of the truck body. If the truck body is twice the length of the bucket, dump from the front to the rear.
3. Push the lever right to dump the bucket.
4. Strike the bucket to loosen sticky materials. Move the control lever back and forth quickly, allowing the tilt arms to strike the stops.

Caution

Striking the stops unnecessarily and repetitively can result in accelerated wear and high maintenance cost of the loader linkage.

5. Put the tilt control lever in roll back position.
6. Before lowering the bucket, make sure that the truck is out of reach from the bucket.
7. Lower the bucket while positioning the loader for the next load.

Loading Hard Soil

Warning

Personal injury or death can result from falling materials.

Remove any overhang and watch for sliding materials.

1. Start to load at the base of bank and follow up the face.
2. Raise the bucket slight and move away from the bank.

Excavating

1. Lower the bucket to the ground and position for a slight digging angle.
2. Apply down pressure to the bucket as the loader starts forward. Returning the control lever to hold position when sufficient penetration is obtained.
3. Maintain the level cuts while moving forward by raising and lowering the bucket.
4. When the bucket is full, tilt it back against the stops. Carry the loaded bucket approximately 40cm above the ground when moving to the dump area.

Loading Hoppers

1. Load the bucket full (refer to “Loading a Stockpile”)
2. When the lift kick-out height is reached, dump the load into the hopper. If possible, dump in leeward direction.

https://truckmanualshub.com/

Parking of the Machine

Machine Parking

Caution

Park the machine on a level ground. If it is necessary to park on a grade, block the wheels securely.

Do not apply the parking brake while the machine is moving unless an emergency exists.

1. Apply the service brake to stop the machine.
2. Move the speed selector control lever to neutral.
3. Pull up the parking brake control lever and engage the parking brake.
4. Lower the bucket to the ground and apply slight down pressure.

Shutdown of the Engine

1. After the machine stopped, run the engine for 5 minutes at low idle speed.
2. Pull up the flameout switch to shut down the engine.
3. Turn the key to Position 0 and remove the key.
4. Hold the handholds with both hands and step down while facing the machine.
5. Inspect the engine hood for debris. Clean out any debris and paper to avoid fire. Remove all flammable debris from front bottom guard through the access to reduce fire hazard.
6. Install all protection locks and covers against damage.

Long Period Storage of the Machine

When Not Used for One Month

Besides cautions for usual parking of the machine, for the machine not used for one month, the following items should be carried out：

- Drive the machine once a week; meanwhile operate the implement to prepare it for ready use at any time.

When Not Used over One Month

Besides cautions for usual parking of the machine for the machine not used over one month, the following items should be carried out：

- Check all lubrication points to see if the oil level is as specified.
- Taking the water level in rainy season into consideration, try to park the machine on the higher hard surface.
- Take off the battery.

Even if the machine is stored inside a house, if the place is hot in summer or full of humidity, it is necessary to remove the battery and store it on a drier location, and charge it once a month.

- Apply anti-rust grease on exposures such as piston rod and so on.
- Cover all the parts open to humidity such as the breather and air filter.
- Adjust the tire pressure to standard air pressure; check tires' wear and damage (prepare new tires according to the inspected result).

To reduce the tire load, make it float by jacking the machine.

If the method cannot be carried out, to keep proper air pressure, check the tire pressure once every two weeks.

- Once a week carry out the procedures that make the machine in ready state. Start the engine, after it warms up enough, drive the machine for a little while.

If the implement is to be actuated, first clean the anti-rust grease on the piston rod.

Reuse after Long Period Storage

- Remove the covers for moistures.
- Clean the anti-rust grease on the exposed parts.
- Drain away all oil inside the engine crankshaft housing, torque converter and transmission housings, differential and final drives, replace it with new specified oil.
- Remove all inclusions and mixed water out of the hydraulic tank and fuel tank.
- Refill cooling water as required.
- Mount the battery after having been charged and connect it with cables.
- Adjust the tire pressure according to the pressure requirement for the road surface.
- Do the inspection before operation.
- Do warm-up operation.

Transportation Notice

Machine Transportation

Investigate the travel route for passage clearances. Make sure that there will be adequate clearance. Note that the passage shall be high enough when the machine is transported with cab.

To prevent the machine from slipping while being loaded or shifted in transit, remove ice, snow or other slippery materials from the loading dock and the truck bed before it being loaded.

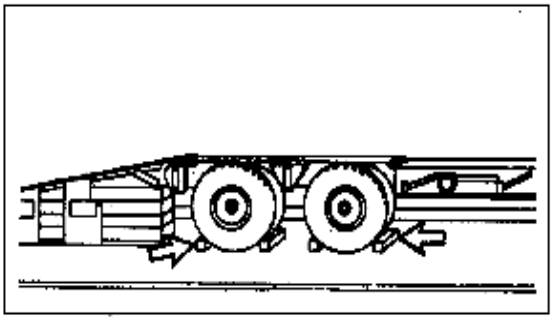

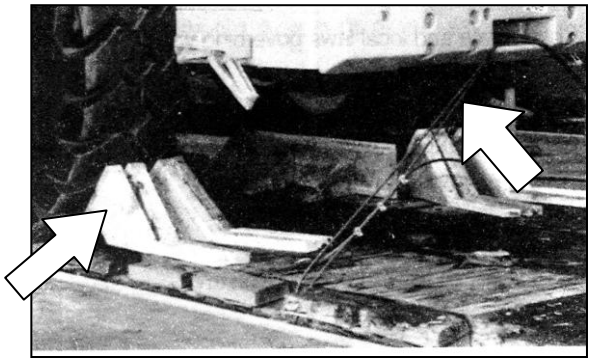

Caution

Obey all state and local laws governing the weight, width and length of a load.

Observe all regulations governing wide loads.

1. Block the trailer or truck wheels before loading.
2. After the machine is in position, connect the steering frame lock link to hold the front and rear frames rigid.

3. Lower the bucket to the floor of the transport machine. Move the speed selector control lever to neutral.
4. Engage the parking brake.
5. Shut down the engine, and take out the key. Close and lock the cab right window and left door.
6. Block the tires and secure the machine with steel ropes when the machine is transported on a truck or a trailer.

Machine Travel

Before you begin to drive a machine on road, consult your tire dealer for recommended tire pressure and speed limitations.

Inflate the tires to the correct pressure.

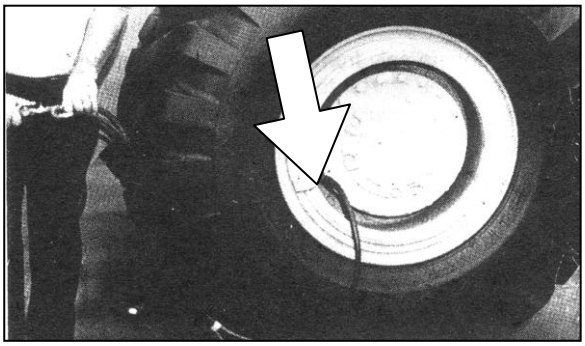

Use a self-attaching inflation chuck and stand behind the tire tread while inflating the tire. See “Tire Inflation Information”

Refill the engine coolant, oil and transmission oil up to the required levels.

Check with the proper officials to obtain

the required permits, etc.

Travel at moderate speed. Observe all speed limitations when driving the machine.

Perform a “Walk-around Inspection” and measure the fluid levels in the various compartments.

Machine Lifting

Caution

Improper lifting or tie-down may make the load shift and cause personal injury or damage.

1. The weight and instructions given below only apply to CG956G wheel loaders made by Sichuan Chengdu Chenggong Construction Machinery Co. Ltd. CG956G weighs 16600 kg.

2. Use suitable cables and hooks. The crane shall be used as horizontal hoister.
3. The beam length of the hoister shall be long enough to prevent from contact with the machine.
4. Use the four hoisting eyes on both front and rear frames provided for lifting.

Install tie-downs at several locations and block front and rear wheels.

Check state and local laws governing weight, width and length of the load.

Contact Sichuan Chengdu Chenggong Construction Machinery Co. Ltd. for shipping instructions for your machine.

Towing

Warning

Towing a disabled machine incorrectly may result in personal injury or death.

Block the machine to prevent movement before releasing the brakes. The machine can roll free if it is not well blocked, causing personal injury or death and machine damage.

To perform the towing procedures properly, please follow the following recommendations.

These towing instructions are for moving a disabled machine in short distance, only a few meters away at the speed no faster than 2km/h to a convenient location for repair. These instructions are for emergencies only. A carrier shall be used if long distance moving of the machine is required.

The towing machine must be equipped with a guard cover to protect the operator in case the towing line or bar breaks.

Do not allow riders on the machine being towed unless the operator is needed to control the steering wheel and /or brakes.

Before towing, make sure that the towing line or bar is in good condition and has enough strength for the towing situation involved. The towing line or bar to be used must have the strength of at least 1.5 times the gross weight of the machine to be towed when struck in mud pit or on a grade.

Keep the towing line at the minimum angle which should not exceed 30° from the straight ahead position.

Quick movement of the machine may overload the towing line or bar and cause it to break. Gradual and smooth machine movement will work much better.

Normally, the towing machine should be as large as the disabled one and has enough brake capacity, weight and power to control both machines for the grade and distance involved.

To provide sufficient control and brake power when moving a disabled machine downhill, a large towing machine or an additional machine connected to the rear may be required. This will prevent it from rolling uncontrolled.

The various situation requiring differently will not be described in detail here, such as a smaller tower is required on smooth level surfaces while the larger one on inclines or poor surface conditions.

Consult CHENGGONG for towing a machine with failures.

With the Engine Running

Caution

If the power train and the steering system are operable, with the engine running, the machine can be towed for a SHORT DISTANCE and pulled out of mud or the side of the road.

The operator on the towed machine MUST steer in the direction of the towing line.

Make sure that all instructions outlined in this topic “Towing” are carefully and exactly followed.

With the Engine Stopped

Perform the following steps before towing the machine with engine stopped：

1. Use a hose to connect the piston chamber to the piston rod chamber in the same steering cylinder, so that the steering cylinder can move freely.

Caution

Be sure that the cylinder hoses are connected correctly before operating the machine. With the hoses reversed, the steering system will not function.

2. If the transmission or driving system failure is suspected, remove all the gearing parts inside the drive axle

gearbox.

Please refer to the Repair Manual of the machine for dismounting and installing the gearing parts inside the drive axle gearbox.

Warning

When the gearing parts are removed from the drive axle gear box, the machine without parking brake may roll and cause personal injury or death.

Block the wheels securely so that the machine cannot move.

The towing connection must be rigid, or the disabled machine must be towed by and between the two machines of the same size or larger than the towed machine.

Be sure that all necessary repairs and adjustments have been made before a machine that has been towed to a service area is ready for operation again.

3. Release the parking brake.
4. Fasten the towing bar
5. Remove the wheel blocks. Tow the machine slowly. Do not tow it faster than 2km/h.

Tire Inflation Information

Inflate the Tires with Nitrogen（N_2）

CHENGGONG recommends using nitrogen gas for tire inflation and tire pressure adjustment on all machines with rubber tires. Nitrogen is an inert gas and will not support combustion inside the tire.

Warning

Proper nitrogen inflation equipment and training in using the equipment are necessary to avoid over inflation. A tire blowout or rim failure can result from improper or misused equipment and serious personal injury or death can occur.

Because the pressure of a fully charged nitrogen cylinder is approximately 15000 kPa， a tire blowout and/or rim failure can occur if the inflation equipment is not used correctly.

In addition to reducing the risk of an explosion, using nitrogen to inflate tires lessens the accompanying gradual tire deterioration. This is especially important for tires that have an expected long service life (four or more years). It also reduces the corrosion of rim components and the resultant disassembly problems.

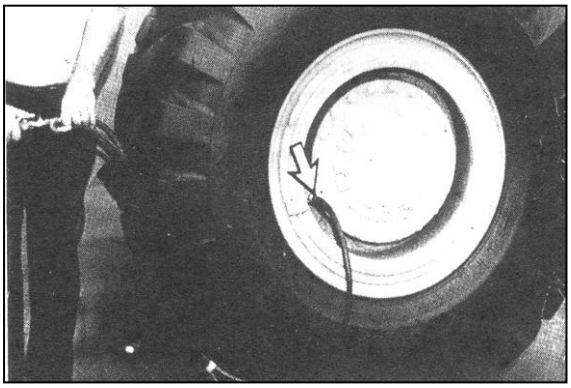

Warning

Use a self-attaching inflation chuck and stand aside the tread when inflating a tire.

Caution

Set the tire inflation equipment's regulator at no more than 300~350 kPa of the recommended tire pressure.

Use the same air tire pressure for nitrogen inflation. Consult your tire dealer for operating pressure.

Inflation Pressure Adjustment

If the machine works at cold weather, the air pressure inflated under the temperature of 18℃~21℃ is too low, which will shorten the duration of a tire.

When operating at freezing temperature, consult the Cold Weather Operation and Maintenance Guide concerning adjustment of inflation pressure.

General Torque Specifications

Caution

Original fasteners removed from the machine should be saved for reassemble whenever possible. If new fasteners are needed, they must be of the same size and grade as the ones that are to be replaced.

The material strength identification is usually shown on the bolt head by numbers（8.8, 10.9 etc.）. The following table gives standard torque for bolts and nuts with Grade 8.8.

Thread Size (Metric)	Standard Torque （N.m）
M6	12±4
M8	25±7
M10	55±10
M12	95±15
M14	150±20
M16	220±30
M20	450±70
M24	775±100
M30	1600±200
M36	2700±400

General Service Information

Your machine needs periodical or non-periodical check (inspection and maintenance) just like you. The causes of failure or decrease of performance should be found out and dealt with in early time, so that your machine is able to exert its performance, have higher productivity and longer duration and serve you more efficiently and economically.

General

Caution

Accumulated grease and oil on a machine may cause a fire. Remove the dirt with steam or high-pressure water at least every 1,000 hours or each time any significant quantity of oil is splashed on a machine.

Wipe all fittings, caps and plugs before servicing. Keep a close watch for leaks. If there is any leakage observed, find out the source and repair the leak.

Check the fluid levels more frequently than the recommended period if a leakage is suspected or observed.

Caution

Before changing hydraulic elements or lines, unfasten the air bleed valve on the top of the hydraulic tank and the air bleed thread plug to prevent the oil from spilling out of the tank. After the service has been finished, be sure to fasten the valves tight again.

Electrical System

Caution

When external power is used to start the engine, follow the instructions in "Start of the Engine" in "Operation Section" to start the engine.

The machine has a 24 volts starting system. Use only equal voltages for jump-starting. The use of a higher voltage will damage the electrical system.

Air Intake System

Check the primary filter screen daily for accumulated dust and debris. Remove any dust and debris if necessary. The primary element can be cleaned up to six times before replacement. The element when cleaned should be thoroughly checked for rips or tears in the filter material. Replace the primary element every year, even though it has not been cleaned six times.

The secondary filter element should be replaced at the time when the primary filter element has served for the third time.

If the exhaust smoke is black after a clean primary element has been installed, mount a new secondary element.

Caution

Do not try to reuse the secondary element by cleaning it. Always use a new element, or the engine damage may occur.

Maintenance for Engine

If any of the maintenance regulations mentioned in this publication regarding the engine is not in accordance with Engine Service Manual, just observe the instructions in the Engine Service Manual.

Cooling System Specification

Coolant

The normally kept engine operating temperature can improve the engine efficiency. So it is very important to correctly maintain the cooling system. Overheating, overcooling, pitting, cavitation erosion, cracked heads, piston seizure and blocked radiator are general cooling system failures. In fact, coolant is as important as fuel and lubricant.

Caution

Since aluminium tank is used, anti-freeze fluid shall be injected as coolant. It is not allowed to inject water as coolant in aluminium tank at any case. Otherwise, service for the machine will be cancelled.

Never add coolant to an overheated engine, or the engine damage may occur. Let the engine cool down before adding coolant to the engine.

All coolant is corrosive at the engine operating temperature. The cooling system must be protected by adding 3%~6% of additive.

If the concentration of coolant additive is greater than 6% and the sum together with the concentration of anti-freeze is more than 65%, deposits may form, which can result in radiator tube blockage, engine overheating or water pump seal damage.

If the machine is to be stored in or shipped to an area with freezing temperature, the cooling system must be protected to the lowest expected outside (ambient) temperature.

Check the specific gravity of the coolant solution frequently in cold weather to ensure adequate protection.

Clean the cooling system if it is contaminated, if the engine is overheating and foam is observed in the radiator.

Coolant should be drained, the system cleaned and new coolant added every 1500 service hours or one year.

Filling at over 20 liters per minute can cause air pockets in the cooling system.

After refilling the new coolant, operate the engine with the radiator cover removed until the coolant reaches normal operating temperature and the coolant level stabilizes. Add coolant as necessary to fill the system to the proper level.

There is a thermostat in the cooling system. Cooling system problems can arise without a thermostat.

Anti-freeze Fluid

Caution

We recommend that anti-freeze fluid shall be injected as coolant. It is not allowed to inject water as coolant in aluminium tank at any case.

The model of anti-freeze fluid to be injected shall be selected according to the anti-freeze agent you purchase and the worst temperature when the machine is used.

Purchase anti-freeze fluid containing less silicate and suitable coolant additive for heavy diesel engine. This kind of anti-freeze fluid has the following advantages:

Use of this kind of anti-freeze fluid can effectively reduce water pump seal leakage due to high concentration of chemical additive.

Other supplemental additive is not required at the first time if this kind of coolant additive is used.

Solid block substances may form if mixing anti-freeze fluid with high silicate content and supplemental additive, which may cause blockage, heat exchange loss or pump seal failure.

Add Anti-Freeze Fluid Additive Correctly

Adding pure antifreeze as a makeup solution of cooling system is an unacceptable practice. This will increase the concentration

of the antifreeze in the cooling system. The right method is to mix water and the antifreeze into the cooling system.

See the table below for reference to assist in determining the concentration of antifreeze fluid (for reference only, please read the usage guide for the antifreeze fluid you purchased in detail).

Antifreeze Fluid Concentration	
Protection Temperature	Concentration
Over -15℃	30% Antifreeze Fluid, 70% Water
Over -23℃	40% Antifreeze Fluid, 60% Water
Over -37℃	50% Antifreeze Fluid, 50% Water
Over -51℃	60% Antifreeze Fluid, 40% Water

Anti-freeze fluid of different brands shall not be mixed!

Supplemental Coolant Additive

Supplemental coolant additive is necessary to prevent rust, scale, pitting and corrosion of engine parts with which coolant comes in contact. Most antifreeze solutions DO NOT contain sufficient supplemental coolant additive.

Caution

Always add supplemental coolant additive or equivalent to the coolant. Never use coolant only, except if the antifreeze is to be used with additive. In this case, no supplemental coolant additive is needed in initial fill, but it is necessary on the process of maintenance.

The use of supplemental coolant additive can increase the concentration of 3%~6% in the cooling system to help prevent corrosion.

To prevent over-inhibiting the engine's system, the concentration of the coolant additive should not exceed our recommended maximum value of 6%.

Excessive concentration of the additive may result in deposit on the higher temperature surface of the cooling system and create a barrier that reduces the engine's heat exchange performance. Reduced heat exchange could cause crack on the cylinder head and other high temperature components. Excessive concentration of additive could also accelerate the water pump seal wear.

Coolant additive must be added when the above-mentioned antifreeze premixed coolant solution is not used.

With initial fill of a new reconditioned engine, if the above-mentioned antifreeze is not used, add 1 liter of supplemental coolant additive or equivalent for each 30 liters of coolant so that the cooling system will have the concentration of 3%~6% of supplemental coolant additive.

To maintain the concentration of 3%~6%, add the supplemental coolant additive shall be added every 250 service hours or when the oil is changed, whichever occurs first.

Fuel Specifications

General Fuel Information

Caution

Fill the fuel tank at the end of each day of operation to drive out moist air and to prevent condensation.

Do not fill the tank to the top level. Fuel expands as it gets warm and may overflow.

Do not fill the fuel tank before install filters, or the contaminated fuel will cause accelerated wear to the parts in the fuel system.

Deposit the fuel for at least 72 hours to ensure the cleanness of the fuel.

Drain the water and sediment from the fuel tank at the start of a shift or after the fuel tank has been filled and allowed to stand for 5 to 10 minutes.

After changing the fuel filter, always prime the fuel system to remove air bubbles from the system.

Drain water and sediment from any fuel storage tank weekly before the tank is refilled, which will help prevent water or sediment being pumped out from the storage tank into the machine fuel tank.

Only use the fuel as recommended in this section.

Fuel Types

In order to provide the best performance and the longest duration for the engine, only distillate diesel oil commonly called diesel fuel, furnace oil or gas oil can be allowed to be used in the engine of CG956G.

We recommend No. 20 light diesel oil for winter (-20℃), No. 10 (-10℃)or No. 0 light diesel for summer in northern area of China; No. 10 light diesel oil for winter and No. 0 light diesel for summer in southern area of China.

Requirement for Cetane Number

The minimum cetane number recommended for the direct injection engine is 40.

Fuel Cloud Point

Fuel waxing can block the fuel filters in cold weather. The fuel cloud point must be below the temperature of the surrounding air to prevent filter screen waxing and power loss.

Fuel Sulfur Content

The percentage of sulfur in the fuel will affect the engine lubricant recommendations. Fuel sulfur is chemically changed during combustion to form both sulfurous and sulfuric acids. These acids chemically attack metal surfaces and then cause corrosion.

Certain additives used in lubricants contain alkaline compounds that can neutralize these acids. The measure of this reserve alkalinity in the lubricant is known as its Total Base Number (TBN).

Higher engine oil TBN values are essential to neutralize the acids from combustion gases and to minimize corrosive wear.

Any API classification engine oil should have sufficient TBN for the fuels with sulfur less than 0.5%.

If the fuel has over 0.5% sulfur content, the engine oil must have a TBN of 20 times

https://truckmanualshub.com/

the percentage of fuel sulfur as measured by ASTM (American Society of Testing Materials) D—2896 method.

If the sulfur content in the fuel is greater than 1.5% by weight， use the oil with TBN of 30 and reduce the oil change interval by one half.

Periodically request fuel sulfur content information from your supplier. The fuel sulfur content can change with each bulk delivery.

Scheduled Oil Sampling (S.O.S)

Use Scheduled Oil Sampling (S.O.S) to monitor the condition and maintenance requirements of your equipment. Each oil sample should be taken when the oil is warm and well mixed to ensure that the sample is representative of the oil in the compartment.

Obtain S.O.S Samples

To realize a good preventive maintenance program, we recommend using S.O.S at regular scheduled intervals to monitor the condition and maintenance requirement of your equipment. Each oil sample should be taken when the oil is warm and well mixed to ensure that the sample is representative of the oil in the compartment.

Methods to Obtain S.O.S Samples:

- Insert a sampling gun into the sump.
- Use a valve installed for samples.
- Use drain stream for replacement

Note：We recommend using the first or second method. If these methods are not feasible, then use the drain stream. When using the drain stream as the oil sample, do not sample from the first or final draining. The oil at the beginning or end of the drain stream is not mixed well enough to be representative of the oil in the compartment.

S.O.S Analysis

S.O.S is composed of three basic tests：

- Wear Analysis
- Chemical and Physical Tests
- Oil Condition Analysis

Wear element analysis uses spectrophotometer to monitor component wear by identifying and measuring concentrations (unit: particle number per million) of wear elements present in the oil. Impending failures can be identified when test results deviate from concentration levels established as acceptable, based on normal wear.

Carry out chemical and physical tests to detect the presence of water, fuel and antifreeze in the oil.

Oil condition is evaluated with infrared analysis. This test determines the presence and measures the amount of soot, sulfur products, oxidation and nitration products in the oil. Infrared analysis can also assist in customizing oil change intervals for particular conditions and applications.

Infrared analysis should always be accompanied by wear element analysis and chemical and physical tests to assure accurate diagnosis.

Specifications for Working Oils

Information for Working Oils

Certain abbreviations follow SAE J754

S. O. S. Periodicity	
Tank	Time Interval
Engine Oil	250h
Hydraulic Oil	500h
Differential/Final Drives Oil	500h
Transmission Oil	500h

nomenclature and some classifications follow SAE J183 abbreviations. The recommended oil viscosity can be found in the table of "Oil Viscosity" in this publication.

Caution

All the oils must be clean and the hydraulic oil must be up to the requirement of 18/15（GB/T14039-93） or of Grade NAS9.

Engine Oil

Use the following recommended engine oils：API specification CD/SD， CD/SE， CD/SF， CD/SG or CD.

Note： The percentage of sulfur in the fuel will affect the engine oil recommendations. For fuel sulfur effects, the Infrared Analysis and ASTM D2896 procedure can be used to evaluate the residual neutralization properties of the engine oil. The sulfur products formation depends on the fuel sulfur content, oil formation, crankcase blow-by, engine operation condition and ambient temperature.

The 20 times rule for TBN versus fuel sulfur is a general requirement, but it can be modified by used oil analysis. The effectiveness of an oil formation will depend on the additive package. A balanced additive package oil of a lower TBN can be as effective in fuel sulfur neutralization and overall performance as some oils with higher TBN values which have additive just for increased TBN. The used oil analysis can show these results.

Caution

Failure to follow these recommendations can cause shortened engine life due to carbon deposits or excessive wear.

CD5W/30 diesel oil is recommended for winter and CD15W/40 diesel oil is recommended for summer.

Oil for Hydraulic System

Hydraulic oil should be used to achieve the maximum life and performance from hydraulic system components and hydrodynamic transmissions. Use the hydraulic oil recommended in most hydraulic and hydrodynamic systems ： API Specifications CC， CC/SF， CD/SF， CD/SG， CD， CE/SF， CE/SG or CE.

If different viscosity is required because of extreme ambient temperature, the oils recommended by CHENGGONG also can be used.

Industrial-type hydraulic oils that are certified by the oil supplier to have anti-wear, anti-foam, anti-rust and anti-oxidation additives for heavy-duty use are also acceptable.

We recommend using L-HM46 anti-wear hydraulic oil.

Transmission Oil

The maximum transmission life and performance can be achieved by using the

following oil. The oil recommended by CHENGGONG for Transmission/Drive Train is the oil that meets the specification of API CD/TO-2.

Note: Failure to follow this recommendation can cause shortened transmission life due to material incapability and inadequate frictional requirements for disk materials.

Note: Multi-grade oils must not be blended for use in transmissions. Multi-grade oils, which use high molecular weight polymers as viscosity index improvers, lose their viscosity effectiveness by permanent and temporary shear of the improvers.

Caution

This oil is formulated for the transmission and drive train only and should not be used in engines, or shortened engine life will be resulted.

The machine adopts No. 8 hydraulic transmission oil.

Differential and Final Drive Oil

For obtaining the maximum life and performance of the front and rear axle components, select the correct viscosity for the oil used. The oil recommended for the differential/final drive is the oil that meets the specification of API GL-5 Grade.

No. 18 fraction hypoid gear oil is recommended for the machine, SAE 80W for winter and SAE 90 for summer.

Lubricating Grease

CHENGGONG recommends various greases for different applications:

- Multipurpose Molybdenum Grease （MPGM）.

Use MPGM for heavily loaded bearings and joints where extreme pressure grease will maximize the machine life. NLGI NO.2 grease is suitable for most temperature situations.

If MPGM grease is not available, use a multipurpose type grease which contains 3%~5% molybdenum.

- Use Multipurpose Lithium Grease （MPGL） （for non-extreme high pressure area）.

This NLGI NO.2 grease is recommended for light duty automotive type applications where a high temperature （up to 175℃） is required. The grease offers excellent mechanical stability, high resistance to oxidation, good rust protection and excellent breakaway torque.

If the grease is not available, use similar multipurpose grease.

We recommend you to use molybdenum disulfide lithium base grease or No. 3 or No. 4 calcium base grease for the machine.

Brake Fluid

It is recommended that the machine should apply brake fluid HZY3.

Working Oil Viscosity and Full Capacity

Working Oil Viscosity

Working Oil Viscosity and Temperature Range			
Tank or System	Oil Viscosity	℃	
		Min.	Max.
Engine Oil	SAE 5W-20，5W-30，5W-40	-40	0
	SAE 10W	-20	+10
	SAE 10W-30	-20	+40
	SAE 15W-40	-15	+50
	SAE 30	0	+40
	SAE 40	+5	+50
Transmission Oil	SAE 15W-40	-20	+50
Hydraulic System Oil	L-HM46	-10	+40
Differential/Final Drive	SAE 80W	Over -25℃	
	SAE 90	Over -10℃	
Brake Fluid	HZY3		

Full Capacity for Systems

Full Capacity（Approximate）	
Tank or System	Liter
Cooling System	46
Fuel Tank	308
Engine Oil	35
Transmission Oil	45
Differential/Final Drive（Single Piece）	40
Hydraulic Tank	128

Note: Capacity refers to oil volume required for filling or replacement during regular maintenance and inspection to reach the oil level for positions such as components and hoses, etc.

Maintenance Interval

Precaution: If the content relating to the engine in this manual conflicts with that of engine application specification, the latter prevails.

When Required
Engine Air Intake System 57
Battery 58
Radiator 58
Fuse Box 59
Windshield Wiper 59
Every 10 Service Hours or Daily
Engine Oil 60
Transmission Oil 60
Hydraulic Oil 60
Cooling System 60
Fuel Tank 60
Brake Fluid 60
Walk Around Inspection 60
Gauges and Indicators 61
Every 50 Service Hours or Weekly
First perform previous service items.
Bucket Lower Pivot Pins 62
Oil Level of Drive Axle 62
Every 100 Service Hours or 2 Weeks
First perform previous service items.
Rear Axle Swing Support 63
Hydraulic Cylinder and Linkage Pins 63
Hinge Pins of Steering Cylinder 63
Every 200 Service Hours or Monthly
First perform previous service items.
Engine Oil and Filter 64
Braking System 64
Cooling System 65
Drive Shaft Spline 65
Fan and Generator Belts 65
Fan Bearing 65
Transmission Oil 65
Front and Rear Axles 67
Working Hydraulic System and Steering Hydraulic System 67
Inspection of Oil Level in Braking System .. 68
Every 600 Service Hours or Quarterly
First perform previous service items.
Engine Crankcase Breather 69
Transmission 69
Hydraulic System 69
Fuel System 69
Transmission 70
Working Hydraulic System and Steering Hydraulic System 70
Inspection of Oil Level in Braking System .. 70
Every 1000 Service Hours or 6 Months
First perform previous service items.
Drive Shaft Universal Joint 71
Transmission 71
Front and Rear Axles 71
Working Hydraulic System and Steering Hydraulic System 71
Inspection of Oil Level in Braking System .. 71
Every 1500 Service Hours
First perform previous service items.
Transmission 72
Front and Rear Axles 72
Working Hydraulic System and Steering Hydraulic System 72
Inspection of Oil Level in Braking System .. 72
Every 2000 Service Hours or 1 Year
First perform previous service items.
The Oil in Hydraulic Oil Tank 73
Engine Valve Clearance 73
Engine Valve Rotor 73
Every 3000 Service Hours or Two Years
First perform previous service items.
Coolant in the Cooling System 74

When Required

You must read and understand the warnings and instructions contained in the Safety Section of this manual, before performing any operation or maintenance procedures.

Engine Air Intake System
Clean the Air Intake Device

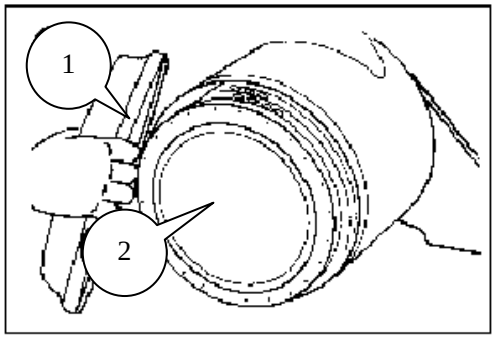

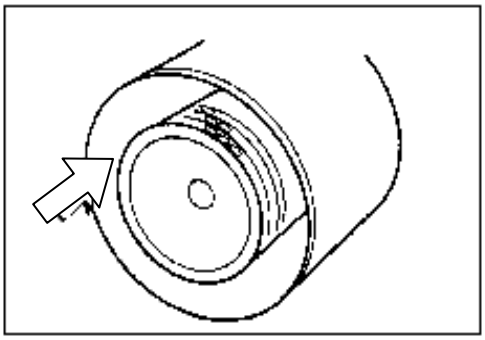

Please carry out the cleaning operation on the Air Intake according to Diesel Engine Service Manual.

Service Filter Elements

Caution

Service the air filter only with the engine stopped to prevent the engine from damage.

Perform the service on the air filter in accordance with the Diesel Engine Service Manual.

Replace/Clean Primary Element

1. Remove air filter cover (1).
2. Remove the primary filter element (2) from air filter housing.
3. Clean the inside of the air filter housing.
4. Clean and inspect the primary element. See “Clean Primary Element”.
5. Install the well-cleaned primary element into the filter housing.
6. Clean and install the cover. Tighten the cover bolts by hands. Do not use a tool to tighten the bolts.

If the engine still exhausts black smoke after the cleaned primary element has been installed, change the element with a new one. The primary element should be replaced after being cleaned for six times at most. Replace the element once a year even though it has not been cleaned six times.

Change Fine Elements

Caution

Always replace the fine filter element. Never attempt to reuse it after being cleaned. The fine filter element should be replaced at the time the primary element has been repaired for the third time.

If the engine still exhausts black

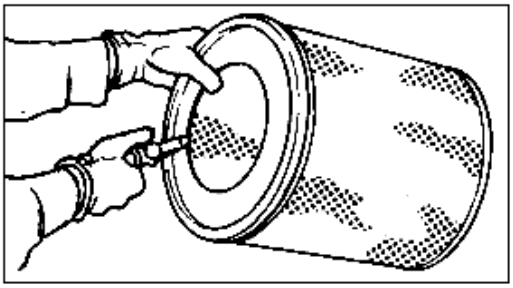

smoke after the cleaned primary element has been installed, change the fine filter element with a new one.

1. Open the access.
2. Remove the housing cover and the primary element.
3. Cover the air inlet. Clean the inside of the air filter housing.
4. Inspect the gasket between air inlet tube

and the housing. Replace it if it is damaged.

5. Uncover the air inlet opening. Install a new fine element.
6. Install the nuts and washers on the screws. Torque of the nut shall be 27±7N.m.
7. Install the primary element and the cover. Tighten the cover bolts by hand only. Do not use a tool to tighten the cover bolts.
8. Close the access.

Caution

Do not clean the primary elements by bumping or tapping them, or it may result in engine damage.

Filter elements can be cleaned with pressure air, pressure water or washing liquid.

1. Direct air or water along pleats inside and outside the filter element.
2. Inspect the primary filter element after being cleaned. Do not use a filter element with damaged pleats, gaskets or seals.

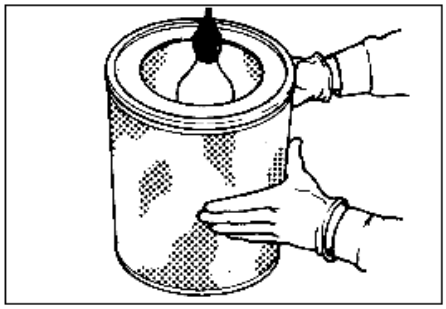

3. Wrap and store the clean filter elements in a clean and dry place.

Battery

Check Electrolyte

The battery used in the machine is maintenance-free type, which is located in right end of the rear frame.

All fixing bolts in the battery should be tightened every 1000 hours.

The following items should be checked at least every 1000 hours. And the times should be more than that if the environment requires.

- Use clean cloth to clear the top of the battery.
- Keep the connector clean, and apply Vaseline.

Watch the condition of the battery through sight hole.

1. Green: indicates everything is normal.
2. Black: indicates the battery needs charging.
3. White: indicates the battery shall be replaced.

Radiator

Clean or Replace Pressure Cover

The maintenance access of radiator cover is located on the rear top of the machine.

1. Open the maintenance access of radiator cover.

2. Remove the radiator cover slowly to relieve pressure.
3. Inspect the cover for damage, deposit or foreign materials. Clean the cover with a clean cloth or replace the cover as necessary.
4. Install the cover.
5. Close the access.

Clean Outside of Radiator Element

Open the radiator guard in the rear of the machine. Remove dust, leaves and other debris from the radiator by compressed air or high-pressure water or steam (compressed air is preferable).

Fuse Box

The fuse box is located on the side control console.

Fuse Box——Protect the electrical system from any damage caused by overload of circuits. If a fuse is broken, replace with a new one; if the new one replaced with same size is also damaged, check and repair the circuits.

Caution

Replace fuses with the same type and specification only. Otherwise electrical damage can be caused. If there is frequent change of fuses, there may be electrical circuit problems. Check and find out the problem.

Windshield Wiper

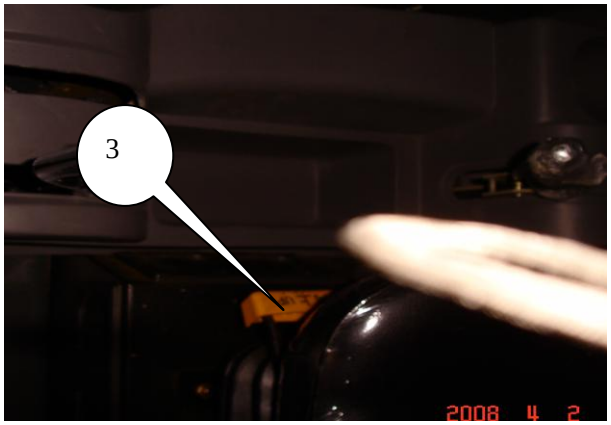

Inspect/Replace

Inspect the windshield wiper blade. Replace if it is worn out or damaged, or if crack occurs.

Every 10 Service Hours or Daily

You must read and understand the warnings and instructions contained in the Safety Section of the manual before performing any operation or maintenance procedures.

Engine Oil

Check Oil Level

Caution

Do not overfill the crankcase to avoid engine damage.

1. Open the access on the side of the machine.
2. Keep the oil level between the normal marks.
3. Remove the oil filler cover and add oil if necessary.
4. Clean and install the filler cover.
5. Close the access.

Transmission Oil

Check Oil Level

The transmission oil dipstick is located on the left side of the machine.

1. Maintain the oil level between the two marks at low idle speed.
2. Add oil in need.
3. Clean and install the filler cover.

Hydraulic Oil

Check Oil Level

The bucket shall be in transportation position when inspecting oil level or filling oil.

The hydraulic oil tank is located behind the cab, and the oil dipstick is on its left side.

1. Keep the oil level at the middle of the oil dipstick.
2. Remove the oil filler cover and add oil through the filler tube if it is necessary.
3. Clean and install the filler cover.

Cooling System

Check Coolant Level

The radiator cover is located inside the engine hood at the back of the machine.

1. Loosen the bolts. Open the radiator cover located on the engine hood.
2. Remove the radiator cover slowly to relieve pressure.
3. Maintain the coolant level 1cm below the filler pipe. If it is necessary to add coolant daily, check for leaks.
4. Inspect the cover seal. Replace the cover if it is damaged.
5. Install the cover and close the radiator cover. Tighten the bolts.

Fuel Tank

Drain Water and Sediment

The fuel tank is located at the back of the machine. Its drain plug is at the right lower part of the fuel tank.

1. Unscrew the drain plug slowly to drain away water and sediment.
2. Fasten the drain plug.

Brake Fluid

Check Oil Level

Caution: Make sure that there is no air in the braking system lines before inspecting the oil level.

Check the oil levels of front and rear brake boosters located at the right articulated area of the front frame and at the left side of rear frame. If it is necessary, refill the brake fluid. The oil level shall be filled to 2/3 of the oil cup.

Walk Around Inspection

Inspect the Machine

1. Inspect the implement and linkage for damage or excessive wear. Replace if damaged.
2. Inspect the lights for broken bulbs and lenses. Replace if broken.
3. Inspect and remove any trash buildup on the engine hood.
4. Inspect the cooling system for leaks,

faulty hoses and trash buildup. Correct any leaks and remove any trash from the radiator.

5. Inspect the hydraulic system for leaks. Inspect the tank, hoses, tubes, plugs and joints. Correct any leaks.
6. Inspect front and rear differentials, final drives and wet type brakes for leaks.
7. Check the transmission for leaks.
8. Inspect tires for damage and proper inflation.
9. Be sure that the covers and guards are firmly in place. Inspect for damage.
10. Inspect the handrails, walkways and handholds for their condition and cleanliness.
11. Inspect the cleanliness of the cab and keep it clean.
12. Inspect the instrument panel for broken gauges and indicator lights. Replace if there is any broken one.
13. Check and adjust the rear view mirrors for best vision.
14. Inspect and supplement battery electrolyte. The electrolyte level shall be 12-15 mm higher than upper edge of the polar plate. When the level falls down, distilled water shall be supplemented. Never add any sulphuric solution or common water (don’t inspect this item when maintenance-free battery is used).
15. Solidified water in air cylinder shall be removed by pulling the ring located in lower part of the air cylinder when there is air pressure after stopping the machine.
16. Inspect all the fixing parts. Check whether the bolts, nuts or connectors are loose.
17. Inspect wires of electrical equipment and instrument. Check whether connectors, wires, all the switches, illumination equipment and instrument are in good condition.
18. Water in the oil-water separator shall be removed.
19. Clean and maintain all the control panels, windows and doors, floor mat and indoor sound absorption plastic surfaces, etc.

Gauges and Indicators

Start the engine to check all gauges, gauge lenses, switches, indicator lights and horns for damage. Stop the engine after the check is finished.

Every 50 Service Hours or Weekly

You must read and understand the warnings and instructions contained in the Safety Section of the manual before performing any operation or maintenance procedures.

Bucket Lower Pivot Pins

Lubricate the Hinges

Lubricate the hinge pin shaft of the bucket bottom. There are two pin shafts in total.

Oil Level of Drive Axle

Check the oil level of drive axle. Refill if oil is not adequate.

https://truckmanualshub.com/

Every 100 Service Hours or 2 Weeks

You must read and understand the warnings and instructions contained in the Safety Section of the manual before performing any operation or maintenance procedures.

Rear Axle Swing Support
Lubricate the Hinges

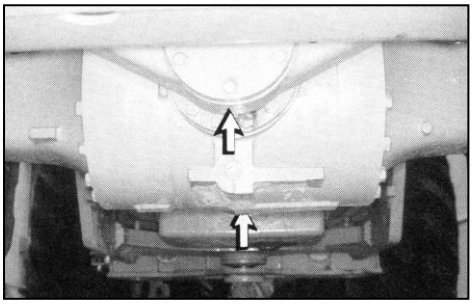

Fill lubricant onto the two connectors on the rear axle swing support.

Hydraulic Cylinder and Linkage Pins
Add Lubricant

Fill lubricant onto all hinges of the implement. There are 13 points for lubrication in total.

Hinge Pins of Steering Cylinder
Add Lubricant

Add lubricant to the bearings of left and right steering cylinders. There are 4 points in total.

Bearings of Articulated Joint of Front and Rear Frames
Add Lubricant

Fill lubricant to bearings at upper and lower hinge joints of front and rear frames.

Every 200 Service Hours or Monthly

You must read and understand the warnings and instructions contained in the Safety Section of the manual before performing any operation or maintenance procedures.

Engine Oil and Filter

Change Oil and Filter

1. Remove the crankcase drain plug. Drain the oil, clean and reinstall the drain plug.
2. Open maintenance access on left side of the machine. Remove the filter with a strap wrench.
3. Clean the filter-housing base. Make sure that all of the used filter gaskets are removed.
4. Spread a thin coat of engine oil on the new gasket of the filter.
5. Install the new filter by hand. When the gasket contacts the filter base, tighten the filter by 1/2 turn.
6. Remove the filler cover; fill the crankcase with new oil. See “Working Oil Viscosity and Full Capacity”. Clean and reinstall the filler cover.
7. Start the engine to warm the oil. Check for leaks and then stop the engine.
8. Keep the engine oil level between the normal marks of the oil dipstick.
9. Reinstall the access.

Braking System

Test Service Brake Holding Ability

Be sure that there is no other personnel or obstacles around the machine.

Make sure that the steering frame lock link is in the storage position.

Test the brakes on a dry, level road surface.

The following tests are to determine if the service brake is functional. These tests are not intended to measure the maximum brake holding effort. The brake holding effort required to hold a machine at a specific engine rpm will vary from machine to machine due to differences in the engine setting, power train efficiency, etc., as well as differences in the brake holding ability.

The engine rpm at the beginning of the machine movement, with the service brake applied, should be compared with that when the machine was stopped under original brake hold test as an indication of the system deterioration.

1. Start the engine and raise the bucket slightly. Apply the service brake and release the parking brake.
2. With the service brake applied, move the transmission speed selector lever to the 2nd speed forward.
3. Gradually increase the engine speed to high idle. The machine should not move.

Warning

If the machine begins to move, reduce the engine revolution immediately and engage the parking brake.

4. Reduce the engine speed to low idle, move the transmission speed selector lever to neutral, engage the parking brake, lower the bucket to the ground and stop the engine.

Caution

If the machine is still moving while testing the service brake, contact your dealer concerned, to let the service personnel check the machine. If necessary, repair the service brake before returning the machine for operation.

Test Parking Brake Braking Ability

Be sure that there is no other personnel or obstacles around the machine.

Make sure that the steering frame lock link is in the storage position.

Do the test on the dry cement road with the slope degree of 8°, and the slope length shall be about 20 meters.

The following tests are to determine if the parking brake is functional. These tests are not intended to measure the maximum brake holding ability.

1. Start the engine and raise the bucket to transport position （40 cm above the ground）.
2. Drive the machine to the middle of a slope, step down the service brake pedal to stop the machine（at this torque do not release the brake pedal）.
3. Move the transmission speed selector lever to neutral and engage the parking brake.
4. Release the service brake pedal （don't shut down the engine）, observe the machine to see if it is moving downward. If the machine does not move downward within 10 minutes, it means that the parking brake is normal.

Warning

If the machine begins to move, apply the service brake pedal at once to stop the machine and drive the machine out of the slope immediately.

Caution

During parking brake holding ability test, if the machine moves, please contact your dealer to let service personnel check the machine. If necessary, repair or adjust the parking brake before returning it for operation.

Cooling System

Add Coolant Additive

Caution

Do not add coolant additive until you read and fully understand the material in the section of "Cooling System Specifications".

The maintenance access on the radiator cover is located on the top of the back engine hood.

1. Open the access.
2. Remove the radiator cover slowly to relieve pressure.
3. Add 0.25 liter of coolant additive.
4. Reinstall the radiator cover and close the access.

Drive Shaft Spline

Lubricate the Spline

1. Disconnect the steering frame lock link and start the engine.
2. Turn the machine full right or left.
3. Lower the bucket, engage the parking brake and stop the engine.
4. Lubricate the spline of the articulated drive shaft.

Fan and Generator Belts

Inspect——Adjust——Replace

Inspect the condition and adjustment of the belts. Replace the belts in sets only, if one or more are worn out or damaged.

Inspect the condition and adjustment of the alternator and fan belts, which should deflect 14~20 mm under 110 N force, or adjustment will be needed.

Fan Bearing

Lubrication

Open the engine maintenance access.

Lubricate the fan bearing.

Transmission Oil

Change Oil of Transmission and Torque Converter

The oil can be filtered and changed for transmission with oil filter trolley only when the oil is of good quality.

Read the instruction carefully before operation and follow strictly the operation requirements.

The transmission oil shall be filtered according to the following steps:

1. Start the engine and operate the machine to make the dirt, metal debris and deposit

fully suspending in the oil.

2. Stop the loader on level ground. Place the speed selector lever in neutral position. Pull up the handle of parking brake. Engage parking brake. Control the hydraulic control lever to lower the boom and lower the bucket to the ground. Stop the engine.
3. Move the oil filter trolley to transmission filler.
4. Dissemble hose connectors at transmission pump suction port. Connect suck hose of oil filter trolley with that of transmission pump in butt. Remove transmission filler cover and insert well-cleaned outlet hose of oil filter trolley into the transmission filler. At the same time, block the suction port of transmission pump to prevent impurity. Clean the filler cover removed and place it in clean container.
5. Start the oil filter trolley. Operate it for 10 minutes or filter the system oil for 2 times.
6. When finishing oil filtering operation, close the oil filter trolley motor. Loosen connectors and remove inlet and outlet hoses of the oil filter. Recover the transmission to former state.
7. Move the oil filter trolley from the loader.
8. Inspect the transmission oil level according to specification.

Operation Precautions

1. Don’t connect the inlet and outlet hoses of the oil filter trolley in wrong positions. All the connectors and hoses shall be always kept clean. It is forbidden to bring impurity into transmission.
2. All the connectors shall be sealed and reliable during operation. The oil suck hose shall not be pressed flat.
3. Inspect whether the instrument of oil filter trolley indicates normally or not during operation or whether there is noise. Otherwise, stop the machine and inspect immediately.

Warning

It is forbidden to move and rotate the loader during filtering oil. Since transmission oil temperature is relatively high, conduct protection work and operate carefully to avoid personal injury.

Application and Maintenance of Oil Filter Trolley

1. Read *Specification for Oil Filter Trolley* carefully before operation and follow strictly the operation and maintenance requirements.
2. When starting the oil filter trolley, pay attention to that the oil pump shall not be rotated in reverse way to prevent blowing away the oil seal or sucking air.
3. The oil pump may suck air during using the oil filter trolley and affect flow of oil pump or normal work of the oil filter trolley. Open air outlet valve to exhaust air in time and close the valve immediately after the air is exhausted.
4. All grades of filter elements on the oil filter trolley shall be cleaned or replaced in time according to *Specification for Oil Filter Trolley.*
5. If oil can not be taken out from the oil filter trolley, inspect and determine:
   a. Whether the oil pump steering is correct;
   b. Whether all seals of parts and components from the oil tank to oil suction ports are reliable;
   c. Whether the primary filter element is blocked.
6. If oil filter trolley flow is decreased, inspect and determine:
   a. Whether primary and fine filter elements are seriously blocked;
   b. Whether oil seal of oil pump shaft is worn or blown out due to reverse rotation.
7. If filtering pressure is decreased suddenly, inspect whether the fine filter element is struck and damaged.

Steps to Replace Transmission Oil

Start the engine to warm the oil. The machine shall be in horizontal position. Lower the bucket and apply pressure downward slightly.

Engage parking brake and stop the engine.

1. Remove the drain plug of the transmission pan and drain the oil away.
2. Replace fine filter element. Refer to “Replace Filter Element” in “Every 600 Service Hours or Quarterly”.
3. Remove oil suck hose and the oil pan assembly from the housing and remove bracket assembly from the oil pan assembly.
4. Remove the magnet from bracket assembly. Clean the magnet with clean hard brush or compressed air.

Caution

Don’t strike the magnet on any hard objects. Replace the magnet if it is damaged.

5. Clean suck hose, bracket assembly and oil pan. If the strainer is damaged, replace bracket assembly.
6. Install the magnet on the bracket assembly.
7. Install the bracket assembly onto the oil pan and inspect the seal gasket. Replace if it is damaged.
8. Install oil pan assembly. Tighten the bolts and install suck hose.
9. Clean and install transmission drain plug.
10. Remove drain plug in the lower part of torque converter oil tank located at the end of the machine to drain the oil out of the tank. Clean and install drain plug.
11. Fill torque converter oil according to specification. Fill the oil to the height of the oil dipstick when the engine is stopped.
12. Start the engine and engage the service brake.
13. Control the speed selector lever at idle to circulate the oil and charge the torque converter oil tank and hoses. Inspect oil level of torque converter. It shall be between low scale and high scale of the oil dipstick.
14. Place the speed selector lever in neutral position. Stop the engine and park the machine.

Front and Rear Axles

Differential and Final Drive

Check the cleanliness of the oil. If the oil is dirty, then change it.

Steps to replace oil of front and rear axles

1. Maintain according to the following steps (unless otherwise specified).
2. Remove the drain plugs of front and rear axles to drain oil out.
3. Clean and install drain plugs.
4. Remove the filler plugs of front and rear axles. Fill oil through the fillers. Refer to “Table of Working Oil Viscosity and Full Capacity”.
5. Install filler plugs. Start the engine and run the machine for several minutes. Inspect the oil level again. If necessary, refill oil to the level specified.
6. Install filler plugs.

Working Hydraulic System and Steering Hydraulic System

Check the cleanliness of the oil. If the oil is dirty, then change it.

Oil in Hydraulic Oil Tank

Steps to Replace the Oil

Run the machine for a long time to warm the oil. Park the machine on horizontal ground. Place all the implements on the ground and apply certain downward force to it. Engage parking brake. Stop the engine.

1. Remove filler cover of hydraulic oil tank.
2. Open oil drain valve in the bottom of the hydraulic oil tank to drain the oil out.
3. Close oil drain valve.
4. Replace filter of hydraulic system. Refer to “Hydraulic System” in “Every 500 Service Hours or Quarterly”.

5. Remove filling strainer. Then clean and install it.
6. Fill oil into hydraulic oil tank. Refer to “Table of Working Oil Viscosity and Full Capacity”.
7. Inspect oil cover gasket. If damaged, replace the gasket.
8. Install filler cover.
9. Start and run the engine for several minutes.
10. Keep the oil level in the middle of the oil dipstick. If necessary, fill oil through the filler.
11. Close the engine.

Inspection of Oil Level in Braking System

Check the cleanliness of the oil. If the oil is dirty, then change it.

Steps to Replace the Oil

1. Maintain according to the following steps (unless otherwise specified).
2. Remove the oil cups of front and rear boosters. Drain the oil out and clean. Then install it to proper position.
3. Loosen the air outlet screws of hub brake. Step the foot brake pedal frequently till there is no oil flowing out.
4. Add brake liquid in the booster oil cup and then exhaust the air till there is no bubble in the liquid. Tighten the air outlet screws.
5. Fill brake liquid to 2/3 of oil cup. Replace the oil and meanwhile clean booster hose. Drain out the brake liquid.

Every 600 Service Hours or Quarterly

You must read and understand the warnings and instructions contained in the Safety Section of the manual before performing any operation or maintenance procedures.

Engine Crankcase Breather

Clean Breather

Clean it according to the requirement of the Diesel Engine Service Manual.

Transmission

Change Filter Element

1. Open the maintenance access of the machine.
2. Disconnect the outer housing of the filter.
3. Remove and throw away the old filter element.
4. Clean the outer housing of filter with nonflammable solvent.
5. Clean the base of the outer housing.
6. Install a new filter element inside the outer housing.
7. Check the seal of outer housing for filter. If it is damaged, change it.
8. Start the engine, and step the service brake.
9. Operate slowly control levers of transmission to circulate the transmission oil.
10. Put the speed selector lever in neutral position, and check if there is leakage.
11. Keep the oil level at the normal position. If it is necessary, add oil through oil filling hose.
12. Shut down the engine, and close the access.

Hydraulic System

Change Filter

1. Remove the oil filler cover to relieve the tank pressure.
2. Loosen the filter retaining bolts.
3. Remove the cover and element.
4. Discard the element
5. Inspect the condition of the “O” ring seal. Replace if necessary.
6. Install the new element and cover. Tighten the cover retaining bolts.
7. Keep the oil level in middle of the oil dipstick. Add the oil through the filler if necessary.
8. Inspect the filler cover gasket. If it is damaged, replace it and reinstall the filler cover.

Fuel System

Clean and Change Filters

Caution

Do not fill fuel before filters are installed. Contaminated fuel will quicken wear to fuel system parts.

Clean the Primary Filter Element

Do maintenance in accordance with the Diesel Engine Service Manual. The following steps are for reference only.

1. Open the access for maintenance at the side of the machine.
2. Loosen the filter housing retaining bolts.
3. Disassemble the housing and element.
4. Remove the element from the housing.
5. Wash the element and housing in the clean nonflammable solvent.
6. Dry the element with compressed air.
7. Clean the filter-housing base.
8. Check the seals. Replace if there is any damaged one.
9. Insert the clean element.
10. Install the element and case into the housing
11. Retighten the bolts.

Change Fine Fuel Filter

Do maintenance in accordance with the Diesel Engine Service Manual. The following steps are for reference only.

1. Remove and discard the filter.
2. Clean the filter-mounting base. Be sure

that all of the used seal must be removed.

3. Coat the new filter seal with clean diesel fuel.
4. Install the new filter by hand. When the seal contacts the base, tighten 3/4 turns.
5. Start the fuel system. （See the following information）.

Start the Fuel System

The injection pumps and high pressure line must be primed if the engine can not start or runs unsteadily after the filters and pump body have been refilled.

Each injection pump has an overflow check valve. It cannot be opened by hand priming pump pressure. Use the following procedures to prime the injection pumps and lines.

Caution

The fuel injection nozzles can be permanently damaged by twist if only one wrench is used to loosen or tighten the fuel line nuts. Use one wrench to hold the nozzle and another to loosen the nuts.

1. Loosen the fuel injection lines at the cylinder head of the engine.
2. Move the governor control lever to low idle position.
3. Crank the engine till the fuel flows free of air bubbles from all fuel lines. Stop cranking the engine.
4. Tighten the fuel line nuts to the torque of 40±7N.m. Use another wrench to hold the nozzle to avoid any damage to it.
5. Start the engine to check for leaks.
6. Close the access.

The Priming Pump

Filters and Pump Body

1. Open the fuel system purge valve on the pump housing.
2. Loosen the priming pump plunger and press it up and down.
3. When the fuel flows without bubbles, turn off the pump and lock the plunger.
4. Close the purge valve.
5. Start the engine and check for leaks.

Fuel Tank Cover and Strainer

The fuel tank filler cover is located at the rear-most part of the machine.

1. Remove the cover.
2. Replace the cover if the gasket is damaged.
3. Remove the strainer of primary filter from the filler.
4. Wash the strainer in the clean nonflammable solvent.
5. Install the strainer.
6. Install the fuel tank filler cover.

Transmission

For replacement of transmission oil, refer to “Transmission” in “Every 200 Service Hours or Monthly”.

Front and Rear Axles

Differential and Final Drive

Please refer to “Front and Rear Axles” in “Every 200 Service Hours or Monthly”.

Working Hydraulic System and Steering Hydraulic System

Please refer to “Working Hydraulic System and Steering Hydraulic System” in “Every 200 Service Hours or Monthly”.

Inspection of Oil Level in Braking System

Check the cleanliness of the oil. If the oil is dirty, then change it.

Please refer to “Inspection of Oil Level in Braking System” in “Every 200 Service Hours or Monthly”.

Every 1000 Service Hours or 6 Months

You must read and understand the warnings and instructions contained in the Safety Section of the manual before performing any operation or maintenance procedures.

Drive Shaft Universal Joint

1. Add the lithium base lubricant to the lubricating nozzle in the middle drive shaft universal joint.
2. Add the lithium base lubricant to the lubricating nozzle in the front drive shaft.
3. Add the lithium base lubricant to the lubricating nozzle in the rear drive shaft yoke universal joint.
4. Add the lithium base lubricant to the lubricating nozzle in the rear drive shaft universal joint.

Transmission

For replacement of transmission oil, refer to “Transmission” in “Every 200 Service Hours or Monthly”.

Front and Rear Axles
Differential and Final Drive

Check the cleanliness of the oil. If the oil is dirty, then change it. Please refer to “Front and Rear Axles” in “Every 200 Service Hours or Monthly”.

Working Hydraulic System and Steering Hydraulic System

Check the cleanliness of the oil. If the oil is dirty, then change it. Please refer to “Working Hydraulic System and Steering Hydraulic System” in “Every 200 Service Hours or Monthly”.

Inspection of Oil Level in Braking System

Check the cleanliness of the oil. If the oil is dirty, then change it.
Please refer to “Inspection of Oil Level in Braking System” in “Every 200 Service Hours or Monthly”.

Every 1500 Service Hours

You must read and understand the warnings and instructions contained in the Safety Section of the manual before performing any operation or maintenance procedures.

Transmission

For replacement of transmission oil, refer to “Transmission” in “Every 200 Service Hours or Monthly”.

Front and Rear Axles
Differential and Final Drive

Check the cleanliness of the oil. If the oil is dirty, then change it. Please refer to “Front and Rear Axles” in “Every 200 Service Hours or Monthly”.

Working Hydraulic System and Steering Hydraulic System

Please refer to “Working Hydraulic System and Steering Hydraulic System” in “Every 200 Service Hours or Monthly”.

Inspection of Oil Level in Braking System

Check the cleanliness of the oil. If the oil is dirty, then change it.

Please refer to “Inspection of Oil Level in Braking System” in “Every 200 Service Hours or Monthly”.

Every 2000 Service Hours or 1 Year

You must read and understand the warnings and instructions contained in the Safety Section of the manual before performing any operation or maintenance procedures.

The Oil in Hydraulic Oil Tank
Change Oil

Operate the machine long enough to warm the oil.

The machine should be on level ground. Lower the implement to ground and apply certain downward pressure; engage the parking brake and stop the engine.

1. Remove the filler cover of the hydraulic oil tank.
2. Open the drain valve located at the bottom of the oil tank to let the oil drain away.
3. Close the drain valve.
4. Change the filter in the system. See “hydraulic System” of “Every 500 Service Hours or Quarterly”.
5. Remove the strainer, clean and mount the strainer.
6. Refill the hydraulic system oil tank. See “Working Oil Viscosity and Full Capacity”.
7. Inspect the filler cover gasket, replace if it is damaged.
8. Install the oil filler cover.
9. Start and run the engine for a few minutes.
10. Keep the oil level between the middle of the oil dipstick. Add the oil through the filler if necessary.
11. Stop the engine.

Engine Valve Clearance
Adjustment

Carry out adjustment in accordance with the Diesel Engine Service Manual. The following methods are only for reference.

Warning

To prevent possible injury, do not use the starter motor to turn the flywheel. Hot engine components can cause burns. Allow additional time for the engine to cool before measuring the valve clearance.

Caution

Measure the Valve Clearance with the engine stopped. To obtain an accurate measurement, allow at least 20 minutes to stop the engine for having the same temperature between engine cylinder head and cylinder block.

Adjust the Valve Clearance to the range specified in the Diesel Engine Service Manual.

As for the complete adjusting procedures for the valve, please contact service personnel.

Engine Valve Rotor

Observe the engine turning condition while it is idling after the Valve Clearance has been set.

Warning

When inspecting the valve rotors, wear protective glasses or face shield and protective clothing to prevent being burned by hot oil spray.

1. Start the engine and run it at low speed.
2. Observe the top of each valve rotor. Each rotor should turn lightly while the valve closes every time. If the rotor does not turn, please contact the service personnel.

https://truckmanualshub.com/

Every 3000 Service Hours or 2 Years

You must read and understand the warnings and instructions contained in the Safety Section of the manual before performing any operation or maintenance procedures.

Coolant in the Cooling System
Change Coolant/Clean System
Caution

Do not change the coolant until you have read and fully understood the materials in the section of "Cooling System Specifications".

Replace the coolant as soon as possible whenever the coolant is dirty or foaming is observed.

The radiator cover is located on the rear top of the machine.

1. Open the radiator maintenance access.
2. Slowly remove the radiator cover to relieve the pressure.
3. Open the drain valve to let coolant drain away. The drain valve is located at the bottom of the radiator.
4. Close the drain valve and refill the system with clean water and the detergent solution of 6%~10% concentration for the cooling system.
5. Start and run the engine for 1.5 hours, then stop the engine to drain away the detergent solution.
6. Stop the engine and wash the system with clean water till all the water has drained off.
7. Close the drain valve.
8. Add the coolant. See "Cooling System Specifications" and "Working Oil Viscosity and Full Capacity".
9. Start and run the engine. Open the radiator cover till the thermostat is turned on and the liquid level becomes stable.
10. The coolant level keeps 1cm below the filler tube.
11. If the cover gasket is damaged, replace it and install the cover.
12. Stop the engine.