AUTOMATIC TRANSMISSION - 545RFE - ELECTRICAL DIAGNOSTICS

TABLE OF CONTENTS

page

AUTOMATIC TRANSMISSION - 545RFE - ELECTRICAL DIAGNOSTICS
DIAGNOSIS AND TESTING
P0122-TPS/APP CIRCUIT LOW 581
P0123-TPS/APP CIRCUIT HIGH 584
P0124-TPS/APP INTERMITTENT 586
P0218-HIGH TEMPERATURE OPERATION ACTIVATED 588
P0562-BATTERY VOLTAGE LOW 589
P0602-CONTROL MODULE PROGRAMMING ERROR/NOT PROGRAMMED 594
P0604-INTERNAL CONTROL MODULE RAM . 595
P0605-INTERNAL CONTROL MODULE ROM . 596
P0613-INTERNAL TCM 597
P0706-TRANSMISSION RANGE SENSOR RATIONALITY 598
P0711-TRANSMISSION TEMPERATURE SENSOR PERFORMANCE. 602
P0712-TRANSMISSION TEMPERATURE SENSOR LOW. 605
P0713-TRANSMISSION TEMPERATURE SENSOR HIGH 608
P0714-TRANSMISSION TEMPERATURE SENSOR INTERMITTENT. 611
P0715-INPUT SPEED SENSOR 1 CIRCUIT . . . 614
P0720-OUTPUT SPEED SENSOR CIRCUIT . . 620
P0725-ENGINE SPEED SENSOR CIRCUIT . . . 626
P0731-GEAR RATIO ERROR IN 1ST 628
P0732-GEAR RATIO ERROR IN 2ND 631
P0733-GEAR RATIO ERROR IN 3RD 637
P0734-GEAR RATIO ERROR IN 4TH 643
P0735-GEAR RATIO ERROR IN 5TH 647
P0736-GEAR RATIO ERROR IN REVERSE . . . 650
P0740-TCC OUT OF RANGE 653
P0750-LR SOLENOID CIRCUIT 655
P0755-2C SOLENOID CIRCUIT 659
P0760-OD SOLENOID CIRCUIT 663
P0765-UD SOLENOID CIRCUIT 667
P0770-4C SOLENOID CIRCUIT 671
P0841-LR PRESSURE SWITCH RATIONALITY 675
P0845-2C HYDRAULIC PRESSURE TEST 682
P0846-2C PRESSURE SWITCH RATIONALITY 690
P0868-LINE PRESSURE LOW 697
P0869-LINE PRESSURE HIGH 703
P0870-OD HYDRAULIC PRESSURE TEST . . . 709
P0871-OD PRESSURE SWITCH RATIONALITY 717
P0875-UD HYDRAULIC PRESSURE TEST . . . 726
P0876-UD PRESSURE SWITCH RATIONALITY 734
P0882-TCM POWER INPUT LOW 741
P0883-TCM POWER INPUT HIGH 745
P0884-POWER UP AT SPEED 749
P0890-SWITCHED BATTERY 751
P0932-LINE PRESSURE SENSOR CIRCUIT . . 755
P0934-LINE PRESSURE SENSOR CIRCUIT LOW. 758
P0935-LINE PRESSURE SENSOR CIRCUIT HIGH 763
P0944-LOSS OF HYDRAULIC PUMP PRIME . 768
P0987-4C HYDRAULIC PRESSURE TEST 770
P0988-4C PRESSURE SWITCH RATIONALITY 778
P128B-TCM POWER CONTROL CIRCUIT 2 LOW - TIPM 784
P128C-TCM POWER CONTROL CIRCUIT 2 HIGH - TIPM 787
P128D-TCM POWER CONTROL CIRCUIT 2 OPEN - TIPM. 790
P128E-TCM POWER CONTROL CIRCUIT 2 OVERCURRENT - TIPM 793
P1684-BATTERY WAS DISCONNECTED 797
P1715-RESTRICTED MANUAL VALVE IN T3 RANGE 799
P1736-GEAR RATIO ERROR IN 2ND PRIME . 800
P1775-SOLENOID SWITCH VALVE LATCHED IN TCC POSITION 805
P1776-SOLENOID SWITCH VALVE LATCHED IN LR POSITION 809
P1790-FAULT IMMEDIATELY AFTER SHIFT . . 813
P1794-SPEED SENSOR GROUND ERROR . . 814
P2700-INADEQUATE ELEMENT VOLUME LR . 818
P2701-INADEQUATE ELEMENT VOLUME 2C . 820
P2702-INADEQUATE ELEMENT VOLUME OD 822
P2703- INADEQUATE ELEMENT VOLUME UD 824
P2704-INADEQUATE ELEMENT VOLUME 4C . 826
P2706-MS SOLENOID CIRCUIT 828
U0002-CAN C BUS OFF PERFORMANCE 832
U0100-NO COMMUNICATION WITH THE ECM/PCM. 834
U0121-LOST COMMUNICATION WITH ABS . . 836
U0141 LOST COMMUNICATION WITH FCM . . 838
STANDARD PROCEDURE
45RFE/545RFE PRE-DIAGNOSTIC TROUBLESHOOTING PROCEDURE. 840
45RFE/545RFE TRANSMISSION VERIFICATION TEST - VER 1 841

AUTOMATIC TRANSMISSION - 545RFE - ELECTRICAL DIAGNOSTICS

DIAGNOSIS AND TESTING

P0122-TPS/APP CIRCUIT LOW

For a complete wiring diagram **Refer to Section 8W**.

Theory of Operation

Due to the integration of the Powertrain and Transmission Control Modules the New Generation Control Module III will be referred to as the Powertrain Control Module (PCM). The 3–wire TPS (4.7L V-8 Engine) provides the PCM with an input signal voltage that represents the throttle blade position of the throttle body. The Throttle Position Sensor (TPS) is connected to the throttle blade shaft. As the position of the throttle blade changes, the output voltage of the TPS changes.

The PCM supplies approximately 5.0 volts to the TPS. The TPS output voltage (input signal to the PCM) represents the throttle blade position. The PCM receives an input signal voltage from the TPS. This will vary in an approximate range from 0.26 volts at minimum throttle opening (idle), to 4.49 volts at maximum opening (wide open throttle).

The Accelerator Pedal Position Sensor (APPS) is currently used only with the 5.7L V-8 engine. The APPS is a linear potentiometer. It provides the PCM with a voltage signal proportional to the angle, or position of the accelerator pedal. The APPS signal along with inputs from other sensors is used by the PCM to calculate the throttle plate position.

A mechanical cable is used between the accelerator pedal and the APPS assembly. Although a cable is used between the accelerator pedal and the APPS assembly, a mechanical cable is not used between the accelerator pedal and the throttle body. The throttle plate position is electronically controlled by the PCM.

- **When Monitored:**
  Continuously with the ignition on and engine running.
- **Set Condition:**
  This DTC will set if the monitored TPS voltage drops below .078 volts for the period of 0.48 seconds.

Possible Causes
RELATED ENGINE TPS/APPS DTC'S PRESENT
POWERTRAIN CONTROL MODULE

Always perform the Pre-Diagnostic Troubleshooting procedure before proceeding. (Refer to 21 - TRANSMISSION/TRANSAXLE/AUTOMATIC - 45RFE/545RFE - STANDARD PROCEDURE)

Diagnostic Test

1. CHECK IF RELATED ENGINE TPS/APPS DTC'S ARE PRESENT

With the scan tool, check Engine DTC's.

Are there any Engine TPS/APPS DTCs present?

Yes >> Refer to the Driveability Category and perform the appropriate Symptom.

No >> Go To 2

2. CHECK TO SEE IF DTC IS CURRENT

With the scan tool, record the DTC EVENT DATA to help identify the conditions in which the DTC was set.

With the scan tool, erase Transmission DTCs.

NOTE: To erase DTC EVENT DATA information, a BATTERY DISCONNECT must be performed. Performing a BATTERY DISCONNECT may reset learned Transmission values to controller defaults which may lead to erratic shift schedules.

Drive the vehicle and try to duplicate the conditions in which the DTC was reported by the DTC EVENT DATA.

With the scan tool, read Transmission DTCs.

Did the DTC P0122 TPS/APPS LOW, reset?

Yes >> Using the schematics as a guide, check the Powertrain Control Module (PCM) terminals for corrosion, damage, or terminal push out. Pay particular attention to all power and ground circuits. If no problems are found, replace the PCM per the Service Information. With the scan tool, perform QUICK LEARN.

Perform 45RFE/545RFE TRANSMISSION VERIFICATION TEST - VER 1. (Refer to 21 - TRANSMISSION/TRANSAXLE/AUTOMATIC - 45RFE/545RFE - STANDARD PROCEDURE)

No >> Go To 3

3. INTERMITTENT WIRING AND CONNECTORS

The conditions necessary to set the DTC are not present at this time.

Using the schematics as a guide, inspect the wiring and connectors specific to this circuit.

Wiggle the wiring and connectors while checking for shorted and open circuits.

With the scan tool, check the DTC EVENT DATA to help identify the conditions in which the DTC was set.

Were there any problems found?

Yes >> Repair as necessary.

Perform 45RFE/545RFE TRANSMISSION VERIFICATION TEST - VER 1. (Refer to 21 - TRANSMISSION/TRANSAXLE/AUTOMATIC - 45RFE/545RFE - STANDARD PROCEDURE)

No >> Test Complete.

P0123-TPS/APP CIRCUIT HIGH

For a complete wiring diagram **Refer to Section 8W**.

Theory of Operation

Due to the integration of the Powertrain and Transmission Control Modules the New Generation Control Module III will be referred as the Powertrain Control Module (PCM). The 4.7L V-8 Throttle Positioning Sensor (TPS) provides the PCM with an input signal voltage that represents the throttle blade position of the throttle body. The TPS is connected to the throttle blade shaft. As the position of the throttle blade changes, the output voltage of the TPS changes.

The 5.7L V-8 Accelerator Pedal Position Sensor (APPS) is a linear potentiometer that provides the PCM with a voltage signal proportional to the angle, or position of the accelerator pedal. The APPS signal along with inputs from other sensors is used by the PCM to calculate the throttle plate position which is electronically controlled.

- **When Monitored:**
  Continuously with the ignition on and engine running.
- **Set Condition:**
  This DTC will set if the monitored TPS voltage rises above 4.94 volts for the period of 0.48 seconds.

Possible Causes
RELATED ENGINE TPS/APPS DTC'S PRESENT
POWERTRAIN CONTROL MODULE

Always perform the Pre-Diagnostic Troubleshooting procedure before proceeding. (Refer to 21 - TRANSMISSION/TRANSAXLE/AUTOMATIC - 45RFE/545RFE - STANDARD PROCEDURE)

Diagnostic Test

1. DETERMINING IF RELATED ENGINE TPS/APPS DTCS ARE PRESENT

With the scan tool, check Engine DTCs, this includes all one trip failures.

Are there any Engine TPS/APPS DTCs present?

Yes >> Refer to the Driveability category and perform the appropriate symptom.

No >> Go To 2

2. CHECK IF THE DTC IS CURRENT

With the scan tool, record the DTC EVENT DATA to help identify the conditions in which the DTC was set.

With the scan tool, erase Transmission DTCs.

NOTE: To erase DTC EVENT DATA information, a BATTERY DISCONNECT must be performed. Performing a BATTERY DISCONNECT may reset all learned Transmission values to controller defaults that could lead to an inconsistent shift schedule.

Drive the vehicle and try to duplicate the conditions in which the DTC was reported by the DTC EVENT DATA.

With the scan tool, read Transmission DTCs.

Did the DTC P0123 TPS/APPS HIGH, reset?

Yes >> Using the schematics as a guide, check the Powertrain Control Module (PCM) terminals for corrosion, damage, or terminal push out. Pay particular attention to all power and ground circuits. If no problems are found, replace the PCM per the Service Information. With the scan tool, perform QUICK LEARN.

Perform 45RFE/545RFE TRANSMISSION VERIFICATION TEST - VER 1. (Refer to 21 - TRANSMISSION/TRANSAXLE/AUTOMATIC - 45RFE/545RFE - STANDARD PROCEDURE)

No >> Go To 3

3. INTERMITTENT WIRING AND CONNECTORS

The conditions necessary to set the DTC are not present at this time.

Using the schematics as a guide, inspect the wiring and connectors specific to this circuit.

Wiggle the wiring and connectors while checking for shorted and open circuits.

With the scan tool, check the DTC EVENT DATA to help identify the conditions in which the DTC was set.

Were there any problems found?

Yes >> Repair as necessary.
Perform 45RFE/545RFE TRANSMISSION VERIFICATION TEST - VER 1. (Refer to 21 - TRANSMISSION/TRANSAXLE/AUTOMATIC - 45RFE/545RFE - STANDARD PROCEDURE)

No >> Test Complete.

P0124-TPS/APP INTERMITTENT

For a complete Transmission wiring diagram **Refer to Section 8W**

Theory of Operation

Due to the integration of the Powertrain and Transmission Control Modules the New Generation Control Module III will be referred as the Powertrain Control Module (PCM). The 4.7L V-8 Throttle Positioning Sensor (TPS) provides the PCM with an input signal voltage that represents the throttle blade position of the throttle body. The TPS is connected to the throttle blade shaft. As the position of the throttle blade changes, the output voltage of the TPS changes.

The 5.7L V-8 Accelerator Pedal Position Sensor (APPS) is a linear potentiometer that provides the PCM with a voltage signal proportional to the angle, or position of the accelerator pedal. The APPS signal along with inputs from other sensors is used by the PCM to calculate the throttle plate position which is electronically controlled.

- **When Monitored:**
  Continuously with the ignition on and engine running.
- **Set Condition:**
  This DTC will set if the monitored TPS throttle angle between the angles of 6° and 120° and the degree change is greater than 5° within a period of less than 7.0 msec.

Possible Causes
RELATED TPS ENGINE DTC'S PRESENT
THROTTLE POSITION SENSOR
POWERTRAIN CONTROL MODULE

Always perform the 45RFE/545RFE Pre-Diagnostic Troubleshooting Procedure before proceeding. (Refer to 21 - TRANSMISSION/TRANSAXLE/AUTOMATIC - 45RFE/545RFE - STANDARD PROCEDURE)

Diagnostic Test

1. DETERMINING IF RELATED ENGINE TPS DTC'S ARE PRESENT

With the scan tool, check Engine DTC's including all one trip failures.

Are there any Engine TPS/APPS DTCs present?

Yes >> Refer to the Powertrain category and perform the appropriate symptom.
Perform 45RFE/545RFE TRANSMISSION VERIFICATION TEST - VER 1. (Refer to 21 - TRANSMISSION/TRANSAXLE/AUTOMATIC - 45RFE/545RFE - STANDARD PROCEDURE)

No >> Go To 2

2. CHECK TO SEE IF DTC IS CURRENT

With the scan tool, record the DTC EVENT DATA to help identify the conditions in which the DTC was set.
With the scan tool, erase Transmission DTCs.

NOTE: To erase EVENT DATA information, a BATTERY DISCONNECT must be performed. Performing a BATTERY DISCONNECT may reset all learned transmission values to controller default. This may lead to erratic shift schedules.

Drive the vehicle and try to duplicate the conditions in which the DTC was reported by the DTC EVENT DATA.
With the scan tool, read Transmission DTCs.

Did the DTC P0124 TPS/APPS INTERMITTENT, reset?

Yes >> Go To 3

No >> Go To 4

3. CHECK THROTTLE POSITION SENSOR OPERATION

Ignition On, Engine Not Running.

With the scan tool, under Transmission Sensors, monitor the TPS voltage in the following step.

Slowly open and close the throttle while checking for erratic voltage changes.

If equipped with ETC, use the ETC Throttle Follower test in the scan tool to check for erratic voltage changes.

Was the TPS voltage change smooth and consistent?

Yes >> Using the schematics as a guide, check the Powertrain Control Module (PCM) terminals for corrosion, damage, or terminal push out. Pay particular attention to all power and ground circuits. If no problems are found, replace the PCM per the Service Information. With the scan tool, perform QUICK LEARN.

Perform 45RFE/545RFE TRANSMISSION VERIFICATION TEST - VER 1. (Refer to 21 - TRANSMISSION/TRANSAXLE/AUTOMATIC - 45RFE/545RFE - STANDARD PROCEDURE)

No >> Replace the Throttle Position Sensor per the Service Information.

Perform 45RFE/545RFE TRANSMISSION VERIFICATION TEST - VER 1. (Refer to 21 - TRANSMISSION/TRANSAXLE/AUTOMATIC - 45RFE/545RFE - STANDARD PROCEDURE)

4. INTERMITTENT WIRING AND CONNECTORS

The conditions necessary to set the DTC are not present at this time.

Using the schematics as a guide, inspect the wiring and connectors specific to this circuit.

Wiggle the wiring and connectors while checking for shorted and open circuits.

With the scan tool, check the DTC EVENT DATA to help identify the conditions in which the DTC was set.

Were there any problems found?

Yes >> Repair as necessary.

Perform 45RFE/545RFE TRANSMISSION VERIFICATION TEST - VER 1. (Refer to 21 - TRANSMISSION/TRANSAXLE/AUTOMATIC - 45RFE/545RFE - STANDARD PROCEDURE)

No >> Test Complete.

P0218-HIGH TEMPERATURE OPERATION ACTIVATED

For a complete wiring diagram **Refer to Section 8W**.

Theory of Operation

The DTC is intended as an informational DTC to aid the technician in determining the root cause of a customer dirveability issue. The DTC is also intended to alert the technician to determine if a cooling system malfunction has occurred or if an additional transmission air to oil cooler is needed to support the customers driving behavior.

- **When Monitored:**
  Whenever the engine is running.
- **Set Condition:**
  Immediately after a Overheat shift schedule is activated when the Transmission temperature exceeds 127° C or 260° F.

Possible Causes
HIGH TEMPERATURE OPERATION ACTIVATED
TORQUE CONVERTER CLUTCH SLIPPING / NOT ACTIVATING
EXCESSIVE TIME IDLING IN GEAR

Always perform the Pre-Diagnostic Troubleshooting procedure before proceeding. (Refer to 21 - TRANSMISSION/TRANSAXLE/AUTOMATIC - 45RFE/545RFE - STANDARD PROCEDURE)

Diagnostic Test

1. HIGH TEMPERATURE OPERATION

This DTC is an informational DTC designed to aid the Technician in diagnosing shift quality complaints.

This DTC indicates that the transmission has been operating in the ″Overheat″ shift schedule which may generate a customer complaint.

The customer driving patterns may indicate the need for an additional transmission oil cooler.

Verify proper Engine cooling system operation which would affect proper transmission operation.

Verify proper torque converter clutch operation.

With the scan tool, check the DTC EVENT DATA to help identify the conditions in which the DTC was set.

If there are no possible causes remaining, view repair.

Repair

Repair the cause of transmission overheating. Refer to the Service Information for the proper repair procedure. Make sure to check for any Service Bulletins pertaining to this problem.

Perform 45RFE/545RFE TRANSMISSION VERIFICATION TEST - VER 1. (Refer to 21 - TRANSMISSION/TRANSAXLE/AUTOMATIC - 45RFE/545RFE - STANDARD PROCEDURE)

P0562-BATTERY VOLTAGE LOW

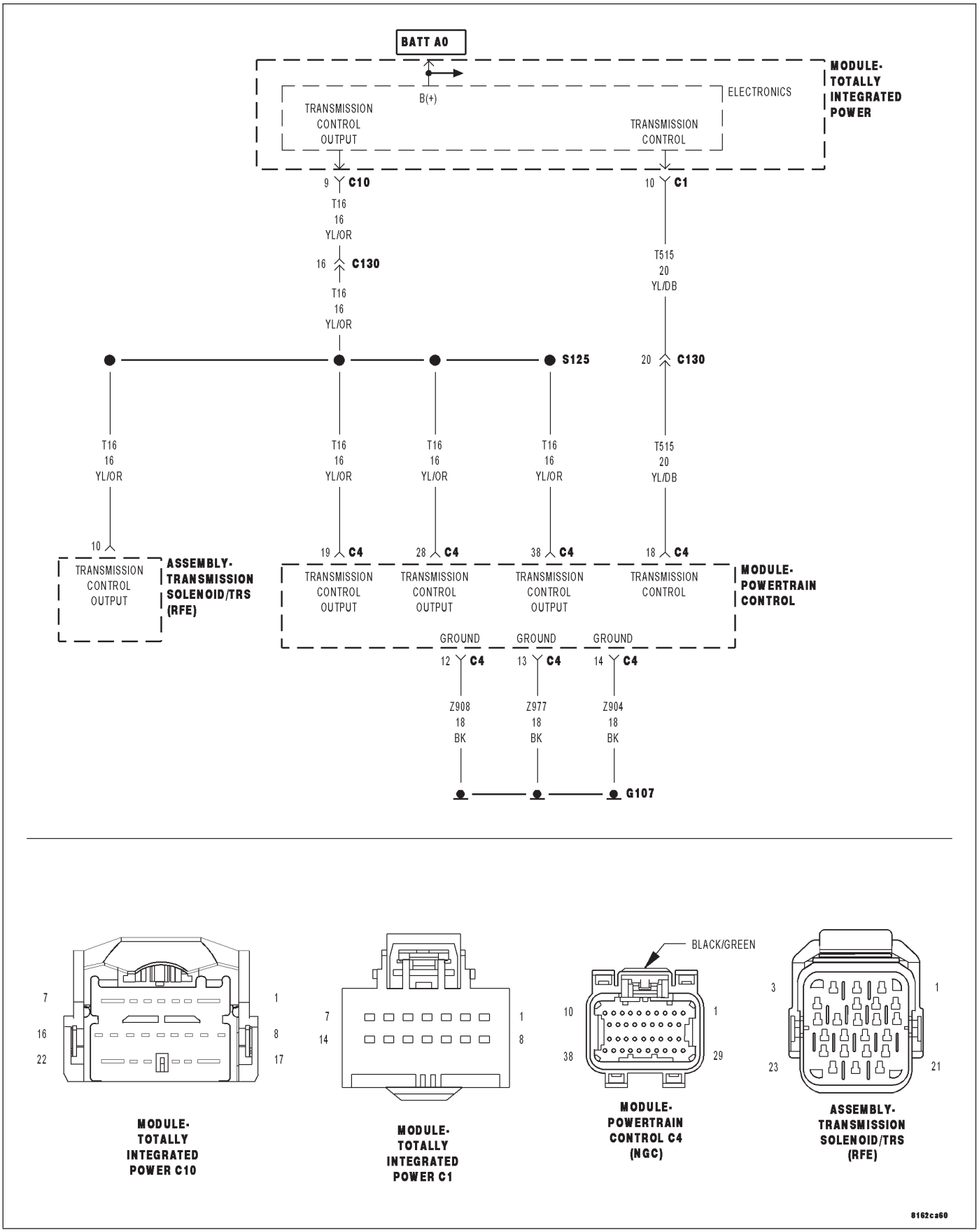

For a complete wiring diagram **Refer to Section 8W**.

- **When Monitored:**
  With the engine running and the PCM has closed the Transmission Control Relay.
- **Set Condition:**
  If the battery voltage of the Transmission Output circuit(s) to the PCM is less than 10.0 volts for the period of 15 seconds. Note: P0562 generally indicates a gradually falling battery voltage or a resistive connection(s) to the PCM. The DTC will also set if the battery voltage sensed at the PCM is less than 6.5-volts for 200ms or where the Transmission Output circuits are less than 7.2-volts for 200ms.

Possible Causes
RELATED CHARGING SYSTEM DTC'S
(Z904, Z908, Z977) GROUND CIRCUITS OPEN OR HIGH RESISTANCE
(T16) TIPM OUTPUT CIRCUIT OPEN OR HIGH RESISTANCE
TOTALLY INTEGRATED POWER MODULE (TIPM)
POWERTRAIN CONTROL MODULE

Always perform the 45RFE/545RFE Pre-Diagnostic Troubleshooting Procedure before proceeding. (Refer to 21 - TRANSMISSION/TRANSAXLE/AUTOMATIC - 45RFE/545RFE - STANDARD PROCEDURE)

Theory of Operation

Friction element distress could result from an insufficient supply voltage to properly control the solenoids. To prevent this possibility, the battery voltage is monitored and the system is placed in logical limp-in if the battery voltage drops below the limit.

Diagnostic Test

1. RELATED CHARGING SYSTEM DTCS

With the scan tool, read the Engine DTCs.

Are there any related Charging System DTCs also present?

Yes >> Refer to the Charging System category and repair any Engine Charging System DTCs, before testing DTC P0562. NOTE: After repairing the Engine Charging System DTC's, perform the Transmission Verification test to verify the transmission control system was not damaged.

Perform 45RFE/545RFE TRANSMISSION VERIFICATION TEST - VER 1. (Refer to 21 - TRANSMISSION/TRANSAXLE/AUTOMATIC - 45RFE/545RFE - STANDARD PROCEDURE)

No >> Go To 2

2. CHECK FOR TIPM DTCS

NOTE: Generator, battery, and charging system must be fully functional before performing this test.
With the scan tool, read TIPM DTCs.

Are there any TCM TIPM DTCs present.

Yes >> Refer to the Transmission category and perform the appropriate symptom. (Refer to 21 - TRANSMISSION/TRANSAXLE/AUTOMATIC - 45RFE/545RFE - DIAGNOSIS AND TESTING)

No >> Go To 3

3. CONDITION P0562 PRESENT

With the scan tool, read Transmission DTCs.

With the scan tool, Check the STARTS SINCE SET counter for P0562.

NOTE: This counter only applies to the last DTC set.

Is the STARTS SINCE SET counter set at 0?

Yes >> Go To 4

No >> Go To 7

4. CHECKING (Z904, Z908, Z977) GROUND CIRCUITS

Turn the ignition off to the lock position.

Disconnect the PCM C4 harness connector and connect Miller tool #8815.

NOTE: Check connectors - Clean/repair as necessary.

CAUTION: Do not probe the PCM harness connectors. Probing the PCM harness connectors will damage the PCM terminals resulting in poor terminal to pin connection. Install Miller tool #8815 to perform diagnosis.

Using a 12-volt test light connected to 12-volts, check the PCM (Z904, Z908, Z977) Ground circuits at the appropriate terminals of Miller tool #8815.

NOTE: The test light must illuminate brightly. Compare the brightness to that of a direct connection to the battery.

Does the test light illuminate brightly for all of the Ground circuits?

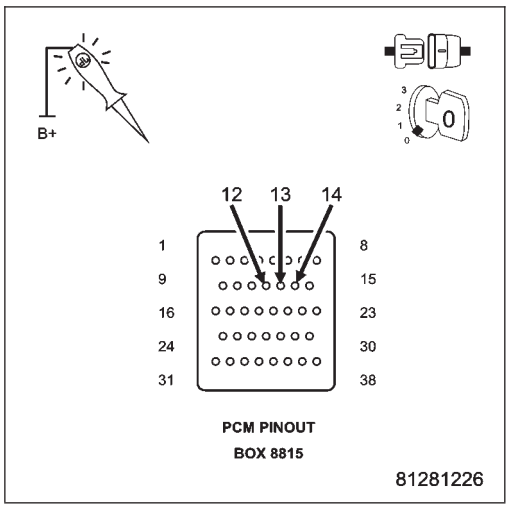

Yes >> Go To 5

No >> Repair the (Z904, Z908, Z977) Ground circuit(s) for an open or high resistance.
Perform 45RFE/545RFE TRANSMISSION VERIFICATION TEST - VER 1. (Refer to 21 - TRANSMISSION/TRANSAXLE/AUTOMATIC - 45RFE/545RFE - STANDARD PROCEDURE)

5. CHECK THE (T16) TRANSMISSION CONTROL OUTPUT CIRCUIT

Turn the ignition off to the lock position.

Disconnect the Transmission Solenoid/TRS Assembly harness connector.

Ignition on, engine not running.

With the scan tool in TIPM, actuate the TCM output.

Using a 12-volt test light connected to ground, check all (T16) Transmission Control Output circuits at the Transmission Solenoid/TRS Assembly harness connector and the appropriate terminals of Miller tool #8815.

NOTE: The (T16) Transmission Control Output circuit branches off to both Transmission Solenoid/TRS Assembly and the PCM.

Does the test light illuminate brightly while cycling on and off on all (T16) Transmission Control Output circuits?

Yes >> Go To 6

No >> Repair the (T16) Transmission Control Output circuit for an open or high resistance.

Perform 45RFE/545RFE TRANSMISSION VERIFICATION TEST - VER 1. (Refer to 21 - TRANSMISSION/TRANSAXLE/AUTOMATIC - 45RFE/545RFE - STANDARD PROCEDURE)

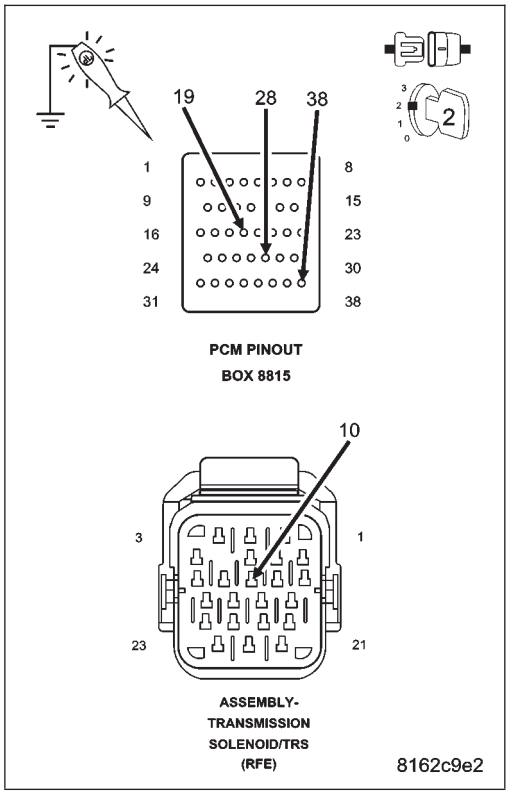

6. CHECK THE (T16) TRANSMISSION CONTROL OUTPUT CIRCUIT FOR AN OPEN

Turn the ignition off to the lock position.

Disconnect the TIPM C10 harness connector.

Measure the resistance of the (T16) Transmission Control Output circuit between the TIPM C10 harness connector and both the Transmission Solenoid/TRS Assembly harness connector and the appropriate terminals of Miller tool #8815.

Is the resistance above 5.0 ohms on any circuit?

Yes >> Repair the (T16) Transmission Control Output circuit for an open or high resistance.

Perform 45RFE/545RFE TRANSMISSION VERIFICATION TEST - VER 1. (Refer to 21 - TRANSMISSION/TRANSAXLE/AUTOMATIC - 45RFE/545RFE - STANDARD PROCEDURE)

No >> Using the schematics as a guide, check the Powertrain Control Module (PCM) terminals for corrosion, damage, or terminal push out. Pay particular attention to all power and ground circuits. If no problems are found, replace the PCM per the Service Information. With the scan tool, perform QUICK LEARN.

Perform 45RFE/545RFE TRANSMISSION VERIFICATION TEST - VER 1. (Refer to 21 - TRANSMISSION/TRANSAXLE/AUTOMATIC - 45RFE/545RFE - STANDARD PROCEDURE)

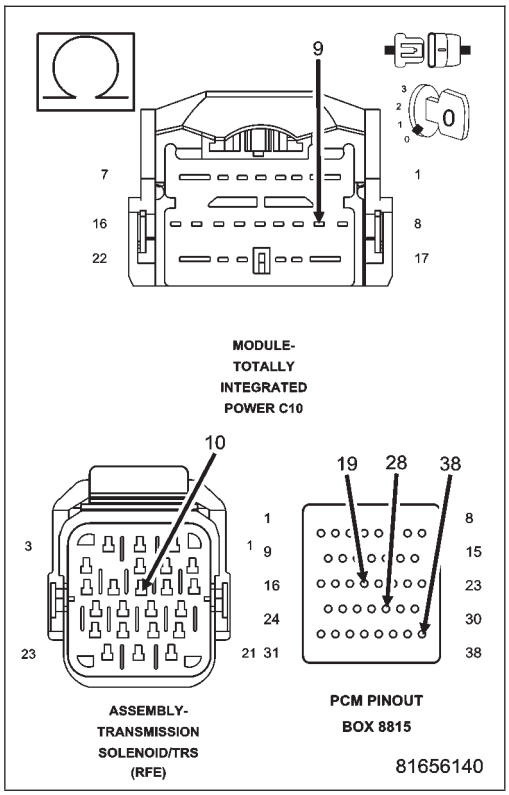

7. INTERMITTENT WIRING AND CONNECTORS

The conditions necessary to set this DTC are not present at this time.

Using the schematics as a guide, inspect the wiring and connectors specific to this circuit.

Wiggle the wires while checking for shorted and open circuits.

With the scan tool, check the DTC EVENT DATA to help identify the conditions in which the DTC was set.

Where there any problems found?

Yes >> Repair as necessary.
Perform 45RFE/545RFE TRANSMISSION VERIFICATION TEST - VER 1. (Refer to 21 - TRANSMISSION/TRANSAXLE/AUTOMATIC - 45RFE/545RFE - STANDARD PROCEDURE)

No >> Test Complete.

P0602-CONTROL MODULE PROGRAMMING ERROR/NOT PROGRAMMED

For a complete wiring diagram **Refer to Section 8W**

Theory of Operation

The controller is programmed during manufacturing with generic software to facilitate testing. However, generic software does not have the proper calibrations to control a transmission in a vehicle. The check for generic software is made at power-up. If generic software is found , the MIL will light immediately and the MIL will stay on even if the fault is cleared, until the proper software is installed. Note: Transmission will be placed in limp-in mode.

- **When Monitored:**
  Check for generic software is made at power-up
- **Set Condition:**
  If generic software is found, the MIL will light immediately. This DTC is designed to inform the technician that the controller still has generic software installed.

Possible Causes
PCM - PROGRAMMING ERROR

Always perform the Pre-Diagnostic Troubleshooting procedure before proceeding. (Refer to 21 - TRANSMISSION/TRANSAXLE/AUTOMATIC - 45RFE/545RFE - STANDARD PROCEDURE)

Diagnostic Test

1. CONTROL MODULE PROGRAMMING ERROR

NOTE: Controller is programmed with generic software and will not allow the correct vehicle Powertrain management.

With the scan tool.

Record the vehicles controller part number.

Select Use Controller Part Number under the Flash Tab.

Flash the controller with the correct software.

Verify the controller flashed successfully.

Test Complete

Perform 45RFE/545RFE TRANSMISSION VERIFICATION TEST - VER 1. (Refer to 21 - TRANSMISSION/TRANSAXLE/AUTOMATIC - 45RFE/545RFE - STANDARD PROCEDURE)

P0604-INTERNAL CONTROL MODULE RAM

For a complete wiring diagram **Refer to Section 8W**.

Theory of Operation

After the controller is reset (ignition turned to the RUN position), the microprocessor checks the integrity of each RAM location by writing to it and reading back from it. The read value should be same as value written.

- **When Monitored:**
  One time after the controller is reset (ignition turned to the RUN position).
- **Set Condition:**
  Whenever the Powertrain Control Module (PCM) detects an internal controller problem.

Possible Causes
POWER OR GROUND CIRCUIT
POWERTRAIN CONTROL MODULE

Always perform the Pre-Diagnostic Troubleshooting procedure before proceeding. (Refer to 21 - TRANSMISSION/TRANSAXLE/AUTOMATIC - 45RFE/545RFE - STANDARD PROCEDURE)

Diagnostic Test

1. CHECK WIRING AND CONNECTORS FOR INTERMITTENT OPERATION

Using the schematics as a guide, check the Powertrain Control Module (PCM) terminals for corrosion, damage, or terminal push out. Pay particular attention to all power and ground circuits.

NOTE: Due to the integration of the Powertrain and Transmission Control Modules, the transmission part of the PCM has it's own specific power and ground circuits.

Wiggle the wires while checking for shorted and open circuits.

Check for any Service Bulletins that may apply.

Were there any problems found?

Yes >> Repair the power and/or ground circuits to the PCM and Transmission Control Relay as necessary.
Perform 45RFE/545RFE TRANSMISSION VERIFICATION TEST - VER 1. (Refer to 21 - TRANSMISSION/TRANSAXLE/AUTOMATIC - 45RFE/545RFE - STANDARD PROCEDURE)

No >> Replace the PCM per the Service Information. With the scan tool, perform QUICK LEARN.
Perform 45RFE/545RFE TRANSMISSION VERIFICATION TEST - VER 1. (Refer to 21 - TRANSMISSION/TRANSAXLE/AUTOMATIC - 45RFE/545RFE - STANDARD PROCEDURE)

P0605-INTERNAL CONTROL MODULE ROM

For a complete wiring diagram **Refer to Section 8W**.

Theory of Operation

After the controller is reset (ignition turned to the RUN position) the microprocessor checks the integrity of the program memory (ROM). A checksum is calculated by adding all used bytes in the program memory. The sum should be the same as a known constant stored in the program memory.

- **When Monitored:**
  One time after the controller is reset (ignition turned to the RUN position).
- **Set Condition:**
  Whenever the Powertrain Control Module (PCM) detects an internal controller problem.

Possible Causes
POWER OR GROUND CIRCUIT
POWERTRAIN CONTROL MODULE

Always perform the Pre-Diagnostic Troubleshooting procedure before proceeding. (Refer to 21 - TRANSMISSION/TRANSAXLE/AUTOMATIC - 45RFE/545RFE - STANDARD PROCEDURE)

Diagnostic Test

1. CHECK WIRING AND CONNECTORS FOR INTERMITTENT OPERATION

Using the schematics as a guide, check the Powertrain Control Module (PCM) terminals for corrosion, damage, or terminal push out. Pay particular attention to all power and ground circuits.

NOTE: Due to the integration of the Powertrain and Transmission Control Modules, the transmission part of the PCM has it's own specific power and ground circuits.

Wiggle the wires while checking for shorted and open circuits.

Check for any Service Bulletins that may apply.

Were there any problems found?

Yes >> Repair the power and/or ground circuits as necessary.
Perform 45RFE/545RFE TRANSMISSION VERIFICATION TEST - VER 1. (Refer to 21 - TRANSMISSION/TRANSAXLE/AUTOMATIC - 45RFE/545RFE - STANDARD PROCEDURE)

No >> Replace the PCM per the Service Information. With the scan tool, perform QUICK LEARN.
Perform 45RFE/545RFE TRANSMISSION VERIFICATION TEST - VER 1. (Refer to 21 - TRANSMISSION/TRANSAXLE/AUTOMATIC - 45RFE/545RFE - STANDARD PROCEDURE)

P0613-INTERNAL TCM

For a complete wiring diagram **Refer to Section 8W**.

Theory of Operation

The internal Watchdog (WD) is a separate hardware circuit that continuously monitors the microprocessor. To insure the proper operation of the Transmission controller the watchdog must receive a signal from the microprocessor within a specific time window (14 msec ± 1 msec) to prevent a system shutdown after a short delay (570 msec). The microprocessor periodically tests the WD's ability to provide this shutdown function using a three phase test;

1) Send the signal too late > 15 msec

2) Send the signal too early < 13 msec

3) Delay test < 590 msec

If the watchdog input signal arrives too early or too late, the Watchdog Fault line will go low and the watchdog delay will start to time out. The delay will be reset by the correct timing of watchdog signal sent during subsequent operations.

The Delay Test checks the delay time out. The Delay Monitor line is pulled low, which forces the delay to start timing out. At the end of the delay time the Transmission Relay will be turned off. The delay test, upon detection of the relay turning off, will immediately turn the relay back on before shutdown can occur.

- **When Monitored:**
  1) One time after the controller is reset (ignition turned to the RUN position) and every 60 seconds thereafter. The Delay Test is executed after a reset only.
  2) 2 seconds after an invalid test.
- **Set Condition:**
  If either of the following conditions occur 3 times:
  1) The watchdog fault line remains high after the period has elapsed for the too early - too late watchdog test.
  2) The Transmission Control Relay remains on after the watchdog delay expired.

Possible Causes
POWER OR GROUND CIRCUIT
POWERTRAIN CONTROL MODULE

Always perform the Pre-Diagnostic Troubleshooting procedure before proceeding. (Refer to 21 - TRANSMISSION/TRANSAXLE/AUTOMATIC - 45RFE/545RFE - STANDARD PROCEDURE)

Diagnostic Test

1. CHECK THE WIRING AND CONNECTORS

Using the schematics as a guide, check the Powertrain Control Module (PCM) terminals for corrosion, damage, or terminal push out. Pay particular attention to all power and ground circuits.

NOTE: Due to the integration of the Powertrain and Transmission Control Modules, the transmission part of the PCM has it's own specific power and ground circuits.
Wiggle the wires while checking for shorted and open circuits.
Check for any Service Bulletins that may apply.

Were there any problems found?

Yes >> Repair the power and/or ground circuits as necessary.
Perform 45RFE/545RFE TRANSMISSION VERIFICATION TEST - VER 1. (Refer to 21 - TRANSMISSION/TRANSAXLE/AUTOMATIC - 45RFE/545RFE - STANDARD PROCEDURE)

No >> Replace the PCM per the Service Information. With the scan tool, perform QUICK LEARN.
Perform 45RFE/545RFE TRANSMISSION VERIFICATION TEST - VER 1. (Refer to 21 - TRANSMISSION/TRANSAXLE/AUTOMATIC - 45RFE/545RFE - STANDARD PROCEDURE)

P0706-TRANSMISSION RANGE SENSOR RATIONALITY

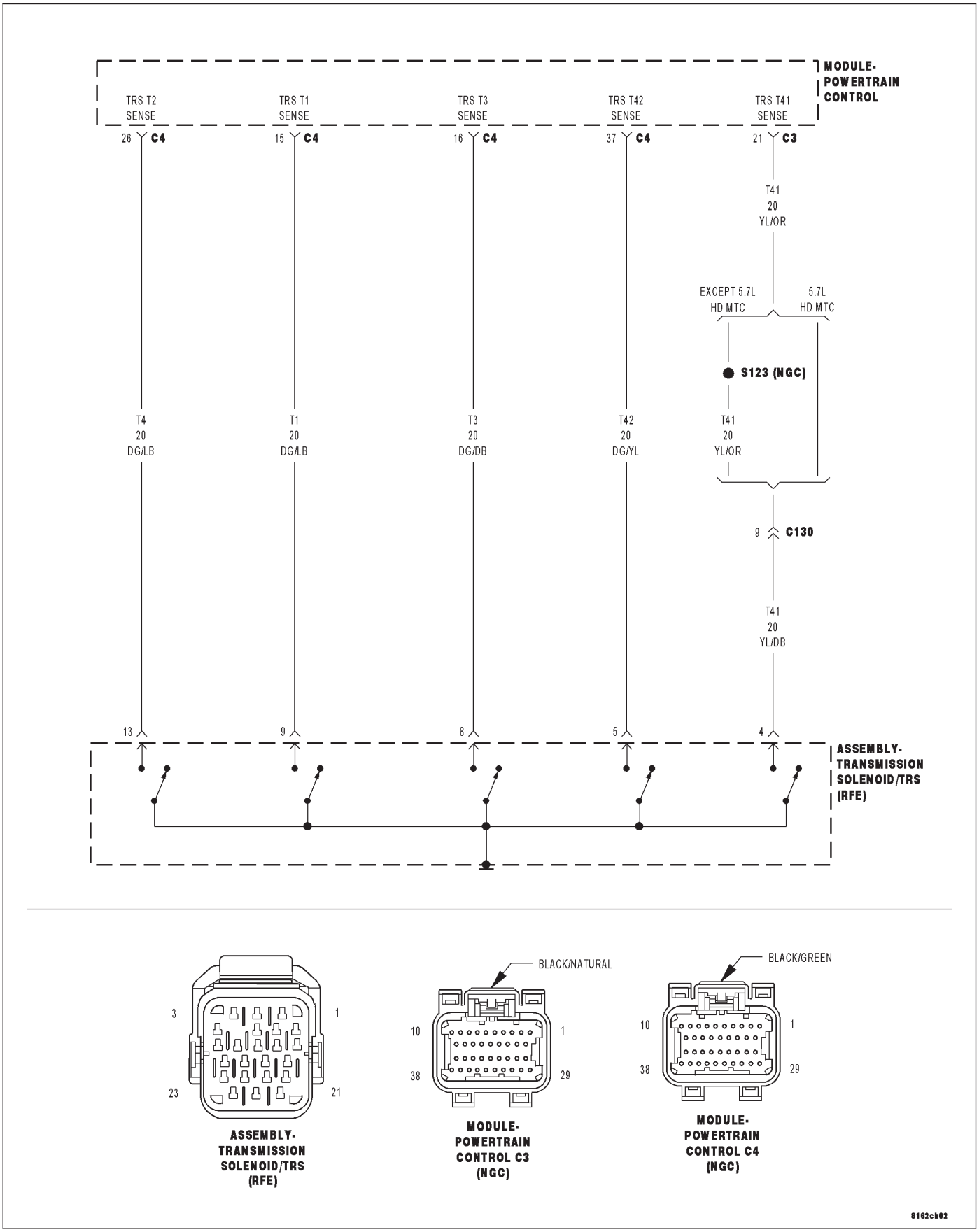

For a complete wiring diagram **Refer to Section 8W**.

- **When Monitored:**
  Continuously with the ignition on.
- **Set Condition:**
  The DTC will set if the controller detects an invalid PRNDL code which lasts for more than 0.042 seconds.

Possible Causes
SHIFTER OUT OF ADJUSTMENT
TRS SENSE CIRCUIT OPEN
TRS SENSE CIRCUIT SHORT TO GROUND
TRS SENSE CIRCUIT SHORT TO VOLTAGE
METAL DEBRIS IN OIL PAN
TRANSMISSION RANGE SENSOR
POWERTRAIN CONTROL MODULE

Always perform the 45RFE/545RFE Pre-Diagnostic Troubleshooting Procedure before proceeding. (Refer to 21 - TRANSMISSION/TRANSAXLE/AUTOMATIC - 45RFE/545RFE - STANDARD PROCEDURE)

Theory of Operation

The T1, T2, T3, T41, or T42 (C1 - C5) Sense circuits communicate the shift lever position to the Transmission Control System. Each circuit is terminated at the transmission by a switch (TRS). Each switch can be either open or closed, depending on the shift lever position. The PCM can decode this information and determine the shift lever position.

Each shift lever position has it own unique combination of closed and open switches. This is called a PRNDL code. There are 5 switches, therefore: there are many possible combinations of open and closed switches (codes). There are 12 valid codes: two for neutral, one for each other gear position (5), and five temporary (transition zone) codes. The remainder of the codes should never occur, these are called invalid codes.

Diagnostic Test

1. CHECK TO SEE IF P0706 DTC IS CURRENT

With the scan tool, perform the Shift Lever Position Test.

Select the test outcome from the following:

Test passes:
Go To 6

Test fails with Error Code:
Go To 2

Test fails without Error Code:
Perform the Gearshift Adjustment Procedure per the Service Information.

Perform 45RFE/545RFE TRANSMISSION VERIFICATION TEST - VER 1. (Refer to 21 - TRANSMISSION/TRANSAXLE/AUTOMATIC - 45RFE/545RFE - STANDARD PROCEDURE)

2. CHECK THE TRANSMISSION SOLENOID/TRS ASSEMBLY

Turn the ignition off to the lock position.

Remove the Ignition Switch Feed fuse from the TIPM.

CAUTION: Removal of the Ignition Switch Feed fuse from the TIPM will prevent the vehicle from being started in gear.

WARNING: The Ignition Switch Feed fuse must be removed from the TIPM. Failure to do so can result in personal injury or death.

Install Transmission Simulator, Miller tool #8333.

Ignition on, engine not running.

With the scan tool, perform the Shift Lever Position Test.

When the scan tool instructs you to put the Gear Selector in a particular position, you must do so using the selector switch on the Transmission Simulator.

The LED for the gear position in question must be illuminated on the Transmission Simulator prior to pressing "ENTER" on the scan tool.

NOTE: When the scan tool requests the O/D off button be depressed, you must use the O/D OFF button in the vehicle or you will fail the Shift Lever Position Test with an error code 11 or OD-TOW/HALL STUCK OPEN.

NOTE: If the Shift Lever Position test fails, make sure to note the identification of the TRS Sense circuit for future reference.

Did the Shift Lever Position test pass?

Yes >> Remove the Oil Pan and Main Valve Body Assembly per the Service Information. Check for metal debris on top of the Solenoid/TRS Assembly and the manual valve code plate. If debris is present, determine the cause of the debris and repair the transmission as necessary. If no problems are found, replace the Transmission Solenoid/TRS Assembly per the Service Information.

Perform 45RFE/545RFE TRANSMISSION VERIFICATION TEST - VER 1. (Refer to 21 - TRANSMISSION/TRANSAXLE/AUTOMATIC - 45RFE/545RFE - STANDARD PROCEDURE)

No >> Go To 3

3. TRS SENSE CIRCUIT OPEN

Turn the ignition off to the lock position.

Disconnect the Transmission Simulator, Miller tool #8333.

Disconnect the PCM harness connectors and install Miller tool #8815.

CAUTION: Do not probe the PCM harness connectors. Probing the PCM harness connectors will damage the PCM terminals resulting in poor terminal to pin connection. Install Miller tool #8815 to perform diagnosis.

Measure the resistance of the identified (T1, T2, T3, T41, or T42) TRS Sense circuit, from the Transmission Solenoid/TRS Assembly harness connector to the appropriate terminal of Miller tool #8815.

Is the resistance above 5.0 ohms?

Yes >> Repair the identified (T1, T2, T3, T41, or T42) TRS Sense circuit for an open.

Perform 45RFE/545RFE TRANSMISSION VERIFICATION TEST - VER 1.

No >> Go To 4

4. TRS SENSE CIRCUIT SHORT TO GROUND

Measure the resistance between ground and the identified (T1, T2, T3, T41, or T42) TRS Sense circuit.

Is the resistance below 5.0 ohms?

Yes >> Repair the identified (T1, T2, T3, T41, or T42) TRS Sense circuit for a short to ground.

Perform 45RFE/545RFE TRANSMISSION VERIFICATION TEST - VER 1. (Refer to 21 - TRANSMISSION/TRANSAXLE/AUTOMATIC - 45RFE/545RFE - STANDARD PROCEDURE)

No >> Go To 5

5. TRS SENSE CIRCUIT SHORT TO OTHER CIRCUITS

Measure the resistance between the identified (T1, T2, T3, T41, or T42) TRS Sense circuit and all other circuits in the Transmission Solenoid/TRS Assembly harness connector.

Is the resistance below 100k ohms between the identified (T1, T2, T3, T41, or T42) TRS Sense circuit and any other circuit(s) in the Transmission Solenoid/TRS Assembly harness connector?

Yes >> Repair the identified (T1, T2, T3, T41, or T42) TRS Sense circuit for a short to other circuit(s).
Perform 45RFE/545RFE TRANSMISSION VERIFICATION TEST - VER 1. (Refer to 21 - TRANSMISSION/TRANSAXLE/AUTOMATIC - 45RFE/545RFE - STANDARD PROCEDURE)

No >> Using the schematics as a guide, check the Powertrain Control Module (PCM) terminals for corrosion, damage, or terminal push out. Pay particular attention to all power and ground circuits. If no problems are found, replace the PCM per the Service Information. With the scan tool, perform QUICK LEARN.
Perform 45RFE/545RFE TRANSMISSION VERIFICATION TEST - VER 1. (Refer to 21 - TRANSMISSION/TRANSAXLE/AUTOMATIC - 45RFE/545RFE - STANDARD PROCEDURE)

6. INTERMITTENT WIRING AND CONNECTORS

The conditions necessary to set the DTC are not present at this time.

Using the schematics as a guide, inspect the wiring and connectors specific to this circuit.

Wiggle the wiring and connectors while checking for shorted and open circuits.

With the scan tool, check the DTC EVENT DATA to help identify the conditions in which the DTC was set.

Were there any problems found?

Yes >> Repair as necessary.
Perform 45RFE/545RFE TRANSMISSION VERIFICATION TEST - VER 1. (Refer to 21 - TRANSMISSION/TRANSAXLE/AUTOMATIC - 45RFE/545RFE - STANDARD PROCEDURE)

No >> Test Complete.

P0711-TRANSMISSION TEMPERATURE SENSOR PERFORMANCE

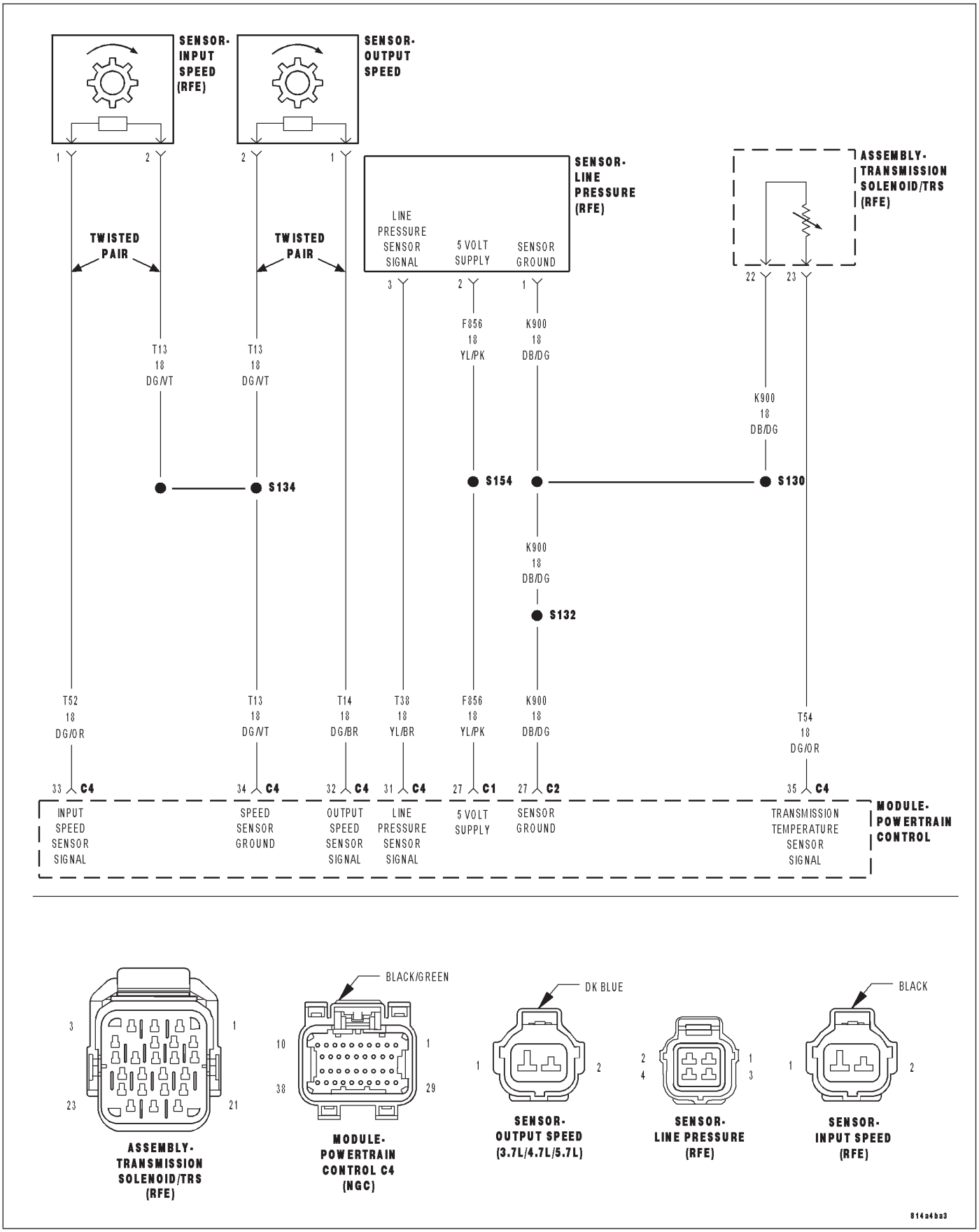

For a complete wiring diagram **Refer to Section 8W**.

- **When Monitored:**
  Continuously with the ignition on and engine running.
- **Set Condition:**
  This DTC will set when the desired transmission temperature does not reach a normal operating temperature within a given time frame. Time is variable due to ambient temperature. Approximate times are starting temperature to warm up time: (-40° F / -40° C - 35 min) (-20° F / -28° C - 25 min) (20° F / -6.6° C - 20 min) (60° F / 15.5 ° C - 10 min)

Possible Causes
RELATED DTC'S PRESENT
TRANSMISSION TEMPERATURE SENSOR
POWERTRAIN CONTROL MODULE

Always perform the 45RFE/545RFE Pre-Diagnostic Troubleshooting Procedure before proceeding. (Refer to 21 - TRANSMISSION/TRANSAXLE/AUTOMATIC - 45RFE/545RFE - STANDARD PROCEDURE)

Theory of Operation

The Transmission Temperature Sensor is a variable resistor that changes with temperature, or otherwise known as a thermister. The temperature of the transmission fluid can affect a variety of electronically controlled transmission operations such as shift quality, torque converter lock-up, and when and/or if certain OBDII or system self-diagnostic test are performed. The Powertrain Control Module (PCM) substitutes a calculated transmission temperature value if a fault is detected in the Transmission Temperature Sensor circuit.

Diagnostic Test

1. DETERMINE IF RELATED DTC'S ARE PRESENT

With the scan tool, check Transmission DTC's.

Are there any other related Transmission Temperature Sensor DTCs present?

Yes >> Refer to the Transmission category and perform the appropriate symptom.

No >> Go To 2

2. CHECK IF DTC IS CURRENT

With the scan tool, Check the STARTS SINCE SET counter for P0711.

NOTE: This counter only applies to the last DTC set.

Is the STARTS SINCE SET counter 2 or less?

Yes >> Go To 3

No >> Go To 4

3. TRANSMISSION TEMPERATURE SENSOR

Turn the ignition off to the lock position.

Remove the Ignition Switch Feed fuse from the TIPM.

CAUTION: Removal of the Ignition Switch Feed fuse from the TIPM will prevent the vehicle from being started in gear.

WARNING: The Ignition Switch Feed fuse must be removed from the TIPM. Failure to do so can result in personal injury or death.

Install the Transmission Simulator, Miller tool #8333.

Ignition on, engine not running.

With the Transmission Simulator, turn the Input/Output switch to OFF.

With the scan tool, monitor the TRANS TEMP VOLTS while turning the Thermistor Voltage switch to all three positions on the Transmission Simulator.

Compare the scan tool readings to the voltage readings listed on the Transmission Simulator.

Do the readings on the scan tool match the Transmission Simulator readings ± 0.2 volts?

Yes >> Replace Transmission Solenoid/TRS Assembly per the Service Information.

Perform 45RFE/545RFE TRANSMISSION VERIFICATION TEST - VER 1. (Refer to 21 - TRANSMISSION/TRANSAXLE/AUTOMATIC - 45RFE/545RFE - STANDARD PROCEDURE)

No >> Using the schematics as a guide, check the Powertrain Control Module (PCM) terminals for corrosion, damage, or terminal push out. Pay particular attention to all power and ground circuits. If no problems are found, replace the PCM per the Service Information. With the scan tool, perform QUICK LEARN.

Perform 45RFE/545RFE TRANSMISSION VERIFICATION TEST - VER 1. (Refer to 21 - TRANSMISSION/TRANSAXLE/AUTOMATIC - 45RFE/545RFE - STANDARD PROCEDURE)

4. INTERMITTENT WIRING AND CONNECTORS

The conditions necessary to set this DTC are not present at this time.

Using the schematics as a guide, inspect the wiring and connectors specific to this circuit.

Wiggle the wires while checking for shorted and open circuits.

With the scan tool, check the DTC EVENT DATA to help identify the conditions in which the DTC was set.

Were there any problems found?

Yes >> Repair as necessary.

Perform 45RFE/545RFE TRANSMISSION VERIFICATION TEST - VER 1. (Refer to 21 - TRANSMISSION/TRANSAXLE/AUTOMATIC - 45RFE/545RFE - STANDARD PROCEDURE)

No >> Test Complete.

P0712-TRANSMISSION TEMPERATURE SENSOR LOW

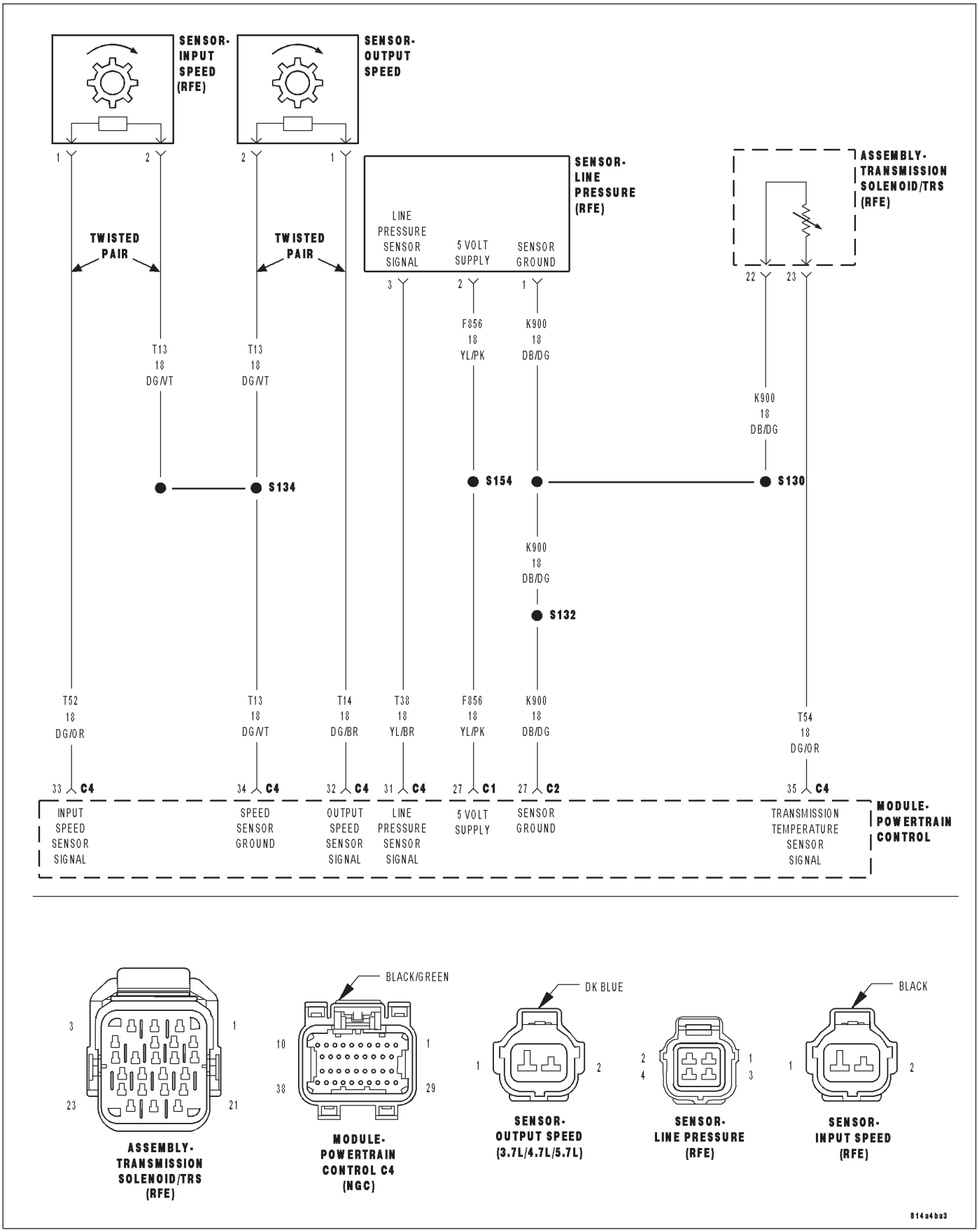

For a complete wiring diagram **Refer to Section 8W**.

- **When Monitored:**
  Continuously with the ignition on and engine running.
- **Set Condition:**
  The DTC will set when the monitored Temperature Sensor voltage drops below 0.078 volts for the period of 0.45 seconds.

Possible Causes
RELATED DTC'S PRESENT
(T54) TRANSMISSION TEMPERATURE SENSOR SIGNAL CIRCUIT SHORT TO GROUND
TRANSMISSION TEMPERATURE SENSOR
POWERTRAIN CONTROL MODULE

Always perform the 45RFE/545RFE Pre-Diagnostic Troubleshooting Procedure before proceeding. (Refer to 21 - TRANSMISSION/TRANSAXLE/AUTOMATIC - 45RFE/545RFE - STANDARD PROCEDURE)

Theory of Operation

The Transmission Temperature Sensor is a variable resistor that changes with temperature, or otherwise known as a thermister. The temperature of the transmission fluid can affect a variety of electronically controlled transmission operations such as shift quality, torque converter lock-up, and when and/or if certain OBDII or system self-diagnostic test are performed. The Powertrain Control Module (PCM) substitutes a calculated transmission temperature value if a fault is detected in the Transmission Temperature Sensor circuit.

Diagnostic Test

1. DETERMINE IF RELATED DTC'S ARE PRESENT

With the scan tool, check Transmission DTC's.

Are there any line pressure sensor or throttle position sensor DTCs present?

Yes >> Refer to the Transmission category and perform the appropriate symptom.

No >> Go To 2

2. CHECK TO SEE IF DTC IS CURRENT

With the scan tool, Check the STARTS SINCE SET counter for P0712.

NOTE: This counter only applies to the last DTC set.

Is the STARTS SINCE SET counter 2 or less?

Yes >> Go To 3

No >> Go To 5

3. TRANSMISSION TEMPERATURE SENSOR

Turn the ignition off to the lock position.

Remove the Ignition Switch Feed fuse from the TIPM.

CAUTION: Removal of the Ignition Switch Feed fuse from the TIPM will prevent the vehicle from being started in gear.

WARNING: The Ignition Switch Feed fuse must be removed from the TIPM. Failure to do so can result in personal injury or death.

Install the Transmission Simulator, Miller tool #8333.

Ignition on, engine not running.

With the Transmission Simulator, turn the Input/Output switch to OFF.

With the scan tool, monitor the TRANS TEMP VOLTS while turning the Thermistor Voltage switch to all three positions on the Transmission Simulator.

Compare the scan tool readings with the numbers listed on the Transmission Simulator.

Do the readings on the Transmission Simulator match the scan tool readings ± 0.2 volts?

Yes >> Replace Transmission Solenoid/TRS Assembly per the Service Information.
Perform 45RFE/545RFE TRANSMISSION VERIFICATION TEST - VER 1. (Refer to 21 - TRANSMISSION/TRANSAXLE/AUTOMATIC - 45RFE/545RFE - STANDARD PROCEDURE)

No >> Go To 4

4. (T54) TRANSMISSION TEMPERATURE SENSOR SIGNAL CIRCUIT SHORT TO GROUND

Turn the ignition off to the lock position.

Disconnect the Transmission Simulator, Miller tool #8333.

Disconnect the PCM C4 harness connector and connect Miller tool #8815.

NOTE: Check connectors - Clean/repair as necessary.

CAUTION: Do not probe the PCM harness connectors. Probing the PCM harness connectors will damage the PCM terminals resulting in poor terminal to pin connection. Install Miller tool #8815 to perform diagnosis.

Measure the resistance between ground and the (T54) Transmission Temperature Sensor Signal circuit.

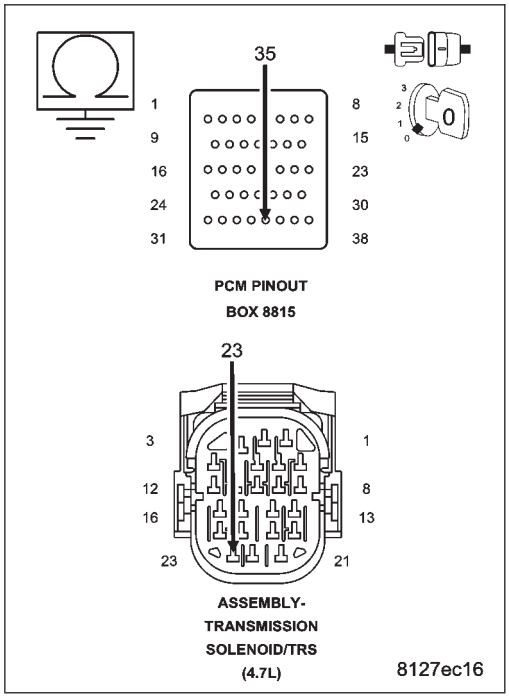

Is the resistance below 5.0 ohms?

Yes >> Repair the (T54) Transmission Temperature Sensor Signal circuit for a short to ground.
Perform 45RFE/545RFE TRANSMISSION VERIFICATION TEST - VER 1. (Refer to 21 - TRANSMISSION/TRANSAXLE/AUTOMATIC - 45RFE/545RFE - STANDARD PROCEDURE)

No >> Using the schematics as a guide, check the Powertrain Control Module (PCM) terminals for corrosion, damage, or terminal push out. Pay particular attention to all power and ground circuits. If no problems are found, replace the PCM per the Service Information. With the scan tool, perform QUICK LEARN.
Perform 45RFE/545RFE TRANSMISSION VERIFICATION TEST - VER 1. (Refer to 21 - TRANSMISSION/TRANSAXLE/AUTOMATIC - 45RFE/545RFE - STANDARD PROCEDURE)

5. INTERMITTENT WIRING AND CONNECTORS

The conditions necessary to set this DTC are not present at this time.

Using the schematics as a guide, inspect the wiring and connectors specific to this circuit.

Wiggle the wires while checking for shorted and open circuits.

With the scan tool, check the DTC EVENT DATA to help identify the conditions in which the DTC was set.

Were there any problems found?

Yes >> Repair as necessary.
Perform 45RFE/545RFE TRANSMISSION VERIFICATION TEST - VER 1. (Refer to 21 - TRANSMISSION/TRANSAXLE/AUTOMATIC - 45RFE/545RFE - STANDARD PROCEDURE)

No >> Test Complete.

P0713-TRANSMISSION TEMPERATURE SENSOR HIGH

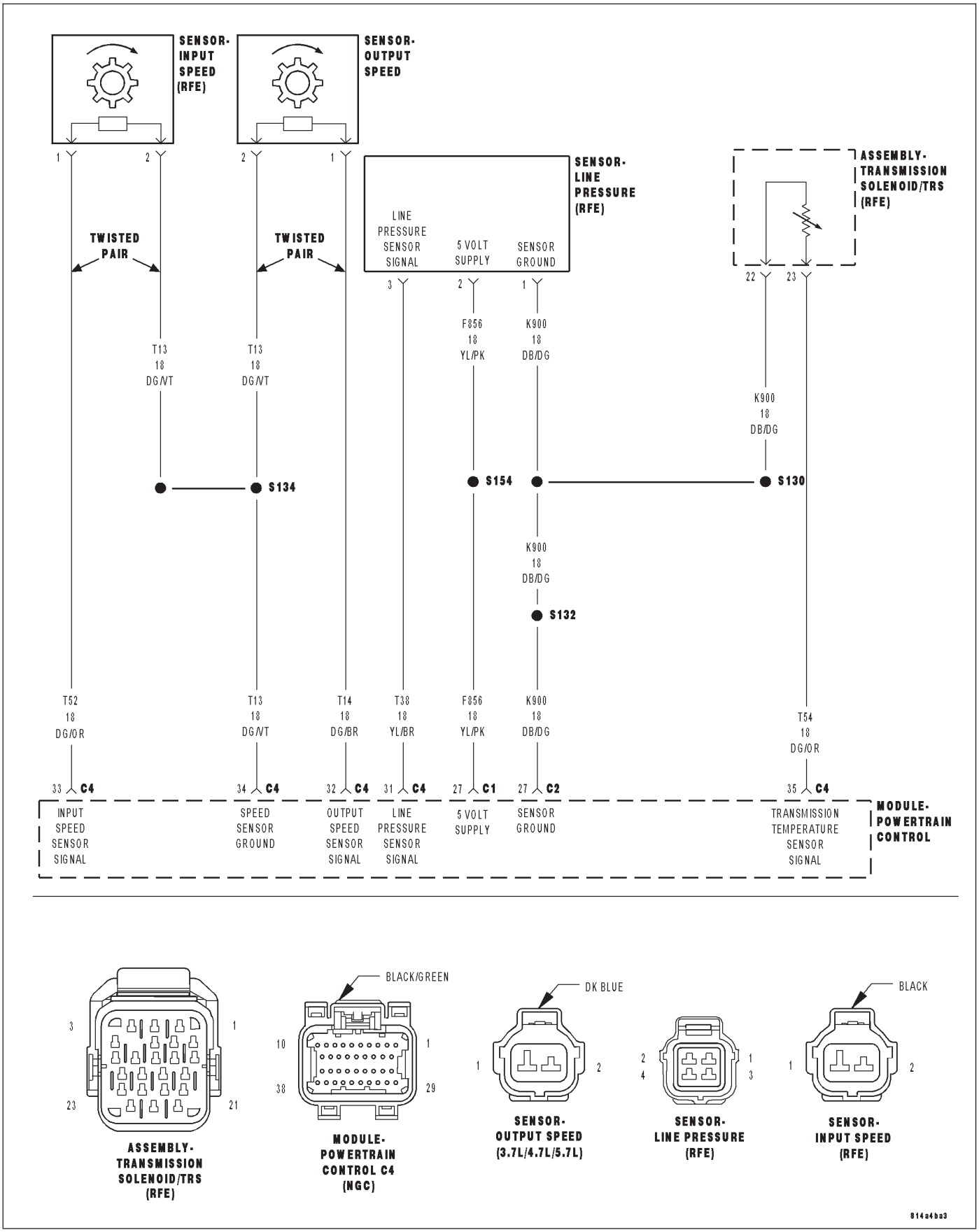

For a complete wiring diagram **Refer to Section 8W**.

- **When Monitored:**
  Continuously with the ignition on and engine running.
- **Set Condition:**
  The DTC will set when the monitored Temperature Sensor voltage rises above 4.94 volts for the period of 0.45 seconds.

Possible Causes
RELATED DTC'S PRESENT
(T54) TRANSMISSION TEMPERATURE SENSOR SIGNAL CIRCUIT SHORT TO OTHER CIRCUITS
TRANSMISSION TEMPERATURE SENSOR
POWERTRAIN CONTROL MODULE

Always perform the 45RFE/545RFE Pre-Diagnostic Troubleshooting Procedure before proceeding. (Refer to 21 - TRANSMISSION/TRANSAXLE/AUTOMATIC - 45RFE/545RFE - STANDARD PROCEDURE)

Theory of Operation

The Transmission Temperature Sensor is a variable resistor that changes with temperature, or otherwise known as a thermister. The temperature of the transmission fluid can affect a variety of electronically controlled transmission operations such as shift quality, torque converter lock-up, and when and/or if certain OBDII or system self-diagnostic test are performed. The Powertrain Control Module (PCM) substitutes a calculated transmission temperature value if a fault is detected in the Transmission Temperature Sensor circuit.

Diagnostic Test

1. DETERMINE IF RELATED DTC'S ARE PRESENT

With the scan tool, check Transmission DTC's.

Are there any line pressure sensor or throttle position sensor DTCs present?

Yes >> Refer to the Transmission category and perform the appropriate symptom.

No >> Go To 2

2. CHECK IF DTC IS CURRENT

With the scan tool, check the STARTS SINCE SET counter for P0713.

NOTE: This counter only applies to the last DTC set.

Is the STARTS SINCE SET counter 2 or less?

Yes >> Go To 3

No >> Go To 5

3. TRANSMISSION TEMPERATURE SENSOR

Turn the ignition off to the lock position.

Remove the Ignition Switch Feed fuse from the TIPM.

CAUTION: Removal of the Ignition Switch Feed fuse from the TIPM will prevent the vehicle from being started in gear.

WARNING: The Ignition Switch Feed fuse must be removed from the TIPM. Failure to do so can result in personal injury or death.

Install the Transmission Simulator, Miller tool #8333.

Ignition on, engine not running.

With the Transmission Simulator, turn the Input/Output switch to OFF.

With the scan tool, monitor the TRANS TEMP VOLTS while turning the Thermistor Voltage switch to all three positions on the Transmission Simulator.

Compare the scan tool readings with the numbers listed on the Transmission Simulator.

Do the readings on the Transmission Simulator match the scan tool readings ± 0.2 volts?

Yes >> Replace Transmission Solenoid/TRS assembly per the Service Information.
Perform 45RFE/545RFE TRANSMISSION VERIFICATION TEST - VER 1. (Refer to 21 - TRANSMISSION/TRANSAXLE/AUTOMATIC - 45RFE/545RFE - STANDARD PROCEDURE)

No >> Go To 4

4. (T54) TRANSMISSION SENSOR SIGNAL CIRCUIT SHORT TO ANOTHER CIRCUIT

Turn the ignition off to the lock position.

Disconnect the Transmission Simulator, Miller tool #8333.

Disconnect the PCM harness connectors.

Measure the resistance between the (T54) Transmission Temperature Sensor Signal circuit and all other circuits in the Transmission Solenoid/TRS Assembly harness connector.

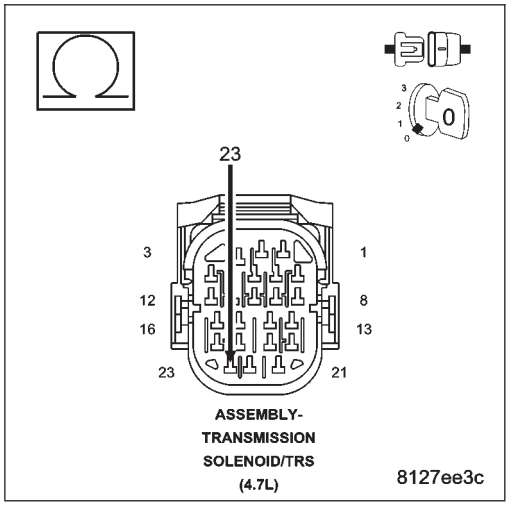

Is the resistance below 5.0 ohms between the (T54) Transmission Temperature Sensor Signal circuit and any other circuit(s) in the Transmission Solenoid/TRS Assembly harness connector?

Yes >> Repair the Transmission Temperature Sensor Signal circuit for a short to another circuit(s).
Perform 45RFE/545RFE TRANSMISSION VERIFICATION TEST - VER 1. (Refer to 21 - TRANSMISSION/TRANSAXLE/AUTOMATIC - 45RFE/545RFE - STANDARD PROCEDURE)

No >> Using the schematics as a guide, check the Powertrain Control Module (PCM) terminals for corrosion, damage, or terminal push out. Pay particular attention to all power and ground circuits. If no problems are found, replace the PCM per the Service Information. With the scan tool, perform QUICK LEARN.
Perform 45RFE/545RFE TRANSMISSION VERIFICATION TEST - VER 1. (Refer to 21 - TRANSMISSION/TRANSAXLE/AUTOMATIC - 45RFE/545RFE - STANDARD PROCEDURE)

5. INTERMITTENT WIRING AND CONNECTORS

The conditions necessary to set this DTC are not present at this time.

Using the schematics as a guide, inspect the wiring and connectors specific to this circuit.

Wiggle the wires while checking for shorted and open circuits.

With the scan tool, check the DTC EVENT DATA to help identify the conditions in which the DTC was set.

Were there any problems found?

Yes >> Repair as necessary.
Perform 45RFE/545RFE TRANSMISSION VERIFICATION TEST - VER 1. (Refer to 21 - TRANSMISSION/TRANSAXLE/AUTOMATIC - 45RFE/545RFE - STANDARD PROCEDURE)

No >> Test Complete.

P0714-TRANSMISSION TEMPERATURE SENSOR INTERMITTENT

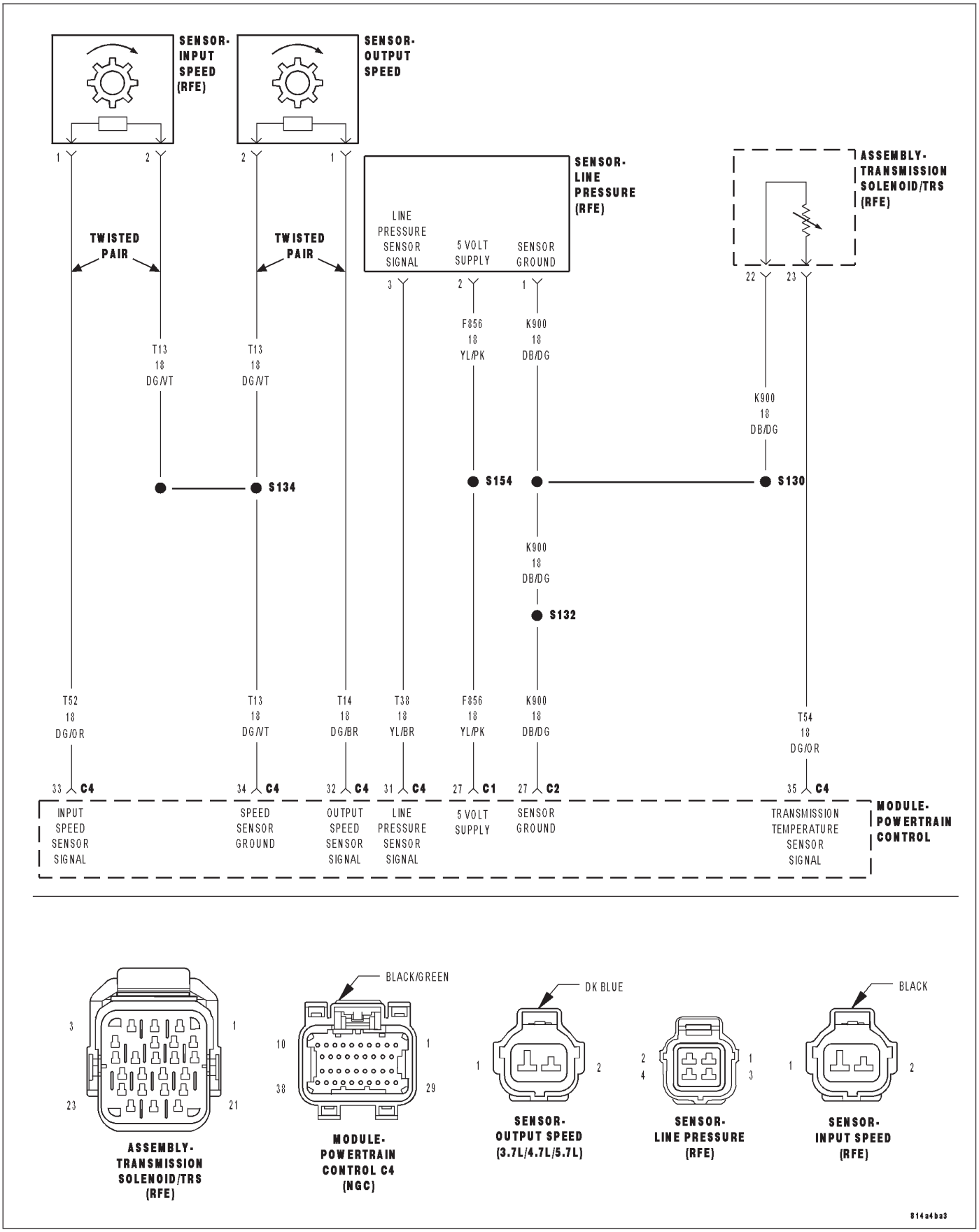

For a complete wiring diagram **Refer to Section 8W**.

- **When Monitored:**
  Continuously with the ignition on and engine running.
- **Set Condition:**
  The DTC will set when the monitored Temperature Sensor voltage fluctuates or changes abruptly within a predetermined period of time.

Possible Causes
RELATED DTC'S PRESENT
TRANSMISSION TEMPERATURE SENSOR
POWERTRAIN CONTROL MODULE

Always perform the 45RFE/545RFE Pre-Diagnostic Troubleshooting Procedure before proceeding. (Refer to 21 - TRANSMISSION/TRANSAXLE/AUTOMATIC - 45RFE/545RFE - STANDARD PROCEDURE)

Theory of Operation

The Transmission Temperature Sensor is a variable resistor that changes with temperature, or otherwise known as a thermister. The temperature of the transmission fluid can affect a variety of electronically controlled transmission operations such as shift quality, torque converter lock-up, and when and/or if certain OBDII or system self-diagnostic test are performed. The Powertrain Control Module (PCM) substitutes a calculated transmission temperature value if a fault is detected in the Transmission Temperature Sensor circuit.

Diagnostic Test

1. DETERMINE IF RELATED DTC'S ARE PRESENT

With the scan tool, check Transmission DTC's.

Are there any line pressure sensor or throttle position sensor DTCs present?

Yes >> Refer to the Transmission category and perform the appropriate symptom. (Refer to 21 - TRANSMISSION/TRANSAXLE/AUTOMATIC - 45RFE/545RFE - DIAGNOSIS AND TESTING)

No >> Go To 2

2. CHECK TO SEE IF DTC IS CURRENT

With the scan tool, Check the STARTS SINCE SET counter for P0714.

NOTE: This counter only applies to the last DTC set.

Is the STARTS SINCE SET counter 2 or less?

Yes >> Go To 3

No >> Go To 4

3. TRANSMISSION TEMPERATURE SENSOR

Turn the ignition off to the lock position.

Remove the Ignition Switch Feed fuse from the TIPM.

CAUTION: Removal of the Ignition Switch Feed fuse from the TIPM will prevent the vehicle from being started in gear.

WARNING: The Ignition Switch Feed fuse must be removed from the TIPM. Failure to do so can result in personal injury or death.

Install the Transmission Simulator, Miller tool #8333.

Ignition on, engine not running.

With the Transmission Simulator, turn the Input/Output switch to OFF.

With the scan tool, monitor the TRANS TEMP VOLTS while turning the Thermistor Voltage switch to all three positions on the Transmission Simulator.

Compare the scan tool readings with the numbers listed on the Transmission Simulator.

Do the readings on the Transmission Simulator match a non-fluctuating scan tool reading ± 0.2 volts?

Yes >> Replace the Transmission Solenoid/TRS Assembly per the Service Information. (Refer to 21 - TRANSMISSION/TRANSAXLE/AUTOMATIC - 45RFE/545RFE/TRANS SOLENOID/TRS ASSY - REMOVAL)

Perform 45RFE/545RFE TRANSMISSION VERIFICATION TEST - VER 1. (Refer to 21 - TRANSMISSION/TRANSAXLE/AUTOMATIC - 45RFE/545RFE - STANDARD PROCEDURE)

No >> Using the schematics as a guide, check the Powertrain Control Module (PCM) terminals for corrosion, damage, or terminal push out. Pay particular attention to all power and ground circuits. If no problems are found, replace the PCM per the Service Information. With the scan tool, perform QUICK LEARN.

Perform 45RFE/545RFE TRANSMISSION VERIFICATION TEST - VER 1. (Refer to 21 - TRANSMISSION/TRANSAXLE/AUTOMATIC - 45RFE/545RFE - STANDARD PROCEDURE)

4. INTERMITTENT WIRING AND CONNECTORS

The conditions necessary to set this DTC are not present at this time.

Using the schematics as a guide, inspect the wiring and connectors specific to this circuit.

Wiggle the wires while checking for shorted and open circuits.

With the scan tool, check the DTC EVENT DATA to help identify the conditions in which the DTC was set.

Were there any problems found?

Yes >> Repair as necessary.

Perform 45RFE/545RFE TRANSMISSION VERIFICATION TEST - VER 1. (Refer to 21 - TRANSMISSION/TRANSAXLE/AUTOMATIC - 45RFE/545RFE - STANDARD PROCEDURE)

No >> Test Complete.

P0715-INPUT SPEED SENSOR 1 CIRCUIT

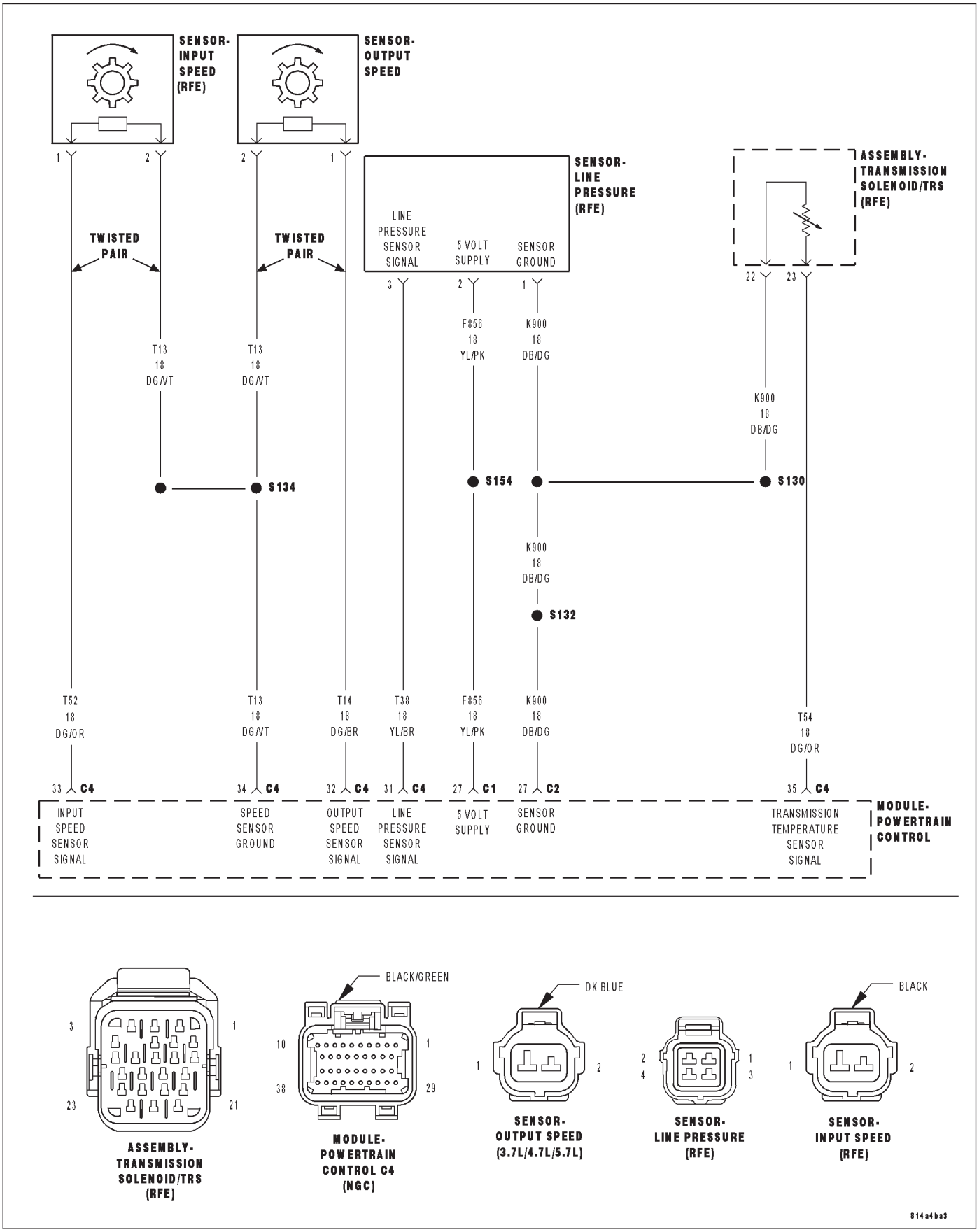

For a complete wiring diagram **Refer to Section 8W**.

- **When Monitored:**
  The transmission gear ratio is monitored continuously while the transmission is in gear.
- **Set Condition:**
  If there is an excessive change in input RPM in any gear. This DTC can take up to five minutes of problem identification before illuminating the MIL.

Possible Causes
(T52) INPUT SPEED SENSOR SIGNAL CIRCUIT OPEN
(T13) SPEED SENSOR GROUND CIRCUIT OPEN
(T52) INPUT SPEED SENSOR SIGNAL CIRCUIT SHORT TO GROUND
(T13) SPEED SENSOR GROUND CIRCUIT SHORT TO GROUND
(T52) INPUT SPEED SENSOR SIGNAL CIRCUIT SHORT TO VOLTAGE
(T13) SPEED SENSOR GROUND CIRCUIT SHORT TO VOLTAGE
INPUT SPEED SENSOR
POWERTRAIN CONTROL MODULE

Always perform the 45RFE/545RFE Pre-Diagnostic Troubleshooting Procedure before proceeding. (Refer to 21 - TRANSMISSION/TRANSAXLE/AUTOMATIC - 45RFE/545RFE - STANDARD PROCEDURE)

Theory of Operation

The transmission system uses two speed sensors, one to measure input RPM and one to measure output RPM. These inputs are essential for proper transmission operation. Therefore, the integrity of this data is verified through the following checks:

1) When in gear, if the gear ratio does not compare to a known gear ratio, the corresponding in-gear trouble code is set (DTCs P0731–36).

2) An excessive change in input or output speeds indicating signal intermittent which may result in the DTCs P0715 and/or P0720 to set.

3) If the common speed sensor ground circuit is lost, both sensor inputs will read the signal from the input speed sensor at idle in neutral. Since the input speed sensor reads 60 teeth from the input clutch hub and the output speed sensor reads 30 teeth from the park gear, the result is an apparent speed ratio of 1:2 and may cause the DTC P1794 to set when at a stop.

Diagnostic Test

1. CHECK TO SEE IF DTC P0715 IS CURRENT

Start the engine in park.

With the scan tool, monitor the Input Speed Sensor RPM.

Is the Input Speed Sensor RPM below 400 RPM?

Yes >> Go To 2

No >> Go To 9

2. INPUT SPEED SENSOR

Turn the ignition off to the lock position.

Remove the Ignition Switch Feed fuse from the TIPM.

CAUTION: Removal of the Ignition Switch Feed fuse from the TIPM will prevent the vehicle from being started in gear.

WARNING: The Ignition Switch Feed fuse must be removed from the TIPM. Failure to do so can result in personal injury or death.

Install the Transmission Simulator, Miller tool #8333.

Ignition on, engine not running.

With the Transmission Simulator, set the selector switch to 3000/1000 and the Input/Output switch to ON.

With the scan tool, monitor the Input and Output Speed Sensor RPM.

Does the Input speed read 3000 RPM and the Output speed read 1000 RPM ± 50 RPM?

Yes >> Replace the Input Speed Sensor per the Service Information.
Perform 45RFE/545RFE TRANSMISSION VERIFICATION TEST - VER 1. (Refer to 21 - TRANSMISSION/TRANSAXLE/AUTOMATIC - 45RFE/545RFE - STANDARD PROCEDURE)

No >> Go To 3

3. (T52) INPUT SPEED SENSOR SIGNAL CIRCUIT SHORT TO VOLTAGE

Turn the ignition off to the lock position.

Disconnect the PCM C4 harness connector and connect Miller tool #8815.

NOTE: Make sure to leave the Speed Sensor, Transmission Solenoid/TRS Assembly, and Line Pressure Sensor harness connectors disconnected.

CAUTION: Do not probe the PCM harness connectors. Probing the PCM harness connectors will damage the PCM terminals resulting in poor terminal to pin connection. Install Miller tool #8815 to perform diagnosis.

Ignition on, engine not running.

With the scan tool in TIPM, actuate the TCM output.

Measure the voltage of the (T52) Input Speed Sensor Signal circuit.

Is the voltage above 0.5 volts?

Yes >> Repair the (T52) Input Speed Sensor Signal circuit for a short to voltage.
Perform 45RFE/545RFE TRANSMISSION VERIFICATION TEST - VER 1. (Refer to 21 - TRANSMISSION/TRANSAXLE/AUTOMATIC - 45RFE/545RFE - STANDARD PROCEDURE)

No >> Go To 4

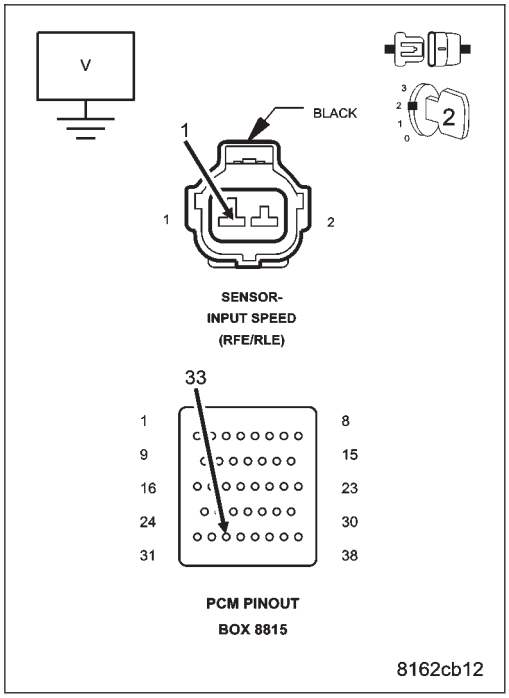

4. (T13) SPEED SENSOR GROUND CIRCUIT SHORT TO VOLTAGE

With the scan tool in TIPM, actuate the TCM output.

Measure the voltage of the (T13) Speed Sensor Ground circuit.

Is the voltage above 0.5 volts?

Yes >> Repair the (T13) Speed Sensor Ground circuit for a short to voltage.

Perform 45RFE/545RFE TRANSMISSION VERIFICATION TEST - VER 1. (Refer to 21 - TRANSMISSION/TRANSAXLE/AUTOMATIC - 45RFE/545RFE - STANDARD PROCEDURE)

No >> Go To 5

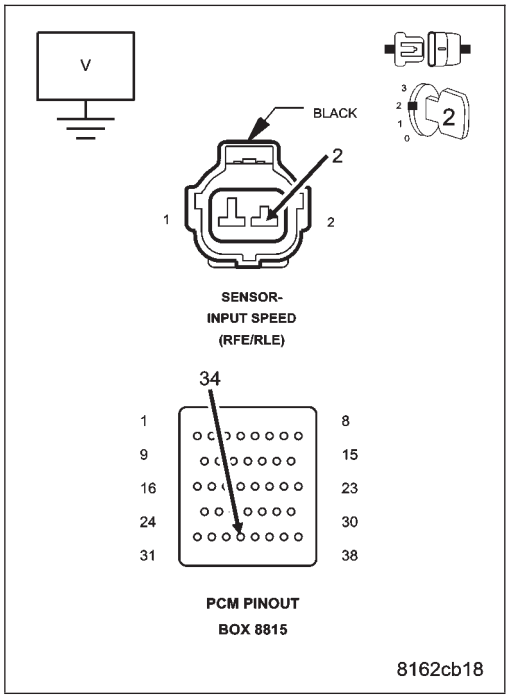

5. (T52) INPUT SPEED SENSOR SIGNAL CIRCUIT OPEN

With the scan tool in TIPM, stop the actuation the TCM output.

Turn the ignition off to the lock position.

Measure the resistance of the (T52) Input Speed Sensor Signal circuit between the Input Speed Sensor harness connector and the appropriate terminal of Miller tool #8815.

Is the resistance above 5.0 ohms?

Yes >> Repair the (T52) Input Speed Sensor Signal circuit for an open.

Perform 45RFE/545RFE TRANSMISSION VERIFICATION TEST - VER 1. (Refer to 21 - TRANSMISSION/TRANSAXLE/AUTOMATIC - 45RFE/545RFE - STANDARD PROCEDURE)

No >> Go To 6

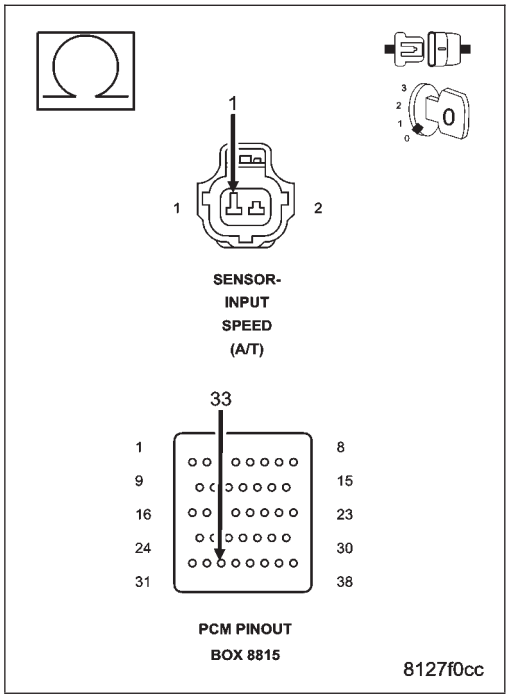

6. (T13) SPEED SENSOR GROUND CIRCUIT OPEN

Measure the resistance of the (T13) Speed Sensor Ground circuit between the Input Speed Sensor harness connector and the appropriate terminal of Miller tool #8815.

Is the resistance above 5.0 ohms?

Yes >> Repair the (T13) Speed Sensor Ground circuit for an open. Perform 45RFE/545RFE TRANSMISSION VERIFICATION TEST - VER 1. (Refer to 21 - TRANSMISSION/TRANSAXLE/AUTOMATIC - 45RFE/545RFE - STANDARD PROCEDURE)

No >> Go To 7

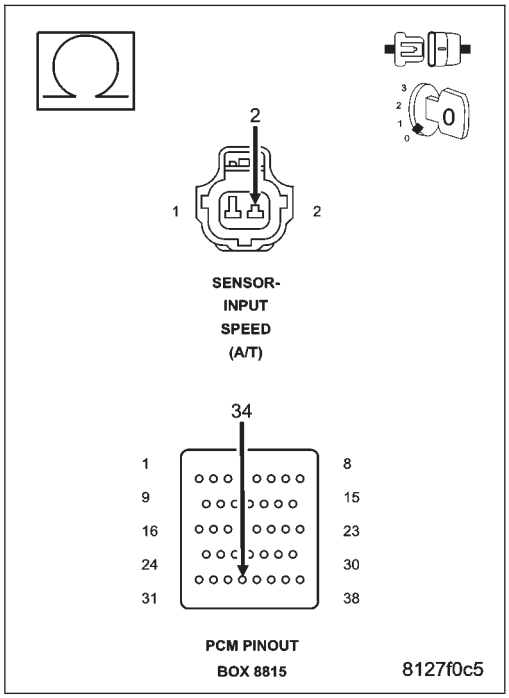

7. (T52) INPUT SPEED SENSOR SIGNAL CIRCUIT SHORT TO GROUND

Measure the resistance between ground and the Input Speed Sensor Signal circuit.

Is the resistance below 5.0 ohms?

Yes >> Repair the (T52) Input Speed Sensor Signal circuit for a short to ground.
Perform 45RFE/545RFE TRANSMISSION VERIFICATION TEST - VER 1. (Refer to 21 - TRANSMISSION/TRANSAXLE/AUTOMATIC - 45RFE/545RFE - STANDARD PROCEDURE)

No >> Go To 8

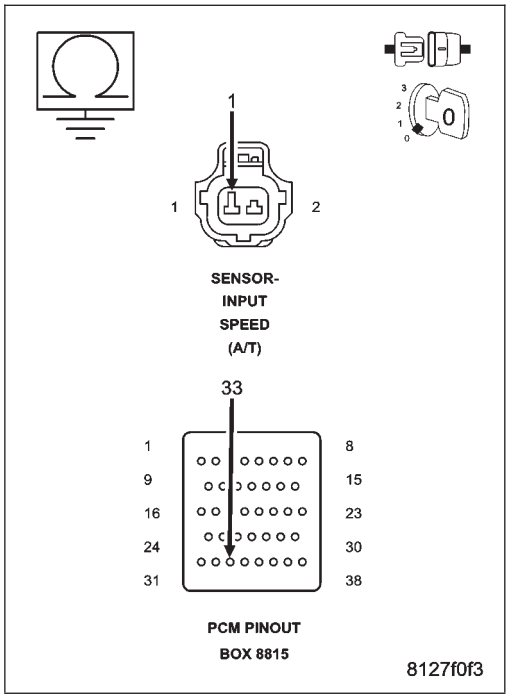

8. (T13) SPEED SENSOR GROUND CIRCUIT SHORT TO GROUND

Measure the resistance between ground and the (T13) Speed Sensor Ground circuit.

Is the resistance below 5.0 ohms?

Yes >> Repair the (T13) Speed Sensor Ground circuit for a short to ground.

Perform 45RFE/545RFE TRANSMISSION VERIFICATION TEST - VER 1. (Refer to 21 - TRANSMISSION/TRANSAXLE/AUTOMATIC - 45RFE/545RFE - STANDARD PROCEDURE)

No >> Using the schematics as a guide, check the Powertrain Control Module (PCM) terminals for corrosion, damage, or terminal push out. Pay particular attention to all power and ground circuits. If no problems are found, replace the PCM per the Service Information. With the scan tool, perform QUICK LEARN.

Perform 45RFE/545RFE TRANSMISSION VERIFICATION TEST - VER 1. (Refer to 21 - TRANSMISSION/TRANSAXLE/AUTOMATIC - 45RFE/545RFE - STANDARD PROCEDURE)

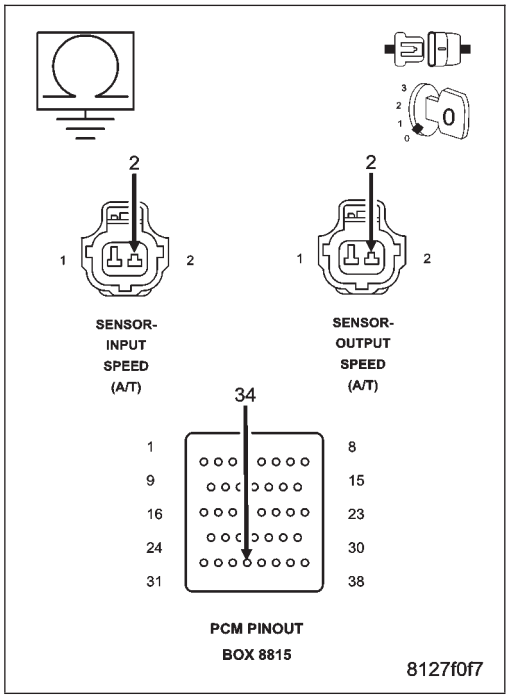

9. INTERMITTENT WIRING AND CONNECTORS

The conditions necessary to set this DTC are not present at this time.

Using the schematics as a guide, inspect the wiring and connectors specific to this circuit.

Wiggle the wires while checking for shorted and open circuits.

With the scan tool, check the DTC EVENT DATA to help identify the conditions in which the DTC was set.

Were there any problems found?

Yes >> Repair as necessary.

Perform 45RFE/545RFE TRANSMISSION VERIFICATION TEST - VER 1. (Refer to 21 - TRANSMISSION/TRANSAXLE/AUTOMATIC - 45RFE/545RFE - STANDARD PROCEDURE)

No >> Test Complete.

P0720-OUTPUT SPEED SENSOR CIRCUIT

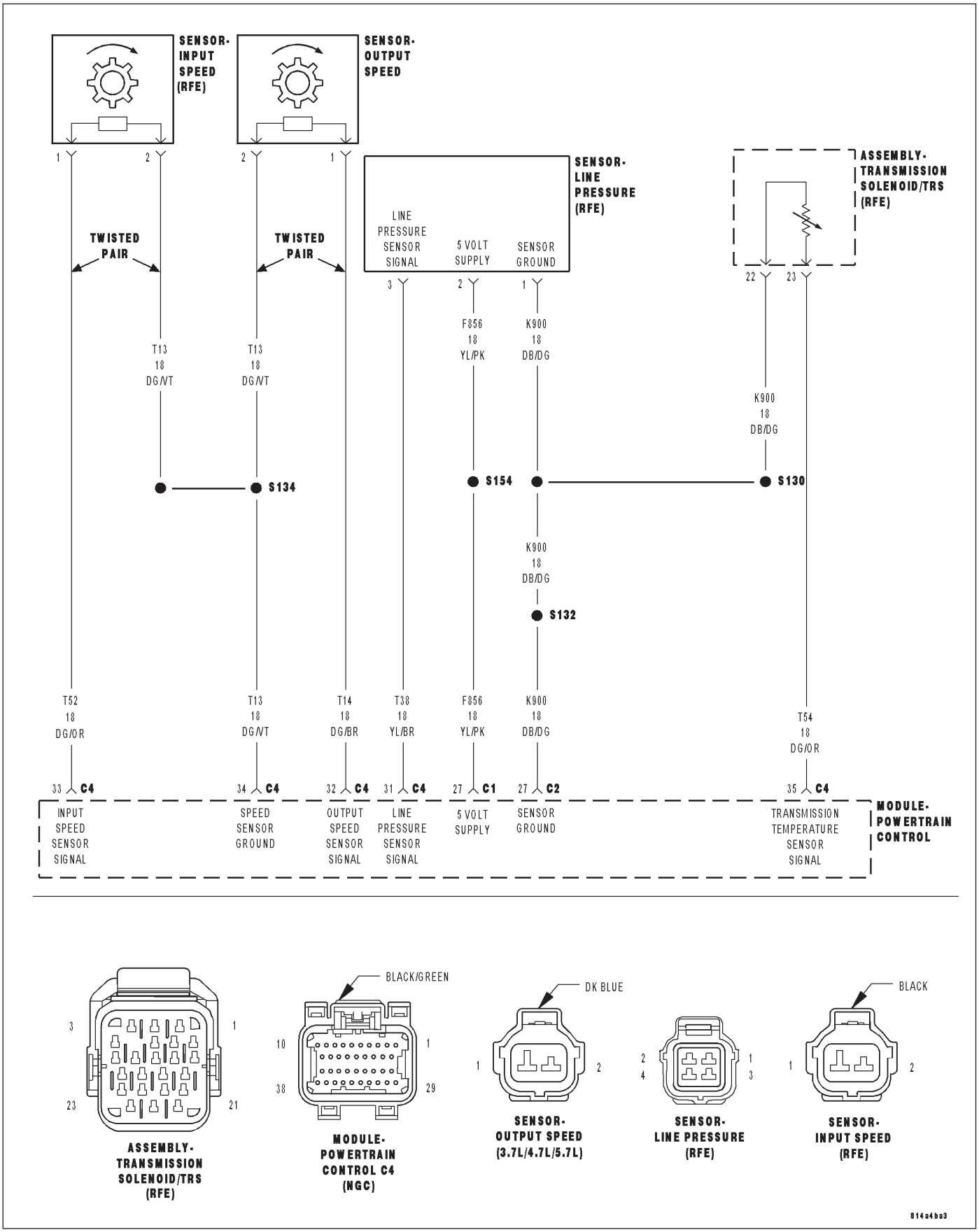

For a complete wiring diagram **Refer to Section 8W**.

- **When Monitored:**
  The transmission gear ratio is monitored continuously while the transmission is in gear.
- **Set Condition:**
  If there is an excessive change in output RPM in any gear. This DTC can take up to five minutes of problem identification before illuminating the MIL.

Possible Causes
(T14) OUTPUT SPEED SENSOR SIGNAL CIRCUIT OPEN
(T13) SPEED SENSOR GROUND CIRCUIT OPEN
(T14) OUTPUT SPEED SENSOR SIGNAL CIRCUIT SHORT TO GROUND
(T13) SPEED SENSOR GROUND CIRCUIT SHORT TO GROUND
(T14) OUTPUT SPEED SENSOR SIGNAL CIRCUIT SHORT TO VOLTAGE
(T13) SPEED SENSOR GROUND CIRCUIT SHORT TO VOLTAGE
OUTPUT SPEED SENSOR
POWERTRAIN CONTROL MODULE

Always perform the 45RFE/545RFE Pre-Diagnostic Troubleshooting Procedure before proceeding. (Refer to 21 - TRANSMISSION/TRANSAXLE/AUTOMATIC - 45RFE/545RFE - STANDARD PROCEDURE)

Theory of Operation

The transmission system uses two speed sensors, one to measure input RPM and one to measure output RPM. These inputs are essential for proper transmission operation. Therefore, the integrity of this data is verified through the following checks:

1) When in gear, if the gear ratio does not compare to a known gear ratio, the corresponding in-gear trouble code is set (codes P0731 through P0736).

2) An excessive change in input or output speeds indicating signal intermittent will result in codes P0715 and/or P0720 being set.

3) If the common speed sensor ground circuit is lost, both sensor inputs will read the signal from the input speed sensor at idle in neutral. Since the input speed sensor has 60 teeth and the output speed sensor has 30 teeth, this results in a an apparent speed ratio of 1:2 and may cause the DTC P1794 to set.

Diagnostic Test

1. CHECK TO SEE IF DTC P0720 IS CURRENT

Turn the ignition off to the lock position.

CAUTION: Properly support the vehicle and raise all drive wheels off the ground.
Release the parking brake.

Start the engine in park.

Place the transmission gear selector in drive, release foot from brake.

WARNING: Be sure to keep hands and feet clear of rotation wheels.
With the scan tool, monitor the Output Speed Sensor RPM.

Is the Output Speed Sensor RPM below 100 RPM?

Yes >> Go To 2

No >> Go To 9

2. OUTPUT SPEED SENSOR

Turn the ignition off to the lock position.

Remove the Ignition Switch Feed fuse from the TIPM.

CAUTION: Removal of the Ignition Switch Feed fuse from the TIPM will prevent the vehicle from being started in gear.

WARNING: The Ignition Switch Feed fuse must be removed from the TIPM. Failure to do so can result in personal injury or death.

Install the Transmission Simulator, Miller tool #8333.

Ignition on, engine not running.

With the Transmission Simulator, set the selector switch to 3000/1000 and the Input/Output switch to ON.

With the scan tool, monitor the Input and Output Speed Sensor RPM

Does the Input Speed read 3000 RPM and the Output Speed read 1000 RPM, ± 50 RPM?

Yes >> Replace the Output Speed Sensor per the Service Information.
Perform 45RFE/545RFE TRANSMISSION VERIFICATION TEST - VER 1. (Refer to 21 - TRANSMISSION/TRANSAXLE/AUTOMATIC - 45RFE/545RFE - STANDARD PROCEDURE)

No >> Go To 3

3. CHECK THE (T14) OUTPUT SPEED SENSOR SIGNAL CIRCUIT FOR AN OPEN

Turn the ignition off to the lock position.

Disconnect the Transmission Simulator, Miller tool #8333.

Disconnect the PCM harness connectors and connect Miller special tool #8815.

CAUTION: Do not probe the PCM harness connectors. Probing the PCM harness connectors will damage the PCM terminals resulting in poor terminal to pin connection. Install Miller special tool #8815 to perform diagnosis.

Measure the resistance of the (T14) Output Speed Sensor Signal circuit from the Output Speed Sensor harness connector to the appropriate terminal of Miller tool #8815.

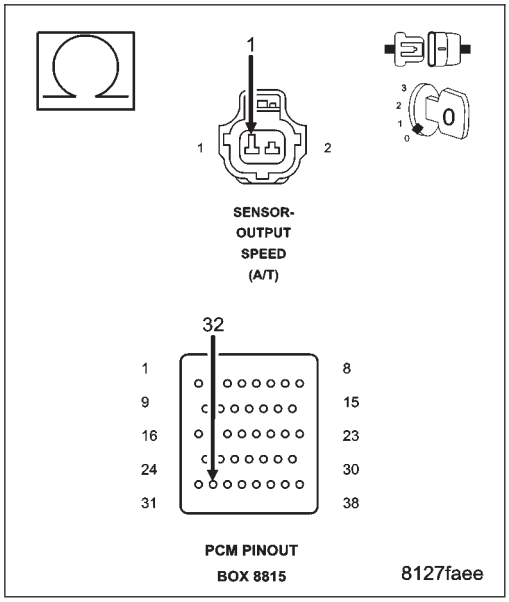

Is the resistance above 5.0 ohms?

Yes >> Repair the (T14) Output Speed Sensor Signal circuit for an open.
Perform 45RFE/545RFE TRANSMISSION VERIFICATION TEST - VER 1. (Refer to 21 - TRANSMISSION/TRANSAXLE/AUTOMATIC - 45RFE/545RFE - STANDARD PROCEDURE)

No >> Go To 4

4. CHECK THE (T13) SPEED SENSOR GROUND CIRCUIT FOR AN OPEN

Measure the resistance of the (T13) Speed Sensor Ground circuit from the Output Speed Sensor harness connector to the appropriate terminal in the Miller tool #8815.

Is the resistance above 5.0 ohms?

Yes >> Repair the (T13) Speed Sensor Ground circuit for an open. Perform 45RFE/545RFE TRANSMISSION VERIFICATION TEST - VER 1. (Refer to 21 - TRANSMISSION/TRANSAXLE/AUTOMATIC - 45RFE/545RFE - STANDARD PROCEDURE)

No >> Go To 5

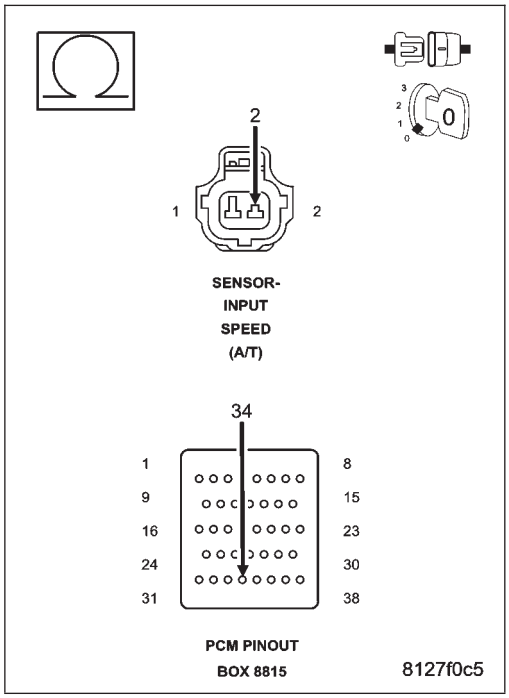

5. CHECK THE (T14) OUTPUT SPEED SENSOR SIGNAL CIRCUIT FOR A SHORT TO GROUND

Measure the resistance between ground and the (T14) Output Speed Sensor Signal circuit.

Is the resistance below 5.0 ohms?

Yes >> Repair the (T14) Output Speed Sensor Signal circuit for a short to ground.

Perform 45RFE/545RFE TRANSMISSION VERIFICATION TEST - VER 1. (Refer to 21 - TRANSMISSION/TRANSAXLE/AUTOMATIC - 45RFE/545RFE - STANDARD PROCEDURE)

No >> Go To 6

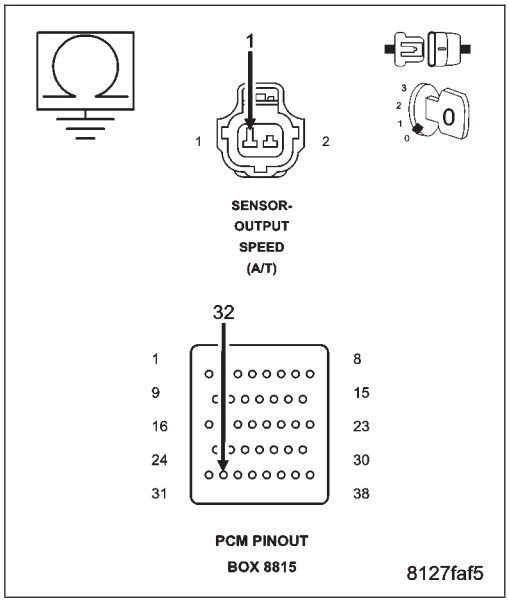

6. CHECK THE (T13) SPEED SENSOR GROUND CIRCUIT FOR A SHORT TO GROUND

Measure the resistance between ground and the (T13) Speed Sensor Ground circuit.

Is the resistance below 5.0 ohms?

Yes >> Repair the (T13) Speed Sensor Ground circuit for a short to ground.

Perform 45RFE/545RFE TRANSMISSION VERIFICATION TEST - VER 1. (Refer to 21 - TRANSMISSION/TRANSAXLE/AUTOMATIC - 45RFE/545RFE - STANDARD PROCEDURE)

No >> Go To 7

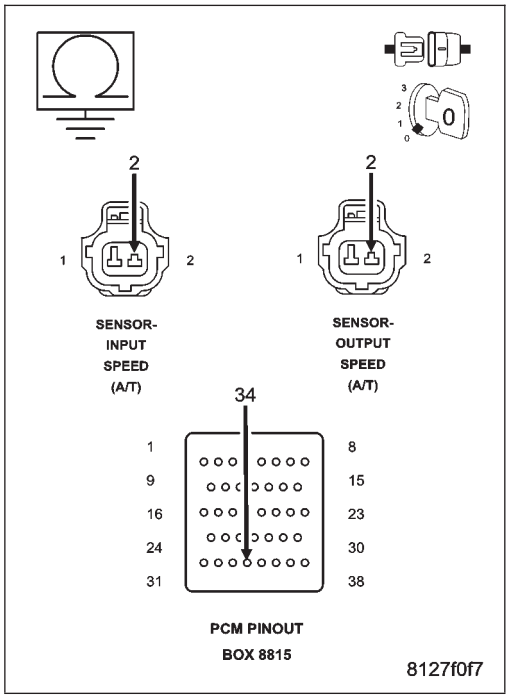

7. CHECK THE (T14) OUTPUT SPEED SENSOR SIGNAL CIRCUIT SHORT TO VOLTAGE

Ignition on, engine not running.

With the scan tool in TIPM, actuate the TCM output.

Measure the voltage of the (T14) Output Speed Sensor Signal circuit.

Is the voltage above 0.5 volts?

Yes >> Repair the (T14) Output Speed Sensor Signal circuit for a short to voltage.

Perform 45RFE/545RFE TRANSMISSION VERIFICATION TEST - VER 1. (Refer to 21 - TRANSMISSION/TRANSAXLE/AUTOMATIC - 45RFE/545RFE - STANDARD PROCEDURE)

No >> Go To 8

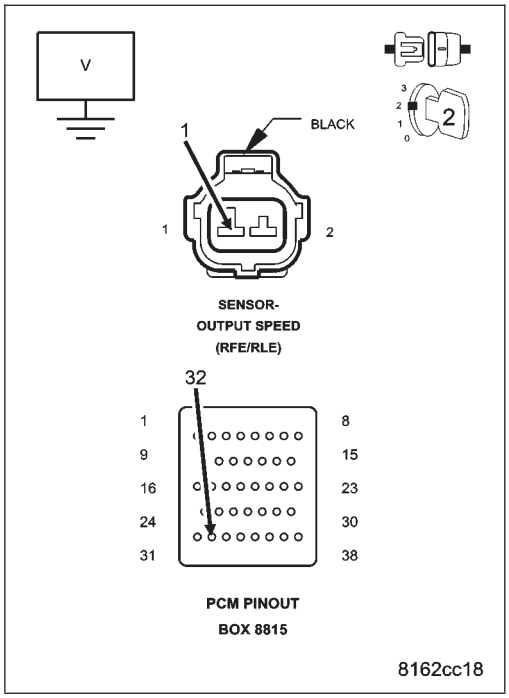

8. CHECK THE (T13) SPEED SENSOR GROUND CIRCUIT FOR A SHORT TO VOLTAGE

With the scan tool in TIPM, actuate the TCM output.

Measure the voltage of the (T13) Speed Sensor Ground circuit.

Is the voltage above 0.5 volts?

Yes >> Repair the (T13) Speed Sensor Ground circuit for a short to voltage.

Perform 45RFE/545RFE TRANSMISSION VERIFICATION TEST - VER 1. (Refer to 21 - TRANSMISSION/TRANSAXLE/AUTOMATIC - 45RFE/545RFE - STANDARD PROCEDURE)

No >> Using the schematics as a guide, check the Powertrain Control Module (PCM) terminals for corrosion, damage, or terminal push out. Pay particular attention to all power and ground circuits. If no problems are found, replace the PCM per the Service Information. With the scan tool, perform QUICK LEARN.

Perform 45RFE/545RFE TRANSMISSION VERIFICATION TEST - VER 1. (Refer to 21 - TRANSMISSION/TRANSAXLE/AUTOMATIC - 45RFE/545RFE - STANDARD PROCEDURE)

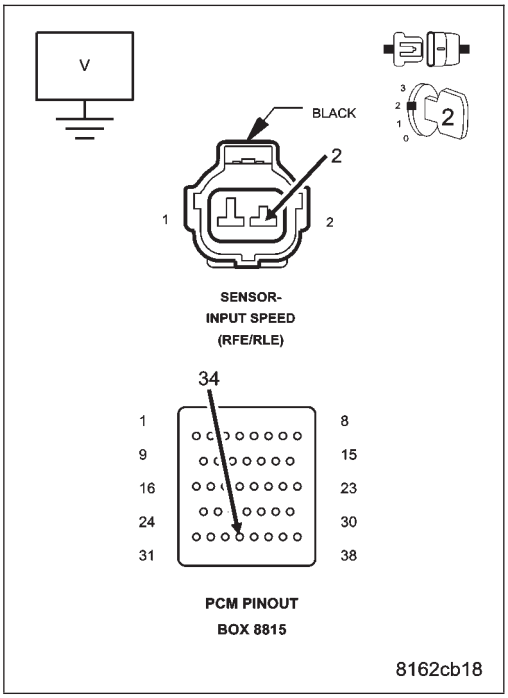

9. INTERMITTENT WIRING AND CONNECTORS

The conditions necessary to set this DTC are not present at this time.

Using the schematics as a guide, inspect the wiring and connectors specific to this circuit.

Wiggle the wires while checking for shorted and open circuits.

With the scan tool, check the DTC EVENT DATA to help identify the conditions in which the DTC was set.

Were there any problems found?

Yes >> Repair as necessary.

Perform 45RFE/545RFE TRANSMISSION VERIFICATION TEST - VER 1. (Refer to 21 - TRANSMISSION/TRANSAXLE/AUTOMATIC - 45RFE/545RFE - STANDARD PROCEDURE)

No >> Test Complete.

P0725-ENGINE SPEED SENSOR CIRCUIT

For a complete wiring diagram **Refer to Section 8W**.

- **When Monitored:**
  Continuously every 7 msec with the ignition on and engine running.
- **Set Condition:**
  This DTC will set when the calculated engine speed is less than 390 RPM with the engine running, or greater than 8000 RPM, for the period of 2.0 seconds. The PCM will place the Transmission in Limp-in when this DTC is set. **Note: This is not a Transmission Input Speed Sensor DTC.**

Possible Causes
RELATED ENGINE DTC'S PRESENT
CRANK POSITION SENSOR OR WIRING
POWERTRAIN CONTROL MODULE

Always perform the 45RFE/545RFE Pre-Diagnostic Troubleshooting Procedure before proceeding. (Refer to 21 - TRANSMISSION/TRANSAXLE/AUTOMATIC - 45RFE/545RFE - STANDARD PROCEDURE)

Theory of Operation

The Transmission Control System calculates the engine RPM by directly reading the engine crank position sensor. It compares the calculated value to the engine speed sensor signal transmitted from the Engine Control System over the controllers internal BUS. The calculated engine RPM is also compared to a minimum and a maximum value. **Note: Due to the integration of the Powertrain Control Module (PCM) and Transmission Control Module (TCM), BUS communication between the modules is internal and unserviceable.**

Diagnostic Test

1. CHECK FOR RELATED ENGINE DTCS

NOTE: This is not a Transmission Input Speed Sensor DTC.

Ignition on, engine not running.

With the scan tool, read all Engine DTCs. This includes any active or stored or one trip DTCs.

Are there any engine RPM related DTCs present?

Yes >> Refer to the Powertrain category and perform the appropriate symptom.
Perform 45RFE/545RFE TRANSMISSION VERIFICATION TEST - VER 1. (Refer to 21 - TRANSMISSION/TRANSAXLE/AUTOMATIC - 45RFE/545RFE - STANDARD PROCEDURE)

No >> Go To 2

2. CHECK IF DTC IS CURRENT

Ignition on, engine not running.

With a scan tool, read and record all DTC EVENT DATA.

With the scan tool, erase all active and stored transmission DTCs. (Note: it may be necessary to perform a battery disconnect with the scan tool to clear DTC EVENT DATA.)

Using the DTC EVENT DATA, duplicate the conditions in which the original DTC set.

With the scan tool, read transmission and engine DTCs.

NOTE: Refer to all engine DTCs first in the following question.

Pick the answer below that best describes your findings, (this includes one trip failures).

Transmission DTC P0725 set
Using the schematics as a guide, check the Powertrain Control Module (PCM) terminals for corrosion, damage, or terminal push out. Also check the Crank Position sensor and wiring. Pay particular attention

to all power and ground circuits. If no problems are found, replace the PCM per the Service Information. With the scan tool, perform QUICK LEARN.

Perform 45RFE/545RFE TRANSMISSION VERIFICATION TEST - VER 1. (Refer to 21 - TRANSMISSION/TRANSAXLE/AUTOMATIC - 45RFE/545RFE - STANDARD PROCEDURE)

Engine DTC set

Refer to the Driveability category and perform the appropriate symptom.

Perform 45RFE/545RFE TRANSMISSION VERIFICATION TEST - VER 1. (Refer to 21 - TRANSMISSION/TRANSAXLE/AUTOMATIC - 45RFE/545RFE - STANDARD PROCEDURE)

No DTC set at all

Go To 3

3. CHECK WIRING AND CONNECTORS

The conditions necessary to set this DTC are not present at this time.

Using the schematics as a guide, inspect the wiring and connectors specific to this circuit.

Wiggle the wires while checking for shorted and open circuits.

With the scan tool, check the DTC EVENT DATA to help identify the conditions in which the DTC was set.

Were there any problems found?

Yes >> Repair as necessary.

Perform 45RFE/545RFE TRANSMISSION VERIFICATION TEST - VER 1. (Refer to 21 - TRANSMISSION/TRANSAXLE/AUTOMATIC - 45RFE/545RFE - STANDARD PROCEDURE)

No >> Test Complete.

P0731-GEAR RATIO ERROR IN 1ST

For a complete wiring diagram **Refer to Section 8W**

- **When Monitored:**
  Continuously with the ignition on, engine running, with the transmission in gear.
- **Set Condition:**
  If the ratio of the Input RPM to the Output RPM does not match the current gear ratio. This DTC can take up to five minutes of problem identification before illuminating the MIL

Possible Causes
CUT UD PISTON SEAL
LOW FLUID LEVEL
CRACKED OR MIS-INSTALLED PRIMARY OIL FILTER OR SEAL
STUCK OR STICKING MAIN REGULATOR VALVE
FAILED OVERRUNNING CLUTCH
CUT UD ACCUMULATOR SEAL RING
BROKEN UD ACCUMULATOR PISTON
BROKEN REACTION SHAFT SUPPORT SEAL RING
LOW LINE PRESSURE
BROKEN / MISSING MAIN VALVE BODY BLEED ORIFICE
BROKEN / MISSING DRIBBLER ORIFICE ASSEMBLY IN REACTION SHAFT SUPPORT
POOR MACHINING ON PUMP VALVE BODY FACE
INPUT SPEED SENSOR AND RELATED WIRING
TRANSMISSION SOLENOID/TRS ASSEMBLY
POWERTRAIN CONTROL MODULE

Always perform the 45RFE/545RFE Pre-Diagnostic Troubleshooting procedure before proceeding. (Refer to 21 - TRANSMISSION/TRANSAXLE/AUTOMATIC - 45RFE/545RFE - STANDARD PROCEDURE)

Theory of Operation

The transmission system uses two speed sensors, one to measure input RPM and one to measure output RPM. These inputs are essential for proper transmission operation. Therefore, the integrity of this data is verified through the following checks:

1) Once in a particular gear, if the gear ratio varies from the correct gear ratio, the corresponding in-gear trouble code is set (DTCs P0731–36).

2) An excessive change in input or output speeds indicating signal intermittent may result in the DTCs P0715 and/or P0720 being set.

3) If the common speed sensor ground circuit is lost, both sensor inputs will read the pulses from the input speed sensor when at a stop in neutral. Since the input speed sensor reads 60 teeth from the input clutch hub and the output speed sensor reads 30 teeth from the park gear, the result is an apparent speed ratio of 1:2 and may cause the DTC P1794 to set.

Diagnostic Test

1. CHECK FOR RELATED DTCS

With the scan tool, check for other transmission DTCs.

If any of these DTCs are present, perform their respective tests first.

Are there any Transmission; solenoid, line pressure, speed sensor, and/or loss of prime DTC's present?

Yes >> Refer to the Transmission category and perform the appropriate symptom. If any of these DTCs are present, they may cause a Speed Ratio Error. Perform the test for P0944 first if it is present.

No >> Go To 2

2. CHECK IF DTC P0731 IS CURRENT

With the scan tool, perform the 1st Gear Clutch Test. Follow the instructions on the scan tool.

Increase the throttle angle or TPS Degree to 30° for no more than a few seconds.

CAUTION: Do not overheat the transmission.

Did the Clutch Test pass, Input Speed remain at zero?

Yes >> Go To 3

No >> Go To 4

3. CHECK FOR INTERMITTENT OPERATION

The conditions to set this DTC are not currently present.

With the scan tool, check the DTC EVENT DATA to help identify the conditions in which the DTC was set.

- If the DTC Event Data shows fault P0731 was set in Park, Reverse, or Neutral, replace the Powertrain Control Module.
- If the DTC Event Data shows fault P0731 set with input RPM = zero, check the input speed sensor and related wiring.
- If the DTC Event Data shows fault P0731 set with line pressure significantly below desired line pressure, check for the cause of low line pressure (i.e., oil level, mis-installed or damaged primary filter or filter seal, sticking main regulator valve in pump, etc.).
- If the DTC Event Data shows fault P0731 set with the UD pressure switch open (but line pressure matches Desired Line Pressure), air check the UD hydraulic clutch circuit for leakage per the Service Information. If the UD hydraulic clutch circuit is OK, replace the solenoid/TRS assembly.

Check the gearshift linkage adjustment.

Intermittent Gear Ratio DTCs can be set by problems in the Input and Output Speed Sensor circuits and/or Speed Sensor Ground circuit.

Remove the Ignition Switch Feed fuse from the TIPM.

CAUTION: Removal of the Ignition Switch Feed fuse from the TIPM will prevent the vehicle from being started in gear.

WARNING: The Ignition Switch Feed fuse must be removed from the TIPM. Failure to do so can result in personal injury or death.

Install the Transmission Simulator, Miller tool #8333.

Wiggle wiring and connectors while checking for intermittent operation with the Transmission Simulator.

Gear ratio DTCs can also be set under extreme temperature conditions.

Verify if the problem is only experienced under extreme hot or cold conditions.

Were there any problems found.

Yes >> Repair as necessary.
Perform 45RFE/545RFE TRANSMISSION VERIFICATION TEST - VER 1. (Refer to 21 - TRANSMISSION/TRANSAXLE/AUTOMATIC - 45RFE/545RFE - STANDARD PROCEDURE)

No >> Test Complete.

4. CHECK INTERNAL TRANSMISSION

Repair internal transmission as necessary. Refer to the Service Information.

If there were any line pressure DTCs present along with this DTC, make sure to inspect the: Primary oil filter and seal, Transmission Oil Pump, and the Main regulator valve per the Service Information.

If DTCs P0876 and/or P0875 were present in addition to the P0731, replace the Transmission Solenoid/TRS Assembly in addition to necessary internal repairs.

Pay particular attention to the following list of possible causes when repairing the transmission:

- Cut UD piston seal
- Failed overrunning clutch
- Cut UD accumulator seal ring
- Broken UD accumulator piston
- Low line pressure
- Broken/missing main valve body bleed orifice
- Broken/missing dribbler orifice assembly in reaction shaft support
- Poor machining on pump valve body face
- Transmission Solenoid/TRS Assembly

View repair

Repair

Repair internal transmission per the Service Information.

Perform 45RFE/545RFE TRANSMISSION VERIFICATION TEST - VER 1. (Refer to 21 - TRANSMISSION/TRANSAXLE/AUTOMATIC - 45RFE/545RFE - STANDARD PROCEDURE)

P0732-GEAR RATIO ERROR IN 2ND

For a complete wiring diagram **Refer to Section 8W**

- **When Monitored:**
  Continuously with the ignition on, engine running, with the transmission in gear.
- **Set Condition:**
  If the ratio of the Input RPM to the Output RPM does not match the current gear ratio. This DTC can take up to five minutes of problem identification before illuminating the MIL

Possible Causes
RELATED DTC'S PRESENT
INPUT SPEED SENSOR OR WIRING
LOW FLUID LEVEL
CRACKED OR MIS-INSTALLED PRIMARY OIL FILTER OR SEAL
WORN SOLENOID SWITCH VALVE OR PLUGS
STUCK OR STICKING MAIN REGULATOR VALVE
BURNED UD OR 2C CLUTCH
CUT 2C OR UD PISTON SEAL
BROKEN 2C PISTON CASTING
BROKEN OR MISSING 2C BLEED ORIFICE
BROKEN OR MISSING UD BLEED ORIFICE
CUT 2C OR UD ACCUMULATOR PISTON SEAL
CRACKED 2C OR UD ACCUMULATOR PISTON
CUT OR MISSING #5 OR #7 CHECK BALL
TRANSMISSION SOLENOID/TRS ASSEMBLY
BROKEN WELD - REACTION CARRIER TO REVERSE SUN GEAR
MISSING TEETH ON INPUT CLUTCH HUB TONE WHEEL

Always perform the 45RFE/545RFE Pre-Diagnostic Troubleshooting Procedure before proceeding. (Refer to 21 - TRANSMISSION/TRANSAXLE/AUTOMATIC - 45RFE/545RFE - STANDARD PROCEDURE)

Theory of Operation

The transmission system uses two speed sensors, one to measure input RPM and one to measure output RPM. These inputs are essential for proper transmission operation. Therefore, the integrity of this data is verified through the following checks:

1) Once in a particular gear, if the gear ratio varies from the correct gear ratio, the corresponding in-gear trouble code is set (DTCs P0731-36).

2) An excessive change in input or output speeds indicating signal intermittent may result in the DTCs P0715 and/or P0720 being set.

3) If the common speed sensor ground circuit is lost, both sensor inputs will read the pulses from the input speed sensor when at a stop in neutral. Since the input speed sensor reads 60 teeth from the input clutch hub and the output speed sensor reads 30 teeth from the park gear, the result is an apparent speed ratio of 1:2 and may cause the DTC P1794 to set.

Diagnostic Test

1. CHECK FOR RELATED DTCS

With the scan tool, check for other transmission DTCs.

Are there any Transmission: solenoid, line pressure, speed sensor, and/or loss of prime DTCs present?

Yes >> Refer to appropriate symptom in the Transmission category. Perform the test for P0944-LOSS OF PRIME first if it is present.

No >> Go To 2

2. CHECK IF DTC IS CURRENT

With the scan tool, read and record the DTC EVENT DATA.

NOTE: Make sure to record all DTC EVENT DATA stored in the scan tool for future reference in this test procedure.

Does the DTC EVENT DATA display information for the DTC P0732?

Yes >> Go To 4

No >> Go To 3

3. CHECK DTC EVENT DATA

In the DTC EVENT DATA, identify the DTC that was recorded earlier.

Does the DTC EVENT DATA display information for the DTC P1790, with target gear = 2nd, or with both 2C and UD clutches applying?

Yes >> Go To 4

No >> Go To 7

4. CHECK RPM IN DTC EVENT DATA

Refer to the DTC EVENT DATA recorded earlier.

Does the Input RPM read zero?

Yes >> Check the input speed sensor and wiring. Refer to test P0715 and diagnose as if the DTC is current.

No >> Go To 5

5. CHECK LINE PRESSURE READING

Refer to the DTC EVENT DATA recorded earlier.

Is the line pressure reading more than 10 psi below the desired line pressure?

Yes >> Go To 6

No >> Go To 7

6. CHECK TRANSMISSION OIL FILTER

Turn the ignition off to the lock position.

Remove and inspect the Transmission Oil Pan for excessive debris per the Service Information.

Remove and inspect the Primary Oil Filter per the Service Information.

NOTE: Make sure the Primary Transmission Oil Filter and seal are properly installed and are not cracked or split.

Does the Oil Pan contain excessive debris and/or is the Primary Oil Filter cracked, plugged or mis-in-

stalled?

Yes >> Repair the plugged, cracked, or split Primary Transmission Oil Filter and/or seal. If excessive clutch debris is present, check the clutches for damage. Refer to the Service Information for the proper hydraulic clutch repair procedure.

Perform 45RFE/545RFE TRANSMISSION VERIFICATION TEST - VER 1. (Refer to 21 - TRANSMISSION/TRANSAXLE/AUTOMATIC - 45RFE/545RFE - STANDARD PROCEDURE)

No >> Remove the Transmission Oil Pump per the Service Information. Check the main Regulator Valve for sticking in its bore, scoring, and/or damage and clean and repair as necessary. If no problem is found, replace the Transmission Solenoid/TRS Assembly.

Perform 45RFE/545RFE TRANSMISSION VERIFICATION TEST - VER 1. (Refer to 21 - TRANSMISSION/TRANSAXLE/AUTOMATIC - 45RFE/545RFE - STANDARD PROCEDURE)

7. CHECK IF THE DTC P0732 IS CURRENT

With the scan tool, perform the 2nd Gear Clutch Test. Follow the instructions on the scan tool.

Increase the throttle angle, TPS Degree, to 30° for no more than a few seconds.

CAUTION: Do not overheat the transmission.

NOTE: If the 2C clutch is faulty, the overrunning clutch will hold and the slip test will pass. The 2nd gear clutch test will not detect a faulty 2C clutch. However, it will detect a faulty UD clutch.

Did the clutch test pass, did the Input Speed remain at zero?

Yes >> Go To 8

No >> Go To 10

8. CHECK FOR INTERMITTENT OPERATION

Check the Shifter adjustment per the Service Information.

Intermittent gear ratio DTCs can be set by problems in the Input and Output Speed Sensor circuits and/or Speed Sensor Ground circuit.

Check the Speed Sensor wiring and connectors for good connection, then perform a wiggle test using the Transmission Simulator, Miller tool #8333.

Were there any problems found?

Yes >> Repair as necessary.

Perform 45RFE/545RFE TRANSMISSION VERIFICATION TEST - VER 1. (Refer to 21 - TRANSMISSION/TRANSAXLE/AUTOMATIC - 45RFE/545RFE - STANDARD PROCEDURE)

No >> Go To 9

9. CHECK FOR SLIPPAGE

With the scan tool, erase Transmission DTCs.

Road test the vehicle.

Is there an obvious slippage noticed in 2nd gear, or runaway on the 1–2 shift?

Yes >> Go To 12

No >> Go To 15

10. CHECK THE UD HYDRAULIC CLUTCH CIRCUIT

Remove Transmission Oil Pan and check for excessive debris.

Remove the Valve Body and air check the UD hydraulic clutch circuit (in the case) per the Service Information.

NOTE: The UD clutch passage contains a small bleed orifice, a small amount of air leakage is normal.

Were there any problems found, excessive debris and/or excessive air leakage in the UD clutch hydraulic circuit?

Yes >> Repair as necessary. Check the UD clutch piston seals, reaction shaft support seal rings and the dribbler assembly, and the flatness of the pump valve body and pump housing faces. Check main regulator valve for sticking in the bore.

Perform 45RFE/545RFE TRANSMISSION VERIFICATION TEST - VER 1. (Refer to 21 - TRANSMISSION/TRANSAXLE/AUTOMATIC - 45RFE/545RFE - STANDARD PROCEDURE)

No >> Go To 11

11. CHECK THE UD ACCUMULATOR PISTON

Check the UD bleed orifice, accumulator piston, and accumulator piston seal in the main valve body.

Were there any problems found?

Yes >> Repair as necessary. Refer to the Service Information for proper repair procedures.

Perform 45RFE/545RFE TRANSMISSION VERIFICATION TEST - VER 1. (Refer to 21 - TRANSMISSION/TRANSAXLE/AUTOMATIC - 45RFE/545RFE - STANDARD PROCEDURE)

No >> Replace Transmission Solenoid/TRS Assembly per the Service Information. (Refer to 21 - TRANSMISSION/TRANSAXLE/AUTOMATIC - 45RFE/545RFE/TRANS SOLENOID/TRS ASSY - REMOVAL)

Perform 45RFE/545RFE TRANSMISSION VERIFICATION TEST - VER 1. (Refer to 21 - TRANSMISSION/TRANSAXLE/AUTOMATIC - 45RFE/545RFE - STANDARD PROCEDURE)

12. CHECK FOR EXCESSIVE DEBRIS

Remove the Transmission Oil Pan and check for excessive debris.

If grey sludge is present, check for a improperly assembled 2C clutch with the thick reaction plate not against the case.

Remove the valve body and air check the 2C hydraulic clutch circuit (in the 2C/4C clutch retainer) per the Service Information.

NOTE: The 2C clutch passage contains a small bleed orifice, a small amount of air leakage is normal.

Were there any problems found, excessive debris, improperly assembled 2C clutch and/or excessive air leakage in the 2C hydraulic clutch circuit?

Yes >> Repair as necessary. Refer to the Service Information for proper repair procedures. Note: Check the 2C piston seals and bleed orifice.

Perform 45RFE/545RFE TRANSMISSION VERIFICATION TEST - VER 1. (Refer to 21 - TRANSMISSION/TRANSAXLE/AUTOMATIC - 45RFE/545RFE - STANDARD PROCEDURE)

No >> Go To 13

13. CHECK THE 2C ACCUMULATOR

Check the 2C Accumulator piston for cracks or a cut seal.

Check for a cut or missing #7 or #5 check ball.

Check the Solenoid Switch Valve and its plugs for sticking in its bore or excessive wear.

Were there any problems found

Yes >> Repair as necessary. Refer to the Service Information for proper repair procedures.

Perform 45RFE/545RFE TRANSMISSION VERIFICATION TEST - VER 1. (Refer to 21 - TRANSMISSION/TRANSAXLE/AUTOMATIC - 45RFE/545RFE - STANDARD PROCEDURE)

No >> Go To 14

14. CHECK FOR BROKEN REVERSE SUN GEAR WELD

Working through the windows in the bottom of the case, check for a broken Reverse Sun gear weld to the reaction carrier as follows:

1) Hold the Transmission Output Shaft by holding the Transmission Manual Lever in the park position.

2) Rotate the Input Annulus gear and drive shell (the drum that encloses the two rearmost carriers).

3) Check to see if the reaction carrier (the front-most carrier, whose outer shell is splined to the 2C clutch) is rotating faster than the drive shell is being turned.

Is the reaction carrier turning faster than the drive shell?

Yes >> Replace Transmission Solenoid/TRS Assembly per the Service Information. (Refer to 21 - TRANSMISSION/TRANSAXLE/AUTOMATIC - 45RFE/545RFE/TRANS SOLENOID/TRS ASSY - REMOVAL)
Perform 45RFE/545RFE TRANSMISSION VERIFICATION TEST - VER 1. (Refer to 21 - TRANSMISSION/TRANSAXLE/AUTOMATIC - 45RFE/545RFE - STANDARD PROCEDURE)

No >> Replace the reaction carrier per the Service Information.
Perform 45RFE/545RFE TRANSMISSION VERIFICATION TEST - VER 1. (Refer to 21 - TRANSMISSION/TRANSAXLE/AUTOMATIC - 45RFE/545RFE - STANDARD PROCEDURE)

15. CHECK IF DTC RESETS

Did the DTC P0732 reset during the road test?

Yes >> Go To 16

No >> Go To 17

16. LIST OF POSSIBLE CAUSES

If any other DTCs set during the road test, refer to the appropriate symptom in the Transmission category.

If no other DTCs set during the road test, below is a list of possible causes, but not strictly limited to those:

- Check for excessive debris in the Transmission Oil pan, plugged, cracked, or misinstalled Primary Transmission Oil Filter and/or seal.
- Check for cut and/or missing #7 and #5 check balls in the main valve body.
- Check the 2C and UD accumulator pistons and seals, UD bleed orifice, and the Solenoid Switch Valve and Plugs in the main valve body.
- Check the UD clutch piston seals, reaction shaft support seal rings and dribbler assembly.
- Check the 2C clutch piston seals, and bleed orifice.
- Check the main regulator valve for sticking in its bore and the flatness of the pump valve body and pump housing faces.
- Check for a improperly assembled 2C clutch with the thick reaction plate not against the case.

View repair

Repair

Repair as necessary. Refer to the Service Information for proper repair procedures.

Perform 45RFE/545RFE TRANSMISSION VERIFICATION TEST - VER 1. (Refer to 21 - TRANSMISSION/TRANSAXLE/AUTOMATIC - 45RFE/545RFE - STANDARD PROCEDURE)

17. INTERMITTENT DTC

The conditions to set this DTC are not currently present.

With the scan tool, check the DTC EVENT DATA to help identify the conditions in which the DTC was set.

- If the DTC Event Data shows fault P0732 was set in Park, Reverse, or Neutral, replace the Powertrain Control Module.
- If the DTC Event Data shows fault P0732 set with input RPM = zero, check the input speed sensor and related wiring.
- If the DTC Event Data shows fault P0732 set with line pressure significantly below desired line pressure, check for the cause of low line pressure (i.e., oil level, misinstalled or damaged primary filter or filter seal, sticking main regulator valve in pump, etc.).
- If the DTC Event Data shows fault P0732 set with the UD or 2C pressure switch open (but line pressure matches Desired Line Pressure), air check the UD and 2C hydraulic clutch circuits for leakage per the Service Information. If the UD and 2C hydraulic clutch circuits are OK, replace the Transmission Solenoid/TRS assembly.

Check the gearshift linkage adjustment.

Intermittent Gear Ratio DTCs can be set by problems in the Input and Output Speed Sensor circuits and/or Speed Sensor Ground circuit.

Remove the Ignition Switch Feed fuse from the TIPM.

CAUTION: Removal of the Ignition Switch Feed fuse from the TIPM will prevent the vehicle from being started in gear.

WARNING: The Ignition Switch Feed fuse must be removed from the TIPM. Failure to do so can result in personal injury or death.

Install Transmission Simulator, Miller tool #8333.

Wiggle wiring and connectors while checking for intermittent operation with the Transmission Simulator.

Gear ratio DTCs can also be set under extreme temperature conditions.

Verify if the problem is only experienced under extreme hot or cold conditions.

Were there any problems found.

Yes >> Repair as necessary.
Perform 45RFE/545RFE TRANSMISSION VERIFICATION TEST - VER 1. (Refer to 21 - TRANSMISSION/TRANSAXLE/AUTOMATIC - 45RFE/545RFE - STANDARD PROCEDURE)

No >> Test Complete.

P0733-GEAR RATIO ERROR IN 3RD

For a complete wiring diagram **Refer to Section 8W**

- **When Monitored:**
  Continuously with the ignition on, engine running, with the transmission in gear.
- **Set Condition:**
  If the ratio of the Input RPM to the Output RPM does not match the current gear ratio. This DTC can take up to five minutes of problem identification before illuminating the MIL

Possible Causes
RELATED DTCS PRESENT
INPUT SPEED SENSOR OR WIRING
LOW FLUID LEVEL
CRACKED OR MIS-INSTALLED PRIMARY OIL FILTER OR SEAL
BENT OR BROKEN ACCUMULATOR COVER ON MAIN VALVE BODY
WORN SOLENOID SWITCH VALVE OR PLUGS
STUCK OR STICKING MAIN REGULATOR VALVE
BURNED UD OR OD CLUTCH
CUT OD OR UD PISTON SEAL
BROKEN OR MISSING UD OR OD BLEED ORIFICE IN MAIN VALVE BODY
BROKEN OR MISSING BLEED ORIFICE IN UD OR OD CLUTCH PISTON
CUT OD OR UD ACCUMULATOR PISTON SEAL
CRACKED OD OR UD ACCUMULATOR PISTON
CUT OR MISSING #6 CHECK BALL
TRANSMISSION SOLENOID/TRS ASSEMBLY
BROKEN WELD - REVERSE CARRIER HUB TO CARRIER
BROKEN REACTION SHAFT SUPPORT SEAL RING
POOR MACHINING ON PUMP VALVE BODY FACE

Always perform the 45RFE/545RFE Pre-Diagnostic Troubleshooting Procedure before proceeding. (Refer to 21 - TRANSMISSION/TRANSAXLE/AUTOMATIC - 45RFE/545RFE - STANDARD PROCEDURE)

Theory of Operation

The transmission system uses two speed sensors, one to measure input RPM and one to measure output RPM. These inputs are essential for proper transmission operation. Therefore, the integrity of this data is verified through the following checks:

1) Once in a particular gear, if the gear ratio varies from the correct gear ratio, the corresponding in-gear trouble code is set (DTCs P0731-36).

2) An excessive change in input or output speeds indicating signal intermittent may result in the DTCs P0715 and/or P0720 being set.

3) If the common speed sensor ground circuit is lost, both sensor inputs will read the pulses from the input speed sensor when at a stop in neutral. Since the input speed sensor reads 60 teeth from the input clutch hub and the output speed sensor reads 30 teeth from the park gear, the result is an apparent speed ratio of 1:2 and may cause the DTC P1794 to set.

Diagnostic Test

1. CHECK IF RELATED DTCS ARE PRESENT

With the scan tool, check for other transmission DTCs

Are there any Transmission; solenoid, line pressure, speed sensor, and/or loss of prime DTCs present?

Yes >> Refer to appropriate symptom in the Transmission category. Perform the test for P0944-LOSS OF PRIME first if it is present.

No >> Go To 2

2. CHECK DTC EVENT DATA

With the scan tool, read and record the DTC EVENT DATA.

NOTE: Make sure to record all DTC EVENT DATA stored in the scan tool for future reference in this test procedure.

Does the DTC EVENT DATA display information for the DTC P0733?

Yes >> Go To 4

No >> Go To 3

3. CHECK THE TARGET GEAR IN DTC EVENT DATA

In the DTC EVENT DATA, identify the DTC that was recorded earlier.

Does the DTC EVENT DATA display information for the DTC P1790, with target gear = 3rd, or with both OD and UD clutches applying?

Yes >> Go To 4

No >> Go To 7

4. CHECK INPUT RPM IN DTC EVENT DATA

Refer to the DTC EVENT DATA recorded earlier.

Does the Input RPM read zero?

Yes >> Check the input speed sensor and wiring. Refer to test P0715 and diagnose as if the DTC is current.

No >> Go To 5

5. CHECK LINE PRESSURE READING

Refer to the DTC EVENT DATA recorded earlier.

Is the line pressure reading more than 10 psi below the desired line pressure?

Yes >> Go To 6

No >> Go To 7

6. CHECK TRANSMISSION OIL FILTER

Turn the ignition off to the lock position.

Remove and inspect the Transmission Oil Pan for excessive debris per the Service Information.

Remove and inspect the Primary Oil Filter per the Service Information.

NOTE: Make sure the Primary Transmission Oil Filter and seal are properly installed and are not cracked or split.

Does the Oil Pan contain excessive debris and/or is the Primary Oil Filter cracked, plugged or mis-in-

stalled?

Yes >> Repair the plugged, cracked, or split Primary Transmission Oil Filter and/or seal. If excessive clutch debris is present, check the clutches for damage. Refer to the Service Information for the proper hydraulic clutch repair procedure.

Perform 45RFE/545RFE TRANSMISSION VERIFICATION TEST - VER 1. (Refer to 21 - TRANSMISSION/TRANSAXLE/AUTOMATIC - 45RFE/545RFE - STANDARD PROCEDURE)

No >> Remove the Transmission Oil Pump per the Service Information. Check the main Regulator Valve for sticking in its bore, scoring, and/or damage and clean and repair as necessary. If no problem is found, replace the Transmission Solenoid/TRS Assembly.

Perform 45RFE/545RFE TRANSMISSION VERIFICATION TEST - VER 1. (Refer to 21 - TRANSMISSION/TRANSAXLE/AUTOMATIC - 45RFE/545RFE - STANDARD PROCEDURE)

7. CHECK IF DTC P0733 IS CURRENT

With the scan tool, perform the 3rd Gear Clutch Test. Follow the instructions on the scan tool.

Increase the throttle angle, TPS Degree, to 30° for no more than a few seconds.

CAUTION: Do not overheat the transmission.

NOTE: If the OD clutch is faulty, the overrunning clutch will hold and the slip test will pass. The 3rd gear clutch test will not detect a faulty OD clutch. However, it will detect a faulty UD clutch.

Did the clutch test pass, did the Input Speed remain at zero?

Yes >> Go To 8

No >> Go To 10

8. CHECK FOR INTERMITTENT OPERATION

Check the Shifter adjustment per the Service Information.

Intermittent gear ratio DTCs can be set by problems in the Input and Output Speed Sensor circuits and/or Speed Sensor Ground circuit.

Check the Speed Sensor wiring and connectors for good connection, then perform a wiggle test using the Transmission Simulator, Miller tool #8333.

Were there any problems found?

Yes >> Repair as necessary.

Perform 45RFE/545RFE TRANSMISSION VERIFICATION TEST - VER 1. (Refer to 21 - TRANSMISSION/TRANSAXLE/AUTOMATIC - 45RFE/545RFE - STANDARD PROCEDURE)

No >> Go To 9

9. CHECK FOR SLIPPAGE

With the scan tool, erase Transmission DTCs.

Road test the vehicle. Check operation in 3rd gear, 4th gear, and Reverse.

Is there an obvious slippage noticed in 3rd gear, or runaway on the 2-3 shift?

Yes >> Go To 12

No >> Go To 16

10. CHECK THE UD HYDRAULIC CLUTCH CIRCUIT

Remove Transmission Oil Pan and check for excessive debris.

Remove the Valve Body and air check the UD hydraulic clutch circuit (in the case) per the Service Information.

NOTE: The UD clutch passage contains a small bleed orifice, a small amount of air leakage is normal.

Were there any problems found, excessive debris and/or excessive air leakage in the UD hydraulic clutch circuit?

Yes >> Repair as necessary. Check the UD clutch piston seals, reaction shaft support seal rings and dribbler assemblies, and the flatness of the pump valve body and pump housing faces. Check main regulator valve for sticking in the bore.

Perform 45RFE/545RFE TRANSMISSION VERIFICATION TEST - VER 1. (Refer to 21 - TRANSMISSION/TRANSAXLE/AUTOMATIC - 45RFE/545RFE - STANDARD PROCEDURE)

No >> Go To 11

11. CHECK UD ACCUMULATOR PISTON

Check the UD bleed orifice, accumulator piston, and accumulator piston seal in the main valve body.

Were there any problems found?

Yes >> Repair as necessary. Refer to the Service Information for proper repair procedures.

No >> Replace Transmission Solenoid/TRS Assembly per the Service Information. (Refer to 21 - TRANSMISSION/TRANSAXLE/AUTOMATIC - 45RFE/545RFE/TRANS SOLENOID/TRS ASSY - REMOVAL)

Perform 45RFE/545RFE TRANSMISSION VERIFICATION TEST - VER 1. (Refer to 21 - TRANSMISSION/TRANSAXLE/AUTOMATIC - 45RFE/545RFE - STANDARD PROCEDURE)

12. CHECK FOR EXCESSIVE DEBRIS

Remove the Transmission Oil Pan and check for excessive debris.

Remove the valve body and check if the accumulator cover is intact.

Air check the OD hydraulic clutch circuit (in the case) per the Service Information.

NOTE: The OD clutch passage contains a small bleed orifice which connects to the Reverse clutch hydraulic circuit, a small amount of air leakage into the Reverse clutch passage is normal.

Were there any problems found, excessive debris, and/or excessive air leakage in the OD hydraulic clutch circuit?

Yes >> Repair as necessary. Refer to the Service Information for proper repair procedures. Note: Check the bleed orifice in the OD/Reverse clutch piston.

Perform 45RFE/545RFE TRANSMISSION VERIFICATION TEST - VER 1. (Refer to 21 - TRANSMISSION/TRANSAXLE/AUTOMATIC - 45RFE/545RFE - STANDARD PROCEDURE)

No >> Go To 13

13. CHECK THE OD ACCUMULATOR

Check the OD Accumulator piston for cracks or a cut seal.

Check for a cut or missing #6 check ball.

Check the Solenoid Switch Valve and its plugs for sticking in its bore or excessive wear.

Were there any problems found?

Yes >> Repair as necessary. Refer to the Service Information for proper repair procedures.

Perform 45RFE/545RFE TRANSMISSION VERIFICATION TEST - VER 1. (Refer to 21 - TRANSMISSION/TRANSAXLE/AUTOMATIC - 45RFE/545RFE - STANDARD PROCEDURE)

No >> Go To 14

14. CHECK FOR NO REVERSE

During the road test on a previous test, did the vehicle have no reverse and no 3rd gear, but 1st and 2nd gears were OK?

Yes >> Go To 15

No >> Replace Transmission Solenoid/TRS Assembly per the Service Information. (Refer to 21 - TRANSMISSION/TRANSAXLE/AUTOMATIC - 45RFE/545RFE/TRANS SOLENOID/TRS ASSY - REMOVAL)

Perform 45RFE/545RFE TRANSMISSION VERIFICATION TEST - VER 1. (Refer to 21 - TRANSMISSION/TRANSAXLE/AUTOMATIC - 45RFE/545RFE - STANDARD PROCEDURE)

15. CHECK FOR BROKEN REVERSE CARRIER WELD

Remove the Transmission per the Service Information and inspect the weld on the reverse carrier hub.

Were there any problems found?

Yes >> Repair as necessary.

No >> Disassemble and inspect the input clutch assembly. Check the OD and Reverse clutch seals, discs, and bleed orifice (in the OD/Reverse clutch piston). Check the OD hub and shaft. Repair as necessary. Refer to the Service Information for proper repair procedures.

Perform 45RFE/545RFE TRANSMISSION VERIFICATION TEST - VER 1. (Refer to 21 - TRANSMISSION/TRANSAXLE/AUTOMATIC - 45RFE/545RFE - STANDARD PROCEDURE)

16. CHECK IF DTC RESETS

Did the DTC P0733 reset during the road test?

Yes >> Go To 17

No >> Go To 18

17. LIST OF POSSIBLE CAUSES

If any other DTCs set during the road test, refer to the appropriate symptom in the Transmission category.

If no other DTCs set during the road test, below is a list of possible causes, but not strictly limited to those.

Check for:

- Excessive debris in the Transmission Oil pan, plugged, cracked, or mis-installed Primary Transmission Oil Filter and/or seal.
- Cut or missing #6 check ball in the main valve body.
- OD and UD accumulator pistons and seals and bleed orifices, and the Solenoid Switch Valve and Plugs in the main valve body.
- OD and UD clutch piston seals, reaction shaft support seal rings and dribbler assemblies, and the flatness of the pump valve body and pump housing faces.
- Main regulator valve for sticking in its bore.

View repair

Repair

Repair as necessary. Refer to the Service Information for proper repair procedures.

Perform 45RFE/545RFE TRANSMISSION VERIFICATION TEST - VER 1. (Refer to 21 - TRANSMISSION/TRANSAXLE/AUTOMATIC - 45RFE/545RFE - STANDARD PROCEDURE)

18. CHECK FOR INTERMITTENT OPERATION

The conditions to set this DTC are not currently present.

With the scan tool, check the DTC EVENT DATA to help identify the conditions in which the DTC was set.

- If the DTC Event Data shows fault P0733 was set in the Park, Reverse, or Neutral, replace the Powertrain Control Module.
- If the DTC Event Data shows fault P0733 set with input RPM = zero, check the input speed sensor and related wiring.
- If the DTC Event Data shows fault P0733 set with line pressure significantly below desired line pressure, check for the cause of low line pressure (i.e., oil level, misinstalled or damaged primary filter or filter seal, sticking main regulator valve in pump, etc.).
- If the DTC Event Data shows fault P0733 set with the OD or UD pressure switch open (but line pressure matches Desired Line Pressure), air check the OD and UD hydraulic clutch circuits for leakage per the Service Information. If the OD and UD hydraulic clutch circuits are OK, replace the Transmission Solenoid/TRS assembly.

Check the gearshift linkage adjustment.

Intermittent Gear Ratio DTCs can be set by problems in the Input and Output Speed Sensor circuits and/or Speed Sensor Ground circuit.

Remove the Ignition Switch Feed fuse from the TIPM.

CAUTION: Removal of the Ignition Switch Feed fuse from the TIPM will prevent the vehicle from being started in gear.

WARNING: The Ignition Switch Feed fuse must be removed from the TIPM. Failure to do so can result in personal injury or death.

Install the Transmission Simulator, Miller tool #8333.

Wiggle wiring and connectors while checking for intermittent operation with the Transmission Simulator.

Gear ratio DTCs can also be set under extreme temperature conditions.

Verify if the problem is only experienced under extreme hot or cold conditions.

Were there any problems found.

Yes >> Repair as necessary.
Perform 45RFE/545RFE TRANSMISSION VERIFICATION TEST - VER 1. (Refer to 21 - TRANSMISSION/TRANSAXLE/AUTOMATIC - 45RFE/545RFE - STANDARD PROCEDURE)

No >> Test Complete.

P0734-GEAR RATIO ERROR IN 4TH

For a complete wiring diagram **Refer to Section 8W**

- **When Monitored:**
  Continuously with the ignition on, engine running, with the transmission in gear.
- **Set Condition:**
  If the ratio of the Input RPM to the Output RPM does not match the current gear ratio. This DTC can take up to five minutes of problem identification before illuminating the MIL.

Possible Causes
LOW FLUID LEVEL
INPUT SPEED SENSOR OR WIRING
VALVE BODY ACCUMULATOR COVER FAILED
CUT OD OR 4C ACCUMULATOR SEAL
CRACKED OD OR 4C ACCUMULATOR PISTON
BROKEN OR MISSING OD BLEED ORIFICE IN MAIN VALVE BODY
CUT 4C TOWER SEAL
TRANSMISSION SOLENOID/TRS ASSEMBLY
CUT OR MISSING #5 OR #6 CHECK BALL
WORN SOLENOID SWITCH VALVE OR PLUGS
CUT OD OR 4C PISTON SEAL
STUCK MAIN REGULATOR VALVE
BURNED OD OR 4C CLUTCH
BROKEN OR MISSING 4C BLEED ORIFICE IN 2C/4C RETAINER
BROKEN REACTION SHAFT SUPPORT SEAL RING
POOR MACHINING ON PUMP VALVE BODY FACE
LOOSE / MISSING DRIBBLER ORIFICE ASSEMBLY IN REACTION SHAFT SUPPORT
CRACKED / LOOSE / MISSING OD/REVERSE PISTON BLEED ORIFICE
BROKEN REVERSE CARRIER HUB WELD
BROKEN REVERSE SUN GEAR WELD TO REACTION CARRIER

Always perform the 45RFE/545RFE Pre-Diagnostic Troubleshooting Procedure before proceeding. (Refer to 21 - TRANSMISSION/TRANSAXLE/AUTOMATIC - 45RFE/545RFE - STANDARD PROCEDURE)

Theory of Operation

The transmission system uses two speed sensors, one to measure input RPM and one to measure output RPM. These inputs are essential for proper transmission operation. Therefore, the integrity of this data is verified through the following checks:

1) Once in a particular gear, if the gear ratio varies from the correct gear ratio, the corresponding in-gear trouble code is set (DTCs P0731–36).

2) An excessive change in input or output speeds indicating signal intermittent may result in the DTCs P0715 and/or P0720 being set.

3) If the common speed sensor ground circuit is lost, both sensor inputs will read the pulses from the input speed sensor when at a stop in neutral. Since the input speed sensor reads 60 teeth from the input clutch hub and the output speed sensor reads 30 teeth from the park gear, the result is an apparent speed ratio of 1:2 and may cause the DTC P1794 to set.

Diagnostic Test

1. CHECK FOR RELATED DTCS

With the scan tool, check for other transmission DTCs

If any of these DTCs are present, perform their respective tests first.

Are there any Transmission; solenoid, line pressure, speed sensor, and/or loss of prime DTCs present?

Yes >> Refer to the Transmission category and perform the appropriate symptom. If any of these DTCs are present, they may cause a Speed Ratio Error. Perform the test for P0944 first if it is present.

No >> Go To 2

2. CHECK DTC EVENT DATA

With the scan tool, read and record the DTC EVENT DATA.

NOTE: Make sure to record all DTC EVENT DATA stored in the scan tool for future reference in this test procedure.

Does the DTC EVENT DATA display information for the DTC P0734?

Yes >> Go To 4

No >> Go To 3

3. CHECK FOR ANOTHER DTC

In the DTC EVENT DATA recorded earlier, does the DTC EVENT DATA show the DTC P1790, with Target Gear = 4th, or with both the 4C and OD clutches applying?

Yes >> Go To 4

No >> Go To 6

4. CHECK INPUT RPM

In the DTC EVENT DATA recorded earlier, does the Input RPM read zero?

Yes >> Refer to the Transmission category and perform the diagnostic procedure for P0715 (Input Speed Sensor Error). Diagnose the DTC as if it is set and current.

No >> Go To 5

5. CHECK LINE PRESSURE READING

In the DTC EVENT DATA recorded earlier, is the line pressure reading more than 10 PSI below the desired line pressure reading?

Yes >> Remove the Transmission Oil pan and check the Transmission Oil filter for improper installation or plugged, if Primary oil filter is OK, check the main regulator valve in pump. If excessive debris is in the oil pan, check clutches and repair as necessary. Refer to the Service Information for proper repair procedures.

Perform 45RFE/545RFE TRANSMISSION VERIFICATION TEST - VER 1. (Refer to 21 - TRANSMISSION/TRANSAXLE/AUTOMATIC - 45RFE/545RFE - STANDARD PROCEDURE)

No >> Go To 6

6. CHECK TRANSMISSION FOR SLIPPAGE

Erase DTCs and road test the vehicle.

Check the transmission operation in reverse and all forward gears.

During the road test, was there any obvious slippage noted in 4th gear or a runaway during the 3-4 shift?

Yes >> Go To 8

No >> Go To 7

7. CHECK IF DTC RESETS

With the scan tool, check for Transmission DTCs after the road test.

Did the DTC P0734 reset?

Yes >> Go To 8

No >> Test Complete.

8. CHECK INTERNAL TRANSMISSION

Remove the Transmission Oil Pan and Valve Body per the Service Information and check for the following:

- Excessive debris in the oil pan.
- Remove the Valve Body and check if the accumulator cover is intact and the 4C tower seal is not cut or split.
- OD and 4C accumulator pistons for cracks and/or cut seals.
- Solenoid Switch Valve and its plugs for stickiness or wear.
- Cut or missing #5 and/or #6 check ball.
- OD bleed orifice on top of the Valve Body
- Air check the OD and 4C hydraulic clutch circuits for excessive leakage. Refer to the Service information.

NOTE: Both the OD and 4C hydraulic clutch circuits contain a small bleed orifice. A small amount of air leakage is considered normal. The OD hydraulic clutch circuit bleed orifice connects to the Reverse input clutch hydraulic cavity. A small amount of air leakage into the Reverse hydraulic clutch circuit is considered normal.

Were there any problems found?

Yes >> Repair as necessary. Refer to the Service Information for proper repair procedures.
Perform 45RFE/545RFE TRANSMISSION VERIFICATION TEST - VER 1. (Refer to 21 - TRANSMISSION/TRANSAXLE/AUTOMATIC - 45RFE/545RFE - STANDARD PROCEDURE)

No >> Go To 9

9. CHECK THE TRANSMISSION SOLENOID/TRS ASSEMBLY

Was there no reverse gear during the road test?

Yes >> Go To 10

No >> Replace Transmission Solenoid/TRS Assembly per the Service Information. (Refer to 21 - TRANSMISSION/TRANSAXLE/AUTOMATIC - 45RFE/545RFE/TRANS SOLENOID/TRS ASSY - REMOVAL)
Perform 45RFE/545RFE TRANSMISSION VERIFICATION TEST - VER 1. (Refer to 21 - TRANSMISSION/TRANSAXLE/AUTOMATIC - 45RFE/545RFE - STANDARD PROCEDURE)

10. CHECK ROAD TEST RESULTS

During the road test, was there no 2nd gear and no 4th gear, but 3rd gear (limp-in) was OK?

Yes >> Go To 11

No >> Go To 12

11. CHECK FOR BROKEN REVERSE SUN GEAR WELD

Working through the windows in the bottom of the case, check for a broken Reverse Sun gear weld to the reaction carrier as follows:

1) Hold the Transmission Output Shaft by holding the Transmission Manual Lever in the park position.

2) Rotate the Input Annulus gear and drive shell (the drum that encloses the two rearmost carriers).

3) Check to see if the reaction carrier (the front most carrier, whose outer shell is splined to the 2C clutch) is rotating faster than the drive shell is being turned.

Is the reaction carrier turning faster than the drive shell?

Yes >> Replace Transmission Solenoid/TRS Assembly per the Service Information. (Refer to 21 - TRANSMISSION/TRANSAXLE/AUTOMATIC - 45RFE/545RFE/TRANS SOLENOID/TRS ASSY - REMOVAL)

Perform 45RFE/545RFE TRANSMISSION VERIFICATION TEST - VER 1. (Refer to 21 - TRANSMISSION/TRANSAXLE/AUTOMATIC - 45RFE/545RFE - STANDARD PROCEDURE)

No >> Replace the reaction carrier per the Service Information.

Perform 45RFE/545RFE TRANSMISSION VERIFICATION TEST - VER 1. (Refer to 21 - TRANSMISSION/TRANSAXLE/AUTOMATIC - 45RFE/545RFE - STANDARD PROCEDURE)

12. CHECK FOR NO REVERSE

Remove the Transmission per the Service Information and inspect the weld on the reverse carrier hub.

Were there any problems found?

Yes >> Repair as necessary. Refer to the Service Information for proper repair procedures.

Perform 45RFE/545RFE TRANSMISSION VERIFICATION TEST - VER 1. (Refer to 21 - TRANSMISSION/TRANSAXLE/AUTOMATIC - 45RFE/545RFE - STANDARD PROCEDURE)

No >> Disassemble and inspect the input clutch assembly. Check the OD and Reverse clutch seals, discs, and bleed orifice (in the OD/Reverse clutch piston). Check the OD hub and shaft. Repair as necessary. Refer to the Service Information for proper repair procedures.

Perform 45RFE/545RFE TRANSMISSION VERIFICATION TEST - VER 1. (Refer to 21 - TRANSMISSION/TRANSAXLE/AUTOMATIC - 45RFE/545RFE - STANDARD PROCEDURE)

P0735-GEAR RATIO ERROR IN 5TH

For a complete wiring diagram **Refer to Section 8W**

- **When Monitored:**
  Continuously with the ignition on, engine running, with the transmission in gear.
- **Set Condition:**
  If the ratio of the Input RPM to the Output RPM does not match the current gear ratio. This DTC can take up to five minutes of problem identification before illuminating the MIL.

Possible Causes
LOW FLUID LEVEL
INPUT SPEED SENSOR OR WIRING
VALVE BODY ACCUMULATOR COVER FAILED
CUT OD OR 2C ACCUMULATOR SEAL
CRACKED OD OR 2C ACCUMULATOR PISTON
BROKEN OR MISSING OD BLEED ORIFICE IN MAIN VALVE BODY
CUT 2C TOWER SEAL
TRANSMISSION SOLENOID/TRS ASSEMBLY
CUT OR MISSING #5, #6, OR #7 CHECK BALL
WORN SOLENOID SWITCH VALVE OR PLUGS
CUT OD OR 2C PISTON SEAL
STUCK MAIN REGULATOR VALVE
BURNED OD OR 2C CLUTCH
BROKEN OR MISSING 2C BLEED ORIFICE IN 2C/4C RETAINER
BROKEN REACTION SHAFT SUPPORT SEAL RING
POOR MACHINING ON PUMP VALVE BODY FACE
LOOSE / MISSING DRIBBLER ORIFICE ASSEMBLY IN REACTION SHAFT SUPPORT
CRACKED / LOOSE / MISSING OD/REVERSE PISTON BLEED ORIFICE
BROKEN REVERSE CARRIER HUB WELD
BROKEN REVERSE SUN GEAR WELD TO REACTION CARRIER

Always perform the 45RFE/545RFE Pre-Diagnostic Troubleshooting Procedure before proceeding. (Refer to 21 - TRANSMISSION/TRANSAXLE/AUTOMATIC - 45RFE/545RFE - STANDARD PROCEDURE)

Theory of Operation

The transmission system uses two speed sensors, one to measure input RPM and one to measure output RPM. These inputs are essential for proper transmission operation. Therefore, the integrity of this data is verified through the following checks:

1) Once in a particular gear, if the gear ratio varies from the correct gear ratio, the corresponding in-gear trouble code is set (DTCs P0731-36).

2) An excessive change in input or output speeds indicating signal intermittent may result in the DTCs P0715 and/or P0720 being set.

3) If the common speed sensor ground circuit is lost, both sensor inputs will read the pulses from the input speed sensor when at a stop in neutral. Since the input speed sensor reads 60 teeth from the input clutch hub and the output speed sensor reads 30 teeth from the park gear, the result is an apparent speed ratio of 1:2 and may cause the DTC P1794 to set.

Diagnostic Test

1. CHECK FOR RELATED DTCS

With the scan tool, check for other transmission DTC's

If any of these DTCs are present, perform their respective tests first.

Are there any Transmission; solenoid, line pressure, speed sensor, and/or loss of prime DTCs present?

Yes >> Refer to the Transmission category and perform the appropriate symptom. If any of these DTCs are present, they may cause a Speed Ratio Error. Perform the test for P0944 first if it is present.

No >> Go To 2

2. CHECK DTC EVENT DATA

With the scan tool, read and record the DTC EVENT DATA.

NOTE: Make sure to record all DTC EVENT DATA stored in the scan tool for future reference in this test procedure.

Does the DTC EVENT DATA display information for the DTC P0735?

Yes >> Go To 4

No >> Go To 3

3. CHECK THE TARGET GEAR

In the DTC EVENT DATA recorded earlier, does the DTC EVENT DATA show the DTC P1790, with Target gear = 5th, or with both the 2C and OD clutches applying?

Yes >> Go To 4

No >> Go To 6

4. CHECK INPUT RPM

In the DTC EVENT DATA recorded earlier, does the Input RPM read zero?

Yes >> Refer to the Transmission category and perform the diagnostic procedure for P0715 (Input Speed Sensor Error). Diagnose the DTC as if it is set and current.

No >> Go To 5

5. CHECK LINE PRESSURE READING

In the DTC EVENT DATA recorded earlier, is the line pressure reading more than 10 PSI below the desired line pressure reading?

Yes >> Remove the Transmission Oil pan and check the Transmission Oil filter for improper installation or plugged, if Primary oil filter is OK, check the main regulator valve in pump. If excessive debris is in the oil pan, check clutches and repair as necessary. Refer to the Service Information for proper repair procedures.

Perform 45RFE/545RFE TRANSMISSION VERIFICATION TEST - VER 1. (Refer to 21 - TRANSMISSION/TRANSAXLE/AUTOMATIC - 45RFE/545RFE - STANDARD PROCEDURE)

No >> Go To 6

6. CHECK TRANSMISSION FOR SLIPPAGE

Erase DTCs and road test the vehicle.

Check the transmission operation in reverse and all forward gears.

During the road test, was there any obvious slippage noted in 5th gear or a runaway during the 4–5 shift?

Yes >> Go To 8

No >> Go To 7

7. CHECK IF DTC RESETS

With the scan tool, check for Transmission DTCs after the road test.

Did the DTC P0735 reset?

Yes >> Go To 8

No >> Test Complete.

Perform 45RFE/545RFE TRANSMISSION VERIFICATION TEST - VER 1. (Refer to 21 - TRANSMISSION/TRANSAXLE/AUTOMATIC - 45RFE/545RFE - STANDARD PROCEDURE)

8. CHECK INTERNAL TRANSMISSION

Remove the Transmission Oil Pan and Valve Body, per the Service Information, and check for the following:

- Excessive clutch and or metal debris in the oil pan.
- If the accumulator cover is intact and the 2C tower seal is not cut or split.
- OD and 2C accumulator pistons for cracks or cut seals.
- Solenoid Switch Valve and its plugs for stickiness or wear.
- Cut or missing #5, #6, or #7 check ball.
- OD bleed orifice on top of the valve body.
- Air check the OD and 2C hydraulic clutch circuits for excessive leakage. Refer to the Service information.

NOTE: Both the OD and 2C hydraulic clutch circuits contain a small bleed orifice. A small amount of air leakage is considered normal. The OD hydraulic clutch circuit bleed orifice connects to the Reverse input clutch hydraulic cavity. A small amount of air leakage into the Reverse hydraulic clutch circuit is considered normal.

Were there any problems found?

Yes >> Repair as necessary. Refer to the Service Information for proper repair procedures.

Perform 45RFE/545RFE TRANSMISSION VERIFICATION TEST - VER 1. (Refer to 21 - TRANSMISSION/TRANSAXLE/AUTOMATIC - 45RFE/545RFE - STANDARD PROCEDURE)

No >> Replace Transmission Solenoid/TRS Assembly per the Service Information. (Refer to 21 - TRANSMISSION/TRANSAXLE/AUTOMATIC - 45RFE/545RFE/TRANS SOLENOID/TRS ASSY - REMOVAL)

Perform 45RFE/545RFE TRANSMISSION VERIFICATION TEST - VER 1. (Refer to 21 - TRANSMISSION/TRANSAXLE/AUTOMATIC - 45RFE/545RFE - STANDARD PROCEDURE)

P0736-GEAR RATIO ERROR IN REVERSE

For a complete wiring diagram **Refer to Section 8W**

- **When Monitored:**
  Continuously with the ignition on, engine running, with the transmission in gear.
- **Set Condition:**
  If the ratio of the Input RPM to the Output RPM does not match the current gear ratio. This DTC can take up to five minutes of problem identification before illuminating the MIL

Possible Causes
LOW FLUID LEVEL
CUT LR TOWER SEAL ON MAIN VALVE BODY
CUT LR CLUTCH PISTON SEALS
BROKEN OR MISSING LR CLUTCH BLEED ORIFICE (IN LR CLUTCH RETAINER)
CUT LR ACCUMULATOR PISTON SEAL IN MAIN VALVE BODY
CRACKED LR ACCUMULATOR PISTON IN MAIN VALVE BODY
CUT OD/REV PISTON SEALS
BROKEN OR MISSING OD/REV BLEED ORIFICE (IN OD/REV CLUTCH PISTON)
BROKEN REVERSE CARRIER HUB WELD
BROKEN REVERSE SUN GEAR WELD TO THE REACTION CARRIER

Always perform the 45RFE/545RFE Pre-Diagnostic Troubleshooting procedure before proceeding. (Refer to 21 - TRANSMISSION/TRANSAXLE/AUTOMATIC - 45RFE/545RFE - STANDARD PROCEDURE)

Theory of Operation

The transmission system uses two speed sensors, one to measure input RPM and one to measure output RPM. These inputs are essential for proper transmission operation. Therefore, the integrity of this data is verified through the following checks:

1) Once in a particular gear, if the gear ratio varies from the correct gear ratio, the corresponding in-gear trouble code is set (DTCs P0731-36).

2) An excessive change in input or output speeds indicating signal intermittent may result in the DTCs P0715 and/or P0720 being set.

3) If the common speed sensor ground circuit is lost, both sensor inputs will read the pulses from the input speed sensor when at a stop in neutral. Since the input speed sensor reads 60 teeth from the input clutch hub and the output speed sensor reads 30 teeth from the park gear, the result is an apparent speed ratio of 1:2 and may cause the DTC P1794 to set.

Diagnostic Test

1. CHECK FOR RELATED DTCS

With the scan tool, check for other transmission DTC's

Are there any Transmission; solenoid, line pressure, speed sensor, and/or loss of prime DTC's present?

Yes >> Refer to appropriate symptom in the Transmission category. Perform the test for P0944-LOSS OF PRIME first if it is present.

No >> Go To 2

2. CHECK IF DTC IS CURRENT

With the scan tool, perform the Reverse Gear Clutch test. Follow the instructions on the scan tool.

Increase the throttle angle, TPS degree, to 30°, for no more than a few seconds.

CAUTION: Do not overheat the transmission.

NOTE: Make sure to record all DTC EVENT DATA stored in the scan tool for future reference in this test procedure.

Did the clutch test pass, input speed remain at zero?

Yes >> Go To 3

No >> Go To 4

3. CHECK DTC EVENT DATA

The conditions necessary to set this DTC are not currently present.

With the scan tool, check the DTC EVENT DATA to help identify the conditions in which the DTC was set.

Does the DTC EVENT DATA show an input speed reading of zero?

Yes >> Go To 8

No >> Go To 4

4. POSSIBLE INTERNAL TRANSMISSION CAUSES

Remove the Transmission Oil Pan and Valve Body and check the following per the Service Information:

- Clutch or metal debris in the pan
- LR clutch tower seal on the main valve body or cuts and the LR accumulator piston and seals.
- Air check the Reverse and LR Hydraulic Clutch circuits (in the case) for excessive air leakage.

NOTE: Both Hydraulic Clutch circuits contain a small bleed orifice , a small amount of air leakage is normal. The Reverse hydraulic clutch circuit bleed orifice connects to the OD hydraulic clutch cavity. A small amount of air leakage into the OD hydraulic clutch circuit is considered normal.

Were there any problems found?

Yes >> Repair as necessary. If clutch debris is present, remove the transmission and inspect the Reverse and LR clutches, and inspect the Transmission Oil Pump and Main Regulator Valve for damage or sticking in its bore.

Perform 45RFE/545RFE TRANSMISSION VERIFICATION TEST - VER 1. (Refer to 21 - TRANSMISSION/TRANSAXLE/AUTOMATIC - 45RFE/545RFE - STANDARD PROCEDURE)

No >> Go To 5

5. CLUTCH TEST FAILURE

Did the clutch test fail in reverse?

Yes >> Go To 6

No >> Test complete.

Perform 45RFE/545RFE TRANSMISSION VERIFICATION TEST - VER 1. (Refer to 21 - TRANSMISSION/TRANSAXLE/AUTOMATIC - 45RFE/545RFE - STANDARD PROCEDURE)

6. CHECK FOR BROKEN REVERSE SUN GEAR WELD

Working through the windows in the bottom of the case, check for a broken Reverse Sun gear weld to the reaction carrier as follows:

1) Hold the Transmission Output Shaft by holding the Transmission Manual Lever in the park position.

2) Rotate the Input Annulus gear and drive shell, (the drum that encloses the two rearmost carriers).

3) Check to see if the reaction carrier (the front-most carrier, whose outer shell is splined to the 2C clutch) is rotating faster than the drive shell is being turned.

Is the reaction carrier turning faster than the drive shell?

Yes >> Go To 7

No >> Replace the reaction carrier per the Service Information.
Perform 45RFE/545RFE TRANSMISSION VERIFICATION TEST - VER 1. (Refer to 21 - TRANSMISSION/TRANSAXLE/AUTOMATIC - 45RFE/545RFE - STANDARD PROCEDURE)

7. CHECK REVERSE CARRIER HUB

Remove the Transmission per the Service Information and inspect the weld on the reverse carrier hub.

Were there any problems found?

Yes >> Repair as necessary. Refer to the Service Information for proper repair procedures.
Perform 45RFE/545RFE TRANSMISSION VERIFICATION TEST - VER 1. (Refer to 21 - TRANSMISSION/TRANSAXLE/AUTOMATIC - 45RFE/545RFE - STANDARD PROCEDURE)

No >> Disassemble and inspect the input clutch assembly. Check the Reverse clutch reaction plate snap ring. Check the OD and Reverse clutch seals, discs, and bleed orifice (in the OD/Reverse clutch piston). Check the Reverse hub and shaft. Repair as necessary. Refer to the Service Information for proper repair procedures.
Perform 45RFE/545RFE TRANSMISSION VERIFICATION TEST - VER 1. (Refer to 21 - TRANSMISSION/TRANSAXLE/AUTOMATIC - 45RFE/545RFE - STANDARD PROCEDURE)

8. CHECK FOR INTERMITTENT OPERATION

Intermittent gear ratio DTCs can be set by problems in the Input and Output Speed Sensor circuits and/or Speed Sensor Ground circuit.

Remove the Ignition Switch Feed fuse from the TIPM.

CAUTION: Removal of the Ignition Switch Feed fuse from the TIPM will prevent the vehicle from being started in gear.

WARNING: The Ignition Switch Feed fuse must be removed from the TIPM. Failure to do so can result in personal injury or death.

Install the Transmission Simulator, Miller tool #8333.

Check the Speed Sensor wiring and connectors for good connection, then perform a wiggle test using the Transmission Simulator, Miller tool #8333.

Were there any problems found?

Yes >> Repair as necessary.
Perform 45RFE/545RFE TRANSMISSION VERIFICATION TEST - VER 1. (Refer to 21 - TRANSMISSION/TRANSAXLE/AUTOMATIC - 45RFE/545RFE - STANDARD PROCEDURE)

No >> Test complete.

P0740-TCC OUT OF RANGE

For a complete wiring diagram **Refer to Section 8W**

- **When Monitored:**
  During Electronically Modulated Converter Clutch (EMCC) Operation.
- **Set Condition:**
  Transmission must be in EMCC, with input speed greater than 1750 RPM. TCC-LR Solenoid achieves the maximum duty cycle and can not pull engine speed within 60 RPM of input speed. Also when the transmission is in FEMCC and the engine slips TCC less than 100 RPM for 10 seconds. This DTC can take up to five minutes of problem identification before illuminating the MIL.

Possible Causes
RELATED DTC P0750 PRESENT
L/R SOLENOID
TCC SWITCH VALVE STUCK
TCC REGULATOR VALVE STUCK
INPUT SHAFT SEAL RING CUT
TORQUE CONVERTER AND/OR INTERNAL TRANSMISSION

Always perform the 45RFE/545RFE Pre-Diagnostic Troubleshooting Procedure before proceeding. (Refer to 21 - TRANSMISSION/TRANSAXLE/AUTOMATIC - 45RFE/545RFE - STANDARD PROCEDURE)

Theory of Operation

When in 2nd, 2nd Prime, 3rd, 4th or 5th gear, the torque converter clutch (TCC) can be engaged when certain conditions are met. The TCC piston is electronically modulated by increasing the duty cycle of the LR Solenoid until the torque converter slip difference (difference between engine and transmission input speed) is within 60 RPM. Then the LR solenoid is fully energized (FEMCC – 100% duty cycle). Torque converter slip is monitored in FEMCC to ensure adequate clutch capacity.

Diagnostic Test

1. CHECK FOR RELATED DTC P0750

With the scan tool, read transmission DTCs.

Is the DTC P0750 present also?

Yes >> Refer to the Transmission category and perform the appropriate symptom.

No >> Go To 2

2. CHECK IF DTC P0740 IS CURRENT

With the scan tool, Read and RECORD ALL Transmission DTC's. After recording DTCs, erase DTCs.

Drive the vehicle until the transmission temperature is at least 43° C or 110° F and the engine temperature at least 49° C or 120° F.

Perform the following steps 3 times.

Drive the vehicle to the speed of at least 88 Kmh or 55 mph.

Allow 4th or 5th gear to engage for at least 10 seconds.

Close the throttle.

Tip back into the throttle until the TPS angle is between 25 and 29 degrees.

NOTE: If the throttle angle goes over 30 degrees, you must close the throttle and try again.

Did the TCC engage during any of the attempts, Engine speed approximately equal to input speed?

Yes >> Go To 3

No >> Go To 4

3. CHECK WIRING AND CONNECTORS

The conditions necessary to set this DTC are not present at this time. Using the schematics as a guide, inspect the wiring and connectors specific to this circuit. Wiggle the wires while checking for shorts and open circuits.

Using the schematics as a guide, inspect the wiring and connectors specific to this circuit.

Wiggle the wires while checking for shorts and open circuits.

With the scan tool, check the DTC EVENT DATA to help identify the conditions in which the DTC was set.

Were there any problems found?

Yes >> Repair as necessary.

Perform 45RFE/545RFE TRANSMISSION VERIFICATION TEST - VER 1. (Refer to 21 - TRANSMISSION/TRANSAXLE/AUTOMATIC - 45RFE/545RFE - STANDARD PROCEDURE)

No >> Test Complete.

4. CHECK THE LR SOLENOID

With the scan tool, check for other transmission DTC's.

Are the DTCs P1775 and P0841 present also?

Yes >> Replace Transmission Solenoid/TRS Assembly per the Service Information. (Refer to 21 - TRANSMISSION/TRANSAXLE/AUTOMATIC - 45RFE/545RFE/TRANS SOLENOID/TRS ASSY - REMOVAL)

Perform 45RFE/545RFE TRANSMISSION VERIFICATION TEST - VER 1. (Refer to 21 - TRANSMISSION/TRANSAXLE/AUTOMATIC - 45RFE/545RFE - STANDARD PROCEDURE)

No >> Go To 5

5. CHECK THE TORQUE CONVERTER AND/OR INTERNAL TRANSMISSION

Repair internal transmission as necessary.

Check for the following possible causes. Refer to the Service information for the proper repair procedures.

Inspect the Transmission Oil Pump and Valve Body.

If no problems are found, replace the Transmission Solenoid/TRS Assembly.

Check the Torque Converter Switch Valve and the Torque Converter Clutch Control Valve for sticking in the bore.

Check the Teflon seal rings on the input shaft. Note: If one of the seal rings is , the loose piece will often lodge in the TCC switch valve, causing it to stick in it bore.

View repair

Repair

In all cases, replace the Torque Converter. Make sure to check all other possible causes in addition to the Torque Converter.

Perform 45RFE/545RFE TRANSMISSION VERIFICATION TEST - VER 1. (Refer to 21 - TRANSMISSION/TRANSAXLE/AUTOMATIC - 45RFE/545RFE - STANDARD PROCEDURE)

P0750-LR SOLENOID CIRCUIT

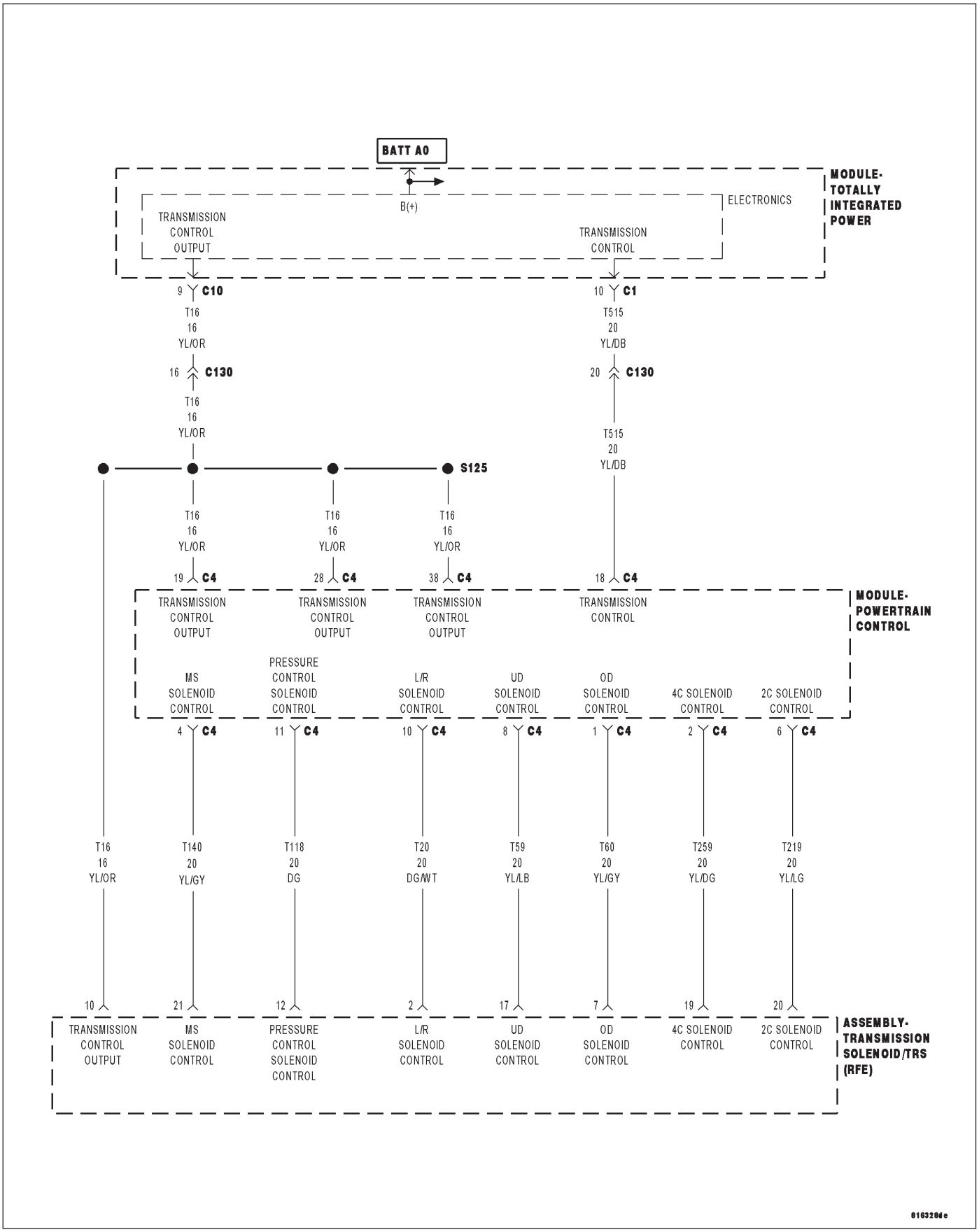

For a complete wiring diagram **Refer to Section 8W**

- **When Monitored:**
  Initially at power-up, then every 10 seconds thereafter. The solenoid circuits will also be tested immediately after a gear ratio or pressure switch error is detected.
- **Set Condition:**
  After three consecutive solenoid continuity test failures, or one failure if test is run in response to a gear ratio or pressure switch error. **Note: This DTC is strictly an electrical fault and does not apply to any internal transmission failures.**

Possible Causes
RELATED TIPM TCM DTCS PRESENT
(T20) LR SOLENOID CONTROL CIRCUIT SHORT TO OTHER CIRCUITS
(T20) LR SOLENOID CONTROL CIRCUIT OPEN
(T20) LR SOLENOID CONTROL CIRCUIT SHORT TO GROUND
TRANSMISSION SOLENOID/TRS ASSEMBLY
POWERTRAIN CONTROL MODULE

Always perform the 45RFE/545RFE Pre-Diagnostic Troubleshooting Procedure before proceeding. (Refer to 21 - TRANSMISSION/TRANSAXLE/AUTOMATIC - 45RFE/545RFE - STANDARD PROCEDURE)

Theory of Operation

The Transmission Control System uses six electronically controlled solenoids that allow hydraulic fluid to be applied to various friction elements (clutches), which enables the gear requested. The continuity of each solenoid circuit is periodically tested. Each inactive solenoid is turned on for a few milliseconds, then off. Each active solenoid is turned off for a few milliseconds, then on. This pulsing of voltage to the solenoid causes an inductive spike which can be sensed by the Transmission Control System. If an inductive spike is not sensed by the Transmission Control System during the continuity check, it is tested again. If the test fails three consecutive times, the appropriate Diagnostic Trouble Code (DTC) is set. If the solenoid test is run in response to a gear ratio or pressure switch error, one failure will result in setting the appropriate DTC. **Note: This DTC is strictly an electrical fault and does not apply to any internal transmission failures.**

Diagnostic Test

1. CHECK FOR TIPM TCM DTCS

With the scan tool, check for other transmission DTCs.

Are there any TIPM TCM DTCs present?

Yes >> Refer to the Transmission category and perform the appropriate symptom.

No >> Go To 2

2. CHECK TO SEE IF P0750 IS PRESENT

Ignition on, engine not running.

With the scan tool, erase all Transmission DTC's.

Turn the ignition off to the lock position.

Remove the Ignition Switch Feed fuse from the TIPM.

CAUTION: Removal of the Ignition Switch Feed fuse from the TIPM will prevent the vehicle from being started in gear.

WARNING: The Ignition Switch Feed fuse must be removed from the TIPM. Failure to do so can result in personal injury or death.

Install the Transmission Simulator, Miller tool #8333.

Ignition on, engine not running.

With the scan tool, actuate the LR Solenoid.

Monitor the LR Solenoid LED on the Transmission Simulator.

Did the LR Solenoid LED on the Transmission Simulator blink on and off?

Yes >> Go To 3

No >> Go To 4

3. CHECK THE TRANSMISSION SOLENOID/TRS ASSEMBLY

With the scan tool, continue to actuate the LR Solenoid for the period of 2 minutes with the Transmission Simulator still connected.

After 2 minutes of actuation, with the scan tool, stop the actuation and check for transmission DTCs.

Did the DTC P0750 reset during the actuation test?

Yes >> Go To 4

No >> Replace the Transmission Solenoid/TRS Assembly per the Service Information. (Refer to 21 - TRANSMISSION/TRANSAXLE/AUTOMATIC - 45RFE/545RFE/TRANS SOLENOID/TRS ASSY - REMOVAL)

Perform 45RFE/545RFE TRANSMISSION VERIFICATION TEST - VER 1. (Refer to 21 - TRANSMISSION/TRANSAXLE/AUTOMATIC - 45RFE/545RFE - STANDARD PROCEDURE)

4. CHECK THE (T20) LR SOLENOID CONTROL CIRCUIT FOR A SHORT TO ANOTHER CIRCUIT

Turn the ignition off to the lock position.

Disconnect the Transmission Simulator, Miller tool #8333.

Disconnect the PCM harness connectors.

Measure the resistance between the (T20) LR Solenoid Control circuit and all other circuits in the Transmission Solenoid/TRS Assembly harness connector.

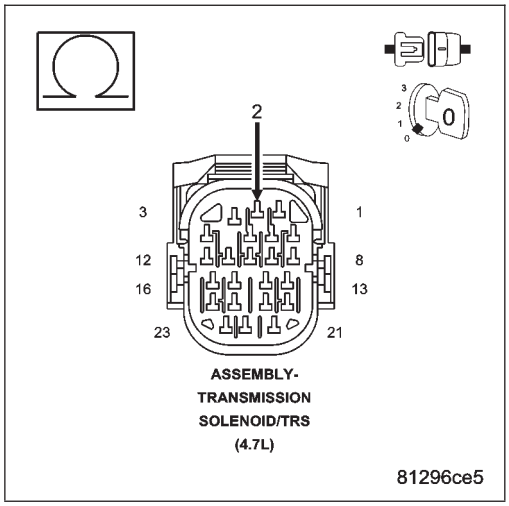

Is the resistance below 5.0 ohms between the (T20) LR Solenoid Control circuit and any other circuit(s) in the Transmission Solenoid/TRS Assembly harness connector?

Yes >> Repair the (T20) LR Solenoid Control circuit for a short to another circuit(s).

Perform 45RFE/545RFE TRANSMISSION VERIFICATION TEST - VER 1. (Refer to 21 - TRANSMISSION/TRANSAXLE/AUTOMATIC - 45RFE/545RFE - STANDARD PROCEDURE)

No >> Go To 5

5. CHECK THE (T20) LR SOLENOID CONTROL CIRCUIT FOR AN OPEN

Connect Miller tool #8815 to the PCM C4 harness connector.

CAUTION: Do not probe the PCM harness connectors. Probing the PCM harness connectors will damage the PCM terminals resulting in poor terminal to pin connection. Install Miller tool #8815 to perform diagnosis.

Measure the resistance of the (T20) LR Solenoid Control circuit between the Transmission Solenoid/TRS Assembly harness connector and the appropriate terminal of Miller tool #8815.

Is the resistance above 5.0 ohms?

Yes >> Repair the (T20) LR Solenoid Control circuit for an open.
Perform 45RFE/545RFE TRANSMISSION VERIFICATION TEST - VER 1. (Refer to 21 - TRANSMISSION/TRANSAXLE/AUTOMATIC - 45RFE/545RFE - STANDARD PROCEDURE)

No >> Go To 6

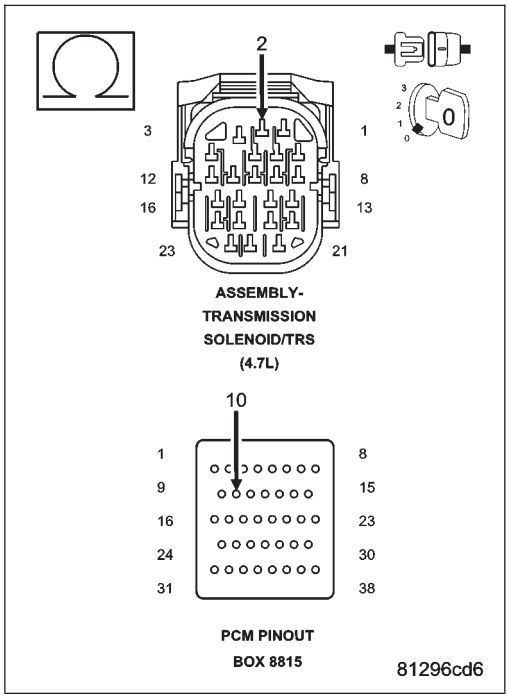

6. CHECK THE (T20) LR SOLENOID CONTROL CIRCUIT FOR A SHORT TO GROUND

Measure the resistance between ground and the (T20) LR Solenoid Control circuit.

Is the resistance below 5.0 ohms?

Yes >> Repair the (T20) LR Solenoid Control circuit for a short to ground.
Perform 45RFE/545RFE TRANSMISSION VERIFICATION TEST - VER 1. (Refer to 21 - TRANSMISSION/TRANSAXLE/AUTOMATIC - 45RFE/545RFE - STANDARD PROCEDURE)

No >> Using the schematics as a guide, check the Powertrain Control Module (PCM) terminals for corrosion, damage, or terminal push out. Pay particular attention to all power and ground circuits. If no problems are found, replace the PCM per the Service Information. With the scan tool, perform QUICK LEARN.
Perform 45RFE/545RFE TRANSMISSION VERIFICATION TEST - VER 1. (Refer to 21 - TRANSMISSION/TRANSAXLE/AUTOMATIC - 45RFE/545RFE - STANDARD PROCEDURE)

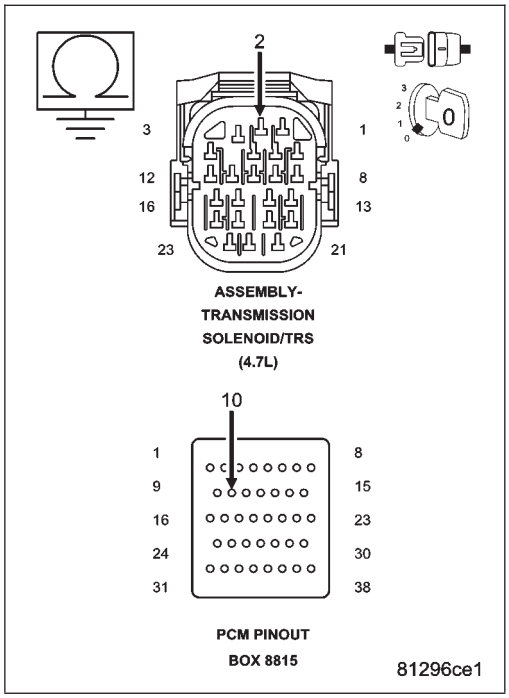

P0755-2C SOLENOID CIRCUIT

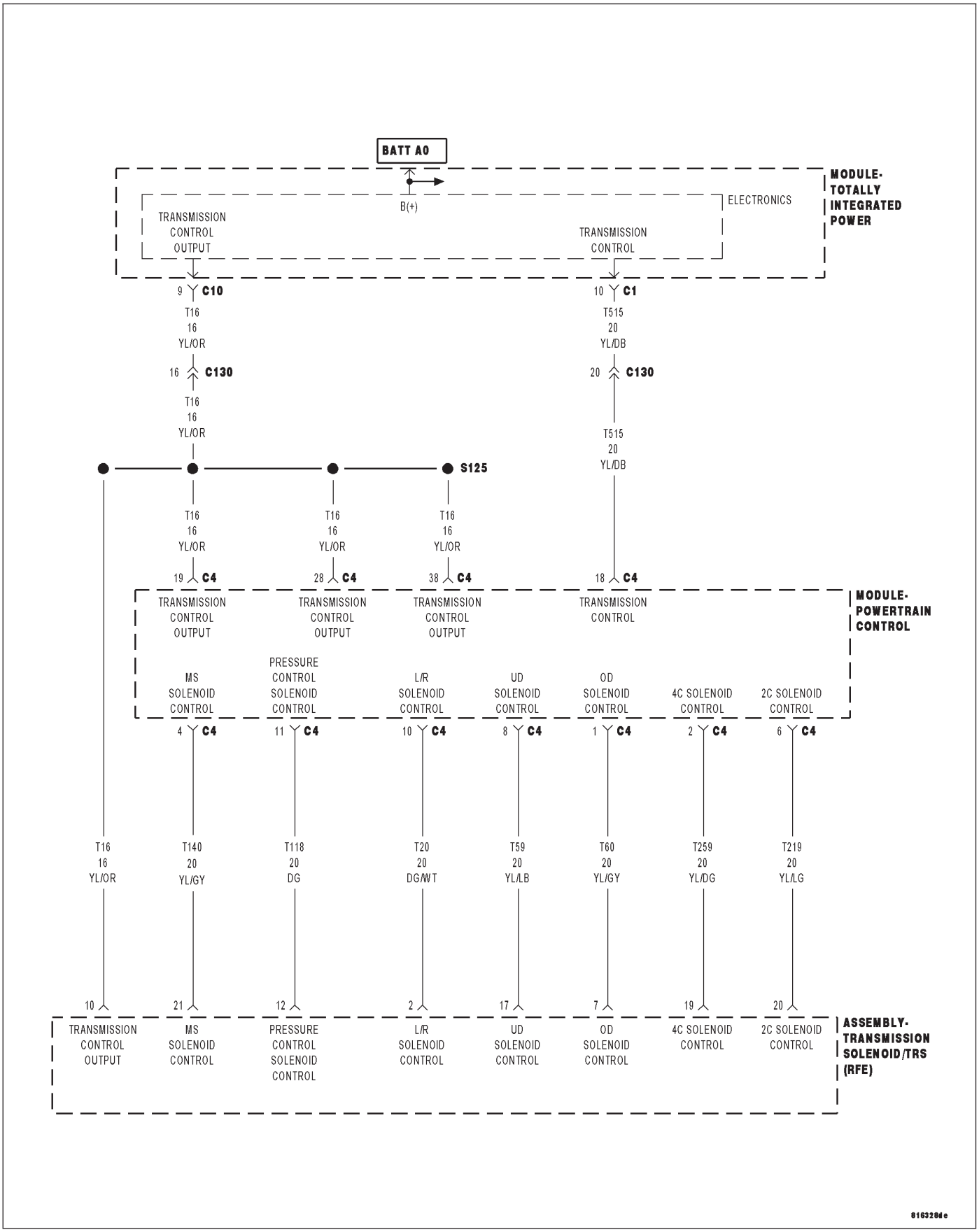

- **When Monitored:**
  Initially at power-up, then every 10 seconds thereafter. The solenoid circuits will also be tested immediately after a gear ratio or pressure switch error is detected.
- **Set Condition:**
  After three consecutive solenoid continuity test failures, or one failure if test is run in response to a gear ratio or pressure switch error. **Note: This DTC is strictly an electrical fault and does not apply to any internal transmission failures.**

Possible Causes
RELATED TIPM TCM DTCS PRESENT
(T219) 2C SOLENOID CONTROL CIRCUIT SHORT TO OTHER CIRCUITS
(T219) 2C SOLENOID CONTROL CIRCUIT OPEN
(T219) 2C SOLENOID CONTROL CIRCUIT SHORT TO GROUND
TRANSMISSION SOLENOID/TRS ASSEMBLY
POWERTRAIN CONTROL MODULE

Always perform the 45RFE/545RFE Pre-Diagnostic Troubleshooting Procedure before proceeding. (Refer to 21 - TRANSMISSION/TRANSAXLE/AUTOMATIC - 45RFE/545RFE - STANDARD PROCEDURE)

Theory of Operation

The Transmission Control System uses six electronically controlled solenoids that allow hydraulic fluid to be applied to various friction elements (clutches), which enables the gear requested. The continuity of each solenoid circuit is periodically tested. Each inactive solenoid is turned on for a few milliseconds, then off. Each active solenoid is turned off for a few milliseconds, then on. This pulsing of voltage to the solenoid causes an inductive spike which can be sensed by the Transmission Control System. If an inductive spike is not sensed by the Transmission Control System during the continuity check, it is tested again. If the test fails three consecutive times, the appropriate Diagnostic Trouble Code (DTC) is set. If the solenoid test is run in response to a gear ratio or pressure switch error, one failure will result in setting the appropriate DTC. **Note: This DTC is strictly an electrical fault and does not apply to any internal transmission failures.**

Diagnostic Test

1. CHECK FOR TCM TIPM DTCS

With the scan tool under TIPM, check for TCM Power Input DTCs.

Are there any TIPM TCM Power Input DTCs present?

Yes >> Refer to the Transmission category and perform the appropriate symptom.

No >> Go To 2

2. CHECK TO SEE IF P0755 IS PRESENT

Turn the ignition off to the lock position.

Remove the Ignition Switch Feed fuse from the TIPM.

CAUTION: Removal of the Ignition Switch Feed fuse from the TIPM will prevent the vehicle from being started in gear.

WARNING: The Ignition Switch Feed fuse must be removed from the TIPM. Failure to do so can result in personal injury or death.

Install the Transmission Simulator, Miller tool #8333.

Ignition on, engine not running.

With the scan tool, actuate the 2C Solenoid.

Did the 2C Solenoid LED blink on and off on the Transmission Simulator?

Yes >> Go To 3

No >> Go To 4

3. CHECK THE TRANSMISSION SOLENOID/TRS ASSEMBLY

With the scan tool, continue to actuate the 2C Solenoid for the period of 2 minutes with the Transmission Simulator still connected.

After 2 minutes of actuation, with the scan tool, stop the actuation and check for transmission DTCs.

Did the DTC P0755 reset during the actuation test?

Yes >> Go To 4

No >> Replace the Transmission Solenoid/TRS Assembly per the Service Information. (Refer to 21 - TRANSMISSION/TRANSAXLE/AUTOMATIC - 45RFE/545RFE/TRANS SOLENOID/TRS ASSY - REMOVAL)

Perform 45RFE/545RFE TRANSMISSION VERIFICATION TEST - VER 1. (Refer to 21 - TRANSMISSION/TRANSAXLE/AUTOMATIC - 45RFE/545RFE - STANDARD PROCEDURE)

4. CHECK THE (T219) 2C SOLENOID CONTROL CIRCUIT FOR A SHORT TO ANOTHER CIRCUIT

Turn the ignition off to the lock position.

Disconnect the Transmission Simulator, Miller tool #8333.

Disconnect the PCM harness connectors.

Measure the resistance between the (T219) 2C Solenoid Control circuit and all other circuits in the Transmission Solenoid/TRS Assembly harness connector.

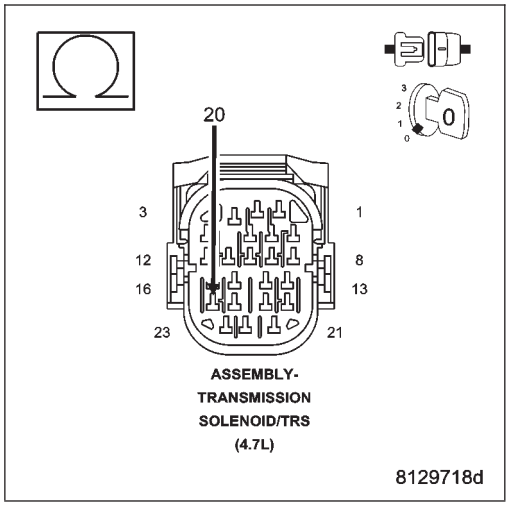

Is the resistance below 5.0 ohms between the (T219) 2C Solenoid Control circuit and any other circuit(s) in the Transmission Solenoid/TRS Assembly harness connector?

Yes >> Repair the (T219) 2C Solenoid Control circuit for a short to another circuit(s).

Perform 45RFE/545RFE TRANSMISSION VERIFICATION TEST - VER 1. (Refer to 21 - TRANSMISSION/TRANSAXLE/AUTOMATIC - 45RFE/545RFE - STANDARD PROCEDURE)

No >> Go To 5

5. CHECK THE (T219) 2C SOLENOID CONTROL CIRCUIT FOR AN OPEN

Connect Miller tool #8815 to the PCM C4 harness connector.

CAUTION: Do not probe the PCM harness connectors. Probing the PCM harness connectors will damage the PCM terminals resulting in poor terminal to pin connection. Install Miller tool #8815 to perform diagnosis.

Measure the resistance of the (T219) 2C Solenoid Control circuit between the Transmission Solenoid/TRS Assembly harness connector and the appropriate terminal of Miller tool #8815.

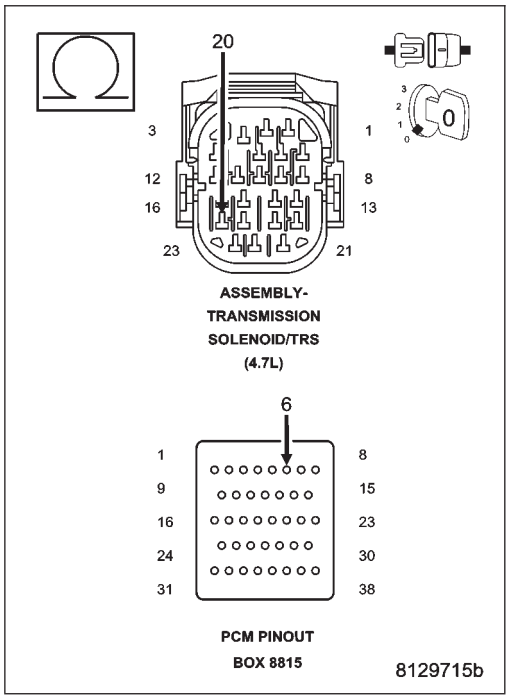

Is the resistance above 5.0 ohms?

Yes >> Repair the (T219) 2C Solenoid Control circuit for an open.

Perform 45RFE/545RFE TRANSMISSION VERIFICATION TEST - VER 1. (Refer to 21 - TRANSMISSION/TRANSAXLE/AUTOMATIC - 45RFE/545RFE - STANDARD PROCEDURE)

No >> Go To 6

6. CHECK THE (T219) 2C SOLENOID CONTROL CIRCUIT FOR A SHORT TO GROUND

Measure the resistance between ground and the (T219) 2C Solenoid Control circuit.

Is the resistance below 5.0 ohms?

Yes >> Repair the (T219) 2C Solenoid Control circuit for a short to ground.

Perform 45RFE/545RFE TRANSMISSION VERIFICATION TEST - VER 1. (Refer to 21 - TRANSMISSION/TRANSAXLE/AUTOMATIC - 45RFE/545RFE - STANDARD PROCEDURE)

No >> Using the schematics as a guide, check the Powertrain Control Module (PCM) terminals for corrosion, damage, or terminal push out. Pay particular attention to all power and ground circuits. If no problems are found, replace the PCM per the Service Information. With the scan tool, perform QUICK LEARN.

Perform 45RFE/545RFE TRANSMISSION VERIFICATION TEST - VER 1. (Refer to 21 - TRANSMISSION/TRANSAXLE/AUTOMATIC - 45RFE/545RFE - STANDARD PROCEDURE)

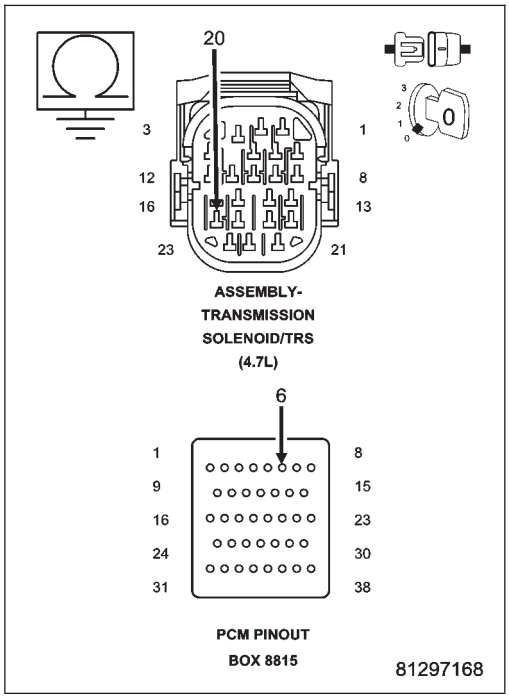

P0760-OD SOLENOID CIRCUIT

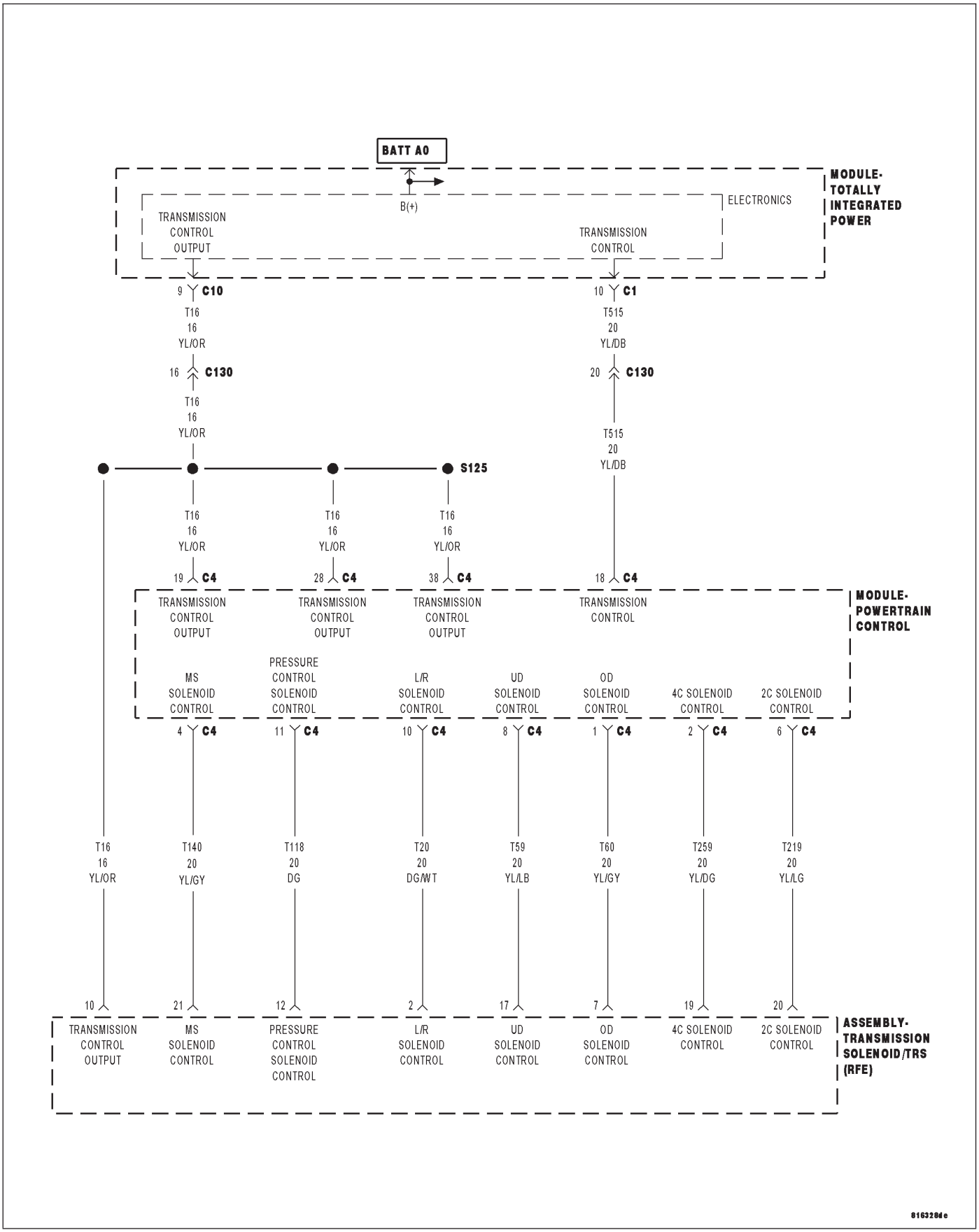

For a complete wiring diagram **Refer to Section 8W**

- **When Monitored:**
  Initially at power-up, then every 10 seconds thereafter. The solenoid circuits will also be tested immediately after a gear ratio or pressure switch error is detected.
- **Set Condition:**
  After three consecutive solenoid continuity test failures, or one failure if test is run in response to a gear ratio or pressure switch error. **Note: This DTC is strictly an electrical fault and does not apply to any internal transmission failures.**

Possible Causes
RELATED TIPM TCM DTCS PRESENT
(T60) OD SOLENOID CONTROL CIRCUIT SHORT TO OTHER CIRCUITS
(T60) OD SOLENOID CONTROL CIRCUIT OPEN
(T60) OD SOLENOID CONTROL CIRCUIT SHORT TO GROUND
TRANSMISSION SOLENOID/TRS ASSEMBLY
POWERTRAIN CONTROL MODULE

Always perform the 45RFE/545RFE Pre-Diagnostic Troubleshooting Procedure before proceeding. (Refer to 21 - TRANSMISSION/TRANSAXLE/AUTOMATIC - 45RFE/545RFE - STANDARD PROCEDURE)

Theory of Operation

The Transmission Control System uses six electronically controlled solenoids that allow hydraulic fluid to be applied to various friction elements (clutches), which enables the gear requested. The continuity of each solenoid circuit is periodically tested. Each inactive solenoid is turned on for a few milliseconds, then off. Each active solenoid is turned off for a few milliseconds, then on. This pulsing of voltage to the solenoid causes an inductive spike which can be sensed by the Transmission Control System. If an inductive spike is not sensed by the Transmission Control System during the continuity check, it is tested again. If the test fails three consecutive times, the appropriate Diagnostic Trouble Code (DTC) is set. If the solenoid test is run in response to a gear ratio or pressure switch error, one failure will result in setting the appropriate DTC. **Note: This DTC is strictly an electrical fault and does not apply to any internal transmission failures.**

Diagnostic Test

1. RELATED TIPM TCM DTCS PRESENT

With the scan tool, check for TIPM DTCs.

Are there any TIPM TCM DTCs present?

Yes >> Refer to the Transmission category and perform the appropriate symptom.

No >> Go To 2

2. CHECK TO SEE IF P0760 IS PRESENT

Turn the ignition off to the lock position.

Remove the Ignition Switch Feed fuse from the TIPM.

CAUTION: Removal of the Ignition Switch Feed fuse from the TIPM will prevent the vehicle from being started in gear.

WARNING: The Ignition Switch Feed fuse must be removed from the TIPM. Failure to do so can result in personal injury or death.

Install Transmission Simulator, Miller tool #8333.

Ignition on, engine not running.

With the scan tool, actuate the OD Solenoid.

Monitor the OD Solenoid LED on the Transmission Simulator.

Did the OD Solenoid LED on the Transmission Simulator blink on and off?

Yes >> Go To 3

No >> Go To 4

3. CHECK THE TRANSMISSION SOLENOID/TRS ASSEMBLY

With the scan tool, continue to actuate the OD Solenoid for the period of 2 minutes with the Transmission Simulator still connected.

After 2 minutes of actuation, with the scan tool, stop the actuation and check for transmission DTCs.

Did the DTC P0760 reset during the actuation test?

Yes >> Go To 4

No >> Replace the Transmission Solenoid/TRS Assembly per the Service Information. (Refer to 21 - TRANSMISSION/TRANSAXLE/AUTOMATIC - 45RFE/545RFE/TRANS SOLENOID/TRS ASSY - REMOVAL)

Perform 45RFE/545RFE TRANSMISSION VERIFICATION TEST - VER 1. (Refer to 21 - TRANSMISSION/TRANSAXLE/AUTOMATIC - 45RFE/545RFE - STANDARD PROCEDURE)

4. CHECK THE (T60) OD SOLENOID CONTROL CIRCUIT FOR A SHORT TO ANOTHER CIRCUIT

Turn the ignition off to the lock position.

Disconnect the Transmission Simulator, Miller tool #8333.

Disconnect the PCM harness connectors.

Measure the resistance between the (T60) OD Solenoid Control circuit and all other circuits in the Transmission Solenoid/TRS Assembly harness connector.

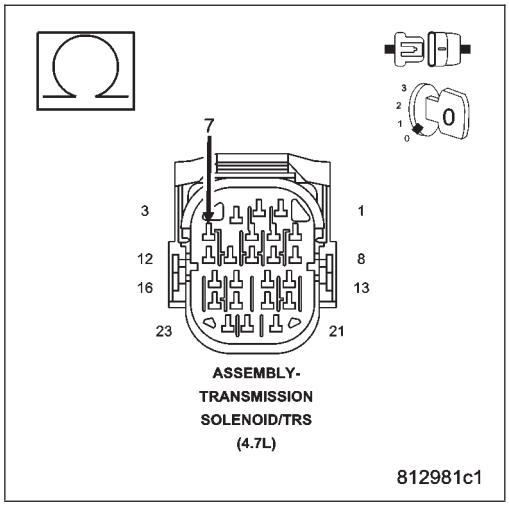

Is the resistance below 5.0 ohms between the (T60) OD Solenoid Control circuit and any other circuit(s) in the Transmission Solenoid/TRS Assembly harness connector?

Yes >> Repair the (T60) OD Solenoid Control circuit for a short to another circuit(s).

Perform 45RFE/545RFE TRANSMISSION VERIFICATION TEST - VER 1. (Refer to 21 - TRANSMISSION/TRANSAXLE/AUTOMATIC - 45RFE/545RFE - STANDARD PROCEDURE)

No >> Go To 5

5. CHECK THE (T60) OD SOLENOID CONTROL CIRCUIT FOR AN OPEN

Connect Miller tool #8815 to the PCM C4 harness connector.

CAUTION: Do not probe the PCM harness connectors. Probing the PCM harness connectors will damage the PCM terminals resulting in poor terminal to pin connection. Install Miller special tool #8815 to perform diagnosis.

Measure the resistance of the (T60) OD Solenoid Control circuit between the Transmission Solenoid/TRS Assembly harness connector to the appropriate terminal of Miller tool #8815.

Is the resistance above 5.0 ohms?

Yes >> Repair the (T60) OD Solenoid Control circuit for an open.
Perform 45RFE/545RFE TRANSMISSION VERIFICATION TEST - VER 1. (Refer to 21 - TRANSMISSION/TRANSAXLE/AUTOMATIC - 45RFE/545RFE - STANDARD PROCEDURE)

No >> Go To 6

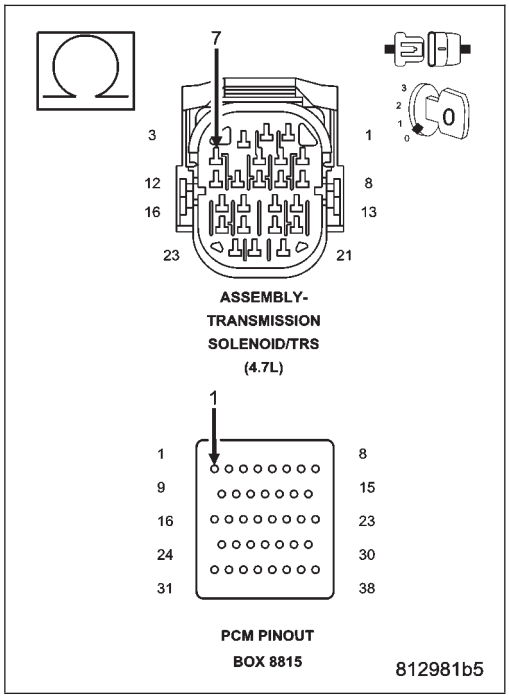

6. CHECK THE (T60) OD SOLENOID CONTROL CIRCUIT FOR A SHORT TO GROUND

Measure the resistance between ground and the (T60) OD Solenoid Control circuit.

Is the resistance below 5.0 ohms?

Yes >> Repair the (T60) OD Solenoid Control circuit for a short to ground.
Perform 45RFE/545RFE TRANSMISSION VERIFICATION TEST - VER 1. (Refer to 21 - TRANSMISSION/TRANSAXLE/AUTOMATIC - 45RFE/545RFE - STANDARD PROCEDURE)

No >> Using the schematics as a guide, check the Powertrain Control Module (PCM) terminals for corrosion, damage, or terminal push out. Pay particular attention to all power and ground circuits. If no problems are found, replace the PCM per the Service Information. With the scan tool, perform QUICK LEARN.
Perform 45RFE/545RFE TRANSMISSION VERIFICATION TEST - VER 1. (Refer to 21 - TRANSMISSION/TRANSAXLE/AUTOMATIC - 45RFE/545RFE - STANDARD PROCEDURE)

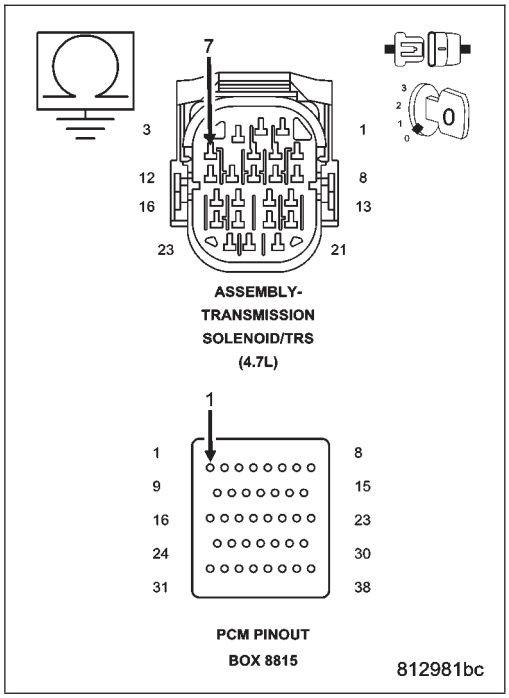

P0765-UD SOLENOID CIRCUIT

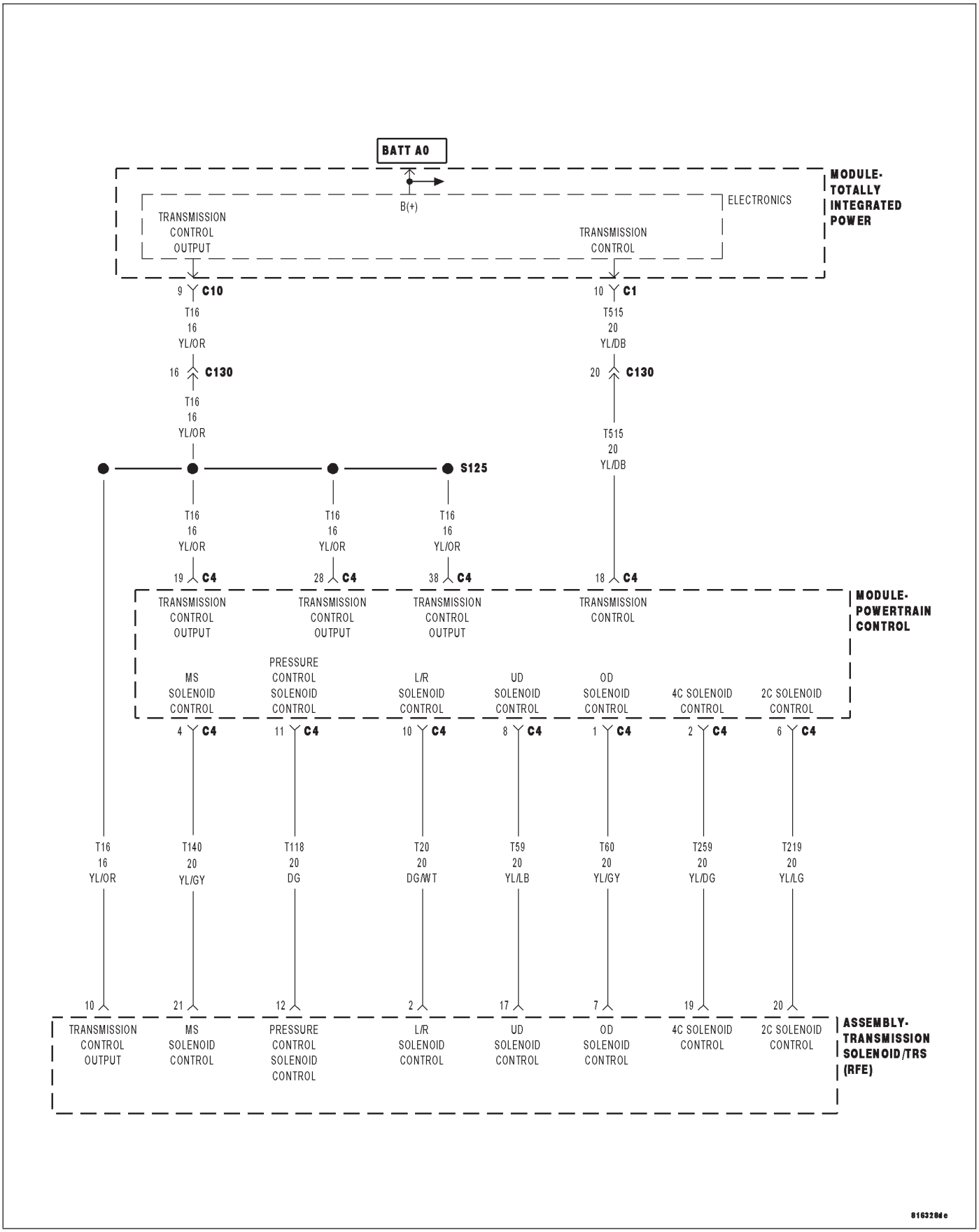

For a complete wiring diagram **Refer to Section 8W**

- **When Monitored:**
  Initially at power-up, then every 10 seconds thereafter. The solenoid circuits will also be tested immediately after a gear ratio or pressure switch error is detected.
- **Set Condition:**
  After three consecutive solenoid continuity test failures, or one failure if test is run in response to a gear ratio or pressure switch error. **Note: This DTC is strictly an electrical fault and does not apply to any internal transmission failures.**

Possible Causes
RELATED TIPM TCM DTCS PRESENT
(T59) UD SOLENOID CONTROL CIRCUIT SHORT TO OTHER CIRCUITS
(T59) UD SOLENOID CONTROL CIRCUIT OPEN
(T59) UD SOLENOID CONTROL CIRCUIT SHORT TO GROUND
TRANSMISSION SOLENOID/TRS ASSEMBLY
POWERTRAIN CONTROL MODULE

Always perform the 45RFE/545RFE Pre-Diagnostic Troubleshooting Procedure before proceeding. (Refer to 21 - TRANSMISSION/TRANSAXLE/AUTOMATIC - 45RFE/545RFE - STANDARD PROCEDURE)

Theory of Operation

The Transmission Control System uses six electronically controlled solenoids that allow hydraulic fluid to be applied to various friction elements (clutches), which enables the gear requested. The continuity of each solenoid circuit is periodically tested. Each inactive solenoid is turned on for a few milliseconds, then off. Each active solenoid is turned off for a few milliseconds, then on. This pulsing of voltage to the solenoid causes an inductive spike which can be sensed by the Transmission Control System. If an inductive spike is not sensed by the Transmission Control System during the continuity check, it is tested again. If the test fails three consecutive times, the appropriate Diagnostic Trouble Code (DTC) is set. If the solenoid test is run in response to a gear ratio or pressure switch error, one failure will result in setting the appropriate DTC. **Note: This DTC is strictly an electrical fault and does not apply to any internal transmission failures.**

Diagnostic Test

1. CHECK FOR TCM TIPM DTCS

With the scan tool under TIPM, check for TCM Power Input DTCs.

Are there any TIPM TCM Power Input DTCs present?

Yes >> Refer to the Transmission category and perform the appropriate symptom.

No >> Go To 2

2. CHECK IF P0765 IS PRESENT

Turn the ignition off to the lock position.

Remove the Ignition Switch Feed fuse from the TIPM.

CAUTION: Removal of the Ignition Switch Feed fuse from the TIPM will prevent the vehicle from being started in gear.

WARNING: The Ignition Switch Feed fuse must be removed from the TIPM. Failure to do so can result in personal injury or death.

Install Transmission Simulator, Miller tool #8333.

Ignition on, engine not running.

With the scan tool, actuate the UD Solenoid.

Monitor the UD Solenoid LED on the Transmission Simulator.

Did the UD Solenoid LED on the Transmission Simulator blink on and off?

Yes >> Go To 3

No >> Go To 4

3. CHECK THE TRANSMISSION SOLENOID/TRS ASSEMBLY

With the scan tool, continue to actuate the UD Solenoid for the period of 2 minutes with the Transmission Simulator still connected.

After 2 minutes of actuation, with the scan tool, stop the actuation and check for transmission DTCs.

Did the DTC P0765 reset during the actuation test?

Yes >> Go To 4

No >> Replace the Transmission Solenoid/TRS Assembly per the Service Information. (Refer to 21 - TRANSMISSION/TRANSAXLE/AUTOMATIC - 45RFE/545RFE/TRANS SOLENOID/TRS ASSY - REMOVAL)

Perform 45RFE/545RFE TRANSMISSION VERIFICATION TEST - VER 1. (Refer to 21 - TRANSMISSION/TRANSAXLE/AUTOMATIC - 45RFE/545RFE - STANDARD PROCEDURE)

4. CHECK THE (T59) UD SOLENOID CONTROL CIRCUIT FOR A SHORT TO ANOTHER CIRCUIT

Turn the ignition off to the lock position.

Disconnect the Transmission Simulator, Miller tool #8333.

Disconnect the PCM harness connectors.

Measure the resistance between the (T59) UD Solenoid Control circuit and all other circuits in the Transmission Solenoid/TRS Assembly harness connector.

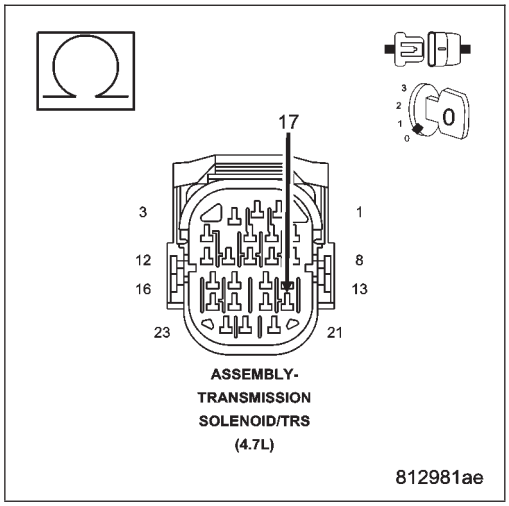

Is the resistance below 5.0 ohms between the (T59) UD Solenoid Control circuit and any other circuit(s) in the Transmission Solenoid/TRS Assembly harness connector?

Yes >> Repair the (T59) UD Solenoid Control circuit for a short to another circuit(s).

Perform 45RFE/545RFE TRANSMISSION VERIFICATION TEST - VER 1. (Refer to 21 - TRANSMISSION/TRANSAXLE/AUTOMATIC - 45RFE/545RFE - STANDARD PROCEDURE)

No >> Go To 5

5. CHECK THE (T59) UD SOLENOID CONTROL CIRCUIT FOR AN OPEN

Connect Miller tool #8815 to the PCM C4 harness connector.

CAUTION: Do not probe the PCM harness connectors. Probing the PCM harness connectors will damage the PCM terminals resulting in poor terminal to pin connection. Install Miller tool #8815 to perform diagnosis.

Measure the resistance of the (T59) UD Solenoid Control circuit between the Transmission Solenoid/TRS Assembly harness connector and the appropriate terminal of Miller tool #8815.

Is the resistance above 5.0 ohms?

Yes >> Repair the (T59) UD Solenoid Control circuit for an open.
Perform 45RFE/545RFE TRANSMISSION VERIFICATION TEST - VER 1. (Refer to 21 - TRANSMISSION/TRANSAXLE/AUTOMATIC - 45RFE/545RFE - STANDARD PROCEDURE)

No >> Go To 6

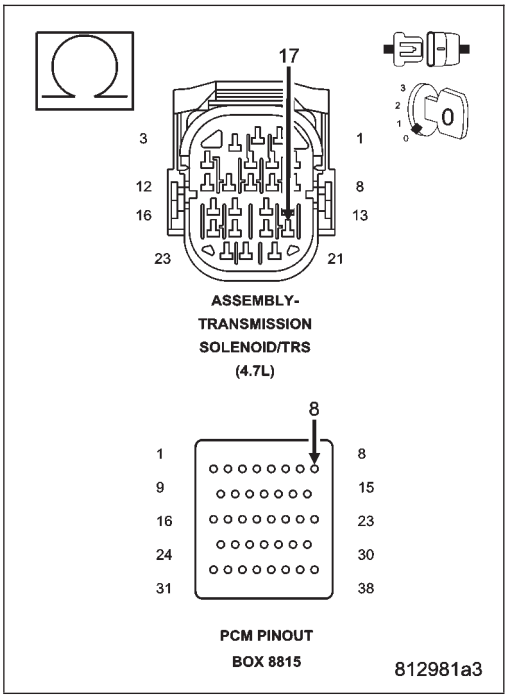

6. CHECK THE (T59) UD SOLENOID CONTROL CIRCUIT FOR A SHORT TO GROUND

Measure the resistance between ground and the (T59) UD Solenoid Control circuit.

Is the resistance below 5.0 ohms?

Yes >> Repair the (T59) UD Solenoid Control circuit for a short to ground.
Perform 45RFE/545RFE TRANSMISSION VERIFICATION TEST - VER 1. (Refer to 21 - TRANSMISSION/TRANSAXLE/AUTOMATIC - 45RFE/545RFE - STANDARD PROCEDURE)

No >> Using the schematics as a guide, check the Powertrain Control Module (PCM) terminals for corrosion, damage, or terminal push out. Pay particular attention to all power and ground circuits. If no problems are found, replace the PCM per the Service Information. With the scan tool, perform QUICK LEARN.
Perform 45RFE/545RFE TRANSMISSION VERIFICATION TEST - VER 1. (Refer to 21 - TRANSMISSION/TRANSAXLE/AUTOMATIC - 45RFE/545RFE - STANDARD PROCEDURE)

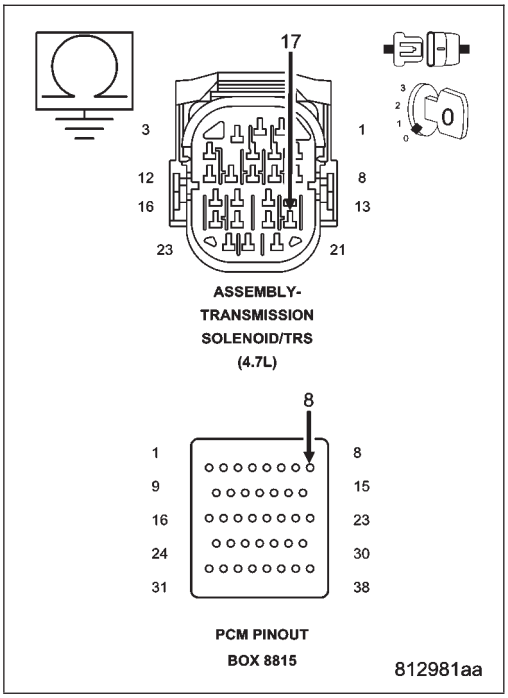

P0770-4C SOLENOID CIRCUIT

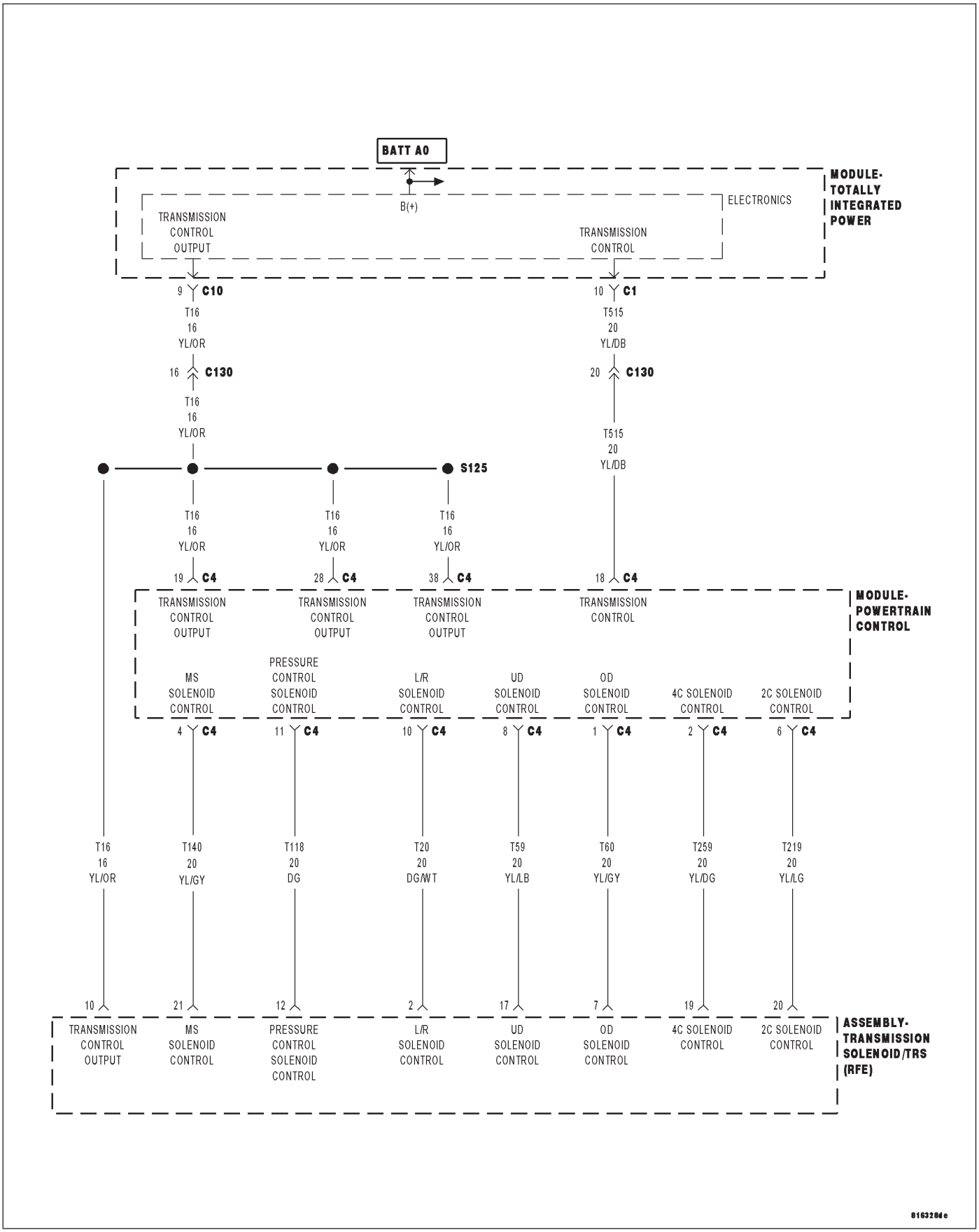

For a complete wiring diagram **Refer to Section 8W**

- **When Monitored:**
  Initially at power-up, then every 10 seconds thereafter. The solenoid circuits will also be tested immediately after a gear ratio or pressure switch error is detected.
- **Set Condition:**
  After three consecutive solenoid continuity test failures, or one failure if test is run in response to a gear ratio or pressure switch error. **Note: This DTC is strictly an electrical fault and does not apply to any internal transmission failures.**

Possible Causes
RELATED TIPM TCM DTCS PRESENT
(T259) 4C SOLENOID CONTROL CIRCUIT SHORT TO OTHER CIRCUITS
(T259) 4C SOLENOID CONTROL CIRCUIT OPEN
(T259) 4C SOLENOID CONTROL CIRCUIT SHORT TO GROUND
TRANSMISSION SOLENOID/TRS ASSEMBLY
POWERTRAIN CONTROL MODULE

Always perform the 45RFE/545RFE Pre-Diagnostic Troubleshooting Procedure before proceeding. (Refer to 21 - TRANSMISSION/TRANSAXLE/AUTOMATIC - 45RFE/545RFE - STANDARD PROCEDURE)

Theory of Operation

The Transmission Control System uses six electronically controlled solenoids that allow hydraulic fluid to be applied to various friction elements (clutches), which enables the gear requested. The continuity of each solenoid circuit is periodically tested. Each inactive solenoid is turned on for a few milliseconds, then off. Each active solenoid is turned off for a few milliseconds, then on. This pulsing of voltage to the solenoid causes an inductive spike which can be sensed by the Transmission Control System. If an inductive spike is not sensed by the Transmission Control System during the continuity check, it is tested again. If the test fails three consecutive times, the appropriate Diagnostic Trouble Code (DTC) is set. If the solenoid test is run in response to a gear ratio or pressure switch error, one failure will result in setting the appropriate DTC. **Note: This DTC is strictly an electrical fault and does not apply to any internal transmission failures.**

Diagnostic Test

1. CHECK FOR TCM TIPM DTCS

With the scan tool under TIPM, check for TCM Power Input DTCs.

Are there any TIPM TCM Power Input DTCs present?

Yes >> Refer to the Transmission category and perform the appropriate symptom.

No >> Go To 2

2. CHECK TO SEE IF P0770 IS PRESENT

Turn the ignition off to the lock position.

Remove the Ignition Switch Feed fuse from the TIPM.

CAUTION: Removal of the Ignition Switch Feed fuse from the TIPM will prevent the vehicle from being started in gear.

WARNING: The Ignition Switch Feed fuse must be removed from the TIPM. Failure to do so can result in personal injury or death.

Install Transmission Simulator, Miller tool #8333.

Ignition on, engine not running.

With the scan tool, actuate the 4C Solenoid.

Monitor the 4C Solenoid LED on the Transmission Simulator.

Did the 4C Solenoid LED on the Transmission Simulator blink on and off?

Yes >> Go To 3

No >> Go To 4

3. CHECK THE TRANSMISSION SOLENOID/TRS ASSEMBLY

With the scan tool, continue to actuate the 4C Solenoid for the period of 2 minutes with the Transmission Simulator still connected.

After 2 minutes of actuation, with the scan tool, stop the actuation and check for transmission DTCs.

Did the DTC P0770 reset during the actuation test?

Yes >> Go To 4

No >> Replace the Transmission Solenoid/TRS Assembly per the Service Information. (Refer to 21 - TRANSMISSION/TRANSAXLE/AUTOMATIC - 45RFE/545RFE/TRANS SOLENOID/TRS ASSY - REMOVAL)

Perform 45RFE/545RFE TRANSMISSION VERIFICATION TEST - VER 1. (Refer to 21 - TRANSMISSION/TRANSAXLE/AUTOMATIC - 45RFE/545RFE - STANDARD PROCEDURE)

4. CHECK THE (T259) 4C SOLENOID CONTROL CIRCUIT FOR A SHORT TO ANOTHER CIRCUIT

Turn the ignition off to the lock position.

Disconnect the Transmission Simulator, Miller tool #8333.

Disconnect the PCM harness connectors.

Measure the resistance between the (T259) 4C Solenoid Control circuit and all other circuits in the Transmission Solenoid/TRS Assembly harness connector.

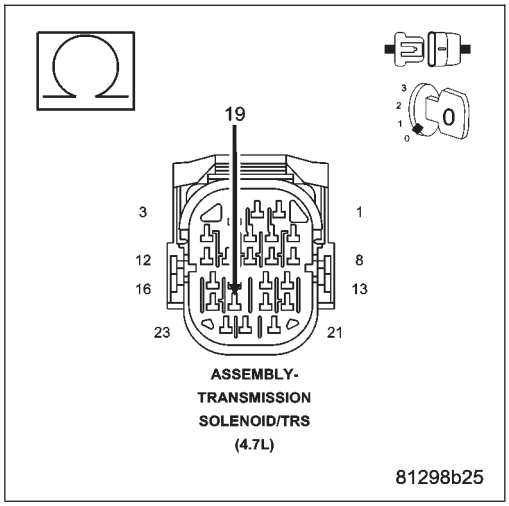

Is the resistance below 5.0 ohms between the (T259) 4C Solenoid Control circuit and any other circuit(s) in the Transmission Solenoid/TRS Assembly harness connector?

Yes >> Repair the (T259) 4C Solenoid Control circuit for a short to another circuit(s).

Perform 45RFE/545RFE TRANSMISSION VERIFICATION TEST - VER 1. (Refer to 21 - TRANSMISSION/TRANSAXLE/AUTOMATIC - 45RFE/545RFE - STANDARD PROCEDURE)

No >> Go To 5

5. CHECK THE (T259) 4C SOLENOID CONTROL CIRCUIT FOR AN OPEN

Connect Miller tool #8815 to the PCM C4 harness connector.

CAUTION: Do not probe the PCM harness connectors. Probing the PCM harness connectors will damage the PCM terminals resulting in poor terminal to pin connection. Install Miller special tool #8815 to perform diagnosis.

Measure the resistance of the (T259) 4C Solenoid Control circuit between the Transmission Solenoid/TRS Assembly harness connector and the appropriate terminal of Miller tool #8815.

Is the resistance above 5.0 ohms?

Yes >> Repair the (T259) 4C Solenoid Control circuit for an open.
Perform 45RFE/545RFE TRANSMISSION VERIFICATION TEST - VER 1. (Refer to 21 - TRANSMISSION/TRANSAXLE/AUTOMATIC - 45RFE/545RFE - STANDARD PROCEDURE)

No >> Go To 6

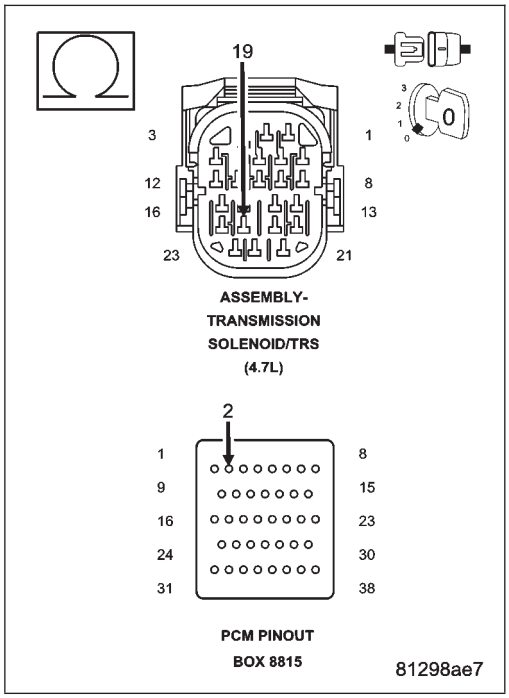

6. CHECK THE (T259) 4C SOLENOID CONTROL CIRCUIT FOR A SHORT TO GROUND

Measure the resistance between ground and the (T259) 4C Solenoid Control circuit.

Is the resistance below 5.0 ohms?

Yes >> Repair the (T259) 4C Solenoid Control circuit for a short to ground.
Perform 45RFE/545RFE TRANSMISSION VERIFICATION TEST - VER 1. (Refer to 21 - TRANSMISSION/TRANSAXLE/AUTOMATIC - 45RFE/545RFE - STANDARD PROCEDURE)

No >> Using the schematics as a guide, check the Powertrain Control Module (PCM) terminals for corrosion, damage, or terminal push out. Pay particular attention to all power and ground circuits. If no problems are found, replace the PCM per the Service Information. With the scan tool, perform QUICK LEARN.
Perform 45RFE/545RFE TRANSMISSION VERIFICATION TEST - VER 1. (Refer to 21 - TRANSMISSION/TRANSAXLE/AUTOMATIC - 45RFE/545RFE - STANDARD PROCEDURE)

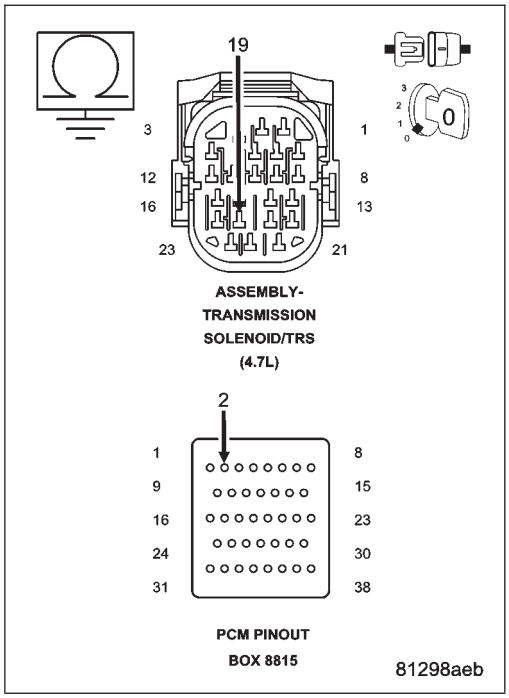

P0841-LR PRESSURE SWITCH RATIONALITY

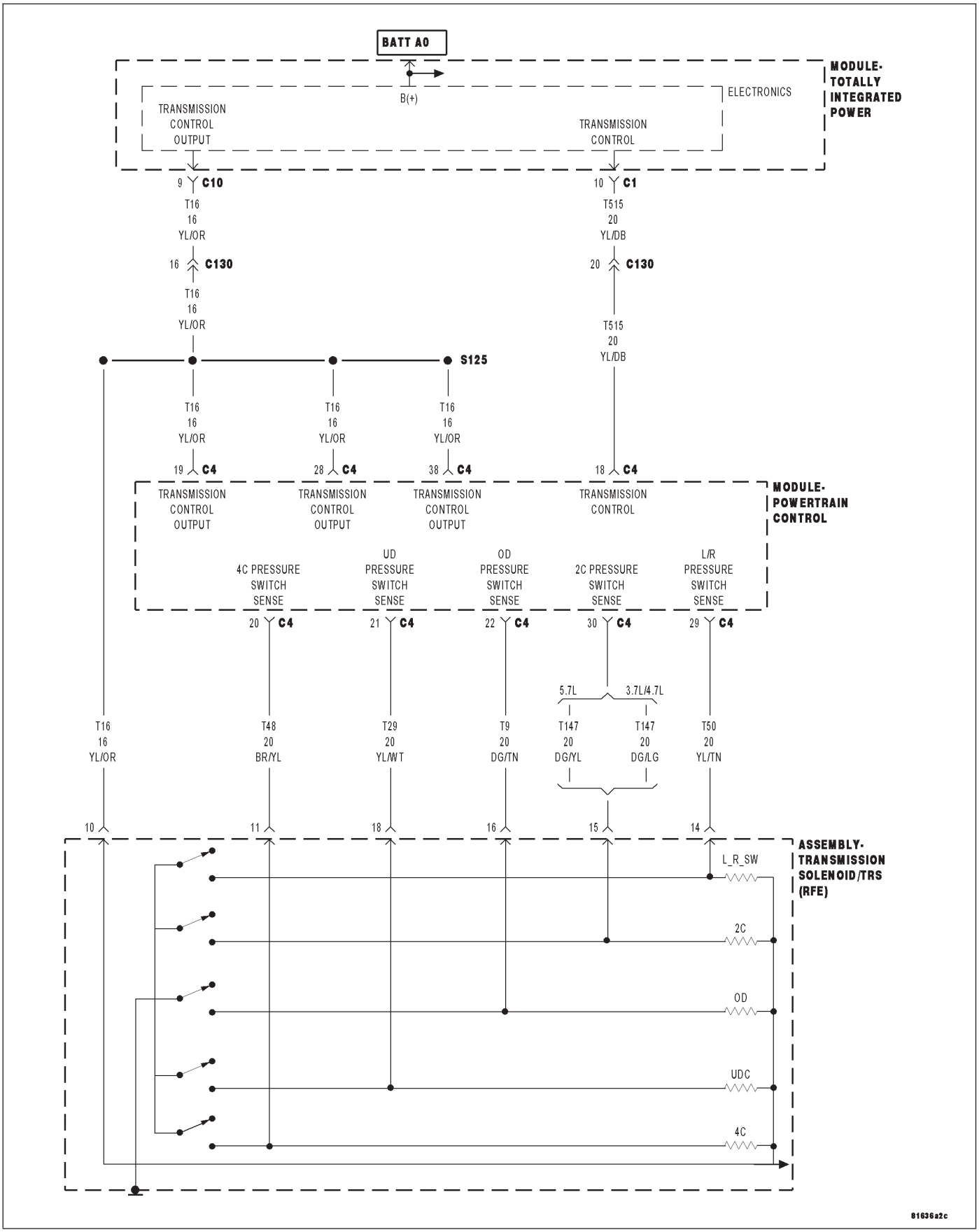

For a complete wiring diagram **Refer to Section 8W**

- **When Monitored:**
  Continuously with the ignition on and engine running.
- **Set Condition:**
  The DTC will set if the LR Pressure Switch reads open or closed at the wrong time in a given gear.

Possible Causes
LOSS OF PRIME AND/OR TIPM DTC PRESENT
LOW FLUID LEVEL
LOW LINE PRESSURE
REVERSE CARRIER SNAP RING DISLODGED
CRACKED OR MISINSTALLED PRIMARY OIL FILTER OR FILTER SEAL
STICKING MAIN REGULATOR VALVE IN PUMP VALVE BODY
NO. 1 CHECK BALL CUT OR DAMAGED
WIRING AND CONNECTORS
(T50) LR PRESSURE SWITCH SENSE CIRCUIT OPEN
(T50) LR PRESSURE SWITCH SENSE CIRCUIT SHORT TO GROUND
(T50) LR PRESSURE SWITCH SENSE CIRCUIT SHORT TO VOLTAGE
TRANSMISSION SOLENOID/TRS ASSEMBLY
POWERTRAIN CONTROL MODULE

Always perform the 45RFE/545RFE Pre-Diagnostic Troubleshooting Procedure before proceeding. (Refer to 21 - TRANSMISSION/TRANSAXLE/AUTOMATIC - 45RFE/545RFE - STANDARD PROCEDURE)

Theory of Operation

The Transmission system uses five pressure switches to monitor the fluid pressure in the LR, 2C, 4C, UD, and OD clutch circuits. The pressure switches are continuously monitored for the correct states in each gear as shown.

GEAR	L/R	2C	4C	UD	OD
REVERSE	OPEN	OPEN	OPEN	OPEN	OPEN
P/N	CLOSED**	OPEN	OPEN	OPEN	OPEN
1ST	CLOSED*	OPEN	OPEN	CLOSED	OPEN
2ND	OPEN	CLOSED	OPEN	CLOSED	OPEN
2ND PRIME	OPEN	OPEN	CLOSED	CLOSED	OPEN
3RD	OPEN	OPEN	OPEN	CLOSED	CLOSED
4TH	OPEN	OPEN	CLOSED	OPEN	CLOSED
5TH	OPEN	CLOSED	OPEN	OPEN	CLOSED

*L/R is closed if output speed is below 100 rpm in Drive and Manual 2. L/R is closed in Manual 1.

**May be open when rolling in Neutral or at low oil temperatures.

Diagnostic Test

1. CHECK IF OTHER RELATED DTC'S PRESENT

Ignition on, engine not running.

With the scan tool, check for other transmission DTC's.

Are there any Loss of Prime and/or TIPM TCM related DTCs present?

Yes >> Refer to the Transmission category and perform the appropriate symptom. If the DTC P0944 is present, perform its respective test first.

No >> Go To 2

2. CHECK IF THE CONDITION P0841 IS PRESENT

With the scan tool, check the DTC EVENT DATA for P0841.

NOTE: Make sure to record all DTC EVENT DATA stored in the scan tool for future reference in this test procedure.

Does the DTC EVENT DATA show the DTC P0841?

Yes >> Go To 3

No >> Refer to the Transmission category and perform diagnostics for the DTC reported in the DTC EVENT DATA.

3. CHECK IF THE DTC SET IN REVERSE

Does the DTC EVENT DATA show the DTC P0841 set while in Reverse?

Yes >> Go To 10

No >> Go To 4

4. CHECK IF THE LR PRESSURE SWITCH IS CLOSED

Does the DTC EVENT DATA show the LR Pressure Switch reading CLOSED when the DTC P0841 was set?

Yes >> Go To 5

No >> Go To 14

5. CHECK THE PCM AND WIRING

Turn the ignition off to the lock position.

Remove the Ignition Switch Feed fuse from the TIPM.

CAUTION: Removal of the Ignition Switch Feed fuse from the TIPM will prevent the vehicle from being started in gear.

WARNING: The Ignition Switch Feed fuse must be removed from the TIPM. Failure to do so can result in personal injury or death.

Install the Transmission Simulator, Miller tool #8333.

Ignition on, engine not running.

Turn the Pressure Switch selector to LR on the Transmission Simulator.

With the scan tool, monitor the LR Pressure Switch state while pressing the Pressure Switch Test button on the Transmission Simulator.

Did the LR Pressure Switch state change from open to closed while pressing the Pressure Switch Test button on the Transmission Simulator?

Yes >> Go To 6

No >> Go To 10

6. CHECK FOR POOR WIRING AND CONNECTIONS

Using the schematics as a guide, inspect the wiring and connectors specific to this circuit.

Wiggle the wires while checking for shorted and open circuits.

Were there any problems found?

Yes >> Repair as necessary.
Perform 45RFE/545RFE TRANSMISSION VERIFICATION TEST - VER 1. (Refer to 21 - TRANSMISSION/TRANSAXLE/AUTOMATIC - 45RFE/545RFE - STANDARD PROCEDURE)

No >> Go To 7

7. CHECK IF THE DTC SET IN FIRST GEAR

With the DTC EVENT DATA recorded earlier, check what gear the transmission was in when the DTC P0841 was set.

Does the DTC EVENT DATA show the Present Gear as first gear when the DTC P0841 was set ?

Yes >> Go To 8

No >> Replace the Transmission Solenoid/TRS Assembly per the Service Information. (Refer to 21 - TRANSMISSION/TRANSAXLE/AUTOMATIC - 45RFE/545RFE/TRANS SOLENOID/TRS ASSY - REMOVAL)

Perform 45RFE/545RFE TRANSMISSION VERIFICATION TEST - VER 1. (Refer to 21 - TRANSMISSION/TRANSAXLE/AUTOMATIC - 45RFE/545RFE - STANDARD PROCEDURE)

8. CHECK IF THE NO. 1 CHECK BALL IS CUT OR DAMAGED

Turn the ignition off to the lock position.

Remove the Transmission Valve Body per the Service Information.

Check the No. 1 Check Ball for any possible cuts or damage.

Is the No. 1 Check Ball cut or damaged?

Yes >> Replace the No. 1 Check Ball and check for clutch debris in the transmission oil pan. If there is excessive debris, perform internal repairs to the LR Clutch assembly. Refer to the Service Information for proper repair procedures.

Perform 45RFE/545RFE TRANSMISSION VERIFICATION TEST - VER 1. (Refer to 21 - TRANSMISSION/TRANSAXLE/AUTOMATIC - 45RFE/545RFE - STANDARD PROCEDURE)

No >> Go To 9

9. CHECK IF THE REVERSE CARRIER SNAP RING IS DISLODGED AND THE TRANSMISSION SOLENOID/TRS ASSEMBLY

Looking through the windows in the bottom of the case, check whether the snap ring at the front of the Reverse (center) Carrier has dislodged.

NOTE: It may be necessary to pry the Input Annulus Gear Shell rearward to check this snap ring.

Is the Reverse Carrier Snap Ring dislodged?

Yes >> Repair as necessary.

Perform 45RFE/545RFE TRANSMISSION VERIFICATION TEST - VER 1. (Refer to 21 - TRANSMISSION/TRANSAXLE/AUTOMATIC - 45RFE/545RFE - STANDARD PROCEDURE)

No >> Replace the Transmission Solenoid/TRS Assembly per the Service Information. (Refer to 21 - TRANSMISSION/TRANSAXLE/AUTOMATIC - 45RFE/545RFE/TRANS SOLENOID/TRS ASSY - REMOVAL)

Perform 45RFE/545RFE TRANSMISSION VERIFICATION TEST - VER 1. (Refer to 21 - TRANSMISSION/TRANSAXLE/AUTOMATIC - 45RFE/545RFE - STANDARD PROCEDURE)

10. CHECK THE (T50) LR PRESSURE SWITCH SENSE CIRCUIT FOR AN OPEN

Turn the ignition off to the lock position.

Disconnect the Transmission Simulator, Miller tool #8333 if connected in a previous step or disconnect the Transmission Solenoid/TRS Assembly harness connector.

Disconnect the PCM C4 harness connector and connect Miller tool #8815.

NOTE: Check connectors - Clean/repair as necessary.

CAUTION: Do not probe the PCM harness connectors. Probing the PCM harness connectors will damage the PCM terminals resulting in poor terminal to pin connection. Install Miller tool #8815 to perform diagnosis.

Measure the resistance of the (T50) LR Pressure Switch Sense circuit between the Solenoid/TRS Assembly harness connector and the appropriate terminal of the Miller tool #8815.

Is the resistance above 5.0 ohms?

Yes >> Repair the (T50) LR Pressure Switch Sense circuit for an open.

Perform 45RFE/545RFE TRANSMISSION VERIFICATION TEST - VER 1. (Refer to 21 - TRANSMISSION/TRANSAXLE/AUTOMATIC - 45RFE/545RFE - STANDARD PROCEDURE)

No >> Go To 11

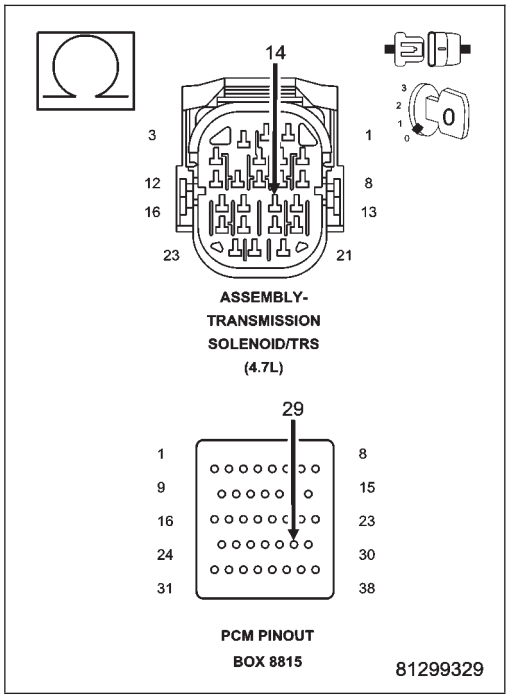

11. CHECK THE (T50) LR PRESSURE SWITCH SENSE CIRCUIT FOR A SHORT TO GROUND

Measure the resistance between ground and the (T50) LR Pressure Switch Sense circuit.

Is the resistance below 5.0 ohms?

Yes >> Repair the (T50) LR Pressure Switch Sense circuit for a short to ground.

Perform 45RFE/545RFE TRANSMISSION VERIFICATION TEST - VER 1. (Refer to 21 - TRANSMISSION/TRANSAXLE/AUTOMATIC - 45RFE/545RFE - STANDARD PROCEDURE)

No >> Go To 12

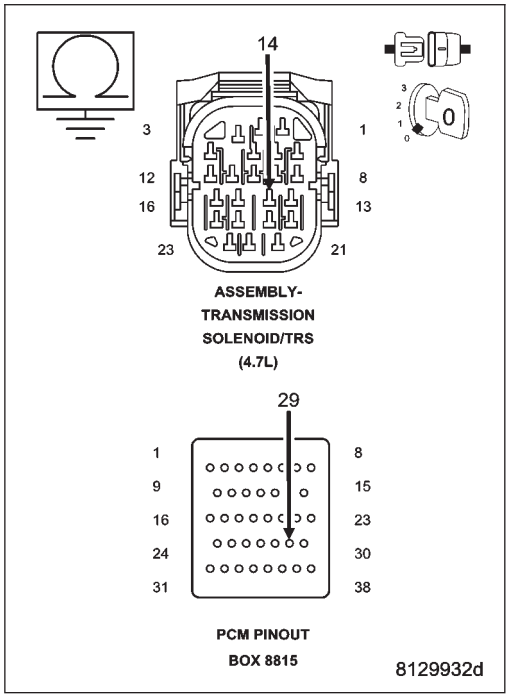

12. CHECK THE PCM POWERS AND GROUNDS

Using the schematics as a guide, check the Powertrain Control Module (PCM) terminals for corrosion, damage, or terminal push out. Pay particular attention to all power and ground circuits.

Were there any problems found?

Yes >> Repair as necessary.

Perform 45RFE/545RFE TRANSMISSION VERIFICATION TEST - VER 1. (Refer to 21 - TRANSMISSION/TRANSAXLE/AUTOMATIC - 45RFE/545RFE - STANDARD PROCEDURE)

No >> Go To 13

13. ROAD TEST THE VEHICLE

With the scan tool, clear the DTC and road test the vehicle.

Try to duplicate the conditions in which the DTC originally set using the DTC EVENT DATA recorded earlier.

Did the DTC P0841 reset?

Yes >> Using the schematics as a guide, check the Powertrain Control Module (PCM) terminals for corrosion, damage, or terminal push out. Pay particular attention to all power and ground circuits. If no problems are found, replace the PCM per the Service Information. With the scan tool, perform QUICK LEARN.

Perform 45RFE/545RFE TRANSMISSION VERIFICATION TEST - VER 1. (Refer to 21 - TRANSMISSION/TRANSAXLE/AUTOMATIC - 45RFE/545RFE - STANDARD PROCEDURE)

No >> Go To 17

14. CHECK FOR LOW LINE PRESSURE

In the DTC EVENT DATA recorded earlier, compare the Line Pressure and the Desired Line Pressure.

Is the Line Pressure less than 40 psi, and significantly below the Desired Line Pressure?

Yes >> Repair as necessary to correct low line pressure. Check for low fluid level. Check the Primary Oil Filter seal for a split, crack, or improperly installed. Refer to the Service Information for the proper installation procedure. If the fluid level and Primary Oil Filter are OK, check the Main Regulator Valve in the Oil Pump per the Service Information.

Perform 45RFE/545RFE TRANSMISSION VERIFICATION TEST - VER 1. (Refer to 21 - TRANSMISSION/TRANSAXLE/AUTOMATIC - 45RFE/545RFE - STANDARD PROCEDURE)

No >> Go To 15

15. CHECK THE (T50) LR PRESSURE SWITCH SENSE CIRCUIT FOR A SHORT TO ANOTHER CIRCUIT

Turn the ignition off to the lock position.

Disconnect the Transmission Solenoid/TRS Assembly harness connector.

Disconnect all PCM harness connectors.

Measure the resistance between the (T50) LR Pressure Switch Sense circuit and all other circuits in the Transmission Solenoid/TRS Assembly harness connector.

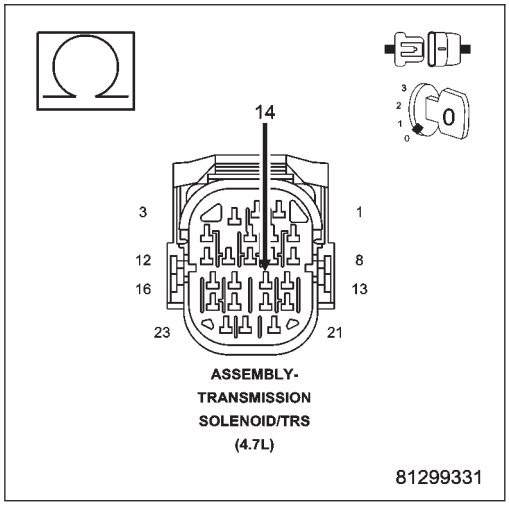

Is the resistance below 5.0 ohms between the (T50) LR Pressure Switch Sense circuit and any other circuit(s) in the Transmission Solenoid/TRS Assembly harness connector?

Yes >> Repair the (T50) LR Pressure Switch Sense circuit for a short to another circuit(s).

Perform 45RFE/545RFE TRANSMISSION VERIFICATION TEST - VER 1. (Refer to 21 - TRANSMISSION/TRANSAXLE/AUTOMATIC - 45RFE/545RFE - STANDARD PROCEDURE)

No >> Go To 16

16. ROAD TEST THE VEHICLE

With the scan tool, clear the DTC and road test the vehicle.

Try to duplicate the conditions in which the DTC originally set using the DTC EVENT DATA recorded earlier.

Did the DTC P0841 reset?

Yes >> Replace the Transmission Solenoid/TRS Assembly per the Service Information. (Refer to 21 - TRANSMISSION/TRANSAXLE/AUTOMATIC - 45RFE/545RFE/TRANS SOLENOID/TRS ASSY - REMOVAL)

Perform 45RFE/545RFE TRANSMISSION VERIFICATION TEST - VER 1. (Refer to 21 - TRANSMISSION/TRANSAXLE/AUTOMATIC - 45RFE/545RFE - STANDARD PROCEDURE)

No >> Go To 17

17. INTERMITTENT WIRING AND CONNECTORS

The conditions necessary to set this DTC are not present at this time.

Using the schematics as a guide, inspect the wiring and connectors specific to this circuit.

Wiggle the wires while checking for shorted and open circuits.

With the scan tool, check the DTC EVENT DATA to help identify the conditions in which the DTC was set.

Were there any problems found?

Yes >> Repair as necessary.

Perform 45RFE/545RFE TRANSMISSION VERIFICATION TEST - VER 1. (Refer to 21 - TRANSMISSION/TRANSAXLE/AUTOMATIC - 45RFE/545RFE - STANDARD PROCEDURE)

No >> Test Complete.

P0845-2C HYDRAULIC PRESSURE TEST

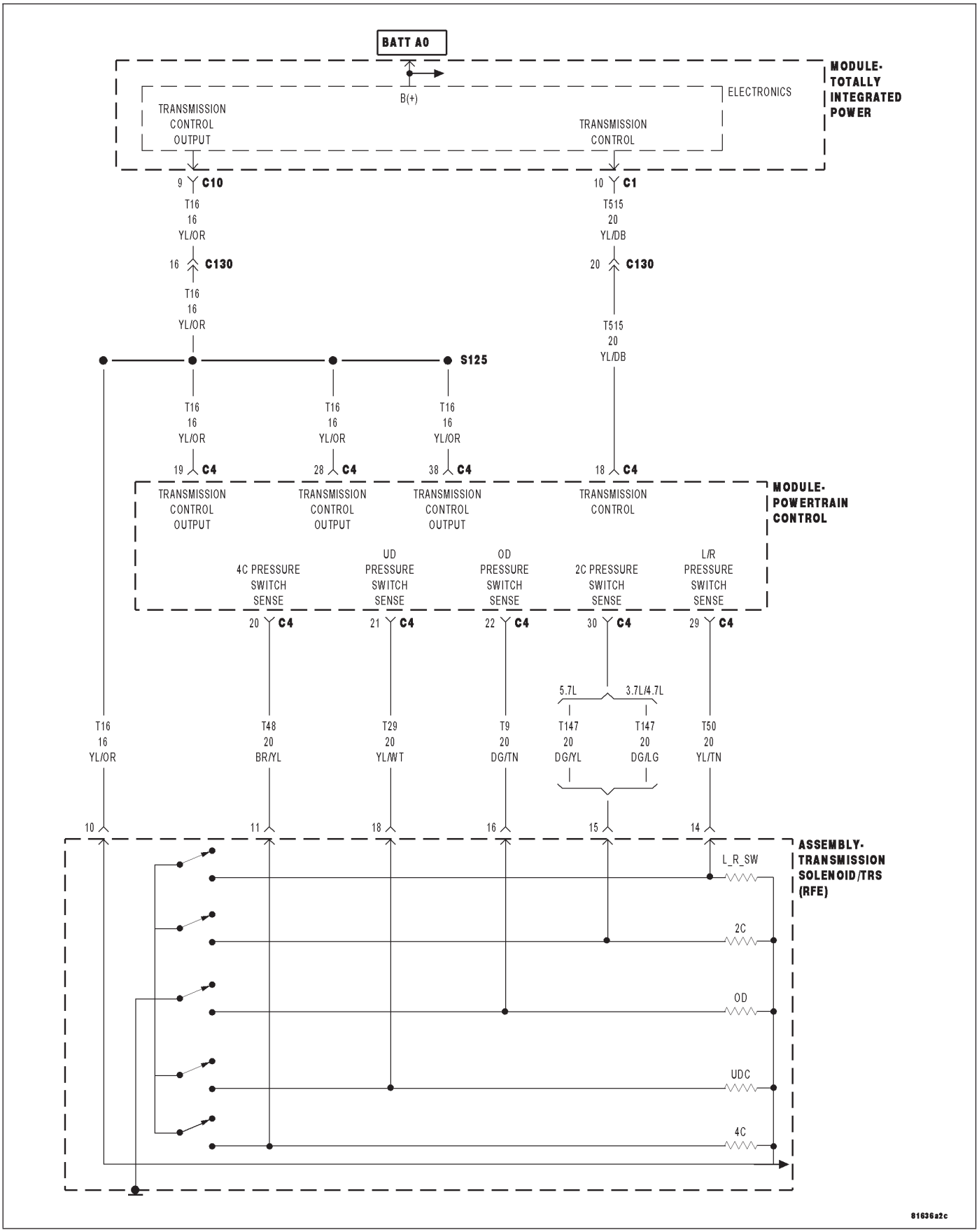

For a complete wiring diagram **Refer to Section 8W**.

- **When Monitored:**
  In any forward gear with engine speed above 1000 RPM shortly after a shift and every minute thereafter.
- **Set Condition:**
  After a shift into a forward gear, with engine speed above 1000 RPM, the PCM momentarily turns on element pressure to the Clutch circuits that don't have pressure to identify the correct Pressure Switch closes. If the Pressure Switch does not close 2 times, the DTC sets.

Possible Causes
LINE PRESSURE SENSOR
TRANSMISSION FLUID CONTAMINATION
RELATED TIPM TCM DTCS PRESENT
RELATED DTC'S PRESENT
TRANSMISSION SOLENOID/TRS ASSEMBLY
EXCESSIVE DEBRIS IN OIL PAN
POOR LINE PRESSURE SENSOR CONNECTION
(T147) 2C PRESSURE SWITCH SENSE CIRCUIT OPEN
(T147) 2C PRESSURE SWITCH SENSE CIRCUIT SHORT TO VOLTAGE
(T147) 2C PRESSURE SWITCH SENSE CIRCUIT SHORT TO ANOTHER CIRCUIT
(F856) 5-VOLT SUPPLY CIRCUIT OPEN
(T147) 2C PRESSURE SWITCH SENSE CIRCUIT SHORT TO GROUND
(F856) 5-VOLT SUPPLY CIRCUIT SHORT TO GROUND
TRANSMISSION SOLENOID/TRS ASSEMBLY
INTERNAL TRANSMISSION
POWERTRAIN CONTROL MODULE

Always perform the 45RFE/545RFE Pre-Diagnostic Troubleshooting Procedure before proceeding. (Refer to 21 - TRANSMISSION/TRANSAXLE/AUTOMATIC - 45RFE/545RFE - STANDARD PROCEDURE)

Theory of Operation

The Transmission Control System tests the pressure switches when they are off. The test verifies that the switches are operational (They will close with pressure applied). The Transmission Control System verifies that the switch closes when the corresponding element is applied. If a switch fails to close, it is re-tested. If it fails the second test, the DTC will set, the MIL will illuminate and the transmission system will default to the orderly Shutdown routine.

Diagnostic Test

1. DETERMINING IF RELATED DTC'S ARE PRESENT

With the scan tool, check for other transmission DTCs.

Is there any Loss of Prime, TIPM TCM Power Input , and/or Line Pressure Sensor DTCs present?

Yes >> Refer to the Transmission category and perform the appropriate symptom. If the DTC P0944-LOSS OF PRIME is present, perform its respective test first.

No >> Go To 2

2. CHECK IT THE DTC P0755 IS PRESENT

With the scan tool, check Transmission DTCs.

Is the DTC P0755 also present?

Yes >> Refer to the symptom list and perform diagnostics for P0755-2C SOLENOID CIRCUIT.

No >> Go To 3

3. CHECK IF THE DTCS P0732, P0735 AND/OR P0846 ARE PRESENT

With the scan tool, check for other transmission DTCs.

Are the DTCs P0732, P0735, and/or P0846 present also?

Yes >> Go To 12

No >> Go To 4

4. CHECK TO SEE IF DTC P0845 IS CURRENT

With the scan tool, Check the STARTS SINCE SET counter for P0845.

NOTE: This counter only applies to the last DTC set.

Is the STARTS SINCE SET counter 2 or less?

Yes >> Go To 5

No >> Go To 17

5. CHECK IF THE LINE PRESSURE STAYS THE SAME

Start the engine.

Warm the transmission to 82° C or 180° F.

Firmly apply the brakes.

With the scan tool, monitor the Line Pressure during the following step.

Move the shift lever to each gear position, pausing momentarily in each position and record the line pressure reading. Allow the pressure to stabilize for at least 5 seconds in each range.

Did the line pressure remain at a steady value between 585 and 655 kPa or 85 and 95 psi in each position?

Yes >> Go To 6

No >> Go To 10

6. CHECK THE LINE PRESSURE SENSOR CONNECTION

Ignition on, **engine not running.**

With the scan tool, monitor the Line Pressure while firmly pushing the Transmission Line Pressure Sensor connector inwards towards the Transmission.

Did the Line Pressure reading on the scan tool change to about 207 kPa or 30 psi when the connector was pushed inward?

Yes >> Disconnect and properly reconnect the Line Pressure Sensor connector. Inspect terminals and repair as necessary.

Perform 45RFE/545RFE TRANSMISSION VERIFICATION TEST - VER 1. (Refer to 21 - TRANSMISSION/TRANSAXLE/AUTOMATIC - 45RFE/545RFE - STANDARD PROCEDURE)

No >> Go To 7

7. CHECK THE LINE PRESSURE SENSOR OPERATION

Turn the ignition off to the lock position.

Remove the Ignition Switch Feed fuse from the TIPM.

CAUTION: Removal of the Ignition Switch Feed fuse from the TIPM will prevent the vehicle from being started in gear.

WARNING: The Ignition Switch Feed fuse must be removed from the TIPM. Failure to do so can result in personal injury or death.

Install the Transmission Simulator, Miller tool #8333.

With the Transmission Simulator select the ″OFF″ position on the ″Input/Output Speed″ switch.

Ignition on, engine not running.

With the scan tool, monitor the Line Pressure while turning the Pressure Switch selector to each of the 3 line pressure positions on the Transmission Simulator.

NOTE: All three scan tool Line Pressure readings should be steady and ±14 kPa or 2.0 psi of the reading specified on the Transmission Simulator.

Did the scan tool Line Pressure readings match the specified readings on the Transmission Simulator and remain steady in all three positions?

Yes >> Replace the Line Pressure Sensor per the Service Information.
Perform 45RFE/545RFE TRANSMISSION VERIFICATION TEST - VER 1. (Refer to 21 - TRANSMISSION/TRANSAXLE/AUTOMATIC - 45RFE/545RFE - STANDARD PROCEDURE)

No >> Go To 8

8. CHECK THE (F856) 5-VOLT SUPPLY CIRCUIT FOR AN OPEN

Turn the ignition off to the lock position.

Disconnect Transmission Simulator.

Disconnect the PCM C1 harness connector and connect Miller tool #8815.

CAUTION: Do not probe the PCM harness connectors. Probing the PCM harness connectors will damage the PCM terminals resulting in poor terminal to pin connection. Install Miller tool #8815 to perform diagnosis.

Measure the resistance of the (F856) 5-volt Supply circuit between the Line Pressure Sensor harness connector and the appropriate terminal of Miller tool #8815.

Is the resistance above 5.0 ohms?

Yes >> Repair the (F856) 5-volt Supply circuit for an open.
Perform 45RFE/545RFE TRANSMISSION VERIFICATION TEST - VER 1. (Refer to 21 - TRANSMISSION/TRANSAXLE/AUTOMATIC - 45RFE/545RFE - STANDARD PROCEDURE)

No >> Go To 9

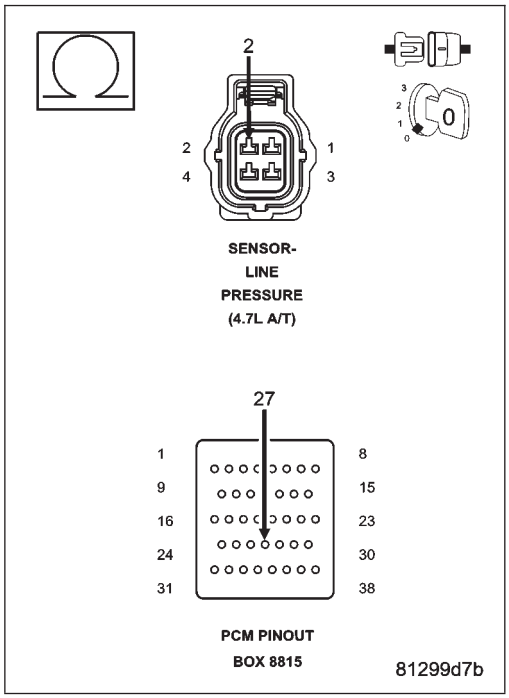

9. CHECK THE (F856) 5-VOLT SUPPLY CIRCUIT FOR A SHORT TO GROUND

Measure the resistance between ground and the (F856) 5-volt Supply circuit.

Is the resistance below 5.0 ohms?

Yes >> Repair the (F856) 5-volt Supply circuit for a short to ground.
Perform 45RFE/545RFE TRANSMISSION VERIFICATION TEST - VER 1.

No >> Using the schematics as a guide, check the Powertrain Control Module (PCM) terminals for corrosion, damage, or terminal push out. Pay particular attention to all power and ground circuits. If no problems are found, replace the PCM per the Service Information. With the scan tool, perform QUICK LEARN.
Perform 45RFE/545RFE TRANSMISSION VERIFICATION TEST - VER 1. (Refer to 21 - TRANSMISSION/TRANSAXLE/AUTOMATIC - 45RFE/545RFE - STANDARD PROCEDURE)

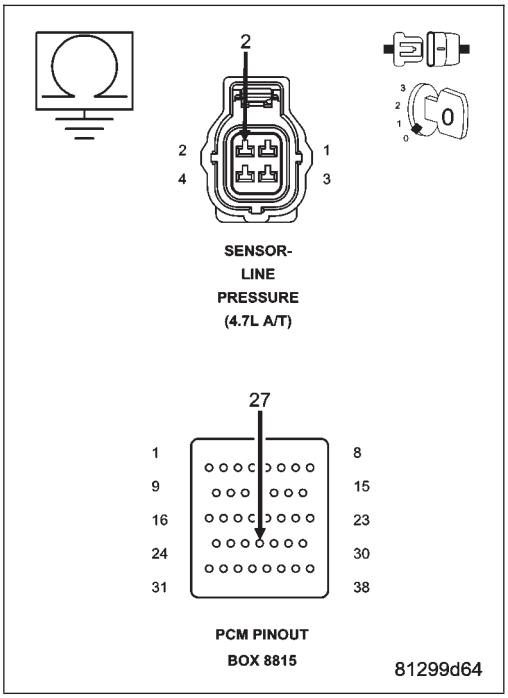

10. COMPARE SCAN TOOL TO PRESSURE GAUGE

Turn the ignition off to the lock position.

Connect the Line Pressure Adapter, Miller tool #8259 and 0-300 psi Test Gauge, Miller tool #C-3293-SP. Refer to the Service Information for proper installation procedure.

CAUTION: Apply parking brake.
Start the engine.

In the following steps, compare the scan tool Line Pressure to the Pressure Gauge readings in each gear.

CAUTION: Do not overheat transmission.
With the gear selector in park, raise the RPM to 1500, and compare line pressure readings.

Firmly apply the brakes, move the gear selector into reverse, raise the RPM to 1500, and compare the line pressure readings.

Firmly apply the brakes, move the gear selector into drive, raise the RPM to 1500, and compare the line pressure readings.

Did the scan tool Line Pressure readings match the Pressure Gauge readings ± 10 psi?

Yes >> Go To 11

No >> Replace the Line Pressure Sensor per the Service Information.
Perform 45RFE/545RFE TRANSMISSION VERIFICATION TEST - VER 1. (Refer to 21 - TRANSMISSION/TRANSAXLE/AUTOMATIC - 45RFE/545RFE - STANDARD PROCEDURE)

11. CHECK THE WIRING AND CONNECTORS

Turn the ignition off to the lock position.

Remove the Ignition Switch Feed fuse from the TIPM.

CAUTION: Removal of the Ignition Switch Feed fuse from the TIPM will prevent the vehicle from being started in gear.

WARNING: The Ignition Switch Feed fuse must be removed from the TIPM. Failure to do so can result in personal injury or death.

Remove the Line Pressure Adapter, Miller tool #8259 and 0-300 psi Test Gauge, Miller tool #C-3293-SP.

Install the Transmission Simulator, Miller tool #8333.

On the Transmission Simulator, turn the Pressure Switch selector switch to 2C.

Ignition on, engine not running.

With the scan tool, monitor the 2C Pressure Switch state while pressing and holding the Pressure Switch test button and wiggling the wire harness and connectors that pertain to the 2C Pressure Switch.

Did the 2C Pressure Switch state change to closed and remain closed while wiggling the wires?

Yes >> Go To 12

No >> Go To 14

12. CHECK FOR EXCESSIVE DEBRIS

Turn the ignition off to the lock position.

Remove the Transmission Simulator, Miller tool #8333.

Remove and inspect the Transmission Oil Pan per the Service Information.

Does the Transmission Oil Pan contain excessive debris or contamination?

Yes >> Repair the cause of the excessive debris in the Transmission Oil Pan. Refer to the Service Information for the proper procedures.

Perform 45RFE/545RFE TRANSMISSION VERIFICATION TEST - VER 1. (Refer to 21 - TRANSMISSION/TRANSAXLE/AUTOMATIC - 45RFE/545RFE - STANDARD PROCEDURE)

No >> Go To 13

13. CHECK THE 2C HYDRAULIC CLUTCH CIRCUIT

Remove the Valve Body and air check the 2C clutch hydraulic circuit, in the 2C/4C clutch retainer, for leakage per the Service Information.

NOTE: The 2C hydraulic clutch circuit contains a small bleed orifice, a small amount of air leakage is normal.

Was there excessive air leakage noticed during the air check?

Yes >> Repair as necessary. Check the 2C clutch piston, piston seals and bleed orifice assembly.

Perform 45RFE/545RFE TRANSMISSION VERIFICATION TEST - VER 1. (Refer to 21 - TRANSMISSION/TRANSAXLE/AUTOMATIC - 45RFE/545RFE - STANDARD PROCEDURE)

No >> Disassemble and inspect the Valve Body and repair as necessary. Inspect the 2C Accumulator piston and seals. Check for an extra check ball downstream from the #7 check ball pocket and repair as necessary. If no problems are found in the Valve Body, replace the Transmission Solenoid/TRS Assembly per the Service Information.

Perform 45RFE/545RFE TRANSMISSION VERIFICATION TEST - VER 1. (Refer to 21 - TRANSMISSION/TRANSAXLE/AUTOMATIC - 45RFE/545RFE - STANDARD PROCEDURE)

14. CHECK THE (T147) 2C PRESSURE SWITCH SENSE CIRCUIT FOR AN OPEN

Turn the ignition off to the lock position.

Remove the Transmission Simulator, Miller tool #8333.

Disconnect the PCM C4 harness connector and connect Miller tool #8815.

Measure the resistance of the (T147) 2C Pressure Switch Sense circuit between the Transmission Solenoid/TRS Assembly harness connector and the appropriate terminal of Miller tool #8815.

Is the resistance above 5.0 ohms?

Yes >> Repair the (T147) 2C Pressure Switch Sense circuit for an open.

Perform 45RFE/545RFE TRANSMISSION VERIFICATION TEST - VER 1. (Refer to 21 - TRANSMISSION/TRANSAXLE/AUTOMATIC - 45RFE/545RFE - STANDARD PROCEDURE)

No >> Go To 15

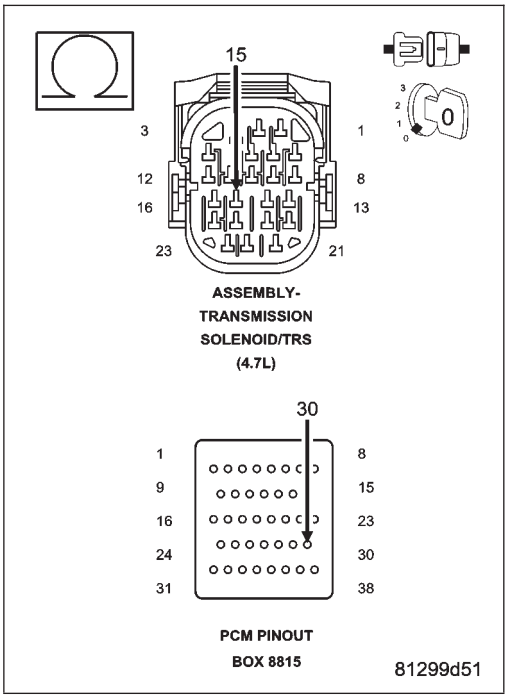

15. CHECK THE (T147) 2C PRESSURE SWITCH SENSE CIRCUIT FOR A SHORT TO GROUND

Measure the resistance between ground and the (T147) 2C Pressure Switch Sense circuit.

Is the resistance below 5.0 ohms?

Yes >> Repair the (T147) 2C Pressure Switch Sense circuit for a short to ground.

Perform 45RFE/545RFE TRANSMISSION VERIFICATION TEST - VER 1. (Refer to 21 - TRANSMISSION/TRANSAXLE/AUTOMATIC - 45RFE/545RFE - STANDARD PROCEDURE)

No >> Go To 16

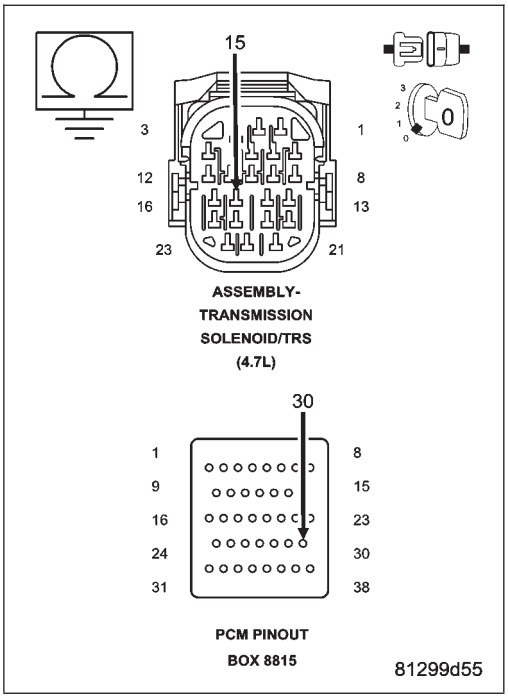

16. CHECK THE (T147) 2C PRESSURE SWITCH SENSE CIRCUIT FOR A SHORT TO ANOTHER CIRCUIT

Disconnect all PCM harness connectors.

Disconnect the Transmission Solenoid/TRS Assembly harness connector.

NOTE: Make sure the Transmission Solenoid/TRS Assembly harness connector is disconnected.

Measure the resistance between the (T147) 2C Pressure Switch Sense circuit and all other circuits in the Transmission Solenoid/TRS Assembly harness connector.

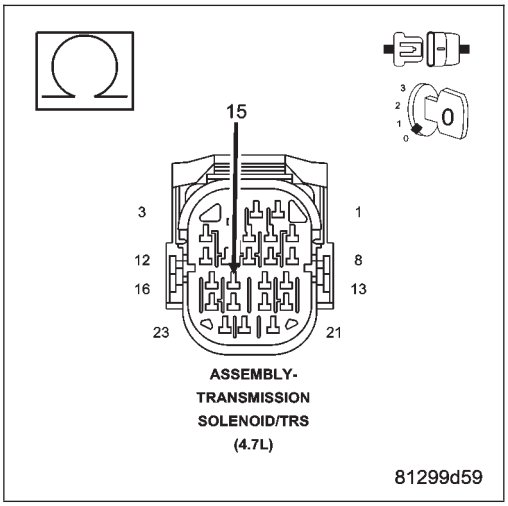

Is the resistance below 5.0 ohms between the (T147) 2C Pressure Switch Sense circuit and any other circuit(s) in the Transmission Solenoid/TRS Assembly harness connector?

Yes >> Repair the (T147) 2C Pressure Switch Sense circuit for a short to another circuit(s).

Perform 45RFE/545RFE TRANSMISSION VERIFICATION TEST - VER 1.

No >> Using the schematics as a guide, check the Powertrain Control Module (PCM) terminals for corrosion, damage, or terminal push out. Pay particular attention to all power and ground circuits. If no problems are found, replace the PCM per the Service Information. With the scan tool, perform QUICK LEARN.

Perform 45RFE/545RFE TRANSMISSION VERIFICATION TEST - VER 1. (Refer to 21 - TRANSMISSION/TRANSAXLE/AUTOMATIC - 45RFE/545RFE - STANDARD PROCEDURE)

17. INTERMITTENT WIRING AND CONNECTORS

The conditions necessary to set this DTC are not present at this time.

Using the schematics as a guide, inspect the wiring and connectors specific to this circuit.

Wiggle the wires while checking for shorted and open circuits.

With the scan tool, check the DTC EVENT DATA to help identify the conditions in which the DTC was set.

If the DTC EVENT DATA shows the DTC P0845 set while the Line Pressure was significantly below the Desired Line Pressure reading, check for causes of low line pressure (low fluid level, broken or mis-installed primary oil filter or filter seal, sticking Main Regulator Valve in the Pump Valve Body etc.). If the data shows the DTC set while the Line Pressure reading was significantly higher than the Desired Line Pressure, check the Line Pressure Sensor and related wiring.

Where there any problems found?

Yes >> Repair as necessary.

Perform 45RFE/545RFE TRANSMISSION VERIFICATION TEST - VER 1. (Refer to 21 - TRANSMISSION/TRANSAXLE/AUTOMATIC - 45RFE/545RFE - STANDARD PROCEDURE)

No >> Test Complete.

P0846-2C PRESSURE SWITCH RATIONALITY

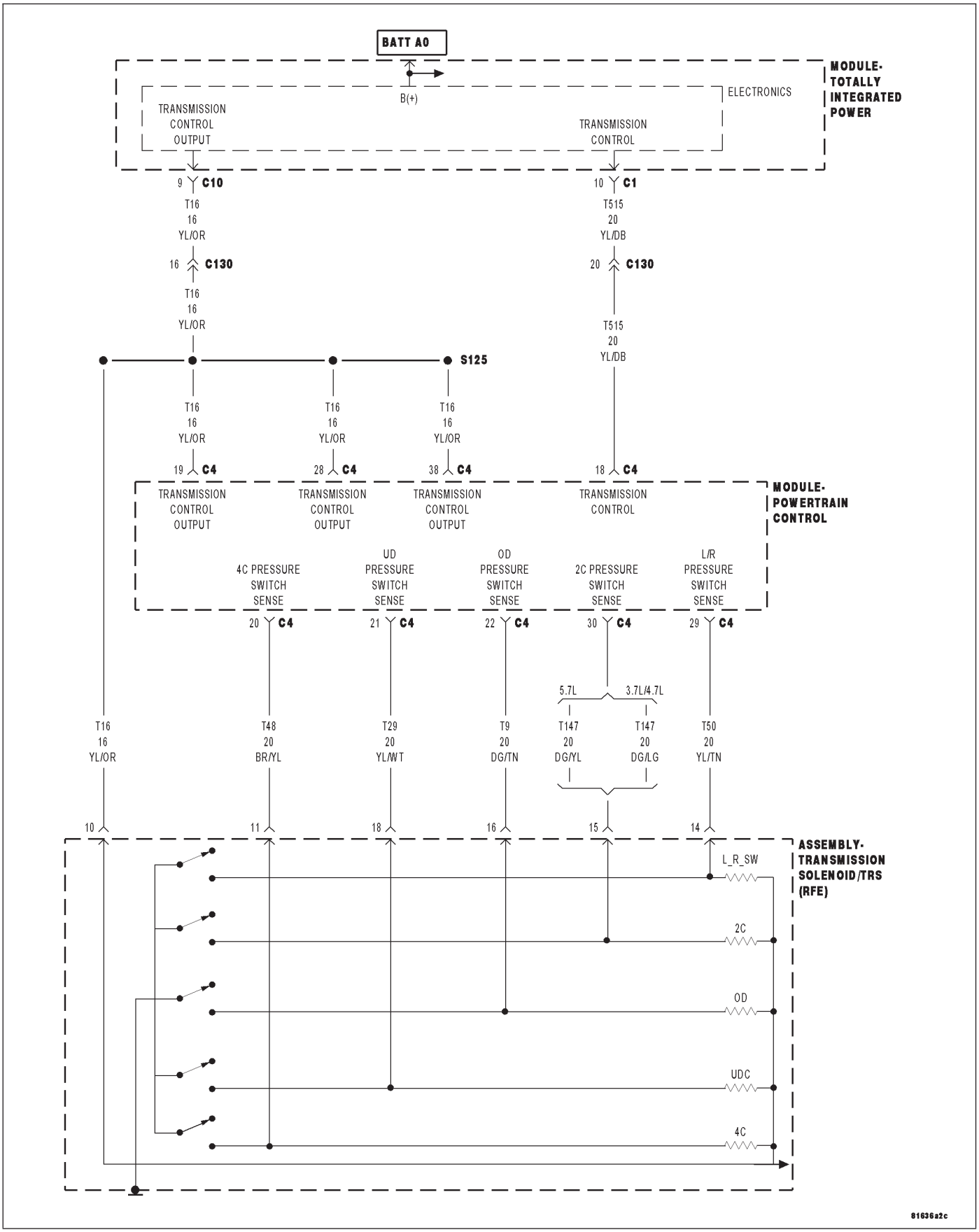

For a complete wiring diagram **Refer to Section 8W**

- **When Monitored:**
  Continuously with the ignition on, engine running, with the transmission in gear.
- **Set Condition:**
  The DTC is set if the 2C Pressure Switch reads open or closed at the wrong time in a given gear.

Possible Causes
RELATED TIPM TCM DTCS PRESENT
(T147) 2C PRESSURE SWITCH SENSE CIRCUIT OPEN
(T147) 2C PRESSURE SWITCH SENSE CIRCUIT SHORT TO GROUND
(T147) 2C PRESSURE SWITCH SENSE CIRCUIT SHORT TO OTHER CIRCUITS
EXCESSIVE FLUID LEAKAGE IN 2C CLUTCH CIRCUIT
NO. 5 AND/OR NO. 7 CHECK BALL CUT OR DAMAGED
EXTRA CHECK BALL DOWNSTREAM OF THE NO. 7 CHECK BALL SOCKET
LOW LINE PRESSURE
TRANSMISSION SOLENOID/TRS ASSEMBLY
POWERTRAIN CONTROL MODULE
WIRING AND CONNECTORS

Always perform the 45RFE/545RFE Pre-Diagnostic Troubleshooting Procedure before proceeding. (Refer to 21 - TRANSMISSION/TRANSAXLE/AUTOMATIC - 45RFE/545RFE - STANDARD PROCEDURE)

Theory of Operation

The Transmission system uses five pressure switches to monitor the fluid pressure in the LR, 2C, 4C, UD, and OD clutch circuits. The pressure switches are continuously monitored for the correct states in each gear as shown.

GEAR	L/R	2C	4C	UD	OD
REVERSE	OPEN	OPEN	OPEN	OPEN	OPEN
P/N	CLOSED**	OPEN	OPEN	OPEN	OPEN
1ST	CLOSED*	OPEN	OPEN	CLOSED	OPEN
2ND	OPEN	CLOSED	OPEN	CLOSED	OPEN
2ND PRIME	OPEN	OPEN	CLOSED	CLOSED	OPEN
3RD	OPEN	OPEN	OPEN	CLOSED	CLOSED
4TH	OPEN	OPEN	CLOSED	OPEN	CLOSED
5TH	OPEN	CLOSED	OPEN	OPEN	CLOSED

*L/R is closed if output speed is below 100 rpm in Drive and Manual 2. L/R is closed in Manual 1.

**May be open when rolling in Neutral or at low oil temperatures.

Diagnostic Test

1. CHECK FOR TCM TIPM DTCS

With the scan tool under TIPM, check for TCM Power Input DTCs.

Are there any TIPM TCM Power Input DTCs present?

Yes >> Refer to the Transmission category and perform the appropriate symptom. (Refer to 21 - TRANSMISSION/TRANSAXLE/AUTOMATIC - 45RFE/545RFE - DIAGNOSIS AND TESTING)

No >> Go To 2

2. CHECK IF THE DTC DATA SHOWS THE CURRENT DTC

With the scan tool, check the DTC EVENT DATA.

Does the DTC EVENT DATA show data for DTC P0846?

Yes >> Go To 3

No >> Refer to the Transmission category and perform the appropriate symptom shown in the DTC EVENT DATA.

Perform 45RFE/545RFE TRANSMISSION VERIFICATION TEST - VER 1. (Refer to 21 - TRANSMISSION/TRANSAXLE/AUTOMATIC - 45RFE/545RFE - STANDARD PROCEDURE)

3. CHECK IF MULTIPLE DTCS ARE PRESENT

With the scan tool, check for other transmission DTC's.

Are there two or more related pressure switch rationality DTCs present in addition to P0846?

Yes >> Go To 4

No >> Go To 7

4. CHECK IF ALL THE PRESSURE SWITCHES READ CLOSED

With the scan tool, check the DTC EVENT DATA for P0846.

NOTE: Make sure to record all DTC EVENT DATA stored in the scan tool for future reference in this test procedure.

Do all the pressure switches read CLOSED in the DTC EVENT DATA for P0846?

Yes >> Refer to Transmission category and perform diagnostics for P0888.

No >> Go To 5

5. CHECK IF ALL THE PRESSURE SWITCHES READ OPEN

In the DTC EVENT DATA recorded earlier, read the state of all pressure switches.

Do all the pressure switches read OPEN?

Yes >> Go To 6

No >> Go To 7

6. CHECK FOR LOW LINE PRESSURE

In the DTC EVENT DATA recorded earlier, compare the Line Pressure and the Desired Line Pressure.

Is the Line Pressure less than 40 psi, and significantly below the Desired Line Pressure?

Yes >> Repair as necessary to correct low line pressure. Check fluid level and adjust as necessary. If fluid level is OK, check the Primary Oil Filter seal for a split, crack, or improperly installed. If the filter and seal are OK, check the Main Regulator Valve in the Oil Pump. Refer to the Service Information for the above procedures.

Perform 45RFE/545RFE TRANSMISSION VERIFICATION TEST - VER 1. (Refer to 21 - TRANSMISSION/TRANSAXLE/AUTOMATIC - 45RFE/545RFE - STANDARD PROCEDURE)

No >> Replace the Transmission Solenoid/TRS Assembly per the Service Information. (Refer to 21 - TRANSMISSION/TRANSAXLE/AUTOMATIC - 45RFE/545RFE/TRANS SOLENOID/TRS ASSY - REMOVAL)

Perform 45RFE/545RFE TRANSMISSION VERIFICATION TEST - VER 1. (Refer to 21 - TRANSMISSION/TRANSAXLE/AUTOMATIC - 45RFE/545RFE - STANDARD PROCEDURE)

7. CHECK IF THE DTC SET IN PARK, NEUTRAL, OR REVERSE

With the scan tool, check the DTC EVENT DATA for P0846.

NOTE: Make sure to record all DTC EVENT DATA stored in the scan tool for future reference in this test procedure.

Does the DTC EVENT DATA show the DTC P0846 set in Park, Neutral, or Reverse?

Yes >> Go To 12

No >> Go To 8

8. CHECK IF THE 2C PRESSURE SWITCH READS CLOSED

With the scan tool, check the DTC EVENT DATA for P0846.

Does the DTC EVENT DATA show the 2C Pressure Switch reading CLOSED?

Yes >> Go To 10

No >> Go To 9

9. CHECK THE LINE PRESSURE

In the DTC EVENT DATA recorded earlier, compare the Line Pressure and the Desired Line Pressure.

Is the Line Pressure less than 40 psi, and significantly below the Desired Line Pressure?

Yes >> Repair as necessary to correct low line pressure. Check fluid level and adjust as necessary. If fluid level is OK, check the Primary Oil Filter seal for a split, crack, or improperly installed. If the filter and seal are OK, check the Main Regulator Valve in the Oil Pump. Refer to the Service Information for the above procedures.

Perform 45RFE/545RFE TRANSMISSION VERIFICATION TEST - VER 1. (Refer to 21 - TRANSMISSION/TRANSAXLE/AUTOMATIC - 45RFE/545RFE - STANDARD PROCEDURE)

No >> Go To 15

10. CHECK THE PCM AND WIRING

Turn the ignition off to the lock position.

Remove the Ignition Switch Feed fuse from the TIPM.

CAUTION: Removal of the Ignition Switch Feed fuse from the TIPM will prevent the vehicle from being started in gear.

WARNING: The Ignition Switch Feed fuse must be removed from the TIPM. Failure to do so can result in personal injury or death.

Install the Transmission Simulator, Miller tool #8333.

Ignition on, engine not running.

With the Transmission Simulator, turn the Pressure Switch selector switch to the 2C position.

With the scan tool, monitor the 2C Pressure Switch while pressing the Pressure Switch test button on the Transmission Simulator.

Did the state of the 2C Pressure Switch change while pressing the Pressure Switch Test button?

Yes >> Go To 11

No >> Go To 12

11. CHECK THE TRANSMISSION SOLENOID/TRS ASSEMBLY

Using the schematics as a guide, inspect the wiring and connectors specific to this circuit.
Wiggle the wires while checking for shorted and open circuits.

Where there any problems found?

Yes >> Repair as necessary.
Perform 45RFE/545RFE TRANSMISSION VERIFICATION TEST - VER 1.

No >> Replace the Transmission Solenoid/TRS Assembly per the Service Information.
Perform 45RFE/545RFE TRANSMISSION VERIFICATION TEST - VER 1. (Refer to 21 - TRANSMISSION/TRANSAXLE/AUTOMATIC - 45RFE/545RFE - STANDARD PROCEDURE)

12. CHECK THE (T147) 2C PRESSURE SWITCH SENSE CIRCUIT FOR AN OPEN

Turn the ignition off to the lock position.
Disconnect the Transmission Simulator, Miller tool #8333.
Disconnect the PCM C4 harness connector.
Connect Miller tool #8815 to the PCM C4 harness connector.

CAUTION: Do not probe the PCM harness connectors. Probing the PCM harness connectors will damage the PCM terminals resulting in poor terminal to pin connection. Install Miller tool #8815 to perform diagnosis.

Measure the resistance of the (T147) 2C Pressure Switch Sense circuit between the Transmission Solenoid/TRS Assembly harness connect and the appropriate terminal of Miller tool #8815.

Is the resistance above 5.0 ohms?

Yes >> Repair the (T147) 2C Pressure Switch Sense circuit for an open.
Perform 45RFE/545RFE TRANSMISSION VERIFICATION TEST - VER 1. (Refer to 21 - TRANSMISSION/TRANSAXLE/AUTOMATIC - 45RFE/545RFE - STANDARD PROCEDURE)

No >> Go To 13

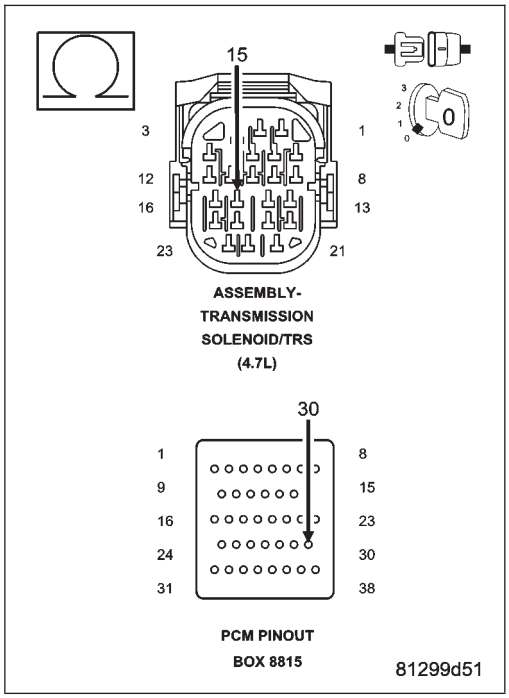

13. CHECK THE (T147) 2C PRESSURE SWITCH SENSE CIRCUIT FOR A SHORT TO GROUND

Measure the resistance between ground and the (T147) 2C Pressure Switch Sense circuit.

Is the resistance below 5.0 ohms?

Yes >> Repair the (T147) 2C Pressure Switch Sense circuit for a short to ground.

Perform 45RFE/545RFE TRANSMISSION VERIFICATION TEST - VER 1. (Refer to 21 - TRANSMISSION/TRANSAXLE/AUTOMATIC - 45RFE/545RFE - STANDARD PROCEDURE)

No >> Go To 14

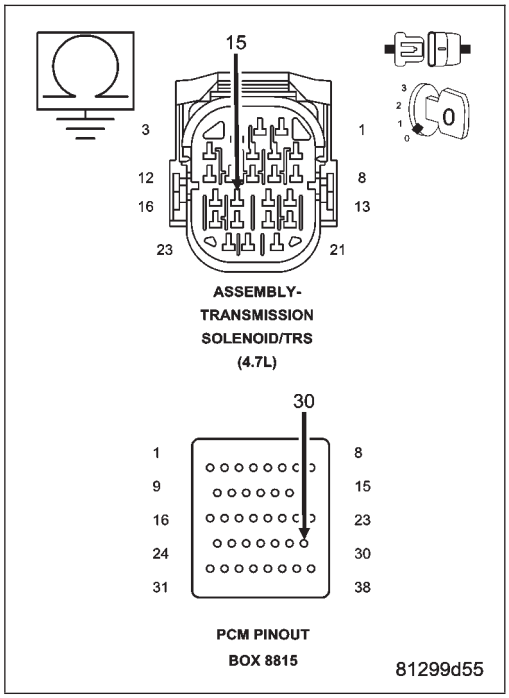

14. CHECK THE (T147) 2C PRESSURE SWITCH SENSE CIRCUIT FOR A SHORT TO ANOTHER CIRCUIT

Measure the resistance between the (T147) 2C Pressure Switch Sense circuit and all the other circuits in the Transmission Solenoid/TRS Assembly harness connector.

Is the resistance below 5.0 ohms?

Yes >> Repair the (T147) 2C Pressure Switch Sense circuit for a short to another circuit(s).

Perform 45RFE/545RFE TRANSMISSION VERIFICATION TEST - VER 1. (Refer to 21 - TRANSMISSION/TRANSAXLE/AUTOMATIC - 45RFE/545RFE - STANDARD PROCEDURE)

No >> Using the schematics as a guide, check the Powertrain Control Module (PCM) terminals for corrosion, damage, or terminal push out. Pay particular attention to all power and ground circuits. If no problems are found, replace the PCM per the Service Information. With the scan tool, perform QUICK LEARN.

Perform 45RFE/545RFE TRANSMISSION VERIFICATION TEST - VER 1. (Refer to 21 - TRANSMISSION/TRANSAXLE/AUTOMATIC - 45RFE/545RFE - STANDARD PROCEDURE)

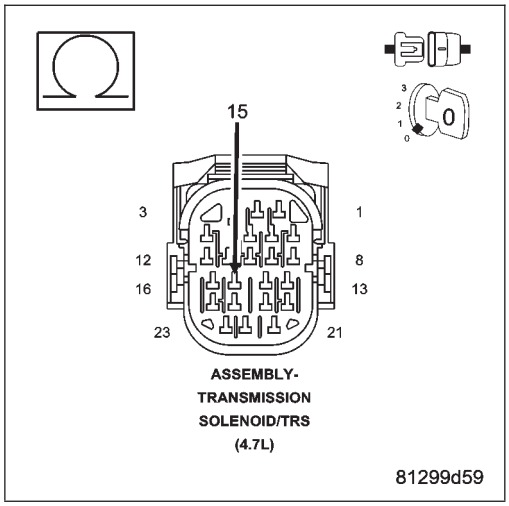

15. CHECK IF THE #5 AND/OR #7 CHECK BALL IS CUT OR DAMAGED

Turn the Ignition off to the lock position.

Remove the Valve Body Assembly per the Service Information.

Inspect the #5 and #7 check balls for any cuts or damage.

Inspect the 2C accumulator piston and seals and also the 2C tower seal on top of the valve body. Refer to the Service Information.

Where there any problems found?

Yes >> Repair as necessary. Check for excessive clutch debris in the transmission oil pan. If excessive clutch debris is present, repair 2C clutch as necessary. Refer to the Service Information for proper repair procedures.

Perform 45RFE/545RFE TRANSMISSION VERIFICATION TEST - VER 1. (Refer to 21 - TRANSMISSION/TRANSAXLE/AUTOMATIC - 45RFE/545RFE - STANDARD PROCEDURE)

No >> Go To 16

16. CHECK FOR EXCESSIVE FLUID LEAKAGE WITHIN THE 2C CLUTCH CIRCUIT

Air check the 2C Clutch hydraulic circuit. Refer to the Service Information.

NOTE: This hydraulic clutch circuit contains a small bleed orifice. Small leakage is considered normal.

Was there excessive air leakage in the 2C Clutch hydraulic circuit?

Yes >> Repair as necessary. Refer to the Service Information.

Perform 45RFE/545RFE TRANSMISSION VERIFICATION TEST - VER 1.

No >> Replace the Transmission Solenoid/TRS Assembly per the Service Information. (Refer to 21 - TRANSMISSION/TRANSAXLE/AUTOMATIC - 45RFE/545RFE/TRANS SOLENOID/TRS ASSY - REMOVAL)

Perform 45RFE/545RFE TRANSMISSION VERIFICATION TEST - VER 1. (Refer to 21 - TRANSMISSION/TRANSAXLE/AUTOMATIC - 45RFE/545RFE - STANDARD PROCEDURE)

P0868-LINE PRESSURE LOW

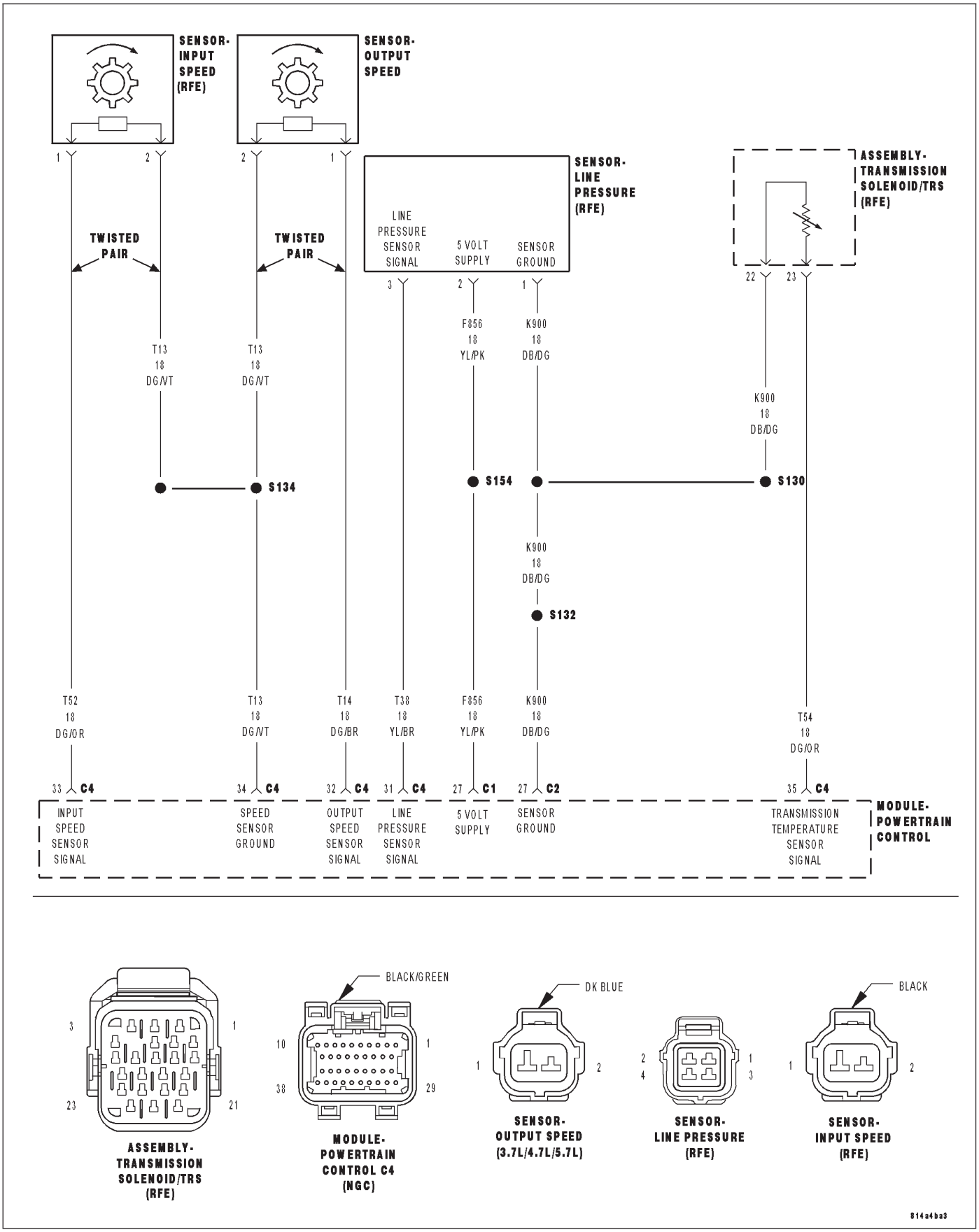

For a complete wiring diagram **Refer to Section 8W**

- **When Monitored:**
  Continuously while driving in a forward gear.
- **Set Condition:**
  The PCM continuously monitors Actual Line Pressure and compares it to Desired Line Pressure. If the Actual Line Pressure is more than 10 psi below Desired Line Pressure, this DTC will set.

Possible Causes
CHECK FOR RELATED DTC'S
LOW FLUID LEVEL
(F856) 5-VOLT SUPPLY CIRCUIT OPEN
POOR LINE PRESSURE SENSOR CONNECTION
(F856) 5-VOLT SUPPLY CIRCUIT SHORT TO GROUND
(F856) 5-VOLT SUPPLY CIRCUIT SHORT TO VOLTAGE
(T118) PRESSURE CONTROL SOLENOID CONTROL CIRCUIT SHORT TO ANOTHER CIRCUIT
INTERNAL TRANSMISSION
LINE PRESSURE SENSOR
CRACKED, PLUGGED, OR MISINSTALLED PRIMARY OIL FILTER
STUCK OR STICKING MAIN REGULATOR VALVE
POWERTRAIN CONTROL MODULE

Always perform the 45RFE/545RFE Pre-Diagnostic Troubleshooting Procedure before proceeding. (Refer to 21 - TRANSMISSION/TRANSAXLE/AUTOMATIC - 45RFE/545RFE - STANDARD PROCEDURE)

Theory of Operation

Line pressure is measured by the Line Pressure Sensor (LPS) and regulation is achieved by changing the duty cycle of the Pressure Control Solenoid (PCS) controlled by the Transmission Control System. (5% duty cycle = solenoid off = Max line pressure, 62% duty cycle = solenoid on = Min line pressure). The Transmission Control System calculates the desired line pressure based on inputs from both the engine and transmission.

The Transmission Control System calculates torque input to the transmission and uses it as the primary input to the desired line pressure calculation. This is called Torque Based Line Pressure. In addition, the line pressure is set to a preset level 827 or 931kPa (120 or 135 psi) during shifts and in Park and Neutral to ensure consistent shift quality. The desired line pressure is continuously being compared to the actual line pressure. If the actual line pressure is consistently lower than the target while driving, the line pressure low DTC P0868 will set.

Diagnostic Test

1. CHECK FOR RELATED DTCS

With the scan tool, check for other transmission DTCs

Is the DTC P0932 present also?

Yes >> Refer to the Transmission category and perform the appropriate symptom.

No >> Go To 2

2. CHECK IF THE DTC IS CURRENT

With the scan tool, check the STARTS SINCE SET counter for P0868.

NOTE: This counter only applies to the last DTC set.

Is the START SINCE SET COUNTER 2 or less?

Yes >> Go To 3

No >> Go To 11

3. CHECK THE LINE PRESSURE SENSOR CONNECTION

Ignition on, **engine not running.**

With the scan tool, monitor the Line Pressure, firmly push the Line Pressure Sensor harness connector towards the Transmission.

Did the Line Pressure change to about 207 kPa or 30 psi when the connector was pushed?

Yes >> Disconnect and properly reconnect the Line Pressure Sensor connector. Inspect terminals and repair as necessary.

Perform 45RFE/545RFE TRANSMISSION VERIFICATION TEST - VER 1. (Refer to 21 - TRANSMISSION/TRANSAXLE/AUTOMATIC - 45RFE/545RFE - STANDARD PROCEDURE)

No >> Go To 4

4. CHECK THE PCM AND WIRING

Turn the ignition off to the lock position.

Remove the Ignition Switch Feed fuse from the TIPM.

CAUTION: Removal of the Ignition Switch Feed fuse from the TIPM will prevent the vehicle from being started in gear.

WARNING: The Ignition Switch Feed fuse must be removed from the TIPM. Failure to do so can result in personal injury or death.

Install the Transmission Simulator, Miller tool #8333.

With the Transmission Simulator select the ″OFF″ position on the ″Input/Output Speed″ switch.

Ignition on, engine not running.

With the scan tool, monitor the Line Pressure during the following steps.

Using the Transmission Simulator, set the rotary knob to each of the 3 line pressure positions.

NOTE: All three scan tool Line Pressure readings should be steady and ± 14 kPa or 2.0 psi of the reading specified on the Transmission Simulator.

Did the Line Pressure read within ± 14 kPa or 2.0 psi in all three positions?

Yes >> Go To 5

No >> Go To 7

5. CHECK THE LINE PRESSURE SENSOR

Turn the ignition off to the lock position.

Disconnect the Transmission Simulator, Miller tool #8333 and reconnect all previously disconnected connectors.

Install the Line Pressure Adaptor, Miller tool #8259, and the Pressure Gauge, Miller tool #C-3293, 0 to 2000 kPa or 0 to 300 psi.

Start the engine in park.

Monitor the line pressure readings of both the scan tool and the pressure gauge and compare the two readings.

Is the line pressure gauge reading within 34 kPa or 5 psi of the scan tool reading?

Yes >> Go To 6

No >> Replace the Line Pressure Sensor per the Service Information.
Perform 45RFE/545RFE TRANSMISSION VERIFICATION TEST - VER 1. (Refer to 21 - TRANSMISSION/TRANSAXLE/AUTOMATIC - 45RFE/545RFE - STANDARD PROCEDURE)

6. CHECK FOR A PLUGGED TRANSMISSION OIL FILTER

Turn the ignition off to the lock position.

Remove and inspect the Transmission Oil Pan for excessive debris per the Service Information.

Remove and inspect the Primary Oil Filter per the Service Information.

NOTE: Make sure the Primary Transmission Oil Filter and/or O-ring is not cracked or split.

Does the Oil Pan contain excessive debris and/or is the Primary Oil Filter cracked or plugged?

Yes >> Repair the plugged, cracked, or split Primary Transmission Oil Filter and/or O-ring. If the Primary Transmission Oil Filter is plugged refer to the Service Information for the proper Hydraulic repair procedure.
Perform 45RFE/545RFE TRANSMISSION VERIFICATION TEST - VER 1. (Refer to 21 - TRANSMISSION/TRANSAXLE/AUTOMATIC - 45RFE/545RFE - STANDARD PROCEDURE)

No >> Repair internal transmission and inspect the Transmission Oil Pump per the Service Information and replace if necessary. If no problem is found, replace the Solenoid/TRS Assembly.
Perform 45RFE/545RFE TRANSMISSION VERIFICATION TEST - VER 1. (Refer to 21 - TRANSMISSION/TRANSAXLE/AUTOMATIC - 45RFE/545RFE - STANDARD PROCEDURE)

7. CHECK THE (F856) 5-VOLT SUPPLY CIRCUIT FOR A SHORT TO VOLTAGE

Disconnect the Transmission Simulator, Miller tool #8333.

Reconnect all previously disconnected connectors except the Line Pressure Sensor harness connector.

Ignition on, engine not running.

Measure the voltage of the (F856) 5-volt Supply circuit in the Line Pressure Sensor harness connector.

Is the voltage above 5.5 volts?

Yes >> Repair the (F856) 5-volt Supply circuit for a short to voltage.
Perform 45RFE/545RFE TRANSMISSION VERIFICATION TEST - VER 1. (Refer to 21 - TRANSMISSION/TRANSAXLE/AUTOMATIC - 45RFE/545RFE - STANDARD PROCEDURE)

No >> Go To 8

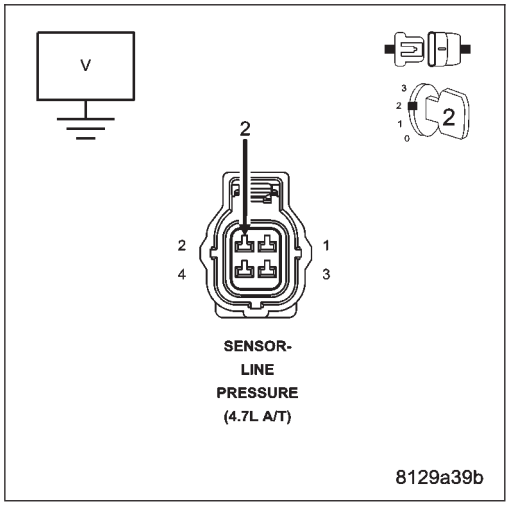

8. CHECK THE (F856) 5-VOLT SUPPLY CIRCUIT FOR AN OPEN

Turn the ignition off to the lock position.

Disconnect the PCM C1 harness connector and connect Miller tool #8815.

CAUTION: Do not probe the PCM harness connectors. Probing the PCM harness connectors will damage the PCM terminals resulting in poor terminal to pin connection. Install Miller tool #8815 to perform diagnosis.

Measure the resistance of the (F856) 5-volt Supply circuit between the Line Pressure Sensor harness connector and the appropriate terminal of Miller tool #8815.

Is the resistance above 5.0 ohms?

Yes >> Repair the (F856) 5-volt Supply circuit for an open.
Perform 45RFE/545RFE TRANSMISSION VERIFICATION TEST - VER 1. (Refer to 21 - TRANSMISSION/TRANSAXLE/AUTOMATIC - 45RFE/545RFE - STANDARD PROCEDURE)

No >> Go To 9

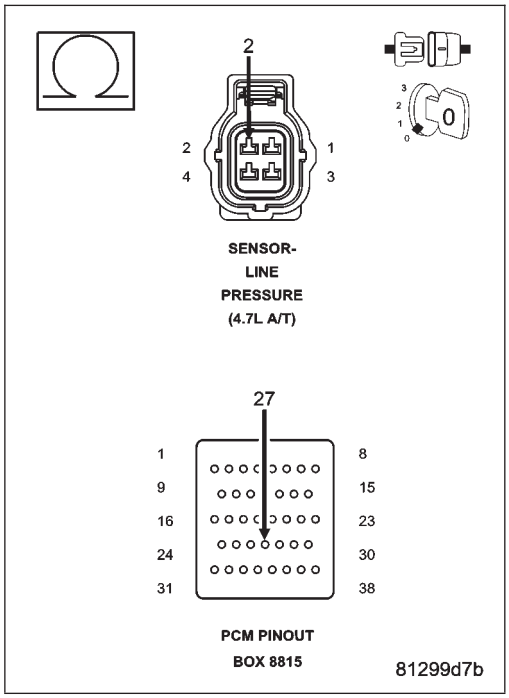

9. CHECK THE (F856) 5-VOLT SUPPLY CIRCUIT FOR A SHORT TO GROUND

Measure the resistance between ground and the (F856) 5-volt Supply circuit.

Is the resistance below 5.0 ohms?

Yes >> Repair the (F856) 5-volt Supply circuit for a short to ground.
Perform 45RFE/545RFE TRANSMISSION VERIFICATION TEST - VER 1. (Refer to 21 - TRANSMISSION/TRANSAXLE/AUTOMATIC - 45RFE/545RFE - STANDARD PROCEDURE)

No >> Go To 10

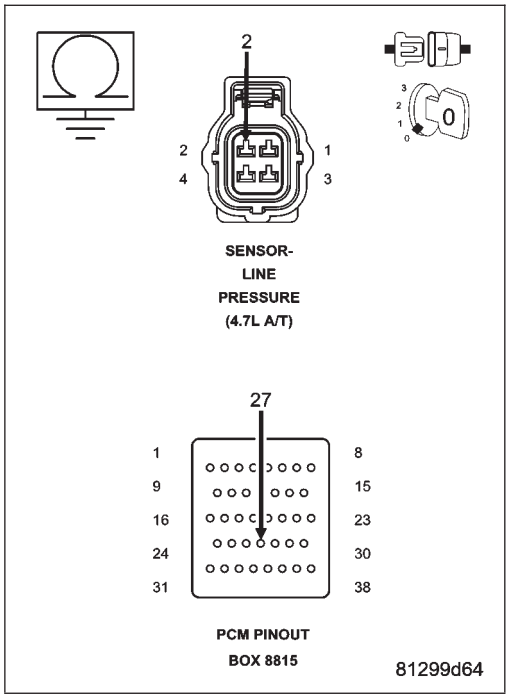

10. CHECK THE (T118) PRESSURE CONTROL SOLENOID CONTROL CIRCUIT FOR A SHORT TO ANOTHER CIRCUIT

Turn the ignition off to the lock position.

Disconnect the Transmission Solenoid/TRS Assembly harness connector.

Disconnect all PCM harness connectors.

Measure the resistance between the (T118) Pressure Control Solenoid Control circuit and all other circuits in the Transmission Solenoid/TRS Assembly harness connector.

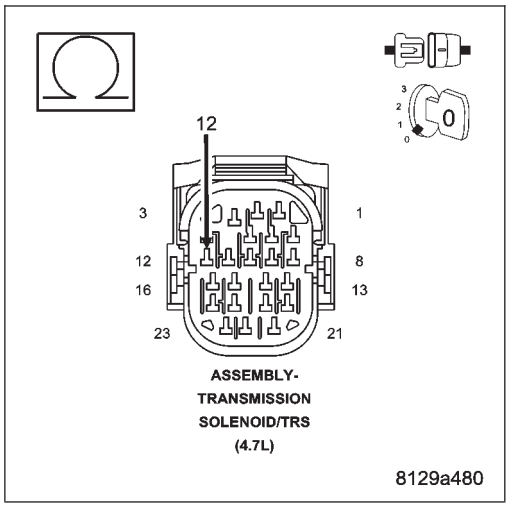

Is the resistance below 5.0 ohms between the (T118) Pressure Control Solenoid Control circuit and any other circuit(s) in the Transmission Solenoid/TRS Assembly harness connector?

Yes >> Repair the (T118) Pressure Control Solenoid Control circuit for a short to another circuit(s).

Perform 45RFE/545RFE TRANSMISSION VERIFICATION TEST - VER 1. (Refer to 21 - TRANSMISSION/TRANSAXLE/AUTOMATIC - 45RFE/545RFE - STANDARD PROCEDURE)

No >> Using the schematics as a guide, check the Powertrain Control Module (PCM) terminals for corrosion, damage, or terminal push out. Pay particular attention to all power and ground circuits. If no problems are found, replace the PCM per the Service Information. With the scan tool, perform QUICK LEARN.

Perform 45RFE/545RFE TRANSMISSION VERIFICATION TEST - VER 1. (Refer to 21 - TRANSMISSION/TRANSAXLE/AUTOMATIC - 45RFE/545RFE - STANDARD PROCEDURE)

11. INTERMITTENT WIRING AND CONNECTORS

The conditions necessary to set this DTC are not present at this time.

Using the schematics as a guide, inspect the wiring and connectors specific to this circuit.

Wiggle the wires while checking for shorted and open circuits.

With the scan tool, check the DTC EVENT DATA to help identify the conditions in which the DTC was set.

Where there any problems found?

Yes >> Repair as necessary.

Perform 45RFE/545RFE TRANSMISSION VERIFICATION TEST - VER 1. (Refer to 21 - TRANSMISSION/TRANSAXLE/AUTOMATIC - 45RFE/545RFE - STANDARD PROCEDURE)

No >> Test Complete.

P0869-LINE PRESSURE HIGH

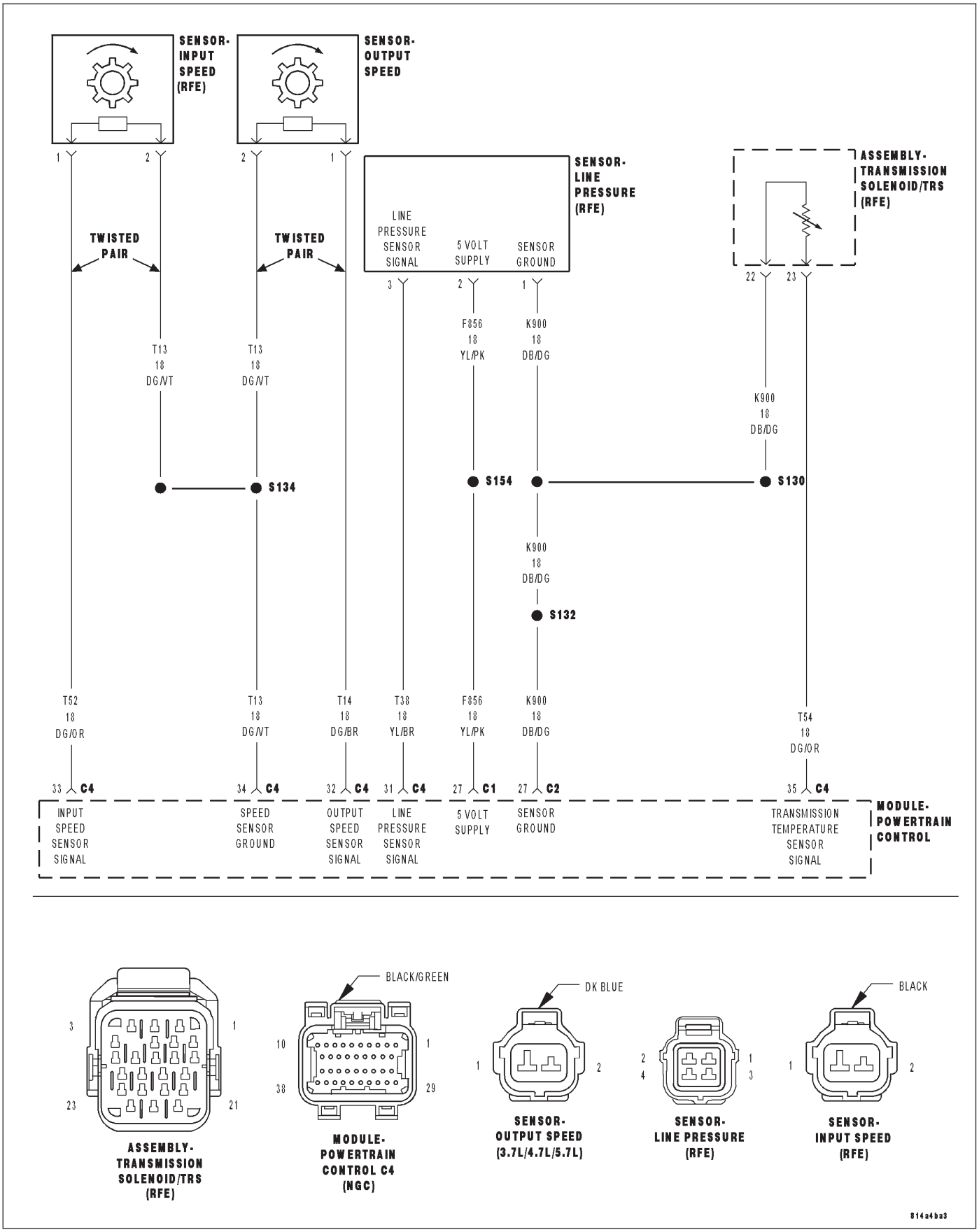

For a complete wiring diagram **Refer to Section 8W**

- **When Monitored:**
  Continuously while driving in a forward gear.
- **Set Condition:**
  The PCM continuously monitors Actual Line Pressure. If the Actual Line Pressure reading is greater than the highest Desired Line Pressure ever used in the current gear, while the Pressure Control Solenoid duty cycle is at or near its maximum value (which should result in minimum line pressure), the DTC will set.

Possible Causes
(F856) 5-VOLT SUPPLY CIRCUIT OPEN
LINE PRESSURE SENSOR CONNECTION
(T118) PRESSURE CONTROL SOLENOID CONTROL CIRCUIT OPEN
(F856) 5-VOLT SUPPLY CIRCUIT SHORT TO GROUND
(T118) PRESSURE CONTROL SOLENOID CONTROL CIRCUIT SHORT TO GROUND
TRANSMISSION CONTROL RELAY OUTPUT CIRCUIT
LINE PRESSURE SENSOR
STUCK OR STICKING MAIN REGULATOR VALVE
POWERTRAIN CONTROL MODULE

Always perform the 45RFE/545RFE Pre-Diagnostic Troubleshooting Procedure before proceeding. (Refer to 21 - TRANSMISSION/TRANSAXLE/AUTOMATIC - 45RFE/545RFE - STANDARD PROCEDURE)

Theory of Operation

Line pressure is measured by the Line Pressure Sensor (LPS) and regulation is achieved by changing the duty cycle of the Pressure Control Solenoid (PCS) controlled by the Transmission Control System. (5% duty cycle = solenoid off = Max line pressure, 62% duty cycle = solenoid on = Min line pressure). The Transmission Control System calculates the desired line pressure based on inputs from both the engine and transmission.

The Transmission Control System calculates torque input to the transmission and uses it as the primary input to the desired line pressure calculation. This is called Torque Based Line Pressure. In addition, the line pressure is set to a preset level 827 or 931 kPa (120 or 135 psi) during shifts and in Park and Neutral to ensure consistent shift quality. The desired line pressure is continuously being compared to the actual line pressure. If the actual line pressure is consistently higher than the highest desired line pressure ever used in the current gear, the line pressure high DTC P0869 will set.

Diagnostic Test

1. CHECK FOR RELATED DTC'S

With the scan tool, check for other Transmission DTC's

Is the DTC P0932 or P0882 present also?

Yes >> Refer to the Transmission category and perform the appropriate symptom.

No >> Go To 2

2. CHECK IF THE DTC IS CURRENT

With the scan tool, check the STARTS SINCE SET counter for P0869.

Is the STARTS SINCE SET COUNTER 2 or less?

Yes >> Go To 3

No >> Go To 10

3. CHECK THE LINE PRESSURE SENSOR CONNECTION

Ignition on, engine not running.

With the scan tool, monitor the Transmission Line Pressure.

Firmly push the Line Pressure Sensor harness connector inward towards the Transmission.

Did the Line Pressure change to about 207 kPa or 30 psi when the sensor connector was pushed?

Yes >> Disconnect and properly reconnect the Line Pressure Sensor connector. Inspect terminals and repair as necessary.

Perform 45RFE/545RFE TRANSMISSION VERIFICATION TEST - VER 1. (Refer to 21 - TRANSMISSION/TRANSAXLE/AUTOMATIC - 45RFE/545RFE - STANDARD PROCEDURE)

No >> Go To 4

4. CHECK THE PCM AND WIRING

Turn the ignition off to the lock position.

Remove the Ignition Switch Feed fuse from the TIPM.

CAUTION: Removal of the Ignition Switch Feed fuse from the TIPM will prevent the vehicle from being started in gear.

WARNING: The Ignition Switch Feed fuse must be removed from the TIPM. Failure to do so can result in personal injury or death.

Install the Transmission Simulator, Miller tool #8333.

With the Transmission Simulator select the ″OFF″ position on the ″Input/Output Speed″ switch.

Ignition on, engine not running.

With the scan tool, monitor the Line Pressure during the following step.

Using the Transmission Simulator, set the rotary switch to each of the 3 line pressure positions.

NOTE: All three scan tool Line Pressure readings should be steady and ±14 kPa or 2.0 psi of the reading specified on the Transmission Simulator.

Did the Line Pressure read within ±14 kPA or 2.0 psi in all three positions?

Yes >> Go To 5

No >> Go To 6

5. CHECK THE LINE PRESSURE SENSOR CALIBRATION

Turn the ignition off to the lock position.

Disconnect the Transmission Simulator, Miller tool #8333 and reconnect all previously disconnected connectors.

Install the Line Pressure Adaptor, Miller tool #8259, and Pressure Gauge, Miller tool #C-3293, 0 to 2000 kPa or 0 to 300 psi.

Start the engine in park.

Monitor the Line Pressure readings on the scan tool and the pressure gauge.

Compare the Line Pressure readings between the scan tool and the pressure gauge.

Is the pressure gauge reading within 34 kPa or 5 psi of the scan tool reading?

Yes >> Repair the internal transmission and inspect the Transmission Oil Pump per the Service Information and replace if necessary. If no problem is found, replace the Transmission Solenoid/TRS Assembly, possible cause is a stuck Pressure Control Solenoid.

Perform 45RFE/545RFE TRANSMISSION VERIFICATION TEST - VER 1. (Refer to 21 - TRANSMISSION/TRANSAXLE/AUTOMATIC - 45RFE/545RFE - STANDARD PROCEDURE)

No >> Replace the Line Pressure Sensor per the Service information.

Perform 45RFE/545RFE TRANSMISSION VERIFICATION TEST - VER 1. (Refer to 21 - TRANSMISSION/TRANSAXLE/AUTOMATIC - 45RFE/545RFE - STANDARD PROCEDURE)

6. CHECK THE (T118) PRESSURE CONTROL SOLENOID CONTROL CIRCUIT FOR AN OPEN

Turn the ignition off to the lock position.

Disconnect the Transmission Simulator, Miller tool #8333.

Disconnect the Powertrain Control Module C4 harness connector.

CAUTION: Do not probe the PCM harness connectors. Probing the PCM harness connectors will damage the PCM terminals resulting in poor terminal to pin connection. Install Miller tool #8815 to perform diagnosis.

Measure the resistance of the (T118) Pressure Control Solenoid Control circuit between the Solenoid/TRS Assembly harness connector and the appropriate terminal of Miller tool #8815.

Is the resistance above 5.0 ohms?

Yes >> Repair the (T118) Pressure Control Solenoid Control circuit for an open.

Perform 45RFE/545RFE TRANSMISSION VERIFICATION TEST - VER 1. (Refer to 21 - TRANSMISSION/TRANSAXLE/AUTOMATIC - 45RFE/545RFE - STANDARD PROCEDURE)

No >> Go To 7

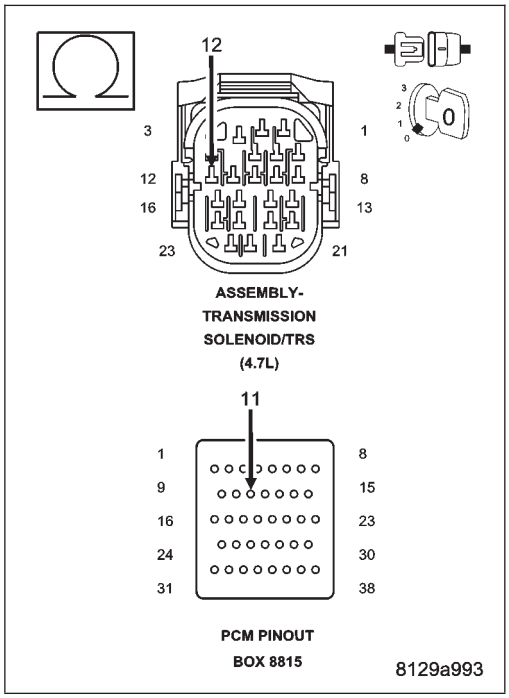

7. CHECK THE (T118) PRESSURE CONTROL SOLENOID CONTROL CIRCUIT FOR A SHORT TO GROUND

Measure the resistance between ground and the (T118) Pressure Control Solenoid Control circuit.

Is the resistance below 5.0 ohms?

Yes >> Repair the (T118) Pressure Control Solenoid Control circuit for a short to ground.

Perform 45RFE/545RFE TRANSMISSION VERIFICATION TEST - VER 1. (Refer to 21 - TRANSMISSION/TRANSAXLE/AUTOMATIC - 45RFE/545RFE - STANDARD PROCEDURE)

No >> Go To 8

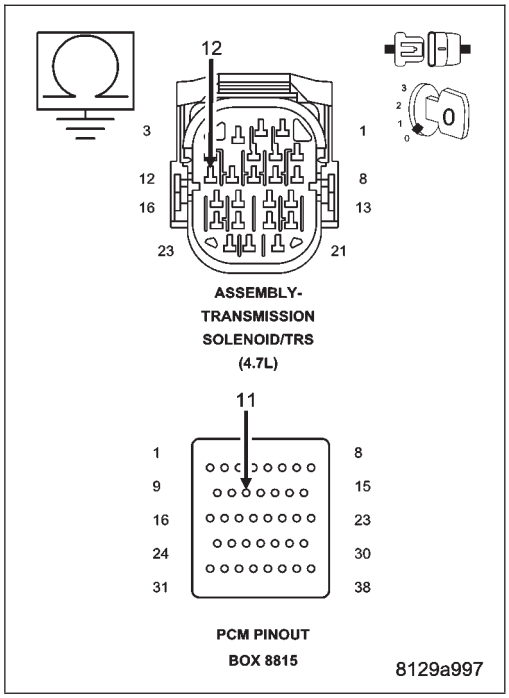

8. CHECK THE (F856) 5-VOLT SUPPLY CIRCUIT FOR AN OPEN

Measure the resistance of the (F856) 5-volt Supply circuit between the Line Pressure Sensor harness connector and the appropriate terminal of Miller tool #8815.

Is the resistance above 5.0 ohms?

Yes >> Repair the (F856) 5-volt Supply circuit for an open.
Perform 45RFE/545RFE TRANSMISSION VERIFICATION TEST - VER 1. (Refer to 21 - TRANSMISSION/TRANSAXLE/AUTOMATIC - 45RFE/545RFE - STANDARD PROCEDURE)

No >> Go To 9

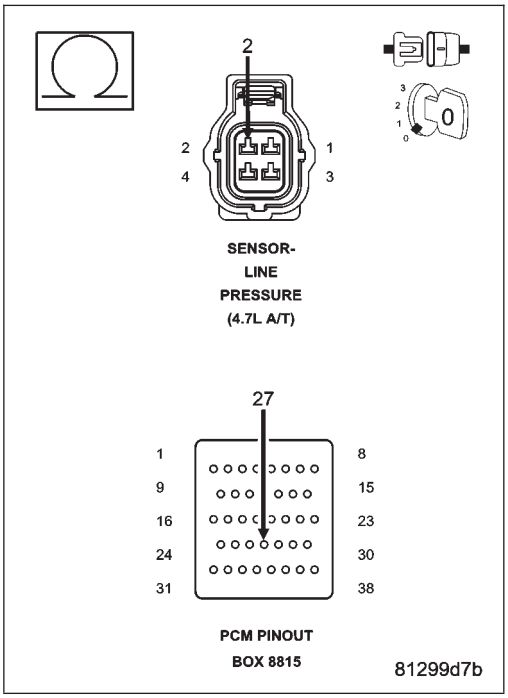

9. CHECK THE (F856) 5-VOLT SUPPLY CIRCUIT FOR A SHORT TO GROUND

Disconnect the PCM C1 harness connector.

Disconnect the Line Pressure Sensor harness connector.

CAUTION: Do not probe the PCM harness connectors. Probing the PCM harness connectors will damage the PCM terminals resulting in poor terminal to pin connection. Install Miller tool #8815 to perform diagnosis.

Measure the resistance between ground and the (F856) 5-volt Supply circuit.

Is the resistance below 5.0 ohms?

Yes >> Repair the (F856) 5-volt Supply circuit for a short to ground.
Perform 45RFE/545RFE TRANSMISSION VERIFICATION TEST - VER 1. (Refer to 21 - TRANSMISSION/TRANSAXLE/AUTOMATIC - 45RFE/545RFE - STANDARD PROCEDURE)

No >> Using the schematics as a guide, check the Powertrain Control Module (PCM) terminals for corrosion, damage, or terminal push out. Pay particular attention to all power and ground circuits. If no problems are found, replace the PCM per the Service Information. With the scan tool, perform QUICK LEARN.
Perform 45RFE/545RFE TRANSMISSION VERIFICATION TEST - VER 1. (Refer to 21 - TRANSMISSION/TRANSAXLE/AUTOMATIC - 45RFE/545RFE - STANDARD PROCEDURE)

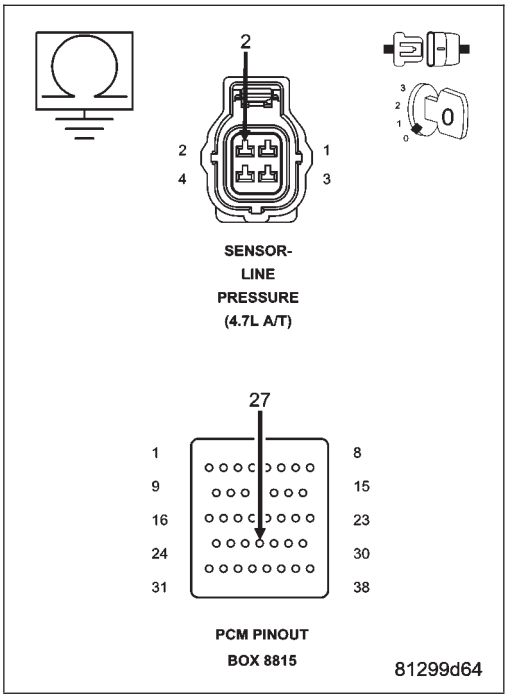

10. INTERMITTENT WIRING AND CONNECTORS

The conditions necessary to set this DTC are not present at this time.

Using the schematics as a guide, inspect the wiring and connectors specific to this circuit.

Wiggle the wires while checking for shorted and open circuits.

With the scan tool, check the DTC EVENT DATA to help identify the conditions in which the DTC was set.

Where there any problems found?

Yes >> Repair as necessary.
Perform 45RFE/545RFE TRANSMISSION VERIFICATION TEST - VER 1. (Refer to 21 - TRANSMISSION/TRANSAXLE/AUTOMATIC - 45RFE/545RFE - STANDARD PROCEDURE)

No >> Test Complete.

P0870-OD HYDRAULIC PRESSURE TEST

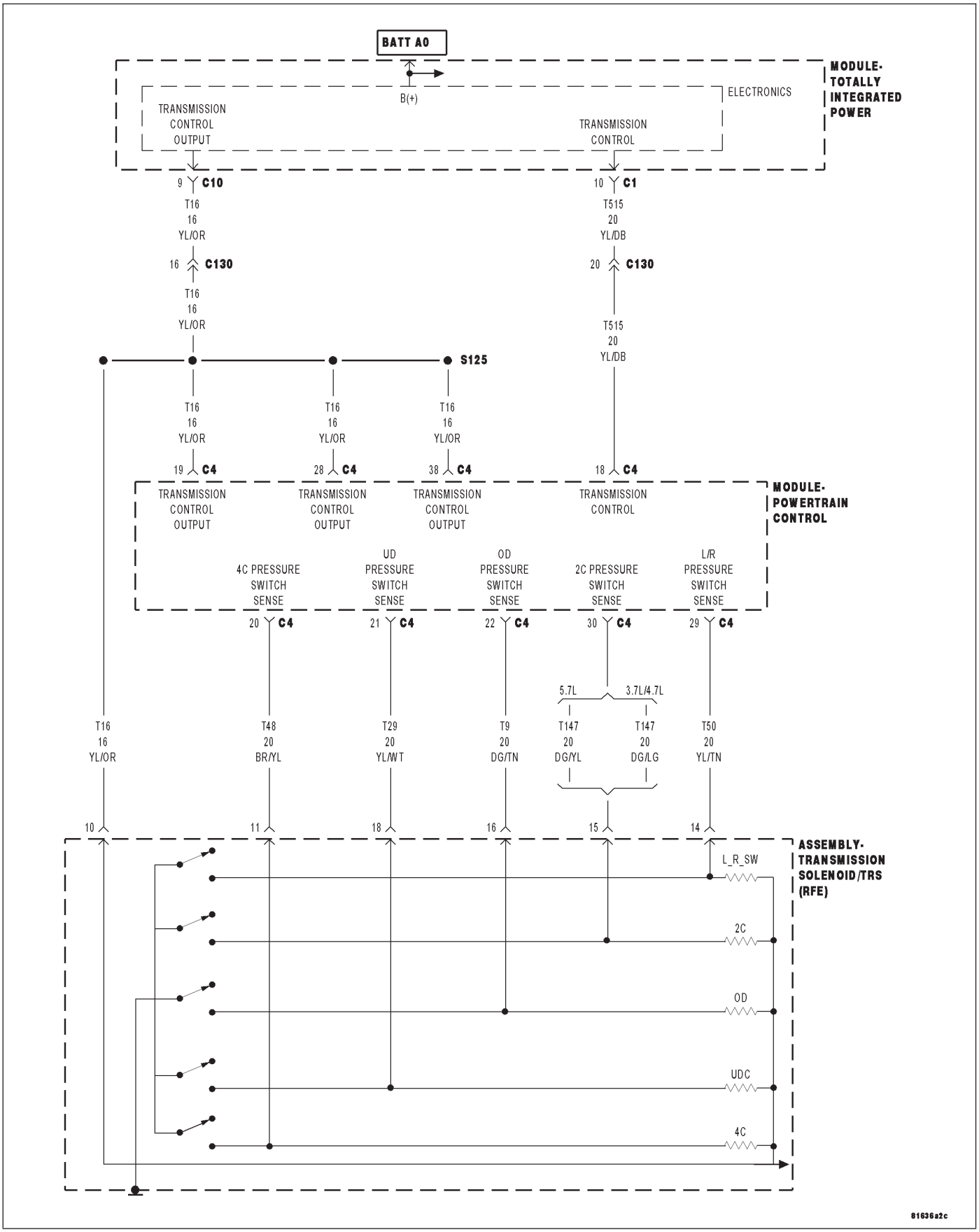

For a complete wiring diagram **Refer to Section 8W**

- **When Monitored:**
  In any forward gear with engine speed above 1000 RPM shortly after a shift and every minute thereafter.
- **Set Condition:**
  After a shift into a forward gear, with engine speed above 1000 RPM, the PCM momentarily turns on element pressure to the Clutch circuits that don't have pressure to identify the correct Pressure Switch closes. If the Pressure Switch does not close 2 times, the DTC sets.

Possible Causes
LINE PRESSURE SENSOR
TRANSMISSION FLUID CONTAMINATION
RELATED DTC'S PRESENT
TRANSMISSION SOLENOID/TRS ASSEMBLY
EXCESSIVE DEBRIS IN OIL PAN
POOR LINE PRESSURE SENSOR CONNECTION
(T9) OD PRESSURE SWITCH SENSE CIRCUIT OPEN
TRANSMISSION CONTROL RELAY DTCS PRESENT
(T9) OD PRESSURE SWITCH SENSE CIRCUIT OPEN
(F856) 5-VOLT SUPPLY CIRCUIT OPEN
TRANSMISSION CONTROL RELAY OUTPUT CIRCUIT OPEN
(T9) OD PRESSURE SWITCH SENSE CIRCUIT SHORT TO GROUND
(F856) 5-VOLT SUPPLY CIRCUIT SHORT TO GROUND
(T9) OD PRESSURE SWITCH SENSE CIRCUIT SHORT TO OTHER CIRCUITS
TRANSMISSION SOLENOID/TRS ASSEMBLY
INTERNAL TRANSMISSION
POWERTRAIN CONTROL MODULE

Always perform the 45RFE/545RFE Pre-Diagnostic Troubleshooting Procedure before proceeding. (Refer to 21 - TRANSMISSION/TRANSAXLE/AUTOMATIC - 45RFE/545RFE - STANDARD PROCEDURE)

Theory of Operation

The Transmission Control System tests the pressure switches when they are off. The test verifies that the switches are operational (They will close with pressure applied). The Transmission Control System verifies that the switch closes when the corresponding element is applied. If a switch fails to close, it is re-tested. If it fails the second test, the DTC will set, the MIL will illuminate and the transmission system will default to the orderly Shutdown routine.

Diagnostic Test

1. CHECK IF RELATED DTCS ARE PRESENT

With the scan tool, check for other transmission DTCs.

Is there any Loss of Prime, Transmission Control Relay, and/or Line Pressure Sensor DTCs present?

Yes >> Refer to the Transmission category and perform the appropriate symptom. If the DTC, P0944-LOSS OF PRIME is present, perform its respective test first.

No >> Go To 2

2. CHECK IF THE DTC P0760 IS PRESENT

With the scan tool, check Transmission DTCs.

Is the DTC P0760 also present?

Yes >> Refer to the symptom list and perform diagnostics for P0760-OD SOLENOID CIRCUIT.

No >> Go To 3

3. CHECK IF OTHER DTCS ARE PRESENT

With the scan tool, check for other transmission DTC's

Are any of the DTCs, P0733, P0734 ,P0735 and/or P0871 present also?

Yes >> Go To 12

No >> Go To 4

4. CHECK TO SEE IF DTC P0870 IS CURRENT

With the scan tool, check the STARTS SINCE SET counter for P0870.

Is the STARTS SINCE SET COUNTER 2 or less?

Yes >> Go To 5

No >> Go To 17

5. CHECK IF THE LINE PRESSURE STAYS THE SAME

Start the engine.

Warm the transmission to 82° C or 180° F.

Firmly apply the brakes.

With the scan tool, monitor the Line Pressure during the following step.

Move the shift lever to each gear position, pausing momentarily in each position and record the line pressure reading. Allow the pressure to stabilize for at least 5 seconds in each range.

Did the line pressure remain at a steady value between 585 and 655 kPa or 85 and 95 psi in each position?

Yes >> Go To 6

No >> Go To 10

6. CHECK THE LINE PRESSURE SENSOR CONNECTION

Ignition on, **engine not running.**

With the scan tool, monitor the Line Pressure while firmly pushing the Transmission Line Pressure Sensor connector inwards towards the Transmission.

Did the Line Pressure reading on the scan tool change to about 207 kPa or 30 psi when the connector was pushed inward?

Yes >> Disconnect and properly reconnect the Line Pressure Sensor connector. Inspect terminals and repair as necessary.

Perform 45RFE/545RFE TRANSMISSION VERIFICATION TEST - VER 1. (Refer to 21 - TRANSMISSION/TRANSAXLE/AUTOMATIC - 45RFE/545RFE - STANDARD PROCEDURE)

No >> Go To 7

7. CHECK THE LINE PRESSURE SENSOR OPERATION

Turn the ignition off to the lock position.

Remove the Ignition Switch Feed fuse from the TIPM.

CAUTION: Removal of the Ignition Switch Feed fuse from the TIPM will prevent the vehicle from being started in gear.

WARNING: The Ignition Switch Feed fuse must be removed from the TIPM. Failure to do so can result in personal injury or death.

Install the Transmission Simulator, Miller tool #8333.

With the Transmission Simulator select the ″OFF″ position on the ″Input/Output Speed″ switch.

Ignition on, engine not running.

With the scan tool, monitor the Line Pressure while turning the Pressure Switch selector to each of the 3 line pressure positions on the Transmission Simulator.

NOTE: All three scan tool Line Pressure readings should be steady and ±14 kPa or 2.0 psi of the reading specified on the Transmission Simulator.

Did the scan tool Line Pressure readings match the specified readings on the Transmission Simulator and remain steady in all three positions?

Yes >> Replace the Line Pressure Sensor per the Service Information.
Perform 45RFE/545RFE TRANSMISSION VERIFICATION TEST - VER 1. (Refer to 21 - TRANSMISSION/TRANSAXLE/AUTOMATIC - 45RFE/545RFE - STANDARD PROCEDURE)

No >> Go To 8

8. CHECK THE (F856) 5-VOLT SUPPLY CIRCUIT FOR AN OPEN

Turn the ignition off to the lock position.

Disconnect Transmission Simulator.

Disconnect the PCM C4 harness connector and connect Miller tool #8815.

CAUTION: Do not probe the PCM harness connectors. Probing the PCM harness connectors will damage the PCM terminals resulting in poor terminal to pin connection. Install Miller tool #8815 to perform diagnosis.

Measure the resistance of the (F856) 5-volt Supply circuit between the Line Pressure Sensor harness connector and the appropriate terminal of Miller tool #8815.

Is the resistance above 5.0 ohms?

Yes >> Repair the (F856) 5-volt Supply circuit for an open.
Perform 45RFE/545RFE TRANSMISSION VERIFICATION TEST - VER 1. (Refer to 21 - TRANSMISSION/TRANSAXLE/AUTOMATIC - 45RFE/545RFE - STANDARD PROCEDURE)

No >> Go To 9

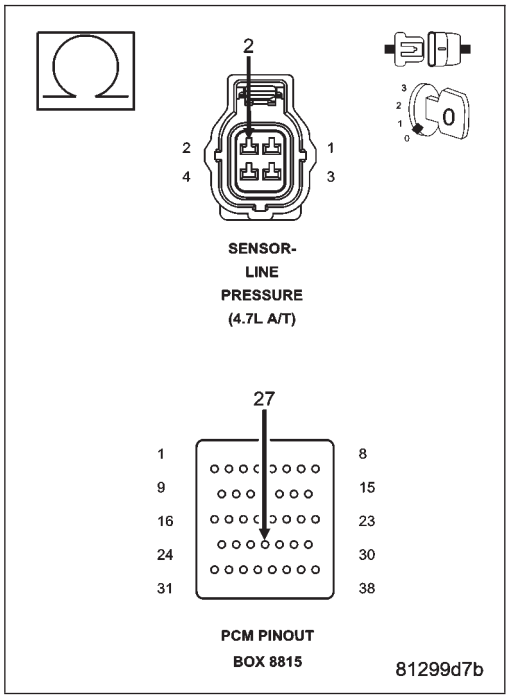

9. CHECK THE (F856) 5-VOLT SUPPLY CIRCUIT FOR A SHORT TO GROUND

Measure the resistance between ground and the (F856) 5-volt Supply circuit.

Is the resistance below 5.0 ohms?

Yes >> Repair the (F856) 5-volt Supply circuit for a short to ground.
Perform 45RFE/545RFE TRANSMISSION VERIFICATION TEST - VER 1. (Refer to 21 - TRANSMISSION/TRANSAXLE/AUTOMATIC - 45RFE/545RFE - STANDARD PROCEDURE)

No >> Using the schematics as a guide, check the Powertrain Control Module (PCM) terminals for corrosion, damage, or terminal push out. Pay particular attention to all power and ground circuits. If no problems are found, replace the PCM per the Service Information. With the scan tool, perform QUICK LEARN.
Perform 45RFE/545RFE TRANSMISSION VERIFICATION TEST - VER 1. (Refer to 21 - TRANSMISSION/TRANSAXLE/AUTOMATIC - 45RFE/545RFE - STANDARD PROCEDURE)

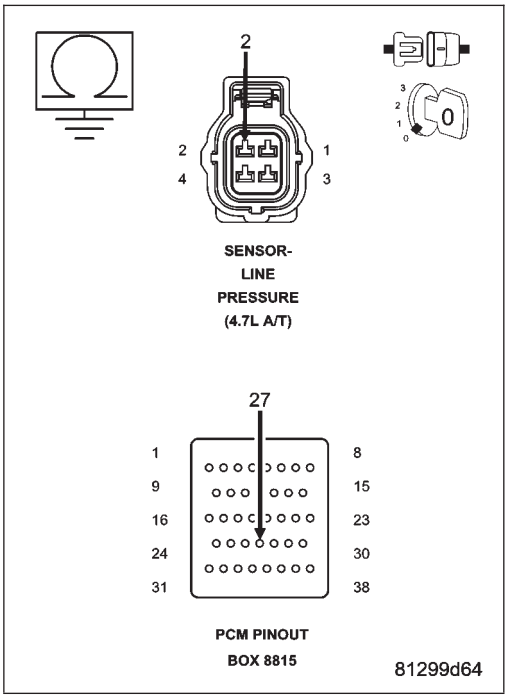

10. COMPARE THE SCAN TOOL TO THE PRESSURE GAUGE

Turn the ignition off to the lock position.

Connect the Line Pressure Adapter, Miller tool #8259 and 0-300 psi Test Gauge, Miller tool #C-3293-SP. Refer to the Service Information for proper installation procedure.

CAUTION: Apply parking brake.
Start the engine.

In the following steps, compare the scan tool Line Pressure to the Pressure Gauge readings in each gear.

CAUTION: Do not overheat transmission.
With the gear selector in park, raise the RPM to 1500, and compare line pressure readings.

Firmly apply the brakes, move the gear selector into reverse, raise the RPM to 1500, and compare the line pressure readings.

Firmly apply the brakes, move the gear selector into drive, raise the RPM to 1500, and compare the line pressure readings.

Did the scan tool Line Pressure readings match the Pressure Gauge readings ± 10 psi?

Yes >> Go To 11

No >> Replace the Line Pressure Sensor per the Service Information.
Perform 45RFE/545RFE TRANSMISSION VERIFICATION TEST - VER 1. (Refer to 21 - TRANSMISSION/TRANSAXLE/AUTOMATIC - 45RFE/545RFE - STANDARD PROCEDURE)

11. CHECK THE WIRING AND CONNECTORS

Turn the ignition off to the lock position.

Remove the Line Pressure Adapter, Miller tool #8259 and 0-300 psi Test Gauge, Miller tool #C-3293-SP.

Remove the Ignition Switch Feed fuse from the TIPM.

CAUTION: Removal of the Ignition Switch Feed fuse from the TIPM will prevent the vehicle from being started in gear.

WARNING: The Ignition Switch Feed fuse must be removed from the TIPM. Failure to do so can result in personal injury or death.

Install the Transmission Simulator, Miller tool #8333.

On the Transmission Simulator, turn the Pressure Switch selector switch to OD.

Ignition on, engine not running.

With the scan tool, monitor the OD Pressure Switch state while pressing and holding the Pressure Switch test button and wiggling the wire harness and connectors that pertain to the OD Pressure Switch.

Did the OD Pressure Switch state change to closed and remain closed while wiggling the wires?

Yes >> Go To 12

No >> Go To 14

12. CHECK FOR EXCESSIVE DEBRIS

Turn the ignition off to the lock position.

Remove the Transmission Simulator, Miller tool #8333.

Remove and inspect the Transmission Oil Pan per the Service Information.

Does the Transmission Oil Pan contain excessive debris or contamination?

Yes >> Repair the cause of the excessive debris in the Transmission Oil Pan. Refer to the Service Information for the proper procedures.

Perform 45RFE/545RFE TRANSMISSION VERIFICATION TEST - VER 1. (Refer to 21 - TRANSMISSION/TRANSAXLE/AUTOMATIC - 45RFE/545RFE - STANDARD PROCEDURE)

No >> Go To 13

13. CHECK THE OD HYDRAULIC CLUTCH CIRCUIT

Remove the Valve Body and air check the OD hydraulic clutch circuit (in the case) for leakage per the Service Information.

NOTE: The OD hydraulic clutch circuit contains a small bleed orifice which connects to the Reverse hydraulic clutch circuit. A small amount of air leakage is normal.

Was there excessive air leakage noticed during the air check?

Yes >> Repair as necessary. Check the OD/Rev clutch piston seals, bleed orifice assembly, reaction shaft support seal rings, and machining of the main mating faces on the pump housing, pump valve body, and reaction shaft support.

Perform 45RFE/545RFE TRANSMISSION VERIFICATION TEST - VER 1. (Refer to 21 - TRANSMISSION/TRANSAXLE/AUTOMATIC - 45RFE/545RFE - STANDARD PROCEDURE)

No >> Disassemble and inspect the Valve Body and repair as necessary. Inspect the OD Accumulator piston and seals. Check for an extra check ball downstream from the #6 check ball pocket and repair as necessary. If no problems are found in the Valve Body, replace the Transmission Solenoid/TRS Assembly per the Service Information.

Perform 45RFE/545RFE TRANSMISSION VERIFICATION TEST - VER 1. (Refer to 21 - TRANSMISSION/TRANSAXLE/AUTOMATIC - 45RFE/545RFE - STANDARD PROCEDURE)

14. CHECK THE (T9) OD PRESSURE SWITCH SENSE CIRCUIT FOR AN OPEN

Turn the ignition off to the lock position.

Remove the Transmission Simulator, Miller tool #8333.

Disconnect the PCM C4 harness connector and connect Miller tool #8815.

Measure the resistance of the (T9) OD Pressure Switch Sense circuit between the Transmission Solenoid/TRS Assembly harness connector and the appropriate terminal of Miller tool #8815.

Is the resistance above 5.0 ohms?

Yes >> Repair the (T9) OD Pressure Switch Sense circuit for an open.

Perform 45RFE/545RFE TRANSMISSION VERIFICATION TEST - VER 1. (Refer to 21 - TRANSMISSION/TRANSAXLE/AUTOMATIC - 45RFE/545RFE - STANDARD PROCEDURE)

No >> Go To 15

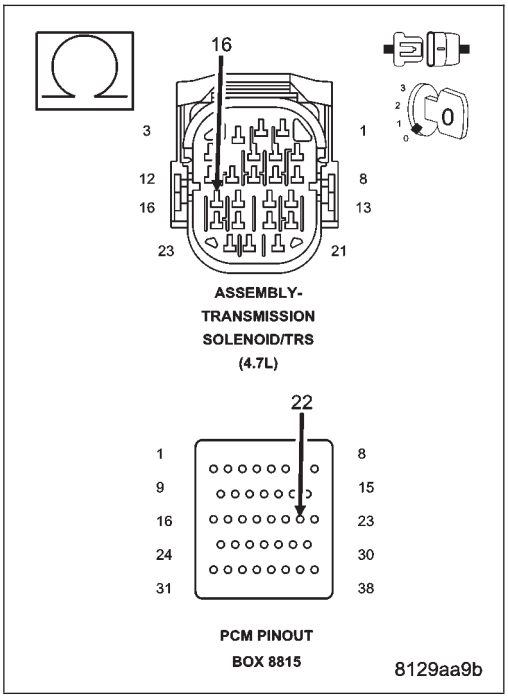

15. CHECK THE (T9) OD PRESSURE SWITCH SENSE CIRCUIT FOR A SHORT TO GROUND

Measure the resistance between ground and the (T9) OD Pressure Switch Sense circuit.

Is the resistance below 5.0 ohms?

Yes >> Repair the (T9) OD Pressure Switch Sense circuit for a short to ground.

Perform 45RFE/545RFE TRANSMISSION VERIFICATION TEST - VER 1. (Refer to 21 - TRANSMISSION/TRANSAXLE/AUTOMATIC - 45RFE/545RFE - STANDARD PROCEDURE)

No >> Go To 16

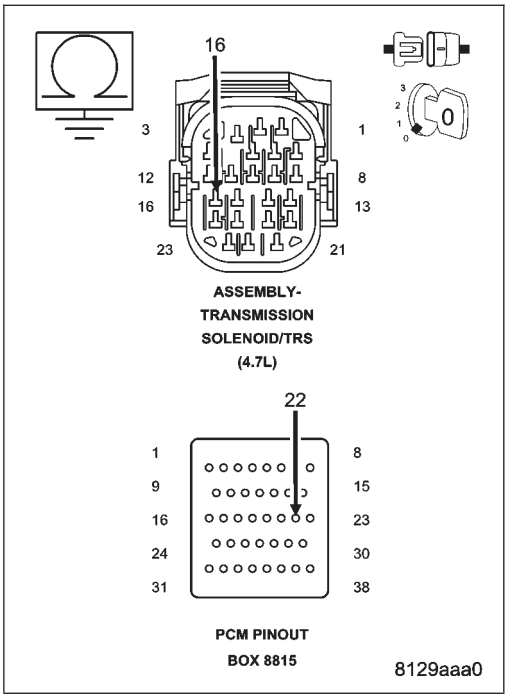

16. CHECK THE (T9) OD PRESSURE SWITCH SENSE CIRCUIT FOR A SHORT TO ANOTHER CIRCUIT

Disconnect all PCM harness connectors.

Disconnect the Transmission Solenoid/TRS Assembly harness connector.

NOTE: Make sure the Transmission Solenoid/TRS Assembly harness connector is disconnected.

NOTE: Check connectors - Clean/repair as necessary.

Measure the resistance between the (T9) OD Pressure Switch Sense circuit and all other circuits in the Transmission Solenoid/TRS Assembly harness connector.

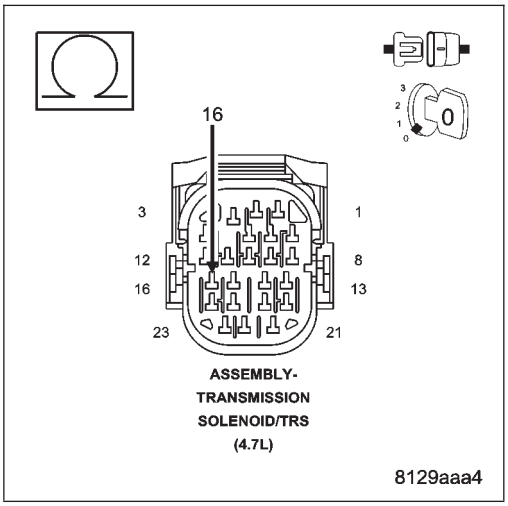

Is the resistance below 5.0 ohms between the (T9) OD Pressure Switch Sense circuit and any other circuit(s) in the Transmission Solenoid/TRS Assembly harness connector?

Yes >> Repair the (T9) OD Pressure Switch Sense circuit for a short to another circuit(s).

Perform 45RFE/545RFE TRANSMISSION VERIFICATION TEST - VER 1. (Refer to 21 - TRANSMISSION/TRANSAXLE/AUTOMATIC - 45RFE/545RFE - STANDARD PROCEDURE)

No >> Using the schematics as a guide, check the Powertrain Control Module (PCM) terminals for corrosion, damage, or terminal push out. Pay particular attention to all power and ground circuits. If no problems are found, replace the PCM per the Service Information. With the scan tool, perform QUICK LEARN.

Perform 45RFE/545RFE TRANSMISSION VERIFICATION TEST - VER 1. (Refer to 21 - TRANSMISSION/TRANSAXLE/AUTOMATIC - 45RFE/545RFE - STANDARD PROCEDURE)

17. INTERMITTENT WIRING AND CONNECTORS

The conditions necessary to set this DTC are not present at this time.

Using the schematics as a guide, inspect the wiring and connectors specific to this circuit.

Wiggle the wires while checking for shorted and open circuits.

With the scan tool, check the DTC EVENT DATA to help identify the conditions in which the DTC was set.

If the DTC EVENT DATA shows the DTC P0870 set while the Line Pressure was significantly below the Desired Line Pressure reading, check for causes of low line pressure (low fluid level, broken or mis-installed primary oil filter or filter seal, sticking Main Regulator Valve in the Pump Valve Body etc.). If the data shows the DTC set while the Line Pressure reading was significantly higher than the Desired Line Pressure, check the Line Pressure Sensor and related wiring.

Where there any problems found?

Yes >> Repair as necessary.

Perform 45RFE/545RFE TRANSMISSION VERIFICATION TEST - VER 1. (Refer to 21 - TRANSMISSION/TRANSAXLE/AUTOMATIC - 45RFE/545RFE - STANDARD PROCEDURE)

No >> Test Complete.

P0871-OD PRESSURE SWITCH RATIONALITY

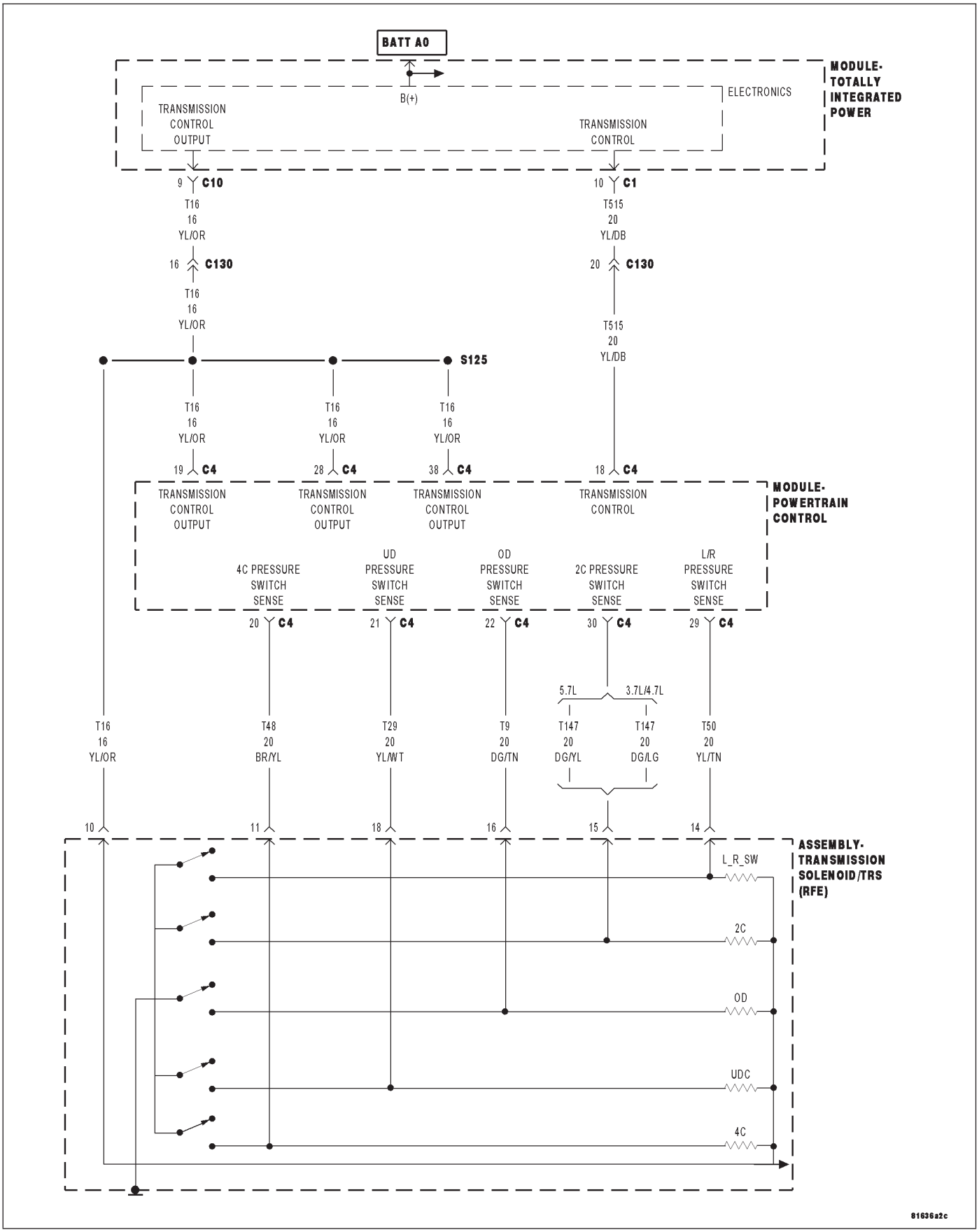

For a complete wiring diagram **Refer to Section 8W**

- **When Monitored:**
  Continuously with the ignition on and engine running.
- **Set Condition:**
  The appropriate DTC is set if one of the pressure switches are open or closed at the wrong time in a given gear.

Possible Causes
RELATED TCM POWER INPUT DTCS PRESENT
LINE PRESSURE DTCS PRESENT
NO. 4 OR 6 CHECK BALL CUT OR DAMAGED
(T9) OD PRESSURE SWITCH SENSE CIRCUIT OPEN
(T9) OD PRESSURE SWITCH SENSE CIRCUIT SHORT TO GROUND
(T9) OD PRESSURE SWITCH SENSE CIRCUIT SHORT TO OTHER CIRCUITS
LOW LINE PRESSURE
WIRING AND CONNECTORS
CUT OD/REV PISTON SEAL
BROKEN OR MISSING DO/REV PISTON BLEED ORIFICE
BROKEN REACTION SHAFT SUPPORT SEAL RING
POOR MACHINING ON PUMP VALVE BODY FACE
BROKEN OR MISSING DRIBBLER ORIFICE ASSEMBLY IN REACTION SHAFT SUPPORT
TRANSMISSION SOLENOID/TRS ASSEMBLY
CUT OD ACCUMULATOR PISTON SEAL
CRACKED OD ACCUMULATOR PISTON
BROKEN OR MISSING OD BLEED ORIFICE IN MAIN VALVE BODY
POWERTRAIN CONTROL MODULE

Always perform the 45RFE/545RFE Pre-Diagnostic Troubleshooting Procedure before proceeding. (Refer to 21 - TRANSMISSION/TRANSAXLE/AUTOMATIC - 45RFE/545RFE - STANDARD PROCEDURE)

Theory of Operation

The Transmission system uses five pressure switches to monitor the fluid pressure in the LR, 2C, 4C, UD, and OD clutch circuits. The pressure switches are continuously monitored for the correct states in each gear as shown.

GEAR	L/R	2C	4C	UD	OD
REVERSE	OPEN	OPEN	OPEN	OPEN	OPEN
P/N	CLOSED**	OPEN	OPEN	OPEN	OPEN
1ST	CLOSED*	OPEN	OPEN	CLOSED	OPEN
2ND	OPEN	CLOSED	OPEN	CLOSED	OPEN
2ND PRIME	OPEN	OPEN	CLOSED	CLOSED	OPEN
3RD	OPEN	OPEN	OPEN	CLOSED	CLOSED
4TH	OPEN	OPEN	CLOSED	OPEN	CLOSED
5TH	OPEN	CLOSED	OPEN	OPEN	CLOSED

*L/R is closed if output speed is below 100 rpm in Drive and Manual 2. L/R is closed in Manual 1.

**May be open when rolling in Neutral or at low oil temperatures.

Diagnostic Test

1. CHECK FOR TCM POWER INPUT SIGNAL DTCS

With the scan tool, check for other transmission DTCs.

Are there any TCM Power Input Signal related DTCs present?

Yes >> Refer to the Transmission category and perform the appropriate symptom.

No >> Go To 2

2. CHECK IF LINE PRESSURE DTCS ARE PRESENT

With the scan tool, read Transmission DTCs.

Are there any Line Pressure DTCs present?

Yes >> Refer to the Transmission category and perform the appropriate symptom.

No >> Go To 3

3. CHECK FOR OTHER PRESSURE SWITCH DTCS

With the scan tool, check Transmission DTCs.

Are there two or more other pressure switch rationality DTCs present in addition to P0871?

Yes >> Go To 5

No >> Go To 4

4. CHECK IF DTC IS CURRENT

With the scan tool, check and record the DTC EVENT DATA.

NOTE: Make sure to record all DTC EVENT DATA stored in the scan tool for future reference in this test procedure.

Does the DTC EVENT DATA show data for P0871

Yes >> Go To 8

No >> Refer to the Transmission category and perform the appropriate symptom. (Refer to 21 - TRANSMISSION/TRANSAXLE/AUTOMATIC - 45RFE/545RFE - DIAGNOSIS AND TESTING)

5. CHECK IF RELATED DTC IS PRESENT

With the scan tool, check and record the DTC EVENT DATA.

NOTE: Make sure to record all DTC EVENT DATA stored in the scan tool for future reference in this test procedure.

Do all the pressure switches read CLOSED in the DTC EVENT DATA?

Yes >> Refer to the Transmission category and perform diagnostics for P0888. Follow instructions as if the DTC is current. (Refer to 21 - TRANSMISSION/TRANSAXLE/AUTOMATIC - 45RFE/545RFE - DIAGNOSIS AND TESTING)

No >> Go To 6

6. CHECK IF PRESSURE SWITCHES READ OPEN

In the DTC EVENT DATA recorded earlier, read the state of all pressure switches.

Do all the pressure switches read open?

Yes >> Go To 7

No >> Go To 8

7. CHECK FOR LOW LINE PRESSURE

In the DTC EVENT DATA recorded earlier, compare the Line Pressure to the Desired Line Pressure.

Is the Line Pressure less than 40 psi, and significantly below the Desired Line Pressure?

Yes >> Repair as necessary to correct low line pressure. Check fluid level and adjust as necessary. If fluid level is OK, check the Primary Oil Filter weal for a spit, crack , or improperly installed. If the filer and seal are OK, check the Main Regulator Valve in the Oil Pump. Refer to the Service Information for the above procedures.

Perform 45RFE/545RFE TRANSMISSION VERIFICATION TEST - VER 1. (Refer to 21 - TRANSMISSION/TRANSAXLE/AUTOMATIC - 45RFE/545RFE - STANDARD PROCEDURE)

No >> Replace the Transmission Solenoid/TRS Assembly per the Service Information. (Refer to 21 - TRANSMISSION/TRANSAXLE/AUTOMATIC - 45RFE/545RFE/TRANS SOLENOID/TRS ASSY - REMOVAL)

Perform 45RFE/545RFE TRANSMISSION VERIFICATION TEST - VER 1.

8. CHECK IF IN PARK, NEUTRAL, OR REVERSE

Ignition on, engine not running.

With the scan tool, read and record the DTC EVENT DATA for P0871.

NOTE: Make sure to record all DTC EVENT DATA stored in the scan tool for future reference in this test procedure.

Does the DTC EVENT DATA show the OD Pressure Switch DTC set while in Park, Neutral, or Reverse?

Yes >> Go To 18

No >> Go To 9

9. CHECK IF THE OD PRESSURE SWITCH WAS OPEN

Refer to the DTC EVENT DATA recorded earlier for P0871.

Did the OD Pressure Switch read OPEN?

Yes >> Go To 10

No >> Go To 15

10. CHECK FOR LOW LINE PRESSURE

Refer to the DTC EVENT DATA recorded earlier and compare the Line Pressure and the Desired Line Pressure.

Is the Line Pressure less than 40 psi, and significantly below the Desired Line Pressure?

Yes >> Repair as necessary to correct low line pressure. Check the fluid level. Check the Primary Oil Filter seal for a split, crack, or improperly installed. Refer to the Service Information for the proper installation procedure. If the fluid level and filter are OK, check the Main Regulator Valve in the Oil Pump.

Perform 45RFE/545RFE TRANSMISSION VERIFICATION TEST - VER 1. (Refer to 21 - TRANSMISSION/TRANSAXLE/AUTOMATIC - 45RFE/545RFE - STANDARD PROCEDURE)

No >> Go To 11

11. CHECK THE (T9) OD PRESSURE SWITCH SENSE CIRCUIT FOR A SHORT TO ANOTHER CIRCUIT

Turn the ignition off to the lock position.

Disconnect all PCM harness connectors.

Disconnect the Transmission Solenoid/TRS Assembly harness connector.

Measure the resistance between the (T9) OD Pressure Switch Sense circuit and all other circuits in the Transmission Solenoid/TRS Assembly harness connector.

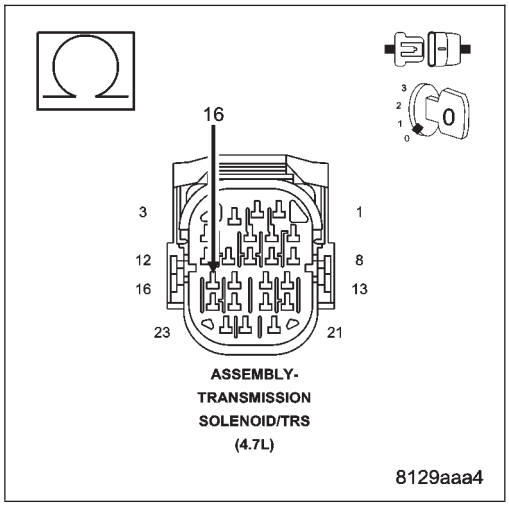

Is the resistance below 5.0 ohms between the (T9) OD Pressure Switch Sense circuit and any other circuit(s) in the Transmission Solenoid/TRS Assembly harness connector?

Yes >> Repair the (T9) OD Pressure Switch Sense circuit for a short to another circuit(s).

Perform 45RFE/545RFE TRANSMISSION VERIFICATION TEST - VER 1. (Refer to 21 - TRANSMISSION/TRANSAXLE/AUTOMATIC - 45RFE/545RFE - STANDARD PROCEDURE)

No >> Go To 12

12. CHECK TO SEE IF THE DTC RESETS

Reconnect all previously disconnected connectors.

With the scan too, erase transmission DTCs.

Test drive the vehicle, use the DTC EVENT DATA recorded earlier to help duplicate the conditions when the DTC originality set.

Does the DTC P0871 reset?

Yes >> Go To 13

No >> Go To 22

13. CHECK THE POWERTRAIN CONTROL MODULE

Remove the Transmission Control Relay.

Operate the vehicle in Drive.

Is the transmission slipping while in Drive?

Yes >> Go To 14

No >> Using the schematics as a guide, check the Powertrain Control Module (PCM) terminals for corrosion, damage, or terminal push out. Pay particular attention to all power and ground circuits. If no problems are found, replace the PCM per the Service Information. With the scan tool, perform QUICK LEARN.

Perform 45RFE/545RFE TRANSMISSION VERIFICATION TEST - VER 1. (Refer to 21 - TRANSMISSION/TRANSAXLE/AUTOMATIC - 45RFE/545RFE - STANDARD PROCEDURE)

14. AIR CHECK TRANSMISSION CLUTCH OPERATION

Perform an Air Check Transmission Clutch Operation procedure per the Service Information.

NOTE: The OD/Rev piston contains a small bleed orifice, a small amount of leakage between the OD and Reverse hydraulic clutch circuits is considered normal.

Is there excessive air leakage in any clutch circuit?

Yes >> Check the OD/Rev piston seals and bleed orifice, reaction shaft support seal rings, dribbler orifice assemblies in the reaction shaft support and for poor machine on the pump valve body faces. Refer to the Service Information.

Perform 45RFE/545RFE TRANSMISSION VERIFICATION TEST - VER 1. (Refer to 21 - TRANSMISSION/TRANSAXLE/AUTOMATIC - 45RFE/545RFE - STANDARD PROCEDURE)

No >> Repair the Valve Body. Check the OD Accumulator piston and seals, OD bleed orifice, and No.6 check ball cuts or damage. If no problems are found in the Valve Body, replace the Transmission Solenoid/TRS Assembly. Refer to the Service Information for proper repair procedures.

Perform 45RFE/545RFE TRANSMISSION VERIFICATION TEST - VER 1. (Refer to 21 - TRANSMISSION/TRANSAXLE/AUTOMATIC - 45RFE/545RFE - STANDARD PROCEDURE)

15. CHECK THE PCM AND WIRING

Turn the ignition off to the lock position.

Remove the Ignition Switch Feed fuse from the TIPM.

CAUTION: Removal of the Ignition Switch Feed fuse from the TIPM will prevent the vehicle from being started in gear.

WARNING: The Ignition Switch Feed fuse must be removed from the TIPM. Failure to do so can result in personal injury or death.

Install Transmission Simulator, Miller tool #8333.

Ignition on, engine not running.

With the Transmission Simulator, turn the Pressure Switch selector switch to OD.

With the scan tool, monitor the OD Pressure Switch state while pressing the Pressure Switch Test button on the Transmission Simulator.

Did the state of the OD Pressure Switch change from OPEN to CLOSED while pressing the Test button?

Yes >> Go To 16

No >> Go To 18

16. CHECK IF THE NO. 4 AND/OR NO. 6 CHECK BALL IS CUT OR DAMAGED

With the scan tool, erase previously stored DTC's and test drive the vehicle, use the DTC EVENT DATA to help duplicate the conditions when the DTC originality set. Note any DTCs that may set.

Remove the Transmission Valve Body per the Service Information.

Check the No. 4 and No. 6 Check Balls for cuts or damage.

Is the No. 4 and/or No. 6 Check Ball cut or damaged?

Yes >> Replace the No. 4 and/or No. 6 Check Ball and check for clutch debris in the transmission oil pan. If there is excessive debris, perform internal repairs to the OD Clutch Assembly. Refer to the Service Information for proper repair procedures.

Perform 45RFE/545RFE TRANSMISSION VERIFICATION TEST - VER 1. (Refer to 21 - TRANSMISSION/TRANSAXLE/AUTOMATIC - 45RFE/545RFE - STANDARD PROCEDURE)

No >> Go To 17

17. CHECK THE TRANSMISSION SOLENOID/TRS ASSEMBLY

Did the DTC P0871 reset during the test drive in the previous step?

Yes >> Replace the Transmission Solenoid/TRS Assembly per the Service Information. (Refer to 21 - TRANSMISSION/TRANSAXLE/AUTOMATIC - 45RFE/545RFE/TRANS SOLENOID/TRS ASSY - REMOVAL)

Perform 45RFE/545RFE TRANSMISSION VERIFICATION TEST - VER 1. (Refer to 21 - TRANSMISSION/TRANSAXLE/AUTOMATIC - 45RFE/545RFE - STANDARD PROCEDURE)

No >> Go To 22

18. CHECK THE (T9) OD PRESSURE SWITCH SENSE CIRCUIT FOR AN OPEN

Turn the ignition off to the lock position.

Disconnect the PCM C4 harness connector and connect Miller tool #8815.

Disconnect the Transmission Solenoid /TRS Assembly harness connector

CAUTION: Do not probe the PCM harness connectors. Probing the PCM harness connectors will damage the PCM terminals resulting in poor terminal to pin connection. Install Miller tool #8815 to perform diagnosis.

Measure the resistance of the (T9) OD Pressure Switch Sense circuit from the appropriate terminal of Miller tool #8815 to the Solenoid/TRS Assembly harness connector.

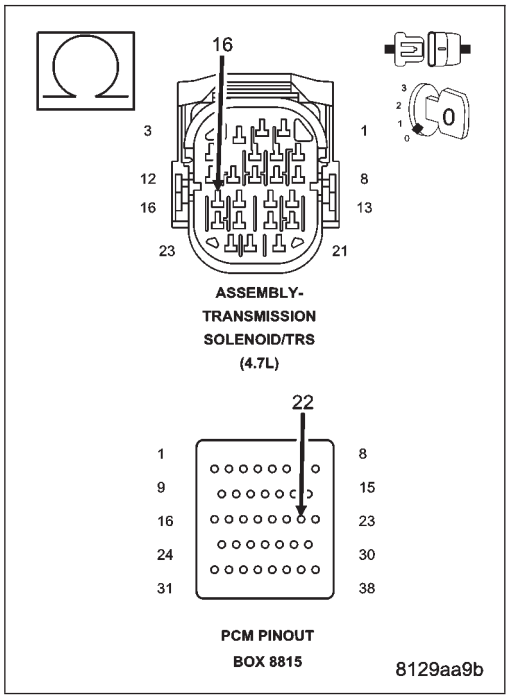

Is the resistance above 5.0 ohms?

Yes >> Repair the (T9) OD Pressure Switch Sense circuit for an open.

Perform 45RFE/545RFE TRANSMISSION VERIFICATION TEST - VER 1. (Refer to 21 - TRANSMISSION/TRANSAXLE/AUTOMATIC - 45RFE/545RFE - STANDARD PROCEDURE)

No >> Go To 19

19. CHECK THE (T9) OD PRESSURE SWITCH SENSE CIRCUIT FOR A SHORT TO GROUND

Measure the resistance between ground and the (T9) OD Pressure Switch Sense circuit.

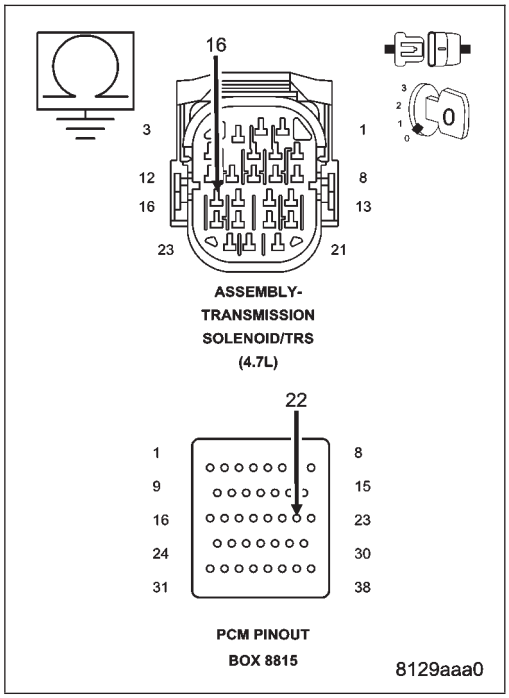

Is the resistance below 5.0 ohms?

Yes >> Repair the (T9) OD Pressure Switch Sense circuit for a short to ground.

Perform 45RFE/545RFE TRANSMISSION VERIFICATION TEST - VER 1. (Refer to 21 - TRANSMISSION/TRANSAXLE/AUTOMATIC - 45RFE/545RFE - STANDARD PROCEDURE)

No >> Go To 20

20. CHECK WIRING AND CONNECTORS

Using the schematics as a guide, inspect the wiring and connectors. Pay particular attention to all power and ground circuits.

Were there any problems found

Yes >> Repair as necessary.

Perform 45RFE/545RFE TRANSMISSION VERIFICATION TEST - VER 1. (Refer to 21 - TRANSMISSION/TRANSAXLE/AUTOMATIC - 45RFE/545RFE - STANDARD PROCEDURE)

No >> Go To 21

21. CHECK THE POWERTRAIN CONTROL MODULE

Reconnect all previously disconnected connectors.

Make sure all DTC EVENT DATA is recorded.

With the scan tool, erase previously stored DTC's and test drive the vehicle, use the DTC EVENT DATA to help duplicate the conditions when the DTC originality set.

Does the DTC P0871 reset?

Yes >> Using the schematics as a guide, check the Powertrain Control Module (PCM) terminals for corrosion, damage, or terminal push out. Pay particular attention to all power and ground circuits. If no problems are found, replace the PCM per the Service Information. With the scan tool, perform QUICK LEARN.

Perform 45RFE/545RFE TRANSMISSION VERIFICATION TEST - VER 1. (Refer to 21 - TRANSMISSION/TRANSAXLE/AUTOMATIC - 45RFE/545RFE - STANDARD PROCEDURE)

No >> Go To 22

22. INTERMITTENT WIRING AND CONNECTORS

The conditions necessary to set this DTC are not present at this time.

Using the schematics as a guide, inspect the wiring and connectors specific to this circuit.

Wiggle the wires while checking for shorted and open circuits.

With the scan tool, check the DTC EVENT DATA to help identify the conditions in which the DTC was set.

Where there any problems found?

Yes >> Repair as necessary.
Perform 45RFE/545RFE TRANSMISSION VERIFICATION TEST - VER 1. (Refer to 21 - TRANSMISSION/TRANSAXLE/AUTOMATIC - 45RFE/545RFE - STANDARD PROCEDURE)

No >> Test Complete.

P0875-UD HYDRAULIC PRESSURE TEST

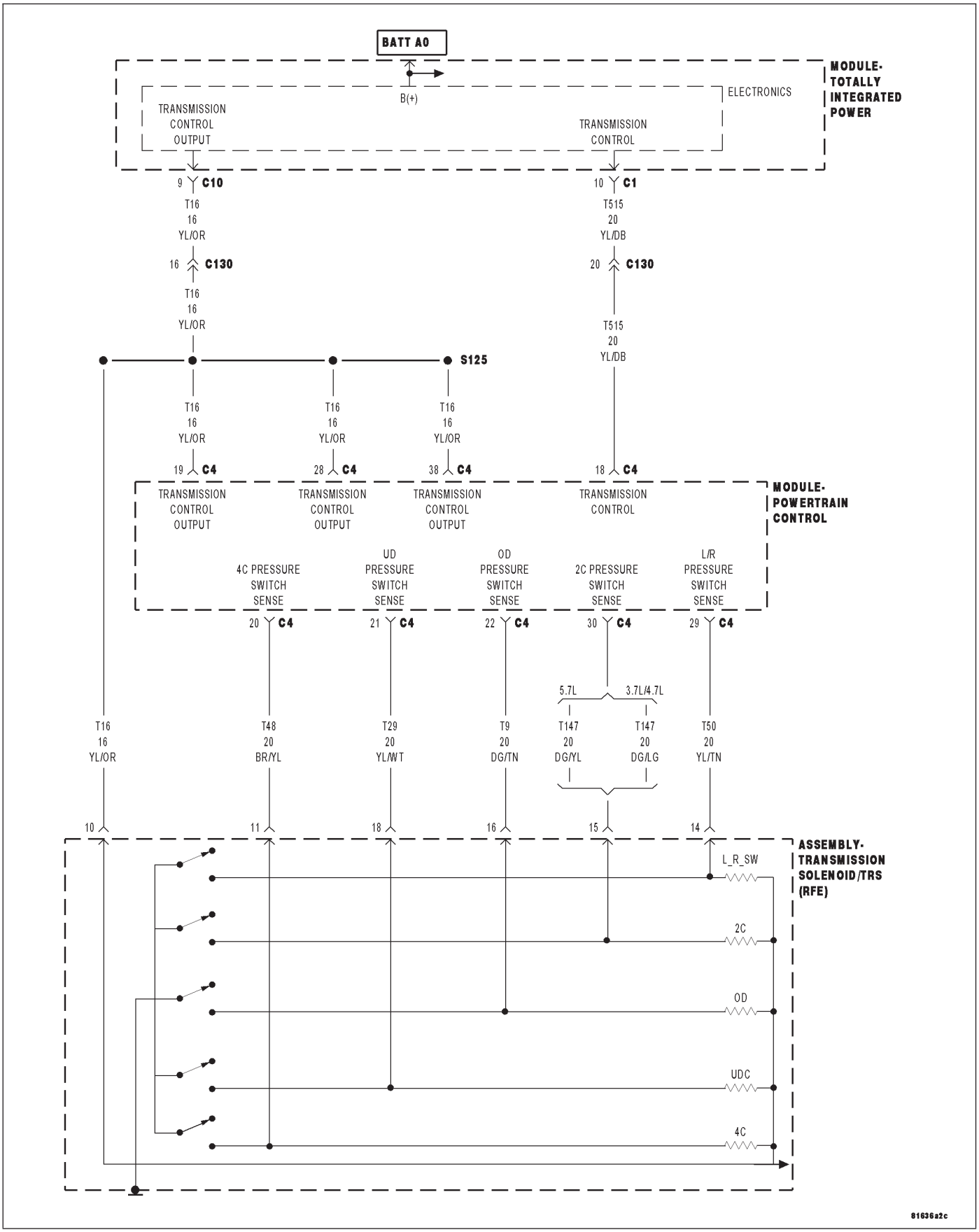

For a complete wiring diagram **Refer to Section 8W**

- **When Monitored:**
  In any forward gear with engine speed above 1000 RPM shortly after a shift and every minute thereafter.
- **Set Condition:**
  After a shift into a forward gear, with engine speed above 1000 RPM, the PCM momentarily turns on element pressure to the Clutch circuits that don't have pressure to identify the correct Pressure Switch closes. If the Pressure Switch does not close 2 times, the DTC sets.

Possible Causes
LINE PRESSURE SENSOR
TRANSMISSION FLUID CONTAMINATION
RELATED DTC'S PRESENT
TRANSMISSION SOLENOID/TRS ASSEMBLY
EXCESSIVE DEBRIS IN OIL PAN
POOR LINE PRESSURE SENSOR CONNECTION
(T29) UD PRESSURE SWITCH SENSE CIRCUIT OPEN
TRANSMISSION CONTROL RELAY DTCS PRESENT
(T29) UD PRESSURE SWITCH SENSE CIRCUIT OPEN
(F856) 5-VOLT SUPPLY CIRCUIT OPEN
(T29) UD PRESSURE SWITCH SENSE CIRCUIT SHORT TO GROUND
(F856) 5-VOLT SUPPLY CIRCUIT SHORT TO GROUND
(T29) UD PRESSURE SWITCH SENSE CIRCUIT SHORT TO VOLTAGE
TRANSMISSION SOLENOID/TRS ASSEMBLY
INTERNAL TRANSMISSION
POWERTRAIN CONTROL MODULE

Always perform the 45RFE/545RFE Pre-Diagnostic Troubleshooting Procedure before proceeding. (Refer to 21 - TRANSMISSION/TRANSAXLE/AUTOMATIC - 45RFE/545RFE - STANDARD PROCEDURE)

Theory of Operation

The Transmission Control System tests the pressure switches when they are off. The test verifies that the switches are operational (They will close with pressure applied). The Transmission Control System verifies that the switch closes when the corresponding element is applied. If a switch fails to close, it is re-tested. If it fails the second test, the DTC will set, the MIL will illuminate and the transmission system will default to the orderly Shutdown routine.

Diagnostic Test

1. CHECK IF RELATED DTCS ARE PRESENT

With the scan tool, check for other transmission DTCs.

Is there any Loss of Prime, TCM Power Input Signal, and/or Line Pressure Sensor DTCs present?

Yes >> Refer to the Transmission category and perform the appropriate symptom. If the DTC, P0944-LOSS OF PRIME is present, perform its respective test first.

No >> Go To 2

2. CHECK IF THE DTC P0765 IS PRESENT

With the scan tool, check Transmission DTCs.

Is the DTC P0765 also present?

Yes >> Refer to the Transmission category and perform diagnostics for the symptom P0765-UD SOLENOID CIRCUIT.

No >> Go To 3

3. CHECK IF OTHER DTCS ARE PRESENT

With the scan tool, check for other transmission DTC's

Are any of the DTCs, P0731, P0732, P0733, P0876, and/or P1736 present also?

Yes >> Go To 12

No >> Go To 4

4. CHECK TO SEE IF DTC P0875 IS CURRENT

With the scan tool, check the STARTS SINCE SET counter for P0875.

Is the STARTS SINCE SET COUNTER 2 or less?

Yes >> Go To 5

No >> Go To 17

5. CHECK IF THE LINE PRESSURE STAYS THE SAME

Start the engine.

Warm the transmission to 82° C or 180° F.

Firmly apply the brakes.

With the scan tool, monitor the Line Pressure during the following step.

Move the shift lever to each gear position, pausing momentarily in each position and record the line pressure reading. Allow the pressure to stabilize for at least 5 seconds in each range.

Did the line pressure remain at a steady value between 585 and 655 kPa or 85 and 95 psi in each position?

Yes >> Go To 6

No >> Go To 10

6. CHECK THE LINE PRESSURE SENSOR CONNECTION

Ignition on, **engine not running.**

With the scan tool, monitor the Line Pressure while firmly pushing the Transmission Line Pressure Sensor connector inwards towards the Transmission.

Did the Line Pressure reading on the scan tool change to about 207 kPa or 30 psi when the connector was pushed inward?

Yes >> Disconnect and properly reconnect the Line Pressure Sensor connector. Inspect terminals and repair as necessary.

Perform 45RFE/545RFE TRANSMISSION VERIFICATION TEST - VER 1. (Refer to 21 - TRANSMISSION/TRANSAXLE/AUTOMATIC - 45RFE/545RFE - STANDARD PROCEDURE)

No >> Go To 7

7. CHECK THE LINE PRESSURE SENSOR OPERATION

Turn the ignition off to the lock position.

Remove the Ignition Switch Feed fuse from the TIPM.

CAUTION: Removal of the Ignition Switch Feed fuse from the TIPM will prevent the vehicle from being started in gear.

WARNING: The Ignition Switch Feed fuse must be removed from the TIPM. Failure to do so can result in personal injury or death.

Install the Transmission Simulator, Miller tool #8333.

With the Transmission Simulator select the ″OFF″ position on the ″Input/Output Speed″ switch.

Ignition on, engine not running.

With the scan tool, monitor the Line Pressure while turning the Pressure Switch selector to each of the 3 line pressure positions on the Transmission Simulator.

NOTE: All three scan tool Line Pressure readings should be steady and ±14 kPa or 2.0 psi of the reading specified on the Transmission Simulator.

Did the scan tool Line Pressure readings match the specified readings on the Transmission Simulator and remain steady in all three positions?

Yes >> Replace the Line Pressure Sensor per the Service Information.
Perform 45RFE/545RFE TRANSMISSION VERIFICATION TEST - VER 1. (Refer to 21 - TRANSMISSION/TRANSAXLE/AUTOMATIC - 45RFE/545RFE - STANDARD PROCEDURE)

No >> Go To 8

8. CHECK THE (F856) 5-VOLT SUPPLY CIRCUIT FOR AN OPEN

Turn the ignition off to the lock position.

Disconnect Transmission Simulator.

Disconnect the PCM C1 harness connector and connect Miller tool #8815.

CAUTION: Do not probe the PCM harness connectors. Probing the PCM harness connectors will damage the PCM terminals resulting in poor terminal to pin connection. Install Miller tool #8815 to perform diagnosis.

Measure the resistance of the (F856) 5-volt Supply circuit from the Line Pressure Sensor harness connector to the appropriate terminal of Miller tool #8815.

Is the resistance above 5.0 ohms?

Yes >> Repair the (F856) 5-volt Supply circuit for an open.
Perform 45RFE/545RFE TRANSMISSION VERIFICATION TEST - VER 1. (Refer to 21 - TRANSMISSION/TRANSAXLE/AUTOMATIC - 45RFE/545RFE - STANDARD PROCEDURE)

No >> Go To 9

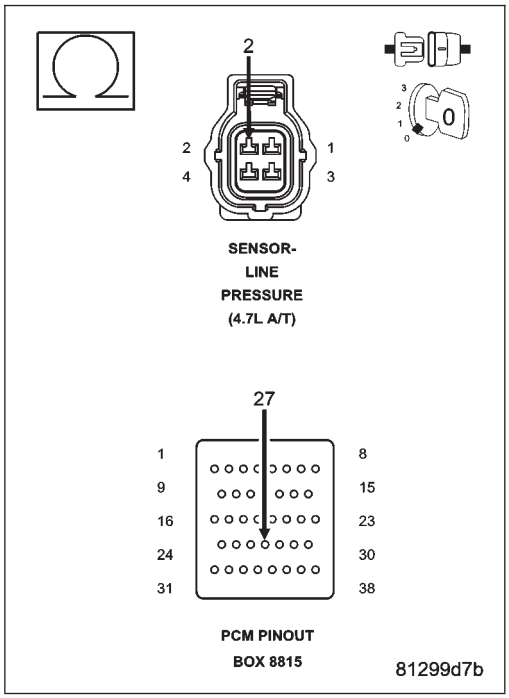

9. CHECK THE (F856) 5-VOLT SUPPLY CIRCUIT FOR A SHORT TO GROUND

Measure the resistance between ground and the (F856) 5-volt Supply circuit.

Is the resistance below 5.0 ohms?

Yes >> Repair the (F856) 5-volt Supply circuit for a short to ground.
Perform 45RFE/545RFE TRANSMISSION VERIFICATION TEST - VER 1. (Refer to 21 - TRANSMISSION/TRANSAXLE/AUTOMATIC - 45RFE/545RFE - STANDARD PROCEDURE)

No >> Using the schematics as a guide, check the Powertrain Control Module (PCM) terminals for corrosion, damage, or terminal push out. Pay particular attention to all power and ground circuits. If no problems are found, replace the PCM per the Service Information. With the scan tool, perform QUICK LEARN.
Perform 45RFE/545RFE TRANSMISSION VERIFICATION TEST - VER 1. (Refer to 21 - TRANSMISSION/TRANSAXLE/AUTOMATIC - 45RFE/545RFE - STANDARD PROCEDURE)

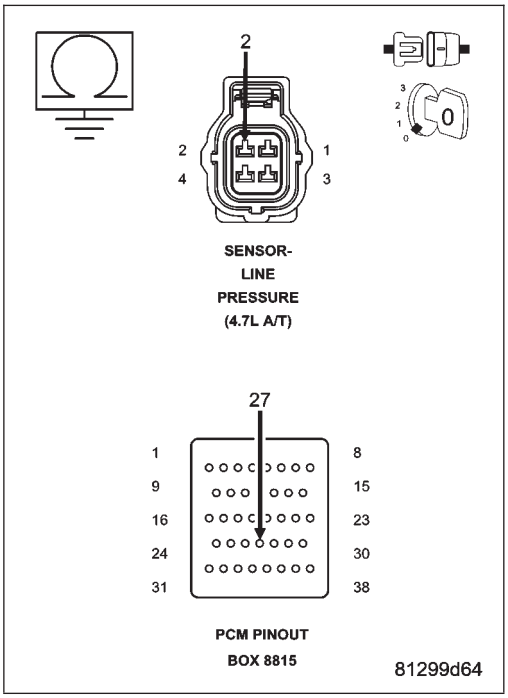

10. COMPARE THE SCAN TOOL READING TO PRESSURE GAUGE READING

Turn the ignition off to the lock position.

Connect the Line Pressure Adapter, Miller tool #8259 and 0-300 psi Test Gauge, Miller tool #C-3293-SP. Refer to the Service Information for proper installation procedure.

CAUTION: Apply parking brake.
Start the engine.

In the following steps, compare the scan tool Line Pressure to the Pressure Gauge readings in each gear.

CAUTION: Do not overheat transmission.
With the gear selector in park, raise the RPM to 1500, and compare line pressure readings.

Firmly apply the brakes, move the gear selector into reverse, raise the RPM to 1500, and compare the line pressure readings.

Firmly apply the brakes, move the gear selector into drive, raise the RPM to 1500, and compare the line pressure readings.

Did the scan tool Line Pressure readings match the Pressure Gauge readings ± 10 psi?

Yes >> Go To 11

No >> Replace the Line Pressure Sensor per the Service Information.
Perform 45RFE/545RFE TRANSMISSION VERIFICATION TEST - VER 1. (Refer to 21 - TRANSMISSION/TRANSAXLE/AUTOMATIC - 45RFE/545RFE - STANDARD PROCEDURE)

11. CHECK THE WIRING AND CONNECTORS

Turn the ignition off to the lock position.

Remove the Ignition Switch Feed fuse from the TIPM.

CAUTION: Removal of the Ignition Switch Feed fuse from the TIPM will prevent the vehicle from being started in gear.

WARNING: The Ignition Switch Feed fuse must be removed from the TIPM. Failure to do so can result in personal injury or death.

Remove the Line Pressure Adapter, Miller tool #8259 and 0-300 psi Test Gauge, Miller tool #C-3293-SP.

Install the Transmission Simulator, Miller tool #8333.

On the Transmission Simulator, turn the Pressure Switch selector switch to UD.

Ignition on, engine not running.

With the scan tool, monitor the UD Pressure Switch state while pressing and holding the Pressure Switch test button and wiggling the wire harness and connectors that pertain to the UD Pressure Switch.

Did the UD Pressure Switch state change to closed and remain closed while wiggling the wires?

Yes >> Go To 12

No >> Go To 14

12. CHECK FOR EXCESSIVE DEBRIS

Turn the ignition off to the lock position.

Remove the Transmission Simulator, Miller tool #8333.

Remove and inspect the Transmission Oil Pan per the Service Information.

Does the Transmission Oil Pan contain excessive debris or contamination?

Yes >> Repair the cause of the excessive debris in the Transmission Oil Pan. Refer to the Service Information for the proper procedures.

Perform 45RFE/545RFE TRANSMISSION VERIFICATION TEST - VER 1. (Refer to 21 - TRANSMISSION/TRANSAXLE/AUTOMATIC - 45RFE/545RFE - STANDARD PROCEDURE)

No >> Go To 13

13. CHECK THE UD HYDRAULIC CLUTCH CIRCUIT

Remove the Valve Body and air check the UD hydraulic clutch circuit (in the case) for leakage per the Service Information.

NOTE: The UD hydraulic clutch circuit contains a small bleed orifice. A small amount of air leakage is normal.

Was there excessive air leakage noticed during the air check?

Yes >> Repair as necessary. Check the UD clutch piston, piston seals and bleed orifice, reaction shaft support seal rings, and machining of the main mating faces of the pump housing, pump valve body, and reaction shaft support.

Perform 45RFE/545RFE TRANSMISSION VERIFICATION TEST - VER 1. (Refer to 21 - TRANSMISSION/TRANSAXLE/AUTOMATIC - 45RFE/545RFE - STANDARD PROCEDURE)

No >> Disassemble and inspect the Valve Body and repair as necessary. Inspect the UD Accumulator piston and seals. If no problems are found in the Valve Body, replace the Transmission Solenoid/TRS Assembly per the Service Information.

Perform 45RFE/545RFE TRANSMISSION VERIFICATION TEST - VER 1. (Refer to 21 - TRANSMISSION/TRANSAXLE/AUTOMATIC - 45RFE/545RFE - STANDARD PROCEDURE)

14. CHECK THE (T29) UD PRESSURE SWITCH SENSE CIRCUIT FOR AN OPEN

Turn the ignition off to the lock position.

Remove the Transmission Simulator, Miller tool #8333.

Disconnect the PCM C4 harness connector and connect Miller tool #8815.

Measure the resistance of the (T29) UD Pressure Switch Sense circuit between the Transmission Solenoid/TRS Assembly harness connector and the appropriate terminal of Miller tool #8815.

Is the resistance above 5.0 ohms?

Yes >> Repair the (T29) UD Pressure Switch Sense circuit for an open.

Perform 45RFE/545RFE TRANSMISSION VERIFICATION TEST - VER 1. (Refer to 21 - TRANSMISSION/TRANSAXLE/AUTOMATIC - 45RFE/545RFE - STANDARD PROCEDURE)

No >> Go To 15

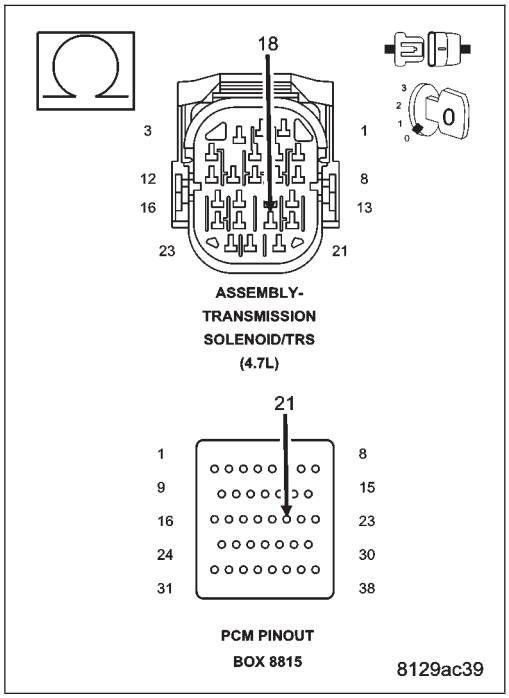

15. CHECK THE (T29) UD PRESSURE SWITCH SENSE CIRCUIT FOR A SHORT TO GROUND

Measure the resistance between ground and the (T29) UD Pressure Switch Sense circuit.

Is the resistance below 5.0 ohms?

Yes >> Repair the (T29) UD Pressure Switch Sense circuit for a short to ground.

Perform 45RFE/545RFE TRANSMISSION VERIFICATION TEST - VER 1. (Refer to 21 - TRANSMISSION/TRANSAXLE/AUTOMATIC - 45RFE/545RFE - STANDARD PROCEDURE)

No >> Go To 16

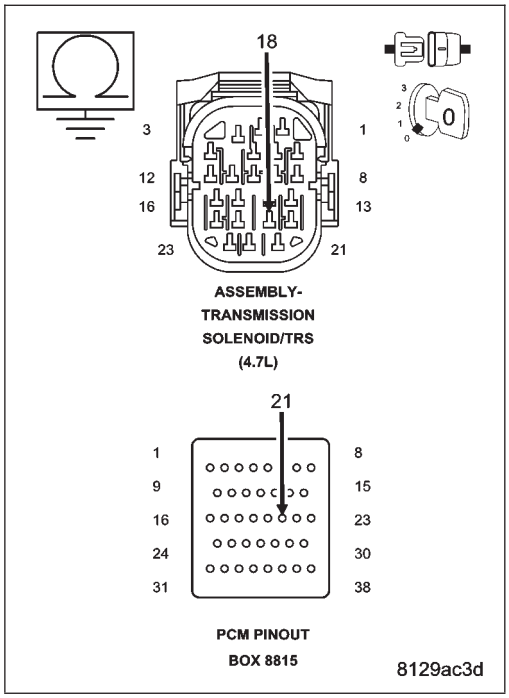

16. CHECK THE (T29) UD PRESSURE SWITCH SENSE CIRCUIT FOR A SHORT TO ANOTHER CIRCUIT

Disconnect all PCM harness connectors.

Disconnect the Transmission Solenoid/TRS Assembly harness connector.

NOTE: Make sure the Transmission Solenoid/TRS Assembly harness connector is disconnected.

Measure the resistance between the (T29) UD Pressure Switch Sense circuit and all other circuits in the Transmission Solenoid/TRS Assembly harness connector.

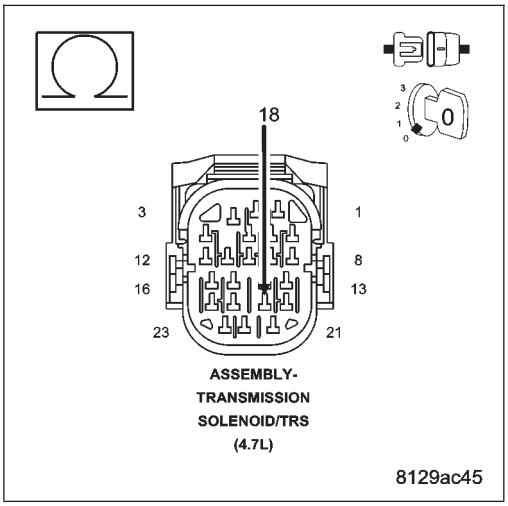

Is the resistance below 5.0 ohms between the (T29) UD Pressure Switch Sense circuit and any other circuit(s) in the Transmission Solenoid/TRS Assembly harness connector?

Yes >> Repair the (T29) UD Pressure Switch Sense circuit for a short to another circuit(s).

Perform 45RFE/545RFE TRANSMISSION VERIFICATION TEST - VER 1. (Refer to 21 - TRANSMISSION/TRANSAXLE/AUTOMATIC - 45RFE/545RFE - STANDARD PROCEDURE)

No >> Using the schematics as a guide, check the Powertrain Control Module (PCM) terminals for corrosion, damage, or terminal push out. Pay particular attention to all power and ground circuits. If no problems are found, replace the PCM per the Service Information. With the scan tool, perform QUICK LEARN.

Perform 45RFE/545RFE TRANSMISSION VERIFICATION TEST - VER 1. (Refer to 21 - TRANSMISSION/TRANSAXLE/AUTOMATIC - 45RFE/545RFE - STANDARD PROCEDURE)

17. INTERMITTENT WIRING AND CONNECTORS

The conditions necessary to set this DTC are not present at this time.

Using the schematics as a guide, inspect the wiring and connectors specific to this circuit.

Wiggle the wires while checking for shorted and open circuits.

With the scan tool, check the DTC EVENT DATA to help identify the conditions in which the DTC was set.

If the DTC EVENT DATA shows the DTC P0875 set while the Line Pressure was significantly below the Desired Line Pressure reading, check for causes of low line pressure (low fluid level, broken or mis-installed primary oil filter or filter seal, sticking Main Regulator Valve in the Pump Valve Body etc.). If the data shows the DTC set while the Line Pressure reading was significantly higher than the Desired Line Pressure, check the Line Pressure Sensor and related wiring.

Where there any problems found?

Yes >> Repair as necessary.

Perform 45RFE/545RFE TRANSMISSION VERIFICATION TEST - VER 1. (Refer to 21 - TRANSMISSION/TRANSAXLE/AUTOMATIC - 45RFE/545RFE - STANDARD PROCEDURE)

No >> Test Complete.

P0876-UD PRESSURE SWITCH RATIONALITY

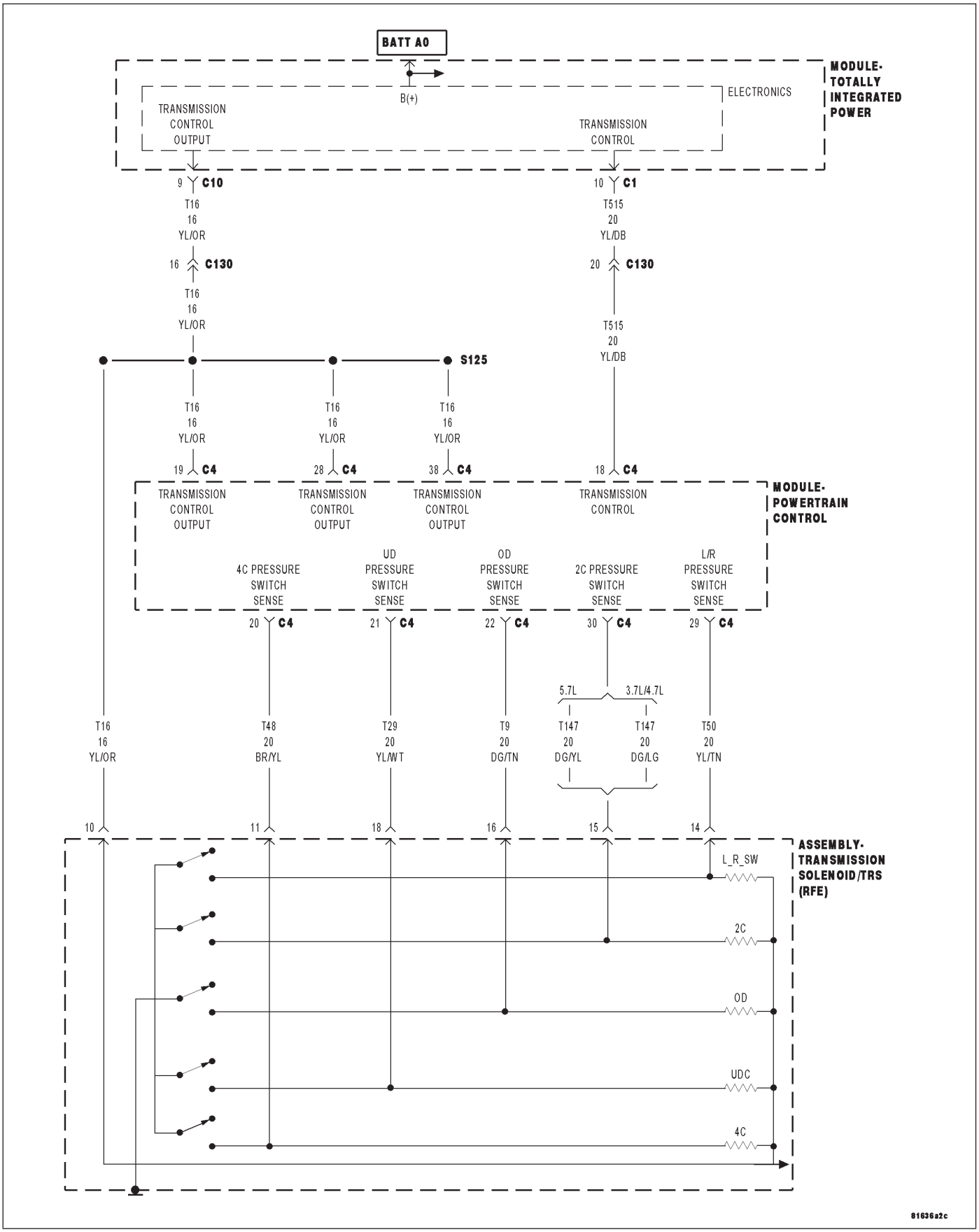

For a complete wiring diagram **Refer to Section 8W**

- **When Monitored:**
  Continuously with the ignition on and engine running.
- **Set Condition:**
  This DTC is set if the UD pressure switch is in the wrong state for the current gear. For example, this code would be set if the UD pressure switch remained off while the transmission was in second gear.

Possible Causes
RELATED TCM POWER INPUT DTCS PRESENT
LOW FLUID LEVEL
NO. 2 CHECK BALL CUT OR DAMAGED
LOW LINE PRESSURE
CRACKED OR MIS-INSTALLED SUMP FILTER OR SEAL
STICKING MAIN REGULATOR VALVE IN PUMP VALVE BODY
(T29) UD PRESSURE SWITCH SENSE CIRCUIT OPEN
(T29) UD PRESSURE SWITCH CIRCUIT SHORT TO GROUND
(T29) UD PRESSURE SWITCH SENSE CIRCUIT SHORT TO ANOTHER CIRCUITS
TRANSMISSION SOLENOID/TRS ASSEMBLY
POWERTRAIN CONTROL MODULE

Always perform the 45RFE/545RFE Pre-Diagnostic Troubleshooting Procedure before proceeding. (Refer to 21 - TRANSMISSION/TRANSAXLE/AUTOMATIC - 45RFE/545RFE - STANDARD PROCEDURE)

Theory of Operation

The Transmission system uses five pressure switches to monitor the fluid pressure in the LR, 2C, 4C, UD, and OD clutch circuits. The pressure switches are continuously monitored for the correct states in each gear as shown.

GEAR	L/R	2C	4C	UD	OD
REVERSE	OPEN	OPEN	OPEN	OPEN	OPEN
P/N	CLOSED**	OPEN	OPEN	OPEN	OPEN
1ST	CLOSED*	OPEN	OPEN	CLOSED	OPEN
2ND	OPEN	CLOSED	OPEN	CLOSED	OPEN
2ND PRIME	OPEN	OPEN	CLOSED	CLOSED	OPEN
3RD	OPEN	OPEN	OPEN	CLOSED	CLOSED
4TH	OPEN	OPEN	CLOSED	OPEN	CLOSED
5TH	OPEN	CLOSED	OPEN	OPEN	CLOSED

*L/R is closed if output speed is below 100 rpm in Drive and Manual 2. L/R is closed in Manual 1.

**May be open when rolling in Neutral or at low oil temperatures.

Diagnostic Test

1. CHECK IF RELATED DTCS ARE PRESENT

With the scan tool, check for other transmission DTC's.

Are there any TCM Power Input Signal, Line Pressure, and/or Loss of Prime DTCs present?

Yes >> Refer to the Transmission category and perform the appropriate symptom. If a Loss of Prime DTC is present, perform its respective test first.

No >> Go To 2

2. CHECK FOR PRESSURE SWITCH DTCS

Are there two or more other pressure switch rationality DTCs present in addition to P0876?

Yes >> Go To 3

No >> Go To 4

3. CHECK IF ALL PRESSURE SWITCHES READ CLOSED

With the scan tool, read and record all DTC EVENT DATA.

NOTE: Make sure to record all DTC EVENT DATA stored in the scan tool for future reference in this test procedure.

Does the DTC EVENT DATA show all pressure switches reading CLOSED?

Yes >> Refer to the Transmission category and perform the diagnostics for P0882. Diagnose the symptom as if the DTC is current.

No >> Go To 4

4. CHECK FOR OTHER DTCS

With the scan tool, check for other transmission DTC's.

Is the DTC P2704 present also?

Yes >> Replace the Transmission Solenoid/TRS Assembly per the Service Information. (Refer to 21 - TRANSMISSION/TRANSAXLE/AUTOMATIC - 45RFE/545RFE/TRANS SOLENOID/TRS ASSY - REMOVAL)

Perform 45RFE/545RFE TRANSMISSION VERIFICATION TEST - VER 1. (Refer to 21 - TRANSMISSION/TRANSAXLE/AUTOMATIC - 45RFE/545RFE - STANDARD PROCEDURE)

No >> Go To 5

5. CHECK THE DTC EVENT DATA

With the scan tool, read and record the DTC EVENT DATA.

NOTE: Make sure to record all DTC EVENT DATA stored in the scan tool for future reference in this test procedure.

Does the DTC EVENT DATA display information for the DTC P0876?

Yes >> Go To 6

No >> Refer to the Transmission category and perform the diagnostics for the DTC listed in the DTC EVENT DATA. (Refer to 21 - TRANSMISSION/TRANSAXLE/AUTOMATIC - 45RFE/545RFE - DIAGNOSIS AND TESTING)

6. CHECK IF DTC EVENT DATA WAS SET IN PARK, NEUTRAL OR REVERSE

Refer to the DTC EVENT DATA recorded earlier.

Did the DTC P0876 set in Park, Neutral, or Reverse?

Yes >> Go To 10

No >> Go To 7

7. CHECK THE UD PRESSURE SWITCH STATUS

Refer to the DTC EVENT DATA recorded earlier.

Did the DTC P0876 set with the UD Pressure Switch closed?

Yes >> Go To 10

No >> Go To 8

8. CHECK THE LINE PRESSURE

In the DTC EVENT DATA recorded earlier, compare the Line Pressure and the Desired Line Pressure.

Is the Line Pressure less than 40 psi, and significantly below the Desired Line Pressure?

Yes >> Repair as necessary to correct low line pressure. Check fluid level and adjust as necessary. If fluid level is OK, check the Primary Oil Filter seal for a split, crack, or improperly installed. If the filter and seal are OK, check the Main Regulator Valve in the Oil Pump. Refer to the Service Information for the above procedures.

Perform 45RFE/545RFE TRANSMISSION VERIFICATION TEST - VER 1. (Refer to 21 - TRANSMISSION/TRANSAXLE/AUTOMATIC - 45RFE/545RFE - STANDARD PROCEDURE)

No >> Go To 9

9. CHECK THE (T29) UD PRESSURE SWITCH SENSE CIRCUIT FOR A SHORT TO ANOTHER CIRCUIT

Turn the ignition off to the lock position.

Disconnect all PCM harness connectors.

Disconnect the Transmission Solenoid/TRS Assembly harness connector.

Measure the resistance between the (T29) UD Pressure Switch Sense circuit and all other circuits in the Transmission Solenoid/TRS Assembly harness connector.

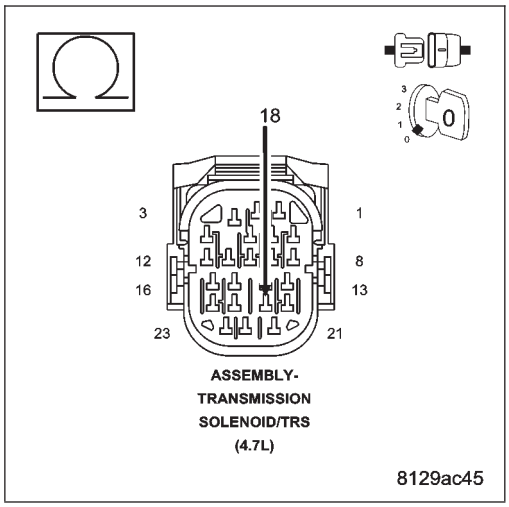

Is the resistance below 5.0 ohms between the (T29) UD Pressure Switch Sense circuit and any other circuit(s) in the Transmission Solenoid/TRS Assembly harness connector?

Yes >> Repair the (T29) UD Pressure Switch Sense circuit for a short to another circuit(s).

Perform 45RFE/545RFE TRANSMISSION VERIFICATION TEST - VER 1. (Refer to 21 - TRANSMISSION/TRANSAXLE/AUTOMATIC - 45RFE/545RFE - STANDARD PROCEDURE)

No >> Replace the Transmission Solenoid/TRS Assembly per the Service Information. (Refer to 21 - TRANSMISSION/TRANSAXLE/AUTOMATIC - 45RFE/545RFE/TRANS SOLENOID/TRS ASSY - REMOVAL)

Perform 45RFE/545RFE TRANSMISSION VERIFICATION TEST - VER 1.

10. CHECK THE PCM AND WIRING

Turn the ignition off to the lock position.

Remove the Ignition Switch Feed fuse from the TIPM.

CAUTION: Removal of the Ignition Switch Feed fuse from the TIPM will prevent the vehicle from being started in gear.

WARNING: The Ignition Switch Feed fuse must be removed from the TIPM. Failure to do so can result in personal injury or death.

Install the Transmission Simulator, Miller tool #8333.

Ignition on, engine not running.

With the Transmission Simulator, turn the Pressure Switch selector switch to the UD position.

With the scan tool, monitor the UD Pressure Switch state while pressing the Pressure Switch Test button on the Transmission Simulator.

Did the state of the UD Pressure Switch change while pressing the Pressure Switch Test button?

Yes >> Go To 14

No >> Go To 11

11. CHECK THE (T29) UD PRESSURE SWITCH SENSE CIRCUIT FOR AN OPEN

Turn the ignition off to the lock position.

Disconnect the Transmission Simulator, Miller tool #8333.

Disconnect the PCM C4 harness connector and connect Miller tool #8815.

CAUTION: Do not probe the PCM harness connectors. Probing the PCM harness connectors will damage the PCM terminals resulting in poor terminal to pin connection. Install Miller tool #8815 to perform diagnosis.

Measure the resistance of the (T29) UD Pressure Switch Sense circuit between the Transmission Solenoid/TRS Assembly harness connector and the appropriate terminal of the Miller tool #8815.

Is the resistance above 5.0 ohms?

Yes >> Repair the (T29) UD Pressure Switch Sense circuit for an open.

Perform 45RFE/545RFE TRANSMISSION VERIFICATION TEST - VER 1. (Refer to 21 - TRANSMISSION/TRANSAXLE/AUTOMATIC - 45RFE/545RFE - STANDARD PROCEDURE)

No >> Go To 12

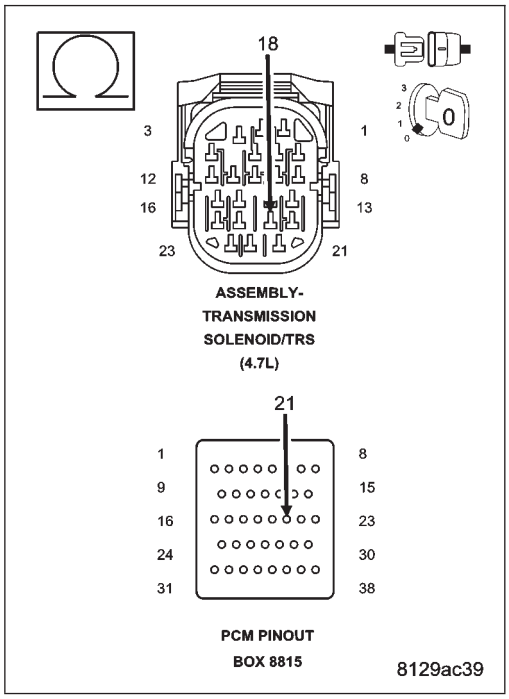

12. CHECK THE (T29) UD PRESSURE SWITCH SENSE CIRCUIT FOR A SHORT TO GROUND

Measure the resistance between ground and the (T29) UD Pressure Switch Sense circuit.

Is the resistance below 5.0 ohms?

Yes >> Repair the (T29) UD Pressure Switch Sense circuit for a short to ground.

Perform 45RFE/545RFE TRANSMISSION VERIFICATION TEST - VER 1. (Refer to 21 - TRANSMISSION/TRANSAXLE/AUTOMATIC - 45RFE/545RFE - STANDARD PROCEDURE)

No >> Go To 13

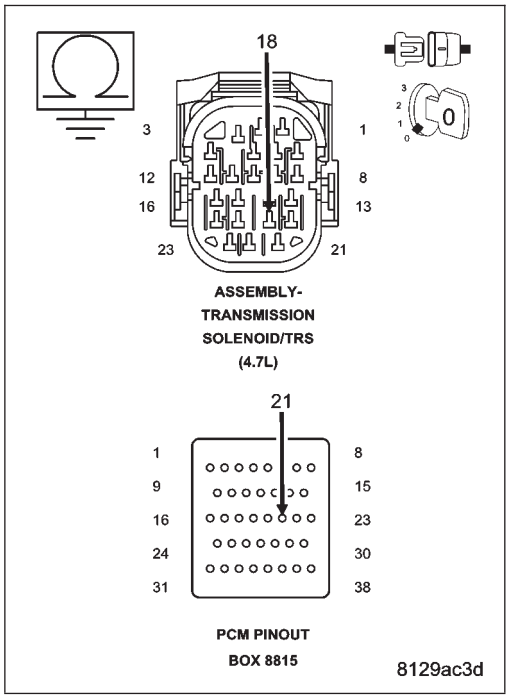

13. CHECK THE (T29) UD PRESSURE SWITCH SENSE CIRCUIT FOR A SHORT TO ANOTHER CIRCUIT

Disconnect all PCM harness connectors.

NOTE: Make sure the Transmission Solenoid/TRS Assembly harness connector is disconnected.

Measure the resistance between the (T29) UD Pressure Switch Sense circuit and all other circuits in the Transmission Solenoid/TRS Assembly harness connector.

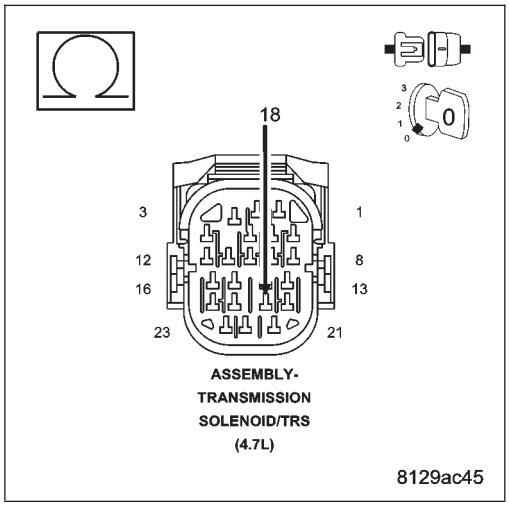

Is the resistance below 5.0 ohms between the (T29) UD Pressure Switch Sense circuit and any other circuit(s) in the Transmission Solenoid/TRS Assembly harness connector?

Yes >> Repair the (T29) UD Pressure Switch Sense circuit for a short to another circuit(s).

Perform 45RFE/545RFE TRANSMISSION VERIFICATION TEST - VER 1. (Refer to 21 - TRANSMISSION/TRANSAXLE/AUTOMATIC - 45RFE/545RFE - STANDARD PROCEDURE)

No >> Using the schematics as a guide, check the Powertrain Control Module (PCM) terminals for corrosion, damage, or terminal push out. Pay particular attention to all power and ground circuits. If no problems are found, replace the PCM per the Service Information. With the scan tool, perform QUICK LEARN.

Perform 45RFE/545RFE TRANSMISSION VERIFICATION TEST - VER 1. (Refer to 21 - TRANSMISSION/TRANSAXLE/AUTOMATIC - 45RFE/545RFE - STANDARD PROCEDURE)

14. PERFORM A WIGGLE TEST USING THE TRANSMISSION SIMULATOR

Perform the steps in the previous test while wiggling the wiring harness and connectors pertaining to the UD Pressure Switch.

Did the state of the UD Pressure Switch change while pressing the Pressure Switch Test button?

Yes >> Repair the wiring harness and/or connectors as necessary.

Perform 45RFE/545RFE TRANSMISSION VERIFICATION TEST - VER 1. (Refer to 21 - TRANSMISSION/TRANSAXLE/AUTOMATIC - 45RFE/545RFE - STANDARD PROCEDURE)

No >> Go To 15

15. CHECK THE TRANSMISSION SOLENOID/TRS ASSEMBLY FOR A SHORT TO GROUND

Disconnect the Transmission Simulator and reconnect the Transmission Solenoid/TRS Assembly harness connector.

Disconnect the PCM C4 harness connector and connect Miller tool #8815.

Measure the resistance between ground and the (T29) UD Pressure Switch Sense circuit in the appropriate terminal of Miller tool #8815.

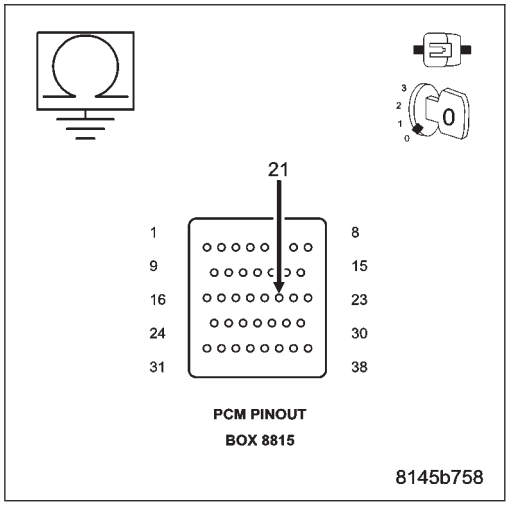

Is the resistance below 5.0 ohms?

Yes >> Replace the Transmission Solenoid/TRS Assembly per the Service Information. (Refer to 21 - TRANSMISSION/TRANSAXLE/AUTOMATIC - 45RFE/545RFE/TRANS SOLENOID/TRS ASSY - REMOVAL)

Perform 45RFE/545RFE TRANSMISSION VERIFICATION TEST - VER 1. (Refer to 21 - TRANSMISSION/TRANSAXLE/AUTOMATIC - 45RFE/545RFE - STANDARD PROCEDURE)

No >> Go To 16

16. CHECK IF THE DTC RESETS

Reconnect all previously disconnected connectors.

With the scan tool, erase all transmission DTCs.

Test drive the vehicle. Using the DTC EVENT DATA recorded earlier, try to duplicate the conditions in which the DTC originally set.

Does the DTC P0876 reset?

Yes >> Go To 17

No >> Go To 18

17. CHECK FOR A CUT NO. 2 CHECK BALL

Remove the Valve Body per the Service Information.

Check the No. 2 check ball for cuts or damage.

Is the No. 2 check ball cut or damaged?

Yes >> Replace the No. 2 check ball. Check for excessive clutch debris in the oil pan. If excessive debris is present, check the UD Clutch and repair as necessary.

Perform 45RFE/545RFE TRANSMISSION VERIFICATION TEST - VER 1. (Refer to 21 - TRANSMISSION/TRANSAXLE/AUTOMATIC - 45RFE/545RFE - STANDARD PROCEDURE)

No >> Replace the Transmission Solenoid/TRS Assembly per the Service Information. Check for excessive clutch debris in the oil pan. If excessive debris is present, check the UD Clutch and repair as necessary. (Refer to 21 - TRANSMISSION/TRANSAXLE/AUTOMATIC - 45RFE/545RFE/TRANS SOLENOID/TRS ASSY - REMOVAL)

Perform 45RFE/545RFE TRANSMISSION VERIFICATION TEST - VER 1. (Refer to 21 - TRANSMISSION/TRANSAXLE/AUTOMATIC - 45RFE/545RFE - STANDARD PROCEDURE)

18. CHECK FOR INTERMITTENT WIRING AND CONNECTORS

The conditions necessary to set this DTC are not present at this time.

Using the schematics as a guide, inspect the wiring and connectors specific to this circuit.

Wiggle the wires while checking for shorted and open circuits.

With the scan tool, check the DTC EVENT DATA to help identify the conditions in which the DTC was set.

Were there any problems found?

Yes >> Repair as necessary.

Perform 45RFE/545RFE TRANSMISSION VERIFICATION TEST - VER 1. (Refer to 21 - TRANSMISSION/TRANSAXLE/AUTOMATIC - 45RFE/545RFE - STANDARD PROCEDURE)

No >> Test Complete.

P0882-TCM POWER INPUT LOW

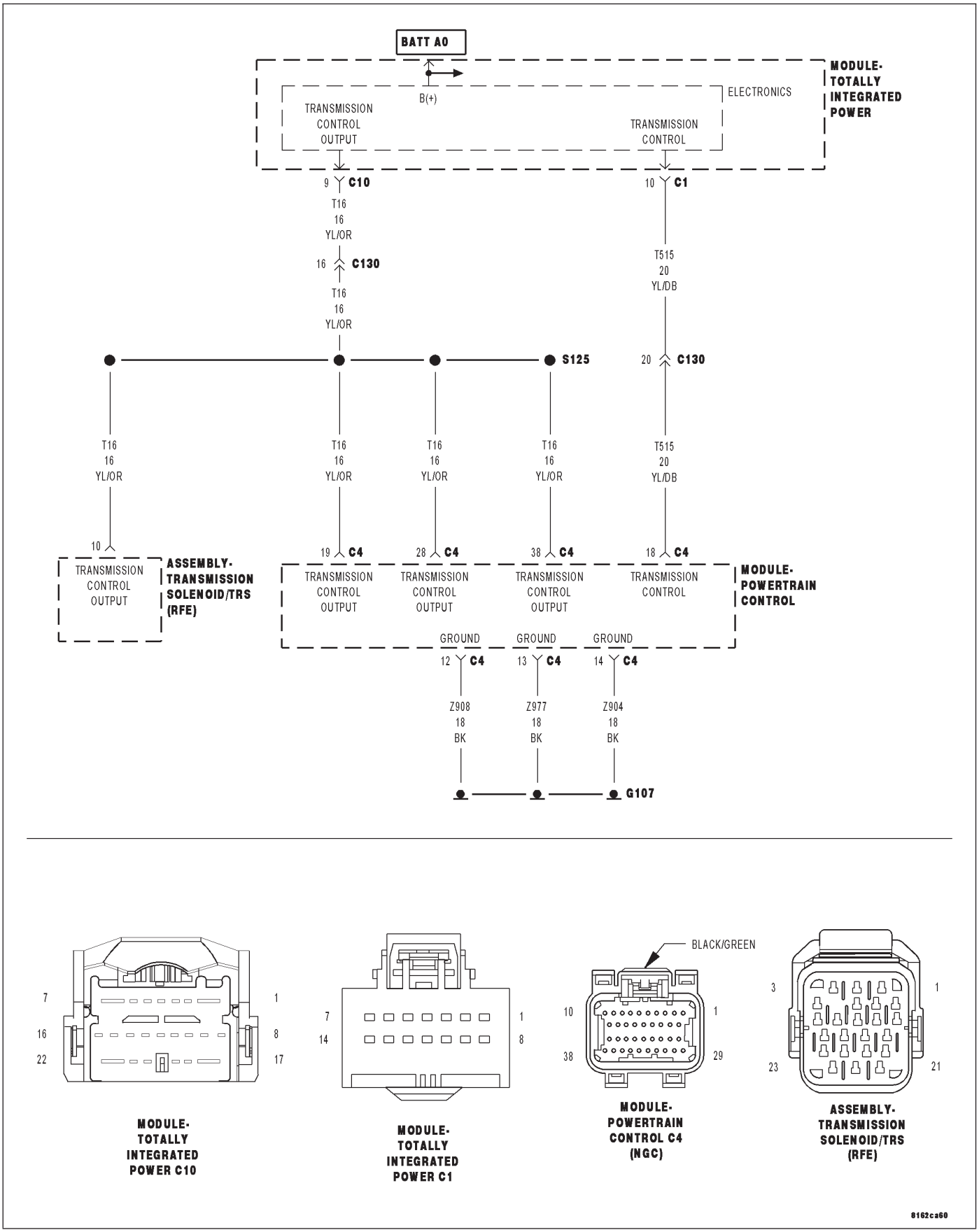

For a complete wiring diagram **Refer to Section 8W**

- **When Monitored:**
  When the ignition is turned from ″OFF″ position to ″RUN″ position and/or the ignition is turned from ″START″ position to ″RUN″ position.
- **Set Condition:**
  This DTC is set when there is less than 3.0 volts present at the transmission control output circuits located in the Powertrain Control Module (PCM) when the Transmission Control System request the power up of those circuits. **Note: Due to the integration of the Transmission Control Module and the Powertrain Control Module, both systems have their own power and ground circuits.**.

Possible Causes
RELATED TIPM DTCS
(T515) TRANSMISSION CONTROL CIRCUIT SHORT TO GROUND
(T515) TRANSMISSION CONTROL CIRCUIT OPEN
POWERTRAIN CONTROL MODULE

Always perform the 45RFE/545RFE Pre-Diagnostic Troubleshooting Procedure before proceeding. (Refer to 21 - TRANSMISSION/TRANSAXLE/AUTOMATIC - 45RFE/545RFE - STANDARD PROCEDURE)

Theory of Operation

The Transmission Control Output circuit is used to supply power to the Transmission Solenoid/TRS Assembly and to the PCM when in normal operating mode. The purpose of the Transmission Output circuit is to allow the Transmission Control System to turn off the power to the Transmission Solenoid/TRS Assembly in event that the transmission should need to be placed into “limp-in” mode due to a DTC.

After a PCM reset, (ignition switch turned to the run position, or after cranking the engine) the Transmission Control System verifies that the Transmission Output circuit is open by checking for voltage on the Transmission Output circuits before the Transmission Control System request for the circuit to be powered up. The request is sent by a direct circuit control from the PCM to the TIPM. If the Transmission Control System detects less that 3.0 volts when the output is commanded on, the DTC will set. **Note: Inadequate Transmission Control Output voltage can also cause DTCs P0846, P0869, P0871, P0876 or P0988 to set. Repairing the P0882 fault should also eliminate the related DTCs.**

Diagnostic Test

1. CHECK IF THE DTC P0882 IS CURRENT

With the scan tool, Check the STARTS SINCE SET counter for P0882.

NOTE: This counter only applies to the last DTC set.

Is the STARTS SINCE SET counter equal to 0?

Yes >> Go To 2

No >> Go To 5

2. CHECK FOR TIPM RELATED DTCS

With the scan tool, check TIPM DTCs.

Are there any TCM TIPM DTCs present?

Yes >> Refer to the Transmission category and perform the appropriate symptom.

No >> Go To 3

3. CHECK THE (T515) TRANSMISSION CONTROL CIRCUIT FOR A SHORT TO GROUND

Turn the ignition off to the lock position.

Disconnect the PCM C4 harness connector and connect Miller tool #8815.

CAUTION: Do not probe the PCM harness connectors. Probing the PCM harness connectors will damage the PCM terminals resulting in poor terminal to pin connection. Install Miller tool #8815 to perform diagnosis.

Disconnect the TIPM C1 harness connector.

Measure the resistance between ground and the (T515) Transmission Control circuit.

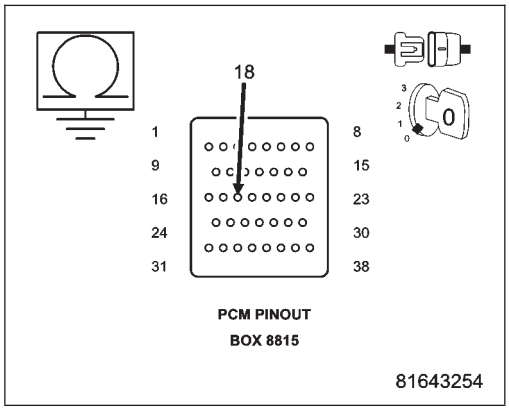

Is the resistance below 5.0 ohms?

Yes >> Repair the (T515) Transmission Control circuit for a short to ground.

Perform 45RFE/545RFE TRANSMISSION VERIFICATION TEST - VER 1. (Refer to 21 - TRANSMISSION/TRANSAXLE/AUTOMATIC - 45RFE/545RFE - STANDARD PROCEDURE)

No >> Go To 4

4. CHECK THE (T515) TRANSMISSION CONTROL CIRCUIT FOR AN OPEN

Measure the resistance of the (T515) Transmission Control circuit between the TIPM C1 harness connector and the appropriate terminal of Miller tool #8815.

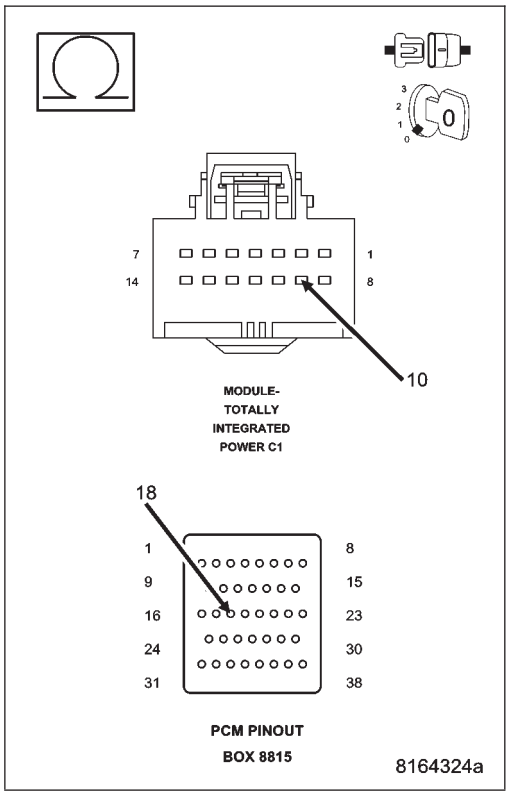

Is the resistance above 5.0 ohms?

Yes >> Repair the (T515) Transmission Control circuit for an open.

Perform 45RFE/545RFE TRANSMISSION VERIFICATION TEST - VER 1. (Refer to 21 - TRANSMISSION/TRANSAXLE/AUTOMATIC - 45RFE/545RFE - STANDARD PROCEDURE)

No >> Using the schematics as a guide, check the Powertrain Control Module (PCM) terminals for corrosion, damage, or terminal push out. Pay particular attention to all power and ground circuits. If no problems are found, replace the PCM per the Service Information. With the scan tool, perform QUICK LEARN

Perform 45RFE/545RFE TRANSMISSION VERIFICATION TEST - VER 1. (Refer to 21 - TRANSMISSION/TRANSAXLE/AUTOMATIC - 45RFE/545RFE - STANDARD PROCEDURE)

5. CHECK THE WIRING AND CONNECTORS

The conditions necessary to set this DTC are not present at this time.

Using the schematics as a guide, inspect the wiring and connectors specific to this circuit.

Wiggle the wires while checking for shorted and open circuits.

With the scan tool, check the DTC EVENT DATA to help identify the conditions in which the DTC was set.

Where there any problems found?

Yes >> Repair as necessary.
Perform 45RFE/545RFE TRANSMISSION VERIFICATION TEST - VER 1. (Refer to 21 - TRANSMISSION/TRANSAXLE/AUTOMATIC - 45RFE/545RFE - STANDARD PROCEDURE)

No >> Test Complete.

P0883-TCM POWER INPUT HIGH

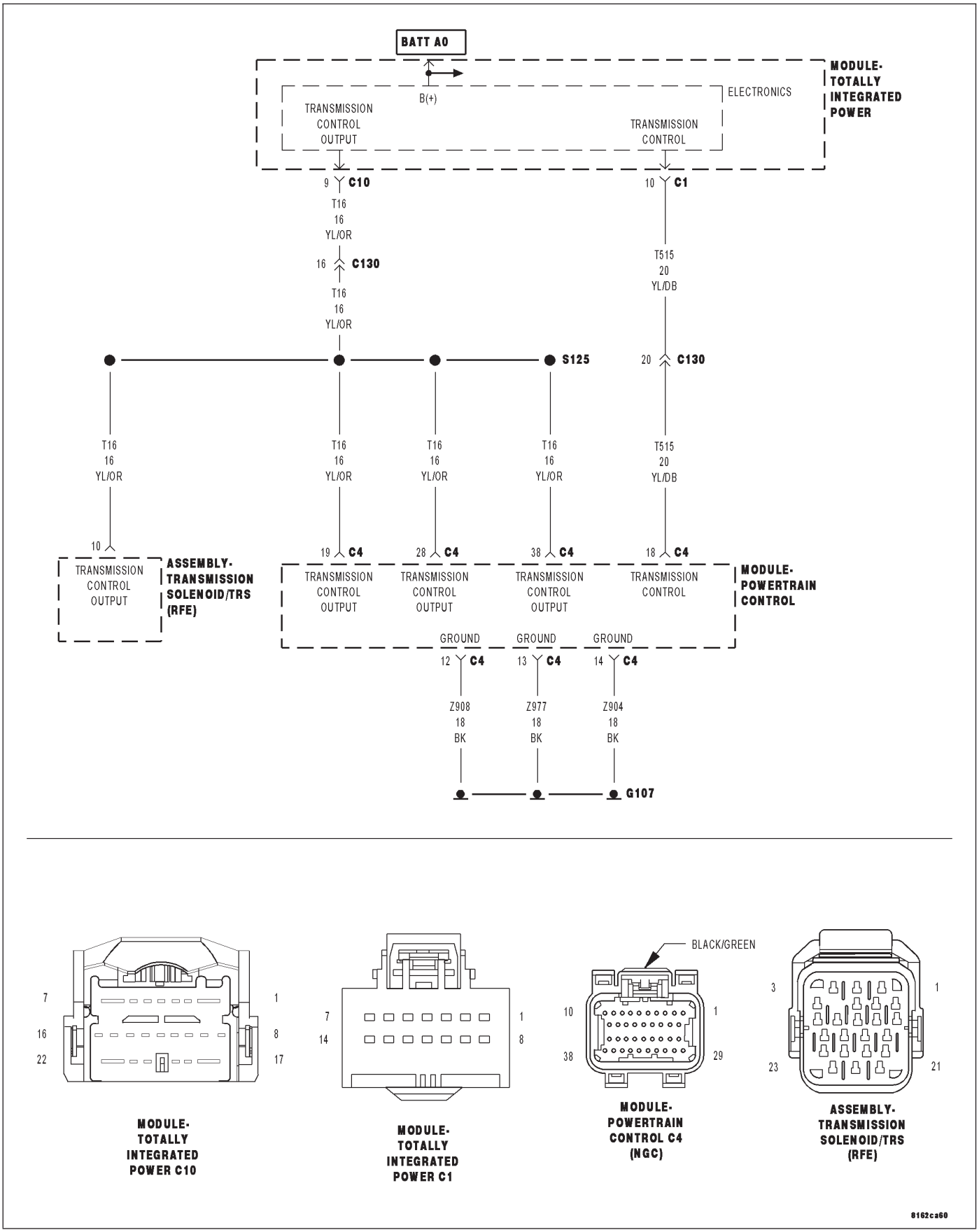

For a complete wiring diagram **Refer to Section 8W**.

- **When Monitored:**
  When the ignition is turned from ″OFF″ position to ″RUN″ position and/or the ignition is turned from ″START″ position to ″RUN″ position.
- **Set Condition:**
  This DTC is set if the Powertrain Control Module senses greater than 3.0 volts on the Transmission Control Relay Output circuits prior to a request from the PCM to TIPM to energize the Transmission Output circuits.

Possible Causes
TIPM DTCS PRESENT
(T15) TRANSMISSION CONTROL CIRCUIT SHORT TO VOLTAGE
(T16) TRANSMISSION CONTROL OUTPUT CIRCUIT SHORT VOLTAGE
TRANSMISSION SOLENOID/TRS ASSEMBLY
POWERTRAIN CONTROL MODULE

Always perform the 45RFE/545RFE Pre-Diagnostic Troubleshooting Procedure before proceeding. (Refer to 21 - TRANSMISSION/TRANSAXLE/AUTOMATIC - 45RFE/545RFE - STANDARD PROCEDURE)

Theory of Operation

The Transmission Control Output circuit is used to supply power to the Transmission Solenoid/TRS Assembly and to the PCM when in normal operating mode. The purpose of the Transmission Output circuit is to allow the Transmission Control System to turn off the power to the Transmission Solenoid/TRS Assembly in event that the transmission should need to be placed into “limp-in” mode due to a DTC.

After a PCM reset, (ignition switch turned to the run position, or after cranking the engine) the Transmission Control System verifies that the Transmission Output circuit is open by checking for voltage on the Transmission Output circuits before the Transmission Control System request for the circuit to be powered up. The request is sent by a direct circuit control from the PCM to the TIPM. If voltage is detected on the Transmission Output circuits before the request is sent, the DTC will set.

Diagnostic Test

1. CHECK FOR TCM TIPM DTCS

With the scan tool under TIPM, check for TCM Power Input DTCs.

Are there any TIPM TCM Power Input DTCS present?

Yes >> Refer to the Transmission category and perform the appropriate symptom.

No >> Go To 2

2. CHECK TO SEE IF DTC P0883 IS CURRENT

With the scan tool, check the STARTS SINCE SET counter.

NOTE: This counter only applies to the last DTC set.

Is the STARTS SINCE SET counter set to 0?

Yes >> Go To 3

No >> Go To 6

3. (T16) TRANSMISSION OUTPUT CIRCUIT SHORT TO VOLTAGE

Turn the ignition off to the lock position.

Disconnect the PCM C4 harness connector and connect Miller tool #8815.

Disconnect the TIPM C10 harness connector.

CAUTION: Do not probe the PCM harness connectors. Probing the PCM harness connectors will damage the PCM terminals resulting in poor terminal to pin connection. Install Miller tool #8815 to perform diagnosis.

Ignition on, engine not running.

Measure the voltage of the (T16) Transmission Control Output circuits in the Miller tool #8815.

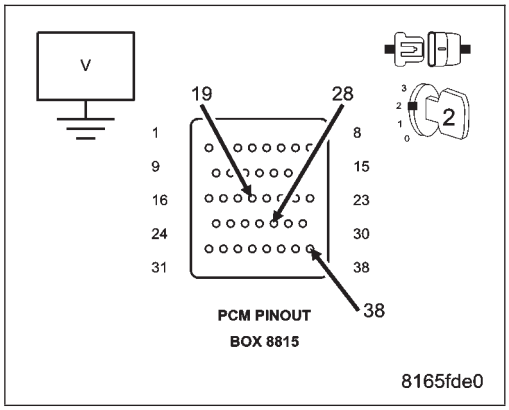

Is the voltage above 0.5 volts on any (T16) Transmission Control Output circuit?

Yes >> Go To 4

No >> Go To 5

4. CHECK THE TRANSMISSION SOLENOID/TRS ASSEMBLY

Turn the ignition off to the lock position.

Disconnect the Transmission Solenoid/TRS Assembly harness connector.

Ignition on, engine not running.

Measure the voltage of the (T16) Transmission Control Output circuits in the Miller tool #8815.

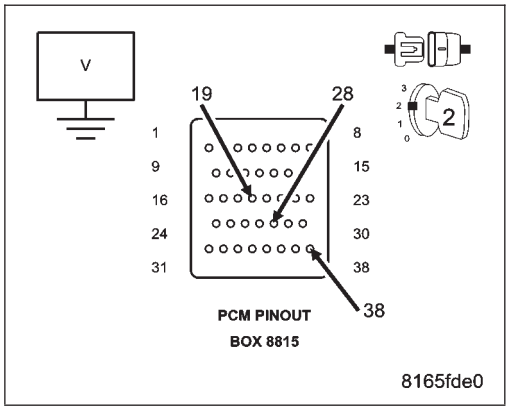

Is the voltage above 0.5 volts?

Yes >> Repair the (T16) Transmission Control Output circuit for a short to voltage.

Perform 45RFE/545RFE TRANSMISSION VERIFICATION TEST - VER 1. (Refer to 21 - TRANSMISSION/TRANSAXLE/AUTOMATIC - 45RFE/545RFE - STANDARD PROCEDURE)

No >> Replace the Transmission Solenoid/TRS Assembly per the Service Information.

Perform 45RFE/545RFE TRANSMISSION VERIFICATION TEST - VER 1. (Refer to 21 - TRANSMISSION/TRANSAXLE/AUTOMATIC - 45RFE/545RFE - STANDARD PROCEDURE)

5. CHECK THE (T515) TRANSMISSION CONTROL CIRCUIT FOR A SHORT TO VOLTAGE

Measure the voltage of the (T515) Transmission Control circuit.

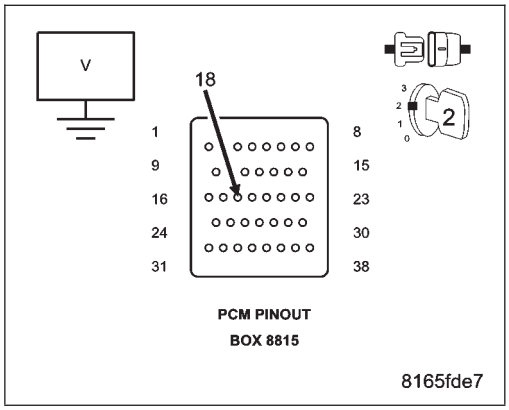

Is the voltage above 0.5 volts?

Yes >> Repair the (T515) Transmission Control circuit for a short to voltage.

Perform 45RFE/545RFE TRANSMISSION VERIFICATION TEST - VER 1. (Refer to 21 - TRANSMISSION/TRANSAXLE/AUTOMATIC - 45RFE/545RFE - STANDARD PROCEDURE)

No >> Using the schematics as a guide, check the Powertrain Control Module (PCM) terminals for corrosion, damage, or terminal push out. Pay particular attention to all power and ground circuits. If no problems are found, replace the PCM

per the Service Information. With the scan tool, perform QUICK LEARN.

Perform 45RFE/545RFE TRANSMISSION VERIFICATION TEST - VER 1. (Refer to 21 - TRANSMISSION/TRANSAXLE/AUTOMATIC - 45RFE/545RFE - STANDARD PROCEDURE)

6. CHECK WIRING AND CONNECTORS

The conditions necessary to set this DTC are not present at this time.

Using the schematics as a guide, inspect the wiring and connectors specific to this circuit.

Wiggle the wires while checking for shorted and open circuits.

With the scan tool, check the DTC EVENT DATA to help identify the conditions in which the DTC was set.

Where there any problems found?

Yes >> Repair as necessary.

Perform 45RFE/545RFE TRANSMISSION VERIFICATION TEST - VER 1. (Refer to 21 - TRANSMISSION/TRANSAXLE/AUTOMATIC - 45RFE/545RFE - STANDARD PROCEDURE)

No >> Test Complete.

P0884-POWER UP AT SPEED

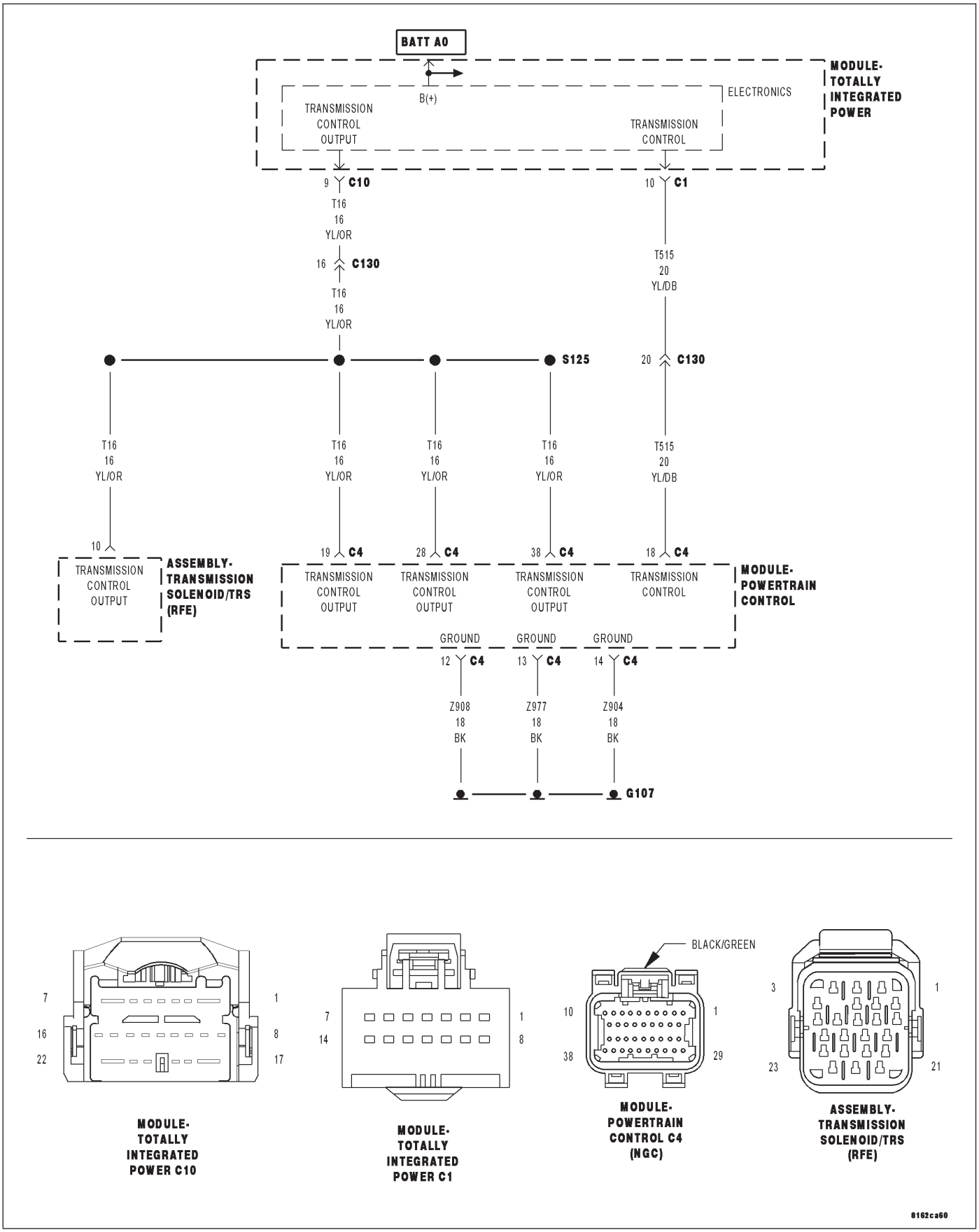

For a complete wiring diagram **Refer to Section 8W**.

- **When Monitored:**
  When Powertrain Control Module initially powers up. Due to the integration of the Powertrain and Transmission Control Modules, the transmission part of the PCM has its own specific power and ground circuits.
- **Set Condition:**
  This DTC will set if the PCM powers up and senses the vehicle in a valid forward gear, with no PRNDL DTCs, and an output speed above 800 RPM, approximately 32 Kmh or 20 mph.

Possible Causes
POWER UP AT SPEED

Always perform the 45RFE/545RFE Pre-Diagnostic Troubleshooting Procedure before proceeding. (Refer to 21 - TRANSMISSION/TRANSAXLE/AUTOMATIC - 45RFE/545RFE - STANDARD PROCEDURE)

Theory of Operation

If a vehicle loses power to the Transmission Control System, the solenoids (LR, 2C, OD, UD, 4C) will go to their respective power off state. Some solenoids are normally vented and some are normally applied in their power off state. The transmission is designed to be in 3rd gear with all of the solenoids in this state. However, if power is restored, the Transmission Control System will power-up and normal operation will be restored.

This code identifies that power to the Transmission Control System was restored when the gear selector was in a ″Drive″ position while the vehicle was moving at speeds above 32 Kmh (20 mph). **This DTC does not indicate a problem with the transmission or Transmission Control System,** instead, it suggests intermittent problems in the fused ignition switch output, fused B(+), or ground circuits to the TCM. Alternately, if a person performs a rolling restart maneuver, the DTC can be set. Therefore it is critical that this DTC be investigated if the vehicle is experiencing intermittent 3rd gear operation and a subsequent return to normal operation.

Diagnostic Test

1. CHECK THE POWER AND GROUND CIRCUITS

This DTC is set when the Transmission portion of the Powertrain Control Module is initialized while the vehicle is moving down the road in a valid forward gear.

Using the wiring diagram/schematic as a guide, inspect the wiring and connectors.

NOTE: Due to the integration of the Powertrain and Transmission Control Modules, the transmission part of the PCM has its own specific power and ground circuits.

Check all of the Fused B(+), Fused Ignition Switch Output, and ground circuits to the PCM for an intermittent open or short to ground.

With the scan tool, check the DTC EVENT DATA to help identify the conditions in which the DTC was set.

View repair.

Repair

Check all power and ground circuits to the PCM and repair as necessary.

Perform 45RFE/545RFE TRANSMISSION VERIFICATION TEST - VER 1. (Refer to 21 - TRANSMISSION/TRANSAXLE/AUTOMATIC - 45RFE/545RFE - STANDARD PROCEDURE)

P0890-SWITCHED BATTERY

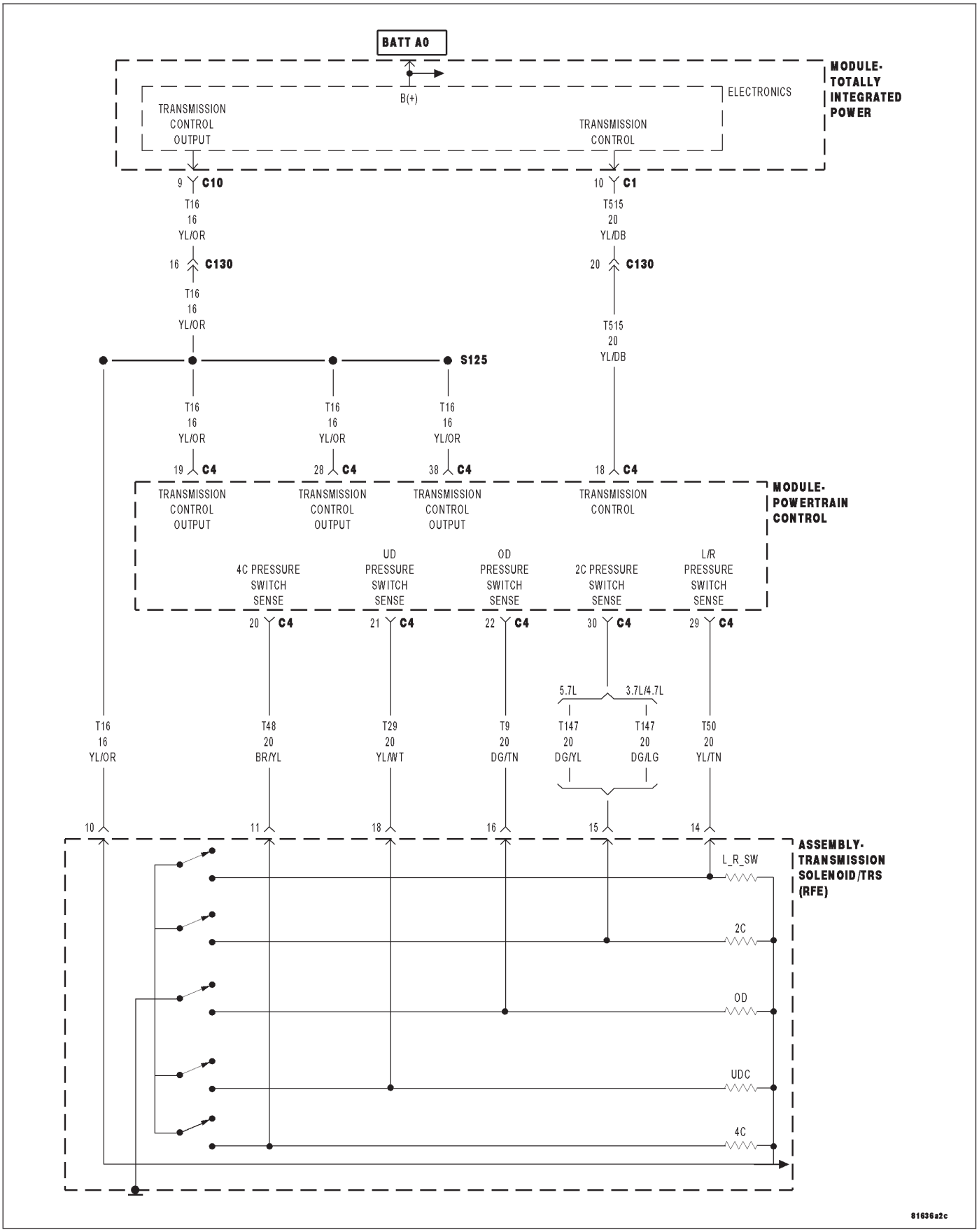

For a complete wiring diagram **Refer to Section 8W**.

- **When Monitored:**
  When the ignition is turned from ″OFF″ position to ″RUN″ position and/or the ignition is turned from ″START″ position to ″RUN″ position.
- **Set Condition:**
  This DTC is set if the Powertrain Control Module senses voltage on any of the pressure switch inputs prior to the Transmission Control Output circuit being energized.

Possible Causes
PRESSURE SWITCH SENSE CIRCUITS SHORT TO VOLTAGE
TRANSMISSION SOLENOID/TRS ASSEMBLY
POWERTRAIN CONTROL MODULE

Always perform the 45RFE/545RFE Pre-Diagnostic Troubleshooting Procedure before proceeding. (Refer to 21 - TRANSMISSION/TRANSAXLE/AUTOMATIC - 45RFE/545RFE - STANDARD PROCEDURE)

Theory of Operation

The Totally Integrated Control Module (TIPM) replaces the Transmission control relay. The Transmission Control Output circuit It is used to supply power to the solenoids and pressure switches (Transmission Solenoid/TRS Assembly) when the transmission is in normal operating mode. When the Transmission Control Output circuit is off, no power is supplied and the transmission.

Immediately after a controller reset (ignition key turned to the ″run″ position or after cranking engine), the TCM verifies that the Transmission Control Output circuits are open by checking for no voltage at the transmission control output terminals at the PCM. After this is verified, the voltage at the pressure switches are checked. There should be no voltage on the pressure switches at this time. The PCM will then activate the relay.

Diagnostic Test

1. CHECK FOR TIPM TCM DTCS

With the scan tool under TIPM, check for TCM Power Control DTCs.

Are there any TCM Power Control DTCs present?

Yes >> Refer to the Transmission category and perform the appropriate symptom.

No >> Go To 2

2. CHECK TO SEE IF DTC P0890 IS PRESENT

With the scan tool, Check the STARTS SINCE SET counter for P0890.

NOTE: This counter only applies to the last DTC set.

Is the ″Starts Since Set″ counter set at 0?

Yes >> Go To 3

No >> Go To 5

3. CHECK THE PRESSURE SWITCH SENSE CIRCUITS FOR A SHORT TO VOLTAGE

Turn the ignition off to the lock position.

Disconnect the PCM C4 harness connector and connect Miller tool #8815.

Disconnect the Transmission Solenoid/TRS Assembly harness connector.

CAUTION: Do not probe the PCM harness connectors. Probing the PCM harness connectors will damage the PCM terminals resulting in poor terminal to pin connection. Install Miller tool #8815 to perform diagnosis.

Ignition on, engine not running.

With the scan tool under TIPM, actuate the Transmission.

Measure the voltage of the (T147) 2C, (T48) 4C, (T50) LR, (T9) OD, and (T29) UD Pressure Switch Sense circuits in Miller tool #8815.

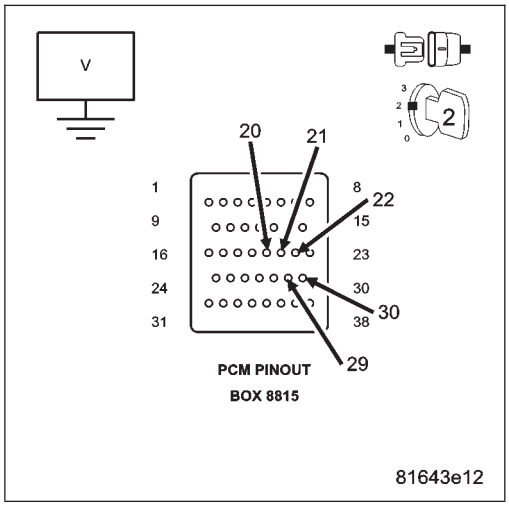

Is the voltage above 0.5 volt on any of the measured circuits?

Yes >> Repair the (T147) 2C, (T48) 4C, (T50) LR, (T9) OD, and/or (T29) UD Pressure Switch Sense circuit(s) for a short to voltage.

Perform 45RFE/545RFE TRANSMISSION VERIFICATION TEST - VER 1. (Refer to 21 - TRANSMISSION/TRANSAXLE/AUTOMATIC - 45RFE/545RFE - STANDARD PROCEDURE)

No >> Go To 4

4. CHECK THE TRANSMISSION SOLENOID/TRS ASSEMBLY

With the scan tool under TIPM, stop the Transmission actuation.

Turn the ignition off.

Reconnect the Transmission Solenoid/TRS Assembly harness connector.

Ignition on, engine not running.

Measure the voltage of the (T147) 2C, (T48) 4C, (T50) LR, (T9) OD, and (T29) UD Pressure Switch Sense circuits in Miller tool #8815.

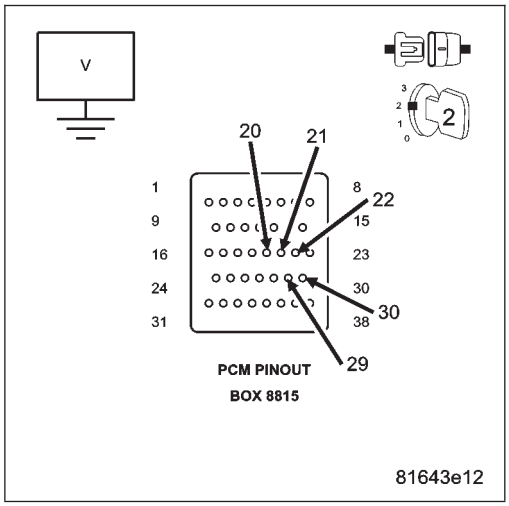

Is the voltage above 0.5 volts on any of the sense circuits?

Yes >> Replace the Transmission Solenoid/TRS Assembly per the Service Information. (Refer to 21 - TRANSMISSION/TRANSAXLE/AUTOMATIC - 45RFE/545RFE/TRANS SOLENOID/TRS ASSY - REMOVAL)

Perform 45RFE/545RFE TRANSMISSION VERIFICATION TEST - VER 1. (Refer to 21 - TRANSMISSION/TRANSAXLE/AUTOMATIC - 45RFE/545RFE - STANDARD PROCEDURE)

No >> Using the schematics as a guide, check the Powertrain Control Module (PCM) terminals for corrosion, damage, or terminal push out. Pay particular attention to all power and ground circuits. If no problems are found, replace the PCM per the Service Information. With the scan tool, perform QUICK LEARN.

Perform 45RFE/545RFE TRANSMISSION VERIFICATION TEST - VER 1. (Refer to 21 - TRANSMISSION/TRANSAXLE/AUTOMATIC - 45RFE/545RFE - STANDARD PROCEDURE)

5. CHECK THE WIRING AND CONNECTORS

The conditions necessary to set this DTC are not present at this time.

Using the schematics as a guide, inspect the wiring and connectors specific to this circuit.

Wiggle the wires while checking for shorted and open circuits.

With the scan tool, check the DTC EVENT DATA to help identify the conditions in which the DTC was set.

Where there any problems found?

Yes >> Repair as necessary.
Perform 45RFE/545RFE TRANSMISSION VERIFICATION TEST - VER 1. (Refer to 21 - TRANSMISSION/TRANSAXLE/AUTOMATIC - 45RFE/545RFE - STANDARD PROCEDURE)

No >> Test Complete.

P0932-LINE PRESSURE SENSOR CIRCUIT

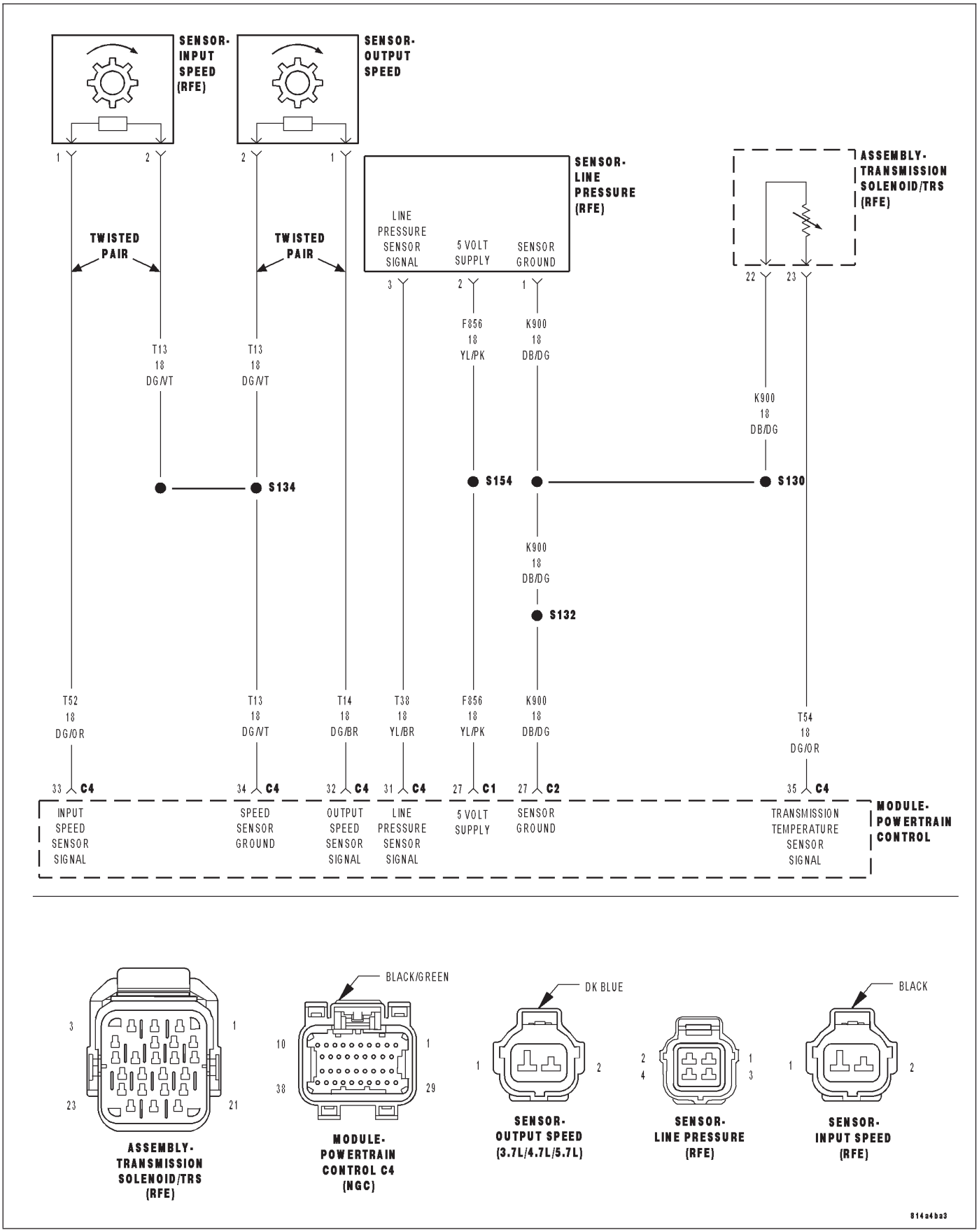

For a complete wiring diagram **Refer to Section 8W**

- **When Monitored:**
  Continuously with the ignition on, engine running, with the transmission in gear.
- **Set Condition:**
  The PCM continuously monitors Actual Line Pressure and compares it to Desired Line Pressure. If the Actual Line Pressure reading is more than 172.4 kPa (25 psi) higher than the Desired Line Pressure, but is less than the highest Line Pressure ever used in the current gear, the DTC sets.

Possible Causes
RELATED DTC'S PRESENT
LINE PRESSURE CONNECTOR AND WIRING
INTERNAL TRANSMISSION
POWERTRAIN CONTROL MODULE

Always perform the 45RFE/545RFE Pre-Diagnostic Troubleshooting Procedure before proceeding. (Refer to 21 - TRANSMISSION/TRANSAXLE/AUTOMATIC - 45RFE/545RFE - STANDARD PROCEDURE)

Theory of Operation

Line pressure is electronically controlled by the Transmission Control System and is measured by the Line Pressure Sensor (LPS). The desired line pressure is continuously being compared to the actual line pressure and is regulated by electronically changing the duty cycle of the Pressure Control Solenoid (PCS). (5% duty cycle = solenoid off = max line pressure, 62% duty cycle = solenoid on = min line pressure).

The Transmission Control System calculates the desired line pressure based on inputs from the transmission and engine. A calculated torque input to the transmission is used as the primary input of the desired line pressure calculation and is called Torque Based Line Pressure. In addition, the line pressure is set to a preset level 827 to 931 kPa (120 to 135 psi) during shifts and in Park and Neutral to ensure consistent shift quality.

Diagnostic Test

1. DETERMINING IF RELATED DTCS ARE PRESENT

With the scan tool, check for other transmission DTCs.

Are there any other line pressure related DTCs present?

Yes >> Refer to the Transmission category and perform the appropriate symptom. Perform the test for P0934 and/or P0935 first if present.

No >> Go To 2

2. COMPARE ACTUAL LINE PRESSURE TO DESIRED LINE PRESSURE

CAUTION: Apply Parking Brake
Start the engine.

CAUTION: Firmly apply the brakes.
With the scan tool, monitor the Line Pressure, Desired Line Pressure and the TPS degrees.

While firmly applying the brakes, place the shifter in reverse, then slowly press the accelerator pedal to a TPS degree of 15°.

Compare the Line Pressure reading to the Desired Line Pressure reading on the scan tool.

Does the Line Pressure stay within ± 34 kPa or 5 psi of the Desired Line Pressure?

No >> Go To 3

Yes >> Go To 5

3. CHECK LINE PRESSURE CONNECTOR AND WIRING

Ignition on, engine not running.

With the scan tool, monitor the Line Pressure Sensor voltage while wiggling the wiring harness and connectors pertaining to the Line Pressure Sensor and the Transmission Solenoid/TRS Assembly.

Did the voltage remain steady while wiggling the wiring harness and connectors?

Yes >> Go To 4

No >> Disconnect and properly reconnect the Line Pressure Sensor connector. Inspect terminals and repair as necessary.

Perform 45RFE/545RFE TRANSMISSION VERIFICATION TEST - VER 1. (Refer to 21 - TRANSMISSION/TRANSAXLE/AUTOMATIC - 45RFE/545RFE - STANDARD PROCEDURE)

4. CHECK PCM AND WIRING

Turn the ignition off to the lock position.

Remove the Ignition Switch Feed fuse from the TIPM.

CAUTION: Removal of the Ignition Switch Feed fuse from the TIPM will prevent the vehicle from being started in gear.

WARNING: The Ignition Switch Feed fuse must be removed from the TIPM. Failure to do so can result in personal injury or death.

Install the Transmission Simulator, Miller tool #8333.

With the Transmission Simulator select the ″OFF″ position on the ″Input/Output Speed″ switch.

Ignition on, engine not running.

With the scan tool, monitor the Line Pressure during the following step.

With the Transmission Simulator, turn the selector switch to each of the 3 Line Pressure positions.

NOTE: All three scan tool Line Pressure readings should be steady and ±14 kPa or 2.0 psi of the reading specified on the Transmission Simulator.

Does the Line Pressure on the scan tool fluctuate up and down more than 69 kPa or 10 psi at any of the 3 line pressure positions on the Transmission Simulator?

Yes >> Using the schematics as a guide, check the Powertrain Control Module (PCM) terminals for corrosion, damage, or terminal push out. Pay particular attention to all power and ground circuits. If no problems are found, replace the PCM per the Service Information. With the scan tool, perform QUICK LEARN.

Perform 45RFE/545RFE TRANSMISSION VERIFICATION TEST - VER 1. (Refer to 21 - TRANSMISSION/TRANSAXLE/AUTOMATIC - 45RFE/545RFE - STANDARD PROCEDURE)

No >> Repair internal transmission and inspect the oil pump per the Service information and replace if necessary. If no problems are found, replace the Transmission Solenoid/TRS Assembly — possible cause is the Pressure Control Solenoid is stuck.

Perform 45RFE/545RFE TRANSMISSION VERIFICATION TEST - VER 1. (Refer to 21 - TRANSMISSION/TRANSAXLE/AUTOMATIC - 45RFE/545RFE - STANDARD PROCEDURE)

5. CHECK WIRING AND CONNECTORS

The conditions necessary to set this DTC are not present at this time.

Using the schematics as a guide, inspect the wiring and connectors specific to this circuit.

Wiggle the wires while checking for shorted and open circuits.

With the scan tool, check the DTC EVENT DATA to help identify the conditions in which the DTC was set.

Where there any problems found?

Yes >> Repair as necessary.

Perform 45RFE/545RFE TRANSMISSION VERIFICATION TEST - VER 1. (Refer to 21 - TRANSMISSION/TRANSAXLE/AUTOMATIC - 45RFE/545RFE - STANDARD PROCEDURE)

No >> Test Complete.

P0934-LINE PRESSURE SENSOR CIRCUIT LOW

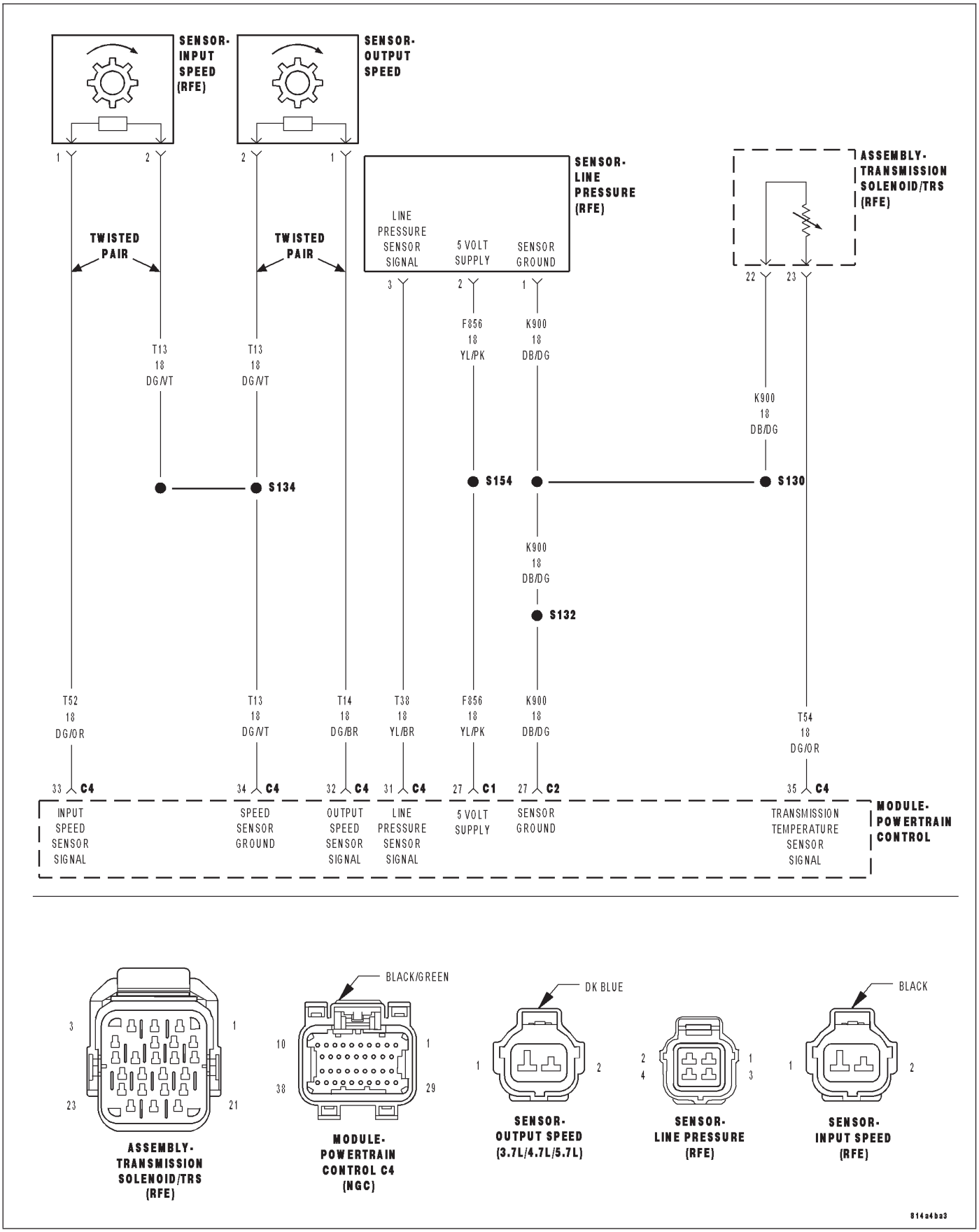

For a complete wiring diagram **Refer to Section 8W**.

- **When Monitored:**
  Continuously with the ignition on and engine running.
- **Set Condition:**
  This DTC will set when the monitored Line Pressure Sensor voltage is less than or equal to 0.35 volts for 0.18 seconds.

Possible Causes
(F856) 5-VOLT SUPPLY CIRCUIT OPEN
(F856) 5-VOLT SUPPLY CIRCUIT SHORT TO GROUND
(T38) LINE PRESSURE SENSOR SIGNAL CIRCUIT SHORT TO GROUND
LINE PRESSURE SENSOR
POWERTRAIN CONTROL MODULE

Always perform the 45RFE/545RFE Pre-Diagnostic Troubleshooting Procedure before proceeding. (Refer to 21 - TRANSMISSION/TRANSAXLE/AUTOMATIC - 45RFE/545RFE - STANDARD PROCEDURE)

Theory of Operation

Line pressure is electronically controlled by the Transmission Control System and is measured by the Line Pressure Sensor (LPS). The desired line pressure is continuously being compared to the actual line pressure and is regulated by electronically changing the duty cycle of the Pressure Control Solenoid (PCS). (5% duty cycle = solenoid off = max line pressure, 62% duty cycle = solenoid on = min line pressure).

The Transmission Control System calculates the desired line pressure based on inputs from the transmission and engine. A calculated torque input to the transmission is used as the primary input of the desired line pressure calculation and is called Torque Based Line Pressure. In addition, the line pressure is set to a preset level 827 to 931 kPa (120 to 135 psi) during shifts and in Park and Neutral to ensure consistent shift quality.

The monitored Line Pressure Sensor voltage should always be between 0.35 and 4.75 volts. Any monitored voltages outside these parameters indicate an Line Pressure Sensor or wiring problem and will cause either DTC P0934 or P0935 to set.

Diagnostic Test

1. CHECK IF DTC IS CURRENT

With the scan tool, check the STARTS SINCE SET counter for P0934.

NOTE: This counter only applies to the last DTC set.

Is the STARTS SINCE SET counter 2 or less?

Yes >> Go To 2

No >> Go To 6

2. CHECK THE PCM AND WIRING

Turn the ignition off to the lock position.

Remove the Ignition Switch Feed fuse from the TIPM.

CAUTION: Removal of the Ignition Switch Feed fuse from the TIPM will prevent the vehicle from being started in gear.

WARNING: The Ignition Switch Feed fuse must be removed from the TIPM. Failure to do so can result in personal injury or death.

Install the Transmission Simulator, Miller tool #8333.

Ignition on, engine not running.

With the scan tool, under Transmission Sensors, monitor the Line Pressure.

Using the Transmission Simulator, set the rotary switch to each of the 3 line pressure positions.

NOTE: The readings should be within ±14 kPa or 2.0 psi on the scan tool to the pressure readings specified on Transmission Simulator.

Does the Line Pressure on the scan tool match the line pressures on the Transmission Simulator?

Yes >> Replace the Line Pressure Sensor per the Service Information.

Perform 45RFE/545RFE TRANSMISSION VERIFICATION TEST - VER 1. (Refer to 21 - TRANSMISSION/TRANSAXLE/AUTOMATIC - 45RFE/545RFE - STANDARD PROCEDURE)

No >> Go To 3

3. CHECK THE (T38) LINE PRESSURE SENSOR SIGNAL CIRCUIT FOR A SHORT TO GROUND

Turn the ignition off to the lock position.

Disconnect the PCM C4 harness connector and connect Miller tool #8815.

Disconnect the Transmission Simulator, Miller tool #8333.

CAUTION: Do not probe the PCM harness connectors. Probing the PCM harness connectors will damage the PCM terminals resulting in poor terminal to pin connection. Install Miller tool #8815 to perform diagnosis.

Measure the resistance between ground and the (T38) Line Pressure Sensor Signal circuit.

Is the resistance below 5.0 ohms?

Yes >> Repair the (T38) Line Pressure Sensor Signal circuit for a short to ground.

Perform 45RFE/545RFE TRANSMISSION VERIFICATION TEST - VER 1. (Refer to 21 - TRANSMISSION/TRANSAXLE/AUTOMATIC - 45RFE/545RFE - STANDARD PROCEDURE)

No >> Go To 4

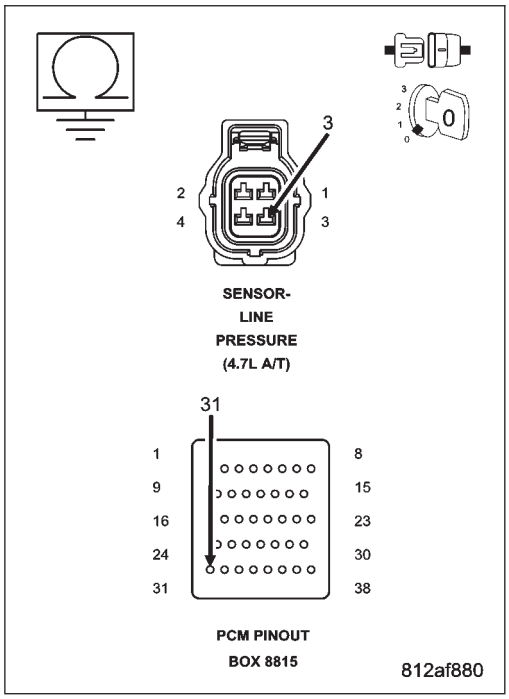

4. CHECK THE (F856) 5-VOLT SUPPLY CIRCUIT FOR AN OPEN

Disconnect the PCM C1 harness connector and connect Miller tool #8815.

Measure the resistance of the (F856) 5-volt Supply circuit between the Line Pressure sensor harness connector and the appropriate terminal of Miller tool #8815.

Is the resistance below 5.0 ohms?

Yes >> Repair the (F856) 5-volt Supply circuit for an open.
Perform 45RFE/545RFE TRANSMISSION VERIFICATION TEST - VER 1. (Refer to 21 - TRANSMISSION/TRANSAXLE/AUTOMATIC - 45RFE/545RFE - STANDARD PROCEDURE)

No >> Go To 5

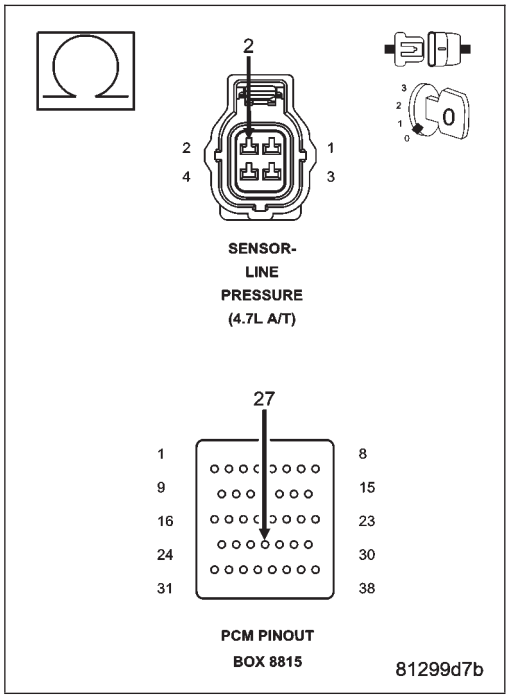

5. CHECK THE (F856) 5-VOLT SUPPLY CIRCUIT FOR A SHORT TO GROUND

Disconnect the PCM C1 harness connector and connect Miller tool #8815.

Measure the resistance between ground and the (F856) 5-volt Supply circuit.

Is the resistance below 5.0 ohms?

Yes >> Repair the (F856) 5-volt Supply circuit for a short to ground.
Perform 45RFE/545RFE TRANSMISSION VERIFICATION TEST - VER 1. (Refer to 21 - TRANSMISSION/TRANSAXLE/AUTOMATIC - 45RFE/545RFE - STANDARD PROCEDURE)

No >> Using the schematics as a guide, check the Powertrain Control Module (PCM) terminals for corrosion, damage, or terminal push out. Pay particular attention to all power and ground circuits. If no problems are found, replace the PCM per the Service Information. With the scan tool, perform QUICK LEARN.
Perform 45RFE/545RFE TRANSMISSION VERIFICATION TEST - VER 1. (Refer to 21 - TRANSMISSION/TRANSAXLE/AUTOMATIC - 45RFE/545RFE - STANDARD PROCEDURE)

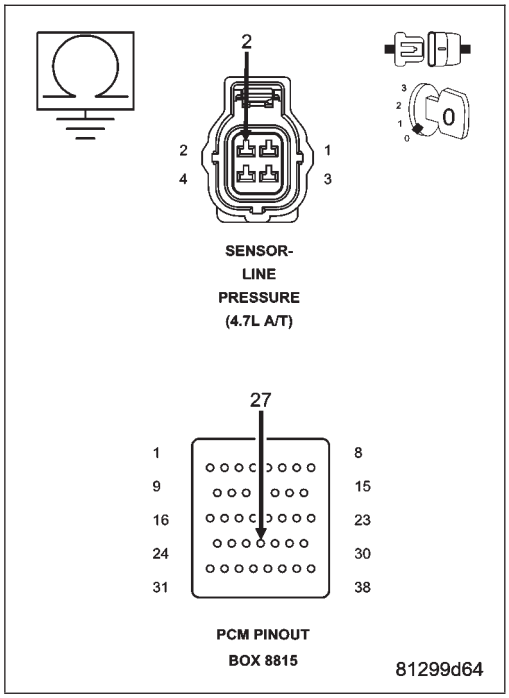

6. INTERMITTENT WIRING AND CONNECTORS

The conditions necessary to set this DTC are not present at this time.

Using the schematics as a guide, inspect the wiring and connectors specific to this circuit.

Wiggle the wires while checking for shorted and open circuits.

With the scan tool, check the DTC EVENT DATA to help identify the conditions in which the DTC was set.

Where there any problems found?

Yes >> Repair as necessary.
Perform 45RFE/545RFE TRANSMISSION VERIFICATION TEST - VER 1. (Refer to 21 - TRANSMISSION/TRANSAXLE/AUTOMATIC - 45RFE/545RFE - STANDARD PROCEDURE)

No >> Test Complete.

P0935-LINE PRESSURE SENSOR CIRCUIT HIGH

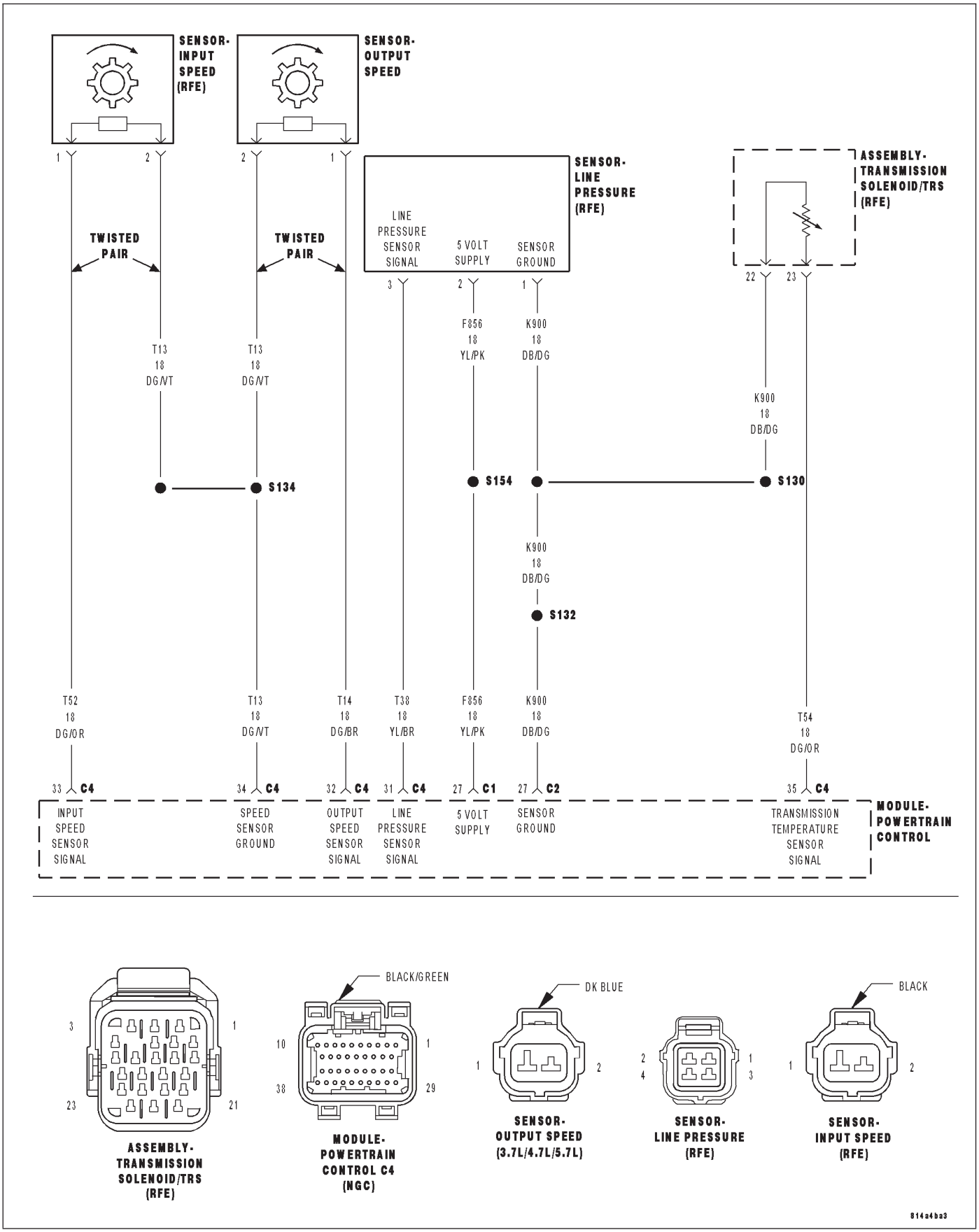

For a complete wiring diagram **Refer to Section 8W**

- **When Monitored:**
  Continuously with ignition on and engine running.
- **Set Condition:**
  This DTC will set if the monitored Line Pressure Sensor voltage is greater than or equal to 4.75 volts for the period of 0.18 seconds

Possible Causes
(T38) LINE PRESSURE SENSOR SIGNAL CIRCUIT OPEN
(K900) SENSOR GROUND CIRCUIT OPEN
(T38) LINE PRESSURE SENSOR SIGNAL CIRCUIT SHORT TO VOLTAGE
LINE PRESSURE SENSOR
POWERTRAIN CONTROL MODULE

Always perform the 45RFE/545RFE Pre-Diagnostic Troubleshooting Procedure before proceeding. (Refer to 21 - TRANSMISSION/TRANSAXLE/AUTOMATIC - 45RFE/545RFE - STANDARD PROCEDURE)

Theory of Operation

Line pressure is electronically controlled by the Transmission Control System and is measured by the Line Pressure Sensor (LPS). The desired line pressure is continuously being compared to the actual line pressure and is regulated by electronically changing the duty cycle of the Pressure Control Solenoid (PCS). (5% duty cycle = solenoid off = max line pressure, 62% duty cycle = solenoid on = min line pressure).

The Transmission Control System calculates the desired line pressure based on inputs from the transmission and engine. A calculated torque input to the transmission is used as the primary input of the desired line pressure calculation and is called Torque Based Line Pressure. In addition, the line pressure is set to a preset level 827 to 931 kPa (120 to 135 psi) during shifts and in Park and Neutral to ensure consistent shift quality.

The monitored Line Pressure Sensor voltage should always be between 0.35 and 4.75 volts. Any monitored voltages outside these parameters indicate an Line Pressure Sensor or wiring problem and will cause either DTC P0934 or P0935 to set.

Diagnostic Test

1. CHECK TO SEE IF DTC IS CURRENT

With the scan tool, Check the STARTS SINCE SET counter for P0935.

NOTE: This counter only applies to the last DTC set.

Is the STARTS SINCE SET counter 2 or less?

Yes >> Go To 2

No >> Go To 6

2. CHECK THE PCM AND WIRING

Turn the ignition off to the lock position.

Remove the Ignition Switch Feed fuse from the TIPM.

CAUTION: Removal of the Ignition Switch Feed fuse from the TIPM will prevent the vehicle from being started in gear.

WARNING: The Ignition Switch Feed fuse must be removed from the TIPM. Failure to do so can result in personal injury or death.

Install the Transmission Simulator, Miller tool #8333.

Ignition on, engine not running.

With the scan tool, monitor the Line Pressure.

Using the Transmission Simulator, set the rotary switch to each of the 3 line pressure positions.

NOTE: The readings should be within ±14 kPa or 2.0 psi on the scan tool of the pressure reading specified on Transmission Simulator.

Does the 3 line pressures on the scan tool match the Line pressure readings on the Transmission Simulator?

Yes >> Replace the Line Pressure Sensor per the Service Information.
Perform 45RFE/545RFE TRANSMISSION VERIFICATION TEST - VER 1. (Refer to 21 - TRANSMISSION/TRANSAXLE/AUTOMATIC - 45RFE/545RFE - STANDARD PROCEDURE)

No >> Go To 3

3. CHECK THE (K900) SENSOR GROUND CIRCUIT FOR AN OPEN

Turn the ignition off to the lock position.

Disconnect the Transmission Simulator, Miller tool #8333.

Disconnect the PCM C2 harness connector and connect Miller tool #8815.

CAUTION: Do not probe the PCM harness connectors. Probing the PCM harness connectors will damage the PCM terminals resulting in poor terminal to pin connection. Install Miller tool #8815 to perform diagnosis.

Measure the resistance of the (K900) Sensor Ground circuit between the Line Pressure Sensor harness connector and the appropriate terminal of Miller tool #8815.

Is the resistance above 5.0 ohms?

Yes >> Repair the (K900) Sensor Ground circuit for an open.
Perform 45RFE/545RFE TRANSMISSION VERIFICATION TEST - VER 1. (Refer to 21 - TRANSMISSION/TRANSAXLE/AUTOMATIC - 45RFE/545RFE - STANDARD PROCEDURE)

No >> Go To 4

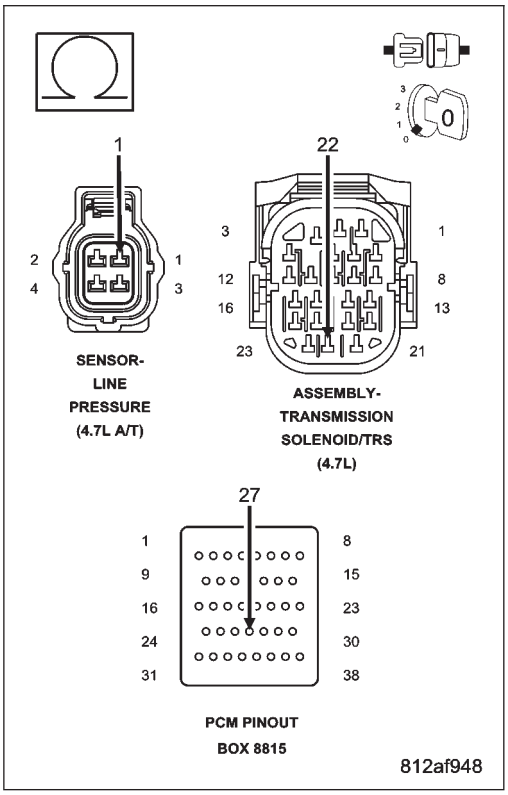

4. CHECK THE (T38) LINE PRESSURE SENSOR SIGNAL CIRCUIT FOR AN OPEN

Disconnect the PCM C4 harness connector and connect Miller tool #8815.

Measure the resistance of the (T38) Line Pressure Sensor Signal circuit between the Line Pressure Sensor harness connector and the appropriate terminal of Miller tool #8815.

Is the resistance above 5.0 ohms?

Yes >> Repair the (T38) Line Pressure Sensor Signal circuit for an open.

Perform 45RFE/545RFE TRANSMISSION VERIFICATION TEST - VER 1. (Refer to 21 - TRANSMISSION/TRANSAXLE/AUTOMATIC - 45RFE/545RFE - STANDARD PROCEDURE)

No >> Go To 5

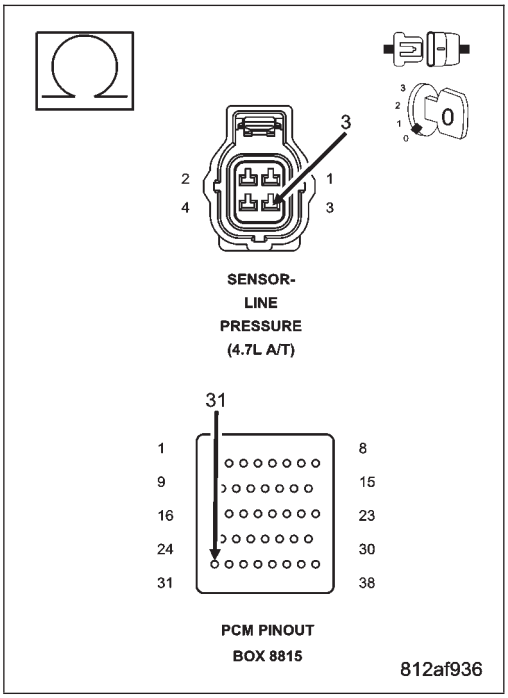

5. CHECK THE (T38) LINE PRESSURE SENSOR SIGNAL CIRCUIT FOR A SHORT TO VOLTAGE

Ignition on, engine not running.

With the scan tool under TIPM, actuate the Transmission.

Measure the voltage of the (T38) Line Pressure Sensor Signal circuit.

Is the voltage above 5.5 volts?

Yes >> Repair the (T38) Line Pressure Sensor Signal circuit for a short to voltage.

Perform 45RFE/545RFE TRANSMISSION VERIFICATION TEST - VER 1. (Refer to 21 - TRANSMISSION/TRANSAXLE/AUTOMATIC - 45RFE/545RFE - STANDARD PROCEDURE)

No >> Using the schematics as a guide, check the Powertrain Control Module (PCM) terminals for corrosion, damage, or terminal push out. Pay particular attention to all power and ground circuits. If no problems are found, replace the PCM per the Service Information. With the scan tool, perform QUICK LEARN.

Perform 45RFE/545RFE TRANSMISSION VERIFICATION TEST - VER 1. (Refer to 21 - TRANSMISSION/TRANSAXLE/AUTOMATIC - 45RFE/545RFE - STANDARD PROCEDURE)

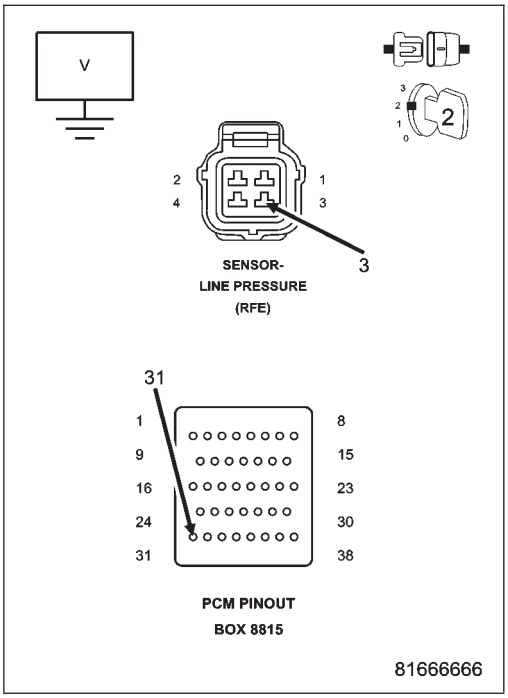

6. CHECK WIRING AND CONNECTORS

The conditions necessary to set this DTC are not present at this time.

Using the schematics as a guide, inspect the wiring and connectors specific to this circuit.

Wiggle the wires while checking for shorted and open circuits.

With the scan tool, check the DTC EVENT DATA to help identify the conditions in which the DTC was set.

Where there any problems found?

Yes >> Repair as necessary.
Perform 45RFE/545RFE TRANSMISSION VERIFICATION TEST - VER 1. (Refer to 21 - TRANSMISSION/TRANSAXLE/AUTOMATIC - 45RFE/545RFE - STANDARD PROCEDURE)

No >> Test Complete.

P0944-LOSS OF HYDRAULIC PUMP PRIME

For a complete wiring diagram **Refer to Section 8W**

- **When Monitored:**
  If the transmission is slipping in any forward gear and all the pressure switches are not indicating pressure, a loss of prime test is run.
- **Set Condition:**
  If the transmission begins to slip in a forward gear and all the pressure switch(s) that should be closed are open a loss of prime test begins. Available elements are turned on by the PCM to see if pump prime exists. The DTC sets if no pressure switch(s) respond.

Possible Causes
SHIFT LEVER OUT OF ADJUSTMENT
IMPROPER FLUID LEVEL
CRACKED OR IMPROPERLY INSTALLED PRIMARY OIL FILTER OR SEAL
LOOSE COOLER RETURN FILTER
STUCK OR STICKING MAIN REGULATOR VALVE
TRANSMISSION OIL PUMP

Always perform the 45RFE/545RFE Pre-Diagnostic Troubleshooting procedure before proceeding. (Refer to 21 - TRANSMISSION/TRANSAXLE/AUTOMATIC - 45RFE/545RFE - STANDARD PROCEDURE)

Theory of Operation

The Loss of prime test is used to prevent transmission defaults and erroneous fault codes during temporary loss of pump prime that may occur with low transmission fluid under severe braking conditions, start-up, etc. and to point towards more subtle problems such as a plugged or cracked oil filter.

The Loss of Prime DTC is set by a loss of hydraulic pressure in the transmission system. This condition, if sustained, will result in the vehicle being unable to move.

Diagnostic Test

1. SHIFT LEVER POSITION TEST

Using the scan tool, perform a Shift Lever Position test. Follow the instructions on the scan tool.

Did the Shift Lever Position Test pass?

Yes >> Go To 2

No >> Refer to the Transmission category and perform the appropriate symptom.
Perform 45RFE/545RFE TRANSMISSION VERIFICATION TEST - VER 1. (Refer to 21 - TRANSMISSION/TRANSAXLE/AUTOMATIC - 45RFE/545RFE - STANDARD PROCEDURE)

2. CHECK TO SEE IF DTC P0944 IS CURRENT

Place the gear selector in Park.

Start the engine.

The transmission must be at operating temperature prior to checking pressure. A cold transmission will give higher readings.

Run the engine at 1500 RPM.

With the scan tool, monitor the Transmission Line Pressure.

Does the Line Pressure match the Desired Line Pressure within ± 5 psi?

No >> Go To 6

Yes >> Go To 3

3. CHECK LINE PRESSURE IN DRIVE AND REVERSE

Firmly apply the brake and repeat the previous test in both Drive and the Reverse gear positions.
With the scan tool, monitor the Transmission Line Pressure.

Does the Line Pressure match the Desired Line Pressure within ± 5 psi in all gear ranges?

Yes >> Go To 4

No >> Go To 5

4. REVIEW CUSTOMER COMMENTS

The conditions necessary to set this DTC are not present at this time.
Verify with the customer if a delayed engagement and/or an intermittent ″No Drive″ condition has occurred.
If the customers answer is ″No″ erase the DTC and return the vehicle to the customer.
Make sure to check for any TSBs or controller flash updates that my apply.
With the scan tool, check the DTC EVENT DATA to help identify the conditions in which the DTC was set.

Has the customer experienced any delayed engagement and/or ″No Drive″ conditions?

Yes >> Repair internal transmission as necessary. Replace the Transmission Oil Pump if inspection reveals no signs of internal seal leakage. Refer to the Service Information for the proper repair procedure.
Perform 45RFE/545RFE TRANSMISSION VERIFICATION TEST - VER 1. (Refer to 21 - TRANSMISSION/TRANSAXLE/AUTOMATIC - 45RFE/545RFE - STANDARD PROCEDURE)

No >> Test Complete.

5. DTC VERIFICATION

Read and record the DTC and the DTC EVENT DATA information.
Test drive the vehicle and attempt to operate the vehicle within the parameters in which the DTC set.
With the scan tool, read DTCs.

Did any following DTCs set, P0868, P0944, P0841, P0846, P0871, P0876, or P0988?

Yes >> Go To 6

No >> Test Complete.

6. CHECK TRANSMISSION OIL FILTER

Remove and inspect the Transmission Oil Pan per the Service Information.
Remove and inspect the Primary Oil Filter per the Service Information.
Inspect the oil filter seal for damage and proper installation.

Does the Oil Pan contain excessive debris and/or is the Oil Filter plugged or seal damaged?

Yes >> Repair the cause of the plugged transmission oil filter or excessive debris. Check the Transmission Oil Filter seal for improper installation onto filter neck instead of into the pump bore, not fully seated against pump housing, filter neck not engaged into pump. Repair as necessary.
Perform 45RFE/545RFE TRANSMISSION VERIFICATION TEST - VER 1. (Refer to 21 - TRANSMISSION/TRANSAXLE/AUTOMATIC - 45RFE/545RFE - STANDARD PROCEDURE)

No >> Repair the Transmission Oil Pump as necessary. Check for a stuck main regulator valve and clean if necessary. Refer to the Service Information for the proper repair procedure.
Perform 45RFE/545RFE TRANSMISSION VERIFICATION TEST - VER 1. (Refer to 21 - TRANSMISSION/TRANSAXLE/AUTOMATIC - 45RFE/545RFE - STANDARD PROCEDURE)

P0987-4C HYDRAULIC PRESSURE TEST

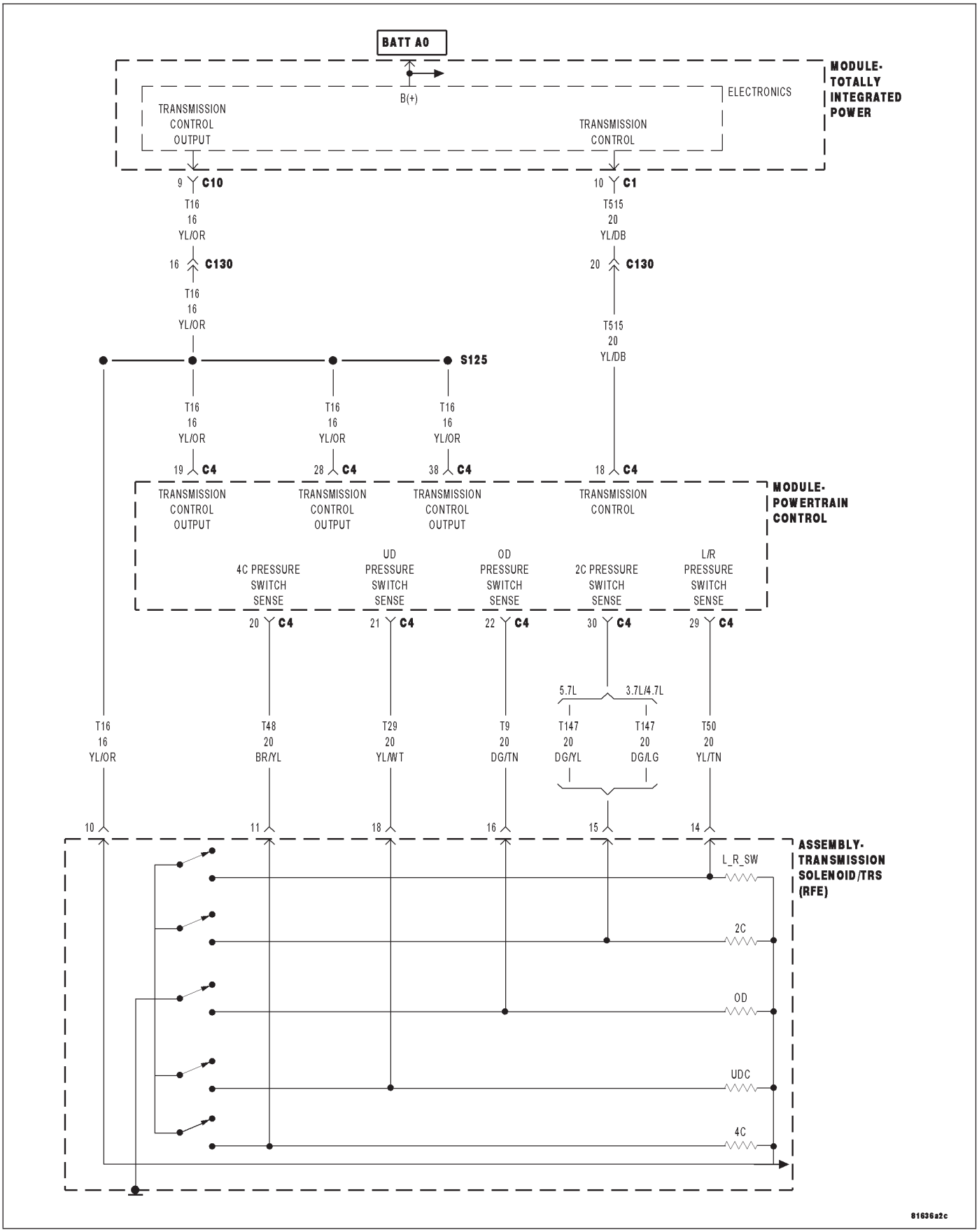

For a complete wiring diagram **Refer to Section 8W**.

- **When Monitored:**
  In any forward gear with engine speed above 1000 RPM shortly after a shift and every minute thereafter.
- **Set Condition:**
  After a shift into a forward gear, with engine speed above 1000 RPM, the PCM momentarily turns on element pressure to the Clutch circuits that don't have pressure to identify the correct Pressure Switch closes. If the Pressure Switch does not close 2 times, the DTC sets.

Possible Causes
LINE PRESSURE SENSOR
TRANSMISSION FLUID CONTAMINATION
RELATED DTC'S PRESENT
TRANSMISSION SOLENOID/TRS ASSEMBLY
EXCESSIVE DEBRIS IN OIL PAN
POOR LINE PRESSURE SENSOR CONNECTION
RELATED TCM POWER INPUT DTCS PRESENT
(T48) 4C PRESSURE SWITCH SENSE CIRCUIT OPEN
(F856) 5-VOLT SUPPLY CIRCUIT OPEN
(T48) 4C PRESSURE SWITCH SENSE CIRCUIT SHORT TO GROUND
(F856) 5-VOLT SUPPLY CIRCUIT SHORT TO GROUND
(T48) 4C PRESSURE SWITCH SENSE CIRCUIT SHORT TO OTHERS
TRANSMISSION SOLENOID/TRS ASSEMBLY
INTERNAL TRANSMISSION
POWERTRAIN CONTROL MODULE

Always perform the 45RFE/545RFE Pre-Diagnostic Troubleshooting Procedure before proceeding. (Refer to 21 - TRANSMISSION/TRANSAXLE/AUTOMATIC - 45RFE/545RFE - STANDARD PROCEDURE)

Theory of Operation

The Transmission Control System tests the pressure switches when they are off. The test verifies that the switches are operational (They will close with pressure applied). The Transmission Control System verifies that the switch closes when the corresponding element is applied. If a switch fails to close, it is re-tested. If it fails the second test, the DTC will set, the MIL will illuminate and the transmission system will default to the orderly Shutdown routine.

Diagnostic Test

1. DETERMINING IF RELATED DTC'S ARE PRESENT

With the scan tool, check for other transmission DTC's

Is there any Loss of Prime, TCM Power Input, and/or Line Pressure Sensor DTCs present?

Yes >> Refer to the Transmission category and perform the appropriate symptom. If the DTC P0944 is present, perform its respective test first.

No >> Go To 2

2. CHECK FOR DTCS

With the scan tool, check Transmission DTCs.

Is the DTC P0770 also present?

Yes >> Refer to the symptom list and perform diagnostics for P0770.

No >> Go To 3

3. OTHER DTCS PRESENT

With the scan tool, check for other transmission DTC's

Are the DTCs P0988 and/or P1736 present also?

Yes >> Go To 12

No >> Go To 4

4. CHECK TO SEE IF DTC IS CURRENT

With the scan tool, check if the DTC P0987-4C HYDRAULIC PRESSURE TEST FAILURE is active or stored.

Is the DTC P0987-4C HYDRAULIC PRESSURE TEST FAILURE active?

Yes >> Go To 5

No >> Go To 17

5. CHECK IF THE LINE PRESSURE STAYS THE SAME

Start the engine.

Warm the transmission to 82° C or 180° F.

Firmly apply the brakes.

With the scan tool, monitor the Line Pressure during the following step.

Move the shift lever to each gear position, pausing momentarily in each position and record the line pressure reading. Allow the pressure to stabilize for at least 5 seconds in each range.

Did the line pressure remain at a steady value between 585 and 655 kPa or 85 and 95 psi in each position?

Yes >> Go To 6

No >> Go To 10

6. CHECK THE LINE PRESSURE SENSOR CONNECTION

Ignition on, **engine not running.**

With the scan tool, monitor the Line Pressure while firmly pushing the Transmission Line Pressure Sensor connector inwards towards the Transmission.

Did the Line Pressure reading on the scan tool change to about 207 kPa or 30 psi when the connector was pushed inward?

Yes >> Disconnect and properly reconnect the Line Pressure Sensor connector. Inspect terminals and repair as necessary.

Perform 45RFE/545RFE TRANSMISSION VERIFICATION TEST - VER 1. (Refer to 21 - TRANSMISSION/TRANSAXLE/AUTOMATIC - 45RFE/545RFE - STANDARD PROCEDURE)

No >> Go To 7

7. CHECK THE LINE PRESSURE SENSOR OPERATION

Turn the ignition off to the lock position.

Remove the Ignition Switch Feed fuse from the TIPM.

CAUTION: Removal of the Ignition Switch Feed fuse from the TIPM will prevent the vehicle from being started in gear.

WARNING: The Ignition Switch Feed fuse must be removed from the TIPM. Failure to do so can result in personal injury or death.

Install the Transmission Simulator, Miller tool #8333.

With the Transmission Simulator select the ″OFF″ position on the ″Input/Output Speed″ switch.

Ignition on, engine not running.

With the scan tool, monitor the Line Pressure while turning the Pressure Switch selector to each of the 3 line pressure positions on the Transmission Simulator.

NOTE: All three scan tool Line Pressure readings should be steady and ±14 kPa or 2.0 psi of the reading specified on the Transmission Simulator.

Did the scan tool Line Pressure readings match the specified readings on the Transmission Simulator and remain steady in all three positions?

Yes >> Replace the Line Pressure Sensor per the Service Information.
Perform 45RFE/545RFE TRANSMISSION VERIFICATION TEST - VER 1. (Refer to 21 - TRANSMISSION/TRANSAXLE/AUTOMATIC - 45RFE/545RFE - STANDARD PROCEDURE)

No >> Go To 8

8. CHECK THE (F856) 5-VOLT SUPPLY CIRCUIT FOR AN OPEN

Turn the ignition off to the lock position.

Disconnect Transmission Simulator.

Disconnect the PCM C1 harness connector and connect Miller tool #8815.

CAUTION: Do not probe the PCM harness connectors. Probing the PCM harness connectors will damage the PCM terminals resulting in poor terminal to pin connection. Install Miller tool #8815 to perform diagnosis.

Measure the resistance of the (F856) 5-volt Supply circuit between the Line Pressure Sensor harness connector and the appropriate terminal of Miller tool #8815.

Is the resistance above 5.0 ohms?

Yes >> Repair the (F856) 5-volt Supply circuit for an open.
Perform 45RFE/545RFE TRANSMISSION VERIFICATION TEST - VER 1. (Refer to 21 - TRANSMISSION/TRANSAXLE/AUTOMATIC - 45RFE/545RFE - STANDARD PROCEDURE)

No >> Go To 9

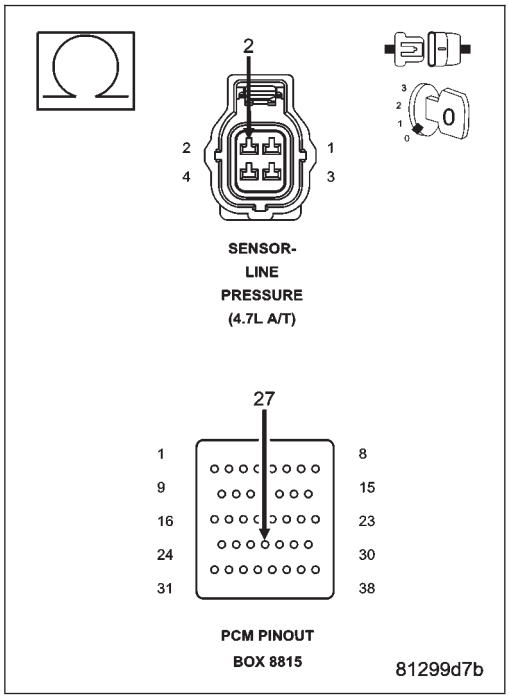

9. CHECK THE (F856) 5-VOLT SUPPLY CIRCUIT FOR A SHORT TO GROUND

Measure the resistance between ground and the (F856) 5-volt Supply circuit.

Is the resistance below 5.0 ohms?

Yes >> Repair the (F856) 5-volt Supply circuit for a short to ground.
Perform 45RFE/545RFE TRANSMISSION VERIFICATION TEST - VER 1.

No >> Using the schematics as a guide, check the Powertrain Control Module (PCM) terminals for corrosion, damage, or terminal push out. Pay particular attention to all power and ground circuits. If no problems are found, replace the PCM per the Service Information. With the scan tool, perform QUICK LEARN.
Perform 45RFE/545RFE TRANSMISSION VERIFICATION TEST - VER 1. (Refer to 21 - TRANSMISSION/TRANSAXLE/AUTOMATIC - 45RFE/545RFE - STANDARD PROCEDURE)

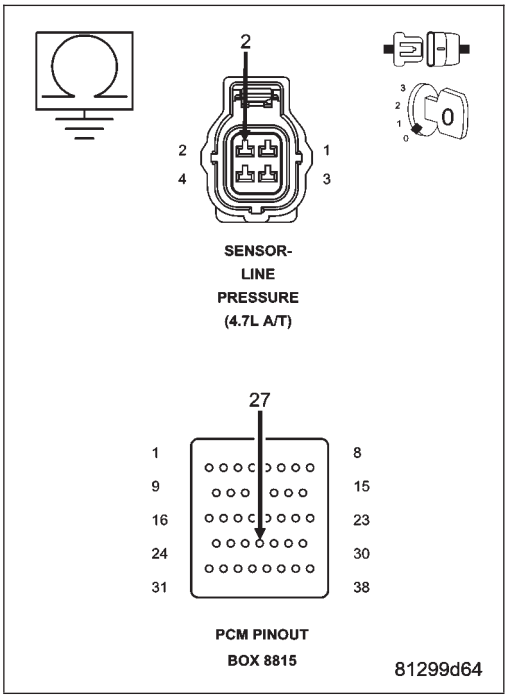

10. COMPARE SCAN TOOL TO PRESSURE GAUGE

Turn the ignition off to the lock position.

Connect the Line Pressure Adapter, Miller tool #8259 and 0-300 psi Test Gauge, Miller tool #C-3293-SP. Refer to the Service Information for proper installation procedure.

CAUTION: Apply parking brake.
Start the engine.

In the following steps, compare the scan tool Line Pressure to the Pressure Gauge readings in each gear.

CAUTION: Do not overheat transmission.
With the gear selector in park, raise the RPM to 1500, and compare line pressure readings.

Firmly apply the brakes, move the gear selector into reverse, raise the RPM to 1500, and compare the line pressure readings.

Firmly apply the brakes, move the gear selector into drive, raise the RPM to 1500, and compare the line pressure readings.

Did the scan tool Line Pressure readings match the Pressure Gauge readings ± 10 psi?

Yes >> Go To 11

No >> Replace the Line Pressure Sensor per the Service Information.
Perform 45RFE/545RFE TRANSMISSION VERIFICATION TEST - VER 1. (Refer to 21 - TRANSMISSION/TRANSAXLE/AUTOMATIC - 45RFE/545RFE - STANDARD PROCEDURE)

11. CHECK PCM AND WIRING

Turn the ignition off to the lock position.

Remove the Line Pressure Adapter, Miller tool #8259 and 0-300 psi Test Gauge, Miller tool #C-3293-SP.

Remove the Ignition Switch Feed fuse from the TIPM.

CAUTION: Removal of the Ignition Switch Feed fuse from the TIPM will prevent the vehicle from being started in gear.

WARNING: The Ignition Switch Feed fuse must be removed from the TIPM. Failure to do so can result in personal injury or death.

Install the Transmission Simulator, Miller tool #8333.

On the Transmission Simulator, turn the Pressure Switch selector switch to 4C.

Ignition on, engine not running.

With the scan tool, monitor the 4C Pressure Switch state while pressing and holding the Pressure Switch test button and wiggling the wire harness and connectors that pertain to the 4C Pressure Switch.

Did the 4C Pressure Switch state change to closed and remain closed while wiggling the wires?

Yes >> Go To 12

No >> Go To 14

12. CHECK FOR EXCESSIVE DEBRIS

Turn the ignition off to the lock position.

Remove the Transmission Simulator, Miller tool #8333.

Remove and inspect the Transmission Oil Pan per the Service Information.

Does the Transmission Oil Pan contain excessive debris or contamination?

Yes >> Repair the cause of the excessive debris in the Transmission Oil Pan. Refer to the Service Information for the proper procedures.

Perform 45RFE/545RFE TRANSMISSION VERIFICATION TEST - VER 1. (Refer to 21 - TRANSMISSION/TRANSAXLE/AUTOMATIC - 45RFE/545RFE - STANDARD PROCEDURE)

No >> Go To 13

13. CHECK 4C HYDRAULIC CLUTCH CIRCUIT

Remove the Valve Body and air check the 4C hydraulic clutch circuit (in the case) for leakage per the Service Information.

NOTE: The 4C hydraulic clutch circuit contains a small bleed orifice. A small amount of air leakage is normal.

Was there excessive air leakage noticed during the air check?

Yes >> Repair as necessary. Check the 4C clutch piston, piston seals and bleed orifice assembly.

Perform 45RFE/545RFE TRANSMISSION VERIFICATION TEST - VER 1. (Refer to 21 - TRANSMISSION/TRANSAXLE/AUTOMATIC - 45RFE/545RFE - STANDARD PROCEDURE)

No >> Disassemble and inspect the Valve Body and repair as necessary. Inspect the 4C Accumulator piston and seals. If no problems are found in the Valve Body, replace the Transmission Solenoid/TRS Assembly per the Service Information.

Perform 45RFE/545RFE TRANSMISSION VERIFICATION TEST - VER 1. (Refer to 21 - TRANSMISSION/TRANSAXLE/AUTOMATIC - 45RFE/545RFE - STANDARD PROCEDURE)

14. CHECK THE (T48) 4C PRESSURE SWITCH SENSE CIRCUIT FOR AN OPEN

Turn the ignition off to the lock position.

Remove the Transmission Simulator, Miller tool #8333 and connect Miller tool #8815.

Disconnect the PCM C4 harness connector.

Measure the resistance of the (T48) 4C Pressure Switch Sense circuit between the Transmission Solenoid/TRS Assembly harness connector and the appropriate terminal of Miller tool #8815.

Is the resistance above 5.0 ohms?

Yes >> Repair the (T48) 4C Pressure Switch Sense circuit for an open.

Perform 45RFE/545RFE TRANSMISSION VERIFICATION TEST - VER 1. (Refer to 21 - TRANSMISSION/TRANSAXLE/AUTOMATIC - 45RFE/545RFE - STANDARD PROCEDURE)

No >> Go To 15

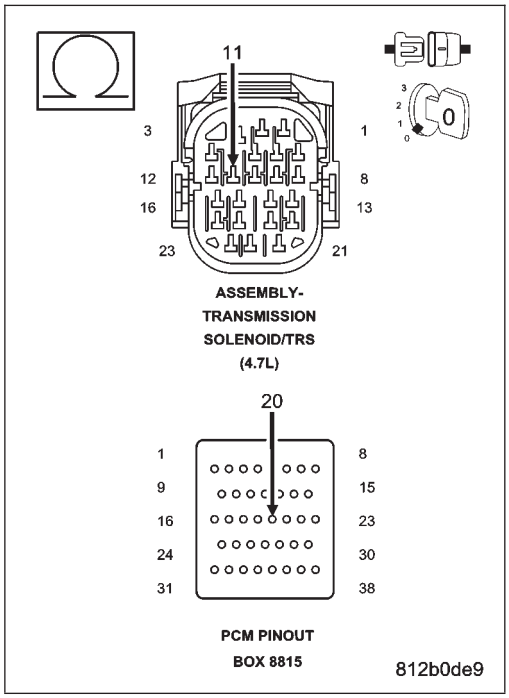

15. CHECK THE (T48) 4C PRESSURE SWITCH SENSE CIRCUIT FOR A SHORT TO GROUND

Measure the resistance between ground and the (T48) 4C Pressure Switch Sense circuit.

Is the resistance below 5.0 ohms?

Yes >> Repair the (T48) 4C Pressure Switch Sense circuit for a short to ground.

Perform 45RFE/545RFE TRANSMISSION VERIFICATION TEST - VER 1. (Refer to 21 - TRANSMISSION/TRANSAXLE/AUTOMATIC - 45RFE/545RFE - STANDARD PROCEDURE)

No >> Go To 16

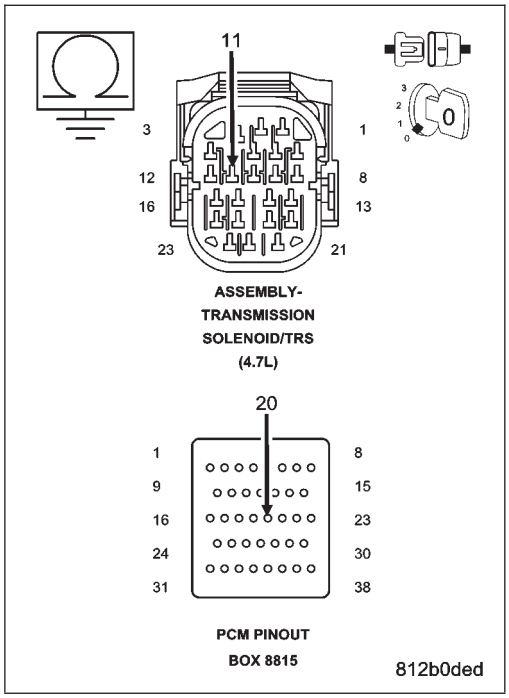

16. CHECK THE (T48) 4C PRESSURE SWITCH SENSE CIRCUIT FOR A SHORT TO ANOTHER CIRCUIT

Disconnect all PCM harness connectors.

Disconnect the Transmission Solenoid/TRS Assembly harness connector.

NOTE: Make sure the Transmission Solenoid/TRS Assembly harness connector is disconnected.

NOTE: Check connectors - Clean/repair as necessary.

Measure the resistance between the (T48) 4C Pressure Switch Sense circuit and all other circuits in the Transmission Solenoid/TRS Assembly harness connector.

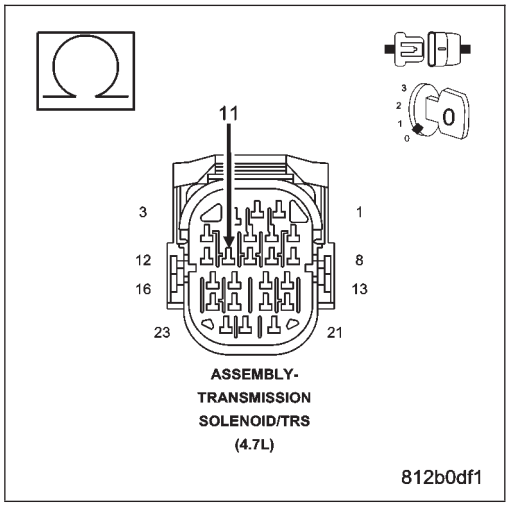

Is the resistance below 5.0 ohms between the (T48) 4C Pressure Switch Sense circuit and any other circuit(s) in the Transmission Solenoid/TRS Assembly harness connector?

Yes >> Repair the (T48) 4C Pressure Switch Sense circuit for a short to another circuit(s).

Perform 45RFE/545RFE TRANSMISSION VERIFICATION TEST - VER 1. (Refer to 21 - TRANSMISSION/TRANSAXLE/AUTOMATIC - 45RFE/545RFE - STANDARD PROCEDURE)

No >> Using the schematics as a guide, check the Powertrain Control Module (PCM) terminals for corrosion, damage, or terminal push out. Pay particular attention to all power and ground circuits. If no problems are found, replace the PCM per the Service Information. With the scan tool, perform QUICK LEARN.

Perform 45RFE/545RFE TRANSMISSION VERIFICATION TEST - VER 1. (Refer to 21 - TRANSMISSION/TRANSAXLE/AUTOMATIC - 45RFE/545RFE - STANDARD PROCEDURE)

17. CHECK WIRING AND CONNECTORS

The conditions necessary to set this DTC are not present at this time.

Using the schematics as a guide, inspect the wiring and connectors specific to this circuit.

Wiggle the wires while checking for shorted and open circuits.

With the scan tool, check the DTC EVENT DATA to help identify the conditions in which the DTC was set.

If the DTC EVENT DATA shows the DTC Pie set while the Line Pressure was significantly below the Desired Line Pressure reading, check for causes of low line pressure (low fluid level, broken or mis-installed primary oil filter or filter seal, sticking Main Regulator Valve in the Pump Valve Body etc.). If the data shows the DTC set while the Line Pressure reading was significantly higher than the Desired Line Pressure, check the Line Pressure Sensor and related wiring.

Where there any problems found?

Yes >> Repair as necessary.

Perform 45RFE/545RFE TRANSMISSION VERIFICATION TEST - VER 1. (Refer to 21 - TRANSMISSION/TRANSAXLE/AUTOMATIC - 45RFE/545RFE - STANDARD PROCEDURE)

No >> Test Complete.

P0988-4C PRESSURE SWITCH RATIONALITY

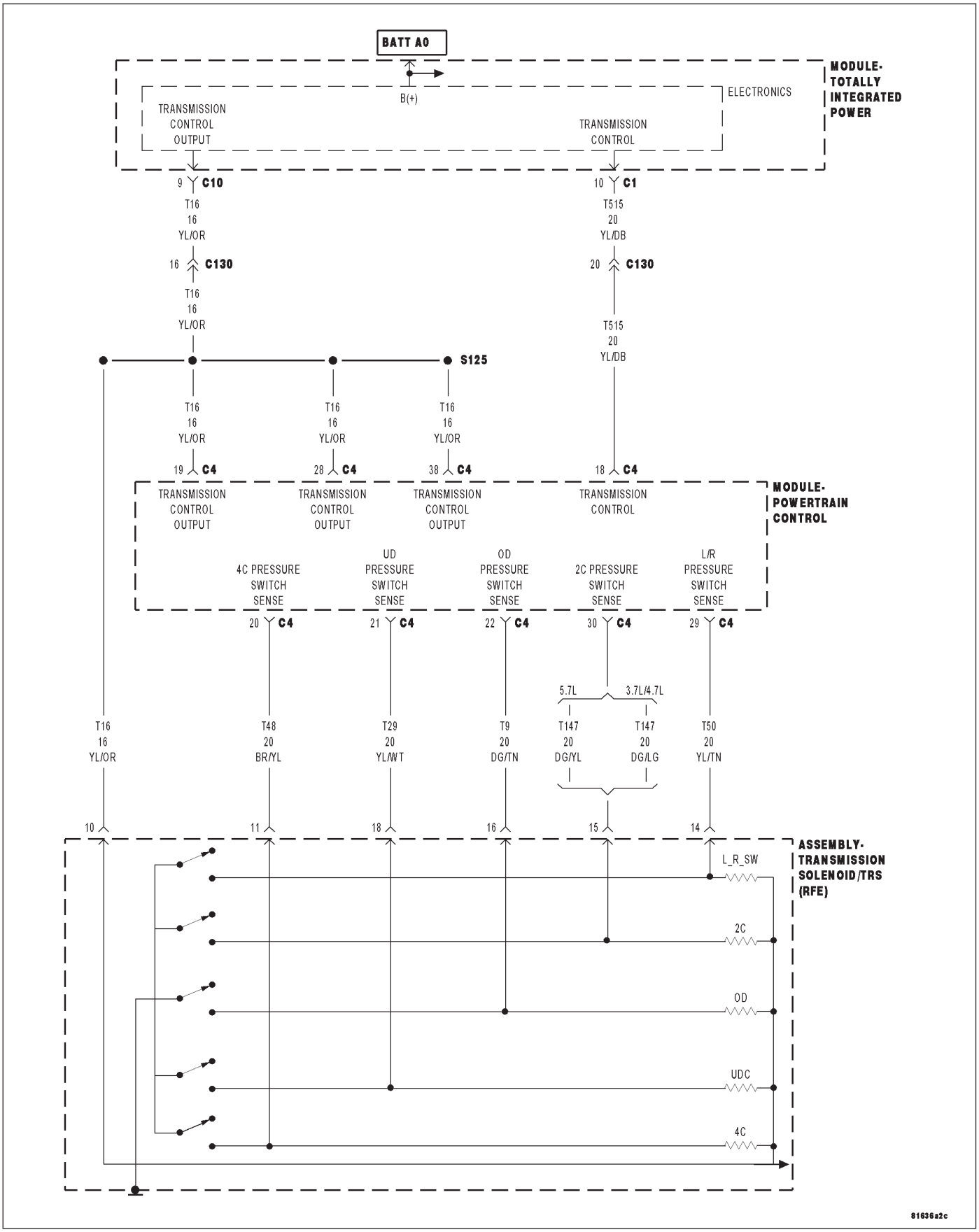

For a complete wiring diagram **Refer to Section 8W**

- **When Monitored:**
  Continuously with the ignition on, engine running, with the transmission in gear.
- **Set Condition:**
  The DTC is set if the 4C Pressure Switch reads open or closed at the wrong time in a given gear.

Possible Causes
RELATED TCM POWER INPUT DTCS PRESENT
DTC P0871 ALSO PRESENT
LOSS OF 12-VOLT FEED
(T48) 4C PRESSURE SWITCH SENSE CIRCUIT OPEN
(T48) 4C PRESSURE SWITCH SENSE CIRCUIT SHORT TO GROUND
EXCESSIVE FLUID LEAKAGE WITH 2C CLUTCH CIRCUIT
#5 AND/OR #7 CHECK BALL CUT OR DAMAGED
LOW LINE PRESSURE
TRANSMISSION SOLENOID/TRS ASSEMBLY
POWERTRAIN CONTROL MODULE
WIRING AND CONNECTORS

Always perform the 45RFE/545RFE Pre-Diagnostic Troubleshooting Procedure before proceeding. (Refer to 21 - TRANSMISSION/TRANSAXLE/AUTOMATIC - 45RFE/545RFE - STANDARD PROCEDURE)

Theory of Operation

The Transmission system uses five pressure switches to monitor the fluid pressure in the LR, 2C, 4C, UD, and OD clutch circuits. The pressure switches are continuously monitored for the correct states in each gear as shown.

GEAR	L/R	2C	4C	UD	OD
REVERSE	OPEN	OPEN	OPEN	OPEN	OPEN
P/N	CLOSED	OPEN	OPEN	OPEN	OPEN
1ST	CLOSED*	OPEN	OPEN	CLOSED	OPEN
2ND	OPEN	CLOSED	OPEN	CLOSED	OPEN
2ND PRIME	OPEN	OPEN	CLOSED	CLOSED	OPEN
DRIVE	OPEN	OPEN	OPEN	CLOSED	CLOSED
4TH	OPEN	OPEN	CLOSED	OPEN	CLOSED
5TH	OPEN	CLOSED	OPEN	OPEN	CLOSED

*L/R is closed if output speed is below 100 rpm in Drive and Manual 2. L/R is open in Manual 1.

Diagnostic Test

1. CHECK FOR TCM POWER INPUT SIGNAL DTCS

With the scan tool, check for other transmission DTCs.

Are there any TCM Power Input DTCs present?

Yes >> Refer to the Transmission category and perform the appropriate symptom.

No >> Go To 2

2. DTC DATA SHOW CURRENT DTC

With the scan tool, check the DTC EVENT DATA.

Does the DTC EVENT DATA show data for DTC P0988?

Yes >> Go To 3

No >> Refer to the Transmission category and perform the appropriate symptom identified in the DTC EVENT DATA.

3. CHECK IF MULTIPLE DTCS ARE PRESENT

With the scan tool, check for other transmission DTC's.

Are there two or more related Pressure Switch Sense DTCs present in addition to P0988?

Yes >> Go To 4

No >> Go To 7

4. RELATED DTC PRESENT

With the scan tool, check the DTC EVENT DATA for P0988.

NOTE: Make sure to record all DTC EVENT DATA stored in the scan tool for future reference in this test procedure.

Do all the pressure switches read CLOSED in the DTC EVENT DATA for P0988?

Yes >> Refer to Transmission category and perform diagnostics for the DTC P0882.

No >> Go To 5

5. CHECK IF THE PRESSURE SWITCHES READ OPEN

In the DTC EVENT DATA recorded earlier, read the state of all pressure switches.

Do all the pressure switches read OPEN?

Yes >> Go To 6

No >> Go To 7

6. CHECK FOR LOW LINE PRESSURE

In the DTC EVENT DATA recorded earlier, compare the Line Pressure and the Desired Line Pressure.

Is the Line Pressure less than 40 psi, and significantly below the Desired Line Pressure?

Yes >> Repair as necessary to correct low line pressure. Check fluid level and adjust as necessary. If fluid level is OK, check the Primary Oil Filter seal for a split, crack, or improperly installed. If the filter and seal are OK, check the Main Regulator Valve in the Oil Pump. Refer to the Service Information for the above procedures.

Perform 45RFE/545RFE TRANSMISSION VERIFICATION TEST - VER 1. (Refer to 21 - TRANSMISSION/TRANSAXLE/AUTOMATIC - 45RFE/545RFE - STANDARD PROCEDURE)

No >> Replace the Transmission Solenoid/TRS Assembly per the Service Information.

Perform 45RFE/545RFE TRANSMISSION VERIFICATION TEST - VER 1. (Refer to 21 - TRANSMISSION/TRANSAXLE/AUTOMATIC - 45RFE/545RFE - STANDARD PROCEDURE)

7. CHECK IF THE DTC P0871 ALSO SET

With the scan tool, check Transmission DTCs.

Is the DTC P0871 also present?

Yes >> Refer to the Transmission category and perform the appropriate symptom.

No >> Go To 8

8. CHECK IF THE DTC SET IN PARK, REVERSE OR NEUTRAL

With the scan tool, check the DTC EVENT DATA for P0988.

NOTE: Make sure to record all DTC EVENT DATA stored in the scan tool for future reference in this test procedure.

Does the DTC EVENT DATA show the DTC set in Park, Neutral, or Reverse for P0988?

Yes >> Go To 13

No >> Go To 9

9. CHECK IF THE DTC EVENT DATA READS CLOSED

With the scan tool, check the DTC EVENT DATA for P0988.

NOTE: Make sure to record all DTC EVENT DATA stored in the scan tool for future reference in this test procedure.

Does the DTC EVENT DATA show the 4C Pressure Switch reading CLOSED?

Yes >> Go To 11

No >> Go To 10

10. CHECK THE PRIMARY OIL FILTER SEAL

In the DTC EVENT DATA recorded earlier, compare the Line Pressure and the Desired Line Pressure.

Is the Line Pressure less than 40 psi, and significantly below the Desired Line Pressure?

Yes >> Repair as necessary to correct low line pressure. Check fluid level and adjust as necessary. If fluid level is OK, check the Primary Oil Filter seal for a split, crack, or improperly installed. If the filter and seal are OK, check the Main Regulator Valve in the Oil Pump. Refer to the Service Information for the above procedures.

Perform 45RFE/545RFE TRANSMISSION VERIFICATION TEST - VER 1. (Refer to 21 - TRANSMISSION/TRANSAXLE/AUTOMATIC - 45RFE/545RFE - STANDARD PROCEDURE)

No >> Go To 15

11. CHECK THE PCM AND WIRING

Turn the ignition off to the lock position.

Remove the Ignition Switch Feed fuse from the TIPM.

CAUTION: Removal of the Ignition Switch Feed fuse from the TIPM will prevent the vehicle from being started in gear.

WARNING: The Ignition Switch Feed fuse must be removed from the TIPM. Failure to do so can result in personal injury or death.

Install the Transmission Simulator, Miller tool #8333.

Ignition on, engine not running.

With the Transmission Simulator, turn the Pressure Switch selector switch to the 4C position.

With the scan tool, monitor the 4C Pressure Switch while pressing the Pressure Switch test button on the Transmission Simulator.

Did the state of the 4C Pressure Switch change while pressing the Pressure Switch Test button?

Yes >> Go To 12

No >> Go To 13

12. CHECK THE TRANSMISSION SOLENOID/TRS ASSEMBLY

Using the schematics as a guide, inspect the wiring and connectors specific to this circuit.

Wiggle the wires while checking for shorted and open circuits.

Where there any problems found?

Yes >> Repair as necessary.
Perform 45RFE/545RFE TRANSMISSION VERIFICATION TEST - VER 1. (Refer to 21 - TRANSMISSION/TRANSAXLE/AUTOMATIC - 45RFE/545RFE - STANDARD PROCEDURE)

No >> Replace the Transmission Solenoid/TRS Assembly per the Service Information.
Perform 45RFE/545RFE TRANSMISSION VERIFICATION TEST - VER 1. (Refer to 21 - TRANSMISSION/TRANSAXLE/AUTOMATIC - 45RFE/545RFE - STANDARD PROCEDURE)

13. CHECK THE (T48) 4C PRESSURE SWITCH SENSE CIRCUIT FOR AN OPEN

Turn the ignition off to the lock position.

Disconnect the Transmission Simulator, Miller tool #8333.

Disconnect the PCM C4 harness connector.

Connect Miller tool #8815 to the PCM C4 harness connector.

CAUTION: Do not probe the PCM harness connectors. Probing the PCM harness connectors will damage the PCM terminals resulting in poor terminal to pin connection. Install Miller tool #8815 to perform diagnosis.

Measure the resistance of the (T48) 4C Pressure Switch Sense circuit between the Transmission Solenoid/TRS Assembly harness connector and the appropriate terminal of Miller tool #8815.

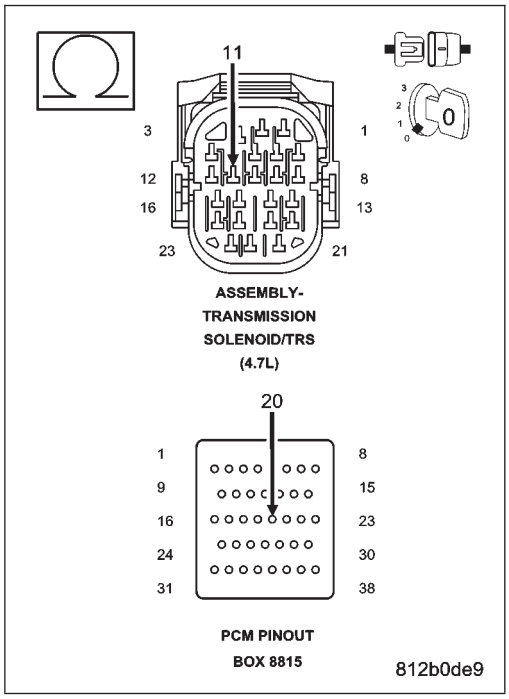

Is the resistance above 5.0 ohms?

Yes >> Repair the (T48) 4C Pressure Switch Sense circuit for an open.
Perform 45RFE/545RFE TRANSMISSION VERIFICATION TEST - VER 1. (Refer to 21 - TRANSMISSION/TRANSAXLE/AUTOMATIC - 45RFE/545RFE - STANDARD PROCEDURE)

No >> Go To 14

14. CHECK THE (T48) 4C PRESSURE SWITCH SENSE CIRCUIT FOR A SHORT TO GROUND

Measure the resistance between ground and the (T48) 4C Pressure Switch Sense circuit.

Is the resistance below 5.0 ohms?

Yes >> Repair the (T48) 4C Pressure Switch Sense circuit for a short to ground.

Perform 45RFE/545RFE TRANSMISSION VERIFICATION TEST - VER 1.

No >> Replace the Powertrain Control Module per the Service Information. With the scan tool, perform the QUICK LEARN procedure.

Perform 45RFE/545RFE TRANSMISSION VERIFICATION TEST - VER 1. (Refer to 21 - TRANSMISSION/TRANSAXLE/AUTOMATIC - 45RFE/545RFE - STANDARD PROCEDURE)

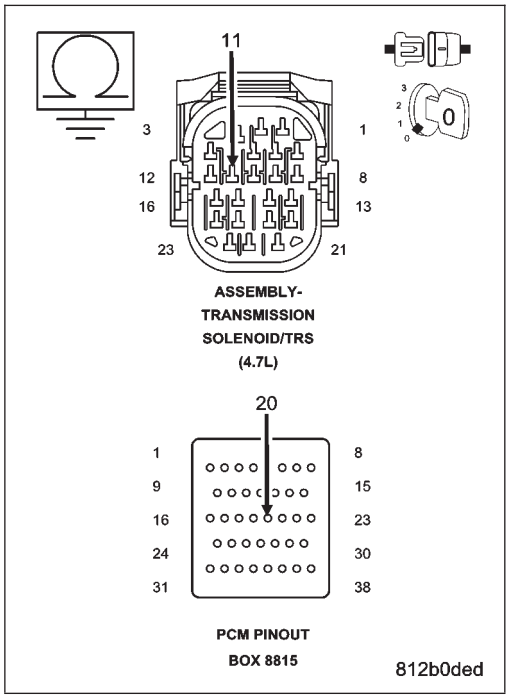

15. CHECK IF THE #5 AND/OR #7 CHECK BALL IS CUT OR DAMAGED

Turn the Ignition off to the lock position.

Remove the Valve Body Assembly per the Service Information.

Inspect the #5 and #7 check balls for any cuts or damage.

Inspect the 4C accumulator piston and seals and also the 4C tower seal on top of the valve body. Refer to the Service Information.

Where there any problems found?

Yes >> Repair as necessary. Check for excessive clutch debris in the transmission oil pan. If excessive clutch debris is present, repair 4C clutch as necessary. Refer to the Service Information for proper repair procedures.

Perform 45RFE/545RFE TRANSMISSION VERIFICATION TEST - VER 1. (Refer to 21 - TRANSMISSION/TRANSAXLE/AUTOMATIC - 45RFE/545RFE - STANDARD PROCEDURE)

No >> Go To 16

16. CHECK FOR EXCESSIVE LEAKAGE WITHIN THE 4C CLUTCH CIRCUIT

Air check the 4C Clutch hydraulic circuit. Refer to the Service Information.

NOTE: This hydraulic clutch circuit contains a small bleed orifice. Small leakage is considered normal.

Was there excessive air leakage in the 4C Clutch hydraulic circuit?

Yes >> Repair as necessary. Refer to the Service Information.

Perform 45RFE/545RFE TRANSMISSION VERIFICATION TEST - VER 1. (Refer to 21 - TRANSMISSION/TRANSAXLE/AUTOMATIC - 45RFE/545RFE - STANDARD PROCEDURE)

No >> Replace the Transmission Solenoid/TRS Assembly per the Service Information.

Perform 45RFE/545RFE TRANSMISSION VERIFICATION TEST - VER 1. (Refer to 21 - TRANSMISSION/TRANSAXLE/AUTOMATIC - 45RFE/545RFE - STANDARD PROCEDURE)

P128B-TCM POWER CONTROL CIRCUIT 2 LOW - TIPM

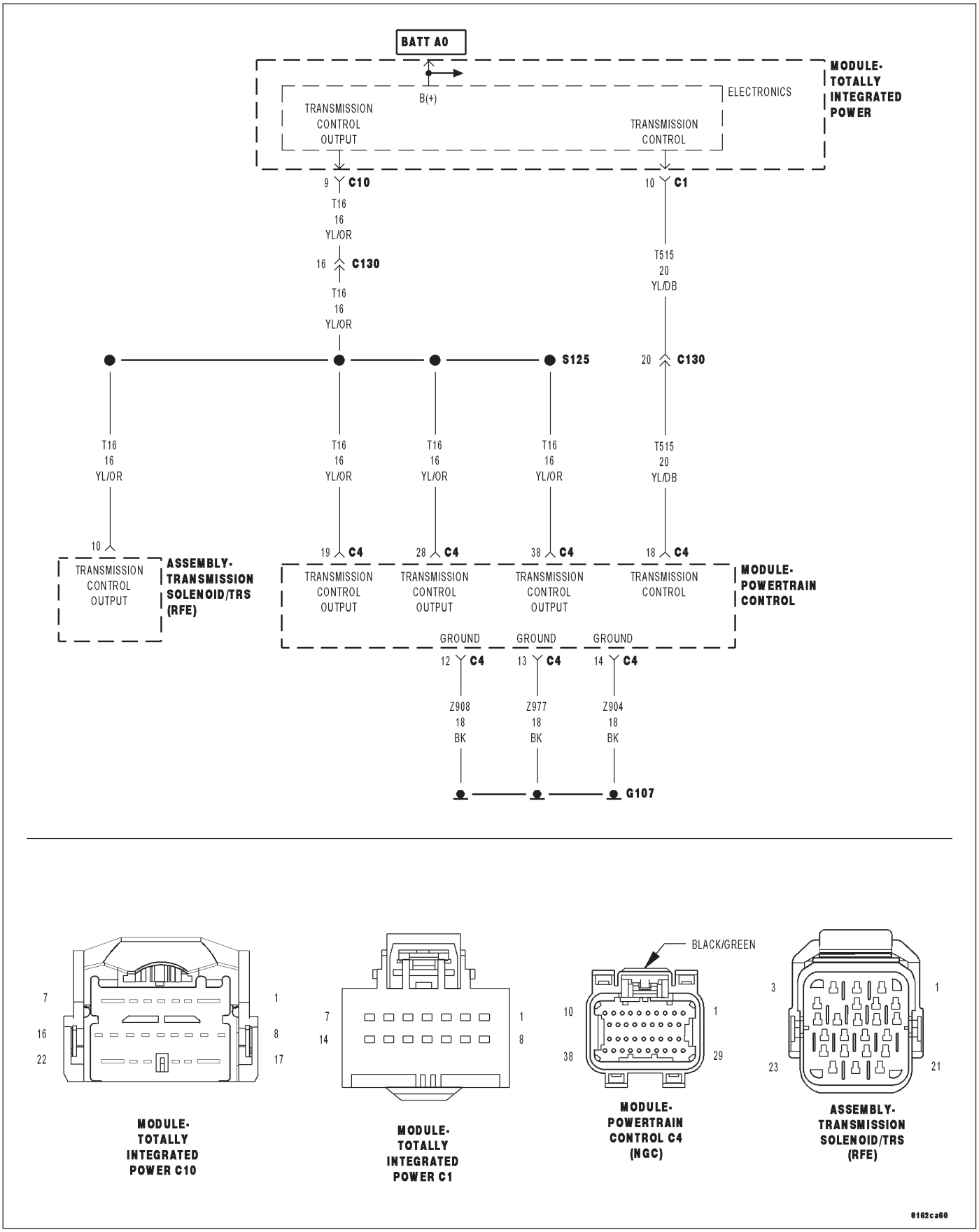

For a complete wiring diagram **Refer to Section 8W**.

- **When Monitored:**
  With the ignition on. Battery voltage greater than 10 volts.
- **Set Condition:**
  A shorted condition is detected in the Transmission Control Output circuit.

Possible Causes
(T16) TRANSMISSION CONTROL OUTPUT CIRCUIT SHORT TO GROUND
(T16) TRANSMISSION CONTROL OUTPUT CIRCUIT FOR AN OPEN
TOTALLY INTEGRATED POWER MODULE (TIPM)

Diagnostic Test

1. CHECK IF THE DTC IS ACTIVE

Ignition on, engine not running.
With the scan tool, check TIPM DTCs.

Is the status Active for this DTC?

Yes >> Go to 2

No >> Go to 5

2. CHECK THE (T16) TRANSMISSION CONTROL OUTPUT CIRCUIT SHORT TO GROUND

Turn the ignition off
Disconnect the TIPM C10 harness connector.
Disconnect the PCM C4 harness connector and install Miller tool #8815.

CAUTION: Do not probe the PCM harness connectors. Probing the PCM harness connectors will damage the PCM terminals resulting in poor terminal to pin connection. Install Miller tool #8815 to perform diagnosis.

Measure the resistance between ground and the (T16) Transmission Control Output circuit.

Is the resistance below 5.0 ohms?

Yes >> Repair the (T16) Transmission Control Output circuit for a short to ground.
Perform 545RFE TRANSMISSION VERIFICATION TEST - VER 1. (Refer to 21 - TRANSMISSION/TRANSAXLE/AUTOMATIC - 45RFE/545RFE - STANDARD PROCEDURE)

No >> Go to 3

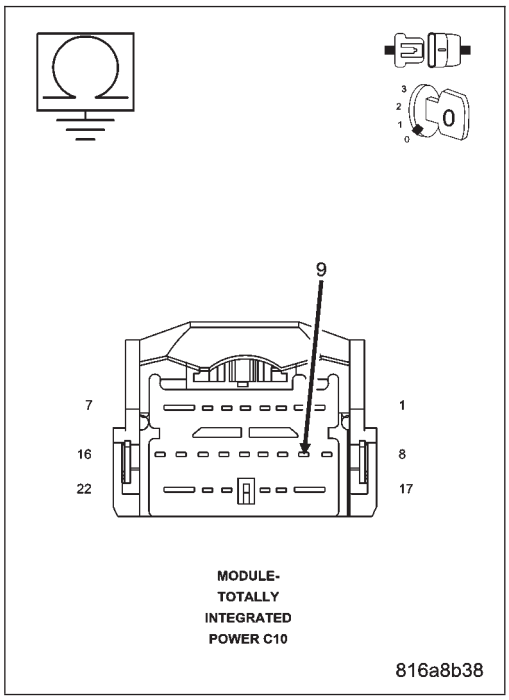

3. CHECK THE (T16) TRANSMISSION CONTROL OUTPUT CIRCUIT FOR AN OPEN

Turn the ignition off to the lock position.

Connect the TIPM C10 harness connector.

Disconnect the Transmission Solenoid/Pressure Switch harness connector.

Disconnect the Line Pressure Sensor/Variable Force Solenoid harness connector (if equipped).

Ignition on, engine not running.

Using the scan tool under the TIPM Actuators, actuate the Transmission.

Using a 12-volt test light connected to ground, check the (T16) Transmission Control Output circuits.

NOTE: The test light must illuminate brightly. Compare the brightness to that of a direct connection to the battery.

Does the test light illuminate brightly at all the (T16) Transmission Control Output circuits?

Yes >> Go To 4

No >> Repair the (T16) Transmission Control Output circuit for an open.
Perform 545RFE TRANSMISSION VERIFICATION TEST - VER 1. (Refer to 21 - TRANSMISSION/TRANSAXLE/AUTOMATIC - 45RFE/545RFE - STANDARD PROCEDURE)

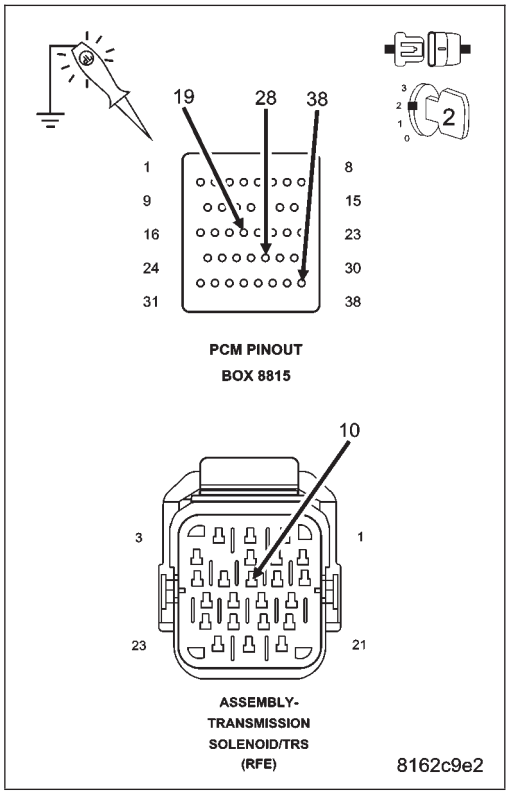

4. TOTALLY INTEGRATED POWER MODULE

Using the schematics as a guide, inspect the wire harness and connectors.

Check the TIPM harness connector terminals for corrosion, damage, or terminal push out.

Pay particular attention to all power and ground circuits.

Were any problems found?

Yes >> Repair as necessary.
Perform 545RFE TRANSMISSION VERIFICATION TEST - VER 1. (Refer to 21 - TRANSMISSION/TRANSAXLE/AUTOMATIC - 45RFE/545RFE - STANDARD PROCEDURE)

No >> Replace the Totally Integrated Power Module per Service Information.
Perform 545RFE TRANSMISSION VERIFICATION TEST - VER 1. (Refer to 21 - TRANSMISSION/TRANSAXLE/AUTOMATIC - 45RFE/545RFE - STANDARD PROCEDURE)

5. INTERMITTENT WIRING AND CONNECTORS

The conditions necessary to set this DTC are not present at this time.

Using the wiring diagram/schematic as a guide, inspect the wiring and connectors.

While monitoring the scan tool data relative to this circuit, wiggle test the wiring and connectors.

Look for the data to change or for the DTC to reset during the wiggle test.

Were any problems found?

Yes >> Repair as necessary.
Perform 545RFE TRANSMISSION VERIFICATION TEST - VER 1. (Refer to 21 - TRANSMISSION/TRANSAXLE/AUTOMATIC - 45RFE/545RFE - STANDARD PROCEDURE)

No >> Test complete.

P128C-TCM POWER CONTROL CIRCUIT 2 HIGH - TIPM

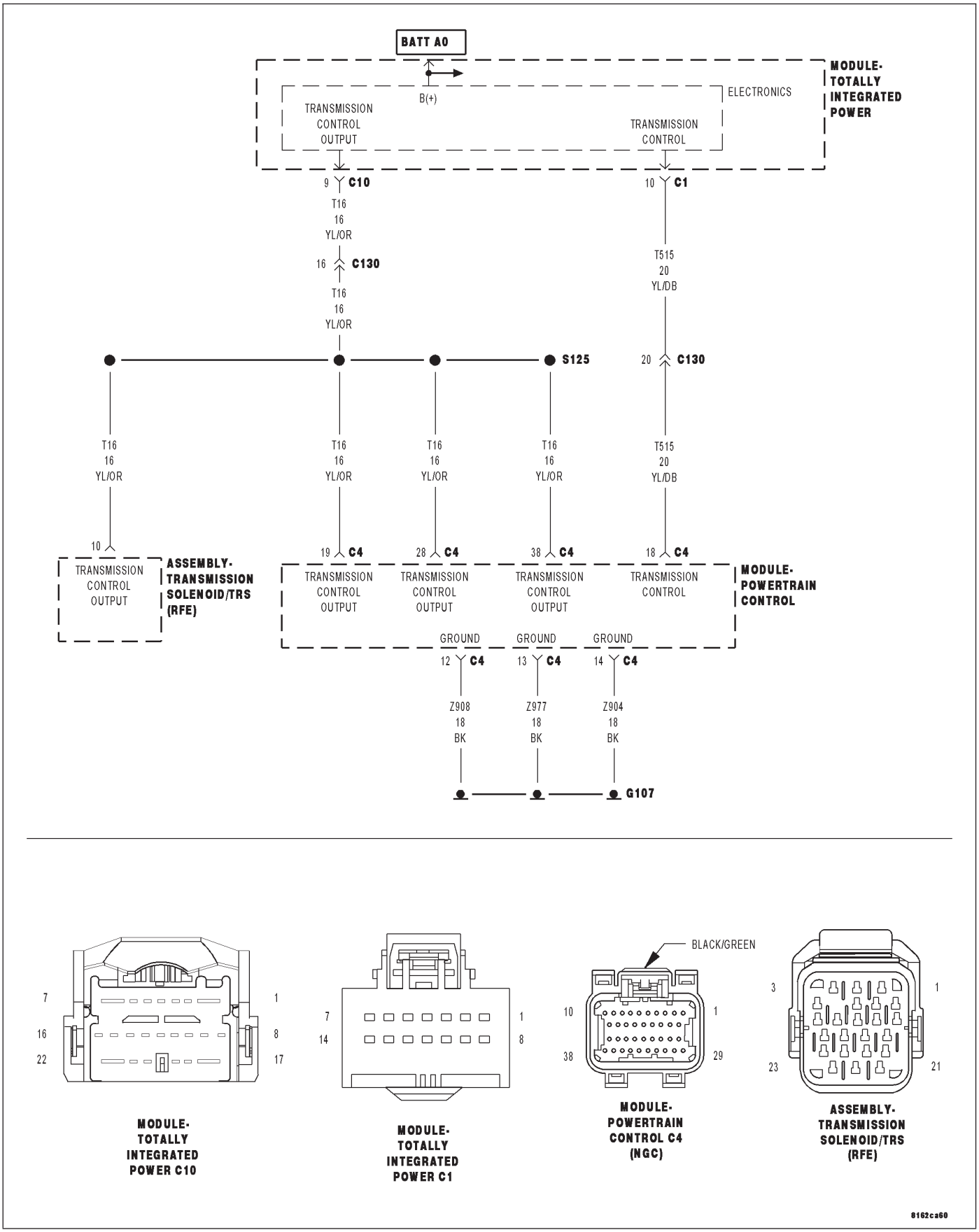

For a complete wiring diagram **Refer to Section 8W**.

- **When Monitored:**
  With the ignition on. Battery voltage greater than 10 volts.
- **Set Condition:**
  A shorted condition is detected in the TIPM Transmission Control Output circuit.

Possible Causes
(T16) TRANSMISSION CONTROL OUTPUT CIRCUIT SHORT TO VOLTAGE TOTALLY INTEGRATED POWER MODULE (TIPM)

Diagnostic Test

1. CHECK IF THE DTC IS ACTIVE

Ignition on, engine not running.
With the scan tool, read TIPM DTCs.

Is the status Active for this DTC?

Yes >> Go to 2

No >> Go to 4

2. (T16) TRANSMISSION CONTROL OUTPUT CIRCUIT SHORT TO VOLTAGE

Turn the ignition off to the lock position.
Disconnect the TIPM C10 harness connector.
Disconnect the PCM C4 harness connector.
Ignition on, engine not running.
Measure the voltage of the (T16) Transmission Control Output circuit.

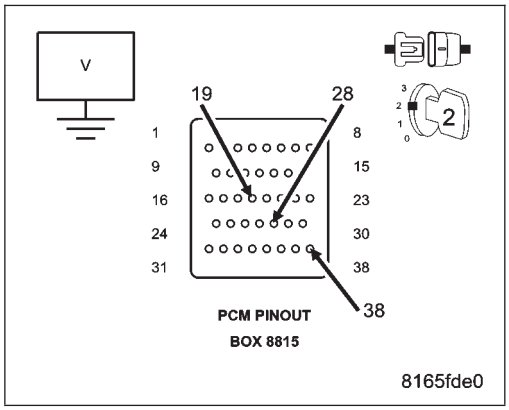

Is the voltage above 10.0 volts?

Yes >> Repair the (T16) Transmission Control Output circuit for a short to voltage.
Perform 545RFE TRANSMISSION VERIFICATION TEST - VER 1. (Refer to 21 - TRANSMISSION/TRANSAXLE/AUTOMATIC - 45RFE/545RFE - STANDARD PROCEDURE)

No >> Go to 3

3. TOTALLY INTEGRATED POWER MODULE

Using the schematics as a guide, inspect the wire harness and connectors.
Check the TIPM harness connector terminals for corrosion, damage, or terminal push out
Pay particular attention to all power and ground circuits.

Were there any problems found?

Yes >> Repair as necessary.
Perform 545RFE TRANSMISSION VERIFICATION TEST - VER 1. (Refer to 21 - TRANSMISSION/TRANSAXLE/AUTOMATIC - 45RFE/545RFE - STANDARD PROCEDURE)

No >> Replace the Totally Integrated Power Module per Service Information.
Perform 545RFE TRANSMISSION VERIFICATION TEST - VER 1. (Refer to 21 - TRANSMISSION/TRANSAXLE/AUTOMATIC - 45RFE/545RFE - STANDARD PROCEDURE)

4. INTERMITTENT WIRING AND CONNECTORS

The conditions necessary to set this DTC are not present at this time.

Using the wiring diagram/schematic as a guide, inspect the wiring and connectors.

While monitoring the scan tool data relative to this circuit, wiggle test the wiring and connectors.

Look for the data to change or for the DTC to reset during the wiggle test.

Were any problems found?

Yes >> Repair as necessary.
Perform 545RFE TRANSMISSION VERIFICATION TEST - VER 1. (Refer to 21 - TRANSMISSION/TRANSAXLE/AUTOMATIC - 45RFE/545RFE - STANDARD PROCEDURE)

No >> Test complete.

P128D-TCM POWER CONTROL CIRCUIT 2 OPEN - TIPM

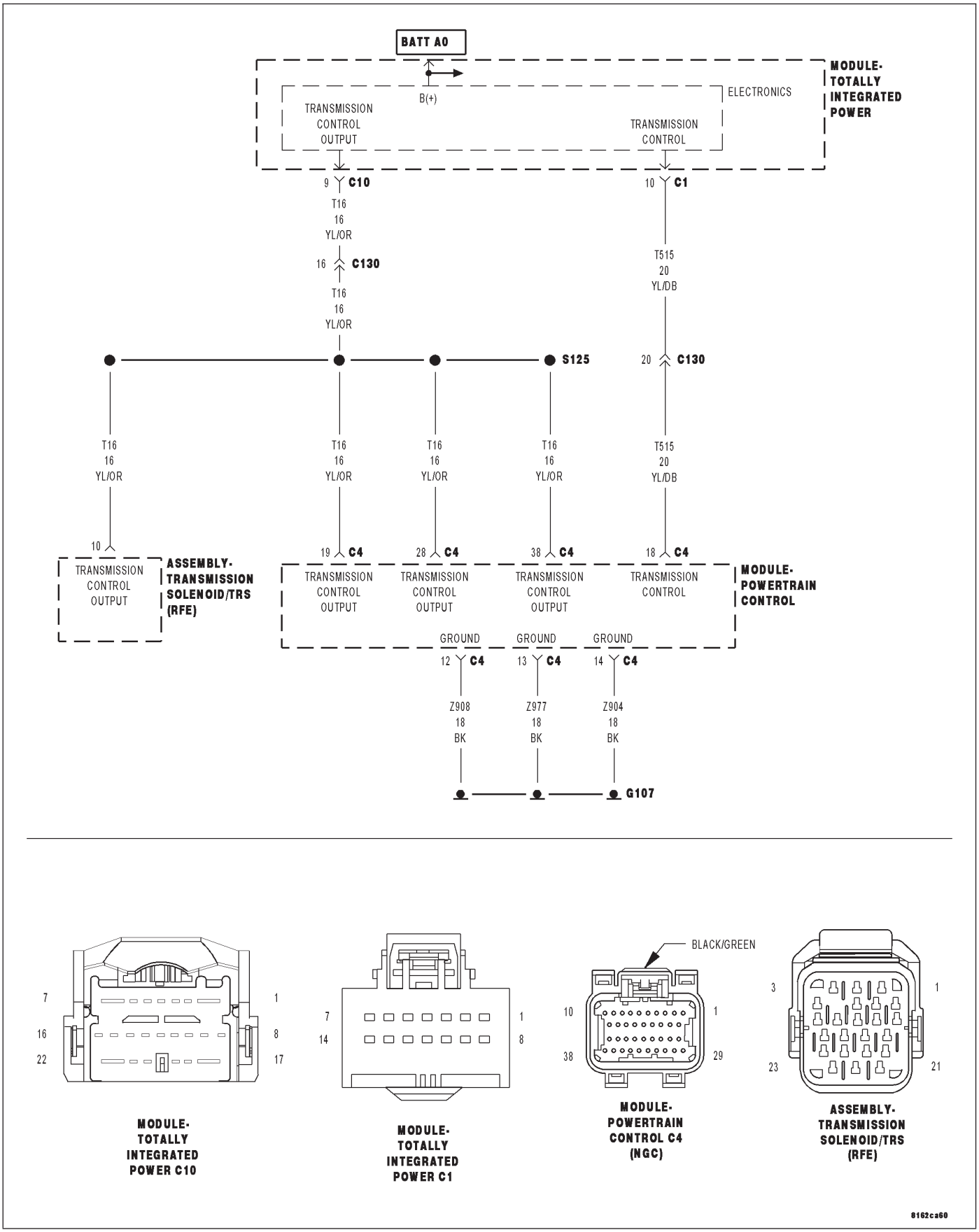

For a complete wiring diagram **Refer to Section 8W**.

- **When Monitored:**
  With the ignition on. Battery voltage greater than 10 volts.
- **Set Condition:**
  An open condition of the Transmission Control Output circuit is detected by the Totally Integrated Power Module (TIPM).

Possible Causes
(T16) TRANSMISSION CONTROL OUTPUT CIRCUIT OPEN
TOTALLY INTEGRATED POWER MODULE (TIPM)

Diagnostic Test

1. CHECK IF THE DTC IS ACTIVE

Ignition on, engine not running.

With the scan tool, select View DTCs.

Is the status Active for this DTC?

Yes >> Go to 2

No >> Go to 4

2. CHECK THE (T16) TRANSMISSION CONTROL OUTPUT CIRCUIT FOR AN OPEN

Turn the ignition off to the lock position.

Disconnect the PCM C4 harness connector and install Miller tool #8815.

Disconnect the Transmission Solenoid harness connector.

Disconnect the Line Pressure Sensor/Variable Force Solenoid harness connector (if equipped).

CAUTION: Do not probe the PCM harness connectors. Probing the PCM harness connectors will damage the PCM terminals resulting in poor terminal to pin connection. Install Miller tool #8815 to perform diagnosis.

Ignition on, engine not running.

Using the scan tool under the TIPM Actuators, actuate the Transmission.

Using a 12-volt test light connected to ground, check the (T16) Transmission Control Output circuits.

NOTE: The test light must illuminate brightly. Compare the brightness to that of a direct connection to the battery.

Does the test light illuminate brightly?

Yes >> Go To 3

No >> Repair the (T16) Transmission Control Output circuit for an open.
Perform 545RFE TRANSMISSION VERIFICATION TEST - VER 1. (Refer to 21 - TRANSMISSION/TRANSAXLE/AUTOMATIC - 45RFE/545RFE - STANDARD PROCEDURE)

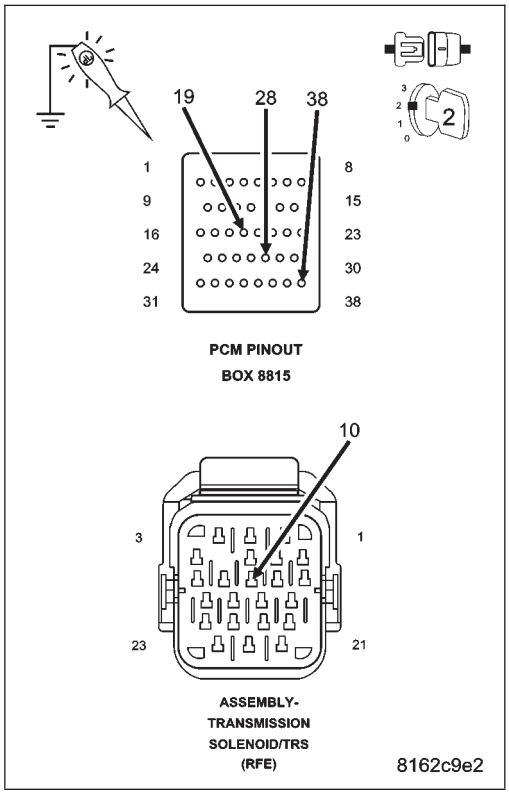

3. TOTALLY INTEGRATED POWER MODULE

Using the schematics as a guide, inspect the wire harness and connectors.

Check the TIPM harness connector terminals for corrosion, damage, or terminal push out.

Pay particular attention to all power and ground circuits.

Were any problems found?

Yes >> Repair as necessary.
Perform 545RFE TRANSMISSION VERIFICATION TEST - VER 1. (Refer to 21 - TRANSMISSION/TRANSAXLE/AUTOMATIC - 45RFE/545RFE - STANDARD PROCEDURE)

No >> Replace the Totally Integrated Power Module per Service Information.
Perform 545RFE TRANSMISSION VERIFICATION TEST - VER 1. (Refer to 21 - TRANSMISSION/TRANSAXLE/AUTOMATIC - 45RFE/545RFE - STANDARD PROCEDURE)

4. INTERMITTENT WIRING AND CONNECTORS

The conditions necessary to set this DTC are not present at this time.

Using the wiring diagram/schematic as a guide, inspect the wiring and connectors.

While monitoring the scan tool data relative to this circuit, wiggle test the wiring and connectors.

Look for the data to change or for the DTC to reset during the wiggle test.

Were any problems found?

Yes >> Repair as necessary.
Perform 545RFE TRANSMISSION VERIFICATION TEST - VER 1. (Refer to 21 - TRANSMISSION/TRANSAXLE/AUTOMATIC - 45RFE/545RFE - STANDARD PROCEDURE)

No >> Test complete.

P128E-TCM POWER CONTROL CIRCUIT 2 OVERCURRENT - TIPM

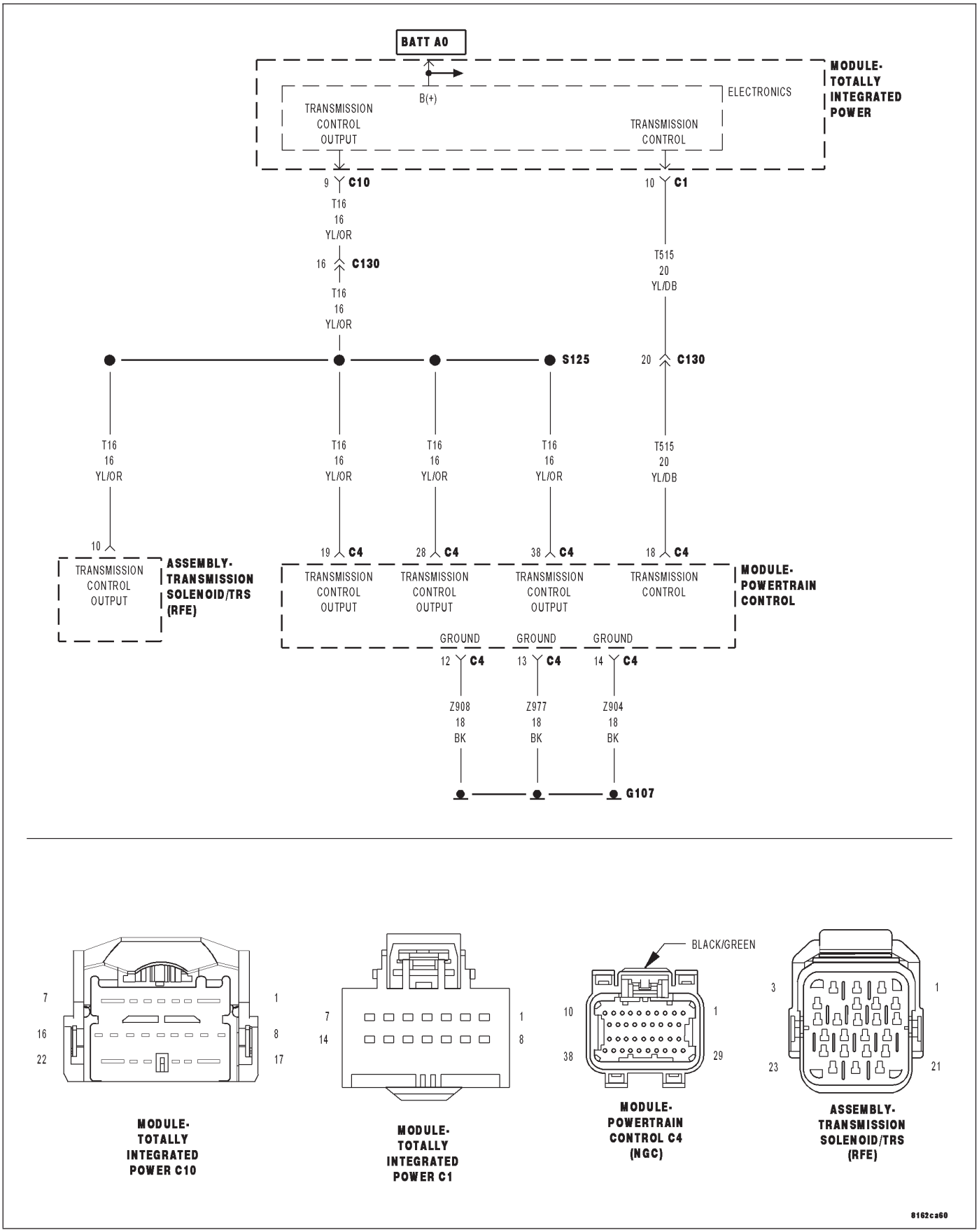

For a complete wiring diagram **Refer to Section 8W**.

- **When Monitored:**
  With the ignition on. Battery voltage greater than 10 volts.
- **Set Condition:**
  An overcurrent condition is detected in the TCM Power Control circuit. One Trip Fault. Three good trips to turn off the MIL.

Possible Causes
LINE PRESSURE SENSOR VARIABLE FORCE SOLENOID
SOLENOID/PRESSURE SWITCH ASSEMBLY
POWERTRAIN CONTROL MODULE (PCM)
TOTALLY INTEGRATED POWER MODULE (TIPM)

Diagnostic Test

1. CHECK IF THE DTC IS ACTIVE

Ignition on, engine not running.
With a scan tool, read TIPM DTCs.

Is the DTC active at this time?

Yes >> Go To 2

No >> Go To 5

2. CHECK THE (T16) TRANSMISSION CONTROL OUTPUT

Turn the ignition off.
Disconnect the TIPM C10 harness connector.
Connect the positive probe of an ammeter to battery positive and connect the negative probe to the (T16) Transmission Control Output circuit in the TIPM C10 harness connector.
Read the amperage on the ammeter.

Does the amperage read below 2.0 amps?

Yes >> Go To 4

No >> Go To 3

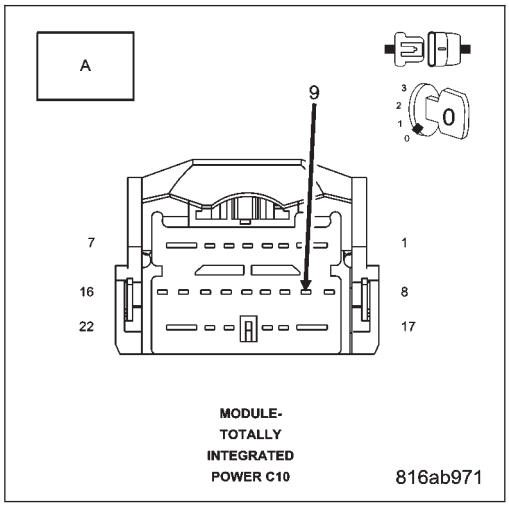

3. CHECK THE PCM

Disconnect the amp meter from the TIPM C10 harness connector and battery positive.

Disconnect the PCM C4 harness connector.

Reconnect the positive probe of an ammeter to battery positive and connect the negative probe to the (T16) Transmission Control Output circuit in the TIPM C10 harness connector.

Read the amperage on the ammeter.

Does the amperage read below 2.0 amps?

Yes >> Using the schematics as a guide, check the Powertrain Control Module (PCM) terminals for corrosion, damage, or terminal push out. Pay particular attention to all power and ground circuits. If no problems are found, replace the PCM per the Service Information. With the scan tool, perform QUICK LEARN

Perform 545RFE TRANSMISSION VERIFICATION TEST - VER 1. (Refer to 21 - TRANSMISSION/TRANSAXLE/AUTOMATIC - 45RFE/545RFE - STANDARD PROCEDURE)

No >> Go To 4

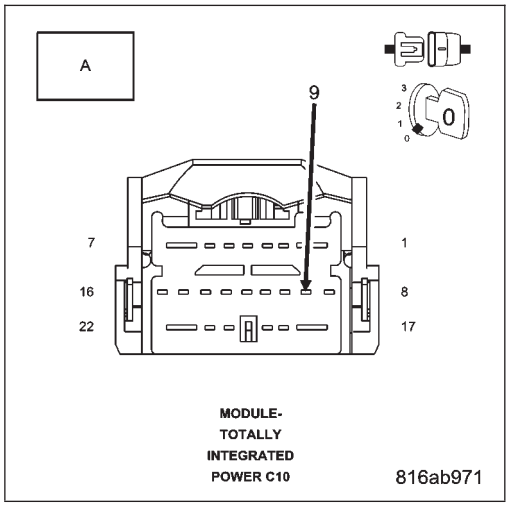

4. CHECK THE TRANSMISSION SOLENOIDS

Disconnect the amp meter from the TIPM C10 harness connector.

Disconnect the PCM C4 harness connector and install Miller tool #8815.

Connect the positive probe of an ammeter to battery positive and connect the negative probe to the (T16) Transmission Control Output circuit in the TIPM C10 harness connector.

While monitoring the amperage reading of the ammeter and using a jumper wire, jump each solenoid control circuit to ground one at a time in the appropriate terminals of Miller tool #8815.

NOTE: The amperage draw should be approximately .02 milliampere on each solenoid circuit with the PCM C4 harness connector disconnected.

Does the amperage read between .05 and .015 milliampere ± .005 milliampere on each solenoid tested?

Yes >> Replace the Totally Integrated Control Module per the Service Information.

Perform 545RFE TRANSMISSION VERIFICATION TEST - VER 1. (Refer to 21 - TRANSMISSION/TRANSAXLE/AUTOMATIC - 45RFE/545RFE - STANDARD PROCEDURE)

No >> Depending on the identified circuit in the test, replace either Transmission Solenoid/Pressure Switch Assembly or the Line Pressure Solenoid (if equipped) per the Service Information.

Perform 545RFE TRANSMISSION VERIFICATION TEST - VER 1. (Refer to 21 - TRANSMISSION/TRANSAXLE/AUTOMATIC - 45RFE/545RFE - STANDARD PROCEDURE)

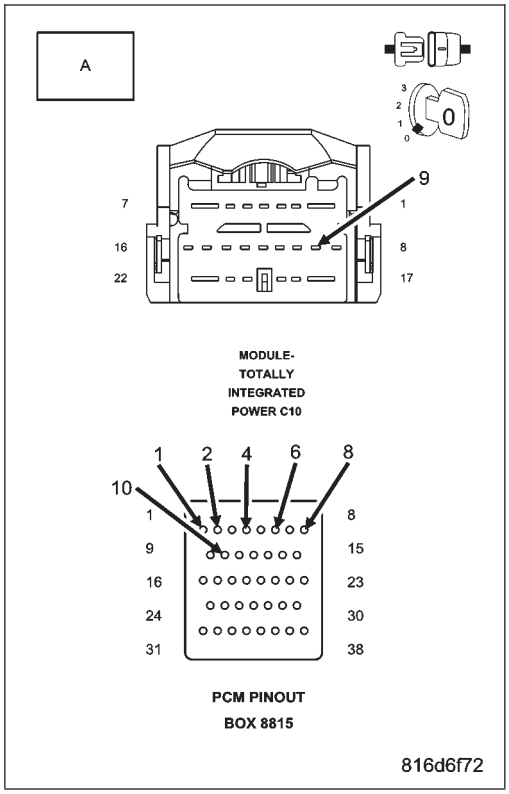

5. INTERMITTENT WIRING AND CONNECTORS

The conditions necessary to set the DTC are not present at this time.

Using the schematics as a guide, inspect the wiring and connectors specific to this circuit.

Wiggle the wires while checking for shorted and open circuits.

With the scan tool, check the DTC EVENT DATA to help identify the conditions in which the DTC was set.

Were there any problems found?

Yes >> Repair as necessary.
Perform 545RFE TRANSMISSION VERIFICATION TEST - VER 1. (Refer to 21 - TRANSMISSION/TRANSAXLE/AUTOMATIC - 45RFE/545RFE - STANDARD PROCEDURE)

No >> Test Complete.

P1684-BATTERY WAS DISCONNECTED

For a complete wiring diagram **Refer to Section 8W**.

- **When Monitored:**
  Whenever the ignition is in the Run/Start position.
- **Set Condition:**
  This DTC will set whenever Powertrain Control Module is disconnected from Fused B(+) or ground. It will also be set using the scan tool to perform a Battery Disconnect and/or Quick Learn procedure.

Possible Causes
BATTERY WAS DISCONNECTED
SCAN TOOL BATTERY DISCONNECT PERFORMED
PCM WAS REPLACED OR DISCONNECTED
QUICK LEARN WAS PERFORMED

Always perform the 45RFE/545RFE Pre-Diagnostic Troubleshooting Procedure before proceeding. (Refer to 21 - TRANSMISSION/TRANSAXLE/AUTOMATIC - 45RFE/545RFE - STANDARD PROCEDURE)

Theory of Operation

The PCM uses a battery backed RAM (Random Access Memory) is used to maintain some learned values. When the battery B(+) is disconnected, the memory is lost. When the B(+) is restored, this memory loss is detected by the Transmission Control System. The DTC is set and the learned values are initialized to known constants or previously learned values from EEPROM (Electronic Erasable Programmable Read Only Memory). This results in the reinitialization of some parameters.

Diagnostic Test

1. POSSIBLE CAUSES

This DTC is an informational DTC only.

This DTC is set due to a momentary loss of power and/or the ground circuits to the PCM.

Below are a list of possible causes associated with this DTC.

Battery was disconnected.

The BATTERY DISCONNECT feature on the scan tool was performed.

The QUICK LEARN feature on the scan tool was performed.

PCM was replaced or disconnected.

Were any of the above possible causes performed?

Yes >> This is the cause of the DTC. Erase the DTC and return vehicle to customer.
Perform 45RFE/545RFE TRANSMISSION VERIFICATION TEST - VER 1. (Refer to 21 - TRANSMISSION/TRANSAXLE/AUTOMATIC - 45RFE/545RFE - STANDARD PROCEDURE)

No >> Go To 2

2. CHECK WIRING AND CONNECTORS

The conditions necessary to set this DTC are not present at this time.

Using the schematics as a guide, inspect the wiring and connectors specific to this circuit.

NOTE: Check all power and ground circuits to the PCM for a intermittent or high resistance condition. Wiggle the wires while checking for shorted and open circuits.

With the scan tool, check the DTC EVENT DATA to help identify the conditions in which the DTC was set.

Where there any problems found?

Yes >> Repair as necessary.
Perform 45RFE/545RFE TRANSMISSION VERIFICATION TEST - VER 1. (Refer to 21 - TRANSMISSION/TRANSAXLE/AUTOMATIC - 45RFE/545RFE - STANDARD PROCEDURE)

No >> Test Complete.

P1715-RESTRICTED MANUAL VALVE IN T3 RANGE

For a complete wiring diagram **Refer to Section 8W**

- **When Monitored:**
  Whenever the PRNDL code indicates Temp 3.
- **Set Condition:**
  This DTC sets when conditions for the DTC P1776 are satisfied or 3 unsuccessful attempts to engage 1st gear while the shifter is in the temp 3 zone. This indicates a restricted port at the manual valve because the shifter is not fully engaged in the drive position.

Possible Causes
RELATED TRANSMISSION DTC'S PRESENT
CUSTOMER DRIVING HABITS
MISADJUSTED SHIFTER

Always perform the 45RFE/545RFE Pre-Diagnostic Troubleshooting Procedure before proceeding. (Refer to 21 - TRANSMISSION/TRANSAXLE/AUTOMATIC - 45RFE/545RFE - STANDARD PROCEDURE)

Diagnostic Test

1. DETERMINING IF RELATED DTC'S ARE PRESENT

With the scan tool, check for other transmission DTC's

Are any of the following DTC's P0731, P0732, P0733, P0734, P1736 or P0715 present?

Yes >> Refer to the Transmission category and perform the appropriate symptom.

No >> Go To 2

2. CHECK SHIFTER ADJUSTMENT

Check Shifter adjustment per the Service Information.

Is the shifter properly adjusted?

Yes >> Go To 3

No >> Adjust the Shifter Assembly per the Service Information.
Perform 45RFE/545RFE TRANSMISSION VERIFICATION TEST - VER 1. (Refer to 21 - TRANSMISSION/TRANSAXLE/AUTOMATIC - 45RFE/545RFE - STANDARD PROCEDURE)

3. CHECK CUSTOMER DRIVING HABIT

This DTC can be set if the customer rests their hand on the shift lever while they are driving. The transmission can be put in the T3 position if just enough forward pressure is exerted on the shift lever.

When this occurs, the feed port to the clutch is restricted, the transmission will declare neutral, and this DTC will be set. The customer should be informed not to rest their hand on the shifter while driving.

This DTC can also be set by simply bumping the shift lever toward neutral while accelerating.

With the scan tool, check the DTC EVENT DATA to help identify the conditions in which the DTC was set.

If there are no possible causes remaining, view repair.

Repair

This DTC can be set by putting too much forward pressure on the shift lever while it is in the OD position. Make sure the customer is informed.

Perform 45RFE/545RFE TRANSMISSION VERIFICATION TEST - VER 1. (Refer to 21 - TRANSMISSION/TRANSAXLE/AUTOMATIC - 45RFE/545RFE - STANDARD PROCEDURE)

P1736-GEAR RATIO ERROR IN 2ND PRIME

For a complete wiring diagram **Refer to Section 8W**.

- **When Monitored:**
  Continuously with the ignition on, engine running, with the transmission in gear.
- **Set Condition:**
  If the ratio of the Input RPM to the Output RPM does not match the current gear ratio. This DTC can take up to five minutes of problem identification before illuminating the MIL

Possible Causes
RELATED DTC'S PRESENT
INPUT SPEED SENSOR OR WIRING
LOW FLUID LEVEL
CRACKED OR MIS-INSTALLED PRIMARY OIL FILTER OR SEAL
WORN SOLENOID SWITCH VALVE OR PLUGS
STUCK OR STICKING MAIN REGULATOR VALVE
BURNED UD OR 4C CLUTCH
CUT 4C OR UD PISTON SEAL
BROKEN 4C PISTON CASTING
BROKEN OR MISSING 4C BLEED ORIFICE
BROKEN OR MISSING UD BLEED ORIFICE
CUT 4C OR UD ACCUMULATOR PISTON SEAL
CRACKED 4C OR UD ACCUMULATOR PISTON
EXTRA CHECK BALL IN PASSAGE DOWNSTREAM OF #7 CHECK BALL POCKET
TRANSMISSION SOLENOID/TRS ASSEMBLY
BROKEN WELD - REACTION CARRIER TO REVERSE SUN GEAR
MISSING TEETH ON INPUT CLUTCH HUB TONE WHEEL

Always perform the 45RFE/545RFE Pre-Diagnostic Troubleshooting Procedure before proceeding. (Refer to 21 - TRANSMISSION/TRANSAXLE/AUTOMATIC - 45RFE/545RFE - STANDARD PROCEDURE)

Theory of Operation

The transmission system uses two speed sensors, one to measure input RPM and one to measure output RPM. These inputs are essential for proper transmission operation. Therefore, the integrity of this data is verified through the following checks:

1) When in gear, if the gear ratio does not compare to a known gear ratio, the corresponding in-gear trouble code is set (DTCs P0731-36).

2) An excessive change in input or output speeds indicating signal intermittent which may result in the DTCs P0715 and/or P0720 to set.

3) If the common speed sensor ground circuit is lost, both sensor inputs will read the signal from the input speed sensor at idle in neutral. Since the input speed sensor reads 60 teeth from the input clutch hub and the output speed sensor reads 30 teeth from the park gear, the result is an apparent speed ratio of 1:2 and may cause the DTC P1794 to set when at a stop.

Diagnostic Test

1. DETERMINING IF RELATED DTC'S ARE PRESENT

With the scan tool, check for other transmission DTCs.

Are any Transmission: solenoid, line pressure, speed sensor, or loss of prime DTCs present?

Yes >> Refer to appropriate symptom in the Transmission category. Perform the test for P0944-LOSS OF PRIME first if it is present.

No >> Go To 2

2. CHECK DTC EVENT DATA

With the scan tool, read and record the DTC EVENT DATA.

NOTE: Make sure to record all DTC EVENT DATA stored in the scan tool for future reference in this test procedure.

Does the DTC EVENT DATA display information for the DTC P1736?

Yes >> Go To 3

No >> Go To 6

3. CHECK RPM IN DTC EVENT DATA

Refer to the DTC EVENT DATA recorded earlier.

Does the Input RPM read zero?

Yes >> Check the input speed sensor and wiring. Refer to test P0715 and diagnose as if the DTC is current.

No >> Go To 4

4. CHECK LINE PRESSURE READING

Refer to the DTC EVENT DATA recorded earlier.

Is the line pressure reading more than 10 psi below the desired line pressure?

Yes >> Go To 5

No >> Go To 6

5. PLUGGED TRANSMISSION OIL FILTER

Turn the ignition off to the lock position.

Remove and inspect the Transmission Oil Pan for excessive debris per the Service Information.

Remove and inspect the Primary Oil Filter per the Service Information.

NOTE: Make sure the Primary Transmission Oil Filter and/or seal is not cracked or split.

Does the Oil Pan contain excessive debris and/or is the Primary Oil Filter cracked or plugged?

Yes >> Repair the plugged, cracked, or split Primary Transmission Oil Filter and/or seal. If the Primary Transmission Oil Filter is plugged, refer to the Service Information for the proper hydraulic clutch repair procedure.

Perform 45RFE/545RFE TRANSMISSION VERIFICATION TEST - VER 1. (Refer to 21 - TRANSMISSION/TRANSAXLE/AUTOMATIC - 45RFE/545RFE - STANDARD PROCEDURE)

No >> Remove the Transmission Oil Pump per the Service Information. Check the main Regulator Valve for sticking in its bore, scoring, and/or damage and clean and repair as necessary. If no problem is found, replace the Transmission Solenoid/TRS Assembly.

Perform 45RFE/545RFE TRANSMISSION VERIFICATION TEST - VER 1. (Refer to 21 - TRANSMISSION/TRANSAXLE/AUTOMATIC - 45RFE/545RFE - STANDARD PROCEDURE)

6. CHECK TO SEE IF DTC P1736 IS CURRENT

With the scan tool, perform the 2nd Prime Gear Clutch Test. Follow the instructions on the scan tool.

Increase the throttle angle, TPS Degree, to 30° for no more than a few seconds.

CAUTION: Do not overheat the transmission.

NOTE: If the 4C clutch is faulty, the overrunning clutch will hold and the slip test will pass. The 2nd Prime Gear Clutch Test will not detect a faulty 4C clutch. However, it will detect a faulty UD clutch.

Did the clutch test pass, did the Input Speed remain at zero?

Yes >> Go To 7

No >> Go To 9

7. CHECK FOR INTERMITTENT OPERATION

Check the Shifter adjustment per the Service Information.

Intermittent gear ratio DTCs can be set by problems in the Input and Output Speed Sensor circuits and/or Speed Sensor Ground circuit.

Check the Speed Sensor wiring and connectors for good connection, then perform a wiggle test using the Transmission Simulator, Miller tool #8333.

Were there any problems found?

Yes >> Repair as necessary.

Perform 45RFE/545RFE TRANSMISSION VERIFICATION TEST - VER 1. (Refer to 21 - TRANSMISSION/TRANSAXLE/AUTOMATIC - 45RFE/545RFE - STANDARD PROCEDURE)

No >> Go To 8

8. CHECK FOR SLIPPAGE

With the scan tool, erase Transmission DTCs.

Road test the vehicle.

During the road test, operate in 4th gear, and perform kickdown shifts from 4th to 2nd (prime) gears.

Is there an obvious slippage noticed in 4th or 2nd prime gears, or runaway on the 4-2 shift?

Yes >> Go To 11

No >> Go To 14

9. UD CLUTCH HYDRAULIC CIRCUIT

Remove Transmission Oil Pan and check for excessive debris.

Remove the Valve Body and air check the UD clutch hydraulic circuit (in the case) per the Service Information.

NOTE: The UD clutch passage contains a small bleed orifice, a small amount of air leakage is normal.

Were there any problems found, excessive debris and/or excessive air leakage in the UD clutch hydraulic circuit?

Yes >> Repair as necessary. Check the UD clutch piston seals and the dribbler assembly, reaction shaft support seal rings, and the flatness of the pump valve body and pump housing faces. Check main regulator valve for sticking in the bore.

Perform 45RFE/545RFE TRANSMISSION VERIFICATION TEST - VER 1. (Refer to 21 - TRANSMISSION/TRANSAXLE/AUTOMATIC - 45RFE/545RFE - STANDARD PROCEDURE)

No >> Go To 10

10. UD ACCUMULATOR PISTON

Check the UD bleed orifice, accumulator piston, and accumulator piston seal in the main valve body.

Were there any problems found?

Yes >> Repair as necessary. Refer to the Service Information for proper repair procedures.

No >> Replace the Transmission Solenoid/TRS Assembly per the Service Information.
Perform 45RFE/545RFE TRANSMISSION VERIFICATION TEST - VER 1. (Refer to 21 - TRANSMISSION/TRANSAXLE/AUTOMATIC - 45RFE/545RFE - STANDARD PROCEDURE)

11. EXCESSIVE DEBRIS

Remove the Transmission Oil Pan and check for excessive debris.

Remove the valve body and air check the 4C clutch hydraulic circuit per the Service Information.

NOTE: The 4C clutch passage contains a small bleed orifice, a small amount of air leakage is normal.

Were there any problems found, excessive debris, improperly assembled 4C clutch and/or excessive air leakage in the 4C clutch hydraulic circuit?

Yes >> Repair as necessary. Refer to the Service Information for proper repair procedures. Note: Check the 4C piston seals and bleed orifice.
Perform 45RFE/545RFE TRANSMISSION VERIFICATION TEST - VER 1. (Refer to 21 - TRANSMISSION/TRANSAXLE/AUTOMATIC - 45RFE/545RFE - STANDARD PROCEDURE)

No >> Go To 12

12. 4C ACCUMULATOR

Check the 4C Accumulator piston for cracks or a cut seal.

Check for a cut or missing #7 or #5 check balls.

Check the Solenoid Switch Valve and its plugs for sticking in its bore or excessive wear.

Were there any problems found

Yes >> Repair as necessary. Refer to the Service Information for proper repair procedures.
Perform 45RFE/545RFE TRANSMISSION VERIFICATION TEST - VER 1. (Refer to 21 - TRANSMISSION/TRANSAXLE/AUTOMATIC - 45RFE/545RFE - STANDARD PROCEDURE)

No >> Go To 13

13. CHECK FOR BROKEN REVERSE SUN GEAR WELD

Working through the windows in the bottom of the case, check for a broken Reverse Sun gear weld to the reaction carrier as follows:

(1) Hold the Transmission Output Shaft by holding the Transmission Manual Lever in the park position.

(2) Rotate the Input Annulus gear and drive shell, (the drum that encloses the two rearmost carriers).

(3) Check to see if the reaction carrier (the front most carrier, whose outer shell is splined to the 4C clutch) is rotating faster than the drive shell is being turned.

Is the reaction carrier turning faster than the drive shell?

Yes >> Replace the Transmission Solenoid/TRS Assembly per the Service Information.
Perform 45RFE/545RFE TRANSMISSION VERIFICATION TEST - VER 1. (Refer to 21 - TRANSMISSION/TRANSAXLE/AUTOMATIC - 45RFE/545RFE - STANDARD PROCEDURE)

No >> Replace the reaction carrier per the Service Information.
Perform 45RFE/545RFE TRANSMISSION VERIFICATION TEST - VER 1. (Refer to 21 - TRANSMISSION/TRANSAXLE/AUTOMATIC - 45RFE/545RFE - STANDARD PROCEDURE)

14. CHECK IF DTC RESET

Did the DTC P1736 reset during the road test?

Yes >> Go To 15

No >> Go To 16

15. LIST OF POSSIBLE CAUSES

If any other DTC's set during the road test, refer to the appropriate symptom in the Transmission category.

If no other DTC's set during the road test, below is a list of possible causes, but not strictly limited to those:

Check for excessive debris in the Transmission Oil pan, plugged, cracked, or split Primary Transmission Oil Filter and/or seal.

Check for cuts or missing #7 and #5 check balls in the main valve body.

Check the 4C and UD accumulator pistons and seals, UD bleed orifice, and the Solenoid Switch Valve and Plugs in the main valve body.

Check the UD clutch piston seals, reaction shaft support seal rings, and the flatness of the pump valve body and pump housing faces.

Check the 4C clutch piston seals, and bleed orifice.

Check the UD clutch piston seals, reaction shaft support seal rings, and dribbler assemblies, and the flatness of the pump valve body and pump housing faces.

View repair

Repair

Repair as necessary. Refer to the Service Information for proper repair procedures.

Perform 45RFE/545RFE TRANSMISSION VERIFICATION TEST - VER 1. (Refer to 21 - TRANSMISSION/TRANSAXLE/AUTOMATIC - 45RFE/545RFE - STANDARD PROCEDURE)

16. INTERMITTENT DTC

The conditions necessary to set this DTC are not present at this time.

Use the DTC EVENT DATA to help identify the conditions and/or possible causes that may have caused the DTC to set.

Check for any Service Information Tune-ups or Technical Service Bulletins that may apply.

Where there any problems found?

Yes >> Repair as necessary.

Perform 45RFE/545RFE TRANSMISSION VERIFICATION TEST - VER 1. (Refer to 21 - TRANSMISSION/TRANSAXLE/AUTOMATIC - 45RFE/545RFE - STANDARD PROCEDURE)

No >> Test Complete.

P1775-SOLENOID SWITCH VALVE LATCHED IN TCC POSITION

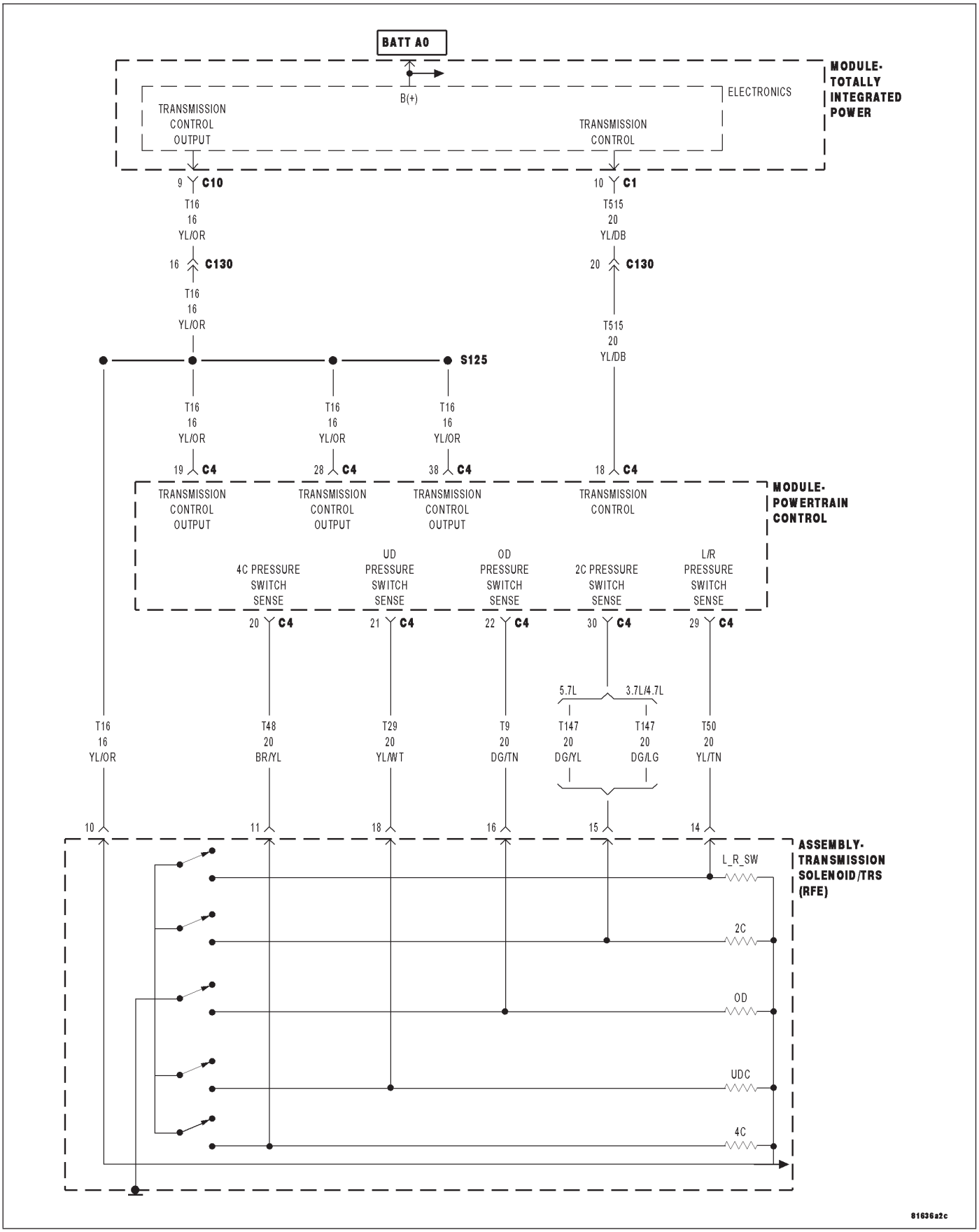

For a complete wiring diagram **Refer to Section 8W**.

- **When Monitored:**
  During an attempted shift into 1st gear.
- **Set Condition:**
  This DTC is set if three unsuccessful attempts are made to shift the Solenoid Switch Valve (SSV) into the downshifted position in one given ignition start. This DTC can take up to five minutes to mature before illuminating the MIL.

Possible Causes
RELATED DTC P0841 PRESENT
SOLENOID SWITCH VALVE STICKING
L/R PRESSURE SWITCH SENSE CIRCUIT SHORT TO OTHER CIRCUITS
TRANSMISSION SOLENOID/TRS ASSEMBLY
POWERTRAIN CONTROL MODULE

Always perform the 45RFE/545RFE Pre-Diagnostic Troubleshooting Procedure before proceeding. (Refer to 21 - TRANSMISSION/TRANSAXLE/AUTOMATIC - 45RFE/545RFE - STANDARD PROCEDURE)

Theory of Operation

The Solenoid Switch Valve (SSV) controls the direction of the transmission fluid when the L/R Solenoid is energized. The SSV will be in the downshifted position in 1st gear, thus directing the fluid to the L/R clutch circuit. In 2nd through 5th gears, it will be in the upshifted position and directing the fluid into the torque converter clutch (TCC).

When shifting into 1st gear, a special hydraulic sequence is performed to ensure SSV movement into the downshifted position. The L/R Pressure Switch is monitored to confirm SSV movement. If movement is not confirmed (the L/R pressure switch does not close), EMCC is inhibited until SSV operation is confirmed.

Diagnostic Test

1. DETERMINING IF RELATED DTC'S ARE PRESENT

With the scan tool, check for other transmission DTC's

Is the DTC P0841 present also?

Yes >> Refer to the Transmission category and perform the appropriate symptom.

No >> Go To 2

2. CHECK IF THE DTC IS CURRENT

Perform a visual inspection of all connectors, wiring, and cooler connections before proceeding. Repair as necessary.

With the scan tool, Check the STARTS SINCE SET counter.

NOTE: This counter only applies to the last DTC set.

Is the STARTS SINCE SET counter for P1775 at 2 or less?

Yes >> Go To 3

No >> Go To 6

3. CHECK THE PCM AND WIRING

Turn the ignition off to the lock position.

Remove the Ignition Switch Feed fuse from the TIPM.

CAUTION: Removal of the Ignition Switch Feed fuse from the TIPM will prevent the vehicle from being started in gear.

WARNING: The Ignition Switch Feed fuse must be removed from the TIPM. Failure to do so can result in personal injury or death.

Install the Transmission Simulator, Miller tool #8333.

Ignition on, engine not running.

With the Transmission Simulator, turn the Pressure Switch selector switch to L/R.

With the scan tool, monitor the L/R Pressure Switch state while pressing the Pressure Switch Test button on the Transmission Simulator.

Did the state of the L/R Pressure Switch change while pressing the Pressure Switch Test button?

Yes >> Go To 4

No >> Go To 5

4. CHECK IF THE SOLENOID SWITCH VALVE STICKING

Turn the ignition off to the lock position.

Remove the Transmission Oil Pan per the Service Information.

Remove the Transmission Valve body per the Service Information.

Inspect the Solenoid Switch Valve and Plugs for sticking.

Is the Solenoid Switch Valve or Plugs sticking?

Yes >> Clean and inspect per the Service Information. Repair as necessary.
Perform 45RFE/545RFE TRANSMISSION VERIFICATION TEST - VER 1. (Refer to 21 - TRANSMISSION/TRANSAXLE/AUTOMATIC - 45RFE/545RFE - STANDARD PROCEDURE)

No >> Replace the Transmission Solenoid/TRS Assembly per the Service Information.
Perform 45RFE/545RFE TRANSMISSION VERIFICATION TEST - VER 1. (Refer to 21 - TRANSMISSION/TRANSAXLE/AUTOMATIC - 45RFE/545RFE - STANDARD PROCEDURE)

5. CHECK THE L/R PRESSURE SWITCH SENSE CIRCUIT FOR A SHORT TO ANOTHER CIRCUIT

Turn the ignition off to the lock position.

Disconnect the Transmission Solenoid/TRS Assembly harness connector.

Disconnect all PCM harness connectors.

Measure the resistance between the (T50) L/R Pressure Switch Sense circuit and all other circuits in the Transmission Solenoid/TRS Assembly harness connector.

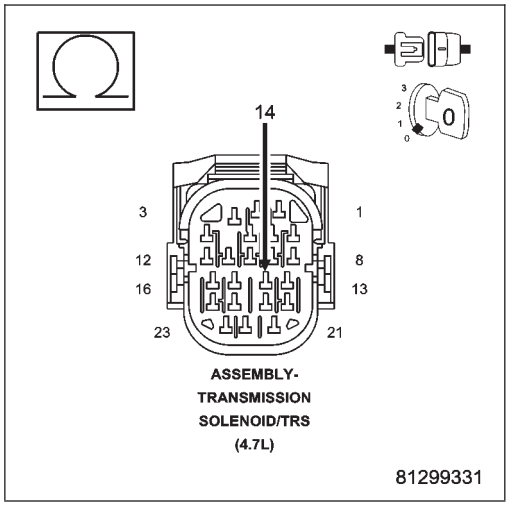

Is the resistance below 5.0 ohms between the (T50) L/R Pressure Switch Sense circuit and all other circuit(s) in the Transmission Solenoid/TRS Assembly harness connector?

Yes >> Repair the (T50) L/R Pressure Switch Sense circuit for a short to another circuit(s).
Perform 45RFE/545RFE TRANSMISSION VERIFICATION TEST - VER 1. (Refer to 21 - TRANSMISSION/TRANS-

AXLE/AUTOMATIC - 45RFE/545RFE - STANDARD PROCEDURE)

No >> Using the schematics as a guide, check the Powertrain Control Module (PCM) terminals for corrosion, damage, or terminal push out. Pay particular attention to all power and ground circuits. If no problems are found, replace the PCM per the Service Information. With the scan tool, perform QUICK LEARN.

Perform 45RFE/545RFE TRANSMISSION VERIFICATION TEST - VER 1. (Refer to 21 - TRANSMISSION/TRANSAXLE/AUTOMATIC - 45RFE/545RFE - STANDARD PROCEDURE)

6. CHECK WIRING AND CONNECTORS

The conditions necessary to set this DTC are not present at this time.

Using the schematics as a guide, inspect the wiring and connectors specific to this circuit.

Wiggle the wires while checking for shorted and open circuits.

With the scan tool, check the DTC EVENT DATA to help identify the conditions in which the DTC was set.

Where there any problems found?

Yes >> Repair as necessary.

Perform 45RFE/545RFE TRANSMISSION VERIFICATION TEST - VER 1. (Refer to 21 - TRANSMISSION/TRANSAXLE/AUTOMATIC - 45RFE/545RFE - STANDARD PROCEDURE)

No >> Test Complete.

P1776-SOLENOID SWITCH VALVE LATCHED IN LR POSITION

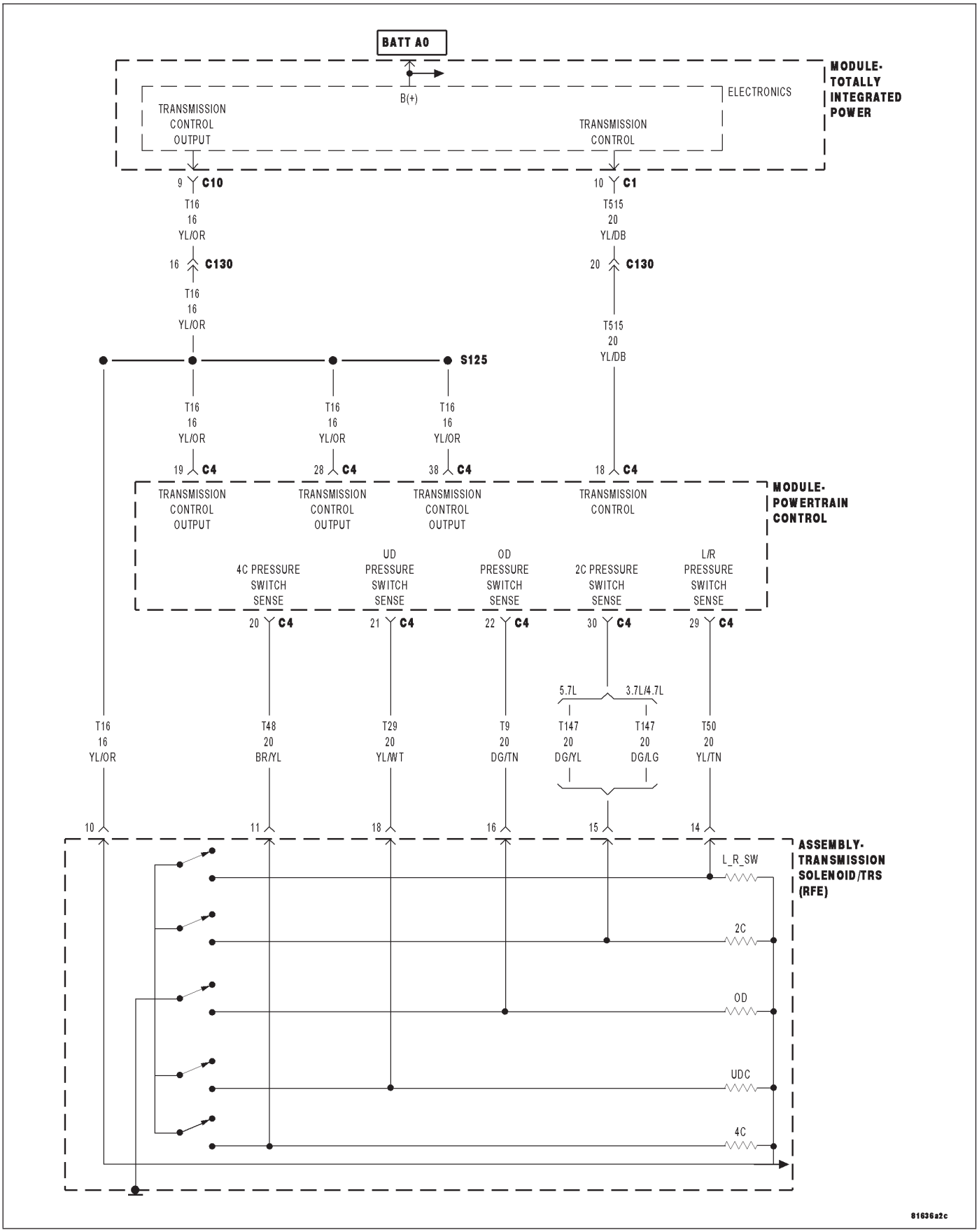

For a complete wiring diagram **Refer to Section 8W**.

- **When Monitored:**
  Continuously when performing partial or full EMCC - PEMCC or FEMCC.
- **Set Condition:**
  If the transmission senses the L/R pressure switch closing while performing PEMCC or FEMCC. This DTC will set after two unsuccessful attempts to perform PEMCC or FEMCC. This DTC can take up to five minutes of problem identification before illuminating the MIL.

Possible Causes
RELATED DTC P0841 PRESENT
LR PRESSURE SWITCH SENSE CIRCUIT OPEN
LR PRESSURE SWITCH SENSE CIRCUIT SHORT TO GROUND
SOLENOID SWITCH VALVE
POWERTRAIN CONTROL MODULE
INTERMITTENT WIRING AND CONNECTORS

Always perform the 45RFE/545RFE Pre-Diagnostic Troubleshooting Procedure before proceeding. (Refer to 21 - TRANSMISSION/TRANSAXLE/AUTOMATIC - 45RFE/545RFE - STANDARD PROCEDURE)

Theory of Operation

The Solenoid Switch Valve (SSV) controls the direction of the transmission fluid when the L/R Solenoid is energized. The SSV will be in the downshifted position in 1st gear, thus directing the fluid to the L/R clutch circuit. In 2nd through 5th gears, it will be in the upshifted position and directing the fluid into the torque converter clutch (TCC).

When in 2nd, 2nd Prime, 3rd, 4th, or 5th gear, the Torque Converter Clutch (TCC) can be engaged when certain conditions are met. The TCC piston is electronically modulated by increasing the duty cycle of the L/R solenoid until the torque converter slip difference (difference between engine and transmission input speed) is within 60 RPM. Then the L/R solenoid is fully energized (FEMCC - 100% duty cycle). Torque converter slip is monitored in FEMCC to ensure adequate clutch capacity.

Diagnostic Test

1. CHECK FOR RELATED DTCS

With the scan tool, check for other transmission DTCs.

Is the DTC P0841 present also?

Yes >> Refer to the Transmission category and perform the appropriate symptom.

No >> Go To 2

2. CHECK TO SEE IF DTC P1776 IS CURRENT

With the scan tool, Check the STARTS SINCE SET counter.

NOTE: NOTE: This counter only applies to the last DTC set.

Is the STARTS SINCE SET counter 2 or less?

Yes >> Go To 3

No >> Go To 7

3. CHECK THE PCM AND WIRING

Turn the ignition off to the lock position.

Remove the Ignition Switch Feed fuse from the TIPM.

CAUTION: Removal of the Ignition Switch Feed fuse from the TIPM will prevent the vehicle from being started in gear.

WARNING: The Ignition Switch Feed fuse must be removed from the TIPM. Failure to do so can result in personal injury or death.

Install the Transmission Simulator, Miller tool #8333.

Ignition on, engine not running.

With the Transmission Simulator, turn the Pressure Switch selector switch to the LR position.

With the scan tool, monitor the LR Pressure Switch state while pressing the Pressure Switch Test button on the Transmission Simulator.

Did the state of the LR Pressure Switch change while pressing the Pressure Switch Test button?

Yes >> Go To 4

No >> Go To 5

4. CHECK THE SOLENOID SWITCH VALVE

Remove the Valve Body per the Service Information.

Inspect the Solenoid Switch Valve and plugs for sticking in the bore and/or wear.

Were there any problems found?

Yes >> Clean and repair as necessary per the Service Information.
Perform 45RFE/545RFE TRANSMISSION VERIFICATION TEST - VER 1. (Refer to 21 - TRANSMISSION/TRANSAXLE/AUTOMATIC - 45RFE/545RFE - STANDARD PROCEDURE)

No >> Go To 7

5. CHECK THE LR PRESSURE SWITCH SENSE CIRCUIT FOR AN OPEN

Turn the ignition off to the lock position.

Disconnect the Transmission Simulator, Miller tool #8333.

Disconnect the PCM C4 harness connector and connect Miller tool #8815.

CAUTION: Do not probe the PCM harness connectors. Probing the PCM harness connectors will damage the PCM terminals resulting in poor terminal to pin connection. Install Miller tool #8815 to perform diagnosis.

Measure the resistance of the (T50) LR Pressure Switch Sense circuit between the Solenoid/TRS Assembly harness connector and the appropriate terminal of Miller tool #8815.

Is the resistance above 5.0 ohms?

Yes >> Repair the (T50) LR Pressure Switch Sense circuit for an open.
Perform 45RFE/545RFE TRANSMISSION VERIFICATION TEST - VER 1. (Refer to 21 - TRANSMISSION/TRANSAXLE/AUTOMATIC - 45RFE/545RFE - STANDARD PROCEDURE)

No >> Go To 6

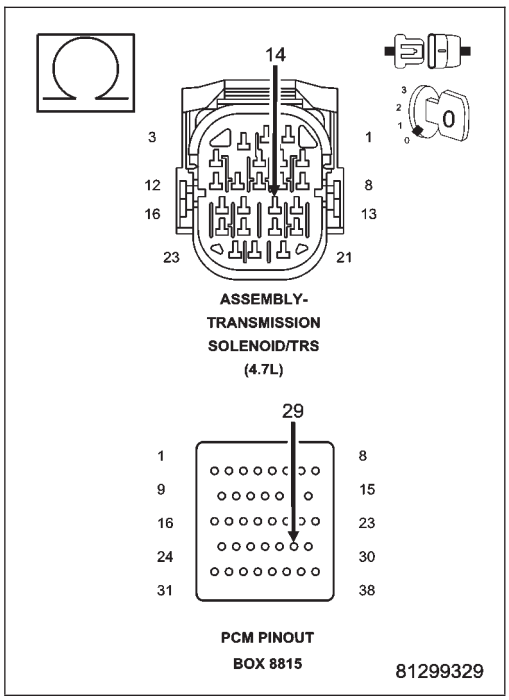

6. CHECK THE (T50) LR PRESSURE SWITCH SENSE CIRCUIT FOR A SHORT TO GROUND

Measure the resistance between ground and the (T50) LR Pressure Switch Sense circuit.

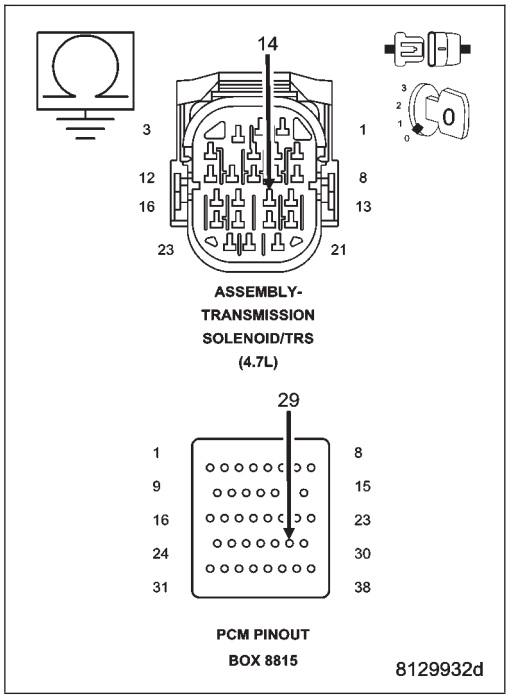

Is the resistance below 5.0 ohms?

Yes >> Repair the (T50) LR Pressure Switch Sense circuit for a short to ground.

Perform 45RFE/545RFE TRANSMISSION VERIFICATION TEST - VER 1. (Refer to 21 - TRANSMISSION/TRANSAXLE/AUTOMATIC - 45RFE/545RFE - STANDARD PROCEDURE)

No >> Using the schematics as a guide, check the Powertrain Control Module (PCM) terminals for corrosion, damage, or terminal push out. Pay particular attention to all power and ground circuits. If no problems are found, replace the PCM per the Service Information. With the scan tool, perform QUICK LEARN.

Perform 45RFE/545RFE TRANSMISSION VERIFICATION TEST - VER 1. (Refer to 21 - TRANSMISSION/TRANSAXLE/AUTOMATIC - 45RFE/545RFE - STANDARD PROCEDURE)

7. CHECK WIRING AND CONNECTORS

The conditions necessary to set this DTC are not present at this time.

Using the schematics as a guide, inspect the wiring and connectors specific to this circuit.

Wiggle the wires while checking for shorted and open circuits.

This DTC can also be set by the Solenoid Switch Valve intermittently sticking in it's bore under extreme temperature conditions, or by a worn Solenoid Switch Valve or plugs.

With the scan tool, check the DTC EVENT DATA to help identify the conditions in which the DTC was set.

Where there any problems found?

Yes >> Repair as necessary.

Perform 45RFE/545RFE TRANSMISSION VERIFICATION TEST - VER 1. (Refer to 21 - TRANSMISSION/TRANSAXLE/AUTOMATIC - 45RFE/545RFE - STANDARD PROCEDURE)

No >> Test Complete.

P1790-FAULT IMMEDIATELY AFTER SHIFT

For a complete wiring diagram **Refer to Section 8W**

- **When Monitored:**
  After a speed ratio error is stored.
- **Set Condition:**
  This DTC is set if the associated speed ratio DTC is stored within 1.3 seconds after a shift.

Possible Causes
FAULT AFTER SHIFT

Always perform the 45RFE/545RFE Pre-Diagnostic Troubleshooting Procedure before proceeding. (Refer to 21 - TRANSMISSION/TRANSAXLE/AUTOMATIC - 45RFE/545RFE - STANDARD PROCEDURE)

Theory of Operation

This DTC will only be stored along with a gear ratio DTC. If this DTC is set, it indicates a probable hydraulic (line pressure) or mechanical problem exists. Diagnosing the transmission should be based on the associated speed ratio DTC and mechanical causes should be considered first.

INTENDED GEAR	CLUTCHES APPLYING	RECOMENDED DTC
REVERSE	UD** - MS	P0738
1ST	UD - LR*	P0731
2ND	UD - 2C	P0732
2ND PRIME	UD - 4C	P1736
3RD	UD - OD/MS	P0733
4TH	OD/MS - 2C	P0734
5TH	OD/MS - 2C	P0735

* L/R is used only up to 150 output RPM in 1st gear. ** UD will show as applied in Reverse but the UD clutch is actually released. OD/MS is OD and/or MS.

Diagnostic Test

1. INTENDED GEAR TO APPLIED CLUTCH

With the scan tool, check the DTC EVENT DATA to determine in which gear the slippage occurred and the clutches that were applied.

With the DTC EVENT DATA, use the information provided above to determine the proper symptom for diagnosis.

View repair

Repair

Refer to the Transmission category and perform the appropriate symptom identified from the DTC EVENT DATA, intended gear, and applied clutches.

Perform 45RFE/545RFE TRANSMISSION VERIFICATION TEST - VER 1. (Refer to 21 - TRANSMISSION/TRANSAXLE/AUTOMATIC - 45RFE/545RFE - STANDARD PROCEDURE)

P1794-SPEED SENSOR GROUND ERROR

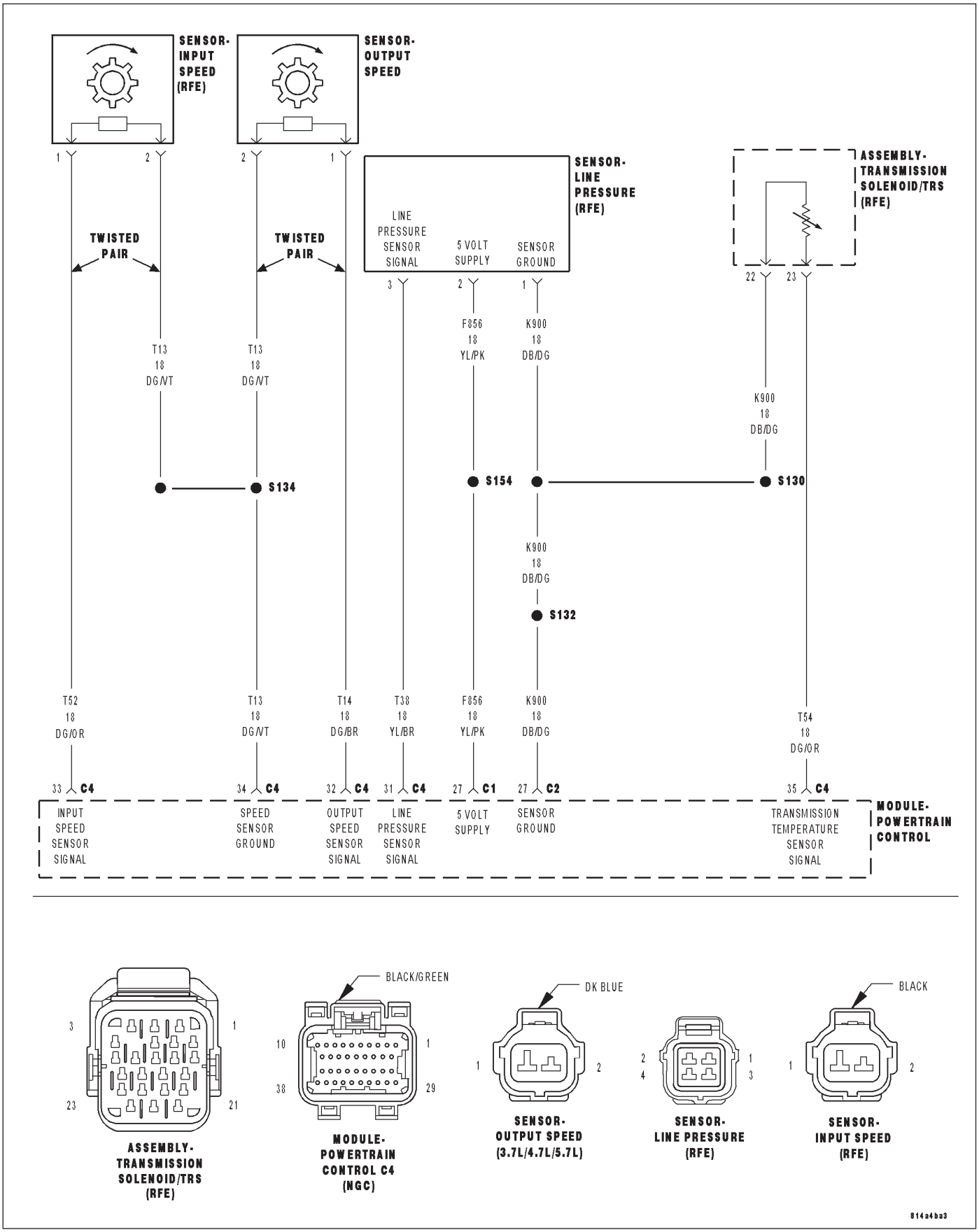

For a complete wiring diagram **Refer to Section 8W**

- **When Monitored:**
  The gear ratio is monitored continuously while the Transmission is in gear.
- **Set Condition:**
  After a controller reset in neutral and a ratio of input to output, of 1 to 2. This DTC can take up to five minutes of problem identification before illuminating the MIL.

Possible Causes
(T13) SPEED SENSOR GROUND CIRCUIT OPEN
(T13) SPEED SENSOR GROUND CIRCUIT SHORT TO GROUND
(T13) SPEED SENSOR GROUND CIRCUIT SHORT TO VOLTAGE
POWERTRAIN CONTROL MODULE

Always perform the 45RFE/545RFE Pre-Diagnostic Troubleshooting Procedure before proceeding. (Refer to 21 - TRANSMISSION/TRANSAXLE/AUTOMATIC - 45RFE/545RFE - STANDARD PROCEDURE)

Theory of Operation

The transmission system uses two speed sensors, one to measure input RPM and one to measure output RPM. These inputs are essential for proper transmission operation. Therefore, the integrity of this data is verified through the following checks:

1) When in gear, if the gear ratio does not compare to a known gear ratio, the corresponding in-gear trouble code is set (DTCs P0731–36).

2) An excessive change in input or output speeds indicating signal intermittent which may result in the DTCs P0715 and/or P0720 to set.

3) If the common speed sensor ground circuit is lost, both sensor inputs will read the signal from the input speed sensor at idle in neutral. Since the input speed sensor reads 60 teeth from the input clutch hub and the output speed sensor reads 30 teeth from the park gear, the result is an apparent speed ratio of 1:2 and may cause the DTC P1794 to set when at a stop.

Diagnostic Test

1. CHECK TO SEE IF DTC P1794 IS CURRENT

Engine Running, Shift lever in park.

With the scan tool, read the Transmission Output and Input Speed Sensor states.

Is the Output Speed Sensor reading twice the Input Speed Sensor reading?

Yes >> Go To 2

No >> Go To 6

2. PCM AND WIRING

Turn the ignition off to the lock position.

Remove the Ignition Switch Feed fuse from the TIPM.

CAUTION: Removal of the Ignition Switch Feed fuse from the TIPM will prevent the vehicle from being started in gear.

WARNING: The Ignition Switch Feed fuse must be removed from the TIPM. Failure to do so can result in personal injury or death.

Install the Transmission Simulator, Miller tool 8333.

With the Transmission Simulator, set the Input/Output Speed selector switch to the ″3000/1000″ position. Turn the Input/Output Speed switch to ″ON″.

Ignition on, engine not running.

With the scan tool, monitor the Input and Output Speed Sensor state.

Does the Input speed read 3000 RPM and the Output speed read 1000 RPM, within 50 RPM?

Yes >> Go To 6

No >> Go To 3

3. (T13) SPEED SENSOR GROUND CIRCUIT OPEN

Turn the ignition off to the lock position.

Disconnect the PCM C4 harness connector and connect Miller tool #8815.

Disconnect the Transmission Simulator, Miller tool #8333.

CAUTION: Do not probe the PCM harness connectors. Probing the PCM harness connectors will damage the PCM terminals resulting in poor terminal to pin connection. Install Miller tool #8815 to perform diagnosis.

Measure the resistance of the (T13) Speed Sensor Ground circuit between both Input and Output Speed Sensor harness connectors and the appropriate terminal of Miller tool #8815 to the.

Is the resistance above 5.0 ohms on any of the above measurements?

Yes >> Repair the (T13) Speed Sensor Ground circuit for an open.
Perform 45RFE/545RFE TRANSMISSION VERIFICATION TEST - VER 1. (Refer to 21 - TRANSMISSION/TRANSAXLE/AUTOMATIC - 45RFE/545RFE - STANDARD PROCEDURE)

No >> Go To 4

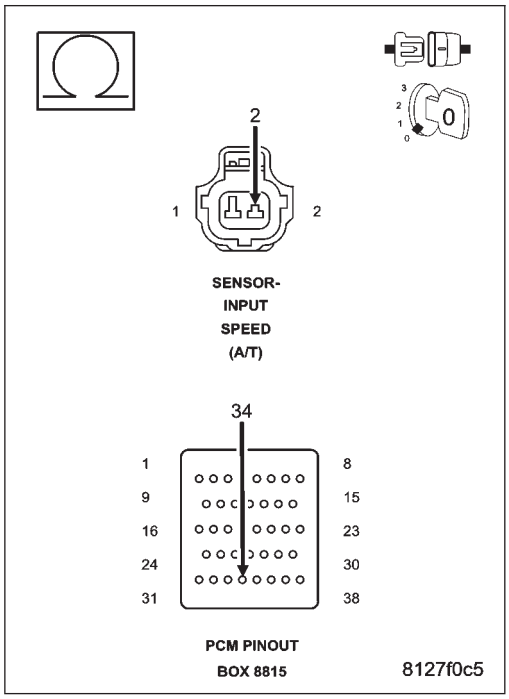

4. (T13) SPEED SENSOR GROUND CIRCUIT SHORT TO GROUND

Measure the resistance between ground and the (T13) Speed Sensor Ground circuit.

Is the resistance below 5.0 ohms?

Yes >> Repair the (T13) Speed Sensor Ground circuit for a short to ground.
Perform 45RFE/545RFE TRANSMISSION VERIFICATION TEST - VER 1. (Refer to 21 - TRANSMISSION/TRANSAXLE/AUTOMATIC - 45RFE/545RFE - STANDARD PROCEDURE)

No >> Go To 5

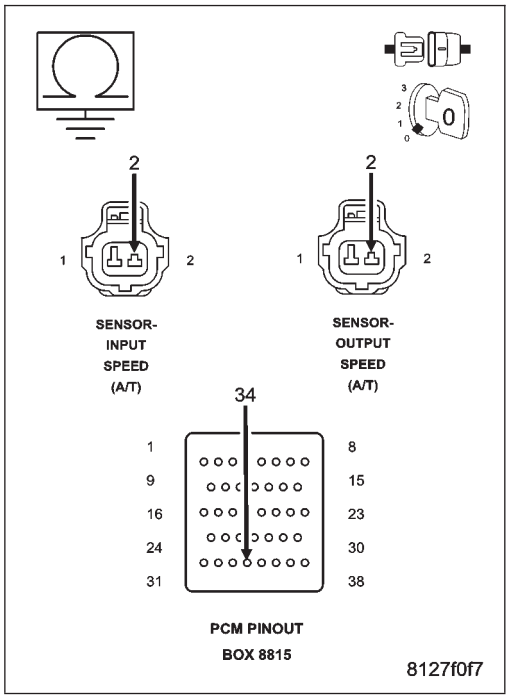

5. (T13) SPEED SENSOR GROUND CIRCUIT SHORT TO VOLTAGE

Ignition on, engine not running.

With the scan tool under TIPM, actuate the Transmission.

Measure the voltage of the (T13) Speed Sensor Ground circuit.

Is the voltage above 0.5 volt?

Yes >> Repair the (T13) Speed Sensor Ground circuit for a short to voltage.

Perform 45RFE/545RFE TRANSMISSION VERIFICATION TEST - VER 1. (Refer to 21 - TRANSMISSION/TRANSAXLE/AUTOMATIC - 45RFE/545RFE - STANDARD PROCEDURE)

No >> Using the schematics as a guide, check the Powertrain Control Module (PCM) terminals for corrosion, damage, or terminal push out. Pay particular attention to all power and ground circuits. If no problems are found, replace the PCM per the Service Information. With the scan tool, perform QUICK LEARN.

Perform 45RFE/545RFE TRANSMISSION VERIFICATION TEST - VER 1. (Refer to 21 - TRANSMISSION/TRANSAXLE/AUTOMATIC - 45RFE/545RFE - STANDARD PROCEDURE)

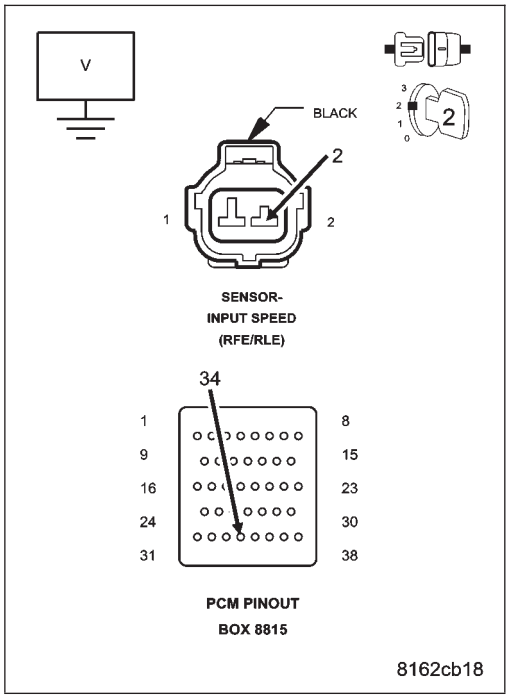

6. INTERMITTENT WIRING AND CONNECTORS

The conditions necessary to set this DTC are not present at this time.

Using the schematics as a guide, inspect the wiring and connectors specific to this circuit.

Wiggle the wires while checking for shorted and open circuits.

With the scan tool, check the DTC EVENT DATA to help identify the conditions in which the DTC was set.

Where there any problems found?

Yes >> Repair as necessary.

Perform 45RFE/545RFE TRANSMISSION VERIFICATION TEST - VER 1. (Refer to 21 - TRANSMISSION/TRANSAXLE/AUTOMATIC - 45RFE/545RFE - STANDARD PROCEDURE)

No >> Test Complete.

P2700-INADEQUATE ELEMENT VOLUME LR

For a complete wiring diagram **Refer to Section 8W**.

- **When Monitored:**
  Whenever the engine is running. The LR clutch volume index (CVI) is updated during a 3-1 or 2-1 manual downshift with throttle angle below 5 degrees. Transmission temperature must be at least 43° C (110° F).
- **Set Condition:**
  When the LR clutch volume index (CVI) falls below 16.

Possible Causes
HYDRAULIC LEAK IN THE VALVE BODY
BROKEN L/R CLUTCH PISTON RETURN SPRING OR SPRING RETAINERS
BROKEN L/R ACCUMULATOR SPRING(S)
TRANSMISSION SOLENOID/TRS ASSEMBLY
POWERTRAIN CONTROL MODULE

Always perform the 45RFE/545RFE Pre-Diagnostic Troubleshooting procedure before proceeding. (Refer to 21 - TRANSMISSION/TRANSAXLE/AUTOMATIC - 45RFE/545RFE - STANDARD PROCEDURE)

Theory of Operation

The volumes of the transmission fluid needed to apply the friction elements are continuously monitored and learned for adaptive controls. As the clutch friction material wears, the volume of fluid needed to apply the clutch increases. Certain transmission mechanical problems can cause near-zero learned volumes resulting in setting a DTC. The DTC will usually set with other DTC's, which indicates an internal transmission problem.

Diagnostic Test

1. OTHER DTCS PRESENT

With the scan tool, check for other transmission DTCs.

Are there any Pressure Switch Sense circuit DTCs present also?

Yes >> Refer to the Transmission category and perform the appropriate symptom.

No >> Go To 2

2. CHECK LR CLUTCH VOLUME INDEX

With the scan tool, erase DTCs.

Start the engine and warm the transmission.

NOTE: The TRANS TEMP DEG must be at least 43° C or 110° F before performing the following steps.

Drive the vehicle and perform at least ten 3-1 manual downshifts at closed throttle from speeds of about 32 Kmh or 20 MPH.

With the scan tool, read the LR CL VOL INDEX.

Is the LR CL VOL INDEX below 20?

Yes >> Go To 3

No >> Go To 5

3. L/R CLUTCH CIRCUIT LEAKS IN THE VALVE BODY

Turn the ignition off to the lock position.

Remove the transmission oil pan per the Service Information.

Remove the valve body per the service information.

Check condition of the L/R accumulator springs.

Look for possible leak paths into the L/R clutch hydraulics circuit within the valve body.

Were any problems found?

Yes >> Repair as necessary.

Perform 45RFE/545RFE TRANSMISSION VERIFICATION TEST - VER 1. (Refer to 21 - TRANSMISSION/TRANSAXLE/AUTOMATIC - 45RFE/545RFE - STANDARD PROCEDURE)

No >> Go To 4

4. AIR CHECK L/R CLUTCH CIRCUITS

Perform an air check on the L/R Clutch circuit per the Service Information.

Watch and listen for L/R Clutch piston movement.

Does the L/R piston stroke and return properly?

Yes >> Replace the Transmission/TRS Solenoid Assembly per the service information. With the scan tool, perform Quick Learn.

Perform 45RFE/545RFE TRANSMISSION VERIFICATION TEST - VER 1. (Refer to 21 - TRANSMISSION/TRANSAXLE/AUTOMATIC - 45RFE/545RFE - STANDARD PROCEDURE)

No >> Repair internal transmission as necessary. Pay attention to the components related to the L/R clutch. A broken or weak L/R clutch return spring, Accumulator Spring, and/or dislocated snap ring could cause this problem.

Perform 45RFE/545RFE TRANSMISSION VERIFICATION TEST - VER 1. (Refer to 21 - TRANSMISSION/TRANSAXLE/AUTOMATIC - 45RFE/545RFE - STANDARD PROCEDURE)

5. VERIFY PCM OPERATION

NOTE: The TRANS TEMP DEG must be at least 43° C or 110° F before performing the following steps.

Perform eight learnable starts. A learnable start is defined as follows: Start engine. From a standstill, accelerate lightly to 80 Kmh or 50 MPH, then brake lightly to a stop. Turn off engine.

With the scan tool, record the CL VOL INDEX (CVI) for all clutches

With the scan tool, perform a BATTERY DISCONNECT.

With the scan tool, read the CVI's and compare them to the readings recorded before the BATTERY DISCONNECT.

Are any of the CVI's less than 5 or different than before the BATTERY DISCONNECT?

Yes >> Using the schematics as a guide, check the Powertrain Control Module (PCM) terminals for corrosion, damage, or terminal push out. Pay particular attention to all power and ground circuits. If no problems are found, replace the PCM per the Service Information. With the scan tool, perform QUICK LEARN.

Perform 45RFE/545RFE TRANSMISSION VERIFICATION TEST - VER 1. (Refer to 21 - TRANSMISSION/TRANSAXLE/AUTOMATIC - 45RFE/545RFE - STANDARD PROCEDURE)

No >> Test Complete.

P2701-INADEQUATE ELEMENT VOLUME 2C

For a complete wiring diagram **Refer to Section 8W**.

- **When Monitored:**
  Whenever the engine is running. The 2C clutch volume index (CVI) is updated during a 3-2 kickdown with throttle angle between 10 and 54 degrees. Transmission temperature must be at least 43° C (110° F).
- **Set Condition:**
  When the 2C CVI falls below 5.

Possible Causes
HYDRAULIC LEAK IN THE VALVE BODY
BROKEN 2C CLUTCH PISTON RETURN SPRING / DISLODGED SNAP RING
BROKEN ACCUMULATOR SPRING(S)
TRANSMISSION SOLENOID/TRS ASSEMBLY
POWERTRAIN CONTROL MODULE

Always perform the 45RFE/545RFE Pre-Diagnostic Troubleshooting procedure before proceeding. (Refer to 21 - TRANSMISSION/TRANSAXLE/AUTOMATIC - 45RFE/545RFE - STANDARD PROCEDURE)

Theory of Operation

The volumes of the transmission fluid needed to apply the friction elements are continuously monitored and learned for adaptive controls. As the clutch friction material wears, the volume of fluid needed to apply the clutch increases. Certain transmission mechanical problems can cause near-zero learned volumes resulting in setting a DTC. The DTC will usually set with other DTC's, which indicates an internal transmission problem.

Diagnostic Test

1. OTHER DTCS PRESENT

With the scan tool, check for other transmission DTCs.

Are there any Pressure Switch Sense circuit DTCs present also?

Yes >> Refer to the Transmission category and perform the appropriate symptom.

No >> Go To 2

2. CHECK 2C CLUTCH VOLUME INDEX

With the scan tool, erase Transmission DTCs.

Drive the vehicle at about 80 Kmh or 50 MPH, then depress the OD off button. This will put the vehicle into third gear.

NOTE: The TRANS TEMP DEG must be at least 43° C or 110° F before performing the following steps.

Perform at least ten 3-2 kickdowns by depressing the throttle between 10 and 54 TPS DEGREES at speeds of about 80 Kmh or 50 MPH.

With the scan tool, read the 2C CL VOL INDEX.

Is the 2C CL VOL INDEX below 10?

Yes >> Go To 3

No >> Go To 5

3. 2C CLUTCH CIRCUIT LEAKS IN THE VALVE BODY

Turn the ignition off to the lock position.

Remove the transmission oil pan per the Service Information.

Remove the valve body per the service information.

Check condition of the 2C accumulator springs.

Look for possible leak paths into the 2C clutch hydraulics circuit within the valve body.

Were any problems found?

Yes >> Repair as necessary.

Perform 45RFE/545RFE TRANSMISSION VERIFICATION TEST - VER 1. (Refer to 21 - TRANSMISSION/TRANSAXLE/AUTOMATIC - 45RFE/545RFE - STANDARD PROCEDURE)

No >> Go To 4

4. AIR CHECK 2C CLUTCH CIRCUIT

Turn the ignition off to the lock position.

Perform an air check on the 2C Clutch circuit per the Service Information.

Watch and listen for 2C Clutch piston movement.

Dose the piston stroke and return properly?

Yes >> Replace the Transmission/TRS Solenoid Assembly per the service information. With the scan tool, perform Quick Learn.

Perform 45RFE/545RFE TRANSMISSION VERIFICATION TEST - VER 1. (Refer to 21 - TRANSMISSION/TRANSAXLE/AUTOMATIC - 45RFE/545RFE - STANDARD PROCEDURE)

No >> Repair internal transmission as necessary. Pay attention to the components related to the 2C clutch. A broken or dislodged 2C return spring, snap ring or broken 2C Accumulator Spring could cause this problem.

Perform 45RFE/545RFE TRANSMISSION VERIFICATION TEST - VER 1. (Refer to 21 - TRANSMISSION/TRANSAXLE/AUTOMATIC - 45RFE/545RFE - STANDARD PROCEDURE)

5. VERIFY PCM OPERATION

NOTE: The TRANS TEMP DEG must be at least 43° C or 110° F before performing the following steps.

Perform eight learnable starts. A learnable start is defined as follows: Start engine. From a standstill, accelerate lightly to 80 Kmh or 50 MPH, then brake lightly to a stop. Turn off engine.

With the scan tool, record the CL VOL INDEX (CVI) for all clutches

With the scan tool, perform a BATTERY DISCONNECT.

With the scan tool, read the CVI's and compare them to the readings recorded before the BATTERY DISCONNECT.

Are any of the CVI's less than 5 or different than before the BATTERY DISCONNECT?

Yes >> Using the schematics as a guide, check the Powertrain Control Module (PCM) terminals for corrosion, damage, or terminal push out. Pay particular attention to all power and ground circuits. If no problems are found, replace the PCM per the Service Information. With the scan tool, perform QUICK LEARN.

Perform 45RFE/545RFE TRANSMISSION VERIFICATION TEST - VER 1. (Refer to 21 - TRANSMISSION/TRANSAXLE/AUTOMATIC - 45RFE/545RFE - STANDARD PROCEDURE)

No >> Test Complete.

P2702-INADEQUATE ELEMENT VOLUME OD

For a complete wiring diagram **Refer to Section 8W**.

- **When Monitored:**
  Whenever the engine is running. The OD clutch volume index (CVI) is updated during a 2-3 upshift with throttle angle between 10 and 54 degrees. Transmission temperature must be at least 43° C (110° F).
- **Set Condition:**
  When the OD CVI falls below 5.

Possible Causes
HYDRAULIC LEAK IN THE VALVE BODY
BROKEN OD ACCUMULATOR SPRING
BROKEN OD/REV PISTON BELLEVILLE SPRING OR DISLODGED SNAP RING
INTERNAL LEAKAGE IN PUMP ASSEMBLY
TRANSMISSION SOLENOID/TRS ASSEMBLY
POWERTRAIN CONTROL MODULE

Always perform the 45RFE/545RFE Pre-Diagnostic Troubleshooting procedure before proceeding. (Refer to 21 - TRANSMISSION/TRANSAXLE/AUTOMATIC - 45RFE/545RFE - STANDARD PROCEDURE)

Theory of Operation

The volumes of the transmission fluid needed to apply the friction elements are continuously monitored and learned for adaptive controls. As the clutch friction material wears, the volume of fluid needed to apply the clutch increases. Certain transmission mechanical problems can cause near-zero learned volumes resulting in setting a DTC. The DTC will usually set with other DTC's, which indicates an internal transmission problem.

Diagnostic Test

1. OTHER DTCS PRESENT

With the scan tool, check for other transmission DTCs.

Are there any Pressure Switch Sense circuit DTCs present also?

Yes >> Refer to the Transmission category and perform the appropriate symptom.

No >> Go To 2

2. CHECK THE OD CLUTCH VOLUME INDEX

With the scan tool, erase DTCs.

NOTE: The TRANS TEMP DEG must be at least 43° C or 110° F before performing the following steps.
Drive the vehicle and perform at least ten 2-3 upshifts with the TPS degree between 10 and 54.
With the scan tool, read the OD CL VOL INDEX.

Is the OD CL VOL INDEX below 10?

Yes >> Go To 3

No >> Go To 5

3. OD CLUTCH CIRCUIT LEAKS IN THE VALVE BODY

Turn the ignition off to the lock position.

Remove the transmission oil pan per the Service Information.

Remove the valve body per the service information.

Check condition of the OD accumulator spring.

Look for possible leak paths into the OD clutch hydraulics circuit within the valve body.

Were any problems found?

Yes >> Repair as necessary.

Perform 45RFE/545RFE TRANSMISSION VERIFICATION TEST - VER 1. (Refer to 21 - TRANSMISSION/TRANSAXLE/AUTOMATIC - 45RFE/545RFE - STANDARD PROCEDURE)

No >> Go To 4

4. AIR CHECK OD CLUTCH CIRCUIT

Perform an air check on the OD Clutch circuit per the Service Information.

Watch and listen for OD Clutch piston movement.

Air check all other pump passages and watch for air leakage into the OD clutch passage.

NOTE: There is a bleed orifice between the OD and Reverse Clutch passages, so a small amount of air leakage from Reverse to OD is normal.

Were any problems found?

Yes >> Repair internal transmission. Pay attention to the OD Clutch. Broken or weak return spring or a dislocated snap ring could cause this problem. If no problems were found in the OD clutch, or if leakage into the OD passage was noted, replace Pump Assembly per the Service Information.

Perform 45RFE/545RFE TRANSMISSION VERIFICATION TEST - VER 1. (Refer to 21 - TRANSMISSION/TRANSAXLE/AUTOMATIC - 45RFE/545RFE - STANDARD PROCEDURE)

No >> Replace the Transmission/TRS Solenoid Assembly per the service information. With the scan tool, perform Quick Learn.

Perform 45RFE/545RFE TRANSMISSION VERIFICATION TEST - VER 1. (Refer to 21 - TRANSMISSION/TRANSAXLE/AUTOMATIC - 45RFE/545RFE - STANDARD PROCEDURE)

5. VERIFY PCM OPERATION

NOTE: The TRANS TEMP DEG must be at least 43° C or 110° F before performing the following steps.

Perform eight learnable starts. A learnable start is defined as follows: Start engine. From a standstill, accelerate lightly to 80 Kmh or 50 MPH, then brake lightly to a stop. Turn off engine.

With the scan tool, record the CL VOL INDEX (CVI) for all clutches.

With the scan tool, perform a BATTERY DISCONNECT.

With the scan tool, read the CVI's and compare them to the readings recorded before the BATTERY DISCONNECT.

Are any of the CVI's less than 5 or different than before the BATTERY DISCONNECT?

Yes >> Using the schematics as a guide, check the Powertrain Control Module (PCM) terminals for corrosion, damage, or terminal push out. Pay particular attention to all power and ground circuits. If no problems are found, replace the PCM per the Service Information. With the scan tool, perform QUICK LEARN.

Perform 45RFE/545RFE TRANSMISSION VERIFICATION TEST - VER 1. (Refer to 21 - TRANSMISSION/TRANSAXLE/AUTOMATIC - 45RFE/545RFE - STANDARD PROCEDURE)

No >> Test Complete.

P2703- INADEQUATE ELEMENT VOLUME UD

For a complete wiring diagram **Refer to Section 8W**.

- **When Monitored:**
  Whenever the engine is running. The UD clutch volume index (CVI) is updated during a 4-3 kickdown with throttle angle between 10 and 54 degrees. Transmission temperature must be at least 43° C (110° F).
- **Set Condition:**
  When the UD CVI falls below 11.

Possible Causes
BROKEN UD ACCUMULATOR SPRING(S)
BROKEN UD CLUTCH PISTON SPRING OR DISLODGED SNAP RING
INTERNAL LEAKAGE IN PUMP OR VALVE BODY ASSEMBLIES
TRANSMISSION SOLENOID/TRS ASSEMBLY
POWERTRAIN CONTROL MODULE

Always perform the 45RFE/545RFE Pre-Diagnostic Troubleshooting procedure before proceeding. (Refer to 21 - TRANSMISSION/TRANSAXLE/AUTOMATIC - 45RFE/545RFE - STANDARD PROCEDURE)

Theory of Operation

The volumes of the transmission fluid needed to apply the friction elements are continuously monitored and learned for adaptive controls. As the clutch friction material wears, the volume of fluid needed to apply the clutch increases. Certain transmission mechanical problems can cause near-zero learned volumes resulting in setting a DTC. The DTC will usually set with other DTC's, which indicates an internal transmission problem.

Diagnostic Test

1. OTHER DTCS PRESENT

With the scan tool, check for other transmission DTCs.

Are there any Pressure Switch Sense circuit DTCs present also?

Yes >> Refer to the Transmission category and perform the appropriate symptom.

No >> Go To 2

2. CHECK UD CLUTCH VOLUME INDEX

With the scan tool, erase Transmission DTCs.

NOTE: The TRANS TEMP DEG must be at least 43° C or 110° F before performing the following steps.

Drive the vehicle and perform at least ten 4-3 kickdowns by depressing the throttle between 30 and 54 TPS degrees at speeds about 80 Kmh or 50 MPH.

With the scan tool, read the UD clutch volume index (CVI).

Is the UD CVI below 10?

Yes >> Go To 3

No >> Go To 5

3. UD CLUTCH CIRCUIT LEAKS IN THE VALVE BODY

Turn the ignition off to the lock position.

Remove the transmission oil pan and valve body per the Service Information.

Check the condition of the UD accumulator springs.

Look for possible leak paths into the UD clutch hydraulics circuit within the valve body.

Were there any problems found?

Yes >> Repair as necessary.

Perform 45RFE/545RFE TRANSMISSION VERIFICATION TEST - VER 1. (Refer to 21 - TRANSMISSION/TRANSAXLE/AUTOMATIC - 45RFE/545RFE - STANDARD PROCEDURE)

No >> Go To 4

4. AIR CHECK UD CLUTCH CIRCUIT

Perform an air check on the UD Clutch circuit per the Service Information.

Watch and listen for UD Clutch piston movement.

Air check all other pump passages for air leakage into the UD Clutch circuit.

Were any problems found?

Yes >> Repair internal transmission. Pay attention to components related to the UD clutch. Broken or weak return spring or a dislocated snap ring. If no trouble is found in UD clutch component or UD clutch leakage was noted in passage, replace the Pump Assembly.

Perform 45RFE/545RFE TRANSMISSION VERIFICATION TEST - VER 1. (Refer to 21 - TRANSMISSION/TRANSAXLE/AUTOMATIC - 45RFE/545RFE - STANDARD PROCEDURE)

No >> Replace the Transmission/TRS Solenoid Assembly per the service information. With the scan tool, perform Quick Learn.

Perform 45RFE/545RFE TRANSMISSION VERIFICATION TEST - VER 1. (Refer to 21 - TRANSMISSION/TRANSAXLE/AUTOMATIC - 45RFE/545RFE - STANDARD PROCEDURE)

5. VERIFY PCM OPERATION

NOTE: The TRANS TEMP DEG must be at least 43° C or 110° F before performing the following steps.

Perform eight learnable starts. A learnable start is defined as follows: Start engine. From a standstill, accelerate lightly to 80 Kmh or 50 MPH, then brake lightly to a stop. Turn off engine.

With the scan tool, record the clutch volume index (CVI) for all clutches.

With the scan tool, perform a BATTERY DISCONNECT.

With the scan tool, read the CVI's and compare them to the readings recorded before the BATTERY DISCONNECT.

Are any of the CVI's less than 5 or different than before the BATTERY DISCONNECT?

Yes >> Using the schematics as a guide, check the Powertrain Control Module (PCM) terminals for corrosion, damage, or terminal push out. Pay particular attention to all power and ground circuits. If no problems are found, replace the PCM per the Service Information. With the scan tool, perform QUICK LEARN.

Perform 45RFE/545RFE TRANSMISSION VERIFICATION TEST - VER 1. (Refer to 21 - TRANSMISSION/TRANSAXLE/AUTOMATIC - 45RFE/545RFE - STANDARD PROCEDURE)

No >> Test Complete.

P2704-INADEQUATE ELEMENT VOLUME 4C

For a complete wiring diagram **Refer to Section 8W**.

- **When Monitored:**
  Whenever the engine is running. The 4C clutch volume index (CVI) is updated during a 3-4 upshift with throttle angle between 10 and 54 degrees. Transmission temperature must be at least 43° C (110° F).
- **Set Condition:**
  When the 4C CVI falls below 5.

Possible Causes
BROKEN 4C RETURN SPRING OR DISLODGED SNAP RING
BROKEN 4C ACCUMULATOR SPRING(S)
HYDRAULIC LEAK IN THE VALVE BODY
TRANSMISSION SOLENOID/TRS ASSEMBLY
POWERTRAIN CONTROL MODULE

Always perform the 45RFE/545RFE Pre-Diagnostic Troubleshooting procedure before proceeding. (Refer to 21 - TRANSMISSION/TRANSAXLE/AUTOMATIC - 45RFE/545RFE - STANDARD PROCEDURE)

Theory of Operation

The volumes of the transmission fluid needed to apply the friction elements are continuously monitored and learned for adaptive controls. As the clutch friction material wears, the volume of fluid needed to apply the clutch increases. Certain transmission mechanical problems can cause near-zero learned volumes resulting in setting a DTC. The DTC will usually set with other DTC's, which indicates an internal transmission problem.

Diagnostic Test

1. CHECK THE 4C CLUTCH VOLUME

With the scan tool, record the 4C clutch volume index (CVI) and erase DTC's.

Perform at least 10, 3-4 upshifts with the throttle between 10 and 54 degrees. The Transmission temperature must be at least 43° C or 110° F.

With the scan tool, read the 4C CVI.

Is the current 4C CVI below 10?

Yes >> Go To 2

No >> Go To 5

2. DTC P0876 PRESENT

With the scan tool, read DTCs.

NOTE: The DTC P0876 must also be set with P2704 in order for this test to be valid.

Is the DTC P0876 also present?

Yes >> Replace the Transmission Solenoid/TRS Assembly per the Service Information.
Perform 45RFE/545RFE TRANSMISSION VERIFICATION TEST - VER 1. (Refer to 21 - TRANSMISSION/TRANSAXLE/AUTOMATIC - 45RFE/545RFE - STANDARD PROCEDURE)

No >> Go To 3

3. 4C CLUTCH CIRCUIT LEAKS IN THE VALVE BODY

Turn the ignition off to the lock position.

Remove the transmission oil pan per the Service Information.

Remove the valve body per the Service Information.

Check condition of the 4C accumulator springs.

Look for possible leak paths into the 4C clutch hydraulics circuit within the valve body.

Were any problems found?

Yes >> Repair as necessary.

Perform 45RFE/545RFE TRANSMISSION VERIFICATION TEST - VER 1. (Refer to 21 - TRANSMISSION/TRANSAXLE/AUTOMATIC - 45RFE/545RFE - STANDARD PROCEDURE)

No >> Go To 4

4. AIR CHECK 4C CLUTCH CIRCUIT

Perform an air check on the 4C Clutch circuit per the Service Information.

Listen for proper 4C Clutch piston movement.

Were any problems found?

Yes >> Repair Internal transmission as necessary. Pay attention to the mechanical components related to the 4th clutch. A broken or weak return spring or a dislocated snap ring could cause this problem.

Perform 45RFE/545RFE TRANSMISSION VERIFICATION TEST - VER 1. (Refer to 21 - TRANSMISSION/TRANSAXLE/AUTOMATIC - 45RFE/545RFE - STANDARD PROCEDURE)

No >> Replace the Transmission Solenoid/TRS Assembly per the service information. With the scan tool, perform Quick Learn.

Perform 45RFE/545RFE TRANSMISSION VERIFICATION TEST - VER 1. (Refer to 21 - TRANSMISSION/TRANSAXLE/AUTOMATIC - 45RFE/545RFE - STANDARD PROCEDURE)

5. VERIFY PCM OPERATION

Perform eight learnable starts. A learnable start is defined as follows: Start engine. From a standstill, accelerate lightly to 50 MPH, then brake lightly to a stop. Turn off engine.

With the scan tool, record Transmission CL VOL INDEX (CVI) for all clutches.

With the scan tool, perform a BATTERY DISCONNECT.

With the scan tool, read the CVI's and compare them to the reading recorded before the BATTERY DISCONNECT.

Are any of the CVI's less than 5 or are they different than before the battery disconnect?

Yes >> Using the schematics as a guide, check the Powertrain Control Module (PCM) terminals for corrosion, damage, or terminal push out. Pay particular attention to all power and ground circuits. If no problems are found, replace the PCM per the Service Information. With the scan tool, perform QUICK LEARN.

Perform 45RFE/545RFE TRANSMISSION VERIFICATION TEST - VER 1. (Refer to 21 - TRANSMISSION/TRANSAXLE/AUTOMATIC - 45RFE/545RFE - STANDARD PROCEDURE)

No >> Test Complete.

P2706-MS SOLENOID CIRCUIT

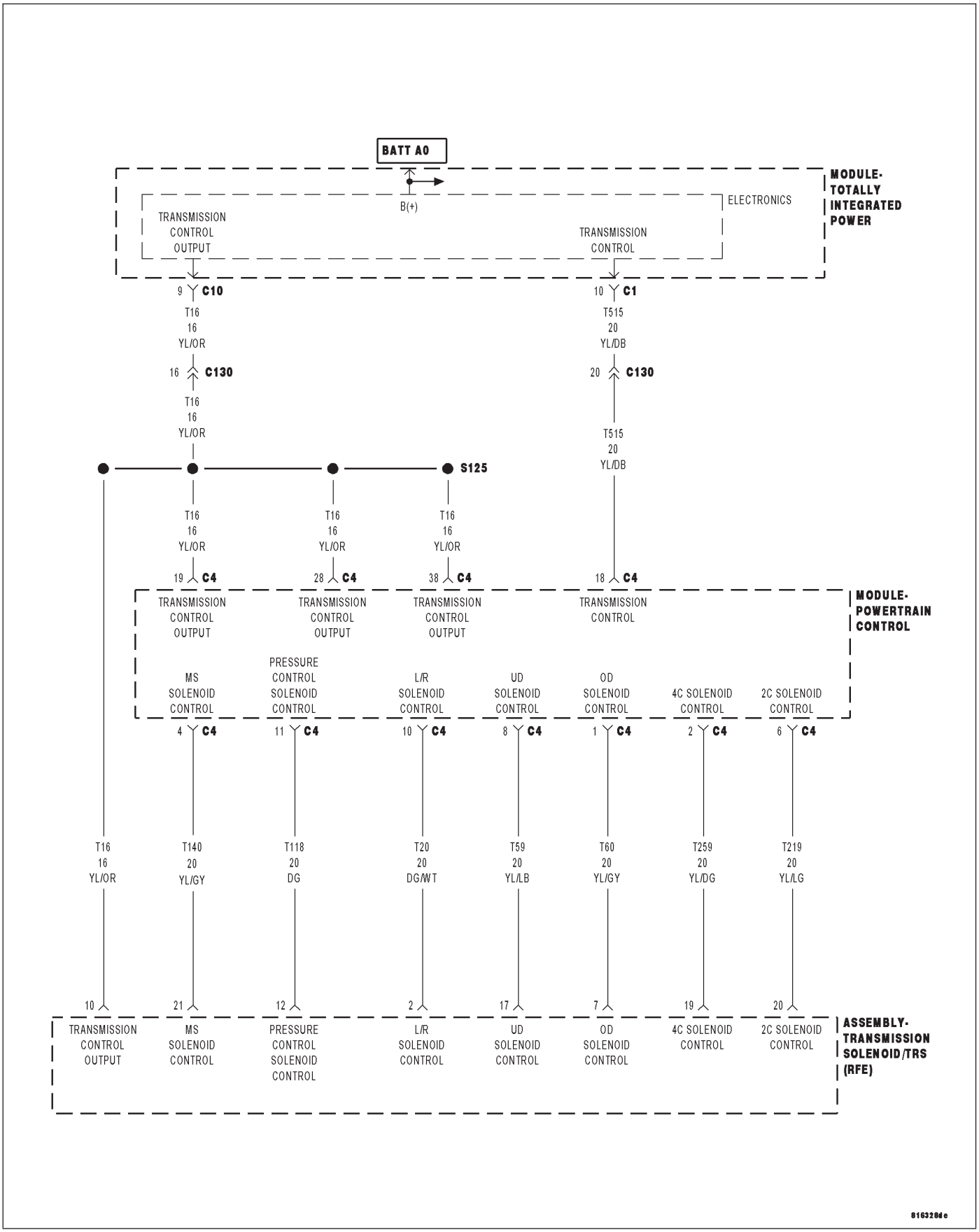

For a complete wiring diagram **Refer to Section 8W**.

- **When Monitored:**
  Initially at power-up, then every 10 seconds thereafter. The solenoid circuits will also be tested immediately after a gear ratio or pressure switch error is detected.
- **Set Condition:**
  After three consecutive solenoid continuity test failures, or one failure if test is run in response to a gear ratio or pressure switch error. **Note: This DTC is strictly an electrical fault and does not apply to any internal transmission failures.**

Possible Causes
RELATED TCM POWER INPUT DTCS PRESENT
(T118) MS SOLENOID CONTROL CIRCUIT SHORT TO OTHER CIRCUITS
(T118) MS SOLENOID CONTROL CIRCUIT OPEN
(T118) MS SOLENOID CONTROL CIRCUIT SHORT TO GROUND
TRANSMISSION SOLENOID/TRS ASSEMBLY
POWERTRAIN CONTROL MODULE

Always perform the 45RFE/545RFE Pre-Diagnostic Troubleshooting Procedure before proceeding. (Refer to 21 - TRANSMISSION/TRANSAXLE/AUTOMATIC - 45RFE/545RFE - STANDARD PROCEDURE)

Theory of Operation

The Transmission Control System uses six electronically controlled solenoids that allow hydraulic fluid to be applied to various friction elements (clutches), which enables the gear requested. The continuity of each solenoid circuit is periodically tested. Each inactive solenoid is turned on for a few milliseconds, then off. Each active solenoid is turned off for a few milliseconds, then on. This pulsing of voltage to the solenoid causes an inductive spike which can be sensed by the Transmission Control System. If an inductive spike is not sensed by the Transmission Control System during the continuity check, it is tested again. If the test fails three consecutive times, the appropriate Diagnostic Trouble Code (DTC) is set. If the solenoid test is run in response to a gear ratio or pressure switch error, one failure will result in setting the appropriate DTC. **Note: This DTC is strictly an electrical fault and does not apply to any internal transmission failures.**

Diagnostic Test

1. RELATED TCM POWER INPUT DTCS PRESENT

With the scan tool, check for other transmission DTCs.

Are there any TCM Power Input DTCs present?

Yes >> Refer to the Transmission category and perform the appropriate symptom.

No >> Go To 2

2. TRANSMISSION SOLENOID/TRS ASSEMBLY

Turn the ignition off to the lock position.

Remove the Ignition Switch Feed fuse from the TIPM.

CAUTION: Removal of the Ignition Switch Feed fuse from the TIPM will prevent the vehicle from being started in gear.

WARNING: The Ignition Switch Feed fuse must be removed from the TIPM. Failure to do so can result in personal injury or death.

Install Transmission Simulator, Miller tool #8333.

Ignition on, engine not running.

With the scan tool, actuate the MS Solenoid.

Monitor the MS Solenoid LED on the Transmission Simulator.

Did the MS Solenoid LED on the Transmission Simulator blink on and off?

Yes >> Replace the Transmission Solenoid/TRS Assembly per the Service Information.
Perform 45RFE/545RFE TRANSMISSION VERIFICATION TEST - VER 1. (Refer to 21 - TRANSMISSION/TRANSAXLE/AUTOMATIC - 45RFE/545RFE - STANDARD PROCEDURE)

No >> Go To 3

3. TRANSMISSION SOLENOID/TRS ASSEMBLY

With the scan tool, continue to actuate the MS Solenoid for the period of 2 minutes with the Transmission Simulator still connected.

After 2 minutes of actuation, with the scan tool, stop the actuation and check for transmission DTCs.

Did the DTC P2706 reset during the actuation test?

Yes >> Go To 4

No >> Perform 45RFE/545RFE TRANSMISSION VERIFICATION TEST - VER 1. (Refer to 21 - TRANSMISSION/TRANSAXLE/AUTOMATIC - 45RFE/545RFE - STANDARD PROCEDURE)

4. (T118) MS SOLENOID CONTROL CIRCUIT SHORT TO OTHER CIRCUITS

Turn the ignition off to the lock position.

Disconnect the Transmission Simulator, Miller tool #8333.

Disconnect the PCM harness connectors.

Measure the resistance between the (T118) MS Solenoid Control circuit and all other circuits in the Transmission Solenoid/TRS Assembly harness connector.

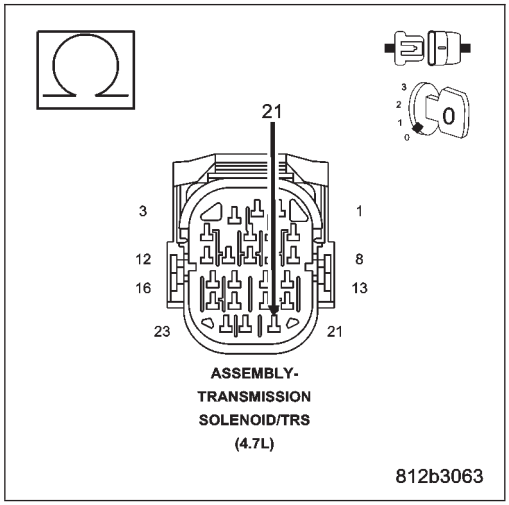

Is the resistance below 5.0 ohms between the (T118) MS Solenoid Control circuit and any other circuit(s) in the Transmission Solenoid/TRS Assembly harness connector?

Yes >> Repair the (T118) MS Solenoid Control circuit for a short to other circuit(s).
Perform 45RFE/545RFE TRANSMISSION VERIFICATION TEST - VER 1. (Refer to 21 - TRANSMISSION/TRANSAXLE/AUTOMATIC - 45RFE/545RFE - STANDARD PROCEDURE)

No >> Go To 5

5. (T118) MS SOLENOID CONTROL CIRCUIT OPEN

Connect Miller tool #8815 to the PCM C4 harness connector.

CAUTION: Do not probe the PCM harness connectors. Probing the PCM harness connectors will damage the PCM terminals resulting in poor terminal to pin connection. Install Miller special tool #8815 to perform diagnosis.

Measure the resistance of the (T118) MS Solenoid Control circuit from the Transmission Solenoid/TRS Assembly harness connector to the appropriate terminal of Miller tool #8815.

Is the resistance above 5.0 ohms?

Yes >> Repair the (T118) MS Solenoid Control circuit for an open.
Perform 45RFE/545RFE TRANSMISSION VERIFICATION TEST - VER 1. (Refer to 21 - TRANSMISSION/TRANSAXLE/AUTOMATIC - 45RFE/545RFE - STANDARD PROCEDURE)

No >> Go To 6

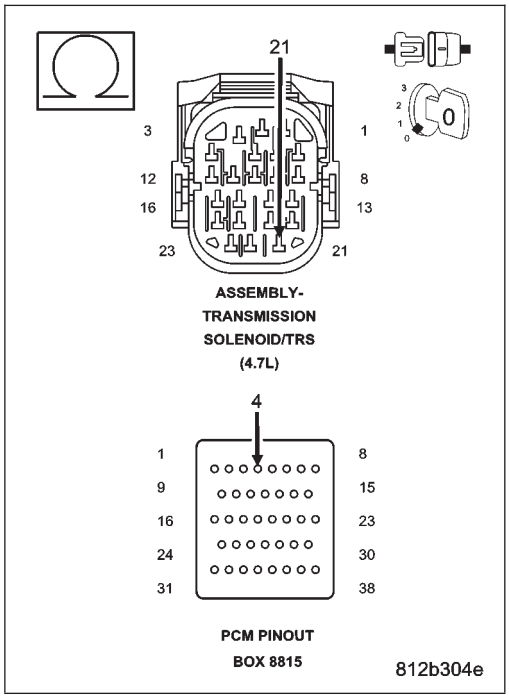

6. (T118) MS SOLENOID CONTROL CIRCUIT SHORT TO GROUND

Measure the resistance between ground and the (T118) MS Solenoid Control circuit.

Is the resistance below 5.0 ohms?

Yes >> Repair the (T118) MS Solenoid Control circuit for a short to ground.
Perform 45RFE/545RFE TRANSMISSION VERIFICATION TEST - VER 1. (Refer to 21 - TRANSMISSION/TRANSAXLE/AUTOMATIC - 45RFE/545RFE - STANDARD PROCEDURE)

No >> Using the schematics as a guide, check the Powertrain Control Module (PCM) terminals for corrosion, damage, or terminal push out. Pay particular attention to all power and ground circuits. If no problems are found, replace the PCM per the Service Information. With the scan tool, perform QUICK LEARN.
Perform 45RFE/545RFE TRANSMISSION VERIFICATION TEST - VER 1. (Refer to 21 - TRANSMISSION/TRANSAXLE/AUTOMATIC - 45RFE/545RFE - STANDARD PROCEDURE)

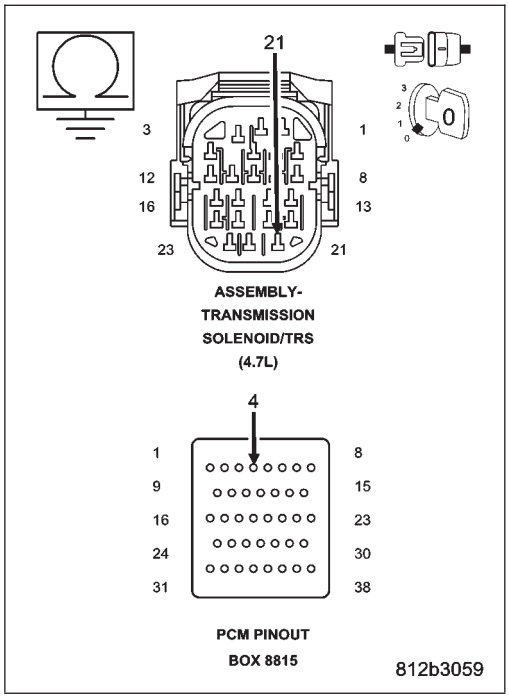

U0002-CAN C BUS OFF PERFORMANCE

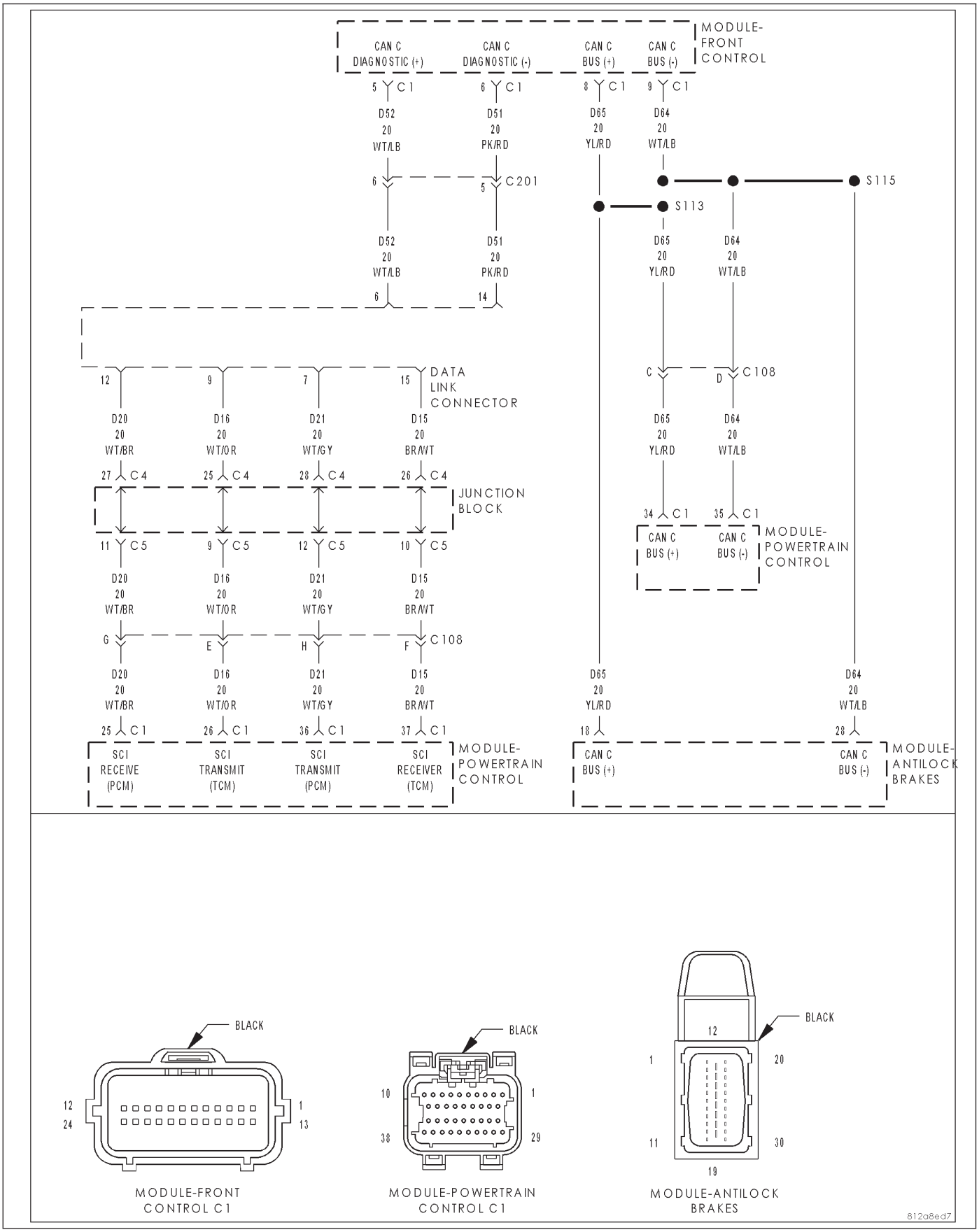

For a complete wiring diagram **Refer to Section 8W**.

- **When Monitored:**
  Every 7 msec. Conditions: 1) Engine speed greater than 500 RPM. 2) Battery voltage greater than 10v but less than 16v.
- **Set Condition:**
  CAN C bus messages not received for 10 seconds.

Theory of Operation

Some NGC controllers communicate with other controllers over the CAN C bus. The transmission controller continuously monitors the bus activity and receives the messages it needs. The CAN C bus is also used to communicate transmission MIL status to the Engine Controller, therefor if the Engine Controller is unable to communicate with the Transmission Controller, the Engine Controller will light the MIL.

Diagnose the U0002 CAN C BUS OFF PERFORMANCE as the U0001 CAN C BUS CIRCUIT test in 8-ELECTRICAL/ELECTRONIC CONTROL MODULES - DIAGNOSIS AND TESTING for diagnostic procedures and for further possible causes.

U0100-NO COMMUNICATION WITH THE ECM/PCM

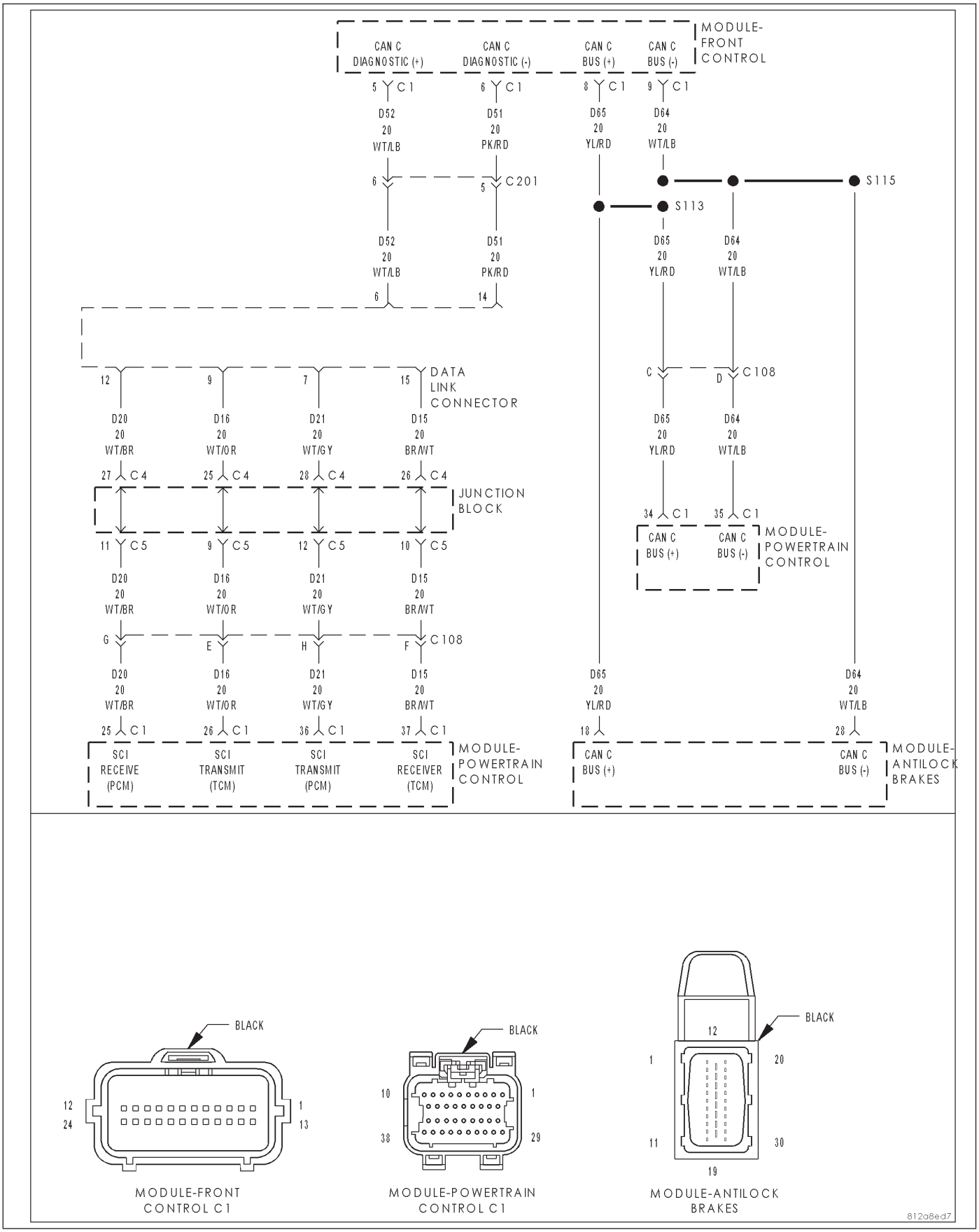

For a complete wiring diagram **Refer to Section 8W**.

- **When Monitored:**
  Every 7 msec. with the ignition on.
- **Set Condition:**
  ECM/PCM CAN bus message not received by the Transmission Control System for the period of 10 seconds.

Theory of Operation

Communication over the CAN bus is continuously monitored between the Engine Control System and the Transmission Control System. Due to the integration of both systems into one module, (Powertrain Control Module) the bus communication between the systems is internally transmitted over the duel port ram.

Refer to 8 - ELECTRICAL/ELECTRONIC CONTROL MODULES - DIAGNOSIS AND TESTING for diagnostic procedures and for further possible causes.

U0121-LOST COMMUNICATION WITH ABS

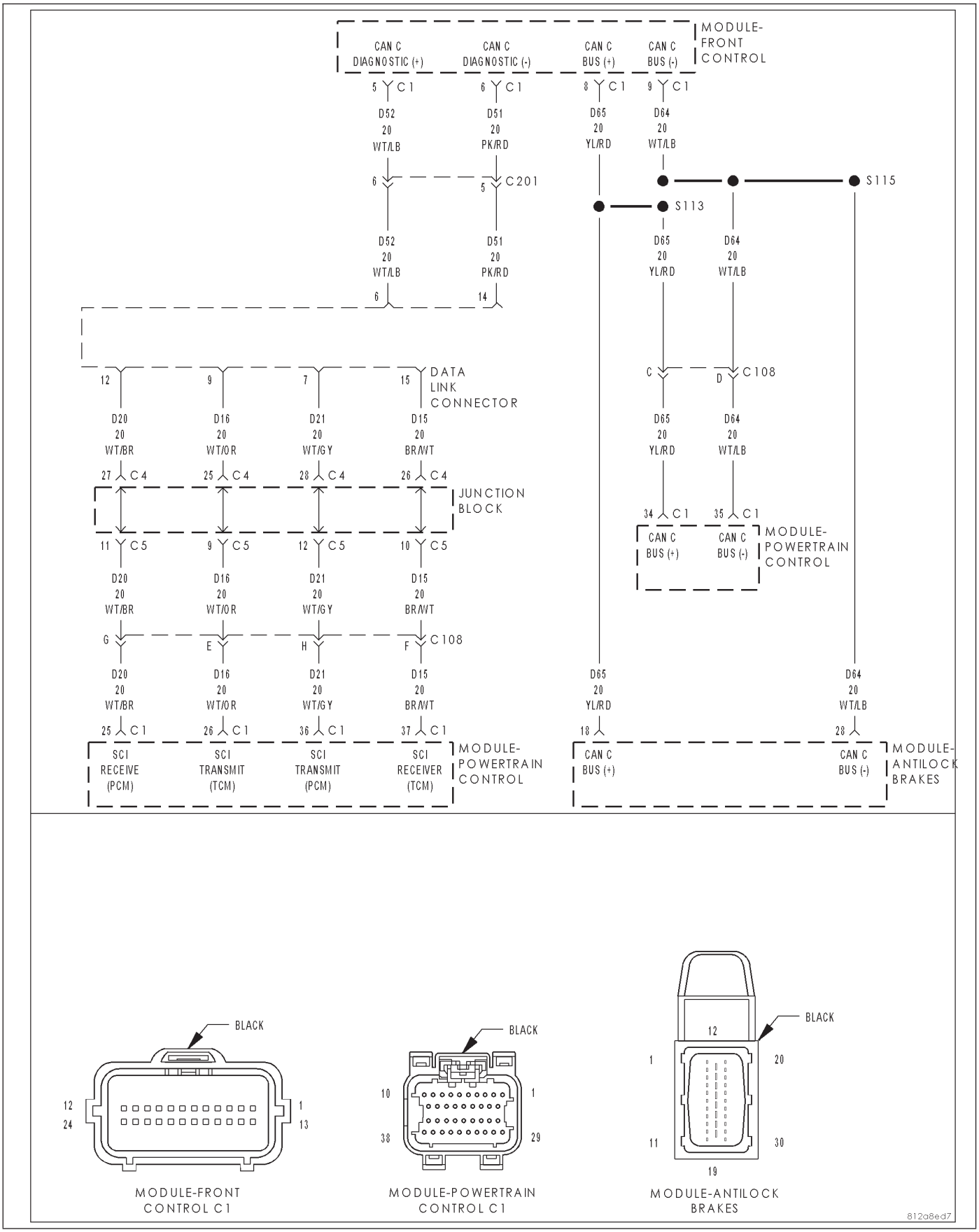

For a complete wiring diagram **Refer to Section 8W**.

- **When Monitored:**
  Every 7 msec. Conditions: 1) Engine speed greater than 500 RPM. 2) Battery voltage greater than 10v but less than 16v.
- **Set Condition:**
  CAN C bus messages not received for 10 seconds.

Theory of Operation

Some NGC controllers communicate with other controllers over the CAN C bus. The transmission controller continuously monitors the bus activity and receives the messages it needs. The CAN C bus is also used to communicate transmission MIL status to the Engine Controller, therefor if the Engine Controller is unable to communicate with the Transmission Controller, the Engine Controller will light the MIL.

Refer to 8-ELECTRICAL/ELECTRONIC CONTROL MODULES - DIAGNOSIS AND TESTING for diagnostic procedures and for further possible causes.

U0141 LOST COMMUNICATION WITH FCM

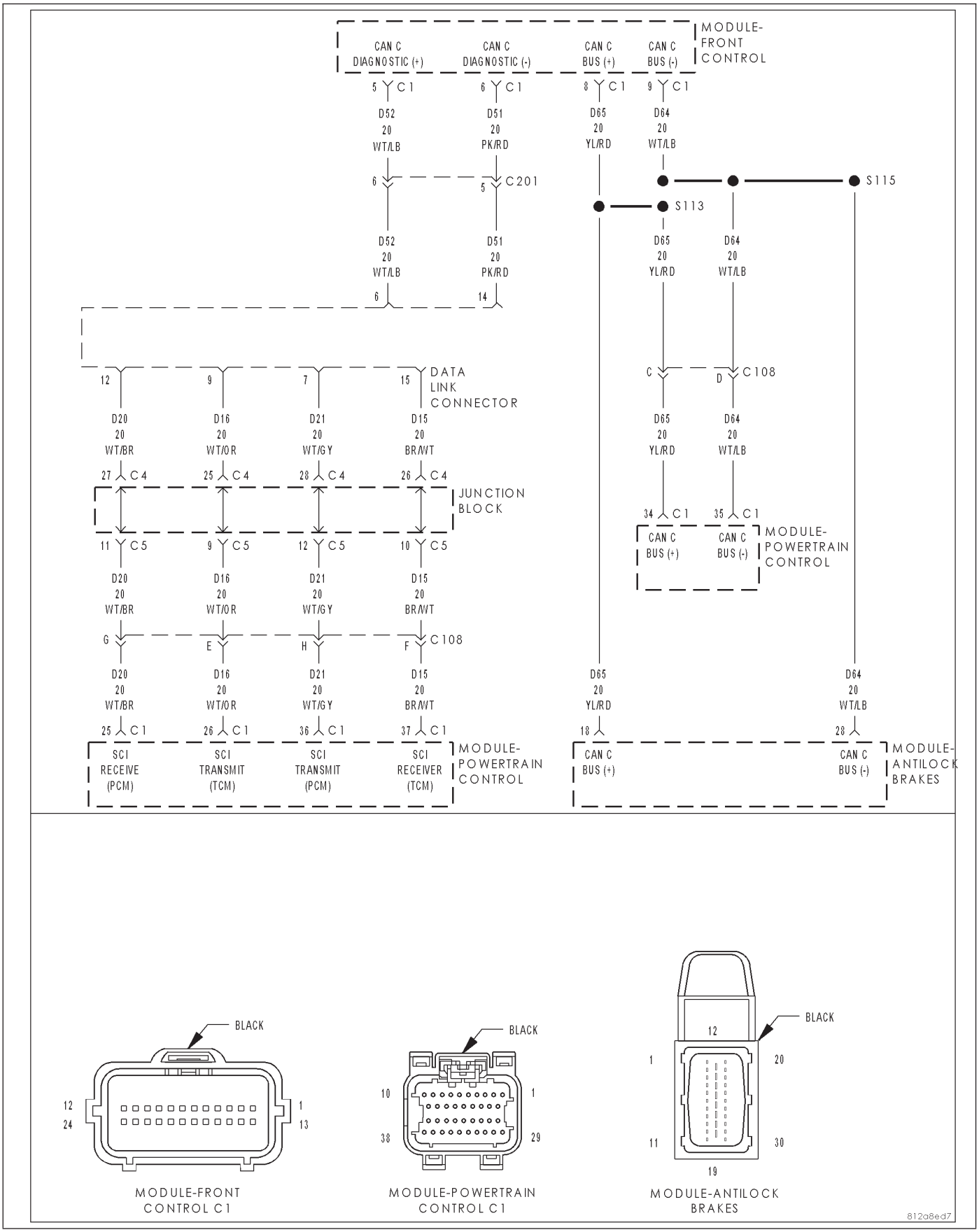

For a complete wiring diagram **Refer to Section 8W**.

- **When Monitored:**
  Every 7 msec. Conditions: 1) Engine speed greater than 500 RPM. 2) Battery voltage greater than 10v but less than 16v.
- **Set Condition:**
  CAN C bus messages not received for 10 seconds.

Theory of Operation

Some NGC controllers communicate with other controllers over the CAN C bus. The transmission controller continuously monitors the bus activity and receives the messages it needs. The CAN C bus is also used to communicate transmission MIL status to the Engine Controller, therefor if the Engine Controller is unable to communicate with the Transmission Controller, the Engine Controller will light the MIL.

Refer to 8-ELECTRICAL/ELECTRONIC CONTROL MODULES - DIAGNOSIS AND TESTING for diagnostic procedures and for further possible causes.

STANDARD PROCEDURE

45RFE/545RFE PRE-DIAGNOSTIC TROUBLESHOOTING PROCEDURE

For a complete wiring diagram **Refer to Section 8W**.

1.

Perform the following before attempting any diagnostic procedures:

- Check the transmission fluid level. If the fluid level is low, locate and repair any leaks and fill the transmission to the proper level. Refer to the appropriate Service Information for procedures. Many transmission symptoms can be caused by a low fluid level.
- Check the battery. To avoid false diagnosis, testing should only be performed with the battery fully charged.
- With the scan tool, read Engine (PCM) DTCs. If DTCs are present, refer to the Driveability Category and perform to the appropriate diagnostic procedure(s) before proceeding.
- With the scan tool, read Transmission (TCM) DTCs. Record all Stored, Active, and Pending DTC information. Diagnose any Pending DTC as a matured DTC.
- With the scan tool, read DTC EVENT DATA. Use this data to identify the conditions in which the DTC was set.
- Performing a Battery Disconnect will clear all DTC EVENT DATA and reset all learned Transmission values to the default values, which may temporarily result in erratic shift schedules.
- With the scan tool, perform the Shift Lever Position Test. If the test does not pass, refer to the diagnostic procedure for P0706 Transmission Range Sensor Rationality.
- For Gear Ratio Error DTCs, use the scan tool to view CVI Monitor data. Read and record the Clutch Volume Index information.
- Use the wiring diagram as a guide. Inspect the wiring and connectors related to this circuit. Repair as necessary.
- Refer to the When Monitored and Set Conditions for this DTC. DTCs can set at ignition on, at start up, after driving under specific conditions and after diagnostic monitors have been run.
- Refer to applicable Technical Service Bulletins (TSBs) for controller software update information. Some conditions can be corrected by upgrading the Engine (PCM) or Transmission (TCM) controller software.
- Refer to any Service Information Tune Ups or Technical Service Bulletins that apply.

Were there any repairs made that fixed the vehicle?

Yes >> Testing complete.
Perform 45RFE/545RFE TRANSMISSION VERIFICATION TEST - VER 1. (Refer to 21 - TRANSMISSION/TRANSAXLE/AUTOMATIC - 45RFE/545RFE - STANDARD PROCEDURE)

No >> Refer to the Transmission category and perform the appropriate diagnostic procedure(s).

45RFE/545RFE TRANSMISSION VERIFICATION TEST - VER 1

For a complete wiring diagram **Refer to Section 8W**.

1.

Perform the following after completion of a diagnostic repair:

- **After completion of the Transmission Verification Test, the Powertrain Verification Test must be performed.**
- Connect the scan tool to the Data Link Connector (DLC).
- Reconnect any disconnected components.
- If the PCM has been replaced or updated (flashed), or the transmission has been repaired or replaced, using the scan tool, perform a Quick Learn Procedure.
- With the scan tool, erase all Transmission and Engine DTC's.
- With the scan tool, perform a BATTERY DISCONNECT, this will clear the DTC EVENT DATA
- With the scan tool, display Transmission Temperature. Start and run the engine until the Transmission Temperature is HOT.
- Check the Transmission fluid level and adjust if necessary. Refer to the Service Information for the Fluid Fill procedure. (Refer to 21 - TRANSMISSION/TRANSAXLE/AUTOMATIC - 45RFE/545RFE/FLUID - STANDARD PROCEDURE)
- Road test the vehicle.
- Perform the following shifts from a standing start with a constant throttle opening of 20 to 25 degrees to the speeds of 97 Kmh (60 mph); make fifteen to twenty 1 to 2, 2 to 3, 3 to 4 upshifts and for 545RFE, 4 to 5.
- Perform the following shifts with speeds below 40 Kmh (25 mph); make five to eight wide open throttle kickdowns to 1st gear. Allow at least 5 seconds each in 2nd and 3rd gear between each kickdown.
- Check for DTCs during and after the road test.
- If after performing the road test, if any shift concerns are noted, perform the drive learn procedure for those affected shifts. (Refer to 8 - ELECTRICAL/ELECTRONIC CONTROL MODULES/TRANSMISSION CONTROL MODULE - STANDARD PROCEDURE)
- **Use the EATX OBDII task manager to run Good Trip time in each gear, this will confirm the repair and to ensure that the DTC does not re-mature.**

Were there any Diagnostic Trouble Codes (DTCs) set during the road test?

Yes >> Refer to the Transmission category and perform the appropriate symptom. (Refer to 21 - TRANSMISSION/TRANSAXLE/AUTOMATIC - 45RFE/545RFE - DIAGNOSIS AND TESTING)

No >> Repair is complete.