https://truckmanualshub.com/

ICHI

Operation Manual

with Maintenance Information

SR12CSM

NOTICE

Read this manual before operating equipment.

CE

[Original Instructions]

https://truckmanualshub.com/

Model Covered: SR12C1SM
(Commercial Name: SR12CSM)
Serial Number Range: after 779224 - Current
Part Number: GS-440S
December 2017

Contact us:

Head office
AICHI CORPORATION
1152 Ryoke Ageo Saitama 362-8550 Japan
TEL: +81-48-781-1111
http://www.aichi-corp.co.jp

Copyright

© 2017 Aichi Corporation. All rights reserved.
No part of this manual may be reproduced in any form, in an electronic retrieval system or otherwise, without the written permission from AICHI, except for personal use or other cases permitted by copyright laws.

This machine has been manufactured to conform to European Machinery Directive 2006/42/EC and European Standard EN280.

https://truckmanualshub.com/

Important Information

Thank you very much for making your purchase from AICHI.

Please operate and use the machine correctly.

- Operation of the machine is to be done in accordance with this manual. Failure to operate, inspect and maintain the machine correctly and in accordance with this manual may lead to death or serious injury, or damage to the machine or other property.
- Read, understand and follow the instructions in this manual before using, inspecting or maintaining the machine.
- Read, understand, and obey all applicable employer and job site safety rules, and local, state, and federal laws, rules, and regulations.
- Not all accidents or incidents are foreseeable, and thus, cannot be addressed in this manual. Therefore, the machine must be operated by following safe practices, and by using caution, common sense and good judgment to control the machine at all times.
- Operators of the machine must be qualified, trained and certified to operate the machine.
- The machine is designed to lift people and equipment. It is designed for use in assembly and repair work in high places (work on ceilings, roofs, buildings, etc.). It is strictly prohibited to use the machine for other purposes.
- To the full extent permitted by law, and without prejudice to any other exclusions of liability under any contract for supply of the machine, AICHI does not accept responsibility for injury, death, damages, direct or indirect loss, or other expenses incurred due to abuse, alteration, or improper use of the machine, including failure to follow the safety guidance provided in this manual.
- Proper maintenance must be done including the replacement of parts that are worn out or have reached the end of their service lives. Refer to the separate service manual and follow the replacement standards of that manual. Contact AICHI or an AICHI dealer to do the replacement.
- Use only AICHI's genuine spare parts to replace those parts that affect the safety and stability of the machine.
- It is strictly forbidden to make modifications to the machine without obtaining AICHI's written approval.
- Perform all maintenance described in this manual and in the designated service manual for the machine.
- This manual covers the entire array of options and equipment available with a specific model. There may be explanations in this manual for equipment not specified for your machine.
- All specifications provided in this manual are current at the time of publication. However, continuous product improvement is an AICHI policy, and therefore, product specifications and design are subject to change without notice.
- The illustrations in this manual are intended as representative reference views only. They may depict shapes and equipment that are different than your machine.
- This manual must be kept with the machine and immediately available for use at all times. Keep the manual in the manual holder of the machine.
- When you transfer the use or ownership of the machine, please make sure to leave this manual with the machine.
- The original of this manual is written in English. If this manual is not written in English, it is a translated one. In the event of a discrepancy between the original and translated manuals, the original manual prevails.
- This manual describes the correct operation and handling procedures for the self-propelled crawler type aerial platforms:

Commercial Names	Model Codes	Engine Type	Height, Platform Max
SR12CSM	SR12C1SM	Yanmar 3TNV88	12.1 m

https://truckmanualshub.com/

Safety Alert Symbol and Signal Words

This is the safety alert symbol. It is used to alert you to potential personal injury hazards. Obey all safety messages that follow this symbol to avoid possible injury or death.

The signal words, "DANGER," "WARNING," and "CAUTION" identify the degree of hazard and its level of seriousness.

DANGER

Indicates a hazardous situation which, if not avoided, will result in death or serious injury.

WARNING

Indicates a hazardous situation which, if not avoided, could result in death or serious injury.

CAUTION

Indicates a hazardous situation which, if not avoided, could result in minor or moderate injury.

NOTICE

Indicates a hazardous situation which, if not avoided, could result in property damage. It may also be used to provide special information to assist in the machine operation.

Symbols Used in Illustrations

Throughout this manual, you will also see the symbol of a circle with a backslash through it.

This means "DO NOT," "DO NOT DO THIS," or "DO NOT LET THIS HAPPEN."

Owner and User Responsibilities

All owners and users of the machine must read, understand, and comply with all applicable regulations. Ultimate compliance to national safety regulations is the responsibility of the user and their employer.

Operator Qualifications

Operator of the machine must receive safety training to ensure safe operations.

Incorrect use of the machine can cause serious injury or death.

All personnel are requested to receive safety training and only trained and authorized personnel are permitted to operate the machine. This manual should be used in conjunction with safety training.

Operator of the machine must not undertake responsibility for the machine operation until enough training has been given by qualified and authorized persons.

https://truckmanualshub.com/

Environmental Protection

Various laws and regulations specify specific procedures for disposing of parts and oil. When disposing of parts or oil yourself, you are responsible for ensuring all actions comply with applicable laws and regulations.

Considerations before operations

- Look around the machine and confirm the absence of oil or water leaks.

  Oil or water leaking from the machine may cause soil contamination or water pollution if allowed to seep into the ground or waterways.

  Always collect and wipe up any waste fluids.
- Start the engine and allow the engine to warm up. Operating the engine before it has warmed up sufficiently will increase exhaust emissions and may lead to engine problems.

Considerations during operations

- Do not operate at loads exceeding the rated load. Overloading the machine may increase exhaust emissions and cause overheating.
- Do not rev the engine or start or accelerate the machine suddenly.
- Always shut off the engine before leaving the machine.

  Avoid unnecessary engine idling or revving.
- Be considerate towards residents in the vicinity when operating the machine. Take special care with noise and direction of lights at night or early in the morning.

Considerations for inspections and replacement

- Oil- or grease-soaked rags or other materials used for cleaning or inspection work must be stored in specified locations. Leaving rags or other materials outside after use may result in ground contamination due to rain seepage or fire.
- Old oil, filters, and lamps must be disposed of by a waste disposal contractor after replacement.
- The batteries contain lead and dilute sulfuric acid. Improper disposal will harm the environment. Please contact AICHI or an AICHI dealer to replace batteries.
- Burning old rubber tracks and shoe pads produces toxic gases and will harm the environment.

  To replace the rubber tracks and shoe pads, contact AICHI or an AICHI dealer. If you wish to dispose of them yourself, contact a waste disposal contractor.

Correct disposal of waste materials

- Consult with AICHI or an AICHI dealer to dispose of the machine after a number of years of use.

  Dispose of the machine in the appropriate manner. Improper disposal can be harmful to the environment.
- Dispose of waste such as old rubber tracks and shoe pads, batteries, and hydraulic oil appropriately and in compliance with applicable laws and regulations after replacement.

https://truckmanualshub.com/

Table of Contents

Chapter 1 **Safety Rules 1**
1. Electrocution Hazards 1
2. Tip Over Hazards 1
3. Fall Hazards 4
4. Collision Hazards 5
5. Damaged Machine Hazards 6
6. Fire and Explosion Hazards 6
7. Battery Safety 7
8. Engine Safety 7
9. Personal Safety 7
10. Traveling Precautions 8

Chapter 2 **Decals 11**
1. Symbol and Pictorials Definitions 11
2. Safety Signs and Locations 13

Chapter 3 **Safety Systems & Devices 19**
1. List of Safety Systems 19
2. Travel Speed Limit System 20
3. Travel Function Limit System 20

Chapter 4 **Part Names & Functions 21**
1. Part Names 21
2. Upper Controls 22
3. Lower Controls 24

Chapter 5 **Workplace Check 26**

Chapter 6 **Pre-operation Checks 27**
1. Visual Check 27
2. Function Check 28
2–1 Preparation for Function Check 28
2–2 Lower Controls Check 28
2–3 Upper Controls Check 29
2–4 Tilt Warning Check 30
2–5 Last Check 30

Chapter 7 **Maintenance 31**
1. Storage Method 31
2. Daily Maintenance 31
2–1 Refuel the Machine 31
2–1–1 Diesel Fuel Specifications 32
2–2 Check the Hydraulic Oil Level 32
2–2–1 Hydraulic Oil Specifications 32
2–3 Check the Battery Fluid Level 32
2–4 Check the Engine Oil Level 33
2–4–1 Engine Oil Viscosity 33
2–5 Check the Cooling System 34
3. Periodic Maintenance 35
3–1 Monthly and Annual Inspection 35
3–2 Crawler Tracks 35
3–2–1 Adjustment Method 35
3–2–2 Adjustment Interval 36
3–3 Engine Maintenance 37
3–3–1 Periodic Maintenance Chart 37

Chapter 8 **Operation 38**
1. Starting the Engine 38
1–1 Starting from Ground 38
1–2 Starting from Platform 40
2. Stopping the Engine 41
3. Upper Controls (from Platform) 42
3–1 Foot Switch 42
3–2 Traveling 43
3–2–1 Travel Speed Select 43
3–2–2 Forward and Backward 44
3–2–3 Pivot Turn 44
3–2–4 Spin Turn 44
3–3 Boom Operation 45
3–3–1 Boom Elevating 45
3–3–2 Boom Rotating 45
3–3–3 Boom Telescoping 46
3–4 Platform Rotating Operation 46
3–5 Horn Operation 46
3–6 Touch Switch 46
3–6–1 Restoring Functions 46
4. Lower Controls (from Ground) 47
4–1 Enable Switch 47
4–2 Boom Operation 47
4–2–1 Boom Elevating 48
4–2–2 Boom Rotating 48
4–2–3 Boom Telescoping 48
5. Platform Leveling System 48
5–1 Platform Level Adjustment 48
5–2 Bleeding Air from Platform Leveling System 49

https://truckmanualshub.com/

6. Hydraulic Generator (If Equipped) 50
6–1 To Start the Hydraulic Generator 50
6–2 To Restore Normal Operation 50

Chapter 9 **Emergency Operation 51**
1. Emergency Stop 51
2. Emergency Lowering 51
2–1 Upper Controls (from Platform) 52
2–2 Lower Controls (from Ground) 52

Chapter 10 **Transporting 53**
1. Preparations for Transporting 53
2. Loading the Machine 54
3. Tie Down 55
4. Unloading the Machine 55
5. Hoisting the Machine 56
6. Hoisting with Boom Raised 57

Chapter 11 **Storage 58**

Chapter 12 **Specifications 59**
1. Dimensions 59
2. General Specifications 60
3. Work Range Diagram 61
4. Supplementary Information 61

Appendix A **Test Report 63**
1. Static Test (EN280; 6.1.4.2.1) 63
2. Dynamic Test (EN280; 6.1.4.2.2) 64

Appendix B **Declaration of Conformity 65**

Appendix C **Daily Inspection Check Sheet ... 69**

https://truckmanualshub.com/

This page intentionally left blank.

https://truckmanualshub.com/

Chapter 1
Safety Rules

1. Electrocution Hazards

DANGER

- This machine is not electrically insulated. Do not use the machine near electric power lines.

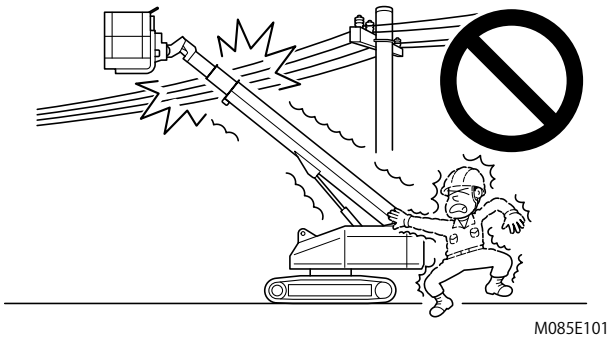

Fig. 1–1

- Keep a safe distance from electric power lines and apparatus. For safe distance, check your national or local regulations. If no national or local regulation is available, use the table below.

Table 1–1 Minimum Approach Distance

Voltage (Phase to Phase)	Minimum Approach Distance
0 to 50 kV	3.05 m
over 50 kV to 200 kV	4.60 m
over 200 kV to 350 kV	6.10 m
over 350 kV to 500 kV	7.62 m
over 500 kV to 750 kV	10.67 m
over 750 kV to 1000 kV	13.72 m

- Keep away from the machine if it contacts energized power lines. Until energized power lines are shut down, any persons in the platform must not operate the machine and any persons on the ground must not touch the machine.

WARNING

- Do not use the machine during lightning or storms. Stop operation in bad weather.
- Do not use the machine as a ground for welding.

2. Tip Over Hazards

DANGER

- Do not exceed the platform capacity as indicated on the serial number plate.

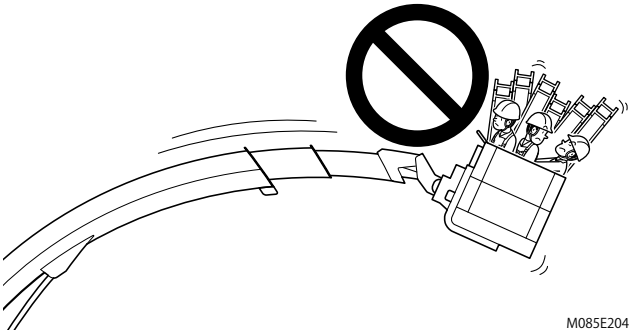

Fig. 1–2

- Do not place things such as steel beams or power lines across the platform, and use the boom to lift them.

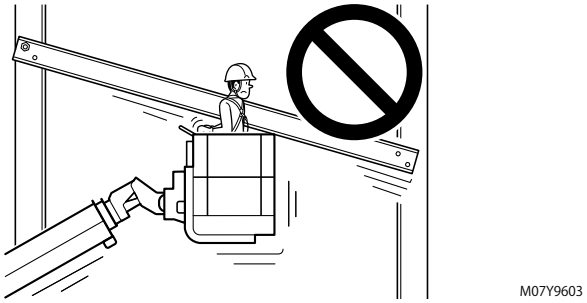

Fig. 1–3

- Do not use the boom or platform to push or pull power lines or other objects. Pressing the boom or platform hard against them could cause the machine to tip over or be damaged.

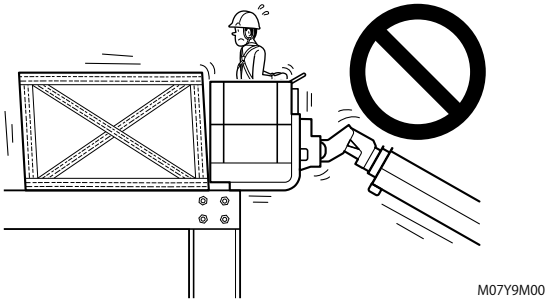

Fig. 1–4

https://truckmanualshub.com/

- Do not push or pull any object outside of the platform.

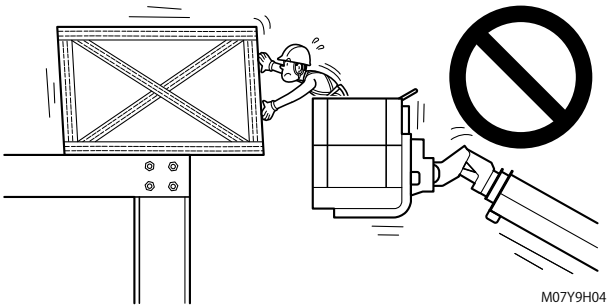

Fig. 1–5

- Stop operation in bad weather.
  Criteria of bad weather:
  - Average wind speed over 10-minute period is over 10 m/s
  - Rainfall of 50 mm or more
  - Settled snow of 250 mm or more
  - Thunder / Lightening

  Even in conditions below the criteria above, follow the instructions of your supervisor.
- Do not operate the machine where there are strong winds or gusts.
- Do not elevate the platform when wind speeds may exceed 12.5 m/s. If wind speeds exceed 12.5 m/s when the platform is elevated, lower the platform and do not continue to operate the machine.

  The criteria of wind velocity at 10 m above ground are as follows:

Table 1–2 Beaufort Scale (For Reference Only)

Beaufort Rating	Wind Speed [m/s]	Ground Conditions
4	5.5–7.9	Raises dust and loose paper; small branches are moved
5	8.0–10.7	Small trees in leaf begin to sway; crested wavelets form on inland waters
6	10.8–13.8	Large branches in motion; whistling heard in telegraph wires; umbrellas used with difficulty
7	13.9–17.1	Whole trees in motion; inconvenience felt when walking against wind

- Do not increase the surface area that can catch wind, such as covering the platform with a sheet. The stability of the machine will decrease.
- Do not use on a slippery or icy surface.
- If an earthquake occurs when you are operating the machine, immediately stop operating the machine.
  After the earthquake, check for damage or deformation in the machine. As needed, contact AICHI or an AICHI dealer for inspections.

⚠WARNING

- Do not hang or attach loads to the machine. Spread loads evenly on the platform.
- Do not place loads outside of the platform.
- Do not use the machine as a crane or lift.

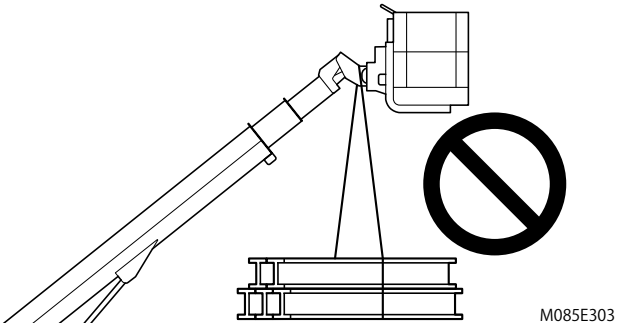

Fig. 1–6

- Do not elevate the platform on soft or uneven ground. Always perform workplace checks before moving the machine to the workplace. (Refer to Chapter 5 for workplace checks.)
  Do not travel the machine on surfaces with bumps and obstructions or do not attempt to travel over them.

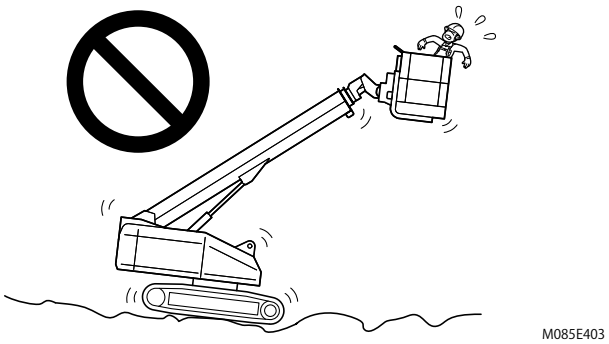

Fig. 1–7

https://truckmanualshub.com/

- Do not use the machine on a moving or mobile surface or vehicle.

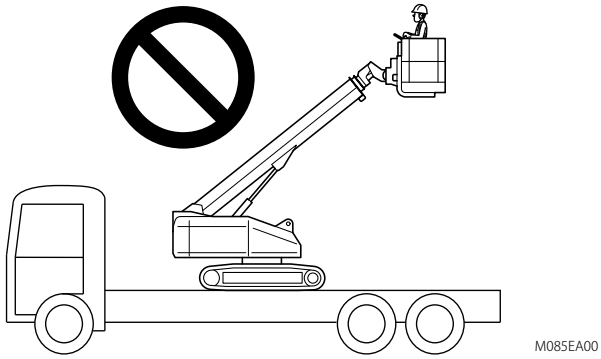

Fig. 1–8

- Do not elevate the platform on a slope.
- Do not use the machine on a slope more than the maximum allowable tilt angle. When the machine tilt more than the maximum allowable tilt angle, the tilt alarm buzzer sounds and the tilt warning light goes on. Never continue working after alarm sounds.
- If the tilt alarm buzzer sounds when the platform is elevated, immediately lower the platform and move to a firm, level surface. Never continue working after alarm sounds. Do not depend on the tilt alarm buzzer as a level indicator. Operate the boom only when the machine is on a firm, level surface.

  Maximum allowable tilt angle: 5° (8.7%)

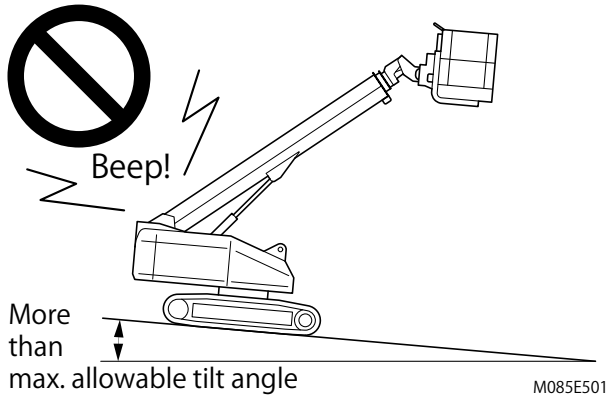

Fig. 1–9

- If traveling on a slope more than maximum allowable tilt angle is unavoidable, make sure to fully retract the boom and lower the boom under the horizontal.
- Do not travel on a slope exceeding the machine gradeability.
- Do not travel on a slope except for the purpose of the machine transportation.

  Maximum allowable tilt angle: 5° (8.7%)

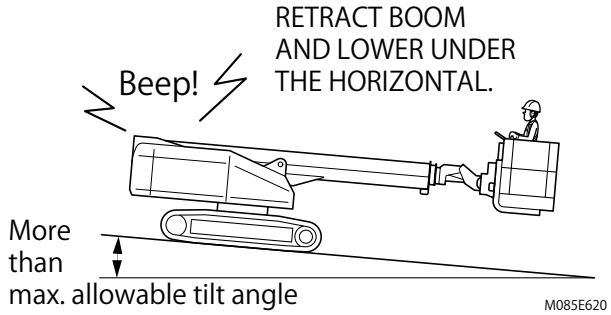

Fig. 1–10

- Do not touch or attach the platform to any nearby structures.

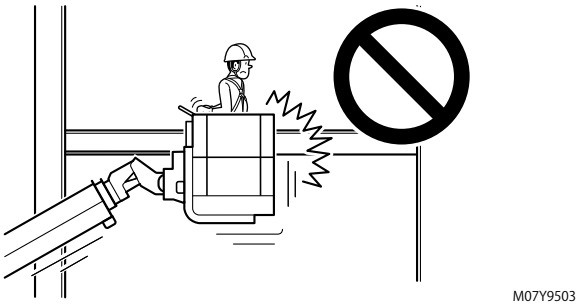

Fig. 1–11

- Do not modify the machine without obtaining the manufacturer's approval. Never use the machine with the counterweight detached.
- Do not disable or alter the machine's components that have an effect on safety and stability in any way.

⚠CAUTION

- Do not tie down the machine chassis, boom, or platform to other structures when working.

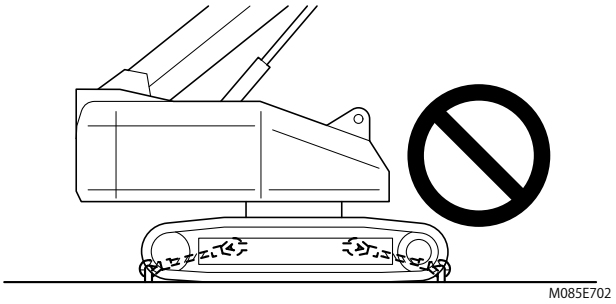

Fig. 1–12

https://truckmanualshub.com/

3. Fall Hazards

DANGER

- Do not place ladders, scaffolds or other devices in the platform or against any part of the machine.
- Do not use a ladder or step in the platform.

Fig. 1–13

- Do not sit, stand or climb on the guardrails. Always keep both feet firmly on the platform floor and conduct operation with stable posture.

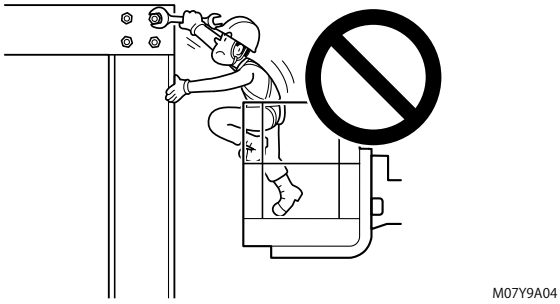

Fig. 1–14

- Do not jump from the platform to another structure.

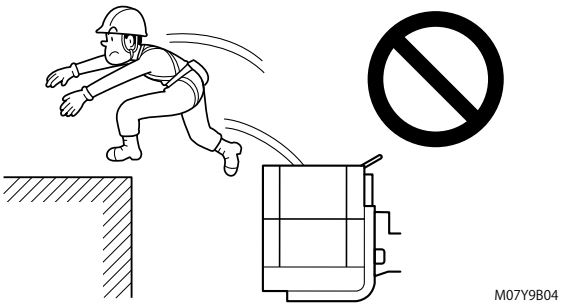

Fig. 1–15

- Do not climb up/down from the platform when it is raised.
- After getting on the platform, close the entry gate or lower the platform entry bar without fail. Do not operate the machine with gate open.

WARNING

- When getting on/off the platform, be especially careful and lower the platform to the lowest position.
- When getting on/off, stop all movement of the machine, face the machine, and always use three-point support (for example, two arms and one leg, or one arm and two legs).
- Do not jump off from the machine.
- Do not hold on to controllers for purpose of getting on/off the platform.
- Do not operate the machine roughly. The operator may be thrown from the platform.

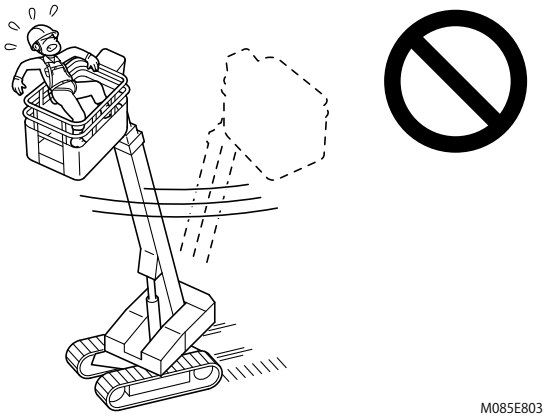

Fig. 1–16

- Keep the platform neat and tidy always. To avoid slips, clear the water, oil, snow, ice off the platform.
- Do not step on any places other than the platform.
- To help prevent incorrect operation, illuminate the control panel in the dark.

https://truckmanualshub.com/

4. Collision Hazards

DANGER

- Do not hit a obstacle with the platform and/or counterweight. If they hit, their mounting units may be damaged. Contact AICHI or an AICHI dealer for inspections.

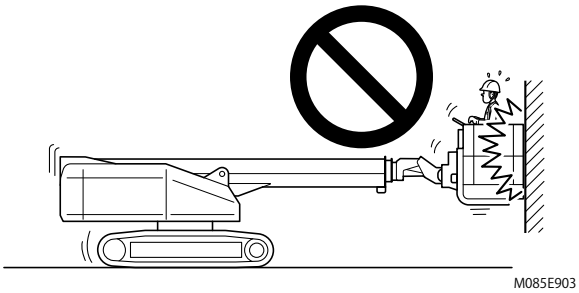

Fig. 1–17

- Once the platform is raised, do not allow people or things under the platform.

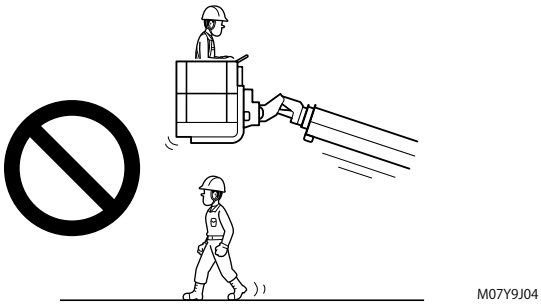

Fig. 1–18

- Do not lower the boom unless the area below is clear of persons and obstacles.
- When you are obliged to get under the boom and platform to perform the inspections or repairs, use a safety support to prevent the boom and the platform from unexpected descent.
- The turntable protrudes 600 mm beyond the width of the chassis when rotating the boom, so watch the turntable movement and make sure that no person or obstacle is around the turntable.

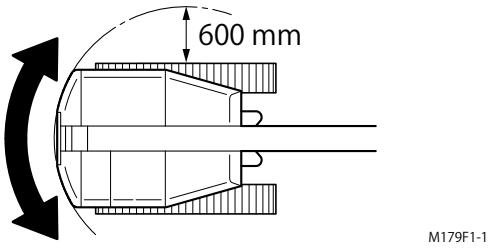

Fig. 1–19

WARNING

- Before traveling, check the arrow decals affixed on the chassis to ensure proper traveling direction of the machine.

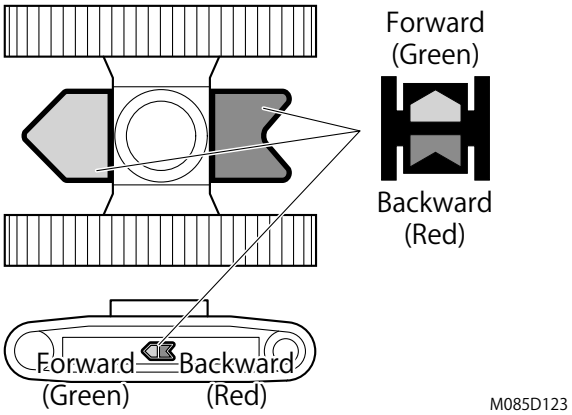

Fig. 1–20

- Make sure that no person or obstacle is around the machine. Be aware of blind spots when traveling or operating. If your field of view is obstructed, have a guide assist you.
- While traveling, check the work area for overhead obstacles or other possible hazards. When raising or lowering the platform, check that there is enough space above, below, and on all sides of the machine.
- Do not hit the ground with the platform.

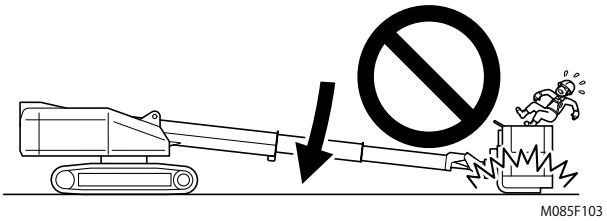

Fig. 1–21

- Do not drop things from the platform. There is a hazard that falling objects will hit cars, or people that are passing by.

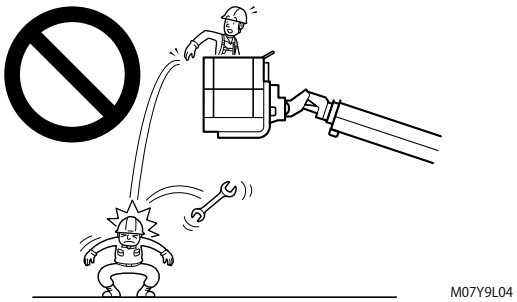

Fig. 1–22

https://truckmanualshub.com/

- Do not place loads outside of the platform. Keep equipment and tools stable when loading on the platform. Unstable loads could be falling off.
- The machine is not allowed to travel on public highways.

⚠CAUTION

- Take care that your hands on the guardrails are not caught in other obstacles.
- If there is other machine in workplace, pay attention to other machine operating and avoid to operate at the same time. Take measures to prevent a collision. Have another person observe work to warn you.
- Do not operate the machine in the path of motion of cranes unless the controls of the cranes are locked out or the precautions are taken to prevent a potential collision.
- Check the control panel to ensure proper direction of the movement. Look in the direction of the movement and operate the controls.

5. Damaged Machine Hazards

⚠WARNING

- Do not use a damaged or malfunctioning machine. Have it checked and repaired immediately.
- If you sense any abnormalities in the machine during operation, immediately stop operation and check the machine.
- When operators change a work shift, perform the pre-operation checks at every change. It is the operator's responsibility to perform a pre-operation check.
- Perform the pre-operation checks on firm, level surface, with the platform lowered.
- If the pre-operation checks reveal any abnormalities, put an "Out of Order" sign on the machine, and stop using the machine. Report the problem to your supervisor.

⚠CAUTION

- Perform all maintenance described in this manual and in the designated service manual for the machine.
- Make sure all decals are in place and not damaged. Any decal missing or damaged should be treated as a machine malfunction.

6. Fire and Explosion Hazards

⚠WARNING

- When handling flammables (fuel, oil, etc.), be aware of anything that can cause fire.
- Never remove the fuel cap with the engine running.
- Only fill the fuel tank with diesel fuel. Filling the fuel tank with gasoline may result in a fire and will damage the engine.
- Never refuel with the engine running.
- Wipe up any spills immediately.
- Keep sparks, open flames or any other form of ignition (match, cigarette, static electric source) well away when refueling.
- Fill the fuel tank. Store any containers containing fuel in a well-ventilated area, away from any combustibles or sources of ignition.
- If the machine is to be used in a location where flammable gas is produced, only use the machine after sufficient ventilation.
- Never park the machine close to oil or other combustible material, such as dead leaf or waste paper, during engine operation or shortly after shutdown. The muffler and exhaust pipes are extremely hot while the engine is operating.
- Have a first-aid kit and a fire extinguisher ready in case of an accident or fire.

https://truckmanualshub.com/

7. Battery Safety

Burn Hazards

CAUTION

- The battery fluid contains corrosive acid. When dealing with the battery, always wear appropriate protective clothing and equipment to protect your hands, eyes, face and body, and avoid contacting battery fluid.
- If battery fluid gets on the skin or on clothing, wash it away immediately with cold water. If it gets into the eye, wash immediately with cold water, and seek medical treatment immediately.

Explosion Hazards

WARNING

- The battery produces flammable hydrogen gas, and there is a possibility of explosion. Never allow anything that can cause fire to be close to the battery. Charge the battery only under good ventilation.
- If the electrolyte is frozen, slowly warm the battery before you recharge it.

8. Engine Safety

Scald Hazards

WARNING

- Never remove the radiator cap if the engine is hot. Steam and hot engine coolant will spurt out and seriously burn you. Allow the engine to cool down before you attempt to remove the radiator cap.
- Tighten the radiator cap securely after you check the radiator. Steam can spurt out during engine operation if the cap is loose.
- Keep your hands and other body parts away from hot components, such as the muffler and exhaust pipe, during operation and shortly after shutdown. These components are extremely hot while the engine is operating and could seriously burn you.

Exhaust Hazard

WARNING

- Never operate the machine in an enclosed area such as a garage, tunnel, or underground room without proper ventilation.
- Never block windows, vents, or other means of ventilation if the machine is operating in an enclosed area. The engine creates carbon monoxide gas during operation. Accumulation of this gas within an enclosure could cause illness or even death.

Coolant Hazard

CAUTION

Wear eye protector and rubber gloves when you handle long life or extended life engine coolant. If contact with the eyes or skin should occur, flush eyes and wash immediately with clean water.

9. Personal Safety

Fall Hazards

DANGER

- Always use a safety harness in the platform. All persons in the platform must comply with employer, work area, and local and national safety regulations regarding the use of personal protective equipment.
- All personal fall protective equipment must be attached to only the authorized lanyard anchorage points provided in the platform.

WARNING

All personal protective equipment must comply with applicable regulations, and must be inspected and used in accordance with the manufacturer's instructions.

https://truckmanualshub.com/

Entanglement Hazard

WARNING

Keep hands and other body parts away from moving / rotating parts such as the cooling fan, flywheel or pinion.

Exposure Hazards

WARNING

- Wear personal protective equipment such as gloves, work shoes, eye and hearing protection as required by the task at hand.
- Never wear jewelry, unbuttoned cuffs, ties or loose-fitting clothing when you are working near moving / rotating parts such as the cooling fan or flywheel.
- Always tie back long hair when you are working near moving / rotating parts such as a cooling fan or flywheel.
- Never operate the machine while wearing a headset to listen to music or radio because it will be difficult to hear the alert signals.

Alcohol and Drug Hazards

WARNING

- Never operate the machine while you are under the influence of alcohol or drugs.
- Never operate the machine when you are feeling ill.

10. Traveling Precautions

Surfaces on which you must avoid traveling or working.

DANGER

- Never travel or work on the following surfaces. Doing so is very dangerous and may cause the machine to tip over or the platform to collide with building structures.

(1) Do not travel or work on soft or uneven surfaces with level differences. In particular, ground foundations are unstable on earth fills, around dug out trenches, and on the shoulder of roads, and may give way due to the weight or vibration of the machine. Particular caution is necessary after rain which may cause soil foundations to become loose.

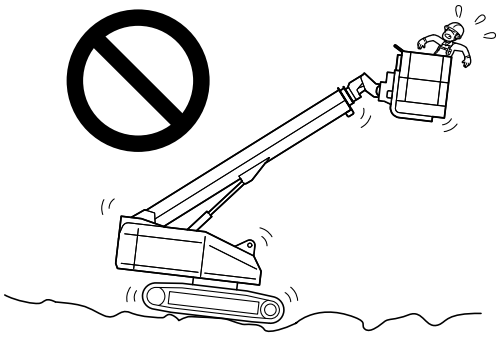

Fig. 1–23

(2) If the machine leans slightly to one side when traveling over small trenches or steps on surfaces, this will cause an extremely large vibration to the platform if the boom is extended. When traveling, fully retract the boom and lower the boom angle near to horizontal.

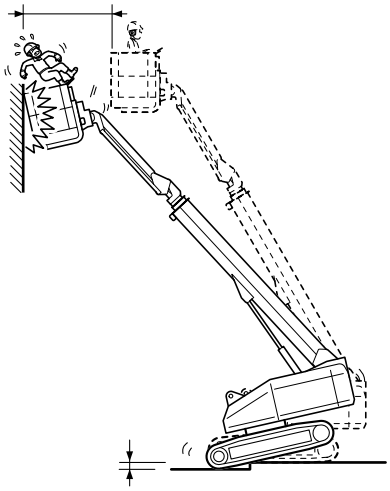

Fig. 1–24

https://truckmanualshub.com/

- When the machine must travel to a particular location and there is no other option but to travel on uneven surfaces, up and down steps, or on slopes exceeding the maximum allowable tilt angle, obey and observe as follows:

(1) Do not travel the machine on a slope exceeding the machine gradeability. Failure to follow instruction could tip over the machine. The machine gradeability: refer to Chapter 12.

(2) Traveling on slopes

(a) Climb perpendicular to the slope face with the counterweight facing uphill.

(b) Do not change direction or turn to the side while climbing a slope face. Change direction after reaching level surface.

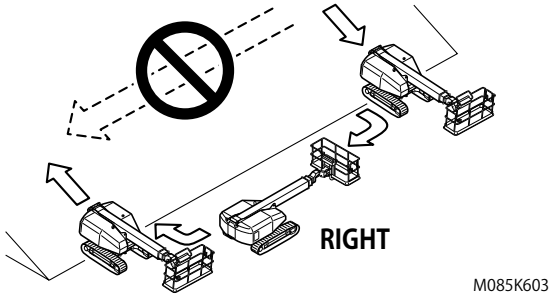

Fig. 1–25

(c) Descend perpendicular to the slope face with the counterweight facing uphill.

(d) Do not park on the slope. If the machine must park or stop on a slope, chock to keep the machine from moving.

(e) Retract the boom fully and raise the boom to the horizontal.

Rotate the boom to rear or front center of the machine.

Adjust the boom rotation to become parallel to the traveling direction.

(f) Do not rotate the boom while traveling on a slope.

(g) Set the travel speed select switch to "LOW" and travel at low speed.

(h) Slopes that are wet, slopes with sand or gravel, and slopes with grass or fallen leaves may cause the machine to slip even on a slight gradient. On such slopes, exercise extra caution so that the machine does not turn on its side.

(3) Climbing up and down steps, traveling on uneven surfaces, reaching the peak of slopes, and at the start of climbs.

- Irrespective of how much the boom is extended, never raise the boom angle to a position greater than horizontal while traveling as the machine will incline on even minor bumps, steps, and slopes. The machine will become unstable and the machine may tip over. This may result in serious accidents in which the worker on the platform may become sandwiched between a building or structures.
- Pay adequate attention when you have no other option but to drive the machine for the purpose of moving it to a different location.

(a) Travel with the boom fully retracted and the boom angle at less than horizontal.

(b) Travel with the travel speed select switch set to "🐢" (LOW SPEED).

(c) The machine may suddenly incline when climbing up and over a top step. Pay attention to buildings and structures located above and below the platform.

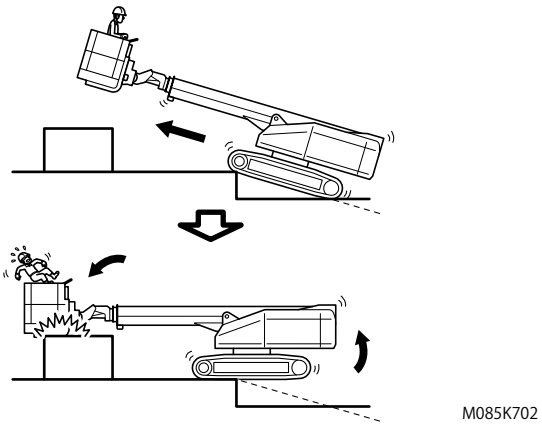

Fig. 1–26

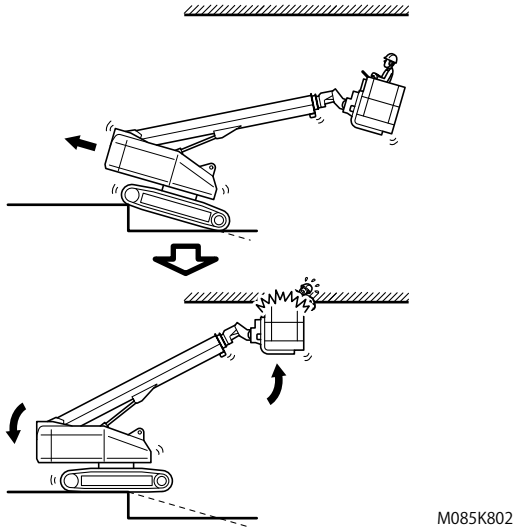

Fig. 1–27

https://truckmanualshub.com/

(d) The machine may suddenly incline when climbing down and over a top step. Pay attention to buildings and structures located above and below the platform.

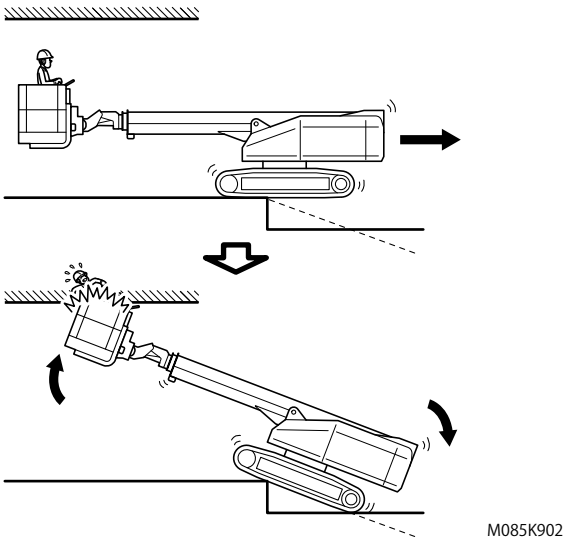

Fig. 1–28

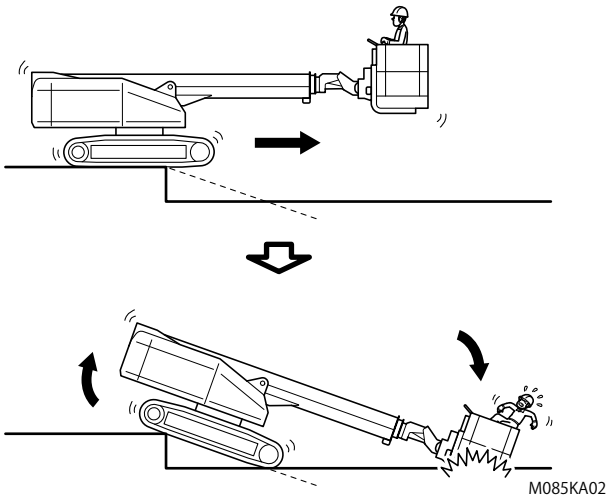

Fig. 1–29

(e) Never travel with the boom raised. This may cause the machine to tip over when traveling on even slight uneven surfaces, steps, or climbing inclines.

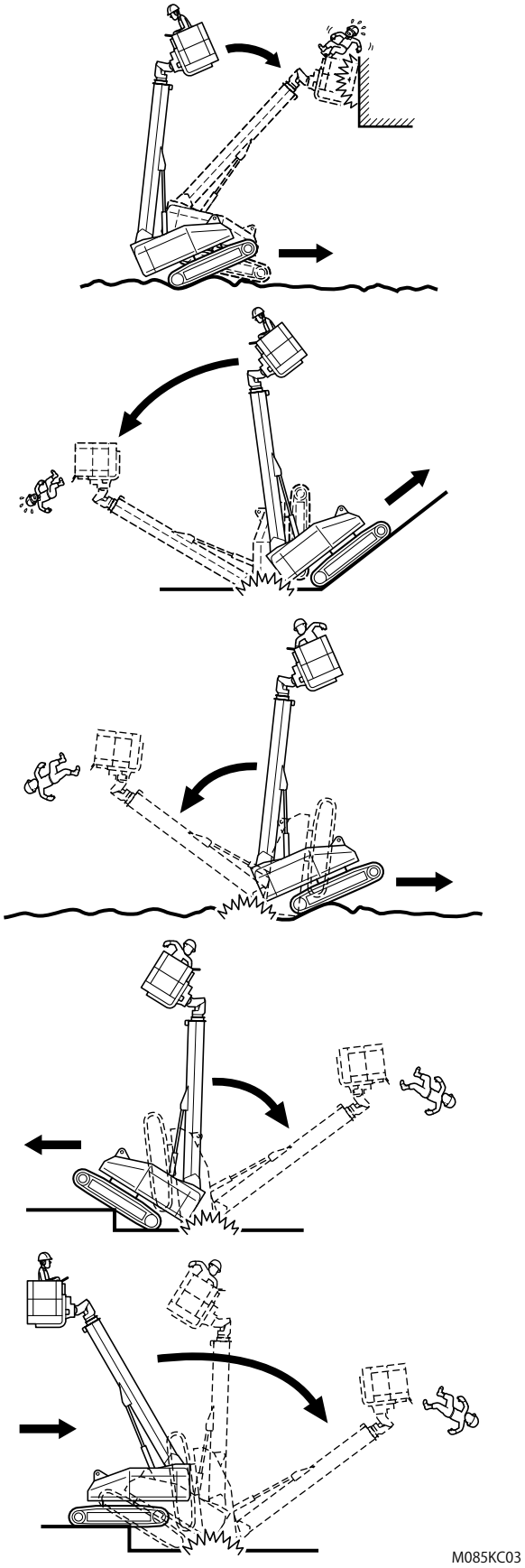

Fig. 1–30

https://truckmanualshub.com/

Chapter 2

Decals

1. Symbol and Pictorials Definitions

Read operation manual.	Read service manual.	Crush Hazard	Crush Hazard	Burn Hazard	Body Injury Hazard
Maintain required clearance.	Do not wash by high pressure.	Do not touch. Keep away.	Do not step. Keep off.	No open flame.	No smoking.
Do not contact power lines; do not touch energized machine.	Do not travel elevated on/near soft or uneven surfaces.	Do not elevate platform unless machine is on firm level surface.	Do not lift.	Maximum Wind Speed	Maximum Manual Force
Platform Load Capacity	Loads (personnel and tools)	Maximum Side Slope Rating	Maximum Slope Rating	Sound power level in decibels	Outreach limit Warning
Platform Overload Warning	Tilt Warning	Platform Contact	System Failure	Engine Failure	Engine Pre Heat
Oil Pressure	Water Temperature	Air Filter	Battery	Fuel	Diesel Fuel
LPG Fuel	Fuel Level	Hydraulic Oil	Lanyard Anchorage Point	Lift Point	Tie-down Point

https://truckmanualshub.com/

Symbol and Pictorials Definitions (Continued)

High Speed	Low Speed	Beacon	Working Light	Head Light	Pre-start Check
Horn	Generator	Engine Start	Emergency Pump	ON and OFF	Enable Switch
Boom Rotation	Boom Telescope	Boom Elevation	Platform Rotation	Horizontal / Vertical Movements	Platform Level Adjust
Travel	Upper Controls / Off / Lower Controls Selection				

https://truckmanualshub.com/

2. Safety Signs and Locations

Left Side View, Top View

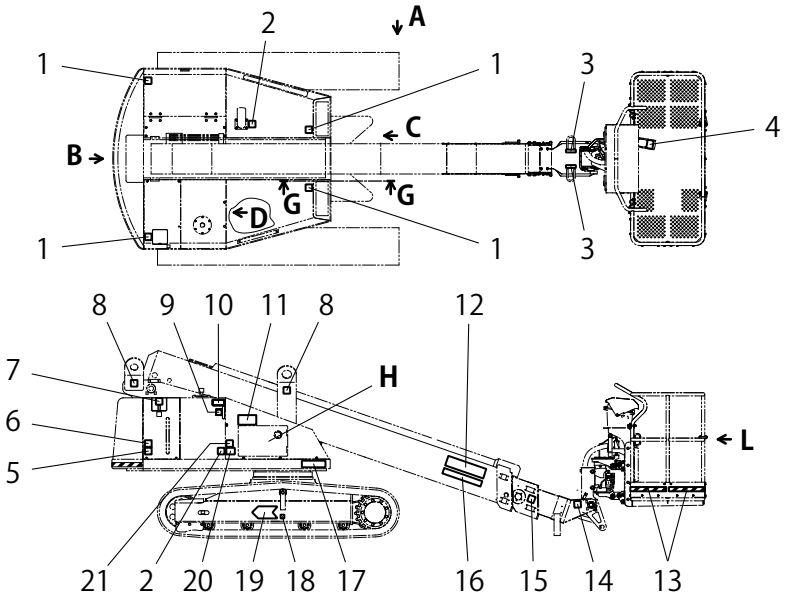

No.		No	
1	491-0000654	6	491-0000673
2	491-0000693	7	494-0000574
3	491-0000557 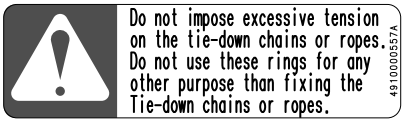 Do not impose excessive tension on the tie-down chains or ropes. Do not use these rings for any other purpose than fixing the Tie-down chains or ropes. 4910000557A	8	494-0000575
4	491-0000152 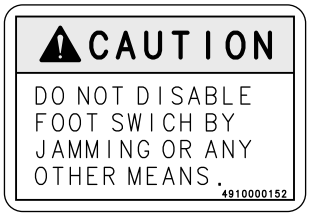 CAUTION DO NOT DISABLE FOOT SWICH BY JAMMING OR ANY OTHER MEANS. 4910000152	9	494-01582 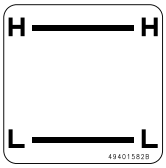 H H L L
5	491-0000649	10	491-0000706 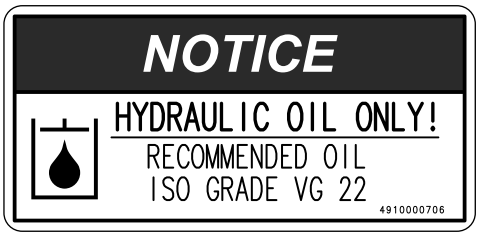 NOTICE HYDRAULIC OIL ONLY! RECOMMENDED OIL ISO GRADE VG 22 4910000706

https://truckmanualshub.com/

Left Side View, Top View (Continued)

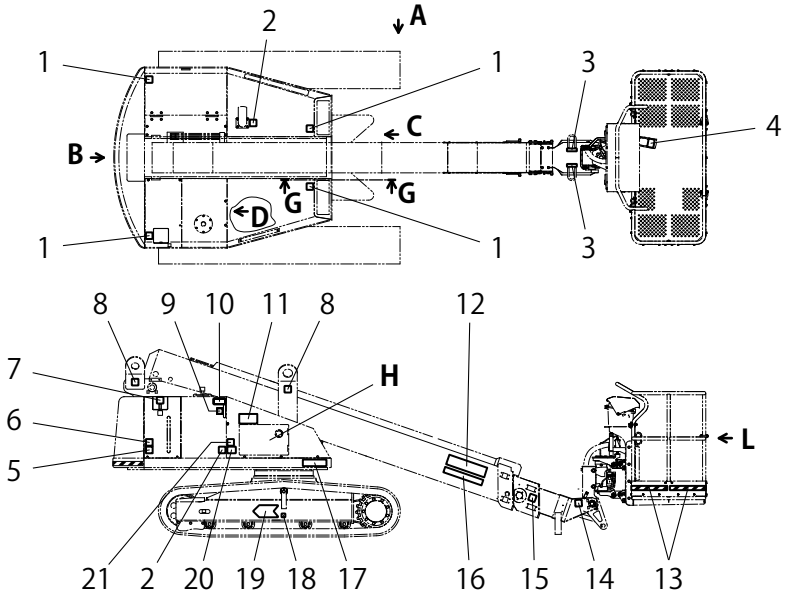

No.		No	
11	491-0000159 CAUTION EMERGENCY PUMP OPERATION In the event of a pump or engine failure this control is used to bring the work platform down. The emergency pump runs only when the switch is held in the on position. Select the desired function and place the "Emergency Pump Switch" in the on position. Hold the switch on for thirty (30) seconds, then off for thirty (30) seconds until the work platform is fully lowered. 4910000159B	16	494-0000253 SKYMASTER
		17	5Y6-07277-00 SR12CSM SKYMASTER
		18	5Y6-04166-00 MAX 65 KPa 5Y60416600
12	182-01002 AICHI	19	5Y6-04167-00
13	(Caution Stripe) 494-0000549	20	491-0000696 WARNING 12 VOLT D.C. BATTERY SYSTEM 4910000696A
14	491-0000670 4910000670A		
15	491-0000650 4910000650	21	491-0000653 4910000653

https://truckmanualshub.com/

Right Side View

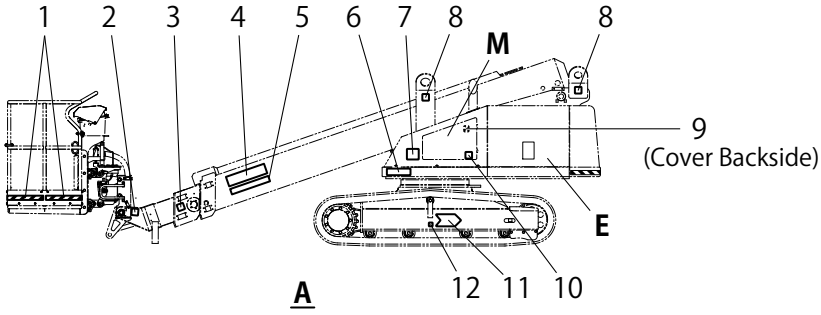

No.		No.	
1	(Caution Stripe) 494-0000549	8	494-0000575
2	491-0000670 		
3	491-0000650 	9	491-0000701
4	182-01002 AICHI	10	491-0000669
5	494-0000253 SKYMASTER	11	5Y6-04167-00 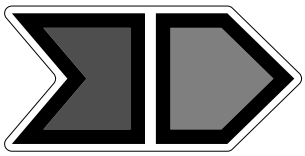
6	5Y6-07277-00 SR12CSM SKYMASTER		
7	5Y6-07901-00 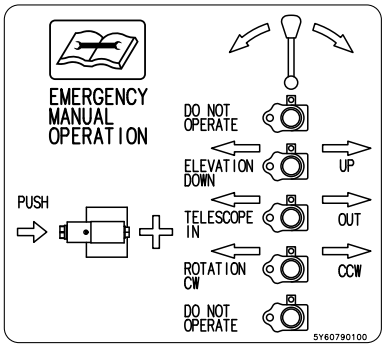	12	5Y6-04166-00

https://truckmanualshub.com/

Front View, Back View, Inside Turntable Cover

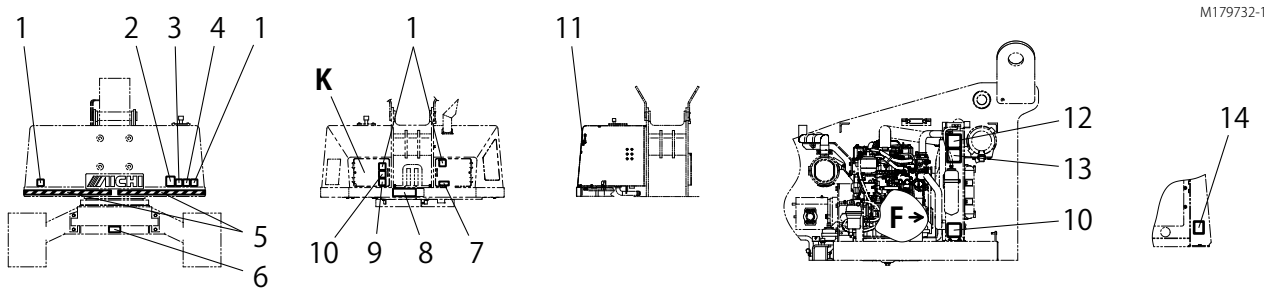

B	C	D	E	F
Front View	Back View	Hydraulic Oil Tank	Engine Compartment	Radiator Mount

No.		No.	
1	491-0000650	8	(Serial Number Plate) 493-0000065 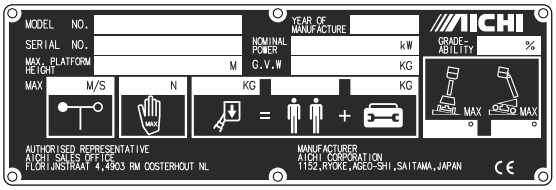
2	S49431-03 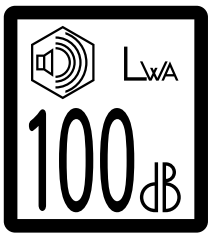	9	491-0000649
3	494-0000578	10	491-0000669
4	491-0000682	11	378-0000024
5	(Caution Stripe) 494-0000577	12	491-0000693
6	5Y6-03876-00 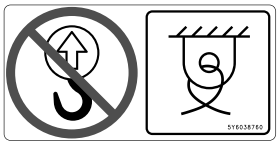	13	491-0000652
7	494-0000170 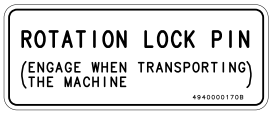	14	491-00891

https://truckmanualshub.com/

Inside Turntable Cover, Platform, Control Valve

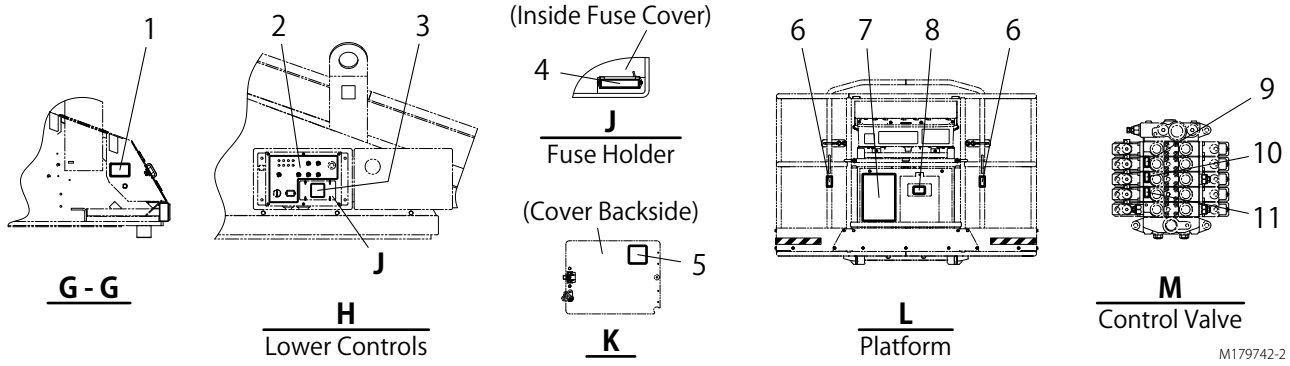

No.	
1	494-0000878

架装物樹脂材料表 / Resin Materials List of Unit

部品名	PART NAME	材料(materials)
操作レバー	LEVER,operation	PA
シリンダブーツ	BOOT,cylinder	NBR
スイーパー	BOOM,sweeper	U
ホースガイド	GUIDE,hose	PA,PE
スライダ	SLIDER	PA,PE
クッションゴム	CUSHION,rubber	CR,EPDM
ゴムクランプ	CLAMP,rubber	CR
グロメット	GROMMET	CR
クローラパッド	PAD,clawler	NR

■ 機種・仕様により部品が付いてない場合があります。
Parts in list may not equip by model, specification. 4940000878

No.	
2	5Y6-07913-00

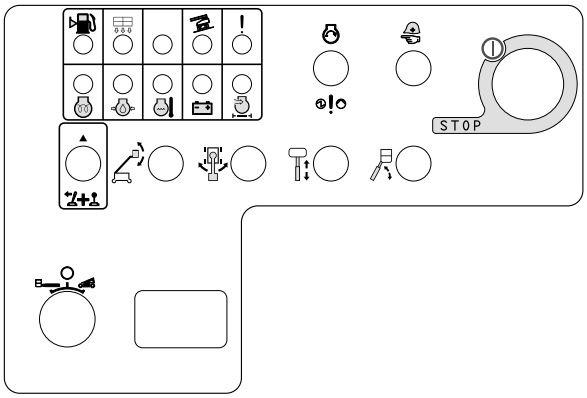

No.	
3	491-0000669

No.	
4	5Y6-07898-00

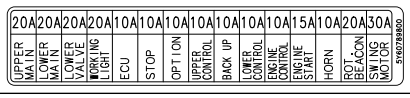

No.	
5	491-0000673

No.	
6	494-0000552

No.	
7	5Y6-03843-00

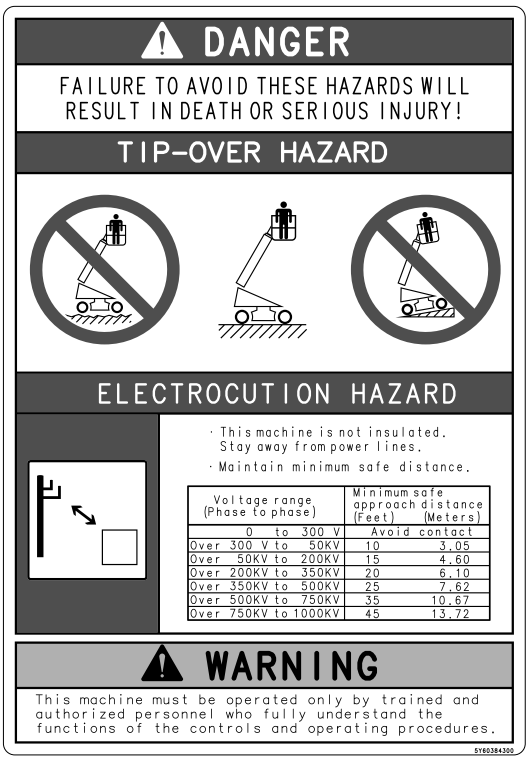

No.	
8	494-0000557

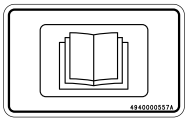

No.	
9	5Y6-00712-00

No.	
10	5Y6-00710-00

No.	
11	5Y6-00714-00

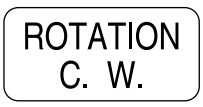

https://truckmanualshub.com/

Upper Controls

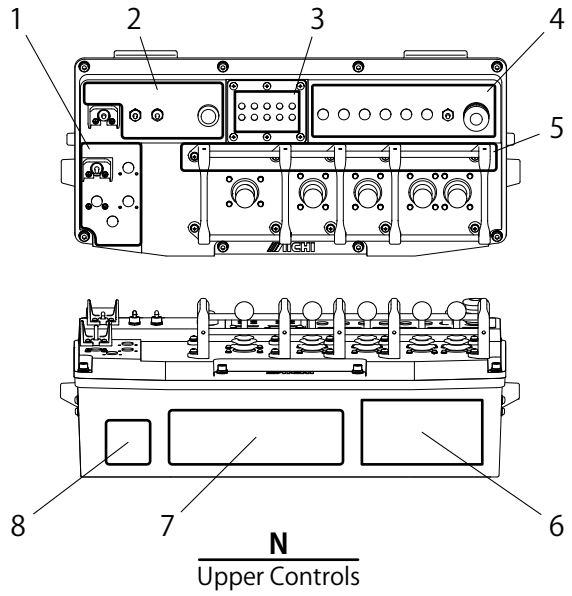

No.		No	
1	5Y6-03860-00 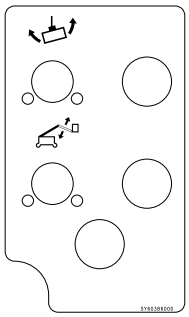	6	491-0000159 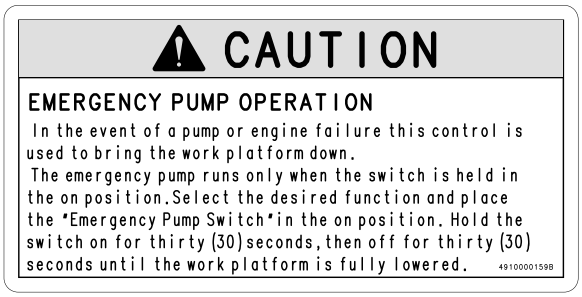
2	5Y6-03858-00 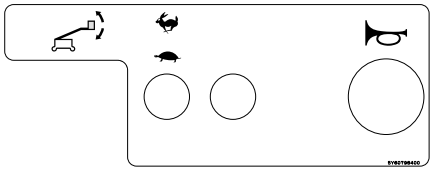	7	5Y6-03847-00 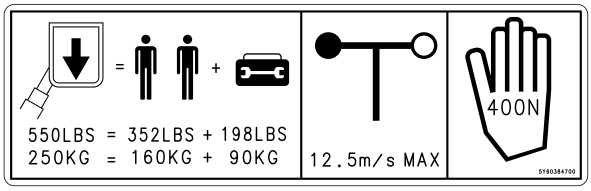
3	5Y6-03856-00 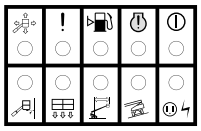	8	491-0000669
4	5Y6-03857-00 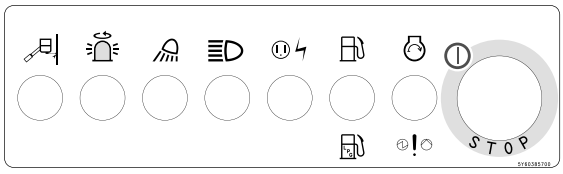		
5	5Y6-04194-00 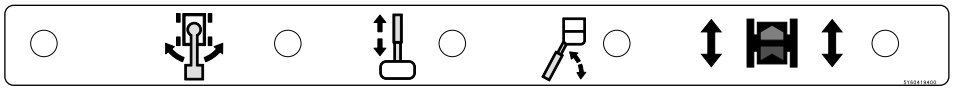		

https://truckmanualshub.com/

Chapter 3
Safety Systems & Devices

⚠WARNING

It is strictly forbidden to make modifications to the machine without obtaining AICHI's written approval. Do not disable or alter the machine's components that have an effect on safety and stability in any way.

Failure to heed warnings could result in decreasing safety, stability, and strength of the machine, or other hazards leading to death or serious injury.

1. List of Safety Systems

(1) Relief Valve

Protect the hydraulic components by relieving abnormally high pressure in the hydraulic system.

(2) Holding Valve on Boom Elevation Cylinder

Prevents the boom from natural descent in the event of hydraulic hose breakage.

(3) Holding Valve on Boom Telescope Cylinder

Prevents the boom from natural descent in the event of hydraulic hose breakage.

(4) Holding Valve on Upper Leveling Cylinder

Maintains the platform level in the event of hydraulic hose breakage.

(5) Emergency Stop Button

The machine is equipped with readily identifiable emergency stop buttons, located at both the upper and lower controls.

Shuts down the engine and stops all of the movements of the machine when this switch is pressed.

(6) Emergency Pump

Auxiliary hydraulic pump driven by the battery. Used to lower the platform in the event of an engine or main pump failure.

(7) Tilt Alarm Buzzer

The tilt light goes on and the alarm buzzer sounds when the machine tilts more than 5 degrees. Even If the tilt alarm buzzer sounds the movements of the machine does not stop.

(8) Travel Alarm Buzzer

The travel alarm buzzer sounds while traveling to warn the people nearby.

(9) Rotation Lock Pin

Fixes the turntable to the chassis to prevent the turntable from being rotated when transporting the machine.

(10) Travel Speed Limit System

This system automatically limits the travel speed according to various boom statuses. For the specific function of this system, see the Section 2 "Travel speed limit system."

(11) Travel Function Limit System

This system disables the travel function according to various boom statuses and the tilt angle of the machine. For the specific function of this system, see Section 3 "Travel Function Limit System."

(12) Guardrails

There are guardrails on all sides of the platform to help prevent persons in the platform from falling off the platform. The entry gate is part of the guardrail system and must be securely fastened after entering the platform.

(13) Lanyard Anchorage Point

The lanyard anchorage points are to hook the safety harness to.

Always use a safety harness in the platform. All personal fall protective equipment must be attached to only the authorized lanyard anchorage points provided in the platform.

(14) Touch switch

This switch helps prevent an incorrect operation caused by an operator falling down onto controls.

Shuts down the engine and stops all of the movements of the machine when you touch this switch on the platform.

https://truckmanualshub.com/

(15) Alarm horn

Before moving the machine, sound the alarm horn to warn the personnel around the machine.

(16) Overload Sensing System

This system disables all of the functions, the overload warning light flashes and the alarm buzzer sounds when the platform is overloaded.

(17) Boom / Travel Function Interlock System

This system does not allow the boom/ platform functions and the travel functions simultaneously, unless the boom is retracted fully and set below 5 degrees. (Area C of the travel speed limit system: See Section 2.)

It allows the boom/platform functions or the travel functions which is operated first, and cancels the other functions, when these functions are operated simultaneously.

(18) Boom Wire Rope Failure Detecting System

This system disables the boom extending functions in the event of the boom extension wire rope failure.

(19) Foot Switch, Enable Switch

To help prevent a misoperation, the boom, platform, and traveling functions are disabled unless the foot switch is depressed or the enable switch is operated.

(20) Foot Switch Cancel System

This system cancels the foot switch/enable switch if any of the boom platform, and traveling function is not operatedfor more than 20 seconds after operating the foot switch/ enable switch.
The system also cancels the functions if the foot switch/enable switch is not operated for more than 20 seconds after operating any of the boom, platform, and traveling function.
At this time, the power indicator light (on the upper controls) or the preheat light (on the lower controls) starts flashing to alert you.
In this case, release all controls and the power indicator light will turn on or the preheat light will turn off. And then operate again to enable the functions.

2. Travel Speed Limit System

This system automatically limits the travel speed according to the boom status as follows.

Table 3–1 Travel Speed Limitation

Area	Boom Status	Travel speed select switch	Travel Speed
A	Elevation: ≥ 45° Telescope: Regardless	Regardless	0.3 km/h
B	Elevation: ≥ 5°, < 45° Telescope: Regardless	Regardless	0.5 km/h
	Elevation: < 5° Telescope: Extended		
C	Elevation: < 5 ° Telescope: Retracted	"🐢" (Low)	0.9 km/h
		"🐇" (High)	1.5 km/h

3. Travel Function Limit System

This system disables the travel function according to the boom status and the machine tilt angle as follows.

Table 3–2 Travel Function Limitation

Area	Boom Status	Machine Tilt Angle	Travel Function
A	Elevation: ≥ 45° Telescope: Regardless	≥ 5°	Disabled
		< 5°	Available
B	Elevation: < 45° Telescope: Extended	≥ 5°	Disabled
		< 5°	Available
C	Elevation: < 45° Telescope: Retracted	Regardless (within the gradeability)	Available

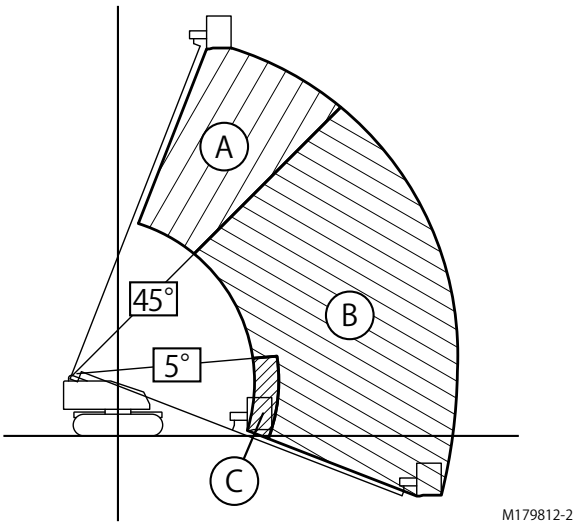

Fig. 3–1

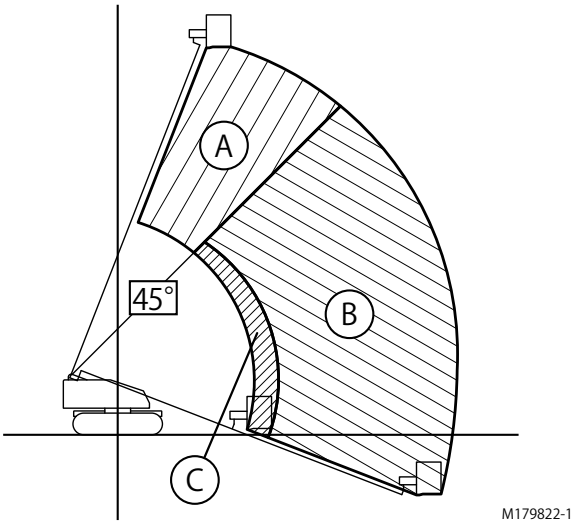

Fig. 3–2

https://truckmanualshub.com/

Chapter 4
Part Names & Functions

1. Part Names

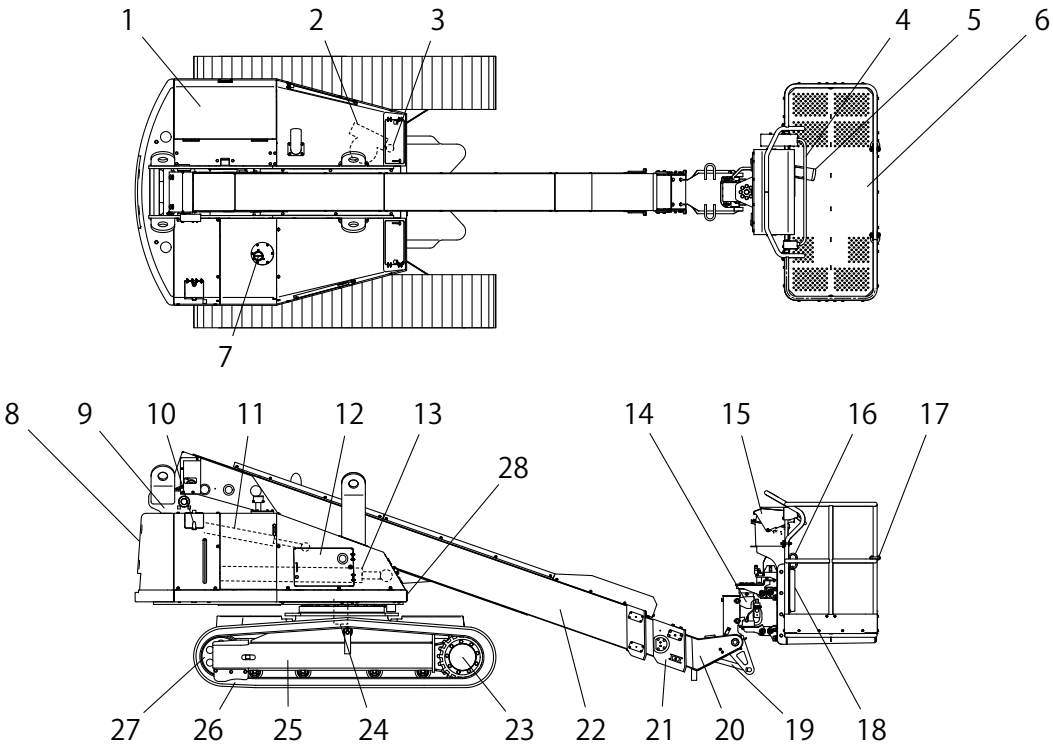

Fig. 4–1

1. Engine Compartment
2. Rotation Gear Box
3. Rotation Lock Pin
4. Touch Switch
5. Foot Switch
6. Platform
7. Hydraulic Oil Tank (Filler Port)
8. Counterweight
9. Turntable
10. Fuel Tank (Filler Port)
11. Platform Leveling Cylinder, Lower
12. Lower Controls
13. Elevation Cylinder
14. Rotary Actuator
15. Upper Controls
16. Lanyard Anchorage Points
17. Entry Gate
18. Manual Holder
19. Platform Leveling Cylinder, Upper
20. 3rd Boom Section
21. 2nd Boom Section
22. 1st Boom Section
23. Travel Motor
24. Swivel Joint
25. Chassis
26. Track
27. Idler Wheel
28. Serial Number Plate

https://truckmanualshub.com/

2. Upper Controls

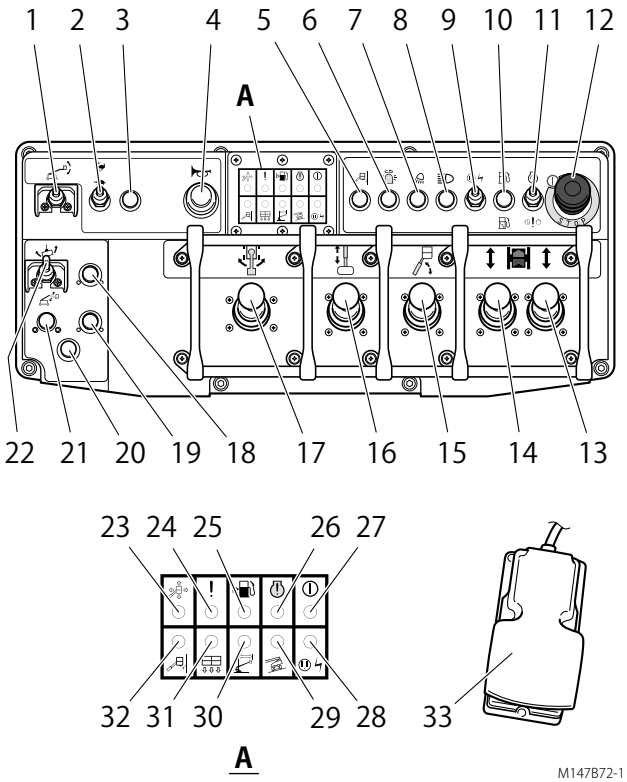

Fig. 4–2

1. Platform Level Adjust Switch

   Operate this switch up and the platform level will tilt up. Operate this switch down and the platform level will tilt down.

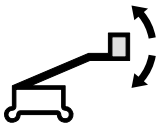

2. Travel Speed Select Switch
   - Select "RABBIT" for a high speed traveling.
   - Select "TURTLE" for a low speed traveling.

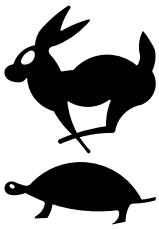

3. Not used
4. Horn Button

   Push the horn button and the alarm horn will sound. Release the horn button and the alarm horn will stop.
   Before moving the machine, sound the horn to warn the personnel around the machine.

5. Not used
6. Not used
7. Not used
8. Not used
9. Hydraulic Generator Switch

   Turn on this switch to use the hydraulic generator (if equipped).

10. Not used
11. Engine Start Switch / Emergency Pump Switch
    - Operate this switch up without pressing the foot switch and the engine will start.
    - Hold this switch down to operate the machine with emergency pump. (Refer to chapter 9 for details)

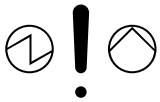

12. Emergency Stop Button

    Push in this button to "OFF" and all functions will stop. Pull out this button to "ON" and the machine will operate.

13. Travel Control Lever (Right)
14. Travel Control Lever (Left)

    Operate both levers up, and the machine will travel forward (green direction). Operate both levers down, and the machine will travel backward (red direction).

    Operate one of levers, and the machine will pivot.

    Operate both levers in each opposite direction, and the machine will spin.

15. Boom Elevation Control Lever

    Operate this lever up and the boom will rise. Operate this lever down and the boom will lower.

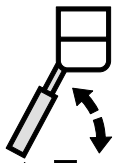

16. Boom Telescope Control Lever

    Operate this lever up and the boom will extend. Operate this lever down and the boom will retract.

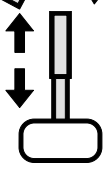

17. Boom Rotation Control Lever

    Operate this lever to the left and the boom will rotate clockwise. Operate this lever to the right and the boom will rotate counterclockwise.

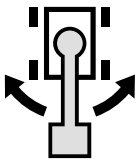

18. Not used
19. Not used
20. Not used
21. Not used

https://truckmanualshub.com/

22. Platform Rotation Switch
    Operate this switch to the left and the platform will rotate clockwise. Operate this switch to the right and the platform will rotate counterclockwise.
23. Not used
24. System Failure Light
    This light will go on or flash in the event of a computer control system failure.

WARNING

Stop using the machine and contact AICHI or an AICHI dealer for inspections, if this light goes on or flashes.

25. Fuel Level Light
    This light goes on when the fuel level is low.
    (On a level surface, the fuel level light goes on at about 20 liters.)

NOTICE

- **When the fuel level light goes on, refill the diesel fuel.**
- **The capacity of the fuel tank is 95 liters.**

26. Engine Failure Light
    This light will go on in the event of an engine failure, e.g., failed charging system, abnormally low oil pressure, and abnormally high cooling water temperature.
27. Power Indicator Light
    This light will go on when the key switch on the lower controls turns to "⊟" (UPPER CONTROLS).

NOTICE

If this light is flashing, operations of the machine are disabled. In that case, release all controls and then operate controls. (See "33. Foot Switch.")

28. Hydraulic Generator Light
    This light will go on when the hydraulic generator switch is turned on.
29. Tilt Light
    This light will go on when the machine tilts more than max allowable tilt angle.
30. Not used
31. Overload Warning Light
    When the platform is overloaded, this light will flash, the alarm buzzer will sound and all of the functions will be disabled.
32. Not used
33. Foot Switch
    Depress this switch to operate the machine on the platform.

NOTICE

Operate controls within 20 seconds after depressing the foot switch. Failure to do so, the power indicator light starts flashing and all controls become disabled even when the foot switch has been depressed. (See "27. Power Indicator Light.")

In that case, release all controls and then operate again.

https://truckmanualshub.com/

3. Lower Controls

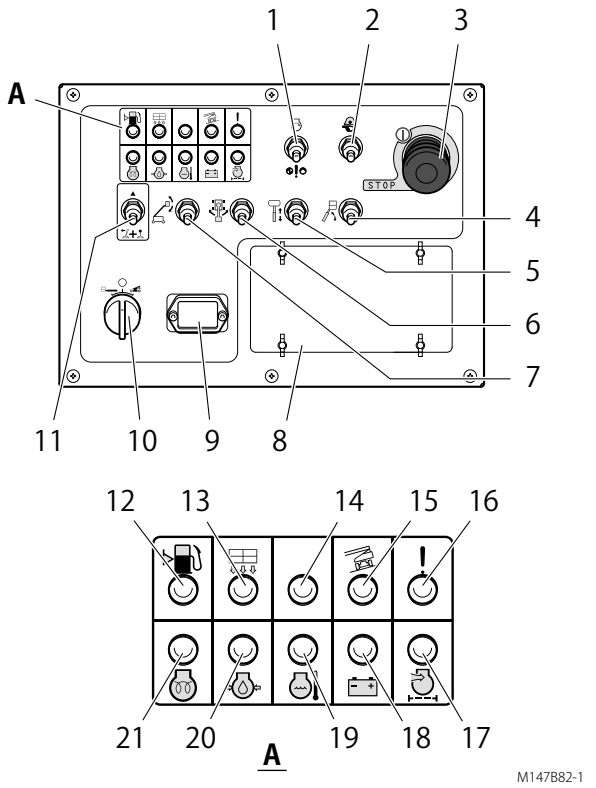

Fig. 4–3

1. Engine Start Switch / Emergency Pump Switch
   - Operate this switch up without operating the enable switch and the engine will start.
   - Hold this switch down to operate the machine with emergency pump. (Refer to chapter 9 for details)
2. Pre-start Check Switch
   Follow the instruction and hold this switch up when the pre-start check is performed.
3. Emergency Stop Button
   Push in this button to "OFF" and all functions will stop. Pull out this button to "ON" and the machine will operate.
4. Boom Elevation Switch
   Operate this switch up and the boom will rise. Operate this switch down and the boom will lower.
5. Boom Telescope Switch
   Operate this switch to the left and the boom will retract. Operate this switch to the right and the boom will extend.
6. Boom Rotation Switch
   Operate this switch up and the boom will rotate counterclockwise. Operate this switch down and the boom will rotate clockwise.
7. Platform level adjust switch
   Operate this switch up and the platform level will tilt up. Operate this switch down and the platform level will tilt down.
8. Fuse Holder
   The fuse holder is located inside the cover.
9. Hour Meter
   The hour meter displays the time during which the machine has been used. Used as a guide for inspecting, servicing, or refueling. It works only when the engine is in motion.
10. Key Switch for Upper Controls / Off / Lower Controls Selection
    Turn the key switch to the left and the upper controls will operate.
    Turn the key switch to center position and the machine will be off.
    Turn the key switch to the right and the lower controls will operate.
11. Enable Switch
    Hold this switch up to operate the machine on the ground.

NOTICE

Operate controls within 20 seconds after operating the enable switch. Failure to do so, the preheat light starts flashing and all controls become disabled even when the enable switch has been operated. (See "21. Preheat Light.")

In that case, release all controls and then operate again.

https://truckmanualshub.com/

12. Fuel Level Light

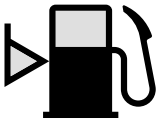

This light goes on when the fuel level is low.
(On a level surface, the fuel level light goes on at about 20 liters.)

NOTICE

- **When the fuel level light goes on, refill the diesel fuel.**
- **The capacity of the fuel tank is 95 liters.**

13. Overload Warning Light

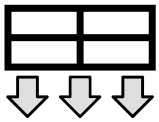

When the platform is overloaded, this light will flash, the alarm buzzer will sound and all of the functions will be disabled.

14. Not used
15. Tilt Light

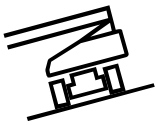

This light will go on when the machine tilts more than max allowable tilt angle.

16. System Failure Light

This light will go on or flash in the event of a computer control system failure.

WARNING

Stop using the machine and contact AICHI or an AICHI dealer for inspections, if this light goes on or flashes.

17. Air Filter Clog Light

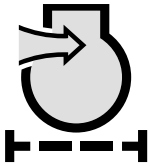

This light will go on when the air filter is clogged.
If this light goes on while the engine is in motion, clean or replace the air filter element.

18. Charge Light

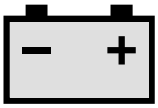

After starting the engine, this light will go off.
If this light goes on while the engine is in motion, check the charging system, e.g. alternator and fan belt.

19. Water Temperature Light

When the engine cooling water temperature goes up abnormally, the engine will stop and this light will go on to protect the engine from overheat.

WARNING

When the engine is overheated, do not remove the radiator cap, as the heated water will splash out, resulting in scald.

CAUTION

If this light goes on during operations, stop using the machine and check the engine cooling system, e.g., shortage of cooling water and broken fan belt.

20. Oil Pressure Light

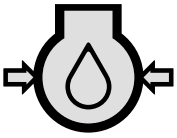

After starting the engine, this light will go off. Check the engine lubrication system, e.g., shortage of engine oil, if this light goes on while the engine is in motion.

21. Preheat Light

This light will go on when the key switch is turned to "" (LOWER CONTROLS) or "" (UPPER CONTROLS) and then will go off when the preheating is completed.

NOTICE

If this light is flashing, operations of the machine are disabled. In that case, release hands from all controls and then operate controls. (See "11. Enable Switch.")

https://truckmanualshub.com/

Chapter 5
Workplace Check

WARNING

Do not move the machine to the workplace until the workplace check is performed.

- Make sure to check the workplace before starting operation. Make sure there are no following hazards:
  - Near electric power lines and apparatus
  - Drop-offs or holes, including those concealed by water, ice, mud, etc.
  - Slope(s)
  - Slippery or icy surfaces
  - Inadequate surface support to withstand all load forces imposed by the machine in all operating configurations
  - Bumps and floor obstructions and electrical conductors
  - Curbs
  - Debris
  - Overhead obstructions
  - Wind and weather conditions
  - Dark workplace (night work)
  - Hazardous locations and atmospheres
  - Presence of unauthorized persons
  - Other possible unsafe conditions

- Remove the hazards, if any, after the workplace check. If it is not possible to remove them, do not move the machine to the workplace.
- The machine can be used only on surfaces which are firm and for which all both tracks can maintain contact evenly with the ground.
- During work, always pay attention to surroundings and make sure there is no hazard.
- To prevent collision, place warning signs, indicate detours and install collision-prevention guards around the workplace, so that pedestrian and cars can pass safely.

https://truckmanualshub.com/

Chapter 6
Pre-operation Checks

⚠ DANGER

If the pre-operation checks reveal any abnormalities, immediately put an "Out of Order" sign on the machine, and stop using the machine.

The use of the machine not repaired can cause a serious accident. After repairs are completed, perform the pre-operation checks again from the beginning.

⚠ WARNING

- **Do not operate the machine before performing pre-operation checks described in this manual.**
- **Perform the pre-operation checks on firm, level surface. Begin the checks with the platform lowered.**
- **If there is damage, such as cracks, on the welds of the platform guardrail, or on the guardrail pipes, change the guardrail immediately.**
- **If there is damage, such as cracks or deformation, on the floor of the platform, immediately contact AICHI or an AICHI dealer for repairing.**
- **Make sure to perform the checks with no load on the platform, because if there is a load on the platform, the checks will not be exact.**

⚠ CAUTION

Damage and stains to the decals will obstruct correct handling. Immediately remove the stain, or change the decals.

NOTICE

Make a copy of the daily inspection check sheet (at the end of this manual). Make a check in the appropriate box on the sheet while performing the pre-operation checks.

1. Visual Check

Step 1

Circle the machine once and check visually that there are no oil leaks, and no damage to the decals or to the machine. In winter or cold climate, remove snow and ice from the machine for safety before using the machine. At the time, do not pour hot water to the machine to melt snow and ice.

Step 2

Check for cracks, or breaks in the boom, platform, and other parts. Check for loose bolts, and open covers. Check that all the guardrails are attached properly. Make sure that all compartment covers are in place and latched.

Step 3

Check that all decals are in place, legible and not damaged. Replace any missing or damaged decals. Use mild soap and water to clean decals if dirty. Refer to Section 2 of Chapter 2 for decals and their locations.

Step 4

Check the fuel, hydraulic oil, battery fluid, engine oil, and coolant levels. (Refer to Chapter 7 for details)

Step 5

Check that greasing points are lubricated sufficiently.

https://truckmanualshub.com/

2. Function Check

NOTICE

- **The machine cannot be operated when the upper or lower emergency stop button is pushed in. Pull out both of the upper and lower emergency stop buttons before pre-operation checking.**
- **The platform leveling system may not work properly when ambient temperature is low. Perform warming-up operation of the machine to raise the hydraulic oil temperature.**

2–1 Preparation for Function Check

Step 6

Make sure the rotation lock pin is unlocked.

NOTICE

Operating with rotation locked will result in machine damage.

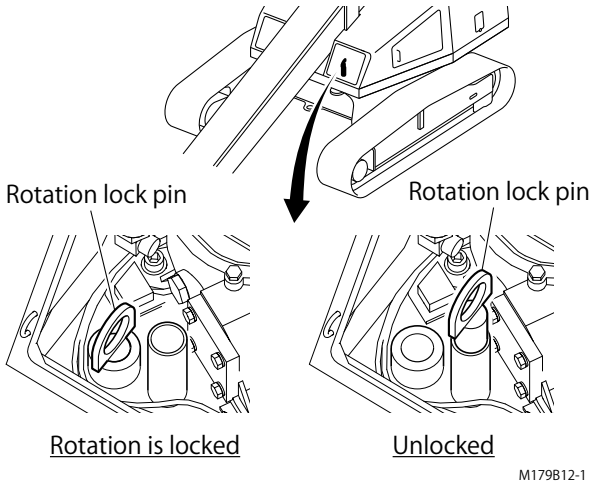

Fig. 6–1

Step 7

Put the machine on a firm, level surface.

Step 8

Set up the machine in the following state:
- Platform rotation: center
- Platform load: 0 kg
- Boom elevation: fully lowered
- Boom rotation: rear center

2–2 Lower Controls Check

Do the checks first with the lower controls, then with the upper controls. In steps up to this section, operate the boom using the lower controls.

Step 9

Turn the key switch to "" (LOWER CONTROLS) and make sure that the alarm buzzer sounds for about 3 seconds, just after turning on.

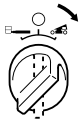

WARNING

If the buzzer does not sound properly, the machine is faulty. Do not use the faulty machine.

Step 10

Hold the pre-operation check switch up.

Make sure the alarm buzzer sounds for about 3 seconds after the pre-operation check switch has been held up.

NOTICE

If the buzzer does not stop sounding , the boom functions are disabled.

Step 11

Start the engine and, idle the engine for warming up.

Step 12

Make sure there are no strange sounds come from any part.

Step 13

Check that all safety systems are functioning properly.
- Emergency stop: push the emergency stop button while operating the boom, and make sure that both the boom operation and the engine stop.
- Emergency pump: Make sure that the boom can be operated while the emergency pump is being operated.

Step 14

Check that no oil is leaking from the hydraulic components, hoses and pipes.

https://truckmanualshub.com/

Step 15

Check the boom telescoping wire ropes for any damages.

- No wobble or unsteady movements when telescoping the boom.
- No damage at the wire rope ends.

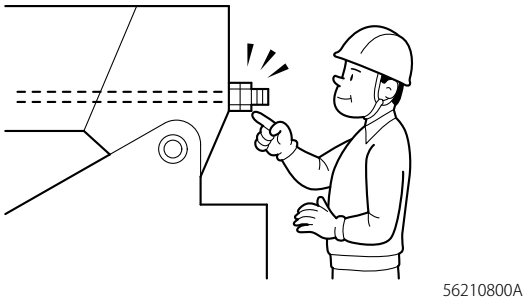

Fig. 6–2

Step 16

Raise the boom fully with continuous operation. And then extend the boom fully with continuous operation.

⚠WARNING

If the boom stops automatically on the way and the system failure light on the lower controls flashes, the machine is faulty. Do not use the faulty machine.

Step 17

Leave the machine as it is for 5 minutes. Check visually that the boom remains in its position.

Step 18

Retract the boom fully and lower the boom fully.

2–3 Upper Controls Check

If no abnormalities are revealed in steps up to the previous section, check the following using the upper controls.

⚠WARNING

- **Retract the boom fully and lower the boom under the horizontal prior to the upper controls check.**
- **Securely close and lock the doors of the covers before operating. Doors opening suddenly through the movements of the machine is hazardous.**

Step 19

Turn the key switch to "▭▬" (UPPER CONTROLS).

Step 20

Wear the safety harness and get on the platform and close gate. After getting on the platform, immediately hook the safety harness to the lanyard anchorage point. (See Section 3 of Chapter 8.)

Step 21

Start the engine.

Step 22

Rotate the platform and make sure that the platform rotates smoothly without excessive free play.

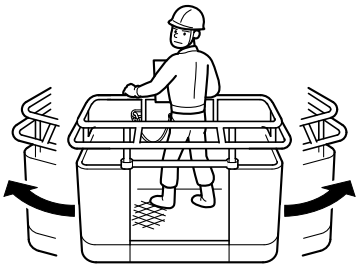

Fig. 6–3

Step 23

Check that all safety systems are functioning properly.

- Emergency stop: push the emergency stop button while operating the boom, and make sure that both the boom operation and the engine stop.
- Foot switch: while operating the boom, release the foot switch, and make sure the boom operation stops.
- Emergency pump: Make sure that the boom can be operated while the emergency pump is being operated.
- Touch switch: Push the center of the touch switch toward the upper controls while operating the boom, and make sure that both the boom operation and the engine stop.

https://truckmanualshub.com/

NOTICE

When stopping the engine with the touch switch, push in the emergency stop switch. After a lapse of 1 second, pull out the emergency stop switch and the machine functions will be restored.

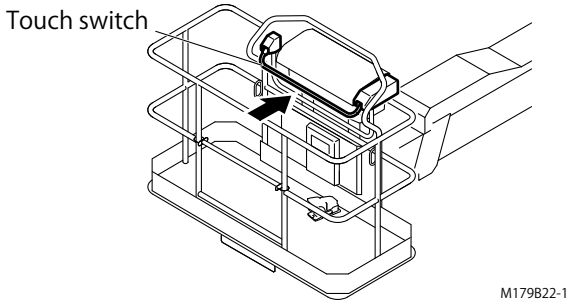

Fig. 6–4

2–4 Tilt Warning Check

Step 24

Set up the machine in the following state:
- Platform load: 1 operator
- Boom elevation: horizontal
- Boom telescope: fully retracted

Step 25

Make sure the tilt light goes on and alarm buzzer sounds when the machine tilts more than 5°, e.g. by traveling up onto a slope more than 5° (within the gradeability).

2–5 Last Check

Step 26

Retract the boom fully and lower the boom fully

Step 27

Put the machine on a firm, level surface and turn the key switch to "○" (OFF) to shut down the engine.

Step 28

Circle the machine and check visually that there are no oil leaks.

The pre-operation check is now complete.

https://truckmanualshub.com/

Chapter 7
Maintenance

1. Storage Method

WARNING

After use the machine, beware of hot parts such as engine and hydraulic oil tank. Contact with hot parts may cause severe burns.

After each use, store the machine as follows:

Step 1

Park the machine on a firm, level surface.

Step 2

Take all tools and materials from the platform.

Step 3

Retract and lower the boom fully.

Step 4

Turn the key switch to "○" (OFF) to shut down the engine, remove the key to prevent using the machine without permission, and store it suitably.

Step 5

Perform the daily maintenance.

2. Daily Maintenance

NOTICE

Only daily maintenance items that specified in this manual shall be performed by the operator.

2–1 Refuel the Machine

WARNING

- **Never refuel with the engine running. Keep open flames or any other form of ignition well away when refueling.**
- **If using a fuel carrying can, refuel in a stable posture using a scaffold such as stools.**

NOTICE

- **After work is completed, always fill up the tank to prevent mixing of moisture into fuel in the tank.**
- **Pay attention so as not to mix dirt and debris during filling the fuel tank.**

Step 1

Check fuel level with the fuel level gauge located on the fuel tank.

Step 2

Pour fuel into the fuel tank carefully.

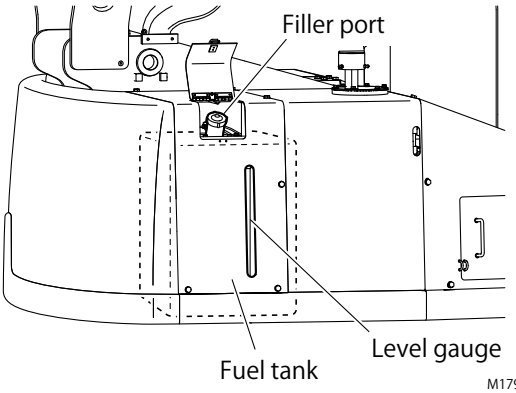

Fig. 7–1

https://truckmanualshub.com/

2–1–1 Diesel Fuel Specifications

Diesel fuel should comply with the following specifications. The table lists several worldwide specifications for diesel fuels. (See Table 7–1.)

Table 7–1 Diesel Fuel Specifications

Diesel Fuel Specification	Location
ASTM D975 No. 1D S15 No. 2D S15	USA
EN590:96	European Union
ISO 8217 DMX	International
BS 2869-A1 or A2	United Kingdom
JIS K2204 Grade No.2	Japan
KSM-2610	Korea
GB252	China

NOTICE

- **Never mix kerosene, used engine oil, or residual fuels with the diesel fuel. Poor quality fuel can reduce engine performance and/or cause engine damage.**
- **Use fuel with sulfur content of less than 0.0015 % (15 ppm). A higher sulfur content fuel may cause sulfuric acid corrosion in the cylinders of the engines.**

2–2 Check the Hydraulic Oil Level

- Maintaining the hydraulic oil at sufficient level is very important for the machine operation. Deficient of the hydraulic oil level can damage hydraulic parts.
- Daily checks from the oil level gauge (Fig. 7–2) can confirm the change of the hydraulic oil level that might show the hydraulic system problems.

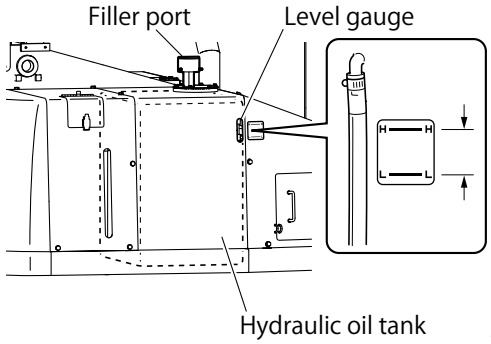

Fig. 7–2

Step 1

Make sure the machine is level.

Step 2

Make sure the boom is retracted and lowered fully.

Step 3

Check the oil level gauge located on the side of the hydraulic oil tank.

Step 4

Add the hydraulic oil if necessary.

2–2–1 Hydraulic Oil Specifications

Table 7–2 Hydraulic Oil Specifications

Grade	Recommended oil
ISO VG22	Shell Tellus S2 M 22 or equivalent

NOTICE

For cold regions and other oil, refer to Section 2 "List of Recommended Lubricants" under Chapter 12.

2–3 Check the Battery Fluid Level

⚠CAUTION

The battery fluid contains corrosive acid. When dealing with the battery, always wear appropriate protective clothing and equipment to protect your hands, eyes, face and body, and avoid contacting battery fluid.

Step 1

Check the battery fluid level in each cell. It should be between the "UPPER LEVEL" and "LOWER LEVEL" lines.

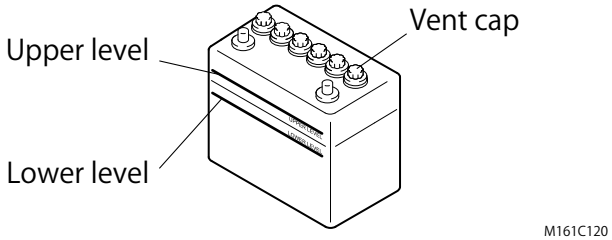

Fig. 7–3

https://truckmanualshub.com/

Step 2

When the amount of fluid nears the "LOWER LEVEL" line, open the cap and fill with distilled water so it is at the "UPPER LEVEL" line.

NOTICE

- **If operation continues with insufficient battery fluid, the battery life is shortened, and the battery may overheat and explode.**
- **Do not overfill.**
- **Do not add anything other than distilled water. Failure to obey this instruction could shorten the battery life.**

Step 3

Wipe up any spills immediately. Keep the terminals and the upper surface of the battery clean.

2–4 Check the Engine Oil Level

Daily checking is important to keep the engine in good operating condition.

⚠WARNING

- **Stop the engine and cool down before checking the engine oil level.**
- **Never leave the key in the key switch when checking the engine oil level. Someone may accidentally start the engine without realizing it while checking the engine oil level. Such accidents could result in a serious injury.**

Step 1

Make sure the machine is level.

Step 2

Turn the key switch to "○" (OFF) to shut down the engine and remove the key.

Step 3

Remove dipstick (Fig. 7–4, 1) and wipe with clean cloth.

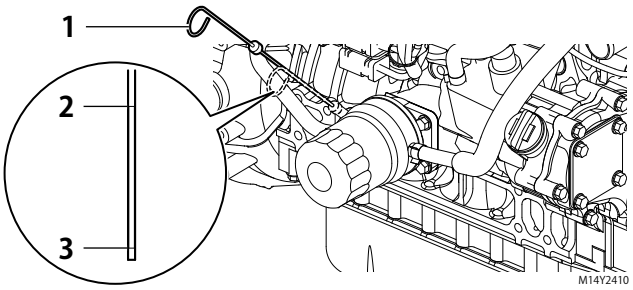

Fig. 7–4

Step 4

Fully reinsert dipstick.

Step 5

Remove dipstick. The oil level should be between upper (Fig. 7–4, 2) and lower (Fig. 7–4, 3) lines on the dipstick.

Step 6

Fully reinsert dipstick.

Step 7

Add the engine oil if necessary.

2–4–1 Engine Oil Viscosity

Select the appropriate engine oil viscosity based on the ambient temperature and use the SAE Service Grade Viscosity Chart in Fig. 7–5.

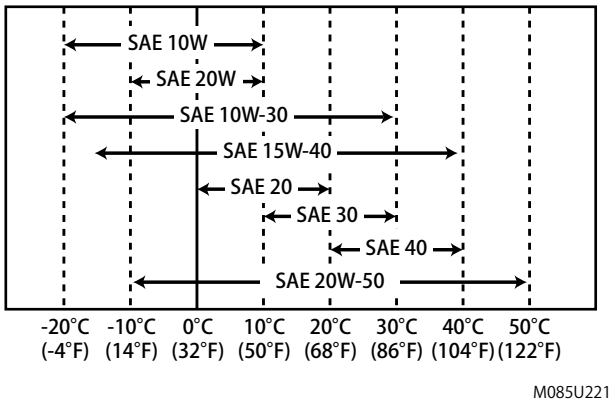

Fig. 7–5

https://truckmanualshub.com/

2–5 Check the Cooling System

WARNING

- **Stop the engine and cool down before checking the cooling system to avoid being burned.**
- **Never leave the key in the key switch when checking the cooling system. Someone may accidentally start the engine without realizing it while checking the cooling system. Such accidents could result in a serious injury.**

CAUTION

Wear eye protector and rubber gloves when handling the engine coolant. If contact with the eyes or skin should occur, flush eyes and wash immediately with clean water.

NOTICE

Do not remove the radiator cap.

Step 1

Make sure the machine is level.

Step 2

Turn the key switch to "○" (OFF) to shut down the engine and remove the key.

Step 3

Check the level of engine coolant in the reserve tank (Fig. 7–6, 1). The coolant level in the tank should be between the "LOW" mark (Fig. 7–6, 1) and "FULL" mark (Fig. 7–6, 3).

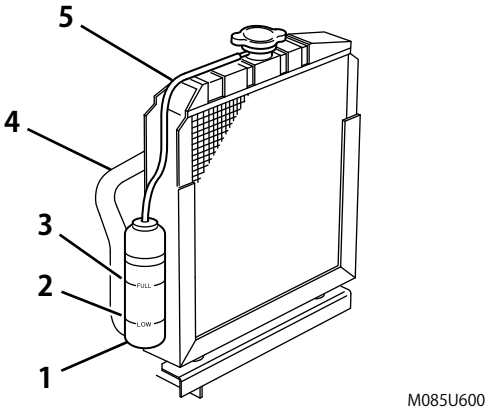

Fig. 7–6

Step 4

Add additional engine coolant to the reserve tank if necessary.

Step 5

Check the radiator hoses (Fig. 7–6, 4) for cracks, abrasions, cuts or other damage. Replace as necessary.

Step 6

Check the hose (Fig. 7–6, 5) that connects the reserve tank (Fig. 7–6, 1) to the radiator.
Be sure it is securely connected and there are no cracks or damage. If the hose is damaged, engine coolant will leak out instead of going into the reserve tank.

https://truckmanualshub.com/

3. Periodic Maintenance

WARNING

Periodic maintenance shall be performed by qualified service technicians.

3–1 Monthly and Annual Inspection

- Perform a monthly and annual inspection referring to the separate service manual.
  - Depending on the laws of the country in which the machine is being used, keep the records of the checks for the required number of years.
  - For any doubts you may have about handling, inspection or spare parts, contact AICHI or an AICHI dealer.
  - Refer to the separate service manual for what must be checked regularly.
- If the machine has not been used for over one month, make sure to perform the monthly inspection before use.

3–2 Crawler Tracks

As slack will form on the crawler tracks due to friction etc., periodically adjust the tension of the tracks.

If the tension is not appropriate, track detachment may occur.

WARNING

- **Do not get on the platform while adjusting the tracks. Failure to avoid this hazard could result in a fall accident and serious injury.**
- **Do not enter under the platform, boom, tracks, and chassis while adjusting the tracks. Failure to avoid these hazards could result in crush accidents and serious injury.**

3–2–1 Adjustment Method

Step 1

A grease cylinder for tension adjustment of the crawler track is located in the work opening on the left and right sides of the chassis frame.

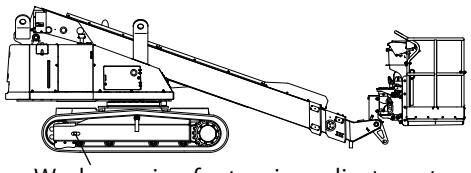

Fig. 7–7

Step 2

Set up the machine on a firm level surface. Retract the boom fully and rotate the boom to the right or left side so that it is at right angles with the chassis.

Step 3

Set the boom stand (Fig. 7–8, B) and the wood block (Fig. 7–8, A) to prop up the first boom end. Use the wood block that is wider than the width of first boom end.
Make sure the stand is stable.

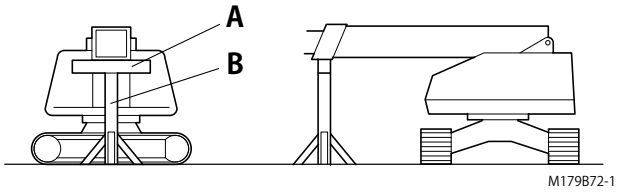

Fig. 7–8

WARNING

Fixate the stand with brace members so that the stand does not fall over during operation.

Step 4

Using the lower controls, lower the boom to lift up the track 30 – 50 mm above the ground.

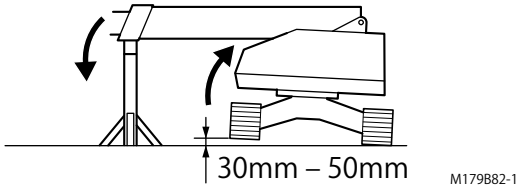

Fig. 7–9

WARNING

Do not lift up the track more than 50 mm above the ground. Excessive lifting could cause the machine to become unstable, resulting in death or serious injury.

https://truckmanualshub.com/

Step 5

Turn the key switch to "○" (OFF) to shut down the engine and remove the key.

WARNING

Never leave the key in the key switch when adjusting the tension of the tracks. Someone may accidentally start the engine without realizing it while adjusting the tension of the tracks. Such accidents could result in a serious injury.

Step 6

To tighten the tension of the track

A grease fitting is located on the right and left sides of the chassis frame. (Fig. 7–10)

Supply grease to the grease cylinder through the grease fitting to adjust the tension of the track. Adjust the tension of the track so that there is 160 – 170 mm of slack between the chassis frame and track shoe. (Fig. 7–11)

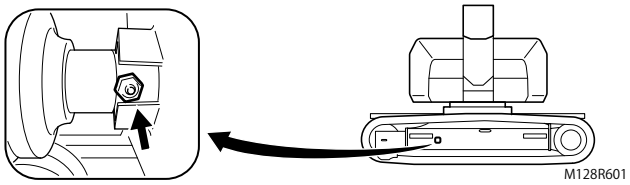

Fig. 7–10

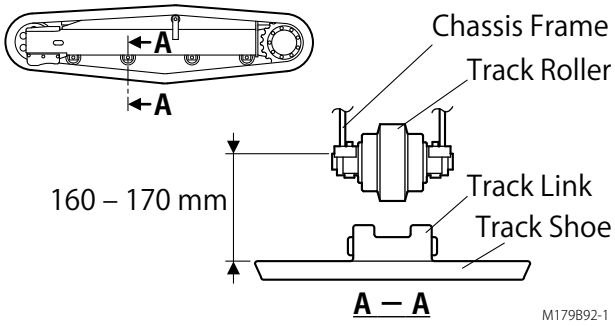

Fig. 7–11

Step 7

To loosen the tension of the track

WARNING

Never loosen the nut more than one turn as it may pop out resulting in serious injury.

If the track is too tight, loosen the nut on the grease fitting till the grease exudes (one turn or less). After adjusting the track, fasten the nut tightly.

Tightening torque: 59 – 88 N·m (6.0 – 9.0 kgf·m)

Step 8

After adjusting one side, rotate the boom 180° and adjust the other side in the same manner.

NOTICE

It is important to adjust the tension of left and right tracks equally.

3–2–2 Adjustment Interval

Adjust the tension of the tracks at the following time intervals.

Table 7–3 Adjustment Interval

	Interval
First time on new machine	After 10 – 20 hours
Thereafter	Every 800 hours or 6 months

NOTICE

Confirm the number of hours in service by the hour meter.

https://truckmanualshub.com/

3–3 Engine Maintenance

Daily and periodic maintenance are important to keep the engine in good operating condition. The following is an excerpt of maintenance items by periodic maintenance intervals.

Periodic maintenance intervals vary depending on engine application, loads, diesel fuel and engine oil used and are hard to establish definitively. The following should be treated only as a general guideline.

3–3–1 Periodic Maintenance Chart

Table 7–4 Periodic Maintenance Chart

○: Check ◇: Replace

System	Check Item	Daily	Periodic Maintenance Interval	
			Every 50 hours	Every 250 hours
Cooling System	Check and Refill Engine Coolant	○		
Electrical Equipment	Check Indicators	○		
Engine Oil	Check Engine Oil Level	○		
	Drain and Fill Engine Oil		◇ 1st time	◇ 2nd and after
	Replace Engine Oil Filter			
Fuel	Check and Refill Fuel Tank Level	○		
	Check Fuel Filter / Water Separator	○		

NOTICE

Contact AICHI or an AICHI dealer for the maintenance items other than the table above.

https://truckmanualshub.com/

Chapter 8
Operation

WARNING

- **Do not operate the machine before pre-operation checks described in this manual.**
- **For a rainy day, read and understand Chapter 9 "Emergency Operation" before operating the machine.**

NOTICE

- **Confirm Chapter 1 "Safety Rules" for precautions about operation.**
- **If ambient temperature is lower than the allowable range of the hydraulic oil temperature, warm up the machine to raise the hydraulic oil temperature, and then operate the machine.**

1. Starting the Engine

1–1 Starting from Ground

Do the following to start the engine from the lower controls.

Step 1

Make sure the water separator fuel cock is in the ON position.

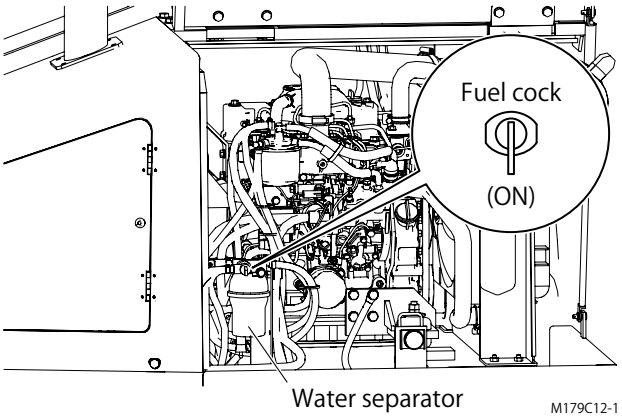

Fig. 8–1

Step 2

Make sure both of the upper and lower emergency stop button are pulled out to "ON."

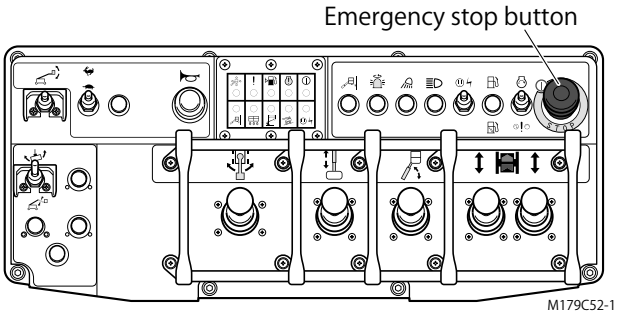

Fig. 8–2 (Upper Controls)

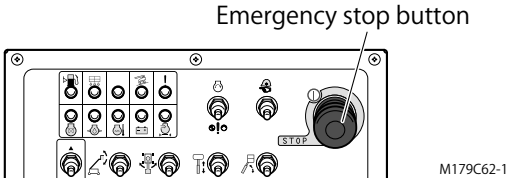

Fig. 8–3 (Lower Controls)

Step 3

Turn the key switch to "" (LOWER CONTROLS). All of indicators will go on and then off. After that, make sure that both of the oil pressure and charge lights go on.

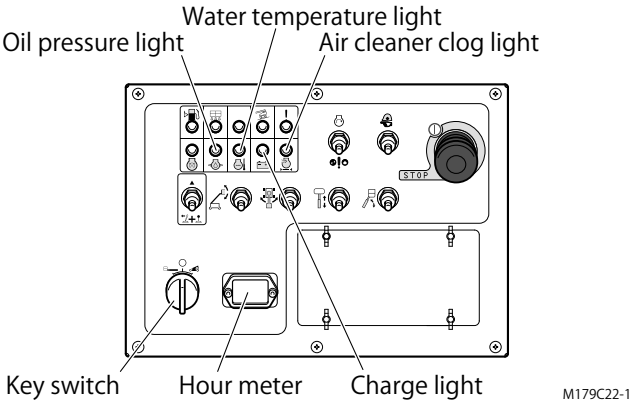

Fig. 8–4

https://truckmanualshub.com/

WARNING

- **When the engine is overheated, do not remove the radiator cap, as the heated water will splash out, resulting in scald.**
- **If any of the lights shown in the figure above are lit while operating, stop using the machine, and inspect as needed. (Refer to Chapter 4 "Part Names and Functions.")**

NOTICE

Before rotating the boom for the first time at the start of work, or during checks, make sure that the rotation lock pin is unlocked. (See figure below.)

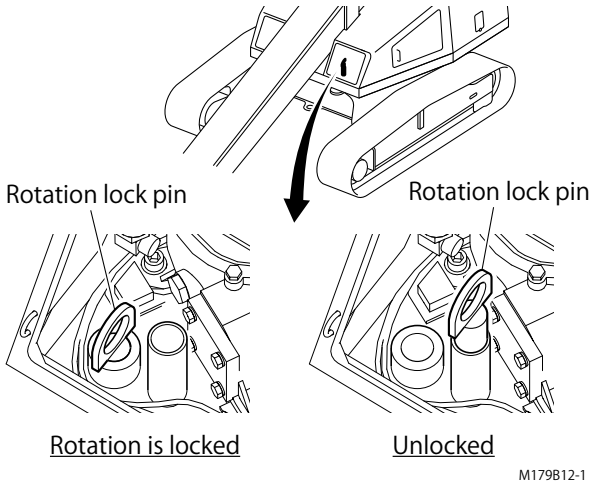

Fig. 8–5

Step 4

Operate the engine start switch up to "ENGINE START" to start the engine.
If the engine does not start easily because of the cold, start the engine after the pre-heat light has gone off.

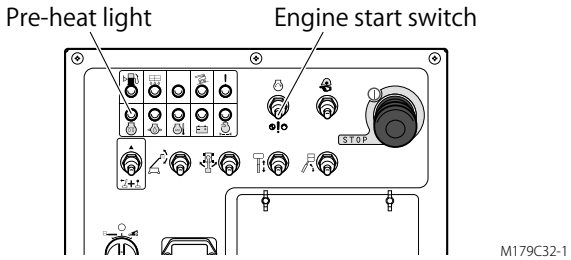

Fig. 8–6

NOTICE

- **Immediately release your hand from the engine start switch once the engine has started.**
- **Do not hold the engine start switch up for 15 seconds or more. Failure to release your hand could result in damage to the starter motor.**
- **Take an interval of 30 seconds or more before re-starting the engine to prevent damaging the engine.**

Step 5

After starting engine, idle the engine for about 5 minutes for warming up.

NOTICE

If the outside air temperature is below the temperature range for the hydraulic oil used in the machine, travel the machine in a warm place until the hydraulic oil is warm enough, and then do the outside work.

Step 6

Check the fuel level light.

When there is little fuel remaining, this light will be lit. (On a level surface, the fuel level light goes on at about 20 liters.)

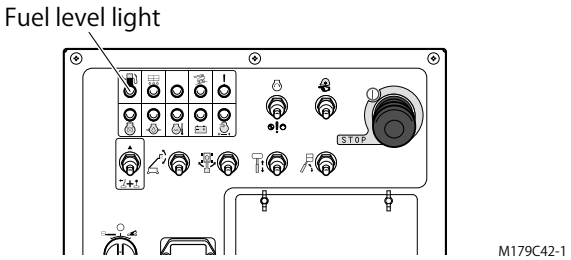

Fig. 8–7

NOTICE

- **When the fuel level light goes on, refill the diesel fuel.**
- **The capacity of the fuel tank is 95 liters.**

https://truckmanualshub.com/

1–2 Starting from Platform

Step 1

Make sure both of the upper and lower emergency stop button are pulled out to "ON."

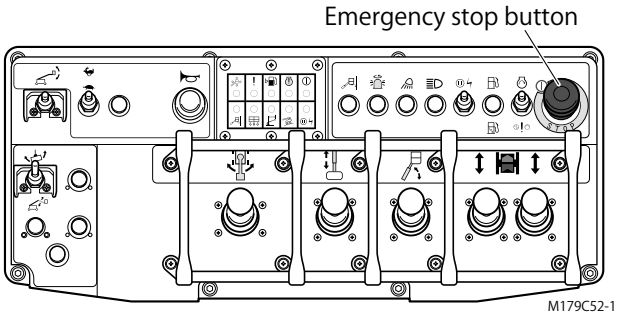

Fig. 8–8 (Upper Controls)

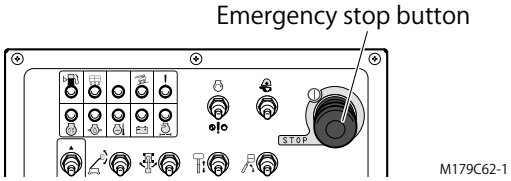

Fig. 8–9 (Lower Controls)

Step 2

Turn the key switch to "⊟" (UPPER CONTROLS).

All of indicators will go on and then off. After that, make sure that both of the power indicator and engine failure lights go on.

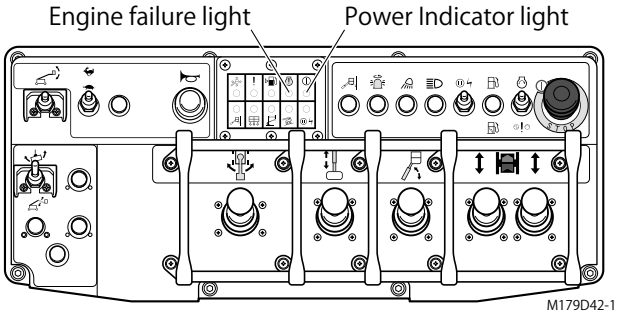

Fig. 8–10

Step 3

Close the door of the lower controls.

Step 4

Wear the safety harness and get on the platform and close gate.

After getting on the platform, immediately hook the safety harness to the lanyard anchorage point.

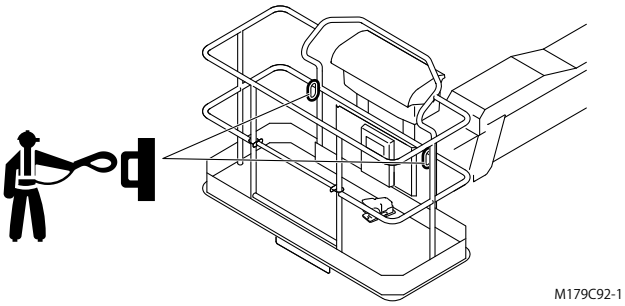

Fig. 8–11

Step 5

Operate the engine start switch up to "ENGINE START" without depressing the foot switch to start the engine.

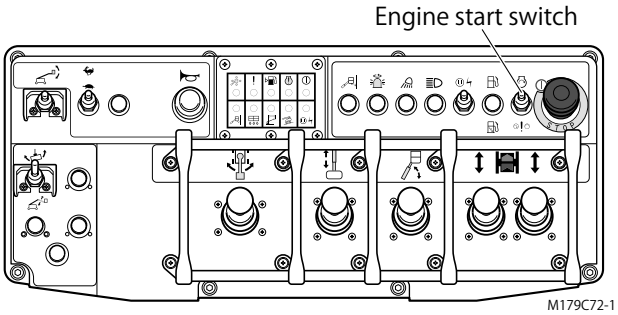

Fig. 8–12

NOTICE

- **Immediately release your hand from the engine start switch once the engine has started.**
- **Do not hold the engine start switch up for 15 seconds or more.**

  Failure to release your hand could result in damage to the starter motor.
- **Take the interval of 30 seconds or more before re-starting the engine to prevent damaging the engine.**

https://truckmanualshub.com/

Step 6

After starting engine, idle the engine for about 5 minutes for warming up.

NOTICE

If ambient temperature is lower than the allowable range of the hydraulic oil temperature, warm up the machine to raise the hydraulic oil temperature, and then operate the machine.

Step 7

Check the fuel level light.

When there is little fuel remaining, this light will be lit. (On a level surface, the fuel level light goes on at about 20 liters.)

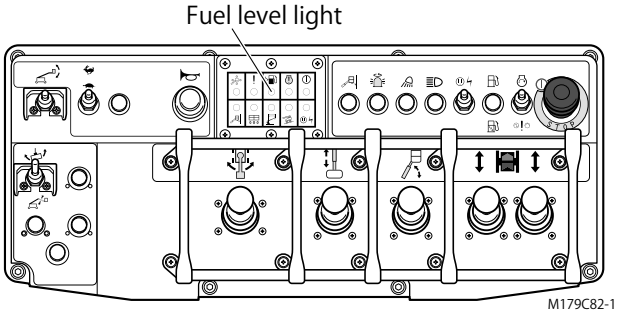

Fig. 8–13

NOTICE

- **When the fuel level light goes on, refill the diesel fuel.**
- **The capacity of the fuel tank is 95 liters.**

2. Stopping the Engine

⚠WARNING

- **When you stop the boom operation and wish to concentrate on another works, push in the emergency stop button to "OFF" to prevent misoperation.**
- **If the boom lowers slowly after the emergency stop button has been pressed, this may be a natural descent. In that case, start the engine or use the emergency pump to stow the boom and then stop using the machine immediately.**
- **Stop using the machine and contact AICHI or an AICHI dealer for inspections, if the emergency stop button was used due to machine failure.**

Push in either of the upper or lower emergency stop button to "OFF," or turn the key switch to "○" (OFF) to stop all functions and shut off the engine.

- To resume operation, pull out both the upper and lower emergency stop buttons to "ON."
- Push in the emergency stop button in the following cases:
  - When shutting off the machine to save fuel.
  - After setting up the platform in a suitable position and you do not operate the boom for relatively long period. (for misoperation prevention)
  - In case of emergency. (Refer to Section 1 of Chapter 9 for emergency operation.)

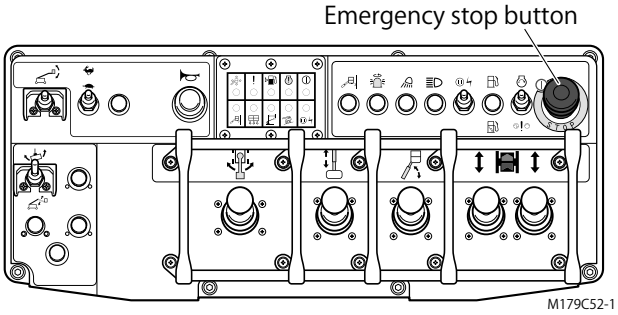

Fig. 8–14 (Upper Controls)

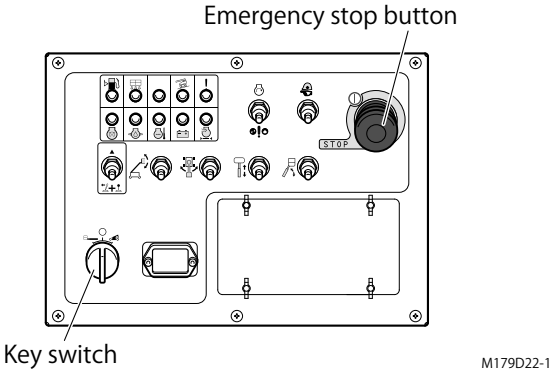

Fig. 8–15 (Lower Controls)

https://truckmanualshub.com/

3. Upper Controls (from Platform)

DANGER

When using the upper controls, make sure to wear a safety harness, and put the hook of the safety harness through the lanyard anchorage point. Do not hook to any other place.

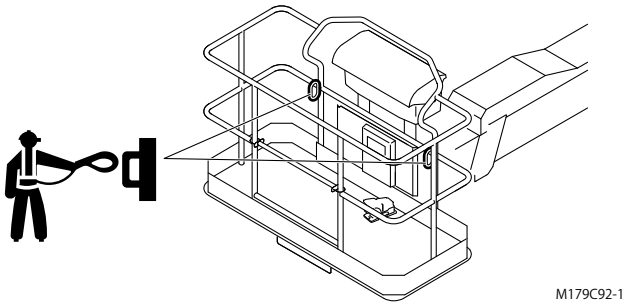

Fig. 8–16

- **Do your work while standing firmly on the platform. If your feet separate from the platform, by climbing on the guardrails, e.g., there is a possibility you will lose your balance, and fall.**

WARNING

- **Before operation, make sure the platform is level. If the platform is tilted, adjust the platform level by referring to Section 12–1 Chapter 8 "Platform Level Adjustment."**
- **Keep the platform neat and tidy always. To avoid slips, clear the water, oil, snow, ice off the platform.**
- **Before operating the machine, make sure that no person or obstacle is around the machine.**
- **Be especially careful when rotating the boom. Check that there are no obstacles in the way before rotating.**
- **Do not place small objects near the upper controls. They may catch the controls and cause incorrect operation.**
- **When you stop the boom operation and wish to concentrate on another works, push in the emergency stop button to "OFF" to prevent misoperation.**
- **To prevent misoperation, light up the upper controls in the dark.**

NOTICE

When painting, make sure to close the cover of the upper controls after the platform has been put in position, and keep the decal clean.

3–1 Foot Switch

NOTICE

- **Release the foot switch while working or not operating. Do not disable the foot switch in any way e.g. by binding. Failure to comply with instructions, the foot switch cancel system is activated and all controls become disabled. (See Chapter 3).**
- **Operate controls within 20 seconds after depressing the foot switch. Failure to do so, all controls become disabled even when the foot switch has been depressed. In that case, release all controls and then operate again.**

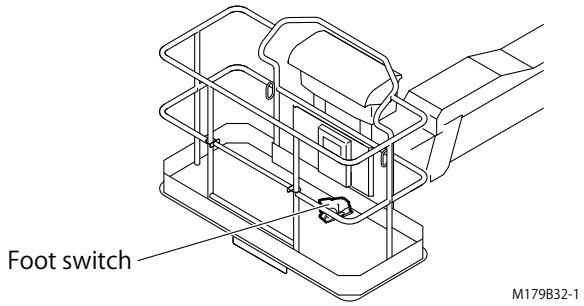

Fig. 8–17

Except for those listed here, you must depress the foot switch on the platform while performing all operations.

- Engine start
- Emergency stop (Stopping the engine)
- Using the horn

https://truckmanualshub.com/

3–2 Traveling

DANGER

- **Before traveling, make sure that no person or obstacle is in the traveling direction.**
- **When traveling, make sure to retract the boom fully.**
- **When traveling, raise the boom so it is almost horizontal, make sure you can see to the front, and make sure you travel safely.**
- **All persons in the platform must comply with employer, work area, and local and national safety regulations regarding the use of personal protective equipment. Always use a safety harness in the platform. Attach the lanyard to the authorized lanyard anchorage point provided in the platform.**

WARNING

- **If traveling on a slope more than maximum allowable tilt angle is unavoidable, make sure to fully retract the boom and lower the boom under the horizontal.**
  - **Maximum allowable tilt angle: 5° (8.7%)**
- **Before traveling onto a slope, approach straight to the inclination direction. If traveling obliquely, any track could leave from the ground, resulting in tipping over.**
- **When you start traveling, make sure to operate the controls gradually, and to start slowly. It is dangerous to start abruptly. Adjust the traveling speed by turning the travel joystick controllers.**
- **Do not change course abruptly. The platform will swing widely, and there is a possibility the operator will be thrown from the platform or the machine will tip over.**
- **When traveling, make sure there is enough distance between the traveling surface and bottom of the platform, or the tip of the boom. If there is not enough distance, depending on the unevenness of the traveling surface, the bottom of the platform or the tip of the boom may come in contact with the traveling surface, and may be damaged.**
- **If the turntable has been rotated 180° , the traveling direction will be opposite to the joystick controller movements, so be careful.**
  Make sure to check the direction of the arrow on the decal and on the chassis when traveling.

NOTICE

- **If the machine tilts more than 5 degrees while the boom is retracted fully and raised to at least 45 degrees, the travel function is stopped. (Refer to Section 3 "Travel Function Limit System" of Chapter 3.)**
- **The travel alarm buzzer sounds when the machine is traveling to warn the people nearby.**

Use the travel control levers and the travel speed select switch to travel the machine.

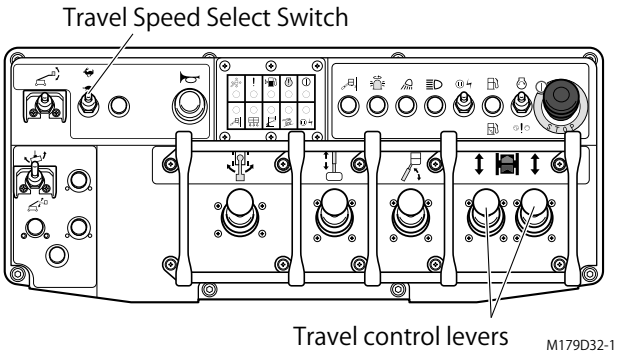

Fig. 8–18

3–2–1 Travel Speed Select

WARNING

Engine rotations become high automatically when high-speed traveling. Do not operate the travel speed select switch while traveling to avoid shocks that are caused by sudden change of the traveling speed.

1. Select "🐇" (HIGH SPEED) for a high speed traveling.
2. Select "🐢" (LOW SPEED) for a low speed traveling.

https://truckmanualshub.com/

NOTICE

- **The high-speed traveling is only possible when the boom is retracted fully and lowered to less than 5 degrees. In all other situations, even if you turn the travel speed select on "🐇" (HIGH SPEED), you will be able to travel only at low speeds.**
- **Under normal circumstances, keep the travel speed select switch on "🐢" (LOW SPEED).**

3–2–2 Forward and Backward

Depress the foot switch and operate both the travel control levers to the traveling direction.

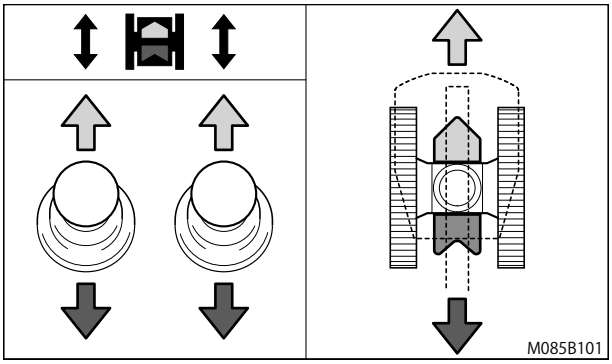

Fig. 8–19

NOTICE

- **A warning buzzer will beep regularly when the travel joystick controller is being operated.**
- **Use the arrow on the chassis to determine which way is forward and which way is backward.**

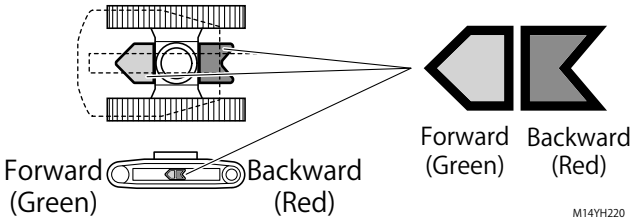

Fig. 8–20

3–2–3 Pivot Turn

Depress the foot switch and operate one of the travel control levers as shown in the figures below.

1. Forward / Backward left turns

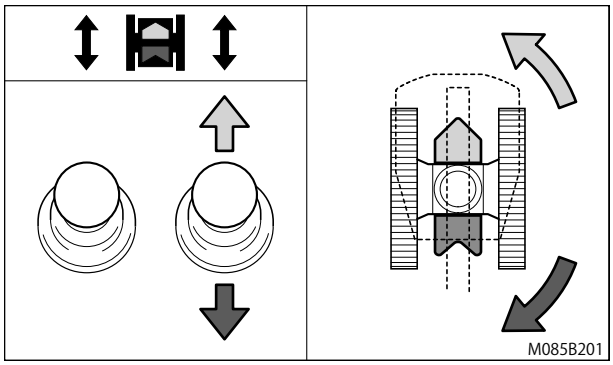

Fig. 8–21

2. Forward / Backward right turns

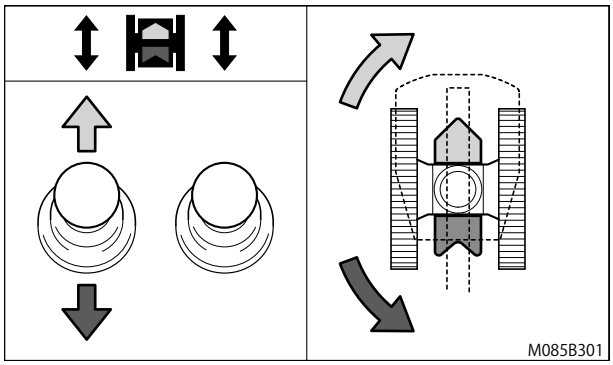

Fig. 8–22

NOTICE

If the direction of travel cannot be changed due to road surface conditions, first adjust the position of the machine by traveling forward or backward, then change course.

3–2–4 Spin Turn

Depress the foot switch and operate the travel control levers as shown in the figure below to make the CW (clockwise) or CCW spin turn (counter clockwise).

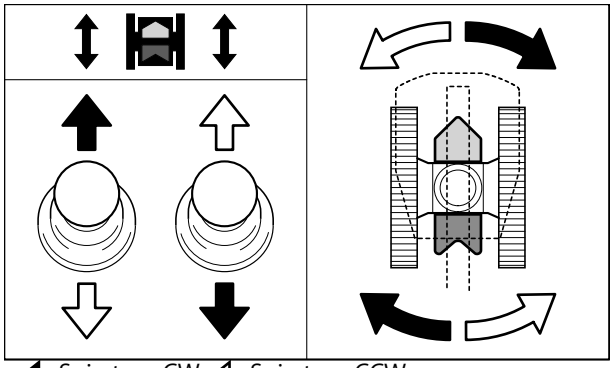

Fig. 8–23

https://truckmanualshub.com/

3–3 Boom Operation

⚠ DANGER

- **Do not maneuver or force the boom or platform into a position where they will hit the ground, hit stationary objects, or be used to move objects in an upwards direction.**
- **The turntable protrudes 600 mm beyond the width of the chassis when rotating the boom.**

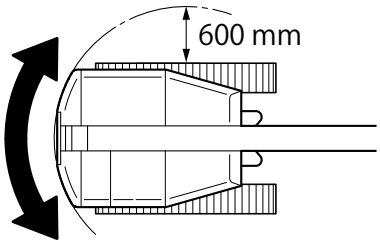

M179F1-1

Fig. 8–24

- **Check that there are no obstacles in the way before rotating.**
- **If your field of vision is obstructed, have a guide assist you.**

⚠ WARNING

Make sure that no person or obstacle is around the machine before operating the boom.

NOTICE

- **Before rotating the turntable and boom, make sure that the rotation lock pin has been in the unlocked position.**

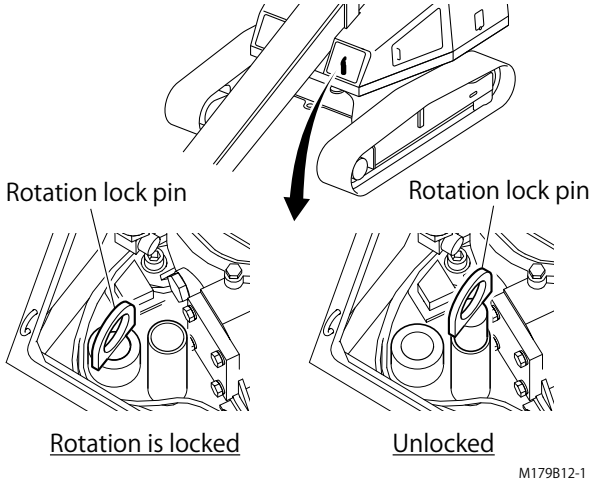

M179B12-1

Fig. 8–25

- **The turntable and boom may not rotate smoothly when the machine is tilted or on uneven ground.**
- **If equipped with optional boom motion alarm, the alarm buzzer will beep regularly when the boom is being operated.**

Use the three joystick controllers for the boom elevation, telescope and rotation to operate the boom.

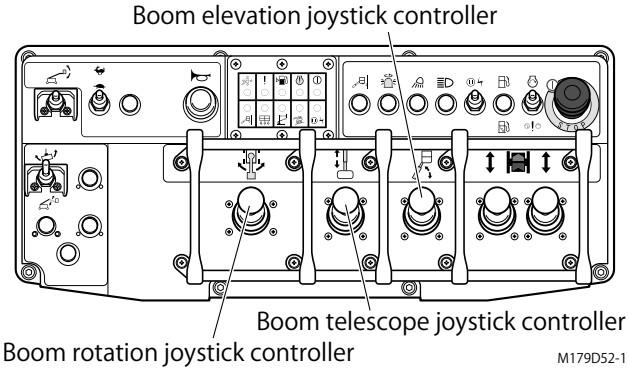

M179D52-1

Fig. 8–26

3–3–1 Boom Elevating

Depress the foot switch and operate the boom elevation joystick controller to raise or lower the boom.

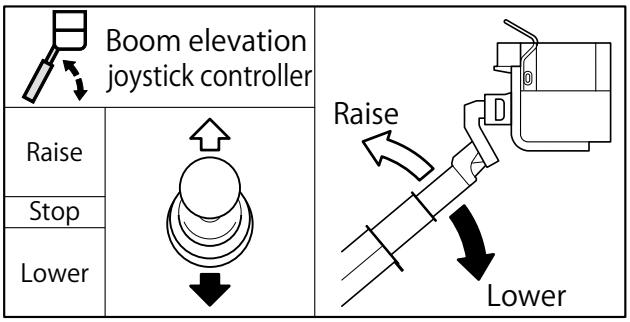

M147C321

Fig. 8–27

3–3–2 Boom Rotating

Depress the foot switch and operate the boom rotation joystick controller to rotate the boom.

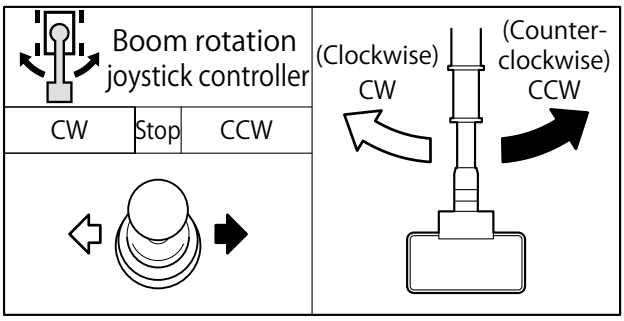

M147C421

Fig. 8–28

https://truckmanualshub.com/

3–3–3 Boom Telescoping

Depress the foot switch and operate the boom telescope joystick controller to extend or retract the boom.

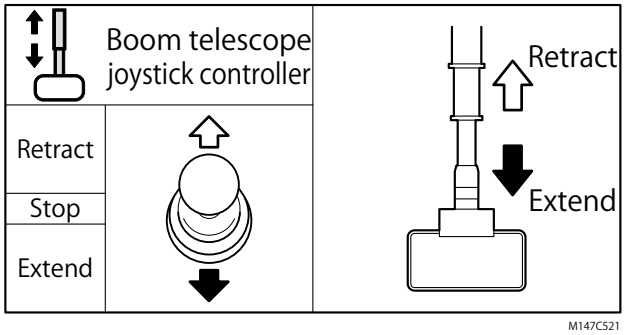

Fig. 8–29

3–4 Platform Rotating Operation

WARNING

When rotating the platform, make sure to stop the machine, and check the safety of the surrounding area.

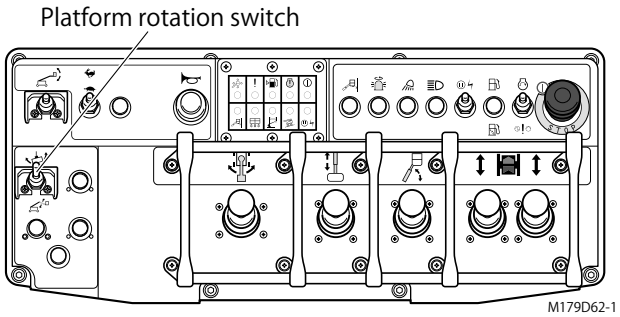

Fig. 8–30

Depress the foot switch and operate the platform rotation switch to rotate the platform.

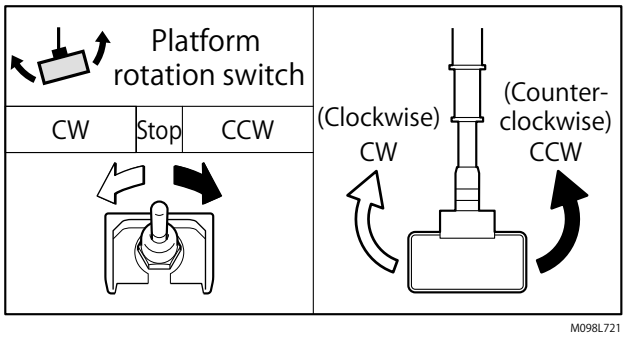

Fig. 8–31

3–5 Horn Operation

Use the horn button.

While pressing the horn button, an alarm will sound. Press the horn button before starting work to alert surrounding personnel.

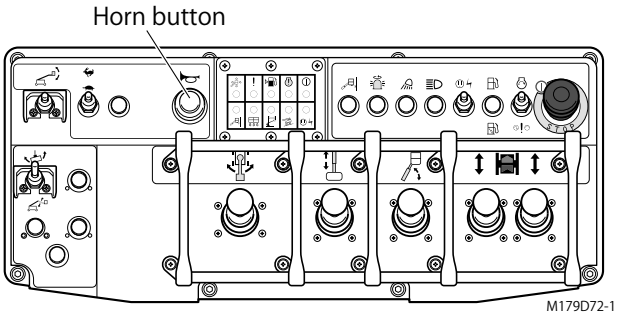

Fig. 8–32

3–6 Touch Switch

When the touch switch (bar) located in the front of the upper controls is touched, the engine stops and all of the functions are disabled. (Horn also cannot be used.)

WARNING

If the touch switch is damaged, do not operate the machine. Contact AICHI or an AICHI dealer for inspections immediately.

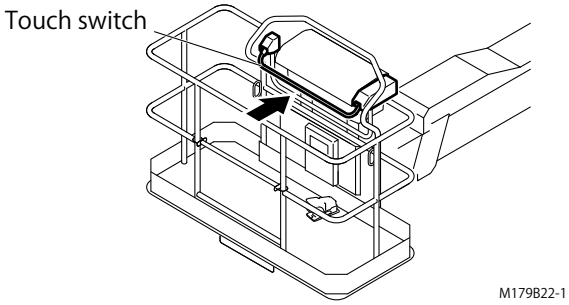

Fig. 8–33

3–6–1 Restoring Functions

Release your hands, feet, and other body part from all of the controls and switches.

Restoring from Platform:

Operate the engine start switch up and the machine functions will be restored and the engine will start up.

Restoring from Ground:

(1) Turn the key switch to "○" (OFF). After a lapse of 1 second, turn the key switch to "" (LOWER CONTROLS) and the machine functions will be restored.
If less than 1 second, it may not be restored.

(2) Operate the engine start switch and the engine will start up.

NOTICE

When the touch switch is activated, the engine cannot be started. Also the emergency pump cannot be operated.

https://truckmanualshub.com/

4. Lower Controls (from Ground)

DANGER

Do not maneuver or force the boom or platform into a position where they will hit the ground, hit stationary objects, or be used to move objects in an upwards direction.

WARNING

- **Make sure that no person or obstacle is around the machine before operating the boom.**
- **Close the door of the lower controls when you do not operate the machine from the lower controls to prevent unauthorized use.**
- **The lower controls are used mainly for the platform level adjustment and the pre-operation checking.**

4–1 Enable Switch

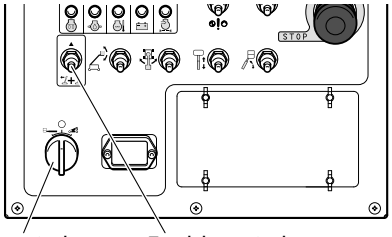

Fig. 8–34

1. When using the lower controls to operate the machine, turn the key switch to "" (LOWER CONTROLS).

2. Hold the enable switch up to "ON" while operating the boom or platform from the lower controls.

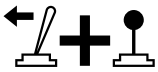

3. In case of the following, turn the key switch to "" (LOWER CONTROLS).
   - If you are not able to do the operation from the upper controls.
   - If you want to operate the boom from the lower controls.

NOTICE

- **If you are using the emergency pump, emergency stopping, or starting the engine from the lower controls, you can operate the machine without turning the enable switch.**
- **Release the enable switch while working or not operating. Do not fix the enable switch in any way e.g. by binding.**

4–2 Boom Operation

CAUTION

When the boom is shaken heavily and/or the platform is pressed hard against the walls during operation, the machine considers it as a sensor error and stops the engine. In this case, restart the engine and resume operation.

Hold the enable switch up to "ON" and use the three control switches for the boom elevation, telescope and rotation to operate the boom.

The boom does not move unless the enable switch is hold up.

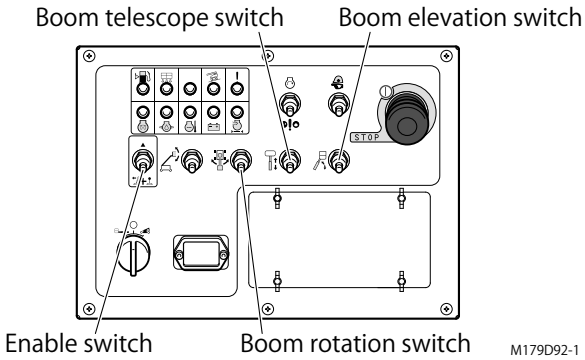

Fig. 8–35

NOTICE

- **The turntable and boom may not rotate smoothly when the machine is tilted or on uneven ground.**
- **Check that there are no obstacles in the way before rotating.**
  If your field of vision is obstructed, have a guide assist you.
- **If equipped with optional boom motion alarm, the alarm buzzer will beep regularly when the boom is being operated.**

https://truckmanualshub.com/

4–2–1 Boom Elevating

Hold the enable switch up to "ON" and operate the boom elevation switch to raise or lower the boom.

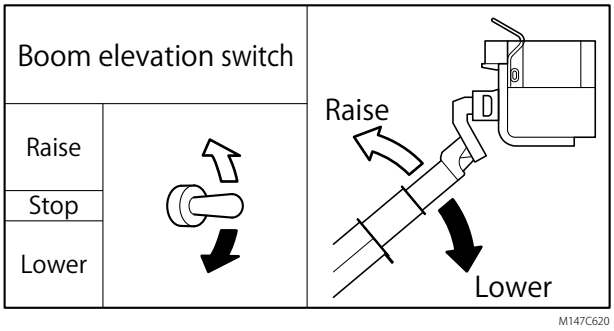

Fig. 8–36

4–2–2 Boom Rotating

Hold the enable switch up to "ON" and operate the boom rotation switch to rotate the boom.

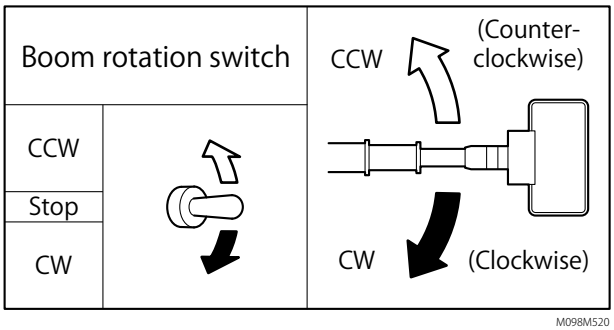

Fig. 8–37

4–2–3 Boom Telescoping

Hold the enable switch up to "ON" and operate the boom telescope switch to extend or retract the boom.

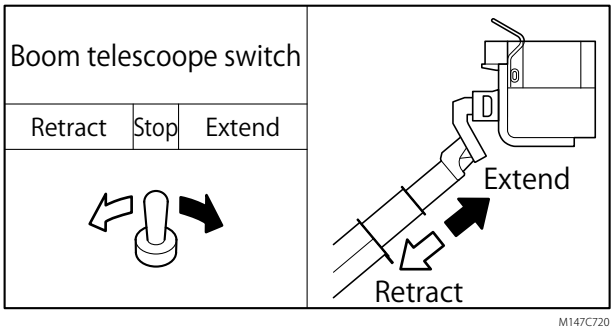

Fig. 8–38

5. Platform Leveling System

5–1 Platform Level Adjustment

If the pre-operation check reveals that the platform is tilted (front-back tilt of about 3° or more), adjust it as follows.

⚠WARNING

- **Do not allow any person or object on the platform when adjusting from the lower controls.**
- **Do not tilt the platform excessively when adjusting from the upper controls. Occupants and load will dump out from the platform.**

NOTICE

Even if the platform tilt is under 3°, adjust it if the tilt makes work hard.

Step 1

Put the machine on a firm, level surface,.

Step 2

Move the boom to a position where it is easy to adjust.

Step 3

Hold the enable switch up to "ON" or depress the foot switch. Operate the platform level adjust switch to adjust the level of the platform.

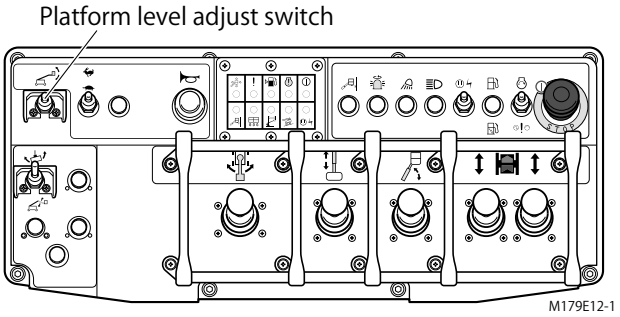

Fig. 8–39

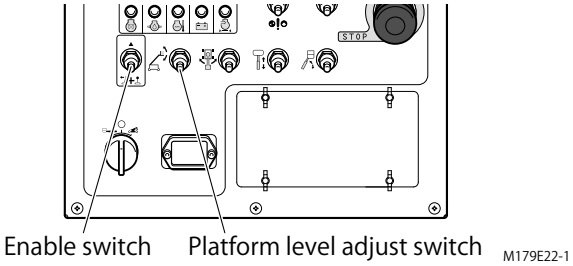

Fig. 8–40

https://truckmanualshub.com/

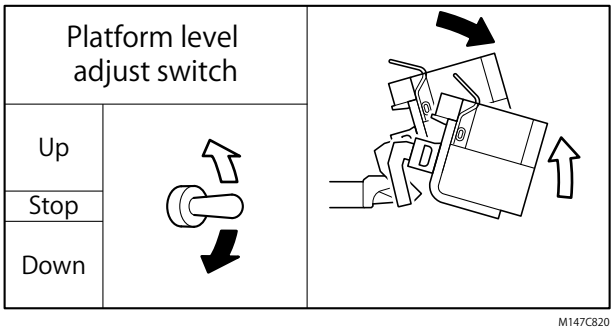

Fig. 8–41

NOTICE

When adjusting from the upper controls, the platform stops automatically after a certain period of time to prevent occupants and load from dumping out. Release the switches to continue adjustment.

5–2 Bleeding Air from Platform Leveling System

WARNING

- **Use only the lower controls to bleed air from the platform leveling system.**
- **Do not allow any person or object on the platform when bleeding air.**

If the platform does not stay level after adjustment, air may have entered the platform leveling system. In this case, bleed air from the platform leveling system in the following way.

Step 1

Put the machine on firm, level surface.

Step 2

Move the boom to a position where it is easy to adjust.

Step 3

Hold the enable switch up to "ON". Operate the platform leveling switch on the lower controls to fully tilt the platform forward and backward several times.

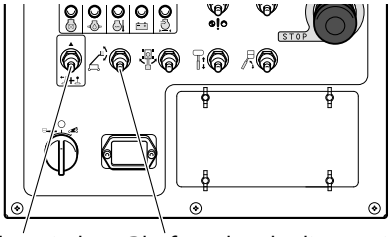

Fig. 8–42

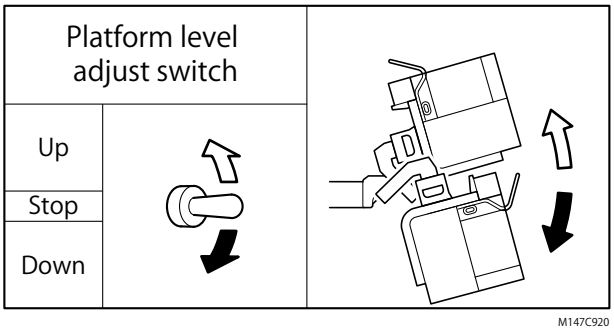

Fig. 8–43

Step 4

Adjust the platform so it becomes level.

Step 5

Repeat the boom raising, lowering and telescoping operations several times and make sure that the platform stays level.

https://truckmanualshub.com/

6. Hydraulic Generator (If Equipped)

6–1 To Start the Hydraulic Generator

Step 1

Make sure that key switch is in the "⊟" (UPPER CONTROLS) position.

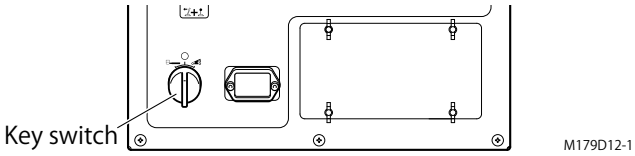

Fig. 8–44

Step 2

Make sure that engine is running.

NOTICE

Warm the hydraulic oil before operating the generator. Cold hydraulic oil may cause generator damage.

Step 3

Make sure that foot switch is not depressed.

NOTICE

Depressing the foot switch while the hydraulic generator switch is "ON" disables the hydraulic generator and enables operation of the machine.

Step 4

To start the hydraulic generator, turn the hydraulic generator switch to "ON" position.

The hydraulic generator light will go on when the hydraulic generator switch is turned on.

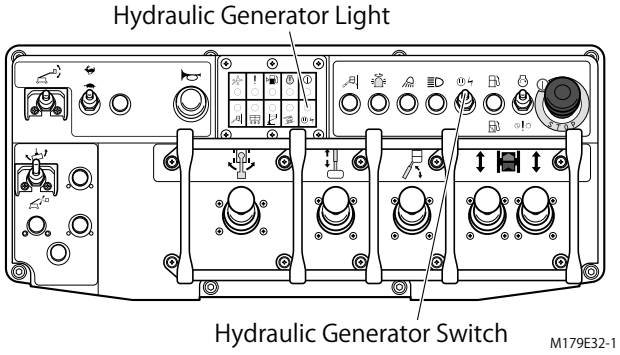

Fig. 8–45

6–2 To Restore Normal Operation

To turn off the hydraulic generator, operate the hydraulic generator switch down to its "OFF" position.

The hydraulic generator light will go off when the hydraulic generator switch is turned off.

NOTICE

- **An engine shut down will turn the hydraulic generator off.**
- **Depressing the foot switch while the hydraulic generator switch is "ON" disables the hydraulic generator and enables operation of the machine.**

⚠ DANGER

Do not plug devices that need continuous electricity into generator such as electro-lifting magnet.

https://truckmanualshub.com/

Chapter 9

Emergency Operation

WARNING

If the emergency operation was done because of a malfunction, immediately stop the operation, and have the machine checked and repaired.

1. Emergency Stop

Use the emergency stop button. When this button is pushed in, the engine stops and all of the functions are disabled.

Push in the emergency stop button in the following cases;

(1) When a person in the platform stops all of the machine movements to avoid hazards.

(2) When a person on the ground judges that the operation from the platform is unsafe.

(3) When the machine is uncontrollable due to malfunction.

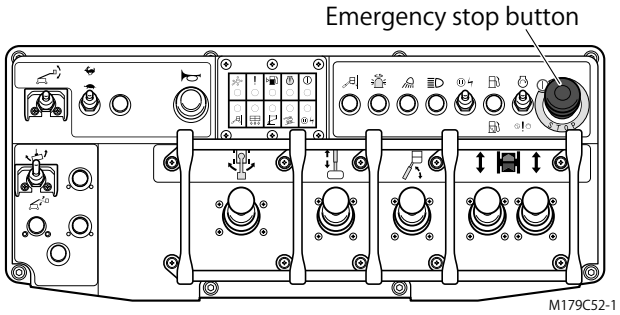

Fig. 9–1 (Upper Controls)

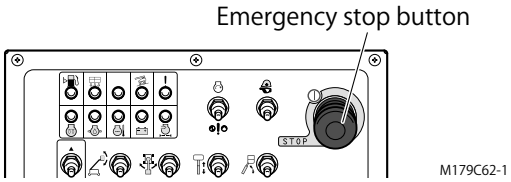

Fig. 9–2 (Lower Controls)

2. Emergency Lowering

If the engine or main pump fails, use the emergency pump to lower the platform.

NOTICE

- **Operate the emergency pump every other 30 seconds. The continuous operation in excess of 30 seconds may cause the damaged emergency pump.**

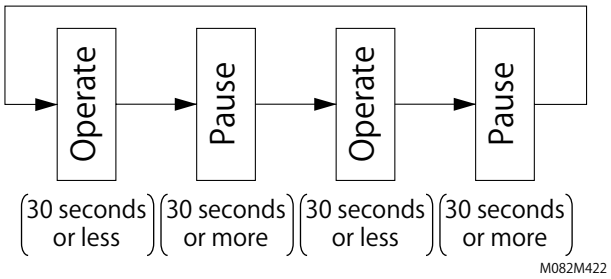

Fig. 9–3

- **Traveling operation is not possible when operating with the emergency pump.**
- **The emergency pump runs off the battery.**
- **The engine will stop if operating the emergency pump switch while the engine is running.**

https://truckmanualshub.com/

2–1 Upper Controls (from Platform)

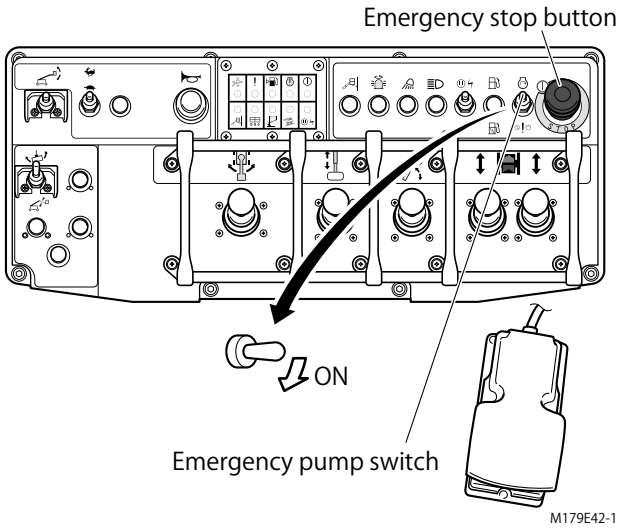

Fig. 9–4

NOTICE

When the upper or lower emergency stop button is pushed in or the key switch is turned to "" (LOWER CONTROLS), operating with the emergency pump from the upper controls is not possible.

Step 1

Pull out the emergency stop button to "ON."

Step 2

Depress the foot switch.

Step 3

Hold the emergency pump switch down, and activate each function at the same time.

The emergency pump will turn on when both the emergency pump switch and the operation switch are turned on.

2–2 Lower Controls (from Ground)

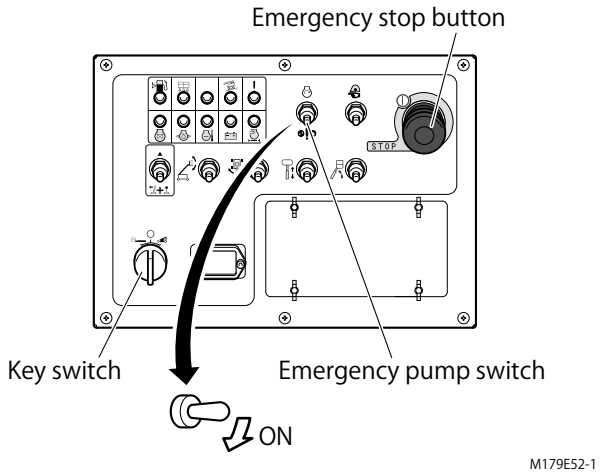

Fig. 9–5

NOTICE

When the upper or lower emergency stop button is pushed in or the key switch is turned to "" (UPPER CONTROLS), operating with the emergency pump from the lower controls is not possible.

Step 1

Turn the key switch to "" (LOWER CONTROLS).

Step 2

Pull out the emergency stop button to "ON."

Step 3

Hold the emergency pump switch down, and activate each function at the same time.

The emergency pump will turn on when both the emergency pump switch and the operation switch are turned on.

https://truckmanualshub.com/

Chapter 10

Transporting

DANGER

Make sure the transport vehicle capacity, crane capacity, loading surfaces, sling chains and wire ropes are strong enough to withstand the machine weight. See the serial number plate for the machine weight.

NOTICE

- **This information about transporting is offered as a recommendation.**
- **Only the qualified persons shall operate the transport vehicle, crane, forklift, and the machine.**
- **All persons on transportation must comply with employer, work area, and local and national safety regulations regarding the use of these machinery.**
- **Each machinery must comply with all applicable regulations, and must be inspected and used in accordance with their manufacturer's instructions.**
- **It is the carrier's responsibility to perform proper loading/unloading, tie-down, lift, hoist and transportation.**

1. Preparations for Transporting

When transporting the machine using a transport vehicle, observe the following items:

Step 1

Park the transport vehicle on level and firm surface for loading/unloading the machine to/ from the transport vehicle.

Step 2

Remove all loose items from the machine and transport vehicle bed.

Step 3

Lock the turntable with the turntable lock pin and prevent the turntable from being rotated during the transportation.

WARNING

Make sure to lock the turntable with the turntable lock pin before transporting.

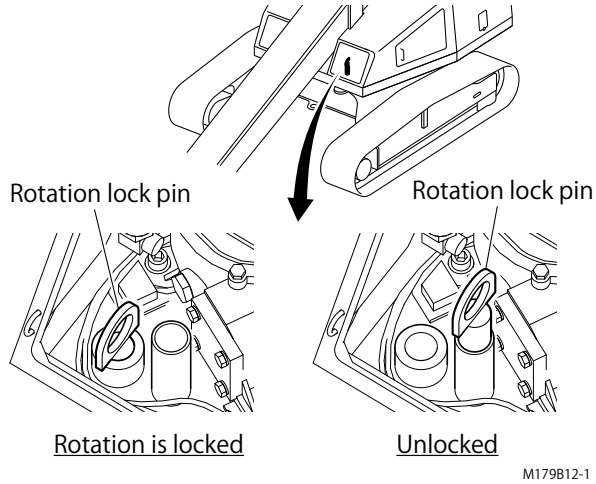

Fig. 10–1

NOTICE

Make sure to unlock the turntable before operating.

Step 4

Check the entire machine for loose bolts, and unfastened locks.

https://truckmanualshub.com/

2. Loading the Machine

⚠DANGER

- **To avoid slip-off and run-off, remove mud or oil from tracks and ramp. In rainy condition, do not perform a loading work to avoid slip off the ramp.**
- **Failure to avoid these fall hazards could result in death or serious injury.**

⚠WARNING

- **Do not travel the machine on a slope that exceeds the machine gradeability.**
  Use a winch for loading/unloading, if the ramp is too steep or slippery.
- **If the transport vehicle and the loading ramp are excessively inclined to the left or right, the machine may fall off the ramp.**
- **Do not turn the steering of the machine while it is on the ramps, because of the possibility of a fall.**
- **When loading/unloading, be sure to have another person assist you to prevent the machine from falling off the ramps.**
- **Failure to avoid these fall hazards could result in death or serious injury.**

Step 1

Park the transport vehicle on level firm surface.

Step 2

Chock the wheels of the transport vehicle. (Fig. 10–2, A)

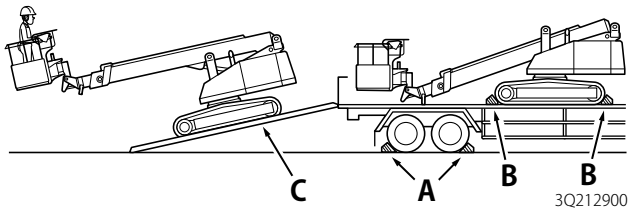

Fig. 10–2

Step 3

Attach the loading ramps at as small an angle as possible. (Fig. 10–2, C)

Step 4

Set the travel speed select switch to "🐢" (LOW SPEED).

Step 5

Drive the machine straight forward or backward at low speed onto the ramps, and load the machine onto the transport vehicle.

Step 6

Shut off the machine and chock the tracks of the machine. (Fig. 10–2, B)

Step 7

Turn the key switch to "○" (OFF) to shut down the engine, remove the key to prevent using the machine without permission, and store it suitably.

Step 8

Close and latch all doors and covers of the machine securely.

If equipped with lockable door, be sure to lock it.

⚠WARNING

Doors opening suddenly through the movements of the machine could hit other loadings, resulting in falling hazard.

Step 9

Remove all loose items from the machine and transport vehicle bed.

https://truckmanualshub.com/

3. Tie Down

Step 1

Tie down the chassis of the machine to the transport vehicle bed securely using the approved tie down eyes (Fig. 10–3, A).
Also, tie down the track frame securely preventing the machine from laterally shifting during the transportation.

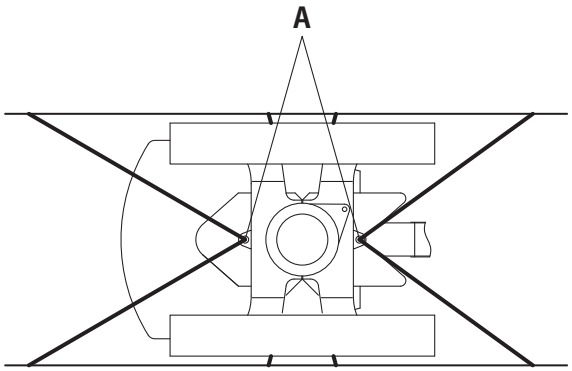

Fig. 10–3

Step 2

Tie down the boom and platform so that it does not swing during the transportation.
At this time, be sure to allow the clearance between the bottom of the platform and the transport vehicle bed.

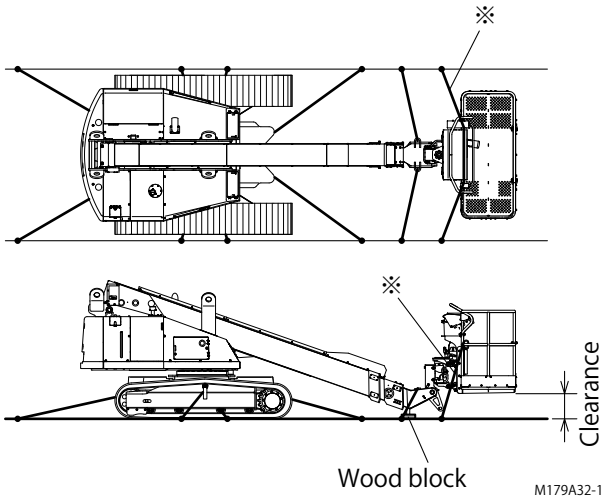

Fig. 10–4

NOTICE

Do not tighten the tie down chains or wire ropes marked "※" too much. Tighten them just so that the platform does not swing or bounce during the transportation.

4. Unloading the Machine

⚠DANGER

- **To avoid slip-off and run-off, remove mud or oil from tracks and ramp. In rainy condition, do not perform a loading work to avoid slip off the ramp.**
- **Failure to avoid these fall hazards could result in death or serious injury.**

⚠WARNING

- **Do not travel the machine on a slope that exceeds the machine gradeability.
  Use a winch for loading/unloading, if the ramp is too steep or slippery.**
- **If the transport vehicle and the loading ramp are excessively inclined to the left or right, the machine may fall off the ramp.**
- **Do not turn the steering of the machine while it is on the ramps, because of the possibility of a fall.**
- **When loading/unloading, be sure to have another person assist you to prevent the machine from falling off the ramps.**
- **Failure to avoid these fall hazards could result in death or serious injury.**

Step 1

Park the transport vehicle on level firm surface.

Step 2

Chock the wheels of the transport vehicle. (Fig. 10–5, A)

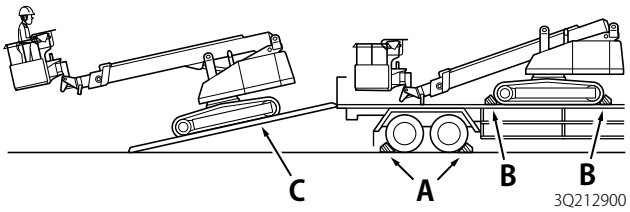

Fig. 10–5

Step 3

Attach the loading ramps at as small an angle as possible. (Fig. 10–5, C)

Step 4

Unchock the tracks of the machine. (Fig. 10–5, B)

https://truckmanualshub.com/

Step 5

Set the travel speed select switch to "🐢" (LOW SPEED).

Step 6

Drive the machine straight forward or backward at low speed onto the ramps.

Step 7

After unloading the machine, turn the key switch to "○" (OFF) to shut down the engine, remove the key to prevent using the machine without permission, and store it suitably.

Step 8

Unlock the turntable lock pin.

5. Hoisting the Machine

⚠ DANGER

- **Make sure the transport vehicle capacity, crane capacity, loading surfaces, sling chains and wire ropes are strong enough to withstand the machine weight. See the serial number plate for the machine weight.**
- **Do not allow any person to get under the machine while hoisting.**
- **Do not pass the sling chains or wire ropes except designated hoisting eyes.**
- **If there is damage, such as cracks, on the hoisting eyes, immediately contact AICHI or an AICHI dealer for repairs.**
- **Failure to heed warnings could result in breaking, falling, or other hazards leading to death or serious injury.**

⚠ CAUTION

When the machine is excessively tilted, battery fluid may leak out.

Step 1

Retract and lower the boom fully.

Step 2

Prepare sling chains or wire ropes according to the Table 10–1.

Step 3

Pass the sling chains or wire ropes through the hoisting eyes located on the turntable as shown in the figure below.

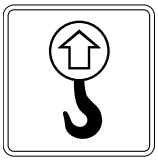

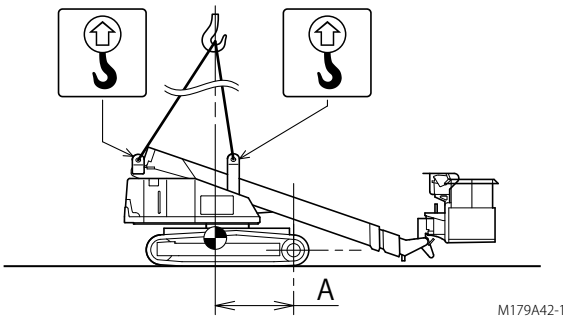

Fig. 10–6

Step 4

Adjust the rigging to prevent damage to the machine and to keep the machine level.

Step 5

If necessary, use spreaders of sufficient length to keep the slings from contacting the turntable or booms.

Step 6

When hoisting, the machine should be in the posture of figure below.
Just before leaving off the ground, check the balance, and operate the boom to adjust the machine level as needed.

Table 10–1 Hoisting Specifications

Model	SR12CSM
Machine weight *	7 550 kg
Type of hitch	4–leg bridle
Min. breaking load	196 kN (20 000 kgf)
Min. leg length (same length for all)	5 m
Center of gravity to travel motor (Fig. 10–6, A)	1.3 m
* The machine weight may vary with the option configuration. See the serial number plate.	

https://truckmanualshub.com/

6. Hoisting with Boom Raised

When you are working in a cramped location, you may not have enough room to lower the boom prior to hoisting. In such cases, it is permissible to hoist the machine while the boom is still up. Proceed as follows.

- Prepare sling chains or wire ropes according to Table 10–2.
- Set the boom angle to 60° or lower (that is, at least 10° below the maximum raise angle of 70°).
- If sling chains or wire ropes contact the boom, place pads on the boom to protect it.

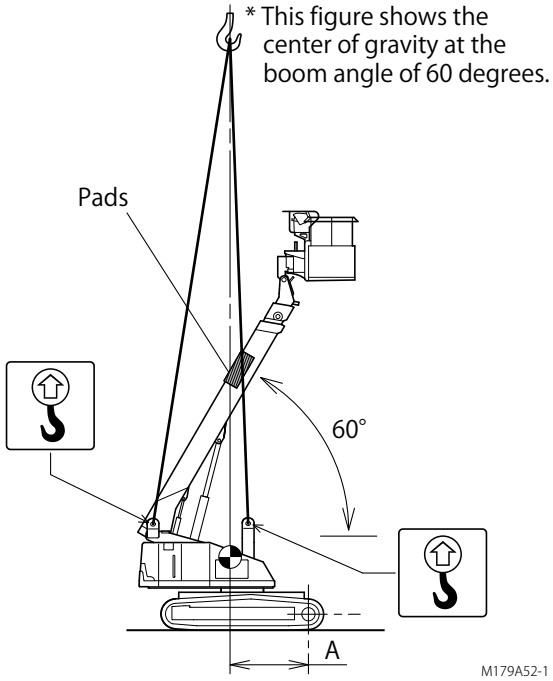

Fig. 10–7

Table 10–2 Hoisting Specifications

Model	SR12CSM
Machine weight *	7 550 kg
Type of hitch	4–leg bridle
Min. breaking load	196 kN (20 000 kgf)
Min. leg length (same length for all)	10 m
Center of gravity to travel motor (Fig. 10–7, A)	1.47 m
* The machine weight may vary with the option configuration. See the serial number plate.	

https://truckmanualshub.com/

Chapter 11

Storage

1. Clean all part of the machine.

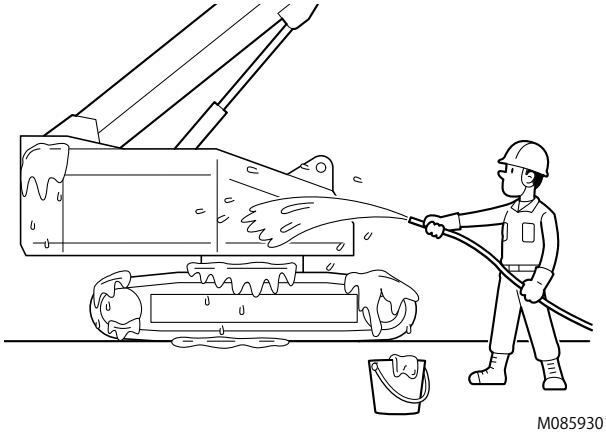

M0859301

Fig. 11–1

NOTICE

Be careful about freezing in winter.

2. Wipe away dirt from around the electrical parts with a dry cloth.

NOTICE

Do not wash, particularly high-pressure washing, around the electrical parts.

3. Lubricate each part of the machine thoroughly.
4. Apply rust prevention oil to the cylinder rods.

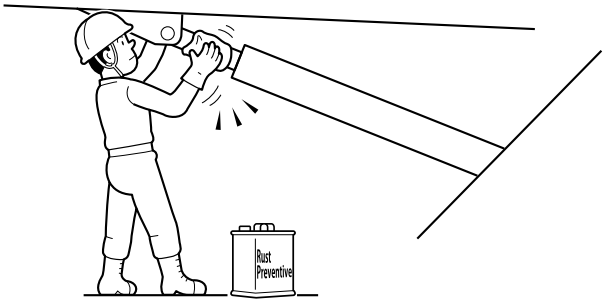

M0839423

Fig. 11–2

NOTICE

Rusting may occur if rust prevention oil is not applied.

5. Store the machine in a dry indoor area.
   If it is necessary to store the machine out of doors, park it in a flat area.

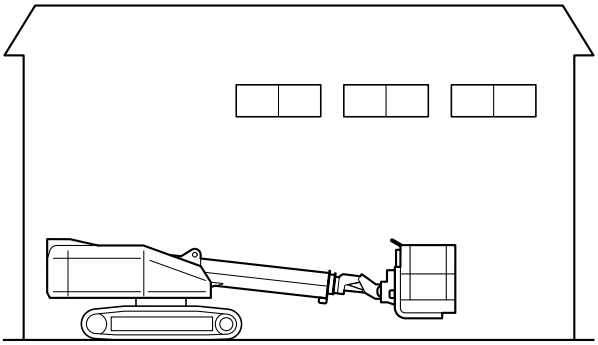

M0859501

Fig. 11–3

6. Periodically operate the boom, so as to maintain the oil film on its lubricated parts.

NOTICE

Wipe off the rust prevention oil applied on the cylinder rods before operating the machine.

7. If the boom is left extended or raised while the hydraulic oil temperature is high, the boom may retract or lower somewhat. This is caused by the contraction of the hydraulic oil confined in the hydraulic cylinders due to a change in the hydraulic oil temperature.

NOTICE

If the hydraulic oil temperature drops 10℃ with the boom fully extended and raised, the boom will retract approx. 30 mm.

This value, however, varies depending on the boom length and the boom angle.

https://truckmanualshub.com/

Chapter 12
Specifications

1. Dimensions

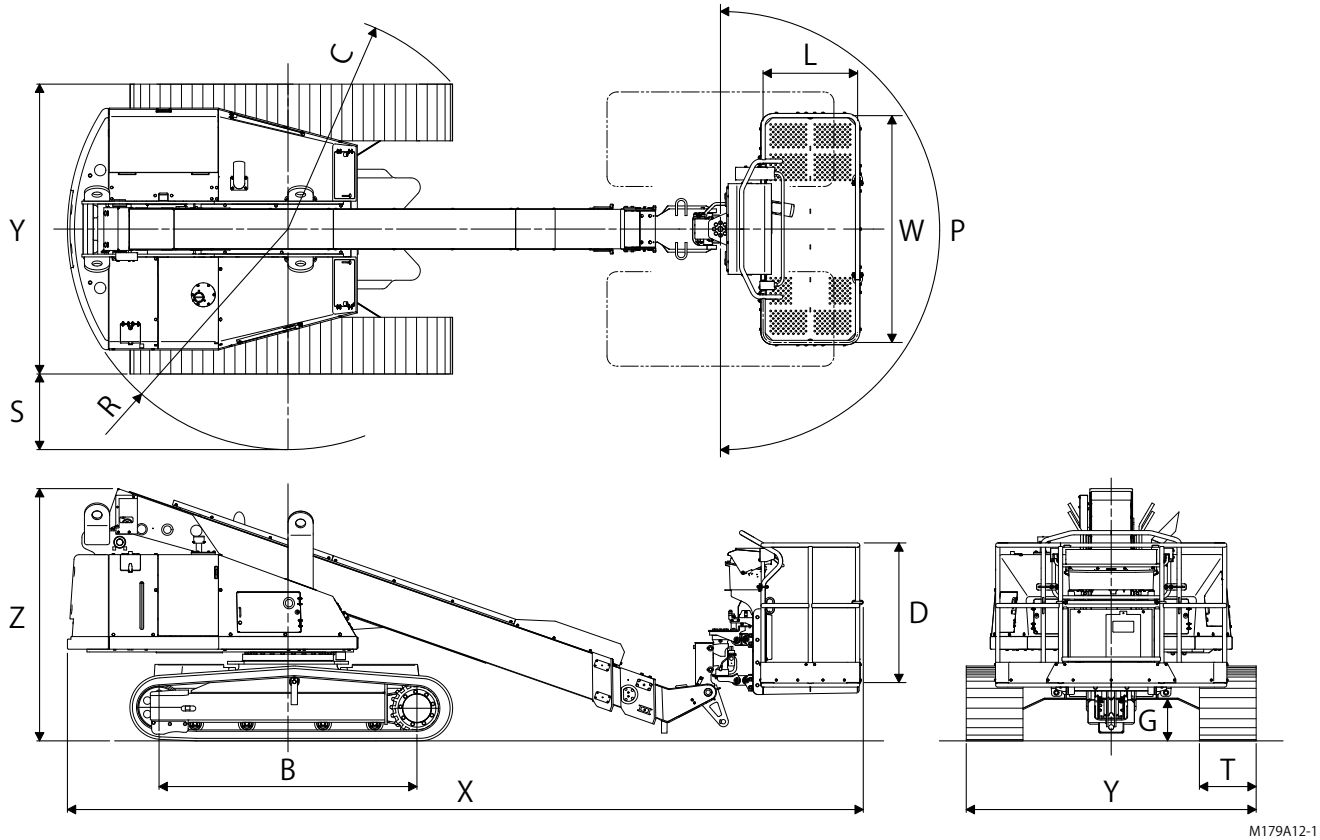

Fig. 12–1

X	Overall Length
Y	Overall Width
Z	Overall Height
R	Turntable Tail Swing Radius
S	Turntable Tail Swing
G	Ground Clearance (Chassis Center)
B	Width of Tumbler Center
T	Track Width
L	Platform Inner Length (Pipe Center)
W	Platform Inner Width (Pipe Center)
D	Platform Inner Depth
P	Platform Rotation
C	Minimum Turning Radius (Track Outer Side)

https://truckmanualshub.com/

2. General Specifications

Commercial Name / Model Code			SR12CSM / SR12C1SM
Performance	Platform Height Maximum		12.1 m
	Horizontal Outreach Maximum		10.7 m
	Platform Load Capacity (Evenly Distributed)		250 kg or 2 persons + tools: 90 kg
	Platform Rotation	[P]	90° CW – 90° CCW (180°)
	Turntable Rotation		360° (Continuous)
	Max. Allowable Tilt Angle		5°
	Gradeability*2 (Stowed)		58 % (30°)
	Min. Turning Radius	[C]	1.74 m
	Max. Allowable Wind Speed		12.5 m/s
	Max. Allowable Manual Side Force		400 N (41 kgf)
Measurements	Overall Length	[X]	6.32 m
	Overall Width	[Y]	2.30 m
	Overall Height	[Z]	1.995 m
	Turntable Tail Swing Radius	[R]	1.75 m
	Turntable Tail Swing	[S]	600 mm
	Inside Diameter of Platform	[LWD]	0.75 x 1.80 x 1.11 m
	Track Width	[T]	450 mm
	Width of Tumbler Center	[B]	2.045 m
	Width of Crawler Center		1.85 m
	Ground Clearance	[G]	340 mm
Weight*3	Gross Weight		7,550 kg
	Max. Track Loading Force		6,125 kg
	Max. Track Ground Contact Pressure		65 kPa
Power source	Engine		YANMER 3TNV88
	Auxiliary Power Unit		12V-DC
	Fuel Type		Diesel Fuel (Ultra Low Sulfur-limited)
	Fuel Tank Capacity		95 L
	Recommended Hydraulic Oil		Shell Tellus S2 M 22
	Hydraulic Tank Capacity		145 L
Function speed*1	Elevation (Retracted Fully)	Up	-19 – 70° / 44 – 56 s
		Down	-19 – 70° / 44 – 56 s
	Telescope	Out	6.11 m / 20 – 30 s
		In	6.11 m / 20 – 30 s
	Turntable Rotation (Retracted and Raised Fully)		0.54 rpm (360° / 98 – 122 s)
	Platform Rotation		180° / 9 – 17 s
	Max. Travel Speed*2 (Level Surface)	Stowed	1.5 km/h
		Elevated	0.9 km/h

- The machine is designed for both indoor and outdoor use.
- Advisable atmospheric temperature range: -20 ℃ – +40 ℃

*1 Function speeds and gradeability assume there is 1 person on the machine.

*2 Travel speed and gradeability depend on the condition of the traveling surface.

*3 Weight information is approximate and does not incorporate different option configurations.

https://truckmanualshub.com/

3. Work Range Diagram

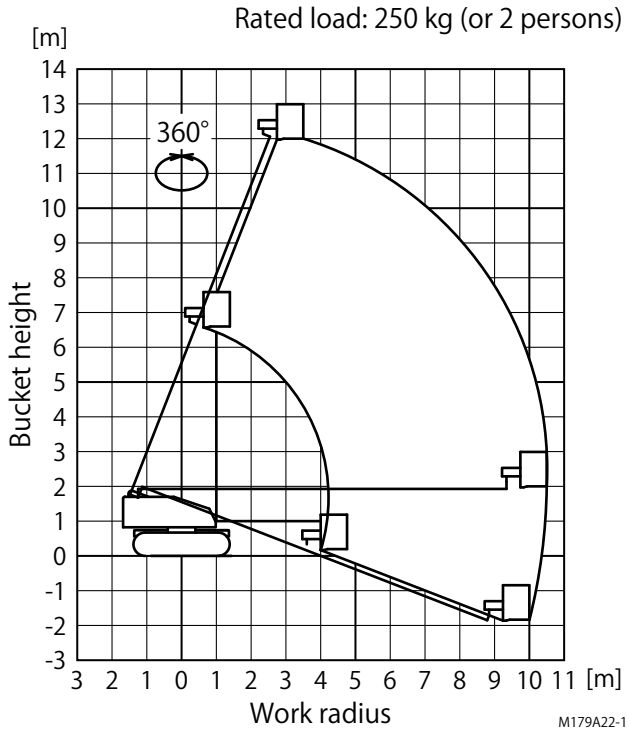

Fig. 12–2

1. The boom deflection is not taken into account in the above working range diagram.
2. The working range is the same in any boom-rotated directions.
3. The working range is a reference measured on a firm level surface.
4. The counter weight should be attached to the specified point.
5. Platform rated load may differ depending on option configurations.

4. Supplementary Information

The following information is provided as supplementary information for the machine.

- The guaranteed Sound Power Level (LWA), tested according to Annex III, Part B, No 1 of the European Directive 2000/14/EC "Noise emission in the environment by equipment for use outdoors", is 100 dB.
- The vibration total value to which the hand-arm system is subjected does not exceed 2.5 m/s^2.
- The highest root mean square value of weighted acceleration to which the whole body is subjected does not exceed 0.5 m/s^2.

https://truckmanualshub.com/

This page intentionally left blank.

https://truckmanualshub.com/

Appendix A
Test Report

1. Static Test (EN280; 6.1.4.2.1)

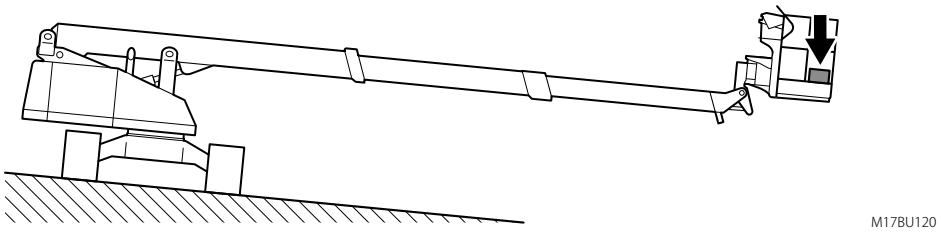

Fig. 13–1

Platform-load [kg]	300 (250 + 20%)	**Slope [°]**	5.0 + 0.5 = 5.5
Boom Length	Fully extended	**Boom Angle [°]**	0
Weather Conditions	Outdoor; no wind	**Additional Weight [kg]**	102 (as manual force and wind force; place on platform)

Result: test passed

https://truckmanualshub.com/

2. Dynamic Test (EN280; 6.1.4.2.2)

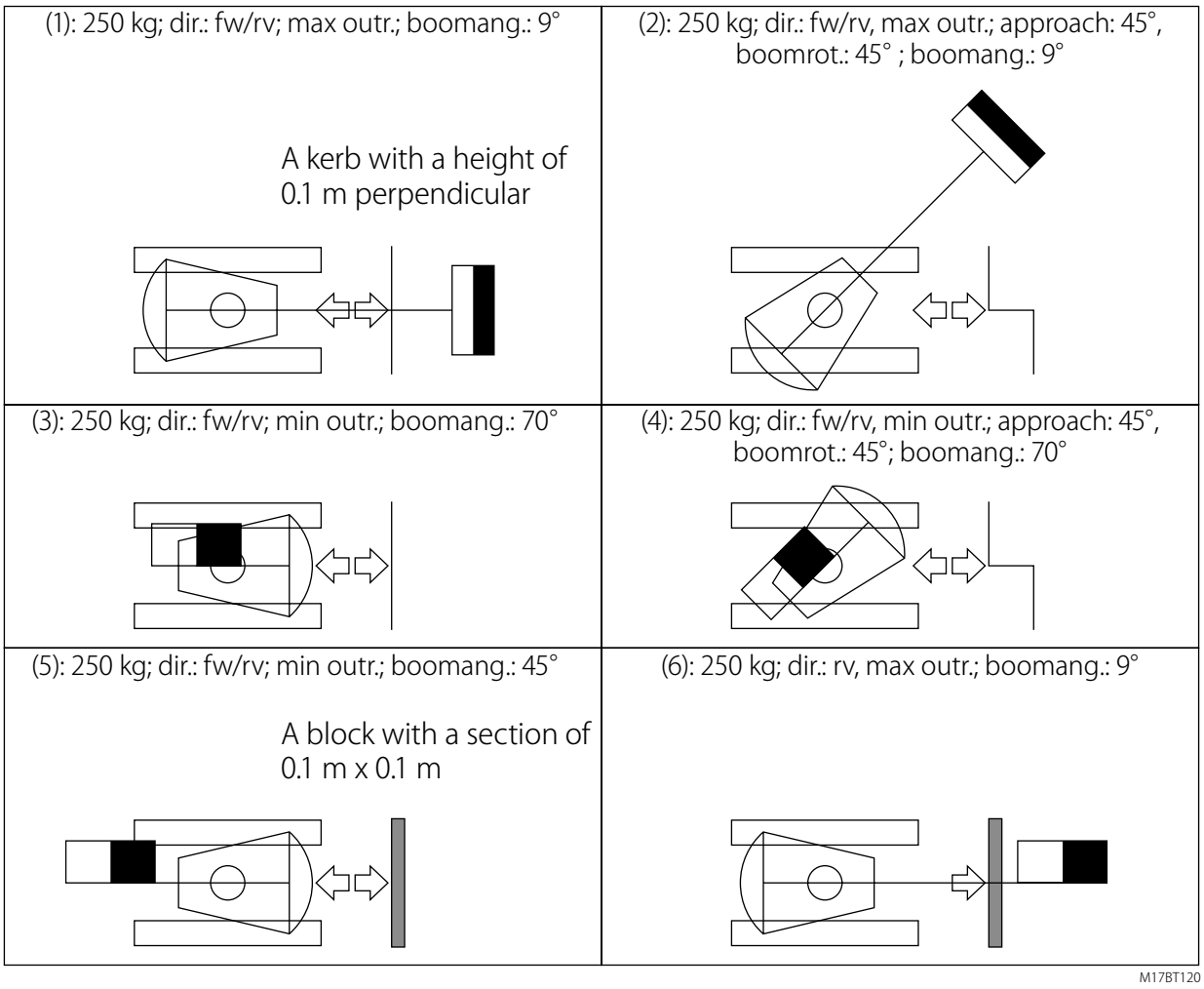

Fig. 13–2

(1) Both crawler tracks into or over the depression
(2) One crawler track into or over the depression
(3) Both crawler tracks into or over the depression
(4) One crawler track into or over the depression
(5) Both crawler tracks get over the block
(6) Both crawler tracks get over the block

Result: test passed

(nominal load: 250 kg / 50% of platform; drive speed: 0.5 km/h; 0.139 m/s).....(1)(2)(5)(6)
(nominal load: 250 kg / 50% of platform; drive speed: 0.3 km/h; 0.083 m/s).....(3)(4)

https://truckmanualshub.com/

Appendix B
Declaration of Conformity

https://truckmanualshub.com/

EC DECLARATION OF CONFORMITY

AICHI CORPORATION

Product: Mobile Elevating Work Platform

Model: SR12CSM

Manufacturer: Aichi Corporation
1152-10, Aza Yamashita Ryoke Oaza Ageo-shi,
Saitama 362-8550
Japan

Technical File: AICHI Sales Office BV
Florijnstraat 4, 4903 RM Oosterhout,
The Netherlands

Contact: R. van Gent / President

Notified body of EC type-examination:
SGS Nederland B.V.
Malledijk 18 P.O.Box 200 NL-3200 AE Spijkenisse
The Netherlands
Identification number Notified Body: 0608

Certificate Number: 110201/500/001/3013

The above products have been evaluated for conformity with provisions of following European Directives:

Directive 2006/42/EC	Machinery Directive
Directive 2014/30/EC	EMC Directive

Applied Harmonized Standards:
EN 280: 2013+A1: 2015
EN 13309: 2010

Signature: _____ Date: 30 November 2017

Name: Takashi Kimura
Position: Director Development Division
Place: Ageo-shi, Japan

This declaration conforms with the requirements of annex II of the council directive.
Any modification to the above described machine violates the validity of this declaration.

https://truckmanualshub.com/

EC DECLARATION OF CONFORMITY

AICHI CORPORATION

Product: Mobile Elevating Work Platform

Model: SR12CSM

Manufacturer: Aichi Corporation
1152-10, Aza Yamashita Ryoke Oaza Ageo-shi,
Saitama 362-8550
Japan

Technical File: AICHI Sales Office BV
Florijnstraat 4, 4903 RM Oosterhout,
The Netherlands

Contact: R. van Gent / President

Sound Power Level
Measured: LwA 96 dB
Guaranteed: LwA 100 dB

Net Installed Power: 18.9 kW

Conformity Assessment Procedure: 2000/14/EC Annex V

The above products have been evaluated for conformity with provisions of following European Directives:

Directive 2000/14/EC
The noise emission in the environment by equipment for use outdoors

Signature: _____ Date: 30 November 2017

Name: Takashi Kimura
Position: Director Development Division
Place: Ageo-shi, Japan

This declaration conforms with the requirements of annex II of the council directive.
Any modification to the above described machine violates the validity of this declaration.

https://truckmanualshub.com/

This page intentionally left blank.

https://truckmanualshub.com/

Appendix C

Daily Inspection Check Sheet

NOTICE

Make a copy of the daily inspection check sheet before performing the pre-operation checks.

Inspect each item in accordance with the pre-operation check procedure described in this manual.

Make a check in the appropriate box on the daily inspection check sheet depending on the inspection result.

https://truckmanualshub.com/

Daily Inspection Check Sheet

Model: _____ Serial number: _____ Year: _____ Month: _____

Item		/ Date	1	2	3	4	5	6	7	8	9	10	11	12	13	14	15	16	17	18	19	20	21	22	23	24	25	26	27	28	29	30	31
Engine	Coolant	Level																															
	Engine oil	Level																															
	Fuel	Level, Water sedimentor																															
Battery	Battery charge level, Battery fluid level																																
Hydraulic system	Hydraulic oil tank	Hydraulic oil level, Oil leakage																															
	Hydraulic filters	Oil leakage																															
	Hydraulic pump	Oil leakage, Abnormal moise																															
Chassis	Chassis frame	Cracks, Deformations																															
	Track links, Shoes	Wear, Tension																															
	Travel motor, Gearbox	Abnormal noise, Damage																															
	Parking brake	Function																															
	Wire harnesses, Hoses	Oil leakage, Damage																															
Turntable	Turntable bearing, Boom rotation gearbox, Turntable, Swivel joint	Cracks, Deformations, Abnormal noise, Oil leakage																															
Cylinder	Elevation, Telescope cylinder	Damage, Oil leakage, Natural descent																															
Boom	Boom, Pivot pins, Cable guide	Cracks, Deformations, Damage, Abnormal noise, Movement																															
Platform	Platform, Hand rail	Cracks, Deformations																															
	Rotary actuator	Oil leakage, Abnormal noise, Movement																															
Lower controls	Control switches	Function, Abnormal noise, Vibration																															
	Emergency stop button	All functions are disabled when pushed																															
	LEDs	Damage, Legibility																															
Upper controls	Joystick controllers, Control switches	Function, Abnormal noise, Vibration																															
	Emergency stop button	All functions are disabled when pushed																															
	LEDs	Damage, Legibility																															
Safety devices	Foot switch	Function																															
	Motion alarm buzzer	Sound																															
	Tilt alarm buzzer	Sound																															
	Emergency pump	Function																															
	Alarm horn	Sound																															
Decals	Legibility																																

See Operation manual for detailed inspection procedures. Pass: ✓ Fail: × N/A: ⧅