https://truckmanualshub.com/

STILL

Original instructions

Electric forklift truck

RX50-10
RX50-13
RX50-15
RX50-16

CE

5060 5061 5063 5065 5066

55048011501 EN - 12/2015

first in intralogistics

https://truckmanualshub.com/

https://truckmanualshub.com/

Address of manufacturer and contact details ▷

STILL GmbH
Berzeliusstraße 10
22113 Hamburg, Germany
Tel. +49 (0) 40 7339-0
Fax: +49 (0) 40 7339-1622
Email: info@still.de
Website: http://www.still.de

https://truckmanualshub.com/

https://truckmanualshub.com/

1 Foreword

Your truck . . . 2
General . . . 2
CE labelling . . . 2
EC declaration of conformity in accordance with Machinery Directive . . . 3
Accessories . . . 3

Information about documentation . . . 4
Documentation scope . . . 4
Issue date and topicality of the operating instructions . . . 5
Copyright and trademark rights . . . 5
Explanation of information symbols used . . . 5
List of abbreviations . . . 6
Definition of directions . . . 9
Schematic views . . . 9

Environmental considerations . . . 11
Packaging . . . 11
Disposal of components and batteries . . . 11

2 Introduction

Use of truck . . . 14
Proper usage . . . 14
Proper use during towing . . . 14
Impermissible use . . . 14
Place of use . . . 15
Parking in temperatures below -10°C . . . 16
Using working platforms . . . 16

Residual risk . . . 17
Residual dangers, residual risks . . . 17
Special risks associated with using the truck and attachments . . . 18
Overview of hazards and countermeasures . . . 20
Danger to employees . . . 23

3 Safety

Definition of responsible persons . . . 26
Operating company . . . 26
Specialist . . . 26
Drivers . . . 27

Essentials for safe operation . . . 29
Insurance cover on company premises . . . 29

https://truckmanualshub.com/

Changes and retrofitting . . . 29
Changes to the overhead guard and roof loads . . . 32
Warning regarding non-original parts . . . 32
Damage, defects and misuse of safety systems . . . 33
Tyres . . . 33
Medical equipment . . . 34
Exercise caution when handling gas springs and accumulators . . . 35
Length of the fork arms . . . 35

Safety tests . . . 37
Regular safety inspection of the truck . . . 37
Insulation testing . . . 37

Safety regulations for handling consumables . . . 39
Permissible consumables . . . 39
Oils . . . 39
Hydraulic fluid . . . 40
Battery acid . . . 41
Brake fluid . . . 42
Disposal of consumables . . . 44

Emissions . . . 45

4 Overviews

General view of truck . . . 50

General view of driver's compartment . . . 52

Operating devices and display elements . . . 53
Display and operating unit . . . 53
Operating devices for hydraulic and traction functions . . . 55
Multi-lever . . . 56
Double mini-lever . . . 57
Three-way mini-lever . . . 58
Four-way mini-lever . . . 59
Joystick 4Plus . . . 60
Fingertip . . . 61
Mini console . . . 62

Identification points . . . 64
Overview . . . 64
Nameplate . . . 65
Production number . . . 66
StVZO (Road Traffic Licensing Regulations) information . . . 66

https://truckmanualshub.com/

5 Operation

Checks and operations prior to commissioning 68
Visual inspections 68
Filling the washer system 70
Checking the condition of the wheels and tyres 71
Adjusting the GS15 driver's seat 72
Adjusting the MSG 65/MSG 75 driver's seat 74
Adjusting the armrest 77

Commissioning 79
Climbing on/off 79
Connecting the battery male connector 81
Shelf and cup holder 81
Unlocking the emergency off switch 82
Switching on the key switch 83
Access authorisation with PIN code (variant) 86
Operating the signal horn 96
Seat belt 97
Checking the brake system for correct function 99
Checking the steering system for correct function 100
Checking the emergency stop function 101
Zero adjustment of the load measurement (variant) 101
Checking the vertical lift mast position (variant) for correct function 103

Driving 104
Safety regulations when driving 104
Driveways 106
Setting the drive programs 108
Reducing speed with a raised load (variant) 109
Special overhead guard for drive-in racks (variant) 109
Selecting the drive direction 111
Actuating the drive direction switch, multiple-lever version 112
Actuating the drive direction switch, mini-lever version 112
Actuating the vertical rocker switch for the "drive direction", joystick 4Plus version 113
Actuate the drive direction switch, fingertip version 113
Actuating the drive direction switch, mini-console version 114
Starting drive mode 114
Starting drive mode, dual-pedal version (variant) 116
Operating the service brake 119
Actuating the mechanical parking brake 120
Steering 121
Reducing speed when turning (Curve Speed Control) 122

https://truckmanualshub.com/

Lifting 123
Lifting system variants 123
Automatic lift cut out (variant) 123
Lift mast vertical position (variant) 124
Types of lift mast 128
Malfunctions during lifting mode 130
Lifting system operating devices 131
Hydraulic blocking function 132
Multi-lever lifting system 134
Controlling the lifting system using a double mini-lever 135
Controlling the lifting system using a triple mini-lever 136
Controlling the lifting system using a quadruple mini-lever 137
Controlling the lifting system using the joystick 4Plus 138
Controlling the lifting system with the fingertip console 140
Changing the fork arms 141
Fork extension (variant) 143
Operation with reversible fork arms (variant) 145

Working with loads 147
Safety regulations when handing loads 147
Before taking up load 148
Load measurement (variant) 149
Picking up loads 152
Danger area 153
Transporting pallets 154
Transport of swinging loads 154
Picking up a load 155
Transporting loads 159
Setting down loads 160
Driving on ascending and descending slopes 162
Driving on lifts 162
Driving on loading bridges 164

Working with attachments 165
Fitting attachments 165
Releasing the pressure from the hydraulic system 167
General instructions for controlling attachments 169
Controlling attachments using multi-lever operation 171
Controlling attachments using multi-lever operation and the 5th function 172
Controlling attachments using a double mini-lever 174
Controlling attachments using the double mini-lever and the 5th function 176
Controlling attachments using a triple mini-lever 178
Controlling attachments using the three-way mini-lever and the 5th function 180

https://truckmanualshub.com/

Controlling attachments using a quadruple mini-lever 182
Controlling attachments using the four-way mini-lever and the 5th function 184
Controlling attachments via the joystick 4Plus 186
Controlling attachments using the joystick 4Plus and the 5th function 187
Controlling the attachments with fingertip 188
Controlling attachments with fingertip and the 5th function 189
Clamp locking mechanism (variant) 191
Taking up a load using attachments 195

Operation of additional equipment 196
Switching lighting on and off 197
Switching the rotating beacon on and off 197
Switching the hazard warning system on and off 198
Switching direction indicators on and off 198
Switching the double working spotlights on and off. 201
Operating the windscreen wiper/washer 203
FleetManager (variant) 203
Accident recorder (variant) 204
Driver restraint systems (variants) 204
Clipboard (variant) 204

Trailer operation 205
Towed load 205
Tow coupling RO*230 206
Tow coupling RO*244 208
Towing trailers 210

Cold store application 211

Operating the display and operating unit 214
Indicators 214
Adjusting the displays 217
Symbols in the display 217
Setting the date or time 222
Resetting the daily kilometres and daily operating hours 222
Setting the language 223
Soft key button for operating various equipment variants 223
Configuring Blue-Q efficiency mode 224

Blue-Q efficiency mode 226
Functional description 226
Effects on additional consumers 226
Switching efficiency mode Blue-Q on and off 227

Malfunctions 229
Screen content 229

https://truckmanualshub.com/

EMERGENCY SWITCH message . . . 230
SEAT SWITCH message . . . 230
SAFETY BELT message . . . 233
APPLY HANDBRAKE message . . . 234
LOWER FORKS message . . . 235
REFERENCE CYCLE message . . . 235
SERVICE BRAKE message . . . 236

Operation in special operating situations . . . 237
Transporting . . . 237
Towing . . . 240
Crane loading . . . 243

Behaviour in emergencies . . . 247
Emergency shutdown . . . 247
Procedure if truck tips over . . . 248
Emergency lowering . . . 248

Handling the battery . . . 251
Safety regulations when handling the battery . . . 251
Opening and closing the battery hood . . . 254
Opening/closing the battery door . . . 259
Disconnecting the battery male connector . . . 261
Battery replacement using a bridge . . . 262
Battery transport with crane . . . 269
Changing the battery using the internal roller channel . . . 270
Battery replacement using an external roller channel . . . 273
Battery installation or battery replacement without onboard devices . . . 277
Maintaining the battery . . . 278

Decommissioning . . . 282
Parking the truck securely and switching it off . . . 282
Wheel chock (variant) . . . 284
Shutting down and storing the truck . . . 284
Recommissioning after storage . . . 286

Cleaning . . . 288
Cleaning the truck . . . 288
Cleaning the electrical system . . . 290
Cleaning load chains . . . 291
After washing . . . 292

6 Maintenance

General maintenance information . . . 294
Personnel qualifications . . . 294

https://truckmanualshub.com/

Information for carrying out maintenance . . . 294
Maintenance — 1000 hours/annually . . . 297
Maintenance - 3000 hours/every two years . . . 301
Ordering spare parts and wearing parts . . . 301
Quality and quantity of the required operating materials . . . 301
Maintenance data table . . . 303

Safety regulations for maintenance . . . 306
General information . . . 306
Working on the hydraulic equipment . . . 306
Working on the electrical equipment . . . 306
Safety devices . . . 307
Set values . . . 307
Lifting and jacking up . . . 307
Working at the front of the truck . . . 308

Providing access to maintenance points . . . 310
Removing/installing the valve cover . . . 310
Removing/installing the bottom plate . . . 311
Removing/installing the bottom plate for dual pedal operation (variant) . . . 313

Maintenance . . . 315
Lubricating the joints and controls . . . 315
Checking the battery hood lock . . . 315
Maintaining the seat belt . . . 316
Checking the driver's seat . . . 318
Servicing wheels and tyres . . . 318
Checking the drive axle for oil level, leaks and general condition . . . 320
Checking the brake fluid level . . . 321
Checking the brake fluid level sensor . . . 322
Checking the battery condition, acid level and acid density . . . 324
Checking the fuses . . . 325
Changing fuses . . . 327
Checking the hydraulic oil level . . . 329
Checking the hydraulic system for leaks . . . 330
Lubricating the lift mast and roller track . . . 331
Maintenance for trucks used in cold stores . . . 331
Maintaining the tow coupling . . . 331

1000-hour maintenance / Annual maintenance . . . 333
Other tasks . . . 333
Checking the cable connections . . . 333
Checking accelerator pedal and brake pedal . . . 333
Checking the brake system for correct operation and leaks . . . 333
Checking the dual pedal . . . 334

https://truckmanualshub.com/

Checking the lift cylinders and connections for leaks 334
Checking fork arms 335
Checking the reversible fork arms 335

7 Technical data

Dimensions 338
VDI datasheet: RX50-10 and RX50-13 339
VDI datasheet: RX50-15 and RX50-16 343
Ergonomic dimensions 347
Battery specifications 348
Fuse assignment 351

https://truckmanualshub.com/

1

Foreword

https://truckmanualshub.com/

Your truck

General

The truck described in these operating instructions corresponds to the applicable standards and safety regulations.

If the truck is to be operated on public roads, it must conform to the existing national regulations for the country in which it is being used. The driving permit must be obtained from the appropriate office.

The trucks have been fitted with state-of-the-art technology. All that remains is to handle the truck safely and maintain its functionality.

These operating instructions provide the necessary information to do this. Read and observe the information provided before commissioning the truck. This will prevent accidents and ensure that the warranty remains valid.

CE labelling

The manufacturer uses CE labelling to indicate that the truck complies with the standards and regulations valid at the time of marketing. This is confirmed by the issued EC declaration of conformity. The CE labelling is attached to the nameplate.

An independent structural change or addition to the truck can compromise safety, thus invalidating the EC declaration of conformity.

The EC declaration of conformity must be carefully stored and made available to the responsible authorities.

▷

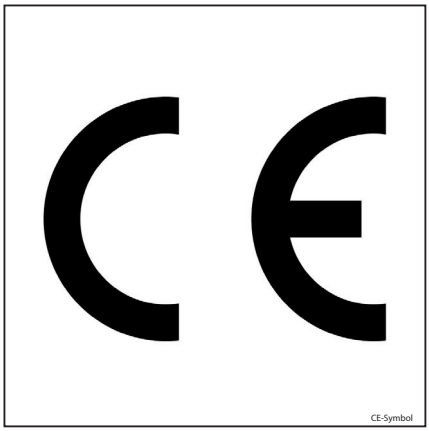

CE-Symbol

https://truckmanualshub.com/

EC declaration of conformity in accordance with Machinery Directive

Declaration

STILL GmbH
Berzeliusstraße 10
D-22113 Hamburg Germany

We declare that the

Industrial truck	**according to these operating instructions**
Model	**according to these operating instructions**

conforms to the latest version of the Machinery Directive 2006/42/EC.

Personnel authorised to compile the technical documents:

See EC compliance declaration

STILL GmbH

Accessories

- Key for key switch (two pieces)
- Hexagon socket wrench for emergency lowering (not in multi-lever operation)

https://truckmanualshub.com/

Information about documentation

Documentation scope

- Original operating instructions
- Original operating instructions for attachments (variant)
- Spare parts list
- VDMA rules for the proper use of industrial trucks

These operating instructions describe all measures necessary for the safe operation and proper maintenance of your truck in all possible variants available at the time of printing. Special versions to meet customer requirements are documented in separate operating instructions. If you have any questions, please contact your authorised service centre.

Enter the production number and year of manufacturer from the nameplate in the space provided:

Production number

.....

Year of manufacture

.....

Please quote the production number during all technical enquiries.

Each truck comes with a set of operating instructions. These instructions must be stored carefully and must be available to the driver and operating company at any time. The storage location is specified in the "Overviews" chapter.

If the operating instructions are lost, the operator must obtain a replacement from the manufacturer immediately.

The operating instructions are included in the spare parts list and can be reordered there as a spare part.

The personnel responsible for operating and maintaining the equipment must be familiar with these operating instructions.

The operating company must ensure that all users have received, read and understood these operating instructions.

https://truckmanualshub.com/

NOTE

Please observe the definition of the following responsible persons: "operating company" and "driver".

Thank you for reading and complying with these operating instructions. If you have any questions or suggestions for improvements, or if you have found any errors, please contact the authorised service centre.

Issue date and topicality of the operating instructions

The issue date of these operating instructions can be found on the title page.

STILL is constantly engaged in the further development of trucks. These operating instructions are subject to change, and any claims based on the information and/or illustrations contained in them cannot be asserted.

Please contact your authorised service centre for technical support relating to your truck.

Copyright and trademark rights

These instructions must not be reproduced, translated or made accessible to third parties—including as excerpts—except with the express written approval of the manufacturer.

Explanation of information symbols used

DANGER

Indicates procedures that must be strictly adhered to in order to prevent the risk of fatalities.

WARNING

Indicates procedures that must be strictly adhered to in order to prevent the risk of injuries.

https://truckmanualshub.com/

CAUTION

Indicates procedures that must be strictly adhered to in order to prevent material damage and/or destruction.

NOTE

For technical requirements that require special attention.

ENVIRONMENT NOTE

To prevent environmental damage.

List of abbreviations

NOTE

This list of abbreviations applies to all types of operating instructions. Not all of the abbreviations that are listed here will necessarily appear in these operating instructions.

Abbreviation	Meaning
°C	Degrees Celsius
°F	Degrees Fahrenheit
A	Amperes
ABE	Display operating unit
ArbSchG	German labour protection law
BetrSichV	German Ordinance on Industrial Safety and Health
BG	Employers' liability insurance association
BGG	Employers' liability insurance association act
BGR	Employers' liability insurance association rule
German Social Accident Insurance	Employers' liability insurance association regulation
Approx.	Approximately
CE	Symbol that confirms conformity with the valid product-specific European directives
CEE	International Commission on the Rules for the Approval of Electrical Equipment
cm	Centimetres

https://truckmanualshub.com/

Abbreviation	Meaning
cm^3	Cubic centimetres
dB	Decibels
DFÜ	Remote data transmission
DIN	German standard
EG	European Community
EN	European standard
FEM	Fédération Européene de la Manutention
F_{max}	Maximum power
g	Grams
GAA	Industrial inspectorate
If applicable	If applicable
GPRS	General Packet Radio Service
h/d	Hours per day (time driven each day in hours)
ID no.	ID number
ISO	International standard
kg	Kilograms
kg/m^3	Kilograms per cubic metre
km/h	Kilometres per hour
km/d	Kilometres per day (kilometres driven each day)
kN	Kilonewtons
kW	Kilowatts
kWh/h	Energy consumption
l	Litres
l/h	Litres per hour
l/min	Litres per minute
LAN	Local area network
LED	Light emitting diode
L_p	Sound pressure level
L_{pAZ}	Continuous sound pressure level in driver's compartment
LSP	Load centre of gravity
o.s.	Or similar
m	Metres

https://truckmanualshub.com/

Abbreviation	Meaning
m/s	Metres per second
m/s^2	Metres per second squared
MAK	Maximum workplace concentration
Max.	Maximum
Min.	Minimum
min	Minutes
rpm	Revolution(s) per minute
mm	Millimetres
N	Newtons
Nm	Newton metres
PIN	Personal identification number
SE	Superelastic
SIT	Snap-in tyre for simplified assembly
StVZO	German Road Traffic Licensing Regulations
t	Tonnes
TRGS	Technical Regulations for Hazardous Substances
a.s.	And similar
V	Volts
VDE	Association for Electrical, Electronic & Information Technologies
VDI	Association of German Engineers
VDMA	German Engineering Federation
W	Watts
WLAN	Wireless local area network
e.g.	For example

https://truckmanualshub.com/

Definition of directions

The directions "forwards" (1), "backwards" (3), "right" (2) and "left" (4) refer to the installation position of the parts as seen from the driver's compartment; the load is to the front.

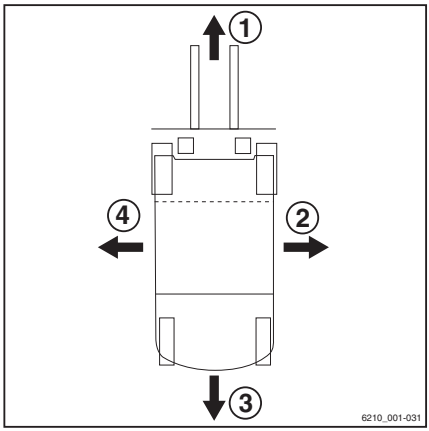

Schematic views

View of functions and operations

This documentation explains the (usually sequential) chain of certain functions or operations. Schematic diagrams of a counterbalance truck are used to illustrate these procedures.

NOTE

These schematic diagrams are not representative of the structural state of the documented truck. The diagrams are used solely for the purpose of clarifying procedures.

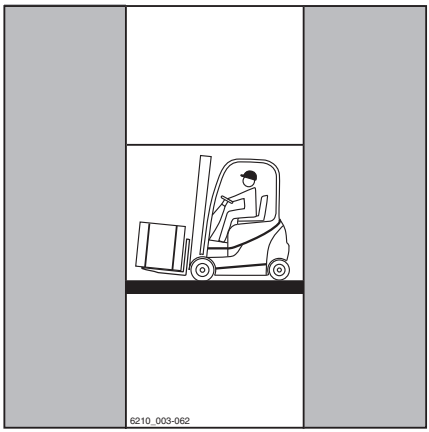

https://truckmanualshub.com/

View of the display operating unit

▷

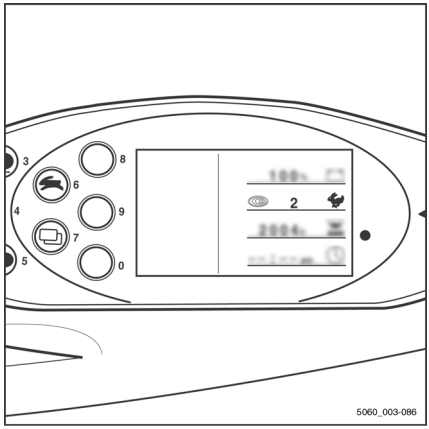

NOTE

Views of operating statuses and values in the display of the display operating unit are examples and partly dependent on the truck equipment. As a result, the displays shown of the actual operating statuses and values can vary. Information that is not relevant for descriptions is not shown.

https://truckmanualshub.com/

Environmental considerations

Packaging

During delivery of the truck, certain parts are packaged to provide protection during transport. This packaging must be removed completely prior to initial start-up.

ENVIRONMENT NOTE

The packaging material must be disposed of properly after delivery of the truck.

Disposal of components and batteries

The truck is composed of different materials. If components or batteries need to be replaced and disposed of, they must be:

- disposed of,
- treated or
- recycled in accordance with regional and national regulations.

NOTE

The documentation provided by the battery manufacturer must be observed when disposing of batteries.

ENVIRONMENT NOTE

We recommend working with a waste management company for disposal purposes.

https://truckmanualshub.com/

https://truckmanualshub.com/

2

Introduction

https://truckmanualshub.com/

Use of truck

Proper usage

The truck described in these operating instructions is suitable for lifting, transporting and stacking loads.

The truck may only be used for its proper purpose as set out and described in these operating instructions.

If the truck is to be used for purposes other than those specified in the operating instructions, the approval of the manufacturer and, if applicable, the relevant regulatory authorities must be obtained beforehand to prevent hazards.

The maximum load to be lifted is specified on the capacity rating plate (load diagram) and must not be exceeded; see also the chapter entitled "Before picking up a load".

Proper use during towing

This truck is suitable for the occasional towing of trailers and is equipped with a towing device for this purpose. This occasional towing may not exceed 2% of the daily operating time. If the truck is to be used for towing on a more regular basis, the manufacturer should be consulted.

The regulations regarding trailer operation must be observed; see chapter "Trailer operation".

Impermissible use

The operating company or driver, and not the manufacturer, is liable for any hazards caused by improper use.

NOTE

Please observe the definition of the following responsible persons: "operating company" and "driver".

Use for purposes other than those described in these operating instructions is prohibited.

https://truckmanualshub.com/

DANGER

There is a risk of fatal injury from falling off the truck while it is moving!

– It is prohibited to carry passengers on the truck.

The truck may not be operated in areas where there is a risk of fire, explosion or corrosion, or in areas that are particularly dusty.

Stacking or unstacking is not permissible on inclined surfaces or ramps.

Place of use

The truck can be used both outside and in buildings. Operation on public roads is only permitted if the "StVZO" (German Road Traffic Licensing Regulations) equipment variant is installed.

If the truck is to be operated on public roads, it must conform to the existing national regulations for the country in which it is being used.

The ground must have an adequate load capacity (concrete, asphalt) and a rough surface. Routes, work areas and aisle widths must conform to the specifications in these operating instructions, see the "Routes" chapter.

Driving on upward and downward gradients is permitted provided the specified data and specifications are observed, see the "Routes "chapter.

The forklift truck is suitable for indoor and outdoor use in countries ranging from the Tropics to Nordic regions (temperature range: -20°C to +40°C).

If the truck is to be used in a cold store, it must be configured accordingly and, if necessary, approved for such an environment; see the chapter entitled "Cold store application".

https://truckmanualshub.com/

CAUTION

Batteries can freeze!

If the truck is parked in an ambient temperature of below –10 °C for an extended period, the batteries cool down. The electrolyte may freeze and damage the batteries. The truck is then not ready for operation.

– In an ambient temperature of below –10 °C, only park the truck for short periods.

The operating company must ensure suitable fire protection for the relevant application in the truck's surroundings. Depending on the application, additional fire protection must be provided on the truck. If in doubt, contact the relevant authorities.

NOTE

Please observe the definition of the following responsible person: "operating company".

Parking in temperatures below -10°C

CAUTION

Batteries can freeze!

If the truck is parked in an ambient temperature below -10°C for an extended period, the batteries will cool down. The electrolyte may freeze and damage the batteries. The truck is then not ready for operation.

– When the ambient temperature is below -10°C, only park the truck for short periods of time.

Using working platforms

WARNING

The use of working platforms is regulated by national law. The use of working platforms is only permitted by virtue of the jurisdiction in the country of use.

– Observe national legislation.
– Before using working platforms, consult the national regulatory authorities.

https://truckmanualshub.com/

Residual risk

Residual dangers, residual risks

Despite careful working and compliance with standards and regulations, the occurrence of other risks when using the truck cannot be entirely excluded.

The truck and all other system components comply with current safety requirements. Nevertheless, even when the truck is used for its proper purpose and all instructions are followed, some residual risk cannot be excluded.

Even beyond the narrow danger areas of the truck itself, a residual risk cannot be excluded. Persons in this area around the truck must exercise a heightened degree of awareness, so that they can react immediately in the event of any malfunction, incident or breakdown etc.

⚠ WARNING

All persons that are in the vicinity of the truck must be instructed regarding these risks that arise through use of the truck.

In addition, we draw attention to the safety regulations in these operating instructions.

The risks can include:

- Escape of consumables due to leakages, rupture of lines and containers etc.
- Risk of accident when driving over difficult ground such as gradients, smooth or irregular surfaces, or with poor visibility etc.
- Falling, tripping etc. when moving on the truck, especially in wet weather, with leaking consumables or on icy surfaces
- Fire and explosion risks due to batteries and electrical voltages
- Human error resulting from failure to observe the safety regulations,
- Unrepaired damage or defective and worn components,
- Insufficient maintenance and testing
- Use of incorrect consumables
- Exceeding test intervals

https://truckmanualshub.com/

The manufacturer is not held responsible for accidents involving the truck caused by the failure of the operating company to comply with these regulations either intentionally or carelessly.

Stability

The stability of the truck has been tested to the latest technological standards and is guaranteed provided that the truck is used properly and according to its intended purpose. These standards only take into account the dynamic and static tipping forces that can arise during specified use in accordance with the operating rules and intended purpose. However, the danger of exceeding the moment of tilt due to improper use or incorrect operation and losing stability can never be excluded.

The loss of stability can be avoided or minimised by the following actions:

- Always secure the load against slipping, e.g. by lashing.
- Always transport unstable loads in suitable containers.
- Always drive slowly when cornering.
- Drive with the load lowered.
- Even with sideshifts, align the load as centrally as possible with the truck and transport in this position.
- Avoid turning and diagonally driving across slopes or gradients.
- Never have the load facing downhill when travelling on slopes or gradients.
- Pick up only loads of the approved width.
- Always take great care when transporting swinging loads.
- Do not drive over ramp edges or steps.

Special risks associated with using the truck and attachments

Approval from the manufacturer and attachment manufacturer must be obtained each

https://truckmanualshub.com/

time the truck is used in a manner that falls outside the scope of normal use, and in cases where the driver is not certain that he can use the truck correctly and without the risk of accidents.

https://truckmanualshub.com/

Overview of hazards and counter-measures

NOTE

This table is intended to help evaluate the hazards in your facility and applies to all drive types. It does not claim to be complete.

– Observe the national regulations for the country in which the truck is being used.

Hazard	Measure	Check note √ Complete - Not applicable	Notes
Truck equipment does not comply with local regulations	Test	O	If in doubt, consult competent factory inspectorate or employers' liability insurance association
Lack of skills and qualification of driver	Driver training (sit-on and stand-on)	O	BGG 925 VDI 3313 driver permit
Usage by unautho-rised persons	Access with key only for authorised persons	O	
Truck not in a safe condition	Recurrent testing and rectification of defects	O	German Ordinance on Industrial Safety and Health (BetrSichV)
Risk of falling when using working platforms	Compliance with national regulations (different national laws)	O	German Ordinance on Industrial Safety and Health (BetrSichV) and employer's liability insurance associations
Impaired visibility due to load	Resource planning	O	German Ordinance on Industrial Safety and Health (BetrSichV)
Contamination of respiratory air	Assessment of diesel exhaust gases	O	Technical Regulations for Hazardous Substances (TRGS) 554 and the German Ordinance on Industrial Safety and Health (BetrSichV)
	Assessment of LPG exhaust gases	O	German threshold limit values list (MAK-Liste) and the German Ordinance on Industrial Safety and Health (BetrSichV)

https://truckmanualshub.com/

Hazard	Measure	Check note √ Complete - Not applicable	Notes
Impermissible usage (improper usage)	Issuing of operating instructions	O	German Ordinance on Industrial Safety and Health (BetrSichV) and German Health and labour protection law (ArbSchG)
	Written notice of instruction to driver	O	German Ordinance on Industrial Safety and Health (BetrSichV) and German Health and labour protection law (ArbSchG)
	Note the German Ordinance on Industrial Safety and Health (BetrSichV), the operating instructions and the German Engineering Federation (VDMA) rules	O	
When fuelling			
a) Diesel	Note the German Ordinance on Industrial Safety and Health (BetrSichV), the operating instructions and the German Engineering Federation (VDMA) rules	O	
b) LPG	Note German Social Accident Insurance (DGUV) regulation D34, the operating instructions and the German Engineering Federation (VDMA) rules	O	

https://truckmanualshub.com/

Hazard	Measure	Check note √ Complete - Not applicable	Notes
When charging the traction battery	Note the German Ordinance on Industrial Safety and Health (BetrSichV), the operating instructions and the German Engineering Federation (VDMA) rules	O	Association for Electrical, Electronic and Information Technologies (VDE) regulation 0510: In particular - Ensure adequate ventilation - Insulation value within the permissible range
When using battery chargers	Note the German Ordinance on Industrial Safety and Health (BetrSichV), employers' liability insurance association regulation 104 and the operating instructions	O	German Ordinance on Industrial Safety and Health (BetrSichV) and employers' liability insurance association regulation 104
When parking LPG trucks	Note the German Ordinance on Industrial Safety and Health (BetrSichV), employers' liability insurance association regulation 104 and the operating instructions	O	German Ordinance on Industrial Safety and Health (BetrSichV) and employers' liability insurance association regulation 104
With driverless transport systems			
Roadway quality inadequate	Clean/clear driveways	O	German Ordinance on Industrial Safety and Health (BetrSichV)
Load carrier incorrect/slipped	Reattach load to pallet	O	German Ordinance on Industrial Safety and Health (BetrSichV)
Drive behaviour unpredictable	Employee training	O	German Ordinance on Industrial Safety and Health (BetrSichV)
Driveways blocked	Mark driveways Keep driveways clear	O	German Ordinance on Industrial Safety and Health (BetrSichV)

https://truckmanualshub.com/

Hazard	Measure	Check note √ Complete - Not applicable	Notes
Driveways intersect	Announce right-of-way rule	O	German Ordinance on Industrial Safety and Health (BetrSichV)
No person detection during depositing and retrieval	Employee training	O	German Ordinance on Industrial Safety and Health (BetrSichV)

Danger to employees

According to the German Ordinance on Industrial Safety and Health (BetrSichV) and labour protection law (ArbSchG), the operating company must determine and assess hazards during operation, and establish the labour protection measures required for employees (BetrSichVO). The operating company must therefore draw up appropriate operating instructions (§ 6 ArbSchG) and make them available to the driver. A responsible person must be appointed.

NOTE

Please observe the definition of the following responsible persons: "operating company" and "driver".

The construction and equipment of the truck correspond to the Machinery Directive 2006/42/EC and are therefore marked with CE labelling. These elements are therefore not included in the hazard assessment. Attachments possess their own CE labelling and likewise are not included for that reason. The operating company must, however, select the type and equipment of the trucks so as to comply with the local provisions for deployment.

The result must be documented (§ 6 ArbSchG). In the case of truck applications involving similar hazard situations, the results may be summarised. This overview (see chapter "Overview of hazards and countermeasures") provides help on complying with this regulation. The overview specifies the main hazards that are the most frequent cause of accidents in the event of non-compliance. If other major

https://truckmanualshub.com/

operational hazards are involved, they must also be taken into consideration.

The conditions of use for trucks are broadly similar in many plants, so the hazards can be summarised in one overview. Observe the information provided by the relevant employers' liability insurance association on this subject.

https://truckmanualshub.com/

3

Safety

https://truckmanualshub.com/

Definition of responsible persons

Operating company

The operating company is the natural or legal person or group who operates the truck or on whose authority the truck is used.

The operating company must ensure that the truck is only used for its proper purpose and in compliance with the safety regulations set out in these operating instructions.

The operating company must ensure that all users read and understand the safety information.

The operating company is responsible for the scheduling and correct performance of regular safety checks.

We recommend that the national performance specifications are adhered to.

Specialist

A qualified person is defined as a service engineer or a person who fulfils the following requirements:

- A completed vocational qualification that demonstrably proves their professional expertise. This proof should consist of a vocational qualification or a similar document.
- Professional experience indicating that the qualified person has gained practical experience of industrial trucks over a proven period during their career During this time, this person has become familiar with a wide range of symptoms that require checks to be carried out, such as based on the results of a hazard assessment or a daily inspection
- Recent professional involvement in the field of the industrial truck test in question and an appropriate further qualification are essential. The qualified person must have experience of carrying out the test in question or of carrying out similar tests. Moreover, this person must be aware of the latest technological developments

https://truckmanualshub.com/

regarding the industrial truck to be tested and the risk being assessed

Drivers

This truck may only be driven by suitable persons who are at least 18 years of age, have been trained in driving, have demonstrated their skills in driving and handling loads to the operating company or an authorised representative, and have been specifically instructed to drive the truck. Specific knowledge of the truck to be operated is also required.

The training requirements under §3 of the Health and Safety at Work Act and §9 of the plant safety regulations are deemed to have been satisfied if the driver has been trained in accordance with BGG (General Employers' Liability Insurance Association Act) 925. Observe the national regulations for your country.

Driver rights, duties and rules of behaviour

The driver must be trained in his rights and duties.

The driver must be granted the required rights.

The driver must wear protective equipment (protection suit, safety footwear, safety helmet, industrial goggles and gloves) that is appropriate for the conditions, the job and the load to be lifted. Solid footwear should be worn to ensure safe driving and braking.

The driver must be familiar with the operating instructions and have access to them at all times.

The driver must:

- have read and understood the operating manual
- have familiarised himself with safe operation of the truck
- be physically and mentally able to drive the truck safely

https://truckmanualshub.com/

DANGER

The use of drugs, alcohol or medications that affect reactions impair the ability to drive the truck!

Individuals under the influence of the aforementioned substances are not permitted to perform work of any kind on or with the truck.

Prohibition of use by unauthorised persons

The driver is responsible for the truck during working hours. He must not allow unauthorised persons to operate the truck.

When leaving the truck, the driver must secure it against unauthorised use, e.g. by pulling out the key.

https://truckmanualshub.com/

Essentials for safe operation

Insurance cover on company premises

In many cases, company premises are restricted public traffic areas.

NOTE

The business liability insurance should be reviewed to ensure that, in the event of any damage caused in restricted public traffic areas, there is insurance cover for the truck in respect of third parties.

Changes and retrofitting

If the truck is used for work that is not listed in the guidelines or in these instructions and has to be converted or retrofitted accordingly, you must note that any change to its structural state can affect the handling and stability of the truck, which in turn can lead to accidents.

You should therefore contact your service centre beforehand.

Changes that will adversely affect stability, load capacity and safety systems, among other things, must not be made without the manufacturer's approval.

The truck can only be converted with written approval from the manufacturer. Approval from the responsible authority must be obtained if necessary.

Changes to the brakes, steering, control elements, circumferential view, equipment variants (e.g. attachments) must also not be made without the prior written approval of the manufacturer.

We warn against the installation and use of restraint systems not approved by the manufacturer.

https://truckmanualshub.com/

DANGER

Risk of injury if truck tips over!

Even when using an approved restraint system, there is some residual risk that the driver might be injured if the truck tips over. This risk of injury can be reduced through the combined use of a restraint system and the seat belt. In addition, the seat belt protects against the consequences of rear-end collisions and falling off a ramp.

– Use the seat belt too.

When carrying out welding work on the truck, it is essential that the battery and all connections to the electronic control cards are disconnected. Contact the authorised service centre on this matter.

DANGER

Risk of explosion from additional holes in the battery hood!

Explosive gases can escape and lead to potentially fatal injuries if they explode. Sealing holes with plugs is not sufficient to prevent gas from escaping.

– Do not drill any holes in the battery hood.

DANGER

Risk of accident from additional holes in the battery hood!

The rigidity of the battery hood is impaired and the battery hood may fracture. The driver's seat may collapse, leading to a risk of accident due to uncontrolled steering movements whilst driving.

– Do not drill any holes in the battery hood.

https://truckmanualshub.com/

⚠ DANGER

Risk to life from falling load!

If the truck is not equipped with an overhead guard, there is a risk to the driver's life, as he may be struck by a load falling from a lift height of 1800 mm or greater.

Operation of the truck without an overhead guard at a lift height of over 1800 mm is prohibited.

– For lift heights of 1800 mm and above, only use trucks with an overhead guard.

In the event of the manufacturer going into liquidation and the company not being taken over by another legal person, the operating company can make changes to the truck.

To do so, the operating company must fulfil the following prerequisites:

Construction documents, test documents and assembly instructions associated with the change must be archived and remain accessible at all times.

Check that the capacity rating plate, decal information, hazard warnings and the operating instructions are consistent with regard to the changes and modify if necessary.

The change must be designed, checked and implemented by a design office that specialises in industrial trucks in accordance with the standards and directives valid at the time the changes are made.

Decal information with the following data must be permanently affixed to the truck so it is clearly visible:

– Type of change

– Date of change

– Name and address of the company implementing the change.

https://truckmanualshub.com/

Changes to the overhead guard and roof loads

DANGER

In the event of the overhead guard failing due to a falling load or the truck tipping over, there are potentially fatal consequences for the driver. There is a risk to life!

Welding and drilling on the overhead guard changes the material characteristics and the structural design of the overhead guard. Excessive forces caused by falling loads or the truck tipping over may result in buckling of the modified overhead guard and no protection for the driver.

– Do not perform welding on the overhead guard.
– Do not perform drilling on the overhead guard.

CAUTION

Heavy roof loads damage the overhead guard!

To ensure the stability of the overhead guard at all times, a roof load may only be mounted on the overhead guard if the structural design has been tested and the manufacturer has given approval.

– Seek advice from the authorised service centre for the mounting of roof loads.

Warning regarding non-original parts

Original parts, attachments and accessories are specially designed for this truck. We specifically draw your attention to the fact that parts, attachments and accessories supplied by other companies have not been tested and approved by STILL.

CAUTION

Installation and/or use of such products may therefore have a negative impact on the design features of the truck and thus impair active and/or passive driving safety.

We recommend that you obtain approval from the manufacturer and, if necessary, from the relevant regulatory authorities before installing such parts. The manufacturer accepts no liability for any damage caused by the use of non-original parts and accessories without approval.

https://truckmanualshub.com/

Damage, defects and misuse of safety systems

Damage or other defects on the truck or attachment must be reported to the supervisor or responsible fleet manager immediately so that they can have the defect rectified.

Trucks and attachments that are not functional or safe to drive may not be used until they have been properly repaired.

Do not remove or deactivate safety systems and switches.

Fixed set values may only be changed with the approval of the manufacturer.

Work on the electrical system (e.g. connecting a radio, additional headlights etc.) is only permitted with the manufacturer's written approval. All electrical system interventions must be documented.

Even if they are removable, roof panels may not be removed, as they are designed to protect against small falling objects.

Tyres

⚠ DANGER

Risk to stability!

Failure to observe the following information and instructions can lead to a loss of stability. The truck may tip over, risk of accident!

The following factors can lead to a loss of stability and are therefore **prohibited**:

- Different tyres on the same axle, e.g. pneumatic tyres and superelastic tyres
- Tyres not approved by the manufacturer
- Excessive tyre wear
- Tyres of inferior quality
- Changing rim wheel parts
- Combining rim wheel parts from different manufacturers

https://truckmanualshub.com/

The following rules must be observed to ensure stability:

- Only use tyres with equal and permitted levels of wear on the same axle
- Only use wheels and tyres of the same type on the same axle, e.g. only superelastic tyres
- Only use wheels and tyres approved by the manufacturer
- Only use high-quality products

Wheels and tyres approved by the manufacturer can be found on the spare parts list. If other wheels or tyres are to be used, authorisation from the manufacturer must be obtained beforehand.

– Contact the authorised service centre on this matter.

When changing wheels or tyres, always ensure that this does not cause the truck to tilt to one side (e.g. always replace right-hand and left-hand wheels at the same time). Changes must only be made following consultation with the manufacturer.

If the type of tyre used on an axle is changed, for example from superelastic tyres to pneumatic tyres, the load diagram must be changed accordingly.

– Contact the authorised service centre on this matter.

Medical equipment

⚠ WARNING

Electromagnetic interference may occur on medical devices!

Only use equipment that is sufficiently protected against electromagnetic interference.

Medical equipment, such as pacemakers or hearing aids, may not work properly when the truck is in operation.

– Ask your doctor or the manufacturer of the medical equipment to confirm that the medical equipment is sufficiently protected against electromagnetic interference.

https://truckmanualshub.com/

Exercise caution when handling gas springs and accumulators

WARNING

Gas springs are under high pressure. Improper removal results in an elevated risk of injury.

For ease of operation, various functions on the truck can be supported by gas springs. Gas springs are complex components that are subject to high internal pressures (up to 300 bar). They may under no circumstances be opened unless instructed to do so, and may be installed only when not under pressure. If required, the authorised service centre will depressurise the gas spring in accordance with the regulations before removal. Gas springs must be depressurised before recycling.

- Avoid damage, lateral forces, buckling, temperatures over 80°C and heavy contamination.
- Damaged or defective gas springs must be changed immediately.
- Contact the authorised service centre.

WARNING

Accumulators are under high pressure. Improper installation of an accumulator results in an elevated risk of injury.

Before starting work on the accumulator it must be depressurised.

- Contact the authorised service centre.

Length of the fork arms

DANGER

Risk of accident due to the incorrect selection of fork arms!

- The fork arms must match the depth of the load.

If the fork arms are too short, the load may fall off the arms after it has been picked up. In addition, be aware that the load centre of gravity may shift as a result of dynamic forces, such as braking. A load that is otherwise resting safely on the fork arms may move forwards and fall.

If the fork arms are too long, they can catch on loading units behind the load that is to be

https://truckmanualshub.com/

picked up. These other loading units then fall over when the load is raised.

– For help with selecting the correct fork arms, contact the authorised service centre.

https://truckmanualshub.com/

Safety tests

Regular safety inspection of the truck ▷

Safety inspection based on time and extraordinary incidents

The operating company must ensure that the truck is checked by a specialist at least once a year or after particular incidents.

As part of this inspection, a complete check of the technical condition of the truck must be performed with regard to accident safety. In addition, the truck must be thoroughly checked for damage that could potentially have been caused by improper use. A test log must be created. The results from the inspection must be retained until a further two inspections have been carried out.

The inspection date is indicated by an adhesive label on the truck.

– Arrange for the service centre to perform periodic safety inspections on the truck.

– Observe guidelines for checks carried out on the truck in accordance with FEM 4.004.

The operator is responsible for ensuring any defects are remedied without delay.

– Contact your service centre.

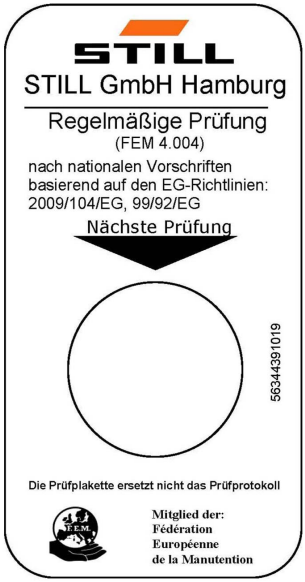

NOTE

Observe the national regulations for your country!

Insulation testing

The truck insulation must have sufficient insulation resistance. For this reason, insulation testing in accordance with DIN EN 1175 and DIN 43539, VDE 0117 and VDE 0510 must be conducted at least once a year.

NOTE

The truck's electrical system and drive batteries must be checked separately.

https://truckmanualshub.com/

Measuring the battery's insulation resistance

NOTE

Nominal battery voltage < test voltage < 500 V.

– Measure the insulation resistance with a suitable measuring device.

The insulation resistance can be considered sufficient if it measures at least 500 Ω/V for the nominal battery voltage against ground.

– Contact the authorised service centre.

Measuring the insulation resistance of the electrical system

NOTE

Nominal battery voltage < test voltage < 500 V.

– Ensure that all voltage sources have been disconnected from the circuit to be tested.

– Measure the insulation resistance with a suitable measuring device.

The insulation resistance can be considered sufficient if it measures at least 1000 Ω/V for the nominal battery voltage against ground.

– Contact the authorised service centre.

https://truckmanualshub.com/

Safety regulations for handling consumables

Permissible consumables

DANGER

Failure to observe the safety regulations relating to consumables may result in a risk of injury, death or damage to the environment.

– Observe the safety regulations when handling such materials.

Refer to the maintenance data table for the permissible substances that are necessary for operation (see ⇒ Chapter "Maintenance data table", P. 6-303).

Oils

DANGER

Oils are flammable!

– Follow the statutory regulations.
– Do not allow oils to come into contact with hot engine parts.
– No smoking, fires or naked flames!

DANGER

Oils are toxic!

– Avoid contact and consumption.
– If vapour or fumes are inhaled, move to fresh air immediately.
– In the event of contact with the eyes, rinse thoroughly (for at least 10 minutes) with water and then consult an eye specialist.
– If swallowed, do not induce vomiting. Seek immediate medical attention.

https://truckmanualshub.com/

WARNING

Prolonged intensive contact with the skin can result in dryness and irritate the skin!

- Avoid contact and consumption.
- Wear protective gloves.
- After any contact, wash the skin with soap and water, and then apply a skin care product.
- Immediately change soaked clothing and shoes.

WARNING

There is a risk of slipping on spilled oil, particularly when combined with water!

- Spilt oil should be removed immediately with oil-binding agents and disposed of according to the regulations.

ENVIRONMENT NOTE

Oil is a water-polluting substance!

- *Always store oil in containers that comply with the applicable regulations.*
- *Avoid spilling oils.*
- *Spilt oil should be removed immediately with oil-binding agents and disposed of according to the regulations.*
- *Dispose of old oils according to the regulations.*

Hydraulic fluid

WARNING

These fluids are pressurised during operation of the truck and are hazardous to your health.

- Do not spill the fluids.
- Follow the statutory regulations.
- Do not allow the fluids to come into contact with hot engine parts.

https://truckmanualshub.com/

WARNING

These fluids are pressurised during operation of the truck and are hazardous to your health.

- Do not allow the fluids to come into contact with the skin.
- Avoid inhaling spray.
- Penetration of pressurised fluids into the skin is particularly dangerous if these fluids escape at high pressure due to leaks in the hydraulic system. In case of such injury, immediate medical assistance is required.
- To avoid injury, use appropriate personal protective equipment (e.g. protective gloves, industrial goggles, skin protection and skin care products).

ENVIRONMENT NOTE

Hydraulic fluid is a water-polluting substance.

- *Always store hydraulic fluid in containers that comply with regulations*
- *Avoid spills*
- *Spilt hydraulic fluid should be removed immediately with oil-binding agents and disposed of according to the regulations*
- *Dispose of old hydraulic fluid according to the regulations*

Battery acid

WARNING

Battery acid contains dissolved sulphuric acid. This is toxic.

- Avoid touching or swallowing the battery acid at all costs.
- In case of injury, seek medical advice immediately.

https://truckmanualshub.com/

⚠ WARNING

Battery acid contains dissolved sulphuric acid. This is corrosive.

- When working with battery acid, always wear a protection suit and eye protection.
- When working with battery acid, never wear a watch or any jewellery.
- Do not allow any acid to get onto clothing or skin or into the eyes; if this does happen, rinse immediately with plenty of clean water.
- In case of injury, seek medical advice immediately.
- Immediately rinse away spilt battery acid with plenty of water.
- Follow the statutory regulations.

ENVIRONMENT NOTE

- Dispose of used battery acid in line with the applicable regulations.

Brake fluid

⚠ WARNING

Brake fluid is poisonous!

- Avoid swallowing. In the event of swallowing, do not induce vomiting. Rinse out your mouth thoroughly with water and ask a doctor for advice.
- Avoid aerosolisation and inhalation. In the event of inhalation, seek fresh air. Ask a doctor for advice if necessary.

https://truckmanualshub.com/

WARNING

Brake fluid is hazardous to your health!

Brake fluid irritates the eyes and can dry out the skin upon prolonged contact.

- Coat your hands with a protective skin cream prior to starting work.
- Avoid prolonged or intensive skin contact. In the event of skin contact, clean the wetted skin with water and soap, and subsequently apply a skin care product.
- Prevent contact with the eyes. In the event of contact with the eyes, wash out the affected eye(s) with clean water for ten minutes and then ask a doctor for advice.
- Change clothing soiled with brake fluid as soon as possible.

CAUTION

Brake fluid is flammable!

- Do not allow brake fluid to come into contact with hot motor parts.
- Smoking, fires and naked flames are prohibited.

CAUTION

Brake fluid has strong dissolving and colour-changing properties.

- Immediately rinse off any brake fluid that has splashed on paint, clothing, and shoes with plenty of water

ENVIRONMENT NOTE

Brake fluid is a water pollutant!

- *Always store brake fluid in containers complying with the regulations..*
- *Do not spill brake fluid.*
- *Spilt brake fluid must be removed immediately using an oil binding agent and disposed of in accordance with regulations*
- *Dispose of old brake fluid according to the regulations.*
- *Observe the national regulations for the country in which the truck is being used.*

https://truckmanualshub.com/

Disposal of consumables

ENVIRONMENT NOTE

Materials that accumulate during repair, maintenance and cleaning must be collected properly and disposed of in accordance with the national regulations for the country in which the truck is being used. Work must only be carried out in areas designated for the purpose. Care must be taken to minimise any environmental pollution.

- Soak up any spilt fluids such as hydraulic oil, brake fluid or gearbox oil using an oil-binding agent.
- Neutralise any spilt battery acid immediately.
- Always observe national regulations concerning the disposal of used oil.

https://truckmanualshub.com/

Emissions

The values specified apply to a standard truck (compare the specifications in the "Technical data" chapter). Different tyres, lift masts, additional units etc. may produce different values.

Noise emissions

The values were determined based on measuring procedures from the standard EN 12053 "Safety of industrial trucks. Test methods for measuring noise emissions", based on EN 12001 and EN ISO 3744 and the requirements of EN ISO 4871.

This machine emits the following sound pressure levels:

Continuous sound pressure level in the driver's compartment

L_{pAZ}
< 70 dB(A)

The values were determined in the test cycle on an identical machine from the weighted values for operating statuses and idling.

Time proportions:

- Lifting 18%
- Idling 58%
- Driving 24%

However, the indicated noise levels at the truck cannot be used to determine the noise emissions at workplaces according to the most recent version of **Directive 2003/10/EC** (daily personal noise pollution). If required, these noise emissions must be determined directly at the workplaces under the actual conditions present (further sources of noise, particular application conditions, sound reflections) by the operating company.

NOTE

Please observe the definition of the following responsible person: "operating company".

https://truckmanualshub.com/

Vibrations

The vibrations of the machine have been determined on an identical machine in accordance with the standards DIN EN 13059 "Safety of industrial trucks - Test methods for measuring vibration" and DIN EN 12096 "Mechanical vibration - Declaration and verification of vibration emission values".

Frequency-weighted effective value of acceleration on the seat

MSG 65 driver's seat	Measurement uncertainty
0.68 m/s^2	0.204 m/s^2

Tests have indicated that the amplitude of the hand and arm vibrations on the steering wheel or the operating devices in trucks is less than 2.5 m/s^2. There are therefore no measurement guidelines for these measurements.

The individual vibration load on the driver over the course of a working day must be determined by the operating company in accordance with **Directive 2002/44/EC** at the actual place of use in order to consider all additional influences, such as driving route, intensity of use etc.

NOTE

Please observe the definition of the following responsible person: "operating company".

https://truckmanualshub.com/

Battery

DANGER

Risk of explosion due to flammable gases!

During charging, the battery releases a mixture of oxygen and hydrogen (oxyhydrogen gas). This gas mixture is explosive and must not be ignited.

- Make sure that there is always sufficient ventilation in working areas that are entirely or partially enclosed.
- Keep away from open flames and flying sparks
- Do not smoke.
- Observe the safety regulations for handling the battery.

https://truckmanualshub.com/

https://truckmanualshub.com/

4

Overviews

https://truckmanualshub.com/

General view of truck

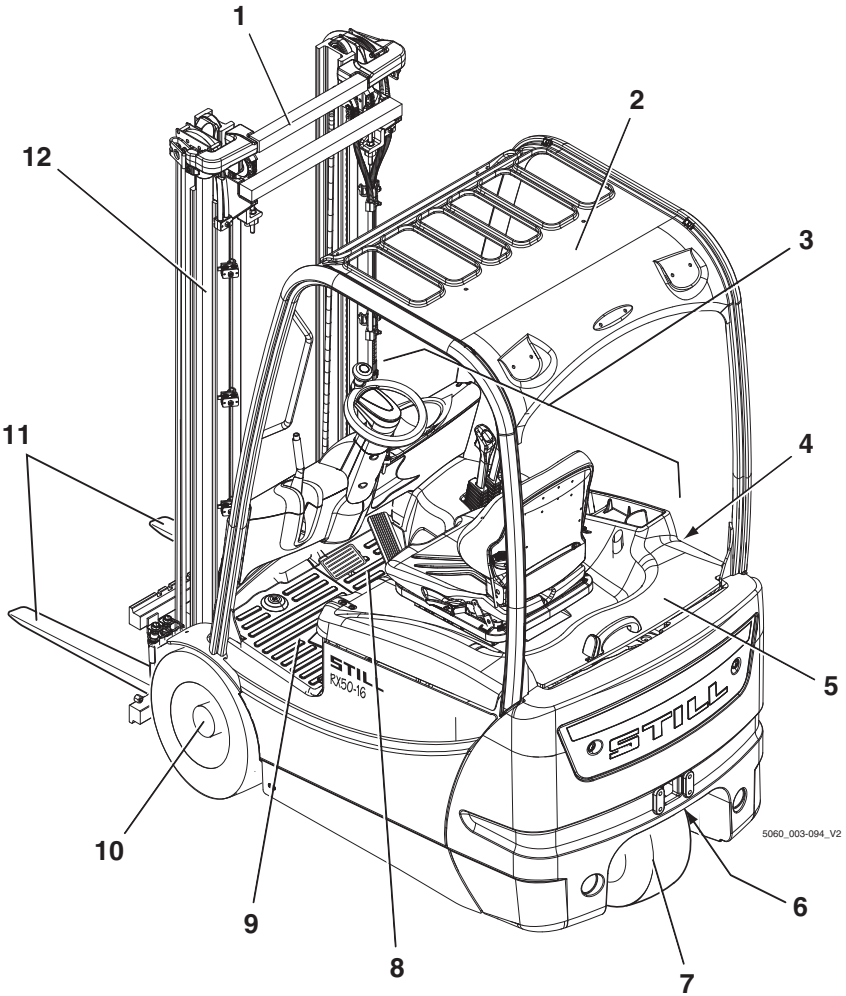

1	Lift mast	7	Drive wheel
2	Overhead guard	8	Right-hand bottom plate
3	Driver's compartment	9	Left-hand bottom plate
4	Battery door	10	Running axle
5	Battery hood	11	Fork arms
6	Connection for towing bracket / tow coupling (optional)	12	Lift cylinder

https://truckmanualshub.com/

https://truckmanualshub.com/

General view of driver's compartment

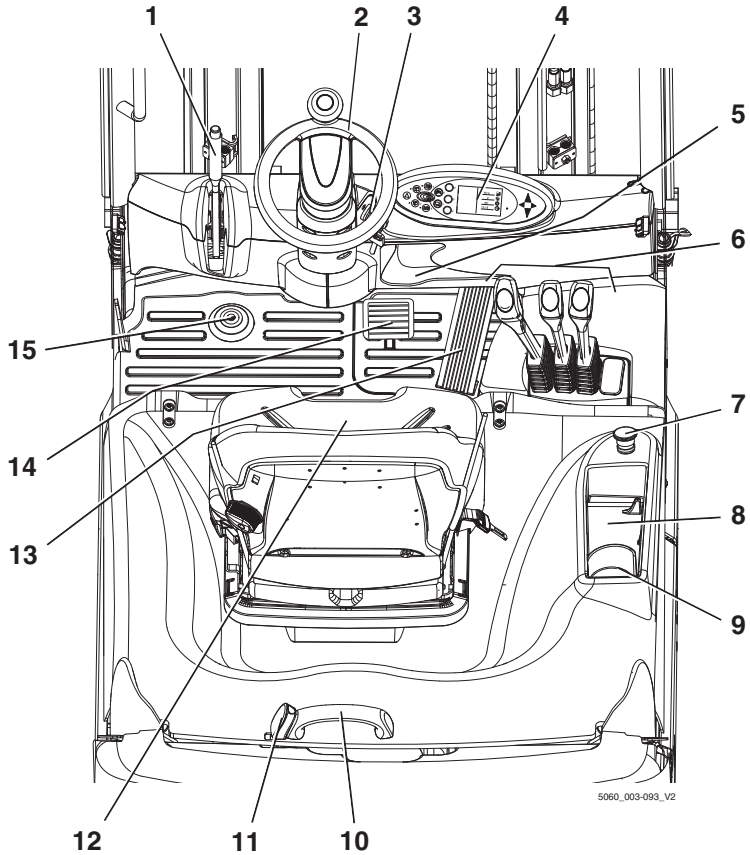

1	Parking brake lever
2	Steering wheel
3	Switch key
4	Display operating unit
5	Document holder and storage location for operating instructions
6	Operating devices for hydraulic and traction functions
7	Emergency stop switch (only in multiple-lever version)
8	Storage box
9	Cup holder for bottles max. 1 l
10	Battery hood handle
11	Battery hood release
12	Driver's seat
13	Accelerator pedal
14	Brake pedal
15	Signal horn foot switch

https://truckmanualshub.com/

Operating devices and display elements

Display and operating unit

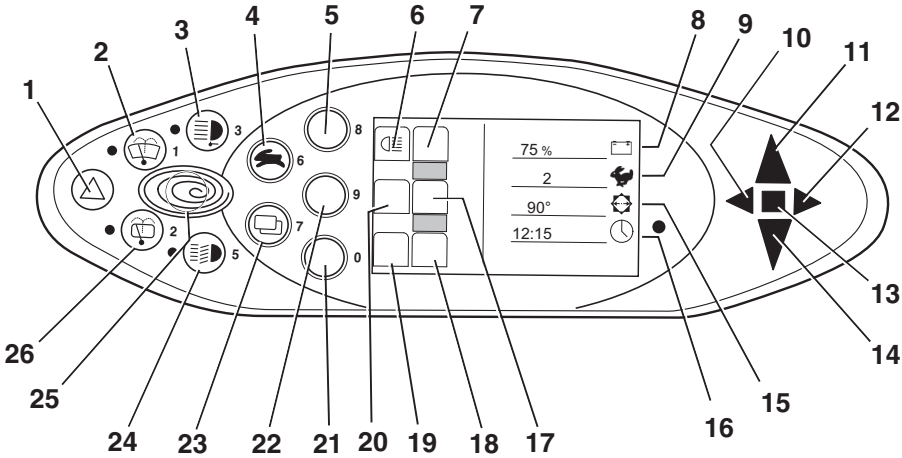

1	Hazard warning system button
2	Front windscreen wiper button
3	Front working spotlight button
4	Drive program selector button
5	Rear working spotlight button
6	Rear working spotlight symbol
7	Not assigned
8	Battery charge display (percent)
9	Drive programme display (numerical)
10	Left direction indicator light
11	Forward travel display
12	Right direction indicator light
13	Malfunction display
14	Reverse travel display
15	Steering position display (degrees)
16	Time display (digital)
17	Not assigned
18	Rotating beacon display
19	Not assigned
20	Not assigned
21	Not assigned
22	Not assigned
23	Menu change button
24	Lighting button
25	Blue-Q button
26	Rear window wiper button

NOTE

The buttons (5, 21, 22) and the corresponding indicators (6, 7, 18, 19, 20) are assigned according to the auxiliary equipment installed.

The assignment shown here is an example and may differ from the assignment actually programmed on the truck. Buttons may be assigned multiple functions that are called up according to the menu navigation. For further information, see the "Operating the display and operating unit" chapter.

https://truckmanualshub.com/

– If you have any questions, please contact your authorised service centre.

https://truckmanualshub.com/

Operating devices for hydraulic and traction functions

Different versions of the operating devices are available for operating the truck's hydraulic and traction functions.

The truck can be equipped with the following operating devices:

- Multiple-lever
- Double mini-lever
- Triple mini-lever
- Quadruple mini-lever
- Joystick 4Plus
- Fingertip
- Mini-console

https://truckmanualshub.com/

Multi-lever

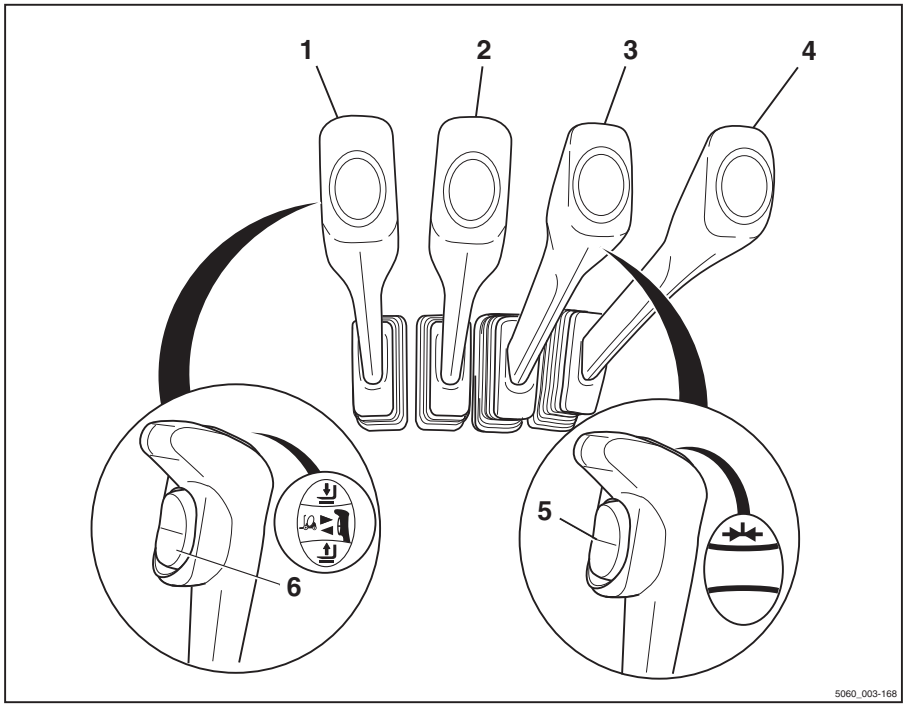

1	"Lift/lower" operating lever	4	Operating lever for attachment (variant)
2	"Tilt" operating lever	5	"5th function" function switch (variant)
3	Operating lever for attachment (variant)	6	Drive direction switch

NOTE

In the dual-pedal version (variant), the truck is equipped with a signal horn button instead of the drive direction switch.

https://truckmanualshub.com/

Double mini-lever

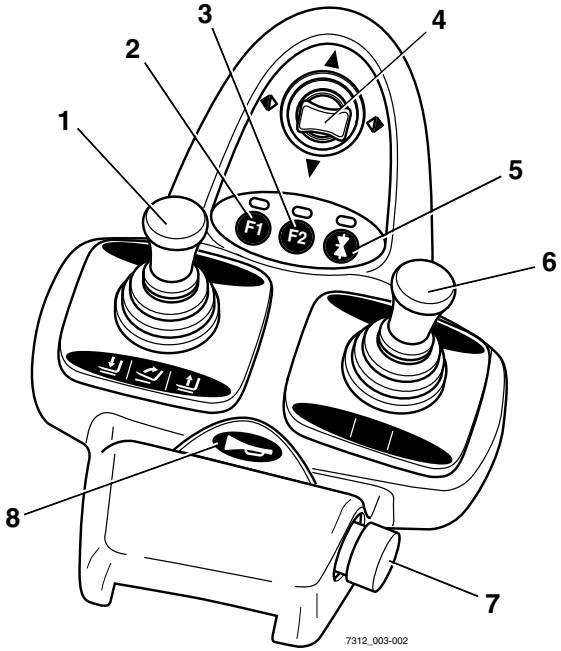

1	"Lift mast" 360° lever	5	Function key "5th function"
2	Function key F1	6	"Attachments" cross lever
3	Function key F2	7	Emergency stop switch
4	"Drive direction / turn indicator" cross lever	8	Signal horn button

NOTE

Depending on the specification, various electric attachment parts can be controlled via function keys (2) and (3). Changes must only be made by the authorised service centre.

https://truckmanualshub.com/

Three-way mini-lever

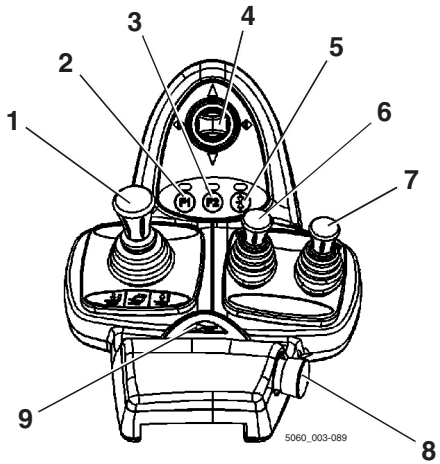

1	"Lift mast" 360° lever	6	"Auxiliary hydraulics 1" operating lever
2	Function key F1	7	"Auxiliary hydraulics 2" operating lever
3	Function key F2	8	Emergency stop switch
4	"Drive direction / turn indicator" cross lever	9	Signal horn button
5	Function key "5th function"		

NOTE

Depending on the specification, various electric attachment parts can be controlled via function keys (2) and (3). Changes must only be made by the authorised service centre.

https://truckmanualshub.com/

Four-way mini-lever

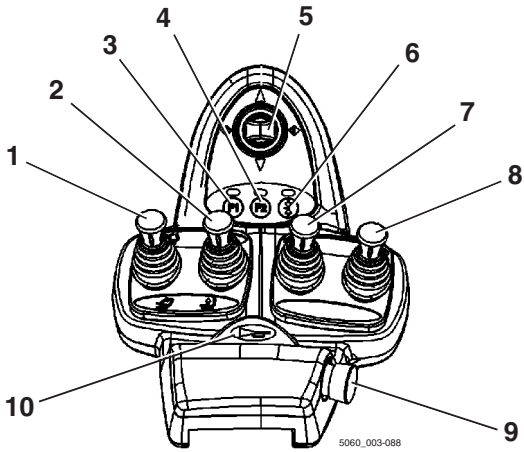

1	"Lift/lower" operating lever	6	Function key "5th function"
2	"Tilt" operating lever	7	"Auxiliary hydraulics 1" operating lever
3	Function key F1	8	"Auxiliary hydraulics 2" operating lever
4	Function key F2	9	Emergency stop switch
5	"Drive direction / turn indicator" cross lever	10	Signal horn button

NOTE

Depending on the specification, various electric attachment parts can be controlled via function keys (3) and (4). Changes must only be made by the authorised service centre.

https://truckmanualshub.com/

Joystick 4Plus

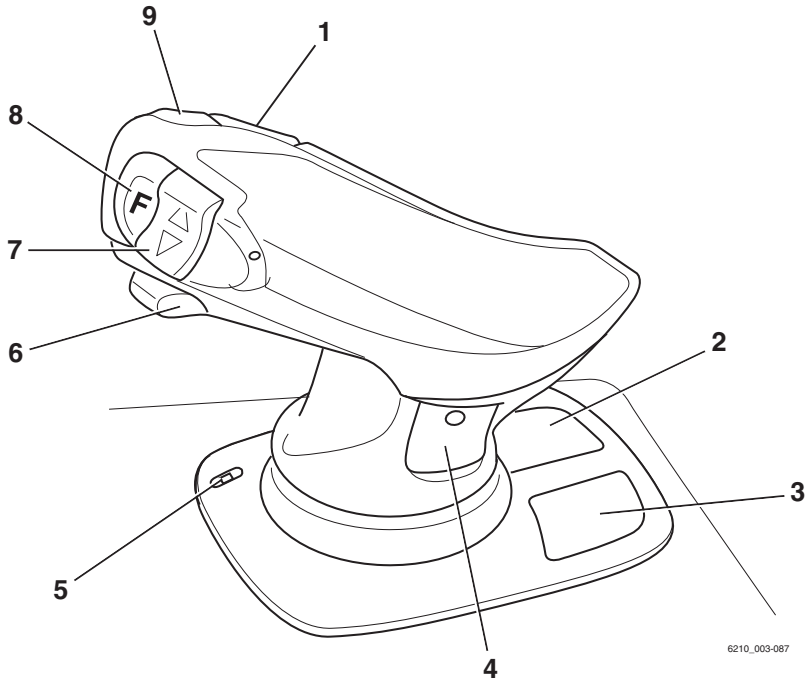

1	Horizontal rocker button for "3rd hydraulic function", tilt the lift mast	5	LED for clamp locking mechanism (variant)
2	Pictograms for the basic hydraulic functions	6	Slider for the "4th hydraulic function", e.g. reach frame forwards/backwards
3	Pictograms for the 5th hydraulic function and the clamp locking mechanism (variant)	7	Vertical rocker button for the "drive direction"
4	Pictograms for the 3rd & 4th hydraulic functions	8	Shift key "F"
		9	Signal horn button

https://truckmanualshub.com/

Fingertip

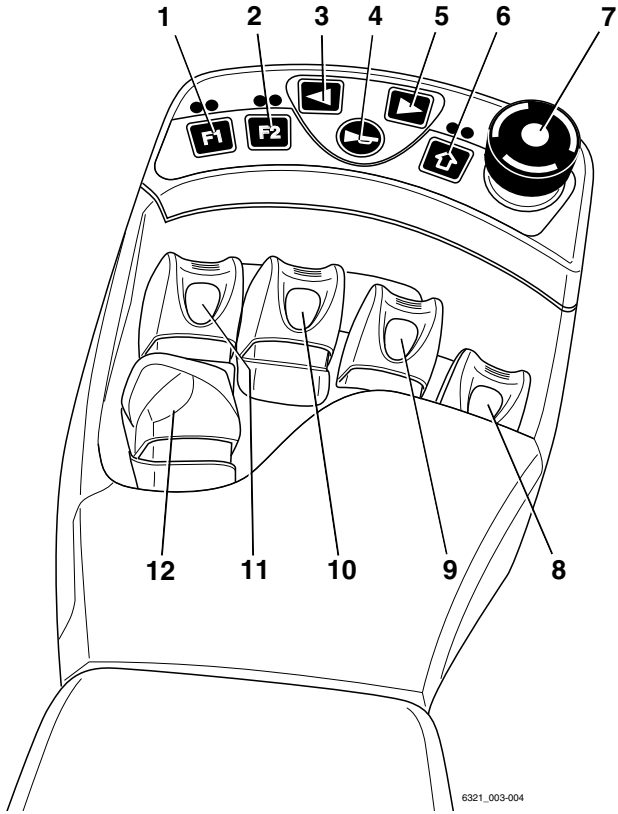

1	Function key F1	7	Emergency stop switch
2	Function key F2	8	"Attachments" operating lever
3	Left-hand turn indicator button	9	"Attachments" operating lever
4	Signal horn button	10	"Tilt" operating lever
5	Right-hand turn indicator button	11	"Lift/lower" operating lever
6	Button for 5th function	12	Travel direction switch

NOTE

Depending on the specification, various electric attachment parts can be controlled via function keys (1) and (2). Changes must only be made by the authorised service centre.

https://truckmanualshub.com/

Mini console

The mini console is located on the steering column below the steering wheel.

▷

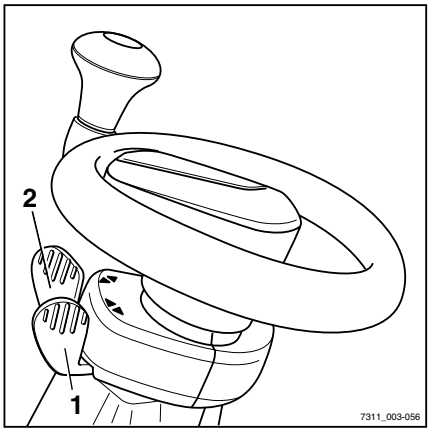

1 Travel direction switch
2 Direction indicator switch

https://truckmanualshub.com/

https://truckmanualshub.com/

Identification points

Overview

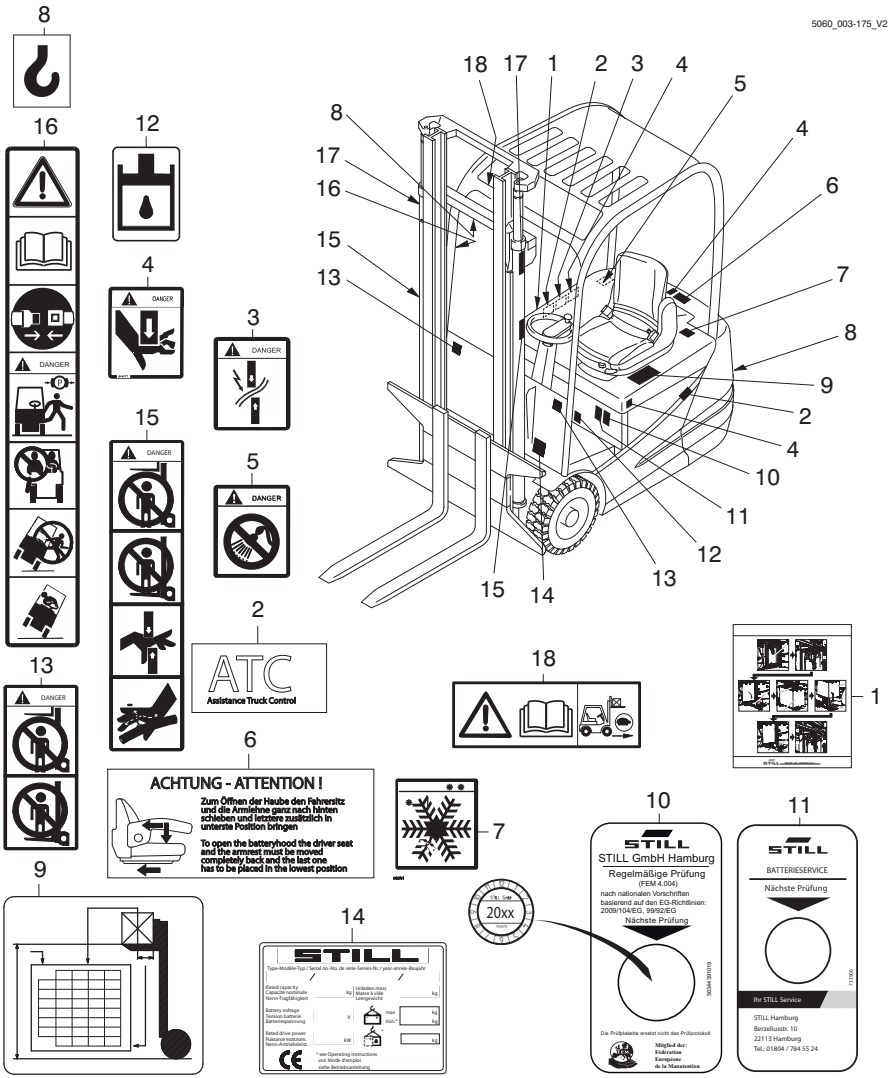

https://truckmanualshub.com/

1 Decal information: Actions to be performed when replacing battery using a bridge (variant)
2 Decal information: Assistance Truck Control
3 Warning sign: Risk of short circuit due to shearing
4 Warning sign: Risk of crushing
5 Warning sign: Cleaning electrical system parts with water is forbidden
6 Decal information: Actions to be performed before opening the battery hood
7 Decal information: Cold store application
8 Decal information: Lifting gear attachment point
9 Decal information: Capacity rating plate
10 Decal information: FEM test
11 Decal information: Battery test
12 Decal information: Hydraulic oil tank
13 Warning sign: Do not stand underneath the fork/Do not stand on the fork
14 Decal information: Nameplate
15 Warning sign: Do not stand underneath the fork/Do not stand on the fork/Danger due to shearing/Danger due to high fluid pressure
16 Decal information: Caution/Read the operating instructions/Fasten seat belt/Apply parking brake when leaving the truck/Passengers are not allowed/Do not jump off if the truck is tipping over/Lean in the opposite direction to which the truck is tipping
17 Manufacturer's label text
18 Decal information: Caution/read operating instructions/drive slowly with raised load

Nameplate

The truck can be identified from the information on the nameplate.

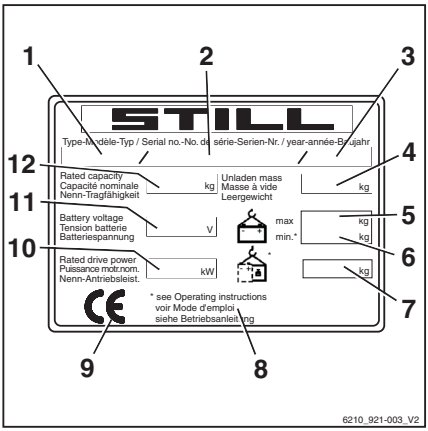

1 Type
2 Production number
3 Year of manufacture
4 Tare weight in kg
5 Max. permissible battery weight in kg (for electric forklift trucks only)
6 Min. permissible battery weight in kg (for electric forklift trucks only)
7 Ballast weight in kg (for electric forklift trucks only)
8 Refer to the technical data listed in these operating instructions for more detailed information
9 CE labelling
10 Nominal drive power in kW
11 Battery voltage in V
12 Rated capacity in kg

https://truckmanualshub.com/

Production number

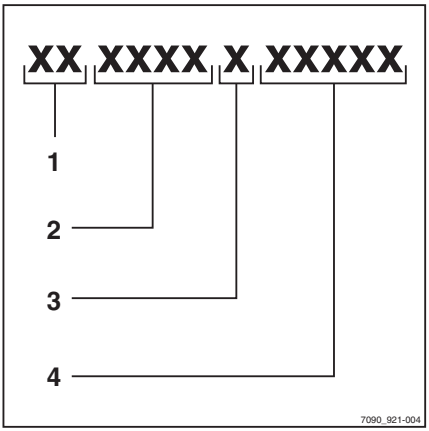

NOTE

The production number is used to identify the truck. It can be found on the nameplate and must be referred to in all technical questions.

The production number contains the following coded information:

(1) Production location

(2) Model

(3) Year of manufacture

(4) Sequential number

StVZO (Road Traffic Licensing Regulations) information

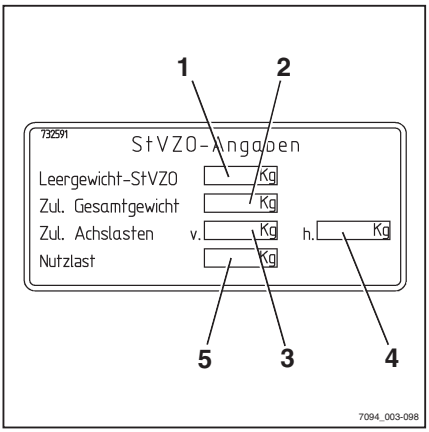

This label includes information on the weight and load distribution of the truck.

1	Tare weight (in kg)
2	Permitted total weight (in kg)
3	Permitted front axle weight (in kg)
4	Permitted rear axle weight (in kg)
5	Payload (in kg)

https://truckmanualshub.com/

5

Operation

https://truckmanualshub.com/

Checks and operations prior to commissioning

Visual inspections

⚠ WARNING

Risk of accident due to damage or other defects on the truck or on the attachment (variant)!

Damage to the truck or the attachment (variant) can lead to unpredictable and dangerous situations.
If damage or other defects are identified on the truck or attachment (variant) during the following inspections, the truck must not be used until it has been properly repaired.

– Do not remove or deactivate safety devices and switches.
– Do not change predefined set values.
– Do not use the truck until it has been properly repaired

⚠ WARNING

There is a risk of falling when working on high parts of the truck.

– Use only the steps provided on the truck.
– Do not stand on truck components or use them to help you climb onto the truck.
– Use suitable equipment.

Prior to start-up, ensure that the truck is safe to be operated:

- The fork arms must be secured against lifting and shifting.
- The locking devices (1) of the fork arms must not be damaged or deformed.
- Fork arms and other lifting accessories must not show any noticeable damage (e.g. bends, cracks, significant wear).
- The roller tracks (2) must be lubricated with a visible grease film.
- The chains must not be damaged and must be evenly and adequately tensioned.
- Check the area under the truck for leaking consumables.
- The guard grille (variant) and overhead guard must be undamaged and securely mounted.

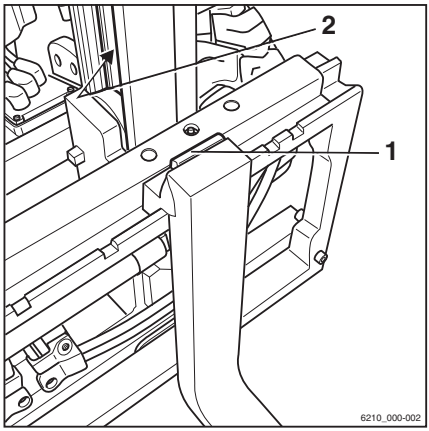

https://truckmanualshub.com/

- Attachments (variant) must be properly mounted and function according to the operating instructions.
- All decal information signs must be in place and legible. Replace damaged or missing adhesive labels in accordance with the overview in the "Identification points" chapter.
- Any warning units (e.g. signal horn) must be in perfect condition and function correctly.
- Check the visible areas of the hydraulic system and hydraulic oil tank for damage and leaks. Damaged hoses must be replaced by the authorised service centre.
- The battery must be securely locked.
- Check the battery male connector for damage (e.g. cracks, breaks or deformation of the housing, bent or damaged contacts). If necessary, have the battery male connector replaced by the authorised service centre.
- The battery door must be closed correctly and the door lock must be properly secured.
- The battery lock latches, the battery door and the battery hood must not be damaged or deformed.
- The battery hood must be closed correctly and the hood lock must be properly secured.
- The battery hood and battery door must show no noticeable damage (e.g. cracks or breaks).
- Steps must be clean and free of ice.
- Any panes of glass (variant, e.g. windscreen) must be clean and free of ice.
- Depending on the tyres, the truck may be fitted with an antistatic belt. The antistatic belt must not be damaged. It must also be clean and long enough to touch the ground
- A tow coupling (variant) must show no noticeable damage (e.g. coupling pin bent, cracks or breaks). Every removable coupling pin must be secured against loss with a securing device (e.g. a chain, a split pin or a rope).
- Damage or other defects on the truck or attachment (variant) must be reported to the supervisor or responsible fleet manager immediately so that they can arrange for the defect to be rectified.

https://truckmanualshub.com/

WARNING

Risk of component damage!

A deformed or damaged battery male connector can cause overheating and related consequential damage.

– Check the battery male connector for damage.
– If necessary, have the battery male connector replaced by the authorised service centre.

DANGER

Risk of explosion if hydrogen builds up in the cab!

If the truck is equipped with a cab, hydrogen from the battery compartment can penetrate the cab through unsealed bores in the battery hood. A build-up of hydrogen can lead to explosions.

There must be no unsealed bores in the battery hood. Sealing bores with plugs is not sufficient to prevent gas from escaping.

– Have unused bores in the battery hood sealed by the authorised service centre.

Filling the washer system

CAUTION

If there is no anti-freeze in the system, the washer system can be damaged.

Always use washer fluid containing anti-freeze.

NOTE

The washer system container is at the front right, beneath the valve cover. The filling opening is accessible from above

https://truckmanualshub.com/

– Open the filler cap (1) of the washer system (variant).

– Fill the windscreen washer container with washer fluid containing anti-freeze according to the maintenance data table (see ⇒ Chapter "Maintenance data table", P. 6-303).

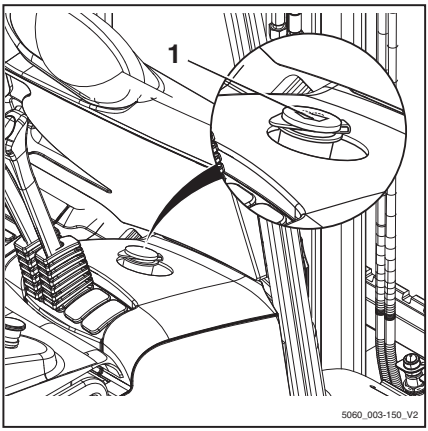

NOTE

Fill to a max. level of approx. 1 cm below the filler neck.

– Close the filler cap.

– Operate washer system until washer fluid is discharged from the spray nozzles.

Checking the condition of the wheels and tyres

WARNING

Risk of accident!

Uneven wear reduces the stability of the truck and increases the braking distance.

– Renew left and right worn or damaged tyres without delay.

WARNING

Risk of tipping!

Tyre quality affects the stability of the truck.

If you wish to use a different type of tyre on the truck from the tyres approved by the truck manufacturer, or tyres from a different manufacturer, you must first obtain approval from the truck manufacturer.

WARNING

Risk to stability!

When using pneumatic tyres or solid rubber tyres, rim wheel parts must never be changed and rim wheel parts from different manufacturers must not be mixed.

NOTE

Only approved types of tyre may be used; see chapter entitled "Tyres".

https://truckmanualshub.com/

– Check tyres (1) for wear or damage.

Tyres must not be damaged or excessively worn. They must be worn evenly on both sides.

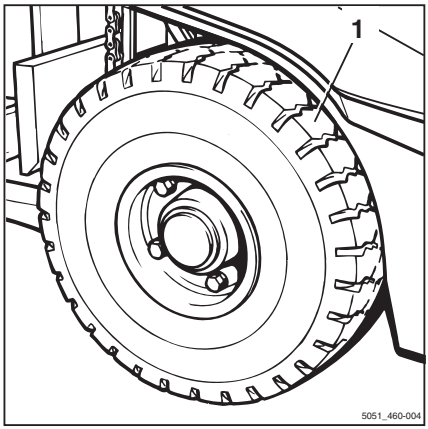

NOTE

Observe the safety regulations in the chapter entitled "Tyres".

Adjusting the GS15 driver's seat

DANGER

There is a risk of accident if the seat or seat backrest shifts suddenly, which could cause the driver to move in an uncontrolled manner. This may result in unintentional actuation of the steering or operating devices and thus cause the truck or load to move in an uncontrolled fashion.

– Do not adjust the seat or seat backrest while driving.
– Adjust the seat and the seat backrest so that all operating devices can be actuated safely
– Ensure that the seat and seat backrest are securely engaged.

WARNING

On some equipment variants, the amount of head clearance on the truck may be restricted.

On these specific equipment variants, the distance between the head and the lower edge of the roofing sheet must be at least 40 mm.

NOTE

If there are separate operating instructions for the seat, they must be followed.

https://truckmanualshub.com/

WARNING

To obtain optimum seat cushioning, you must adjust the seat suspension to your own body weight. This is better for your back and protects your health.

– To prevent injury, make sure that there are no objects within the swivel area of the seat.

Moving the driver's seat

▷

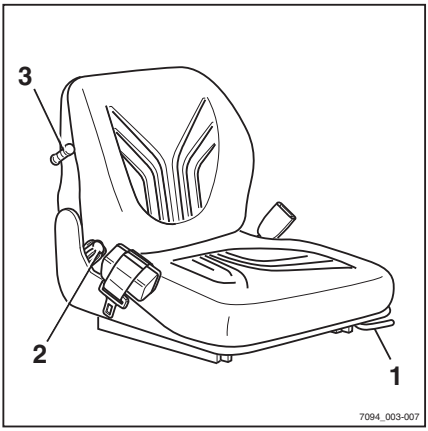

– Lift the lever (1) and hold.

– Shift the driver's seat into the desired position.

– Release the lever and make sure that the driver's seat engages.

Adjusting the seat backrest

– Turn the knob (2) to the right or left until the seat backrest is in the desired position.

Adjusting the seat suspension

NOTE

The driver's seat is designed for people weighing between 50 kg and 120 kg. Depending on the driver's weight, three different weight classes can be set for the seat (light, medium and heavy).

NOTE

This adjustment should only be made while the seat is occupied.

– Push the lever (3) and hold.

– Move the lever to the desired weight class.

– Release the lever and make sure that it engages.

https://truckmanualshub.com/

Adjusting the MSG 65/MSG 75 driver's seat

DANGER

There is a risk of accident if the seat or seat backrest shifts suddenly, which could cause the driver to move in an uncontrolled manner. This can result in unintentional actuation of the steering or the operating devices and thus cause uncontrolled movements of the truck or load.

- Do not adjust the seat or seat backrest while driving.
- Adjust the seat and seat backrest so that all operating devices can be actuated safely.
- Ensure that the seat and seat backrest are securely engaged.

WARNING

On some equipment variants, the amount of head clearance on the truck may be restricted.

On these specific equipment variants, the distance between the head and the lower edge of the roofing sheet must be at least 40 mm.

NOTE

If there are separate operating instructions for the seat, they must be followed.

WARNING

To obtain optimum seat cushioning, you must adjust the seat suspension to your own body weight. This is better for your back and protects your health.

- To prevent injury, make sure that there are no objects within the seat's swivel area.

https://truckmanualshub.com/

Moving the driver's seat

- Lift the lever (1) and hold.
- Push the driver's seat into the desired position.
- Release the lever.
- Ensure that the driver's seat is securely engaged.

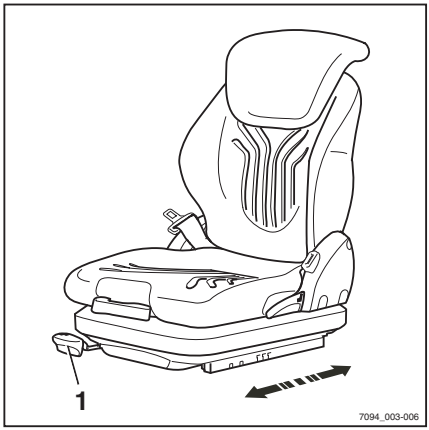

Adjusting the seat backrest

Do not put pressure on the seat backrest while engaging it.

- Lift the lever (2) and hold.
- Push the seat backrest into the desired position.
- Release the lever.
- Ensure that the seat backrest is securely engaged.

NOTE

The backwards tilt angle of the seat backrest can be restricted by the structural condition of the truck.

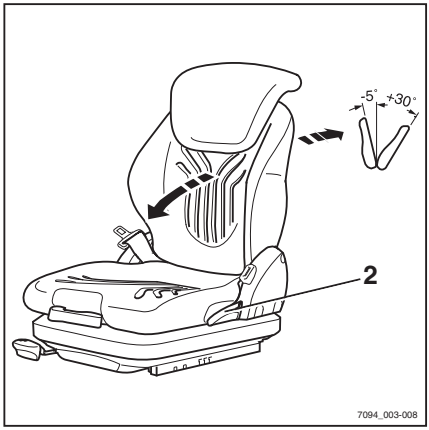

https://truckmanualshub.com/

Adjusting the seat suspension

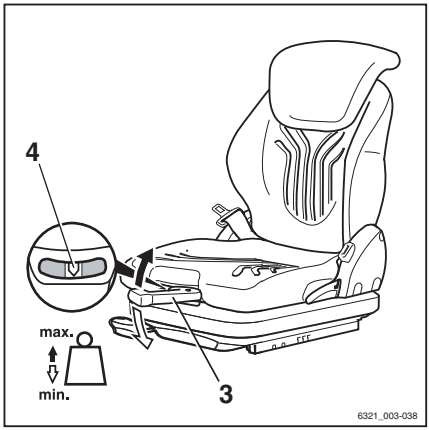

NOTE

The driver's seat can be adjusted to suit the weight of the individual driver. In order to achieve the best seat suspension setting, the driver should perform the adjustment whilst sitting in the seat.

NOTE

The MSG 75 seat is equipped with electric air suspension activated with an electric switch instead of a lever (3).

- Fully extend weight adjusting lever (3).
- Pump it up or down to set the driver's weight.
- Return the weight adjusting lever to the central initial position before each new lift (audible click).
- Fully fold in the weight adjusting lever once adjustment is complete.

NOTE

The correct driver's weight has been selected when the arrow (4) is in the centre of the inspection window. A noticeable empty lift on the weight adjusting lever shows that you have reached the minimum or maximum weight setting.

Adjusting the lumbar support (variant)

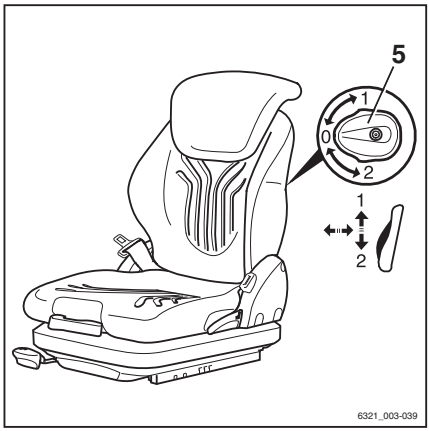

NOTE

The lumbar support can be adjusted to suit the contours of the individual driver's spine. Adjusting the lumbar support moves a convex support cushion into the upper or lower part of the backrest.

- Turn the turning knob (5) up or down until the lumbar support is in the desired position.

https://truckmanualshub.com/

Adjusting the backrest extension (variant)

▷

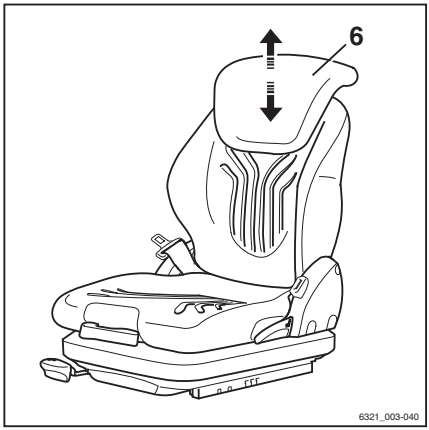

– Adjust the backrest extension (6) by pulling it out or pushing it into the desired position.

To remove the backrest extension, move it past the end stop by jolting it upwards.

Switching the seat heater (variant) on and off

▷

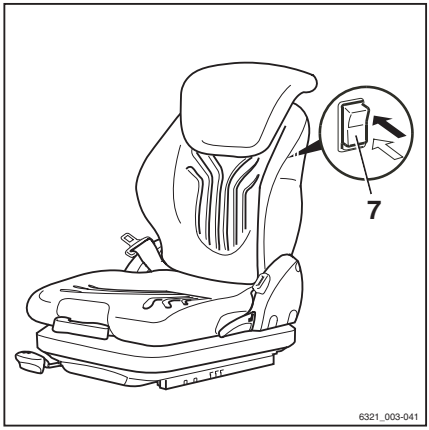

NOTE

The seat heater only functions if the seat contact switch is active, i.e. when the driver is sitting on the driver's seat.

– Switch the seat heater (7) on or off using the switch.

Adjusting the armrest

DANGER

There is a risk of accident if the armrest lowers suddenly, causing the driver to move in an uncontrolled manner. This can result in unintentional actuation of the steering or the operating devices and thus cause uncontrolled movements of the truck or load.

– Do not adjust the armrest while driving.
– Adjust the armrest so that all operating devices can be actuated safely.
– Ensure that the armrest is securely tightened.

https://truckmanualshub.com/

Adjusting the length of the armrest

- Release the star-grip handle (1) by turning it anti-clockwise.
- Shift the armrest (2) into the desired position.
- Tighten the star-grip handle by turning it clockwise.
- Check that the armrest is firmly attached.

Adjusting the height of the armrest

- Release hand wheel (3) by turning it anti-clockwise.
- Shift the armrest (2) into the desired position.
- Tighten the hand wheel by turning it clockwise.
- Check that the armrest is firmly attached.

▷

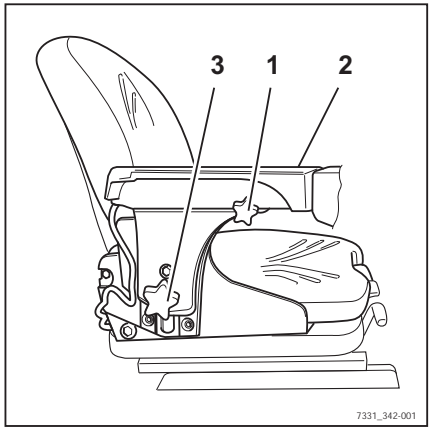

https://truckmanualshub.com/

Commissioning

Climbing on/off

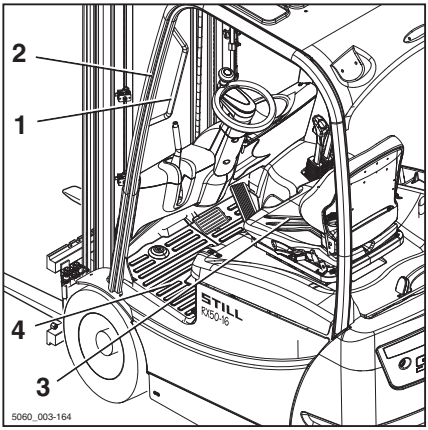

WARNING

Risk of injury when climbing on and off the truck due to slipping, hitting parts of the truck or becoming stuck!

If the footwell cover is very dirty or smeared with oil, there is a risk of slipping. There is a risk of hitting your head on the post of the overhead guard or of your clothes becoming stuck when climbing off the truck.

- Ensure that the footwell cover is non-slip.
- Do not jump into or out of the truck.
- Ensure that you have a secure grip on the truck.

WARNING

Risk of injury when jumping off the truck!

If your clothing or jewellery (e.g. watch, ring etc.) becomes stuck on a component while you are jumping out of the truck, this can lead to serious injuries (e.g. from falling, loss of fingers etc.). It is forbidden to jump off the truck.

- Do not jump off the truck.
- Do not wear jewellery at work.
- Do not wear loose-fitting workwear.

CAUTION

Component damage through incorrect use!

Truck components, such as the driver's seat, steering wheel, parking brake lever etc., are not designed to be used for climbing on and off the truck and can be damaged due to misuse.

- Only use the devices specifically designed for the purpose of climbing on and off.

To assist with climbing on and off the truck, the footwell must be used as a step (4) and the handle (1) must be used for support. The post of the overhead guard (2) can also be used for support.

Always climb onto the truck in a forwards motion:

- Grip the handle (1) with your left hand and hold on.
- Put your left foot on the step (4).

https://truckmanualshub.com/

– Use your right foot to enter the truck, and sit down on the driver's seat (3).

Always climb off the truck backwards:

– Grip the handle (1) with your left hand and hold on.

– Stand up from the driver's seat and climb out of the truck with your right foot first.

https://truckmanualshub.com/

Connecting the battery male connector

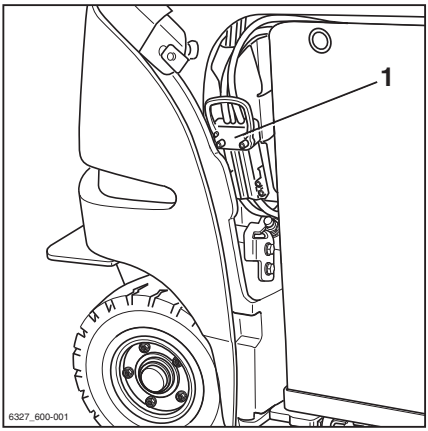

– Open the battery door.

CAUTION

Risk of component damage!

If you connect the battery male connector with the key switch switched on (under load), an arc will be produced. This can lead to corrosion at the contacts, which considerably shortens their service life.

– Do not connect the battery male connector with the key switch switched on.
– Make sure that the key switch is switched off before connecting the battery male connector.

– Insert the battery male connector (1) fully into the plug connection on the truck.

CAUTION

There is a risk of short circuit if the cables are damaged.

Do not crush the battery cable when closing the battery cover.

– Ensure that the battery cable does not come into contact with the battery cover.

– Close the battery door.

Shelf and cup holder

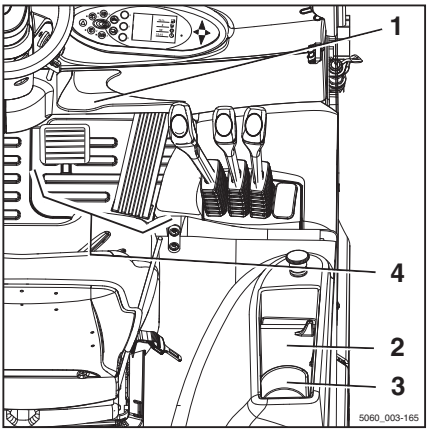

WARNING

Objects may fall into the footwell and obstruct the pedals — there is risk of accident!

Objects to be stored must be of the correct size so they do not fall from the shelves (1, 2) or out of the cup holder (3). Objects that fall into the footwell during travel as a result of steering or braking can slip between the pedals (4) and stop them working correctly. The truck may subsequently not be able to be braked when necessary.

– Bottles of 1 l or smaller may be stored in the cup holder.
– Make sure that stored objects cannot fall from the shelves when the truck is started up, steered and braked.

https://truckmanualshub.com/

Unlocking the emergency off switch

– Pull out/turn the emergency off switch (1) until it unlocks. ▷

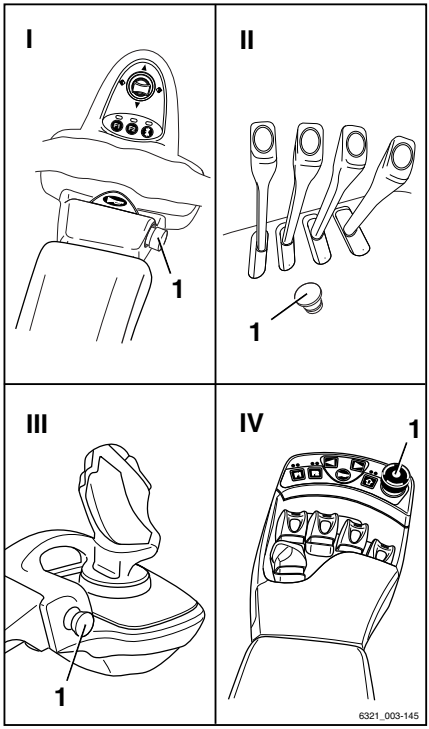

https://truckmanualshub.com/

Switching on the key switch

WARNING

Before switching on the key switch, all tests prior to start-up must be performed without detecting any defects.

- Perform the tests prior to commissioning.
- Do not operate the truck if defects have been detected.
- Notify the authorised service centre.

NOTE

If the truck is switched on with the steering wheel turned, the maximum driving speed is limited. The driving speed limitation is disabled as soon as the truck is steered out of cornering to drive in a straight line. A change in steering angle of around half a revolution is sufficient for this to be the case.

- Insert switch key (1) into the key switch and turn to position "I". ▷

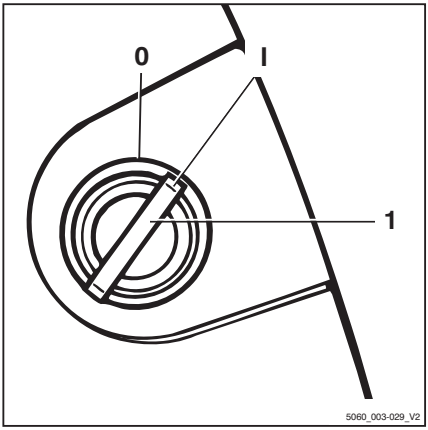

https://truckmanualshub.com/

This initiates a self-test. All lamps in the drive direction and turn indicator displays light up briefly. ▷

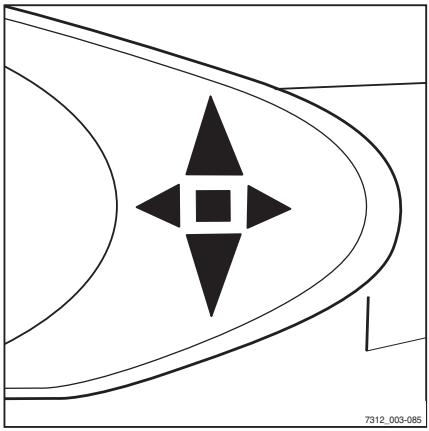

When the key switch is switched on, the display shows the welcome screen in the set language. ▷

https://truckmanualshub.com/

The display will indicate the warning message ▷ TILTING / SPEED.

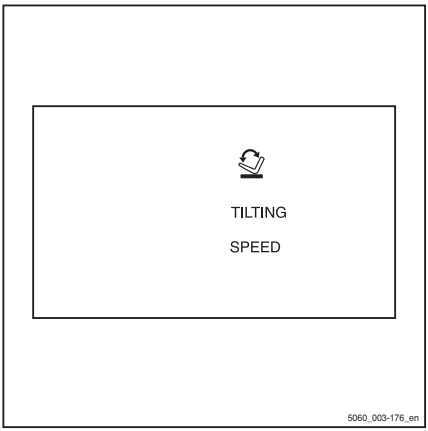

NOTE

The tilt speed of the lift mast in this truck is significantly higher than for previous products in this series.

The truck controller is now fully started up.

If the truck has the "access authorisation with PIN code" variant, the display initially changes to the input menu for access authorisation.

If the truck is ready for operation, the standard displays are shown.

Standard display elements ▷

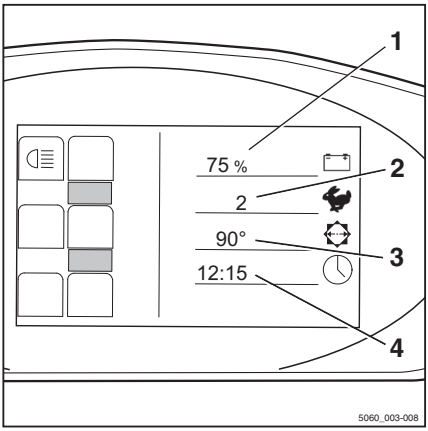

1 **Battery charge**
The useable battery capacity appears in the display field as a percentage.

2 **Drive programme**
The current drive program (1-5) appears in the display field.

3 **Steering position**
The position of the steering appears in the display field.

4 **Time**
The current time appears in the display field.

NOTE

After connecting the battery, the correct charge status is not displayed until after being placed under load for the first time by driving or lifting.

NOTE

Have all repair and maintenance work performed by an authorised service centre. This is the only way to permanently correct defects.

– Inform the authorised service centre when the maintenance interval is reached.

https://truckmanualshub.com/

NOTE

Additional information may appear on the display. If malfunctions occur, refer to the information in the chapter entitled "Malfunctions".

Access authorisation with PIN code (variant)

Description

Trucks equipped with the "Access authorisation with PIN code" variant are protected against unauthorised use by a five-digit driver PIN. Up to fifty different driver PINs can be defined so that the same truck can be used by different drivers, each with their own driver PIN.

NOTE

The driver PINs are defined in a truck control unit menu that can only be accessed by persons with the corresponding access authorisation, e.g. fleet managers.

Once the key switch has been switched on, the input menu for the driver PIN appears on the display and operating unit screen. All of the truck's functions (driving, hydraulics, additional electrical installations and the display and operating unit displays) are blocked. The function of the hazard warning system (variant) is guaranteed. Enter the five-digit driver PIN (possible entries from 00000 to 99999) to enable the blocked functions. Once the correct driver PIN has been entered, the standard displays are shown. All of the truck functions are available.

The access authorisation can be configured in such a way that the driver PIN has to be re-entered each time the driver steps off the truck, in order for the truck to be operated again.

– Contact the authorised service centre on this matter.

The first driver PIN is preset to "11111" at the factory. All others are preset to "0xFFF" but have no function as the highest valid driver PIN

https://truckmanualshub.com/

is "99999". Persons with the corresponding access authorisation, e.g. fleet managers, can change the driver PINs in the corresponding menu.

NOTE

When first commissioning the truck, we recommend you change the access authorisation set at the factory. This is the only way to guarantee that the driver PIN is only known to persons with corresponding access authorisation.

The driver PINs are stored in the truck control unit. These are still available if the display and operating unit has been changed. The authorised service centre can use a diagnostic device to read out the driver PIN and, if necessary, restore the factory default driver PIN.

ACCESS CODE input menu

The driver enters the five-digit driver PIN (00000 to 99999) in this input menu.

The driver PIN is entered using the buttons (1). The digits entered for the driver PIN (2) are not visible, instead being represented by circles. If the driver PIN entered is correct, the familiar display appears with the standard display, and all truck functions are available.

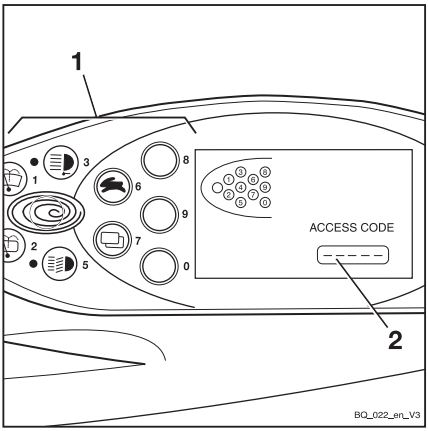

https://truckmanualshub.com/

If an incorrect driver PIN is entered, the message INVALID appears for a short time. When the message goes out, the driver PIN can be re-entered.

▷

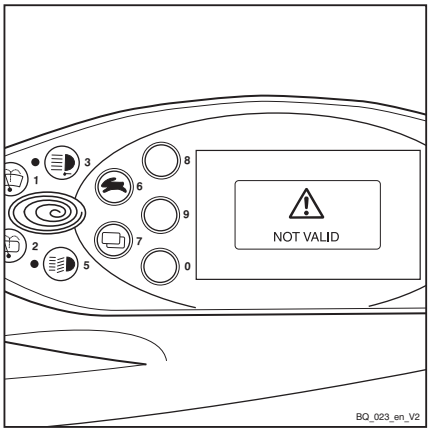

After three invalid entry attempts, the message CODE DENIED appears. The input is then locked for five minutes before another attempt can be made.

▷

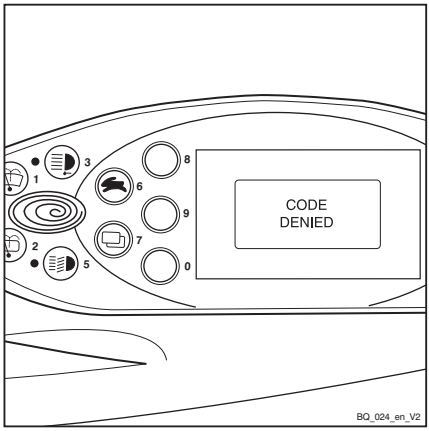

https://truckmanualshub.com/

Defining the driver PIN

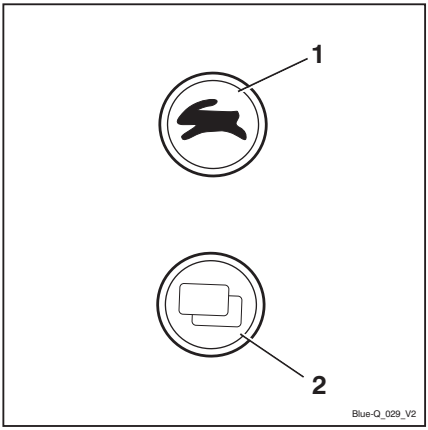

NOTE

The driver PIN can only be defined by persons with the corresponding access authorisation, e.g. fleet managers. In order for the fleet manager to define the driver PIN, the configuration menu must be accessed. The configuration menu is password-protected. After entering the password, the fleet manager can configure general settings for the truck. To change the password, see the chapter entitled "Changing the password".

– Push the drive program selection button (1) and the menu change button (2) at the same time.

`PASSWORD` appears in the display.

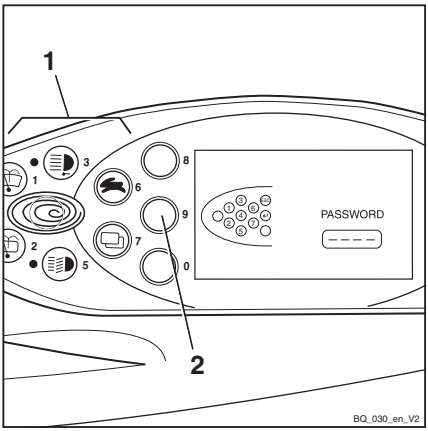

– Enter the four-digit password (factory default: 2777) using the buttons (1).

– Confirm the entry by pressing the ENTER button (2).

https://truckmanualshub.com/

CONFIGURATION appears in the display. ▷

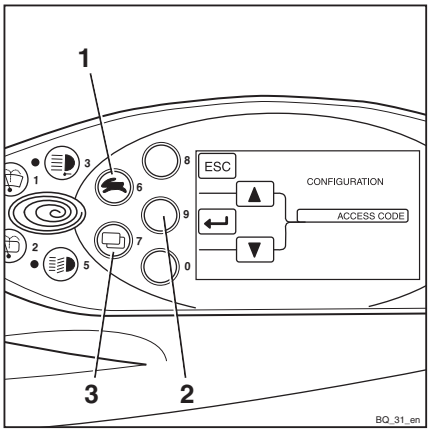

- Use the drive program selection button (1) and the menu change button (3) to select the ACCESS CODE menu.
- Confirm your selection by pressing the ENTER button (2).

Selecting the driver PIN

In the ACCESS CODE menu, there are fifty possible driver PINs to choose from.

The digit sequences can be set or changed in the NEW CODE submenu.

Once the ACCESS CODE menu has been accessed, the CODE selection field (2) contains the number 1. The first of the fifty driver PINs can now be defined.

- Use the drive program selection button (1) and the menu change button (4) to select the desired driver PIN (1 to 50).
- Confirm your selection by pressing the ENTER button (3).

▷

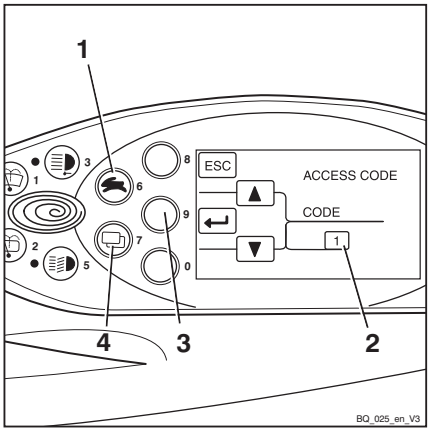

https://truckmanualshub.com/

NEW CODE appears in the display.

– Enter the desired driver PIN using the buttons (5).

The digits entered do not appear in the display. Instead they are represented by circles in the NEW CODE field (6).

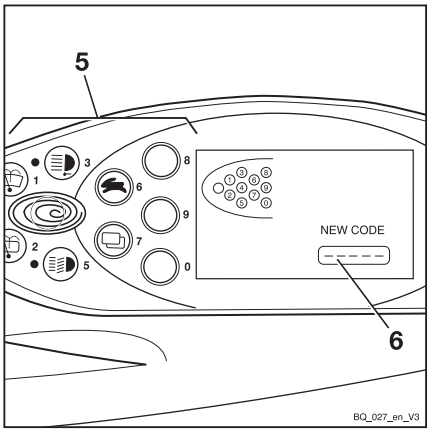

CONFIRM appears in the display.

The CONFIRM submenu is used to confirm the new driver PIN.

– Enter the new driver PIN for a second time in the CONFIRM field (8) using the buttons (7).

If the entry matches the new driver PIN previously entered, the system will accept the new driver PIN once the last digit has been entered. The display switches back to the ACCESS CODE menu.

Another driver PIN can be defined here.

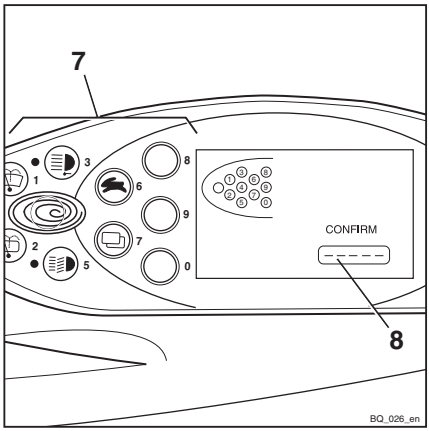

https://truckmanualshub.com/

If the driver PIN entered in the CONFIRM submenu does not match the driver PIN entered previously in the NEW CODE submenu, the message INVALID will appear.

The message will then disappear after a short time. The new driver PIN can be entered in the CONFIRM submenu for further confirmation.

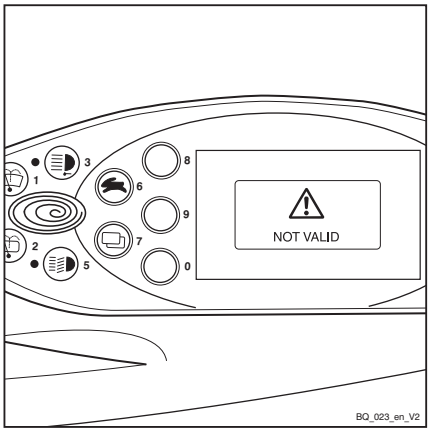

After three incorrect entries, the CODE DENIED message appears.

The display switches back to the ACCESS CODE menu. The desired driver PIN must be re-defined.

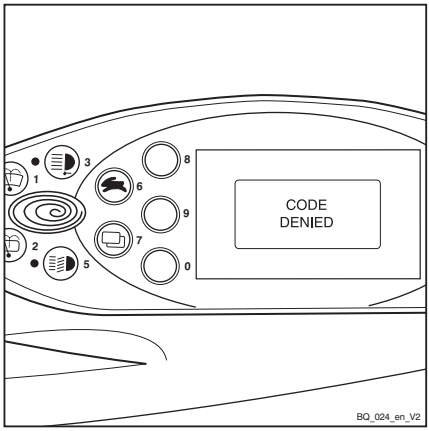

https://truckmanualshub.com/

Changing the password

It is recommended that you change the factory default password.

NOTE

The password can only be changed when the parking brake is applied.

– Push the drive program selection button (1) and the menu change button (2) at the same time.

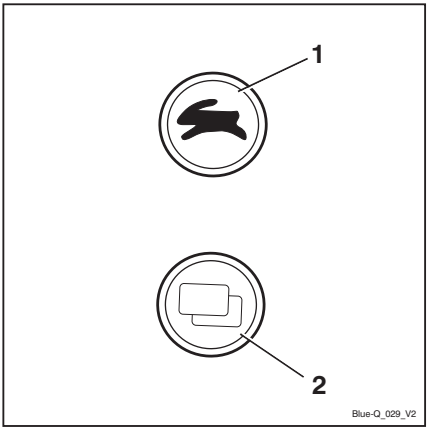

PASSWORD appears in the display.

– Enter the current password using the buttons (1).

– Confirm the entry by pressing the ENTER button (2).

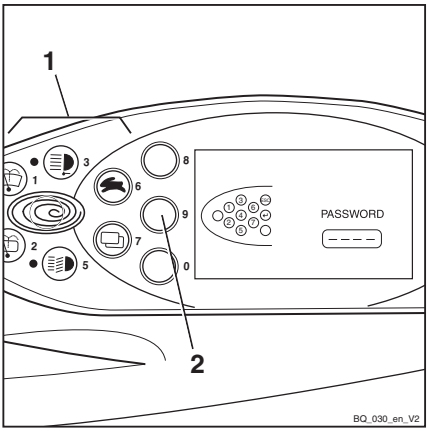

https://truckmanualshub.com/

CONFIGURATION appears in the display. ▷

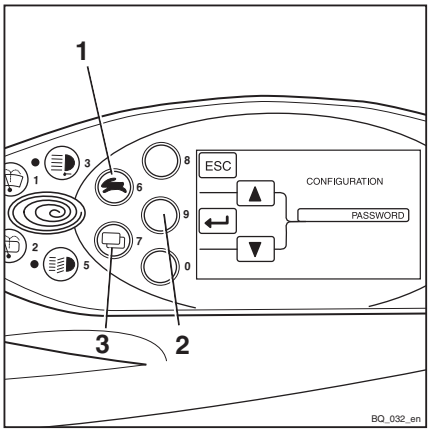

- Use the drive program selection button (1) and the menu change button (3) to select the PASSWORD menu.
- Confirm your selection by pressing the ENTER button (2).

PASSWORD / PASSWORD LEVEL appears in the display. ▷

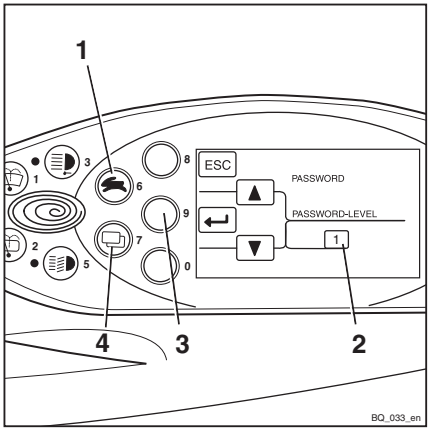

- Use the drive program selection button (1) and the menu change button (4) to select the desired PASSWORD LEVEL (2).
- Confirm your selection by pressing the ENTER button (3).

https://truckmanualshub.com/

NEW CODE appears in the display.

The four-digit password can be entered using the buttons (1).

CAUTION

Do not enter the password 1777!

If this password is entered, the configuration options for the fleet manager are restricted to driver authorisations and cannot be reset independently.

The authorisations can only be reset by the authorised service centre!

– Enter the new desired password using the buttons (1).

The digits entered are shown in plain text in the NEW CODE field (4).

– Confirm your selection by pressing the ENTER button (3).

In the NEW CODE field, -??- appears briefly. The new password is confirmed.

– To correct the new password, push the ESC button (2).

The display switches back to PASSWORD/PASSWORD LEVEL.

– Repeat the process steps from PASSWORD/PASSWORD LEVEL.

– To exit the configuration menu, push the ESC button repeatedly until the standard displays appear.

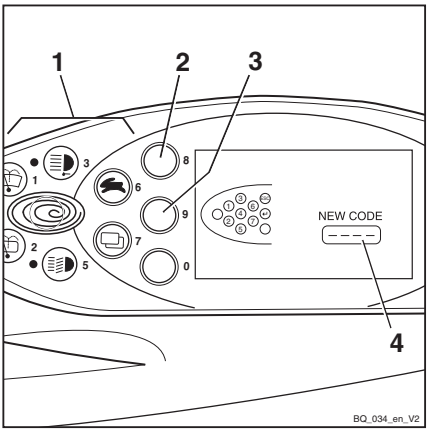

https://truckmanualshub.com/

Operating the signal horn

▷

– Push the signal horn button (1).

The signal horn sounds.

NOTE

The signal horn is used to warn people against imminent danger or to announce your intention to overtake.

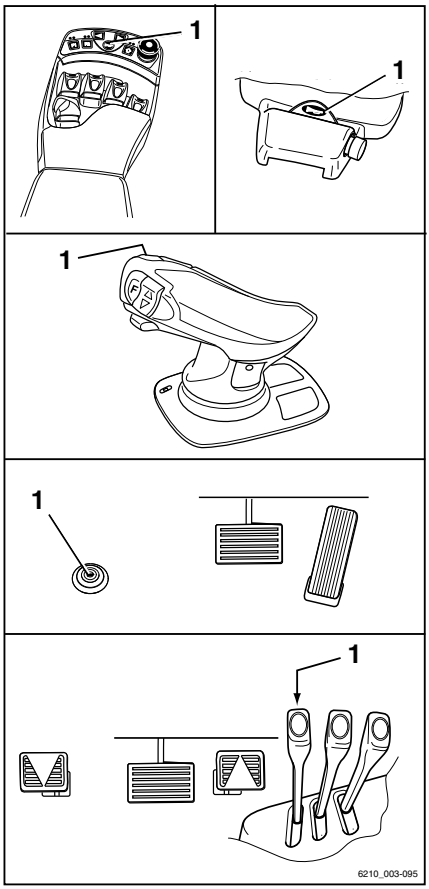

https://truckmanualshub.com/

Seat belt

DANGER

Even when using an approved restraint system, there is some residual risk that the driver might be injured if the truck tips over.

This risk of injury can be reduced through the combined use of the restraint system and the seat belt.

In addition, the seat belt protects against the consequences of rear-end collisions and falling off a ramp.

– We therefore recommend that you also use the seat belt.

Fastening the seat belt

DANGER

Risk to life when driving without a seat belt!

If the truck tips over or crashes into an obstacle and the driver is not wearing his seat belt, he can be hurled out of the truck. The driver could slide under the truck or collide with an obstacle.

There is a risk of fatal injury!

– Fasten the seat belt before every trip.
– Do not twist the seat belt when fastening it.
– Only use the seat belt to secure one person
– Have any malfunctions repaired by the authorised service centre.

NOTE

The buckle has a buckle switch (variant). In the event of an operating error or malfunction, the message SAFETY BELT *appears in the display and operating unit, see chapter "SAFETY BELT message".*

– Pull the seat belt (3) out of the belt retractor without jerking and fasten closely around the body over the thighs.

NOTE

Sit as far back as possible so that your back is leaning against the seat backrest. The automatic blocking mechanism permits sufficient freedom of movement on the seat.

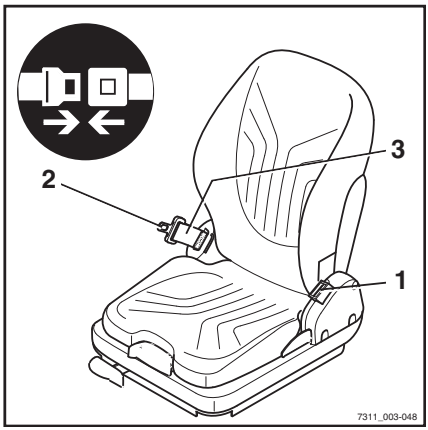

https://truckmanualshub.com/

– Click the belt tongue (2) into buckle (1).

– Check tension of the seat belt. It should be close to the body.

Fastening on a steep slope

The automatic blocking mechanism prevents the belt from being extended whenever the truck is on a steep gradient. It is not possible to pull the seat belt any further out of the belt retractor.

– Move away carefully on the slope.

– Fasten the seat belt.

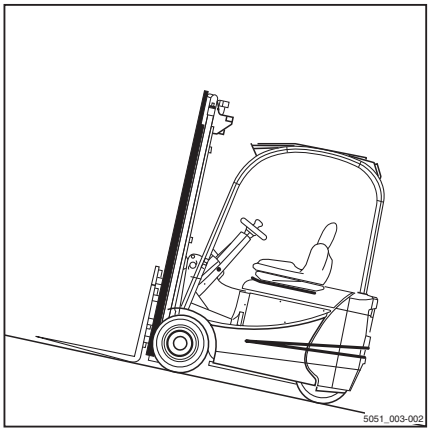

Releasing the seat belt

– Push the red button (4) on the buckle (1).

– Slowly guide the belt tongue back to the retractor by hand.

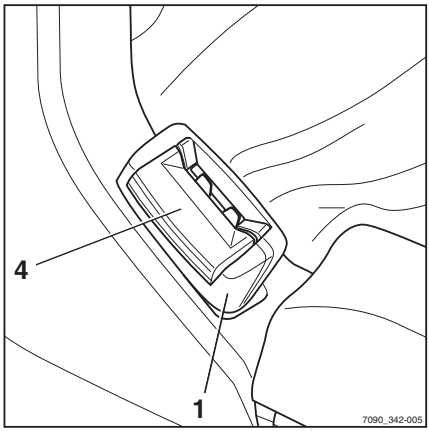

NOTE

Do not allow the seat belt to retract too quickly. The automatic blocking mechanism may be triggered if the belt tongue strikes the housing. It will then no longer be possible to pull the seat belt out with the usual force.

– Using increased force, pull the seat belt around 10-15 mm out of the retractor to disengage the blocking mechanism.

– Slowly allow the seat belt to retract again.

– Protect the seat belt from dirt (for example, by covering it).

Malfunctions due to cold

– If the buckle or belt retractor is frozen, thaw them out and dry them thoroughly to prevent recurrence.

https://truckmanualshub.com/

CAUTION

The seat belt may be damaged by heat!

Do not subject the buckle or belt retractor to excessive heat when thawing.

– Do not use air warmer than 60 °C when thawing out!

Checking the brake system for correct function

DANGER

If the brake system fails, the truck is insufficiently braked or not braked at all, so there is a risk of accident!

– Do not commission trucks with a defective brake system.

Checking the foot brake

– Check pedal clearance:

There must be a distance of at least 60 mm between the pressure point and the pedal stop.

– Accelerate the truck without a load in a clear area; see "Driving" chapter.

– Press the brake pedal (1) firmly.

The truck must decelerate noticeably.

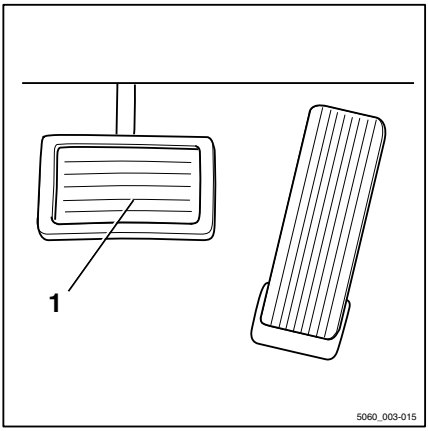

https://truckmanualshub.com/

Checking the parking brake

▷

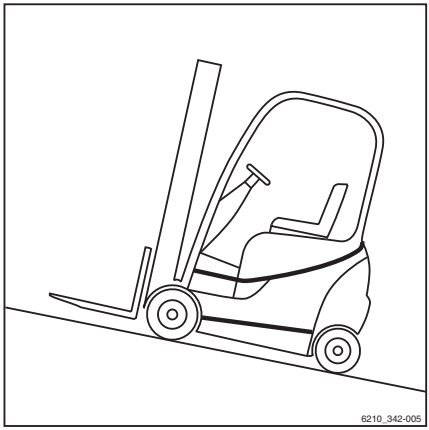

DANGER

If the truck rolls away, there is a risk of being run over and therefore a danger to life!

- The truck must not be parked on a slope.
- In emergencies, secure with wedges on the side facing downhill.
- Only leave the truck when the parking brake is applied.

- Check the function of the parking brake at walking speed or on a steep gradient by applying the parking brake.

The truck must remain stationary on the gradient with the parking brake applied. If the truck rolls in spite of an actuated parking brake, contact your service centre.

Checking the steering system for correct function

▷

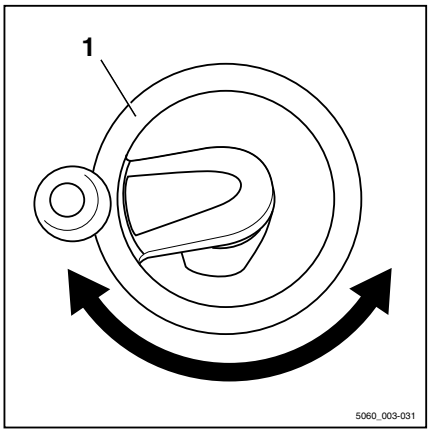

DANGER

If the hydraulics fail, there is a risk of accident as the steering characteristics have changed.

- Do not operate the truck if it has a defective steering system.

- Operate steering wheel (1). The steering play while stationary must not be more than two finger widths.

NOTE

If the truck is switched on with the steering wheel turned, the maximum driving speed is limited. Travel speed limitation is removed as soon as the steering wheel is moved out of a cornering position into the straight-ahead position. This requires a change in steering angle of about half a revolution.

https://truckmanualshub.com/

Checking the emergency stop function

⚠ WARNING

No electric brake assistance when the emergency off switch is actuated!

Actuating the emergency off switch will disconnect the drives from the power supply.

– To brake, actuate the service brake.

– Slowly drive the truck forwards.

– Press the emergency off switch (1).

The truck will roll to a stop.

The display and operating unit shows the message `EMERGENCY SWITCH` periodically.

– Brake the truck to a standstill by depressing the brake pedal.

– Pull out/turn the emergency off switch (1).

The truck performs an internal self-test and is then ready for operation again.

▷

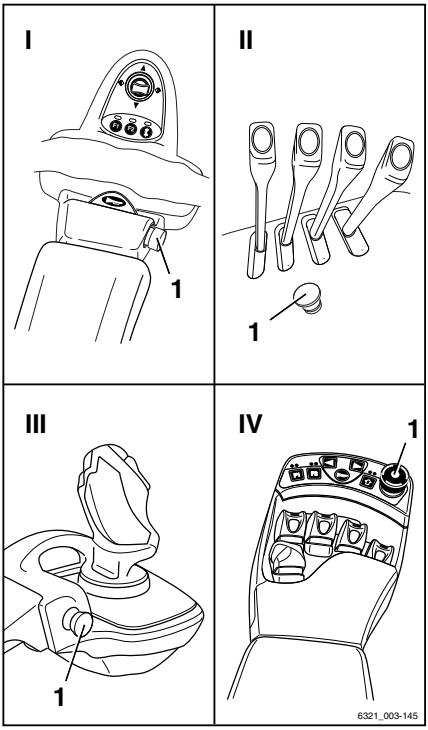

Zero adjustment of the load measurement (variant)

NOTE

A zero adjustment must be carried out in order to guarantee the accuracy of the load

https://truckmanualshub.com/

measurement (variant) at all times. Zero adjustment is required

- *as part of daily commissioning*
- *after changing the fork arms*
- *after fitting or changing attachments.*

NOTE

Accurate zero adjustment is only possible if the fork is not carrying a load. Do not take up a load yet.

NOTE

Accurate zero adjustment is only possible within the first lifting stage of the lift mast. When carrying out the zero adjustment, do not raise the fork more than 800 mm above the ground.

NOTE

Operation of the lifting system depends on which operating devices the truck is fitted with; see ⇒ Chapter "Lifting system operating devices", P. 5-131.

– Set lift mast to vertical.

– Raise the fork to a height of 300–800 mm.

– Keep button (1) for the "zero adjustment" pressed for at least four seconds; the "zero adjustment"(2)symbol will appear in the display.

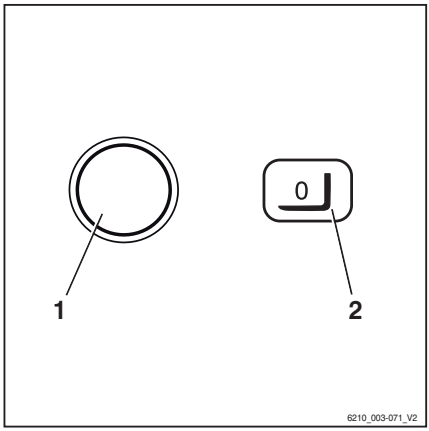

NOTE

During the following process, the fork carriage must be lowered slightly and then stopped abruptly. While doing so, the fork must not touch the ground, otherwise the zero adjustment will not be accurate. To stop the lowering procedure quickly, release the operating device for lowering so that it jumps into the zero position.

– Lower the fork carriage slightly and release the operating device.

When the zero adjustment has been carried out correctly, the value "0 kg" appears in the operating unit display.

https://truckmanualshub.com/

Checking the vertical lift mast position (variant) for correct function

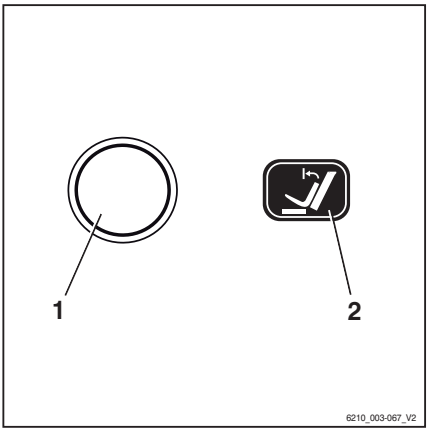

NOTE

The function check of the lift mast vertical position (variant) must be carried out every time a truck is commissioned.

– Actuate function key (1) to switch on the comfort feature "lift mast vertical position".

Function display (2) must appear in the display.

– Tilt the lift mast backwards.

The lift mast must tilt back fully and move gently as far as the end stop.

– Tilt the lift mast forward.

The lift mast must tilt forwards and stop in the vertical position.

– Release the operating device to tilt and actuate again.

The lift mast must tilt forwards fully and move gently as far as the end stop.

https://truckmanualshub.com/

Driving

Safety regulations when driving

Driving conduct

The driver must comply with the highway code when driving within the plant.

The speed must be appropriate to the local conditions.

For example, the driver must drive slowly around corners, in tight passageways, when driving through swing-doors, at blind spots, or on uneven roadways.

The driver must always maintain a safe braking distance from vehicles and persons in front, and must always have the truck under control. He must avoid stopping suddenly, turning at speed and overtaking in dangerous places or in blind spots.

– Initial driving practice must be carried out in an empty space or on a clear roadway.

The following are forbidden during driving:

- Allowing arms and legs to hang outside the truck
- Leaning the body over the outer contour of the truck
- Climbing out of the truck
- Moving the driver's seat
- Releasing the seat belt
- Disabling the restraint system
- Raising the load higher than 300 mm above the ground (with the exception of manoeuvring processes during the placement into stock/removal from stock of loads)
- Using electronic devices, for example radios, mobile phones etc.

https://truckmanualshub.com/

⚠ WARNING

The use of multimedia and communication equipment as well as playing these devices at an excessive volume during travel or when handling loads can affect the operator's attention. There is a risk of accident!

- Do not use devices during travel or when handling loads.
- Set the volume so that warning signals can still be heard.

⚠ WARNING

In areas where use of mobile phones is prohibited, use of a mobile phone or radio telephone is not permitted.

- Switch off the devices.

Visibility when driving

The driver must look in the drive direction and have a sufficient view of the driving lane.

Particularly for reverse travel, the driver must be sure that the driving lane is clear.

When transporting goods that impair visibility, the driver must drive the truck in reverse.

If this is not possible, a second person acting as a guide must walk in front of the truck.

In this case the driver must only move at walking pace and with extra care. The truck must be stopped immediately if eye contact with the guide is lost.

Rear-view mirrors are only to be used for observing the road area behind the truck and not for reverse travel. If visual aids (mirror, monitor) are necessary to achieve sufficient visibility, it is necessary to practise using them. For reverse travel using visual aids, extra care should be taken.

When using attachments, special conditions apply; see the chapter entitled "Fitting attachments".

Any glass (variant, e.g. windscreen) and mirrors must always be clean and free of ice.

https://truckmanualshub.com/

Driveways

Dimensions of the driveways and aisle widths

The following dimensions and aisle width requirements apply under the specified conditions to ensure safe manoeuvring. In each case, it should be checked whether a larger aisle width is necessary, e.g. with deviating load dimensions. Within the EU, there must be compliance with the 89/654/EEC directive (minimum safety and health requirements for the workplace). The respective national guidelines apply for the areas outside of the EU.

The required aisle widths depend on the dimensions of the load.

For pallets, these are:

Model	Type	Aisle width [mm]	
		With pallet 1000x1200 crosswise	With pallet 800x1200 lengthwise
RX50-10 compact	5060	2888	3010
RX50-10	5061	2942	3064
RX50-13	5063	3050	3172
RX50-15	5065	3104	3226
RX50-16	5066	3109	3231

The truck may only be used on driveways that do not have curves that are too tight, have gradients that are too steep, and entrances that are not too narrow or low.

Driving on gradients

⚠ WARNING

Driving up and down long gradients may cause the drive unit to overheat and switch off.

It is not permitted to drive up and down long gradients due to the minimum specified braking values. The climbing capability values given below only apply to overcoming obstacles on the roadway and to short differences in level, e.g. ramps.

https://truckmanualshub.com/

The truck may be driven on the following upwards or downwards gradients:

Model	Type	Maximum gradient [%]	
		With load	Without load
RX50-10 compact	5060	19.0	25.0
RX50-10	5061		
RX50-13	5063		
RX50-15	5065		
RX50-16	5066		

The upwards and downwards slopes may not exceed the gradient listed above and should have a rough surface.

Smooth and gradual transitions should be provided at the top and bottom of the gradient to prevent the load from falling on the floor or the truck being damaged.

Warning in case components project beyond the truck contour

Trucks are often required to drive through very narrow or very low spaces such as aisles or containers. The trucks are dimensioned for this purpose. However, movable parts may project beyond the truck contour and be damaged or torn off. Examples of such components include:

- A folding roof panel in the driver's cab
- Cab doors
- Fold-out LPG cylinders

Condition of the roadways

Roadways must be sufficiently firm, level and free from dirt and fallen objects.

Drainage channels, level crossings and similar obstacles must be evened out and, if necessary, ramps must be provided so that trucks can drive over these obstacles with as few bumps as possible.

Note the load capacity of manhole covers, drain covers etc.

https://truckmanualshub.com/

There must be sufficient distance between the highest points of the truck or the load and the fixed elements of the surrounding area. The height is based on the overall height of the lift mast and the dimensions of the load; see the chapter entitled "Technical data".

Rules for roadways and the working area

It is only permitted to drive on routes authorised for traffic by the operating company or its representatives. Traffic routes must be free of obstacles. The load may only be set down and stored in the designated locations. The operating company and its representatives must ensure that unauthorised third parties do not enter the working area.

NOTE

Please observe the definition of the following responsible person: "operating company".

Hazard areas

Dangerous locations on the driveways must be designated by the signs typical for traffic or, if necessary, by additional warning signs.

Setting the drive programs

▷

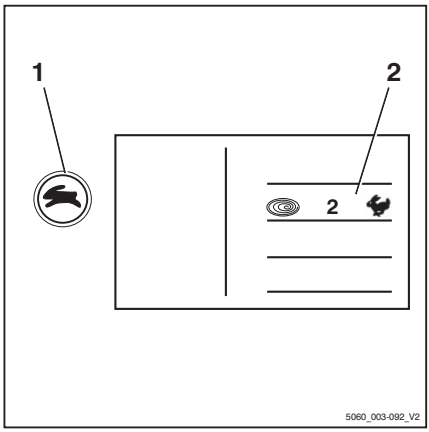

The driving and braking characteristics of the drive can be set on the display operating unit.

– Push the drive program button (1) repeatedly until the number of the desired drive program appears on the display (2).

Drive programs 1-5 are available.

The basic principle is that the higher the drive program number is, the greater the driving dynamics.

The following drive programs are possible:

https://truckmanualshub.com/

Drive programme	1	2	3	4	5
Speed (km/h) (forwards/backwards)	12.5/10	12.5/10	12.5/10	12.5/10	12.5/10
Acceleration (%) (forwards/backwards)	50	60	70	80	90
Deceleration (%) (forwards/backwards)	50	60	70	70	70
Reversing (%) (forwards/backwards)	50	60	70	80	90
Brake retardation (%) (electric brake booster)	60	70	80	90	100

Reducing speed with a raised load (variant) ▷

This function (variant) reduces the speed of the truck with a raised load.

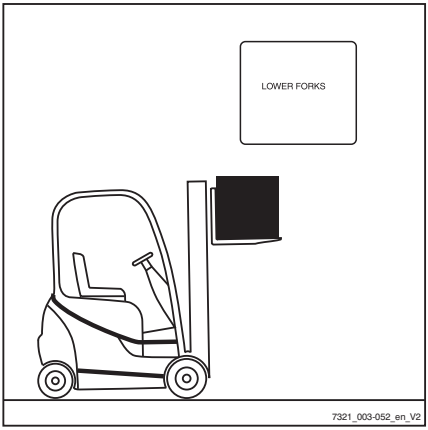

Special overhead guard for drive-in racks (variant)

NOTE

In order to be able to enter "drive-in racks", the truck can be equipped with a special overhead guard (variant).

https://truckmanualshub.com/

DANGER

Risk of crushing and shearing when driving through the racks!

The outer contour of the special overhead guard is narrower than the truck undercarriage. This may create the impression that the driver is leaning out of the moving truck unhindered and without danger. Parts projecting from the racks may protrude into the contour neck and seriously injure the driver.

- When travelling, arms and legs must remain within the truck.
- When travelling, do not lean your body outside the overhead guard contour.

The following height and width dimensions for the truck with special overhead guard may deviate from the standard equipment. ▷

Max. height to top of overhead guard	a (mm)	2050
Max. width of overhead guard	b (mm)	738
Height to overhead guard neck	c (mm)	1270

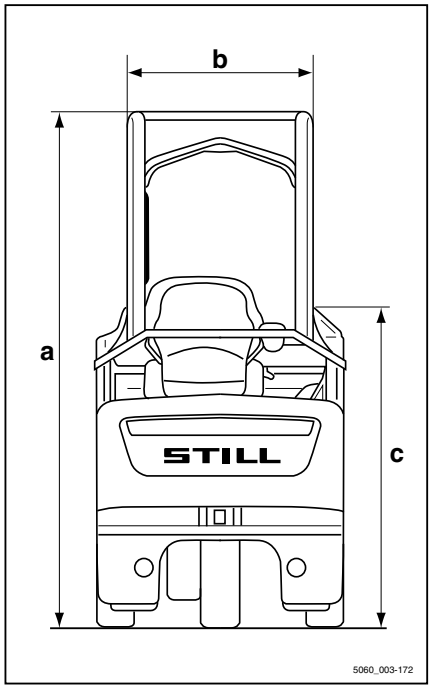

https://truckmanualshub.com/

Selecting the drive direction

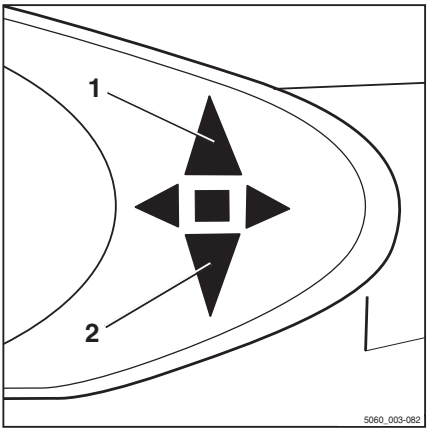

The desired drive direction of the truck must be selected using the drive direction switch before attempting to drive. Actuation of the drive direction switch depends on which operating devices are fitted on the truck.

Possible equipment variants include:

- **Multiple-lever**
- **Mini-lever**
- **Joystick 4Plus**
- **Fingertip**
- **Mini-console**

NOTE

The drive direction can also be changed during travel. Your foot can remain on the accelerator pedal while doing so. The truck decelerates and is then accelerated again in the opposite direction (reversing).

The indicator for the selected drive direction ("forwards" (1) or "reverse" (2)) lights up on the display and operating unit.

Neutral position

If the truck is stopped for an extended period, select the neutral position to prevent the truck from suddenly starting if the accelerator pedal is pressed inadvertently.

– Briefly select the drive direction switch for the direction opposite to the current direction.

The drive direction indicator on the display and operating unit goes out.

NOTE

When the seat is vacated, the drive direction switch is set to "Neutral". To drive, the drive direction switch must be actuated again.

https://truckmanualshub.com/

Actuating the drive direction switch, multiple-lever version

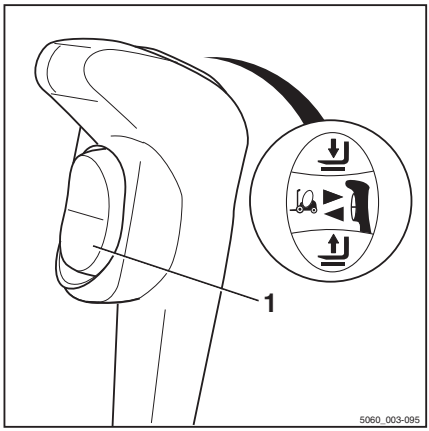

NOTE

Before actuating the drive direction switch, see the notes about choosing the drive direction; see ⇒ Chapter "Selecting the drive direction", P. 5-111.

– For the "forwards" drive direction, push the drive direction switch (1) downwards

– For the "backwards" drive direction, push the drive direction switch upwards

Actuating the drive direction switch, mini-lever version

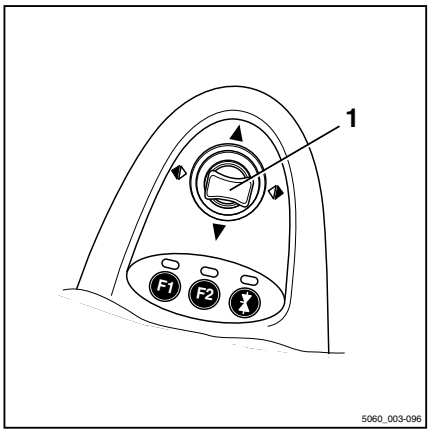

– For the "forwards" drive direction, push the cross lever (1) forwards

– For the "backwards" drive direction, push the cross lever backwards

https://truckmanualshub.com/

Actuating the vertical rocker switch for the "drive direction", joy-stick 4Plus version

- For the "forwards" drive direction, push the vertical rocker button for the "drive direction"(1) upwards (A).
- For the "reverse" drive direction, push the vertical rocker button for the "drive direction"(1) downwards (B).

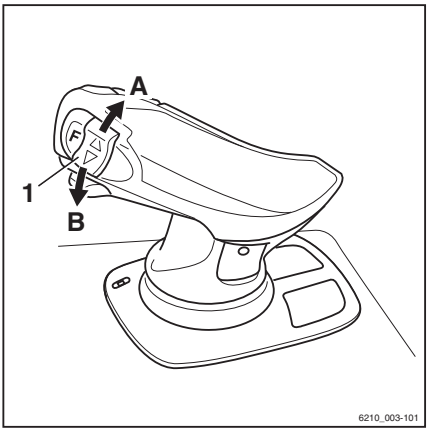

Actuate the drive direction switch, fingertip version

- For the "forwards" drive direction, push the drive direction switch (1) forwards.
- For the "backwards" drive direction, push the drive direction switch backwards.

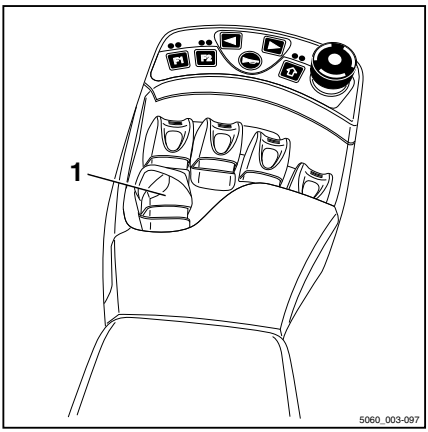

https://truckmanualshub.com/

Actuating the drive direction switch, mini-console version

- For the "forwards" drive direction, push the drive direction switch (1) forwards.
- For the "backwards" drive direction, push the drive direction switch to the rear.

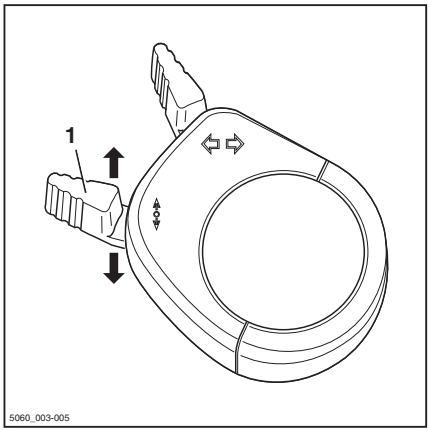

NOTE

Alternatively, the drive direction can also be selected using the drive direction switches on the operating devices.

Starting drive mode

DANGER

Being trapped under a rolling or tipping truck could cause fatal injuries!

- Sit down on the driver's seat.
- Fasten the seat belt.
- Activate the available restraint systems.

Observe the information in the chapter entitled "Safety regulations when driving".

The driver's seat is equipped with a seat switch. This checks whether the driver's seat is occupied. If it is not occupied or in the case of malfunction of the seat switch, the truck cannot be moved and all lift functions are locked out. In such a case, the message `SEAT SWITCH` appears in the operating unit display; see the chapter entitled "`SEAT SWITCH` message".

- Lift the fork carriage until the necessary ground clearance is achieved.
- Tilt the lift mast backwards.
- Release the parking brake.
- Select the desired drive direction.

https://truckmanualshub.com/

The indicator for the selected drive direction ("forwards" (1) or "backwards" (2)) lights up on the display and operating unit.

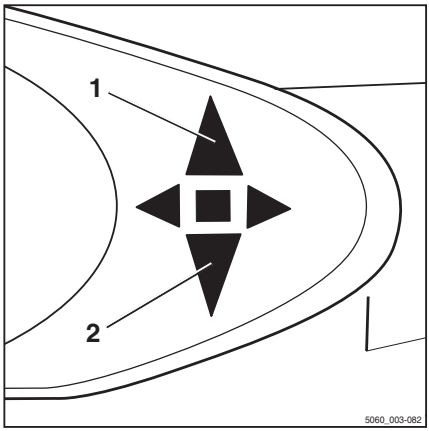

NOTE

Depending on the equipment, an acoustic signal (variant) may sound a warning during reverse travel, the warning light (variant) may light up or the hazard warning system (variant) may flash.

– Actuate the accelerator pedal (3).

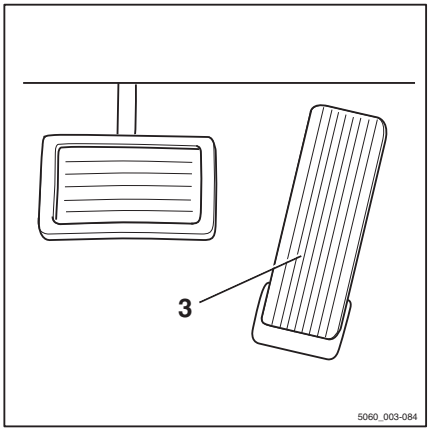

The truck will travel in the selected drive direction. The speed is controlled by the accelerator pedal position. When the accelerator pedal is released, the truck decelerates.

NOTE

The truck can briefly be stopped on upward or downward gradients without actuating the parking brake (electric brake). The truck begins to creep downwards slowly.

DANGER

Risk of accident due to brake failure!

The electric brake only functions while the key switch is switched on, the emergency off switch has not been actuated and the parking brake is released.

– Use the brake pedal if the electric brake malfunctions.
– Do not leave the truck without applying the parking brake!

Changing the drive direction

– Remove foot from accelerator pedal.
– Select the desired drive direction.
– Actuate the accelerator pedal.

The truck will travel in the selected drive direction.

https://truckmanualshub.com/

NOTE

The drive direction can also be changed during travel. Your foot can remain on the accelerator pedal while doing so. The truck decelerates and is then accelerated again in the opposite direction (reversing).

NOTE

In the event of an electrical fault with the accelerator the drive unit is shut down. The electrical brake (service brake) causes the truck to decelerate. The truck cannot be driven again until the accelerator pedal has been released and then actuated again, provided the electrical fault has been corrected. If the truck still cannot be operated, park it securely and contact your authorised service centre.

Starting drive mode, dual-pedal version (variant)

DANGER

Being trapped under a rolling or tipping truck could cause fatal injuries.

- Sit down on the driver's seat.
- Fasten the seat belt.
- Activate the available restraint systems.

Observe the information in the chapter entitled Safety regulations when driving.

The driver's seat is equipped with a seat switch. This checks whether the driver's seat is occupied. If it is not occupied or in the case of malfunction of the seat switch, the truck cannot be moved and all lifting functions are locked. In this situation, the message `SEAT SWITCH` appears on the operating unit display.

- Lift the fork carriage until the necessary ground clearance is achieved.
- Tilt the lift mast backwards.
- Release the parking brake.

https://truckmanualshub.com/

– Press the right accelerator pedal (1) to drive "forwards" and press the left accelerator pedal (2) to drive "backwards".

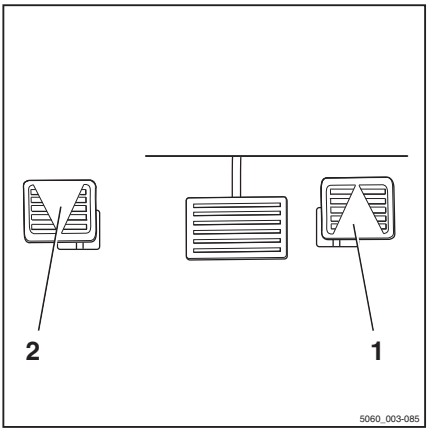

NOTE

In the dual pedal version, any drive direction switches on the operating devices will not function.

The indicator for the selected drive direction ("forwards" (3) or "backwards" (4)) lights up on the display and operating unit.

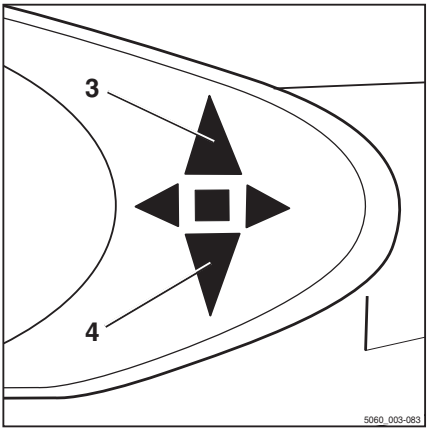

NOTE

Depending on the equipment, an acoustic signal (variant) may sound a warning during reverse travel, the warning light (variant) may light up or the hazard warning system (variant) may flash.

The truck will travel in the selected drive direction. The speed is controlled by the accelerator pedal position. When the accelerator pedal is released, the truck decelerates.

NOTE

The truck can be stopped briefly on upward or downward gradients without actuating the parking brake (electric brake). The truck will then begin to creep downhill slowly.

https://truckmanualshub.com/

DANGER

Risk of accident due to brake failure!

The electric brake only functions while the key switch is switched on, the emergency off switch has not been actuated and the parking brake is released.

- Use the brake pedal if the electric brake malfunctions.
- Do not leave the truck without applying the parking brake!

Changing the drive direction

- Remove foot from actuated accelerator pedal.
- Actuate the accelerator pedal for the opposite direction.

The truck will travel in the selected drive direction.

NOTE

In the event of an electrical fault with the accelerator the drive unit is shut down. The electric brake (service brake) causes the truck to decelerate. The truck cannot be driven again until the accelerator pedal has been released and then actuated again, provided that the electrical fault has been corrected. If the truck still cannot be operated, park it securely and contact your authorised service centre.

https://truckmanualshub.com/

Operating the service brake

The electric brake converts the acceleration energy of the truck into electrical energy. This causes the truck to decelerate.

Electrical braking recovers energy for the battery. This results in a longer operating time between charging operations and less wear to the brakes.

The truck can also be braked with the mechanical brake by actuating the brake pedal (2). In the first section of the brake pedal's travel, only the electric brake takes effect. As the pedal is depressed further, the mechanical brake is also activated and acts on the drive wheels

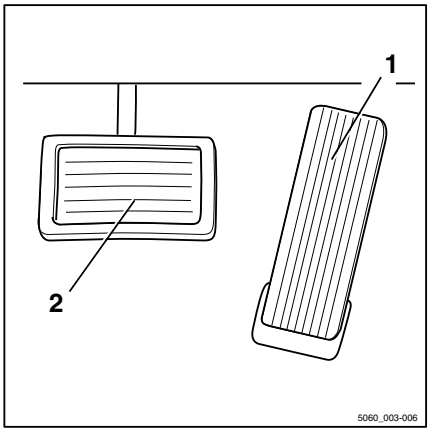

DANGER

If the service brake fails, the truck cannot brake sufficiently. There is a risk of accident!

If the driver notices that the electrical braking effect has reduced by 50% and that the drive torque has decreased to 50% of the normal level, a component failure may have occurred.

- Bring the truck to a standstill using the brakes. Use the parking brake if necessary to assist in this process.
- Notify the authorised service centre.
- Do not operate the truck again until the service brake has been repaired.

DANGER

At speeds that are too high, there is a danger that the truck could slip or overturn!

The braking distance of the truck depends on the weather conditions and the level of contamination on the roadway. Note that the basic braking distance increases with the square of the speed.

- Adapt your driving and braking style to suit the weather conditions and the level of contamination on the roadway.
- Always choose a driving speed that will provide a sufficient stopping distance.

- Brake the truck by releasing the accelerator pedal (1).
- If the braking effect is inadequate, use the brake pedal (2) as well to apply the mechanical brake.

https://truckmanualshub.com/

Actuating the mechanical parking brake

DANGER

There is a risk of being run over if the truck rolls away and therefore a danger to life.

- The truck should not be parked on a slope.
- In emergencies, secure with wedges on the side facing downhill.
- Only leave the truck if the parking brake is applied.

NOTE

Once the parking brake is released, the previously selected drive direction is retained and is shown on the drive direction indicator.

NOTE

If you operate the accelerator pedal while the parking brake is applied and a drive direction is selected, the message PARKING BRAKE appears on the display.

Applying the parking brake

- Apply the parking brake lever (2) and allow it to engage.

The truck can no longer be driven. The drive direction indicator will go out.

Releasing the parking brake

- Push and hold the knob (1) on the parking brake lever.
- Move the parking brake lever all the way forward, and then release the knob.

▷

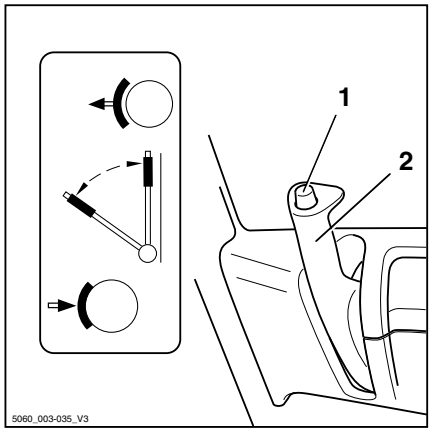

https://truckmanualshub.com/

Steering

DANGER

If the hydraulics fail, there is a risk of accident as the steering characteristics have changed.

– Do not operate the truck if it has a defective steering system.

– Steer the truck by turning the steering wheel (1) accordingly.

Turning the steering wheel in the direction of arrow (A) steers the truck in drive direction (A).

Turning the steering wheel in the direction of arrow (B) steers the truck in drive direction (B).

For turning radius information, see ⇒ Chapter "Technical data", P. 337.

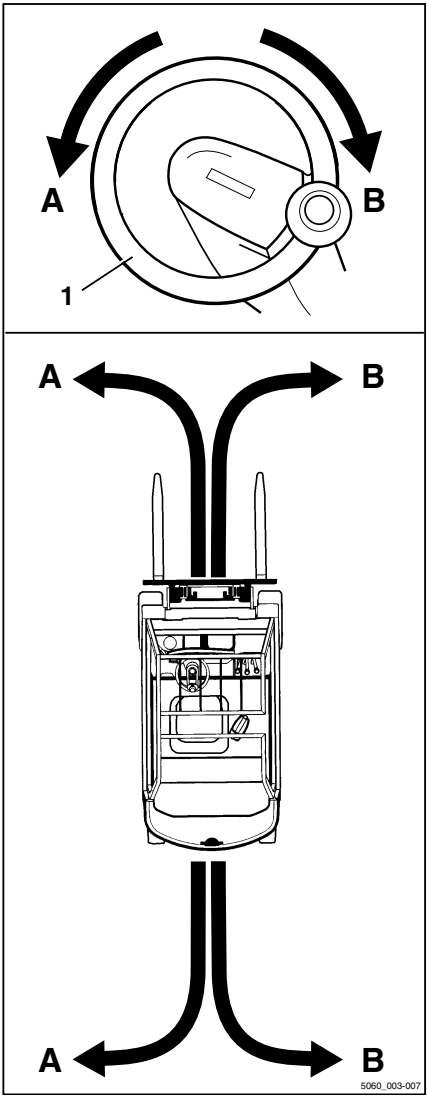

https://truckmanualshub.com/

Reducing speed when turning (Curve Speed Control)

This function reduces the speed of the truck as the steering angle increases, regardless of the amount to which the accelerator has been actuated. If the steering angle is reduced again upon exiting the curve, the truck accelerates in line with how far the accelerator is depressed.

However, the function does not release the driver from the duty to approach a curve at a speed according to the following factors:

- The carried load
- The roadway conditions
- The radius of the curve

DANGER

The Curve Speed Control function cannot override the physical limits of stability. Despite this function, there still is a risk of tipping!

– Before using this function, familiarise yourself with the change to the driving and steering characteristics of the truck.

DANGER

Increased risk of tipping if the Curve Speed Control function is disabled! If the controller fails while the truck is in motion or if the controller is disabled, the truck will no longer automatically brake when steering.

– Do not turn off the key switch while driving.
– Actuate the emergency stop switch only in emergencies.
– Always adapt your driving style to the conditions.

Despite the Curve Speed Control function, the truck may overturn in extreme cases within the following situations:

- Cornering too fast on uneven or inclined roadways.
- Turning the steering wheel sharply while driving.
- Cornering with an inadequately secured load.
- Cornering too fast on a smooth or wet roadway.

▷

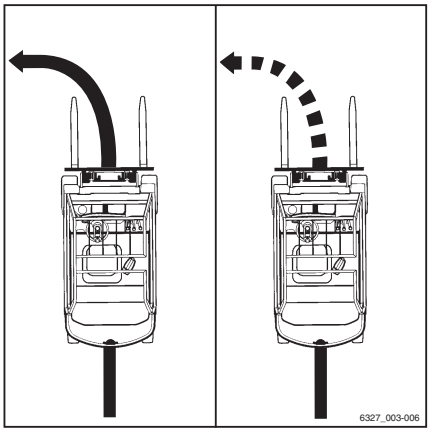

https://truckmanualshub.com/

Lifting

Lifting system variants

The movement of the fork carriage and the lift mast heavily depends on the following equipment:

- The lift mast with which the truck is equipped, see ⇒ Chapter "Types of lift mast", P. 5-128
- The operating device with which the hydraulic functions are controlled, see ⇒ Chapter "Lifting system operating devices", P. 5-131

Regardless of the equipment variants of the truck, the basic specifications and procedures must be complied with, see ⇒ Chapter "Safety regulations when handing loads", P. 5-147.

Automatic lift cut out (variant)

Description:

The automatic lift cut out (variant) means that the load cannot be lifted above a preset height. This function uses a sensor that is welded on at the factory at the required lift mast limit height. Once attached, the height cannot be easily changed.

Application:

- If the ceiling of the building is lower than the maximum lift height of the truck, this variant can prevent the lift mast from accidentally hitting the ceiling, which can result in damage.
- If the truck is frequently used at a particular height, the work is simplified by the automatic lift cut out at this height.

NOTE

If a load is lifted very quickly, the fork carriage and load are moved approximately 15 cm above the position of the sensor due to inertia. This deviation is already taken into consideration at the factory when determining the position of the sensor.

https://truckmanualshub.com/

Overriding and reactivating the automatic lift cut out

If a load needs to be lifted to the truck's maximum lift height and the automatic lift cut out function is not required, it is possible to override the lift cut out. It is automatically reactivated when the truck is switched off and back on again.

To override the automatic lift cut out:

– Press the "F1"(1) button on the display operating unit. The automatic lift cut out is now overridden and a load can be lifted to the truck's maximum lift height.

To switch the automatic lift cut out back on:

– Press the "F1"(1) button again.

▷

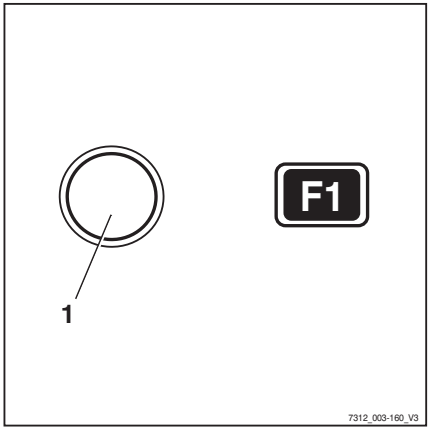

Lift mast vertical position (variant)

Description

If the truck is equipped with the "lift mast vertical position" comfort feature (variant), the driver can put down goods, such as paper rolls, vertically with precision and thus avoid damage when unloading. The tilt cylinders run into the end stops gently to prevent hard vibrations and impacts. Oscillating motions of the truck are minimised, thus increasing work safety. The lift mast vertical position reduces wear on various components and therefore reduces maintenance costs.

https://truckmanualshub.com/

⚠ CAUTION

Risk of damage to property due to the lift mast colliding with racks or other objects!

– Before using the "lift mast vertical position" comfort feature, position the truck at a sufficient distance from racks and other objects.

The "lift mast vertical position" comfort feature consists of the following individual functions:

- Display of the "lift mast vertical position"
- Automatic approach towards the "lift mast vertical position"
- Gentle running-in to the end stops

The "lift mast vertical position" comfort feature is only available as a variant if the truck is equipped with one of the following operating devices:

- Double mini-lever (1)
- Triple mini-lever (2)
- Quadruple mini-lever (3)
- Fingertip (4)
- Joystick 4Plus (5)

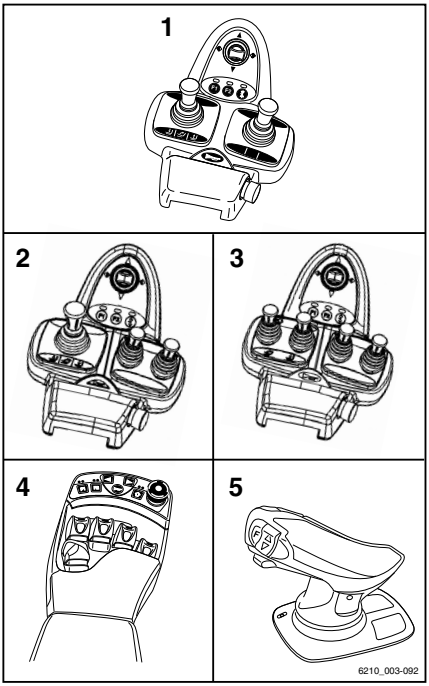

https://truckmanualshub.com/

Display of the "lift mast vertical position"

The driver can see the mast tilt on the display and operating unit screen. The bar in the display shows the current mast tilt relative to the "lift mast vertical position". The arrow above the bar marks the vertical position of the lift mast.

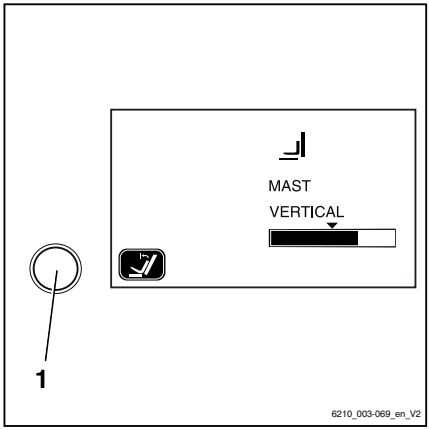

Automatic approach towards the "lift mast vertical position"

- Switch on the "lift mast vertical position" comfort feature via the button (1) on the display and operating unit.
- Tilt the lift mast forwards using the corresponding operating device. The lift mast stops automatically as soon as the preselected setting is reached for the "lift mast vertical position".

If the comfort feature is switched off, the lift mast tilts forwards past the "lift mast vertical position" without stopping.

If the lift mast is tilted backwards, it moves past the "lift mast vertical position" without stopping, regardless of whether the comfort feature is switched on or not.

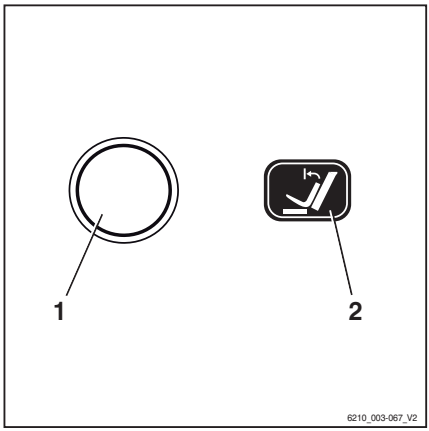

Gentle running-in to the end stops

The lift mast is braked gently at the end of the tilt range. This prevents the lift mast from stopping harshly in the end position and reduces severe oscillating motions of the truck.

https://truckmanualshub.com/

Tilting the lift mast forwards with the "lift mast vertical position"

– Actuate the button (1) to switch on the "lift mast vertical position" comfort feature; the function display (2) in the display shows the activated status.

– Tilt the lift mast forwards.

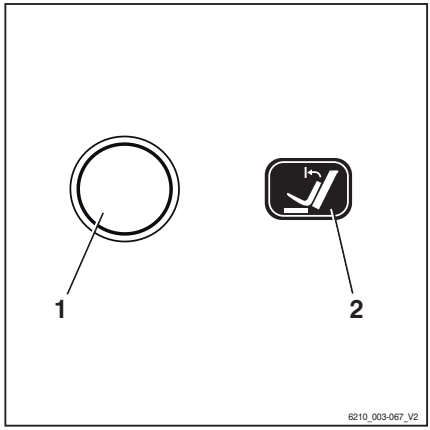

NOTE

The way in which the lifting system is operated depends on the operating devices included in the truck's equipment; see the chapter entitled "Lifting system operating devices".

The lift mast is tilted forwards and stops as soon as the vertical position is reached. The arrow above the bar shown on the screen of the display and operating unit represents the "lift mast vertical position".

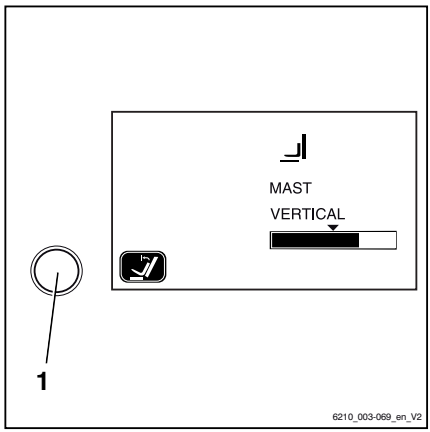

Tilting the lift mast forwards beyond the vertical position:

– Release the operating device for tilting and actuate again.

The lift mast is tilted beyond the vertical position up to the end stop. The current mast tilt is shown in the display and operating unit.

– To deactivate the "lift mast vertical position", actuate the button (1) again.

Tilting the lift mast backwards with the "lift mast vertical position"

– Tilt the lift mast backwards.

The lift mast is tilted backwards without stopping in the vertical position.

https://truckmanualshub.com/

Possible restrictions on the "lift mast vertical position"

In some circumstances, the lift mast cannot move exactly into the preset vertical position. Possible causes include:

- Uneven ground
- Bent fork
- Bent attachment
- Worn tyres
- Severely deformed lift mast

The vertical position can be corrected by tilting the lift mast using the relevant operating device. If the vertical position has to be corrected frequently, the "lift mast vertical position" should be calibrated.

Calibrating the "lift mast vertical position" ▷

– Set the lift mast to the required position.

– Press and hold the button (1) for the "lift mast vertical position" for at least five seconds.

The message "? VERTICAL POSITION" will appear on the display.

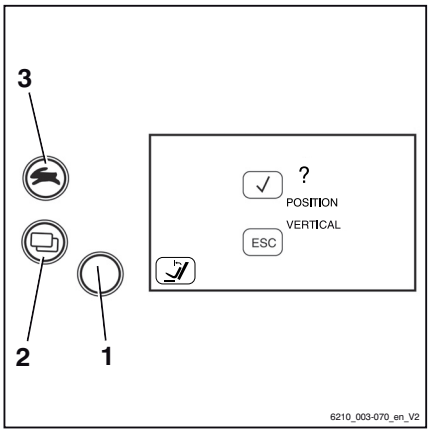

Storing the mast position:

– Press the drive program selection button (3).

The current mast position is stored.

Cancelling calibration:

– Press the menu change button (2).

The calibration is cancelled.

Types of lift mast

One of the following lift masts may be installed in the truck:

https://truckmanualshub.com/

Telescopic mast

During lifting, the lift mast rises over the outer lift cylinders, bringing the fork carriage with it via the chains (fork carriage rises twice as fast as the inner lift mast). The top edge (1) of the inner lift mast can therefore be higher than the fork carriage.

DANGER

Risk of accident due to collision of the lift mast or load with low ceilings or entrances.

- Note that the inner lift mast or load may be higher than the fork carriage.
- Note the heights of ceilings and entrances.

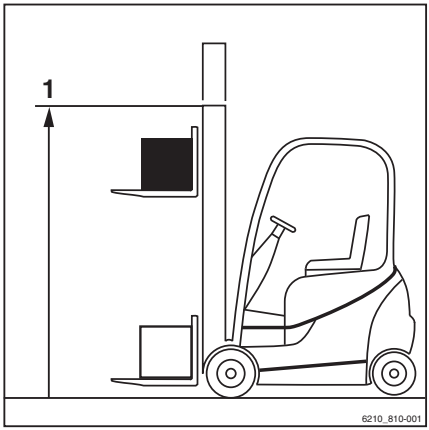

Hi-Lo lift mast (variant)

During lifting, the inner lift cylinder moves up to free lift (3), and then the outer lift cylinders raise the inner lift mast up to the max. height (2).

NOTE

When lifting above the free lift, the fork carriage always remains at the upper edge of the extending lift mast.

DANGER

Risk of accident due to collision of the lift mast or load with low ceilings or entrances.

- Note that the inner lift mast or load may be higher than the fork carriage.
- Note the heights of ceilings and entrances.

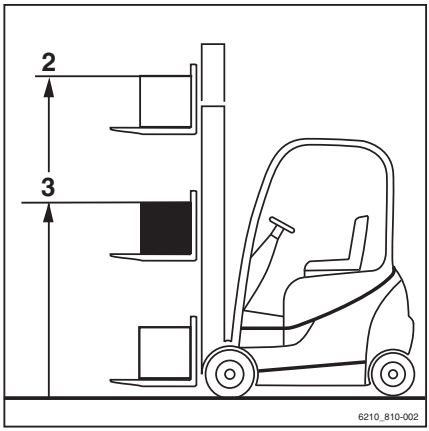

https://truckmanualshub.com/

Triplex lift mast (variant)

During lifting, the inner lift cylinder moves up to free lift (3), and then the outer lift cylinders raise the inner lift mast up to the max. height (2).

DANGER

Risk of accident due to collision of the lift mast or load with low ceilings or entrances.

– Note that the inner lift mast or load may be higher than the fork carriage.

– Note the heights of ceilings and entrances.

▷

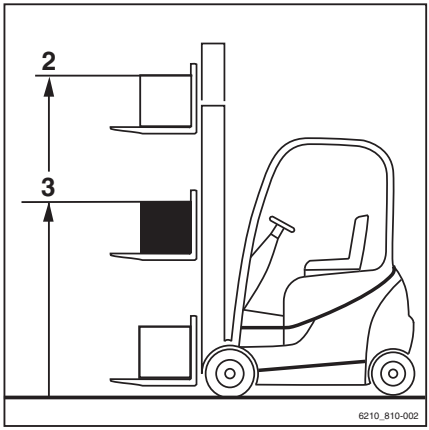

Malfunctions during lifting mode

Incorrect extension sequence

DANGER

Risk of accidents!

In the case of Hi-Lo lift masts (variant) and triplex lift masts (variant), an incorrect extension sequence may occur, i.e. the inner lift mast may extend before the free lift is complete. As a result, the overall height is exceeded and damage may occur in passageways or from low ceilings.

An incorrect extension sequence may, for instance, result from:

- The hydraulic oil temperature being too low.
- Blocking of the fork carriage in the inner lift mast.
- Blocking of the free lift cylinder.
- Blocking of the chain roller on the free lift cylinder.

– If the hydraulic oil temperature is too low, slowly actuate the lift mast functions several times in order to raise the oil temperature.

In the event that the fork carriage is blocked in the inner lift mast, or the free lift cylinder or chain roller are blocked, the cause of the blockage must be eliminated before resuming work.

– Notify your service centre

https://truckmanualshub.com/

Load chains not under tension

DANGER

Danger caused by a falling load!

– Make sure that the chain(s) does (do) not become slack when lowering the load.

Slack chains can, for instance, result from:

- Resting the fork carriage or the load on the racking.
- Fork carriage rollers blocking in the lift mast due to contamination.

– If the fork carriage or the load comes to an unexpected stop, lift the fork carriage until the chains are under tension again and lower the load at another suitable location.

– If the fork carriage rollers in the lift mast become blocked due to contamination, lift the fork carriage until the chains are under tension again. Remove the contamination before resuming work.

WARNING

Risk of injury!

– Observe the safety regulations for working on the lift mast, see the chapter entitled "Working at the front of the truck".

Lifting system operating devices

The operation of the lifting system depends on the operating devices that are fitted on the truck.

Possible equipment variants include:

- **Multiple-lever**
- **Double mini-lever**
- **Triple mini-lever**
- **Quadruple mini-lever**
- **Joystick 4Plus**
- **Fingertip**

– The following information must be observed regardless of the equipment variant:

https://truckmanualshub.com/

DANGER

Reaching into or climbing between moving parts of the truck (e.g. lift mast, sideshifts, working equipment, load carrying devices etc.) can lead to serious injury or death and is therefore prohibited.

– Observe the safety regulations for handling loads.
– Only operate the lifting system from the driver's seat.

Hydraulic blocking function

The hydraulic blocking function ensures that all hydraulic functions are disabled whenever the seat switch in the driver's seat is unloaded This is when the driver stands up from the driver's seat or exits the truck. All hydraulic functions are disabled in this case:

- Lift the load
- Lower the load
- Tilt the lift mast
- Auxiliary hydraulic functions

To ensure that the hydraulics blocking function does not lock as well, the operating device must be in the neutral position for the "Lifting" function.

Enabling the hydraulic blocking function

The hydraulic blocking function must be enabled after the following incidents:

- The driver has stood up from the driver's seat whilst lowering the load.
- The driver has left the driver's seat for more than one minute.

Proceed as follows to enable the hydraulic blocking function:

– Sit down on the driver's seat.

– Lift the fork a little.

https://truckmanualshub.com/

Emergency lowering of the load after the hydraulics blocking function has been triggered

If the truck hydraulics are disabled by the exhaust valve of the hydraulic blocking function, either permanently or due to a technical fault, it is possible to lower a raised load at the valve block. See the chapter entitled "Emergency lowering".

https://truckmanualshub.com/

Multi-lever lifting system

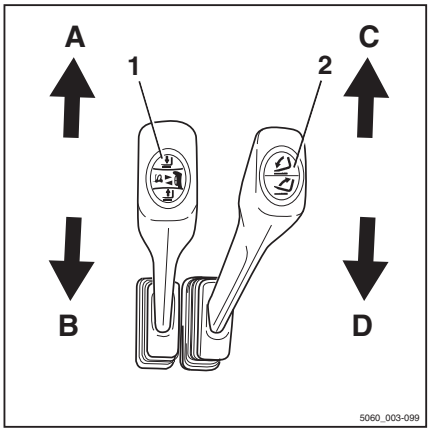

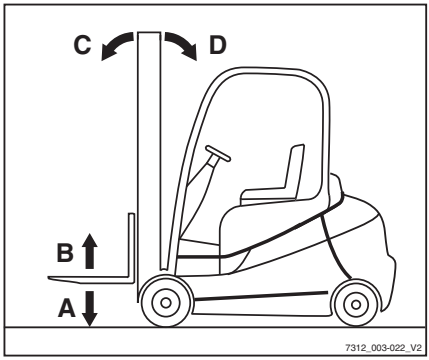

DANGER

Reaching or climbing between moving parts of the truck (e.g. lift mast, sideshifts, working equipment, load carrying devices etc.) can lead to serious injury or death and is therefore prohibited.

- Always observe the safety regulations for handling loads; see ⇒ Chapter "Safety regulations when handing loads", P. 5-147.
- Only operate the lifting system from the driver's seat.

Lifting/lowering the fork carriage

To lift fork carriage:

- Move the "lift-lower" operating lever (1) in the direction of the arrow (B).

To lower fork carriage:

- Move the "lift-lower" operating lever (1) in the direction of the arrow (A).

Tilting the lift mast

To tilt the lift mast forwards:

- Move the "tilt" operating lever (2) in the direction of the arrow (C).

To tilt the lift mast backwards:

- Move the "tilt" operating lever (2) in the direction of the arrow (D).

NOTE

The symbols on the operating levers show the direction of movement of the lift mast or fork carriage when the operating lever is moved.

https://truckmanualshub.com/

Controlling the lifting system using a double mini-lever ▷

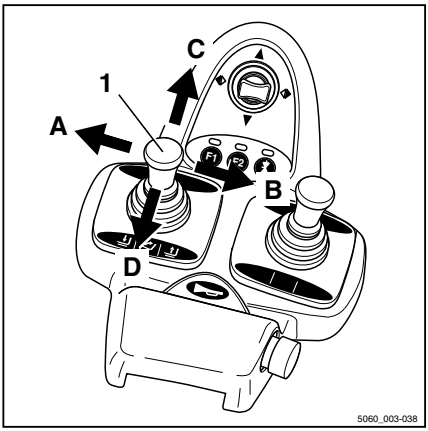

DANGER

Reaching into or climbing between moving parts of the truck (e.g. lift mast, sideshifts, working equipment, load carrying devices etc.) can lead to serious injury or death and is therefore prohibited.

- Observe the safety regulations for handling loads.
- Only operate the lifting system from the driver's seat.

Lifting/lowering the fork carriage

To lift fork carriage:

- Move the "lift mast" 360° lever (1) in the direction of arrow (B).

To lower fork carriage:

- Move the "lift mast" 360° lever (1) in the direction of arrow (A).

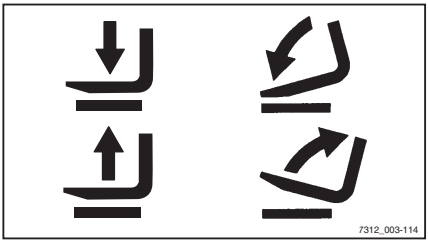

Tilting the lift mast

To tilt the lift mast forwards:

- Move the "lift mast" 360° lever (1) in the direction of arrow (C).

To tilt the lift mast backwards:

- Move the "lift mast" 360° lever (1) in the direction of arrow (D).

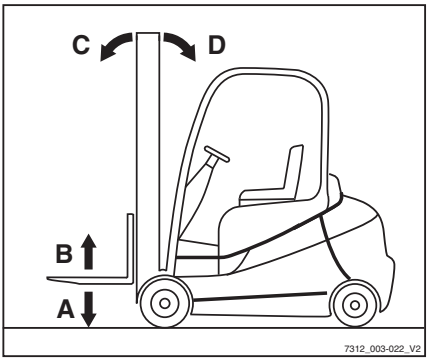

NOTE

The symbols on the 360° lever show the direction of movement of the lift mast and the fork carriage when the 360° lever is moved.

https://truckmanualshub.com/

Controlling the lifting system using a triple mini-lever ▷

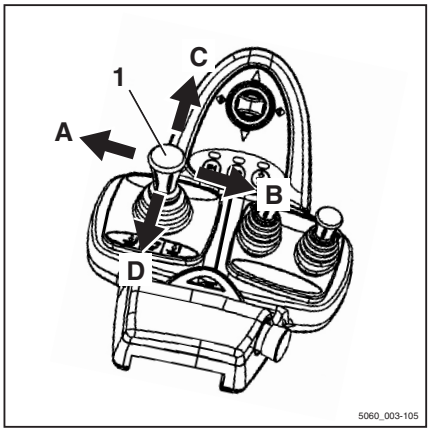

DANGER

Reaching into or climbing between moving parts of the truck (e.g. lift mast, sideshifts, working equipment, load carrying devices etc.) can lead to serious injury or death and is therefore prohibited.

- Observe the safety regulations for handling loads.
- Only operate the lifting system from the driver's seat.

Lifting/lowering the fork carriage

To lift fork carriage:

- Move the "lift mast" 360° lever (1) in the direction of arrow (B).

To lower fork carriage:

- Move the "lift mast" 360° lever (1) in the direction of arrow (A).

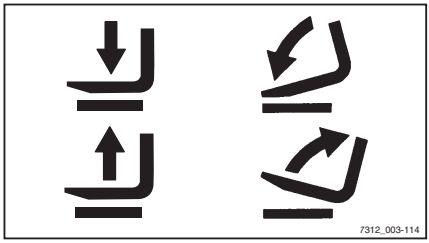

Tilting the lift mast

To tilt the lift mast forwards:

- Move the "lift mast" 360° lever (1) in the direction of arrow (C).

To tilt the lift mast backwards:

- Move the "lift mast" 360° lever (1) in the direction of arrow (D).

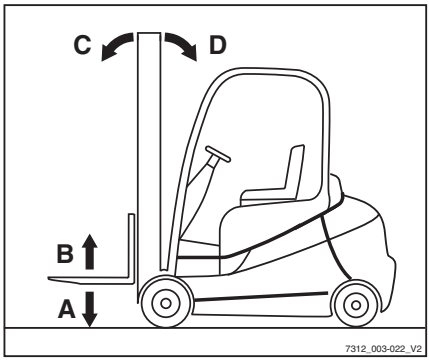

NOTE

The symbols on the 360° lever show the direction of movement of the lift mast and the fork carriage when the 360° lever is moved.

https://truckmanualshub.com/

Controlling the lifting system using a quadruple mini-lever ▷

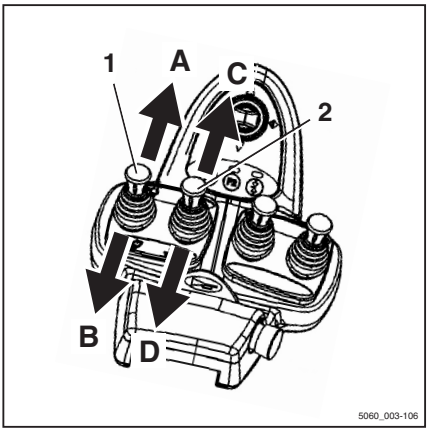

DANGER

Reaching into or climbing between moving parts of the truck (e.g. lift mast, sideshifts, working equipment, load carrying devices etc.) can lead to serious injury or death and is therefore prohibited.

- Observe the safety regulations for handling loads.
- Only operate the lifting system from the driver's seat.

Tilting the lift mast

To tilt the lift mast forwards:

- Move the "lift mast" operating lever (1) in the direction of the arrow (A).

To tilt the lift mast backwards:

- Move the "lift mast" operating lever (1) in the direction of the arrow (B).

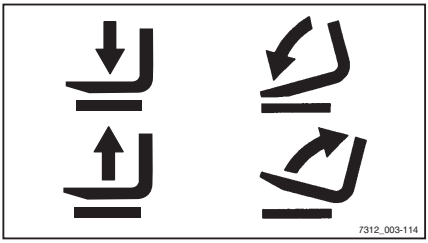

Lifting/lowering the fork carriage

To lift fork carriage:

- Move the "lift-lower" operating lever (2) in the direction of arrow (D).

To lower fork carriage:

- Move the "lift-lower" operating lever (2) in the direction of arrow (C).

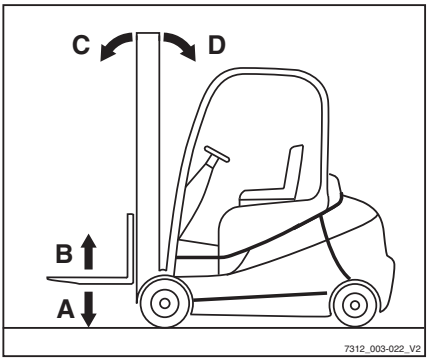

NOTE

The symbols on the operating levers show the direction of movement of the lift mast or fork carriage when the operating lever is moved.

https://truckmanualshub.com/

Controlling the lifting system using the joystick 4Plus

DANGER

Reaching into or climbing between moving parts of the truck (e.g. lift mast, sideshifts, working equipment, load carrying devices etc.) can lead to serious injury or death and is therefore prohibited.

- Observe the safety regulations for handling loads.
- Only operate the lifting system from the driver's seat.

Lifting/lowering the fork carriage

To lift the fork carriage:

- Pull the joystick 4Plus (1) backwards (B).

To lower the fork carriage:

- Push the joystick 4Plus (1) forwards (A).

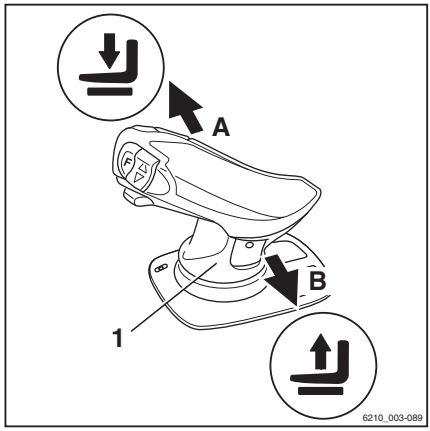

Tilting the lift mast

To tilt the lift mast forwards:

- Tilt the horizontal rocker button (2) to the left (D).

To tilt the lift mast backwards:

- Tilt the horizontal rocker button (2) to the right (C).

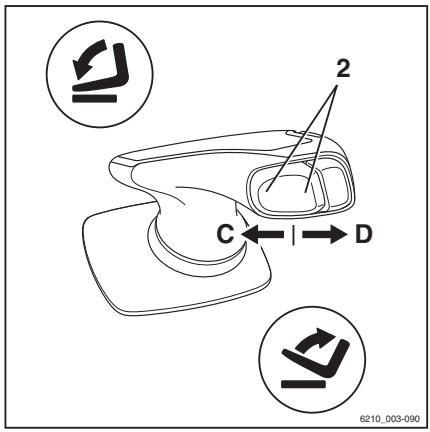

https://truckmanualshub.com/

Fork-carriage sideshift

To move the fork carriage to the left.

– Push the joystick 4Plus (1) to the left (E).

To move the fork carriage to the right:

– Push the joystick 4Plus (1) to the right (F).

NOTE

The symbols on the joystick 4Plus indicate the direction of movement of the lift mast or the fork carriage.

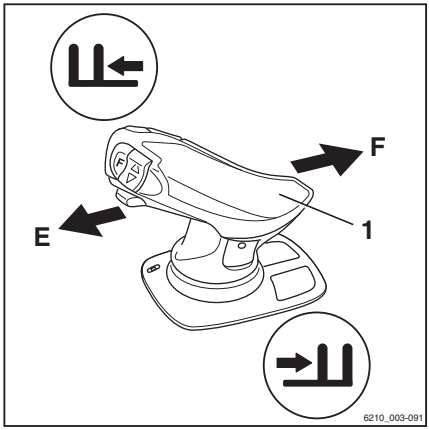

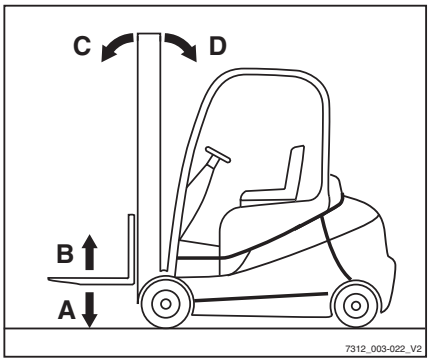

https://truckmanualshub.com/

Controlling the lifting system with the fingertip console ▷

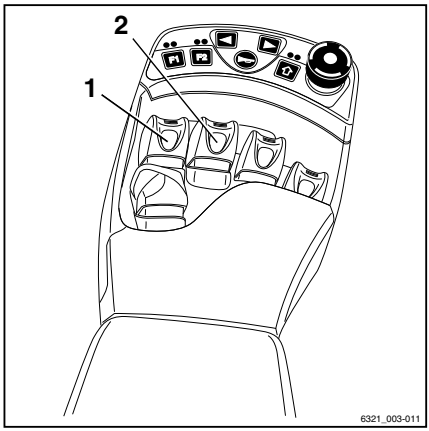

DANGER

Reaching into or climbing between moving parts of the truck (e.g. lift mast, sideshifts, working equipment, load carrying devices etc.) can lead to serious injury or death and is therefore prohibited.

- Observe the safety regulations for handling loads.
- Only operate the lifting system from the driver's seat.

Lifting/lowering the fork carriage

To lift fork carriage:

- Pull the "lift/lower" operating lever (1) backwards.

To lower fork carriage:

- Push the "lift/lower" operating lever (1) forwards.

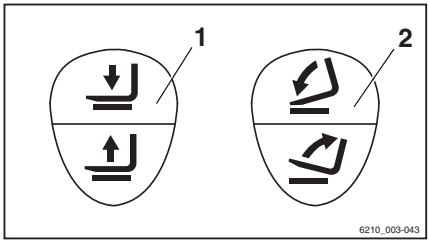

Tilting the lift mast

To tilt the lift mast forwards:

- Push the "tilt" operating lever (2) forwards.

To tilt the lift mast backwards:

- Pull the "tilt" operating lever (2) backwards.

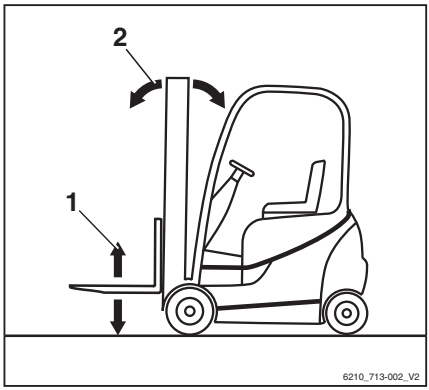

NOTE

The symbols on the operating levers show the direction of movement of the lift mast or fork carriage when the operating lever is moved.

https://truckmanualshub.com/

Changing the fork arms

DANGER

There is a risk of being run over if the truck rolls away, and therefore a danger to life.

- Do not park the truck on a gradient.
- Apply the parking brake.
- Change the fork arms in a separate, safe location on a level surface.

WARNING

There is a risk of injury when changing the fork arms; the fork arms' weight could cause them to fall on your legs, feet or knees. The space to the left and right of the fork is a danger area.

- Always wear protective gloves and safety footwear when changing the fork arms.
- Ensure that no one stands in the danger area!
- Do not pull on the fork arms.
- The fork arms must always be carried by two people; if necessary, use a hoist.

NOTE

- *For installation and removal, a transport pallet is recommended for supporting the fork arms. The pallet size depends on the fork arm size used and should be dimensioned such that the fork arms do not protrude after being placed on the pallet. This means the fork arms can be safely placed down and transported.*
- *Both fork arms can be pushed over onto one side.*

https://truckmanualshub.com/

Removal

- Select a pallet corresponding to the fork arm size.
- Position the pallet to the left or right of the fork carriage.
- Raise the fork carriage until the lower edges of the fork arms are approx.3 cm higher than the height of the pallet.
- Actuate the parking brake and make sure it is applied securely.
- Turn the switch key to the left and remove it.
- Undo the locking screw (2) on the right or left.
- Pull the locking lever (1) upwards and push the fork arms outwards onto the pallet.

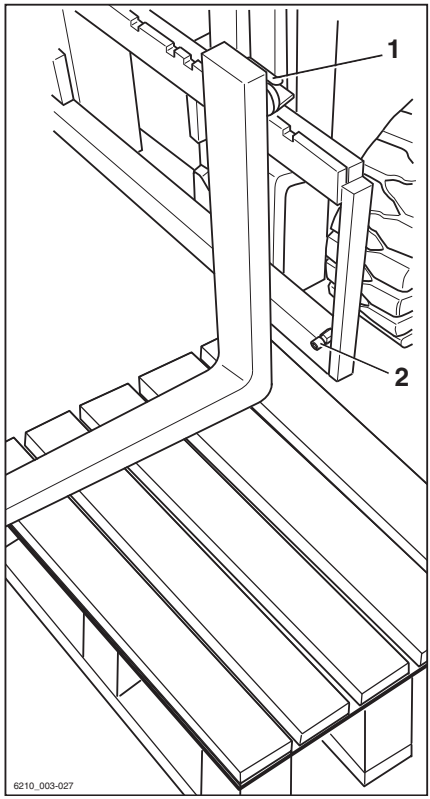

Installation

- Position the fork arms to the left or right of the fork carriage on a pallet.
- Push the fork arms onto the fork carriage from the outside towards the centre.
- Pull the locking lever (1) upwards and push the fork arms into the required position. Ensure that the locking lever snaps into place.
- Fit and tighten the locking screw (2).

⚠ DANGER

There is a risk to life caused by a falling load or fork!

- Tighten the locking screw after every fork replacement.
- It is not permitted to drive or transport loads without the locking screw.

NOTE

If the truck is equipped with the "load measurement" comfort feature, then a "zero adjustment of the load measurement" is imperative after the fork arms have been changed; see ⇒ Chapter "Zero adjustment of the load measurement (variant)", P. 5-101. Otherwise correct measurement of the load cannot be guaranteed.

https://truckmanualshub.com/

Fork extension (variant)

DANGER

There is a risk of being run over if the truck rolls away and therefore a danger to life.

- Do not park the truck on a slope.
- Apply the parking brake.
- Change the fork extension in a separate, safe location on a level surface.

WARNING

There is a risk of crushing!

The weight of the fork extension can cause crushing or cuts on sharp edges or burrs.

- Always wear protective gloves and safety footwear.

WARNING

There is a risk of tipping!

The weight and dimensions of the fork extension affect the stability of the truck. The permissible weights stated on the capacity rating plate must be reduced in proportion to the actual load distance.

- Observe load capacity, see the "Before picking up a load" chapter.

NOTE

If the truck is equipped with the "load measurement" comfort feature, a "zero adjustment of the load measurement" is imperative after the fork extension has been changed; see the "Zero adjustment of the load measurement" chapter. Otherwise, correct load measurement cannot be guaranteed.

https://truckmanualshub.com/

Attachment

DANGER

Risk to life from falling load!

At least 60% of the length of the fork extension must lie on the fork arm. A maximum 40% overhang over the fork arm end is permissible. The fork extension must also be secured against slipping from the fork arm.

If the fork extension (1) is not secured with a securing bolt (2) and linch pin (3), the load with the fork extension may fall.

- Push the fork extension completely to the back of the fork.
- Make sure that 60% of the length of the fork extension is on the fork arm.
- Always secure the fork extension with a securing bolt.
- Always secure the securing bolt with a linch pin.

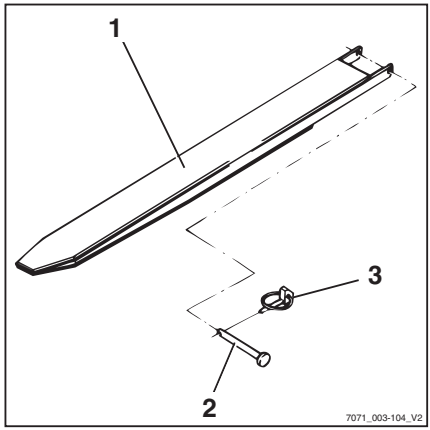

- Remove the linch pin (3) from the securing bolt (2).
- Remove the securing bolt from the fork extension (1).
- Push the fork extension onto the fork arms until it is flush with the fork back.
- Insert the securing bolts located behind the fork back fully into the fork extension.
- Insert the linch pin into the securing bolt and secure.

Removal

- Remove the linch pin (3) from the securing bolt (2).
- Remove the securing bolt from the fork extension (1).
- Pull the fork extension from the fork arms.
- Insert the securing bolt fully into the fork extension.
- Insert the linch pin into the securing bolt and secure.

https://truckmanualshub.com/

Operation with reversible fork arms (variant)

Normal operation

The reversible fork arms (variant) can be lifted and tilted with the lift mast in the same manner as a normal fork.

Reverse operation

DANGER

Risk to life from falling load!

Standard fork arms are not structurally designed for reverse operation. If this is not observed, this can lead to material failure and the load falling.

– Do not carry out reverse operation with the standard fork arms.

WARNING

Risk of accident from slipping load!

Loads may slip on the fork arms (1) if there is no load support. A fork extension (variant) cannot be secured against slipping.

– Load pick-up on the fork arms is not permitted.
– The fork extension (variant) must not be used.

WARNING

Risk of accident from the truck tipping over.

When driving, the centre of gravity of the load (2) must not be higher than 600 mm above the ground. The truck may tip forwards when driving or braking.

– Only drive with the load centre of gravity up to a max. of 600 mm above the ground.

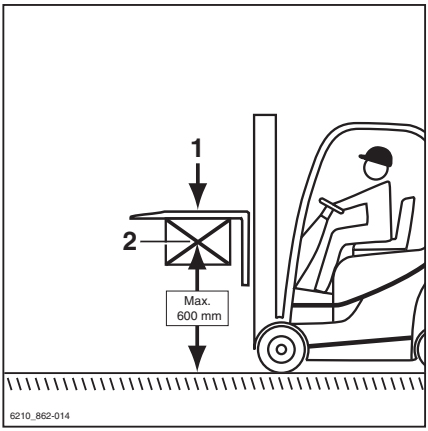

https://truckmanualshub.com/

NOTE

If the truck is equipped with the "load measurement" comfort feature, then a "zero adjustment of the load measurement" is obligatory after the reversible fork arms have been changed; see ⇒ Chapter "Zero adjustment of the load measurement (variant)", P. 5-101. Otherwise, correct load measurement cannot be guaranteed.

https://truckmanualshub.com/

Working with loads

Safety regulations when handing loads

The safety regulations for handling loads are shown in the following sections.

DANGER

There is a risk to life caused by falling loads or if parts of the truck are being lowered.

- Never walk or stand underneath suspended loads or raised fork arms.
- Never exceed the maximum load indicated on the capacity rating plate. Otherwise stability cannot be guaranteed!

DANGER

Risk of accident from falling or crushing!

- Do not step onto the forks.
- Do not lift people.
- Never grab or climb on moving parts of the truck.

DANGER

Risk of accident from a falling load!

- When transporting small items, attach a load safety guard (variant) to prevent the load from falling on the driver.
- Use a closed roof covering (variant) in addition.

https://truckmanualshub.com/

Before taking up load

Load capacity

The load capacity indicated for the truck on the capacity rating plate may not be exceeded. The load capacity is influenced by the load centre of gravity and the lift height as well as by the tyres, if applicable.

The position of the capacity rating plate can be found in the chapter entitled "Identification points".

WARNING

The figures show examples.

Only the capacity rating plates on the truck are valid!

The attachment of additional weights to increase load capacity is prohibited.

DANGER

Risk to life from the truck losing stability!

Never exceed the maximum loads shown! These values apply to compact and homogenous loads. Otherwise, the stability as well as the rigidity of the fork arms and lift mast cannot be guaranteed.

Improper or incorrect operation or the placement of persons to increase load capacity is prohibited.

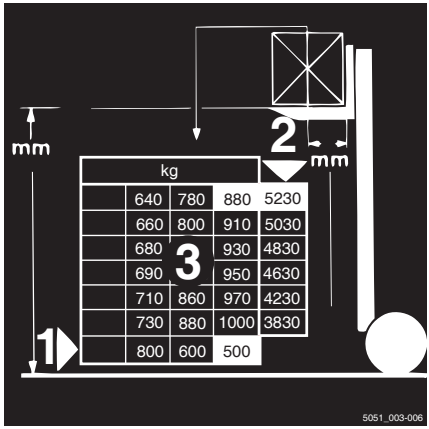

https://truckmanualshub.com/

Example

Weight of load to be lifted: 880 kg (3)

Load distance from fork back: 500 mm (1)

Permitted lift height: 5230 mm (2)

⚠ WARNING

Risk of accident from the truck losing stability!

The permissible load of the attachments (variant) and the reduced lifting capacity of the combination of truck and attachment must not be exceeded.

– Observe the special capacity rating plate information shown on the truck and the attachment.

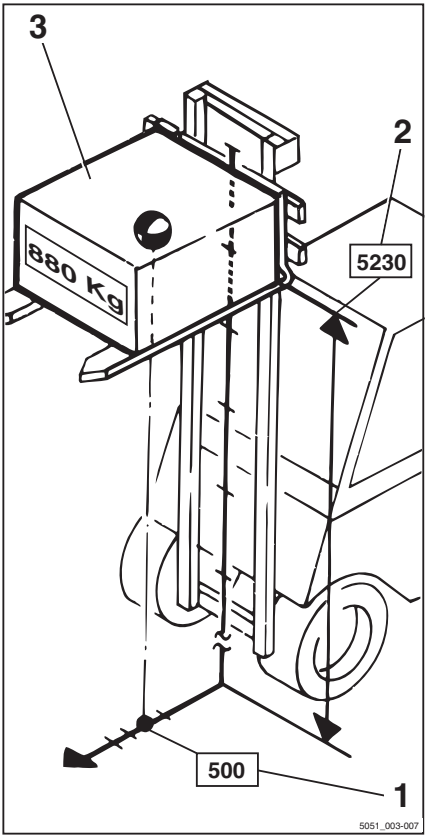

Load measurement (variant)

Description

Knowing the weight of the load to be transported gives the driver greater security. If the truck is equipped with the "load measurement" (variant) comfort feature, the weight of the lifted load can be measured and shown in the display and operating unit.

Load measurement is possible only when the truck is at a standstill. Before performing a load measurement, the load must be raised to a height of 300-800 mm above the ground.

https://truckmanualshub.com/

The load measurement has an accuracy of +/-3% of the rated capacity of the truck.

NOTE

In order to ensure accuracy at all times, a zero adjustment of the load measurement must be carried out. Zero adjustment is required.

- *as part of daily commissioning*
- *after changing the fork arms*
- *after fitting or changing attachments.*

Performing the load measurement

DANGER

Risk of accident from a falling load!

The load may fall if the load centre of gravity has not been taken into account or the load has not been picked up securely.

– Pick up the load securely; see the chapter entitled "Picking up loads".

CAUTION

If the weight determined by a load measurement exceeds the permissible residual load capacity of the truck, the truck cannot be operated safely.

– Set down and reduce load immediately.
– If necessary, use another truck with sufficient load-bearing capacity.

NOTE

Accurate load measurement is only possible under the following conditions:

- *The hydraulic oil is at normal operating temperature*
- *The load is at rest at the beginning of the load measurement*
- *The load corresponds to at least 10% of the nominal load capacity in trucks with a load capacity of up to 2.5 t*
- *The load corresponds to at least 5% of the nominal load capacity in trucks with a load capacity of 3 t and over*
- *The lift mast is in the vertical position*
- *The fork is not raised to more than 800 mm above the ground*

https://truckmanualshub.com/

NOTE

The method of operating the lifting system depends on the operating devices included in the truck's equipment.

– Ensure that the truck has been in operation for a period of time before carrying out the load measurement.

– Set lift mast to vertical.

– Raise the fork to a height of 300–800 mm.

– Ensure that the load is at rest.

– Press button (1) for "load measurement"; the "load measurement" symbol (2) appears on the display highlighted in black.

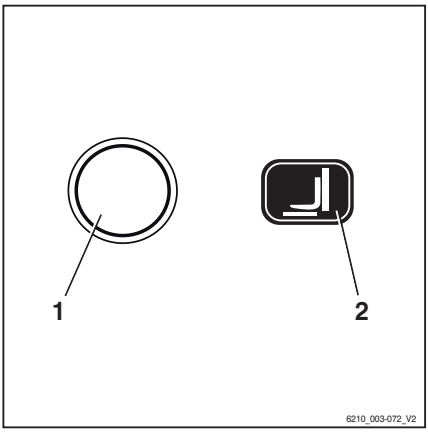

NOTE

If the truck is equipped with mini-levers or fingertip operation, the "F1" button can also be pressed as an alternative.

NOTE

During the following process, the fork carriage must be lowered slightly and then stopped abruptly. While doing so, the fork must not touch the ground, otherwise the load measurement will not be accurate. To stop the lowering procedure quickly, release the operating device for lowering so that it jumps into the zero position.

– Lower the fork carriage slightly and release the operating device.

NOTE

When stopping the lowering process the load must be cushioned in order to create a measurable impulse.

https://truckmanualshub.com/

When the load measurement has been carried out correctly, the determined load weight is displayed in the operating unit. ▷

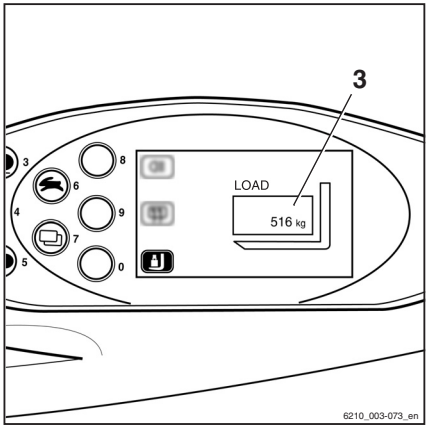

NOTE

If the load measurement is invalid, the value "-9999 kg" is displayed in the operating unit.

Picking up loads

To make sure that the load is securely supported, it must be ensured that the fork arms are sufficiently far apart and are positioned as far as possible under the load.

If possible, the load should rest on the back of the fork.

The load must not protrude too far over the fork tips, nor should the fork tips protrude too far out from the load.

Loads are to be picked up and transported as close to the middle as possible.

DANGER

Risk of accident from a falling load!

When transporting small items, attach a load safety guard (variant) to prevent the load from falling on the driver.

A closed roof covering (variant) should also be used.

Removable roof panels may not be removed.

https://truckmanualshub.com/

Adjusting the fork

- Lift the locking lever (1) and move the fork arms to the desired position.
- Allow the locking lever to snap back into place.

The load centre of gravity must be midway between the fork arms.

- Only actuate the fork prong positioner (variant) when the fork is not carrying a load.

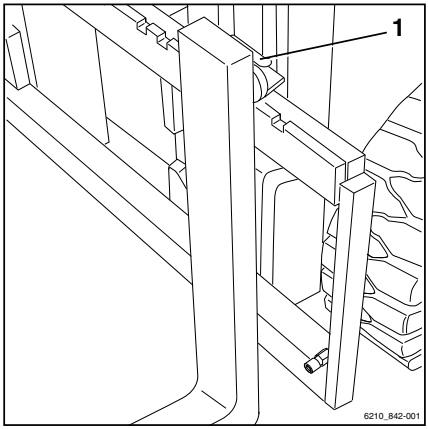

Danger area

The danger area is the area in which people are at risk due to the movements of the truck, its working equipment, its load-carrying equipment (e.g. attachments) or the load. Also included are the areas where loads could fall or working equipment could fall or be lowered.

DANGER

Risk of injury!

- Do not step on the fork.

DANGER

Risk of injury!

- Do not step under the raised forks.

DANGER

People may be injured in the danger area of the truck!

The danger area of the truck must be completely clear of all personnel, except the driver in his normal operating position. If persons fail to leave the danger area despite warnings:

- Cease work with the truck immediately.
- Secure the truck against use by unauthorised parties.

https://truckmanualshub.com/

DANGER

Danger of death from falling loads!

– Never walk or stand underneath suspended loads.

Transporting pallets

As a rule, loads (e.g. pallets) must be transported individually. Transporting multiple loads at the same time is only permitted:

- when instructed by the supervisor and
- when the technical requirements have been met.

The driver must ensure proper condition of the load. Only safely and carefully positioned loads may be transported.

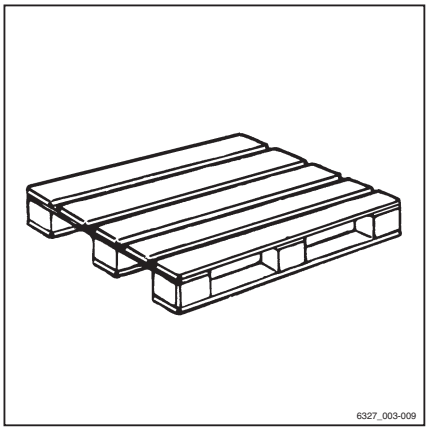

Transport of swinging loads

Contact your national regulatory authorities (employer's liability insurance associations in Germany) prior to transporting swinging loads.

National regulations may place restrictions on these operations. Contact the relevant authorities.

DANGER

Swinging loads can result in the following risks:

- Impaired braking and steering action
- Tipping over the load wheels or drive wheels
- Tipping the truck at right angles to the direction of travel
- Risk of crushing of guide persons
- Reduced visibility.

https://truckmanualshub.com/

DANGER

Loss of stability due to slipped, unstable or, in particular, hanging loads!

The following information should be noted when transporting hanging loads:

- Swinging of the load is to be prevented by using the proper driving speed and driving manner (careful steering, braking).
- Hanging loads must be coupled to the truck in such a way that the harness cannot shift or release unintentionally, and cannot be damaged.
- Take particular care to ensure that there are no persons in the direction of travel in the driving lane.
- Ensure that swinging loads do not put persons at risk.
- When transporting hanging loads, suitable devices (e.g. guy wires or hand rails) are to be made available and used by guide persons.

DANGER

Risk of accidents!

When transporting hanging loads, never abruptly perform or end driving and load movements during transport.

Never drive on slopes with a hanging load!

Containers with fluids cannot be transported as hanging loads.

Picking up a load

DANGER

There is a risk to life caused by a falling load or if parts of the truck are being lowered.

– Never walk or stand underneath suspended loads or raised fork arms.
– Never exceed the maximum load values specified on the capacity rating plate. Otherwise, stability cannot be guaranteed.

– Only store pallets that do not exceed the specified maximum size. Damaged loading equipment and incorrectly formed loads must not be stored.

https://truckmanualshub.com/

– Attach or secure the load to the lifting accessory so that the load cannot move or fall.

– Store the load so that the specified aisle width is not reduced by protruding parts.

– Approach the rack carefully, brake gently and stop just in front of the rack.

▷

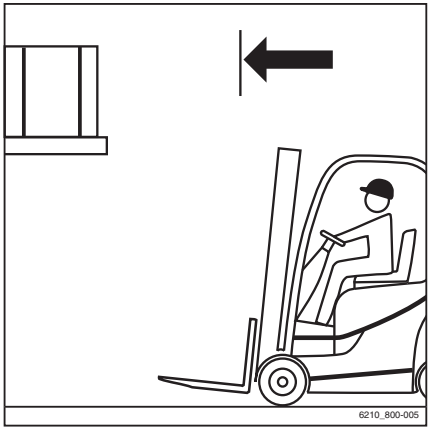

– Position the forks.

▷

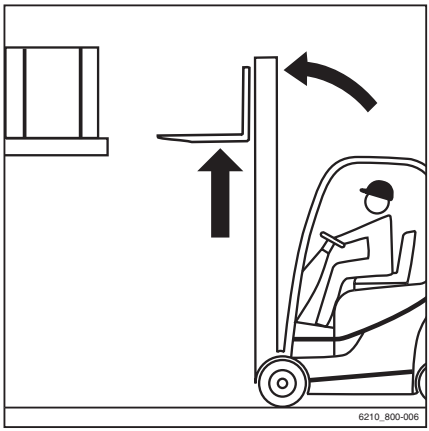

NOTE

The tilt speed of the lift mast in this truck is significantly higher than for previous products in this series. This is signalled by a warning message shown on the display and operating unit after the key switch has been switched on.

– Set the lift mast to vertical.

– Lift the fork carriage to the stacking height.

CAUTION

Risk of component damage!

When inserting the fork into the rack, ensure that the rack and load are not damaged.

https://truckmanualshub.com/

– Insert the fork as far under the load as possible. Stop the truck as soon as the fork back is resting on the load. The load centre of gravity must be midway between the fork arms.

– Lift the fork carriage until the load is resting entirely on the fork.

DANGER

Risk of accident!

– Beware of any people in the danger area.

CAUTION

Risk of component damage!

– Ensure that the roadway behind you is clear.

– Reverse carefully and slowly until the load is clear of the rack. Brake gently.

DANGER

Due to the risk of tipping, never tilt the lift mast with a raised load!

– Lower the load before tilting the lift mast.

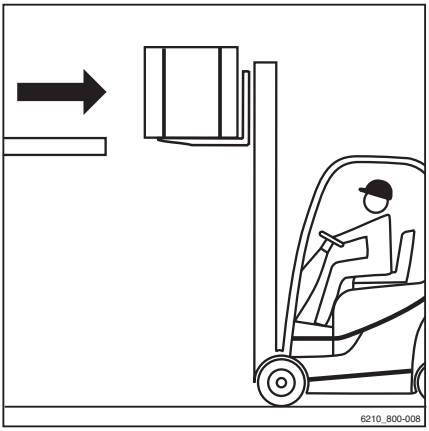

https://truckmanualshub.com/

– Lower the load while maintaining ground clearance.

▷

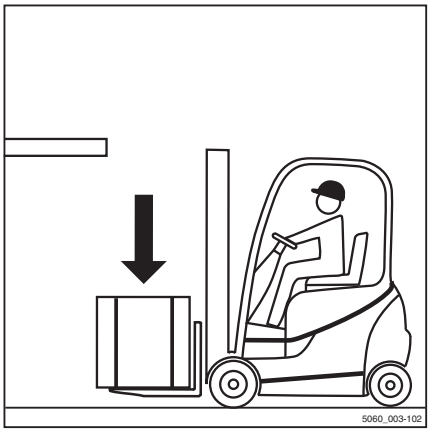

– Tilt the lift mast backwards.

▷

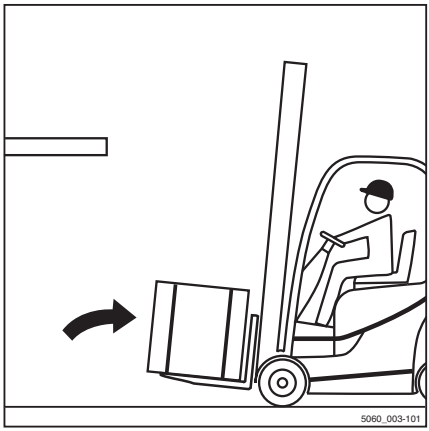

The load can be transported.

https://truckmanualshub.com/

Transporting loads

▷

NOTE

Observe the information in the chapter entitled "Safety regulations when driving".

DANGER

The higher a load is lifted, the less stable it becomes. The truck can tip over or the load can fall, increasing the risk of accident!

Driving with a raised load and the lift mast tilted forward is not permitted.

- Only drive with the load lowered.
- Lower the load until ground clearance is reached (not over 300 mm).
- Only drive with the lift mast tilted backwards.

- Drive slowly and carefully round corners!

▷

NOTE

Observe the information in the chapter entitled "Steering".

- Always accelerate and brake gently!

NOTE

Observe the information in the chapter entitled "Operating the service brake".

https://truckmanualshub.com/

– Never drive with a load protruding to the side (e.g. with the sideshift)!

▷

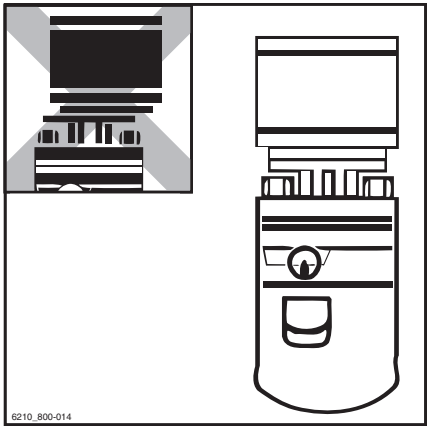

Setting down loads

DANGER

Risk of accident due to changed moment of tilt!

Please note that the lift mast can be tilted far enough forward with a raised load to cause the truck to tip over.

The load centre of gravity and the moment of tilt both change when the load slips. The truck may tip forwards.

– Only tilt the lift mast forwards with a raised lifting accessory when it is directly above the stack.
– When the lift mast is tilted forwards, take particular care to ensure that the truck does not tip forwards and that the load does not slip.

WARNING

Risk of accident from falling load!

If the fork or the load remains suspended during lowering, the load may fall.

– When removing from stock, move the truck far enough back so that the load and the fork can be lowered freely.

NOTE

If the truck is to be used to store a raised load with the lift mast tilted forwards, e.g. in a rack with sloping racking channels, an additional

https://truckmanualshub.com/

load capacity diagram must be created as the stability will be affected.

- *Contact the authorised service centre on this matter.*

– Drive up to the stack with the load lowered in accordance with regulations.

– Set the lift mast to vertical.

– Lift the load to the stacking height.

– Approach the rack at a moderate speed.

NOTE

The tilt speed of the lift mast in this truck is significantly higher than for previous products in this series. This is signalled by a warning message shown on the display and operating unit after the key switch has been switched on.

– Lower the load until it rests securely on the rack.

– Look behind you!

– Move the truck back until the fork arms can be lowered without touching the stack.

– Lower the fork to the ground clearance position.

– Tilt the lift mast backwards and drive away.

https://truckmanualshub.com/

Driving on ascending and descending slopes

DANGER

Danger to life!

On ascending and descending slopes the load must be carried facing uphill.

It is only permitted to drive on ascending and descending slopes if they are marked as traffic routes and can be used safely.

The driver must check that the ground is clean with a good grip.

It is not permitted to perform turns on ascending slopes, to approach them diagonally or to park the truck on them.

Drive at a reduced speed on descending slopes.

It is not permitted to put items into stock or to remove them from stock while on an ascending or descending slope.

The forklift truck should not be parked on a slope.

– In case of emergency, secure the truck with chocks.

Driving on lifts

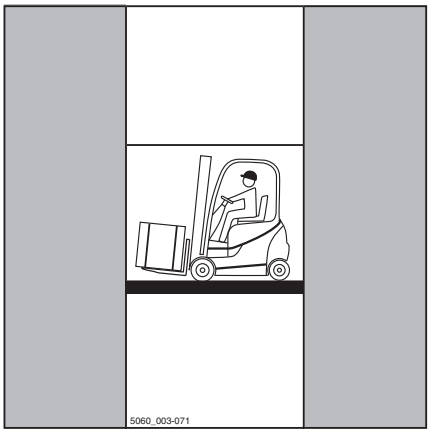

The driver is only allowed to use this truck on lifts with a sufficient load capacity and for which the operating company (see ⇒ Chapter "Definition of responsible persons", P. 26) has been granted authorisation.

DANGER

There is a risk to life from being crushed or run over by the truck.

– There must be no personnel already in the lift when the truck is driven into the lift.

– Personnel are only permitted to enter the lift once the truck is secure, and must exit the lift before the truck is driven out.

https://truckmanualshub.com/

Determining the actual total weight

- Park the truck securely, see ⇒ Chapter "Parking the truck securely and switching it off", P. 5-282.
- Determine the unit weights by reading the truck nameplate and, if necessary, the attachment (variant) nameplate and, if necessary, by weighing the load to be lifted.
- Add the determined unit weights to obtain the actual total weight of the truck:

  Tare weight (1)

  \+ Max. permissible battery weight (2)

  \+ Ballast weight (variant) (3)

  \+ Net weight of attachment (variant)

  \+ Weight of the load to be lifted

  \+ 100 kg allowance for the driver

  = Actual total weight

- Drive the truck with the forks forwards into the lift without touching the shaft walls.
- Park the truck securely in the lift, see ⇒ Chapter "Parking the truck securely and switching it off", P. 5-282, to prevent uncontrolled movements of the load or the truck.

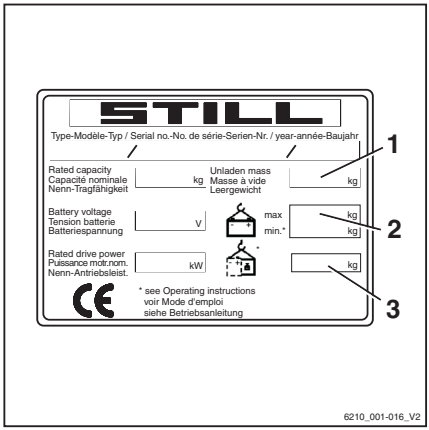

https://truckmanualshub.com/

Driving on loading bridges

DANGER

Risk of accident if the truck crashes!

Steering movements can cause the tail end to veer off the loading bridge towards the edge. This may cause the truck to crash.

For 3-wheel trucks, the useable area of the loading bridge must be enclosed so that the rear drive wheel does not fall through.

The lorry driver and the truck driver must agree on the lorry's departure time.

- Establish the departure time of the truck.
- Determine the actual total weight of the truck.
- Before driving across a loading bridge, ensure that it is properly attached and secured and has a sufficient load capacity (lorry, bridge etc.).
- Ensure that the vehicle onto which you will be driving is secured to prevent it from shifting and can support the load of the truck.

Determining the actual total weight

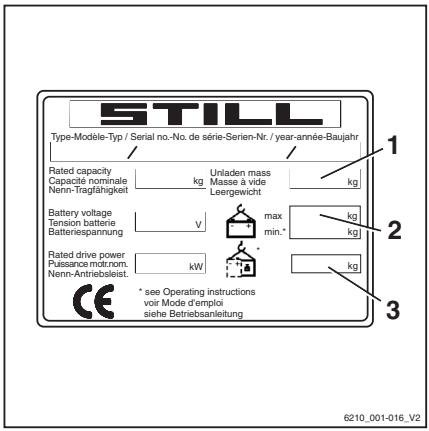

- Park the truck securely.
- Determine the unit weights by reading the truck nameplate and, if necessary, the attachment (variant) nameplate and, if necessary, by weighing the load to be lifted.
- Add the determined unit weights to obtain the actual total weight of the truck:

  Tare weight (1)

  \+ Max. permissible battery weight (2)

  \+ Ballast weight (variant) (3)

  \+ Attachment net weight (variant)

  \+ Weight of the load to be lifted

  \+ 100 kg allowance for driver

  = Actual total weight

- Drive slowly and with care on the loading bridge.

https://truckmanualshub.com/

Working with attachments

Fitting attachments

If the truck is equipped with an integrated attachment (variant) at the factory, the specifications in the STILL operating instructions for integrated attachments must be observed.

If attachments are fitted at the place of use, the specifications in the operating instructions of the attachment manufacturer must be observed.

If an attachment is not delivered together with the forklift truck, the specifications and operating instructions of the attachment manufacturer must be observed.

Before initial commissioning, the function of the attachment and the visibility from the driver's position with and without a load must be checked by a competent person. If the visibility is deemed insufficient, visual aids such as mirrors, a camera/monitor system etc. must be used.

NOTE

Please observe the definition of the following responsible person: "competent person".

CAUTION

Attachments must be CE-certified. If the truck is not fitted with an attachment-specific residual load capacity rating plate and the operating devices are not marked with corresponding pictograms, the truck must not be used.

- Order the residual load capacity rating plate and pictograms from your authorised service centre in good time.
- The authorised service centre must adapt the hydraulic system to the requirements of the attachment (e.g. by adjusting the pump motor speed).

https://truckmanualshub.com/

DANGER

There is risk to life caused by a falling load!

Attachments that hold the load by exerting pressure on it (e.g. clamps) must be controlled additionally by a second operating function (lock) that is actuated to prevent an unintentional release of the load.

If such an attachment is retrofitted, a second operating function for actuation must also be retrofitted.

– Make sure that the additional clamp locking mechanism function is available.

DANGER

There is risk to life caused by a falling load!

During installation of a clamp with integral sideshift, ensure that the clamp does not open when the sideshift is actuated.

– Notify your authorised service centre before installation.
– Never grab or climb on moving parts of the truck.

Hydraulic connection

– Before installing the attachment, release the pressure from the hydraulic system.

CAUTION

Risk of damage to components!

Open connections of plug connectors can become dirty. The plug connectors can become stiff and dirt can enter the hydraulic system.

– Once the attachment has been disassembled, attach the protective caps to the plug connectors.

Mounting attachments

Mounting an attachment and connecting the energy supply for an attachment must only be performed by competent persons in accordance with the information provided by the manufacturer and supplier of the attachment. After each installation, the attachment must be checked for correct function prior to initial commissioning.

NOTE

Please observe the definition of the following responsible person: "competent person".

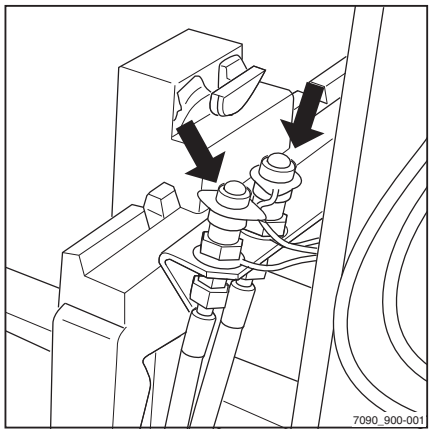

https://truckmanualshub.com/

Load capacity with attachment

The permissible load capacity of the attachment and the allowable load (load capacity and load moment) of the truck must not be exceeded by the combination of attachment and payload. The specifications of the manufacturer and supplier of the attachment must be complied with.

– Observe the residual load capacity rating plate, see the chapter entitled "Taking up a load using attachments".

Releasing the pressure from the hydraulic system

▷

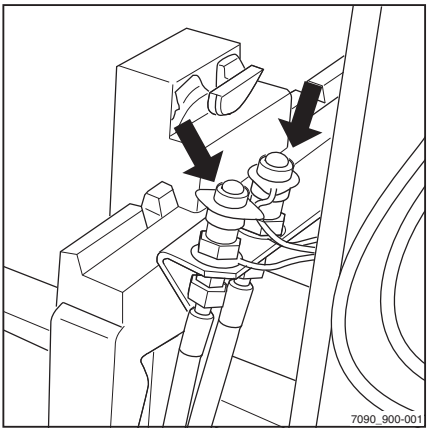

Prior to assembling attachments, the plug connectors must be depressurised.

Attachments must only be installed by authorised personnel in accordance with the information provided by the manufacturer and supplier of the attachments. After each installation, the attachment must be checked for correct function prior to initial commissioning.

NOTE

The pressure release procedure is dependent on the operating devices for controlling the hydraulic functions; see the chapter entitled "Lifting system operating devices".

Depressurisation, multi-lever

▷

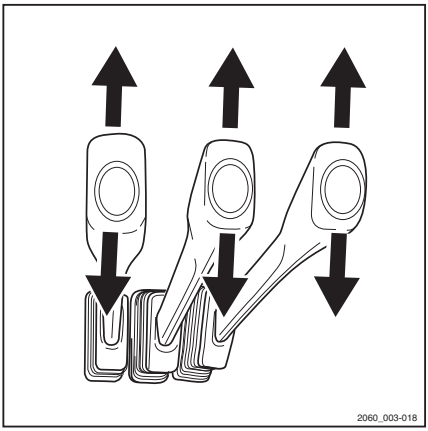

– Switch on the key switch.
– Lower the fork carriage to the ground.
– Tilt the lift mast back to the stop
– Switch off the key switch.
– Actuate the operating lever for controlling the hydraulic functions repeatedly in the direction of the arrow as far as the end position

NOTE

The number of operating levers shown may differ from the truck's equipment.

https://truckmanualshub.com/

Releasing pressure, joystick 4Plus, mini-lever and fingertip switch

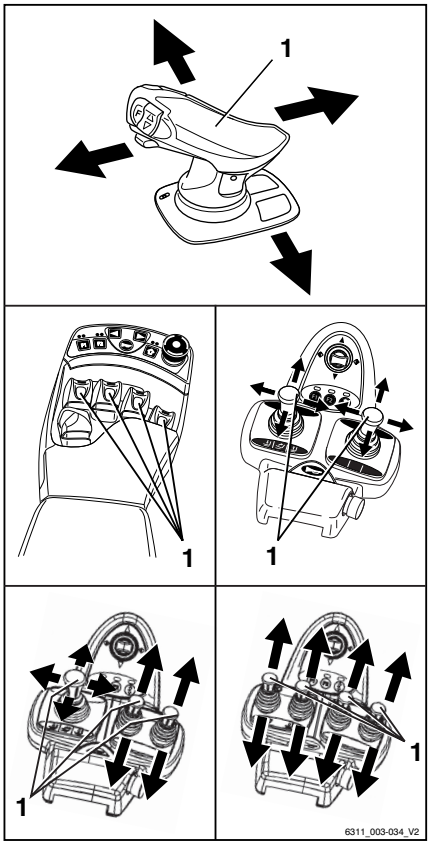

NOTE

In trucks with the "FleetManager" or "access authorisation with PIN code" equipment variants, access authorisation must be enabled.

- Switch on the key switch.
- Lower the fork carriage.
- Switch on the hazard warning system (variant).

NOTE

Press the button for switching on the hazard warning system even if the truck is not equipped with a hazard warning system. Switching on the hazard warning system prevents the electrical system from being switched off, even if the key switch is subsequently switched off.

- Switch off the key switch.
- Actuate the operating lever (1) for controlling the hydraulic functions repeatedly in the direction of the arrow, as far as the end position.

The valves open and the hydraulic system is depressurised.

https://truckmanualshub.com/

General instructions for controlling attachments

The way in which attachments (variant) are controlled depends on the operating devices included in the truck's equipment.

Essentially, a distinction is drawn between:

- **Multiple-lever**
- **Multiple-lever with a 5th function** (variant)
- **Double mini-lever**
- **Double mini-lever with a 5th function** (variant)
- **Triple mini-lever**
- **Triple mini-lever with a 5th function** (variant)
- **Quadruple mini-lever**
- **Quadruple mini-lever with a 5th function** (variant)
- **Joystick 4Plus**
- **Joystick 4Plus with a 5th function** (variant)
- **Fingertip**
- **Fingertip with a 5th function** (variant)

– For information on controlling attachments with the respective operating devices, see the relevant sections in this chapter.

⚠ WARNING

Use of attachments can give rise to additional hazards such as a change in the centre of gravity, additional danger areas etc.

Attachments must only be used for their intended purpose as described in the relevant operating instructions. Drivers must be taught how to operate the attachments.

Loads may only be picked up and transported with attachments if they are securely grasped and attached. Where necessary, loads must also be secured against slipping, rolling away, falling over, swinging or tipping over. Note that any change to the position of the load centre of gravity will affect the stability of the truck.

– Refer to the capacity rating plate for the attachments being used.

NOTE

Further variants and functions are available in addition to the functions described below. The

https://truckmanualshub.com/

directions of movement can be seen on the pictograms on the operating devices.

NOTE

All the attachments described fall into the category of equipment variants. Please see the respective operating instructions for an exact description of the respective movements/actions of the attachment fitted.

https://truckmanualshub.com/

Controlling attachments using multi-lever operation

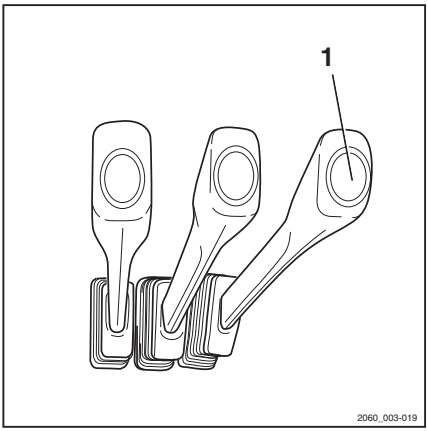

The attachments (variant) are controlled in this version using the operating lever (1).

The pictograms on the operating lever show all of the functions that are activated by this lever.

The meanings are as follows:

– Move operating lever (1) forwards.

The attachment moves in the direction of movement shown in the upper part of the pictogram.

– Move operating lever (1) backwards.

The attachment moves in the direction of movement shown in the lower part of the pictogram.

– Note the following attachment functions and pictograms.

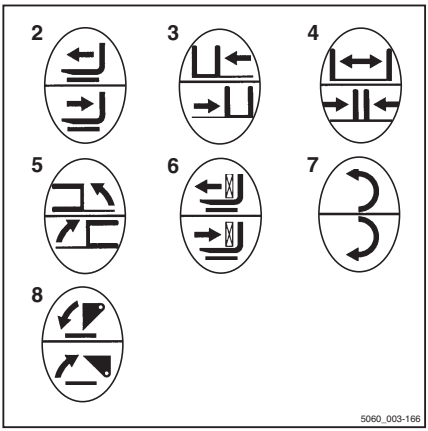

2	Move side shift frame or fork forwards/backwards
3	Move sideshift to the left/right
4	Adjust fork arms: open/close
5	Swivel lift mast or fork to the left/right
6	Push off/pull in load
7	Turn to the left/right
8	Tip shovel over/tip shovel back

NOTE

The pictograms shown correspond to the attachments fitted to this truck at the factory. If an attachment with other functions is fitted, the pictograms must be checked for the correct representation and changed if necessary.

– Contact the authorised service centre if required.

https://truckmanualshub.com/

Controlling attachments using multi-lever operation and the 5th function

The attachments (variant) are controlled in this version using operating levers (1) and (2).

On the operating lever (1) you can, with the aid of switch (3), initiate a function changeover so that this operating lever then controls the "5th function".

NOTE

The "5th function" designation refers to the fact that the four operating levers control four functions, while the "5th function" can be controlled by switching functions.

The top and bottom parts of the pictograms on the operating levers always show the function that is activated by that lever. The upper part of the pictogram shows that the attachment is equipped with the 5th function.""

The meanings are as follows:

– Move operating lever forwards:

The attachment moves in the direction of movement shown in the centre part of the pictogram.

– Move operating lever backwards:

The attachment moves in the direction of movement shown in the lower part of the pictogram.

– Actuate the switch

The additional function of the attachment is activated and can be controlled as the "5th function" with the operating lever.

NOTE

Please see the operating instructions of the fitted attachment for the movements/actions resulting from using this "5th function".

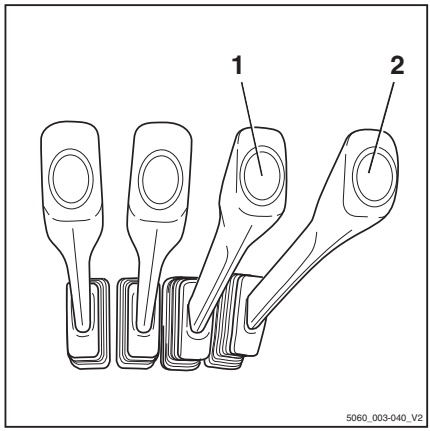

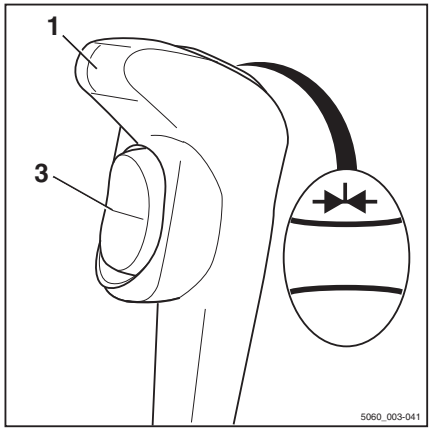

https://truckmanualshub.com/

– Note the following attachment functions and pictograms. ▷

2	Move side shift frame or fork forwards/backwards
3	Move sideshift to the left/right
4	Adjust fork arms: open/close
5	Push off/pull in load
6	Turn to the left/right
7	Tip shovel over/tip shovel back
8	Swivel lift mast or fork to the left/right

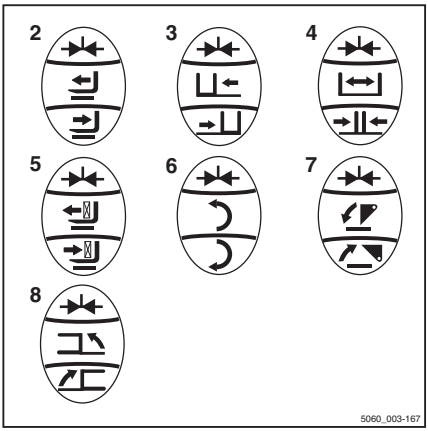

NOTE

The pictograms shown correspond to the attachments fitted to this truck at the factory. If an attachment with other functions is fitted, the pictograms must be checked for the correct representation and changed if necessary.

– Contact the authorised service centre if required.

https://truckmanualshub.com/

Controlling attachments using a double mini-lever

The attachments (variants) are controlled in this version using the "attachments" cross lever (1).

The pictograms on the "attachments" cross lever show the respective functions that are activated by this lever.

This essentially involves the following:

– Move the "attachments"(1) cross lever in the direction of the arrow (A) .

The attachment moves in accordance with the pictogram in position (A).

– Move the "attachments"(1) cross lever in the direction of the arrow (B) .

The attachment moves in accordance with the pictogram in position (B).

– Move the "attachments"(1) cross lever in the direction of the arrow (C) .

The attachment moves in accordance with the pictogram in position (C).

– Move the "attachments"(1) cross lever in the direction of the arrow (D) .

The attachment moves in accordance with the pictogram in position (D).

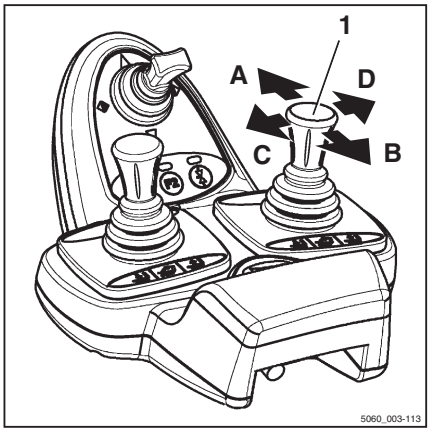

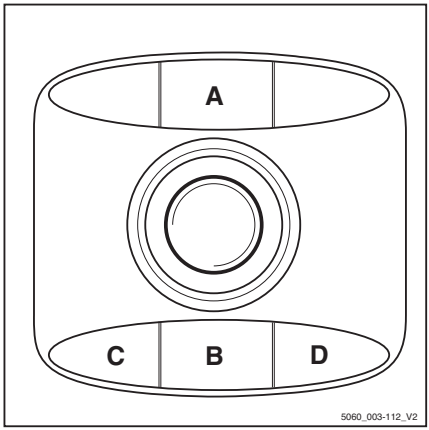

https://truckmanualshub.com/

– Note the following attachment functions and pictograms. ▷

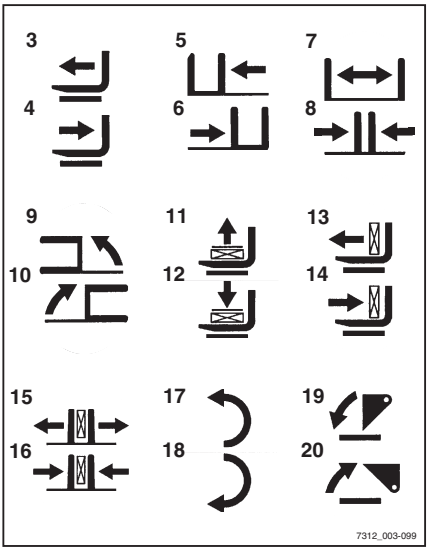

3	Move sideshift frame or fork forwards
4	Move sideshift frame or fork back-wards
5	Move sideshift to the left
6	Move sideshift to the right
7	Adjust fork arms: open
8	Adjust fork arms: close
9	Swivel lift mast or fork to the left
10	Swivel lift mast or fork to the right
11	Release load retainer
12	Clamp load retainer
13	Push off the load
14	Pull in the load
15	Open clamps
16	Close clamps
17	Rotate to the left
18	Rotate to the right
19	Tip shovel over
20	Tip shovel back

NOTE

The pictograms shown correspond to the attachments fitted to this truck at the factory. If an attachment with other functions is fitted, the pictograms must be checked for the correct representation and changed if necessary.

– Contact the authorised service centre if required.

https://truckmanualshub.com/

Controlling attachments using the double mini-lever and the 5th function

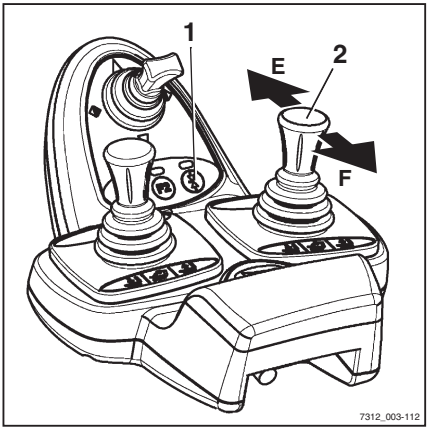

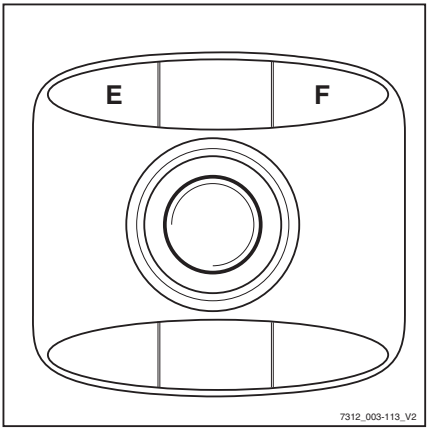

NOTE

The "lift mast" 360° lever and the "attachments" cross lever control four hydraulic functions. The "5th function" designation refers to the fact that switching functions using the "5th function" function key (1) control the 5th hydraulic function via the cross lever.

The pictograms on the "attachments" cross lever show the respective functions that are activated by this lever.

This essentially involves the following:

– Actuate the "5th function"(1) function key and move the "attachments"(2)cross lever in the direction of arrow (E).

The attachment moves in accordance with the pictogram in position (E).

– Actuate the "5th function" function key (1) and move the "attachments"(2) cross lever in the direction of the arrow (F).

The attachment moves in accordance with the pictogram in position (F).

https://truckmanualshub.com/

– Note the following attachment functions and pictograms. ▷

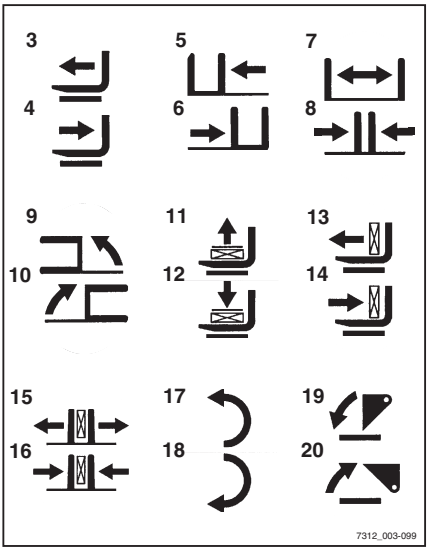

3	Move sideshift frame or fork forwards
4	Move sideshift frame or fork back-wards
5	Move sideshift to the left
6	Move sideshift to the right
7	Adjust fork arms: open
8	Adjust fork arms: close
9	Swivel lift mast or fork to the left
10	Swivel lift mast or fork to the right
11	Release load retainer
12	Clamp load retainer
13	Push off the load
14	Pull in the load
15	Open clamps
16	Close clamps
17	Rotate to the left
18	Rotate to the right
19	Tip shovel over
20	Tip shovel back

NOTE

The pictograms shown correspond to the attachments fitted to this truck at the factory. If an attachment with other functions is fitted, the pictograms must be checked for the correct representation and changed if necessary.

– Contact the authorised service centre if required.

https://truckmanualshub.com/

Controlling attachments using a triple mini-lever

The attachments (variant) are controlled in this version using operating levers (1) and (2).

The pictograms on the operating levers show the respective functions that are activated by these levers.

This essentially involves the following:

– Move the operating lever (1) towards (A)

The attachment moves in accordance with the pictogram in position (A).

– Move the operating lever (1) towards (B)

The attachment moves in accordance with the pictogram in position (B).

– Move the operating lever (2) towards (C)

The attachment moves in accordance with the pictogram in position (C).

– Move the operating lever (2) towards (D)

The attachment moves in accordance with the pictogram in position (D).

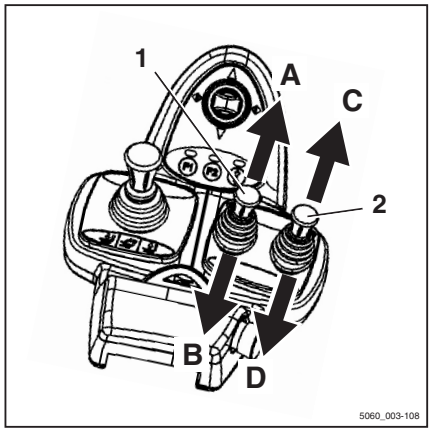

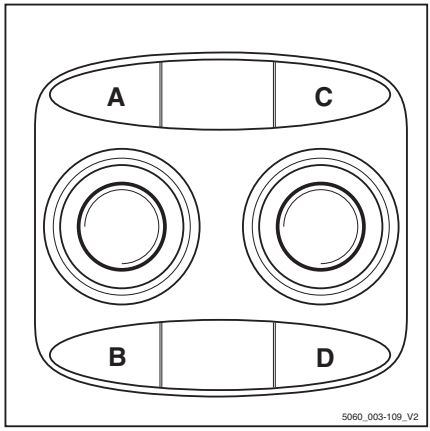

https://truckmanualshub.com/

– Note the following attachment functions and pictograms. ▷

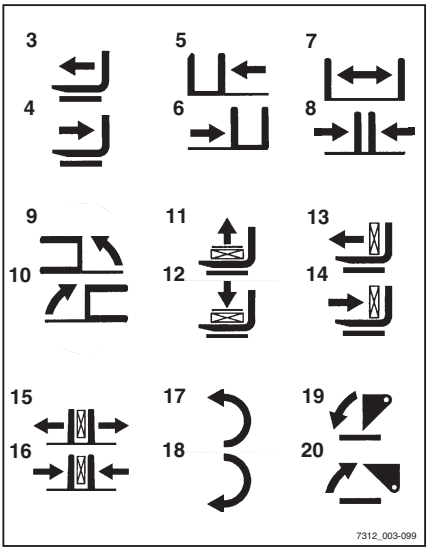

3	Move sideshift frame or fork forwards
4	Move sideshift frame or fork back-wards
5	Move sideshift to the left
6	Move sideshift to the right
7	Adjust fork arms: open
8	Adjust fork arms: close
9	Swivel lift mast or fork to the left
10	Swivel lift mast or fork to the right
11	Release load retainer
12	Clamp load retainer
13	Push off the load
14	Pull in the load
15	Open clamps
16	Close clamps
17	Rotate to the left
18	Rotate to the right
19	Tip shovel over
20	Tip shovel back

NOTE

The pictograms shown correspond to the attachments fitted to this truck at the factory. If an attachment with other functions is fitted, the pictograms must be checked for the correct representation and changed if necessary.

– Contact the authorised service centre if required.

https://truckmanualshub.com/

Controlling attachments using the three-way mini-lever and the 5th function

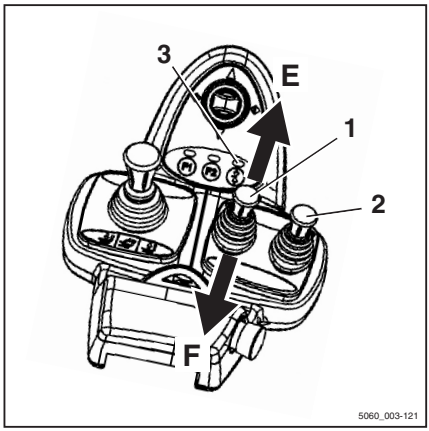

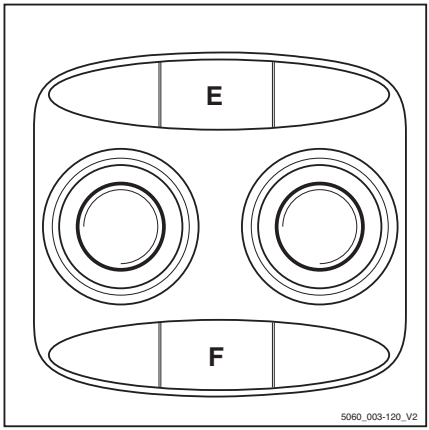

NOTE

Four hydraulic functions are controlled using the "lift mast" 360° lever and operating levers (1) and (2). The designation "5th function" refers to the fact that the function change-over uses the function key (3) , which then allows the 5th hydraulic function to be controlled with the operating lever (1).

The pictograms on the operating levers show the respective functions that are activated by these levers.

The meanings are as follows:

– Actuate the "5th function" function key (3) and move operating lever (1) towards (E).

The attachment moves in accordance with the pictogram in position (E).

– Actuate the "5th function" function key (3) and move the operating lever (1) towards(F).

The attachment moves in accordance with the pictogram in position (F) .

https://truckmanualshub.com/

– Note the following attachment functions and pictograms. ▷

1	Adjust fork arms: open
2	Adjust fork arms: close
3	Rotate to the left
4	Rotate to the right

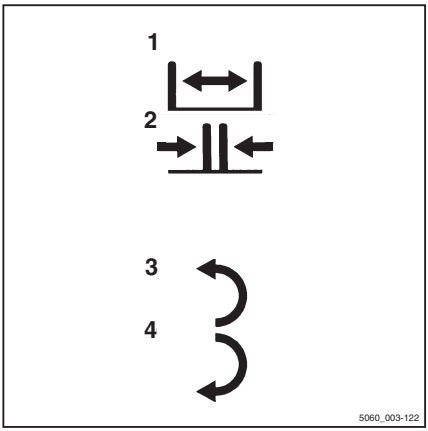

NOTE

The pictograms shown correspond to the attachments fitted to this truck at the factory. If an attachment with other functions is fitted, the pictograms must be checked for the correct representation and changed if necessary.

– Contact the authorised service centre if required.

https://truckmanualshub.com/

Controlling attachments using a quadruple mini-lever

The attachments (variant) are controlled in this version using operating levers (1) and (2).

The pictograms on the operating levers show the respective function that is activated by these levers.

This essentially involves the following:

– Move the operating lever (1) towards (A)

The attachment moves in the direction shown in pictogram (A).

– Move the operating lever (1) towards (B)

The attachment moves in the direction shown in pictogram (B).

– Move the operating lever (2) towards (C)

The attachment moves in the direction shown in pictogram (C).

– Move the operating lever (2) towards (D)

The attachment moves in the direction shown in pictogram (D).

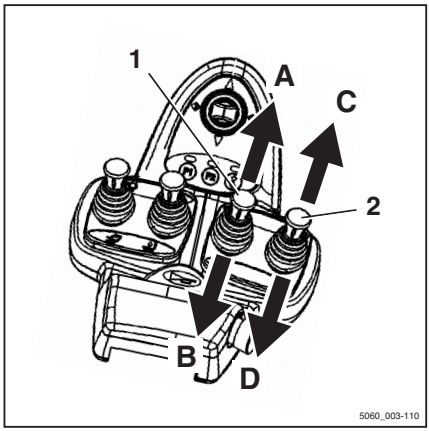

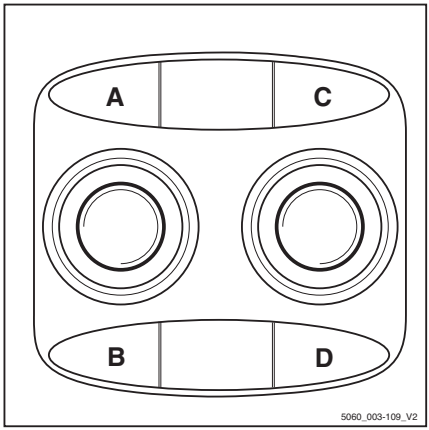

https://truckmanualshub.com/

– Note the following attachment functions and pictograms. ▷

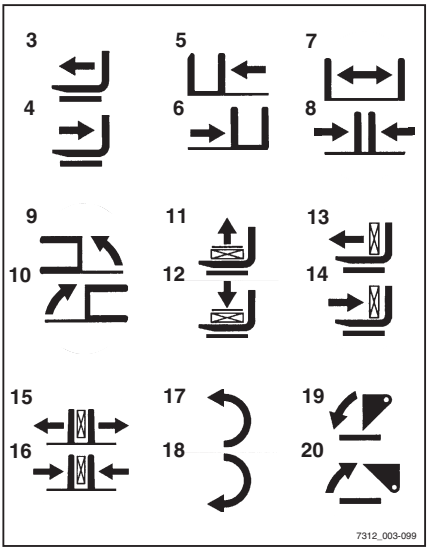

3	Move sideshift frame or fork forwards
4	Move sideshift frame or fork back-wards
5	Move sideshift to the left
6	Move sideshift to the right
7	Adjust fork arms: open
8	Adjust fork arms: close
9	Swivel lift mast or fork to the left
10	Swivel lift mast or fork to the right
11	Release load retainer
12	Clamp load retainer
13	Push off the load
14	Pull in the load
15	Open clamps
16	Close clamps
17	Rotate to the left
18	Rotate to the right
19	Tip shovel over
20	Tip shovel back

NOTE

The pictograms shown correspond to the attachments fitted to this truck at the factory. If an attachment with other functions is fitted, the pictograms must be checked for the correct representation and changed if necessary.

– Contact the authorised service centre if required.

https://truckmanualshub.com/

Controlling attachments using the four-way mini-lever and the 5th function

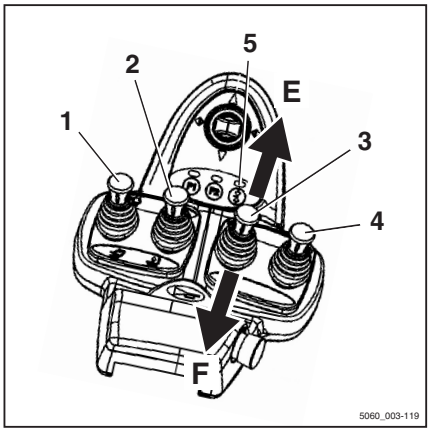

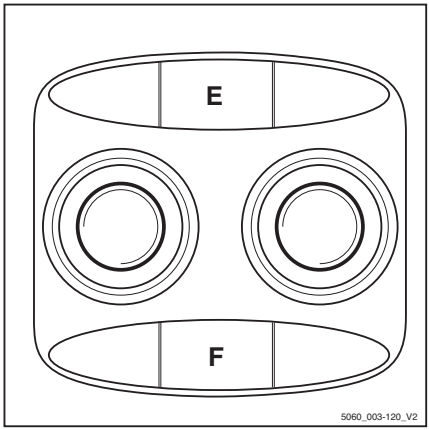

NOTE

Operating levers (1) to (4) are used to control 4 hydraulic functions. The designation "5th function" refers to the fact that the function change-over uses the "5th function" function key (5), which then allows the 5th hydraulic function to be controlled using the operating lever (3).

The pictograms on the operating levers show the respective functions that are activated by these levers.

The meanings are as follows:

– Actuate the "5th function" function key (5) and move operating lever (3) towards (E).

The attachment moves in accordance with the pictogram in position (E).

– Actuate the "5th function" function key (5) and move operating lever (3) towards (F).

The attachment moves in accordance with the pictogram in position (F).

https://truckmanualshub.com/

– Note the following attachment functions and pictograms. ▷

1	Adjust fork arms: open
2	Adjust fork arms: close
3	Rotate to the left
4	Rotate to the right

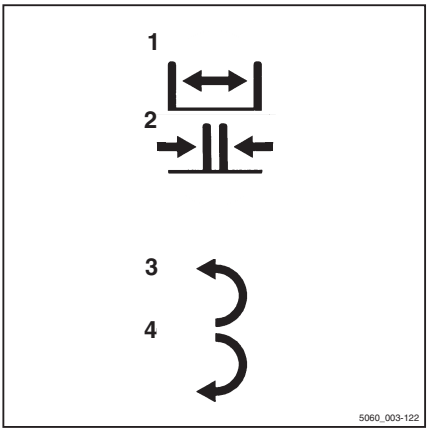

NOTE

The pictograms shown correspond to the attachments fitted to this truck at the factory. If an attachment with other functions is fitted, the pictograms must be checked for the correct representation and changed if necessary.

– Contact the authorised service centre if required.

https://truckmanualshub.com/

Controlling attachments via the joystick 4Plus

In this equipment, the attachments (variant) are controlled via the joystick 4Plus (1).

The pictograms on the decal information about operation of the joystick 4Plus show the respective functions that are activated by the individual operating devices of the joystick 4Plus.

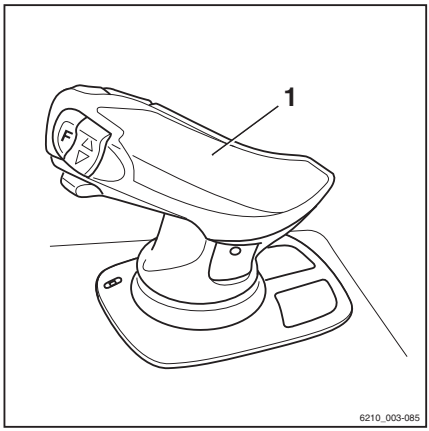

– Note the following attachment functions and pictograms.

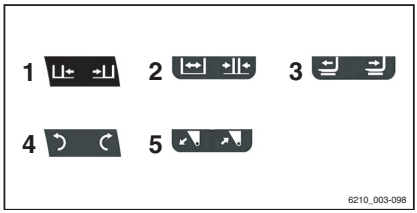

	Operating device	Function of the attachment
1	Joystick 4Plus	Move sideshift to the left/right
2	Joystick 4Plus or slider	Adjust fork arms: open/close
3	Slider	Move reach frame or fork carriage forwards/backwards
4	Joystick 4Plus or slider	Rotate attachment left/right
5	Slider	Tip shovel over/tip shovel back

NOTE

The pictograms on the joystick 4Plus are attached according to the attachments fitted to this truck at the factory. If an attachment with other functions is fitted, the pictograms must be checked for the correct representation and changed if necessary.

– Contact the authorised service centre if required.

https://truckmanualshub.com/

Controlling attachments using the joystick 4Plus and the 5th function

– Note the following attachment functions and pictograms.

	Operating device	Function of the attachment
1	Horizontal rocker button + shift button "F"	Release/open clamp

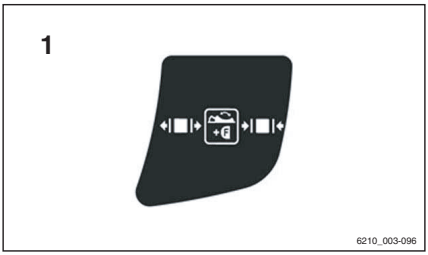

NOTE

The 5th hydraulic function can be used to control an attachment. The pictograms on the joystick 4Plus show which attachment functions can be controlled using the 5th function.

For attachments that are controlled using the 5th hydraulic function, the procedures for operation are as follows:

– Press and hold shift key "F"(1) on the joystick 4Plus.

– Simultaneously actuate the horizontal rocker switch (2) in the direction shown in the pictogram so that the attachment moves accordingly.

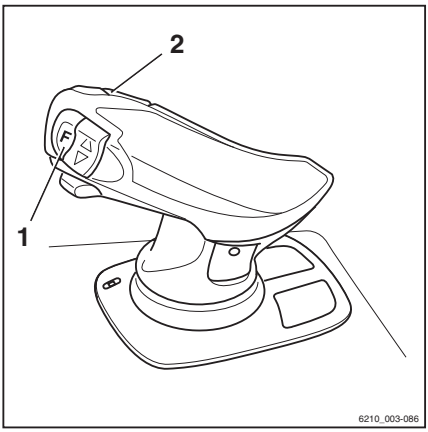

NOTE

The pictograms on the joystick 4Plus are attached according to the attachments fitted to this truck at the factory. If an attachment with other functions is fitted, the pictograms must be checked for the correct representation and changed if necessary.

– Contact the authorised service centre if required.

https://truckmanualshub.com/

Controlling the attachments with fingertip

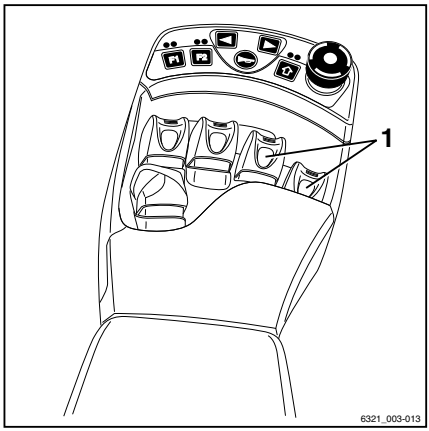

The attachments (variant) are controlled in this version using the operating levers (1).

The pictograms on the operating levers always show the functions that are activated by that lever.

– Move operating lever (1) forwards.

The attachment moves in the direction of movement shown in the upper part of the pictogram.

– Move operating lever (1) backwards.

The attachment moves in the direction of movement shown in the lower part of the pictogram.

– Note the following attachment functions and pictograms.

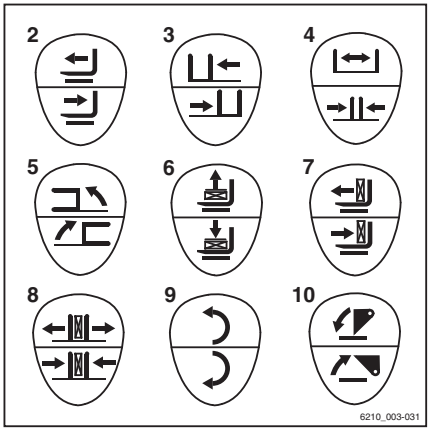

2	Move side shift frame or forks forwards/backwards
3	Move sideshift to the left/to the right
4	Adjust fork arms: open/close
5	Swivel lift mast or forks to the left/to the right
6	Release/clamp load retainer
7	Push off/pull in load
8	Open/close clamps
9	Turn to the left/to the right
10	Tip shovel over/tip shovel back

NOTE

The pictograms shown correspond to the attachments fitted to this truck at the factory. If an attachment with other functions is fitted, the pictograms must be checked for the correct representation and changed if necessary.

– Contact the authorised service centre if required.

https://truckmanualshub.com/

Controlling attachments with finger-tip and the 5th function ▷

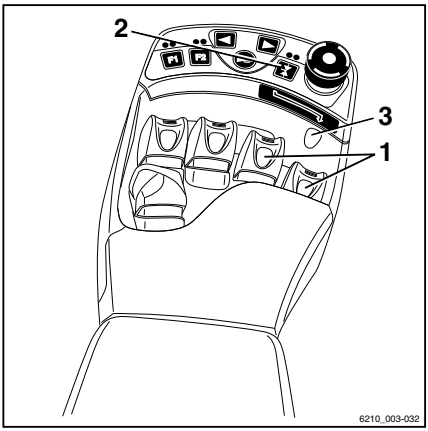

NOTE

The designation "5th function" refers to the fact that the four operating levers control four functions, while the "5th function" can be controlled by switching functions.

The attachments (variant) are controlled using the operating levers (1).

You can also use the switch (2) to switch functions, in which case the corresponding operating lever controls the "5th function".

The pictogram (3) behind the operating lever shows in the upper and lower parts the function that is activated with this lever.

The meanings are as follows:

– Move operating lever forwards.

The attachment moves in the direction of movement shown in the upper part of the pictogram.

– Move operating lever back.

The attachment moves in the direction of movement shown in the lower part of the pictogram.

– Actuate the switch (2).

The additional function of the attachment is activated/deactivated and can be controlled as the "5th function" using the operating lever.

https://truckmanualshub.com/

– Press the function key (4).

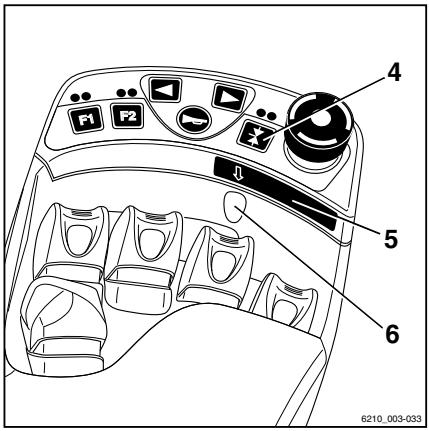

NOTE

The arrow (5) under the function key indicates which operating lever is equipped with the "5th function".

The "5th function" is switched to the 3rd operating lever; see adhesive label (6).

– Press the function key (7).

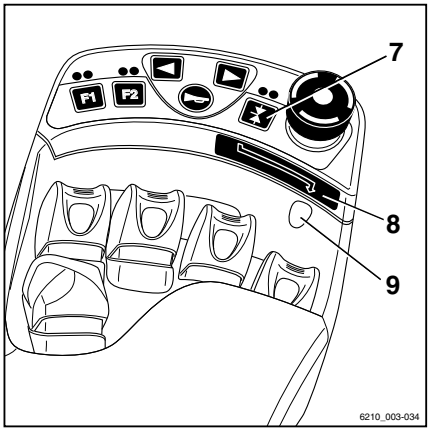

NOTE

The arrow (8) under the function key indicates which operating lever is equipped with the "5th function".

The "5th function" is switched to the 4th operating lever; see adhesive label (9).

NOTE

The movement/action of this "5th function" can be found in the operating instructions of the fitted attachment.

https://truckmanualshub.com/

– Note the following attachment functions and pictograms. ▷

10	Move side shift frame or fork forwards/backwards
11	Move sideshift to the left/right
12	Adjust fork arms: open/close
13	Swivel lift mast or fork to the left/right
14	Release/clamp load retainer
15	Push off/pull in load
16	Open/close clamps
17	Turn to the left/right
18	Tip shovel over/tip shovel back

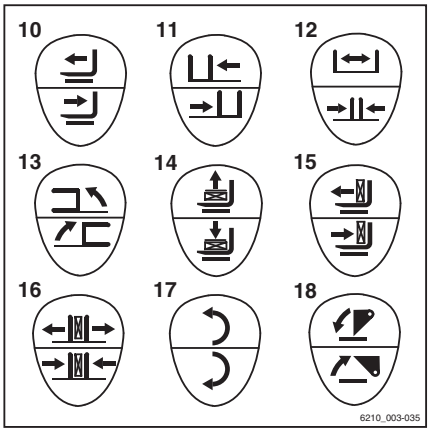

NOTE

The pictograms shown correspond to the attachments fitted to this truck at the factory. If an attachment with other functions is fitted, the pictograms must be checked for the correct representation and changed if necessary.

– Contact the authorised service centre if required.

Clamp locking mechanism (variant)

This truck can be fitted with a clamp locking mechanism as a variant. This prevents the clamp from opening unintentionally if the operating function is inadvertently triggered.

DANGER

There is a risk of fatal injury from falling loads if the correct function of the clamp locking mechanism is not guaranteed!

If other attachments are used on this truck in addition to the clamp, make sure that the clamp locking mechanism function is reassigned to the corresponding operating device every time the clamp is reassembled; see the chapter entitled "Fitting attachments".

– Make sure that the additional clamp locking mechanism function is available.

https://truckmanualshub.com/

Multiple-lever

NOTE

Clamping attachments are only available as a special solution when the truck is equipped with this multi-lever variant. To operate the clamp locking mechanism, please see the operating instructions that correspond to the special solution.

Double mini-lever

▷

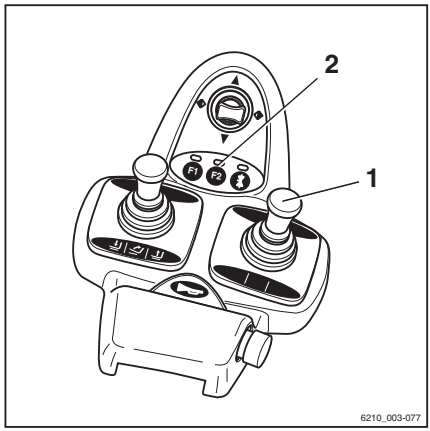

– To release the clamp locking mechanism, push the operating lever (1) forwards.

The LED for button F2 (2) lights up as long as the clamp locking mechanism is released.

NOTE

The hydraulic function for opening the clamp is available for one second after the clamp locking mechanism is released. After one second, the clamp locking mechanism is automatically reactivated.

– To open the clamp, push the control lever (1) forwards again.

It is not necessary to release the clamp locking mechanism in order to close the clamp.

– To close the clamp, pull the control lever (1) back.

– To operate clamping attachments, see the section entitled "Controlling attachments using the double mini-lever and the 5th function".

https://truckmanualshub.com/

Triple mini-lever

▷

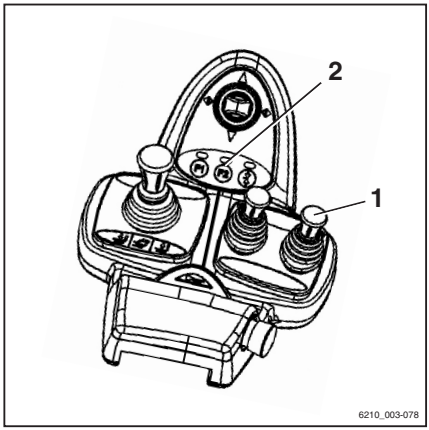

– To release the clamp locking mechanism, push the operating lever (1) forwards.

The LED for button F2 (2) lights up as long as the clamp locking mechanism is released.

NOTE

The hydraulic function for opening the clamp is available for one second after the clamp locking mechanism is released. After one second, the clamp locking mechanism is automatically reactivated.

– To open the clamp, push the control lever (1) forwards again.

It is not necessary to release the clamp locking mechanism in order to close the clamp.

– To close the clamp, pull the control lever (1) back.

– To operate clamping attachments, see the section entitled "Controlling attachments using the triple mini-lever and the 5th function".

Quadruple mini-lever

▷

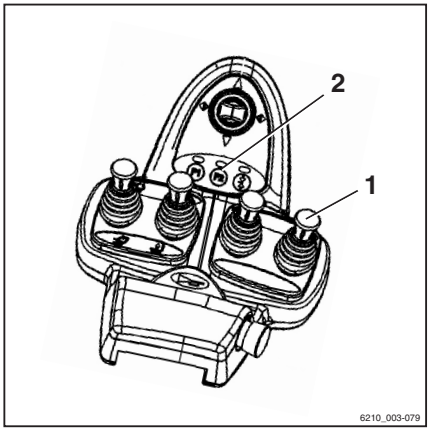

– To release the clamp locking mechanism, push the operating lever (1) forwards.

The LED for button F2 (2) lights up as long as the clamp locking mechanism is released.

NOTE

The hydraulic function for opening the clamp is available for one second after the clamp locking mechanism is released. After one second, the clamp locking mechanism is automatically reactivated.

– To open the clamp, push the control lever (1) forwards again.

It is not necessary to release the clamp locking mechanism in order to close the clamp.

– To close the clamp, pull the control lever (1) back.

https://truckmanualshub.com/

– To operate clamping attachments, see the section entitled "Controlling attachments using the quadruple mini-lever and the 5th function".

Joystick 4Plus

▷

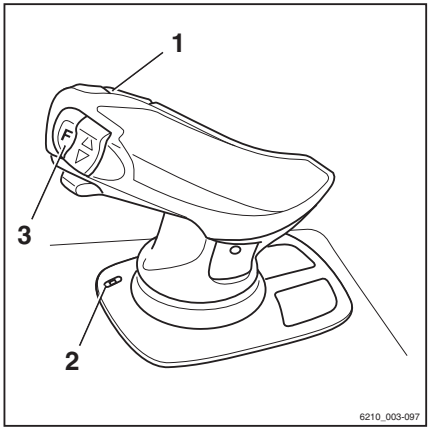

– To release the clamp locking mechanism, press and hold shift key "F"(3) and move the horizontal rocker button (1) to the right.

– Keep shift key "F"(3) pressed and move the horizontal rocker button (1) back to the neutral position.

The LED (2) lights up as long as the clamp locking mechanism is released.

– To open the clamp, press and hold shift key "F"(3) and move the horizontal rocker button (1) to the right.

NOTE

The hydraulic function for opening the clamp is available for one second after the clamp locking mechanism is released. After one second, the clamp locking mechanism is automatically reactivated.

It is not necessary to release the clamp locking mechanism in order to close the clamp.

– To close the clamp, press and hold shift key F (3) and move the horizontal rocker button (1) to the left.

– To operate the clamping attachments, see the section entitled "Controlling attachments using the joystick 4Plus and the 5th function".

https://truckmanualshub.com/

Fingertip

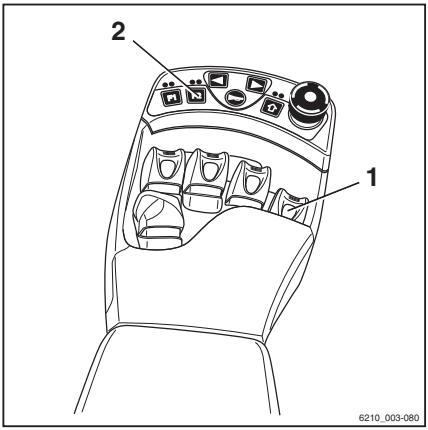

– To release the clamp locking mechanism, push the operating lever (1) forwards.

The LED for button F2 (2) lights up as long as the clamp locking mechanism is released.

NOTE

The hydraulic function for opening the clamp is available for one second after the clamp locking mechanism is released. After one second, the clamp locking mechanism is automatically reactivated.

– To open the clamp, push the control lever (1) forwards again.

It is not necessary to release the clamp locking mechanism in order to close the clamp.

– To close the clamp, pull the control lever (1) back.

– To operate the clamping attachments; see the section entitled "Controlling attachments using the fingertip and the 5th function".

Taking up a load using attachments

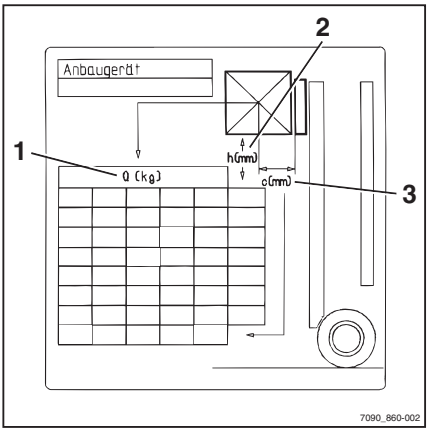

WARNING

Risk of accidents!

Attachments may only be used for their intended purpose as described in the relevant operating instructions.

Drivers must be instructed in the handling of the attachments.

WARNING

Risk of accidents!

Loads may only be picked up and transported with attachments if they are securely attached. Where necessary, loads should also be secured against slipping, rolling, falling over, swinging or tipping over. Note that any change to the position of the load's centre of gravity will affect the stability of the forklift truck.

Check the capacity rating plates for the attachments or combination of attachments.

https://truckmanualshub.com/

– The rating plates show the permissible values for:

- Load capacity Q (kg) (1)
- Lift height h (mm) (2)
- Load distance C (mm) (3)

Operation of additional equipment

Switching lighting on and off

▷

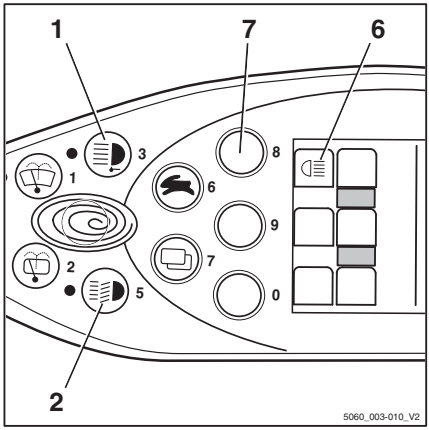

– Turn the key switch to position "I".

– Press button (1) for the front working spotlights.

The front working spotlights (4) are switched on.

– Press button (7) for the rear working spotlights.

The rear working spotlights (5) are switched on.

NOTE

The "rear working spotlights" symbol (6) lights up until the rear working spotlights are switched off again.

NOTE

Depending on the configuration, the rear working spotlights (5) only light up when the drive direction switch is set to reverse.

– Press button (2) for lighting.

The parking light (3, 4) is switched on.

– Press button (2) again.

The driving light (3, 4) is switched on.

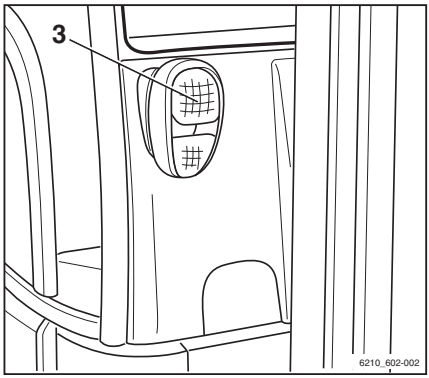

https://truckmanualshub.com/

NOTE

Pressing a button again turns the correspon-ding lighting unit off again.

NOTE

The parking light can also be switched on without the key switch being switched on.

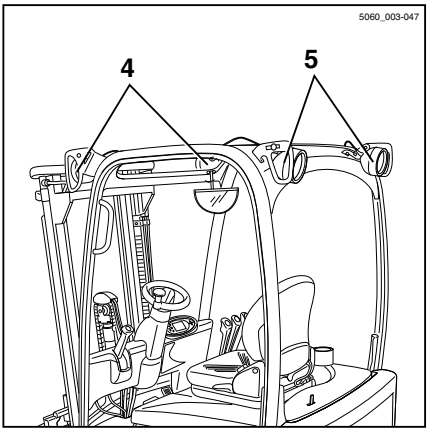

Switching the rotating beacon on and off

– Push the button (1) for switching on the rotating beacon. ▷

The rotating beacon symbol (2) appears on the display. The rotating beacon is switched on.

NOTE

Pushing the button again switches the rotating beacon off again.

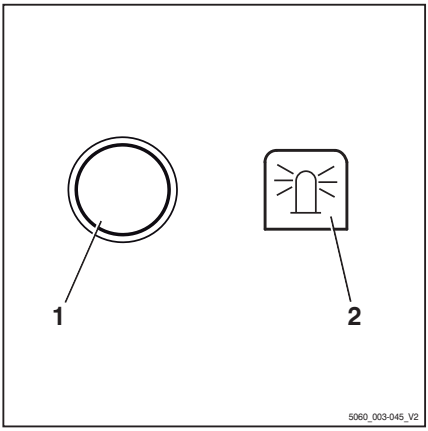

https://truckmanualshub.com/

Switching the hazard warning system on and off

▷

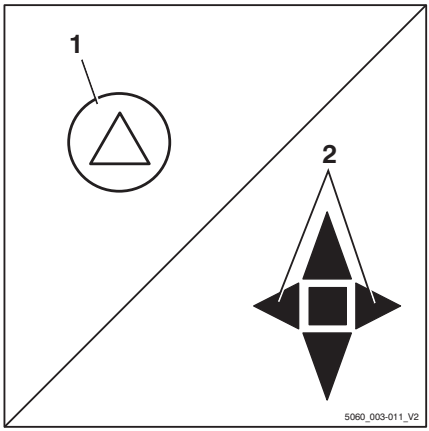

– Push the button (1) to switch on the hazard warning system.

All direction indicators and indicator lights (2) flash.

NOTE

Pushing the button again switches the hazard warning system off again.

NOTE

The hazard warning system can also be switched on without the key switch being switched on.

Switching direction indicators on and off

Mini-lever version

▷

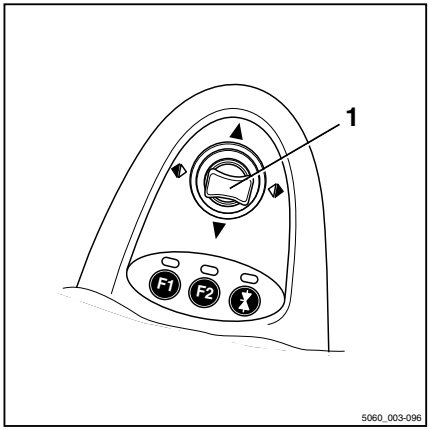

– Switch on the direction indicators by moving the corresponding drive direction/turn indicator cross lever (1) to the left or right.

The direction indicators and the corresponding direction indicator lights (2) or (3) flash.

– Switch off the direction indicators by moving the cross lever to the centre position.

https://truckmanualshub.com/

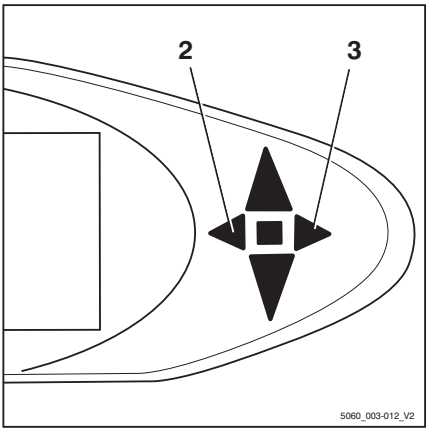

Fingertip version

– Switch on the direction indicators by moving the corresponding turn indicator button (1) to the left or to the right.

The direction indicators and the corresponding direction indicator lights (2) or (3) flash.

– Turn off the direction indicators by pushing the other turn indicator button.

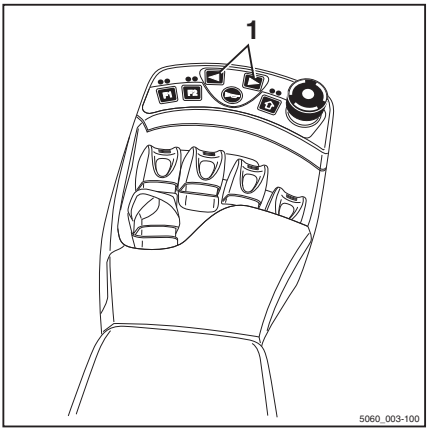

https://truckmanualshub.com/

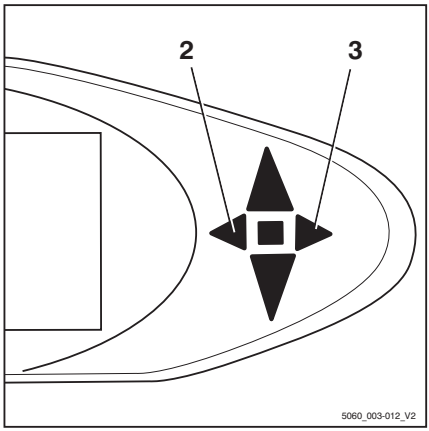

Mini-console version

▷

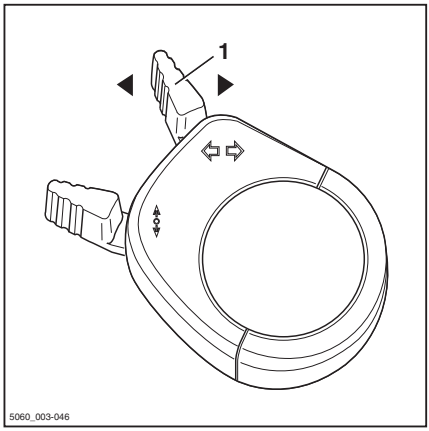

– Switch on the direction indicators by moving the turn indicator switch (1) to the left or to the right.

The direction indicators and the corresponding direction indicator lights (2) or (3) flash.

– Switch off the direction indicators by moving the turn indicator switch to the centre position.

https://truckmanualshub.com/

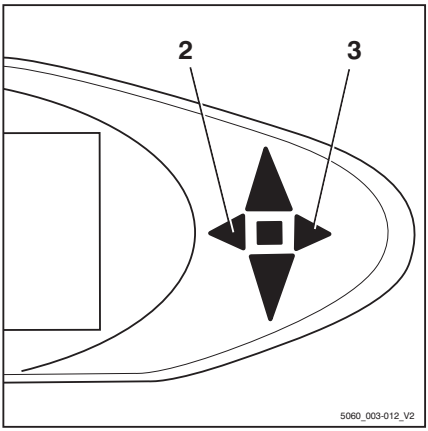

Switching the double working spotlights on and off.

The double working spotlights are fitted up on the front right and left on the overhead guard. Each double working spotlight consists of an upper working spotlight (2) and a lower working spotlight (3). The upper working spotlight illuminates the working area at great lift heights, the lower working spotlight illuminates the working area directly in front of the truck.

Depending on the equipment, the upper working spotlights can be switched on/off automatically or manually.

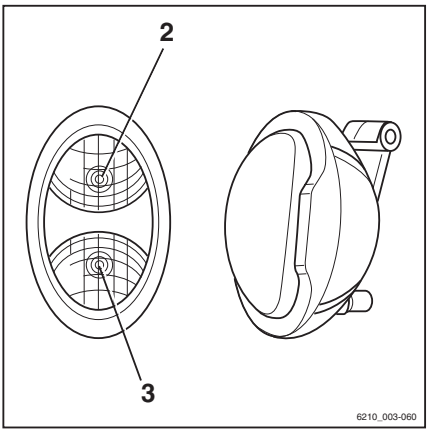

Switching the upper working spotlights on/off manually

NOTE

The upper working spotlights can be switched on/off independently of the lower working spotlights. For information on switching the lower working spotlights on, see the "Switching lighting on and off" chapter.

NOTE

This function is not available if the truck is equipped with rear window heating.

https://truckmanualshub.com/

– Turn the key switch to position "I".

– Press button (1).

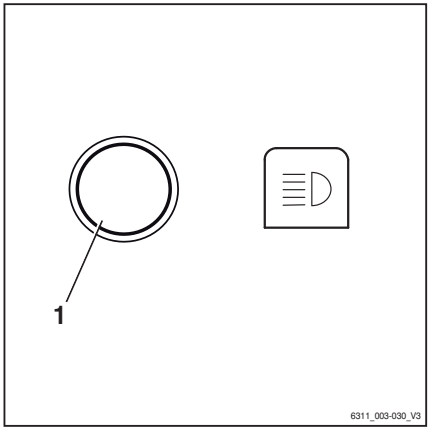

NOTE

Pressing the button again switches the working spotlights off again.

Switching the upper working spotlights on/off automatically

– Turn the key switch to position "I".

– For information on switching on working spotlights, see the "Switching lighting on and off" chapter.

The lower working spotlights light up.

The upper working spotlights are switched on automatically when the lift mast is lifted for a period of at least two seconds.

NOTE

In these two seconds, a maximum of two lifts can take place so that the working spotlights do not switch on each time a precise adjustment is made. If more lifts are carried out during this time, the upper working spotlights will remain switched off.

NOTE

The upper working spotlights are switched off automatically when the truck is driven for longer than one second and faster than 2.1 km/h.

Lift-height-controlled switching on/off of the upper working spotlights

NOTE

This equipment is available only if a proximity switch is fitted to the lift mast to record a particular lift height of the fork carriage on the lift mast.

– Turn the key switch to position "I".

– Switch on the working spotlights.

https://truckmanualshub.com/

The lower working spotlights light up.

The upper working spotlights are switched on by the proximity switch when the fork carriage reaches or exceeds the preset lift height.

The upper working spotlights are switched off by the proximity switch when the fork carriage falls below the preset lift height again.

⚠ CAUTION

Possible component damage caused by collision if the proximity switch is set incorrectly.

- The proximity switch may be adjusted by trained personnel.
- Inform the relevant service centre.

Operating the windscreen wiper/washer

- Push the button (1) to actuate the front windscreen wiper/washer (variant).

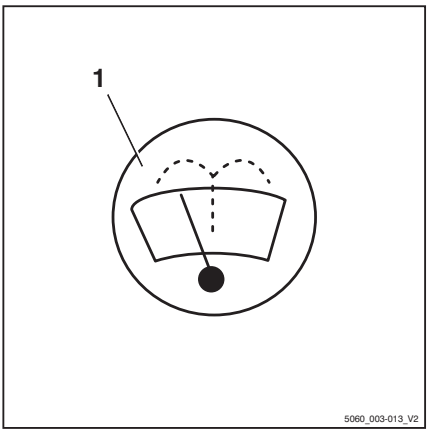

Every time the button is pressed, the wiper interval increases:

Button 1	Operating stage
	Off
1st time	On
2nd time	Interval
3rd time	Washer, hold down the third time you press it
4th time	Off

FleetManager (variant)

FleetManager is an equipment variant and can be fitted to the truck in different versions. The description and operation information can be found in the separate operating instructions for the corresponding FleetManager versions.

https://truckmanualshub.com/

Accident recorder (variant)

The accident recorder is an equipment variant to the FleetManager (variant), which is installed in the truck's acceleration sensor. The acceleration sensor records data in the event of an accident. This data can be electronically read out and evaluated. For further information, contact your STILL service centre.

Driver restraint systems (variants)

Different driver restraint systems are available as variants for this truck. The description and operation for these systems can be found in the separate "Driver restraint systems" operating instructions.

Clipboard (variant)

▷

The clipboard (1) with reading lamp (2) is an equipment variant.

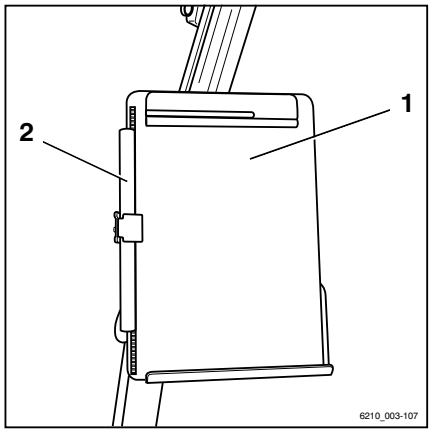

https://truckmanualshub.com/

Trailer operation

Towed load

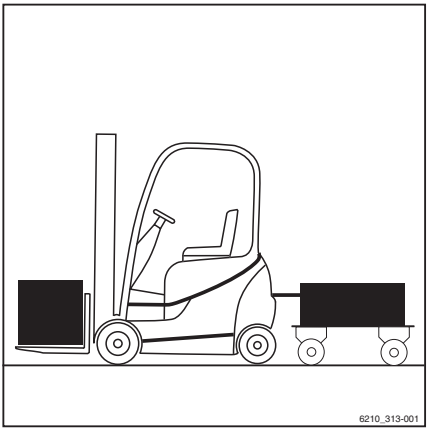

DANGER

There is an increased risk of accident when using a trailer.

Using a trailer changes the truck handling characteristics. When towing, operate the truck such that the trailer train can be safely driven and braked at all times. The maximum permissible speed when towing is 5 km/h.

- Do not exceed the permissible speed of 5 km/h.
- Do not couple the truck in front of rail vehicles.
- The truck must not be used to push any kind of trolley.
- It must be possible to drive and brake at all times.

CAUTION

Risk of damage to components!

The maximum towed load for occasional towing is the rated capacity specified on the nameplate. Overloading can lead to component damage on the truck. The sum of the actual towed load and the actual load on the fork must not exceed the rated capacity. If the existing towed load corresponds to the rated capacity of the truck, no load may be transported on the fork at the same time. The load can be distributed between the fork and the trailer.

- Check the load distribution and adjust it to correspond to the rated capacity.
- Observe the permissible rigidity value of the tow coupling.

CAUTION

Risk of damage to components!

The maximum towed load only applies when towing unbraked trailers on a level surface (maximum deviation +/- 1%) and on firm ground. The towed load must be reduced if towing on gradients. If necessary, notify the authorised service centre of the application conditions. The service centre will provide the required data.

- Inform the authorised service centre.

https://truckmanualshub.com/

CAUTION

Risk of damage to components!

A support load is not permitted.

– Do not use trailers with tillers supported by the tow coupling.

This truck is suitable for the occasional towing of trailers. If the truck is equipped with a towing device, this occasional towing must not exceed 2% of the daily operating time. If the truck is to be used for towing on a more regular basis, the manufacturer should be consulted.

Tow coupling RO*230

CAUTION

The intended use of this coupling is restricted to the towing of unserviceable trucks and, in exceptional cases, for shunting purposes. It is not permitted to use it for trailer operation.

DANGER

Never jack up or crane load the truck on the tow coupling. The tow coupling is not designed for this and could be deformed or damaged. The truck could fall off, with potentially fatal consequences!

– For jacking up and crane loading, use only the designated connection points.

DANGER

If you briefly leave the truck to couple or uncouple the trailer, there is a risk to life caused by the truck rolling away and running you over.

– Apply the parking brake.
– Lower the forks to the ground.
– Switch off the key switch and remove the key.

https://truckmanualshub.com/

Coupling

– Take measures to prevent the trailer from rolling away, e.g. use wheel chocks (1).

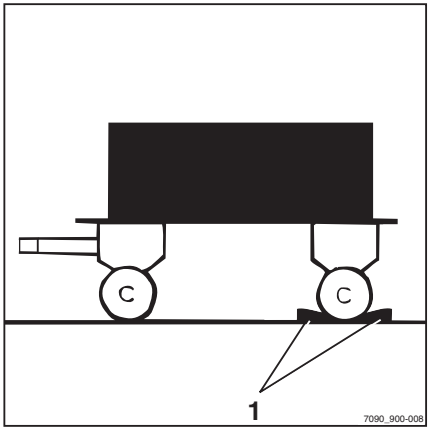

– Remove the security pin (2) from the coupling pin (3).

– Pull the coupling pin upwards to take it out.

– Slowly move the truck backwards.

– Insert the tow-bar eye of the trailer into the towing jaws (4) of the tow coupling.

– Insert the coupling pin and attach the security pin.

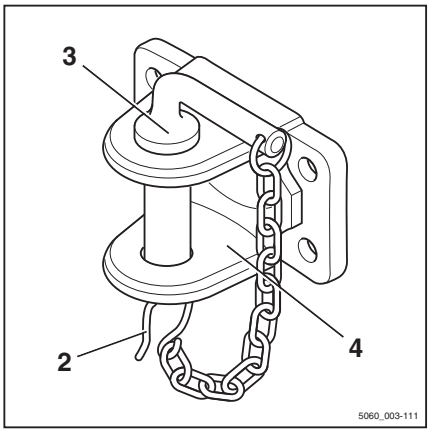

⚠ DANGER

If the coupling pin is lost or destroyed during towing, the trailer will become loose and uncontrollable. This causes a risk of accident!

– Use only original coupling pins that have been checked for good condition!

– Ensure that the coupling pin is correctly inserted and secured.

– Remove any items used to prevent the trailer from rolling away.

– Tow or shunt the trailer.

Uncoupling

– Take measures to prevent the trailer from rolling away, e.g. use wheel chocks.

– Remove the security pin from the coupling pin.

https://truckmanualshub.com/

– Pull the coupling pin upwards to take it out.
– Slowly drive the truck forward until the tow-bar eye and towing jaws are separated.
– Insert the coupling pin and attach the security pin.

Tow coupling RO*244

DANGER

Never jack up the truck on the tow coupling or use it for crane lifting. The tow coupling is not designed for this and could be deformed or damaged. This could cause the truck to fall, with potentially fatal consequences!

– Use the tow coupling only for towing.
– For jacking up and lifting, use only the designated connection points.

DANGER

The trailer coupling is not designed to support loads and could be deformed or damaged. This could cause the supported load to fall, with potentially fatal consequences!

– The tow coupling should be subjected only to horizontal loads, i.e. the tiller must be horizontal.

DANGER

If you briefly leave the truck to couple or uncouple the trailer, there is a risk to life caused by the truck rolling away and running you over.

– Apply the parking brake.
– Lower the forks to the ground.
– Switch off the key switch and remove the key.

WARNING

Never reach between the coupling pins of the towing jaws. If the component moves suddenly there is a risk of injury!

– Use a suitable device to release the coupling pin.
– When not in use, close the automatic trailer coupling.

https://truckmanualshub.com/

NOTE

When manoeuvring in restricted areas, take into account the projection of the coupling.

Coupling

NOTE

The trailer coupling RO 244 is intended for a tow-bar eye in accordance with DIN 74054 (bore diameter 40 mm) or DIN 8454 (bore diameter 35 mm)

- Take measures to prevent the trailer from rolling away, e.g. use wheel chocks.
- Push the hand lever (4) upwards and open the tow coupling.

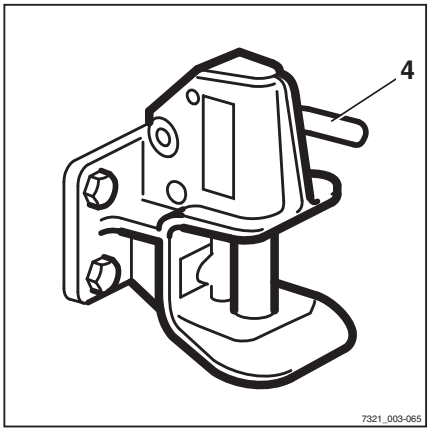

CAUTION

When being coupled, the tow-bar eye must engage in the middle of the coupling jaw. Failure to follow these instructions could result in damage to the coupling jaw or to the tow-bar eye!

- Ensure that the tow-bar eye enters the coupling jaw centrally.

- Slowly move the truck backwards.

DANGER

If the coupling pin works loose during towing, the trailer will become loose and uncontrollable. This causes a risk of accident!

- Ensure that the coupling pin is engaged correctly.
- If it is not, repeat the coupling procedure.

- Remove any items used to prevent the trailer from rolling away.
- Tow the trailer.

Uncoupling

- Take measures to prevent the trailer from rolling away, e.g. use wheel chocks.
- Push the hand lever upwards.
- Slowly drive the truck forward until the tow-bar eye and towing jaws are separated.
- Close the tow coupling.

https://truckmanualshub.com/

Towing trailers

- Drivers who are towing a trailer for the first time must practise driving with a trailer in a suitable area.
- When passing through narrow road areas (entrances, gates etc.), observe the dimensions of the trailer and load.
- When towing multiple trailers, ensure a sufficient minimum distance to fixed installations when turning and cornering.

The permissible length of the trailer trains depends on the roadways to be driven and may need to be determined during the test drive.

It is the responsibility of the operating company to instruct the drivers regarding the permissible number of trailers and, where required, any additional speed reductions on individual sections of the route.

NOTE

Please observe the definition of the following responsible persons: "operating company" and "driver".

▷

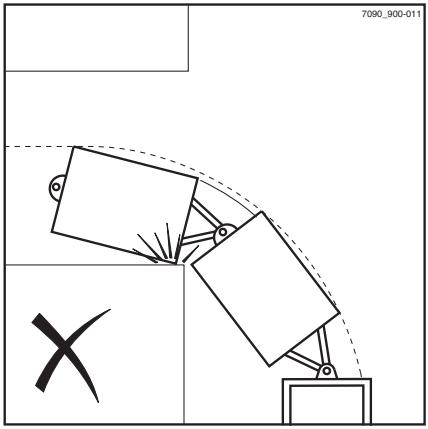

https://truckmanualshub.com/

Cold store application

The truck features cold store equipment (variant), making it suitable for use in cold stores.

It is equipped for two different types of application and marked with the cold store symbol.

Cold store-compatible oils (for hydraulics and gearbox) and greases (for moving parts, gearing and chains) are used with the cold store equipment.

Permissible use

Type of application 1:

- Constant deployment in temperature range -5 °C, brief deployment down to -10 °C.

Type of application 2:

- Alternating between indoor use down to -32 °C and for outdoor use +25 °C, briefly up to +40 °C. For this application, cold store-compatible hydraulic oil must be used according to the maintenance data table; see ⇒ Chapter "Maintenance data table", P. 6-303.

Operation

⚠ CAUTION

Changing from a cold inside temperature to a warm outside temperature may result in the formation of condensation water. This water may freeze on re-entering the cold store, blocking moving parts of the truck.

It is essential that close attention is paid to the duration of deployment in the different temperature ranges for both types of application.

Before being used in the cold store, the truck must be dry and warmed up.

The truck should not leave the cold store area for more than 10 minutes. By adhering to this rule, condensation water will not have time to form.

If the truck stays outside for longer than 10 minutes, it must remain there at least until the condensation water has drained off and the truck has dried off. Depending on the weather, this will take at least 30 minutes.

https://truckmanualshub.com/

WARNING

Risk of injury!

If condensation water freezes in the cold store, do not try to free blocked parts with your hands.

– Drive the truck for 5 minutes or so and operate the brake several times to ensure operational safety.

– Actuate all of the mast's lifting functions several times.

This warm-up phase is necessary to ensure that the oil reaches the operating temperature.

– Always park the truck outside the cold store.

CAUTION

Risk of component damage!

Batteries should not be left in the cold store overnight without power uptake or charging.

– Charge the battery outside the cold store and operate the truck using a replacement battery.

Using batteries in the cold store

To compensate for the reduction in capacity at low temperatures, it is advisable to use batteries with the maximum nominal capacity in the respective battery dimensions for the range.

Electric forklift trucks should not be parked for any longer than necessary in a cold area. This also applies to unused batteries. The charging station and the parking area for trucks and batteries should be at normal room temperature (not below 10°C). Charging is extremely slow at low temperatures. At temperatures below 10°C and with the usual charging parameters, the battery cannot be fully charged.

The battery must be fully charged before each shift.

Purified water (topping-up water) should be used constantly during the gassing phase to ensure that it is mixed thoroughly with the remaining acid. If the top-up water is not mixed, it may freeze.

https://truckmanualshub.com/

Water top-up systems must not be used at temperatures below 0°C, as this could cause the systems and the water present in the hose lines to freeze.

On discharge, the battery voltage is therefore generally lower at low temperatures, and the final discharged voltage is reached earlier, i.e. the battery's capacity is lower.

https://truckmanualshub.com/

Operating the display and operating unit

Indicators

Standard displays

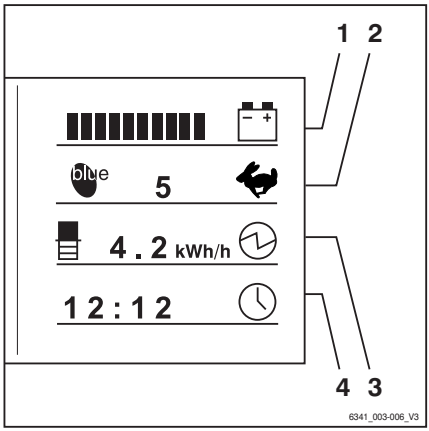

In the factory setting, the following indicators can be seen in the display and operating unit:

1 **Battery charge**

Displays the available battery capacity as a segmented bar graph in 10% increments.

Approx. every 10 seconds, the display switches from showing the battery charge to the remaining operating time.

If a different drive program or a different drive mode (e.g. Blue-Q) is selected, the system immediately recalculates the remaining operating time and indicates for how long the truck can be driven if the operating situation of the last 30 minutes is maintained.

2 **Drive program**

Displays the number of the selected drive program. To change the drive program, refer to the section entitled "Setting the drive program".

The Blue-Q icon appears when the Blue-Q function is switched on; refer to the section entitled "Blue-Q efficiency mode".

3 **Power rating**

The power rating indicator shows the average energy consumption over the last 30 minutes in kilowatts (kW).

Trends relating to the current energy consumption are displayed as a vertical bar graph. The percentage change in each bar is shown in the table under "Power trends indicator" below.

4 **Time**

Displays the current time digitally in hours and minutes. The time can be adjusted; see the chapter entitled "Setting the time".

https://truckmanualshub.com/

CAUTION

Deep discharges shorten the service life of the battery.

If no bar is shown (0% of the available battery capacity, i.e. around 20% of the nominal capacity), deep discharge begins.

- Deep discharge (no bar on the display) must be avoided.
- Cease work with the truck immediately.
- Charge the batteries immediately.

NOTE

To prevent deep discharge, certain restrictions (variant) can be activated (e.g. slow lifting). Consult the authorised service centre on this matter.

Power trends indicator

Symbol	Energy consumption trend
	Significant increase (> 50%)
	Increase (up to 50%)
	Slight increase (up to 30%)
	No change
	Slight decrease (up to -30%)
	Decrease (up to -50%)
	Significant decrease (> -50%)

https://truckmanualshub.com/

Additional indicators

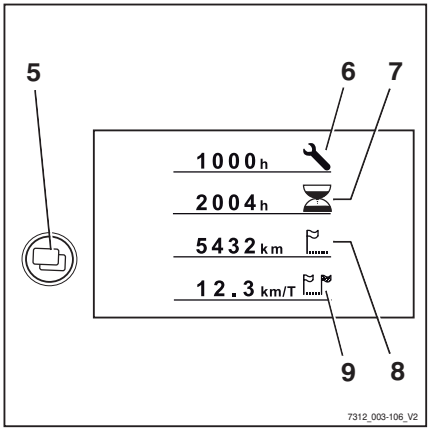

5 **Menu change button**

When the menu change button is pressed, the following additional indicators appear:

6 **"Service in" display**

Displays the remaining time in operating hours until the next maintenance operation is due according to the maintenance schedule in the maintenance instructions. Contact the authorised service centre in good time.

7 **Operating hours**

Displays the total operating hours completed by the truck. The hour meter starts running as soon as the truck is driven or the working hydraulics are actuated.

8 **Total distance**

Displays the total distance driven in kilometres.

9 **Daily kilometres**

Displays the kilometres driven for the day.

NOTE

Ask the authorised service centre about the speed driven indicator.

NOTE

Have all repair and maintenance work performed by an authorised service centre. This is the only way to permanently correct defects.

– Inform the authorised service centre when the maintenance interval is reached.

https://truckmanualshub.com/

Adjusting the displays

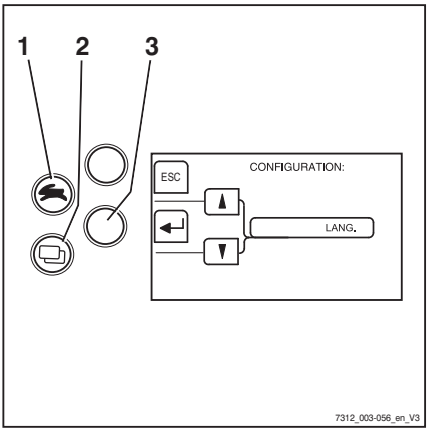

NOTE

The parking brake must always be engaged when you adjust the displays. The displays cannot be adjusted if the parking brake is not engaged.

NOTE

When adjusting the displays, do not actuate the hydraulic system operating devices. If you do, entry is interrupted and the display returns to the operating display.

The displays are adjusted in the `CONFIGURATION` menu.

– Turn the key switch to position "I".

– Press the drive program button (1) and the menu change button (2) at the same time.

The display changes to the `PASSWORD` menu.

– Press the return key (3).

The display changes to the `CONFIGURATION` menu.

The following settings are possible and can be found in the corresponding chapter:

- Setting the date and time
- Resetting the daily kilometres and daily operating hours
- Setting the language
- Configuring Blue Q

Symbols in the display

Messages

To show operating messages, warning messages or error messages in the display, text messages and symbols are used.

https://truckmanualshub.com/

Symbols for operating messages

Description	Symbol
Empty field	No display
Please wait	
Service required	
Lift limitation	
Reference cycle	
Battery charging	
Drive program	
Hour meter	
Odometer	
Daily hour meter	
Daily odometer	
Speed	
Steering angle	
Load	
Time	
Hydraulic system	
Exh.gas purifier	
Coolant temperature	
Fuel level	
Blue-Q	
Power rating (average)	
Power rating (trend)	

Symbols for warning messages

Description	Symbol
Parking brake	
Actuate seat switch	
Safety belt	
Battery acid level	
Neutral warning message	

https://truckmanualshub.com/

Description	Symbol
Are you sure?	?
Oil pressure	

Symbols for error messages

Description	Symbol
Brake system malfunction	
Overheating of the engine	
Overheating	
Malfunction in the electrical system	
General malfunction	

Symbols for auxiliary equipment soft key functions

For the auxiliary equipment, the following symbols for the soft key functions are used on the left in the display:

Description	Symbol
Empty field	No display
General function key OFF	F1 F2 F3
General function key **ON**	F1 F2 F3
Rear working spotlight OFF	
Rear working spotlight **ON**	
Front working spotlight OFF	
Front working spotlight **ON**	
Windscreen heating OFF	
Windscreen heating **ON**	
Rear window heating OFF	
Rear window heating **ON**	
Interior lighting OFF	
Interior lighting **ON**	
Roof wiper/washer OFF	
Roof wiper/washer **ON**	

https://truckmanualshub.com/

Description	Symbol
Heater blower OFF	
Heater blower **ON**	
Rotating beacon OFF	
Rotating beacon **ON**	
Seat heater OFF	
Seat heater **ON**	
Signal horn OFF	
Signal horn **ON**	

Symbols for the soft key functions for menu navigation and for acknowledging messages

For menu navigation and to acknowledge messages, the following symbols for the soft key functions are used on the left of the display:

Description	Symbol
Empty field	No display
ESC button to return to the main menu	ESC
ENTER button to confirm	
OK button to confirm	
RES button to reset	RES
Button to return to the main menu	
Button to return to the previous edit field	
Scroll button to scroll up	
Scroll button to scroll down	
Scroll button to count up	+
Scroll button to count down	−

Status LEDs of the function keys for additional electrical installations

The current switch status of a button is indicated with LEDs next to the relevant function key for the additional electrical installation.

https://truckmanualshub.com/

Description	LED
Function off	LED **OFF**
Function on	LED **ON**

Symbols for numeric keypad

The available inputs and the positions of the keys are shown for inputting digits, ESC and ENTER.

Keys for the digits 1 to 7 and the ESC and ENTER keys for inputting the fleet manager password ▷

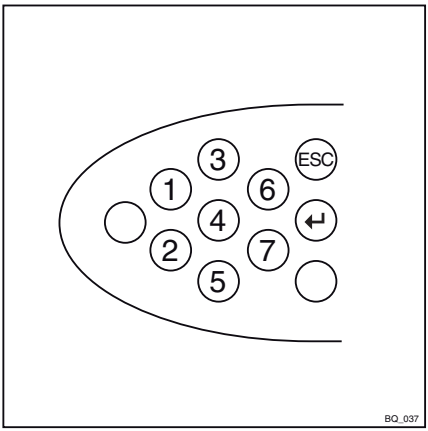

Keys for digits 0 to 9 for inputting the driver PIN (access code) ▷

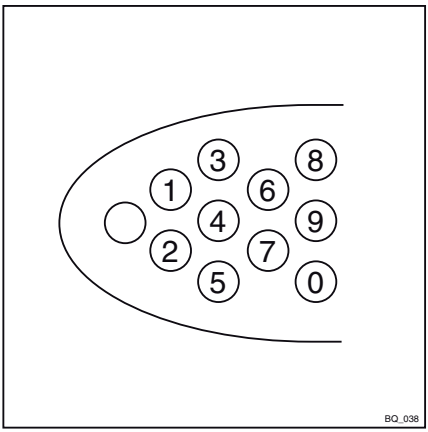

https://truckmanualshub.com/

Setting the date or time

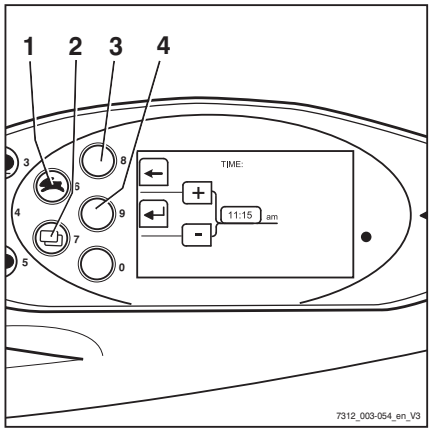

– Switch to the "CONFIGURATION" menu; see ⇒ Chapter "Adjusting the displays", P. 5-217.

– Press the drive program key (1) or menu selection key (2) until the option `TIME` appears.Confirm your selection by pressing the Return key (4).

The "TIME" menu appears.

– Press the drive program button (1) or the menu change button (2) until the desired time appears in the display.

As the buttons are held down for longer, the scrolling speed increases in three levels.

– Confirm the time set by pressing the Return key (4).

– Use the arrow key (3) to exit the menu and return to the next higher level.

NOTE

The date is set in a similar manner.

Resetting the daily kilometres and daily operating hours

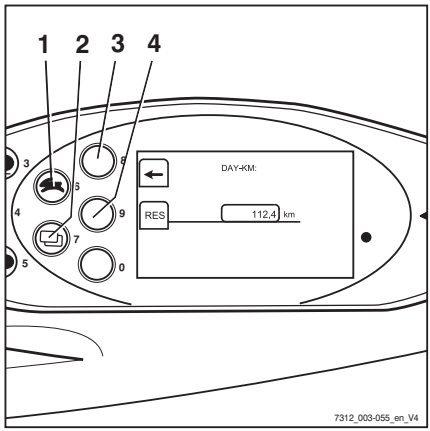

The daily number of kilometres and daily operating hours displays can be reset to zero:

– Switch to the "CONFIGURATION" menu; see ⇒ Chapter "Adjusting the displays", P. 5-217.

– Press drive program button (1) or menu selection button (2) until the `DAY-KM` option appears. Confirm your selection by pressing the Return key.

The "DAY KM" menu appears.

– Reset the values by pressing the RES (4) button.

– Use the arrow key (3) to exit the menu and return to the next higher level.

https://truckmanualshub.com/

NOTE

The daily operating hours are reset in the same manner.

Setting the language

The displays can be shown in additional languages:

- Switch to the "CONFIGURATION" menu; see ⇒ Chapter "Adjusting the displays", P. 5-217.
- Press drive program button (1) or menu selection button (2) until the LANGUAGE option appears. Confirm your selection by pressing Return key(4).

The "LANGUAGE" menu appears.

- Press drive program button (1) or menu change button (2) until the desired language appears in the display.
- Confirm your selection by pressing the Return key (4).
- Use arrow key (3) to exit the menu and return to the next higher level.

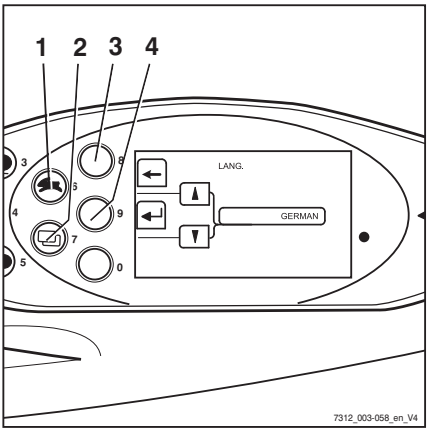

Soft key button for operating various equipment variants

There are two soft key columns available on the display operating unit. With these soft key columns, you can switch the additional functions on and off, e.g. a rotating beacon. The second soft key column is only available if the truck has more than three additional functions.

https://truckmanualshub.com/

A grey bar (3) highlights the active soft key column, i.e. the soft keys in this column can be operated. To change the soft key column:

– Briefly press the "Menu change button"(1). The grey bar jumps to the other soft key column. The required soft keys are now active and the functions assigned to them can be switched on and off using the corresponding soft key buttons (2).

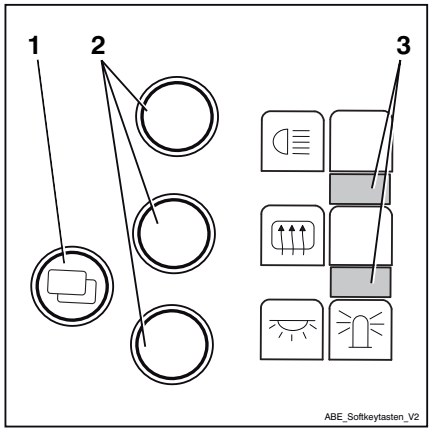

NOTE

In order to shift between the individual menus of the display operating unit, press the "Menu change button" (1) for approx. 1 second.

NOTE

The functions of the two soft key columns depend on the individual equipment of the truck. Therefore, the soft keys on your display operating unit may vary to those shown here.

Configuring Blue-Q efficiency mode

The following operating modes can be selected to activate the Blue-Q efficiency mode:

STANDARD

- Blue-Q is turned off whenever the truck is commissioned. The driver can use the Blue-Q button to switch efficiency mode on and off at any time while the truck is being operated

FIXED

- Blue-Q is switched on permanently whenever the truck is commissioned and during truck operation. The driver cannot turn efficiency mode off

FIXED-FLEX

- Blue-Q is turned on whenever the truck is commissioned. The driver can use the Blue-Q button to switch efficiency mode on and off at any time while the truck is being operated

https://truckmanualshub.com/

- Switch to the CONFIGURATION menu; see ⇒ Chapter "Adjusting the displays", P. 5-217
- Keep pressing the drive programme button (1) or the menu change button (2) until option BLUE Q CONFIGURATION appears.
- Confirm your selection by pressing the Return key (4).

The BLUE-Q CONFIGURATION menu appears.

- Press drive program button (1) or menu change button (2) until the desired efficiency mode appears in the display.
- Confirm the set efficiency mode with Return button (4).
- Use arrow key (3) to exit the menu and return to the next higher level.

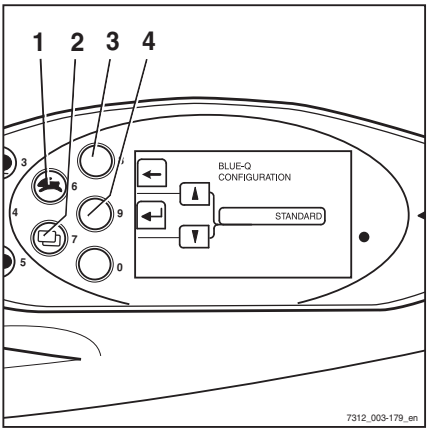

https://truckmanualshub.com/

Blue-Q efficiency mode

Functional description

The Blue-Q efficiency mode affects both the drive unit and the activation of the additional consumers, and reduces the truck's energy consumption.

If the efficiency mode has been activated, the acceleration behaviour of the truck changes to make acceleration more moderate.

When travelling at low speeds—normally when manoeuvring—no reduction is noticeable despite the activated efficiency mode. For moderate speeds of at least approx. 7 km/h, acceleration is gentler. Therefore, on distances of up to approx. 40 m, lower speeds are reached than would be the case if the efficiency mode was not activated.

Blue-Q has no influence on:

- Maximum speed
- Climbing capability
- Traction
- Braking characteristics

NOTE

The Blue-Q efficiency mode can be switched on and off in the `STANDARD` *and* `FIXED-FLEX` *operating modes. If the* `FIXED` *operating mode is configured in the display operating unit, the Blue-Q button has no function and the Blue-Q efficiency mode is switched on permanently; see also chapter "Configuring Blue-Q efficiency mode".*

Effects on additional consumers

The following table shows the specific conditions that cause certain auxiliary devices to shutdown when Blue Q is activated. The auxiliary devices available depend on the truck equipment.

https://truckmanualshub.com/

Shut-off	Seat switch	Truck stopped	Drive direction
Front working spotlight*	X	X	Backwards > 3 km/h
Rear working spotlight*	X	X	Forwards
Top double working spotlight*	X	X	> 3 km/h
Headlight*	X	X	-
Side light	-	-	-
Front wiper	X	X	Backwards > 3 km/h
Rear wiper	X	X	Forwards
Seat heater	X	-	-
Cab heating	X	-	-
*No shutdown for StVZO (Road Traffic Licensing Regulations) equipment.			

Switching efficiency mode Blue-Q on and off

NOTE

The Blue-Q efficiency mode can be switched on and off in the `STANDARD` *and* `FIXED-FLEX` *operating modes. If the* `FIXED` *operating mode is configured in the display operating unit, the Blue-Q button has no function and the Blue-Q efficiency mode is switched on permanently. For information on configuring the Blue-Q operating modes, see chapter "Configuring Blue Q efficiency mode".*

https://truckmanualshub.com/

Blue-Q efficiency mode

– Press the Blue-Q button (1).

The Blue-Q symbol (2) appears next to the drive programme symbol in the display and operating unit, which means that the Blue-Q efficiency mode is activated.

Pressing the Blue-Q button once again turns the Blue-Q efficiency mode off again.

▷

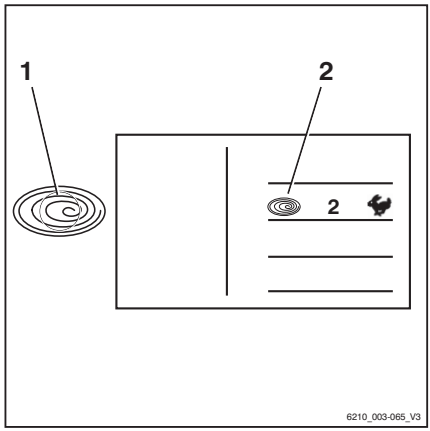

https://truckmanualshub.com/

Malfunctions

Screen content

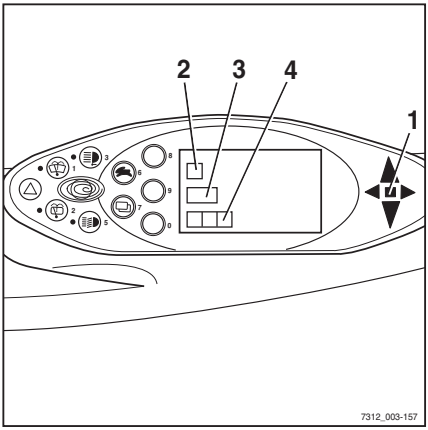

If a message is shown on the display operating unit, the "Malfunction" message will light up in the multi-function display(1).

The following messages can appear on the screen:

- A graphic symbol (2)
- Message text (3) naming the event
- An error code (4), consisting of a letter and a four-digit number.

A message always appears repeatedly and for a certain period depending on the event.

In the case of successive events, the respective messages are displayed one after another on the screen.

After a few seconds, the screen will alternate between the last shown operating display and the message.

The frequency of alternation depends on the type of event.

– If a message appears, follow these operating instructions.

Once the event is remedied, the message disappears.

If a malfunction continues to occur, the message will continue to appear.

– Park the truck securely.

– Inform the service centre.

https://truckmanualshub.com/

EMERGENCY SWITCH message ▷

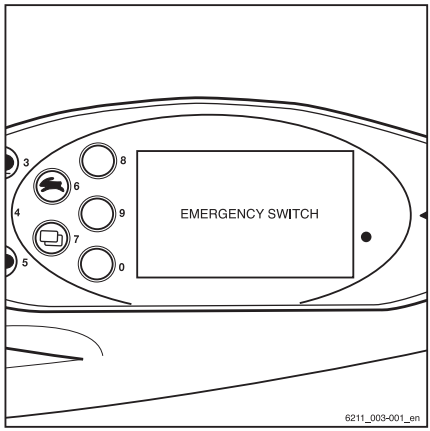

⚠ WARNING

No electric braking assistance is available when the emergency off switch is actuated!

Actuating the emergency off switch will disconnect the drives from the power supply.

– To brake, actuate the service brake.

The truck is equipped with an emergency off switch. When this switch is actuated, the driving functions and the functions of the working hydraulics are blocked.

The `EMERGENCY SWITCH` message appears periodically when the following criteria are met:

- The key switch is set to stage "I"
- The emergency off switch is actuated
- An operating device is actuated

– Refer to the chapter entitled "Checking the emergency off function."

SEAT SWITCH message

The truck is equipped with a seat switch.

If the `SEAT SWITCH` message appears, the driving functions and the working hydraulic are blocked.

The `SEAT SWITCH` message is triggered by the following situations:

- The seat switch is not actuated while the accelerator pedal or steering wheel is actuated.
- The seat switch is not actuated while the operating device for the working hydraulics is actuated.
- The shift time has been exceeded.
- The operating time has been exceeded.

NOTE

The operating devices shown in the following illustrations are only examples and may differ from the equipment on your truck.

https://truckmanualshub.com/

The seat switch is not actuated while the accelerator pedal or steering wheel is actuated.

The accelerator pedal or steering wheel is actuated even though no one is sitting in the driver's seat. `SEAT SWITCH` appears on the display. The truck will not move.

– Sit on the driver's seat and fasten the seat belt.

The forklift truck can be driven again without restriction.

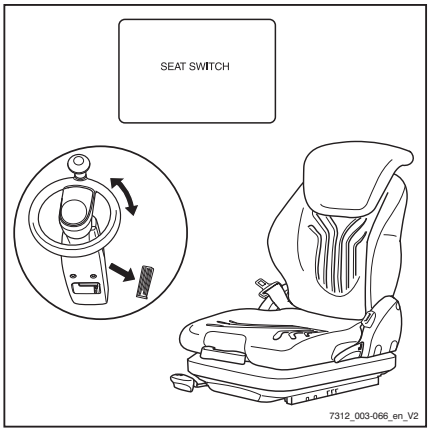

The seat switch is not actuated while the operating device for the working hydraulics is actuated.

An operating device for the working hydraulics is actuated even though no one is sitting in the driver's seat. `SEAT SWITCH` appears on the display. The working hydraulic functions cannot be executed.

– Sit on the driver's seat and fasten the seat belt.

The working hydraulics can be operated again.

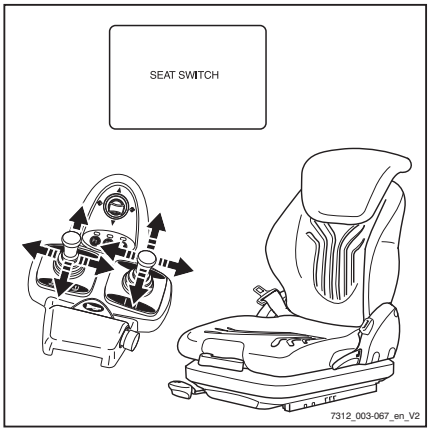

https://truckmanualshub.com/

Exceeding the shift time

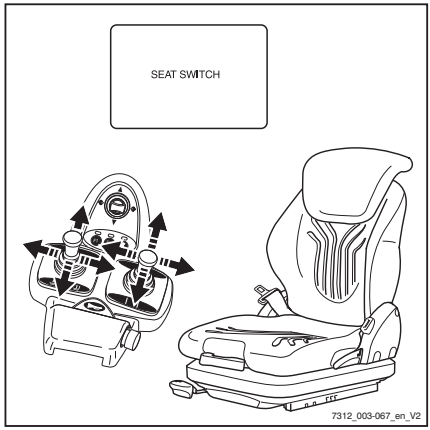

NOTE

The shift time is adjustable.

If the key switch is switched on and the driver does not leave the seat until the set shift time is exceeded, `SEAT SWITCH` appears on the display. This is also the case if an operating device for the working hydraulics or the accelerator pedal is actuated. Depending on the configuration, the working hydraulic functions can be executed normally, slowly or not at all.

– Standing up briefly from the seat, sitting back down again and fastening the seat belt.

The forklift truck can again be operated without restriction.

Exceeding the operating time

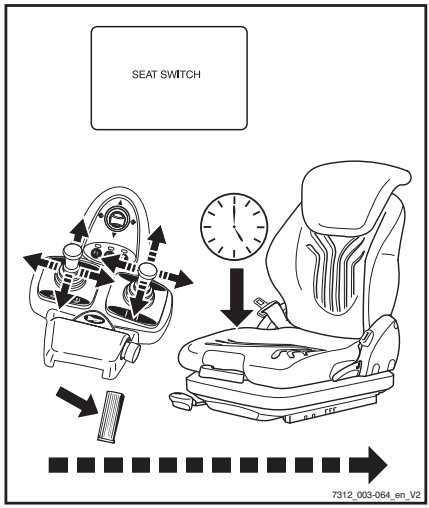

NOTE

The operating time is adjustable.

If the key switch is switched on, the parking brake is released and the driver does not leave the seat until the set operating time is exceeded, and if neither the operating devices for the working hydraulics nor the accelerator pedal are actuated during this time, `SEAT SWITCH` appears on the display. The truck will not move. Depending on the configuration, the working hydraulic functions can be executed normally, slowly or not at all.

– Standing up briefly from the seat, sitting back down again and fastening the seat belt.

The forklift truck can again be operated without restriction.

https://truckmanualshub.com/

SAFETY BELT message

DANGER

Risk of fatal injury in the event of falling from the truck if it tips over!

If the truck tips over, the driver is at risk of injury even if a restraint system is used. The risk of injury can be reduced by using a combination of a restraint system and a seat belt. In addition, the seat belt protects against the consequences of rear-end collisions and falling off ramps.

– We therefore recommend that you also use the seat belt

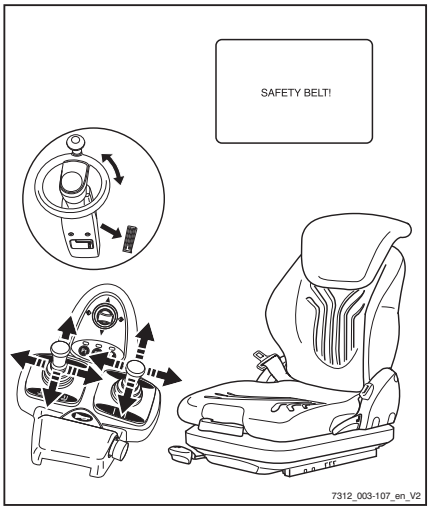

This device (variant) ensures that if the seat belt is not being used or is being used incorrectly, the truck will only drive slowly or (optionally) will not drive at all.

Depending on the configuration selected, the working hydraulics functions (lift/tilt) are either available as normal, slowed down or not available at all.

The `SAFETY BELT` message with the restricted driving and lifting functions is triggered by the following circumstances:

- Seat belt not worn and driver's seat occupied.
- The seat belt is continuously fastened and the driver's seat is occupied afterwards.
- The seat belt is not fastened until after the key switch has been switched on.
- The seat belt is unfastened while driving.

– If the `SAFETY BELT` message appears, fasten the seat belt in accordance with the regulations.

The truck can be operated again without restriction.

If the seat belt is released while driving, the truck will be limited to low driving speeds or will be braked to a halt.

https://truckmanualshub.com/

DANGER

Risk of accidents!

– The speed must be adjusted to suit the driving situation!

The increased safety provided by this function may not be misused in order to take safety risks.

APPLY HANDBRAKE message

DANGER

If the truck rolls away, there is a risk of being run over and therefore a danger to life!

Parking the truck without the parking brake applied is dangerous and is not permitted.

– The truck should not be parked on a slope.
– Do not leave the truck until the parking brake has been applied.
– In emergencies, secure the truck using wedges on the side facing downhill.

If you park the truck without applying the parking brake and then vacate the driver's seat, the `APPLY HANDBRAKE` message will appear in the display (variant). An optional signal tone sounds.

– Apply the parking brake.

The `APPLY HANDBRAKE` message disappears.

If the truck moves even though the parking brake is applied:

– Drive the truck onto level ground and park it safely. Secure it with chocks if necessary.
– Notify the authorised service centre.

▷

https://truckmanualshub.com/

LOWER FORKS message

DANGER

There is a risk to life caused by a falling load or if parts of the truck are being lowered!

Parking the truck with the load lifted is dangerous and is not permitted under any circumstances! The increased safety provided by this function may not be misused in order to take safety risks.

– Before leaving the truck, lower the load fully.

The fork is not lowered.

If the fork is above the height sensor, the key switch is turned off and the seat vacated, the `LOWER FORKS` message appears in the display (variant). An optional signal tone sounds.

– Lower the forks to the ground.

The message `LOWER FORKS` disappears.

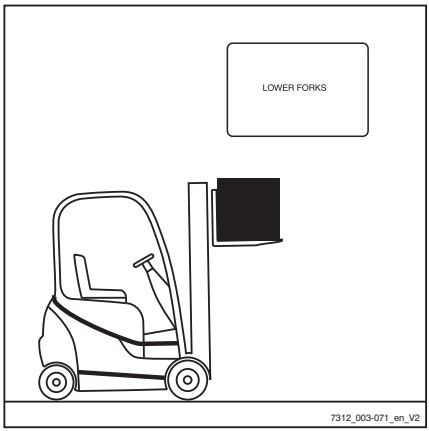

REFERENCE CYCLE message

If the fork was lowered after the truck was switched off, the control electronics do not know the position of the fork when the truck is restarted. The truck will only travel at a reduced driving speed. Depending on the position of the fork, the message `REFERENCE CYCLE` (variant) may appear in the display. To align the position with the control electronics, the fork must be raised.

– Switch on the key switch.

The truck will only travel at a reduced driving speed. The message `REFERENCE CYCLE` may appear in the display.

– Raise the fork

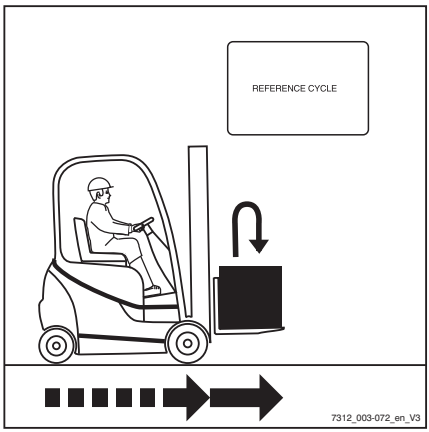

https://truckmanualshub.com/

The message REFERENCE CYCLE goes out, or now appears in the display for the first time and then goes out.

– To drive again, lower the fork to a maximum of 300 mm above the ground

The truck can now be driven again with no speed limitation.

SERVICE BRAKE message

If the message SERVICE BRAKE appears in the display, the brake fluid level must be checked. Contact your service centre.

▷

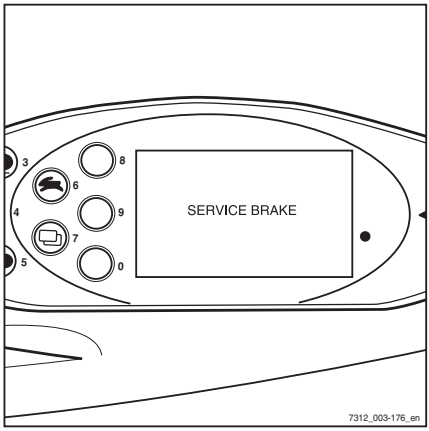

https://truckmanualshub.com/

Operation in special operating situations

Transporting

⚠ CAUTION

Danger of material damage from overloading!

If the truck is driven onto a means of transport, the load capacity of the means of transport, the ramps and loading bridges must be greater than the actual total weight of the truck. Components may be permanently deformed or damaged due to overloading.

- Determine the actual total weight of the truck.
- Only load the truck if the load capacity of the means of transport, the ramps and loading bridges is greater than the actual total weight of the truck.

Determining the actual total weight

- Park the truck securely.
- Determine the unit weights by reading the truck nameplate and, if necessary, the attachment (variant) nameplate.
- Add the determined unit weights to obtain the actual total weight of the truck:

  Tare weight (1)

  \+ Max. permissible battery weight (2)

  \+ Ballast weight (variant) (3)

  \+ Net weight of attachment (variant)

  \+ 100 kg allowance for the driver

  = Actual total weight

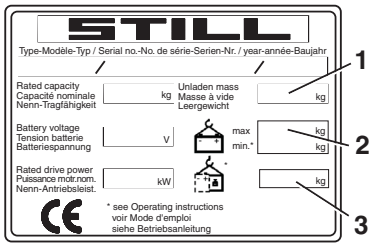

6210_001-016_V2

https://truckmanualshub.com/

DANGER

Risk of accident from the truck crashing!

Steering movements can cause the tail end to veer off the loading bridge towards the edge. This may cause the truck to crash.

- Before driving over a loading bridge, ensure that it is installed and secured properly.
- Ensure that the transport vehicle to be driven onto has been sufficiently secured against moving.
- Maintain a safety distance from edges, loading bridges, ramps, working platforms etc.
- Drive slowly and carefully onto the transport vehicle.

Wedging

NOTE

Due to its design, the truck can only be chocked securely if the fork carriage is raised before chocking. To ensure secure parking after chocking, the fork carriage can be lowered as far as the chock.

- Raise the fork carriage high enough so that the chocks can be inserted in front of the front wheels.
- Secure the truck from rolling away by placing a wheel chock in front of each front wheel and behind the back wheel (1).
- Park the truck securely.

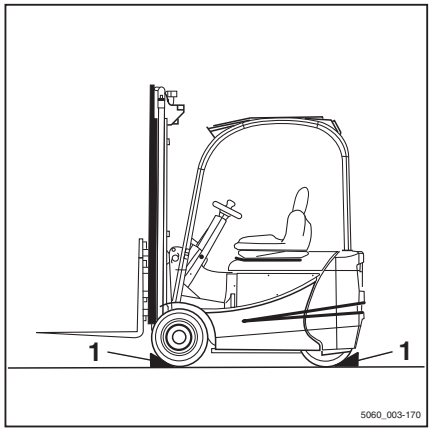

CAUTION

Risk of component damage!

If you remove the battery male connector while the key switch is switched on (under load), an arc will be produced. This can lead to corrosion at the contacts, which considerably shortens their service life.

- Switch off the key switch before the battery male connector is disconnected.
- Do not disconnect the battery male connector while the key switch is switched on, except in an emergency.

- Ensure that the key switch is switched off.
- Disconnect the battery male connector.

https://truckmanualshub.com/

Lashing

CAUTION

Abrasive lashing straps can rub against the surface of the truck and cause damage.

– Position the slip-resistant pads underneath the lifting points (3) (e.g. rubber mats or foam).

– Attach lashing straps (1) to both sides of the truck and lash the truck to the rear. ▷

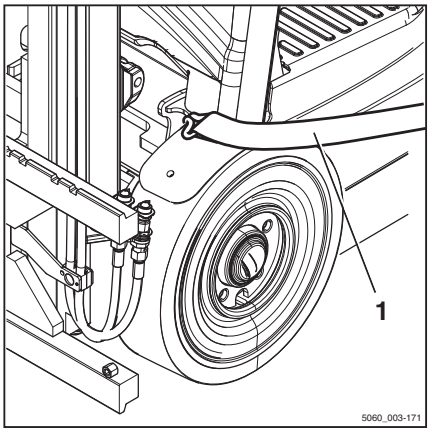

– Sling lashing straps (2) around the rear of the truck within the chassis contour and lash the truck to the front. ▷

DANGER

The truck may slip if the lashing straps slip!

The truck must be lashed securely so that it cannot move during transportation.

– Make sure that the lashing straps are tightened securely and that the pads cannot slip off.

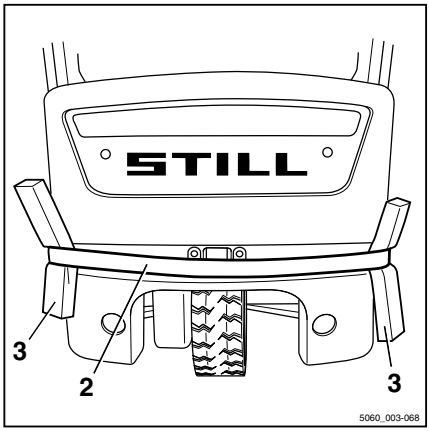

https://truckmanualshub.com/

Towing

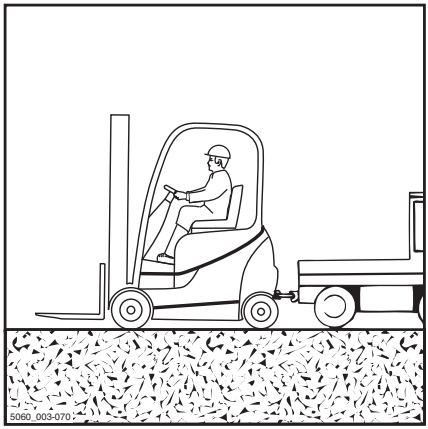

DANGER

The brake system on the towing vehicle may fail. There is a risk of accident!

If the towing vehicle's brake system is not of the correct size, the vehicle cannot be braked securely or the brakes may fail. The towing vehicle must be able to absorb the pulling and braking forces from the unbraked towed load (total actual weight of the truck).

– Check the pulling and braking force of the towing vehicle.

DANGER

The truck could drive into the towing vehicle when the towing vehicle brakes. There is a risk of accident!

If a rigid connection has not been used during towing for the power transmission in two directions, the truck may drive into the towing vehicle when the towing vehicle brakes. For safety reasons, only a tested tow bar may be used.

– Use a tested tow bar.

– Set down load and lower fork arms close to the ground.

CAUTION

If the truck drive between the drive motor and the drive axle is not interrupted, the drive may be damaged.

– Place the drive direction switch in the neutral position.

CAUTION

Risk of component damage!

If you remove the battery male connector while the key switch is switched on (under load), an arc will be produced. This can lead to corrosion at the contacts, which considerably shortens their service life.

– Do not disconnect the battery male connector while the key switch is switched on.

https://truckmanualshub.com/

DANGER

People can be crushed between the truck and towing vehicle during manoeuvring. There is a risk to life!

The towing vehicle may only be manoeuvred and the tow bar may only be attached using a second person as a guide. This ensures that the driver of the towing vehicle and the mechanic attaching the tow bar are aware of possible risks.

– Only manoeuvre with a guide.

CAUTION

Steering is stiff! There is no power steering if the hydraulics fail!

– The selected towing speed must allow braking and control of the truck and towing vehicle at all times.

CAUTION

If the truck is not steered while it is being towed, it may veer out in an uncontrolled manner!

– The truck being towed must also be steered by a driver.
– The driver of the truck being towed must sit in the driver's seat and fasten the seat belt before towing.
– Where possible, activate the restraint systems provided.

– Set down the load and lower fork arms close to the ground.
– Place the drive direction switch in the neutral position.
– Apply the parking brake.
– Switch off the key switch.
– Disconnect the battery male connector.
– Open the battery hood.

https://truckmanualshub.com/

- Unscrew the eye bolt (1) from the stowed position.
- Take the lid (2) out of the wheel cutaway on the rear weight.
- Place the lid in the stowed position of the eye bolt.
- Close the battery hood again.

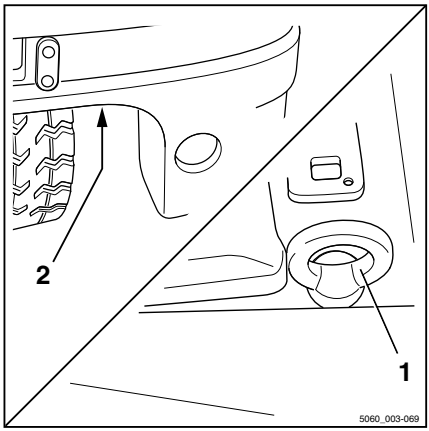

- Screw in the eye bolt (1) to the stop on the rear weight.
- Check the pulling and braking force of the towing vehicle.
- With the help of a guide, attach the towing vehicle to the truck.
- Secure the tow bar to the towing vehicle and to the eye bolt (1) of the truck.
- Sit in the driver's seat in the truck to be towed, and fasten the seat belt.
- Where possible, activate the restraint systems provided.
- Release the parking brake.
- Select a towing speed that allows the truck and towing vehicle to be effectively braked and controlled at all times.
- Tow the truck.
- After towing, secure the truck from rolling away (e.g. by applying the parking brake or using chocks).
- Remove the tow bar.
- Open the battery hood.
- Unscrew the eye bolt from the rear weight.
- Take the lid out of the stowed position of the eye bolt and insert into the wheel cutaway on the rear weight.

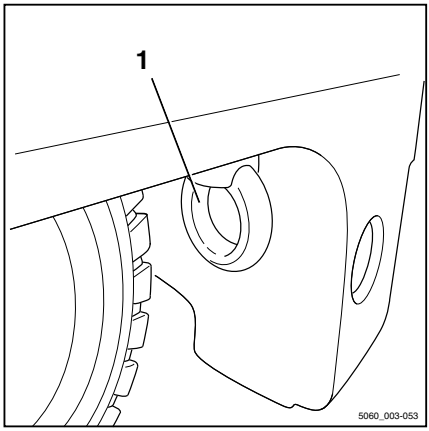

https://truckmanualshub.com/

– Screw the eye bolt into the stowed position.

⚠ CAUTION

The cables can be damaged by being crushed — there is risk of short circuit!

Cables must not be crushed when screwing in the eye bolt.

– Ensure that the wiring can move freely.

– Close the battery hood again.

Crane loading

Crane loading is only intended for transporting the complete truck, including the lift mast, for its initial commissioning. For application conditions that require frequent loading or that are not presented here, please contact the manufacturer with regard to special variants.

Only those persons with sufficient experience of suitable harnesses and hoists may load trucks.

Determining the actual total weight

– Park the truck securely; see ⇒ Chapter "Parking the truck securely and switching it off", P. 5-282.

– Determine the unit weights by reading the truck nameplate and, if necessary, the attachment (variant) nameplate.

– Add the determined unit weights to obtain the actual total weight of the truck:

Tare weight (1)

\+ Max. permissible battery weight (2)

\+ Ballast weight (variant) (3)

\+ Attachment net weight (variant)

= Actual total weight

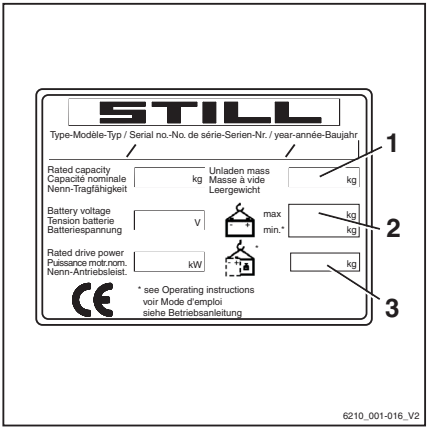

https://truckmanualshub.com/

Hooking on the lifting straps

▷

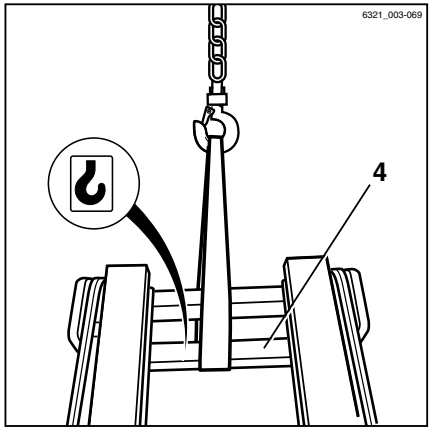

⚠ CAUTION

Harnesses may damage the truck's paintwork!

Harnesses can damage paintwork by chafing and pressing on the surface of the truck. Hard or sharp-edged harnesses, such as wires or chains, can quickly damage the surface.

– Use textile harnesses, e.g. lifting straps, with edge protectors or similar protective devices if necessary.

⚠ DANGER

There is risk of being hit if the hoists and harnesses fail and cause the truck to fall, with potentially fatal consequences!

– Only use hoists and harness with sufficient load capacity for the actual total weight of the truck.
– Only use the truck's designated lifting points.
– Make sure that harnesses such as hooks, shackles, belts etc. are only used in the indicated load direction.
– The harnesses must not be damaged by truck parts.

– Loop the lifting straps around the main traverse (4) on the outer mast of the lift mast.

NOTE

The lifting points of the truck are marked with the hook symbol, see ⇒ Chapter "Overview", P. 4-64.

https://truckmanualshub.com/

– Loop the lifting straps through the recess (8) in the counterweight, see illustration.

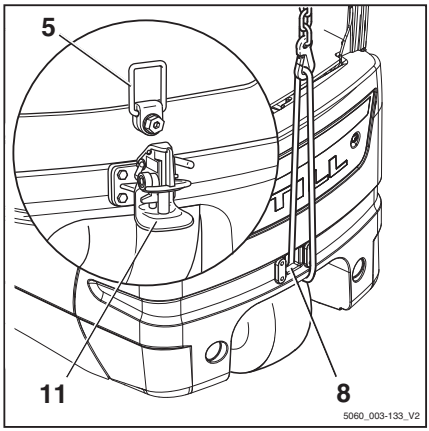

DANGER

Never crane-load the truck using the tow coupling. The tow coupling is not designed for this and could be deformed or damaged. The truck could fall off, with potentially fatal consequences!

Hooking the crane belt to an available tow coupling (11) is only permitted on an additional lifting eye (5) approved for this purpose.

If an additional lifting eye is not present at the tow coupling, one can be retrofitted by the service team or the tow coupling can be removed for crane loading.

– Hook crane belt onto the additional lifting eye.
– If necessary seek advice from STILL service.

– Determine the truck's centre of gravity.

NOTE

The centre of gravity is indicated by the symbol "S" in the operating instructions; see the section entitled "Dimensions" ⇒ Chapter "Technical data", P. 337.

– Set the length of the harnesses so that the lifting eye (9) is vertically above the truck's centre of gravity.

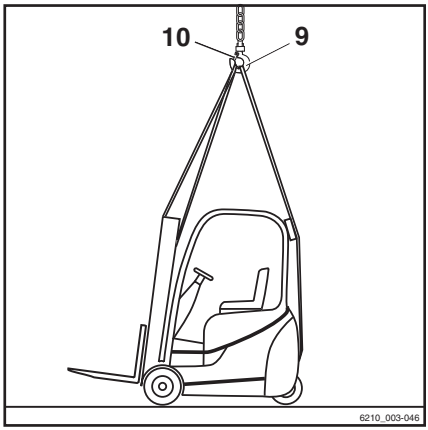

This ensures that the truck hangs level when lifting it.

– Connect the lifting straps to the lifting eye and insert the safety device (10).

CAUTION

Incorrectly fitted harnesses may damage attachment parts!

Pressure from the harnesses can damage or destroy attachment parts when the truck is lifted. If attachment parts are in the way (e.g. lighting, rear window, trademark emblem etc.), these must be removed before loading. Ask your service centre about this.

– Secure harnesses so that they are not touching any attachment parts.

https://truckmanualshub.com/

Loading the truck

DANGER

If the raised truck swings in an uncontrolled fashion, it may crush people. There is a risk to life!

- Never walk or stand underneath suspended loads.
- Do not allow the truck to bump into anything whilst it is being lifted, or allow it to move in an uncontrolled way.
- If necessary, hold the truck using guide ropes.

- Carefully lift the truck and take care when setting it down at the intended location.

https://truckmanualshub.com/

Behaviour in emergencies

Emergency shutdown

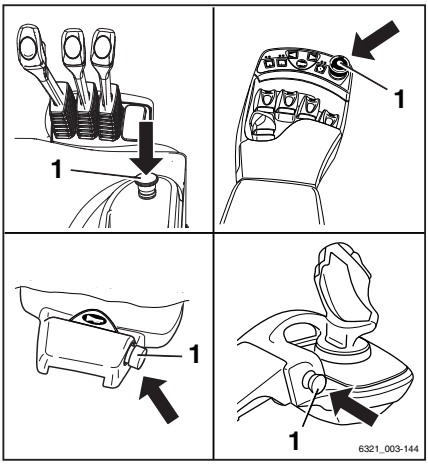

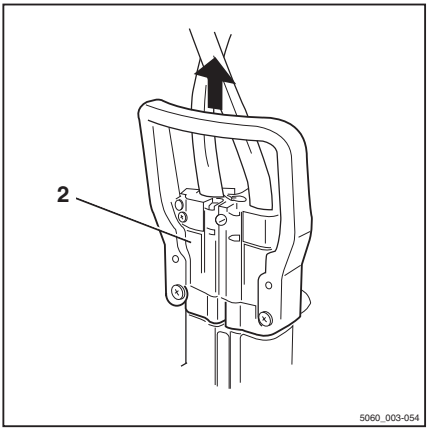

WARNING

No electric brake assistance when the emergency off switch is actuated!

Actuating the emergency off switch will disconnect the drives from the power supply.

– To brake, actuate the service brake.

CAUTION

Actuating the emergency off switch (1) or disconnecting the battery male connector (2) shuts down the electrical functions of the truck.

This safety system must only be used in an emergency or to safely park the truck.

CAUTION

Risk of component damage!

If you disconnect the battery male connector while the key switch is switched on (under load), an arc will be produced. This can lead to erosion at the contacts, which considerably shortens their service life.

– Switch off the key switch before the battery male connector is disconnected.
– Do not disconnect the battery male connector while the key switch is switched on, except in an emergency.

In an emergency, all functions of the truck can be shut down:

– Press the emergency off switch (1) or disconnect the battery male connector (2).

In drive mode, this has the following effect:

- No reduction in truck speed when the accelerator pedal is released, according to the drive program selected. The truck will roll to a stop
- The electric brake does not function during the first part of brake pedal depression. To brake the truck using the mechanical brake, the brake pedal must be pushed down further

https://truckmanualshub.com/

- No power steering effect; the steering forces are increased by the remaining emergency steering function
- The "Curve Speed Control" system (automatic reduction in truck speed when cornering) does not function. The truck must be decelerated with the mechanical brake by pressing the brake pedal
- No hydraulic functions are available

Procedure if truck tips over

▷

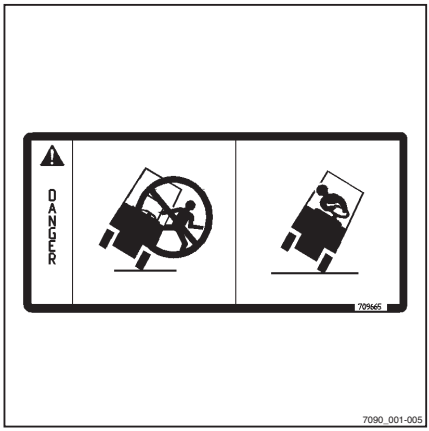

⚠ DANGER

If the truck tips over, the driver could fall out and slide under the truck with potentially fatal consequences. There is a risk to life.

Failure to comply with the limits specified in these operating instructions, e.g. driving on unacceptably steep gradients or failing to adjust speed when cornering, can cause the truck to tip over. If the truck starts to tip over, do not leave the truck under any circumstances. This increases the danger of being hit by the truck.

– Do not release your seat belt.
– Never jump off the truck.
– You must adhere to the rules of behaviour if the truck tips over.

Rules of behaviour if truck tips over:

– Hold onto the steering wheel with your hands.
– Brace your feet in the footwell.
– Bend your upper body over the steering wheel.
– Bend your body against the direction of the fall.

Emergency lowering

If the hydraulic control system fails whilst a load is raised, emergency lowering can be performed. An emergency lowering screw for this purpose is located on the valve block.

https://truckmanualshub.com/

DANGER

There is a risk of fatal injury from falling loads or parts of the truck being lowered.

– Do not walk beneath the raised load.
– Adhere to the following steps.

NOTE

The hexagon socket wrench that is used to remove the valve cover is also used for emergency lowering.

– Remove the valve cover.
– Continue using the hexagon socket wrench.

NOTE

In this procedure, a distinction is made between the types of operating devices.

For the Joystick 4Plus version and the mini-lever version (A):

– Using the hexagon socket wrench (2), turn the emergency lowering screw (5) on the valve block a maximum of 1.5 revolutions to loosen it.

For the multiple-lever version (B):

– Using the hexagon socket wrench, turn the emergency lowering screw (3) on the valve block (3) a maximum of 1.5 revolutions to loosen it.(4)

WARNING

The load is lowered!

The lowering speed is regulated by unscrewing the emergency lowering screw.

– Note the following list.

For both versions:

- Tightening torque:
  max. 2.5 Nm
- When unscrewed a little:
  The load lowers slowly
- When unscrewed a lot:
  The load lowers quickly

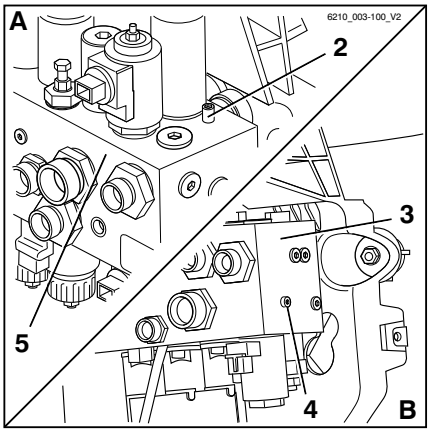

A Joystick 4Plus version and the mini-lever version:
B Multiple-lever version

https://truckmanualshub.com/

After lowering:

- Screw in the emergency lowering screw again.
- Install the valve cover.
- Securely store the hexagon socket wrench between the battery hood and the valve cover.

DANGER

If the truck is operated with the hydraulic controller blocked, there is an increased risk of accidents!

- After the emergency lowering procedure, have the malfunction rectified.
- Notify the authorised service centre.

https://truckmanualshub.com/

Handling the battery

Safety regulations when handling the battery

– National statutory provisions must be followed when setting up and operating battery charging stations.

CAUTION

Risk of component damage!

Incorrect connection or operation of the charging station or battery charger may result in damage to components.

– Follow the operating instructions for the charging station or battery charger and for the battery.

Maintenance personnel

Batteries may be charged, maintained or changed only by properly trained personnel in accordance with the instructions of the manufacturer of the battery, battery charger or truck.

– The handling instructions for the battery and the operating instructions for the battery charger must be followed.

– The following safety regulations must be observed when maintaining, charging and changing the battery.

WARNING

Risk of crushing/shearing!

The battery is very heavy. There is a risk of serious injury if any parts of the body are caught under the battery.

If parts of the body are wedged between the battery door and the edge of the chassis when the battery door is closed, this could lead to injuries.

– Always wear safety footwear when replacing the battery.

– Only close the battery door if there is no part of the body between the battery door and the edge of the chassis.

https://truckmanualshub.com/

The battery must only be replaced in accordance with the directions in these operating instructions.

– When charging and maintaining the battery, observe the manufacturer's maintenance instructions for the battery and battery charger.

Fire protection measures

DANGER

Risk of explosion due to flammable gases!

During charging, the battery releases a mixture of oxygen and hydrogen (detonating gas). This gas mixture is explosive and must not be ignited.

There must be no flammable materials or spark-forming operating materials within 2 m of either the truck when it is parked for charging or the battery charger.

– When working with batteries, take the following security precautions.

– Keep away from open flames and do not smoke.

– Always ensure adequate ventilation in the vicinity.

– Disconnect the battery male connector before charging and only when the truck and battery charger are switched off.

– The battery door must be open when charging.

– Expose the surfaces of the battery cells.

– Do not place any metal objects on the battery.

– Open any protective structures fully (e.g. fabric-covered cab).

– Have fire extinguishing equipment ready.

https://truckmanualshub.com/

Lifting accessory

DANGER

Risk of accident!

The battery could fall from the lifting accessory or the lifting accessory could tip over or become damaged. If this happens, there is a risk to life.

The battery must only be removed when the truck is on level, smooth ground with sufficient load capacity. The load capacity of the lifting accessory used (see operating instructions or nameplate) must at least match the battery weight (see battery identification plate).

– Ensure the load capacity of the lifting accessory.
– Remove the battery on suitable ground.

Battery removal from trucks with an internal roller channel can be carried out with the following lifting accessories:

- Lift truck including external roller channel (variant)

The battery can be removed from trucks with a bridge (variant) using the following lifting accessories:

- Crane

NOTE

The removal of batteries from trucks without their own devices must be carried out by the authorised service centre.

Battery weight and dimensions

DANGER

Risk of tipping due to change in battery weight!

The battery weight and dimensions affect the stability of the truck. When replacing the battery, the weight ratios must not be changed. The battery weight must remain within the weight range specified on the nameplate.

– Do not remove or change the position of ballast weights.
– Note the battery weight.

https://truckmanualshub.com/

Damage to cables and battery male connectors

⚠ CAUTION

There is a risk of short circuit if the cables are damaged.

Do not crush the battery cable when closing the battery door.

- Check the battery cables for damage.
- When removing and reinstalling the battery, ensure that the battery cables are not damaged.
- Ensure that the battery cable does not come into contact with the battery door.

▷

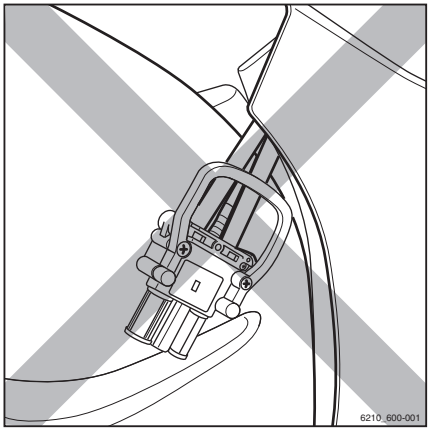

⚠ CAUTION

Possible damage to the male battery connector!

If the battery male connector is disconnected or connected while the key switch or battery charger is under load, an arc will be produced at the battery male connector. This can lead to corrosion at the contacts, and can considerably shorten the service life of the contacts.

- Switch off the key switch or battery charger before the battery male connector is disconnected or connected.
- Only disconnect the battery male connector while under load in an emergency.

Opening and closing the battery hood

⚠ CAUTION

Risk of damage through component collision!

Driver's seats with operating devices in the armrest and opened ERS or HRS driver restraint systems (variant) can collide with and damage surrounding components (for example, interior mirror) when the battery hood is opened.

- Position the driver's seat as far back as it can go.
- Carry out preparations for ERS or HRS driver restraint system (variant).
- Only then open the battery hood.

https://truckmanualshub.com/

NOTE

If the truck is fitted with the ERS or HRS driver restraint system (variant), the following measures must be observed for opening and closing the battery hood.

Preparations for ERS driver restraint system (variant)

CAUTION

Risk of component damage!

If you remove the battery male connector while the key switch is switched on (under load), an arc will be produced. This can lead to corrosion at the contacts, which considerably shortens their service life.

- Switch off the key switch before the battery male connector is disconnected.
- Do not disconnect the battery male connector while the key switch is switched on, except in an emergency.

- Disconnect the battery male connector; see the chapter entitled "Disconnecting the battery male connector".
- Pull release button (4).
- Swivel restraining brackets (5) downwards. ▷

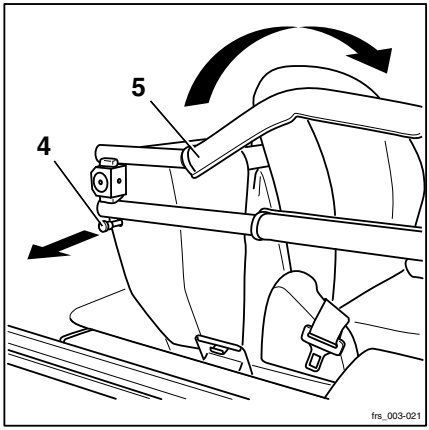

https://truckmanualshub.com/

Preparations for HRS driver restraint system (variant)

– Swivel restraining brackets (6) downwards. ▷

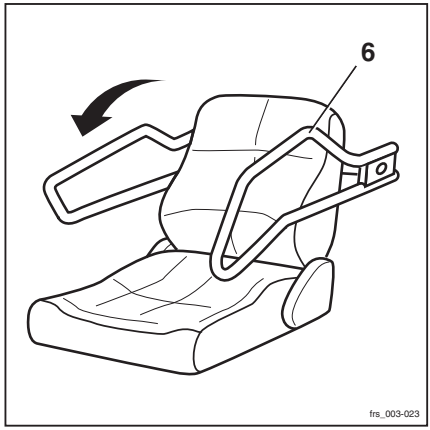

Opening the battery hood

⚠ WARNING

Risk of injury from crushing due to falling battery hood!

The battery hood is equipped with a gas spring which holds the battery hood in the open position unless there is any other load on it, e.g. heavy objects, strong winds or other persons. During opening, there must be no objects on the battery hood that are not part of the truck equipment.

– Remove loose objects from the battery hood before opening.
– Make sure that the battery hood is not being pushed down by strong winds or other persons.

– Position the driver's seat as far back as it can go.
– Push the locking lever (1) to the left. ▷
– Lift the battery hood (3) using the handle (2) and bring it forwards.

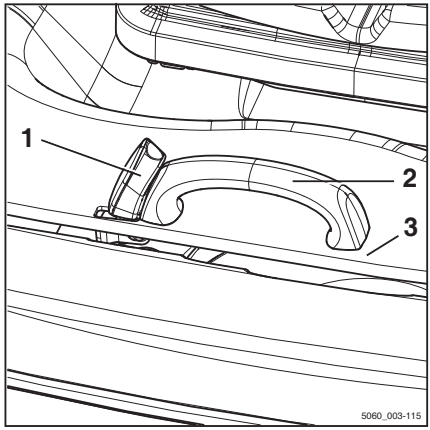

NOTE

The battery hood can be raised to a max.angle of approx. 30°.

Closing the battery hood

⚠ WARNING

Limbs can become trapped when closing the battery hood — risk of crushing!

When closing the battery hood, nothing should come between the battery hood and the edge of the chassis.

– Carefully close the battery hood.
– Only close the battery hood if there are no parts of the body in the way.

https://truckmanualshub.com/

WARNING

When closing the battery hood, there is a risk of the battery cable becoming trapped. If the cable is crushed or sheared off, there is a risk of short circuit!

When closing the battery hood, nothing should come between the battery hood and the edge of the chassis.

- Carefully close the battery hood.
- Only close the battery hood if the battery cable is not trapped.

DANGER

Risk of accident due to the battery hood opening!

In the event of a sharp deceleration, an unlocked battery hood may swing open towards the seat and driver, injuring the driver.

- Ensure that the battery hood is shut securely.
- Drive the truck only when the battery hood is locked.

DANGER

Risk to life from the battery sliding out!

If the battery hood is not locked and the truck tips over, the battery can slide out of position and can fall on the driver.

- Ensure that the battery hood is shut securely.
- Drive the truck only when the battery hood is locked.

NOTE

The aperture running around the hood is used for forced ventilation and must not be closed.

NOTE

If the internal roller channel or battery bridge (variant) is not locked correctly, the battery hood cannot be closed.

https://truckmanualshub.com/

– Push down and close the battery hood (3) using the handle (2).

– Ensure that the locking lever (1) has engaged.

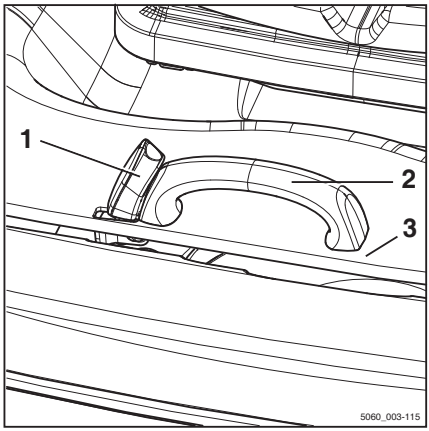

Final measures for ERS driver restraint system (variant)

CAUTION

Risk of damage to components!

Do not open a closed restraint system by force.

NOTE

If the parking brake is on and the key switch is turned off, the restraining brackets swivel into the opened position once the power supply is restored.

CAUTION

Risk of component damage!

If you connect the battery male connector with the key switch switched on (under load), an arc will be produced. This can lead to corrosion at the contacts, which considerably shortens their service life.

– Switch off the ignition switch before the battery male connector is disconnected.

– Connect the battery male connector.

The restraining brackets (5) automatically swivel upwards.

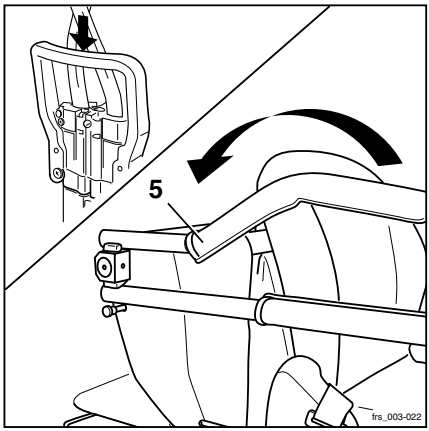

Final measures for HRS driver restraint system (variant)

– Press left restraining bracket (6) inwards.

https://truckmanualshub.com/

– Swivel the restraining brackets upwards. ▷

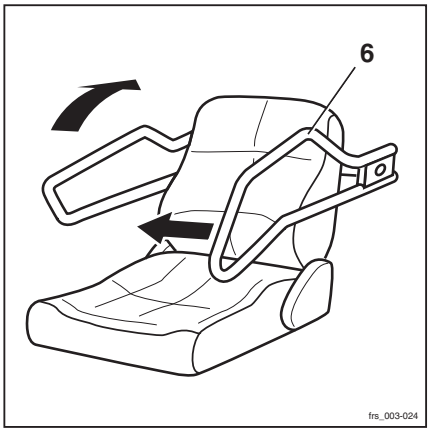

Opening/closing the battery door

Opening the battery door

NOTE

The battery door is equipped with a spring mechanism and an end position latch so that it does not close automatically.

– Push the battery door release button (1) in the direction of the arrow, and open the battery door forwards. ▷

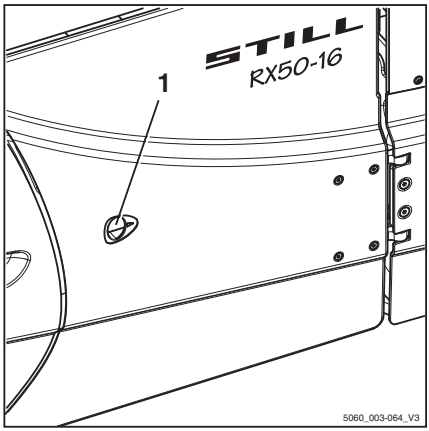

https://truckmanualshub.com/

Closing the battery door

WARNING

When closing the battery door, limbs could become trapped - risk of crushing!

When closing the battery door, nothing should come between the battery door and the edge of the chassis.

– Carefully close the battery door.
– Only close the battery door if there are no parts of the body in the way.

WARNING

When closing the battery door, there is a risk of trapping the battery cable. If the cable is crushed or sheared off, there is a risk of short circuit!

When closing the battery door, nothing should come between the battery door and the edge of the chassis.

– Carefully close the battery door.
– Only close the battery door if the battery cable is not in the way.

WARNING

Risk of accident due to the battery door opening!

An unlocked battery door may open if the truck decelerates sharply. If the battery door opens while driving, there is risk of damage from a collision.

– Ensure that the battery door is shut securely.
– Drive the truck only when the battery door is locked.

DANGER

Risk to life from the battery sliding out!

If the battery door is not locked and the truck tips over, this may lead to the battery falling on the driver!

– Ensure that the battery door is shut securely.
– Drive the truck only when the battery door is locked.

▷

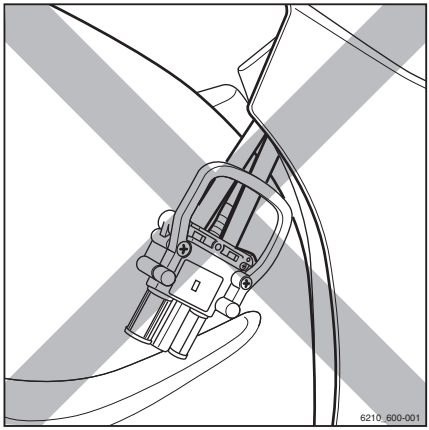

https://truckmanualshub.com/

NOTE

The apertures in the door are necessary for forced ventilation and must not be blocked.

NOTE

If the internal roller channel or battery bridge (variant) is not locked correctly, it is not possible to close the battery door.

– Close the battery door.
– Close the battery door securely by pushing it into the engaged position.
– Ensure that the battery door is shut securely.

Disconnecting the battery male connector

CAUTION

Risk of component damage!

If you remove the battery male connector while the key switch is switched on (under load), an arc will be produced. This can lead to corrosion at the contacts, which considerably shortens their service life.

– Do not disconnect the battery male connector while the key switch is switched on.
– Only disconnect the battery male connector while the key switch is switched on in an emergency.

– Open the battery door.

https://truckmanualshub.com/

– Disconnect the battery male connector (1) by pulling in the direction of the arrow at the plug connection.

– Place the battery male connector on the battery.

CAUTION

There is a risk of short circuit if the cables are damaged.

Position the battery cable on the battery in such a way that it cannot be crushed - either when removing or inserting the battery, or when closing the battery door.

– Check the connecting cable for damage.

– Ensure that the battery cable does not come into contact with the battery door.

– Close the battery door.

▷

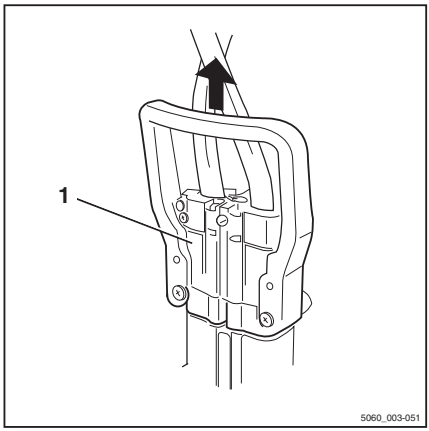

Battery replacement using a bridge

Removing the battery

WARNING

If the truck is not parked on horizontal ground, there is nothing to prevent the battery rolling away once the lock has been opened, leading to a risk of crushing and shearing!

– The truck must be parked on horizontal ground.

– People must not stand directly in the battery's direction of travel or in the battery compartment.

– Do not place objects or any parts of the body between the battery and the truck chassis.

– Use only the handles that are provided and identified.

https://truckmanualshub.com/

CAUTION

If the battery cable is trapped it may be damaged, there is a risk of crushing!

– Position the battery cable on the battery in such a way that it cannot be crushed - either when removing or inserting the battery, or when closing the battery door.

CAUTION

The battery door may be damaged if it is struck by the battery!

– Ensure that the battery door is fully open and secured during battery removal.

– Park the truck securely.

– Switch off the key switch.

– Open the battery hood.

– Open the battery door.

CAUTION

Do not disconnect the battery male connector while the key switch is switched on!

– Ensure that the key switch is switched off.

– Disconnect the battery male connector (1) from the plug connection by pulling in the direction of the arrow. ▷

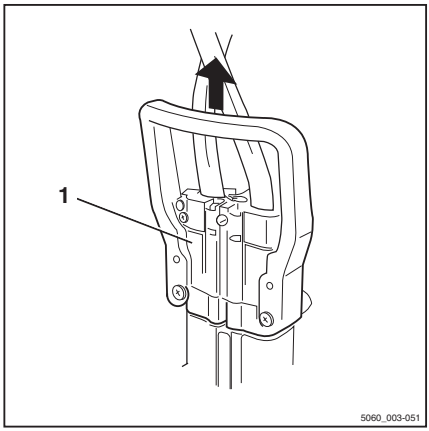

https://truckmanualshub.com/

The bridge (1) is now freely accessible and should be folded down for removing the battery.

– Observe decal information (11) for the individual procedures for battery replacement shown on the inside of the battery door.

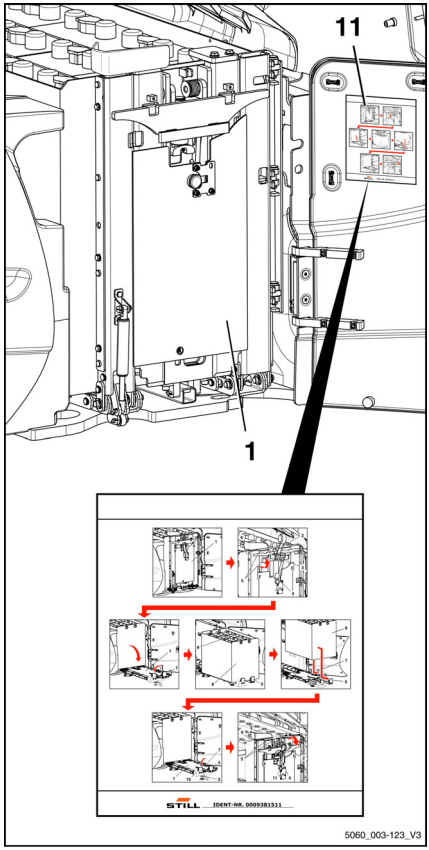

– Raise the bridge support (3) at the red web belt (2) until the lock (4) audibly engages.

– Ensure that the battery stop (5) is clear of the edge of the battery tray (6).

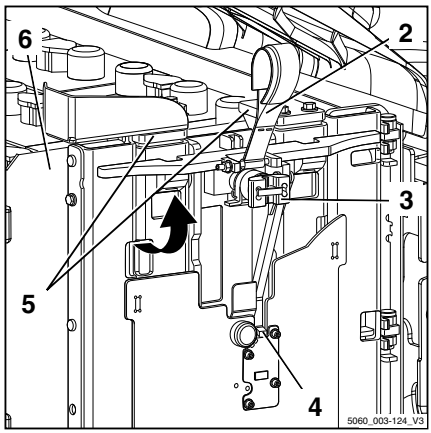

https://truckmanualshub.com/

– Fold down the bridge (1) at the red web belt. ▷

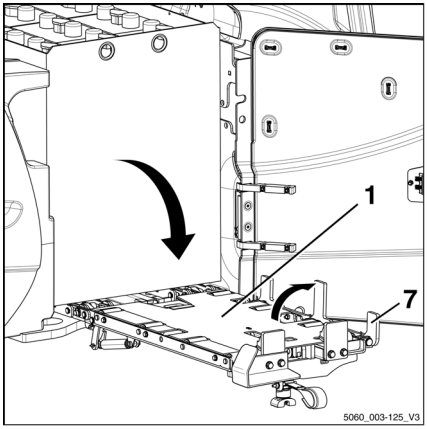

⚠ WARNING

If the bridge folds down whilst the battery is being taken out, the battery can roll forward in an uncontrolled manner, creating a risk of crushing!

– Ensure that the bridge support stands vertically under the bridge.

– Grip the side battery stop (7) at the front and fold it up.

⚠ WARNING

The battery can now move freely and may roll away unimpeded, creating a risk of crushing!

– People must not stand directly in the battery's direction of travel or in the battery compartment.
– Do not place objects or any parts of the body between the battery and the truck chassis.
– Do not attempt to keep hold of the battery if it rolls away.

– Carefully pull the battery tray (6) with the battery (9) completely out of the battery compartment to the battery stop (5) on the bridge. ▷

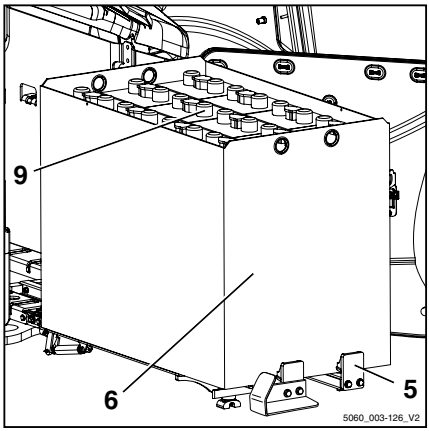

ℹ NOTE

The battery stop is mounted on a pull-out piece and travels with the battery to the end stop of the pull-out piece.

– Transfer the battery using the crane; see chapter "Battery transport with crane".

Installing the battery

⚠ CAUTION

If when the battery is being installed the battery hood or the battery door are not fully open, or the battery stops are not folded in or pulled out, or if there are objects in the truck's battery compartment, considerable damage will be done to these components during installation of the battery.

– Open the battery hood.
– Open the battery door.
– Fold down the side battery stop.

https://truckmanualshub.com/

- Pull out the battery stop with the pull-out piece fully.
- Remove all objects from the battery compartment.

⚠ CAUTION

The battery must be positioned carefully so that it is flat on the horizontal bridge. Setting the battery down on the battery stops can deform the stops or the bridge; the battery then cannot be inserted.

- Ensure that the bridge support stands vertically under the bridge.
- Ensure that the battery has not been set down on the battery stops.
- Ensure that the battery is resting right up against the battery stops.
- Using the crane, carefully set down the battery (9) on to the bridge and push it up against the stops (5) and (7).
- Release the battery from the lifting gear and take away the crane.
- Push the battery fully into the battery compartment of the truck.

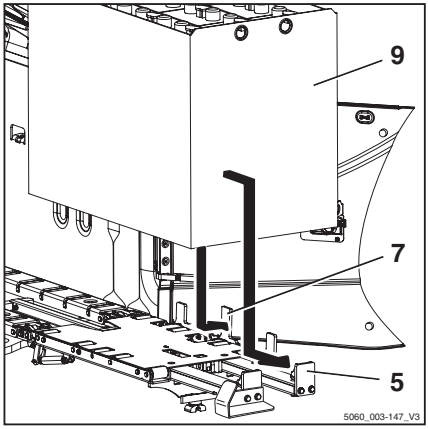

https://truckmanualshub.com/

- Fold down the side battery stop (7).
- Fully insert the battery stop (5) on the cable guide (10).
- Completely fold up the bridge (1) at the red web belt (2).

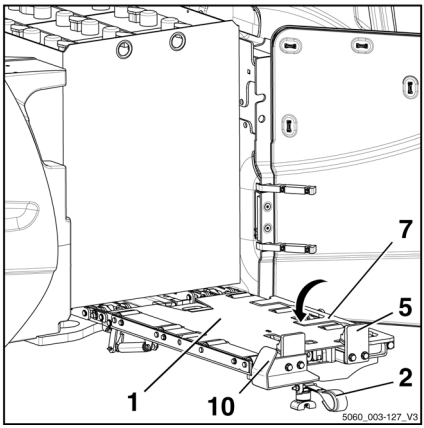

CAUTION

The battery cable may be damaged by becoming trapped — there is risk of short circuit due to crushing!

If the battery cable is positioned between the battery tray and the battery bridge to be folded up, the battery cable will become trapped. This can lead to the battery cable or battery male connector becoming damaged and a short circuit.

- Only fold up the battery bridge when the entire battery cable is positioned on top of the battery.

NOTE

To fold down the bridge support, the lock must be released. The lock is released with a two-handed operation. This protects the operator against injuries due to an incorrect sequence of operations.

WARNING

The bridge support can be folded down. During folding down there is risk of crushing if the correct sequence of operations is not followed.

- Do not reach into the assembly or locking mechanisms.
- Hold the bridge support at the red web belt until it is fully folded down.
- Follow the sequence of operations.

https://truckmanualshub.com/

– To fold down the bridge support, raise the red web belt (2) and keep it raised so as to free the lock (4).

– Push the release button (11) and hold it.

– Slowly fold the bridge support right down.

– Release the web belt and the release button.

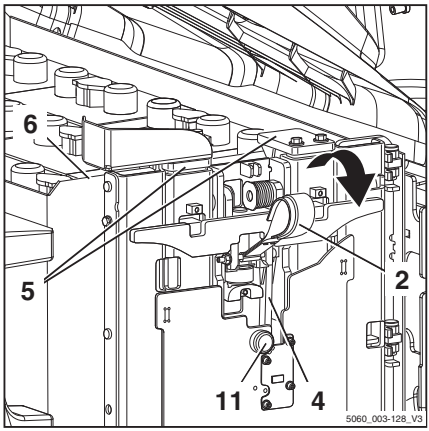

DANGER

If the battery is not locked correctly, the battery can slide out of the truck, with potentially fatal consequences!

– Ensure that the battery stop (5) is fully pushed in and engaged behind the battery tray (6).

– Always lay the battery cable (12) to the left of the cable guide (10), as shown in the diagram.

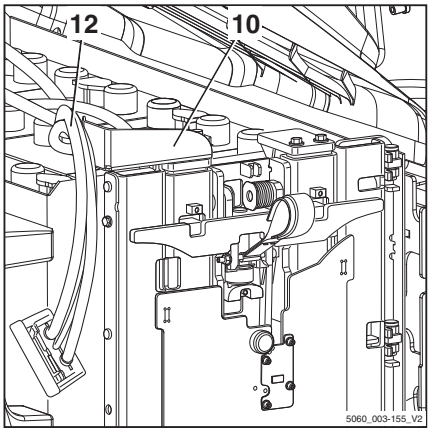

CAUTION

The battery cable may be damaged by becoming trapped — there is risk of short circuit due to crushing!

If the battery cable (12) is laid to the right of the cable guide (10), the battery cable will become trapped between the battery bridge and the battery door. This can lead to the battery cable or battery male connector becoming damaged and a short circuit.

– Ensure that the battery cable is correctly positioned.

– Connect the battery male connector.

– Close the battery door.

– Close the battery hood.

https://truckmanualshub.com/

Battery transport with crane

DANGER

If the load is dropped, the consequences could potentially be fatal!

– Never walk or stand underneath suspended loads.

– Ensure there is sufficient distance between the truck and any obstacles so that the truck is not damaged when the crane is used.

To avoid short circuits, batteries with open terminals or connectors should be covered with a rubber mat.

– Attach battery (1) to suitable lifting gear (2).

Observe the operating instructions for the lifting gear.

The lifting gear should be vertical when lifting, so that no lateral pressure is applied to the tray.

– Lift the battery from the roller channel. Ensure that there is sufficient distance from the battery door.

– Set the battery down carefully.

– Do not place or allow slack lifting gear to fall on the battery cells.

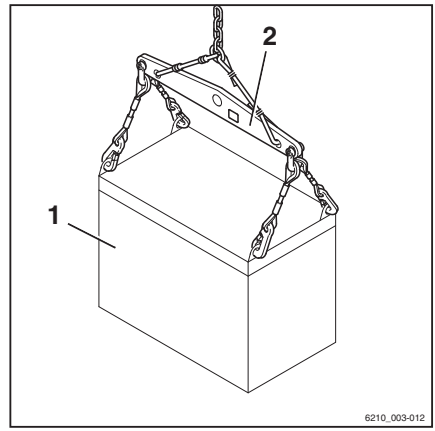

https://truckmanualshub.com/

Changing the battery using the internal roller channel

Activities before removal of the battery

WARNING

If the truck is not parked on horizontal ground, there is nothing to prevent the battery rolling away once the lock has been opened, leading to a risk of crushing and shearing!

- The truck must be parked on horizontal ground.
- People must not stand directly in the battery's direction of travel or in the battery compartment.
- Do not place objects or any parts of the body between the battery and the truck chassis.
- Use only the handles that are provided and identified.

- Park the truck securely.
- Switch off the key switch.
- Open the battery hood.
- Open the battery door.

CAUTION

Do not disconnect the battery male connector while the key switch is switched on!

- Ensure that the key switch is switched off.

- Disconnect the battery male connector (1) from the plug connection by pulling in the direction of the arrow. ▷

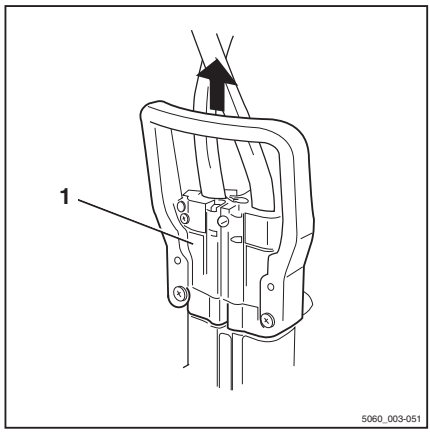

https://truckmanualshub.com/

The battery lock (1) is now freely accessible and must be swung down and pushed under the battery tray prior to removing the battery.

CAUTION

If the battery cable is trapped it may be damaged, there is a risk of crushing!

– Position the battery cable on the battery in such a way that it cannot be crushed - either when removing or inserting the battery, or when closing the battery door.

CAUTION

The battery door may be damaged if it is struck by the battery!

– Ensure that the battery door is fully open and secured during battery removal.

CAUTION

If the battery rolls out of the battery compartment when no external device is present, this can lead to material damage.

– Before removing the battery, always position an external device (such as an external roller channel; see chapter "Replacing the battery using an external roller channel").

– Lift the lock (1) at the handle (2).

– Ensure that the lock catch (3) is clear of the edge of the battery tray (4).

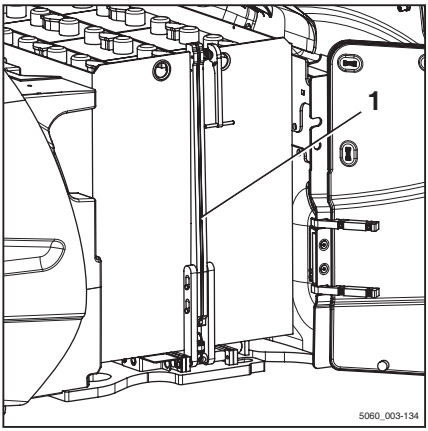

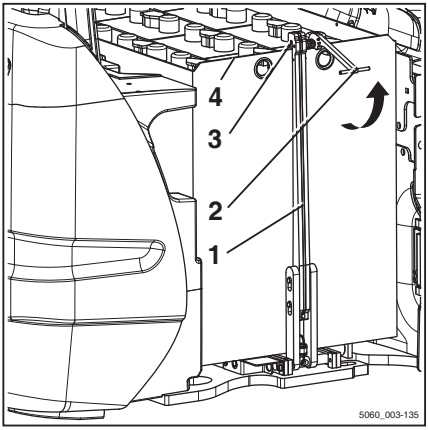

https://truckmanualshub.com/

– Grip the lock (1) at the handle (2) and fold it down fully. ▷

– Push the lock fully under the battery tray (4).

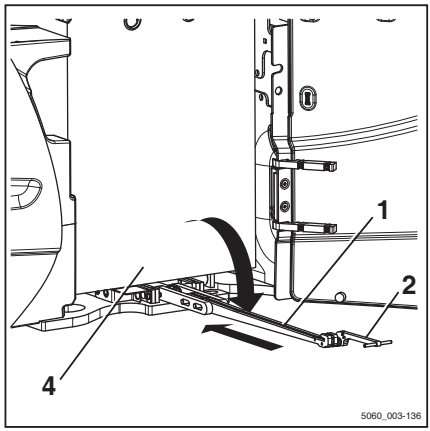

⚠ WARNING

The battery can now move freely and may roll away unimpeded, creating a risk of crushing!

– People must not stand directly in the battery's direction of travel or in the battery compartment.

– Do not place objects or any parts of the body between the battery and the truck chassis.

– Do not attempt to keep hold of the battery if it rolls away.

The battery is now freely accessible and can be pulled out of the battery compartment using an external device (such as an external roller channel; see chapter "Replacing the battery using an external roller channel").

Activities after installation of the battery

– Grip the lock (1) at the handle (2), pull it out from under the battery tray and swing it up. ▷

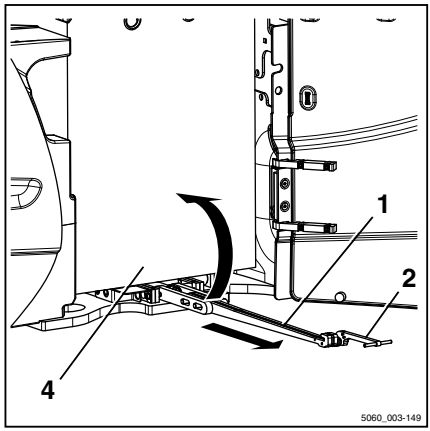

https://truckmanualshub.com/

– Grip the lock (1) at the handle (2) and lower it vertically, ensuring that the lock catch (3) engages behind the edge of the battery tray (4).

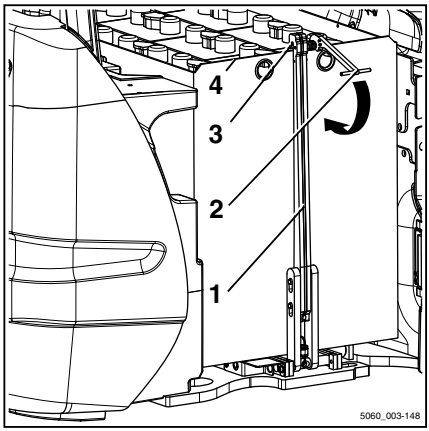

DANGER

If the battery is not locked correctly, the battery can slide out of the truck, with potentially fatal consequences!

– Ensure that the lock is fully lowered and that the lock catch engages behind the edge of the battery tray.

– Connect the battery male connector.

– Close the battery door.

– Close the battery hood.

Battery replacement using an external roller channel

Preparing the external roller channel for battery replacement

NOTE

Trucks with an integral roller channel allow the battery to be changed using a hand pallet truck which is equipped with an external roller channel.

DANGER

Risk of crushing due to the hand pallet truck tipping over or rolling away!

– The load capacity of the hand pallet truck must correspond to at least the battery weight (see battery identification plate).

– The hand pallet truck must be equipped with a parking brake.

– Observe the operating instructions for the hand pallet truck.

NOTE

The external roller channel is designed for transporting a variety of widths of batteries. Before using the external roller channel, the battery type to be transported should be determined and the roller channel prepared accordingly.

https://truckmanualshub.com/

– Determine the battery type on the battery identification plate.

– Position the deflector plates (A) and (B) appropriately for the battery type, and bolt them into place.

– Position the guide bolts (C) appropriately for the battery type, and bolt them into place.

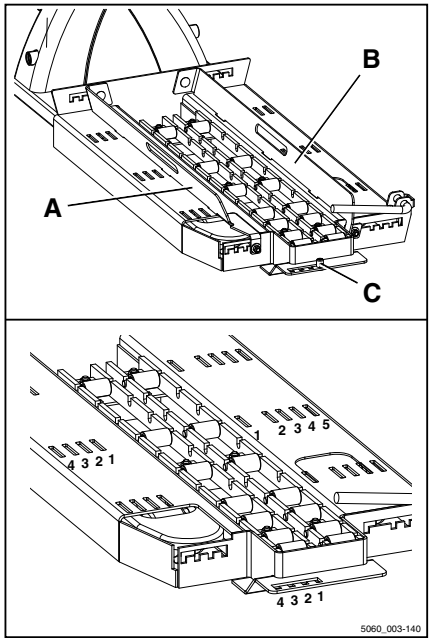

NOTE

The positions shown for the deflector plates and the guide bolts can be found in the following table.

Battery type	(C)	(A)	(B)
4 Pzs	1	1	1
5 Pzs	1	1	2
6 Pzs	2	2	3
7 Pzs	3	3	4
8 Pzs	4	4	5

– Perform these activities before removing the battery; see the chapter entitled "Changing the battery using the internal roller channel".

– Fully open the safety lever (7) by moving it in the direction of the arrow.

– Position the hand pallet truck (5) so that the external roller channel (6) is in front of the battery compartment of the truck.

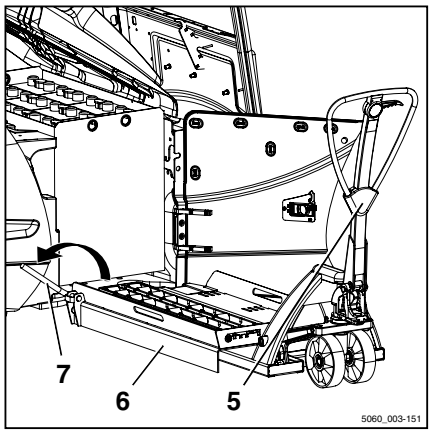

https://truckmanualshub.com/

– Position the guide bolt (1) directly underneath the slotted hole (2).

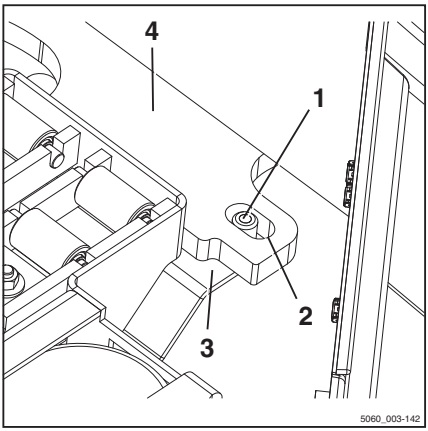

NOTE

The forks of the hand pallet truck should be lowered sufficiently far that the guide bolt (1) can be slid under the bottom plate (4) of the forklift truck.

– Lift the forks of the hand pallet truck and guide the guide bolt into the slotted hole until the stop plate (3) is against the underside of the truck's bottom plate (4).

– Apply the parking brake on the hand pallet truck to secure it against rolling away.

– Carefully pull the battery (8) out of the battery compartment until it reaches the battery stop (9) on the external roller channel.

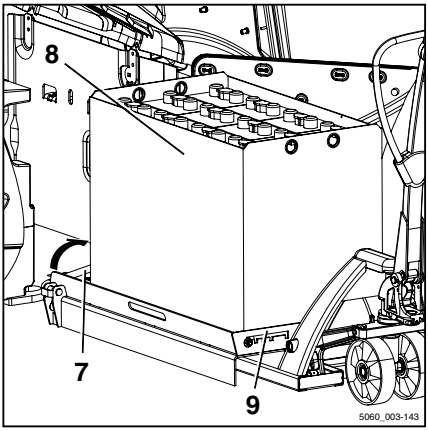

– Fully apply the safety lever (7) by moving it in the direction of the arrow in front of the battery.

– Lower the forks of the hand pallet truck until the guide bolt of the stop plate is completely clear of the slotted hole in the bottom plate.

– Release the parking brake on the hand pallet truck.

The battery is now ready to be transported.

https://truckmanualshub.com/

Transporting and setting down the battery

WARNING

If the safety lever (7) is not applied in front of the battery (8), the battery can roll off the external roller channel (6), creating a risk of crushing!

– Ensure that the safety lever (7) is fully applied in front of the battery (8).

WARNING

Excessive speed, sharp turns and heavy braking can cause the hand pallet truck and battery to tip over, creating a risk of injury!

– Take special care when transporting the battery.
– Keep the transport speed low, steer carefully and brake gently.
– Do not use the methods described above to transport the battery over long distances.

– Transport the battery to the intended storage space.

CAUTION

If the battery support is not sufficiently strong, it can be damaged or destroyed by the weight of the battery.

– The battery must be stored on a suitable beam support or on suitable racking.
– The battery must not be stored on a wooden beam or the like.

– Set down the battery.

Installing the battery

CAUTION

If when the battery is being installed the battery hood or the battery door are not fully open, or the interlock is folded up or pulled out, or if there are objects in the truck's battery compartment, considerable damage will be done to these components during installation of the battery.

– Open the battery hood.
– Open the battery door.
– Remove all objects from the battery compartment.

▷

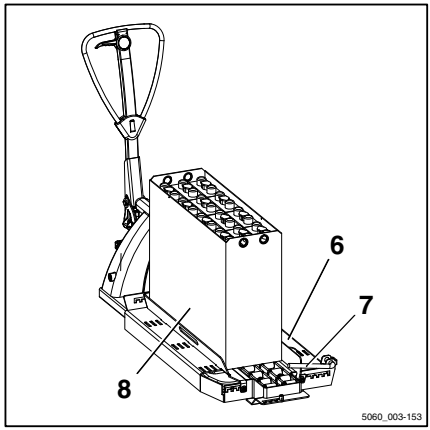

https://truckmanualshub.com/

– Position the hand pallet truck so that the external roller channel is in front of the battery compartment of the truck.

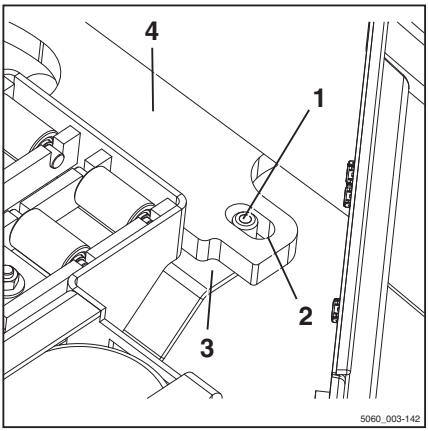

NOTE

The forks of the hand pallet truck should be lowered sufficiently far that the guide bolt (1) can be slid under the bottom plate (4) of the forklift truck.

– Position the guide bolt (1) directly underneath the slotted hole (2).

– Lift the forks of the hand pallet truck and guide the guide bolt into the slotted hole until the stop plate (3) is against the underside of the truck's bottom plate (4).

– Apply the parking brake on the hand pallet truck to secure it against rolling away.

– Fully open the safety lever (7) by moving it in the direction of the arrow.

– Carefully slide the battery (8) from the external roller channel (6) fully into the battery compartment.

– Lower the forks of the hand pallet truck (5) until the guide bolt of the stop plate is completely clear of the slotted hole in the bottom plate.

– Release the parking brake of the hand pallet truck and remove the hand pallet truck.

– Perform these activities after installing the battery; see the chapter entitled "Changing the battery using the internal roller channel".

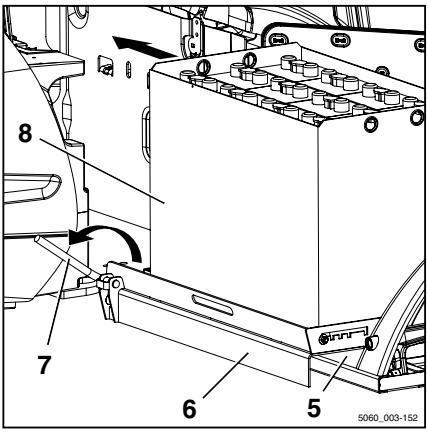

Battery installation or battery replacement without onboard devices

CAUTION

Possible risk of injury or risk of damage to components.

The installation or replacement of the battery without truck-internal devices requires special tools and specially trained staff.

https://truckmanualshub.com/

If the truck does **not** have a battery bridge **or** an internal roller channel as optional devices for the battery installation or battery replacement, these activities must be carried out by the STILL service centre.

⚠ CAUTION

Possible risk of injury or risk of damage to components.

To install or remove the battery, do **not** disassemble the available battery lock.

Maintaining the battery

⚠ DANGER

Risk to life!

– Observe the chapter "Safety regulations for handling the battery".

⚠ WARNING

Battery acid is toxic and corrosive!

– Observe the safety regulations in the "Battery acid" chapter.

NOTE

Battery maintenance is carried out in accordance with the battery manufacturer's operating instructions! The operating instructions for the battery charger must also be followed. Only the instructions that came with the battery charger are valid. If any of these instructions are not available, please request them from the dealer.

Depending on the equipment, the battery can also be removed for maintenance. This must only be carried out using the specified devices; see section "Lifting accessory" in the chapter "Safety regulations for handling the battery".

https://truckmanualshub.com/

Checking the battery charge status

CAUTION

Deep discharges shorten the service life of the battery.

If a battery charge of 0% is shown on the display, this corresponds to a deep discharge of below 20% of the nominal capacity.

- Avoid deep discharges (0% shown on the display).
- Charge the batteries at once.
- Do not leave batteries in a discharged or partly discharged state.

- Apply the parking brake.
- Switch on the key switch.
- Read the charge state (1) from the display.
- Charge a discharged or partly discharged battery.

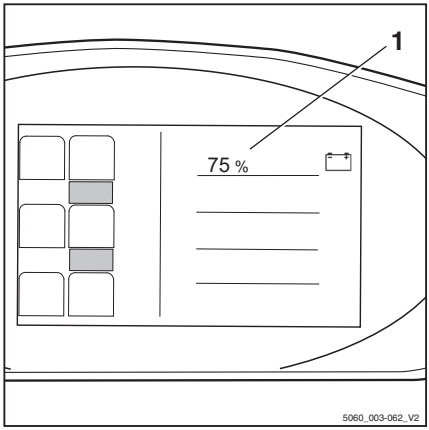

Charging the battery

CAUTION

Risk of component damage!

Incorrect connection or operation of the charging station or battery charger may result in damage to components!

- Follow the operating instructions for the charging station or battery charger and for the battery.

CAUTION

Possible damage to the male battery connector!

If the battery male connector is disconnected or connected while the ignition switch is switched on or the battery charger is under load, an arc will be generated at the battery male connector. This can lead to corrosion at the contacts, and can considerably shorten the service life of the contacts.

- Switch off the key switch or battery charger before the battery male connector is disconnected or connected.
- Do not disconnect the battery male connector while under load, except in an emergency.

- Park the truck securely.
- Switch off the key switch.

https://truckmanualshub.com/

- Always ensure adequate ventilation in the vicinity.
- Open any protective structures fully (e.g. fabric-covered cab).
- Open the battery door completely.
- Disconnect the battery male connector (1). ▷
- Do not place any metallic objects or tools on the battery.
- Keep away from open flames and do not smoke.
- Inspect the battery cables and charging cables for damage; change if necessary.
- Attach the battery male connector to the battery charger plug.

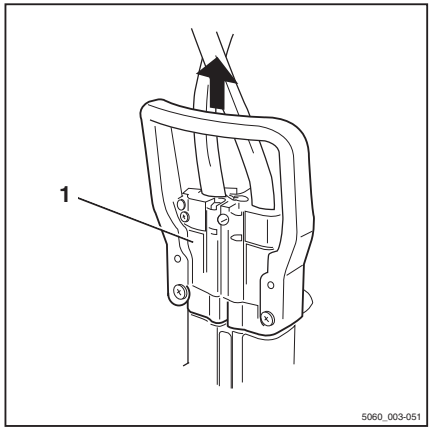

NOTE

Follow the information in the operating instructions for your battery and the battery charger (equalising charge).

CAUTION

Risk of component damage!

If you disconnect the charging cable while the battery charger is switched on, an arc will be produced. This can lead to corrosion at the contacts, which considerably shortens their service life.

- Switch off the battery charger before the charging cable is disconnected.

- Start the battery charger.

Once the charging process is complete:

- Turn off the battery charger.
- Disconnect the battery male connector from the battery charger plug.
- Insert the battery male connector fully into the plug connection on the truck.
- Ensure that the battery cable does not come into contact with the battery door.

https://truckmanualshub.com/

– Close the battery door. When doing so, ensure that no cable is crushed between the chassis and the battery door.

▷

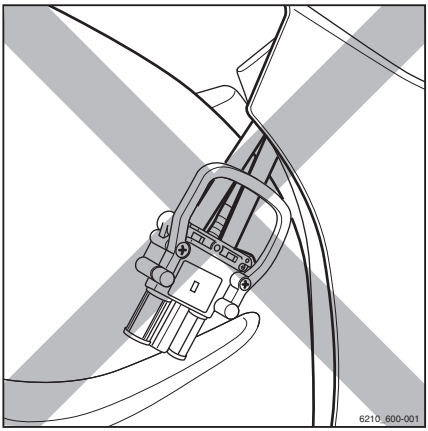

https://truckmanualshub.com/

Decommissioning

Parking the truck securely and switching it off

DANGER

There is a risk of fatal injury from being run over if the truck rolls away.

– The truck must not be parked on a slope.
– In emergencies, secure with wedges on the side facing downhill.
– Do not leave the truck until the parking brake has been applied.

DANGER

There is a risk of fatal injury from a falling load or parts of the truck being lowered!

– Lower the load fully before leaving the truck.

CAUTION

Batteries may freeze!

If the truck is parked in an ambient temperature of below -10°C for an extended period, the batteries will cool down. The electrolyte may freeze and damage the batteries. The truck will then not be ready for operation.

– At ambient temperatures of below -10°C, only park the truck for short periods of time.

– Apply the parking brake.

https://truckmanualshub.com/

- Lower the fork carriage to the ground.
- Tilt the lift mast forwards until the tips of the fork arms rest on the ground.
- If attachments (variant) are fitted, retract the working cylinders; see the chapter entitled "General instructions for controlling attachments".
- Turn the switch key to the left and remove it.

- Press the emergency off switch (1).

NOTE

Switch keys, FleetManager cards (variant), FleetManager transponder chips (variant) and the PIN code for access authorisation (variant) must not be handed over to other persons unless explicit instructions to this effect have been given.

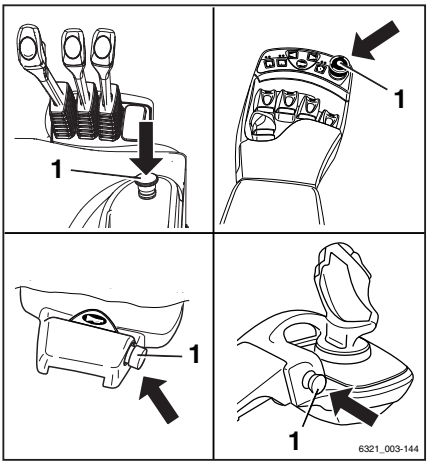

https://truckmanualshub.com/

Wheel chock (variant)

The wheel chock (variant) is used to prevent the truck from rolling away on a slope.

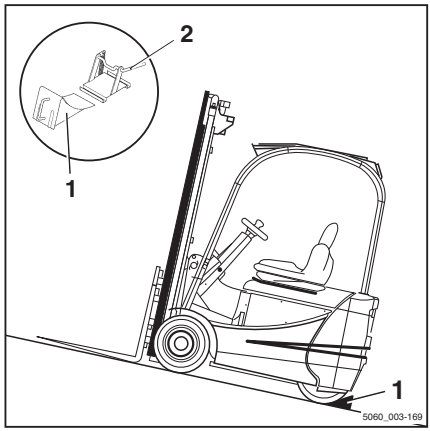

NOTE

Due to the design, the securely parked truck can only be chocked at the rear wheel. The truck must be parked facing uphill on slopes where a wheel chock is to be used.

- Lift the handle (2) on the support mounting.
- Remove the wheel chock (1) from the support mounting.
- Slide the wheel chock underneath the back wheel on the side facing downhill.

NOTE

After use, return the wheel chock to the support mounting and press the handle (2) down again.

Shutting down and storing the truck

CAUTION

Component damage due to incorrect storage!

In the event of incorrect storage or shutdown for more than two months, the truck may suffer corrosion damage. If the truck is parked in an ambient temperature of below –10 °C for an extended period, the batteries cool down. The electrolyte may freeze and damage the batteries.

- Store the truck in a dry, clean, frost-free and well ventilated environment.
- Carry out the following measures before shutdown.

Measures before shutdown

- Clean the truck thoroughly; see chapter "Cleaning".
- Lift fork carriage to stop several times.
- Tilt the lift mast forwards and backwards several times and, if fitted, move attachment repeatedly.

https://truckmanualshub.com/

- To relieve the strain on the load chains, lower the fork onto a suitable supporting surface, e.g. a pallet.
- Check the hydraulic oil level and top up if required.
- Apply oil or grease thinly to all untreated moving parts.
- Grease the truck.
- Lubricate the joints and controls.
- Lubricate the battery hood interlock.
- Apply a suitable contact spray to all exposed electrical contacts.

⚠ CAUTION

Risk of component damage!

If you remove the battery male connector while the key switch is switched on (under load), an arc will be produced. This can lead to corrosion at the contacts, which considerably shortens their service life.

- Switch off the key switch before the battery male connector is disconnected.
- Do not disconnect the battery male connector while the key switch is switched on, except in an emergency.

- Disconnect the battery male connector.
- Check the battery condition, acid level and acid density.
- Service the battery.

NOTE

Store only fully charged batteries.

⚠ CAUTION

Tyre deformation as a result of continuous loading on one side!

Have the truck raised and jacked up by the authorised service centre so that all the wheels are clear of the ground. This prevents permanent deformation of the tyres.

- Only have the truck raised and jacked up by the authorised service centre.

https://truckmanualshub.com/

⚠ CAUTION

Risk of damage from corrosion due to condensation on the truck!

Many plastic films and synthetic materials are watertight. Condensation water on the truck cannot escape through these covers.

– Do not use plastic film as this facilitates the formation of condensation water.

– Cover the truck with vapour permeable materials, such as cotton, in order to protect against dust.

– If the truck is to be shut down for even longer periods, contact your authorised service centre to find out about additional measures.

Recommissioning after storage

If the truck has been in storage for longer than six months, it must be carefully checked before being recommissioned. As in the annual inspection, this check should also include all safety items for the truck.

– Clean the truck thoroughly; see chapter "Cleaning".

– Lubricate the joints and controls.

– Check the battery condition, acid level and acid density.

– Check hydraulic oil for condensation water; change if necessary.

– Carry out checks and operations before the first commissioning.

– Change the brake fluid.

– Put the truck into operation.

During commissioning, the following must be checked in particular:

- Drive, control, steering
- Brakes (service brake, parking brake)
- Lifting system (lifting accessories, load chains, mounting)

https://truckmanualshub.com/

NOTE

For further information, see the truck workshop manual or contact the authorised service centre.

https://truckmanualshub.com/

Cleaning

Cleaning the truck

– Park the truck securely.

⚠ CAUTION

Risk of component damage!

If you remove the battery male connector with the key switch switched on (under load), an arc will be produced. This can lead to corrosion at the contacts, which considerably shortens their service life.

– Switch off the key switch before the battery male connector is disconnected.
– Only disconnect the battery male connector with the key switch switched on in an emergency.

– Disconnect the battery male connector.

⚠ WARNING

There is a risk of injury due to falling when climbing onto the truck!

When climbing onto the truck, you can get stuck or slip on components and fall. Higher points on the truck should only be accessed using the appropriate equipment.

– Adhere strictly to the following steps.

– Use only the steps provided to climb onto the truck.
– Use equipment such as stepladders or platforms to reach inaccessible areas.

Preparing the truck for cleaning

⚠ CAUTION

If water penetrates the electrical system, there is a risk of short circuit!

– Adhere strictly to the following steps.

– Switch the electrical system off before cleaning.
– Do not spray electric motors and other electrical components or their covers directly with water.

https://truckmanualshub.com/

CAUTION

Excessive water pressure or water and steam that are too hot can damage truck components.

– Adhere strictly to the following steps.

– Only use high-pressure cleaners with a maximum output power of 50 bar and at a maximum temperature of 85°C.

– When using high-pressure cleaners, make sure there is a distance of at least 20 cm between the nozzle and the object being cleaned.

– Do not aim the cleaning jet directly at adhesive labels or decal information.

DANGER

Risk of fire!

Deposits/accumulations of combustible materials may ignite in the vicinity of hot components (e.g. drive units).

– Adhere strictly to the following steps.

– Regularly remove all deposits/accumulations of foreign materials in the vicinity of hot components.

DANGER

Flammable fluids can be ignited by hot components on the truck, causing a risk of fire!

– Adhere strictly to the following steps.

– Do not use flammable fluids for cleaning.

– Note the manufacturer's guidelines for working with cleaning materials.

CAUTION

Abrasive cleaning materials can damage component surfaces!

Using abrasive cleaning materials that are unsuitable for plastics may dissolve plastic parts or make them brittle. The screen on the display operating unit may become cloudy.

– Adhere strictly to the following steps.

https://truckmanualshub.com/

- Only clean plastic parts with plastic cleaning materials.
- Note the manufacturer's guidelines for working with cleaning materials.

Washing the truck exterior

- Clean the truck exterior with water-soluble cleaning materials and water (water jet, sponge, cloth).
- Clean all walk-in areas, the oil filling openings and their surroundings, and the lubricating nipples before lubricating.

NOTE

Please note: The more often the truck is cleaned, the more frequently it must be lubricated.

Cleaning the electrical system

WARNING

Danger of electric shocks due to residual capacity!

- Never reach into the electrical system with your bare hands.

CAUTION

Cleaning electrical system parts with water can damage the electrical system.

Cleaning electrical system parts with water is forbidden!

- Do not remove covers etc.
- Use only dry cleaning materials in accordance with the manufacturer's specifications.

- Clean the electrical system parts with a metal-free brush and blow the dust off with low-pressure compressed air.

https://truckmanualshub.com/

Cleaning load chains

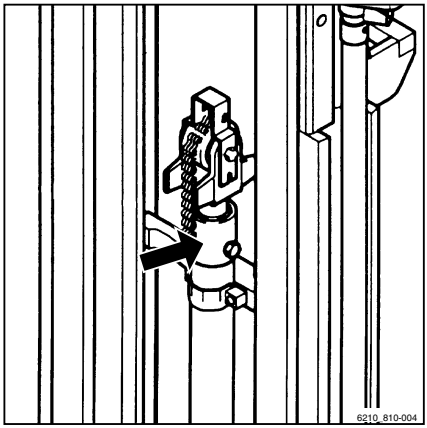

WARNING

Risk of accident!

Load chains are safety elements.

The use of cold/chemical cleaners or fluids that are corrosive or contain acid or chlorine can damage the chains and is forbidden!

- Observe the manufacturer's guidelines for working with cleaning materials.

- Place a collection vessel under the lift mast.
- Clean with paraffin derivatives, such as benzine.
- When using a steam jet, do not use additional cleaning agents.
- Remove any water in the chain links using compressed air immediately after cleaning. Move the chain several times during this procedure.
- Immediately after drying the chain, spray it with chain spray. Move the chain several times during this procedure.

For chain spray specifications, see the "Maintenance data table" chapter.

ENVIRONMENT NOTE

Dispose of any fluid that has been spilled or collected in the collection vessel in an environmentally friendly manner. Follow the statutory regulations.

https://truckmanualshub.com/

After washing

▷

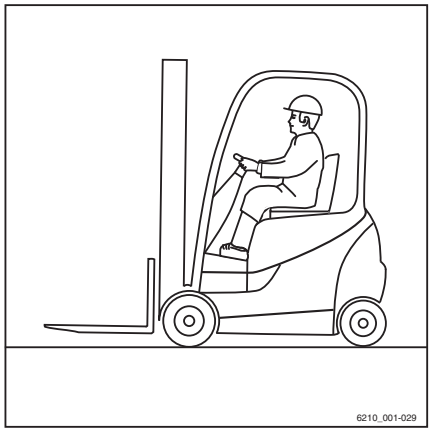

- Carefully dry truck (e.g. with compressed air).
- Sit on the driver's seat and start up the truck in accordance with regulations.

⚠ CAUTION

Danger of short-circuits!

- If any moisture has penetrated into the motors despite the precautionary measures taken, this must first be dried with compressed air.
- The truck must then be started up to prevent possible corrosion damage.

https://truckmanualshub.com/

6

Maintenance

https://truckmanualshub.com/

General maintenance information

Personnel qualifications

Only qualified and authorised personnel are allowed to perform maintenance work. The annual testing must be carried out by a qualified person. The examination and assessment of the qualified person must be unaffected by operational and economic conditions and must be conducted solely from a safety perspective. He/she must have sufficient knowledge and experience to be able to assess the condition of a truck and the effectiveness of the protective devices in accordance with technical conventions and the principles for testing trucks.

Maintenance personnel for batteries

Batteries may only be charged, maintained or changed by properly trained personnel in accordance with the instructions from the manufacturers of the battery, battery charger and truck. The handling instructions for the battery and the operating instructions for the battery charger must be followed.

Maintenance work without special qualifications

Simple maintenance work, e.g. checking the hydraulic oil level, may be carried out by untrained personnel. A qualification, like that of a specialist, is not required to carry out this work. The required operations are described in sufficient detail in the corresponding places in these operating instructions.

Information for carrying out maintenance

This section contains all information required to determine when the truck needs maintenance. Carry out maintenance work within the time limits according to the hour meter and using the following maintenance check lists. This is the only way to ensure that the truck remains ready for operation and provides op-

https://truckmanualshub.com/

timal performance and service life. It is also a precondition for any warranty claims.

Maintenance timeframe

– Carry out maintenance work on the truck in accordance with the "Service in" display (1).

– The maintenance check lists indicate the maintenance work that is due.

The intervals are defined for standard use. Shorter maintenance intervals can be defined in consultation with the operating company, depending on the application conditions of the truck.

The following factors may necessitate shorter maintenance intervals:

- Contaminated, poor quality roads
- Dusty or salty air
- High levels of air humidity
- Extremely high or low ambient temperatures, or extreme changes in temperature
- Multi-shift operation with a high duty cycle
- Specific national regulations for the truck or individual components

▷

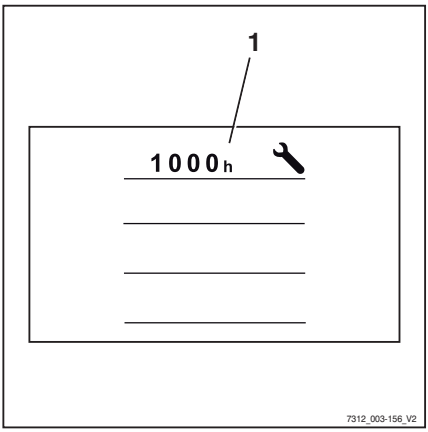

https://truckmanualshub.com/

https://truckmanualshub.com/

Maintenance — 1000 hours/annually

At operating hours										Carried out	
1000		2000		4000		5000		7000			
8000		10000		11000		13000		14000		✓	✗
Chassis, bodywork and fittings											
Check chassis for cracks											
Check overhead guard/cab and panes of glass for damage											
Check controls, switches and joints for damage, and apply grease and oil											
Check the accelerator pedal and brake pedal for damage and function, and lubricate											
Check driver's seat for correct function and for damage											
Check driver restraint system for correct function and for damage, and clean.											
Check battery hood, interlock and sensor for correct function and for damage											
Check the dual pedal variant for damage and function, and lubricate											
Tyres and wheels											
Check tyres for wear and check the air pressure											
Check wheels for damage and check the tightening torques											
Power unit											
Drive unit: Check that it is securely attached and check for leaks											
Gearbox oil: Check oil level											
Steering											
Check the steering system for correct function and for leaks											
Check that the steering wheel is securely attached and check the turning handle for damage											
Check the steering stop											
Check steering chain; if necessary, adjust the tension and apply oil											
Brake											
Check all mechanical brake parts for condition, wear and correct function											
Check the brake fluid level											
Check brake fluid switch for correct function											
Carry out brake test											
Electrical system											
Check all power cable connections											
Check main contactor contacts											

https://truckmanualshub.com/

At operating hours										Carried out	
1000		2000		4000		5000		7000			
8000		10000		11000		13000		14000		✓	✖
Check the switches, transmitters and sensors for correct function											
Check the lighting and indicator lights											
Battery and accessories											
Check battery for damage and acid density; observe manufacturer's maintenance instructions											
Check battery male connector and cable for damage											
Hydraulics											
Check the hydraulic system for condition, correct function and leaks											
Check the hydraulics blocking function (ISO valve)											
Check the oil level											
Lift mast											
Check the mast bearings for damage and lubricate. Check the tightening torque											
Check the mast profiles for damage and wear, and lubricate											
Check the load chains for damage and wear, adjust and lubricate											
Check the lift cylinder and connections for damage and leaks											
Check the guide pulleys for damage and wear											
Check the support rollers and chain rollers for damage and wear											
Check the play between the fork carriage stop and the run-out barrier											
Check the tilt cylinder and connections for damage and leaks											
Check the fork carriage for damage and wear											
Check the fork arm interlock for damage and correct function											
Check the fork arms for wear and deformation											
Check that there is a safety screw on the fork carriage or on the attachment											
Special equipment											
Check the attachments for wear and damage; observe the manufacturer's maintenance instructions											
Check the trailer coupling for wear and damage; observe the manufacturer's maintenance instructions											
General											
Read out error numbers and delete list											
Reset the maintenance interval											

https://truckmanualshub.com/

At operating hours										Carried out	
1000		2000		4000		5000		7000			
8000		10000		11000		13000		14000		✓	✗
Check labelling to ensure it is complete											
Perform a test drive											

https://truckmanualshub.com/

https://truckmanualshub.com/

Maintenance - 3000 hours/every two years

At operating hours										Carried out	
3000		6000		9000		12000		15000		✓	✗
Note											
Perform all 1000-hour maintenance work											
Power unit											
Change the gearbox oil											
Brake											
Change the brake fluid											
Hydraulics											
Change the hydraulic oil.											
Replace the return line filter, breather filter and high-pressure filter (variant)											

Ordering spare parts and wearing parts

Spare parts are provided by our spare parts service department. The information required for ordering parts can be found in the spare parts list.

Only use spare parts as per the manufacturer's instructions. The use of unapproved spare parts can result in an increased risk of accidents due to insufficient quality or incorrect assignment. Anyone using unapproved spare parts shall assume unlimited liability in the event of damage or harm.

Quality and quantity of the required operating materials

Only the operating materials specified in the maintenance data table may be used.

– The required consumables and lubricants can be found in the maintenance data table.

Oil and grease types of a different quality must not be mixed. This negatively affects the lubricity. If a change between different

https://truckmanualshub.com/

manufacturers cannot be avoided, drain the old oil thoroughly.

Before carrying out lubricating work, filter changes or any work on the hydraulic system, carefully clean the area around the part involved.

When topping up working materials, use only clean containers!

https://truckmanualshub.com/

Maintenance data table

General lubrication points

Unit	Operating materials	Specifications	Quantity
Lubrication	Grease	DIN 51825-KPF2 N-20 penetration class 2, lithium-saponified, ID no. 141001	As required

Battery

Unit	Operating materials	Specifications	Quantity
System filling	Distilled water		As required
Insulation resistance		DIN 43539 VDE 0510	Min. 500 Ω/V against ground

Electrical system

Unit	Operating materials	Specifications	Quantity
Insulation resistance		DIN EN 1175 VDE 0117	Min. 1000 Ω/V against ground

Controls/joints

Unit	Operating materials	Specifications	Quantity
Lubrication	Grease	DIN 51825-KPF2 N-20 penetration class 2, lithium-saponified, ID no. 163488	As required
	Oil	SAE 80 MIL-L2105 API-GL4	As required

https://truckmanualshub.com/

Hydraulic system

Unit	Operating materials	Specifications	Quantity
System filling	Hydraulic oil	HVLP 68 DIN 51524, part 3	Lift mast height up to 2100 mm = max. 20 l Lift mast height over 2100 mm = max. 26 l
	Hydraulic oil for the food industry (variant)	USDA H1 DIN 51524	
	Hydraulic oil for cold store application	HVLP 68 DIN 51524, part 3	
Lubrication	Grease	RIVOLTA S.K.D. 3400/M.T.X.60 ID no. 127905	As required

Tyres

Unit	Operating materials	Specifications	Quantity
Superelastic tyres	Wear limit		To wear mark
Solid rubber tyres	Wear limit		To wear mark

Steering axle/drive axle

Unit	Operating materials	Specifications	Quantity
Wheel nuts/screws	Torque wrench		195 Nm
Wheel gear	Gearbox oil	ARAL Degol GS 220	

Running axle

Unit	Operating materials	Specifications	Quantity
Wheel nuts/screws	Torque wrench		195 Nm
Brakes	Brake fluid	ATE DOT 4 SL.6	0.2 l

Lift mast

Unit	Operating materials	Specifications	Quantity
Lubrication	Super-pressure adhesive lubricant	ID no. 147873	As required
Stop	Play		min. 2 mm
Mast bearing screws	Torque wrench		275 Nm

Load chains

Unit	Operating materials	Specifications	Quantity
Lubrication	Chain spray	ID no. 141001 ID no. 156428	As required
Setting	Support roller distance		35 mm under the top edge of the inner mast

https://truckmanualshub.com/

Washer system

Unit	Operating materials	Specifications	Quantity
System filling	Screen wash	Winter, ID no. 172566	As required

https://truckmanualshub.com/

Safety regulations for maintenance

General information

To prevent accidents during maintenance and repair work, all necessary safety measures must be taken, e.g.:

- Apply the parking brake.
- Turn off the key switch and remove the key.
- Disconnect the battery male connector.
- Ensure that the truck cannot move unintentionally or start up inadvertently.
- If required, have the truck jacked up by the authorised service centre.
- Have the raised fork carriage or the extended lift mast secured against accidental lowering by the authorised service centre.
- Insert an appropriately sized wooden beam as an abutment between the lift mast and the cab, and secure the lift mast to prevent it tilting backwards unintentionally.
- Observe the maximum lift height of the lift mast, and compare the dimensions from the technical data with the dimensions of the hall into which the truck is to be driven. These steps are taken to prevent a collision with the ceiling of the hall and to avoid any damage caused as a result.

Working on the hydraulic equipment

The hydraulic system must be depressurised prior to all work on the system.

Working on the electrical equipment

Work may only be performed on the electrical equipment of the truck when it is in a voltage-free state. Function checks, inspections and adjustments on energised parts must only be performed by trained and authorised persons, taking the necessary precautions into account. Rings, metal bracelets etc. must be removed before working on electric components.

https://truckmanualshub.com/

To prevent damage to electronic systems with electronic components, such as an electronic driving regulator or lift control, these components must be removed from the truck prior to the start of electric welding.

Work on the electrical system (e.g. connecting a radio, additional headlights etc.) is only permitted with approval from the authorised service centre.

Safety devices

After maintenance and repair work, all safety devices must be reinstalled and tested for operational reliability.

Set values

The device-dependent set values must be observed when making repairs and when changing hydraulic and electrical components. These are listed in the appropriate sections.

Lifting and jacking up

⚠ DANGER

There is a risk to life if the truck tips over!

If not raised and jacked up properly, the truck may tip over and fall off. Only the hoists specified in the workshop manual for this truck are allowed and are tested for the necessary safety and load capacity.

- Only have the truck raised and jacked up by the authorised service centre.
- Only jack the truck up at the points specified in the workshop manual.

The truck must be raised and jacked up for various types of maintenance work. The authorised service centre must be informed that this is to take place. Safe handling of the truck and the corresponding hoists is described in the truck's workshop manual.

https://truckmanualshub.com/

Working at the front of the truck

DANGER

Risk of accident!

If the lift mast or fork carriage is raised, no work may be performed on the lift mast or at the front of the truck unless the following safety measures are observed.

- When securing, only use chains with sufficient load-bearing capacity.
- Contact the authorised service centre.

CAUTION

Possibility of damage to the ceiling!

- Note the maximum lift height of the lift mast.

Securing the lift mast against tilting backwards

A hardwood beam with a cross-section of 120 x 120 mm is required. The length of the hardwood beam must approximately correspond to the width of the fork carriage (b3). To avoid impact injuries, the hardwood beam must not protrude beyond the outer contour of the truck. A maximum length matching the total width (b1) of the truck is recommended.

- Obtain the dimensions (b1) and (b3) from the corresponding VDI datasheet.

https://truckmanualshub.com/

– Clamp the hardwood beam (1) between the driver protection structure (2) and the lift mast (3).

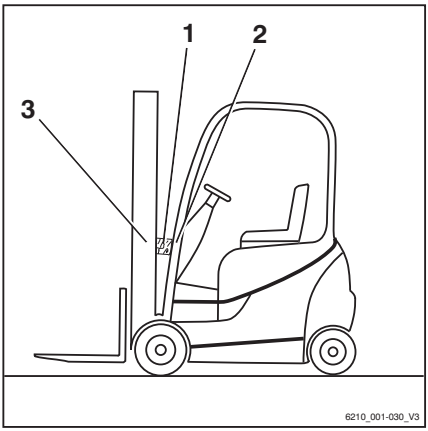

Removing the lift mast

DANGER

Risk of accident!

This work must only be performed by an authorised service technician.

– Arrange for an authorised service technician to remove the lift mast.

Securing the lift mast against falling off

DANGER

Risk of accident!

This work must only be performed by an authorised service technician.

– Arrange for an authorised service technician to secure the lift mast.

https://truckmanualshub.com/

Providing access to maintenance points

Removing/installing the valve cover

Removing the valve cover

NOTE

A 4-mm hexagon socket wrench (2) is located between the battery hood (1) and valve cover (5) to assist in carrying out the following work. This hexagon socket wrench must remain in the truck at all times.

In the single-pedal version:

– Remove the right bottom plate (4) ⇒ Chapter "Removing/installing the bottom plate", P. 6-311.

In the dual-pedal version:

– Remove the right bottom plate (4) ⇒ Chapter "Removing/installing the bottom plate for dual pedal operation (variant)", P. 6-313.

– Unscrew the four screws (3).

– Lift up the valve cover (5) and remove.

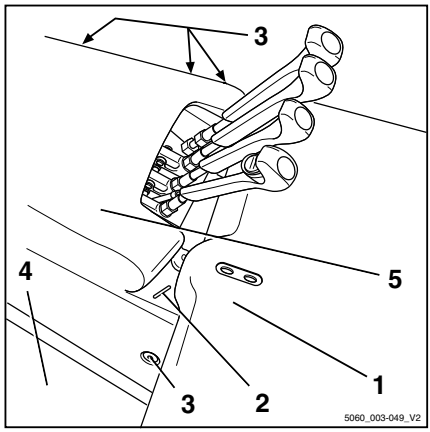

Installing the valve cover

– Position the valve cover and attach it with four screws.

– Install the right bottom plate.

– Return the hexagon socket wrench to its position between the battery hood and valve cover.

https://truckmanualshub.com/

Removing/installing the bottom plate

Removing the left bottom plate

CAUTION

There is a risk of short circuit if the cables are damaged.

- Check the connecting cable for damage.
- When removing and reinstalling the bottom plate, ensure that the connecting cables are not damaged.

WARNING

When closing the bottom plate, nothing should come between the bottom plate and the edge of the chassis. There is a risk of crushing!

- When closing the bottom plate, make sure nothing is between the bottom plate and the edge of the chassis.

NOTE

The left bottom plate (1) has a recess which the operator can insert his fingers into to lift it. The recess is underneath the rubber covering (4).

- Fold the rubber covering (4) forwards and reach into the recess.
- Lift up the bottom plate (1).
- Disconnect the connecting plug (2) for the signal horn foot switch (3).
- Remove the bottom plate.

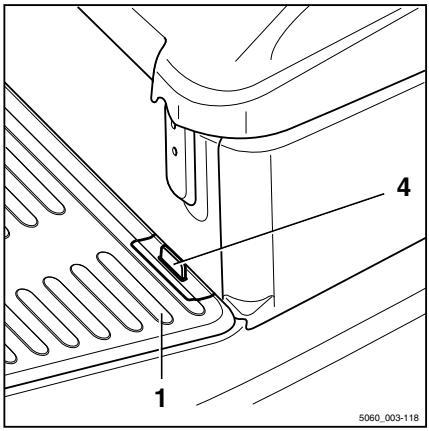

Installing the left bottom plate

- Position the bottom plate.
- Connect the connecting plug for the signal horn foot switch.
- Close the bottom plate.

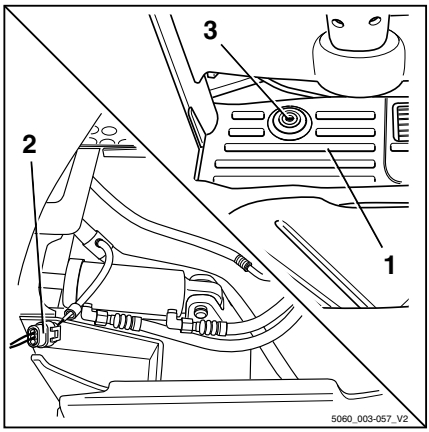

https://truckmanualshub.com/

Removing the right bottom plate

▷

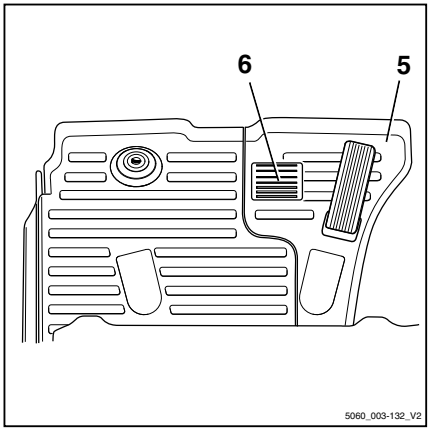

NOTE

The accelerator pedal is attached to the right bottom plate and is removed with it. The connecting plug for the accelerator is located underneath the bottom plate.

- Lift the bottom plate (5) forwards and carefully guide it upwards over the brake pedal (6).
- Disconnect the connecting plug for the accelerator.
- Remove the bottom plate.

Installing the right bottom plate

- Position the bottom plate.
- Connect the connecting plug for the accelerator.
- Lower the bottom plate, carefully guiding it downwards over the brake pedal.
- Close the bottom plate.

https://truckmanualshub.com/

Removing/installing the bottom plate for dual pedal operation (variant)

Removing the right bottom plate

CAUTION

There is a risk of short circuit if the cables are damaged.

- Check the connecting cable for damage.
- When removing and reinstalling the bottom plate, ensure that the connecting cables are not damaged.

WARNING

When closing the bottom plate, nothing should come between the bottom plate and the edge of the chassis. There is a risk of crushing!

- When closing the bottom plate, make sure nothing is between the bottom plate and the edge of the chassis.

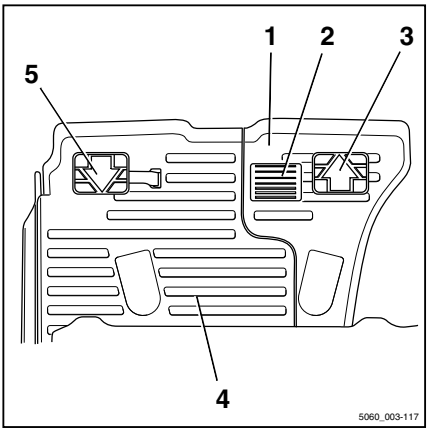

NOTE

The accelerator pedals (3) and (5) are attached to the left bottom plate and are removed with it. Due to the design, the right bottom plate must always be removed first.

- Lift the bottom plate (1) forwards and carefully guide it upwards over the brake pedal (2) and the forwards accelerator pedal (3).
- Remove the bottom plate.

Installing the right bottom plate

- Position the bottom plate.
- Lower the bottom plate, carefully guiding it downwards over the brake pedal and the forwards accelerator pedal.
- Close the bottom plate.

Removing the left bottom plate

- Lift up the bottom plate (4).

https://truckmanualshub.com/

– Disconnect the connecting plug for the accelerator.
– Remove the bottom plate.

Installing the left bottom plate

– Position the bottom plate.
– Connect the connecting plug for the accelerator.
– Close the bottom plate.

https://truckmanualshub.com/

Maintenance

Lubricating the joints and controls

– Oil or grease other bearing points and joints according to the maintenance data table; see ⇒ Chapter "Maintenance data table", P. 6-303.

- Driver's seat guide
- Cab door hinges (variant)
- Battery door hinges or battery cover hinges
- Control linkage (1) for valves

▷

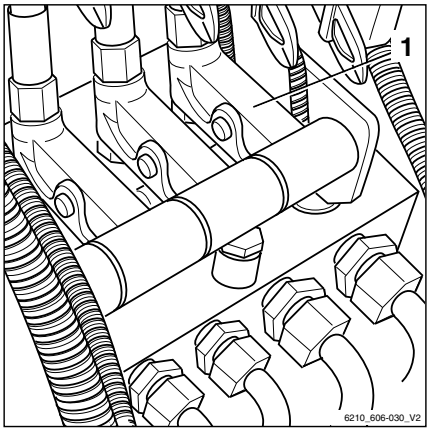

Checking the battery hood lock

⚠ DANGER

The battery could fall on the driver — there is a risk to life!

If the hood lock malfunctions and the truck tips over or is subjected to sharp deceleration, the battery hood can open and the battery can fall out.

– If the hood lock is deformed, damaged or stiff, inform STILL Service immediately and do not operate the truck.
– Always check the hood lock after an accident.
– Check the hood lock for secure function.
– Pivot points must be greased and move easily.

NOTE

The interval for greasing is influenced significantly by the application conditions and environmental conditions affecting the truck. As required and after every 1000 hours, perform a visual inspection and function check of the hood lock. Grease all moving parts of the hood lock if necessary.

https://truckmanualshub.com/

- Open the battery hood (4), see ⇒ Chapter "Opening and closing the battery hood", P. 5-254.
- Check components (1) and (2) of the hood lock (3) for ease of movement.
- Grease the lock mechanism.
- Close the battery hood again.

▷

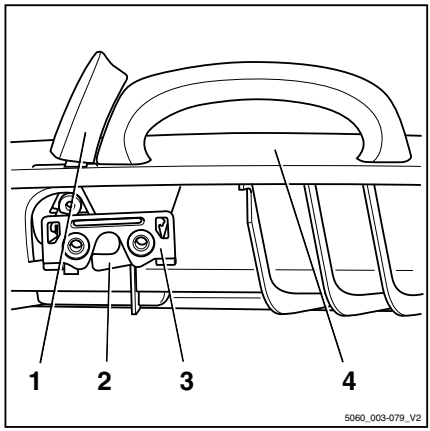

Maintaining the seat belt

DANGER

There is a risk to life if the seat belt fails during an accident!

If the seat belt is faulty, it may tear or open during an accident and no longer keep the driver in the driver's seat. The driver may therefore be hurled against the truck components or out of the truck.

- Ensure operational reliability by continually testing.
- Do not use a truck with a defective seat belt.
- A defective belt must only be replaced by your service centre.
- Only use genuine spare parts.
- Do not make any changes to the belt.

NOTE

Carry out the following checks on a regular basis (monthly). In the case of significant strain, a daily check is necessary.

https://truckmanualshub.com/

Checking the seat belt

– Pull out the belt (3) completely and check for wear.

The belt must not be frayed or cut. The stitching must not be loose.

– Check whether the belt is dirty.

– Check whether parts are worn or damaged, including the attachment points.

– Check the buckle (1) to ensure that it locks into place properly.

When the belt tongue (2) is inserted, the belt must be held securely.

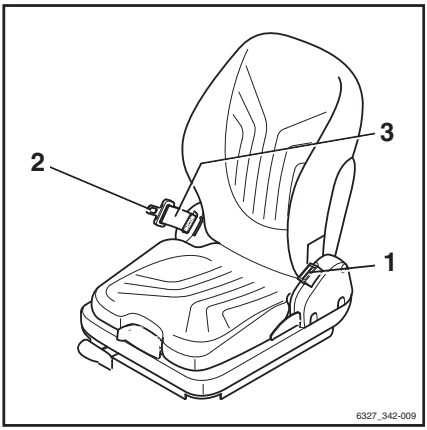

– The belt tongue (2) must release when the red button (4) is pressed.

– The automatic blocking mechanism must be tested at least once a year:

– Park the forklift truck on level ground.

– Pull out the belt with a jerk.

The automatic blocking mechanism must block extension of the belt.

– Tilt the seat at least 30°. In order to do this, open the battery hood fully, see ⇒ Chapter "Opening and closing the battery hood", P. 5-254.

– Slowly extend the belt.

The automatic blocking mechanism must block extension of the belt.

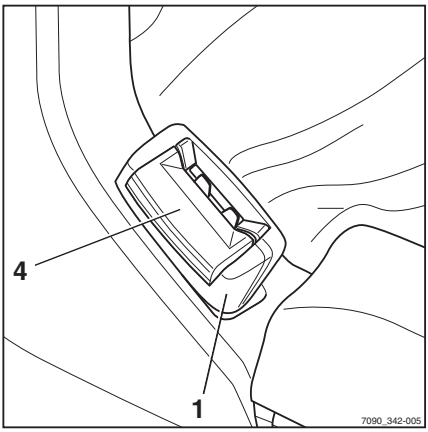

Cleaning the seat belt

– Clean the seat belt as necessary, but without using chemical cleaning materials (a brush will suffice).

Replacement after an accident

As a rule, the seat belt must be replaced after an accident.

https://truckmanualshub.com/

Checking the driver's seat

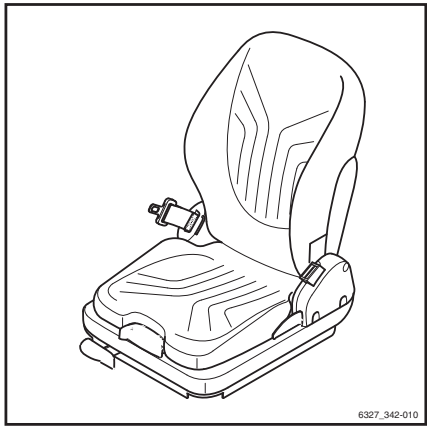

WARNING

Risk of injury!

– After an accident, check the driver's seat with attached restraining belt and fastening.

– Check the controls for correct operation.

– Check the condition of the seat (e.g. wear on the upholstery) and secure fastening to the hood.

WARNING

Risk of injury!

– Have the seat repaired by the service centre if you identify any damage during the checks.

Servicing wheels and tyres

WARNING

Risk of accident! Uneven wear decreases the stability of the truck and increases the braking distance.

– Change worn or damaged tyres without delay.

WARNING

Risk of tipping!

Tyre quality affects the stability of the truck.

If you wish to use a different type of tyre on the truck from the tyres approved by the truck manufacturer, or tyres from a different manufacturer, you must first obtain approval from the truck manufacturer.

WARNING

Risk to stability!

When using pneumatic tyres or solid rubber tyres, rim parts must never be changed and rim parts from different manufacturers must not be mixed.

https://truckmanualshub.com/

Checking condition and wear of the tyres ▷

⚠ WARNING

Tyre quality affects the stability and handling of the truck.

Changes can only be made in consultation with the manufacturer.

When changing wheels or tyres, always ensure that this does not cause the truck to tilt to one side (e.g. always change right and left wheels at the same time).

NOTE

The wear of the tyres on an axle must be approximately the same.

- *Superelastic tyres and solid rubber tyres can be worn down to the wear mark (2).*

– If necessary, remove any foreign bodies (1) imbedded in the tyre tread.

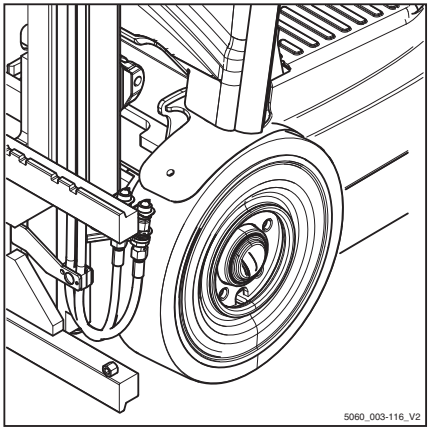

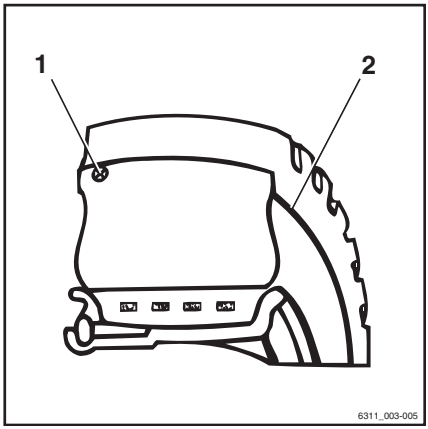

https://truckmanualshub.com/

Checking wheel fastenings

- Check wheel fastening nuts (3) and bolts for secure positioning, and retighten them as necessary.
- Observe the torques; see the "maintenance data table".

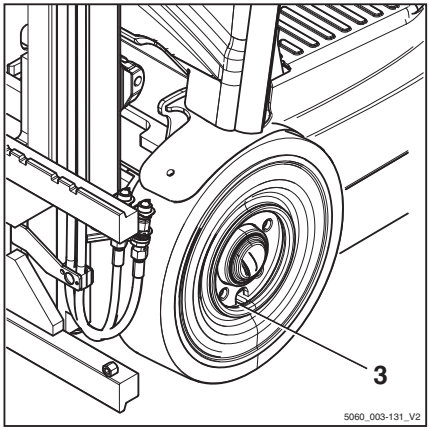

Checking the drive axle for oil level, leaks and general condition

Drive axle: checking the oil level

DANGER

Consumables are toxic!

- Note safety regulations for working with gearbox oil, see ⇒ Chapter "Oils", P. 3-39.

NOTE

See the workshop manual for the filling quantity for gearbox oil as well as for the tightening torque of the oil filler plug (1), or ask the relevant service centre.

- Turn the steering completely to the right, in order to make the oil filling opening at the gearbox housing (2) accessible.
- Park the truck securely; see ⇒ Chapter "Parking the truck securely and switching it off", P. 5-282.

NOTE

The truck must be standing on a flat, level surface.

- Unscrew the oil filler plug (1).

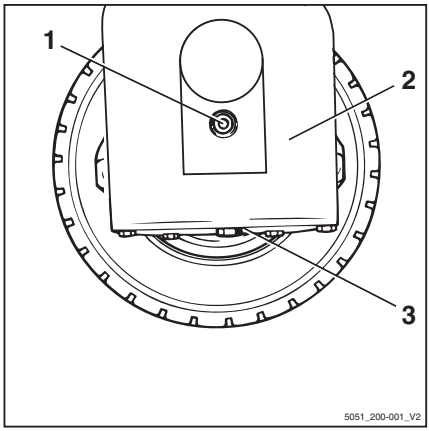

https://truckmanualshub.com/

– The oil level must reach the lower edge of the bore; top up if necessary, see ⇒ Chapter "Maintenance data table", P. 6-303.

ENVIRONMENT NOTE

Carefully collect any spilled oil and dispose of it in accordance with regulations.

Checking the drive axle for leaks

– Check the gearbox housing (2) around the drive axle and gearbox cover (3) for leaks (traces of oil).

– In the event of leaks, inform the service team.

Checking the brake fluid level

If the message SERVICE BRAKE appears in the display operating unit, the brake fluid level must be checked.

WARNING

Risk of injury from becoming trapped in moving parts!

– Observe the safety regulations for working at the front of the truck; see ⇒ Chapter "Working at the front of the truck", P. 6-308.

WARNING

Brake fluid is hazardous to your health!

– Observe the safety regulations for working with brake fluid, see ⇒ Chapter "Brake fluid", P. 3-42.

WARNING

Risk of accident as a result of a low brake fluid level!

If the brake fluid level is low, there are leakages.

– Top up the brake fluid.

– Check the brake system for leaks and repair any that are found.

– Do not place the truck back into operation until the cause is repaired.

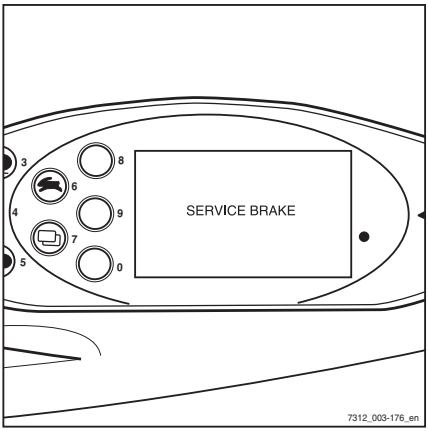

https://truckmanualshub.com/

– Check the brake fluid level at the expansion tank (1). ▷

The brake fluid level must be between the MAX and MIN marks.

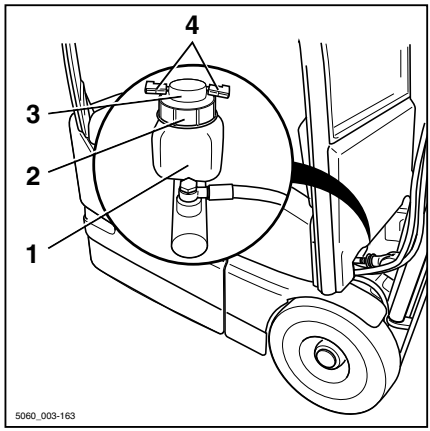

⚠ WARNING

The brake fluid level sensor cables can tear off when the filler cap is opened!

When the filler cap (2) is unscrewed, the cables (4) must not be rotated also, otherwise the cables may tear off. The brake fluid level sensor (3) is stored in the rotatable filler cap and can be held in position when turning the cover.

– Keep the brake fluid level sensor with cables in position and unscrew the cover.
– If necessary, remove the cables before opening the cover and reattach after servicing.

– Top up any missing brake fluid to the MAX mark according to the maintenance data table; see ⇒ Chapter "Maintenance data table", P. 6-303.

Checking the brake fluid level sensor ▷

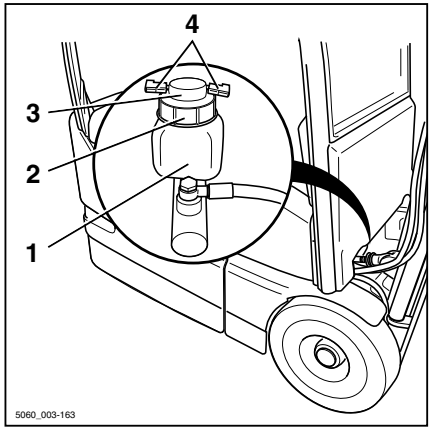

⚠ WARNING

Risk of injury from becoming trapped in moving parts!

– Observe the safety regulations for working at the front of the forklift truck, see ⇒ Chapter "Working at the front of the truck", P. 6-308.

⚠ WARNING

Brake fluid is hazardous to your health!

– Observe the safety regulations for working with brake fluid, see ⇒ Chapter "Brake fluid", P. 3-42

⚠ WARNING

The brake fluid level sensor cables can tear off when the filler cap is opened!

When the filler cap (2) is unscrewed, the cables (4) must not be rotated also, otherwise the cables may tear off. The brake fluid level sensor (3) is stored in the rotatable filler cap and can be held in position when turning the cover.

– Keep the brake fluid level sensor with cables in position and unscrew the cover.

https://truckmanualshub.com/

- Turn the key switch to position "I".
- Unscrew filler cap (2).
- Press brake fluid level sensor switch (3).

The `SERVICE BRAKE` message must appear in the display.

- If the message does not appear in the display, inform the service centre.
- When testing is complete, screw the filler cap back on.

https://truckmanualshub.com/

Checking the battery condition, acid level and acid density

⚠ CAUTION

Risk of damage!

– Heed the information in the operating instructions for the battery.

– Remove the battery from the truck, see chapter "Handling the battery".

– Inspect battery for cracked housing, raised plate sand acid leaks.

⚠ WARNING

The electrolyte (dilute sulphuric acid) is poisonous and caustic!

– Observe safety regulations for handling battery acid; see chapter "Battery acid".

– Rinse away spilt battery acid immediately with plenty of water!

– Have defective battery overhauled.

– Open filler cap (1) and check the acid level. ▷

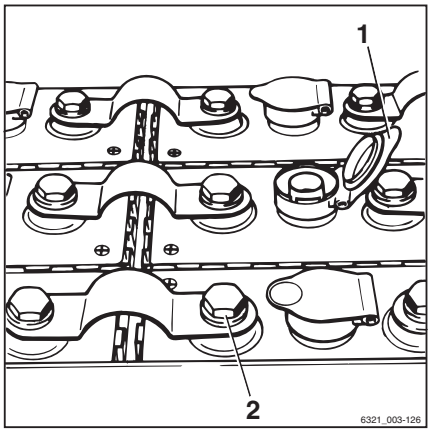

For batteries with "caged cell plugs", the acid must reach the bottom of the cage; for batteries without "caged cell plugs", it must cover the lead plates by about 10–15 mm.

– Top up missing fluid with distilled water only.

The battery cell covers must be kept clean and dry.

– Remove any oxidation residues on the battery terminals and then apply acid-free grease to the terminals.

– Tighten the battery terminals (2).

– Check acid density with an acid siphon.

After charging, this value must be between 1.24 and 1.29 kg/l.

https://truckmanualshub.com/

Checking the fuses

DANGER

Hazard from electrical current!

Take care when handling; there may be residual capacity present.

Before starting the following maintenance work:

- Park the truck securely.
- Disconnect the battery male connector.

CAUTION

Risk of component damage!

If you remove the battery male connector while the key switch is switched on (under load), an arc will be produced. This can lead to corrosion at the contacts, which considerably shortens their service life.

- Switch off the key switch before the battery male connector is disconnected.
- Do not disconnect the battery male connector while the key switch is switched on, except in an emergency.

NOTE

Depending on the equipment, not all fuses will be present in the truck.

The fuses are located at the rear, within the control electronics section.

- Open the battery hood.

https://truckmanualshub.com/

– Open the cover (1).

– Remove the cover from the control electronics.

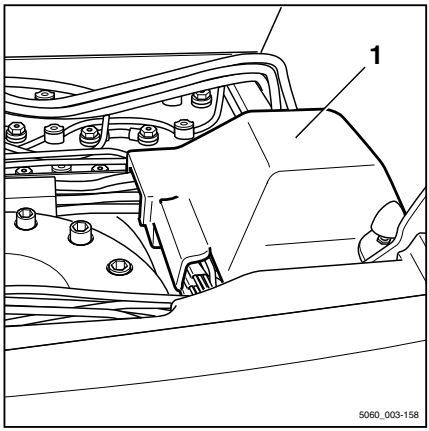

– Check the condition of the main fuse (2) (no damage to the porcelain body) and check that it is securely attached; tighten the clamping screws if necessary.

– Check the condition of fuses (3), check that the cable connections are secure and check for oxidation residues. Clean if necessary.

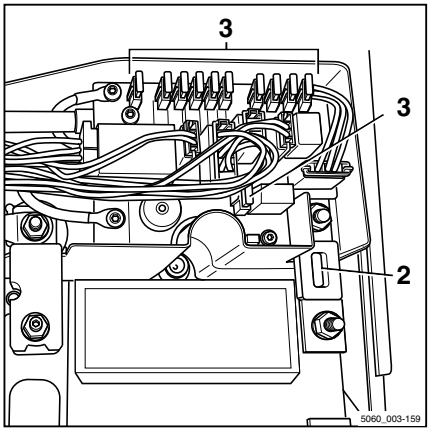

CAUTION

Water in the electrical system can cause damage to components!

In order to protect the electrical system against ingress of water, the cover must be closed.

– Refit the cover after completion of the activities.

– Close the cover of the control electronics.

– Close the cover.

– Close the battery hood.

– Connect the battery male connector.

– Carry out a functional test.

https://truckmanualshub.com/

Changing fuses

DANGER

Hazard from electrical current!

Take care when handling; there may be residual capacity present.

Before starting the following maintenance work:

- Park the truck securely.
- Disconnect the battery male connector.

CAUTION

Risk of component damage!

If you remove the battery male connector while the key switch is switched on (under load), an arc will be produced. This can lead to corrosion at the contacts, which considerably shortens their service life.

- Switch off the key switch before the battery male connector is disconnected.
- Do not disconnect the battery male connector while the key switch is switched on, except in an emergency.

DANGER

Risk of fire!

Using the wrong fuses can result in lack of protection against short circuits.

- Only use fuses with the prescribed nominal current.

NOTE

Depending on the equipment, not all fuses will be present in the truck.

The fuses are located at the rear, within the control electronics section.

- Open the battery hood.

https://truckmanualshub.com/

– Open the cover (1).

– Remove the cover from the control electronics.

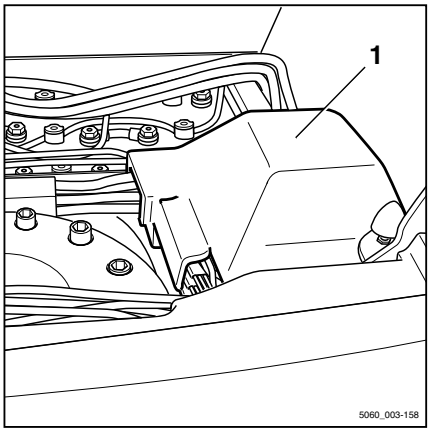

– Locate the blown fuse; see the section entitled "Fuse assignment".

– Unscrew the faulty fuse (2) or remove the faulty fuse (3) and replace it with a new fuse with the specified nominal current.

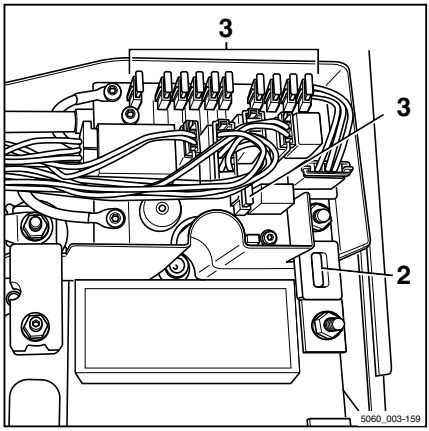

CAUTION

Water in the electrical system can cause damage to components!

In order to protect the electrical system against ingress of water, the cover must be closed.

– Refit the cover after completion of the activities.

– Close the cover of the control electronics.

– Close the cover.

– Close the battery hood.

– Connect the battery male connector.

– Carry out a functional test.

https://truckmanualshub.com/

Checking the hydraulic oil level

CAUTION

Hydraulic oils are hazardous to your health and are under pressure during operation.

– Observe the safety regulations in the chapter "Hydraulic fluid".

– Park the truck securely.

– Remove the left bottom plate.

CAUTION

The maximum oil volume is dependent on the height of the attached lift mast.

The filling quantities vary by 6 l depending on the lift mast version. Always observe the filling quantities for the height of the lift mast, see the chapter "Maintenance data table".

– For lift masts up to 2100 mm in height, the oil level must be within the lower mark (2).

– For lift masts over 2100 mm in height, the oil level must be within the upper mark (3).

– The corresponding minimum marking must be exceeded.

– Unscrew breather filter with oil dipstick (1). ▷

– Check the oil level.

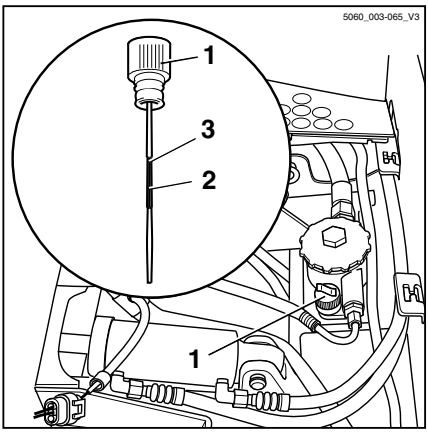

NOTE

The oil level must lie within the mark (2) or within the mark (3) on the dipstick, depending on the height of the lift mast. The corresponding minimum marking must be exceeded.

– If necessary, pour hydraulic oil of the correct specification as specified in the maintenance data table into the filler neck.

ENVIRONMENT NOTE

- *Carefully collect up any spilled oil and dispose of it in an environmentally friendly manner.*

– Screw in the breather filter with oil dipstick.

– Install the left bottom plate.

https://truckmanualshub.com/

Checking the hydraulic system for leaks

WARNING

Hydraulic oil under pressure can escape from leaking lines and cause injuries to the skin.

Wear suitable protective gloves, industrial goggles etc.

WARNING

Hydraulic hoses become brittle!

Hydraulic hoses should not be used longer than 6 years.

The specifications of BGR 237 should be complied with. Deviating national laws are to be taken into account.

– Check pipe and hose connection screw joints for leaks (traces of oil).

Hose lines must be changed if:

- The outer layer has been breached or becomes brittle with tears
- They are leaking
- There are unnatural deformations (e.g. bubble formation or buckling)
- A fitting is detached from the hose
- A fitting is badly damaged or corroded

Pipes must be changed if:

- There is abrasion with the loss of material
- There are unnatural deformations and detectable bending stress
- They are leaking

https://truckmanualshub.com/

Lubricating the lift mast and roller track ▷

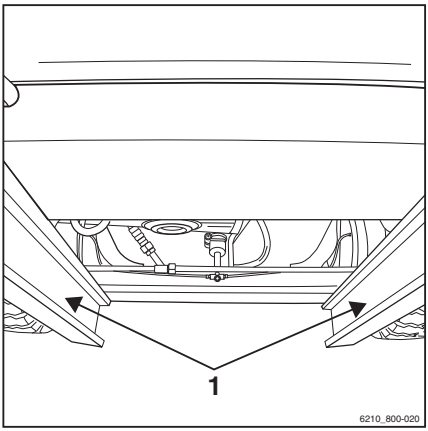

- Remove dirt and lubricant residue from the roller track.
- Lubricate the roller tracks (1) of the outside, middle, and inside mast with a super-pressure adhesion lubricant to reduce wear. See ⇒ Chapter "Maintenance data table", P. 6-303.

NOTE

Spray the roller track evenly from a distance of approx. 15-20 cm. Wait approx. 15 minutes until the equipment is ready to use again.

Maintenance for trucks used in cold stores ▷

- On trucks used in cold stores (variant), check all rollers and chains in the lift mast for ease of movement once a week.

Maintaining the tow coupling

NOTE

Wear to moving parts can be significantly reduced by appropriate servicing and regular lubrication of the coupling.

- Avoid over-greasing!

https://truckmanualshub.com/

Model RO*230

▷

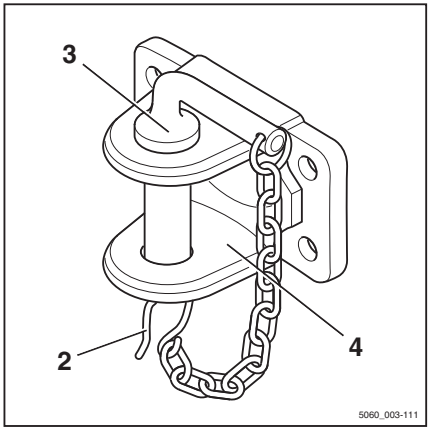

- Check the condition of the pin retainer (2), change if necessary.
- Grease the supporting surface for the tow-bar eye (4) and the coupling pin (3).

Model RO*244

▷

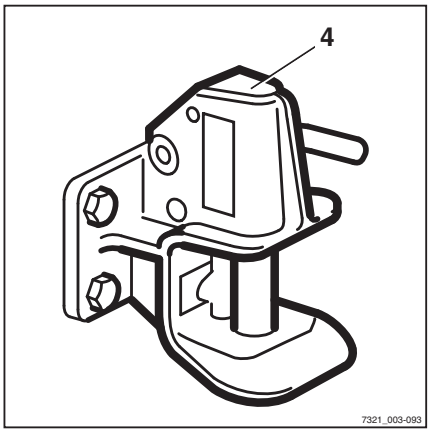

- Grease via the lubricating nipple in accordance with the maintenance data table; see ⇒ Chapter "Maintenance data table", P. 6-303.
- For couplings without a lubricating nipple, unscrew the end cover (4), then open the coupling and grease it.
- Grease the supporting surface for the tow-bar eye.

https://truckmanualshub.com/

1000-hour maintenance / Annual maintenance

Other tasks

– Perform all maintenance work; see the "Maintenance" chapter.

Checking the cable connections

– Check that the feed cables of the pump motor and traction motor are securely attached, in good condition and insulated.

NOTE

Oxidised connections and brittle cables result in voltage drops and cause malfunctions.

– Remove oxidation residues and replace brittle cables.

Checking accelerator pedal and brake pedal

– Check the accelerator pedal and brake pedal for damage and function.

– Remove the bottom plate as necessary and lubricate the mechanism.

Checking the brake system for correct operation and leaks

– Perform a functional check of the brake system; see ⇒ Chapter "Checking the brake system for correct function", P. 5-99.

If you determine that the pedal stop is soft, the pipe lines and hoses must be checked for condition and leaks and the brake system must be bled.

– Contact your service centre.

DANGER

Risk of accident!

Do not put trucks with a defective brake system into service.

▷

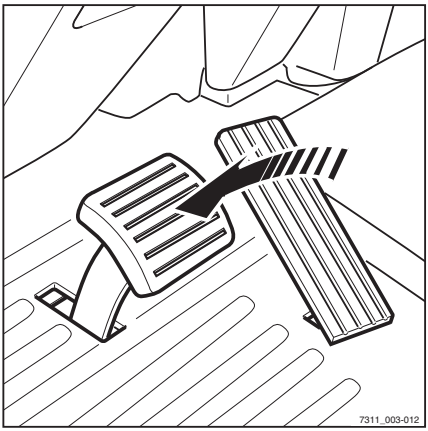

https://truckmanualshub.com/

Checking the dual pedal

- Check the accelerator pedals for forwards and reverse travel for damage and function.
- Remove the bottom plate; see ⇒ Chapter "Removing/installing the bottom plate for dual pedal operation (variant)", P. 6-313.
- Check that the support and springs of the mechanism are securely positioned.
- Perform visual inspection to verify that all screws are coated with retaining compound.

Checking the lift cylinders and connections for leaks

▷

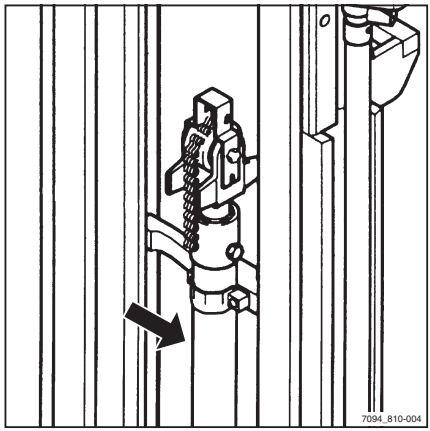

⚠ WARNING

Risk of injury

Observe safety regulations for working on the lift mast, see the "Working at the front of the truck" chapter.

- Check the hydraulic connections and lift cylinder for leaks (visual inspection).
- Have leaking screw joints or leaking hydraulic cylinders repaired by the authorised service centre.

https://truckmanualshub.com/

Checking fork arms

– Inspect the fork arms (1) for any visible deformation. The wear must not amount to more than 10 % of the original thickness.

CAUTION

Worn fork arms should always be replaced in pairs.

– Check the securing mechanism (3) for proper operation.

– The locking screw (2) that prevents dislodging must be present.

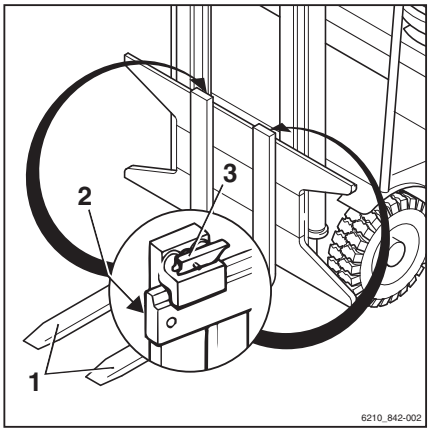

Checking the reversible fork arms

NOTE

This check is only required for reversible fork arms (variant).

– Check the outside of the fork bend (1) for cracks. Contact your service centre.

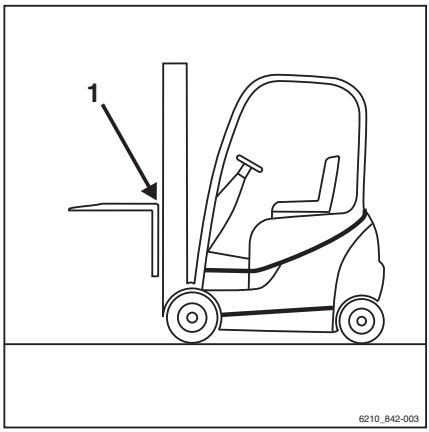

https://truckmanualshub.com/

https://truckmanualshub.com/

7

Technical data

https://truckmanualshub.com/

Dimensions

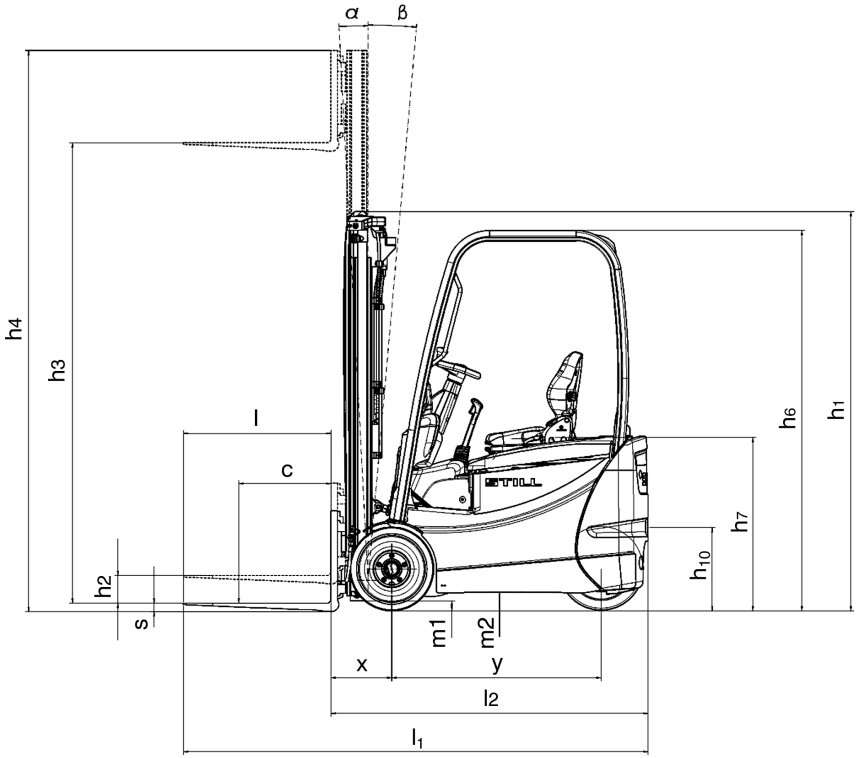

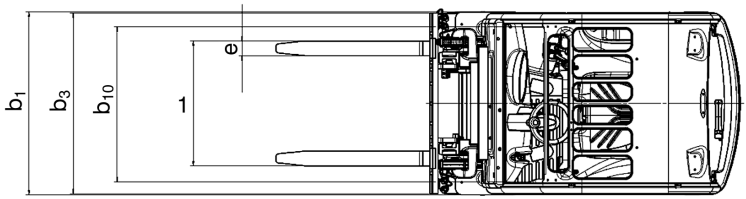

5060_003-146_V2

1 Seat is adjustable ± 90 mm

2 Fork spacing is adjustable

https://truckmanualshub.com/

NOTE

Measurements h_1, h_3, h_4, h_6 and b_1 are customer-specific and can be taken from the order confirmation.

Centre of gravity position — centre of gravity "S"(Distance measured from the front axle)

RX50-10c	576 mm
RX50-10	592 mm
RX50-13	663 mm
RX50-15	720 mm
RX50-16	717 mm

NOTE

The specified centre of gravity "S" relates to trucks with standard equipment. If, for example, the truck is equipped with a different lift mast, attachment or driver protection structure, this value is only a guide value. If necessary, the centre of gravity "S" must be determined on an individual basis for each truck.

VDI datasheet: RX50-10 and RX50-13

Characteristics

Model		**RX50-10c**	**RX50-10**	**RX50-13**
Type number		**5060**	**5061**	**5063**
Manufacturer		STILL GmbH	STILL GmbH	STILL GmbH
Drive		Electric	Electric	Electric
Operation		Seated	Seated	Seated
Rated capacity/load	Q (kg)	1000	1000	1250
Load centre of gravity distance	c (mm)	500	500	500
Load distance	x (mm)	330	330	330
Wheelbase	y (mm)	974	1028	1136

https://truckmanualshub.com/

Weight

Model		RX50-10c	RX50-10	RX50-13
Type number		**5060**	**5061**	**5063**
Net weight including battery	kg	2358	2372	2561
Front axle load with load	kg	2833	2832	3247
Rear axle load with load	kg	525	540	564
Front axle load without load	kg	981	1025	1084
Rear axle load without load	kg	1377	1347	1477

Wheels, chassis frame

Model		RX50-10c	RX50-10	RX50-13
Type number		**5060**	**5061**	**5063**
Tyres		Superelastic	Superelastic	Superelastic
Front tyre size		180/70-8	180/70-8	180/70-8
Rear tyre size		180/70-8	180/70-8	180/70-8
Number of front wheels (x = driven)		2	2	2
Number of rear wheels (x = driven)		1x	1x	1x
Front track width	b_{10} (mm)	840	840	840
Rear track width	b_{11} (mm)	—	—	—

Basic dimensions

Model		RX50-10c	RX50-10	RX50-13
Type number		**5060**	**5061**	**5063**
Tilt of lift mast/fork carriage, forwards	α (degrees)	3	3	3
Tilt of lift mast/fork carriage, backwards	β (degrees)	5	5	5
Height with lift mast retracted	h_1 (mm)	2160	2160	2160
Free lift	h_2 (mm)	150	150	150
Lift[1]	h_3 (mm)	3230	3230	3230
Height with lift mast extended	h_4 (mm)	3805	3805	3805

[1] The specified lift takes into account the tyre deflection and the tolerances of the tyre diameter.

https://truckmanualshub.com/

Model		RX50-10c	RX50-10	RX50-13
Type number		**5060**	**5061**	**5063**
Height to top of overhead guard (cab)	h_6 (mm)	1980	1980	2050
Seat height (in relation to SIP)	h_7 (mm)	953	953	953
Coupling height	h_{10} (mm)	—	—	—
Total length	l_1 (mm)	2359	2413	2521
Length including fork back	l_2 (mm)	1559	1613	1721
Total width	b_1 (mm)	990	990	990
Fork arm thickness	s (mm)	40	40	40
Fork arm width	e (mm)	80	80	80
Fork arm length	l (mm)	800	800	800
Fork carriage according to ISO 2328, class/form A, B		ISO II/A	ISO II/A	ISO II/A
Fork carriage width	b_3 (mm)	980	980	980
Ground clearance with load under lift mast	m_1 (mm)	90	90	90
Ground clearance at centre of wheelbase	m_2 (mm)	90	90	90
Aisle width for pallet 1000 x 1200 crosswise	A_{st} (mm)	2888	2942	3050
Aisle width for pallet 800 x 1200 longitudinal	A_{st} (mm)	3010	3064	3172
Turning radius	W_a (mm)	1229	1283	1391
Smallest pivot point distance	b_{13} (mm)	—	—	—

Performance data

Model		RX50-10c	RX50-10	RX50-13
Type number		**5060**	**5061**	**5063**
Driving speed with load	km/h	12.0	12.0	12.0
Driving speed without load	km/h	12.5	12.5	12.5
Lifting speed with load	m/s	0.38	0.38	0.33
Lifting speed without load	m/s	0.54	0.54	0.54
Lowering speed with load	m/s	0.54	0.54	0.54
Lowering speed without load	m/s	0.60	0.60	0.60

https://truckmanualshub.com/

Model		RX50-10c	RX50-10	RX50-13
Type number		**5060**	**5061**	**5063**
Pulling force with load	N	1650	1650	1400
Pulling force without load	N	1950	1950	1700
Max. pulling force without load	N	2840	2840	3500
Max. pulling force without load	N	7150	7150	7150
Climbing capability with load	%	6.5	6.5	5.0
Climbing capability without load	%	11.0	11.0	8.5
Max. climbing capability with load	%	19.0	19.0	19.0
Max. climbing capability without load	%	25.0	25.0	25.0
Acceleration time with load	s	5.1	5.1	5.3
Acceleration time without load	s	4.7	4.7	4.8
Service brake		Hydraulic	Hydraulic	Hydraulic

Elec. motor

Model		RX50-10c	RX50-10	RX50-13
Type number		**5060**	**5061**	**5063**
Traction motor, power rating at S2: 60 min.	kW	4.9	4.9	4.9
Lift motor, power rating at S3: 15%	kW	7.6	7.6	7.6
Battery in accordance with DIN 43531/35/36 A, B, C, no		DIN 43535 A	DIN 43535 A	DIN 43535 A
Battery voltage	U (V)	24	24	24
Battery capacity	K_5 (Ah)	460	575	805
Battery weight	kg	372	445	600
Energy consumption: 60 VDI working cycles/hour	kWh/h	3.7	3.7	4.2

Other

Model		RX50-10c	RX50-10	RX50-13
Type number		**5060**	**5061**	**5063**
Working pressure for attachments	bar	230	230	230
Oil flow for attachments	l/min	30	30	30

https://truckmanualshub.com/

Model		RX50-10c	RX50-10	RX50-13
Type number		5060	5061	5063
Sound pressure level L_{pAZ} (driver's compartment)[2]	dB (A)	63.9	63.9	63.9
Human vibration: acceleration according to EN 13059	m/s^2	< 0.7	< 0.7	< 0.7
Tow coupling, DIN type/model		—	—	—

VDI datasheet: RX50-15 and RX50-16

Characteristics

Model		RX50-15	RX50-16
Type number		5065	5066
Manufacturer		STILL GmbH	STILL GmbH
Drive		Electric	Electric
Operation		Seated	Seated
Rated capacity/load	Q (kg)	1000	1000
Load centre of gravity distance	c (mm)	500	500
Load distance	x (mm)	335	335
Wheelbase	y (mm)	1190	1190

Weight

Model		RX50-15	RX50-16
Type number		5065	5066
Net weight including battery	kg	2826	2833
Axle load with front load	kg	3679	3866
Axle load with rear load	kg	647	567
Axle load without front load	Kg	1133	1143
Axle load without rear load	kg	1693	1690

[2] Without cab. Values differ with a cab.

https://truckmanualshub.com/

Wheels, chassis frame

Model		RX50-15	RX50-16
Type number		**5065**	**5066**
Tyres		Superelastic	Superelastic
Front tyre size		180/70-8	180/70-8
Rear tyre size		180/70-8	180/70-8
Number of front wheels (x = driven)		2	2
Number of rear wheels (x = driven)		1x	1x
Front track width	b_{10} (mm)	840	840
Rear track width	b_{11} (mm)	—	—

Basic dimensions

Model		RX50-15	RX50-16
Type number		**5065**	**5066**
Tilt of lift mast/fork carriage, forwards	α (degrees)	3	3
Tilt of lift mast/fork carriage, backwards	β (degrees)	5	5
Height with lift mast retracted	h_1 (mm)	2160	2160
Free lift	h_2 (mm)	150	150
Lift[3]	h_3 (mm)	3230	3230
Height with lift mast extended	h_4 (mm)	3805	3805
Height to top of overhead guard (cab)	h_6 (mm)	2050	2050
Seat height (in relation to SIP)	h_7 (mm)	953	953
Coupling height	h_{10} (mm)	—	—
Total length	l_1 (mm)	2575	2580
Length including fork back	l_2 (mm)	1775	1780
Total width	b_1 (mm)	990	990
Fork arm thickness	s (mm)	40	40
Fork arm width	e (mm)	80	80
Fork arm length	l (mm)	800	800
Fork carriage according to ISO 2328, class/form A, B		ISO II/A	ISO II/A

[3] The specified lift takes into account the tyre deflection and the tolerances of the tyre diameter.

https://truckmanualshub.com/

Model		RX50-15	RX50-16
Type number		**5065**	**5066**
Fork carriage width	b_3 (mm)	980	980
Ground clearance with load under lift mast	m_1 (mm)	90	90
Ground clearance at centre of wheelbase	m_2 (mm)	90	90
Aisle width for pallet 1000 x 1200 cross-wise	A_{st} (mm)	3104	3109
Aisle width for pallet 800 x 1200 longitudi-nal	A_{st} (mm)	3226	3231
Turning radius	W_a (mm)	1445	1445
Smallest pivot point distance	b_{13} (mm)	—	—

Performance data

Model		RX50-15	RX50-16
Type number		**5065**	**5066**
Driving speed with load	km/h	12.0	12.0
Driving speed without load	km/h	12.5	12.5
Lifting speed with load	m/s	0.32	0.30
Lifting speed without load	m/s	0.54	0.54
Lowering speed with load	m/s	0.54	0.54
Lowering speed without load	m/s	0.60	0.60
Pulling force with load	N	1280	1240
Pulling force without load	N	1670	1670
Max. pulling force without load	N	3770	3470
Max. pulling force without load	N	7150	7150
Climbing capability with load	%	4.0	4.0
Climbing capability without load	%	8.0	7.5
Max. climbing capability with load	%	16.0	15.0
Max. climbing capability without load	%	25.0	25.0
Acceleration time with load	s	5.5	5.6
Acceleration time without load	s	4.9	5.0
Service brake		Hydraulic	Hydraulic

https://truckmanualshub.com/

Elec. motor

Model		RX50-15	RX50-16
Type number		**5065**	**5066**
Traction motor, power rating at S2: 60 min.	kW	4.9	4.9
Lift motor, power rating at S3: 15%	kW	7.6	7.6
Battery in accordance with DIN 43531/35/36 A, B, C, no		DIN 43535 A	DIN 43535 A
Battery voltage	U (V)	24	24
Battery capacity	K_5 (Ah)	920	920
Battery weight	Kg	676	676
Energy consumption: 60 VDI working cycles/hour	kWh/h	4.8	4.9

Other

Model		RX50-15	RX50-16
Type number		**5065**	**5066**
Working pressure for attachments	bar	230	230
Oil flow for attachments	l/min	30	30
Sound pressure level L_{pAZ} (driver's compartment)[4]	dB (A)	63.9	63.9
Human vibration: acceleration according to EN 13059	m/s^2	< 0.7	< 0.7
Tow coupling, DIN type/model		—	—

[4] Without cab. Values differ with a cab.

https://truckmanualshub.com/

Ergonomic dimensions

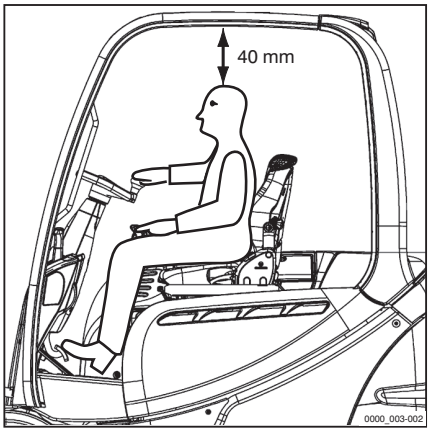

WARNING

Danger of impact injuries to the head!

If the head of the operator is located too close to the underside of the roof, the suspension of the driver's seat or an accident may cause the head to strike the overhead guard.

To avoid head injuries, a minimum distance of **40 mm** must be ensured between the underside of the roof and the head of the tallest operator.

To determine the actual head clearance, the operator must sit in the driver's seat and the seat suspension must be set to this driver's requirements.

Due to the individual nature of height and body weight as well as the wide variety of types of driver's seat and overhead guard, the minimum head clearance must be ensured in every truck.

The driver's compartment has been designed taking ergonomics in the workplace into account and in accordance with EN ISO 3411. In general, from the seat position, the operator has sufficient space to reach the operating devices safely, to operate the truck and to view the outline of the truck. Operators whose body size deviates from the specified dimensions on which EN ISO 3411 is based must be individually considered by the operating company.

https://truckmanualshub.com/

Battery specifications

NOTE

Battery specifications to DIN 43535 A

CAUTION

The battery weight and dimensions affect the stability of the truck.

When replacing the battery, the weight ratios must not be changed. The battery weight must remain within the weight range specified on the nameplate. The location of ballast weights must not be changed. The bottom of the battery tray must be closed.

- Use batteries that meet DIN standards.
- Do not change the position of ballast weights.
- Check the battery weight against the information on the nameplate.
- Only use a battery tray that is closed at the bottom.

RX50-10 (5060)

Battery designation	Capacity in Ah	Weight in kg ± 5%	Battery compartment dimensions in mm			Tray	Ballast weight in kg
			Length	Width	Height		
4 PzV 440	440	372	284	845	645	104	-
4 PzS 460	460						

RX50-10 (5061)

Battery designation	Capacity in Ah	Weight in kg ± 5%	Battery compartment dimensions in mm			Tray	Ballast weight in kg
			Length	Width	Height		
4 PzV 440	440	372	284	845	645	104	78
4 PzS 460	460						
5 PzV 500	500	445	338	845	645	105	-
5 PzV 550	550						
5 PzS 575	575						
5 PzS 625	625						
5 CSM 625	625						

https://truckmanualshub.com/

RX50-13 (5063)

Battery designation	Capacity in Ah	Weight in kg ± 5%	Battery compartment dimensions in mm			Tray	Ballast weight in kg
			Length	Width	Height		
5 PzV 500	500	445	338	845	645	105	156
5 PzV 550	550						
5 PzS 575	575						
5 PzS 625	625						
5 CSM 625	625						
6 PzV 600	600	524	392			106	78
6 PzS 690	690						
6 PzS 750	750						
6 CSM 750	750						
7 PzV 700	700	600	446			107	-
7 PzS 805	805						
7 PzS 875	875						
7 CSM 875	875						

RX50-15 (5065), RX50–16 (5066)

Battery designation	Capacity in Ah	Weight in kg ± 5%	Battery compartment dimensions in mm			Tray	Ballast weight in kg
			Length	Width	Height		
6 PzV 600	600	524	392	845	645	106	156
6 PzS 690	690						
6 PzS 750	750						
6 CSM 750	750						
7 PzV 700	700	600	446			107	78
7 PzS 805	805						
7 PzS 875	875						
7 CSM 875	875						
8 PzV 800	800	676	500			108	-
8 PzV 880	880						
8 PzS 920	920						

https://truckmanualshub.com/

Battery specifications

Battery designa-tion	Capac-ity in Ah	Weight in kg ± 5%	Battery compartment dimensions in mm			Tray	Ballast weight in kg
			Length	Width	Height		
8 PzS 1000	1000						
8 CSM 1000	1000						

https://truckmanualshub.com/

Fuse assignment

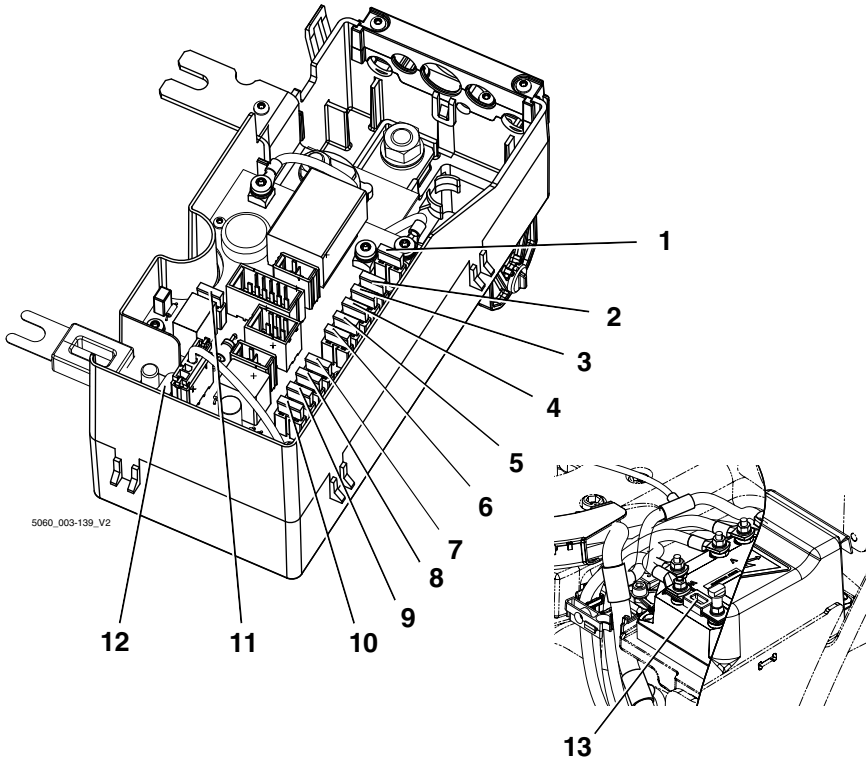

1	Electric parking brake	F21	30 A
2	CAN power port (CPP) 1 — standard	F13	30 A
3	CAN power port (CPP) 2 — lighting	F18	20 A
4	12 V voltage transformer supply	F14	10 A
5	Enable hydraulics multi-lever	F19	10 A
6	Switch lock, display and operating unit, main control unit (MCU), diagnostic connector	F11	10 A
7	Proportional technology	F17	10 A
8	5th hydraulic function	F16	10 A
9	Not assigned	F15	10 A

https://truckmanualshub.com/

10	Horn	F12	10 A
11	Pre-charging the converter	F20	10 A
12	Traction motor main fuse	1 F01	355 A
13	Pump motor main fuse	2 F01	355 A

NOTE

Depending on the equipment, not all fuses will be present in the truck.

https://truckmanualshub.com/

A

Access authorisation
- Changing the password 93
- Defining the driver PIN 89
- Entering the access code 87
- Selecting the driver PIN 90

Access authorisation with PIN code 86
Accessories 3
Accident recorder 204
Actuating the drive direction switch
- Fingertip version 113
- Joystick 4Plus version 113
- Mini-console version 114
- Mini-lever version 112
- Multiple-lever version 112

Address of manufacturer I
Adjusting the armrest 77
Adjusting the fork 153
After washing 292

Attachments
- Assembly 165
- Controlling using a double mini-lever 174
- Controlling using multi-lever operation 171
- Controlling using the double mini-lever and the 5th function . . 176
- Controlling using the four-way mini-lever and the 5th function . . 184
- Controlling using the three-way mini-lever and the 5th function . . 180
- Controlling via the joystick 4Plus . . . 186
- Controlling with a quadruple mini-lever 182
- Controlling with a triple mini-lever . . . 178
- Controlling with fingertip 188
- Controlling with fingertip and 5th function 189
- Controlling with multi-lever operation and the 5th function 172
- General controlling 169
- Mounting 166
- Releasing the pressure from the connections 167
- Special risks 18
- Taking up a load 195

Automatic lift cut out 123

https://truckmanualshub.com/

B

Battery
Activities after installation using the internal roller channel 272
Activities before removal using the internal roller channel 270
Changing using the internal roller channel 270
Charging 279
Checking condition, acid level and acid density 324
Checking the charge status 279
Disposal 11
Installing using a bridge 265
Maintaining 278
Removing using a bridge 262
Replacing using a bridge 262
Replacing using an external roller channel 273
Safety regulations 251
Battery acid 41
Battery hood
Closing 254
Opening 254
Battery specifications 348
Battery transport with crane 269
Before taking up load 148
Blue-Q
Configure 224
Functional description 226
Switching off 227
Switching on 227
Bottom plate
Installing 311
Installing, dual pedal operation 313
Removing 311
Removing, dual pedal operation . . . 313
Brake fluid 42
Checking the brake fluid level 321
Checking the function of the sensor . 322
Brake system
Checking for correct operation 333
Checking for leaks 333

C

CE labelling 2
Changes to the truck 29
Changing the drive direction 115
Dual-pedal version 118
Changing the fork arms 141
Changing the password 93
Checking accelerator pedal and brake pedal 333
Checking fork arms 335
Checking the battery hood lock 315
Checking the cable connections 333
Checking the drive axle for oil level, leaks and general condition 320
Checking for leaks 321
Checking the oil level 320
Checking the driver's seat 318
Checking the dual pedal 334
Checking the emergency stop function . 101
Checking the lift cylinders and connections for leaks 334
Checking wheel fastenings 320
Clamp locking mechanism
Releasing 191
Cleaning the electrical system 290
Cleaning the truck 288
Climbing off 79
Climbing on 79
Clipboard 204
Cold store application 211
Operation 211
Permissible use 211
Condition of the roadways 107
Connecting the battery male connector . . 81

https://truckmanualshub.com/

Consumables 39
Brake fluid safety information 42
Disposal 44
Safety information for handling battery acid 41
Safety information for handling oils . . . 39
Safety information for hydraulic fluid . . 40
Contact details I
Copyright and trademark rights 5
Crane loading 243
Curve Speed Control 122

D

Damage 33
Danger area 153
Danger to employees 23
Declaration of conformity 3
Defects 33
Defining the driver PIN 89
Definition of directions 9
Dimensions 338
Dimensions of driveways 106
Direction indicators 198
Fingertip version 200
Mini-console version 201
Mini-lever version 199
Disconnecting the battery male connector 261
Display and operating unit 53
Additional indicators 216
Adjusting the displays 217
Configure Blue Q 224
Indicators 214
Standard display elements 85
Display operating unit
Resetting the daily kilometres 222
Setting the date 222
Setting the language 223
Setting the time 222
Standard displays 214
Display symbols 217
Auxiliary equipment soft key functions 219
Error messages 219
Menu navigation soft key functions . . 220
Numeric keypad 221
Operating messages 218
Status LEDs 220
Warning messages 218
Disposal
Battery 11
Components 11
Documentation scope 4
Double mini-lever 57
Lifting/lowering the fork carriage . . . 135
Tilting the lift mast 135
Driver rights, duties and rules of behaviour 27
Driver’s compartment 52
Drivers 27
Driveways 106
Driving
on ascending and descending slopes 162
Driving on gradients 106
Driving on lifts 162
Driving on loading bridges 164

E

EC declaration of conformity in accordance with Machinery Directive 3
Effects on additional consumers 226
Emergencies
Truck tipping over 248
Emergency lowering 248
Emergency shutdown 247
Emissions 45
Battery 47
Noise emissions 45
Vibrations 46
Entering the access code 87
Ergonomic dimensions 347

https://truckmanualshub.com/

Example 149

F

Filling the washer system 70
Fingertip 61
  Lifting/lowering the fork carriage . . . 140
  Tilting the lift mast 140
Fitting attachments 165
FleetManager 203
  Accident recorder 204
Fork arms
  Length 35
Fork extension 143
Four-way mini-lever 59
  Lifting/lowering the fork carriage . . . 137
Fuse assignment 351
Fuses
  Changing 327
  Checking 325

G

General 2
General view 50
GS15 driver's seat
  Adjusting 72
  Adjusting the seat backrest 73
  Adjusting the seat suspension 73
  Moving 73

H

Handling gas springs and accumulators . 35
Hazard areas 108
Hazard warning system 198
Hazards and countermeasures 20
Hydraulic blocking function 132
  Enabling 132
Hydraulic fluid 40
Hydraulic system
  Checking for leaks 330
  Checking the oil level 329

I

Identification points 64
Impermissible use 14
Information for carrying out maintenance 294
  Maintenance timeframe 295
Information symbols 5
Insulation testing 37
Insurance cover on company premises . . 29
Issue date of the operating instructions . . . 5

J

Jacking up 307
Joystick 4Plus 60
  Fork-carriage sideshift 139
  Lifting/lowering the fork carriage . . . 138
  Tilting the lift mast 138

L

Lashing 239
Lift cut out
  Automatic 123
Lift mast
  Lubricating the roller track 331
  Removing 309
  Securing against falling off 309
  Securing against tilting backwards . . 308
Lift mast versions
  Hi-Lo lift mast 129
  Triplex lift mast 130
Lift mast vertical position 124
  Automatic approach 126
  Calibrating 128
  Description 124
  Display 126
  Possible restrictions 128
  Run-in to end stops 126
  Tilting the lift mast backwards 127
  Tilting the lift mast forwards 127
Lifting 307

https://truckmanualshub.com/

Lifting system
Controlling using a double mini-lever 135
Controlling using a quadruple mini-lever 137
Controlling using a triple mini-lever . . 136
Controlling using the joystick 4Plus . 138
Controlling with the fingertip console 140
Multi-lever 134
Operating devices 131
Lighting 197
List of abbreviations 6
Load
Picking up 155
Setting down 160
transporting 159
Load capacity 148
Load chains
Cleaning 291
Load measurement 149
Description 149
Execution 150
Zero adjustment 101
Lubricating the joints and controls 315

M

Maintenance data table 303
Battery 303
Controls/joints 303
Electrical system 303
General lubrication points 303
Hydraulic system 304
Lift mast 304
Load chains 304
Running axle 304
Steering axle/drive axle 304
Tyres 304
Washer system 305
Maintenance for trucks used in cold stores 331
Maintenance personnel for batteries . . . 294
Maintenance work without special qualifications 294
Malfunctions during lifting mode 130
Measuring the battery's insulation resistance 38
Measuring the insulation resistance of the electrical system 38
Medical equipment 34
Message
APPLY HANDBRAKE 234
EMERGENCY SWITCH 230
LOWER FORKS 235
REFERENCE CYCLE 235
SAFETY BELT 233
SEAT SWITCH 230
SERVICE BRAKE 236
Messages
Screen content 229
Mini console 62
Misuse of safety systems 33
MSG 65/MSG 75 driver's seat
Adjusting 74
Adjusting the backrest extension 77
Adjusting the lumbar support 76
Adjusting the seat backrest 75
Adjusting the seat suspension 76
Moving 75
Switching the seat heater on and off . . 77
Multi-lever 56
Lifting/lowering the fork carriage . . . 134
Tilting the lift mast 134

N

Nameplate 65
Neutral position 111

O

Oils 39
Opening/closing the battery door 259
Operating company 26
Operating devices for hydraulic and traction functions 55

https://truckmanualshub.com/

Operating materials
Quality and quantity 301
Operating procedures 9
Operating the service brake 119
Operating the signal horn 96
Ordering spare parts and wearing parts . 301
Overhead guard
Drilling 32
Roof loads 32
Welding 32
Overview
Accessories 3
Identification points 64

P

Packaging 11
Parking brake
Mechanical parking brake 120
Parking the truck securely 282
Personnel qualifications 294
Picking up loads 152
Place of use 15
Procedure if truck tips over 248
Production number 66
Prohibition of use by unauthorised persons 28
Proper usage 14

Q

Quadruple mini-lever
Tilting the lift mast 137

R

Recommissioning after storage 286
Reducing speed when turning 122
Reducing speed with a raised load 109
Resetting the daily kilometres 222
Resetting the daily operating hours 222
Residual dangers 17
Residual risks 17
Retrofitting 29
Reversible fork arm
Checking 335
Reversible fork arms 145
Roadways . . . . . 107 – 108
Rotating beacon 197
Rules for roadways and the working area 108

S

Safety devices 307
Safety inspection 37
Safety regulations for maintenance
General information 306
Safety devices 307
Set values 307
Working on the electrical equipment 306
Working on the hydraulic equipment 306
Safety regulations for working on the lift mast 308
Safety regulations when driving 104
Safety regulations when handing loads . 147
Safety regulations when handling the battery 251
Battery weight and dimensions 253
Damage to cables and battery male connectors 254
Fire protection measures 252
Lifting accessory 253
Maintenance personnel 251
Schematic views 9
Seat belt 97
Checking 317
Cleaning 317
Fastening 97
Fastening on a steep slope 98
Maintaining 316
Malfunctions due to cold 98
Releasing 98
Replacement after an accident 317
Selecting the drive direction 111
Selecting the driver PIN 90

https://truckmanualshub.com/

Set values 307
Setting the date 222
Setting the drive programs 108
Setting the language 223
Setting the time 222
Shutting down the truck 284
Special overhead guard for drive-in racks 109
Special risks 18
Stability 18
Starting drive mode 114
Dual-pedal version 116
Status LEDs 220
Steering 121
Steering system
Checking for correct function 100
Storing the truck 284
StVZO (Road Traffic Licensing Regulations) information 66
Switching off the truck 282
Switching on the key switch 83

T

Technical data
Dimensions 338
Three-way mini-lever 58
Lifting/lowering the fork carriage . . . 136
Topicality of the operating instructions . . . 5
Tow coupling
Maintaining 331
Tow coupling RO*230 206
Coupling 207
Uncoupling 207
Tow coupling RO*244 208
Coupling 209
Uncoupling 209
Towed load 205
Towing 240
Proper use 14
Trailers
Towing 210
Transport of swinging loads 154
Transporting 237
Transporting pallets 154
Triple mini-lever
Tilting the lift mast 136
Types of lift mast 128
Telescopic mast 129
Tyres
Safety principles 33

U

Unlocking the emergency off switch 82
Using batteries in the cold store 212
Using working platforms 16

V

Valve cover
Installing 310
Removing 310
Variants
Access authorisation with PIN code . . 86
Accident recorder 204
Automatic lift cut out 123
Clamp locking mechanism 191
Clipboard 204
FleetManager 203
Fork extension 143
Hi-Lo lift mast 129
Lift mast vertical position 124
Lifting systems 123
Load measurement 149
Reducing speed with a raised load . . 109
Reversible fork arms 145
Special overhead guard for drive-in racks 109
Triplex lift mast 130
Wheel chock 284
VDI datasheet
RX50-10 and RX50-13 339
RX50-15 and RX50-16 343
Vertical lift mast position
Checking for correct function 103
View of functions and operations 9

https://truckmanualshub.com/

View of operating procedures 9
Views of the display operating unit 10
Visual inspections 68

W

Warning regarding non-original parts . . . 32
Wedging 238
Wheel chock 284
Wheels and tyres
Checking condition and wear of the tyres 319
Checking the condition 71
Checking wheel fastenings 320
Servicing 318
Windscreen wiper/washer 203
Working at the front of the truck 308
Working on the electrical equipment . . . 306
Working on the hydraulic equipment . . . 306
Working spotlights
Automatically switching on/off 202
Lift-height-controlled switching on/off 202
Manually switching on/off 201
Switching on and off 201

Z

Zero adjustment of the load measurement 101

https://truckmanualshub.com/

https://truckmanualshub.com/

STILL GmbH

55048011501 EN – 12/2015