https://truckmanualshub.com/

Introduction

This manual provides information needed to operate and understand the vehicle and its components. More detailed information is contained in the *Owner's Warranty Information for North America* booklet, and in the vehicle's workshop and maintenance manuals.

Custom-built Freightliner vehicles are equipped with various chassis and cab components. Not all of the information contained in this manual applies to every vehicle. For details about components in your vehicle, refer to the chassis specification pages included in all new vehicles and to the vehicle specification decal, located inside the vehicle.

For your reference, keep this manual in the vehicle at all times.

IMPORTANT: Descriptions and specifications in this manual were in effect at the time of printing. Freightliner Trucks reserves the right to discontinue models and to change specifications or design at any time without notice and without incurring obligation. Descriptions and specifications contained in this publication provide no warranty, expressed or implied, and are subject to revisions and editions without notice.

Environmental Concerns and Recommendations

Whenever you see instructions in this manual to discard materials, you should first attempt to reclaim and recycle them. To preserve our environment, follow appropriate environmental rules and regulations when disposing of materials.

Event Data Recorder

This vehicle is equipped with one or more devices that record specific vehicle data. The type and amount of data recorded varies depending on how the vehicle is equipped (such as the brand of engine, if an air bag is installed, or if the vehicle features a collision avoidance system, etc.).

This vehicle is equipped with an event data recorder (EDR). The main purpose of an EDR is to record data in certain crash or near-crash situations, such as air bag deployment or hitting a road obstacle, that will assist in understanding how a vehicle's systems performed. The EDR is designed to record data related to vehicle dynamics and safety systems for approximately 60 seconds. This data can help provide a better understanding of the circumstances in which crashes and injuries occur. Data recorded includes the following items:

- how various systems in the vehicle were operating
- engine system information
- how far (if at all) the driver was depressing the accelerator
- if the driver was depressing the brake pedal
- how fast the vehicle was traveling

NOTE: Data is not recorded by the EDR under normal driving conditions. Personal data such as name, gender, age, and crash location are not recorded. However, other parties such as law enforcement could combine the EDR data with the type of personally identifying data routinely acquired during a crash investigation.

To read data recorded by an EDR, special equipment is required, and access to the vehicle or the EDR is needed. In addition to the vehicle manufacturer, other parties that have the special equipment, such as law enforcement, can read the information if they have access to the vehicle or the EDR.

Customer Assistance Center

Having trouble finding service? Call the Customer Assistance Center at 1-800-385-4357 or 1-800-FTL-HELP. Call night or day, weekdays or weekends, for dealer referral, vehicle information, breakdown coordination, or Fleetpack assistance. Our people are knowledgeable, professional, and committed to following through to help you keep your truck moving.

Reporting Safety Defects

If you believe that your vehicle has a defect which could cause a crash or could cause injury or death, you should immediately inform the National Highway Traffic Safety Administration (NHTSA) in addition to notifying Daimler Trucks North America LLC.

If the NHTSA receives similar complaints, it may open an investigation, and if it finds that a safety defect exists in a group of vehicles, it may order a

STI-411-2 (9/18)
A24-01036-000
Printed in U.S.A.

https://truckmanualshub.com/

Foreword

recall and remedy campaign. However, NHTSA cannot become involved in individual problems between you, your dealer, or Daimler Trucks North America LLC.

To contact NHTSA, you may call the Vehicle Safety Hotline toll-free at 1-888-327-4236 (TTY: 1-800-424-9153); go to **www.safercar.gov**; or write to: Administrator, NHTSA, 1200 New Jersey Avenue, SE, Washington, DC 20590. You can also obtain other information about motor vehicle safety from **www.safercar.gov**.

Canadian customers who wish to report a safety-related defect to Transport Canada, Defect Investigations and Recalls, may telephone the toll-free hotline 1-800-333-0510, or contact Transport Canada by mail at: Transport Canada, ASFAD, Place de Ville Tower C, 330 Sparks Street, Ontario, Canada K1A 0N5.

For additional road safety information, please visit the Road Safety website at: **www.tc.gc.ca/roadsafety**.

© 1996–2016 Daimler Trucks North America LLC. All rights reserved. Daimler Trucks North America LLC is a Daimler company.

No part of this publication, in whole or part, may be translated, reproduced, stored in a retrieval system, or transmitted in any form by any means, electronic, mechanical, photocopying, recording, or otherwise, without the prior written permission of Daimler Trucks North America LLC. For additional information, please contact Daimler Trucks North America LLC, Service Systems and Documentation, P.O. Box 3849, Portland OR 97208–3849 U.S.A. or refer to **www.Daimler-TrucksNorthAmerica.com**and **www.FreightlinerTrucks.com**.

https://truckmanualshub.com/

Contents

Chapter		Page
	Introduction, Environmental Concerns and Recommendations, Event Data Recorder, Customer Assistance Center, Reporting Safety Defects	Foreword
1	Vehicle Identification	1.1
2	Instruments and Controls Identification	2.1
3	Vehicle Access	3.1
4	Heater and Air Conditioner	4.1
5	Seats and Seat Belts	5.1
6	Steering and Brake Systems	6.1
7	Engines and Clutches	7.1
8	Transmissions	8.1
9	Rear Axles	9.1
10	Fifth Wheels and Trailer Couplings	10.1
11	Pretrip and Post-Trip Inspections and Maintenance	11.1
12	Cab Appearance	12.1
13	In an Emergency	13.1
	Index	I.1

https://truckmanualshub.com/

https://truckmanualshub.com/

1

Vehicle Identification

Vehicle Specification Decal 1.1
Federal Motor Vehicle Safety Standard (FMVSS) Labels 1.1
Canadian Motor Vehicle Safety Standard (CMVSS) Labels 1.1
Tire and Rim Labels 1.2
EPA Emission Control 1.2

https://truckmanualshub.com/

Vehicle Specification Decal

The vehicle specification decal lists the vehicle model, identification number, and major component models. It also recaps the major assemblies and installations shown on the chassis specification sheet. One copy of the specification decal is attached to the driver's side sunvisor; another copy is inside the rear cover of the *Owner's Warranty Information for North America* booklet. An illustration of the decal is shown in **Fig. 1.1**.

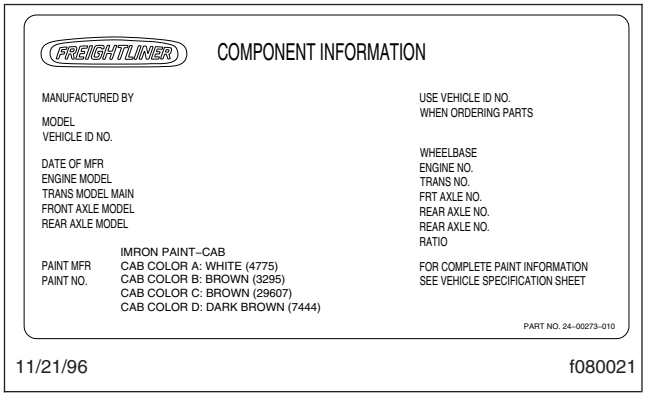

Fig. 1.1, Vehicle Specification Decal, U.S.-Built Vehicle Shown

NOTE: Labels shown in this chapter are examples only. Actual specifications may vary from vehicle to vehicle.

Federal Motor Vehicle Safety Standard (FMVSS) Labels

NOTE: Due to the variety of FMVSS certification requirements, not all of the labels shown will apply to your vehicle.

Tractors with or without fifth wheels purchased in the U.S. are certified by means of a certification label (**Fig. 1.2**) and the tire and rim labels (**Fig. 1.3**). These labels are attached to the left rear door post, as shown in **Fig. 1.4**.

If purchased for service in the U.S., trucks built without a cargo body have a certification label (**Fig. 1.5**) attached to the left rear door post. See **Fig. 1.4**. In addition, after completion of the vehicle, a certification label similar to that shown in **Fig. 1.2** must be attached by the final-stage manufacturer. This label will be located on the left rear door post and certifies that the vehicle conforms to all applicable FMVSS regulations in effect on the date of completion.

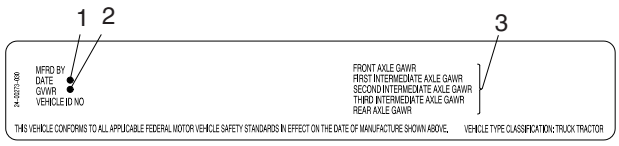

11/21/96 f080053

1. Date of Manufacture: by month and year
2. Gross Vehicle Weight Rating: developed by taking the sum of all the vehicle's gross axle ratings
3. Gross Axle Weight Ratings: developed by considering each component in an axle system - including suspension, axle, wheels, and tires - and using the lowest component capacity as the value for the system

Fig. 1.2, Certification Label, U.S.

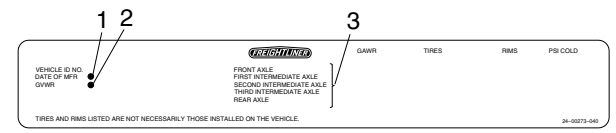

10/31/95 f080054

1. Date of Manufacture: by month and year
2. Gross Vehicle Weight Rating: developed by taking the sum of all the vehicle's gross axle ratings
3. Gross Axle Weight Ratings: developed by considering each component in an axle system - including suspension, axle, wheels, and tires - and using the lowest component capacity as the value for the system

Fig. 1.3, Tire and Rim Label

Canadian Motor Vehicle Safety Standard (CMVSS) Labels

In Canada, tractors with fifth wheels are certified by means of a "Statement of Compliance" label and the Canadian National Safety Mark (**Fig. 1.6**), which are attached to the left rear door post. In addition, tire and rim labels (**Fig. 1.3**) are also attached to the left rear door post.

If purchased for service in Canada, trucks built without a cargo body and tractors built without a fifth wheel are certified by a "Statement of Compliance" label, similar to **Fig. 1.2**. This label must be attached by the final-stage manufacturer after completion of the vehicle. The label is located on the left rear door post, and certifies that the vehicle conforms to all applicable CMVSS regulations in effect on the date of completion.

https://truckmanualshub.com/

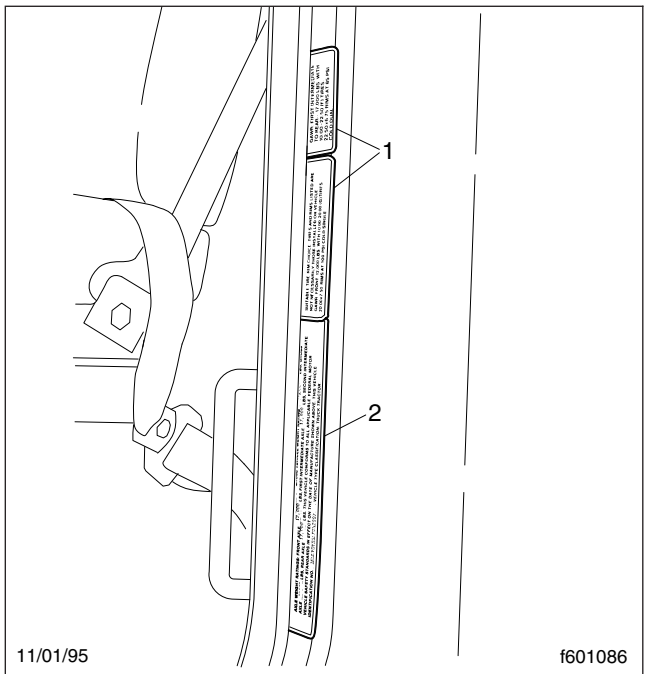

1. Tire and Rim Labels 2. Certification Label

Fig. 1.4, Labels Location

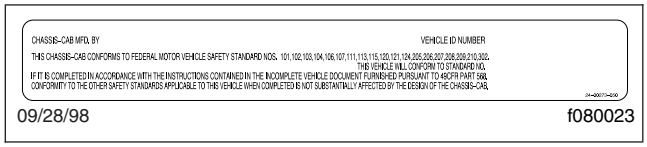

Fig. 1.5, Incomplete Vehicle Certification Label, U.S.

Fig. 1.6, Canadian National Safety Mark

Tire and Rim Labels

Tire and rim labels certify suitable tire and rim combinations that can be installed on the vehicle, for the given gross axle weight rating. Tires and rims installed on the vehicle at the time of manufacture may have a higher load capacity than that certified by the tire and rim label. If the tires and rims currently on the vehicle have a lower load capacity than that shown on the tire and rim label, then the tires and rims determine the load limitations on each of the axles. See **Fig. 1.3**.

EPA Emission Control

Vehicle Noise Emission Control Label

A vehicle noise emission control label (**Fig. 1.7**) is attached either to the left side of the dashboard or to the top-right surface of the frontwall between the dash and the windshield.

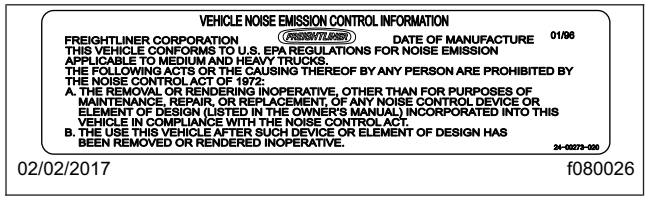

Fig. 1.7, Vehicle Noise Emission Control Label

IMPORTANT: Certain Freightliner incomplete vehicles may be produced with incomplete noise control hardware. Such vehicles will not have a vehicle noise emission control information label. For such vehicles, it is the final-stage manufacturer's responsibility to complete the vehicle in conformity to U.S. EPA regulations (40 CFR Part 205) and label it for compliance.

EPA07 Exhaust Emissions Regulations

To meet January 2007 emissions regulations, engines manufactured after January 1, 2007, are equipped with an emission aftertreatment device. There is a warning label on the driver's sunvisor, explaining important new warning indicators in the driver's message display, that pertain to the aftertreatment system. See **Fig. 1.8**.

It is a violation of federal law to alter exhaust plumbing or aftertreatment in any way that would bring the engine out of compliance with certification requirements. (Ref: 42 U.S.C. S7522(a) (3).) It is the owner's responsibility to maintain the vehicle so that it conforms to EPA regulations.

https://truckmanualshub.com/

EXHAUST AFTERTREATMENT SYSTEM INFORMATION

INDICATOR LAMP(S)	(Solid) Level 1	(Flashing) Level 2	(Flashing) CHECK Level 3	(Flashing) CHECK STOP Level 4
Indicator Lamp Message(s)	Filter Regeneration Recommended	Filter Regeneration Necessary	Parked Regeneration Required – Engine Derate	Parked Regeneration Required – Engine Shut Down
Diesel Particulate Filter Condition	Filter is reaching capacity.	Filter is now reaching maximum capacity.	Filter has reached maximum capacity.	Filter has exceeded maximum capacity.
Required Action	Bring vehicle to highway speeds to allow for an Automatic Regeneration or perform a Parked Regeneration.	To avoid engine derate bring vehicle to highway speeds to allow for an Automatic Regeneration or perform a Parked Regeneration as soon as possible.	Vehicle must be parked and a Parked Regeneration must be performed – engine will begin derate.	Vehicle must be parked and a Parked Regeneration or Service Regeneration must be performed. Check engine operator's manual for details –engine will shut down.
For a driver performed Parked Regeneration, vehicle must be equipped with a dash mounted Regeneration Switch.				

WARNING

HEST (High Exhaust System Temperature)

Flashing

A regeneration is in progress.

Solid

Exhaust Components and exhaust gas are at high temperature. When stationary, keep away from people and flammable materials or vapors.

See Engine Operator's Manual for complete Regeneration Instructions.

24–01583–000B

06/29/2009 f080147

Fig. 1.8, Sunvisor Warning Label

https://truckmanualshub.com/

2

Instruments and Controls Identification

Instrumentation Control Units 2.1
Warning and Indicator Lights 2.2
Driver Message Center 2.5
Instruments 2.13
Controls 2.18
Roll Stability Advisor and Control System 2.25
Voltage and Fuel Efficiency Controls 2.27
Meritor WABCO® Antilock Braking System 2.29
VORAD VS-400 System 2.31
Lane Departure Warning Controls 2.36

https://truckmanualshub.com/

Instruments and Controls Identification

Instrumentation Control Units

The instrumentation control unit (ICU) provides the driver with engine and vehicle information. It is comprised of standard and optional gauges, an audible warning, a driver message center, and a lightbar containing warning and indicator lamps (also known as telltales). Warning and indicator lamps illuminate in red (danger), amber (caution), green (status advisory), or blue (high-beam headlights activated).

Century Class vehicles are equipped with either an ICU4M (**Fig. 2.1**) or ICU2M (**Fig. 2.2**).

The following headings in this chapter provide additional information and operating instructions for ICU components:

- "Warning and Indicator Lights"
- "Driver Message Center"
- "Instruments"

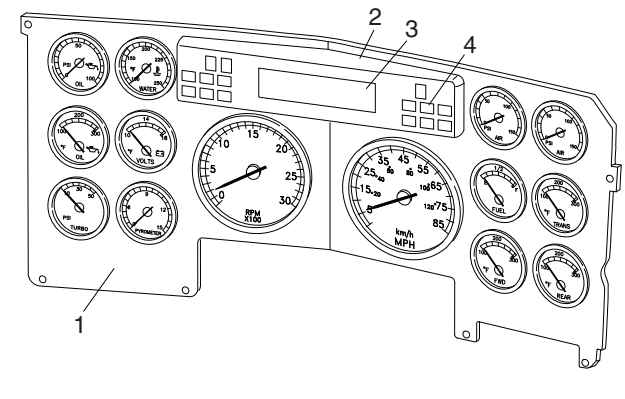

09/27/95 f600991

1. Main Dash Panel
2. Lightbar
3. Driver Message Center
4. Warning and Indicator Lights

Fig. 2.2, ICU2M Instrument Cluster

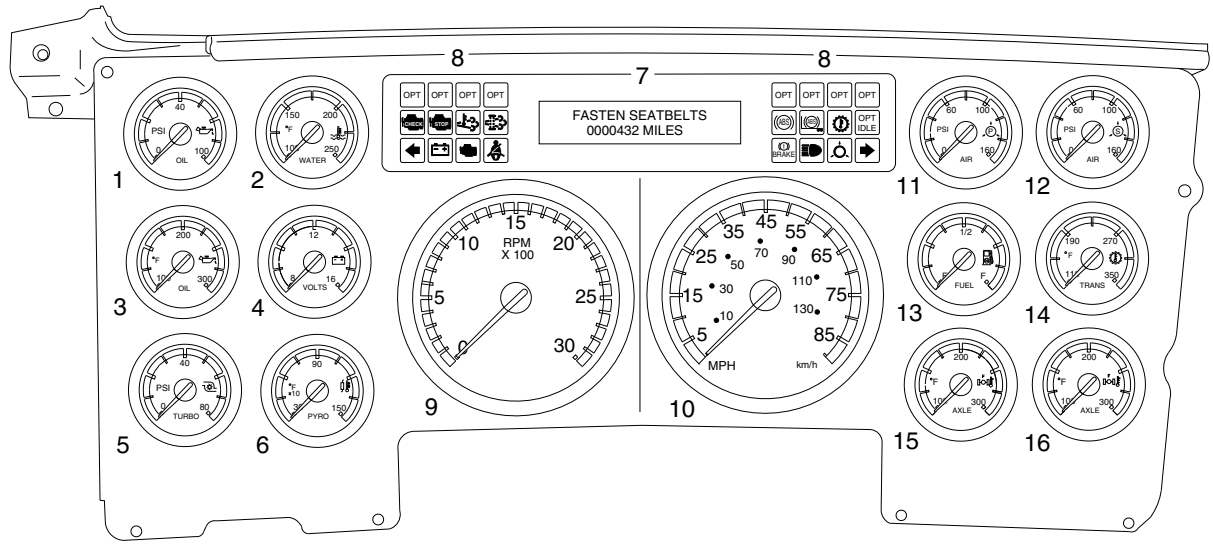

09/29/2010 f610706b

1. Engine Oil Pressure Gauge
2. Engine Coolant Temperature Gauge
3. Engine Oil Temperature Gauge
4. Battery Voltage Gauge
5. Turbo Boost Air Pressure Gauge
6. Pyrometer
7. Dash Message Center
8. Warning and Indicator Lights
9. Tachometer
10. Speedometer
11. Primary Air Pressure Gauge
12. Secondary Air Pressure Gauge
13. Fuel Level Gauge
14. Transmission Fluid Temperature Gauge
15. Forward Drive Axle Temperature Gauge
16. Rearmost Drive Axle Temperature Gauge

Fig. 2.1, ICU4M Instrument Cluster

https://truckmanualshub.com/

Ignition Sequence

When the ignition is turned on, the ICU runs a self-check. Observing the ignition sequence is a good way to ensure the ICU is functioning properly.

IMPORTANT: Do not crank the engine until the ICU gauge sweep is complete.

NOTE: Air gauges do not complete a sweep of their dials during the ignition sequence.

When the ignition is turned on, the following actions should occur:

- electronic gauges complete a full sweep of their dials
- some warning and indicator lamps illuminate, then are extinguished
- audible alert sounds until sufficient air pressure builds up in the primary and secondary air systems
- software revision level of the ICU is displayed on the driver message center, followed by any active faults

IMPORTANT: If any red or amber warning or indicator lamps do not illuminate during the ICU self-check or do not extinguish after the self-check completes, take the action outlined in **Table 2.1**, or take the vehicle to an authorized Daimler Trucks service facility as soon as possible.

NOTE: If active faults are present, take the vehicle to an authorized Daimler Trucks service facility as soon as possible.

If the ICU receives active fault codes, it displays them one after the other until the parking brake is released or the ignition is turned off. Once the parking brake is completely released, the ICU displays the odometer. If there are no active faults, the ICU displays the odometer after the self-check completes.

When the self-check is complete on an ICU4M, the fasten seat belt screen displays if the engine is off. If the engine is running, the idle hours screen displays.

Audible Alerts

An audible alert sounds during the ignition sequence and whenever one of the following conditions exists:

- Engine oil pressure falls below the minimum preset value.
- Coolant temperature rises above the maximum preset value.
- Air pressure falls below approximately 70 psi (483 kPa).
- Parking brake is set with the vehicle moving faster than two miles per hour.
- System voltage falls below 12 volts.
- Door is open or the headlights are on, with the parking brake off.

Warning and Indicator Lights

The ICU lightbar has three or four rows of warning and indicator lights with icon symbols, depending on the ICU. The positions of the lights may vary for the different ICU's, but the telltales are standard for all applications. See **Table 2.1** for a listing of standard and commonly used warning and indicator lamps.

Warning and indicator lamps illuminate in red (danger), amber (caution), green (status advisory), or blue (high-beam headlights active).

IMPORTANT: Depending upon local jurisdictional emissions guidelines, vehicles may not be equipped with all of the lamps shown in **Table 2.1**.

Engine Protection System

⚠ WARNING

When the red STOP engine lamp illuminates, most engines are programmed to shut down automatically within 30 seconds. The driver must immediately move the vehicle to a safe location at the side of the road to prevent causing a hazardous situation that could cause bodily injury, property damage, or severe damage to the engine.

See **Fig. 2.3** for an explanation of the aftertreatment system (ATS) warning indicators, and actions required to avoid further engine protection steps.

https://truckmanualshub.com/

Common Warning and Indicator Lamps			
	Lamp Description		Color
	STOP Engine *	Indicates a serious fault that requires engine shutdown immediately. The engine protection system reduces the maximum engine torque and speed, and, if the condition does not improve, shuts down the engine within 30 to 60 seconds. Safely bring the vehicle to a stop on the side of the road and shut down the engine as soon as the red light is seen. **IMPORTANT: If the engine shuts down while the vehicle is in a hazardous location, turn the key to the OFF position for a few seconds, then restart the engine and move the vehicle to a safer location.**	Red
	Low Air Pressure	Indicates air pressure in the primary or secondary reservoir is below 70 psi (483 kPa).	
	Parking Brake	Indicates the parking brake is engaged. An audible alert activates when the vehicle is moving over 2 mph (3 km/h) with the parking brake set.	
	Low Battery Voltage	Indicates that battery voltage is 11.9 volts or less.	
	Unfastened Seat Belt	Activates with an audible alert when the system detects that the parking brake is off and the driver seat belt is not fastened on some vehicles. On other vehicles, this lamp illuminates for 15 seconds when the ignition is first turned on.	
	CHECK Engine *	Indicates an engine condition (low oil pressure, low coolant level, high coolant temperature, high DPF soot level, or uncontrolled DPF regeneration) that requires correction. Correct the condition as soon as possible. If the condition worsens, the STOP engine lamp illuminates.	Amber
	High Exhaust System Temperature (HEST) *	Slow (10-second) flashing indicates a regeneration (regen) is in progress. **IMPORTANT: When the HEST lamp is illuminated, do not park the vehicle near flammable material.** Solid illumination indicates high exhaust temperatures at the outlet of the tail pipe when speed is below 5 mph (8 km/h).	
	Diesel Particulate Filter (DPF) Status	Solid illumination indicates a regen is required. Change to a more challenging duty cycle (such as highway driving) to raise exhaust temperatures for at least twenty minutes, or perform a parked regen. Blinking indicates that a parked regen is required immediately. An engine derate and shutdown occurs.	
	Malfunction Indicator Lamp (MIL)	Indicates an emissions-related fault. See the engine operation manual for details.	

https://truckmanualshub.com/

Common Warning and Indicator Lamps			
	Lamp Description		Color
	Vehicle ABS	Momentary illumination indicates the vehicle ABS is engaged. Solid illumination indicates a problem with the vehicle ABS. Repair the ABS immediately to ensure full braking capability.	Amber
	Trailer ABS	Momentary illumination indicates the trailer ABS is engaged. Solid illumination indicates a problem with the trailer ABS. Repair the ABS immediately to ensure full braking capability.	
NO CHARGE	No Charge	Indicates the alternator is not properly powering the electrical system.	
	Water in Fuel	Indicates the fuel may contain water. Drain any water collected in the fuel/water separators.	
	Fuel Filter Restriction	Indicates the fuel filter is clogged and requires service.	
	Check Transmission	Indicates an undesirable transmission condition.	
	Transmission Overheat	Indicates high transmission temperature.	
WHEEL SPIN	Wheel Spin	Flashing indicates the ATC system is active, or the ATC button has been pressed to allow wheel slip. Solid illumination indicates a problem with the ATC system. Repair the ATC system immediately to ensure full braking capability.	
	Engine Brake	Indicates the engine brake is enabled.	Green
	Left-Turn Signal	Flashing indicates the outside left-turn signal lights are activated.	
	Right-Turn Signal	Flashing indicates the outside right-turn signal lights are activated.	
	High-Beam Headlights	Indicates the high-beam headlights are on.	Blue

* See Fig. 2.3 for an explanation of the aftertreatment system (ATS) warning indicators, and actions required to avoid further engine protection steps.

Table 2.1, Common Warning and Indicator Lamps

The STOP engine lamp illuminates when the engine protection system is activated in one of two ways. On

https://truckmanualshub.com/

EXHAUST AFTERTREATMENT SYSTEM INFORMATION

INDICATOR LAMP(S)	(Solid) Level 1	(Flashing) Level 2	(Flashing) CHECK Level 3	STOP Level 4
Indicator Lamp Message(s)	Filter Regeneration Recommended.	Filter Regeneration Necessary	Parked Regeneration Required – Engine Derate	Service Regeneration Required. Engine Derate To Idle Only.
Diesel Particulate Filter Condition	Filter is reaching capacity.	Filter is now reaching maximum capacity.	Filter has reached maximum capacity.	Filter has exceeded maximum capacity.
Required Action	Bring vehicle to highway speeds to allow for an Automatic Regeneration or perform a Parked Regeneration.	To avoid engine derate, bring vehicle to highway speeds to allow for an Automatic Regeneration, or perform a Parked Regeneration as soon as possible.	Vehicle must be parked, and a Parked Regeneration must be performed. Engine will begin derate.	Vehicle must be parked, and a Service Regeneration must be performed. Check engine operator's manual for details. Engine will shut down.
For a driver performed Parked Regeneration, vehicle must be equipped with a dash mounted Regeneration Switch.				

WARNING

HEST (High Exhaust System Temperature)

Flashing

A regeneration is in progress.

Solid

Exhaust components and exhaust gas are at high temperature. When stationary, keep away from people and flammable materials or vapors.

02/20/2009 f080156

Fig. 2.3, ATS Warning Lamps

some engines, the engine protection system derates the engine, allowing it to run at lower rpm and slower vehicle speed. Drive the vehicle to a safe location or to a service facility.

IMPORTANT: Safely bring the vehicle to a stop on the side of the road and shut down the engine as soon as the red light is seen. If the engine shuts down while the vehicle is in a hazardous location, turn the key to the OFF position for a few seconds, then restart the engine and move the vehicle to a safer location.

On other engines, the engine protection system shuts down the engine. It first derates the engine, then shuts it down completely 30 to 60 seconds after the indicator illuminates (depending on the critical fault type) if the condition does not improve. Bring the vehicle to a stop on the side of the road before the engine shuts down.

Some vehicles may have a shutdown-override switch, which may be used to momentarily override the shutdown sequence. See **Chapter 7** for detailed information regarding the shutdown process.

IMPORTANT: Do not attempt to restart the engine while the vehicle is moving. Bring the vehicle to a safe stop, then restart the engine.

To restart the engine, turn the ignition switch to OFF for a few seconds, then turn the ignition switch to ON and let the gauge sweep complete before starting the engine. The engine will run for a short period and shut down again if the condition does not improve.

Driver Message Center

The dash message centers for the following instrument clusters are described below:

- ICU4M
- ICU2M

A keypad located on the auxiliary dash panel controls the driver message center. See **Fig. 2.4**.

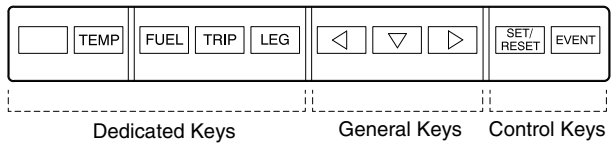

08/08/96 f601009

To reset a value, press the SET/RESET button twice.

Fig. 2.4, ICU4M Keypad

https://truckmanualshub.com/

ICU4M

Functions

Main features of the ICU4M include:

- Gauges that sweep 270 degrees and have pointers lit by an LED.
- Service intervals that are programmable via the keypad.
- An audible warning and alert message to warn the driver if the door is opened without first setting the parking brake.
- A flashing alert message that appears on the driver message center in low engine oil pressure or high coolant temperature conditions.

With the parking brake off, only the odometer and alert screens will display. Park the vehicle and set the parking brake to access additional screens.

The dash message center displays alert screens when certain conditions occur. They are warnings, cautions, or other messages that require the driver's attention, but not all of them are critical to the operation of the vehicle. Warning messages always display at full brightness.

More important messages take priority over less important messages. The order of priority is:

1. parking brake set (with the vehicle moving)
2. parking brake off (with the door open)
3. low oil pressure or high coolant temperature
4. hard brake warnings (if equipped with roll stability advisor)
5. low battery voltage
6. turn signal on
7. service warnings
8. no datalink activity

Alert Screens

NOTE: If there is more than one alert message to display, tap any key to access the next message, and so on, until all the messages have been viewed.

Parking Brake On

This warning message and an audible warning come on whenever the parking brake is applied and the vehicle is moving faster than 2 mph (3 km/h). The screen and audible warning go away only when the parking brake is released, or speed is reduced below 2 mph.

Low Oil Pressure

This warning message and an audible warning come on whenever the oil pressure falls below the minimum oil pressure, whether the vehicle is idling or in motion. Tap any key to dismiss the message.

If the fault is still active 30 seconds after the message is dismissed, the warning message will come on again.

High Coolant Temp

This message and an audible warning come on whenever the engine coolant temperature exceeds the maximum allowable temperature.

If the fault is still active 30 seconds after the message is dismissed, the warning message will come on again.

Low Voltage

On some vehicles, this optional message and an audible warning come on whenever the ICU detects a low voltage condition.

Turn Signal On

This warning message and audible warning come on whenever the turn signal remains on for four minutes or five miles of travel.

To dismiss this message, either turn off the turn signal or tap any key.

Service Warnings

Service warning screens display during the ignition sequence and indicate that a service interval has been reached or exceeded and maintenance is required. The messages may indicate the number of miles (KM) or hours until the next required service or, once passed, the number of miles (KM) or hours ago that maintenance should have been performed.

Automated Transmission Display

The ICU4M can display current gear information for vehicles with an automated transmission. The last three digits at the far right on the lower line of the driver display screen are reserved for this information.

If there is a request to shift, an up or down arrow is also displayed, depending on the shift direction.

https://truckmanualshub.com/

On vehicles with conventional manual or automatic transmissions, the gear and shift direction are not displayed. For more information about specific models of automated transmissions, see **Chapter 8**.

Mobile Screens

The following screens are available when the parking brake is off (when the vehicle is mobile).

i. Fasten seat belt (rpm<100)

ii. Fuel economy (rpm>100)

iii. Odometer

iv. Trip distance/hours

v. Trip advisory

vi. Leg distance/hours

vii. Leg advisory

viii. Outside air temperature

ix. Fuel used/average MPG (KM/L)

iii. Fuel information including fuel used, fuel economy, idle/PTO fuel usage

iv. Engine information including engine miles/hours, engine/PTO gallons, oil level

v. Diagnostic information

vi. Service information including mileage or time to next service

vii. Setup information

viii. Vehicle information including Datalink status, ICU serial number, software version

ix. Fasten seat belt warning

Trip Information

When idle hours are displayed, tap the any key to access the main trip information screen. See **Fig. 2.5**. Tap the arrow keys on the 10-key keypad to advance through the screens. Press and hold the SET/RESET key to reset any of the screens.

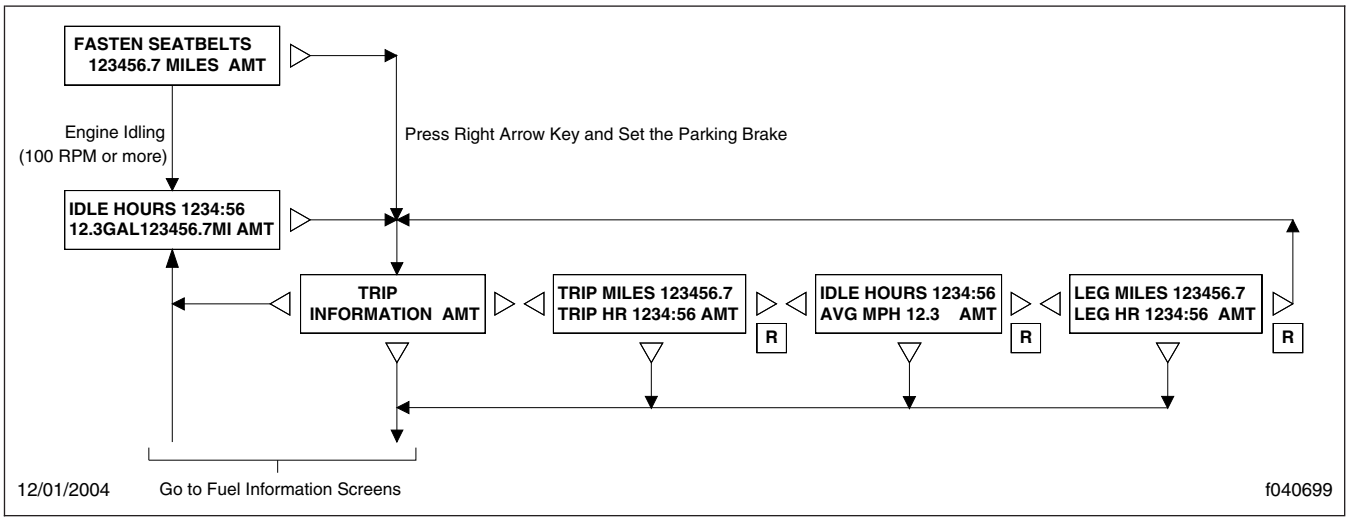

Fig. 2.5, ICU4M Trip Information Screens

Stationary Screens

NOTE: Metric unit screens are similar. AMT= Current gear information for automated manual transmissions.

The following screens are available when the parking brake is on (when the vehicle is stationary).

i. Odometer

ii. Trip information including trip miles/hours, idle hours, average speed, leg miles/hours

Fuel Information

Fuel information allows you to view total fuel usage since the last reset, fuel mileage, and fuel consumed while idling or running the PTO. See **Fig. 2.6**. Tap the arrow keys on the 10-key keypad to advance through the screens. Press and hold the SET/RESET key to reset any of the screens.

https://truckmanualshub.com/

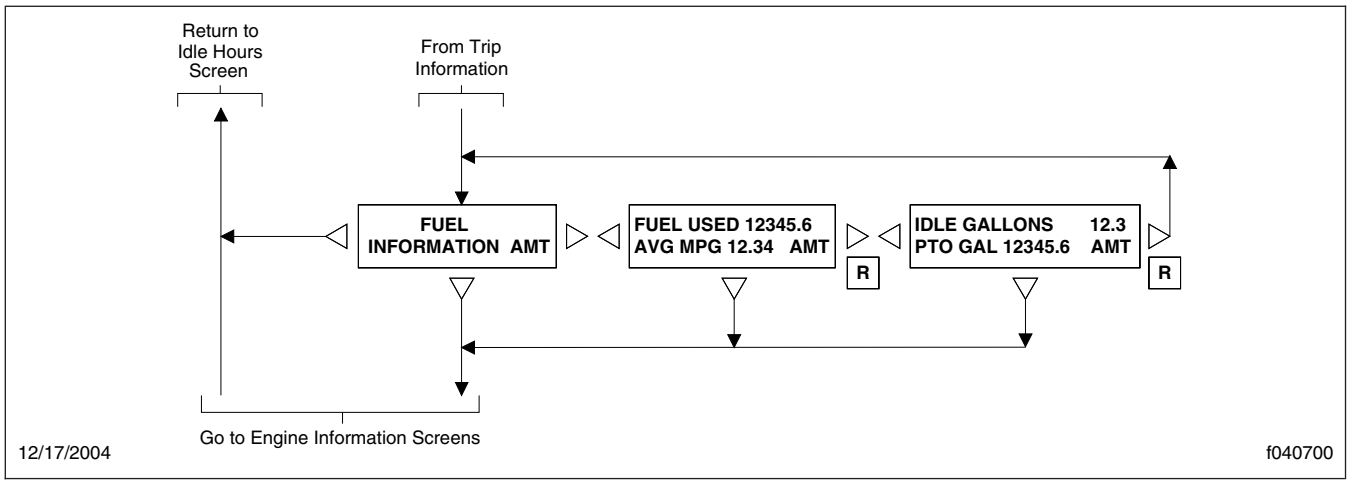

Fig. 2.6, ICU4M Fuel Information Screens

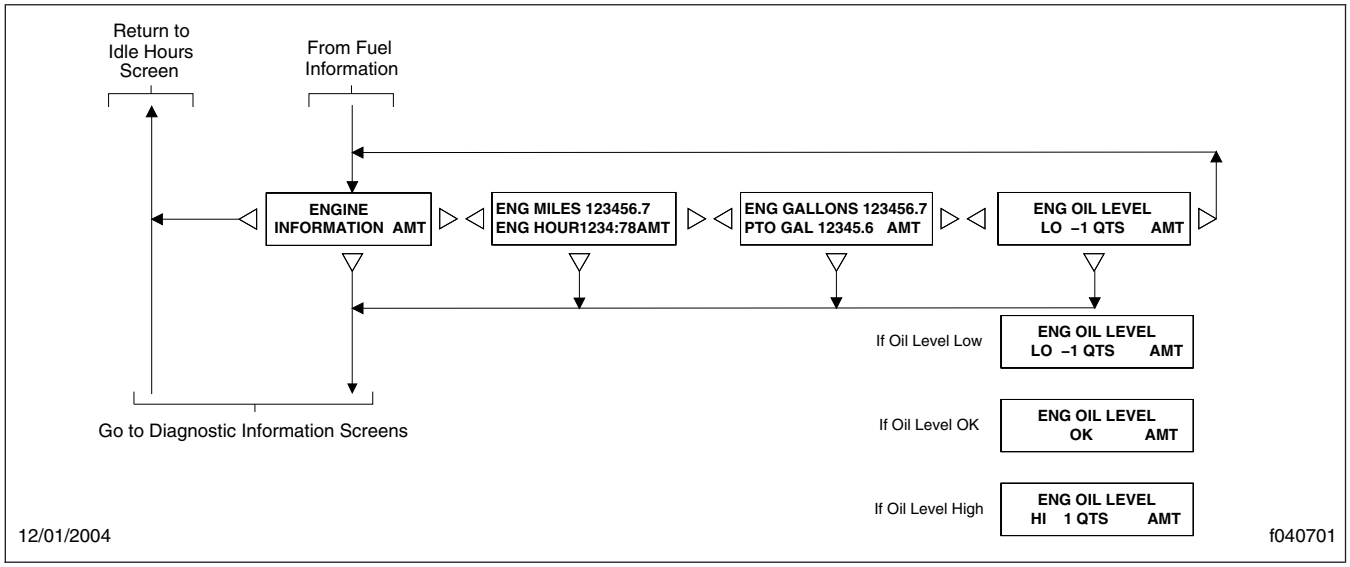

Fig. 2.7, ICU4M Engine Information Screens

Engine Information

The engine information screens allow you to view engine mileage and hours, and total fuel consumption. See **Fig. 2.7**. Tap the arrow keys on the 10-key keypad to advance through the screens. Press and hold the SET/RESET key to reset any of the screens.

Diagnostic Information

If active fault codes are displayed on the diagnostic information screens, make a note of the fault code and text message, then take the vehicle to an authorized Freightliner service facility as soon as possible.

See **Fig. 2.8** for a diagram of the diagnostic information screens.

Service Information

Service information allows you to view the next recurring service interval, expressed in either miles or hours. See **Fig. 2.9**. Service intervals can also be deactivated, so they do not display at all.

For programming service intervals, see **Setup Information**, below.

NOTE: If the vehicle has gone past the service interval, the **miles (km)/hours remaining** screen is replaced by the **service was due**

https://truckmanualshub.com/

screen, followed by the number of miles(km)/ hours since the service was due.

Setup Information

See **Fig. 2.10** and **Fig. 2.11** for diagrams of the setup information screens.

Setup information allows you to program various features of the ICU4M environment, including:

A. Service intervals (OFF/MILES/HOURS);

B. Target MPG;

C. LCD Lamp (ON/OFF);

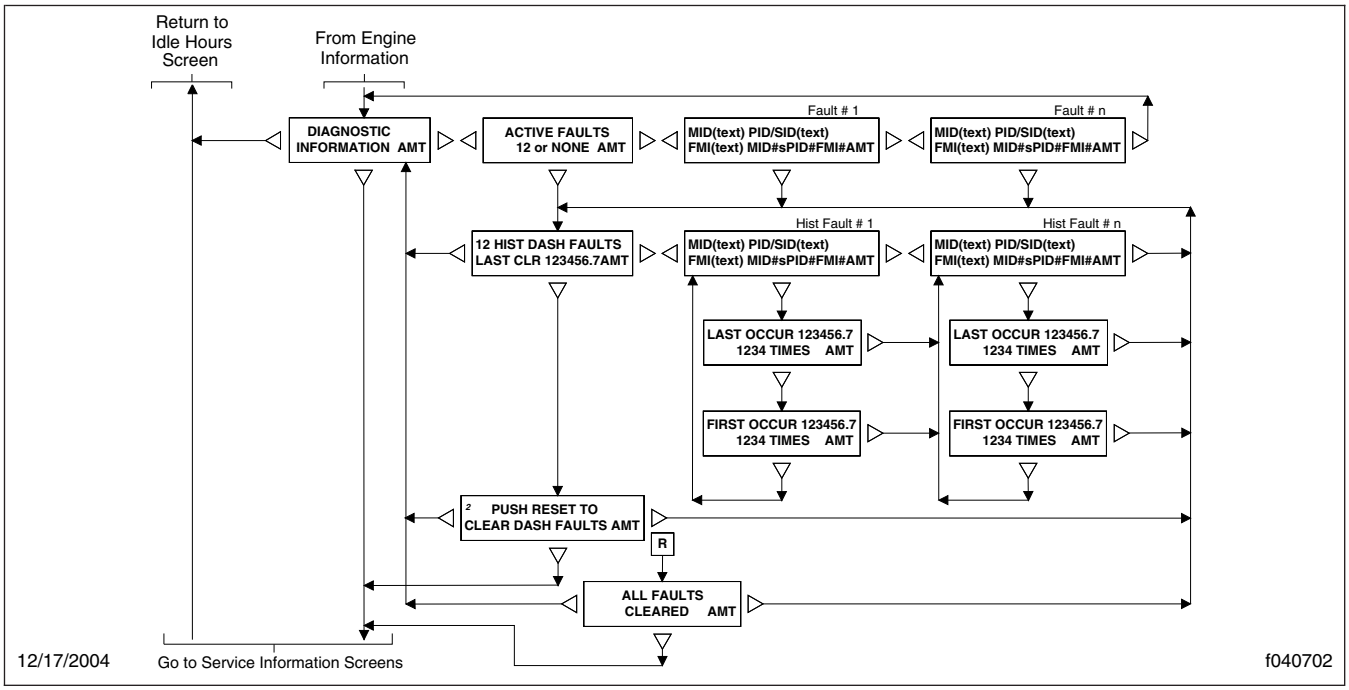

Fig. 2.8, ICU4M Diagnostic Information Screens

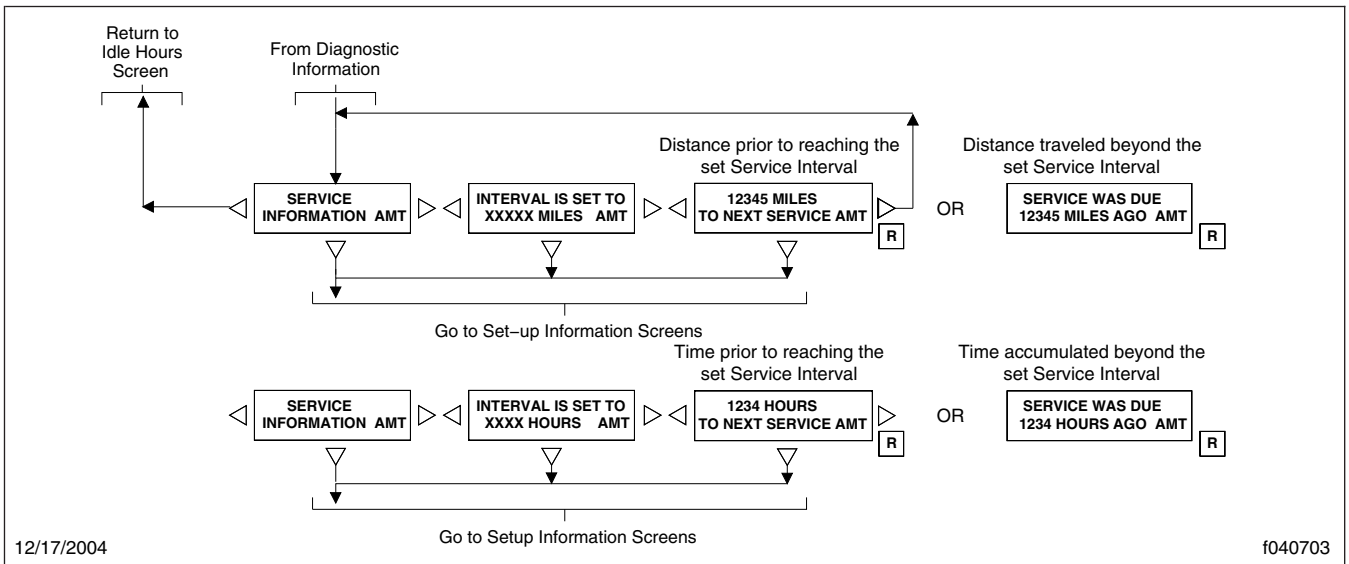

NOTE: Service information screens only appear if the service interval is set to MILES or HOURS in Setup Information.

Fig. 2.9, ICU4M Service Information Screens

https://truckmanualshub.com/

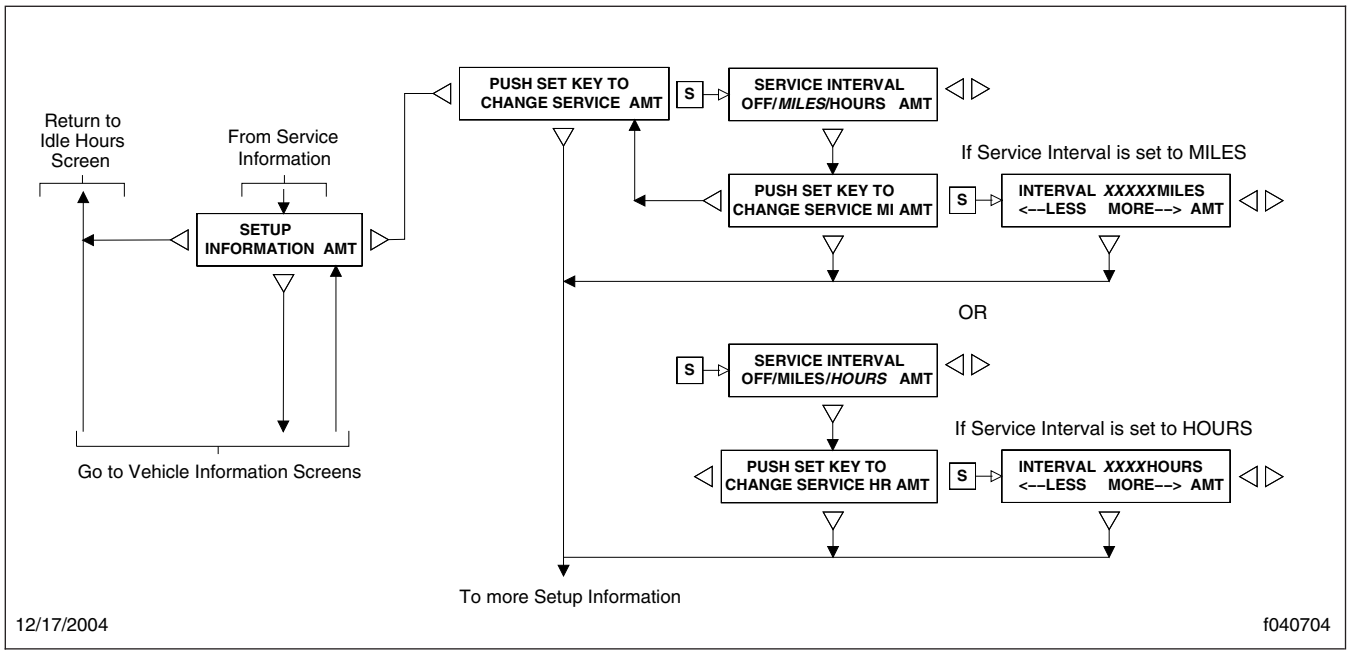

Fig. 2.10, ICU4M Setup Information Screens (for service intervals)

D. Driver message center brightness;

E. Language (English/French/Spanish);

F. Units of measurement (English/Metric);

G. Driver select (ON/OFF)

H. Reset parameters to original settings.

Vehicle Information Screens

The vehicle information screens display hardware and software information, including the Freightliner part number and switch ID of the ICU. See **Fig. 2.12**.

ICU2M

A keypad located on the auxiliary dash panel controls the ICU2M. See **Fig. 2.4**. This 10-key keypad is used to:

- call up information on mobile screens;
- navigate from screen to screen;
- set up the display;
- record significant data.

The odometer is a seven-digit display with one decimal point after the sixth digit, allowing it to display tenths of miles (or kilometers). When first installed, the odometer starts at 0.0 miles (or kilometers). When replaced, the odometer starts again from 0.0.

Alert Screens

Alert screens can appear at any time, even when the vehicle is moving. They override the regular screen display. They are warnings, cautions, or other messages that require the driver's attention, but not all of them are critical to the operation of the vehicle. The word **Warning** or **Alert** sometimes flashes on the display screen above the alert text. More important messages take priority over less important messages.

NOTE: If there is more than one alert message to display, press any button to scroll to the next message, and so on until all the messages have been viewed.

Parking Brake On

This warning message and an audible warning come on whenever the parking brake is applied and the vehicle is moving faster than 2 mph (3 km/h). The screen and audible warning go away only when the parking brake is released, or speed is reduced below 2 mph (3 km/h).

Low Oil Pressure

NOTE: All alert screens follow Low Oil Pressure alert format.

https://truckmanualshub.com/

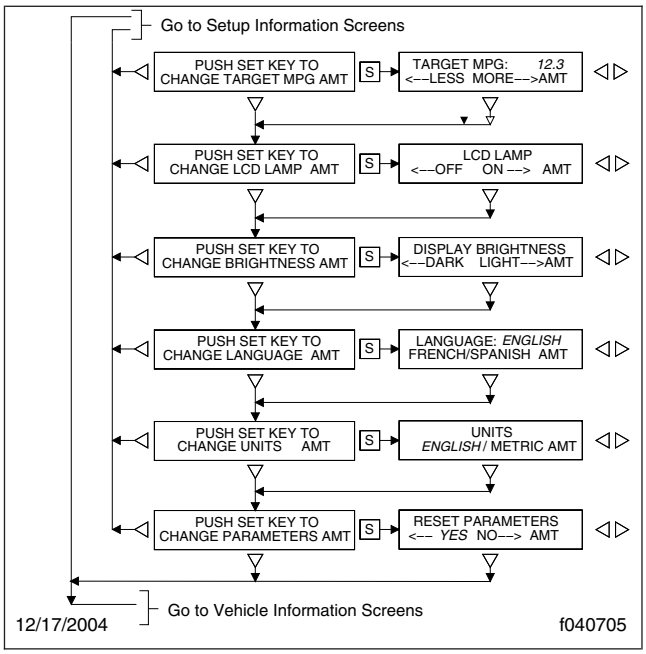

Fig. 2.11, Other Setup Information

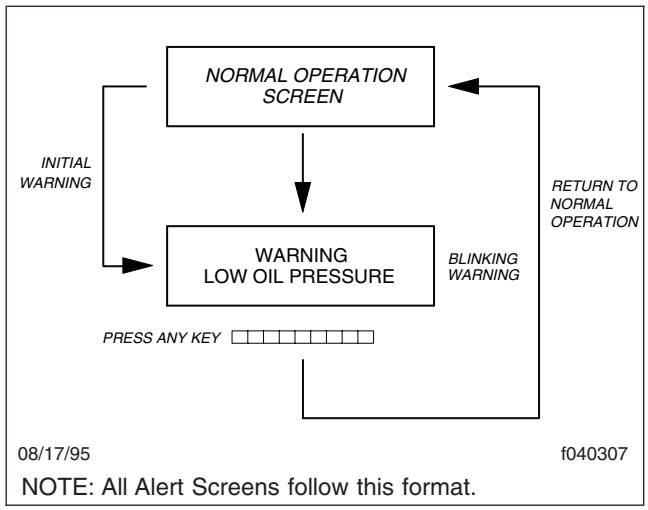

Fig. 2.13, ICU2M Alert Screen: Low Oil Pressure

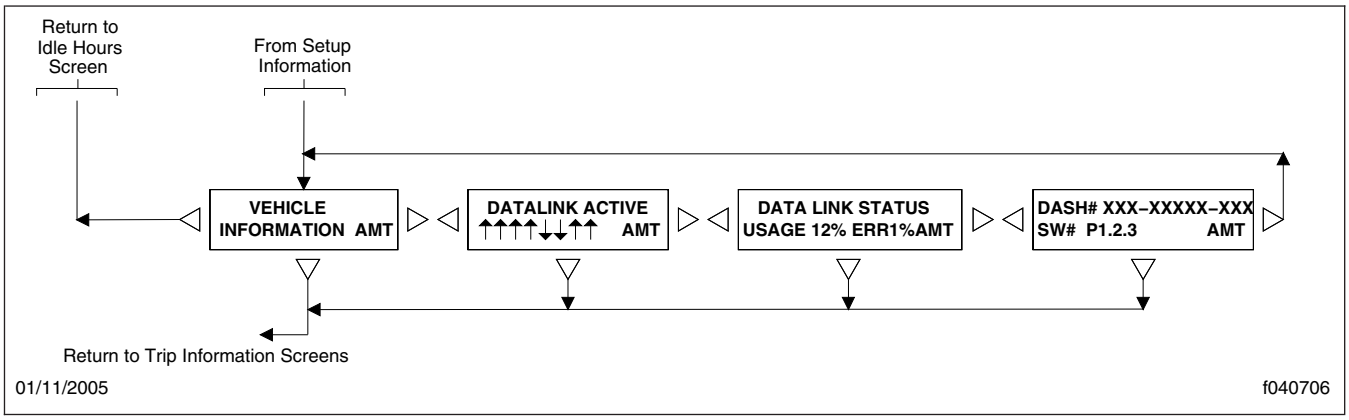

Fig. 2.12, ICU4M Vehicle Information Screens

This warning message and an audible warning come on whenever the oil pressure falls below the minimum oil pressure, whether the vehicle is idling or in motion. See **Fig. 2.13**. To dismiss the message, press any button on the keypad.

If low oil pressure is detected during the ignition sequence, it displays as an active fault and the alert screen does not appear. After 30 seconds, this message displays again.

Low Coolant Level

This warning message and audible warning activate whenever the coolant level falls below a preset point.

High Coolant Temp

This message and an audible warning come on whenever the engine coolant temperature exceeds the maximum allowable temperature.

If high coolant temperature is detected during the ignition sequence, it displays as an active fault and the alert screen does not appear. After 30 seconds, this message displays again.

Low Voltage

On some vehicles, this optional message and an audible warning come on whenever the ICU detects a low voltage condition.

https://truckmanualshub.com/

Faulty Speedo Gauge

This message is displayed when the system detects a faulty speedometer. This becomes the default screen, and vehicle speed is displayed as a digital readout at the bottom left of the screen. All other screens and functions operate normally.

Recirc Mode Engaged/Provide Fresh Air

The **Recirc Mode Engaged** message appears whenever recirculated air is selected on the fresh/air recirculation switch or the air circulation switch is rotated to the maximum air conditioning position. It displays one time only for seven seconds. It notifies the driver that recirculated air is being used and that fresh air needs to be provided after 20 minutes.

If fresh air is not provided after 20 minutes, **Provide Fresh Air** is displayed. It displays for seven seconds approximately every four minutes until the driver selects fresh air on the fresh/air recirculation switch or rotates the air circulation switch away from maximum air conditioning. See **Chapter 4** for detailed operating instructions for the heater/air conditioner.

Low Fuel Level

The ICU continuously monitors fuel level. When the fuel level drops to 1/8th full, the word **Warning** flashes on the message display screen above the low fuel alert.

Turn Signal On

This message (the audible warning is optional) appears whenever the turn signal remains on beyond a preset time or distance traveled.

To dismiss this message, either turn off the turn signal or press any button on the keypad.

Service Warnings

Service warning screens display during the ignition sequence and indicate that a service interval has been reached or exceeded and maintenance is required. The messages may indicate the number of miles (KM) or hours until the next required service or, once passed, the number of miles (KM) or hours ago that maintenance should have been performed. The ICU2M can be programmed using ServiceLink to generate service warnings in either miles or hours, but not both.

No Datalink Activity

This message appears whenever the datalink is not receiving data. If the condition persists, take the vehicle in for service as soon as possible to discover the cause of the problem.

Mobile Screens

The following screens are available when the parking brake is off (when the vehicle is mobile) and no active fault codes are found. Press the appropriate button on the keypad to display one of the mobile screens.

- trip miles and hours
- fuel used and average MPG
- leg miles and hours

NOTE: Resetting trip miles and hours also resets leg miles and hours.

To reset a mobile screen, push the Set/Reset button twice within a 6-second period while the screen is displayed. A confirmation screen will display after you press the button once.

NOTE: If the memory in the data logger is full, the screen will display **Memory Full Data Not Recorded**. If the data logger is not connected or not responding, the screen will display **Data Recorder Not Responding**. If the EVENT button was pressed within the last two minutes, the screen will display **Still Recording Last Event**.

Stationary Screens

The following screens are available when the parking brake is applied (vehicle is stationary) and no active fault codes are found. Each set of stationary screens has a title screen followed by one or more data screens.

To move forward and backward through these screens, use the three arrow buttons on the keypad. See **Fig. 2.14**, **Fig. 2.15**, and **Fig. 2.16** for stationary screen navigation.

i. Trip Information: miles, hours

ii. Fuel information: fuel used, average MPG

iii. Engine information: engine miles and hours, engine gallons and PTO gallons

iv. Diagnostic information: active faults, historical dash faults

v. Setup Information: target MPG, brightness, language, units of measurement

https://truckmanualshub.com/

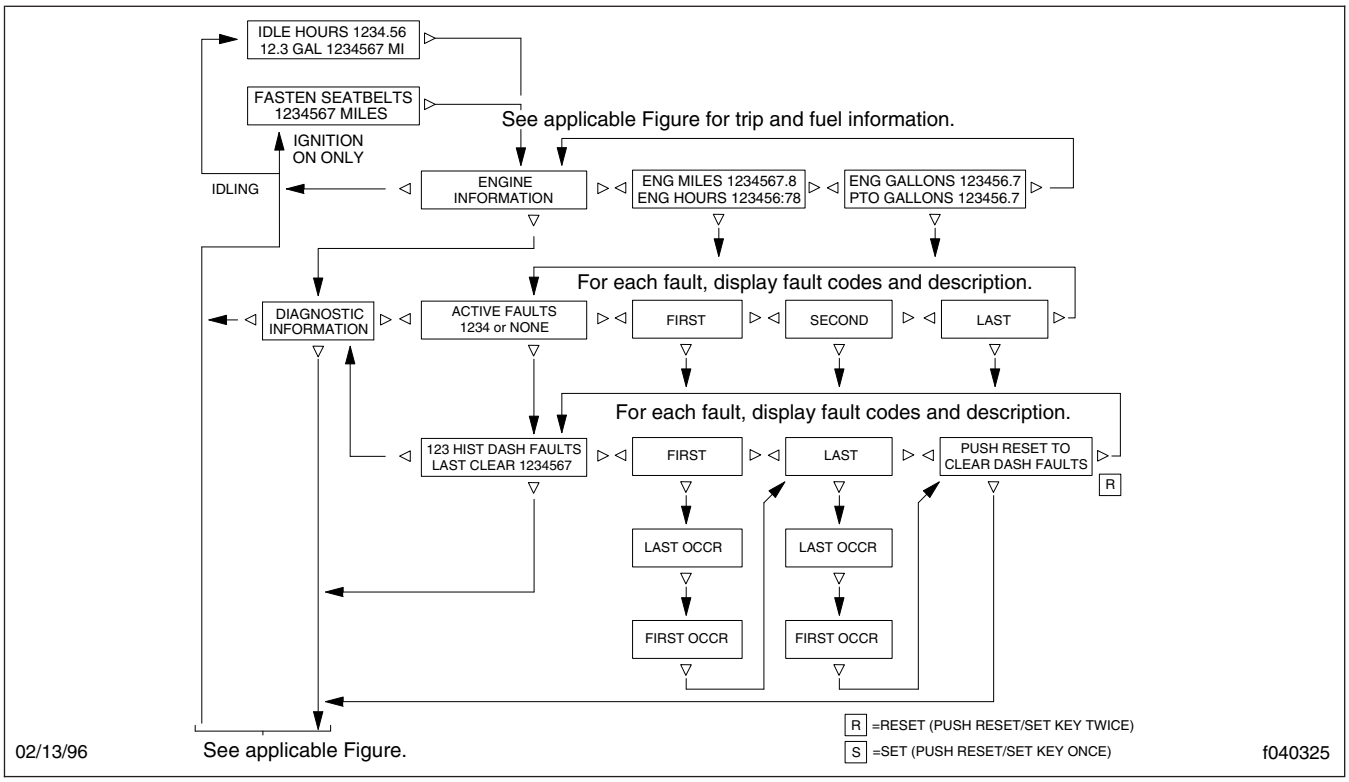

Fig. 2.14, ICU2M Engine Information and Diagnostic Information

vi. Vehicle information: datalink activity/status, ICU part number, software ID number

Instruments

Standard instruments are present on every vehicle. Optional instruments, typically located on the auxiliary dash panel or right-hand control panel, are not found on every vehicle. Instruments are listed here in alphabetical order to make the information easier to find.

Air Intake Restriction Gauge

The air intake restriction gauge indicates the vacuum on the engine side of the air cleaner. On standard installations, it is mounted on the air cleaner. As an option for easier viewing, an air intake restriction indicator (see **Fig. 2.17**) can be mounted on the auxiliary dash panel.

NOTE: Rain or snow can wet the filter element and cause a temporary high reading.

Air intake restriction vacuum is measured in inches of water (inH $_2$O). For vehicles equipped with a graduated indicator or a restriction gauge on the dash, check the gauge with the engine off. If the yellow signal stays locked in the red zone once the engine is shut down, or is at or above the values shown in **Table 2.2**, the air cleaner element needs to be replaced.

Air Intake Maximum Restriction Values: (inH $_2$O)		
Engine Make	**Pre-EPA07 Engines**	**EPA07 Engines**
Caterpillar	25	—
Cummins	25	25
Detroit™	20	22
Mercedes-Benz	22	22

Table 2.2, Air Intake Maximum Restriction Values

Vehicles may be equipped with a go/no-go restriction indicator without graduations (see **Fig. 2.18**) instead of a graduated indicator.

If air restriction exceeds the maximum allowable value, operate the vehicle for one more day, making sure not to run the engine over rated rpm. Refer to the engine operation manual for more information on rated rpm for your engine.

https://truckmanualshub.com/

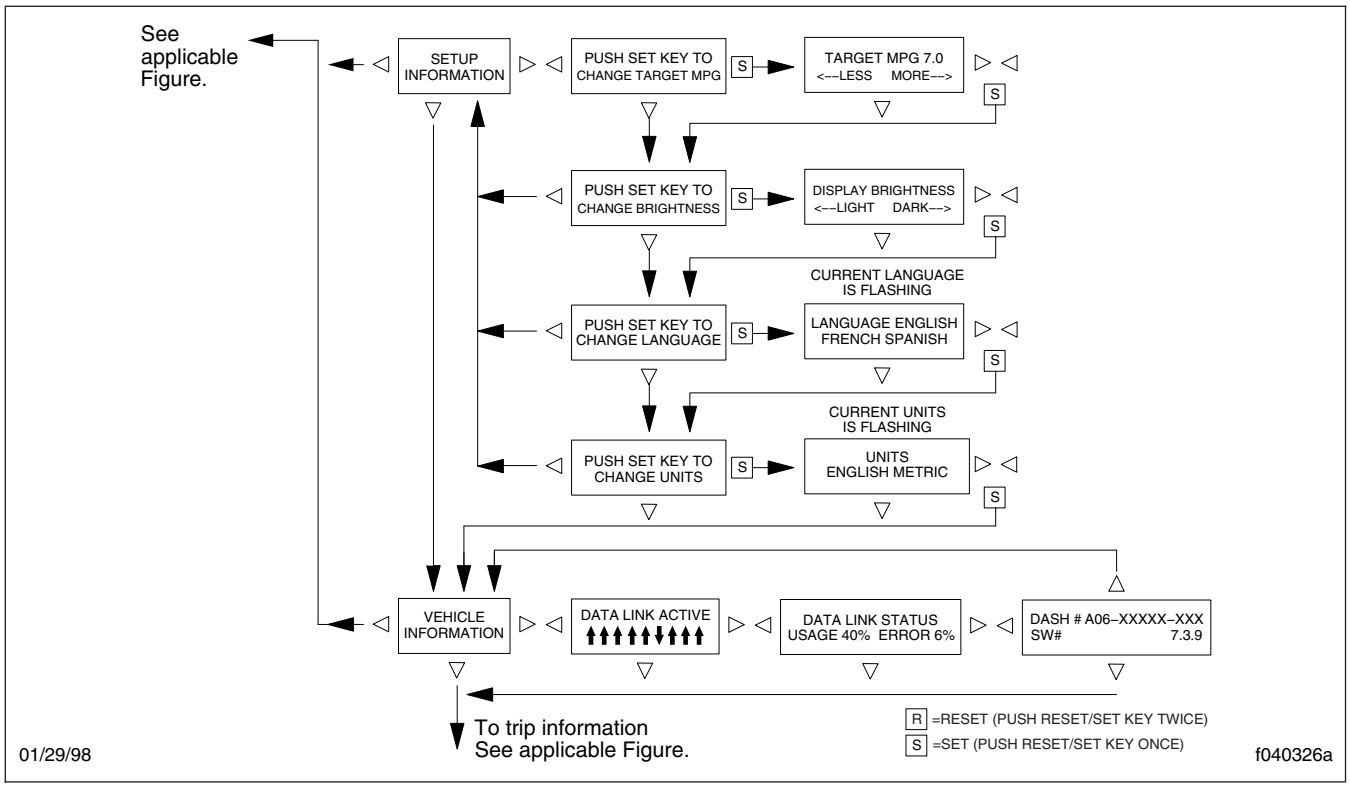

Fig. 2.15, ICU2M Setup Information and Vehicle Information

If air restriction exceeds the maximum value again, replace the air cleaner element. For instructions, refer to **Group 09** of the *Century Class Trucks Workshop Manual*.

Ammeter

An ammeter measures current flowing to and from the battery. When the batteries are charging, the meter needle moves to the plus side of the gauge; when the batteries are being discharged, the needle moves to the minus side. A consistent negative reading when the engine is running indicates a possible problem with the charging system.

Application Air Pressure Gauge

An application air pressure gauge registers the air pressure being used to apply the brakes, and should be used for reference only. The gauge will not register air pressure until the foot brake pedal is depressed or the trailer hand brake is applied.

Coolant Temperature Gauge

NOTICE

A sudden increase in coolant temperature may indicate engine or cooling system failure. Bring the vehicle to a safe stop and investigate the cause to prevent further damage. Do not operate the engine until the cause has been determined and corrected.

During normal engine operation, the coolant temperature gauge should read between 175 and 195°F (79 and 91°C). If the temperature remains below 160°F (71°C), inspect the cooling system to determine the cause.

If the temperature exceeds the maximum temperature shown in **Table 2.3**, inspect the cooling system to determine the cause. See the *Century Class Trucks Workshop Manual* for troubleshooting and repair procedures.

https://truckmanualshub.com/

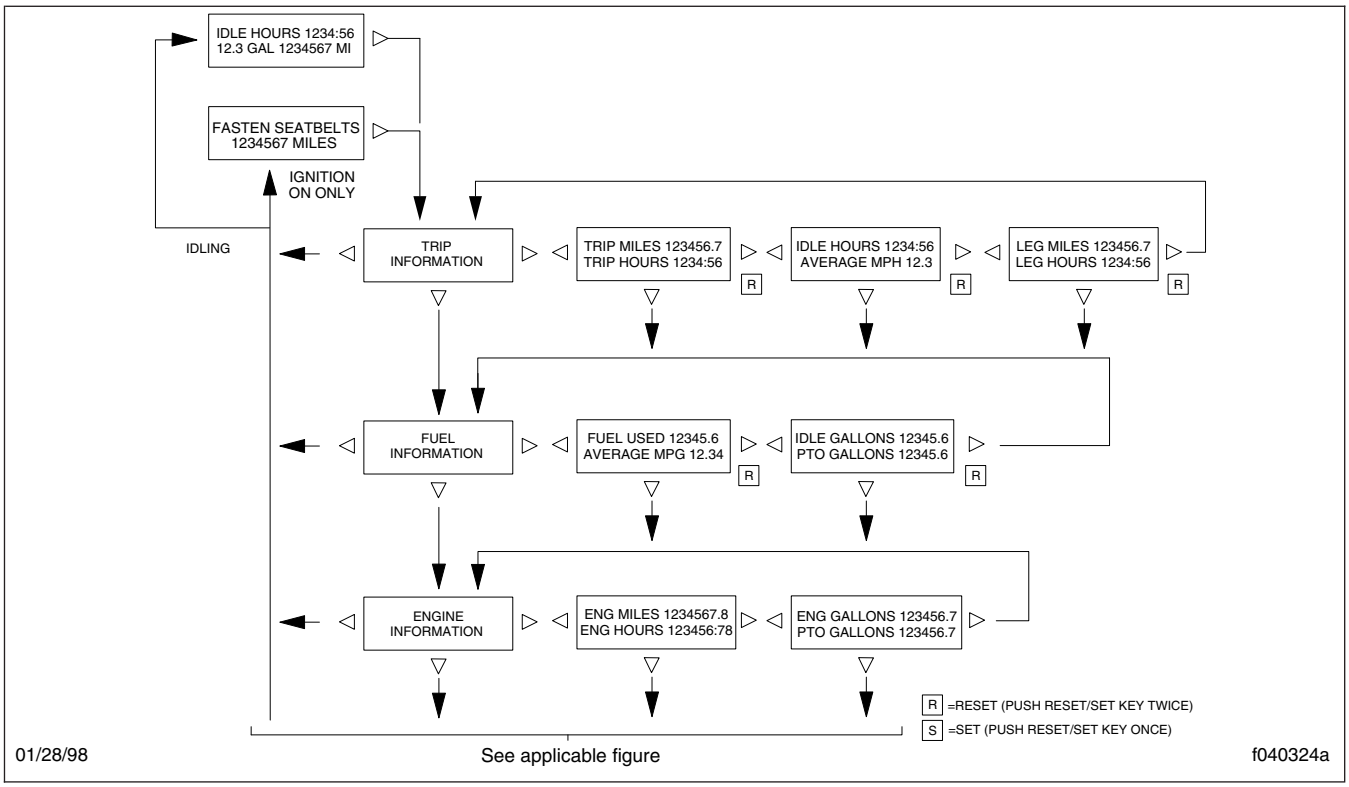

Fig. 2.16, ICU2M Trip Information, Fuel Information, and Engine Information

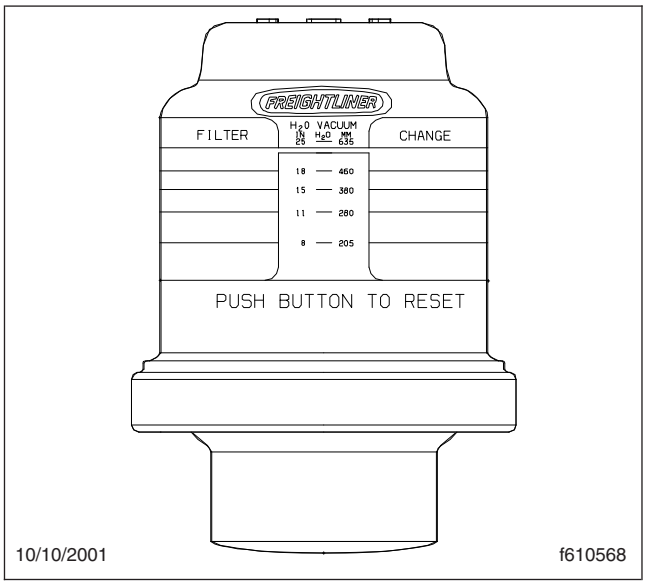

Fig. 2.17, Air Intake Restriction Indicator

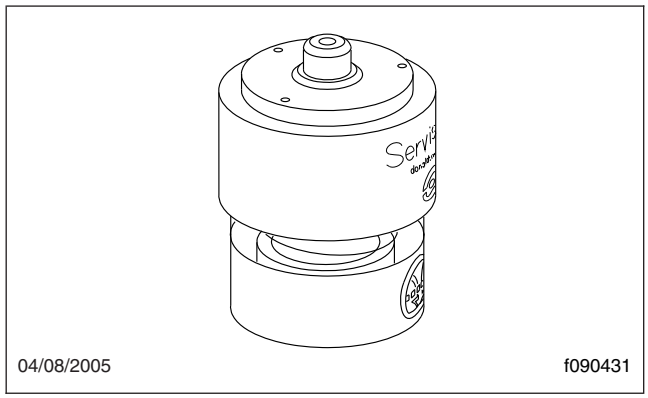

Fig. 2.18, Manual-Reset Air Restriction Indicator, Go/ No-Go

Maximum Coolant Temperature	
Engine Make	**Temperature: °F (°C)**
Caterpillar	215 (101)
Cummins	225 (107)
Detroit	215 (101)
Mercedes-Benz	221 (105)

Table 2.3, Maximum Coolant Temperature

https://truckmanualshub.com/

If coolant temperature rises above the maximum temperature listed in **Table 2.3** on EPA07 engines, the CHECK engine lamp will illuminate. If the condition does not improve, the STOP engine lamp will also illuminate and an audible warning will sound. The engine will then derate or shut down, depending on the type of engine protection system installed.

Drive Axle Oil Temperature Gauges

NOTICE

A sudden increase in oil temperature that is not caused by a load increase may indicate mechanical failure. Bring the vehicle to a safe stop and investigate the cause to prevent further damage. Do not operate the vehicle until the cause has been determined and corrected.

During normal operation, drive axle oil temperature gauges should read as follows:

- 160 to 220°F (71 to 104°C) for Detroit™ and Meritor™ drive axles
- 180 to 200°F (82 to 93°C) for Dana Spicer® drive axles

Under heavy loads, such as when climbing steep grades, temperatures that exceed the normal oil temperature range for a short period are not unusual. If the temperature returns to normal when the load decreases, there is no problem.

Engine Oil Pressure Gauge

NOTICE

A sudden decrease or absence of oil pressure may indicate mechanical failure. Bring the vehicle to a safe stop and investigate the cause to prevent further damage. Do not operate the engine until the cause has been determined and corrected.

The engine oil pressure gauge displays the current engine oil pressure. If engine oil pressure falls below the minimum levels shown in **Table 2.4**, the CHECK engine lamp will illuminate. If the condition does not improve, the STOP engine lamp will also illuminate and an audible warning will sound. The engine will then derate or shut down, depending on the type of engine protection system installed.

Minimum Oil Pressure*		
Engine Model	**At Idle Speed: psi (kPa)**	**At Rated RPM: psi (kPa)**
Caterpillar	10–20 (69–138)	30–45 (207–310)
Cummins	15 (103)	35 (241)
Detroit	14 (97)	55 (350)
Mercedes-Benz	7 (50)	36 (250)

* Pressures apply with the engine at operating temperature. Oil pressure may be higher on a cold engine. Observe and record pressures when the engine is new to create a guide for checking engine condition.

Table 2.4, Minimum Engine Oil Pressure

Engine Oil Temperature Gauge

NOTICE

A sudden increase in oil temperature that is not caused by a load increase may indicate mechanical failure. Bring the vehicle to a safe stop and investigate the cause to prevent further damage. Do not operate the engine until the cause has been determined and corrected.

During normal operation, the optional engine oil temperature gauge should read:

- 190 to 220°F (88 to 104°C) for Caterpillar engines;
- 200 to 260°F (93 to 126°C) for Detroit and Cummins engines
- 177 to 203°F (81 to 95°C) for Mercedes-Benz engines

Under heavy loads, such as when climbing steep grades, temperatures that exceed the normal oil temperature range for a short period are not unusual. If the temperature returns to normal when the load decreases, there is no problem.

Fuel Gauge

The fuel gauge indicates the level of fuel in the fuel tank(s). A single fuel gauge is standard. If equipped with an optional second fuel tank, each fuel tank level is indicated on a separate gauge.

https://truckmanualshub.com/

Primary and Secondary Air Pressure Gauges

⚠ WARNING

If air pressure falls below minimum pressure, the braking ability of the vehicle will be limited. Slow the vehicle down and bring it to a gradual stop. Do not attempt to move the vehicle until air pressure has risen above the minimum level. Moving a vehicle without adequate braking power could cause an accident resulting in property damage, personal injury, or death.

Air pressure gauges register the pressure in the primary and secondary air systems. Normal pressure, with the engine running, is 100 to 120 psi (689 to 827 kPa) in both systems.

A low-air-pressure warning light and audible alert, connected to both the primary and secondary systems, activate when air pressure in either system drops below 64 to 76 psi (441 to 524 kPa).

When the engine is started, the warning light and audible warning remain on until air pressure in both systems exceeds minimum pressure.

Pyrometer

A pyrometer registers the exhaust temperature near the turbocharger. Variations in engine load can cause exhaust temperatures to vary. If the pyrometer reading shows that exhaust temperature exceeds normal, reduce fuel to the engine until the exhaust temperature is reduced. Shift to a lower gear if the engine is overloaded.

Speedometer

The speedometer registers speed in both miles per hour (mph) and kilometers per hour (km/h).

Tachometer

The tachometer indicates engine speed in revolutions per minute (rpm) and serves as a guide for shifting the transmission and keeping the engine in the appropriate rpm range. For low idle and rated rpm, see the engine identification plate.

Transmission Fluid Temperature Gauge

The transmission fluid temperature gauge indicates the transmission lubricant operating temperature. Temperatures vary by application, but the transmission fluid temperature gauge reading should not exceed 250°F (121°C).

Under heavy loads, such as when climbing steep grades, temperatures that exceed the normal oil temperature range for a short period are not unusual. If the temperature returns to normal when the load decreases, there is no problem.

NOTICE

A sudden increase in transmission fluid temperature that is not caused by a load increase may indicate mechanical failure. Bring the vehicle to a safe stop and investigate the cause to prevent further damage. Do not operate the vehicle until the cause has been determined and corrected.

Turbocharger Boost Pressure Gauge

A turbocharger boost pressure gauge indicates the pressure in the intake manifold, in excess of atmospheric pressure, being created by the turbocharger.

Voltmeter

The voltmeter indicates the vehicle charging system voltage when the engine is running and the battery voltage when the engine is off. By monitoring the voltmeter, the driver can stay aware of potential battery charging problems and have them fixed before the batteries discharge enough to create starting difficulties. Vehicles are equipped with either a voltmeter gauge, or a digital voltmeter readout located on the bottom line of the dash message center.

The voltmeter will normally show approximately 13.7 to 14.1 volts when the engine is running. The voltage of a fully charged battery is 12.7 to 12.8 volts when the engine is off. Battery voltage under 12.0 volts is considered a low battery, and a completely discharged battery will produce only about 11.0 volts.

If the voltmeter shows an undercharged or overcharged condition for an extended period, have the charging system and batteries checked at an authorized Freightliner service facility.

On a vehicle equipped with a battery isolator system, the voltmeter measures the average voltage of all the batteries when the engine is running. When the engine is off, the voltmeter shows only the isolated battery voltage and does not indicate the voltage of the engine-starting batteries.

https://truckmanualshub.com/

Controls

Controls and switches are listed here in alphabetical order.

Axle Switches

Differential Lock Switch

The differential lock switch provides maximum traction for slippery conditions by forcing the wheels on each drive axle governed by the switch to rotate together. Engagement can be at any speed, provided the wheels are not slipping or spinning. See **Fig. 2.19**.

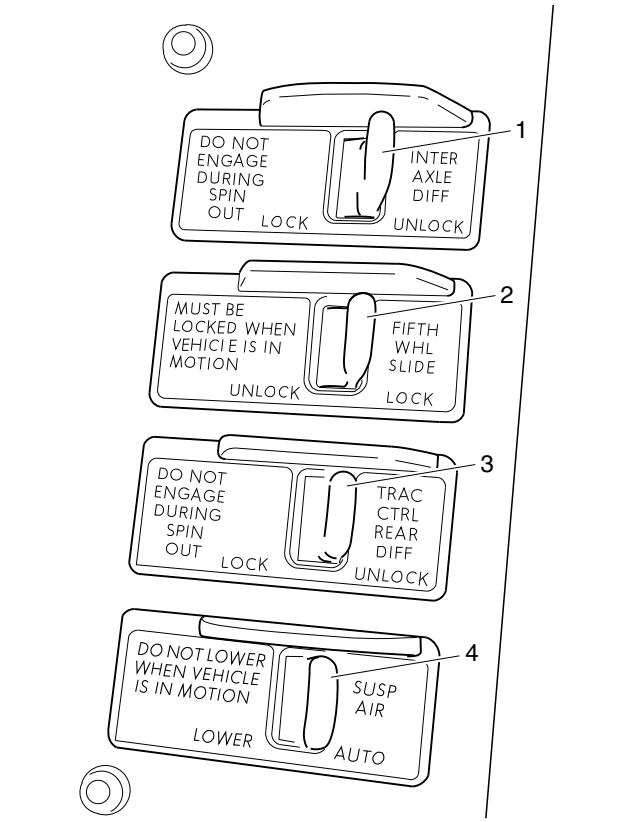

1. Interaxle Differential Lock Switch
2. Fifth Wheel Slide Switch
3. Rearmost Axle Differential Lock Switch
4. Air Suspension Dump Control Switch

Fig. 2.19, Axle and Suspension Switches

Interaxle Lock Switch

The interaxle lock, standard on all dual-drive vehicles, is driver-actuated by means of a LOCK/UNLOCK control valve switch. See **Fig. 2.19**. A red indicator illuminates when the interaxle lock is engaged.

NOTICE

The interaxle lock should only be engaged when the vehicle is moving slowly at low throttle. Engagement at high speed or power can damage the axle(s).

Do not permit rear wheels to spin freely for more than ten seconds when traction is lost. Shift into LOCK to prevent damage to interaxle and main differentials.

Brake Controls

NOTE: See **Chapter 6** for detailed information about brake systems.

Parking Brake Control Valve

NOTICE

Do not step on the service brake pedal while the parking brakes are applied. To do so can cause damage to the brake mechanisms.

The yellow diamond-shaped knob operates the parking brake valve. See **Fig. 2.20**. Pull the knob out to apply the tractor and the trailer spring parking brakes. Push the knob in to release the spring parking brakes. Before the spring parking brakes can be released, the air pressure in either air brake system must be at least 65 psi (447 kPa).

If the trailer is not equipped with spring parking brakes, pull the parking brake valve out to apply the tractor parking brakes and the trailer service brakes.

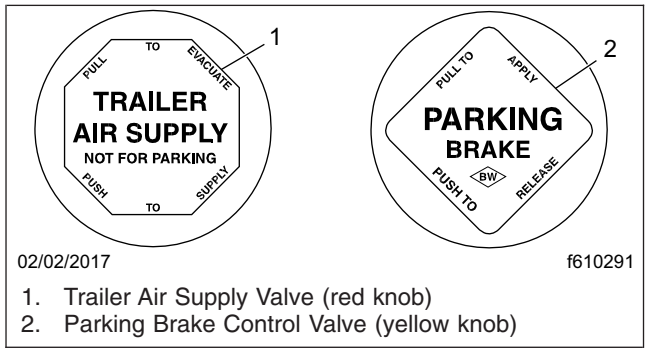

1. Trailer Air Supply Valve (red knob)
2. Parking Brake Control Valve (yellow knob)

Fig. 2.20, Brake Valve Control Knobs

https://truckmanualshub.com/

Trailer Air Supply Valve

The red octagonal-shaped knob operates the trailer air supply valve, which charges the trailer air supply system and releases the trailer spring parking brakes. See **Fig. 2.20**.

After the vehicle and its air hoses are connected to a trailer and the pressure in the air system is at least 65 psi (447 kPa), push the trailer air supply valve knob in (and leave it in) to charge the trailer air supply system and release the trailer spring parking brakes. Pull the trailer air supply valve out before disconnecting a trailer or when operating a vehicle without a trailer.

Trailer Brake Lever

The trailer brake lever is used to apply the trailer service brakes without applying the truck or tractor service brakes. It is usually mounted on the right-hand control panel. See **Fig. 2.21**. The valve can be partially or fully applied, but in any partially on position it will be overridden by a full application of the service brake pedal. Move the lever down to apply the trailer brakes; move the lever up to release the trailer brakes. The lever will automatically return to the up position when it is released.

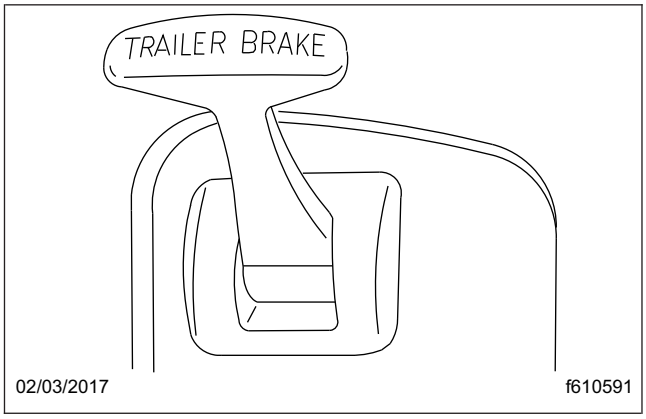

Fig. 2.21, Trailer Brake Lever

Engine Brake Switch

The Hi/Med/Lo engine brake 3-position switch controls the amount of engine braking. Press the lower third of the switch for low, center for medium, and upper third for high. See **Fig. 2.22**.

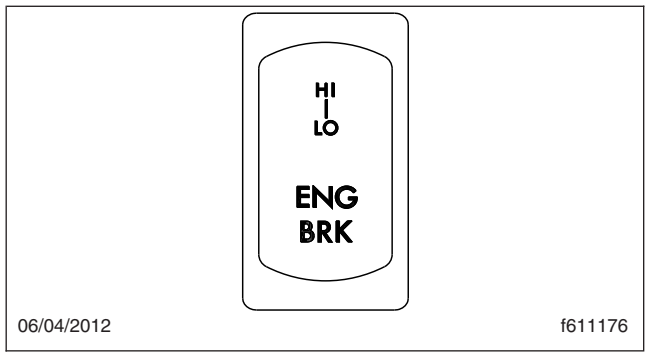

Fig. 2.22, Engine Brake Switch

Cruise Control Switches

⚠ WARNING

Do not use the cruise control system when driving conditions do not permit maintaining a constant speed, such as in heavy traffic or on roads that are winding, icy, snow-covered, slippery, or roads with a loose driving surface. Failure to follow this precaution could cause a collision or loss of vehicle control, possibly resulting in personal injury or property damage.

NOTICE

When the cruise control is engaged, do not attempt to shift gears without using the clutch pedal. Failure to follow this precaution will result in a temporarily uncontrolled increase in engine speed. Transmission damage and gear stripping could result.

Cruise control is activated by two dash-mounted switches: an On/Off switch and a Set/Decelerate/Resume/Accelerate switch. See **Fig. 2.23**.

Cruise At a Set Speed

1. Press the upper part of the cruise control On/Off switch to turn cruise control on.
2. Hold the accelerator pedal down until the speedometer reaches the desired speed.
3. Press the lower half of the Set/Resume/Accelerate/Decelerate switch momentarily to set the cruise speed (with the vehicle moving at the desired speed).

   To decrease cruise speed, press and hold the lower half of the Set/Resume/Accelerate/

https://truckmanualshub.com/

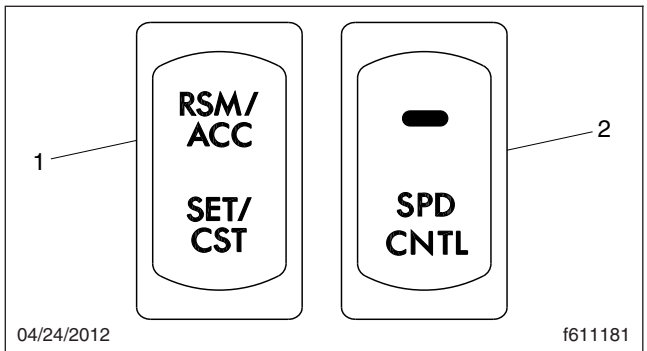

1. Set/Decelerate/Resume/Accelerate Switch
2. Cruise Control On/Off Switch

Fig. 2.23, Cruise Control Switches

Decelerate switch to decelerate slowly. Release the switch when the desired speed is achieved.

To increase cruise speed, press and hold the upper half of the Set/Resume/Accelerate/ Decelerate switch to accelerate slowly. Release the switch when the desired speed is achieved.

Disengage Cruise Control

NOTE: The speed memory is lost whenever the ignition is turned off or the cruise control system is turned off.

1. Depress the brake pedal (automatic or manual transmissions)

   or

   Depress the clutch pedal (manual transmissions only).
2. Press the lower half of the On/Off switch.

NOTE: To resume the preselected cruise speed, increase vehicle speed to above minimum cruise control speed and momentarily press the upper half of the Set/Resume/Accelerate/ Decelerate switch. Cruise will return to the last speed selected.

Engine Fan Switch

To turn the engine fan on, press the upper half of the engine fan switch. See **Fig. 2.24**. The fan will continue to operate for a set amount of time and then turn off unless the coolant temperature is high enough to continue fan operation. To turn the fan off before the set time period ends, press the lower half of the switch.

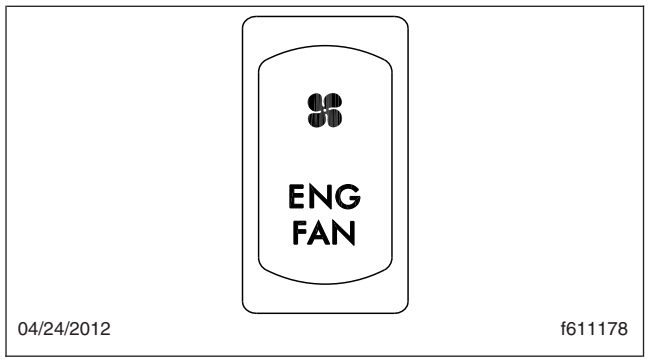

Fig. 2.24, Engine Fan Switch

Ignition Switch

The ignition switch has four positions: OFF, ACC (accessory), ON, and START. See **Fig. 2.25**. The ignition key also locks and unlocks the cab doors, baggage door(s), and if equipped, the bunk door(s).

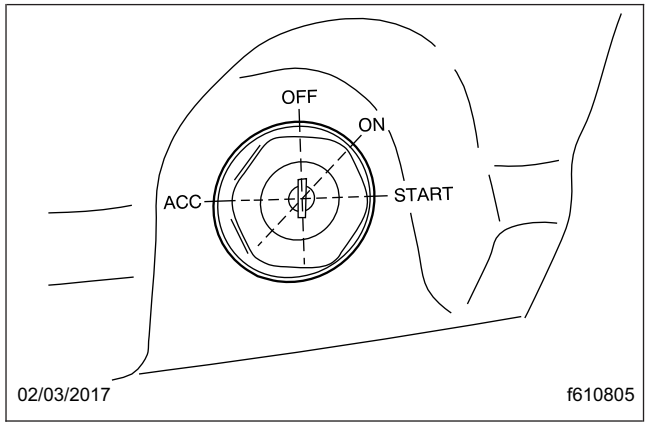

Fig. 2.25, Ignition Switch

In the OFF position, the ignition switch is vertical. The key can be inserted and removed only in the OFF position.

The following functions are operable when the ignition switch is in the OFF position (regardless of whether the key is inserted):

- low-beam headlights
- taillights
- brake lights
- road lights
- dome lights
- clearance lights
- hazard warning lights

https://truckmanualshub.com/

- turn signals
- utility lights
- baggage compartment lights
- spotlights
- horn
- clock
- refrigerator
- CB radio
- power mirrors
- power receptacle
- fuel heater
- electric oil pan heater
- electric or diesel-fired engine coolant preheater

Turn the key counterclockwise to reach the ACC position. In addition to all the functions that are operable in the OFF position, the following functions are operable when the switch is in the ACC position:

- radio/stereo system
- heater and A/C fan
- mirror defog
- windshield fan
- ether start system
- air dryer
- backup lights

Turn the key clockwise past the OFF position to reach the ON position. When the ignition is turned on, the following actions should occur:

- electronic gauges complete a full sweep of their dials
- warning and indicator lamps illuminate, then are extinguished
- audible alert sounds for approximately four seconds or until sufficient air pressure builds up in the primary and secondary air systems
- software revision level of the ICU is displayed on the driver message center, followed by any active faults

IMPORTANT: Do not crank the engine until the ICU gauge sweep is complete.

Turn the key clockwise past the ON position to reach the START position to start the engine. Release the key the moment the engine starts. Do not operate the starter longer than thirty seconds, then allow the starter to cool between attempts. If the starter overheats, the starter protection system will prevent operation of the starter until it has cooled. Release the key the moment the engine starts.

Lighting Controls

Exterior Lighting Controls

Exterior light controls are listed here in alphabetical order.

Backup Lights

Backup lights provide a warning to pedestrians and other drivers that the vehicle is, or is about to, back up.

Daytime Running Lights

The daytime running lights (DRL), if equipped, are automatically activated when the ignition is switched on and the parking brake is released. The DRL operate until the parking brake is applied or the headlights are turned on.

Some vehicles may be equipped with a momentary DRL override switch. See **Fig. 2.26**. Press the upper half of the switch to briefly deactivate the DRL.

Fog Lights

Fog lights are designed to reduce glare in foggy conditions. The low-beam headlights must be on in order to turn the fog lights on. Press the upper half of the switch to activate the fog lights. See **Fig. 2.26**.

Hazard Warning Lights

The hazard warning light switch tab is located below the turn signal lever. Pull the tab out to activate the hazard warning lights. When the hazard warning lights flash, all turn signal lamps and both of the indicator lights on the control panel will flash. Move the turn signal lever up or down to cancel the warning lights.

Headlights

A three-position paddle switch is used to operate the exterior lights. See **Fig. 2.26**. Move the paddle switch up to activate the headlights, instrument panel, clearance lights, marker lights, and taillights. To deactivate all vehicle lighting, ensure the switch is in the middle position. Move the paddle switch down to activate

https://truckmanualshub.com/

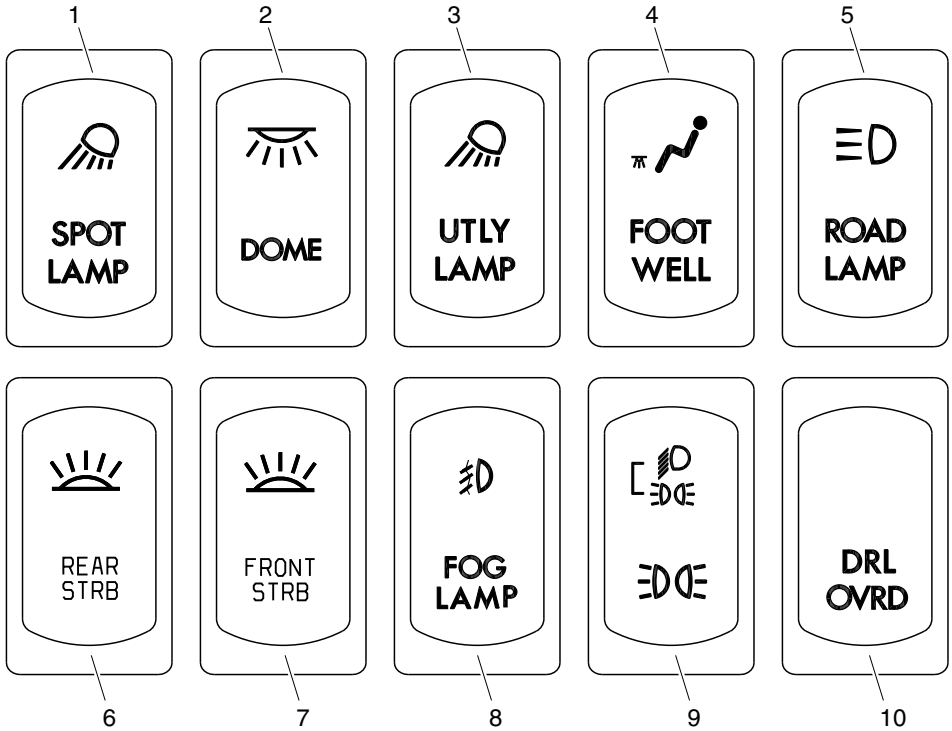

04/24/2012 f611174

1. Spotlight Switch
2. Dome Light Switch
3. Utility Lights Switch
4. Foot Well Lights Switch
5. Road Lights Switch
6. Rear Strobe Light Switch
7. Front Strobe Light Switch
8. Fog Lights Switch
9. Headlights/Marker Lights Switch
10. DRL Override Switch

Fig. 2.26, Typical Light Controls

only the clearance, instrument panel, marker lights, and the taillights.

High-Beam Headlights

To activate the high-beam headlights, pull the turn signal lever towards the driver while the low-beam headlights are on. Pull the turn signal lever back again to deactivate the high beams and return to low beam headlights.

When the high-beam headlights are on, a blue light illuminates on the instrument cluster.

NOTE: The ignition switch must be on for the high beams to work.

Marker Light Interrupt

A momentary interrupt switch temporarily deactivates the marker lights and taillights. With the vehicle lights on, press and release the interrupt switch to briefly turn the marker lights and taillights off. To alert the driver that the switch is functioning, the dash lights will flash with the marker lights when the switch is actuated.

Road Lights

Press the upper half of the road light switch to activate the road lights mounted on the bottom edge of the front bumper or recessed in the front bumper. See **Fig. 2.26**.

Spotlight

The spotlight switch is located on the pivoting handle of the spotlight. There may be a single spotlight assembly mounted above the driver's door, or one above each door.

Turn Signals

The turn signal lever is mounted on the steering column. Push the lever down to activate the left-turn signal lights; pull the lever up to activate the right-turn signal lights. To manually cancel the signal, move the lever to the neutral position. When a turn

https://truckmanualshub.com/

signal is activated, a green indicator light flashes on the instrument cluster.

Utility Lights

Utility lights can be swivel-mounted on top of the cab, mounted on the intake/exhaust support, or flush-mounted in the back of the cab or sleeper. Press the upper half of the switch to activate the utility lights. See **Fig. 2.26**. Press the lower half of the switch to turn the utility lights off. When activated, a red indicator light in the switch is illuminated, if equipped

Interior Lighting Controls

Interior light controls are listed here in alphabetical order.

Baggage Compartment Lights

Baggage compartment lights are located on the underside of the lower bunk, on both sides. Both lights turn on when either baggage compartment door is opened to illuminate the baggage compartment. The lights also come on when the lower bunk is raised.

Cab Overhead Console Lights

The overhead console includes a clear reading light, a clear dome light, and a red map light. The dome lights illuminate when a door opens, then stay on for a short time after both doors are closed. Press the lens of the reading light, dome light, or map light to activate each one.

Foot Well Lights

When the driver or passenger doors are opened, red lights illuminate both foot wells. These lights can also be activated with the foot well light switch. See **Fig. 2.26**. Press the upper half of the switch to turn the foot well lights on, press the lower half of the switch to turn them off.

The sleeper foot well switch is located in the lower switch module in the sleeper. It looks identical to the cab foot well switch. See **Fig. 2.26**. When the switch is activated, two lights illuminate the sleeper floor.

Instrument Panel Lights

The instrument panel lights illuminate when the headlights are turned on. When the headlights are on, the panel lamp switch controls the intensity of the instrument panel lamps. Slide the switch up to brighten them and down to dim them. When the headlights are turned on, the panel lights setting will default to the intensity that was last set.

Rear-Wall Dome Light

A rear-wall dome light is available on all sleeper cabs. It is located on the rear wall where the wall meets the roof. To turn on the rear-wall fluorescent light, press the dome light switch on either the lower or upper bunk control panels.

Sleeper Dome Light

A sleeper dome light is located on the roof, between the bunk and the cab on sleeper vehicles. The rear cab dome light will activate with the dome lights when a door is opened, then stay on for a short time after both doors are closed. Use the dash-mounted switch or the switch in the sleeper panel to activate the rear cab dome light. See **Fig. 2.26**.

Sleeper Reading Lights

Clear reading lights are mounted above the lower bunk in the rear corners of the sleeper. There are two switches in the sleeper control panel for the reading lights. To turn a reading light on, press the upper half of the switch. Press the lower half of the switch to turn it off.

The reading lights can also be activated by pressing the lens.

PTO Switch

To activate the PTO function, press the upper half of the switch. Press the lower half of the switch to deactivate the PTO function.

Steering Column Tilt/Telescope Control

⚠ WARNING

Make sure that the steering column is locked before driving the vehicle. Never tilt the column while driving the vehicle. Doing so could cause loss of vehicle control, personal injury, and property damage.

Adjust the seat to the desired ride position, then tilt or telescope the steering column as needed.

To tilt the steering column, press down on the foot pedal located on the steering column. Tilt the steering column up or down to the desired position. Release the foot pedal to lock the steering column in place.

To telescope the steering column, press down on the foot pedal located on the steering column. Pull the

https://truckmanualshub.com/

steering wheel closer to you or push the steering wheel away from you. Release the foot pedal to lock the steering column in place.

Suspension/Trailer Connection Controls

Air Suspension Dump Control Switch

NOTICE

Do not operate the vehicle over uneven ground such as ramps, speed bumps, curbs, etc. with the air springs deflated. Doing this may lead to air bag separation from the piston, preventing the suspension air springs from re-inflating.

The air suspension height control switch may be used to aid in connecting or disconnecting from a trailer. When the switch is set to LOWER, the air suspension dump valve deflates the air springs to lower the rear of the vehicle. In the AUTO position, the automatic ride-control valves operate for normal driving.

NOTICE

Never exhaust air from the suspension while driving. When the air is exhausted, the suspension will not absorb road shocks, and components may be damaged.

A red LED in the switch is illuminated when the suspension is deflated.

Fifth Wheel Slide Control Switch

NOTICE

Do not activate the fifth wheel slide control valve while the vehicle is in motion. To do so could cause damage to the fifth wheel member, the kingpin, the cab or trailer, and ultimately to the drivetrain.

The fifth wheel air slide valve allows repositioning of the sliding fifth wheel from inside the cab. Move the air slide control valve switch to the LOCK position to lock the fifth wheel to the baseplate. Move the switch to the UNLOCK position to unlock the fifth wheel slide mechanism, allowing changes to the total length of the tractor-trailer and changes to axle loads to comply with state or provincial laws.

For detailed operating instructions for fifth wheel slide, refer to **Chapter 10**. A red indicator light illuminates whenever the fifth wheel slide is unlocked.

Trailer Auxiliary Switch

Some trailers with pneumatic brakes are equipped with power for the trailer lights. The connection is passed from the vehicle to the trailer via the primary receptacle, controlled by a dash switch.

Press the top of the switch to activate the trailer auxiliary function. Press the bottom of the switch to turn trailer auxiliary function off.

Windshield Wiper/Washer Controls

NOTICE

Do not attempt to manually move the windshield wiper arms. Wiper motor damage will occur if the arms are forcibly moved.

The wipers are operated by a dual paddle switch located on the auxiliary instrument panel. See **Fig. 2.27**. To turn the wipers on or off, press the top paddle in. When the top paddle is pushed up, the wipers will operate at high speed; when it is pushed down, they will wipe at low speed.

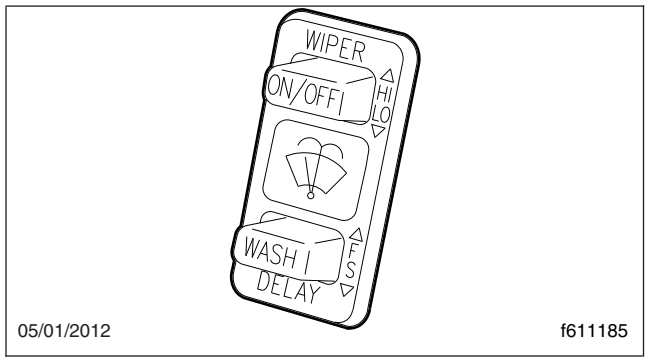

Fig. 2.27, Windshield Wiper Switch

The bottom paddle, when pushed in, turns the washers on. When pressed for less than ½-second, the wipers will perform a single, low speed dry wipe (mist function). When pressed for more than ½-second, the wash cycle begins and continues for three cycles or until the paddle is released. When the bottom paddle is pushed up, the wipers operate in fast delay. When the bottom paddle is pushed down, the wipers operate in slow delay. With the wipers in delay mode (fast or slow), push the bottom paddle

https://truckmanualshub.com/

up to shorten the delay period, or push the paddle down to lengthen it.

Roll Stability Advisor and Control System

The roll stability system may include only the roll stability advisor (RSA) only, or it may also include the roll stability control (RSC).

A decal (**Fig. 2.28**) on the auxiliary dash panel, and an amber-colored dash indicator light (**Fig. 2.29**), indicate that the vehicle is equipped with roll stability system components.

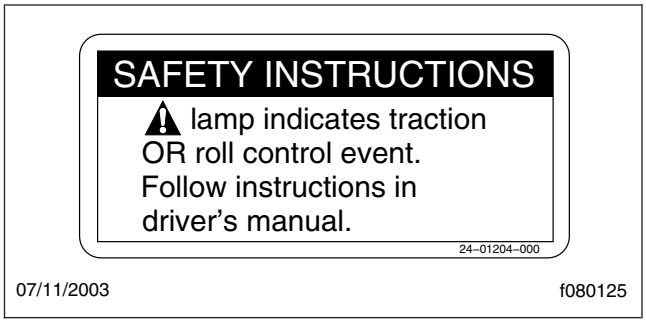

Fig. 2.28, Roll Stability Decal

Fig. 2.29, Roll Stability Indicator Lamp

Roll Stability Advisor

IMPORTANT: This is not an advance warning system. The roll stability advisor displays a message only after the driving maneuver is completed.

The roll stability system uses a lateral-acceleration sensor that monitors rollover risk. Shortly after a curve, lane change, or other driving maneuver that results in a rollover-risk detection, a dash warning light illuminates, an audible tone sounds, and a driver advisory message is displayed in the driver message center. The purpose is to advise the driver that the previous maneuver produced a rollover risk.

The roll stability advisor displays different text messages depending on the severity of the risk of each occurrence of risky driving. From the highest risk level to the lowest risk level, the system will sound an audible alert, and display a message, as shown in **Fig. 2.30**.

NOTE: The system will calculate and recommend a speed reduction value. It may be different than the values shown here.

Bring the vehicle to an authorized service facility if a system failure message is displayed.

Roll Stability Control

WARNING

The Roll Stability Control system is intended only as an aid for a conscientious and alert driver. Carefully read the information in this manual to understand this system and its limitations. The Roll Stability Control system is not a substitute for safe driving procedures. Failure to drive safely, and use the system properly, could result in personal injury and/or death and property damage.

The roll stability control system automatically reduces engine power, applies the engine brake, and/or applies the tractor and trailer brakes when the acceleration sensor detects that the vehicle is at risk of rolling over. The control can intervene even before an advisory message is displayed.

The dash indicator light illuminates whenever the roll stability control system intervenes.

Hard-Braking Advisor

The hard-braking advisor uses the information from the ABS wheel speed sensors to determine when braking is severe enough to produce lockup at one or more wheels on the tractor, and/or very rapid vehicle deceleration. Shortly after a hard-braking event occurs, an advisory message is displayed in the driver message center, indicating that the braking behavior was too aggressive for the current road surface conditions. This system is not a replacement for a driver's good judgment. Sometimes it is necessary to brake hard.

https://truckmanualshub.com/

MSG No.	Message	Message to Display	Display Time: Seconds	Buzzer Time: Seconds
1	System Fault	WARNING RAC SYSTEM FAIL	4	1
2	RSC	ACTIVE SLOWING ROLLOVER RISK	4	None
3	RSA Level 3	VERY HIGH RISK OF + ROLLOVER DETECTED REDUCE SPEED + AT LEAST 7 MPH or in metric REDUCE SPEED + AT LEAST 11 KPH	19.6	10
4	RSA Level 2	HIGH RISK OF + ROLLOVER DETECTED REDUCE SPEED + AT LEAST 7 MPH or in metric REDUCE SPEED + AT LEAST 11 KPH	14	5
5	RSA Level 1	ROLLOVER RISK + DETECTED REDUCE SPEED + AT LEAST 7 MPH or in metric REDUCE SPEED + AT LEAST 11 KPH	8.4	2
6	HBED Level 3	HARD BRAKING WITH + ABS ACTIVATED LOOK AHEAD + BRAKE SOONER	14	0.5
7	HBED Level 2	HARD BRAKING + DETECTED LOOK AHEAD + BRAKE SOONER	14	0.5
8	HBED Level 1	LOSS OF TRACTION + ABS ACTIVATED ROAD SURFACE + MAY BE POOR	14	0.5

07/25/2008 f040769

Fig. 2.30, Roll Stability and Hard-Braking Warnings

From the highest risk level to the lowest risk level, the system will sound an audible alert, and display a message, as shown in **Fig. 2.30**.

Trip/Leg Totals

The driver message center records the number of messages received, and displays the number of messages as counts. Roll stability advisor (RSA) and hard-braking event data (HBED) counts can be viewed in the trip advisory screen, and the leg advisory screen.

Counts can be reset using the + key on the steering wheel. Clearing RSA and HBED leg counts will also reset the leg miles and leg hours. Clearing RSA and HBED trip counts will also reset trip miles, trip hours, leg miles, leg hours, and leg advisory counts. In addition, resetting leg miles will clear leg counts. Clearing trip miles will reset miles, hours, and counts in both the leg and trip screens.

The TRIP and LEG advisor screens count both the roll stability advisories (ROLL) and hard-braking events (BRK). For example, if during a TRIP, the driver message center recorded the events in **Table 2.5**, the message center would display as shown in **Fig. 2.31**.

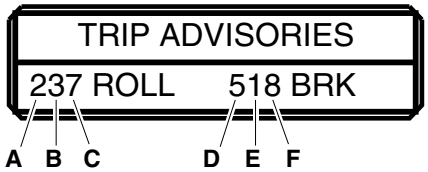

07/25/2008 f040770

A. RSA lev. 3 Count (2)
B. RSA lev. 2 Count (3)
C. RSA lev. 1 Count (7)
D. HBED lev. 3 Count (5)
E. HBED lev. 2 Count (1)
F. HBED lev. 1 Count (8)

Fig. 2.31, Trip Advisor Message Screen

RSA/HBED Count	
Message Received	**Message Counts**
RSA Level 3	2
RSA Level 2	3
RSA Level 1	7
HBED Level 3	5
HBED Level 2	1
HBED Level 1	8

Table 2.5, RSA/HBED Count

If the count reaches more than 9 occurrences an up-arrow symbol will appear, to indicate to the driver that the count has exceeded 9 counts. See **Fig. 2.32**.

https://truckmanualshub.com/

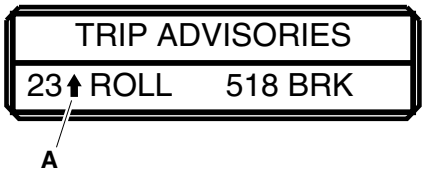

07/25/2008 f040771

A. RSA Lev. 1 has more than 9 counts.

Fig. 2.32, Trip Advisor Message Screen (more than 9 counts)

Voltage and Fuel Efficiency Controls

Cab Load Disconnect Switch

WARNING

Turning the cab load disconnect switch (CLDS) to the off position does not disconnect the connection between the battery and the starter. To work on the vehicle safely, the negative leads must be disconnected from the battery.

IMPORTANT: The ignition should be turned off before turning the CLDS to on or off.

The CLDS is used to avoid excessive draw on the battery when the vehicle is parked for an extended period of time by disconnecting (or opening) the connection between the battery and the most of the vehicle electrical system. See **Fig. 2.33**.

The CLDS may be mounted:

- inside the cab on the outboard side of the driver's seat;
- at the battery box;
- outboard on the left frame rail.

Idle Shutdown Timer

This feature is an optional 1-to-100 minute idle shutdown system. Its purpose is to conserve fuel by eliminating excessive idling, and allowing a turbocharger cool-down period. To activate the shutdown, the transmission must be in neutral with the vehicle parking brakes set and the engine in idle or fast-idle mode.

Low Voltage Disconnect Feature

The low voltage disconnect (LVD) feature protects the batteries from excessive discharge by disconnecting certain circuits from battery power supply. This allows the batteries to maintain acceptable charge to restart the vehicle. The LVD system turns off cab and sleeper accessories when voltage drops to 12.3 volts. An alarm sounds for one minute before accessories are turned off. If no action is taken within that minute, the LVD module will shut off power to predetermined cab and sleeper circuits and illuminate an LED indicator on the LVD module located inside the right-hand door frame behind the seat. These circuits will remain off until the LVD measures 13.0 volts on the electrical system, which can be done by starting the engine. After the engine is started, the system will reset.

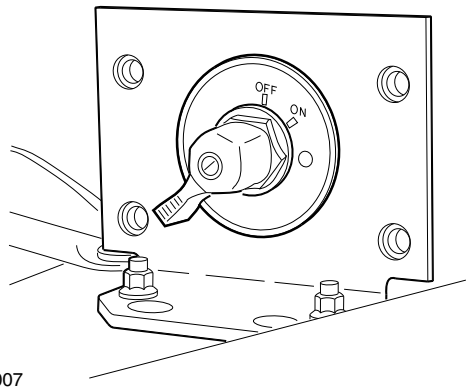

06/19/2007 f545071

Fig. 2.33, Cab Load Disconnect Switch

All vehicles equipped with LVD should have a sticker on the dash indicating the presence of the system. Another sticker is located inside the right-hand door frame behind the seat, along with the LVD module.

Optimized Idle®

Optimized Idle reduces engine idle time by running the engine only when required. Optimized Idle automatically shuts down and restarts the engine as needed to ensure engine oil temperature remains within factory preset limits, the batteries stay charged, and cab/sleeper temperature remains at the thermostat setting. The benefits of the system include reduced engine idle time, fuel savings, reduction of exhaust emissions and noise, increased starter and engine life, and reduced chance of dead batteries.

Vehicles equipped with Optimized Idle have a label on the dash, and a telltale (OPT IDLE) in the ICU. See **Fig. 2.34** for the dash label detail. If equipped, a thermostat is located above the sleeper bunk. See **Fig. 2.35**.

https://truckmanualshub.com/

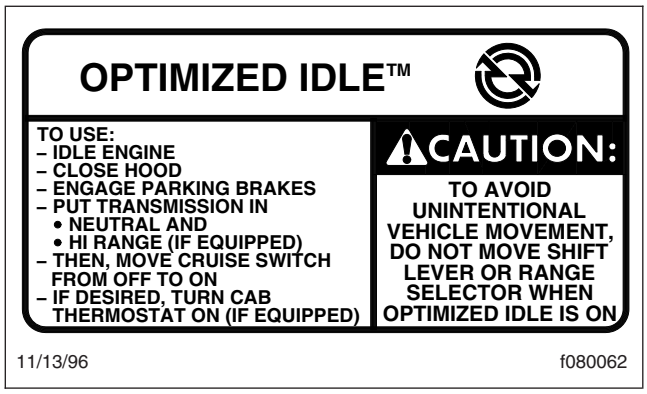

Fig. 2.34, Optimized Idle Dash Label

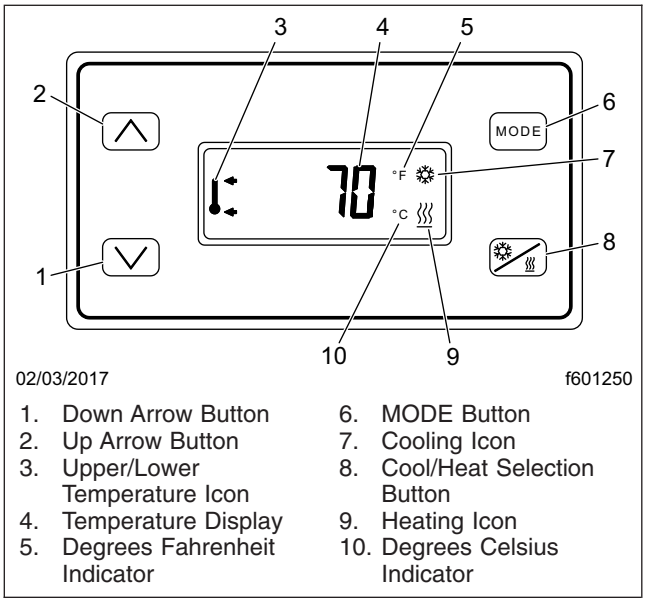

1. Down Arrow Button
2. Up Arrow Button
3. Upper/Lower Temperature Icon
4. Temperature Display
5. Degrees Fahrenheit Indicator
6. MODE Button
7. Cooling Icon
8. Cool/Heat Selection Button
9. Heating Icon
10. Degrees Celsius Indicator

Fig. 2.35, Optimized Idle Thermostat

Optimized Idle operates in two modes:

- Engine mode: Keeps the battery charged and engine oil temperature between 60 and 104°F (16 to 40°C).
- Thermostat mode (activated when the optional thermostat is turned on): Keeps the cab and sleeper at a constant preset temperature, in addition to all functions available in engine mode.

Thermostat mode controls the set point, which is the desired temperature of the cab and sleeper, and the comfort zone, which is the allowed temperature deviation from the set point before the engine starts.

The thermostat display defaults to show the temperature of the sleeper, but changes accordingly as the buttons are pressed.

The button functions are as follows:

- Up arrow: Increases the set point and comfort zone (allowed temperature variation).
- Down arrow: Decreases the set point and comfort zone.
- Cool/Heat: Sets either cooling or heating operation.
- MODE: Scrolls through the various functions. It can also be used to set desired temperature values.

If a vehicle has Optimized Idle, the following functions will not operate with the key in accessory mode. Optimized Idle may also turn these functions off to reduce stress on the batteries.

- Cab climate control fan
- Sleeper climate control fan
- Mirror heat
- Fuel/water separator heat
- Seat heat
- Advertising light
- Auxiliary circulation fan (windshield)
- Air dryer

1. To activate Optimized Idle (engine mode):

   1.1 Set the parking brake.

   1.2 If it is open, close and secure the hood.

   1.3 Start the engine and let it idle.

   1.4 Put the transmission in neutral.

   1.5 Turn on the cruise control.

   The OPT IDLE lamp will blink, indicating that Optimized Idle is active. The system is now in engine mode and after an initial phase, in which the idle speeds up to 1000 rpm, the engine will stop and start automatically to keep the battery charged and the engine oil warm.

   IMPORTANT: The cruise control must be turned on once the engine is idling. If it was previously turned on, turn the cruise control off, then turn it on again.

https://truckmanualshub.com/

2. Activate thermostat mode, if equipped.

   NOTE: When the system is in thermostat mode, it is also in engine mode. It will continue to operate in engine mode even if thermostat mode is turned off.

   2.1 With the system in engine mode, set the cab and sleeper heater or air conditioner controls to the highest setting.

   2.2 Turn on the thermostat by touching any of the four buttons. See **Fig. 2.35**.

   The display will flash the current sleeper temperature and the previous mode (cooling or heating) selected. If the cab needs to be cooled or heated, the cool/heat icon will flash.

   2.3 Choose either cool or heat by pressing the Cool/Heat button. Make sure the selection matches that of the cab controls.

   IMPORTANT: If the heat or cool selection of the thermostat does not match that of the cab controls, the system will idle and cycle excessively.

   2.4 Select Fahrenheit or Celsius by pressing and holding the MODE button until either the "F" or "C" is displayed.

   2.5 Select the temperature set point by pressing the up or down arrows, as applicable. Holding the button will cause the display to scroll up or down rapidly. When the desired set point is displayed, release the button. The set point is stored in memory.

   2.6 Select the temperature comfort zone by pressing the MODE button until the upper and lower temperature limit icon is displayed. Then use the up or down arrow to select one of the three comfort zones: 4°F (2°C), 7°F (4°C), or 10°F (6°C).

3. To deactivate thermostat mode and return to just engine mode, press and hold the MODE button for three seconds.

4. To shut down Optimized Idle completely, either turn off the ignition or use the drive away feature.

   The drive away feature allows the use of all the engine features. Use the drive away feature as follows:

   4.1 If the engine is running: Release the parking brakes or put the transmission in gear.

   If the engine is not running: Start the engine. Release the parking brakes or put the transmission into gear.

   4.2 Let the engine return to base idle. The active light will turn off. Optimized Idle is now disabled.

Meritor WABCO® Antilock Braking System

The Meritor WABCO Antilock Braking System (ABS) is an electronic wheel speed monitoring and control system that works with the standard air brake system. ABS passively monitors vehicle wheel speed at all times, and controls wheel speed during emergency stops.

IMPORTANT: For proper ABS system operation, do not change tire sizes. The sizes of the tires installed during production are programmed into the electronic control unit. Installing different-sized tires could result in a reduced braking force, leading to longer stopping distances.

ABS includes signal-generating tone wheels and sensors located in the wheel hubs of each sensed wheel. The sensors transmit vehicle wheel speed information to an electronic control unit (located behind the center dash). The control unit's main circuit interprets the speed sensor signals and calculates wheel speed, wheel retardation, and a vehicle reference speed. If the calculations indicate wheel lockup, the main circuit signals the appropriate modulator valve to reduce braking pressure. During emergency braking, the modulator valve alternately reduces, increases, or maintains air pressure supply in the brake chamber to prevent front and rear wheel lockup.

The electronic control unit (ECU) also has a safety circuit that constantly monitors the wheel sensors, traction control valve (if equipped), modulator valves, and the electrical circuitry.

The Meritor WABCO ABS combines one front-axle control channel with one rear-axle control channel to form one control circuit. For example, the sensor and modulator valve on the left-front axle form a control circuit with the sensor and modulator valve on the right-rear axle. If, during vehicle operation, the safety circuit senses a failure in any part of the ABS, the vehicle ABS warning indicator illuminates and the control circuit where the failure occurred is switched to normal braking action. The remaining control circuit will retain the ABS effect. Even if the ABS is

https://truckmanualshub.com/

completely inoperative, normal braking ability is maintained. An exception would be if a modulator valve (or combination modulator valve) is damaged and inoperative. As these components are an integral part of the air brake system, normal braking may be impaired or inoperative.

During emergency or reduced-traction stops, fully depress the brake pedal until the vehicle comes to a safe stop. *Do not pump the brake pedal*. With the brake pedal fully depressed, the ABS will control all wheels to provide steering control and a reduced braking distance.

Although the ABS improves vehicle control during emergency braking situations, the driver still has the responsibility to change driving styles depending on existing traffic and road conditions. For example, the ABS cannot prevent an accident if the driver is speeding or following too closely.

Trailer ABS Compatibility

The Meritor WABCO ABS is designed to communicate with a trailer ABS, if they are compatible. Compatibility will result in the illumination of the trailer ABS warning indicator during vehicle start-up and fault detection.

The trailer ABS warning indicator will not illuminate unless a compatible trailer is connected to the tractor. The dash-mounted lamp will operate as follows when a compatible trailer is properly connected to the tractor:

- When the ignition key is turned to the ON position, the trailer ABS warning indicator will illuminate momentarily, then turn off.
- If the lamp illuminates momentarily during vehicle operation, then shuts off, a fault was detected and corrected.
- If the lamp illuminates and stays on during vehicle operation, there is a fault with the trailer ABS. Repair the trailer ABS system immediately to ensure full antilock braking capability.

IMPORTANT: If a compatible trailer is connected, and the lamp is not illuminating momentarily when the ignition key is turned to the ON position, it is possible that the lamp is burnt out.

Automatic Traction Control

Vehicles with electronic engines and ABS may have Automatic Traction Control (ATC). On these vehicles, the ATC system automatically limits wheel spin during reduced-traction situations. In normal braking applications, the standard air brake system is in effect.

An additional solenoid valve is installed. During reduced-traction situations, the ATC solenoid valve controls air pressure to the modulator valves and they in turn increase, hold, or reduce pressure to the appropriate brake chambers to provide better traction whenever wheel spin occurs.

When the ATC system is in the NORMAL mode, it will apply gentle braking to the spinning wheel, to feed power to the wheel(s) with better traction. If both wheels are spinning, the system will signal the engine to reduce power.

ATC includes a deep snow and mud option to increase available traction on extra-soft surfaces like snow, mud, or gravel. A rocker switch labeled ATC is located on the dash. See **Fig. 2.36**. Pressing the switch temporarily allows more drive wheel spin. Activating the deep snow and mud option causes the WHEEL SPIN lamp to flash. Pressing the switch again cycles the system back to normal operation.

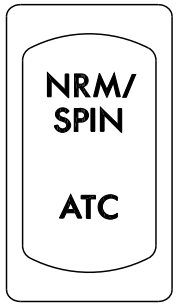

04/24/2012 f611180

Fig. 2.36, ATC Switch

NOTICE

The deep snow and mud option is intended to be used under specific slippery conditions that require momentary increased wheel spin. Using this option for an extended period of time may damage the vehicle brake system.

After the ignition switch is turned on, the vehicle ABS lamp and the WHEEL SPIN indicator lamp come on for about three seconds. After three seconds, the warning lights go out if all of the tractor's ABS components are working.

IMPORTANT: If any of the ABS warning lights do not work as described above, or come on

https://truckmanualshub.com/

while driving, repair the ABS immediately to ensure full antilock braking capability.

VORAD VS-400 System

⚠ WARNING

The VORAD VS-400 System is intended solely as an aid for an alert and conscientious professional driver. It is not intended to be relied upon to operate a vehicle. Use the system in conjunction with rearview mirrors and other instruments to safely operate the vehicle. Operate a vehicle equipped with the VS-400 System in the same safe manner as if the CWS were not present.

The VS-400 System is not a substitute for safe, normal driving procedures, nor will it compensate for any driver impairment such as drugs, alcohol, or fatigue.

The VS-400 System may provide little or no warning of hazards such as pedestrians, animals, oncoming vehicles, or cross traffic.

Failure to drive safely and use the system properly could result in personal injury and/or death and severe property damage.

The VORAD VS-400 system is an on-board radar system that monitors traffic conditions, warning the driver of potentially hazardous driving situations.

The collision warning system (CWS) tracks objects ahead of the vehicle, warning the driver with visual and audible indicators whenever following distances become unsafe.

SmartCruise® adjusts the vehicle's cruise speed in order to match the speed of traffic ahead, allowing the driver to maintain a safe following distance while cruise control is engaged.

The optional side object detection system warns of unsafe lane changes by detecting vehicles that may be difficult to see in adjacent lanes.

The VORAD VS-400 system performs in fog, rain, snow, dust, smoke, and darkness. The VS-400 system becomes active whenever the ignition key is switched to ON.

Driver Interface Unit

The driver interface unit (DIU) provides visual and audible alerts, along with system status information. The DIU also provides an interface for changing system settings. Menu selections are made by pressing the up and down arrow buttons, and the OK button. See **Fig. 2.37**.

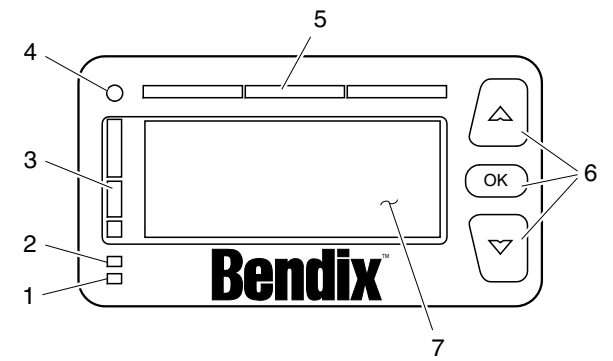

02/03/2012 f610919a

1. Fault Indicator
2. Info Indicator
3. Following Distance Lights
4. Ambient Light Sensor
5. Collision Alert Lights
6. User Interface Keypad
7. Graphic Display

Fig. 2.37, Driver Interface Unit (DIU)

The following warning and indicator lights illuminate on the DIU:

- Red: illuminates with the collision alert
- Yellow: illuminates with 3-, 2-, and 1-second following distance alerts
- Orange: illuminates when a system failure occurs
- Blue: illuminates when information is available

Immediately after the ignition switch is turned to ON, the DIU initializes a self-test routine. During the initialization, the VORAD screen displays and all lamps illuminate for approximately three seconds, along with a power-up tone. When the initialization is complete, the DIU displays the VS-400 system configuration screen. See **Fig. 2.38**.

Menu Selections

IMPORTANT: The display of a menu item is overridden whenever conditions require an alert or collision warning to be displayed.

After initialization, the menu screen is displayed. Scroll to the desired menu item by pressing an arrow button, then press the OK button to select the item. See **Fig. 2.39**. If the driver does not make a selection within 30 seconds, or the vehicle begins to move, the DIU reverts to the system status display.

https://truckmanualshub.com/

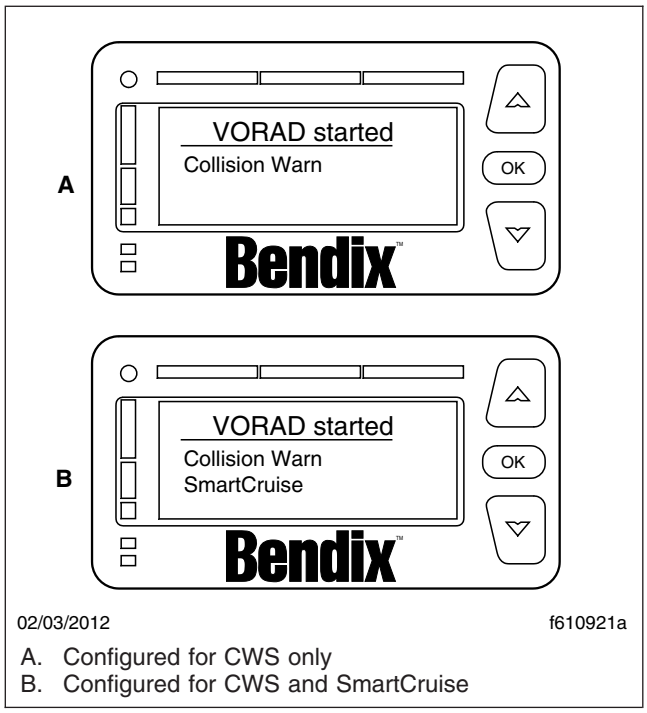

A. Configured for CWS only
B. Configured for CWS and SmartCruise

Fig. 2.38, System Configuration Screens

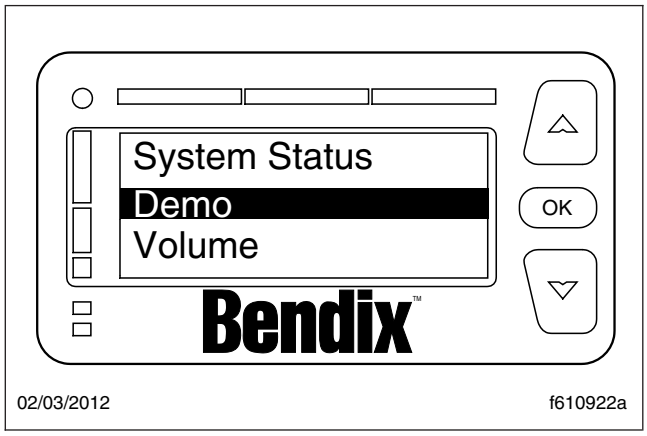

Fig. 2.39, Menu Screen

The display of any menu item is overridden whenever conditions require an alert or collision warning to be displayed.

Demo (vehicle must be stationary)

When the vehicle is stationary and Demo mode is selected, the DIU will demonstrate the meaning of all LED and screen displays, including alert messages and sound warnings. Scroll through the demo screens by pressing the down arrow. Pressing any other key exits Demo mode.

Volume

The minimum adjustable volume is 50% of the maximum volume. If the DIU volume is not adjustable, the display screen shows a grayed bar graph whenever volume adjustment is selected. After each ignition switch cycle, the volume will default back to 100%.

NOTE: Headway and collision alert tones may be suppressed when the brake is applied if the system is configured to do so.

SmartCruise Headway Range

Headway range adjustment is only available with SmartCruise. Headway range is adjustable between 3.25 and 2.25 seconds. The headway range setting will default to 3.25 seconds after each ignition power cycle.

If headway range adjustment is disabled, only the **3.25 sec** screen is displayed. See **Fig. 2.40** for the various headway range screens. Press the OK button to exit the menu.

NOTE: If the headway range is adjusted to three seconds or below and SmartCruise is active, the 3-second collision warning headway alert will not display. All other alerts are not suppressed.

Brightness

Use the up and down arrows to change the DIU backlight and warning LED brightness. Press the OK button to exit the brightness screen.

The ambient light sensor reading determines if the DIU is in daytime or nighttime mode. Menu-adjusted brightness is applied only to the mode the DIU is in at the time of adjustment. The previous brightness settings are repeated after each ignition cycle. However, the graphic display and the warning LED brightness range are constrained such that they are always visible regardless of how low the brightness is adjusted in all driving conditions. Press the OK button to exit the menu.

Unit Adjustment Screen

The unit adjustment screen allows the driver to select either km/h or mph units for display of SmartCruise set speed. Press OK to exit the mph selection screen.

System Status

System status shows the status of each system, indicating if the system is operating normally. If a system

https://truckmanualshub.com/

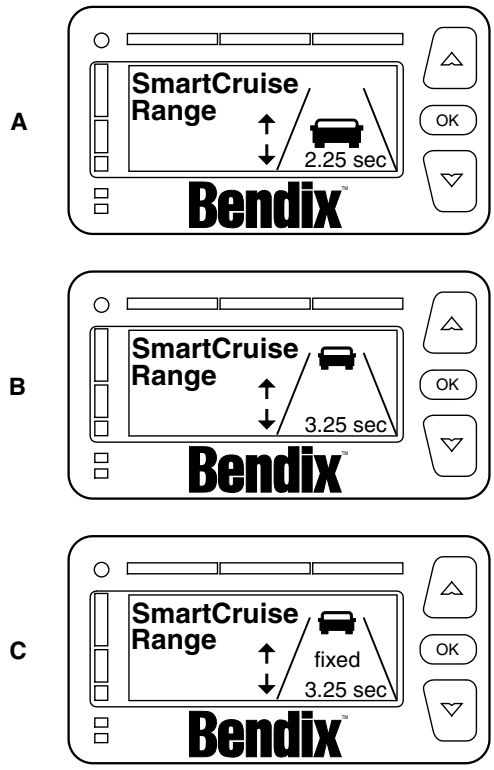

02/03/2012 f610927a

A. Minimum headway adjustment
B. Maximum headway adjustment
C. Headway range disabled

Fig. 2.40, Headway Range Screen

is not operating normally, the system displays **Failed** beside the system name. **Failed** indicates that a fault is preventing the system from operating and it cannot be used until the fault is corrected or acknowledged.

Depending on the VS-400 system installed, one of the screens shown in **Fig. 2.41** will appear unless a system fault is active. Press OK to exit the system status menu.

Diagnostics

The DIU displays fault codes currently active when this screen is selected and the vehicle is stationary. See **Fig. 2.42**. Contact an authorized Freightliner service center if fault codes display.

Collision Warning System

The CWS may require a warm-up period of up to one minute if the outside air temperature is below 32°F (0°C). The DIU will display a warm-up message

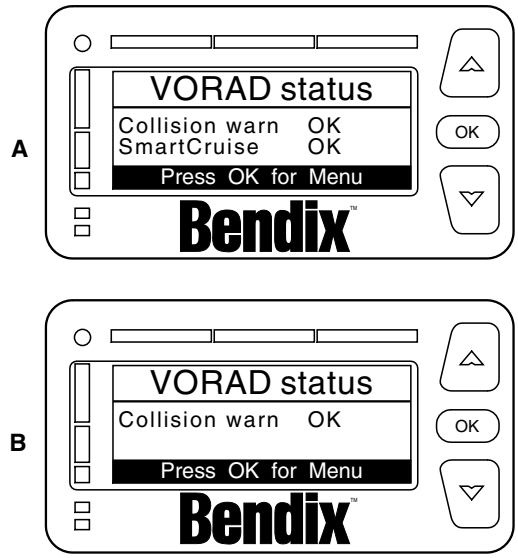

02/03/2012 f610923a

A. Status display for CWS and SmartCruise configuration
B. Status display for CWS configuration

Fig. 2.41, System Status Screens

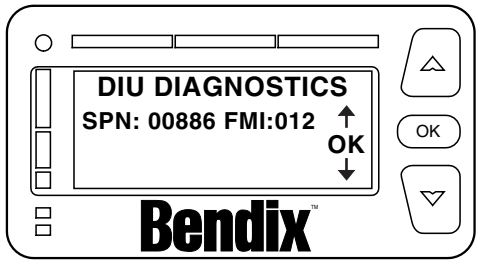

02/03/2012 f610929a

Fig. 2.42, DIU Diagnostic Screen

until the system reaches operating temperature. See **Fig. 2.43**.

The alerts given by the VS-400 system are based on the distance to the object ahead, whenever vehicle speed is 10 mph (8 km/h) or faster. The VS-400 CWS identifies and tracks the nearest object in the lane of travel. This object is classified by the range, and assigned a message described under the following headings.

https://truckmanualshub.com/

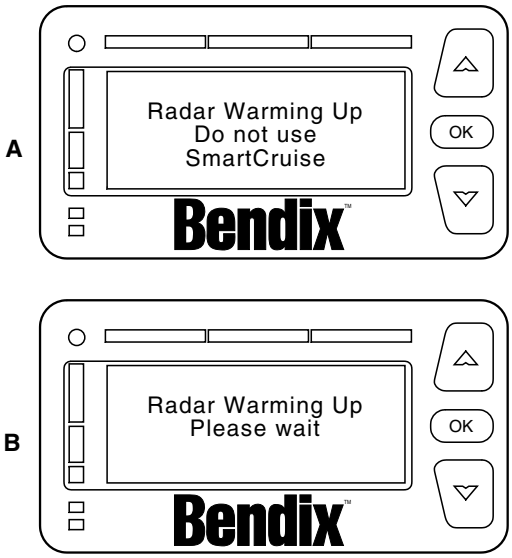

02/03/2012 f610924a

A. CWS with SmartCruise

B. CWS Only

Fig. 2.43, CWS Warm-Up Screens

Object Detected

When a vehicle is detected in the same lane of travel within 350 ft (107 m) but farther than a 3-second following distance, the DIU will display **OBJECT DETECTED**. See Fig. 2.44.

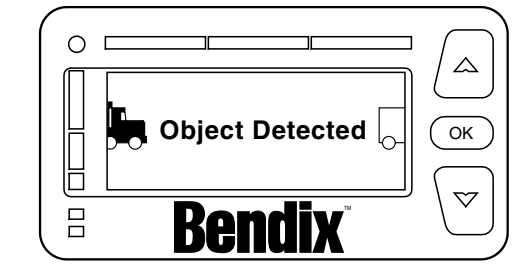

02/03/2012 f610930a

Fig. 2.44, Object Detected Alert

3-Second Headway Alert

When a vehicle is detected to be within a 3-second following distance, a single yellow indicator will illuminate and the DIU will display **3 seconds**. See Fig. 2.45.

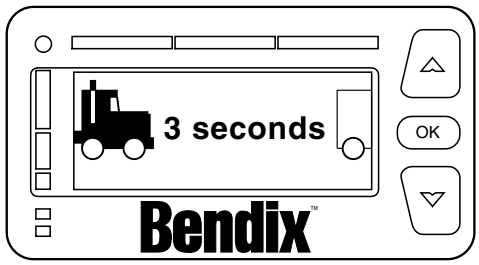

02/03/2012 f610931a

Fig. 2.45, 3-Second Alert

2-Second Headway Alert

When the following distance to the object ahead in the same lane of travel decreases to within two seconds, a second yellow indicator will illuminate, the DIU will display **2 seconds**, and a single tone will sound. See Fig. 2.46.

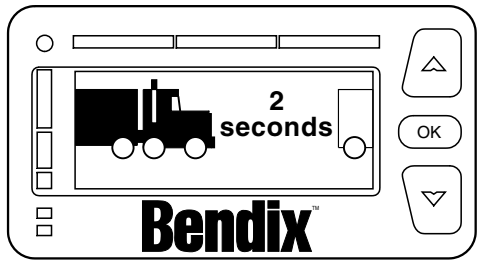

02/03/2012 f610932a

Fig. 2.46, 2-Second Alert

1-Second Headway Alert

When the following distance to the object ahead in the same lane of travel decreases to within one second, a third yellow indicator will illuminate, the DIU will display **1 sec**, and two tones will sound. See Fig. 2.47.

Collision Alert: ½-Second Headway

When the following distance to the object ahead in the same lane of travel decreases to 0.5 second, the red indicators all illuminate across of the DIU, the DIU will display **COLLISION ALERT**, and a tone will sound repeatedly. See Fig. 2.48.

https://truckmanualshub.com/

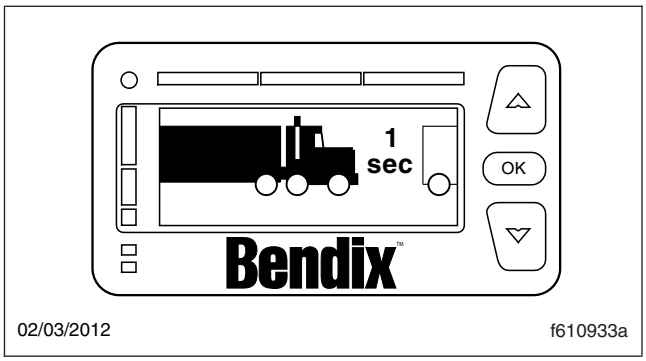

Fig. 2.47, 1-Second Alert

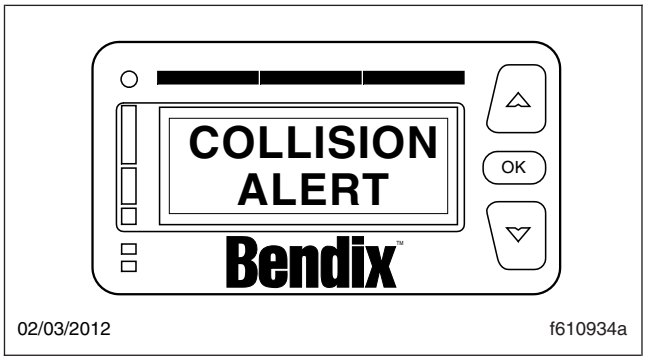

Fig. 2.48, Collision Alert

SmartCruise

When approaching slower moving traffic with the vehicle's cruise control engaged, SmartCruise adapts the engine cruise speed to that of the closest vehicle ahead, allowing the vehicle to maintain a safe following distance without disengaging the cruise control. The DIU will display the SmartCruise status screen indicating the vehicle's current set cruise speed.

Once the speed of traffic ahead increases beyond the adapted engine cruise speed, the original cruise control set speed re-engages.

When SmartCruise is engaged, depressing the accelerator pedal will override the SmartCruise and will cause the vehicle to accelerate. Depressing the brake or clutch pedals will deactivate SmartCruise.

When approaching a slow moving or stopped vehicle ahead, SmartCruise will attempt to maintain the minimum following distance by reducing the engine cruise speed and engaging the engine brake, if necessary. If SmartCruise is unable to maintain the minimum following distance, the driver will be alerted by the CWS headway alerts until the driver takes control or conditions clear.

Side Object Detection

The optional side object detection system may be installed on one or both sides of the vehicle. The radar sensor(s) are located on the side of the vehicle, while the sensor display unit is mounted on the A-pillar. See **Fig. 2.49**.

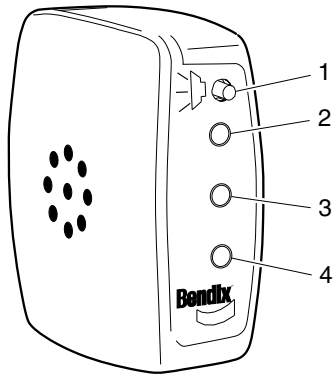

1. Volume Adjust
2. Red LED–Object Detected
3. Ambient Light Sensor
4. Yellow–No Object Detected

Fig. 2.49, Side Sensor Display Unit

The side sensor display unit uses two lights to display the status of the side sensor(s). The yellow light indicates the system is active, but no objects are detected. The red light indicates that the side sensor detects an object. If the vehicles turn signal is active and the sensor detects an object alongside the vehicle, an audible warning tone will sound.

Special Road Situations

Certain road situations may affect the system's ability to detect objects. These situations include the effects of curves, dips, and hills which can provide an unexpected result.

NOTE: A warning may sound when an object is detected in front of the vehicle even though the driver intends to turn away or stop before reaching the object.

- When an object is detected in a very sharp right- or left-hand turn, the audible alarm will not sound.
- When approaching a curve, alarms may sound and lights illuminate, because of an object off

https://truckmanualshub.com/

the road directly in line with your vehicle. This will not occur when the brakes are applied.

- When approaching a roadway descending to a lower elevation, elevated obstacles such as overpasses and overhead signs may be detected.
- Vehicles cannot be detected on the other side of a hill. An alarm will not sound until the object is within the antenna assembly's field of view.
- On approaching a steep hill, objects above the beam cannot be detected. Generally, the beam hitting the road surface does not cause an alarm.
- The side sensor only detects objects within its field of view, next to the tractor. A vehicle behind the field of view will not be detected.
- The side sensor range is set to detect average-sized vehicles 2 to 10 feet (0.5 to 3 meters) away in the adjacent lane.
- The radar beam will detect near range cut-ins of approximately 30 feet (9 meters) or less, depending on the angle of entrance into the lane in front of your vehicle.
- A continuous fixed object on the right side of the vehicle such as a guard rail, wall, tunnel, or bridge may cause the side sensor alert light to stay on.

⚠ WARNING

Heavy rain or water spray at the side sensor may cause both the yellow and red lights on the side sensor display to illuminate at the same time. Under these conditions the system is temporarily unable to provide adequate warnings.

Failure to drive safely and use the system properly could result in personal injury and/or death and severe property damage.

Maintenance

Keep the antenna and side sensor free of buildup of mud, dirt, ice, or other debris that might reduce the system's range.

Failure Display Mode/Fault Codes

The VS-400 performs internal diagnostics at power-up, then continuously monitors system components thereafter.

If a failure is detected, depending on what features are affected, the DIU displays a screen similar to **Fig. 2.50**, blinks the orange fault light, and sounds a tone. Press the OK button to acknowledge the fault.

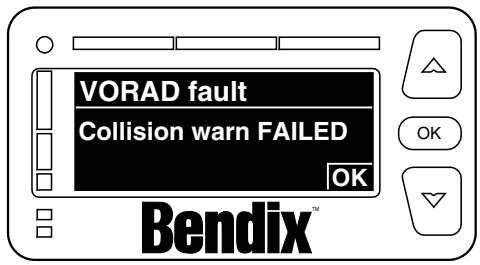

02/03/2012 f610936a

Fig. 2.50, VORAD Fault Display

After the fault has been acknowledged, the DIU will attempt to return to normal operations. The orange LED is continuously illuminated while the fault persists. If the fault disappears, the VS-400 transmits a message to indicate that the fault status has changed to a previously active fault.

In the event the CWS antenna becomes blocked while the vehicle is moving (e.g., snow, mud, ice, tampering, etc.), the system sounds a tone and displays the fault screen shown in **Fig. 2.51**.

Contact an authorized Freightliner dealer to review and clear previously active fault codes.

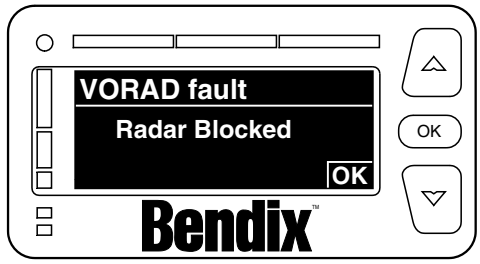

02/03/2012 f610937a

Fig. 2.51, Antenna Blocked Display

Lane Departure Warning Controls

The Lane Guidance lane departure warning system monitors the vehicle's position within the roadway lane markings and sounds a warning in the cab when the vehicle is about to stray outside its lane,

https://truckmanualshub.com/

provided the turn signal is not on and the vehicle is traveling at least 37 mph (60 km/h). The system includes a digital camera mounted high near the center of the windshield inside the cab and speakers that emit a sound similar to a rumble strip. The sound is made on the side of the vehicle it's straying toward, prompting the driver to respond and steer away from the sound and back into the center of the correct lane.

WARNING

The lane departure warning system is intended only as an aid for a conscientious and alert driver. The system may not indicate lane departures under certain conditions. Read the information in this manual to understand the circumstances under which this system may not provide adequate lane departure warnings. Do not rely solely on the system to safely operate the vehicle. The system does not warn of all possible hazards. For example, the system cannot prevent an accident if the driver is impaired or not driving safely.

The lane departure warning system is not a substitute for safe driving procedures.

Failure to drive safely and use the system properly could result in personal injury and/or death and severe property damage.

The lane departure warning system powers up each time the ignition is turned to ON. The system conducts a self test, and initiates test tones from the left speaker and then the right speaker. Once the vehicle is started and the system is ready, the LED in the switch illuminates.

Press the LANE ALERT switch to temporarily disable the lane departure warning system. Some vehicles are equipped with a timer that automatically re-enables the warning system after 15 minutes. On all other vehicles, the warning system will remain disabled until the driver enables the system by pressing the LANE ALERT switch again, or the ignition is cycled off and then on.

When the vehicle approaches the lane markings on either side, the system sense the activation of a turn signal. If a turn signal has not been activated, the system initiates the audible warning to alert the driver that the vehicle is departing its current lane of travel.

The LANE SRCHNG warning light illuminates to indicate the system is not fully functional. When the warning light is on, the system audible alert may not indicate a lane departure. Conditions that can cause the warning light to illuminate include:

- The system is unable to detect lane markings.
- Vehicle speed is less than 37 mph (60 km/h).
- A system problem is detected.

https://truckmanualshub.com/

3

Vehicle Access

Ignition and Lock Key 3.1
Cab Door Locks and Handles 3.1
Grab Handles and Access Steps 3.1
Door Windows 3.4
Sleeper Compartment Vents 3.4
Circuit Breaker/Relay Panel 3.4
Cab-to-Sleeper Access 3.4
Sleeper Bunk Latches 3.4
Sleeper Door 3.4
Baggage Compartment Doors 3.4
Back-of-Cab Grab Handles, Steps, and Deck Plate 3.5
Battery Box Cover 3.6
Hood Tilting 3.6
Keyless Security System, Optional 3.7
Cab Amenities 3.9
Windshield Washer Reservoir 3.11

https://truckmanualshub.com/

Ignition and Lock Key

One key operates the ignition switch and all of the door locks.

IMPORTANT: Each key is numbered. Record the number so, if needed, a duplicate key can be made.

Cab Door Locks and Handles

To unlock the driver's door from outside the cab, insert the key in the lockset and turn it one-quarter turn clockwise (**Fig. 3.1**). Turn the key counterclockwise to the original position to remove it. Pull out on the paddle handle to open the door (**Fig. 3.1**).

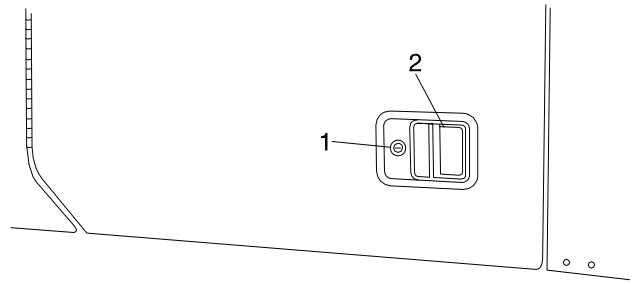

9/07/95 f600906

1. Lockset
2. Paddle Handle

Fig. 3.1, Exterior Door Handle

To unlock the passenger's door from outside the cab, insert the key in the lockset and turn it one-quarter turn counterclockwise. Turn the key to the original position to remove it.

NOTE: The cab door locks can be operated when the doors are open.

To lock a door from outside the cab, insert the key in the lockset and turn it opposite the unlocking direction, then close the door if it is open. Or, push down the inside lock button (**Fig. 3.2**), then close the door.

To lock either door from inside the cab, push down the lock button (**Fig. 3.2**), then close the door if it is open. Pull the integral grab bar (**Fig. 3.2**) when closing the door.

To open the door from the inside, pull the door handle toward you (**Fig. 3.2**). This will unlatch the door whether or not it is locked. To unlock the door without unlatching it, pull the lock button up.

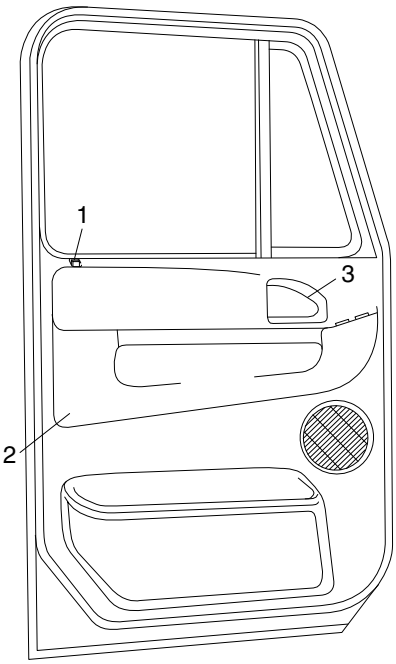

10/27/95 f600910

1. Lock Button
2. Integral Grab Bar
3. Door Handle

Fig. 3.2, Door Interior

Grab Handles and Access Steps

⚠ WARNING

Wet or dirty shoe soles greatly increase the chance of slipping or falling. If your soles are wet or dirty, be especially careful when climbing onto, or down from, the back-of-cab area.

Always maintain three-point contact with the back-of-cab access supports while entering and exiting the back-of-cab area. Three-point contact means both feet and one hand, or both hands and one foot, on the grab handles, steps, and deck plates. Other areas are not meant to support back-of-cab access, and grabbing or stepping in the wrong place could lead to a fall, and personal injury.

Be careful not to get hands or feet tangled in hoses or other back-of-cab equipment. Carelessness could cause a person to trip and fall, with possible injury.

https://truckmanualshub.com/

Entering the Driver's Side (Fig. 3.3)

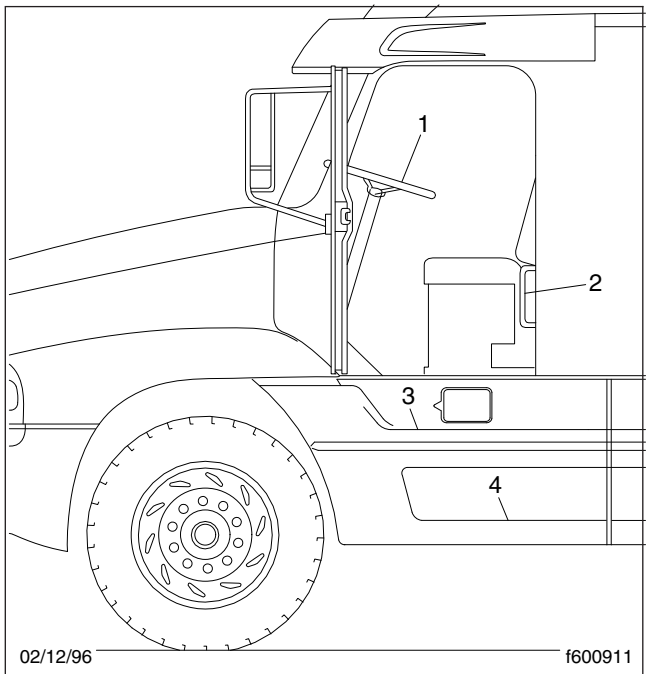

1. Steering Wheel
2. Grab Handle
3. Top Step
4. Bottom Step

Fig. 3.3, Driver's Side Steps and Grab Handle

When entering the cab from the driver's side, use the grab handle and access steps as follows:

1. Open the driver's door, and place anything that you are carrying in the cab.
2. Grasp the grab handle with both hands. Reach up as far as is comfortable.
3. Place your right foot on the bottom step, and pull yourself up.
4. Place your left foot on the top step.
5. Grasp the steering wheel with your left hand, and step up.
6. Step into the cab with your right foot first, and grasp the steering wheel with your right hand.

Exiting the Driver's Side (Fig. 3.3)

Exit the cab from the driver's side as follows:

IMPORTANT: Do not attempt to exit the cab while carrying any items in your hands.

1. Grasp the steering wheel with both hands, place your left foot on the top step, and stand on the threshold, facing into the cab.
2. Grasp the grab handle at the aft edge of the door opening with your right hand.
3. Move your right foot to the bottom step.
4. Move your left hand to the grab handle.
5. Step to the ground with your left foot first.

Entering the Passenger's Side (Fig. 3.4)

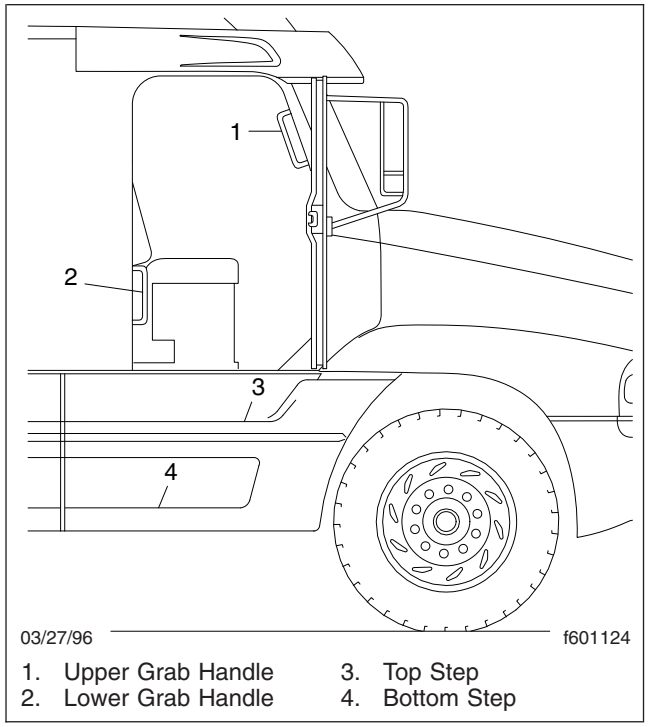

1. Upper Grab Handle
2. Lower Grab Handle
3. Top Step
4. Bottom Step

Fig. 3.4, Passenger's Side Steps and Grab Handles

When entering the cab from the passenger's side, use the grab handles and access steps as follows:

1. Open the passenger's door, and place anything that you are carrying in the cab.
2. Grasp the grab handle at the aft edge of the door opening with your left hand.
3. Grasp the handle on the door (**Fig. 3.5**) with your right hand.
4. Place your right foot on the bottom step and step up to the upper step with your left foot.
5. With your left hand, grasp the upper grab handle on the windshield post.
6. Place your right foot on the top step and step up.

https://truckmanualshub.com/

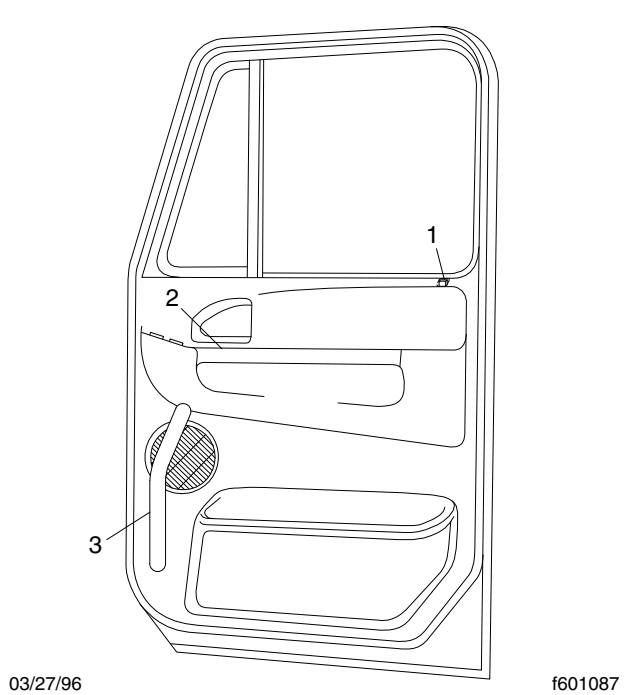

1. Lock Button
2. Door Handle
3. Grab Handle

Fig. 3.5, Passenger's Door Interior

7. Move your right hand to the upper grab handle on the windshield post.
8. Step into the cab with your left foot first.

Exiting the Passenger's Side (Fig. 3.4)

Exit the cab from the passenger's side as follows:

IMPORTANT: Do not attempt to exit the cab while carrying any items in your hands.

1. Grasp the grab handle on the windshield post with both hands, and place your right foot on the top step while standing up from the seat facing inward.
2. Place your left foot on the bottom step.
3. Move your left hand to the grab handle at the aft edge of the door opening.
4. Move your right hand to the grab handle on the door (**Fig. 3.5**).
5. Step to the ground with your right foot first.

Entering the Driver's Side for Right-Hand-Drive Vehicles

When entering the cab from the driver's side, use the grab handle and access steps as follows:

1. Open the driver's door, and place anything that you are carrying in the cab.
2. Grasp the grab handle with both hands. Reach up as far as is comfortable.
3. Place your left foot on the bottom step, and pull yourself up.
4. Place your right foot on the top step.
5. Grasp the steering wheel with your right hand, and step up.
6. Step into the cab with your left foot first, and grasp the steering wheel with your left hand.

Exiting the Driver's Side for Right-Hand-Drive Vehicles

Exit the cab from the driver's side as follows:

IMPORTANT: Do not attempt to exit the cab while carrying any items in your hands.

1. Grasp the steering wheel with both hands, place your right foot on the top step, and stand on the threshold, facing into the cab.
2. Grasp the grab handle at the aft edge of the door opening with your left hand.
3. Move your left foot to the bottom step.
4. Move your right hand to the grab handle.
5. Step to the ground with your right foot first.

Entering the Passenger's Side for Right-Hand-Drive Vehicles

When entering the cab from the passenger's side, use the grab handles and access steps as follows:

1. Open the passenger's door, and place anything that you are carrying in the cab.
2. Grasp the grab handle at the aft edge of the door opening with your right hand.
3. Grasp the lower door pocket with your left hand.
4. Place your left foot on the bottom step and step up to the upper step with your right foot.

https://truckmanualshub.com/

5. With your right hand, grasp the upper grab handle on the windshield post.
6. Place your left foot on the top step and step up.
7. Move your left hand to the upper grab handle on the windshield post.
8. Step into the cab with your right foot first.

Exiting the Passenger's Side for Right-Hand-Drive Vehicles

Exit the cab from the passenger's side as follows:

IMPORTANT: Do not attempt to exit the cab while carrying any items in your hands.

1. Grasp the grab handle on the windshield post with both hands, and place your left foot on the top step while standing up from the seat facing inward.
2. Place your right foot on the bottom step.
3. Move your right hand to the grab handle at the aft edge of the door opening.
4. Move your left hand to the lower door pocket.
5. Step to the ground with your left foot first.

Door Windows

The windows in both doors operate electrically (if so equipped). Use the appropriate switch to raise or lower a door window.

Sleeper Compartment Vents

To open any sleeper compartment vent, push the vent handle outward and forward with your fingertips. To close the vent, turn your hand so that your fingers are pulling on the handle from the front edge, then pull in and back on the handle. Use care to avoid pinching your fingers.

Circuit Breaker/Relay Panel

The circuit breaker/relay panel is located in front of the passenger's seat under the top cover of the instrument panel. To access the compartment, first remove the vertical panel located immediately below the right hand adjustable louvers. Gently pry up the lower edge by using your fingertips or a flat-bladed screwdriver in the slots provided. Rotate the exposed fastener one-quarter turn and lift off the cover. Removal of the smaller exposed duct might also be required.

Cab-to-Sleeper Access

⚠ WARNING

Place rigid or heavy objects in storage areas on the floor or under the bunk. Sudden stops or swerves could cause personal injury if items fall from overhead storage shelves.

To open the sleeper access on vehicles with vinyl sleeper curtains, unzip the sleeper curtains. If desired, unsnap the curtains all the way around the sides and top and remove the curtains.

To open the sleeper access on vehicles with velour sleeper curtains, unfasten the snaps at one side, then push the curtain to the opposite side.

Sleeper Bunk Latches

To move the lower or upper sleeper bunk (if equipped), disengage the latch at the front of the lower bunk, or the latches on both sides of the upper bunk. Lock the bunks into operating position, down for the lower bunk and up or down for the upper bunk, by engaging both the primary and secondary latches.

Sleeper Door

The sleeper door (**Fig. 3.6**, Ref. 1) is not intended for entry or exit. The door is intended only as a convenient means to stow or remove personal belongings in and from the sleeper area. To open the door, push down on the lever handle located inside the sleeper compartment to the right of the door. The door can be opened from the outside by pulling the release cable strap inside the baggage door opening. To close the door, push it closed until it latches.

IMPORTANT: The sleeper doors are two-stage latching. When closing the doors, ensure that they are completely latched to prevent wind noise and water intrusion.

Baggage Compartment Doors

To unlock the baggage compartment door on the passenger's side, insert the ignition key in the lockset, and turn it one-quarter turn clockwise. See

https://truckmanualshub.com/

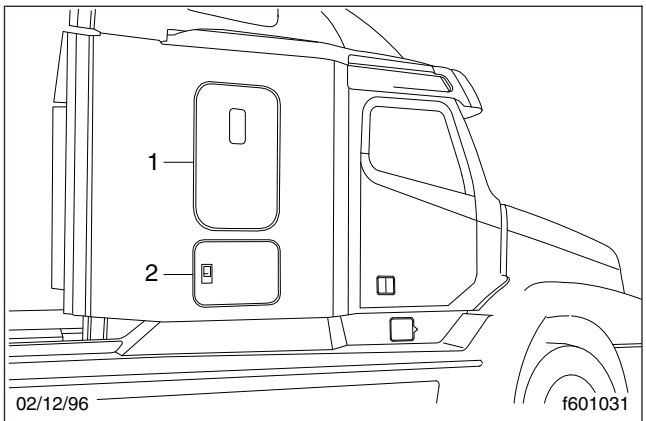

1. Sleeper Door
2. Baggage Compartment Door

Fig. 3.6, Passenger-Side Sleeper and Baggage Compartment Doors

Fig. 3.6. Turn the key to the original position to remove it. Pull up and outward on the baggage door handle to open the door. To close the door, push it closed until it latches. To lock the door, insert the ignition key in the lockset and turn it one-quarter turn counterclockwise.

Use the same procedure to open the baggage compartment door on the driver's side, but turn the key counterclockwise to unlock the door and clockwise to lock it.

Back-of-Cab Grab Handles, Steps, and Deck Plate

When trailer connections cannot be reached conveniently from the ground, Federal Motor Carrier Safety Administration Regulations require secure back-of-cab access supports.

Grab handles are mounted where they can provide hand support, to maintain three points of hand-and-foot contact with the vehicle. See **Fig. 3.7**. Steps are mounted on the fuel tank, battery box, or frame, depending on the available space. When a deck plate is necessary, it is mounted across the top of the frame rails.

⚠ WARNING

Wet or dirty shoe soles greatly increase the chance of slipping or falling. If your soles are wet or dirty, be especially careful when climbing onto, or down from, the back-of-cab area.

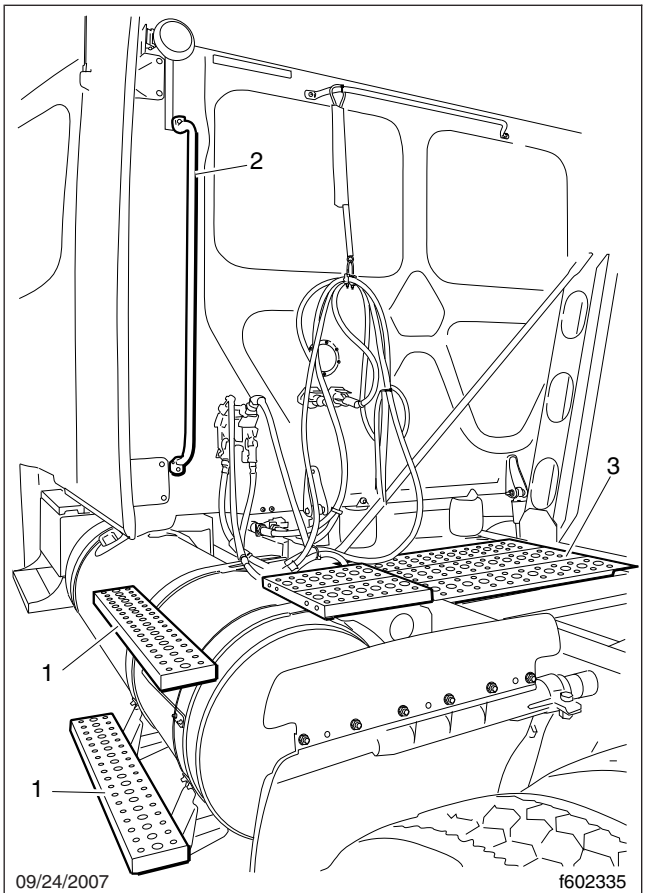

1. Steps
2. Grab Handle
3. Deck Plates

Fig. 3.7, Back-of-Cab Access (typical)

Always maintain three-point contact with the back-of-cab access supports while entering and exiting the back-of-cab area. Three-point contact means both feet and one hand, or both hands and one foot, on the grab handles, steps, and deck plates. Other areas are not meant to support back-of-cab access, and grabbing or stepping in the wrong place could lead to a fall, and personal injury.

Be careful not to get hands or feet tangled in hoses or other back-of-cab equipment. Carelessness could cause a person to trip and fall, with possible injury.

Back-of-Cab Access Points (typical)

When climbing onto the deck plate, use the grab handle and access steps as follows:

https://truckmanualshub.com/

1. Grasp the grab handle with both hands. Reach up as far as is comfortable.

IMPORTANT: Climb onto, and down from, back-of-cab access facing in toward the vehicle, as you would on a ladder. Do not climb up or down facing out away from the vehicle.

2. Place one foot on the bottom step and pull yourself up.
3. Place your other foot on the top step.
4. Move your lower hand to a higher position on the grab handle.
5. Step onto the deck plate.

Exiting Back-of-Cab

When climbing down from the deck plate, use the grab handle and access steps as follows:

1. Grasp the grab handle with both hands.
2. Step onto the top step.
3. Move your upper hand to a lower position on the grab handle.
4. Move one foot to the bottom step.
5. Move your upper hand to a lower position on the grab handle.
6. Step to the ground with your upper foot first.

Battery Box Cover

To remove the cover from the frame rail-mounted battery box, release the latches that attach the left chassis fairing panel (if equipped) in front of the battery box. Remove the air fairing panel. See **Group 60** of the *Century Class Trucks Workshop Manual* for instructions. If no air fairing panel is installed, remove the step plate. Pull on the end of each hold-down latch until the end clears the cover-mounted catch. Pivot the latches out of the way, then lift off the cover. When installing the cover, be sure it is positioned properly before fastening the latches.

To remove the cover from the battery box mounted between the frame rails, remove the deck plate and lift the handle on the top of the battery box cover. If equipped, remove the spring pin.

Hood Tilting

The hood can be tilted to a full-open position. A grab handle at the front of the hood provides a hand-hold for hood tilting. A torsion bar helps you to tilt the hood open, and to return it to the operating position. Hood straps prevent the hood from overtravel. In the operating position, the hood is secured to the lower cab side panels by a hold-down latch on each side of the hood.

To Tilt the Hood

1. Apply the parking brakes.
2. Release both hood hold-down latches by pulling the ends outward.

CAUTION

Do not let the hood free-fall to the full-open position. To do so could cause damage to the hood or hood straps.

3. Using the bumper step and grab handle, slowly tilt the hood until the straps support it. See **Fig. 3.8**.

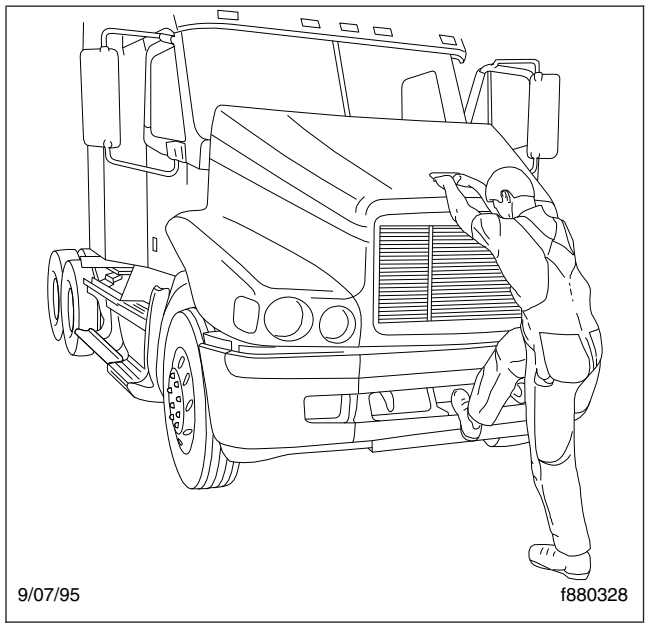

Fig. 3.8, Hood Tilting

To Return the Hood

1. Grasp the grab handle, and lift the hood to the 45-degree position.
2. As the hood goes over center, use the bumper step and grab handle to control the rate of descent to the operating position. See **Fig. 3.8**.

https://truckmanualshub.com/

3. Make sure the hood is flush with the cowl, then secure the hood by engaging both hood hold-down latches.

IMPORTANT: Make sure that both hold-down latches are fully engaged before operating the vehicle.

Keyless Security System, Optional

General Information

The optional Meritor keyless security system is a complete vehicle security system. If installed, it locks and unlocks the doors, protects against theft, and provides security for the driver while sleeping or resting inside the vehicle.

The system consists of the following components:

- A hand-held radio frequency transmitter that looks like a key chain fob. It acts as a remote control for locking the doors, unlocking the doors, or placing the system on alert. Each system allows as many as four different fobs. See **Fig. 3.9**.

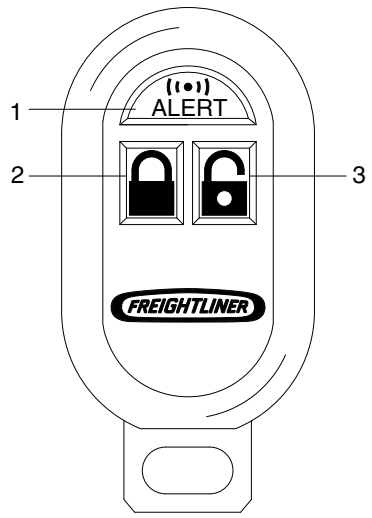

08/30/96 f541289

1. ALERT Button
2. LOCK Button
3. UNLOCK Button

Fig. 3.9, Key Chain Fob (radio transmitter)

- A red system-status LED (light-emitting diode) mounted on the overhead panel above the clock. The LED flashes slow or fast to indicate what state the system is in: armed, alert, alarmed, or violated. It is off when the system is disarmed. See **Fig. 3.10**.

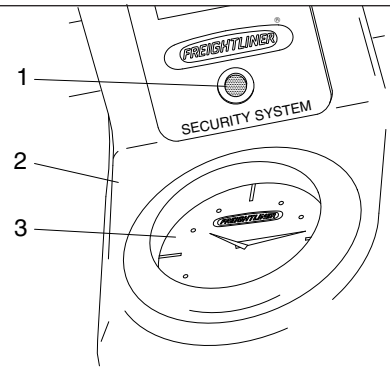

07/01/96 f541288

1. System Status LED
2. Overhead Panel
3. Clock

Fig. 3.10, Red System-Status LED

- A Meritor relay module mounted behind the right-hand B-pillar electrical compartment door that arms and disarms the system and programs the fobs.
- A program switch on the Meritor relay module that places the relay module in the learning mode, which is the only state in which the system can learn fob ID codes. The switch is shown in its normal, or OFF, state (toggle pointing up). See **Fig. 3.11**.
- A security system electronic control module (ECM), also mounted behind the right-hand B-pillar electrical compartment door, that monitors all the entry points, controls the door locks, operates the alarm, and interrupts the power to the engine, as necessary. There is also a PDM (power distribution module) relay module mounted on top of the left-hand side of the ECM.

How It Works

The fob has three push buttons: LOCK, UNLOCK, and ALERT. When a button is pushed, the fob sends a radio frequency signal to the ECM. The signal contains a unique vehicle access code that identifies the individual fob, plus codes that indicate which button has been pushed.

The ECM detects the signal sent by the fob, amplifies it, and converts it to a digital sequence.

If the LOCK button is pressed, the ECM arms the system. It locks the two cab doors, begins to monitor

https://truckmanualshub.com/

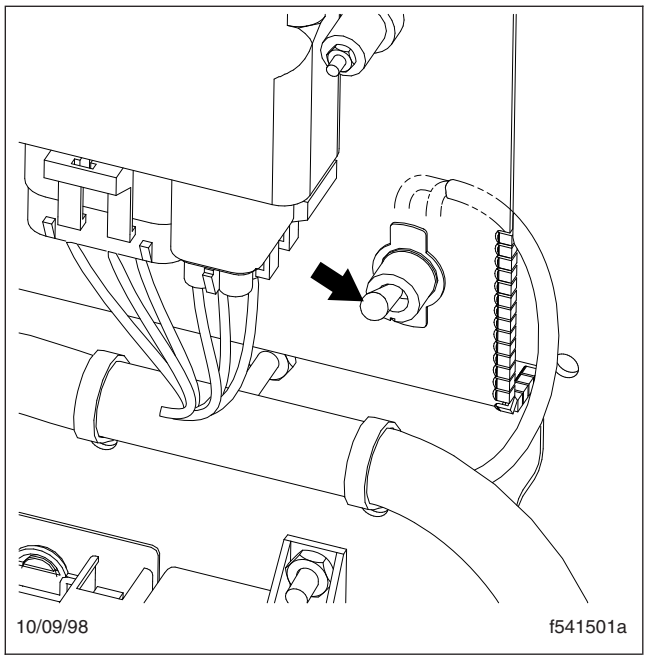

Fig. 3.11, Program Switch

all the entry points (the two cab doors, the sleeper cab access door, and the two baggage doors, as installed), and instructs the relay module to start flashing the system LED at the slow rate. If any entry points are open, the ECM sounds the horn and flashes the cab marker lights twice. If the ignition keyswitch is turned off, the ECM interrupts ignition power to the engine.

The driver may be inside or outside the vehicle. However, if the engine is running at the time the LOCK button is pressed, the system still enters the armed state, except that the engine is not immobilized. This improves security for the occupant as well as comfort while sleeping or resting, because the system is armed, and the heating or air conditioning is operating without draining any batteries.

Once the system is armed, the alarm functions activate whenever one of the entry points is opened. In the alarmed state, the ECM does the following:

- Immobilizes the vehicle by cutting off power between the ignition keyswitch and the engine electronic control unit (ECU).
- Sounds the horn in pulses of 0.5 second on, 0.5 second off.
- Flashes the cab marker lights in pulses of 0.5 second on, 0.5 second off.
- Changes the blink rate of the LED from slow to fast.

If the UNLOCK button is pressed, the ECM disarms the system, if armed. It unlocks all the entry points, discontinues its monitoring of the entry points, instructs the relay module to stop flashing the system LED, and restores ignition power to the engine, if interrupted.

If the ALERT button is pressed, the ECM executes the unlock sequence and also activates the vehicle alarm functions (see above). To cancel an ALERT (to turn off the alarm), press the UNLOCK button.

Once activated, the alarm sequence continues for 30 seconds unless deactivated by pressing the UNLOCK button on the fob. After 30 seconds in the alarmed state, the system automatically enters the violated state.

In the violated state, the horn does not sound and the cab marker lights do not flash, but the engine is still immobilized and the LED continues to blink at the fast rate. The vehicle remains in this state until the UNLOCK button is pressed.

Fob Programming

The security system ECM can store up to four fob identification codes. Once the first fob has been programmed, there are never any vacant memory locations.

IMPORTANT: As a security measure, all fobs must be coded during the same programming sequence. The first fob code is stored in all four memory locations. Taken together, these ensure that only the vehicle owner's fobs can be programmed into the system. If additional fobs are programmed, they overwrite the original code in locations two, three, and four, in that order.

The ECM provides a 20-second time period to program each fob. If the fob is not programmed within this time span, the system will exit the programming sequence.

After each valid code storage sequence, the system LED will indicate the completion of a learning cycle by turning off the LED for approximately 0.5 second, and unlocking the doors.

To program a fob, do the following steps:

1. With the ignition keyswitch turned off, turn the program switch ON (flip the toggle DOWN). See **Fig. 3.11**.

https://truckmanualshub.com/

2. Now turn the ignition keyswitch on. Note that the system LED illuminates continuously. See **Fig. 3.10**. This indicates that the ECM is ready to begin the learning sequence.

NOTE: If the LED does not illuminate continuously at this point, repeat the first two steps.

3. On the fob, press down both the LOCK and UNLOCK buttons at the same time and hold them down for at least three seconds. See **Fig. 3.9**. If the code was learned, the system LED flashes and the doors unlock.

IMPORTANT: If no valid code was received, the system does not erase any stored data in that memory location. This is a security measure to ensure that a fob ID cannot be erased accidentally.

4. Repeat the above step to program additional fobs, up to a total of four.
5. When the programming sequence is over, return the system to normal operation by turning the program switch OFF (flip the toggle UP).

Fob Battery Replacement

1. Open the battery cover on the back of the fob with a suitable coin or other thin piece of metal. Twist off the cover. See **Fig. 3.12**.

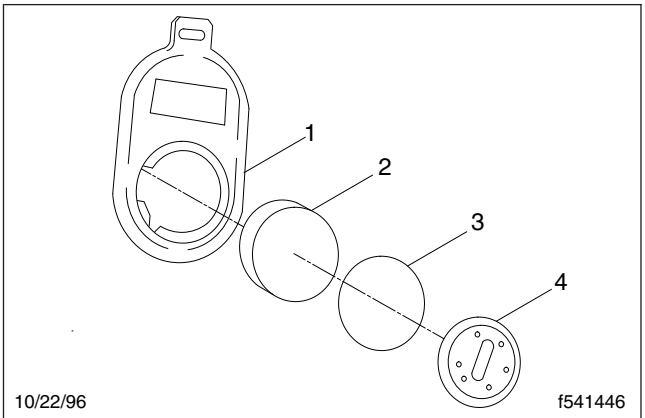

1. Fob
2. Battery
3. O-Ring
4. Battery Cover

Fig. 3.12, Fob Battery

2. Remove the battery and the O-ring installed inside the cover. Save the O-ring for later installation.

IMPORTANT: The battery may contain perchlorate material; special handling may apply, see **www.dtsc.ca.gov/hazardouswaste/perchlorate**.

3. Install the new battery, as follows.
   - 3.1 Insert the new battery into the fob. Make sure the battery is right side up.
   - 3.2 Install the O-ring as removed. If the O-ring is damaged, or there are signs of moisture inside the fob, replace the O-ring.
   - 3.3 Twist on the battery cover and check it to make sure it is tight.
4. Check the fob for correct operation.

Cab Amenities

Waste Bin

To remove the waste bin, slide the waste bin out as far as it will go. Reach in behind the bin and release the bin from the stops on the bin sides. Remove the bin. See **Fig. 3.13**.

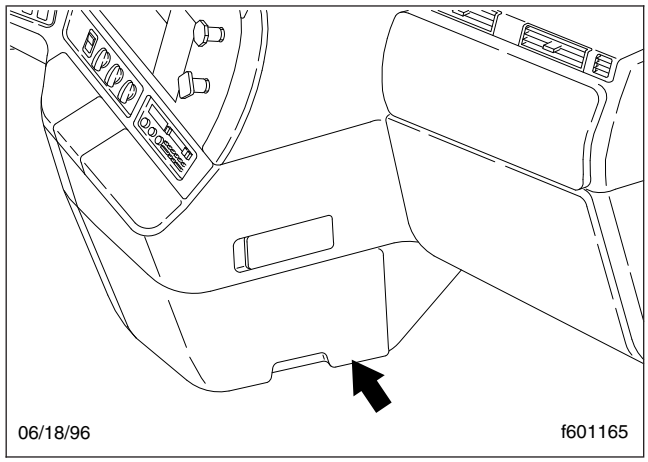

Fig. 3.13, Waste Bin

To install the bin, insert the bin onto the slides, and then slide the bin into place.

Cup Holders

The Century Class vehicle features two cup holders. The driver's cup holder is located to the right of the ash tray on the lower dash panel. The cup holder flips open for use, and can be pivoted into the dash when not needed. See **Fig. 3.14**. The passenger's cup holder pivots out of the lower dash console. See

https://truckmanualshub.com/

Fig. 3.15. The passenger's cup holder can also be pivoted into the console when not in use.

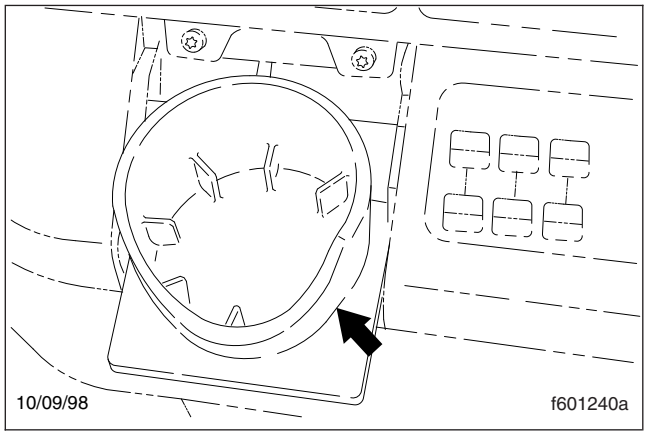

Fig. 3.14, Driver's Cup Holder

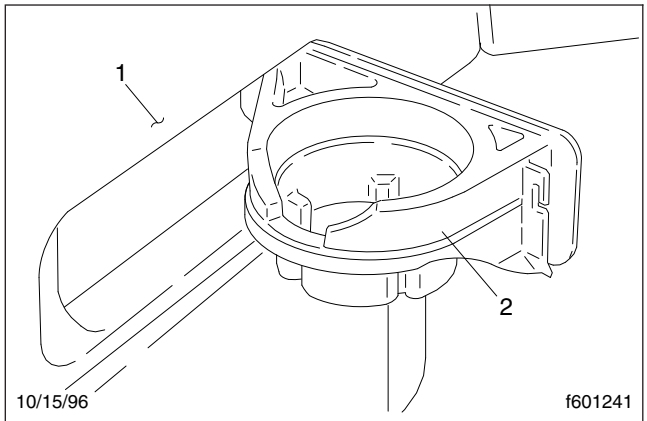

1. Lower B-Panel Dash Assembly
2. Passenger's Cup Holder

Fig. 3.15, Passenger's Cup Holder

Ash Tray and Cigar Lighter

The driver's ash tray and cigar lighter assembly is on the left side of the top of the lower dash panel. See **Fig. 3.16**. There is a hinged cover that pivots backward to allow access to the cigar lighter and to the ash tray. The tray is removable.

Dash Storage Bin

The dash storage bin is located next to the driver's cup holder on the lower dash panel. See **Fig. 3.17**. The bin has a hinged cover, and can be used to store sunglasses.

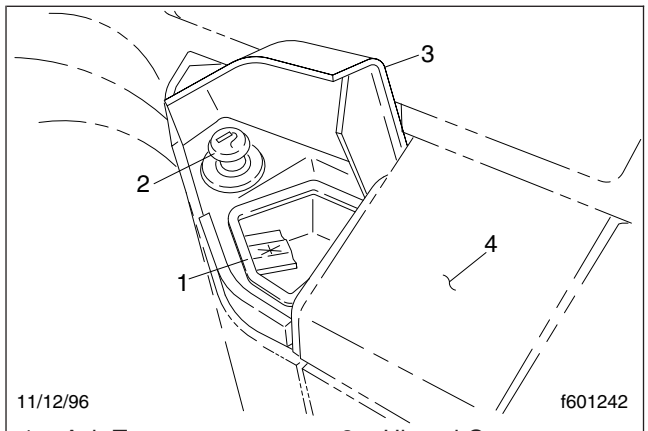

1. Ash Tray
2. Cigar Lighter
3. Hinged Cover
4. Driver's Cup Holder

Fig. 3.16, Ash Tray and Cigar Lighter

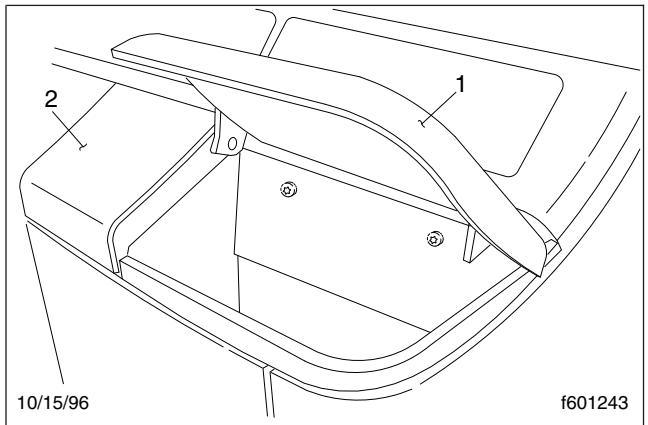

1. Dash Storage Bin Cover
2. Driver's Cup Holder

Fig. 3.17, Dash Storage Bin

Map Holder

An elastic-topped pouch is located above each door. These are intended for holding maps and other items.

Glove Box

Some vehicles have two glove boxes and two small overhead bins, all located in the overhead console assembly. See **Fig. 3.18**. Above the sun visors on both the driver's and the passenger's sides are the glove boxes with latched doors or netted openings. In the middle section of the console assembly are two small bins. The driver's-side bin is often removed and replaced with a CB radio. The grille underneath

https://truckmanualshub.com/

this portion of the console allows the radio's speaker to be heard.

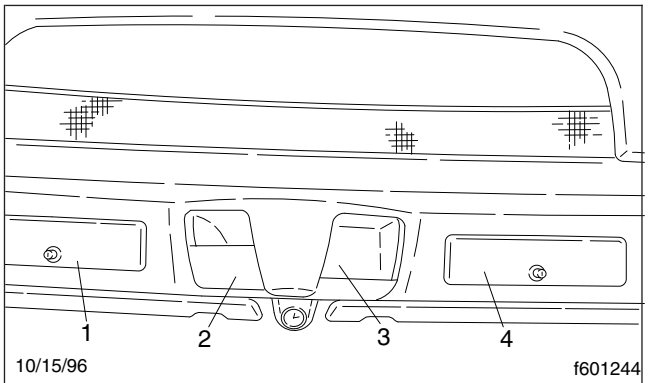

1. Driver's Glove Box
2. Driver's Overhead Storage Bin
3. Passenger's Overhead Storage Bin
4. Passenger's Glove Box

Fig. 3.18, Glove Boxes and Overhead Storage

Overhead Lights

Above both the driver's and the passenger's seats are three oval-shaped lights mounted to the bottom of the overhead console: a red light and two white lights. The red light is mounted nearest to the windshield. Each light is activated by pushing on the lens cover. Also, the center light, a white light, activates when the doors to the vehicle are opened.

Footwell Lights

There are optional red lights mounted underneath the dash on the driver's and the passenger's sides of the vehicle. These lights are activated by a rocker switch on the lower dash panel next to the climate control switches.

Windshield Washer Reservoir

The windshield washer reservoir is located on the left-hand side of the frontwall between the surge tank and the hood. See **Fig. 3.19**.

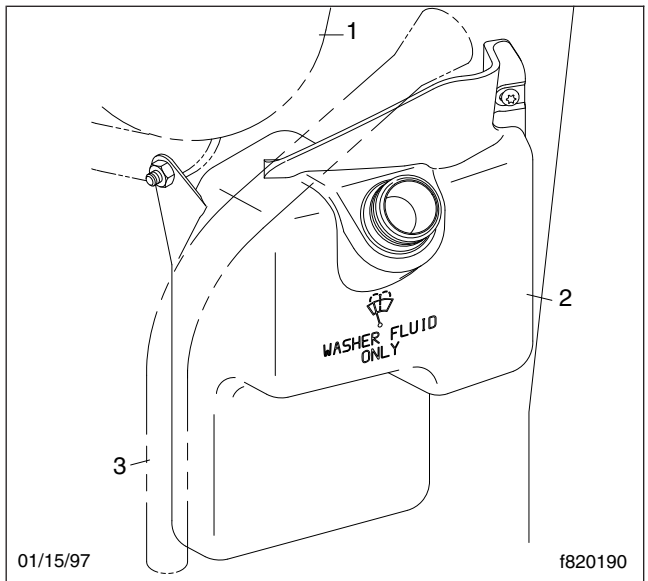

1. Surge Tank
2. Washer Reservoir
3. Drain

Fig. 3.19, Windshield Washer Reservoir

https://truckmanualshub.com/

4

Heater and Air Conditioner

Blend Air Heater and Air Conditioner System 4.1
Water-Valve-Controlled Heater and Air Conditioner System 4.4
Parked HVAC 4.8

https://truckmanualshub.com/

Blend Air Heater and Air Conditioner System

Constant Discharge Temperature Control

The cab heater and air conditioner system is a Constant Discharge Temperature Control (CDTC) system. The CDTC maintains a constant temperature of airflow in the cab regardless of outside air temperature, selected fan speed, engine coolant temperature, or engine coolant flow. Once the temperature control switch is turned to the desired temperature, no other adjustments are necessary. The CDTC system is disabled when the temperature control switch is in the maximum cool or maximum warm position.

Cab Climate Control Panel

The climate control panel allows you to control the heating and air conditioning functions of the heater and air conditioner. See **Fig. 4.1**.

Fan Switch

The fan switch controls the fan speed and forces fresh air or recirculated air through the selected air outlets. The fan switch has eight fan speeds and an off position.

To increase airflow, turn the switch clockwise or to a higher number. To decrease the airflow, turn the switch counterclockwise or to a lower number. Setting the fan switch to the off position disables the air conditioner and places the air source in the fresh air mode.

NOTE: When the fan switch on the cab climate control panel is off and the sleeper air conditioner is on, the cab fan will operate at low speed even though the cab fan switch is in the off position. This is necessary to protect the evaporator in the cab heater and air conditioner system from freezing.

There is a two-second delay between the time the engine is started and the blower is operational. It can take an additional four seconds for the blower to reach high speed. The blower motor performs a self-test immediately after the engine is started, which causes the delay.

Air Selection Switch

The air selection switch allows you to control the flow of air through the face outlets, the floor outlets, the defrost (windshield) outlets, or a combination of these outlets to give you nine air selection modes. See **Fig. 4.2**.

1. **Face Mode:** Directs all airflow through the face or instrument panel outlets.
2. **Selection between Face Mode and Bi-Level Mode:** Directs 75 percent of the airflow through

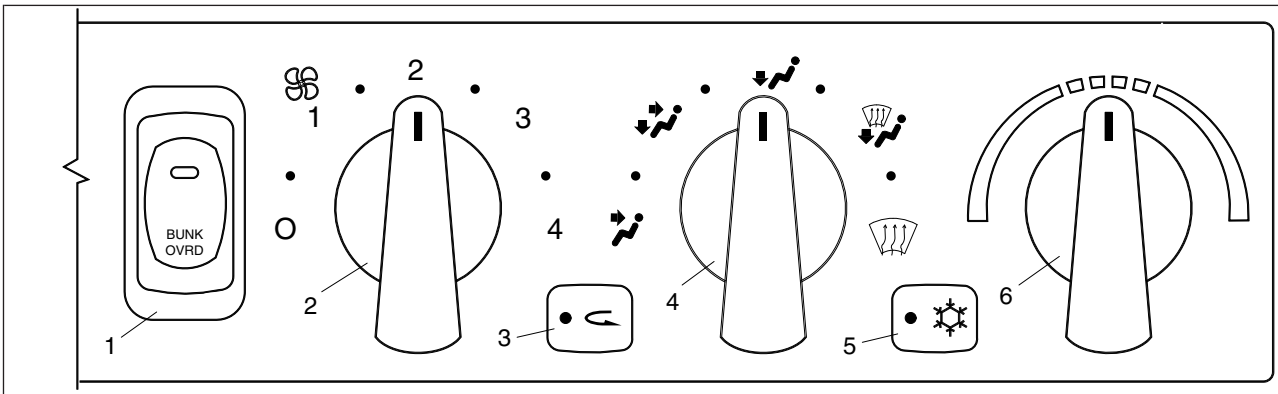

06/21/2001 f610450

1. Bunk Override Switch
2. Fan Switch
3. Recirculation Button
4. Air Selection Switch
5. Air Conditioning Button
6. Temperature Control Switch

Fig. 4.1, CDTC Climate Control Panel

https://truckmanualshub.com/

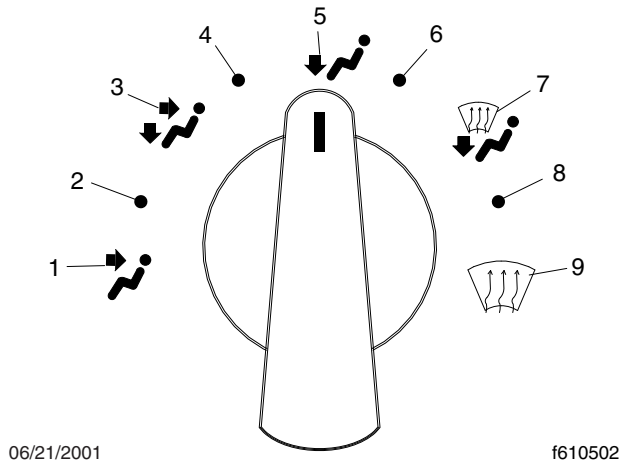

1. Face Mode
2. Selection Between Face Mode and Bi-Level Mode
3. Bi-Level Mode
4. Selection Between Bi-Level Mode and Floor Mode
5. Floor Mode
6. Selection Between Floor Mode and Floor/Defog Mode
7. Defog Mode
8. Selection Between Defog Mode and Defrost Mode
9. Defrost Mode

Fig. 4.2, Air Selection Switch Modes

the face outlets and 25 percent through the floor outlets.

3. **Bi-Level Mode:** Directs the airflow equally to the face outlets and floor outlets.
4. **Selection between Bi-Level Mode and Floor Mode:** Directs 25 percent of the airflow through the face outlets and 75 percent through the floor outlets.
5. **Floor Mode:** Directs all airflow through the floor outlets.
6. **Selection between Floor Mode and Floor/Defog Mode:** Directs 75 percent of the airflow through the floor outlets and 25 percent through the defrost outlets.
7. **Defog Mode:** Directs the airflow equally to the floor outlets and the defrost outlets. The air conditioner automatically turns on in this mode. The recirculation button will not work in this mode.
8. **Selection between Defog Mode and Defrost Mode:** Directs 75 percent of the airflow through the defrost outlets and 25 percent through the floor outlets. The air conditioner automatically turns on in this mode. The recirculation button will not work in this mode.
9. **Defrost Mode:** Directs all airflow through the defrost outlets. The air conditioner automatically turns on in this mode. The recirculation button will not work in this mode.

Temperature Control Switch

The temperature control switch is used to select the desired temperature. On the manual and CDTC climate control panel, turn the switch clockwise or to the red area for warm air. Turn the switch counterclockwise or to the blue area for cool air.

Air Conditioning

The air conditioner cools and dehumidifies the air inside the cab. Press the air conditioning button to turn the air conditioner on and off. See **Fig. 4.3**.

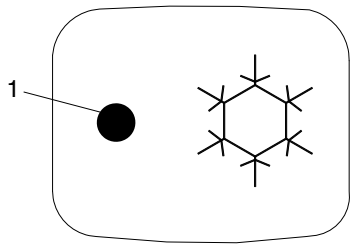

1. Amber Indicator

Fig. 4.3, Air Conditioning Button

When the air conditioner is operating, the amber indicator on the air conditioning button will be on whether the request for air conditioning comes from the cab climate control panel or the sleeper climate control panel. When the instrument panel lights are on, the snowflake indicator on the air conditioning button will be on.

The air conditioner will be automatically disabled when:

- The outside air temperature is low enough to make air conditioning ineffective;
- The engine is running at low rpm;
- Specific conditions exist that result in the heater and air conditioner system going into protection mode.

https://truckmanualshub.com/

Recirculation

The recirculation mode limits the amount of outside air entering the cab. Press the recirculation button to prevent dusty or smoky air from entering the cab. See **Fig. 4.4**. The recirculation mode can also decrease the time required to cool or heat the cab interior during extreme outside temperature conditions. When the recirculation mode is on, the amber indicator on the recirculation button will be on.

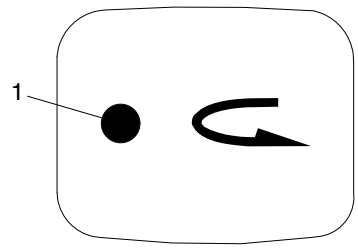

06/21/2001 f610504

1. Amber Indicator

Fig. 4.4, Recirculation Button

The recirculation button will not work when the air selection switch is in one of the following modes:

- defog mode
- the selection between defog mode and defrost mode
- defrost mode

NOTE: To prevent the buildup of fumes or odors and to prevent oxygen depletion inside the cab, the system switches from full recirculation mode to partial recirculation mode after 20 minutes. In extremely dusty or smoky conditions, the partial recirculation mode can be overridden by pressing the recirculation button twice to obtain full recirculation mode. This resets the 20-minute timer.

Bunk Override Switch, Optional

The bunk override (BUNK OVRD) switch allows the driver to remotely control the fan speed and temperature settings in the sleeper. See **Fig. 4.1**. Press the upper half of the bunk override switch to override the sleeper settings with the cab settings. The amber indicator on the switch is on when the bunk override mode is on. If the fan speed or temperature setting on the sleeper climate control panel is adjusted when the bunk override mode is on, the bunk override mode will be canceled.

When the heating and air conditioning system is in the bunk override mode, the cab climate control panel can be adjusted without affecting the sleeper settings. To reset the sleeper settings, set the fan speed and temperature settings on the cab climate control panel to the desired sleeper settings and press the upper half of the bunk override switch again. The cab climate control panel can again be adjusted without affecting the sleeper settings.

Press the lower half of the bunk override switch to cancel the override mode. After the override mode is canceled, the sleeper heater and air conditioner system will operate from the sleeper fan speed and temperature settings and the amber indicator will be off.

Sleeper Climate Control Panel

The sleeper heater and air conditioner system features Constant Discharge Temperature Control (CDTC). The sleeper climate control panel is shown in **Fig. 4.5**. The CDTC maintains a constant temperature of airflow in the sleeper regardless of outside air temperature, selected fan speed, engine coolant temperature, or engine coolant flow. Once the temperature control switch is turned to the desired temperature, no other adjustments are necessary.

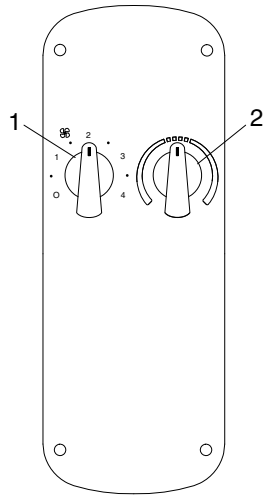

06/21/2001 f610503

1. Fan Switch
2. Temperature Control Switch

Fig. 4.5, Sleeper Climate Control Panel

https://truckmanualshub.com/

Fan Switch

The fan switch controls the sleeper heater and air conditioner system fan speed. The sleeper climate control panel has eight fan speeds and an off position. To increase airflow, turn the switch clockwise or to a higher number. To decrease the airflow, turn the switch counterclockwise or to a lower number.

NOTE: When the cab air conditioner is on, the sleeper fan will operate at low speed even though the sleeper fan switch is in the off position. This is necessary to protect the evaporator in the sleeper heater and air conditioner system from freezing.

Temperature Control Switch

The temperature control switch is used to select the desired temperature in the sleeper. Turn the switch clockwise or to the red area for warm air. Turn the switch counterclockwise or to the blue area for cool air.

The air conditioner automatically turns on when necessary to maintain the selected temperature in the sleeper. If the sleeper air conditioner automatically turns on when the cab air conditioner is on, the cab air conditioner fan speed and temperature settings will override the sleeper air conditioner settings.

The CDTC system is disabled when the temperature control switch is in the maximum cool or maximum warm positions.

The bunk override switch allows the driver to remotely control the temperature and fan speed settings in the sleeper. The bunk override mode can be canceled by changing the sleeper fan speed or temperature setting. After the override mode is canceled, the sleeper heater and air conditioner system will operate from the sleeper fan speed and temperature settings and the amber indicator on the switch will be off.

Air Outlets

The face outlets on the instrument panel have louvers that can be moved right and left, and up and down. Move the louvers to the desired location or to close the outlet. The defrost (windshield) outlets and the outlets that are directed at the doors are not adjustable.

The sleeper has one or two air outlets on the right side of the cab, depending on the height of the cab. The sleeper air outlet pivots from side to side and has louvers that can be moved up and down or closed.

Water-Valve-Controlled Heater and Air Conditioner System

General Information

The cab climate control panel allows you to control all of the heating, air conditioning, defrosting, and ventilating functions. See **Fig. 4.6** or **Fig. 4.7**.

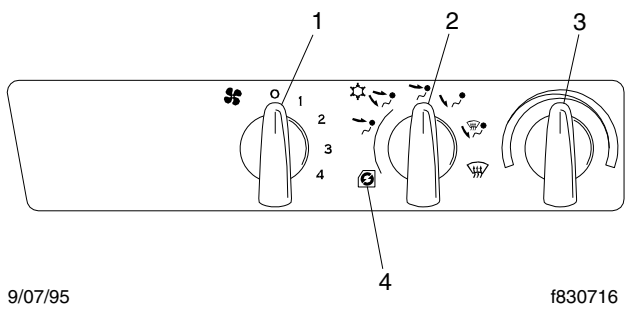

1. Fan Switch
2. Air Selection Switch
3. Temperature Control Switch
4. Maximum Air Conditioning

Fig. 4.6, Climate Control Panel, Heater and Air Conditioning

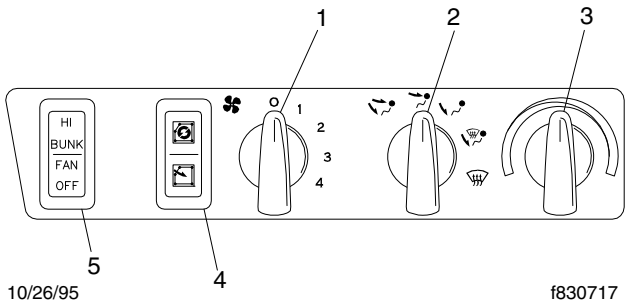

1. Fan Switch
2. Air Selection Switch
3. Temperature Control Switch
4. Fresh Air/Recirculation Switch
5. Bunk Fan Switch

Fig. 4.7, Climate Control Panel, Heater Only

A four-speed fan forces fresh or recirculated air to any selected air outlets at the windshield, door windows, dashboard face, and cab floor.

https://truckmanualshub.com/

An air selection switch controls the direction of warm or cool air to the face and feet, face only, feet only, feet and windshield, or windshield only (defrost).

A temperature control switch is used to select the desired temperature. Turn the switch counterclockwise for cool air, or clockwise for warm air.

All of the dash-face outlets have adjustable louvers that pivot right, left, up, and down. The outlets can be closed by moving the louvers all the way down. Windshield defrost outlets and the passenger's door window defrost outlet have nonadjustable louvers. The bunk outlet (at the right-hand rear corner of the bunk) has two sets of vertical louvers that operate like the horizontal dash-face louvers.

The sleeper heater and air conditioner is installed in the right-side baggage compartment and uses the cab's refrigerant system for air conditioner operation. The sleeper heater and air conditioner is equipped with a separate evaporator coil, expansion valve, and fan. It is also equipped with its own heater core and water valve, independent of the cab heater. The sleeper climate control panel is mounted on the right rear wall or the rear overhead storage compartment. See **Fig. 4.8**.

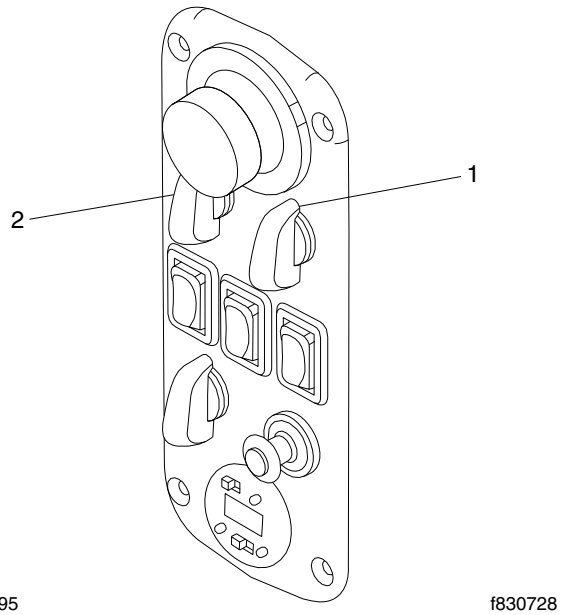

1. Temperature Control Switch
2. Fan Switch

Fig. 4.8, Sleeper Climate Control Panel

NOTE: Shutting off the heater supply gate valve, if equipped, on the engine limits the ability to control air conditioning temperature in the cab and in the sleeper. With the valve shut off, warm coolant is no longer available from the engine and the outlet air temperature controls can't be used to change air temperature.

A fresh air/recirculation switch is standard equipment when there is no air conditioning. See **Fig. 4.7**. This control is an option when air conditioning is ordered. It allows the cab to be ventilated with either fresh or recirculated air. When the air selection switch is rotated to the maximum air conditioning position, the system uses *only*recirculated air, regardless of whether fresh or recirculated air has been selected. See **Fig. 4.6**.

When the air selection switch is set to air conditioning and recirculated air has been selected, the system functions the same as when the air selection switch is set at maximum air conditioning.

The fan bunk switch on the cab climate control panel overrides the sleeper climate control panel. See **Fig. 4.7**. For increased ventilation in the sleeper, put the switch in the HI position. For normal fan and temperature operation, put the switch in the middle position. To turn the fan in the sleeper off, put the switch in the OFF position.

NOTE: When the bunk fan switch is in the OFF position, the sleeper temperature control will default to the heat mode. The sleeper fan will blow hot air when any air conditioning mode is selected. To operate the temperature controls, move the bunk fan switch to the middle position.

A cab exhaust system is included with sleeper cabs. When the climate control unit is set for fresh air, 300 cubic feet per minute of air is provided to the sleeper cab and exhausted through a vent in the left rear area of the sleeper. When the system is activated, fresh air rapidly displaces stale air as the cab pressurizes.

IMPORTANT: To prevent the buildup of fumes or odors inside the cab (for example, from smoking), *do not* operate the heater and air conditioning system in a recirculation mode for more than 20 minutes.

Defogging and Defrosting Using Fresh Air

1. Turn the temperature control switch all the way clockwise for warm air, the fan switch to off and,

https://truckmanualshub.com/

if equipped, the bunk fan switch to off before starting the engine.

2. Remove any ice or snow from the outside of the windshield, door windows, and fresh air inlet grille.
3. With the engine at operating temperature, turn the fan switch to 4, the highest speed. See **Fig. 4.9**. Leave it in this position for 30 seconds. This will clear the system of moist air.

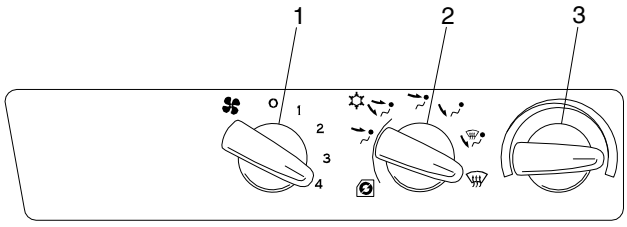

9/07/95 f830718

1. Fan Switch at Highest Speed
2. Air Selection Switch at Defrost
3. Temperature Control Switch at Warm

Fig. 4.9, Defogging and Defrosting Settings

4. Move the air selection switch to the defrost (windshield) position. In this position warm, dry air is directed to the windshield.

NOTE: The air conditioner, if equipped, is automatically engaged in the defrost mode. This dries the air.

Heating

1. With the engine at operating temperature, move the temperature control switch all the way clockwise for heat. See **Fig. 4.10**.
2. Turn on the fan switch to the desired speed.
3. Move the air selection switch to the desired setting.

IMPORTANT: If the windows start to fog, move the air selection switch to defrost (windshield) and make sure the fan is on. To defog the driver's door window, turn the extreme left dashface outlet to direct airflow to the upper left.

NOTE: In mild weather the fan switch can be kept off since forward motion of the vehicle will provide airflow through the heater.

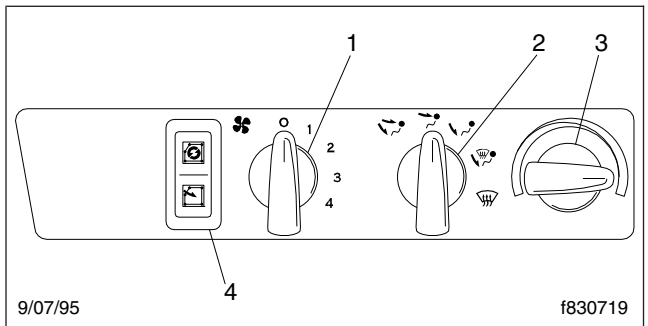

9/07/95 f830719

1. Fan Switch
2. Air Selection Switch
3. Temperature Control Switch at Warm
4. Fresh Air/Recirculation Switch

Fig. 4.10, Heating Settings

4. If the vehicle has a sleeper climate control panel, set the controls as desired. Refer to "Heating, Auxiliary Heater and Air Conditioner."
5. When a comfortable temperature has been reached, adjust the fan switch setting and temperature control as needed to maintain the temperature.

IMPORTANT: To prevent the buildup of fumes or odors inside the cab (for example, from smoking), *do not* operate the heater and air conditioning system in a recirculation mode for more than 20 minutes.

Air Conditioning

IMPORTANT: Operate the air conditioner at least five minutes each month, even during cool weather. This helps prevent drying and cracking of tubing seals, reducing refrigerant leaks in the system. Operate the air conditioner only after the engine compartment is warm, and the interior of the cab is 70°F (21°C) or higher. During cold weather, the heater can be operated at the same time to prevent discomfort.

1. If the cab is hot inside, temporarily open the windows to let the hot air out.
2. Move the air selection switch to the non-air conditioning face only position and turn the fan switch off before starting the engine. See **Fig. 4.11**.
3. Start the engine.

https://truckmanualshub.com/

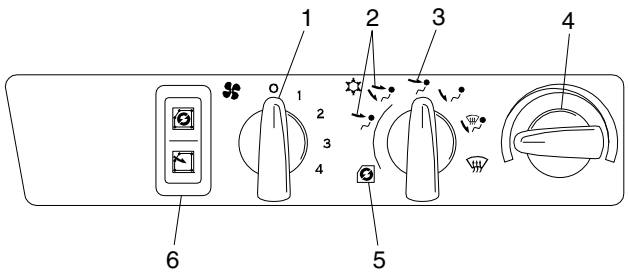

1. Fan Switch
2. Air Conditioning Settings
3. Face Only Setting (non-air conditioning)
4. Temperature Control Switch
5. Maximum Air Conditioning
6. Fresh Air/Recirculation Switch

Fig. 4.11, Air Conditioning Settings

4. Move the air selection switch to either one of the air conditioning settings. With the control at either one of the air conditioning settings, fresh air is drawn into the cab. With the control at maximum air conditioning, the air inside the cab is recirculated.

IMPORTANT: If the outside air is dusty or smoky, set the air selection switch at maximum air conditioning and keep the windows and vent closed to prevent drawing in dust or smoke. On vehicles with the fresh air/recirculation switch, recirculated air can be selected either with the switch or by setting the air selection switch to maximum air conditioning.

5. Move the temperature control switch counterclockwise for cool air. In this position, no heat is given off by the heater.
6. Turn the fan switch to the highest speed, 4.
7. As soon as cool air is flowing from the dashboard outlets, close the windows. Adjust the fan switch setting as desired.
8. If the air from the vents is too cold, move the temperature control switch clockwise for warmer air flow.

IMPORTANT: To prevent the buildup of fumes or odors inside the cab (for example, from smoking), *do not* operate the heater and air conditioning system in a recirculation mode for more than 20 minutes.

Fresh Air

1. Move the fresh air/recirculation switch to the fresh air position. Move the air selection switch to the desired position. See **Fig. 4.7**.
2. Move the temperature control switch counterclockwise for no heating or clockwise for heat.
3. Set the fan switch at the desired speed.

IMPORTANT: To prevent the buildup of fumes or odors inside the cab (for example, from smoking), *do not* operate the heater or ventilation system in a recirculation mode for more than 20 minutes.

Heating, Sleeper Heater and Air Conditioner

1. With the engine at operating temperature, set the bunk fan switch on the cab climate control panel to the middle position. See **Fig. 4.7**.

   When the bunk fan switch in the middle position, full control is given to the sleeper heater and air conditioner climate control panel. The bunk fan is off when the bunk fan switch is in the OFF position. The bunk fan is on high when the bunk fan switch is in the HI position.

NOTE: Whenever the refrigerant compressor is operating, the fan will always run at a very low speed, even with the fan switch in the off position. This prevents ice from forming on the evaporator, especially during humid weather.

2. Turn the temperature control switch all the way clockwise to heat. Turn the fan switch to position 3. See **Fig. 4.8**.
3. When the sleeper compartment heats to the desired temperature, turn the temperature control switch counterclockwise to adjust outlet air temperature. Then, turn the fan switch to adjust the air flow level.

   The system will automatically maintain the selected outlet air temperature.
4. When heat is not desired, turn the temperature control switch counterclockwise and turn the fan off.

IMPORTANT: To prevent the buildup of fumes or odors inside the sleeper (for example, from

https://truckmanualshub.com/

smoking) *do not* operate the heater and air conditioning system in a recirculation mode for more than 20 minutes.

Air Conditioning, Sleeper Heater and Air Conditioner

1. Turn on the cab air conditioner (refer to "Air Conditioning") and set the bunk fan switch on the cab climate control panel to the middle position. See **Fig. 4.7**.

   When the bunk fan switch in the middle position, full control is given to the sleeper heater and air conditioner climate control panel. The bunk fan is off when the bunk fan switch is in the OFF position. The bunk fan is on high when the bunk fan switch is in the HI position.

2. Turn the temperature control switch on the sleeper climate control panel all the way counterclockwise to cool. Turn the fan switch to position 3. See **Fig. 4.8**.

3. When the sleeper compartment cools to the desired temperature, turn the temperature control switch clockwise to adjust outlet air temperature. Then, turn the fan switch to adjust the air flow level.

   The system will automatically maintain the selected outlet air temperature.

4. When air conditioning is not desired, turn the temperature control switch clockwise and turn the fan off.

IMPORTANT: To prevent the buildup of fumes or odors inside the sleeper (for example, from smoking) *do not* operate the heater and air conditioning system in a recirculation mode for more than 20 minutes.

NOTE: Whenever the refrigerant compressor is operating, the fan will always run at a very low speed, even with the fan switch in the off position. This prevents ice from forming on the evaporator, especially during humid weather.

Parked HVAC

The parked HVAC system consists of a compact electrical 3000-BTU air conditioning system, and a diesel-fired heater unit.

Overview

The Bergstrom NITE (No Idle Thermal Environment) parked, or no-idle, air conditioning system is a compact, electrically powered, 3000-BTU system. It is designed to provide a means of air conditioning to the sleeper area without having the engine running. It is completely self-contained, and runs on 12-volt deep-cycle batteries. The system is designed to maintain cool air in the sleeper interior. For optimal operation, the curtain between the cab and the sleeper must be closed when using the A/C system. The parked A/C unit will not cool down a hot sleeper that has been sitting in the sun without the vehicle A/C running. If the interior temperature is higher than desired, start the engine and run the vehicle A/C system until the desired sleeper temperature is achieved. This will help cool the sleeper to a temperature that the parked A/C system can maintain. Once the sleeper temperature is lowered, the system will maintain a comfortable setting.

The A/C unit is located under the lower bunk in the sleeper compartment. The unit gets its intake air from the under-bunk area through a grate in the top panel. An air intake grille is located on the front panel of the lower bunk. The outlet ducting runs from the left side of the unit to an outlet near the bunk occupant’s face on the back wall of the sleeper. It is important to keep the air intake grille, and the area under the bunk, free of objects that might block air flow or put objectionable odors into the cooling air. Air for the condenser is taken in from under the cab and exhausted through another opening in the cab floor.

The system receives power from four deep-cycle batteries located between the frame rails. These batteries are completely isolated from the starting batteries to keep the starting batteries from being drawn down during operation.

The heater unit is located under the lower bunk in the sleeper compartment next to the A/C unit. The unit gets its intake air through a duct attached to a grille located on the right side of the front panel of the lower bunk. The outlet ducting runs from the back of the unit to a grille on the left side of the front panel of the lower bunk.

Operation

IMPORTANT: Before operating the Parked HVAC system, make sure that the intake and outlet vents for the A/C and heater units are

https://truckmanualshub.com/

clear. Blocked vents will hamper the operation of the unit.

The control panel for the parked A/C and heater is located on the back wall of the sleeper near the left side. It has a temperature control dial, and a four-position mode selector switch. Turn the temperature control dial to the left for cooling, and to the right for heat. See **Fig. 4.12**. See **Table 4.1** for a description of the function of the mode switch.

The system must be turned off whenever it is not in use, or the batteries may not charge properly. After using the system, turn the mode switch to the OFF position, even if the unit is not running.

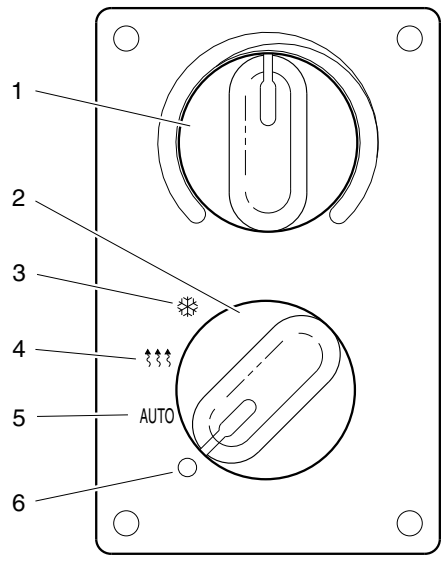

08/29/2007 f831760

1. Temperature Control Dial
2. Mode Switch
3. A/C Only
4. Heat Only
5. AUTO
6. Off

Fig. 4.12, Parked A/C and Heater Control Panel

Parked A/C and Heater Mode Switch Operation	
Mode	**Function**
Off	Turns the unit off.
AUTO	Allows the unit to automatically heat or cool the sleeper, depending on the temperature setting and the sleeper temperature. Adjusts the compressor, heater, and fans to keep temperature constant.

Parked A/C and Heater Mode Switch Operation	
Mode	**Function**
Heat Only	Allows only the heat portion of the system to run. Adjusts the heater only to keep the temperature constant.
A/C Only	Allows only the A/C portion of the system to run. Adjusts compressor and fans only to keep the temperature constant.

Table 4.1, Parked A/C and Heater Mode Switch Operation

https://truckmanualshub.com/

5

Seats and Seat Belts

Seats 5.1
Seat Belts and Tether Belts 5.6
Sleeper Compartment Restraints 5.8
Supplemental Restraint System, Optional 5.9
Air Bag, Optional 5.9
SPACE System, Optional 5.10

https://truckmanualshub.com/

Seats

General Information

Unless otherwise noted, all seat adjustments should be made while seated and before the engine is started.

Due to the maximum adjustability of mid- and high-back air suspension seats, it is possible to combine the seat back recline adjustment and the seat slide adjustment so that the seat back contacts the back-wall. It is the responsibility of the driver to adjust the seat to prevent damage to the seat and the cab interior.

⚠ WARNING

Keep hands, tools, and other objects away from the scissor points under the seats. Failure to do so could cause personal injury.

Seat Adjustments

The following is a description of adjustments that can be made to various Freightliner-installed seats. Not all seats have all of the adjustments listed below. See **Fig. 5.1**.

1. Back Cushion Tilt: This adjustment enables the back cushion to pivot forward or backward.
2. Lumbar Support: Lumbar support changes the shape of the seat back to give more or less support to the occupant's lumbar (lower back) area. This adjustment is either mechanical or air controlled, depending on make and model of the seat.
3. Isolator: This feature (also referred to as back-slap isolator or Chugger-Snubber®) reduces the amount of road shock by isolating the occupant from the motion of the vehicle, and allowing the upper seat to move in a simple pendulum motion. A lockout feature is used whenever the isolator is not desired.

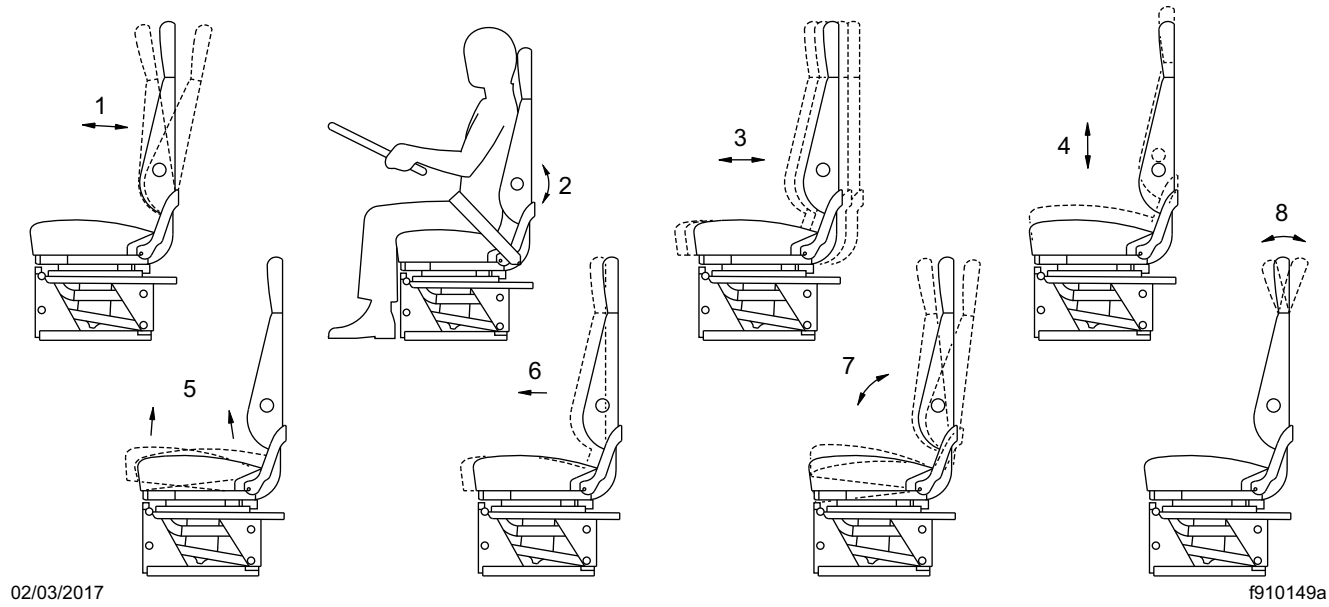

1. Back Cushion Tilt
2. Lumbar Support
3. Isolator Feature
4. Height Adjustment
5. Bottom Cushion Angle (fore and aft cushion height)
6. Fore and Aft Seat Adjustment (seat track adjustment)
7. Seat Tilt
8. Upper Back Cushion

Fig. 5.1, Seat Adjustments

4. Height Adjustment: The entire seat moves up or down when adjusting the height. The adjustment

https://truckmanualshub.com/

is either manually or air controlled, depending on the make of the seat.

5. Bottom Cushion Angle or Fore and Aft Bottom Cushion Height: This feature enables the occupant to raise or lower the front or back of the bottom cushion. This adjustment is easier to perform when all weight is removed from the seat.
6. Fore and Aft Seat or Seat Track Adjustment: The entire seat moves forward or backward when this adjustment is made.
7. Seat Tilt: When this adjustment is made, the seat assembly (back and bottom cushions) tilts forward or backward.
8. Upper Back Cushion Adjustment: When this adjustment is made, the upper back cushion changes angle to provide upper back support.
9. Weight Adjustment: On those seats with weight adjustment, the feature is fully automatic. When you sit on the seat, a leveling valve places you in the center of the ride zone. Additional adjustments are possible by using the height adjustment feature.

EzyRider® Seat

For seat adjustment controls on vehicles built before November 28, 2005, see **Fig. 5.2**. For seat adjustment controls on vehicles built on or after November 28, 2005, see **Fig. 5.3**.

Back Cushion Tilt

To tilt the back cushion, raise the back cushion tilt lever and lean forward or backward. Release the lever to lock the cushion in place.

Lumbar Support

To adjust the amount of support for your lower back, use the lumbar support switch or lever on the side of the seat.

Isolator

To engage the isolator, push in on the isolator lever. To lock out the isolator, pull the isolator lever out to the first stop.

Fore and Aft Seat Adjustment

Pull the fore and aft seat adjustment lever out to the second stop and slide the seat forward or backward to the desired position.

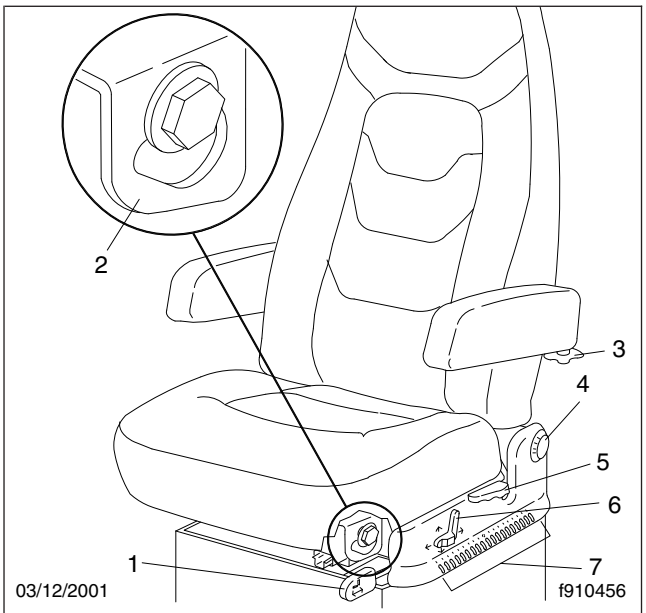

1. Isolator and Fore/Aft Seat Adjustment Lever
2. Bottom Cushion Angle Guide
3. Armrest Adjustment Knob
4. Back Cushion Tilt Position Indicator
5. Back Cushion Tilt Lever
6. Height Adjustment and Lumbar Support Lever
7. Fore/Aft Seat Position Indicator

Fig. 5.2, EzyRider Seat Adjustment Controls (Vehicles Built Before November 28, 2005)

Height Adjustment

To raise or lower the seat, use the height adjustment switch or lever on the side of the seat.

Bottom Cushion Angle

To adjust the bottom cushion angle, pull the bottom cushion up and forward or down and back. The bottom cushion angle is controlled by the guides on each side of the seat.

Seat Position Indicators

Seats installed in vehicles built before November 28, 2005 are equipped with seat position indicators. A back cushion tilt position indicator and a fore/aft seat position indicator allow the driver to see where the seat is adjusted within the adjustment ranges.

Armrest Angle (optional armrests)

To adjust the vertical angle of the armrest, turn the adjustment knob on the underside of the armrest.

https://truckmanualshub.com/

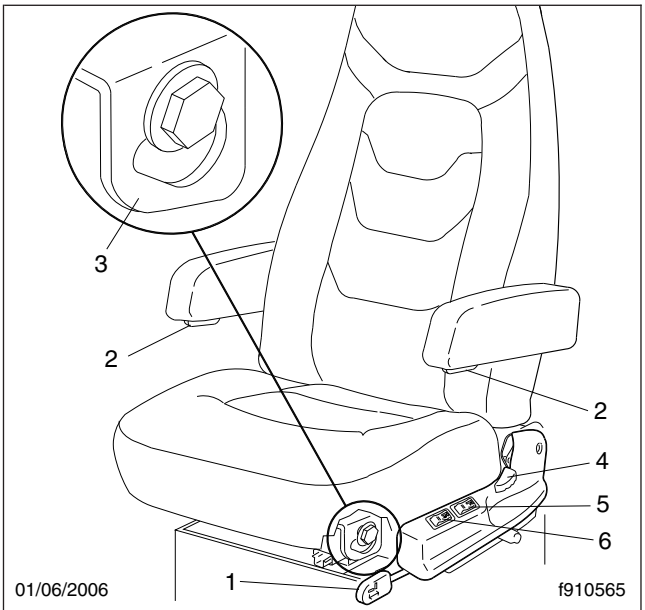

1. Isolator and Fore/Aft Seat Adjustment Lever
2. Armrest Adjustment Knob
3. Bottom Cushion Angle Guide
4. Back Cushion Tilt Lever
5. Lumbar Support Switch
6. Height Adjustment Switch

Fig. 5.3, EzyRider Seat Adjustment Controls (Vehicles Built on or After November 28, 2005)

Freightliner/Bostrom Seat

See **Fig. 5.4** for seat adjustment controls.

Back Cushion Tilt

To tilt the back cushion, lean forward slightly to remove pressure from the cushion and hold the back cushion tilt lever rearward. Lean backward slowly to the desired position and release the lever to lock the cushion in place.

Weight and Height Adjustment

To raise the seat, press the upper portion of the weight and height adjustment switch. To lower the seat, press the lower portion of the switch.

Isolator

To engage the isolator, put the isolator lever in the center position. Lock out the isolator by moving the lever to the right.

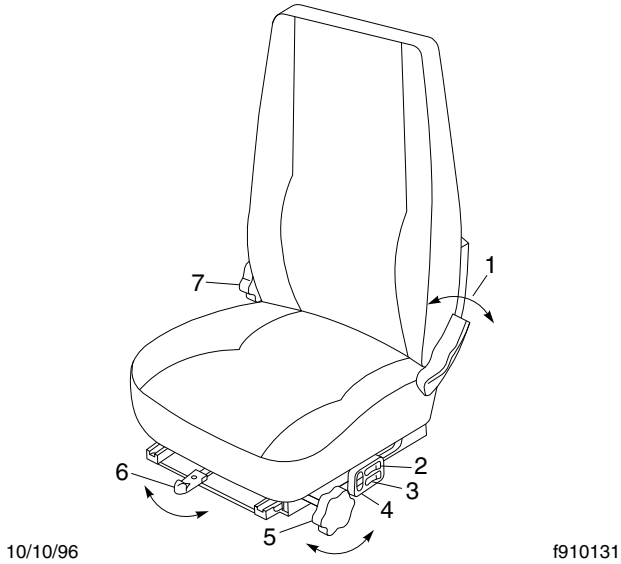

1. Back Cushion Tilt Lever
2. Lumbar Support Switch (LSO models)
3. Damper Adjustment Switch
4. Weight and Height Adjustment Switch
5. Bottom Cushion Tilt Knob
6. Fore and Aft Adjustment and Isolator Lever
7. Lumbar Support Knob (non-LSO models)

Fig. 5.4, Freightliner/Bostrom Seat Adjustment Controls

Fore and Aft Seat Adjustment

Hold the fore and aft adjustment lever to the left and slide the seat forward or backward to the desired position.

Bottom Cushion Tilt Adjustment

Rotate the bottom cushion tilt knob to increase or decrease bottom cushion tilt.

Lumbar Support

To increase lumbar support on LSO models, press the plus sign on the lumbar support switch. To decrease lumbar support on LSO models, press the minus sign on the switch. To increase lumbar support on non-LSO models, rotate the lumbar support knob forward. To decrease lumbar support on non-LSO models, rotate the knob rearward.

Damper Adjustment

Press the damper adjustment switch to adjust the damper.

https://truckmanualshub.com/

Dura-Form Fleetcruiser Seat

See **Fig. 5.5** for seat adjustment controls.

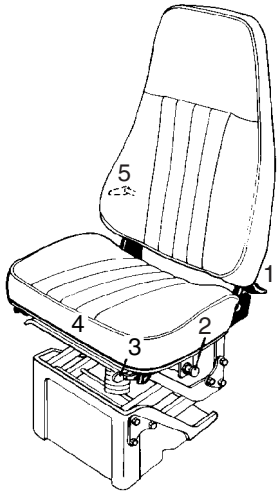

1. Back Cushion Tilt Handle
2. Height Adjustment Knob
3. Isolator and Fore-Aft Adjustment Lever
4. Seat Cushion Adjustment
5. Lumbar Support Lever

Fig. 5.5, Dura-Form Fleetcruiser Seat Adjustment Controls

Back Cushion Tilt

To tilt the back cushion through a range of 10 degrees, push down on the back cushion tilt handle. Move the back cushion to the desired position and release the handle.

Height Adjustment

Push the height adjustment knob in to inflate the suspension and raise the seat. Pull the knob out to deflate the suspension and lower the seat.

Isolator and Fore-Aft Seat Adjustment

Move the fore-aft adjustment lever to the left to adjust the seat to the desired fore-aft position. Move the same lever to the center position to lock out the isolator feature. Move the lever to the right to engage the isolator.

Seat Cushion Adjustment

To put the seat cushion in the upper position, lift upward on the front of the cushion, then push rearward. To put the seat cushion in the lower position, pull forward and then push downward.

Lumbar Support

Move the lumbar support lever to any of the three positions as desired.

National 2000 Series Seat

See **Fig. 5.6** for seat adjustment controls.

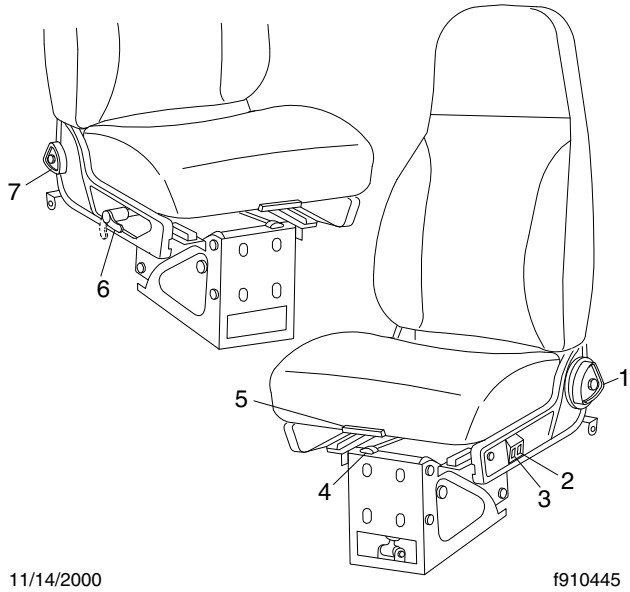

1. Back Cushion Tilt Knob
2. Lumbar Support Switch
3. Height Adjustment Switch
4. Fore and Aft Seat Adjustment Lever
5. Bottom Cushion Front Height Adjustment Handle
6. Isolator Handle
7. Rear Cushion Adjustment Knob

Fig. 5.6, National 2000 Series Seat Adjustment Controls

Back Cushion Tilt

To tilt the back cushion, turn the back cushion tilt knob until the desired position is reached.

Height Adjustment

To raise or lower the height of the seat, use the height adjustment switch on the side of the seat.

Fore and Aft Seat Adjustment

To adjust the fore and aft position of the entire seat, move the fore and aft seat adjustment lever to the left and slide the seat forward or backward to the desired position. Move the lever back to its original position to lock the seat in place.

https://truckmanualshub.com/

Rear Cushion Adjustment

To adjust the height of the rear of the seat cushion, remove your weight from the seat and turn the rear cushion adjustment knob to one of three positions.

Isolator

Also called a Chugger Snubber®, the isolator reduces the amount of road shock by isolating the occupant from the motion of the vehicle and allowing the seat to move in a simple pendulum motion. To use the isolator feature, turn the isolator handle to the horizontal position. Turn the isolator handle down when the isolator feature is not desired.

Lumbar Support

To adjust the lumbar support, use the lumbar support switch on the side of the seat to give more or less support to your lower back.

Bottom Cushion Front Height

To adjust the height of the front of the bottom cushion, lift the bottom cushion front height adjustment handle, and pull forward or push back to the desired setting.

ABTS Seat

See **Fig. 5.7** for ABTS (all-belts-to-seat) seat adjustment controls.

Cushion Extension Adjustment

Move the cushion extension adjustment lever to the left and move the seat cushion to the desired position.

Track Adjustment

To adjust the fore-and-aft position of the entire seat, lift the track adjustment handle and slide the seat to the desired position.

Isolator

Pull up the isolator control handle to lock out the isolation movement.

Lumbar Adjustment

Push the middle rocker switch to adjust the lower lumbar bag. Push the forward switch to adjust the upper lumbar bag.

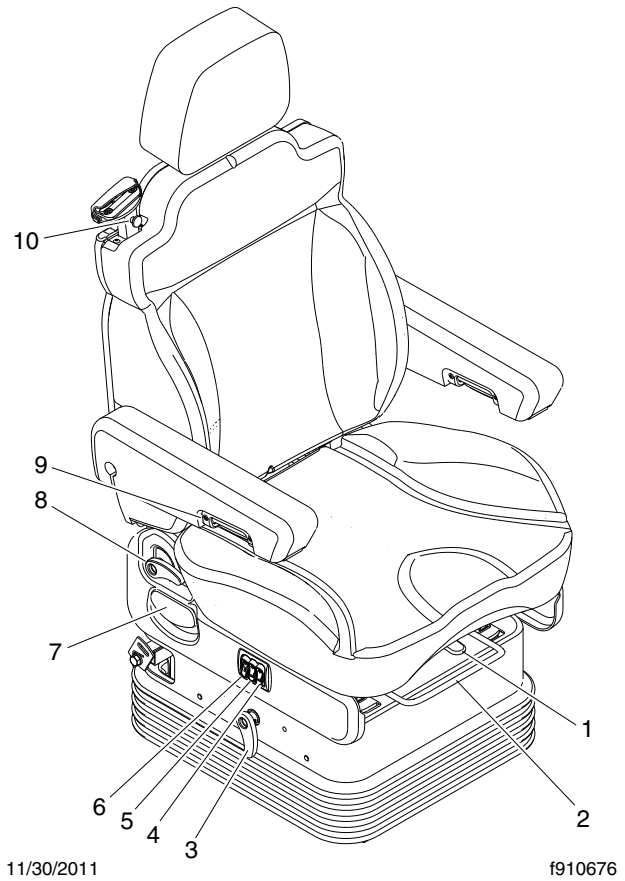

1. Cushion Extension Adjustment Lever
2. Track Adjustment Handle
3. Isolator Control Handle
4. Upper Lumbar Adjustment Switch
5. Lower Lumbar Adjustment Switch
6. Seat Height Adjustment Switch
7. Seat Tilt Control
8. Recliner Handle
9. Armrest Control Knob
10. Shoulder Belt Height Control

Fig. 5.7, ABTS Seat Adjustment Controls

Seat Height Adjustment

Push the seat height adjustment switch to raise or lower the seat suspension.

Seat Tilt Control

Set the seat tilt control to one of the five positions to set cushion rake adjustment.

https://truckmanualshub.com/

Backrest Adjustment

To tilt the backrest backward, pull up on the recliner handle while leaning backward. To tilt the backrest forward, pull up on the recliner handle while leaning forward.

Armrest Adjustment

Rotate the control knob, located on the underside of the armrest, to set the desired angle of the armrest.

Shoulder Belt Height Control

Adjust the shoulder belt height. The height can be adjusted vertically by 3 inches (75 mm).

Seat Belts and Tether Belts

General Information

Seat belt assemblies are designed to secure persons in the vehicle to help reduce the chance of injury or the amount of injury resulting from accidents or sudden stops. For this reason, Daimler Trucks North America LLC urges that the driver and *all* passengers, regardless of age or physical condition, use seat belts when riding in the vehicle.

⚠ WARNING

Always use the vehicle's seat belt system when operating the vehicle. Failure to do so can result in severe personal injury or death.

Seat belt assemblies in Daimler Trucks North America (DTNA) vehicles meet Federal Motor Vehicle Safety Standard 209, "Type 1" and "Type 2" requirements.

When transporting a child, always use a child restraint system or the vehicle seat belts as appropriate. To determine whether a child restraint system is required, review and comply with applicable state and local laws. Any child restraint used must comply with Federal Motor Vehicle Safety Standard 213, "Child Restraint Systems." When providing a child restraint system, always carefully read and follow all instructions pertaining to installation and usage for the child. Make certain the child remains in the restraint system at all times when the vehicle is in motion.

In addition to seat belt assemblies, tether belts are installed on suspension-type seats. Tether belts help secure the seat to the floor and are intended to restrain the seat and seat belt in case of an accident or sudden stop.

IMPORTANT: Seat belts have a finite life which may be much shorter than the life of the vehicle. Regular inspections and replacement as needed are the only assurance of adequate seat belt security over the life of the vehicle.

Seat Belt Inspection

⚠ WARNING

Inspect and maintain seat belts. When any part of a seat belt system needs replacement, the entire seat belt must be replaced, both retractor and buckle side. Any time a vehicle is involved in an accident, and the seat belt system was in use, the entire vehicle seat belt system must be replaced before operating the vehicle. Do not attempt to modify the seat belt system; doing so could change the effectiveness of the system. Failure to replace worn or damaged seat belts, or making any modifications to the system, may result in personal injury or death.

Inspect the seat belts and tether belts (if so equipped).

1. Check the web for fraying, cuts, extreme dirt and dust, or for severe fading from exposure to sunlight, especially near the buckle latch plate and in the D-loop guide area.
2. Check operation of the buckle, latch, Komfort Latch or Sliding Komfort Latch (if equipped), web retractor, and upper seat belt mount on the door pillar. Check all visible components for wear or damage.
3. Check the seat belt and tether belt connection points and tighten any that are loose.

Seat Belt Operation

Three-Point Seat Belt With Komfort Latch

NOTE: For vehicles not equipped with the Komfort Latch, see the seat belt operation under the heading "Three-Point Seat Belt."

⚠ WARNING

Wear three-point seat belts only as described below. Three-point seat belts are designed to be

https://truckmanualshub.com/

worn by one person at a time. In case of an accident or sudden stop, personal injury or death could result from misuse.

Fasten the seat belts before driving. Fastening a three-point seat belt while driving creates a hazard.

1. Slowly pull the link end of the three-point seat belt out of the retractor and pull it across your lap (from outboard to inboard) far enough to engage the buckle. If the retractor locks too soon, allow the belt to retract slightly, then slowly pull it out again.
2. Fasten the three-point seat belt by pushing the link into the buckle until it latches (**Fig. 5.8**). Give the belt a tug at the buckle. If the buckle unlatches, repeat this step. If the problem continues, replace the three-point seat belt.

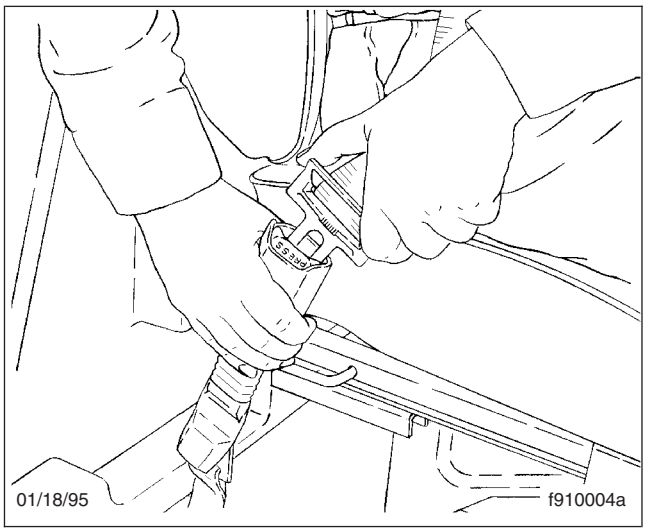

Fig. 5.8, Fastening the Three-Point Belt

3. Position the shoulder strap diagonally across your chest with the adjustable D-loop bracket (if equipped). The shoulder strap must be centered on your shoulder and chest, away from your face and neck. See **Fig. 5.9**. If desired, engage the Komfort Latch as follows.

   Pull on the shoulder strap to lessen the pressure of the strap on your shoulder and chest. Allow no more than one inch (2.5 cm) of slack between your chest and the shoulder harness. More slack can significantly reduce the seat belt's effectiveness in an accident or a sudden stop. While holding the belt slack, press the Komfort Latch lever up, clamping the seat belt webbing (**Fig. 5.10** and **Fig. 5.11**).

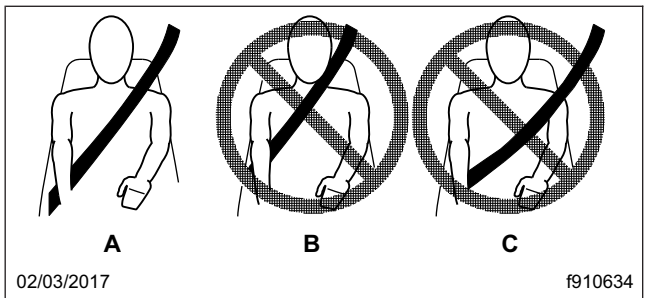

A. Correct—Belt is centered on your shoulder and chest, away from your face and neck.
B. Wrong—Belt must not rub against face or neck.
C. Wrong—Belt must not hang off shoulder.

Fig. 5.9, Proper Shoulder Strap Fit

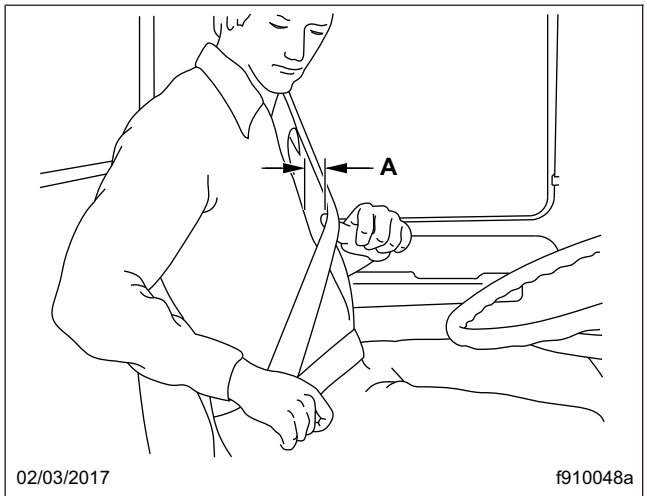

A. 1 Inch (2.5 cm) Maximum

Fig. 5.10, Adjusting Shoulder Harness Clearance

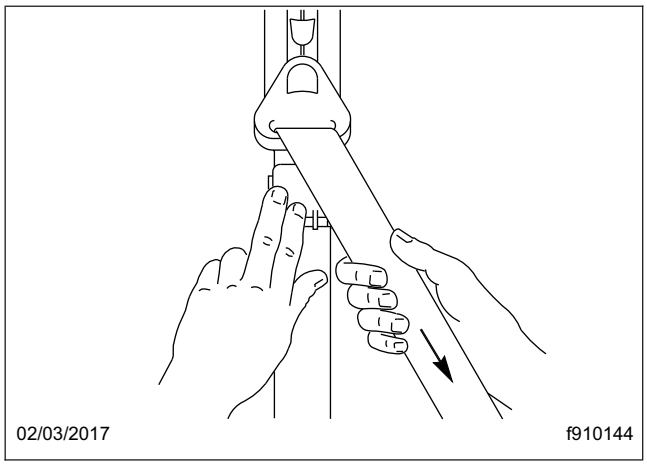

Fig. 5.11, Locking Komfort Latch

https://truckmanualshub.com/

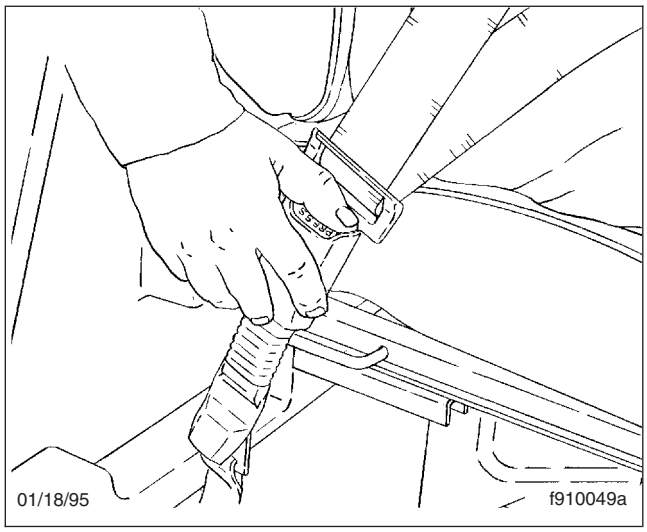

Fig. 5.12, Releasing the Three-Point Seat Belt

4. To unbuckle the three-point seat belt, push the button on the buckle as shown in **Fig. 5.12**. If the Komfort Latch was used, release it by giving the shoulder belt a quick tug. If you lean forward against the shoulder belt, the Komfort Latch will automatically release, and will need to be reset.

NOTE: The Komfort Latch does not have to be released in an emergency situation. The Komfort Latch will release by itself under rough road or other abnormal conditions. Make sure the three-point seat belt is completely retracted when it is not in use.

Three-Point Seat Belt

NOTE: For vehicles equipped with the Komfort Latch, see the seat belt operation under the heading "Three-Point Seat Belt With Komfort Latch."

⚠ WARNING

Wear three-point seat belts only as described below. Three-point seat belts are designed to be worn by one person at a time. In case of an accident or sudden stop, personal injury or death could result from misuse.

Fasten the seat belts before driving. Fastening a three-point seat belt while driving creates a hazard.

1. Slowly pull the link end of the three-point seat belt out of the retractor and pull it across your lap (from outboard to inboard) far enough to engage the buckle. If the retractor locks too soon, allow the belt to retract slightly, then slowly pull it out again.
2. Fasten the three-point seat belt by pushing the latch into the buckle. Listen for an audible click. See **Fig. 5.8**.
3. Tug on the seat belt to make sure it is securely fastened. If the buckle unlatches, repeat this step. If the problem continues, replace the three-point seat belt.
4. Snug the seat belt to your waist.
5. Position the shoulder strap diagonally across your chest with the adjustable D-loop bracket (if equipped). The shoulder strap must be centered on your shoulder and chest, away from your face and neck. See **Fig. 5.9**.
6. To unbuckle the three-point seat belt, press the release button on the buckle; see **Fig. 5.12**.

NOTE: Make sure the three-point seat belt is completely retracted when it is not in use.

Sleeper Compartment Restraints

General Information

On vehicles equipped with a sleeper compartment, bunk restraints should be used whenever the sleeper compartment is occupied and the vehicle is moving. Restraints are designed to lessen the chance of injury or the amount of injury resulting from accidents or sudden stops. For this reason, Daimler Trucks North America LLC urges the use of bunk restraints when the sleeper compartment is occupied in a moving vehicle.

⚠ WARNING

Do not use the sleeper compartment while the vehicle is in motion unless a bunk restraint is installed and used. Not using the bunk restraint increases the chance of injury, or the degree of injury, from accidents or sudden stops to all occupants of the vehicle.

Bunk Restraint Adjustment

1. Make sure the belt is attached to the bunk support and sleeper wall.

https://truckmanualshub.com/

2. To lengthen the belt, tip the link end downward and pull the link until it connects with the buckle.
3. After the belt is connected, shorten it by pulling on the loose end until the belt is snug, but comfortable. Be sure the belts are not twisted. See **Fig. 5.13**.

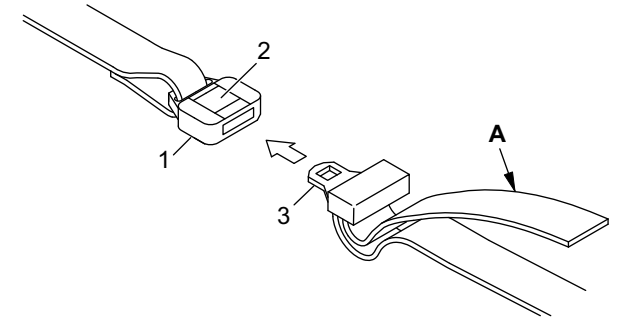

02/17/2017 f910068a

A. Pull on the loose end to shorten the belt.
1. Buckle
2. Belt Release Button
3. Link

Fig. 5.13, Bunk Restraint Adjustment

Bunk Restraint Operation

1. Starting at the foot of the bunk, pull up the link end of the belt far enough to engage the buckle. See **Fig. 5.14**.

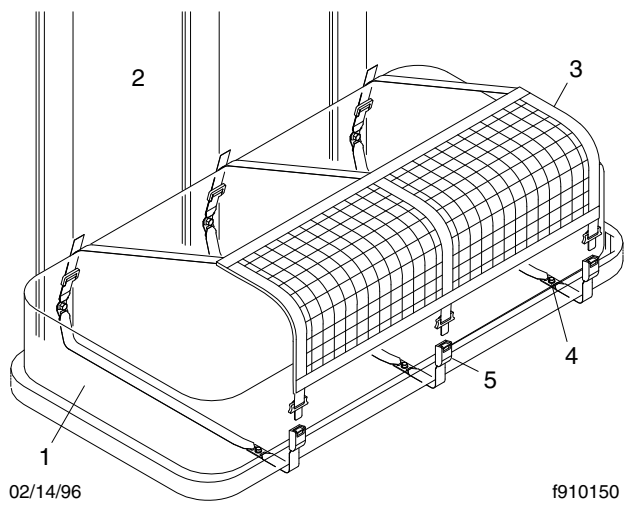

02/14/96 f910150

1. Mattress
2. Sleeper Wall
3. Restraint
4. Belt Anchor
5. Buckle

Fig. 5.14, Bunk Restraint

2. Fasten the belt by pushing the link end into the buckle until they latch. Make sure that the belt is not twisted. Check the engagement by trying to pull the link out of the buckle. If they come apart, repeat this step. If the problem continues, replace the belt. Repeat steps 1 and 2 for the other two belts located in the middle and upper portion of the bunk to lock the restraint in place.
3. To release the bunk restraint, push the release button on the buckle at the head of the bunk and pull the link from the buckle.

   Repeat this step for the other two buckles to completely release the bunk restraint.

Supplemental Restraint System, Optional

The supplemental restraint system can consist of an air bag and SPACE system, or an air bag only system. Your vehicle may or may not have a supplemental restraint system.

Air Bag, Optional

The air bag, when used with seat belts, provides additional protection to the driver in severe frontal collisions. The operational readiness of the air bag system is indicated by the supplemental restraint system (SRS) indicator on the dash. The SRS indicator comes on when the engine is started and then goes off. The indicator will remain on if there is a problem with the air bag system. The vehicle should be serviced if the SRS indicator does not come on when the engine is started or if the SRS indicator remains on.

⚠ WARNING

Air bags are designed to inflate only in severe frontal collisions. The driver and the passenger should always wear seat belts. For maximum protection in a collision or rollover, always be in a normal seated position with your back against the seat back and your head upright. Fasten your seat belt and ensure that it is properly positioned on your body as described under the "Seat Belt Operation" heading. Since the air bag inflates with considerable speed and force, a proper seat position will keep you a safe distance from the inflating air bag.

Do not place objects on the steering wheel or between you and the steering wheel. Keep your

https://truckmanualshub.com/

hands on the sides and lower portion of the steering wheel. Any objects may cause harm during an accident.

Failure to follow these instructions may result in death or personal injury.

Air Bag Safety Guidelines

The air bag system contains components that use combustible chemicals. Because these chemicals are combustible, care must be taken when replacing or handling system components.

⚠ WARNING

Consider undeployed air bags to be dangerous and capable of deploying at any time. Do not attempt to service the air bag system unless trained to do so. Damaged air bag systems should be examined by qualified personnel before any attempt is made to remove or to deploy the air bag. All intentional deployments and testing of the system should be performed by trained personnel. Unintentional or improper air bag deployment could cause severe bodily injury or death.

Do not attempt to disassemble the air bag inflator unit or breach the integrity of the sealed metallic inflator case. Doing so could cause severe bodily injury or death.

Do not allow system chemicals to contact other liquids, combustibles, and flammable materials. Doing so could cause chemical burns or personal injury.

The surface of the deployed air bag may contain small amounts of sodium hydroxide (which is a by-product of the gas generant combustion) and metallic sodium. Sodium hydroxide may be irritating to the skin and eyes. Always wear rubber gloves and safety glasses when handling a deployed air bag. Immediately wash your hands and exposed skin areas with a mild soap and water. Flush your eyes immediately if exposed to sodium hydroxide.

Review and comply with the following list of warnings. Failure to do so could result in severe injury or death.

- **Keep all liquids, acids, halogens, heavy metals, and heavy salts away from the air bag system.**
- **Do not cut, drill, braze, solder, weld, strike, or probe any part of the air bag system.**
- **Do not expose the air bag module to electricity. Never probe a circuit.**
- **Do not attempt to adapt, reuse, or install an air bag system in any vehicle other than the specific vehicle for which it is designed.**
- **Do not cut wires or tamper with the connector between the vehicle wiring harness and the air bag module. Cutting or removing the connector from the system will disable the safety shunt and could cause unintentional deployment.**
- **Allow deployed air bag systems to cool after deployment.**
- **Wear rubber gloves and safety glasses when handling a deployed air bag.**
- **Wash your hands and exposed skin surface areas immediately after handling a deployed system.**
- **Store, transport, dispose of, and recycle deployed air bag system components in accordance with all applicable federal, state, and local regulations.**
- **The air bag module may contain perchlorate material: special handling may apply, see www.dtsc.ca.gov/hazardouswaste/perchlorate.**
- **Keep all heavy objects in the cab secured.**

SPACE System, Optional

The Seat Pretensioner Activation for Crash survival Enhancement (SPACE) system, when used with seat belts, provides additional protection to the driver and/or passenger in severe frontal collisions.

The SPACE system provides a significant increase in seat stability during a severe, frontal collision. When the SPACE module senses a severe, life-threatening frontal impact, the module triggers two gas-cylinders mounted at the base of the seat. See **Fig. 5.15**. The gas cylinders activate the power cinches that then tighten the lap and shoulder belts against the occupant of the seat and lower the seat suspension, moving the occupant down and away from the steering wheel and ceiling. See **Fig. 5.16**. The air bag is activated simultaneously. This sequence of actions occurs in about a tenth of a second.

https://truckmanualshub.com/

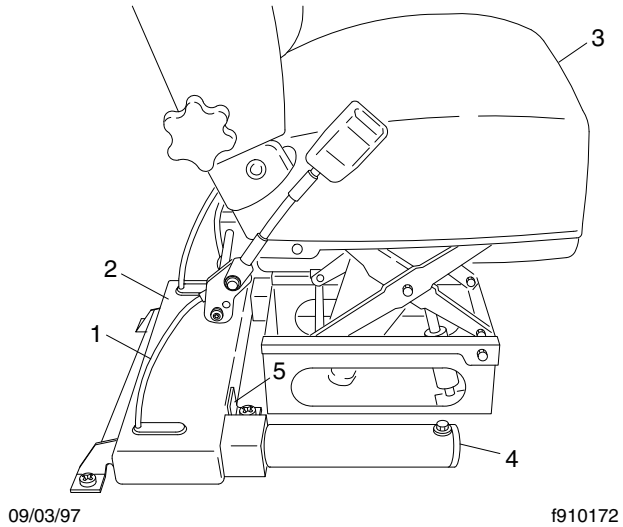

1. Pretensioning Cable Tether
2. SPACE Module
3. Suspension Seat
4. Gas Cylinder
5. Sensor Bracket

Fig. 5.15, SPACE System Components

WARNING

The SPACE system will activate during a severe, frontal collision even if the seat belts are not fastened, but the SPACE system only provides protection to the occupant when the seat belts are fastened. Always use the seat belts when operating the vehicle. Failure to do so can result in severe personal injury or death.

WARNING

Damaged seat belts or seat belts that were worn in an accident must be replaced and their anchoring points must be checked. Do not attempt to modify the SPACE system. Doing so could change the effectiveness of the system. The SPACE system must be replaced after being activated. Failure to do so may result in personal injury or death.

Infants and children must not be placed in seats equipped with the SPACE system. The SPACE system is designed for adults only. Failure to follow these instructions may result in personal injury or death.

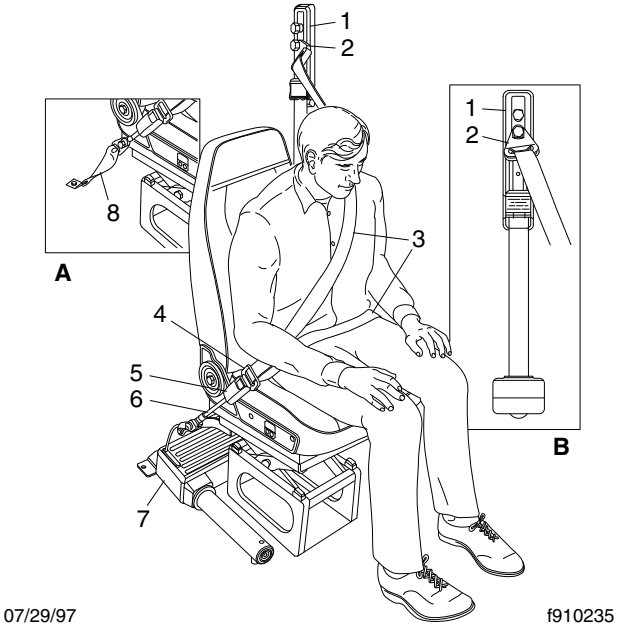

A. Seat Tether Without the SPACE System
B. Seat Belt Assembly B-Pillar Components

1. Height Adjuster
2. Shoulder Loop
3. Seat Belt
4. Latch
5. Buckle
6. Buckle Cable
7. SPACE Module
8. Seat Tether

Fig. 5.16, SPACE System Seat Belt Assembly

The operational readiness of the SPACE system is indicated by the supplemental restraint system (SRS) indicator on the dash. The SRS indicator comes on when the engine is started and then goes off. The indicator will remain on if there is a problem with the air bag or SPACE system. The vehicle should be serviced if the SRS indicator does not come on when the engine is started or if the SRS indicator remains on.

Safety Guidelines for the SPACE System

The SPACE system contains components that use combustible chemicals. Because these chemicals are combustible, care must be taken when replacing or handling system components.

WARNING

Do not attempt to service the air bag/SPACE system. Damaged or deployed air bag/SPACE systems should be examined only by qualified personnel before any attempt is made to remove,

https://truckmanualshub.com/

replace, or handle the air bag/SPACE system components. All intentional deployments and testing of the system should be performed by trained personnel. Unintentional or improper deployment of the air bag/SPACE system could cause severe bodily injury or death.

Do not attempt to service or to disassemble the SPACE module. The SPACE module cannot be serviced. Doing so could result in severe bodily injury or death.

Although the air bag/SPACE system components will not likely explode, self-deploy, or produce shrapnel, take care when it is necessary to replace or perform work around the air bag/SPACE system components. Review and comply with the following list of warnings. Failure to do so could result in severe injury or death.

- **Do not cut, drill, braze, solder, weld, strike, or probe any part of the air bag/SPACE system.**
- **Keep all liquids, acids, halogens, heavy metals, and heavy salts away from the air bag/SPACE system.**
- **Do not expose the air bag/SPACE system components to electricity.**
- **Do not attempt to adapt, reuse, or install an air bag/SPACE system in any vehicle other than the specific vehicle for which it is designed.**
- **Keep hands and tools away from the scissor points under the seats.**
- **Do not cut wires or tamper with the connectors between the vehicle wiring harness and the air bag/SPACE system. Cutting or removing the electrical connectors could cause unintentional deployment.**
- **Do not expose the air bag/SPACE system to electricity. Never probe a circuit.**
- **Store, transport, dispose, and recycle deployed air bag/SPACE system components in accordance with all applicable federal, state, and local regulations.**
- **Replace damaged seat belts or seat belts that were worn in an accident, and check all anchoring points. Only qualified personnel familiar with air bag/SPACE systems should replace the seat belts used in a vehicle with an air bag/SPACE system.**
- **The air bag/SPACE system requires a special seat belt. Care must be taken to be sure the correct seat belt is used.**
- **Keep all heavy objects in the cab secured.**

https://truckmanualshub.com/

https://truckmanualshub.com/

6

Steering and Brake Systems

Steering System 6.1
Brake System 6.1

https://truckmanualshub.com/

Steering System

General Information

When there is no load on the vehicle, and the front tires are pointed straight ahead, the steering wheel spokes should be centered, ±10 degrees, as shown in **Fig. 6.1**. See **Group 46** of the *Century Class Trucks Workshop Manual* for steering adjustment procedures.

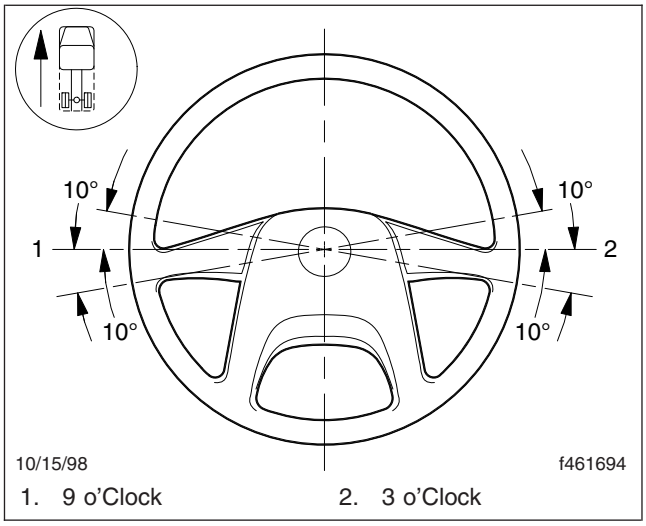

Fig. 6.1, Proper Steering Wheel Position (with tires pointed straight ahead)

CAUTION

Never steam clean or high-pressure wash the steering gear. Internal damage to gear seals, and ultimately the steering gear, can result.

Power Steering System

The power steering system consists of an integral steering gear (which includes a manual steering mechanism, a hydraulic control valve, and a hydraulic power cylinder), hydraulic hoses, power steering pump, reservoir, and other components. Some models are also equipped with a separate hydraulic power cylinder on the right side of the front axle. The power steering pump, driven by the engine, provides the power assist for the steering system. If the engine is not running, there is no power assist. If the power-assist feature does not work due to hydraulic fluid loss, steering pump damage, or some other cause, bring the vehicle to a safe stop. Do not drive the vehicle until the cause of the problem has been corrected.

WARNING

Driving the vehicle without the power-assist feature of the steering system requires much greater effort, especially in sharp turns or at low speeds, which could result in an accident and possible injury.

Drivers should carefully use the power available with a power steering system. If the front tires become lodged in a deep chuckhole or rut, drive the vehicle out, instead of using the steering system to lift the tires from the hole. Also, avoid turning the tires when they are against a curb, as this places a heavy load on steering components and could damage them.

Brake System

General Information

A dual air brake system consists of two independent air brake systems which use a single set of brake controls. Each system has its own reservoirs, plumbing, and brake chambers. The primary system operates the service brakes on the rear axle; the secondary system operates the service brakes on the front axle. Service brake signals from both systems are sent to the trailer.

WARNING

Do not operate the vehicle with the front brakes backed off or disconnected. Backing off or disconnecting the front brakes will not improve vehicle handling and may lead to loss of vehicle control, resulting in property damage or personal injury.

Loss of air pressure in the primary system causes the rear service brakes to become inoperative; front brakes will continue to be operated by secondary system air pressure. In addition, trailer brakes will be operated by the secondary system. Loss of secondary system air pressure causes the front axle brakes to become inoperative; rear service brakes and trailer brakes will be operated by the primary system.

Before driving your vehicle, allow time for the air compressor to build up a minimum of 100 psi (689 kPa) pressure in both the primary and secondary systems. Monitor the air pressure system by observing the dual system air pressure gauge and the low-air-pressure warning light and buzzer. The warning light and buzzer shut off when air pressure in both systems reaches 64 to 76 psi (441 to 524 kPa).

https://truckmanualshub.com/

The warning light and buzzer come on if air pressure drops below 64 to 76 psi (441 to 524 kPa) in either system. If this happens, check the dual system air pressure gauge to determine which system has low air pressure. Although the vehicle's speed can be reduced using the foot brake control pedal, either the front or rear service brakes will not be operating, causing a longer stopping distance. Bring the vehicle to a safe stop, and have the air system repaired before continuing.

IMPORTANT: In the event of a total loss of service brakes with full system air pressure, use the parking brake control valve (yellow knob) to bring the vehicle to a complete stop in the safest location possible.

On tractor-trailer vehicles, if both the primary and secondary systems become inoperative, the trailer service brakes or spring parking brakes will automatically apply when air pressure drops below 35 to 45 psi (242 to 310 kPa). The tractor spring parking brakes will automatically apply when air pressure drops below 20 to 30 psi (138 to 207 kPa). On straight trucks, spring parking brakes will apply when air pressure drops below 20 to 30 psi (138 to 207 kPa). Do not wait for the brakes to apply automatically. When the warning light and buzzer first come on, immediately bring the vehicle to a safe stop. Before continuing operation of the vehicle, correct the cause of the air loss.

Before the vehicle can be moved, the spring parking brakes must be released by applying an external air source at the gladhands, or by manually caging the parking brake springs.

⚠ WARNING

Do not release (cage) the spring parking brakes and then drive the vehicle. There would be no means of stopping the vehicle, and this could result in serious personal injury or vehicle damage. Before releasing (caging) the spring parking brakes, make the connection to a towing vehicle, or chock the tires.

After correcting the brake system problem, uncage the spring parking brakes before resuming normal vehicle operation.

Brake System Operation

Before driving the vehicle, secure all loose items in the cab so that they will not fly forward during a full brake application. Make sure all passengers are wearing seat belts.

During normal brake stops, depress the foot brake control pedal until braking action slows down the vehicle. Increase or decrease the pressure on the pedal so that the vehicle comes to a smooth, safe stop. Apply the spring parking brakes if the vehicle is to be parked.

IMPORTANT: An air brake proportioning system is used in tractor air brake systems when the vehicle is not equipped with ABS. When operating in bobtail mode, the rear brake chambers (whose axle load has been greatly reduced) receive reduced or proportional air pressure, while the front axle brake chambers receive full (normal) air pressure. This results in a different brake pedal "feel," as the pedal seems to require more travel and/or effort to slow or stop the vehicle. However, the air brake proportioning system actually improves vehicle control when the tractor is in the bobtail mode of operation. When the tractor is towing a trailer, the rear brake chambers will receive full (normal) application air pressure.

NOTE: If equipped with main and auxiliary transmissions, do not shift both transmissions into neutral while the vehicle is rolling. Shifting both transmissions back into gear would be difficult while the vehicle is rolling.

The trailer brake hand control valve (**Fig. 6.2**) actuates the trailer service brakes independently from the vehicle chassis service brakes. The valve can be partially or fully applied, but in any partially-on position it will be overridden by a full application of the foot brake control pedal. Moving the valve handle clockwise actuates the trailer brakes, while moving it counterclockwise releases the trailer brakes. The valve handle is spring-loaded and returns to it's original, no-air application position when released.

⚠ WARNING

Do not use the trailer service brakes for parking; they are not designed for this purpose. If air bleeds out of the trailer air tank during parking, the vehicle could roll, causing serious personal injury or property damage.

The red octagonal-shaped knob (**Fig. 6.3**) in the control panel actuates the trailer air supply valve. After the vehicle's air hoses are connected to a trailer, and

https://truckmanualshub.com/

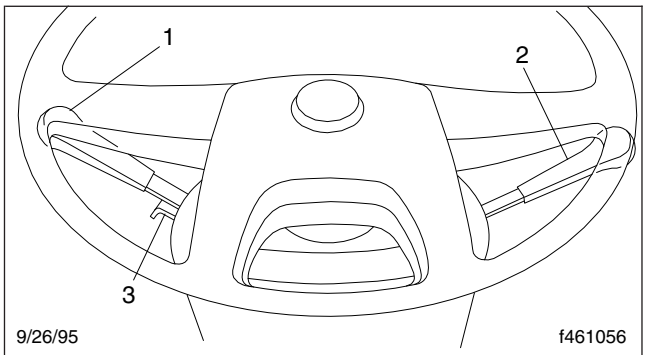

1. Turn Signal Lever
2. Trailer Brake Hand Control Valve
3. Hazard Warning Light Tab

Fig. 6.2, Steering Column-Mounted Controls (left-hand drive shown)

the pressure in both air systems is at least 65 psi (448 kPa), the red knob must be pushed in. It should stay in, to charge the trailer air supply system and to release the trailer spring parking brakes. It must be pulled out before disconnecting a trailer. It must also be pulled out when operating a vehicle without a trailer. If pressure in both air systems drops to 35 to 45 psi (242 to 310 kPa), the red knob automatically pops out, exhausting the trailer air supply, and applying the trailer service or spring parking brakes.

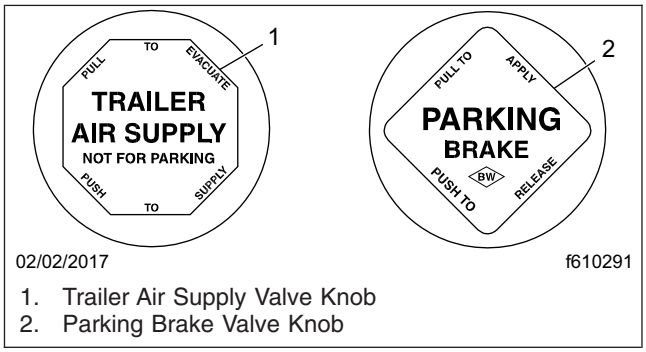

1. Trailer Air Supply Valve Knob
2. Parking Brake Valve Knob

Fig. 6.3, Brake Valve Knobs

The yellow diamond-shaped knob (**Fig. 6.3**) in the control panel actuates the parking brake valve. Pulling out the knob applies both the tractor and trailer spring parking brakes and automatically causes the trailer air supply valve knob to pop out.

CAUTION

Do not use the spring parking brakes if the service brakes are hot, such as after descending a steep grade. Also, do not use the spring parking brakes during freezing temperatures if the service brakes are wet. To do so could damage the brakes if hot, or cause them to freeze during cold weather.

If the brakes are wet, drive the vehicle in low gear and lightly apply the brakes to heat and dry them. Allow hot brakes to cool before using the spring parking brakes. Always chock the tires.

If the trailer is not equipped with spring parking brakes, pulling out the yellow knob applies the tractor spring parking brakes and the trailer service brakes. When the tractor and trailer parking brakes (or trailer service brakes) are both applied, the trailer brakes are released by pushing in the red knob, leaving the tractor parking brakes applied. Air pressure in the primary or secondary reservoir must be at least 65 psi (447 kPa) before the tractor spring parking brakes, or the trailer service or spring parking brakes, can be released.

On trailers not equipped with spring parking brakes, chock the trailer tires before disconnecting the truck or tractor when parking just the trailer.

When parking a truck or tractor with a trailer (combination vehicle), and the trailer is not equipped with spring parking brakes, apply the truck or tractor spring parking brakes.

WARNING

If a trailer is not equipped with spring parking brakes, do not park it or a combination vehicle by pulling out only the trailer air supply valve knob. This would apply only the trailer service brakes. If air were to bleed from the trailer brake system, the trailer brakes would release, possibly causing an unattended runaway vehicle.

CAUTION

Never apply the service and spring parking brakes simultaneously. To do so transmits excessive input force to the brake components, which could damage or cause eventual failure of brake actuating components.

Meritor WABCO® Antilock Braking System (ABS) (Fig. 6.4)

The Meritor WABCO® Antilock Braking System (ABS) is an electronic wheel speed monitoring and control system that works with the standard air brake system. ABS passively monitors vehicle wheel speed

https://truckmanualshub.com/

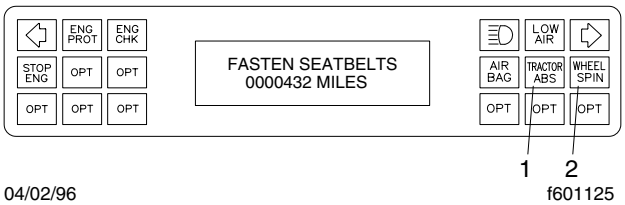

1. Tractor ABS Warning 2. Wheel Spin Indicator

Fig. 6.4, ABS Dash Lights

at all times, and *controls* wheel speed during emergency stops. If equipped with Automatic Traction Control, wheel spin is controlled during reduced-traction situations. In normal braking applications, the standard air brake system is in effect.

IMPORTANT: For proper ABS system operation, do not change tire sizes. The sizes of the tires installed during production are programmed into the electronic control unit. Installing different sized tires could result in a reduced braking force, leading to longer stopping distances.

ABS includes signal-generating tone wheels and sensors located in the wheel hubs of each sensed wheel. The sensors transmit vehicle wheel speed information to an electronic control unit (located in a panel behind the driver's seat). The control unit's main circuit interprets the speed sensor signals and calculates wheel speed, wheel retardation, and a vehicle reference speed. If the calculations indicate wheel lockup, the main circuit signals the appropriate solenoid control valve to reduce braking pressure. During emergency braking, the solenoid control valve alternately reduces, increases, or maintains air pressure supply in the brake chamber to prevent front and rear wheel lockup.

If equipped with Automatic Traction Control, an additional solenoid valve is installed. During reduced-traction situations, the valve increases or reduces air pressure supply in the brake chamber to provide better traction whenever wheel spin occurs.

The electronic control unit also has a safety circuit that constantly monitors the wheel sensors, traction control valve (if equipped), solenoid control valves, and the electrical circuitry.

After the ignition switch is turned on, the tractor warning light (TRACTOR ABS) and, if equipped with Automatic Traction Control, the wheel spin (WHEEL SPIN) indicator light come on for about three seconds. After three seconds, the warning lights go out only if all of the tractor's ABS components are working.

The wheel spin (WHEEL SPIN) indicator light comes on if one of the drive wheels spins during acceleration. The light goes out when the wheel stops spinning. When the light comes on, partially release the throttle pedal until the light goes out. If slippery road conditions continue, engage the axle lock.

CAUTION

Axle lock should only be engaged when the vehicle is moving slowly at low throttle. Engagement at high speed or power can damage the axle(s).

Do not engage the axle lock while the WHEEL SPIN light is on. To do so could damage the rear axle. Refer to Chapter 9 for axle lock instructions.

Vehicles with electronic engines and ABS may have automatic traction control (ATC). On these vehicles, the ATC system automatically limits wheel spin during reduced-traction situations.

If the vehicle has ATC, there will be a momentary contact rocker switch on the dash labeled NORM/SPIN and ATC.

When the ATC system is in the NORMAL mode, it will apply gentle braking to the spinning wheel, to feed power to the wheel(s) with better traction. If both wheels are spinning, the system will signal the electronic engine to reduce power.

Pressing NORM/SPIN will temporarily allow more drive wheel spin to help burn through a thin layer of ice, or to help throw off accumulated mud or snow. SPIN mode is indicated by a flashing WHEEL SPIN light. Pressing NORM/SPIN again will cycle the system back to normal operation.

The Meritor WABCO® ABS system combines one front-axle control channel with one rear axle to form one control circuit. For example, the sensor and solenoid control valve on the left-front axle form a control circuit with the sensor and solenoid control valve on the right rear axle. If, during vehicle operation, the safety circuit senses a failure in any part of the ABS system (a sensor, solenoid control valve, wiring connection, short circuit, etc.), the tractor warning light (TRACTOR ABS) comes on and the control circuit where the failure occurred is switched to normal braking action. The remaining control circuit will retain the ABS effect. Even if the ABS system is completely inoperative, normal braking ability is maintained. An exception would be if a solenoid control

https://truckmanualshub.com/

valve (or combination solenoid control valve) is damaged and inoperative. As these components are an integral part of the air brake system, normal braking may be impaired or inoperative.

IMPORTANT: If any of the ABS warning lights do not work as described above, or come on while driving, repair the ABS system immediately to ensure full antilock braking capability.

During emergency or reduced-traction stops, fully depress the brake pedal until the vehicle comes to a safe stop; *do not pump*the brake pedal. With the brake pedal fully depressed, the ABS system will control all wheels to provide steering control and a reduced braking distance.

Although the ABS system improves vehicle control during emergency braking situations, the driver still has the responsibility to change driving styles depending on the existing traffic and road conditions. For example, the ABS system cannot prevent an accident if the driver is speeding or following too closely.

Trailer ABS Lamp Operation

Antilock braking systems on tractors are designed to communicate with trailer ABS systems, if they are compatible. Compatibility will result in the illumination of the trailer ABS lamp during vehicle start-up and fault detection.

The dash-mounted lamp will operate as follows when a compatible trailer is properly connected to a tractor:

- When the ignition key is turned to the ON position, the trailer ABS lamp will illuminate momentarily, then turn off.
- If the lamp comes on momentarily during vehicle operation, then shuts off, a fault was detected and corrected.
- If the lamp comes on and stays on during vehicle operation, there is a fault with the trailer ABS. Repair the trailer ABS system immediately to ensure full antilock braking capability.

The Trailer ABS lamp will not illuminate unless a compatible trailer is connected to the tractor.

IMPORTANT: If a compatible trailer is connected, and the lamp is not illuminating momentarily when the ignition key is turned to the ON position, it is possible that the lamp is burnt out.

Meritor WABCO® Electronic Braking System (EBS)

The Meritor WABCO® Electronic Braking System (EBS) is designed to continuously monitor and coordinate all aspects of service braking.

The EBS pairs an electronic control system with a pneumatic application system. Key braking data such as driver brake demand, wheel speed, and vehicle load is gathered by a network of electronic sensing devices (including load sensors, and signal generating tone wheels and sensors located in the wheel hubs of each sensing axle).

An electronic control unit, the central module, oversees the translation of electronic signals into pneumatic actuation. During a braking application, electronic-pneumatic modulators control the brake pressure of each wheel, as well as at the trailer coupling head. As a result, the same amount of vehicle deceleration will occur for a given brake pedal travel, regardless of vehicle load. During emergency stops (i.e. wheel lockup), the EBS also activates the Antilock Braking System (ABS).

The EBS includes a system check for all modulators, sensors, brake system electric circuits and data lines and is thereby able to detect malfunctions in the braking system. When a fault is detected, the central module will disable the affected part of the EBS. Under this safe status (i.e. fail-safe) mode, the nonaffected parts will continue to function. For example, in the case of a sensor malfunction, the system works without the sensor information but at a reduced performance level.

If a serious malfunction causes a total switch-off of one or more electronic braking circuits, a pure pneumatic backup system is available.

The following functions can be deactivated in the event of a malfunction:

- ABS can be deactivated at one individual wheel, at one axle, or for the whole vehicle.
- ATC control can be deactivated. If it is shut down, then both the brake control and the engine control will be shut down.
- If electrical control is lost, the affected axle is braked by means of the pneumatic redundancy pressure. The driver must compensate by exerting more force on the brake pedal to stop the vehicle.

This system has built-in diagnostics to ensure that all components are operating properly. Under normal

https://truckmanualshub.com/

conditions, the system performs a three second self-check when the ignition is turned on. The two warning lamps (EBS, ABS) and the information lamp (ATC) should illuminate for three seconds and then go out if all EBS components are working properly. If all three lamps do not switch on or if all three lamps do not switch off after three seconds, the system should be checked.

NOTE: If there is no bulb check and no displayed fault, most likely the brake pedal is partially depressed, either by the driver or by something holding the pedal down. This safety feature alerts the driver that the brake pedal is not fully in the released position.

Automatic Slack Adjusters

Automatic slack adjusters are required on all vehicles equipped with air brakes manufactured after October 20, 1994. Automatic slack adjusters should never be manually adjusted except during routine maintenance of the foundation brakes (e.g., replacing shoes), during slack adjuster installation or in an emergency situation.

When the brake pushrod stroke exceeds the legal brake adjustment limit on a vehicle, there is likely a mechanical problem with the foundation brake components or the adjuster is improperly installed.

Visit a repair facility as soon as possible when brakes equipped with automatic slack adjusters are determined to be out of adjustment.

⚠ WARNING

Manually adjusting an automatic slack adjuster to bring the pushrod stroke within legal limits is likely masking a mechanical problem. Adjustment is not repairing. In fact, continual adjustment of automatic slack adjusters may result in premature wear of the adjuster itself. Further, the improper adjustment of some automatic slack adjusters may cause internal damage to the adjuster, thereby preventing it from properly functioning.

https://truckmanualshub.com/

https://truckmanualshub.com/

7

Engines and Clutches

EPA07 Aftertreatment System (ATS) 7.1
DD15 Heavy-Duty Engine 7.3
Engine Starting—CAT, Cummins, DDE S60, M-B 7.5
Starting After Extended Shutdown or Oil Change—CAT, Cummins, DDE S60, M-B 7.9
Engine Break-In—CAT, Cummins, DDE S60, M-B 7.10
Engine Operation—CAT, Cummins, DDE S60, M-B 7.10
Cold-Weather Operation—CAT, Cummins, DDE S60, M-B 7.15
High-Altitude Operation—CAT, Cummins, DDE S60, M-B 7.17
Engine Shutdown—CAT, Cummins, DDE S60, M-B 7.18
Engine Braking System—CAT, Cummins, DDE S60, M-B 7.19
Exhaust Braking System—CAT, Cummins, DDE S60, M-B 7.21
Clutches 7.22

https://truckmanualshub.com/

EPA07 Aftertreatment System (ATS)

On-road diesel engines built after December 31, 2006 are required to meet EPA07 guidelines for reduced exhaust emissions of particulate matter and nitrogen oxides (NOx). NOx is limited to just over 1 gram per brake horsepower hour (g/bhp-hr), and particulate matter cannot exceed 0.01 g/bhp-hr.

EPA07-compliant engines require ultralow-sulfur diesel (ULSD) fuel, and they should never be run on fuel with sulfur content higher than 15 ppm. In addition, they require low-ash engine oil. The following guidelines must be followed, or the warranty may be compromised.

- Use ultralow-sulfur diesel (ULSD) with 15 ppm sulfur content or less, based on ASTM D2622 test procedure.
- Do not use fuel blended with used engine lube oil.
- Engine lube oil must have a sulfated ash level less than 1.0 wt %, meeting the API CJ-4 index specifications.

IMPORTANT: Using non-specification fuels or oils can lead to shortened diesel particulate filter (DPF) cleaning or exchange intervals. For example, using CI-4+ oil with 1.3% sulfated ash (30% more ash content) may result in the need for DPF cleaning or exchange 20 to 30% sooner than would normally be required.

The "exhaust system" in EPA07-compliant vehicles is called the aftertreatment system (ATS). The ATS varies according to engine manufacturer and vehicle configuration, but instead of a muffler, an aftertreatment system has a device that outwardly resembles a muffler, called the aftertreatment device (ATD).

IMPORTANT: See your engine operation manual for complete details and operation of the aftertreatment system.

Inside the ATD on Mercedes-Benz, Detroit Diesel, and Cummins engines, the exhaust first passes over the diesel oxidation catalyst (DOC), then it passes through the diesel particulate filter (DPF), which traps soot particles. If exhaust temperature is high enough, the trapped soot is reduced to ash, in a process called passive regeneration (regen). **Passive regeneration** occurs as the vehicle is driven normally under load; the driver is not even aware that it is happening. The harder an EPA07 engine works, the better it disposes of soot, as the exhaust heat alone is enough to burn the soot to ash. Over the course of a workday, however, passive regeneration cannot always keep the ATD filter clean, so the filter must undergo **active regeneration**. In active regeneration, extra fuel is injected into the exhaust stream to superheat the soot trapped in the DPF and turn it to ash. Active regeneration happens only when the vehicle is moving above a certain speed, determined by the engine manufacturer. Consult manufacturers' documentation for details.

Both active and passive regeneration happen automatically, without driver input.

NOTE: Caterpillar engines do not use a DOC; CAT engines burn diesel fuel at the regeneration head to superheat the exhaust and burn the trapped soot to ash. Engine software monitors and controls this process.

Only when operating conditions do not allow for ATD filter cleaning by at-speed active or passive regeneration, the vehicle may require a driver-activated **parked regeneration**. The vehicle must be standing still, and the driver must initiate a parked regen. Completing a parked regen takes 20 minutes to an hour, depending on ambient conditions.

⚠ DANGER

During parked regeneration, exhaust temperatures are very high, and could cause a fire, heat damage to objects or materials, or personal injury to persons near the exhaust outlet.

Before initiating a parked regeneration, make certain the exhaust outlets are directed away from structures, trees, vegetation, flammable materials, and anything else that may be damaged or injured by prolonged exposure to high heat.

The warning lamps in the driver message center alert the driver of a regen in progress, high exhaust temperatures, the need to perform a parked regen either soon or immediately, and of an engine fault that affects the emissions.

A slow (10-second) flashing of the high exhaust system temperature (HEST) lamp indicates that a parked regeneration is in progress, and the engine's high idle speed is being controlled by the engine software, not the driver.

A steadily illuminated high temperature (HEST) lamp alerts the operator of high exhaust temperature during the regeneration process, if vehicle speed is

https://truckmanualshub.com/

below 5 mph (8 km/h). The HEST lamp does not signify the need for any kind of vehicle or engine service; it only alerts the vehicle operator of high exhaust temperatures. Make sure the engine exhaust pipe outlet is not directed at any person, or at any surface or material that will melt, burn, or explode. See **Fig. 7.1**.

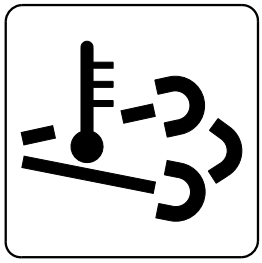

09/25/2006 f610816a

Fig. 7.1, High Exhaust System Temperature (HEST) Lamp

⚠ WARNING

Active regeneration can occur automatically anytime the vehicle is moving. The exhaust gas temperature could reach 1500°F (816°C), which is hot enough to cause a fire, heat damage to objects or materials, or personal injury to persons near the exhaust outlet. See *Regen-Inhibit Switch* later in this chapter for instructions on preventing automatic regen if necessary.

The exhaust temperature can remain high even after the vehicle has stopped. When stopping the vehicle shortly after an automatic regen, ensure the exhaust outlets are directed away from structures, trees, vegetation, flammable materials, and anything else that may be damaged or injured by exposure to high heat.

A steadily illuminated yellow diesel particulate filter (DPF) lamp indicates that a regen may be required soon. Bring the vehicle to highway speeds to allow for an active regen, or a parked regen should be scheduled for the earliest convenient time. See **Fig. 7.2**.

A DPF lamp blinking at the same time as a steadily illuminated yellow Check Engine lamp, indicates that a parked regen must be performed immediately, or an engine derate will occur. If the red Stop Engine lamp illuminates with the blinking DPF lamp and the Check Engine lamp, a parked regen must occur or an engine shutdown will occur. Park the vehicle and perform a parked regen. See **Fig. 7.3**.

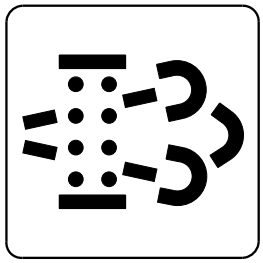

09/25/2006 f610815a

Fig. 7.2, Diesel Particulate Filter (DPF) Status Lamp

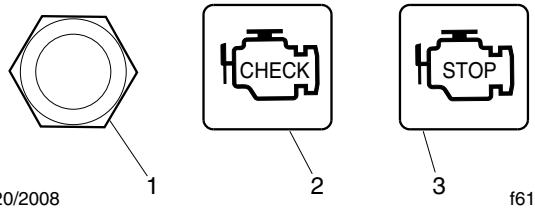

03/20/2008 f611000

1. Stop Engine Override Switch
2. Amber Check Engine Warning Lamp
3. Red Stop Engine Lamp

Fig. 7.3, Engine Lamps

A steadily illuminated yellow malfunction indicator lamp (MIL) indicates an engine fault that affects the emissions. See **Fig. 7.4**.

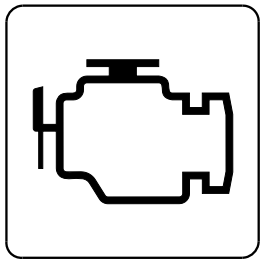

09/25/2006 f610814a

Fig. 7.4, Malfunction Indicator Lamp (MIL)

When diesel particulate filter servicing is needed, it must be performed by an authorized technician, and a record must be maintained for warranty purposes. The record must include:

- date of cleaning or replacement;

https://truckmanualshub.com/

- vehicle mileage;
- particulate filter part number and serial number.

The request/inhibit regen switch (**Fig. 7.5**), located on the dash, can have three selectable positions:

- request regeneration;
- default (either automatic regeneration or inhibit state);
- inhibit regeneration.

NOTE: The regen switch can start a parked regen only when at least one of two conditions exists: either the DPF light is lit, or the engine software calls for it. If neither of those conditions exist, the regen switch cannot cause a regeneration to happen.

The function of the switch will vary by the engine make and model in the vehicle. See the engine operation manual for switch operation details.

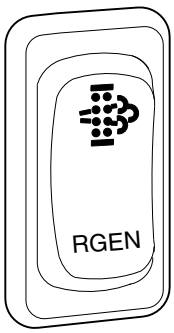

Fig. 7.5, Request/Inhibit Regen Switch

DD15 Heavy-Duty Engine

See **Chapter 2** of this manual for information on the DDEC VI operator controls. See the *Detroit Diesel DD15 Engine Operator's Guide* for complete details of engine operation.

Engine Protection

An engine protection system monitors all engine sensors and electronic components, and recognizes system malfunctions. If a critical fault is detected, an amber Check Engine warning lamp and a red Stop Engine lamp illuminate. See **Fig. 7.3**.

The standard parameters that are monitored for engine protection are: low coolant level, high coolant temperature, low oil pressure, and high oil temperature.

Amber Check Engine Warning Lamp

When the amber Check Engine warning lamp comes on for any reason, the vehicle can still be operated, and the driver can proceed to the required destination. See **Fig. 7.3**. This condition should be reported to an authorized service center as soon as possible.

Red Stop Engine Lamp

When the red Stop Engine lamp comes on, the computer has detected a major malfunction in the engine that requires immediate attention. See **Fig. 7.3**. **It is the operator's responsibility to shut down the engine to avoid serious damage.** This system features a 30-second, stepped-down power-shutdown sequence, or an immediate emergency-running mode, in the event that a major engine malfunction occurs. The conditions that will cause the red Stop Engine lamp to come on are:

- high coolant temperature
- loss of coolant
- high oil temperature
- low oil pressure
- auxiliary shutdown

Stop Engine Override Switch

In the event that the vehicle is operating in a critical location when a shutdown is initiated, a Stop Engine Override (SEO) switch can be used to override the shutdown sequence. See **Fig. 7.3**. This override resets the shutdown timer, restoring power to the level when the red stop engine lamp was illuminated. The switch must be recycled after five seconds to obtain a subsequent override.

CAUTION

Using the override button so the engine operates for an extended period may result in engine damage. The operator has the responsibility to take action to avoid engine damage.

DDEC VI Driving Tips

Accelerating the Vehicle

The accelerator pedal was designed to communicate "percentage" of accelerator pedal travel to the engine MCM. A throttle characteristic you may need time to

https://truckmanualshub.com/

get used to, is the DDEC limiting speed governor. This allows the driver to command total engine response between idle and rated speed, such as accelerating at half throttle—an advantage when driving under slippery conditions. To obtain 100 percent fueling at any speed, the accelerator pedal must be depressed to the fully pressed position.

Shifting

Depending on your transmission model, the gear split may vary from 400 to 500 rpm. The electronic governor provides almost no overrun capability; if the transmission is downshifted too early, you will experience a temporary loss of pulling power until the engine speed falls below rated speed. In general, when using a 9-speed transmission, you should always downshift between 1000 and 1100 rpm. This is true even on steep grades with heavy loads. When using an 18-, 15-, or 13-speed transmission, you will need to downshift at an rpm that allows “less than rated” rpm, before throttle application in the next gear down. You may want to limit engine speed to 1900 rpm in all gears.

The DD15 engine provides horsepower through 2100 rpm, but fuel economy is not as efficient above 1800 rpm. If you decide to drive at lower rpm for improved fuel economy, don’t let different engine noises throw you off guard. The DD15 engine sounds quiet at 1400 rpm, almost as if it had quit pulling. If you had a boost gauge to look at while driving, you would notice the turbocharger maintaining steady intake manifold pressure, even as rpm falls. Depending on the air intake arrangement, you may also hear a “chuffing” sound as the engine starts to pull hard at lower rpm. This is normal, and caused by the velocity changes of the air flow within the air intake plumbing. Electronic engines can actually deliver more fuel at lower engine speeds than at rated speed.

The DD15 engine has been designed for a very quiet operation, but the air flow may be noticeable to the tuned attentive ear. The turbocharger operates at higher boost pressure, forcing exhaust to flow through the exhaust gas recirculation plumbing. In some situations the driver may believe they have experienced a charge air cooler system leak. Even while connecting trailer lights and air hoses, the driver may hear a different tone (exhaust and under hood with the engine idling). If equipped with a turbo boost gauge, the driver may occasionally note the intake manifold pressure exceeds 35 psi (241 kPa).

Idling

The common belief that idling a diesel engine causes no engine damage is wrong. Idling produces sulfuric acid, that is absorbed by the lubricating oil, and eats into bearings, rings, valve stems, and engine surfaces. If you must idle the engine for cab heat or cooling, the high idle function of the cruise control switches should be used. An idle speed of 900 rpm should be enough to provide cab heat in above freezing ambient temperatures.

Cold-Weather Operation

Precautions must be taken during cold weather to protect your engine. Special cold-weather handling is required for fuel, engine oil, coolant, and batteries. The engine does not require starting aids down to 50°F (10°C). A grid heater is included for temperatures between 50°F (10°C) and –4°F (–20°C). Temperatures below –4°F (–20°C), will require a grid heater, block heater, and oil pan heater.

CAUTION

NEVER use ether as a starting aid on a DD HD engine. Doing so will result in injector damage.

A winterfront may be used to improve cab heating. At least 25 percent of the grill opening should remain open in sectioned stripes that run perpendicular to the charge air cooler tube flow direction. This assures even cooling across each tube, and reduces header-to-tube stress and possible failure. Winterfronts should only be used when the ambient temperature remains below 10°F (–12°C).

Driving on Flat, Dry Pavement

Use the following guidelines when driving on flat, dry pavement.

- If driving on flat, dry, open stretches, with a light load, place the progressive braking switch in the LOW position.
- If you find you are still using the service brakes, move the switch to a higher position until you do not need to use the service brakes to slow the vehicle.
- If you are carrying a heavier load and road traction is good, move the progressive braking switch to the HIGH position.
- Check your progressive braking switch often for proper position, since road conditions can

https://truckmanualshub.com/

change quickly. Never skip a step when operating the progressive braking switch. Always go from OFF to LOW, and then to a higher position.

Descending a Long, Steep Grade

An explanation of “control speed” may be helpful in understanding how to use the engine brake system while descending a grade. Control speed is the constant speed at which the forces pushing the vehicle forward on a grade, are equal to the forces holding it back, without using the vehicle service brakes. In other words, this is the speed the vehicle will maintain without using the service brakes or throttle.

CAUTION

Do not over apply the vehicle service brakes when descending a long, steep grade. Excessive use of the vehicle brakes will cause them to heat up, reducing their stopping ability. This condition, referred to as “brake fade”, may result in loss of braking, which could lead to loss of control of the vehicle, resulting in personal injury or property damage.

Use the following guidelines when descending a long, steep grade.

- Before beginning the descent, determine if your engine brake system is operating properly, by lifting your foot briefly off the accelerator pedal. You should feel the system activate.
- Ensure the progressive braking switch is in the appropriate power position. Check your progressive braking switch often for proper position, since road conditions can change quickly. Never skip a step when operating the progressive braking switch. Always go from OFF to LOW and then to a higher position when on slippery roads.
- Do not exceed the safe control speed of your vehicle. Example: You could descend a 6 percent grade, under control at 10 mph (16 km/h) without an engine brake, but at 25 mph (40 km/h) it requires an engine brake. You could not descend that same hill at 50 mph (80 km/h) and still expect to remain under control. Know how much slowing power your engine brake can provide before descending hills, and do not exceed a safe control speed.

Driving on Wet or Slippery Pavement

WARNING

To avoid injury from loss of vehicle control, do not activate the engine brake system under the following conditions:

- **on wet or slippery pavement**
- **when driving without a trailer (bobtailing) or pulling an empty trailer**
- **if the tractor drive wheels begin to lock, or there is fishtail motion after the engine brake is activated**

NOTE: On single trailers or combinations, a light air application of the trailer brakes may be desirable to help keep the trailer stretched out. Follow the manufacturer’s recommended operating procedure when using the trailer brakes.

On wet or slippery pavement, start with the master switch in the OFF position and use the gear you would normally use under these conditions. If the vehicle is maintaining traction, place the selective braking switch in the LOW position and turn ON the engine brake system. If the drive wheels are maintaining traction and you desire greater slowing power, move the braking switch to the next higher position. However, if the tractor drive-wheels begin to lock, or there is a fishtail motion, turn the engine brake system OFF immediately and do not activate it until road conditions improve.

Check your progressive engine braking switch often for proper position, since road conditions can change quickly. Never skip a step when operating the progressive braking system. Always go from OFF to LOW and then to a higher position. See **Chapter 2** for the proper operation of the engine brake.

Engine Starting—CAT, Cummins, DDE S60, M-B

Normal Starting

For cold-weather starting, refer to "Cold-Weather Starting" later in this chapter.

Whenever you start an engine, watch for any signs of engine problems. If the engine vibrates, misfires, or makes unusual noises, turn the engine off as soon as possible and determine the cause of the problem.

https://truckmanualshub.com/

Frequently, engine damage may be avoided by a quick response to early indications of problems.

CAUTION

When starting a vehicle equipped with a manual transmission and clutch lockout switch, the clutch pedal must be fully depressed during the entire start sequence. Failure to do so can cause the pinion to release and re-engage, which could cause ring gear and starter pinion damage.

If a vehicle does not start on the first attempt, make sure that the engine has completely stopped rotating before reapplying the starter switch. Failure to do so can cause the pinion to release and re-engage, which could cause ring gear and starter pinion damage.

Moving a vehicle with the starter and/or using the starter to bump the engine for maintenance procedures is strictly prohibited. Use of these methods to bump the engine over or move the vehicle can cause the pinion to release and re-engage, which could cause ring gear and starter pinion damage.

IMPORTANT: The starter can not be used for priming the fuel system. Priming is done by operating the manual hand priming pump located on the fuel filter module, or connecting an electric priming pump to the priming port on the fuel filter module. See the engine operation manual for complete instructions.

Prestart

NOTE: These prestart steps apply to all engines.

1. Perform the engine pretrip inspection and daily maintenance checks in **Chapter 11**.
2. Apply the parking brake.

NOTE: On vehicles equipped with a neutral start switch, the transmission must be in neutral before the engine can be started. For air start systems, check the air supply before starting the engine. There must be 100 psi (689 kPa) of air pressure available.

3. For manual transmissions, place the transmission in neutral and disengage the clutch.

   For automatic transmissions, make sure the transmission shift control is in neutral or park.

Starting Precautions

CAUTION

Do not crank the engine for more than 30 seconds at a time. Wait two minutes after each try to allow the starter to cool. Failure to do so could cause starter damage.

NOTE: Some starters are equipped with optional overcrank protection. If overcranking occurs, a thermostat breaks the electrical circuit to the starter motor until the motor has cooled.

CAUTION

Protect the turbocharger during the start-up by not opening the throttle or accelerating the engine above 1000 rpm until minimum engine idle oil pressure registers on the gauge. Failure to do so could damage the turbocharger.

WARNING

Never pour fuel or other flammable liquid into the air inlet opening in the air intake in an attempt to start the vehicle. This could result in a flash fire causing serious personal injury or property damage.

WARNING

Starting fluid is highly flammable and explosive. It can cause serious injury or death if improperly handled. Do not smoke where starting fluid is in use. Keep sparks, flames, and arc welding equipment away from starting fluid.

Caterpillar

NOTE: Before doing these steps, do the steps in "Prestart".

1. Turn the ignition switch to the on position (**Fig. 7.6**). All the electronic gauges on the ICU (instrumentation control unit) complete a full sweep of their dials, the warning and indicator lights light up, and the buzzer sounds for three seconds.

NOTE: The engine electronics supply the correct amount of fuel for starting the engine. Pedal pressure is unnecessary.

https://truckmanualshub.com/

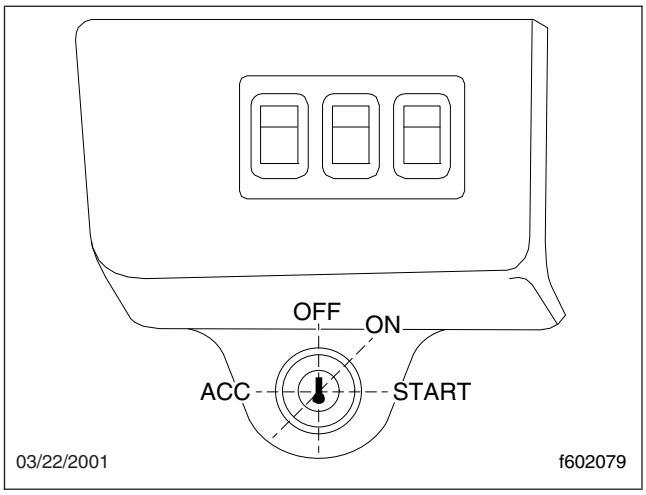

Fig. 7.6, Ignition Switch Positions

2. Turn the ignition switch to the start position. Do not press down on the throttle pedal. Release the switch the moment the engine starts.

   2.1 If the engine does not start after 30 seconds of cranking, turn the ignition switch off.

   NOTE: Some starters are equipped with optional overcrank protection. If overcranking occurs, a thermostat breaks the electrical circuit to the starter motor until the motor has cooled.

   2.2 Wait two minutes to allow the starter motor to cool. Turn the ignition switch back to the on position and try again to start the engine.

   2.3 As soon as the engine starts, release the ignition switch, allowing the engine to run at a slow idle.

CAUTION

If the oil pressure is less than 5 psi (35 kPa), shut down the engine immediately to prevent serious damage. If the vehicle is equipped with an automatic shutdown system, the engine will shut down after 30 seconds.

3. Caterpillar C–10/C–12/C–15/C–16 engines may be operated at low load and speed once the engine oil pressure has reached 10 to 20 psi (69 to 138 kPa). Caterpillar 3406E engines may be operated at low load and speed once the engine oil pressure has reached 18 psi (124 kPa).

4. When the engine has reached the normal operating temperature of 189°F (87°C), the engine may be operated at full load.

Cummins

NOTE: Before doing these steps, do the steps in "Prestart".

1. Turn the ignition switch to the on position (**Fig. 7.6**). All the electronic gauges on the ICU (instrumentation control unit) complete a full sweep of their dials, the warning and indicator lights light up, and the buzzer sounds for three seconds.

2. Turn the ignition switch to the start position. After the engine starts, release the key.

NOTE: Some starters are equipped with optional overcrank protection. If overcranking occurs, a thermostat breaks the electrical circuit to the starter motor until the motor has cooled.

3. Bring the engine up to operating speed gradually as it warms up and develops stable oil pressure.

NOTE: When the engine is started, it takes a short time to build up a lubricating oil film between the shafts and bearings, and between the pistons and liners. The oil pressure gauge indicates any drop in lubricating oil pressure within 15 seconds of engine start-up.

4. If minimum engine oil pressure at idle of 10 psi (69 kPa) does not register within 15 seconds, shut down the engine.

CAUTION

Protect the turbocharger during the start-up by not opening the throttle or accelerating the engine above 1000 rpm until minimum engine idle oil pressure registers on the gauge. Failure to do so could damage the turbocharger.

5. Idle the engine for three to five minutes at 1000 rpm before operating the engine under load.

DDE S60

NOTE: Before doing these steps, do the steps in "Prestart".

1. Turn the ignition switch to the on position (**Fig. 7.6**). All the electronic gauges on the ICU (instrumentation control unit) complete a full

https://truckmanualshub.com/

sweep of their dials, the warning and indicator lights light up, and the buzzer sounds for three seconds.

2. When all the indicators go out, turn the ignition switch to the start position. Without touching the throttle pedal, start the engine. If the engine won't start within 15 seconds, release the ignition switch and allow the starter motor to cool.

IMPORTANT: If the engine won't start, check the main engine power fuses. The fuses are located along the main engine electrical harness on the left frame rail, near the batteries. If the fuses are blown, replace the fuses. Be sure to find the cause of the blown fuses as soon as possible.

NOTE: Some starters are equipped with optional overcrank protection. If overcranking occurs, a thermostat breaks the electrical circuit to the starter motor until the motor has cooled.

WARNING

Never pour fuel or other flammable liquid into the air inlet opening in the air intake in an attempt to start the vehicle. This could result in a flash fire causing serious personal injury or property damage.

3. Check the oil pressure gauge immediately after starting the engine.
4. If no pressure registers within 10 to 15 seconds or the ENGINE PROTECT indicator comes on, shut down the engine and check the lubricating oil system.

CAUTION

Protect the turbocharger during the start-up by not opening the throttle or accelerating the engine above 1000 rpm until minimum engine idle oil pressure of 12 psi (83 kPa) registers on the gauge.

5. Idle the engine for about five minutes at 1000 rpm before operating the engine under load.

Mercedes-Benz

NOTE: Before doing these steps, do the steps in "Prestart".

CAUTION

Never attempt to start any Mercedes-Benz electronic engine using ether or any other starting fluid. Serious engine damage could result.

1. Turn the ignition switch to the on position (**Fig. 7.6**). All the electronic gauges on the ICU (instrumentation control unit) complete a full sweep of their dials, the warning and indicator lights light up, and the buzzer sounds for three seconds.

IMPORTANT: On vehicles equipped with an intake air preheater, the INTAKE HEATER indicator stays on for a minimum of two seconds, regardless of coolant temperature. Wait until the INTAKE HEATER indicator goes out before attempting to start the engine.

2. Turn the ignition switch to the start position. Without touching the throttle pedal, start the engine.

NOTE: Some starters are equipped with optional overcrank protection. If overcranking occurs, a thermostat breaks the electrical circuit to the starter motor until the motor has cooled.

3. Idle the engine for one to three minutes at 600 to 850 rpm before operating the engine under load.
4. Check the oil pressure gauge for any drop in lubricating oil pressure or mechanical malfunction in the lubricating oil system. Minimum oil pressure at idle is 7 psi (50 kPa).

CAUTION

Do not rev the engine if the oil pressure gauge indicates no oil pressure. Shut down the engine if no oil pressure appears within approximately ten seconds. Check to determine the cause of the problem. Operating the engine with no oil pressure will damage the engine.

Cold-Weather Starting

Modern electronic engines do not normally require special starting aids. At low temperatures, oil pan heaters or water jacket heaters are sometimes used to assist in starting.

https://truckmanualshub.com/

⚠ WARNING

If using a cold-weather-start system, be sure to follow the manufacturer's instructions regarding its use, handling, and storage. Many starting fluids are in capsules or pressure cans, and improper usage can be dangerous.

Do not attempt to use any type of vapor-compound start system near heat or open flame. Engine damage due to an explosion or fire in the intake manifold could result.

Do not breathe the ether fumes; doing so could result in personal injury.

Caterpillar

Turn the ignition switch to the on position (**Fig. 7.6**).

If the engine doesn't start after 30 seconds of cranking, turn the key to the off position and wait two minutes; then repeat the starting procedure.

If the coolant temperature is less than 64°F (18°C), the engine will start up in the cold-start strategy. This reduces the amount of fuel available to the injectors, advances the timing, and controls white smoke emissions. The engine remains in the cold-start strategy until the coolant temperature rises above 64°F (18°C), or until it has been running for 12 minutes.

IMPORTANT: Do not move the vehicle when it is in the cold-start strategy. Power will be noticeably reduced.

After a cold engine start of less than 64°F (18°C), Caterpillar electronic engines automatically idle at 800 rpm (for C–10 and C–12 engines), or 600 rpm (for 3406E, C–15, and C–16 engines). These electronic engine systems will adjust the idle speed to 700 to 750 rpm when the engine is warm enough to drive the vehicle.

Cummins

The cold-start system approved for use on Cummins engines has been based upon starting aid capabilities to –25°F (–32°C). For more information, see the Cummins *Operation and Maintenance Manual*.

Turn the ignition switch to the on position (**Fig. 7.6**).

If the engine doesn't start after 30 seconds of cranking, turn the key to the off position and wait two minutes; then repeat the starting procedure.

Run the engine slightly above idle until oil pressure shows on the gauge. If oil pressure doesn't show on the gauge within 30 seconds of starting, turn the key to the off position and wait one minute; then repeat the starting procedure.

DDE S60

The engine may require the use of a cold-weather starting aid if the outside temperature falls below 40°F (4°C).

Turn the ignition switch to the on position and start the engine.

If the engine doesn't start after 30 seconds of cranking, turn the key to the off position and wait two minutes; then repeat the starting procedure.

Run the engine slightly above idle until oil pressure shows on the gauge. If oil pressure doesn't show on the gauge within 30 seconds of starting, turn the key to the off position and wait one minute; then repeat the starting procedure.

Mercedes-Benz

⚠ CAUTION

Never attempt to start any Mercedes-Benz electronic engine using ether or any other starting fluid. Serious engine damage could result.

The intake air preheater is activated by turning the ignition switch to the on position (**Fig. 7.6**). If the engine is at normal temperature, the INTAKE HEATER indicator goes out after two seconds.

If the temperature is low enough to require the heater, the INTAKE HEATER indicator stays on while the intake air preheater warms up. After the indicator goes out, start the engine. If the engine doesn't start after about 30 seconds of cranking, turn the key to the off position and wait two minutes; then repeat the starting procedure.

NOTE: If the engine doesn't start on the second try, wait at least five minutes before using the intake air preheater again.

Starting After Extended Shutdown or Oil Change—CAT, Cummins, DDE S60, M-B

An engine in storage for an extended period of time (over winter, for example) may accumulate water in

https://truckmanualshub.com/

the oil pan. Oil diluted by water cannot provide adequate bearing protection at start-up. For this reason, change the engine oil and filters after extended storage.

Do the following steps after an oil change or after the engine has been shut down for more than three days:

1. Make sure the transmission is filled with the correct type of fluid, as recommended by the transmission manufacturer.
2. Make sure the fuel tank is full. If air has entered the fuel system, prime the fuel system, using the engine manufacturer's instructions.
3. If the engine is equipped with a fuel/water separator, drain off any accumulated water.
4. Check the drive belts to make sure they are in good condition and properly adjusted. Replace any drive belts that are cracked, worn, or glazed.
5. Check the turbocharger for signs of oil or exhaust leaks. Correct any problems before starting the engine.
6. Check the engine mounting bolts for tightness. Retighten them if necessary.
7. Make sure the battery cable connections are clean and tight. Check that the batteries are charged.
8. Start the engine. See "Engine Starting".

Engine Break-In—CAT, Cummins, DDE S60, M-B

Caterpillar

Every Caterpillar engine must pass a full-load operation test on a dynamometer before shipment, eliminating the need for a break-in period. Only an initial operational check is necessary.

Cummins

Cummins engines are run on a dynamometer before being shipped from the factory. They do not require a break-in period.

DDE S60

Detroit Diesel engines can be put to work upon delivery without having to follow a formal break-in schedule. The engine has been "run-in" on a factory dynamometer during performance and quality assurance tests prior to shipment.

Mercedes-Benz

Every Mercedes-Benz engine is tested on a dynamometer before shipment. Therefore, no break-in period is necessary for the MBE4000 engine. Before running the engine for the first time, follow the instructions in **Chapter 2** of the *MBE4000 Engine Operator's Manual*.

Engine Operation—CAT, Cummins, DDE S60, M-B

Operating vehicles with diesel engines in areas where there are concentrated flammable vapors (such as diesel, gasoline, or propane fumes) can create a hazardous situation. These vapors can be drawn into the engine through the air intake, and cause engine overspeed. Be especially cautious of low-lying or closed-in areas, and always check for signs that flammable vapors may be present.

⚠ DANGER

Do not operate the engine in an area where flammable vapors such as gasoline or diesel fumes are present. Shut down the engine when in an area where flammable liquids or gases are being handled. Failure to observe these precautions could result in serious injury or death.

All diesel engines have been built to comply with the requirements of the Federal (U.S.) Clean Air Act. Once the engine is placed in service, the responsibility for meeting both state and local regulations is with the owner/operator. Good operating practices, regular maintenance, and proper adjustments are factors which will help to stay within the regulations.

Adequate maintenance of the engine, which is the responsibility of the owner/operator, is essential to keep the emission levels low.

The driver should be familiar with the vehicle warning system in order to bring the vehicle to a safe stop if the engine malfunctions. If the driver doesn't understand how the warning system works, an engine shutdown could occur, causing a safety hazard. See **Chapter 2** for information on the control panels for the various engines.

https://truckmanualshub.com/

Caterpillar

Proper operation and maintenance are key factors in obtaining the maximum life and economy of a vehicle engine. Follow the directions in this manual and the Caterpillar *Operation and Maintenance Manual* for trouble-free, economical engine operation.

Caterpillar C–10, C–12, C–15, C–16, and 3406E electronic engines can be equipped with a variety of options designed to warn the driver of engine malfunctions. The driver of a vehicle equipped with these engines should know the extent of the warning system in order to bring the vehicle to a safe stop if the engine malfunctions. If the driver doesn't understand how the warning system works, an engine shutdown could cause a safety hazard. See **Chapter 2** for information on the control panel for these engines.

The electronic control system can monitor engine oil pressure, coolant temperature, intake manifold air temperature, and coolant level. There are four customer programmable levels for Caterpillar engine monitoring: off, warning (factory default), derate, and shutdown.

In the engine monitoring off mode, the ECM (engine control module) will ignore the oil pressure sensor and coolant level sensor (if installed). Engine monitoring warning mode uses oil pressure, coolant temperature, intake manifold temperature, and the coolant level sensor (if installed and enabled). The CHECK ENGINE indicator will flash and the warning signal will come on when the diagnostic code is active. Engine monitoring derate and shutdown modes allow the ECM to alter engine performance or stop the engine to help the engine avoid damage and return to normal conditions.

1. Operate the engine at low load. After normal oil pressure is reached and the temperature gauge begins to move, the engine may be operated at full load.
2. Keep engine speed to a minimum. An acceptable range is 1200 to 1600 rpm.
3. Select a gear that allows a smooth, easy start without increasing engine speed above low idle or slipping the clutch. Engage the clutch smoothly. Jerky starts waste fuel and put stress on the drivetrain.

   It is not necessary to accelerate Caterpillar electronic engines to governed speed in the lower gears to get the vehicle moving, except in a high power demand situation such as starting on a grade.
4. Continue to upshift until cruising speed is reached. Use only the rpm needed to make an upshift into the next gear. The engine speed needed to make an upshift increases as the vehicle speed increases or if upshifts are made on uphill grades. If the vehicle can be operated in a higher gear after reaching the desired speed, select the highest gear available that will pull the load. Experience with your vehicle will show you what rpm is needed to make upshifts under various conditions. This progressive shifting technique will lower fuel costs because the engine will be operating at the lowest rpm needed to pull the load.

   Caterpillar electronic engines can be programmed to limit engine rpm while the vehicle is operated in the lower and higher gears. This feature assists the driver in following progressive shifting techniques.
5. On uphill grades, begin downshifting when the engine speed falls to 1200 rpm for C–10, C–12, C–15, C–16, and 3406E electronic engines. Fuel economy will be best if you let the engine lug back to around this speed before you downshift. Downshift until a gear is reached in which the engine will pull the load. Let the engine lug down if you can make it to the top of a hill without downshifting.

IMPORTANT: Do not let C–10, C–12, C–15, C–16, and 3406E electronic engines exceed 2300 rpm (2100 rpm if equipped with an exhaust brake).

6. On a downhill grade, do not coast or put the transmission in neutral. Select the correct gear that does not allow the engine to exceed its maximum speed. Use the brakes to limit the vehicle speed.

   A simple rule to follow is to select the same gear (or one gear lower) than would be needed to go up the grade.
7. As with any engine, prolonged idling of Caterpillar engines is not recommended. An idling engine wastes fuel and if left unattended, is also unsafe.

   Caterpillar engines can be programmed to shut off automatically after a specified idling time. The vehicle transmission must be in neutral and the parking brake must be set for the automatic shutoff option to work.

https://truckmanualshub.com/

BrakeSaver, Optional

The BrakeSaver (optional on 3406E engines) permits the operator to control the speed reduction of the vehicle on grades, curves, or anytime speed reduction is necessary but long applications of the service brakes are not desired.

During downhill operation, the crankshaft is turned by the rear wheels (through the drivetrain). To reduce the speed of the vehicle, an application of braking force can be made to the crankshaft. The BrakeSaver does this by converting rotation energy into heat, which is removed by the engine cooling system. The BrakeSaver is controlled by the driver, as necessary, by operating a lever on the instrument panel. Braking force increases as the lever is moved toward the ON position. An air pressure gauge provides a relative indication of the braking force. An oil temperature gauge indicates the heat in the BrakeSaver during its operation. If the temperature gauge indicates HOT, the BrakeSaver control lever must be moved to the OFF position. The oil temperature will decrease rapidly with the BrakeSaver off. When the temperature reaches normal, the BrakeSaver can be used.

CAUTION

Do not engage the BrakeSaver and control the wheel speed with the accelerator. The design of the cooling system is for the control of the temperature of the oil at full engine power or full BrakeSaver capacity, but not both at the same time.

Cummins

Follow the directions in this manual and the Cummins *Operation and Maintenance Manual* for trouble-free, economical vehicle engine operation.

1. Cummins diesel engines produce high horsepower and peak torque characteristics at lower rpm. Because of this, it is not necessary to keep the engine "wound up" to deliver the required horsepower at the wheels. These characteristics may also result in less shifting and make shifting at lower rpm (toward peak torque) more practical.
2. Depending on the vehicle gearing, the posted speed limit can sometimes allow operation in either of the top two gears; however, for improved operating efficiency (fuel economy and engine life), operate in the top gear at reduced rpm rather than in the next lower gear at the maximum rpm.
3. Drive at partial throttle whenever road conditions and speed requirements permit. This driving technique permits operating within the most economical power range of the engine.
4. When approaching a hill, open the throttle smoothly to start the upgrade at full power, then shift down as desired to maintain the maximum vehicle speed. The high torque of Cummins engines may permit topping some grades without shifting.
5. Cummins engines are designed to operate over a wide speed range. More frequent shifting than necessary does not allow proper utilization of this flexibility. The driver who stays in top gear and uses the wider speed range will achieve the best fuel economy.
6. The Cummins diesel engine is effective as a brake on downhill grades, but care must be used not to overspeed the engine going downhill. The governor has no control over engine speed when it is being pushed by the loaded vehicle.

   Never turn off the ignition switch while going downhill. With the engine still in gear, fuel pressure will build up against the shutdown valve, and may prevent it from opening when the ignition key is turned on.

CAUTION

Do not allow the engine to exceed its governed speed, or serious engine damage could result.

7. Use a combination of brakes and gears to keep the vehicle under control at all times and to keep the engine speed below the rated governed rpm.

DDE S60

Individual driving habits can make a difference in the performance and economy of any engine. The recommendations below call attention to the techniques that can be employed to save fuel and extend the operating efficiency and life of a new Detroit Diesel engine for the longest possible time.

Engines with Detroit Diesel Electronic Control (DDEC) can be equipped with a variety of options designed to warn the operator of engine problems. The operator of a DDEC-equipped engine should know the extent of the warning system in order to

https://truckmanualshub.com/

bring the vehicle to a safe stop if the engine malfunctions. If the operator does not understand how the system works, an engine shutdown could cause a safety hazard. See **Chapter 2** for information on the DDEC control panel.

All engines have an operating range in which the engine performs most efficiently. The operating range extends from maximum torque rpm at the low end to engine rated speed at the high end. Detroit Diesel engines deliver best fuel economy when operated in the low- and mid-speed segments of the efficiency range and produce maximum horsepower at rated speed, which is also the recommended maximum speed of the engine.

1. It is seldom necessary to accelerate the engine to governed speed in the lower gears to get the vehicle moving, except in a high power demand situation such as starting on a grade.

   To conserve fuel, start off in low gear and develop only the engine speed needed to get rolling. Then, increase engine speed gradually as upward gear shifting progresses.

   As described by Detroit Diesel, this progressive shifting technique will get the vehicle up to the desired cruising speed while minimizing noise emission and maximizing fuel economy. A progressive shift pattern is illustrated in **Fig. 7.7**.

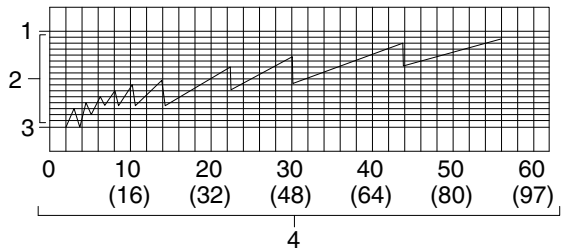

11/02/95 f250319

1. Governed RPM
2. Engine RPM
3. Idle RPM
4. Miles (Kilometers) Per Hour

Fig. 7.7, Progressive Shift Pattern

NOTE: A momentary hesitation in throttle response will occur when a vehicle with a turbocharged engine is started on a grade. *Do not* disengage the clutch. The rpm will recover, and the vehicle will accelerate up the grade.

2. For city driving, run in the highest gear possible and reduce engine speed. This enables you to operate at a safe speed for traffic conditions while using less fuel and reducing noise. Also, when slowing down for reduced speed zones, remain in your running gear and reduce engine rpm to stay within the speed limit. Avoid downshifting until you are ready to return to highway cruising speed.

3. For highway cruising, and for best fuel economy, run the engine at 80 to 90 percent of rated rpm to maintain highway speed. Engines with 1800 rpm ratings are exceptions and will provide fuel economy when run at their rated speed. Proper gear selection should permit cruising in the economy range with no appreciable sacrifice in desired highway speed.

   It is okay to operate below rated rpm at full throttle if you are satisfied with the way the vehicle performs. However, there are times when hilly terrain, high winds, or other conditions make it impractical to operate without reserve power. Such conditions are better met if the vehicle is operated in a lower gear with reserve power available for changes in terrain, wind, etc.

4. The proper use of gears will shorten time on hills and minimize the amount of shifting. When starting up a hill, gradually depress the throttle pedal all the way and keep it there as the vehicle moves up the grade. If the engine continues to maintain a satisfactory road speed, remain in that gear for the entire grade.

   If the hill causes a steady decline in engine rpm, downshift as required until the engine can maintain a stable uphill speed. Make full use of each gear before going to a lower gear. By remaining in a gear until arriving at the speed of the next lower gear, the vehicle will top the grade in the best possible time on less fuel and fewer shifts.

5. Because of their constant torque over a wide speed range, Detroit Diesel engines can be operated at full throttle at lower rpm than other engines. This offers benefits in fuel economy and engine life. And more than likely, it will be possible to top most grades without downshifting.

   When the vehicle starts into a grade, allow the engine to lug down to maximum torque rpm before downshifting. Downshift, if required, at maximum torque rpm also or at the predetermined road speed for the next lower gear.

   Do not be afraid to lug the engine down. It has more than enough torque at low rpm to keep a

https://truckmanualshub.com/

loaded vehicle moving against a grade and it won't harm the engine.

6. The driver who is not familiar with the vehicle's shift points can greatly improve driving skill by learning them for all gears. By knowing rather than guessing where the shift points are, it is possible to avoid overspeeding the engine by downshifting too soon or missing the full use of a gear by downshifting too late. The shift points of any vehicle can be determined by a simple road-test method. Run the vehicle and determine the maximum road speed possible in every gear at the engine governed full-load speed setting.

   The top road speed possible in a gear would be the shift point for that gear. The results should be recorded in the proper order of shifting and displayed inside the cab.

CAUTION

Do not allow the engine to exceed its governed speed, or serious engine damage could result.

7. To slow the vehicle on downgrades and curves (using the engine), shift to a lower gear and allow the vehicle to decelerate in that gear. The engine provides maximum braking effect when running at the top end of the operating range, but it must not be allowed to exceed its full-load rated rpm. Continue to downshift as further reduction in vehicle speed is required. If the vehicle is above the allowable maximum speed of a lower gear, use the service brakes to slow the vehicle to an acceptable speed where the transmission may be downshifted safely. Again, the importance of knowing the shift points is demonstrated.

IMPORTANT: The engine governor has no control over engine rpm when the engine is being pushed by a loaded vehicle down a grade. Use service brakes and gears in combination on long grades to keep the vehicle speed under control and the engine rpm below full-load rated governed speed.

8. Essential information regarding the operation and care of Allison automatic transmissions is contained in the Allison *Driver's Handbook.* Applying the knowledge presented will not only make driving easier, but will give the maximum benefits from an Allison-equipped vehicle.

   Maintenance literature is also available for drivers of Allison-equipped vehicles who desire trouble-free performance and maximum life from their equipment. These maintenance books are available from any authorized Detroit Diesel engine distributor.

9. As with all engines, prolonged idling of Detroit Diesel engines is not recommended. An idling engine wastes fuel, and left unattended is also unsafe.

   A Detroit Diesel Electronic Control (DDEC) engine can be equipped to shut off automatically after a specified idling time. The vehicle transmission must be in neutral and the parking brake must be set for the automatic shutoff option to work. To start the engine, follow the normal start-up procedure.

   Engines equipped with DDEC will idle fast when cold. As the engine warms up to operating temperature, the idle speed will decrease. Warm the engine until idle speed is normal before operating the vehicle.

Mercedes-Benz

While you are driving, watch for any signs of engine problems. If the engine overheats, uses excessive fuel or lubricating oil, vibrates, misfires, makes unusual noises, or shows an unusual loss of power, turn the engine off as soon as possible and determine the cause of the problem. Frequently, engine damage may be avoided by a quick response to early indications of problems.

1. Use the tachometer to determine when to shift. Follow the pattern on the shift lever when moving through the gears.
2. Depending on the vehicle gearing, the posted speed limit can sometimes allow operation in either of the top two gears; however, for improved operating efficiency (fuel economy and engine life), operate in the top gear at reduced rpm, rather than in the next lower gear at the maximum rpm.
3. Cruise at partial throttle whenever road conditions and speed requirements permit. This driving technique permits operating within the most economical power range of the engine.
4. Use lower gears in steep downhill driving. Normally, the gear used to descend a hill is the same gear used to climb a hill of the same grade.

https://truckmanualshub.com/

5. Never allow the engine to exceed the rated speed. Use the exhaust brake and the optional constant-throttle brake, if installed, to lower engine rpm below the rated speed.
6. Never allow the engine to idle for more than 30 minutes. Excessive idling can cause oil to leak from the turbocharger.

⚠ CAUTION

Stop the engine at the first sign of malfunction. Almost all malfunctions give some warning to the operator before significant damage occurs. Many engines are saved because alert operators heed the warning signs (sudden drop in oil pressure, unusual noises, etc.) and immediately shut down the engine.

NOTE: Long periods of idling are not good for an engine because the combustion chamber temperatures drop so low that the fuel may not burn completely. This will cause carbon to clog the injector spray holes and piston rings, and may result in stuck valves.

If the engine coolant temperature becomes too low, raw fuel will wash the lubricating oil off the cylinder walls and dilute the crankcase oil, causing all moving parts of the engine to suffer from poor lubrication.

Cold-Weather Operation—CAT, Cummins, DDE S60, M-B

Satisfactory performance of a diesel engine operating in low ambient temperatures requires modification of the engine, surrounding equipment, operating practices, and maintenance procedures. The lower the temperatures, the greater the amount of modification required; and yet with the modifications applied, the engines must still be capable of operation in warmer climates without extensive changes.

The following information is provided to engine owners, operators, and maintenance personnel on how the modifications can be applied to get satisfactory performance from their diesel engines.

There are three basic objectives:

- Reasonable starting characteristics followed by practical and dependable warm-up of the engine and equipment.
- A unit or installation which is as independent as possible from external influences.
- Modifications which maintain satisfactory operating temperatures with a minimum increase in maintenance of the equipment and accessories.

If satisfactory engine temperature is not maintained, higher maintenance cost will result due to increased engine wear. Special provisions to overcome low temperatures are definitely necessary, whereas a change to a warmer climate normally requires only a minimum of revision. Most of the accessories should be designed in such a way that they can be disconnected so there is little effect on the engine when they are not in use.

IMPORTANT: If a winterfront is used on a vehicle with an electronic engine equipped with a charge air cooler, make sure that there are slit openings distributed across the face of the winterfront to allow airflow through the entire charge-air-cooler core. Do not use a winterfront with closed areas that block uniform air flow across all sections of the charge-air-cooler crossflow tubes. This will adversely affect the operation and durability of the charge air cooler.

On all engines, the following steps are necessary when operating in cold weather:

1. Check for cracks in the battery cases, for corrosion of the terminals, and for tightness of the cable clamps at the terminals.
2. Charge the batteries to full capacity. Replace any battery that is unable to hold full charge or is physically damaged.
3. Check the alternator output.
4. Check the condition and tension of the drive belts.

Caterpillar

If the engine is in good mechanical condition and the precautions necessary for cold-weather operation are taken, ordinary cold weather will not cause difficulty in starting or loss of efficiency.

If the engine does not start, prime the fuel system.

When the use of unblended No. 2 diesel fuel in winter cannot be avoided, install a thermostatically controlled fuel heater. Fuel heaters can prevent wax from clogging the fuel filters and formation of ice crystals from water in the fuel.

https://truckmanualshub.com/

IMPORTANT: If a fuel heater is used, make sure it has thermostatic controls to prevent excessive heating of the fuel in warm weather. Excessive heating of fuel can cause a loss of engine power.

For cold weather operation, use the following guidelines:

1. When starting the engine in temperatures below 32°F (0°C), use engine lubricants of lower viscosity. Refer to the Caterpillar *Operation and Maintenance Manual* for specifications.
2. When the temperature is below freezing, use sufficient antifreeze solution in the cooling system to prevent freezing.
3. During cold weather, give more attention to the condition of the batteries. Test them frequently to ensure sufficient power for starting. See **Group 15** of the *Century Class Trucks Workshop Manual* for detailed information.
4. If so equipped, turn off the battery disconnect switch after the engine is shut down, to prevent battery discharge.

   For starting below 0°F (–18°C), an optional cold-weather starting assist is recommended. For temperatures below –10°F (–23°C), consult your Caterpillar dealer for recommendations.
5. When customer parameters include cold-mode operation and the coolant temperature is below 82°F (28°C), the system puts the engine into cold mode. It adjusts the low idle to 600 rpm (for the 3406E, C–15, and C–16 engines) and 800 rpm (for the C–10 and C–12 engines). It also advances the timing, to reduce white smoke emissions and improve warm-up time. The system will keep the engine in cold mode until the coolant temperature rises above 82°F (28°C). After cold mode has been completed, operate the vehicle at low load and low rpm until the engine coolant reaches normal operating temperature of 189°F (87°C).
6. Fuel cloud point is the temperature at which wax crystals become visible, which is generally above the pour point of the fuel. To keep the fuel filter elements from plugging with wax crystals, the cloud point should be no higher than the lowest ambient temperature at which the engine must start.

Cummins

The two most commonly used terms associated with preparation of equipment for low-temperature operation are "winterization" and "arctic specifications."

Winterization of the engine and/or components, so that starting and operating are possible in the lowest temperature to be encountered, requires:

- Proper lubrication with low-temperature lubricating oils.
- Protection from the low-temperature air. The metal temperature does not change, but the rate of heat dissipation is affected.
- Fuel of the proper grade for the lowest temperature.
- Heat to raise the engine block and component temperatures to at least –25°F (–32°C) for starting in lower temperatures.
- Electrical equipment capable of operating in the lowest expected temperature. All switches, connections, and batteries in the electrical system should be inspected and kept in good condition to prevent losses through poor contacts.

Arctic specifications refer to the design of material and specifications of components necessary for satisfactory engine operation in extremely low temperatures to –65°F (–54°C). Contact the nearest Freightliner dealer or Cummins engine dealer, to obtain the special items required.

CAUTION

"Antileak" antifreezes are not recommended for use in Cummins engines. Although these antifreezes are chemically compatible with DCA water treatment, the "antileak" agents may clog the coolant filters.

IMPORTANT: Fuel heaters used on vehicles with Cummins CELECT Plus engine systems could cause high fuel temperatures that affect engine performance and operation of the electronic engine controls. If a fuel heater is used, make sure it has thermostatic controls. If the fuel heater has a timer, set the timer to activate only for a limited period of time before the engine starts. Make sure the fuel heater is used only for starting the engine.

For more information, see the Cummins *Operation and Maintenance Manual*.

https://truckmanualshub.com/

DDE S60

Preparations made in advance of winter and maintenance performed during the cold months will help to ensure efficient engine starting and operation.

- Engine oil thickens as it gets colder, slowing cranking speed. When cold, multi-grade oil offers less resistance to the cranking effort of the engine and permits sufficient rpm to be developed to start the engine. See "How to Select Lubricating Oil" in the Detroit Diesel *Engine Operator's Guide* for specific recommendations.
- When an engine equipped with a DDEC system is started at temperatures below 25°F (–4°C), the idle speed automatically increases to 900 rpm. The injection timing is also advanced to decrease white smoke. As the engine oil warms up, the idle speed gradually decreases. When the oil temperature reaches 122°F (50°C), both the idle speed and the injection timing return to normal.
- A winterfront may be used to improve cab heating while idling. At least 25% of the grille opening should should remain open in sectioned stripes that run perpendicular to the charge air cooler tube flow direction. This assures even cooling across each tube and reduces header-to-tube stress, and possible failure. Winterfronts should only be used when the ambient temperature remains below 10°F (–12°C)
- During cold weather, the batteries should be tested more frequently to ensure ample power for starting. All electrical connections should be tight and in good condition to prevent losses through loose or corroded connections.
- Ethylene glycol base antifreeze is recommended. An inhibitor system is included in this type of antifreeze, and the corrosion protection is sufficient as long as the recommended concentration range of 30 to 67 percent (antifreeze to water by volume) is employed.
- If the engine is to be operated in arctic temperatures, consult the nearest Freightliner dealer or an authorized Detroit Diesel engine dealer for information regarding availability of special cold-weather equipment.

Mercedes-Benz

Special precautions must be taken during cold weather. For service products to use in cold weather, see **Chapter 5** of the *MBE4000 Engine Operator's Manual*.

IMPORTANT: At outside temperatures below –4°F (–20°C), a coolant preheater is recommended.

1. Periodically check the coolant mixing ratio (concentration of antifreeze in the coolant). Add more if necessary. The coolant mixing ratio should never rise above 60 percent antifreeze.
2. Use low-viscosity lubricating oils for adequate lubrication.
3. At temperatures below 32°F (0°C), do not use summer-grade (2-D) diesel fuel. To avoid fuel problems due to paraffin separation, use winter-grade (1-D or winterized 2-D) diesel fuel only.

⚠ WARNING

The addition of kerosene lowers the flash point of diesel fuel. To prevent fire and risk of injuries due to burning, do not smoke or use open flames around fuel mixed with kerosene. Comply with all appropriate safety regulations.

4. When winter-grade diesel fuel is not adequate, it is possible to mix kerosene with the diesel fuel. Add the kerosene only when refilling the tank, and before adding the diesel fuel.

NOTE: Engine power may drop according to the proportion of kerosene. For this reason, never add more than 50 percent kerosene to the fuel.

High-Altitude Operation—CAT, Cummins, DDE S60, M-B

Engines lose horsepower when operated at high altitude because the air is too thin to burn as much fuel as at sea level. This loss is about three percent for each 1000 feet (300 m) altitude above sea level for a naturally aspirated engine. Most turbocharged engines are rated for higher altitudes than naturally aspirated engines.

An engine will have smoky exhaust at high altitudes unless a lower gear is used. The engine will not demand full fuel from the fuel system unless the engine is altitude-compensated by the use of a turbocharger.

https://truckmanualshub.com/

Shift gears as needed to avoid excessive exhaust smoke.

Engine Shutdown—CAT, Cummins, DDE S60, M-B

Caterpillar

CAUTION

Stopping the engine immediately after it has been working under load can result in overheating and accelerated wear of the engine components. Excessive temperatures in the turbocharger center-housing will cause oil coking problems. Follow the procedure, outlined below, to allow the engine to cool.

1. With the vehicle stopped, apply the parking brakes. Reduce the engine speed to low idle.
2. Place the transmission shift lever in neutral.

NOTE: If the engine has been operating at low loads, run it at low idle for 30 seconds before stopping. If the engine has been operating at highway speed or at high loads, run it at low idle for three minutes to reduce and stabilize internal engine temperatures before stopping.

3. Turn off the ignition switch and shut down the engine.
4. After engine shutdown, fill the fuel tank.
5. Check the crankcase oil level. Maintain the oil level between the add and full marks on the dipstick.
6. If equipped with an idle shutdown timer, it can be set to shut the engine down after a preset amount of time. Ninety seconds before the preset shutdown time, the CHECK ENGINE light will begin to flash at a rapid rate. If the clutch pedal or service brake indicate a position change during this final ninety seconds, diagnostic lamp flashing, the idle shutdown timer will be disabled until reset.
7. If freezing temperatures are expected, allow the engine jacket water expansion tank to cool, then check the coolant for proper antifreeze protection. The cooling system must be protected against freezing to the lowest expected outside temperature. Add permanent-type antifreeze, if required.
8. Repair any leaks, perform minor adjustments, tighten loose bolts, etc. Observe the vehicle mileage or the service meter reading, if so equipped. Perform periodic maintenance as instructed in the Maintenance Interval Schedule in the Caterpillar *Operation and Maintenance Manual*.

Cummins

CAUTION

When safe to do, shut down the engine at the first sign of malfunction. Almost all malfunctions give some warning to the operator before significant damage occurs. Many engines are saved because alert operators heed warning signs (sudden drop in oil pressure, unusual noises, etc.) and immediately shut down the engine. Failure to do so could damage the engine.

1. With the vehicle stopped, apply the parking brakes, and place the transmission in neutral.

IMPORTANT: Bearings and seals in the turbocharger are subjected to the high heat of combustion exhaust gases. While the engine is running, this heat is carried away by oil circulation, but if the engine is stopped suddenly, the turbocharger temperature may rise as much as 100°F (56°C). The extreme heat may cause bearings to seize or oil seals to leak.

2. Idle the engine three to five minutes before shutting it down. This allows the lubricating oil and the water to carry heat away from the combustion chamber, bearings, shafts, etc. This is especially important with turbocharged engines.

NOTE: Do not idle the engine for excessively long periods. Long periods of idling are not good for an engine because the combustion chamber temperatures drop so low the fuel may not burn completely. This will cause carbon to clog the injector spray holes and piston rings, and may result in stuck valves.

3. If the engine coolant temperature becomes too low, raw fuel will wash the lubricating oil off the cylinder walls and dilute the crankcase oil; therefore, all moving parts of the engine will suffer from poor lubrication.
4. Turn off the ignition switch and shut down the engine.

https://truckmanualshub.com/

DDE S60

1. With the vehicle stopped, apply the parking brakes, and place the transmission in neutral.
2. Allow the engine to run at idle for four to five minutes. This allows the engine to cool and the turbocharger to slow down.

CAUTION

After high-speed operation, shutting down the engine without idling may cause damage to the turbocharger, as it will continue to turn without an oil supply to the bearings.

3. Turn off the ignition switch and shut down the engine.

Mercedes-Benz

If any of the following occur, shut down the engine immediately.

- The oil pressure swings back and forth or falls sharply.
- Engine power and rpm fall even though the throttle pedal remains steady.
- The exhaust pipe gives off heavy smoke.
- The coolant and/or oil temperature climb abnormally.
- Abnormal sounds suddenly occur in the engine or turbocharger.

1. With the vehicle stopped, apply the parking brakes and place the transmission in neutral.

CAUTION

Idle the engine one to two minutes before shutting it down, if this can be done without damage to the engine. After hard operation, shutting down the engine without idling may cause damage to the turbocharger.

2. Allow the engine to idle one to two minutes before shutting it down. This allows the lubricating oil and the coolant to carry heat away from the combustion chambers, bearings, shafts, and seals. The extreme heat may cause bearings to seize or oil seals to leak.

IMPORTANT: Bearings and seals in the turbocharger are subjected to the high heat of combustion exhaust gases. While the engine is running, this heat is carried away by oil circulation, but if the engine is stopped suddenly, the turbocharger temperature may rise as much as 115°F (63°C).

CAUTION

Except in emergency, do not shut down the MBE4000 engine when the coolant temperature is above 194°F (90°C). To do so could damage the engine.

3. Turn off the ignition switch and shut down the engine.

Engine Braking System—CAT, Cummins, DDE S60, M-B

Jacobs Engine Brake

A Jacobs engine brake is a hydraulic-electric engine attachment that converts a diesel engine into an air compressor. This is done by changing engine exhaust valve operation. An engine brake is not a substitute for a service braking system, except in emergencies, because it does not provide the precise control available from the service brakes.

The Jake Brake is controlled by a single, dash-mounted paddle switch with three positions: OFF, LO and HI.

Jacobs Engine Brake Operation

WARNING

Do not use the engine brake if road surfaces are slippery. Using the engine brake on wet, icy, or snow-covered roads could result in loss of vehicle control, possibly causing personal injury and property damage.

To engage the engine brake, the dash switch must be in the LO or HI position and both the clutch and throttle pedals must be fully released. To disengage the engine brake, depress the throttle or clutch pedal, or move the dash switch to OFF. Use the LO position when driving on flat, open stretches of road. If you need to use the service brakes to slow down, switch to a higher position until there is no need for the service brakes.

https://truckmanualshub.com/

⚠ WARNING

The engine brake must be disengaged when shifting gears. The clutch must be used if the dash switch is in the LO or HI position. If the engine brake is engaged when the transmission is in neutral, the braking power of the engine brake can stall the engine, which could result in loss of vehicle control, possibly causing personal injury and property damage.

Since the engine brake is most effective at rated engine speed, gear selection is very important. Gearing down the vehicle within the limits of the rated engine speed makes the engine brake more effective. Recommended engine braking speed is above 1800 rpm and below the rated speed.

IMPORTANT: Maximum retarder performance is obtained when you use the lowest possible gear without exceeding the recommended engine braking speed.

"Control speed" is the speed at which the engine brake performs 100 percent of the required downhill braking, resulting in a constant speed of descent. The control speed varies, depending on vehicle weight and the downhill grade.

Below a set engine speed (set at the factory to 700 rpm), the engine control unit (ECU) will not engage the engine brake. The engine brake will not work below the set engine speed.

For faster descent, select a higher gear than that used for control speed. Service brakes must then be used intermittently to prevent engine overspeed and to maintain desired vehicle speed.

IMPORTANT: When descending a grade, remember that frequent use of service brakes causes them to become hot, which results in a reduction of their stopping ability. Grade descent speed should be such that the service brakes are used infrequently and that they remain cool, thus retaining their effectiveness.

A driver may descend slower than control speed by selecting a lower gear, one that will not overspeed the engine. The engine brake retarding force will then be sufficient to cause vehicle deceleration. Occasional deactivation of the engine brake may be necessary to maintain the designated road speed under these conditions.

⚠ WARNING

Using the engine brake as a primary braking system when the service brakes are operable is dangerous. This can cause long, unpredictable stopping distances, possibly resulting in personal injury or property damage.

Whenever vehicle braking is required, the engine brake may be used with the service brakes. There is no time limit for operation of the engine brake.

1. After the engine is warmed up and the vehicle is in motion, move the paddle switch to the desired position, LO or HI. Depending on the engine model, LO will provide 1/3 or 1/2 of the full braking capacity of the engine. HI will provide maximum engine braking.
2. The engine brake activates when the dash switch is in LO or HI position and the driver's feet are removed from both the clutch and throttle pedals. If it fails to activate, take the vehicle to an authorized Freightliner dealer for service.
3. To obtain maximum retarding, maintain the top governed speed of the engine through appropriate selection of gears when the engine brake is in use.
4. When either the clutch or throttle pedal is depressed, the engine brake is deactivated.

⚠ CAUTION

If the engine brake fails to shut off when either the throttle or clutch pedal is depressed, place the dash switch in the OFF position and do not use the engine brake until the throttle or clutch switch system is repaired. If the engine brake fails to shut off when the dash switch is turned off, the engine should be shut down and the engine brake repaired before continuing operation. Failure to do so could result in damage to the engine.

Turbo Brake (MBE4000 only)

For high braking output, the Mercedes-Benz MBE4000 engine can be equipped with an optional turbo brake. The turbo brake redirects the exhaust gas flow through the turbocharger to provide 600 brake horsepower.

https://truckmanualshub.com/

The turbo brake can be operated either manually or automatically, through the cruise control function.

Because the charge air pressure is maintained at a high level during braking, full throttle response is available immediately, if the operator desires it, without any turbo lag.

The turbo brake is maintenance-free, highly reliable, and adds virtually no weight to the engine.

Constant-Throttle Valves (MBE4000 only)

To increase braking performance, the Mercedes-Benz MBE4000 engine can be equipped with constant throttles in each combustion chamber. Small valves built into the cylinder head allow a small amount of compressed air to escape through the exhaust port during the combustion stroke. The constant-throttle valves are open during the entire time that the engine brake is activated. Although some braking ability is lost because the valves are constantly open, constant-throttle braking is quieter in operation than other types of engine brakes.

When both the exhaust brake and the constant throttles are installed, a three-position switch on the dash controls the engine braking system. Like the engine brake, the constant throttles are deactivated when the accelerator or clutch pedal is depressed. The ABS system, when active, also deactivates constant-throttle braking.

Exhaust Braking System—CAT, Cummins, DDE S60, M-B

General Information

An exhaust brake is an optional auxiliary braking system that assists but does not replace the service brake system. The exhaust brake can be used alone or together with the constant-throttle valves for steep or long grades. The exhaust brake switch located on the control panel, in combination with the accelerator and clutch pedals, allows the driver to make maximum use of the exhaust brake in off-highway and mountain driving as well as in traffic or high-speed highway driving.

When only the exhaust brake is installed, a two-position switch on the dash controls the engine braking system. The exhaust brake is only active when the engine speed is between 900 and 2700 rpm. Depressing the accelerator or clutch pedal deactivates the exhaust brake. The ABS system, when active, also deactivates the exhaust brake.

The exhaust brake is a butterfly valve mounted in the exhaust pipe. When the driver's foot is not on the accelerator pedal and the exhaust brake switch is in the on position, an air cylinder shuts the butterfly valve which restricts the flow of exhaust gases and retards the engine. This retarding action is carried through the engine and drivetrain, slowing the vehicle and reducing the need for frequent service brake applications.

Exhaust brakes are not intended for use as the primary braking system during vehicle operation.

Starting the Engine

Before starting the engine, make sure that the exhaust brake switch is in the off position. Do not turn the exhaust brake on until the engine has reached normal operating temperatures.

Driving Downhill

While approaching a steep grade, make sure that the exhaust brake switch is in the on position. The exhaust brake comes on as soon as you remove your foot from the accelerator pedal. While going down the grade, use a low enough gear to safely descend with a minimum application of the service brakes. As a general guideline, use the same gear as you would to ascend the hill.

CAUTION

Do not allow the engine to exceed its governed speed, or serious engine damage could result.

Apply the service brakes to reduce the engine rpm or make a slower descent by using a lower gear.

WARNING

Do not use the exhaust brake when driving on slippery or low-traction road surfaces. Failure to follow this precaution could result in a loss of vehicle control and possible personal injury or property damage.

Exhaust Brake Operating Characteristics

When you remove your feet from both the accelerator and clutch pedals and the exhaust brake switch is in the on position, the exhaust brake is applied. The following conditions should exist if the brake is operating properly.

https://truckmanualshub.com/

- A slight change in the sound of the engine may be noticed when the exhaust brake is applied.
- Exhaust smoke should appear normal.
- Engine temperature should remain in the normal operating range.
- Road speed usually decreases when the exhaust brake is applied during a descent. When the vehicle is carrying a heavy load or the grade is extremely steep, you may need to apply the service brakes occasionally.
- Do not expect a retarding effect similar to sudden hard application of the service brakes. The exhaust brake retards the vehicle with a smooth braking effect.
- During a descent, the tachometer usually shows a drop in rpm depending on the grade and the vehicle load.
- Depending on the grade and vehicle load, you may or may not feel the retarding force acting against your body when the brake is applied. The retarding force of the brake may not always be noticed, but it is actually preventing the vehicle from going much faster.

Shutting Off the Engine

Make sure the exhaust brake is turned off before shutting off the engine.

Clutches

General Information

The major reason why clutches wear out too soon is excessive heat. Clutches are designed to absorb and dissipate more heat than encountered in typical operation. The temperatures developed in typical operation will not break down the clutch friction surfaces. However, if a clutch is slipped excessively or asked to do the job of a fluid coupling, high temperatures develop quickly and destroy the clutch. Temperatures generated between the flywheel, driven discs, and pressure plates can be high enough to cause the metal to flow and the friction facing material to char and burn.

Heat and wear are practically nonexistent when a clutch is fully engaged. But during the moment of engagement, when the clutch is picking up the load, it generates considerable heat. An improperly adjusted or slipping clutch will rapidly generate sufficient heat to destroy itself.

The most important items that a driver should be aware of to ensure long service life of the clutch include: starting in the right gear, clutch malfunctions, and when to adjust a clutch.

Clutch Operation

Starting the Vehicle in the Proper Gear

An empty vehicle can be started in a higher transmission gear ratio than a partially or fully loaded vehicle. A good rule of thumb for the driver to follow is: select the gear combination that allows you to start moving with an idling engine, or if necessary, just enough throttle to prevent stalling the engine. After the clutch is fully engaged, the engine should be accelerated to the correct rpm for the upshift into the next higher gear.

Gear Shifting Techniques

Many drivers upshift into the next gear, or even skip-shift into a higher gear, before the vehicle has reached the proper speed. This type of shifting is almost as bad as starting off in a gear that is too high, since the engine rpm and vehicle speeds are too far apart, requiring the clutch to absorb the speed difference with friction, creating heat. For transmission operating instructions, refer to **Chapter 8** in this manual.

The clutch brake is applied by fully depressing the clutch pedal. Its purpose is to stop the transmission gears from rotating in order to engage the transmission gears quickly in making an initial start.

⚠ CAUTION

Never apply the clutch brake when making downshifts or upshifts. The clutch pedal should never be fully depressed before the transmission is put in neutral. If the clutch brake is applied with the transmission still in gear, a reverse load will be put on the gear. At the same time, it will have the effect of trying to stop or decelerate the vehicle with the clutch brake. Rapid wear of the friction discs will take place necessitating frequent replacement. Considerable heat will be generated, which will be detrimental to the release bearings and transmission front bearings.

https://truckmanualshub.com/

Excessive Vehicle Overload, or Overloading the Clutch

Clutches are designed for specific vehicle applications and loads. These limitations should not be exceeded.

CAUTION

Overloading will not only result in damage to the clutch, but also to the entire powertrain.

Riding the Clutch Pedal

Riding the clutch pedal is very destructive to the clutch, since partial clutch engagement permits slippage, generating excessive heat. Riding the clutch pedal will also put a constant thrust load on the release bearing, which can thin out the lubricant. Release bearing failures can be attributed to this type of misuse.

Holding the Vehicle on an Incline With a Slipping Clutch

A slipping clutch accumulates heat faster than it can be dissipated, resulting in early clutch failures. Never use the clutch as a hill holder.

Coasting With the Clutch Released (Pedal Depressed) and the Transmission in Gear

Coasting with the clutch released and the transmission in gear can cause high driven disc rpm through multiplication of ratios from the final drive and transmission.

WARNING

Do not coast with the clutch released (pedal depressed) and the transmission in gear. High driven-disc rpm could cause the clutch facing to be thrown off the disc. Flying debris could cause injury to persons in the cab.

Engaging the Clutch While Coasting

Engaging the clutch while coasting can result in tremendous shock loads and possible damage to the clutch, as well as to the entire drivetrain.

Reporting Erratic Clutch Operation Promptly

Reporting erratic clutch operation as soon as possible will give maintenance personnel a chance to inspect and lubricate the clutch components, make necessary internal clutch and linkage adjustments, etc.

Clutch free pedal is a decreased resistance felt at the top of the clutch pedal stroke. See **Fig. 7.8**. With the clutch pedal in this range, the clutch is fully engaged and the only resistance to clutch pedal movement is the force of the return spring. If clutch free pedal is 3/4 inch (20 mm) or less, measured at the pedal, have the clutch adjusted.

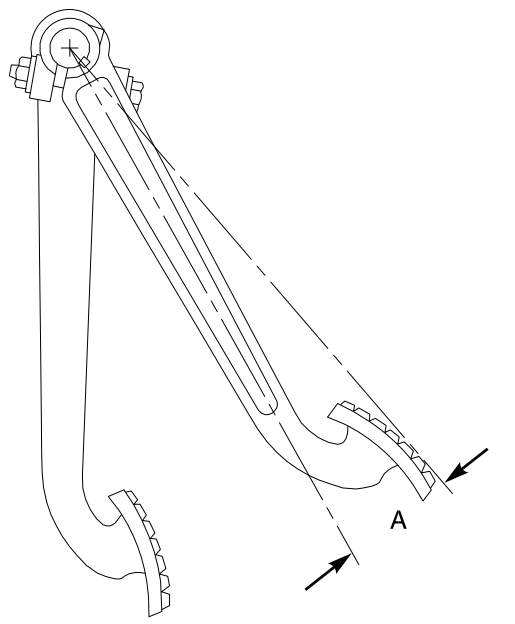

A. Free Pedal

Fig. 7.8, Clutch Free Pedal

Free pedal should be included and commented on daily in the driver's report, since clutch free pedal is the maintenance department's guide to the condition of the clutch and the release mechanism.

See **Group 25** of the *Century Class Trucks Workshop Manual* for clutch adjustment procedures and specifications.

https://truckmanualshub.com/

CAUTION

Operating the vehicle with incorrect free pedal could result in clutch damage.

Clutch brake squeeze is an increased resistance (greater than the force of the clutch spring) felt as the clutch pedal approaches the end of its stroke. If the gears grind when shifting into first or reverse gear with the clutch pedal fully depressed, the clutch is out of adjustment or the clutch brake is worn and needs to be replaced.

Clutch Adjustments

Clutches have an internal adjustment, and external linkage adjustment. See **Group 25** of the *Century Class Trucks Workshop Manual* for clutch adjustment procedures and specifications.

CAUTION

Operating the vehicle with the clutch improperly adjusted could result in clutch or clutch brake failure.

Lubrication

On vehicles equipped with a greaseable release bearing, the release bearing and linkage should be lubricated at frequent intervals. See **Group 25** of the *Century Class Trucks Maintenance Manual* for intervals and procedures.

CAUTION

Failure to lubricate the release bearing and linkage as recommended could result in release bearing and clutch damage.

https://truckmanualshub.com/

https://truckmanualshub.com/

8

Transmissions

Freightliner SmartShift Shift Control 8.1
Eaton Fuller AutoShift Automated Transmissions 8.1
Eaton UltraShift DM 8.6
Meritor SureShift 8.11
ZF Meritor FreedomLine Automated Transmissions 8.13
Eaton Fuller Range-Shift Transmissions 8.15
Eaton Fuller Splitter and Range-Shift Transmissions 8.17
Eaton Fuller Deep-Reduction Transmissions 8.20
Meritor Range-Shift Transmissions 8.23
Meritor Splitter and Range-Shift Transmissions 8.25
Eaton Fuller AutoSelect Automated Transmissions 8.26
Eaton Fuller Top 2 and Lightning Semi-Automated Transmissions 8.29
Meritor Engine Synchro Shift (ESS) Automated Models 8.31
Allison Automatic Transmissions 8.34

https://truckmanualshub.com/

Freightliner SmartShift Shift Control

General Information, SmartShift™

The SmartShift transmission control is an electronic transmission control device. It is installed with the following transmissions:

- Eaton® Fuller® AutoShift™
- Eaton Fuller UltraShift™ DM
- Meritor™ SureShift
- ZF Meritor™ FreedomLine™

It replaces the typical floor-mounted shift lever or dash-mounted push button control.

SmartShift accepts driver requests for transmission functions and transmits them through hard wiring to the transmission control unit (TCU). SmartShift is a true shift-by-wire system.

SmartShift offers two main advantages over conventional transmission control devices. Usable cab space is increased and access to the sleeper is improved by removing the shift lever from the floor.

The SmartShift control mounts to the right-hand side of the steering column and is operated by the fingers of the driver's right hand, allowing both hands to remain on the steering wheel.

A two-position slide switch is mounted on the body of the control lever just before the paddle widens out. The slide switch allows the driver to choose automatic (AUTO) mode or manual (MAN) mode. The SureShift lever has no slide switch.

In AUTO mode, gears shift automatically, without driver interaction. Manual gear shifts (all SureShift shifts; AutoShift, UltraShift, or FreedomLine when in MAN mode) are accomplished by a momentary pull or push on the control in the plane perpendicular to the steering wheel. Pull upward (toward you) on the control to upshift and push downward (away from you) to downshift. The control is spring-loaded and returns to mid-position when released after an upshift or downshift.

For the Eaton Fuller automated transmissions, a four-position (R, N, D, L) selector switch (**Fig. 8.1**) is located at the end of the lever. For the Meritor SureShift transmission, a three-position (R, N, F) selector switch (**Fig. 8.2**) is located at the end of the lever. For the Meritor FreedomLine transmission, a three-position (R, N, D) selector switch (**Fig. 8.3**) is located at the end of the lever.

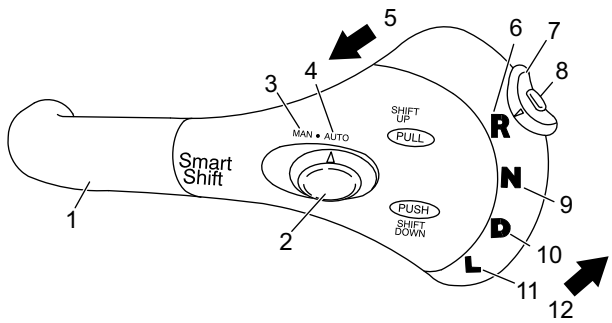

02/02/2017 f270120

To upshift manually, pull the lever up (towards you). To downshift manually, pull the lever down (away from you).

1. SmartShift Control Lever
2. Slide Switch (forward driving mode switch)
3. MAN Position (of slide switch)
4. AUTO Position (of slide switch)
5. Upshift Direction
6. Reverse Position (of selector switch)
7. Selector Switch
8. Neutral Lock Button
9. Neutral Position (of selector switch)
10. Drive Position (of selector switch)
11. Low Position (of selector switch)
12. Downshift Direction

Fig. 8.1, Four-Position SmartShift Control (with Eaton Fuller transmissions)

Embedded in the selector switch is a small neutral lock button to prevent accidental shifts into gear from neutral. Any time you shift through N, press down on the neutral lock button to move the switch from neutral (N) to another gear, such as drive (D), low (L), or reverse (R). When shifting to N, it is not necessary to press the neutral lock button.

Eaton Fuller AutoShift Automated Transmissions

Refer to the Eaton website for additional information, **www.roadranger.com**.

General Information, AutoShift

10-Speed RTO Models

Eaton Fuller 10-speed AutoShift automated transmissions have 10 forward speeds and two reverse speeds. The transmission consists of a 5-speed front section and a 2-speed rear section. The driver must use the clutch to start and stop the vehicle.

The driver does not need to break torque or increase or decrease engine speed to synchronize the shift.

https://truckmanualshub.com/

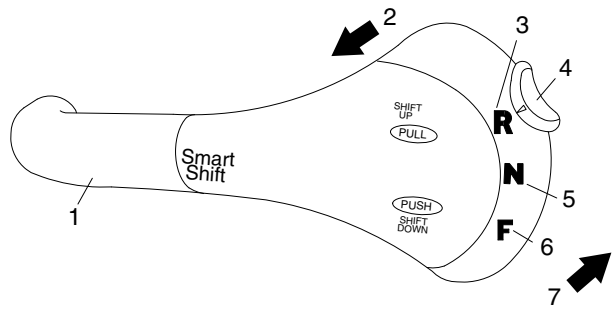

11/23/99 f270081

To upshift, pull the lever up (towards you). To downshift, pull the lever down (away from you).

1. SmartShift Control Lever
2. Upshift Direction
3. Reverse Position (of selector switch)
4. Selector Switch
5. Neutral Position (of selector switch)
6. Forward Position (of selector switch)
7. Downshift Direction

Fig. 8.2, Three-Position SmartShift Lever (with Meritor SureShift)

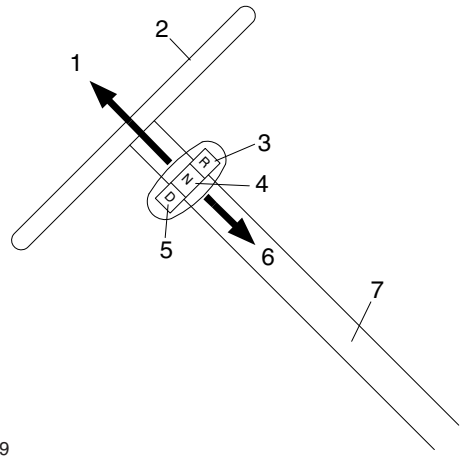

06/03/99 f270065

1. Upshift (in manual mode, pull upward)
2. Steering Wheel
3. Reverse Position
4. Neutral Position
5. Drive Position
6. Downshift (in manual mode, push downward)
7. Steering Column

Fig. 8.3, SmartShift Control Operation (FreedomLine control, showing only R, N, D positions)

The transmission signals the engine controller when to break torque and the engine controller automatically increases or decreases engine speed. When engine speed is correct, the transmission engages the next gear and signals the engine controller to resume operation.

The AutoShift system consists of the following components:

- The Gear Display Module (**Fig. 8.4**) mounted on the dashboard indicates the current gear position or transmission status. The display also flashes the next gear to be engaged while the transmission is in Neutral during a gear change.
- The Driver Command Console (DCC) replaces the shift lever and controls the transmission's shift patterns.

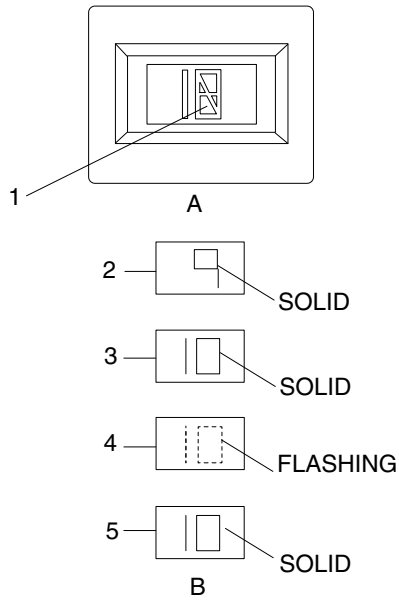

02/17/98 f270062

A. Gear Display Module B. Module Detail

1. Current Gear
2. 9th Gear Engaged
3. In 9th Gear, Preselected Toward 10th
4. Out Of Gear, Waiting For Engine/Transmission rpm To Synchronize
5. 10th Gear Engaged

Fig. 8.4, Gear Display Module

- The DCC (**Fig. 8.5**) has indicators for reverse, neutral, and the three forward positions: drive, hold, and low. Service and wait lamps are also located on the console. The gear select handle contains upshift and downshift buttons and a gear select lever detent button.
- The shifter performs shifts at the front portion of the transmission. It preselects the shift to

https://truckmanualshub.com/

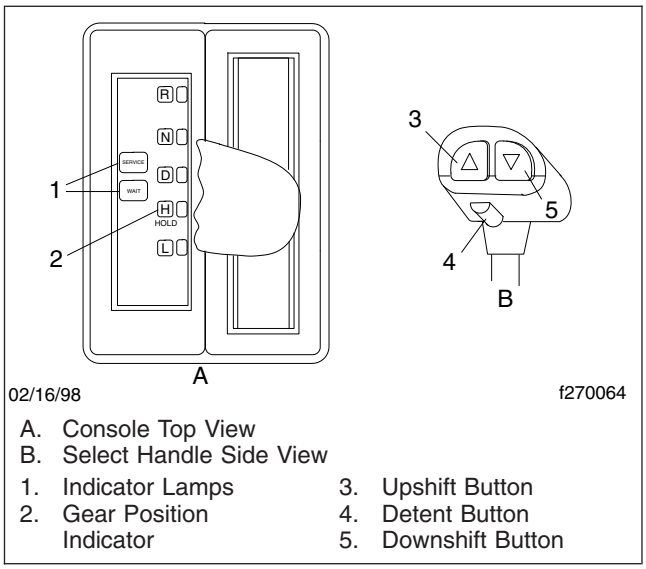

A. Console Top View
B. Select Handle Side View

1. Indicator Lamps
2. Gear Position Indicator
3. Upshift Button
4. Detent Button
5. Downshift Button

Fig. 8.5, Enhanced Driver Command Console (DCC)

neutral and completes the gear change after driver input.

- The Electronic Control Unit (ECU) includes two controllers: a transmission ECU and a system ECU. The transmission ECU controls all transmission shift functions and the system ECU manages all vehicle interfaces for transmission shift functions.
- An electronic range valve, controlled by the transmission ECU, is used to perform range shifts.

Operation, SmartShift With Eaton Fuller AutoShift

⚠ WARNING

If the engine cranks in any gear other than neutral, have the vehicle serviced immediately. If the vehicle is started in gear it will suddenly move forward or backward, which could result in personal injury and damage to property and the transmission.

Automatic and Manual Modes

A two-position slide switch (forward driving mode switch) is located near the end of the control (**Fig. 8.1**). The switch positions are labelled MAN (manual shift mode) and AUTO (automatic drive mode).

NOTE: In automatic drive mode, upshifts and downshifts require no driver interaction. Move the selector switch to the drive (D) position, disengage the clutch to engage the gear selected, engage the clutch and drive the vehicle. In manual shift mode, upshifts and downshifts require either a pull upward or push downward on the control.

Driver Message Center

Gear information is presented to the driver via the level III ICU (ICU2M) Driver Message Center. In automatic drive mode, the number of the forward gear currently engaged appears continually on the message display screen when in drive (D). In manual shift mode, the current gear is displayed until a new gear is requested. When neutral (N) is engaged, "N" will appear on the message display screen. When reverse (R) is engaged on 10- or 18-speed AutoShift transmissions, either "RL" or "RH" will appear on the message display screen. AutoShift transmissions with fewer speeds do not have a dual range reverse gear and "R" will appear when reverse is engaged.

IMPORTANT: The information shown on the message display screen indicates the state of the transmission only, not the state of the SmartShift control.

Start-Up

1. With the parking brake applied, press the clutch all the way down to the floor.
2. Start the engine.
3. Check to make sure the transmission is in neutral.
4. With the transmission in neutral, release the clutch.

NOTE: This allows the speed sensor on the input shaft to get a reading.

5. Press down on the clutch again and release the parking brake.
6. Select the desired starting gear.
7. Release the clutch.

Reverse

1. To engage reverse (R), slide the selector switch upward to the next position above the Neutral position and disengage the clutch.

https://truckmanualshub.com/

NOTE: AutoShift 10- and 18-speed transmissions have a dual-range reverse. Reverse low (RL) is the default reverse gear.

2. Select reverse high (RH) by pulling upward on the control.

NOTE: Reverse may be engaged below a programmable forward speed in order to rock the vehicle. If reverse is selected above the programmed forward speed, an audible warning will sound and a message indicating that the gear is not available will appear on the message display screen.

Neutral Position

Select neutral (N) by moving the selector switch to the "N" position.

NOTE: Neutral is always available during operation. When in neutral, upshift and downshift requests are ignored. If the mode selector switch is moved from neutral to drive (D) while the vehicle is moving, the transmission will shift into a gear causing the engine to go to a high torque level, under the engine's rated torque.

Selecting a Starting Gear

1. In automatic mode, select drive (D) by sliding the selector switch downward to the next position below the neutral position.
2. Disengage the clutch to engage the gear selected. Engage the clutch and drive the vehicle.

NOTE: To select a starting gear other than the default starting gear, either pull upward or push downward on the control while the vehicle is stopped and in drive (either manual or automatic mode). Each pull upward on the control increases the starting gear by one gear, but no higher than fourth gear. The number of the gear selected will flash on the message display screen until the driver engages the clutch. This gear will be stored in memory as the default starting gear until either a different starting gear is selected by the driver or the engine is shut down. The transmission may also be programmed so that it is not possible to select a starting gear other than the preprogrammed default starting gear.

Upshifting

NOTE: With the transmission in drive (D) in the automatic mode, upshifts require no driver interaction.

1. With the transmission in drive in the manual mode, request an upshift by pulling upward on the control. If the requested gear is available, the transmission will upshift.

NOTE: A single, momentary pull upward on the control selects the next higher gear when it is available. Two consecutive, momentary upward pulls will cause a skip shift when the next two higher gears are available and conditions are right.

2. To skip shift, move the control two times in less than 1/2 second. The number of the gear engaged will appear on the message display screen.

NOTE: The Eaton Fuller AutoShift 18-speed transmission is able to perform triple upshifts when the next three higher gears are available and conditions are right. To triple shift this transmission, move the control three times in less than 1/2 second.

If a requested gear is not available, an audible warning will sound and the message display screen will indicate that the gear is not available. An unavailable requested upshift is not stored in memory. The upshift must be requested again.

Downshifting

NOTE: With the transmission in drive (D) in the automatic mode, downshifts require no driver interaction.

1. With the transmission in drive in the manual mode, request a downshift by pushing downward on the control. If the requested gear is available, the transmission will downshift.

NOTE: A single, momentary push downward on the control selects the next lower gear when it is available. Two consecutive, momentary downward pushes will cause a skip shift, when the next two lower gears are available and conditions are right.

https://truckmanualshub.com/

2. To skip shift, move the control two times in less than 1/2 second. The number of the gear engaged will appear on the message display screen.

NOTE: The Eaton Fuller AutoShift 18-speed transmission is able to perform triple downshifts when the next three lower gears are available and conditions are right. To triple shift this transmission, move the control three times in less than 1/2 second.

If a requested gear is not available, an audible warning will sound and the message display screen will indicate that the requested gear is not available. Unlike upshifting, an unavailable requested downshift is stored in memory and the shift will be made when the gear is available. The time limit for this memory is a programmable parameter.

Low Gear Operation

Use low (L) when descending steep hills and using compression braking. Engine speed will be increased by 200 rpms and shift points will be offset by 200 rpm. The efficiency of the exhaust brake will be maximized.

Using the Clutch

Use the clutch to start and stop the vehicle.

Operation, AutoShift (without SmartShift)

⚠ WARNING

If the engine cranks in any gear other than neutral, have the vehicle serviced immediately. If the vehicle is started in gear it will suddenly move forward or backward, which could result in personal injury and damage to property and the transmission.

Start-Up

1. With the parking brake applied, press the clutch all the way down to the floor.
2. Start the engine.
3. Check to make sure the transmission is in neutral.
4. With the transmission in neutral, release the clutch.

NOTE: This allows the speed sensor on the input shaft to get a reading.

5. Press down on the clutch again and release the parking brake.
6. Select the desired starting gear.
7. Release the clutch.

Reverse

NOTE: To drive in reverse, first depress the clutch.

1. Move the gear select lever to the "R" position.
2. Select either LO or HI reverse by depressing either the downshift or upshift button (**Fig. 8.5**) on the gear select handle (if equipped).
3. Release the clutch.

NOTE: The clutch must be used for starting and stopping.

Driving in the "D" Mode

NOTE: The drive mode is used for normal driving conditions.

1. Fully depress the clutch.
2. Move the gear select lever from neutral to drive.

NOTE: The clutch must be fully depressed to shift from neutral to drive.

3. Upshifting and downshifting are performed automatically with no driver interaction required.

NOTE: The clutch must be used for starting and stopping.

Parking the Vehicle

1. With the clutch pedal depressed, move the gear select lever to neutral.
2. Ensure that a solid "N" appears on the gear display module. See **Fig. 8.4**.

NOTE: If the gear display does not show a solid "N," the transmission is not yet in neutral.

3. Set the parking brakes.
4. Slowly release the clutch pedal.

https://truckmanualshub.com/

Selecting a Starting Gear

NOTE: In either the automatic or manual drive mode, a starting gear other than the default starting gear, may be selected. Push either the upshift or downshift buttons on the gear select handle while the vehicle is stopped and in drive. Each push of the upshift button increases the starting gear by one gear. Depending on the vehicle's load, you may select gears first through fifth as the starting gear. The number of the gear selected will flash on the gear display module until the driver engages the clutch. This gear will be stored in memory until either a different starting gear is selected by the driver or the engine is shut down. The transmission may also be programmed so that it is not possible to select a starting gear other than the preprogrammed default starting gear. The highest programmable default starting gear is third gear.

1. With the vehicle stopped, place the gear select lever in the "D" or "H" position to select a starting gear. See **Fig. 8.5**.
2. Select a starting gear with the upshift or downshift buttons on the gear select handle. See **Fig. 8.5**.

Driving in the "H" Mode

NOTE: You must use the upshift and downshift buttons on the gear select handle to change gears while in the "H" (hold) mode.

1. Depress the clutch pedal.
2. Place the shift lever in the "H" mode.
3. Select the starting gear you want.
4. Slowly release the clutch pedal.

Upshifting

NOTE: In the "H" mode you, the driver, decide when to upshift and downshift.

1. Accelerate.
2. Press the upshift button on the gear select handle. To skip shift, press twice.
3. The transmission automatically selects and shifts to the next gear.

Downshifting

1. Decelerate.
2. Press the downshift button on the gear select handle. To skip shift, press twice.
3. The transmission automatically selects and shifts to the next gear.

Eaton UltraShift DM

General Information, UltraShift™ DM

Eaton UltraShift DM is a ten-speed heavy-duty fully-automated transmission. No clutch pedal is required to operate the vehicle.

UltraShift DM uses a dry clutch system which is offered only on this automated transmission system.

The UltraShift transmission uses the four-position SmartShift lever on the steering column to select gears. To know what gear the transmission is in, look at the round current gear indicator on the right-hand control panel as shown in **Fig. 8.6**. All forward shifts can be made either manually or automatically, at the driver's choice.

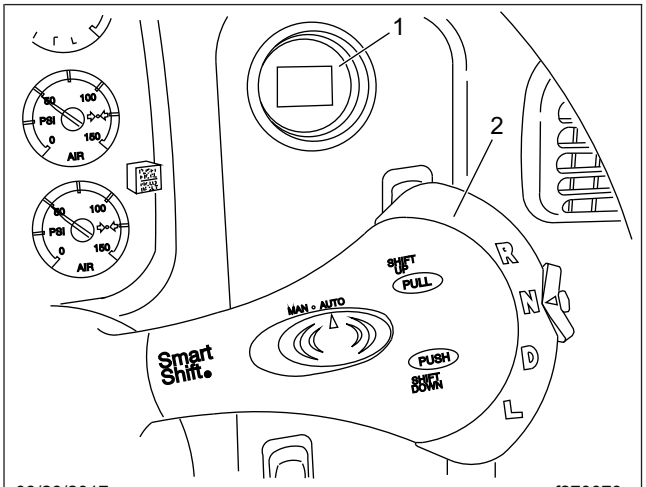

03/28/2017 f270079a

To know what gear the transmission is in, look at the current gear indicator.

1. Current Gear Indicator
2. SmartShift Control

Fig. 8.6, Shift Controls and Indicators, UltraShift Transmissions

https://truckmanualshub.com/

Operation, UltraShift DM

Power Up

1. With the parking brake set, select neutral (N) by moving the selector switch to the N position.
2. With the transmission in neutral, turn on the ignition switch. The "CHECK TRANS" and "TRANS TEMP" telltale lights come on and go out again (bulb check). See **Fig. 8.7**.

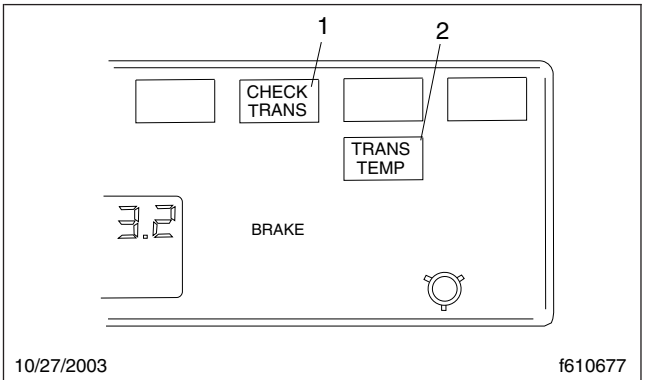

1. "CHECK TRANS" Light
2. "TRANS TEMP" Light

Fig. 8.7, Telltale Lights

3. After the ignition is turned on, the current gear indicator shows the dot display, arranged in a square pattern. All dots in the pattern should light up, without gaps or spaces. See **Fig. 8.8**.

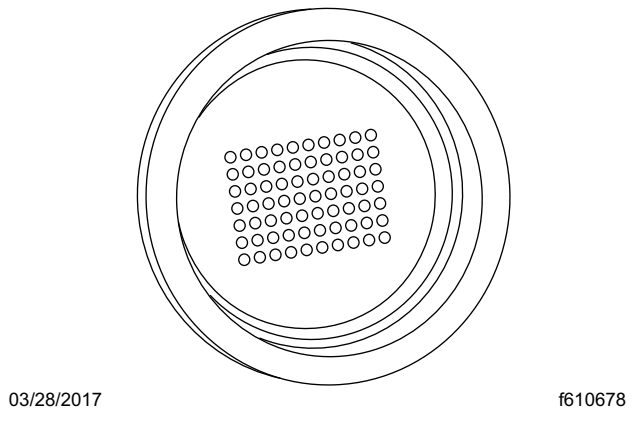

Fig. 8.8, Power Up Dot Display

4. Wait for the current gear indicator to show a solid "N." When the "N" is solid, rather than flashing, the UltraShift DM TCU is powered up. Start the engine and apply the service brake.
5. Select drive (D) by pressing in the neutral lock button and moving the selector switch downward to the position below neutral. Release the parking brake. The gear is displayed on the current gear indicator.

NOTE: When D is selected, the transmission starts up in the default starting gear.

6. On a level grade, release the service brake and press down on the throttle pedal to allow the vehicle to move forward. The vehicle will not move until the pedal is depressed.

⚠ WARNING

When starting or stopping on hills and grades, use extra care to prevent the vehicle from rolling back. A rollback accident could cause death, serious personal injury, or property damage.

7. Prevent the vehicle from rolling backwards when stopped on a hill or grade, or when the vehicle is starting from a stop on a hill or grade.

   7.1 *To start from a full stop on hill or grade*, quickly move your foot from the brake pedal and press firmly on the throttle pedal.

   On steep hills, set the parking brake and release it only when there is enough engine power to prevent rollback.

   7.2 *To stop on a hill or grade*, press and hold the brake pedal to keep the vehicle from moving. On steep hills, set the parking brake and chock the tires, front and/or rear.

   On steep hills, set the parking brake and chock the tires, front and/or rear. Never hold a hill with the throttle pedal. This will cause the clutch to overheat.

Power Down

1. Apply the service brakes.
2. Select neutral (N) by pressing in the neutral lock button and moving the selector switch to N. When the "N" on the current gear indicator is solid, rather than flashing, the UltraShift DM TCU is ready to power down.
3. With the transmission in neutral, set the parking brake.

https://truckmanualshub.com/

4. Turn off the ignition key and shut down the engine.

Automatic and Manual Modes

The SmartShift control has a slide switch located on the body of the control lever just before the paddle widens out. See **Fig. 8.9**. The slide switch controls the forward driving mode, automatic or manual.

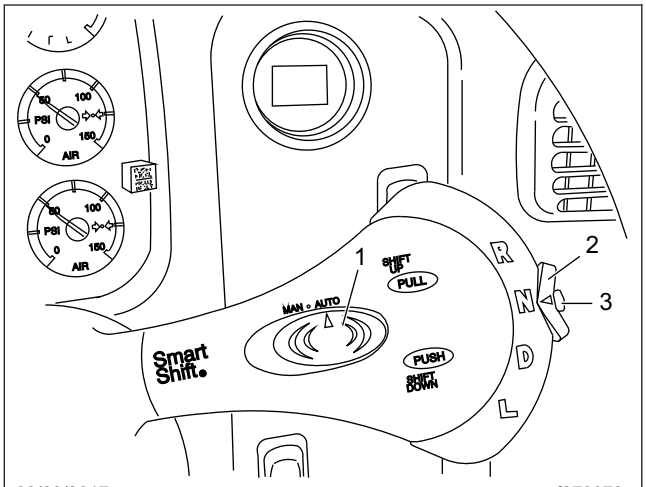

03/29/2017 f270079c

1. Slide Switch (controls forward driving mode)
2. Selector Switch (controls gear selection)
3. Neutral Lock Button (prevents accidental shift into gear)

Fig. 8.9, Switches, UltraShift Transmissions

To change mode at any time, move the slide switch in the desired direction. This allows the driver to respond flexibly to a wide range of driving conditions, such as blind corners, tight curves, and steep hills.

IMPORTANT: Whatever the mode, it is always possible to shift manually by moving the lever up or down as needed. When the engine speed is within 75 revolutions per minute (rpm) of the load-based shift point for an automatic shift, the UltraShift DM TCU will advance the shift.

In either mode, the gear indicator displays the current gear. See **Fig. 8.10**.

At the start of a shift, the current gear continues to display until the transmission has been pulled into neutral. At this point, as the transmission is synchronizing for the new (target) gear, the gear indicator flashes the number of the new gear.

When the shift is complete, the new gear displays solid, without flashing.

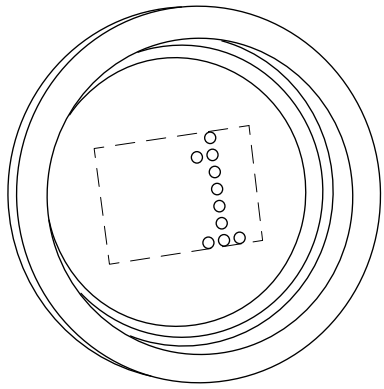

03/29/2017 f610680

NOTE: The gear indicator displays the current gear. In this example, it displays first gear.

Fig. 8.10, Current Gear Display

Automatic Mode (AUTO)

In automatic drive mode (AUTO), upshifts and downshifts are made by the transmission without driver intervention. Press in the neutral lock button, move the selector switch to drive (D), and press down on the throttle pedal. The transmission will shift automatically.

If driving conditions require, it is still possible to request a manual shift. The transmission will make the shift if the engine speed is within 75 rpm of the load-based shift point for that gear.

If the driver presses down on the throttle pedal after a manual downshift in automatic mode, the transmission will upshift again if the UltraShift DM TCU requires it.

Manual Mode (MAN)

In manual drive mode (MAN), upshifts and downshifts are made by the driver:

- To shift up, pull the lever up (towards you).
- To shift down, push the lever down (away from you).

The system will hold the current gear until the driver requests a shift. In downhill situations in particular, the driver must be alert to vehicle speed by downshifting and/or using the service brakes as needed.

A shift request will still be refused if the selected gear would cause engine overspeed or excessive lugging.

https://truckmanualshub.com/

Selecting Gears

Reverse

Reverse (R) is at the upper end of the four-position selector switch located at the end of the SmartShift control lever. To select R, press in the neutral lock button and move the selector switch upward to the position above neutral.

UltraShift DM has two reverse gears, reverse low and reverse high. To manually shift between them, use the shift lever as described for MAN mode. There is no AUTO mode for reverse.

When reverse low is selected, the letter "R" displays on the current gear indicator. When reverse high is selected, the letter "H" displays on the current gear indicator. See **Fig. 8.11**.

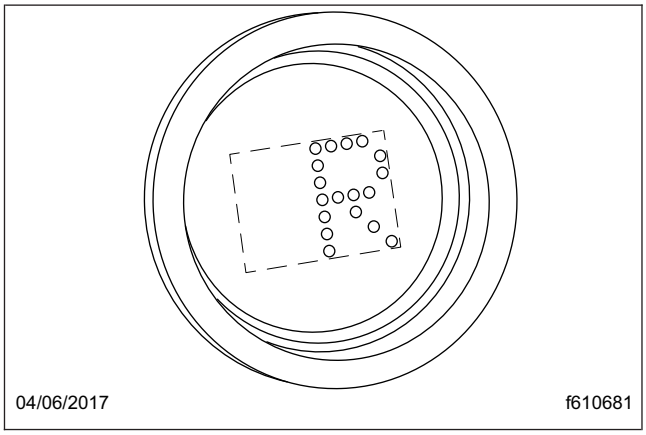

Fig. 8.11, Reverse Gear Display

IMPORTANT: Under normal conditions, do not select reverse with the vehicle moving forward.

The vehicle must be moving at less than two miles per hour (3 km/h) before selecting reverse. If reverse is selected when the vehicle is moving faster, an audible warning will sound and continue sounding at three-second intervals until the control lever is returned to the "D" position or the vehicle slows to the proper speed.

If necessary to rock the vehicle, use the selector switch to shift back and forth at low speed between reverse and drive.

Neutral

IMPORTANT: Always start the engine with the transmission in neutral, the parking brake set, and the service brakes applied.

Neutral (N) is directly below R on the four-position selector switch located at the end of the SmartShift control lever. To select N, press in the neutral lock button and move the selector switch to the position below R. When neutral is selected, the letter "N" displays on the current gear indicator. See **Fig. 8.12**.

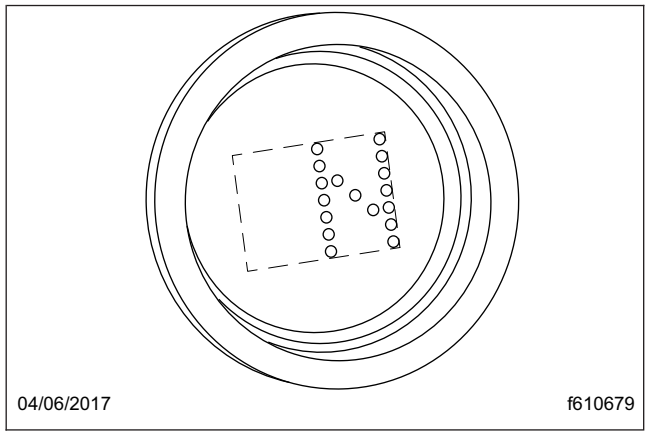

Fig. 8.12, Neutral Display

⚠ WARNING

Do not coast in neutral. Coasting in neutral can cause an accident, possibly resulting in severe personal injury or death.

Neutral is always available during operation, whatever the vehicle speed. When in neutral, requests to upshift or downshift are ignored. If the selector switch is moved from neutral to drive while the vehicle is moving, the transmission will shift into a gear within the engine's operating torque range.

Before shutting down the engine, return the selector switch to N. When the ignition is turned off, the transmission will reset to neutral in a few minutes regardless of the position of the shift lever.

Drive

Drive (D) is directly below N on the four-position selector switch located at the end of the SmartShift control lever. To select D, press in the neutral lock button and move the selector switch to the position below N. When drive is selected, the number of the currently selected forward gear (1 through 10) displays on the gear indicator. See **Fig. 8.10**.

When in drive, requests to upshift or downshift are enabled. Either manual or automatic mode can be selected on the slide switch.

https://truckmanualshub.com/

More than one starting gear is available. To change the starting gear, press the brake pedal and select D with the vehicle stopped. The current gear indicator will display the starting gear. Move the shift lever up or down until the desired starting gear is displayed.

The UltraShift DM TCU adapts to the working conditions of each vehicle and its driver. After power up or a load change, it needs to learn the new conditions. While learning, it may hold a gear too long before upshifting. Start the upshift manually. It may take three or four shifts before UltraShift succeeds in learning the new load-based shift points, but after that it will handle the shifting automatically.

Low

Low (L) is located at the lower end of the four-position selector switch located at the end of the SmartShift control lever. To select L, press in the neutral lock button and move the selector switch to the position below D.

When in low, the current gear is maintained. Requests to upshift are not enabled.

IMPORTANT: If the engine is approaching overspeed, the UltraShift DM TCU will override the current gear setting and upshift to prevent engine damage.

To enhance engine braking, downshifts are performed at higher rpm than normal.

If L is selected from neutral while stopped, the vehicle starts up in first gear and stays there until the engine approaches overspeed.

Upshifting

To request an upshift with the transmission in drive, pull the control lever up (towards you). If the gear is available, the transmission upshifts and the new gear displays on the gear indicator. No skip shifts are available while upshifting.

No upshifts are available in low, except to prevent engine overspeed.

If the transmission does not upshift quickly enough after power-up or a load change, begin the shift manually. The UltraShift DM TCU will learn the new load-based shift conditions after three or four shifts.

If the gear requested is unavailable, a tone will sound. An unavailable request to upshift is not stored in memory. The upshift must be requested again.

Downshifting

NOTE: The driver can manually downshift at any time, even when the slide switch is set to AUTO mode.

To request a downshift with the transmission in drive or low, push the control lever down (away from you). If the gear is available, the transmission downshifts and the new gear displays on the gear indicator. Skip shifts are available while downshifting.

For best engine braking, select low while moving. In low, downshifts are performed at higher rpm than in drive.

IMPORTANT: If the engine is approaching overspeed, the UltraShift DM TCU will override the current gear setting and upshift to prevent engine damage.

If the gear requested is unavailable, a tone will sound. An unavailable request to downshift is not stored in memory. The downshift must be requested again.

When coasting to a stop, the UltraShift DM TCU does not finish the downshift until the driver presses down on the throttle pedal again.

IMPORTANT: A downshift request can never result in a shift into neutral, even if the vehicle is in the drive position in the lowest possible gear.

Before starting down a hill, slow down. Downshift to a speed that you can control without hard pressure on the service brakes.

Before entering a curve, slow down to a safe speed. Downshift if necessary. This lets you use some power through the curve to help the vehicle be more stable on the turn. It also allows you to regain speed faster as you come out of the curve.

Ultrashift Diagnostics

Clutch Protection Fault

Excessive clutch slippage creates heat and reduces the life of the clutch. These are some conditions which lead to clutch abuse:

- Using the throttle to hold the vehicle on a grade
- Starting the vehicle in too high a gear
- Overloading the vehicle
- Using high idle with the vehicle in gear

https://truckmanualshub.com/

The UltraShift DM TCU is programmed to prevent clutch abuse. When the clutch overheats, the following alerts take place:

- The "TRANS TEMP" light comes on
- The current gear indicator displays "CA"
- A warning tone sounds at one second intervals

The alerts continue until the clutch cools, the throttle is released, or the clutch is fully engaged.

System Problem

In the event of a problem, do the following steps:

1. Note the driving conditions at the time the problem occurred.
2. Record the status of the transmission at the time of the problem (AUTO or MAN mode, gear setting R, N, D, or L, current gear, engine speed, etc.)
3. Reset the system, using the procedure below.

Reset Procedure

Transmission operation can sometimes be restored by doing the following reset procedure:

1. Stop the vehicle when it is safe to do so. Set the parking brake.
2. Place the selector switch in neutral and turn off the ignition.
3. Check all harness connectors as described in **Chapter 11**.
4. Wait at least two minutes with the engine shut down.
5. Restart the engine.

If the problem continues, contact an authorized Freightliner or Eaton service facility.

Locked In Gear

If the transmission becomes locked in gear, a dash (-) will appear on the current gear indicator when the vehicle is restarted during the reset procedure.

NOTE: If the transmission becomes locked in gear while the vehicle is moving, increased braking effort may be required to stop the vehicle.

If the current gear indicator displays a dash during power-up with the selector switch in neutral, do the following steps:

1. Make sure the parking brake is set.
2. Turn off the ignition and wait at least two minutes.
3. Apply brakes.
4. With the service brakes applied, release the parking brake.
5. Make sure the selector switch is in neutral and turn on the ignition key. Do not attempt to start the engine at this time.
6. If necessary to get the transmission to shift into neutral, release the pressure on the brake pedal slightly.
7. Once the UltraShift DM TCU reaches neutral, a solid "N" will appear on the current gear indicator and the vehicle will start. Make sure the service brakes are applied and the parking brake is set.

If the current gear indicator continues to display a dash, contact an authorized Freighliner or Eaton service facility.

Meritor SureShift

Refer to the Meritor website for additional information, **www.meritor.com**.

Operation, Meritor SureShift

Manual Mode

There is no slide switch on the Meritor SureShift control. Only the manual mode is available.

Driver Message Center

Gear information is presented to the driver via the level III ICU Driver Message Center. The current forward numerical gear is displayed until a new gear is requested. During the shifting process, the letters "SH" appear until the shift is completed. Then, the newly engaged numerical gear is displayed. When neutral (N) is engaged, "N" will appear on the message display screen. When reverse (R) is engaged, "RL" will appear on the message display screen.

IMPORTANT: The information shown on the message display screen indicates the state of the transmission only, not the state of the SmartShift control.

https://truckmanualshub.com/

Neutral Position

Neutral (N) is in the center of the three positions of the selector switch at the end of the control. Select neutral by sliding the mode selector switch to the center position.

NOTE: Neutral is always available during operation. When in neutral, upshift and downshift requests are ignored. If the mode selector switch is moved from neutral to forward (F) while the vehicle is moving, the transmission will shift into a gear causing the engine to go to a high torque level, under the engine's rated torque.

Selecting a Starting Gear

1. Select forward (F) by sliding the selector switch downward to the next position below the neutral position.

NOTE: When forward is selected, the transmission controller is signaled to engage the default starting gear.

2. Select a different starting gear by pulling upward on the control while the vehicle is stopped and in Forward, before disengaging the clutch to engage the selected gear.

NOTE: Each pull upward on the control increases the starting gear by one gear, but no higher than fourth gear. The number of the selected starting gear is displayed for one second and then the signal to disengage the clutch "CL" is displayed. Disengaging the clutch will engage the selected starting gear, which will now be stored in memory as the default starting gear. However, when the transmission controller is reinitialized at the beginning of another power cycle, the starting gear will default to the originally preprogrammed starting gear. The transmission may also be programmed so that it is not possible to select a starting gear other than the preprogrammed default starting gear.

Upshifting

With the transmission in forward (F), request an upshift by pulling upward on the control. If the requested gear is available, the transmission will upshift.

NOTE: If a requested gear is not available, an audible warning will sound and a message will appear on the message display screen advising that the gear is not available. An unavailable requested upshift is not stored in memory. The upshift must be requested again. All shift requests with the clutch disengaged, while the vehicle is in motion, will be ignored. Skip shifting is not available with the Meritor version of SmartShift.

Downshifting

With the transmission in forward (F), request a downshift by pushing downward on the control. If the requested gear is available, the transmission will downshift.

NOTE: If a requested gear is not available, an audible warning will sound and a message will appear on the message display screen advising that the gear is not available. An unavailable requested downshift is not stored in memory. The downshift must be requested again. All shift requests with the clutch disengaged, while the vehicle is in motion, will be ignored. Skip shifting is not available with the Meritor version of SmartShift. While in the forward position in the lowest available gear, a downshift request will not cause a shift into neutral.

Reverse

1. To select reverse (R), slide the mode selector switch upward to the next position above the Neutral position.

NOTE: Reverse low (RL) is the default reverse gear.

2. Select reverse high (RH) by pulling upward on the control before disengaging the clutch.

NOTE: It is not possible to shift between low range reverse and high range reverse with the vehicle in motion. If reverse is selected above the minimum detectable speed in Forward, an audible warning will sound and a warning message will appear on the message display screen.

Using the Clutch

Use the clutch to start and stop the vehicle.

https://truckmanualshub.com/

ZF Meritor FreedomLine Automated Transmissions

Refer to the Meritor website for additional information, **www.meritor.com**.

General Information, FreedomLine

The ZF Meritor™ FreedomLine is a fully-automated manual transmission that features only an accelerator and brake pedal in the cab. Clutch actuation is fully automated. On Freightliner vehicles, it will be operated by a custom version of the SmartShift™ controller. On Century Class S/T vehicles, dash messages will appear on the SmartDash™ (ICU2M).

This transmission requires an additional 10-liter air reservoir. After any transmission service, it will be necessary to charge this tank with air before the vehicle can be operated.

Operation, FreedomLine

1. With the parking brake engaged and/or the brake pedal pressed down, select neutral (N) by pressing in the safety release and moving the selector switch to the center position. See **Fig. 8.13**.
2. With the transmission in neutral, start the engine. Allow the air pressure to build to 100 psi (689 kPa) to ensure clutch engagement before moving the vehicle.
3. With air pressure built up, select drive (D) by pressing in the safety release and moving the selector switch downward to the position below neutral. Release the parking brake and/or pedal.

NOTE: When D is selected, the transmission controller starts up in the default starting gear.

4. Press down on the accelerator pedal to allow the vehicle to move forward. The vehicle will not move until the pedal is depressed.

⚠ WARNING

A vehicle equipped with the FreedomLine fully-automated transmission can roll backwards when stopped on a hill or grade, or when the vehicle is starting from a stop on a hill or grade. This can result in serious personal injury or property damage.

5. *To stop on a hill or grade*, press and hold the brake pedal to keep the vehicle from moving.

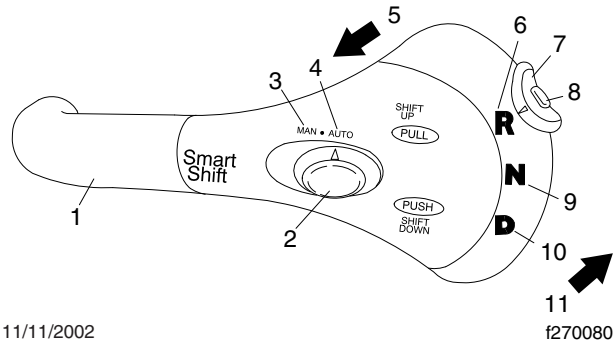

To upshift manually, pull the lever up (towards you). To downshift manually, push the lever down (away from you).

1. SmartShift Control Lever
2. Slide Switch (forward driving mode switch)
3. MAN Position (on slide switch)
4. AUTO Position (on slide switch)
5. Upshift Direction
6. Reverse Position (on selector switch)
7. Selector Switch
8. Safety Release
9. Neutral Position (on selector switch)
10. Drive Position (on selector switch)
11. Downshift Direction

Fig. 8.13, SmartShift Controller (FreedomLine custom version)

6. *To start from a full stop on hill or grade*, quickly move your foot from the brake pedal and press firmly on the accelerator pedal.

Automatic and Manual Modes

The SmartShift selector has a slide switch located on the body of the control lever just before the paddle widens out. The slide switch controls the forward driving mode, automatic or manual.

In automatic drive mode, upshifts and downshifts are made by the transmission without driver intervention. Press in the safety release, move the selector switch to drive (D), and press down on the accelerator pedal. On the driver message center display, the first character is a special character to indicate automatic mode.

In manual drive mode, upshifts and downshifts are made by the driver:

- To shift up, pull the lever up (towards you).
- To shift down, push the lever down (away from you).

https://truckmanualshub.com/

On the driver message center display, the first character is blank to indicate manual mode.

NOTE: Automatic shifting is possible only in forward gear. When the selector switch is in reverse (R), all shifts are done manually, regardless of the position of the slide switch.

Gear Positions

Neutral

Neutral (N) is in the center of the three-position selector switch located at the end of the SmartShift control lever. To select neutral, press in the safety release and move the selector switch to the center position.

Neutral is always available during operation. When in neutral, requests to upshift or downshift are ignored. If the selector switch is moved from neutral to drive while the vehicle is moving, the transmission will shift into a gear within the engine's operating torque range.

Reverse

To select reverse (R), press in the safety release and move the selector switch upward to the position above neutral.

NOTE: When the selector switch is in reverse (R), all shifts are done manually, regardless of the position of the slide switch.

The vehicle must come to a complete stop before selecting reverse. If reverse is selected with the vehicle moving, an audible warning will sound. Once the vehicle has come to a complete stop, reverse low can be engaged.

There are two reverse gears. Reverse low (RL) is the default reverse gear. To select reverse high (RH), pull the control lever up (towards you). You can shift between RL and RH "on the fly," without stopping first.

Upshifting

NOTE: A request to upshift or downshift can only be accepted in the manual mode.

With the transmission in drive, to request an upshift, pull the control lever up (towards you). If the gear is available, the transmission will upshift.

An unavailable request to upshift is not stored in memory. The upshift must be requested again. Skip shifting in manual mode is not available with the ZF Meritor version of SmartShift.

Downshifting

NOTE: A request to upshift or downshift can only be accepted in the manual mode.

With the transmission in drive, to request a downshift, push the control lever down (away from you). If the gear is available, the transmission will downshift.

An unavailable request to downshift is not stored in memory. The downshift must be requested again. Skip shifting in manual mode is not available with the ZF Meritor version of SmartShift.

IMPORTANT: A downshift request can never result in a shift into neutral, even if the vehicle is in the drive position in the lowest possible gear.

Selecting a Non-Default Starting Gear

NOTE: For the clutch to engage, pressure in the primary air system must be at least 100 psi (689 kPa).

1. Select drive (D) by pressing in the safety release and moving the selector switch downward to the position below neutral.
2. Select manual mode (MAN) by moving the two-position slide switch towards the steering column until it is in the manual position.
3. To increase the starting gear, pull the lever up (towards you). To decrease the starting gear, push the lever down (away from you).
4. Select automatic mode (AUTO), if desired, by moving the two-position slide switch away from the steering column until it is in the automatic position.

Driver Message Center

On the Century Class S/T, the gear is displayed on the driver display screen in the SmartDash™ (ICU2M) message center. See **Fig. 8.14**.

The first character of the display is either blank, to indicate the transmission is in manual mode, or an up-and-down arrow to indicate the transmission is in automatic mode.

NOTE: Pre-production vehicles will have a small numeric "10" in place of the up-and-down arrow when in automatic mode.

https://truckmanualshub.com/

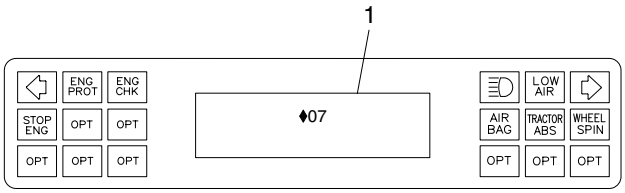

03/21/2002 f600996c

1. Driver Display Screen

Fig. 8.14, SmartDash Display

The next two characters indicate the current gear. For forward drive gears, this appears as a two-digit number (*Examples*: "03, "11"). For reverse, two letters appear, either "RL" for low reverse (the default), or "RH" for high reverse. For neutral, a single letter "N" appears.

Eaton Fuller Range-Shift Transmissions

Refer to the Eaton website for additional information, **www.roadranger.com**.

General Information, Eaton Range-Shift

To operate a range-shift transmission, move the shift lever through all of the low gear positions, then activate the range switch. This provides an additional set of ratios in the high range. Using the same shift lever positions as used in low range, move the shift lever through each position as before. On some models, the initial low gear is used only in low range.

Eaton Fuller Range-Shift transmissions are not synchronized in the front section, but the range section is synchronized to prevent grinding gears during range shifts.

IMPORTANT: Not all lever positions are used in each range and the shift patterns vary between transmissions. Be sure to read the shift pattern decal on the dash for the operating instructions for the specific transmission installed in your vehicle.

9-Speed RT, RTO, and RTX Models

Eaton Fuller 9-speed transmissions have a 5-speed front section, and a 2-speed rear range section. On the RT-8609 and all "A" and "B" ratio transmissions, the low gear is used only as a starting ratio. On "R" ratio transmissions, the high gear is used only as the top gear. The remaining gear positions of the above transmissions are used once in the low range and once in the high range. See **Fig. 8.15** for the shift patterns.

NOTE: The 3rd/7th and 4th/8th shift positions in the RT (direct ratio) and RTX-B (overdrive ratio) transmissions are opposite of the RTO (overdrive ratio) transmissions. The RTX-R ratio transmissions have the 1st/5th shift positions where LOW is in the A and B ratio transmissions. The top gear in the RTX-R ratio transmissions is called 9th gear.

10-Speed RT, RTO, RTLO, and RTX Models

Eaton Fuller 10-speed transmissions have ten selective, evenly-spaced forward ratios. Each transmission has a 5-speed front section, and a 2-speed rear range section. The ten forward speeds are obtained by twice using a 5-speed shift pattern: the first time in low range, the second time in high range. See **Fig. 8.16** for the shift patterns.

NOTE: The 4th/9th and the 5th/10th shift positions in the RT (direct ratio) and RTX (overdrive ratio) transmissions are directly opposite in the RTO (overdrive ratio) transmissions.

Operation, Eaton Range-Shift

1. When operating off-highway, or under adverse conditions, always use low gear (if so equipped) when starting to move the vehicle.

   When operating on-highway, with no load, or under ideal conditions, use 1st gear when starting to move the vehicle (except when equipped with a 9-speed RTO transmission, then always start in low gear).

   For all conditions, use the highest gear that is still low enough to start the vehicle moving with engine idling, and without slipping the clutch excessively.

2. Use the clutch brake to stop gear rotation when shifting into low (or 1st) or reverse when the vehicle is stationary. The clutch brake is actuated by depressing the clutch pedal all the way to the floor.

   For normal upshifts and downshifts, only a partial disengagement of the clutch is necessary to break engine torque.

https://truckmanualshub.com/

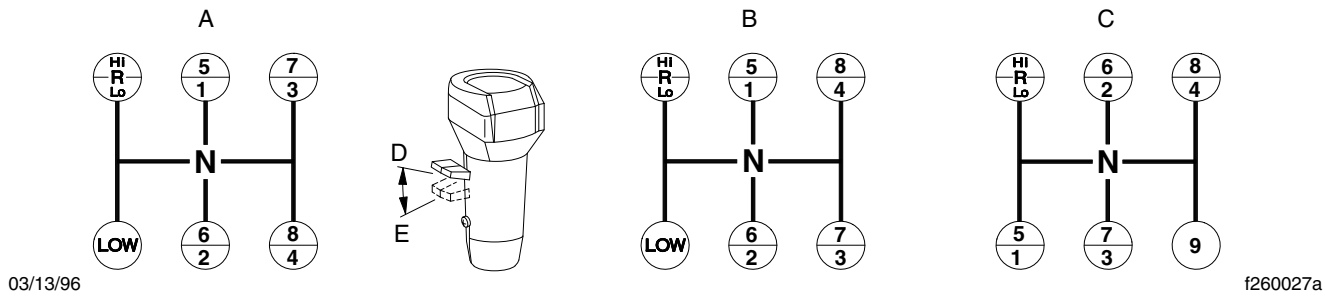

A. All RT and RTX-B Transmissions
B. All RTO Transmissions
C. All RTX-R Transmissions
D. High Range
E. Low Range

Fig. 8.15, Eaton Fuller 9-Speed Transmission Shift Patterns

3. Do not make range shifts with the vehicle moving in reverse gear.
4. Never attempt to move the range preselection lever with the gear shift lever in neutral while the vehicle is moving. Preselection with the range preselection lever must be made prior to moving the shift lever out of gear into neutral.
5. Do not shift from high range to low range at high vehicle speeds.
6. Double-clutch between all upshifts and downshifts.
7. After your shifting ability improves, you may want to skip some of the ratios. This may be done only when operating conditions permit, depending on the load, grade, and road speed.

Upshifting

1. Position the gear shift lever in neutral. Start the engine, and bring the air system pressure up to 100 to 120 psi (689 to 827 kPa).
2. Position the range preselection lever down, into low range.
3. Depress the clutch pedal to the floor; shift into low or 1st gear (**Table 8.1**), then engage the clutch, with the engine at or near idle speed, to start the vehicle moving. Accelerate to 80 percent of engine governed speed.
4. Shift progressively upward from low or 1st gear, to the top gear in low range (**Table 8.1**), double-clutching between shifts, and accelerating to 80 percent of engine governed speed.

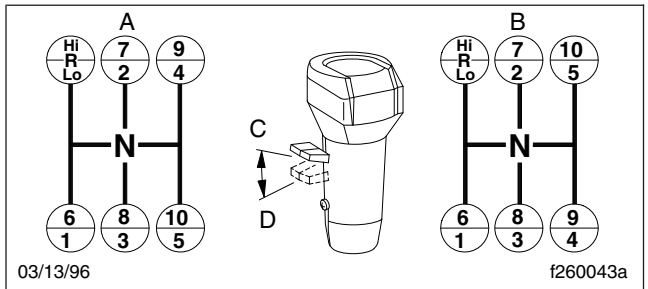

A. All RT and RTX Transmissions
B. All RTO Transmissions
C. High Range
D. Low Range

Fig. 8.16, Eaton Fuller 10-Speed Transmissions Shift Patterns

CAUTION

To prevent damage to the range section synchros, make sure the range preselection lever is in high range before moving the shift lever to neutral. Leave the shift lever in neutral long enough to be sure the range section has shifted.

5. While in the top gear of the low-range shift pattern, and ready for the next upshift, flip the range preselection lever up into high range. Double-clutch through neutral, and shift into the bottom gear in high range (**Table 8.1**). As the shift lever passes through neutral, the transmission will automatically shift from low range to high range.

https://truckmanualshub.com/

Eaton Fuller Shift Progressions			
TRANS. MODEL	LOW RANGE		HIGH RANGE
	Off-Highway	On-Highway	
8-Speed Direct (RT)	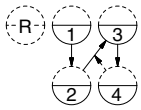 f260321	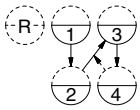 f260321	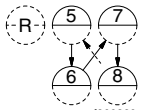 f260320
9-Speed Direct or Overdrive (RT or RTX)	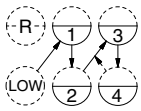 f260322	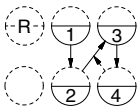 f260323	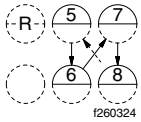 f260324
9-Speed Direct (RTX-P)	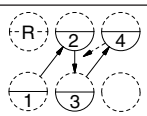 f260325	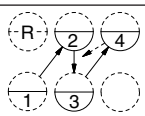 f260325	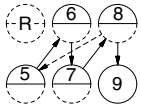 f260326
9-Speed Overdrive (RTO)	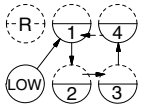 f260327	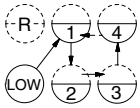 f260327	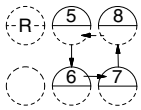 f260328
10-Speed Direct or Overdrive (RT or RTX)	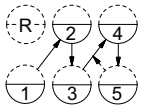 f260329	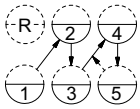 f260329	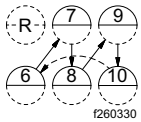 f260330
10-Speed Overdrive (RTO)	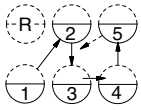 f260331	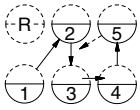 f260331	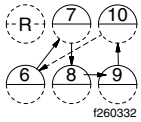 f260332

Table 8.1, Eaton Fuller Shift Progressions

6. With the transmission in high range, shift progressively upward through each of the high range gears (**Table 8.1**), double-clutching between shifts.

Downshifting

1. With the transmission in high range, shift progressively downward to the bottom gear in high range, double-clutching between shifts.
2. When in the bottom gear of the high-range shift pattern, and ready for the next downshift, push the range preselection lever down into low range. Double-clutch through neutral, and shift into the top gear of the low-range shift pattern. As the shift lever passes through neutral, the transmission will automatically shift from high range to low range.
3. With the transmission in low range, downshift through the low range gears as conditions require.

IMPORTANT: Never use the clutch brake when downshifting, or as a brake to slow the vehicle.

Eaton Fuller Splitter and Range-Shift Transmissions

Refer to the Eaton website for additional information, **www.roadranger.com**.

General Information, Eaton Splitter and Range-Shift

13-Speed RTLO Models

Eaton Fuller 13-speed transmissions have thirteen forward speeds and two reverse speeds. Each transmission has a 5-speed front section, and a 3-speed auxiliary section. The auxiliary section contains low- and high-range ratios, plus an overdrive splitter gear. See **Fig. 8.17** for the shift pattern.

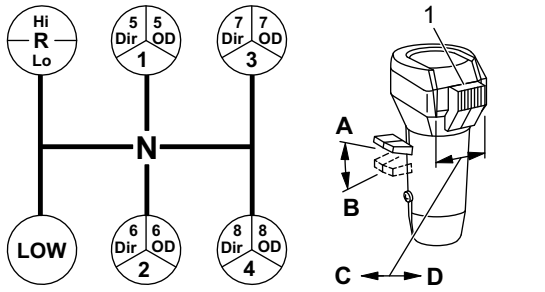

A. High Range
B. Low Range
C. Overdrive (forward)
D. Direct Drive (rearward)
1. Splitter Control Button

Fig. 8.17, Eaton Fuller 13-Speed Transmission Shift Pattern

All of the 13 speeds are controlled with one shift lever. A range preselection lever and a splitter control button are built into the shift knob. The range preselection lever controls range selection and the splitter control button (located on the side of the shift knob) controls gear splits.

Low gear in the front section is used only as a starting ratio. The remaining four forward positions are used once in the low range and once in the high range. However, each of the four high range gear positions can be split with the underdrive ratio (RT

https://truckmanualshub.com/

models), or overdrive ratio (RTO models) of the splitter gear. Ratios cannot be split while the transmission is in low range.

18-Speed RTO Models

Eaton Fuller 18-speed transmissions have eighteen forward speeds and four reverse, consisting of a 5-speed front section and a 3-speed auxiliary section. The auxiliary section contains low and high range ratios, plus an overdrive splitter gear. See **Fig. 8.18** for the shift pattern.

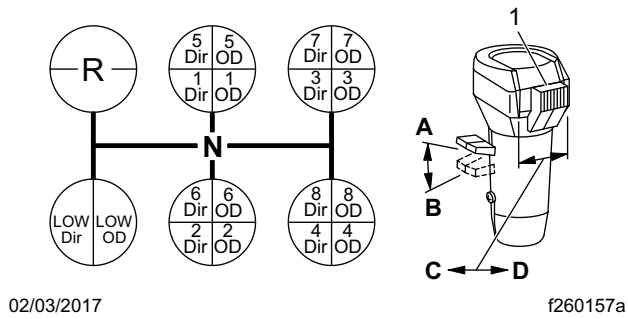

A. High Range
B. Low Range
C. Overdrive (forward)
D. Direct Drive (rearward)
1. Splitter Control Button

Fig. 8.18, Eaton Fuller 18-Speed Transmission Shift Pattern

One ratio in the front section (low) is used as a starting ratio; it is never used when the transmission is in high range.

The other four ratios in the front section are used once in low range and once again in high range; however, each of the five ratios (low–1–2–3–4) in low range and each of the four ratios (5–6–7–8) in high range can be split with the overdrive splitter gear.

All of the 18 speeds are controlled with one shift lever. A range preselection lever and a splitter control button are built into the shift knob. The range preselection lever controls range selection and the splitter control button (located on the side of the shift knob) controls gear splits.

Operation, Eaton Splitter and Range-Shift

IMPORTANT: The shifter knob has an interlock feature that prevents the splitter control button from being moved forward when the range preselection lever is down (in low range); when in high range and the splitter control button is in the forward position, the range preselection lever cannot be moved down.

1. When operating off-road, or under adverse conditions, always use low gear when starting to move the vehicle forward.

   When operating on-highway, with no load, or under ideal conditions, use 1st gear when starting to move the vehicle forward.

   For all conditions, use the highest gear that is still low enough to start the vehicle moving with the engine at or near idle speed, and without slipping the clutch excessively.

2. Use the clutch brake to stop gear rotation when shifting into low (or 1st) or reverse when the vehicle is stationary. The clutch brake is actuated by depressing the clutch pedal all the way to the floor.

   For normal upshifts and downshifts, only a partial disengagement of the clutch is necessary to break engine torque.

3. Use double-clutching between all upshifts and downshifts that require movement of the shift lever. Splitting of the high range gears does not require movement of the shift lever.

4. Never move the shift lever into low gear while in high range.

5. Never move the splitter control button while in neutral.

6. Do not preselect with the splitter control button; after moving the control button, complete the shift immediately.

7. Except when downshifting from 5th direct to 4th gear, never push the range preselection lever down into low range while operating in high range—the splitter will become inoperative.

8. Do not shift from high range to low range at high vehicle speeds.

9. Do not make range shifts with the vehicle moving in reverse gear.

10. Never attempt to move the range preselection lever with the gear shift lever in neutral while the vehicle is moving. Preselection with the range preselection lever must be made prior to moving the shift lever out of gear into neutral.

11. After your shifting ability improves, you may want to skip some of the ratios. This may be done

https://truckmanualshub.com/

only when operating conditions permit, depending on the load, grade, and road speed.

Upshifting

1. Position the gear shift lever in neutral. Start the engine, and bring the air system pressure up to 100 to 120 psi (689 to 827 kPa).
2. Position the range preselection lever down, into low range. See **Fig. 8.17** for 13-speed transmissions and **Fig. 8.18** for 18-speed transmissions.
3. Make sure the splitter control button is in the direct (rearward) position.
4. For 13-speed transmissions:

   Depress the clutch to the floor, shift into low or 1st gear; then engage the clutch, with the engine at or near idle speed, to start the vehicle moving. Accelerate to 80 percent of engine governed speed.

   For 18-speed transmissions:

   Depress the clutch to the floor, shift into low; then engage the clutch, with the engine at or near idle speed, to start the vehicle moving.

   To shift from low direct to low overdrive, move the splitter control button (**Fig. 8.18**) into the overdrive (forward) position, then immediately release the accelerator. Press and release the clutch pedal. After releasing the clutch, accelerate again.
5. For 13-speed transmissions:

   Shift upward from low to 1st gear, 2nd, etc. until 4th gear, double-clutching between shifts, and accelerating to 80 percent of engine governed speed. See **Fig. 8.17**.

   For 18-speed transmissions:

   Shift upward from low overdrive to 1st direct by first moving the splitter control button into the direct (rearward) position (**Fig. 8.18**). Move the shift lever, double-clutching, to the 1st gear position.

   Continue upshifting through the shift pattern. Double-clutch during lever shifts (1st to 2nd to 3rd to 4th); single-clutch during split shifts (1st direct to 1st overdrive, etc.).
6. When in 4th gear (13-speed transmissions) or 4th overdrive (18-speed transmissions) and ready to shift up to 5th gear, use the range shift lever as follows:

   For 13-speed transmissions:

   While in 4th gear, pull the range shift preselection lever up, into high range. The transmission will automatically shift from low to high range as the shift lever passes through neutral. Then, disengage the clutch; double-clutch through neutral; move the shift lever to 5th gear; engage the clutch, and accelerate the engine.

   For 18-speed transmissions:

   While in 4th overdrive, pull the range shift preselection lever up, into high range. The transmission will automatically shift from low to high range as the shift lever passes through neutral.

   Move the shift lever, double-clutching, to the 5th gear position. Just before making final clutch engagement, move the splitter control button to the direct (rearward) position; then engage the clutch and accelerate. Do not move the control button while the shift lever is in neutral.
7. Shift up through the high range gears as follows:

   For 13-speed transmissions:

   To shift from 5th direct to 5th overdrive, move the splitter control button (**Fig. 8.17**) into the overdrive (forward) position, then immediately release the accelerator. Press and release the clutch pedal. After releasing the clutch, accelerate again.

   Continue upshifting through the shift pattern. Double-clutch during lever shifts (6th to 7th to 8th); single-clutch during split shifts (6th direct to 6th overdrive, etc.).

   For 18-speed transmissions:

   To shift from 5th direct to 5th overdrive, move the splitter control button (**Fig. 8.18**) into the overdrive (forward) position, then immediately release the accelerator. Press and release the clutch pedal. After releasing the clutch, accelerate again.

   Continue upshifting through the shift pattern. Double-clutch during lever shifts (6th to 7th to 8th); single-clutch during split shifts (6th direct to 6th overdrive, etc.).

Downshifting

1. Downshift from 8th overdrive to 8th direct without moving the shift lever. Flip the splitter control button to the direct (rearward) position, then immediately release the accelerator, and disengage

https://truckmanualshub.com/

the clutch. Engage the clutch, and accelerate the engine only after the transmission has shifted.

2. Start the downshift from 8th direct to 7th overdrive by flipping the splitter control button to the overdrive (forward) position; then, immediately double-clutch through neutral, moving the shift lever from 8th to 7th gear.
3. Shift downward through each of the high range gears, alternating the procedures in steps 1 and 2, above, until reaching 5th direct.
4. While in 5th direct and ready for the downshift to 4th (13-speed transmissions) or 4th overdrive (18-speed transmissions), push the range preselection lever down. Then, double-clutch through neutral and move the shift lever to the 4th gear position. On 18-speed transmissions, move the splitter control button to the overdrive (forward) position *before*engaging the clutch. Do not move the control button while the shift lever is in neutral.
5. Continue downshifting from 4th to 1st as follows:

   For 13-speed transmissions:

   Downshift through the low range gears as conditions require.

   For 18-speed transmissions:

   Continue downshifting from 4th overdrive to 4th direct, then 4th direct to 3rd overdrive, 3rd overdrive to 3rd direct, etc. Single-clutch when split shifting (direct to overdrive, overdrive to direct). Double-clutch when making lever shifts (4th to 3rd, 3rd to 2nd, etc.).

IMPORTANT: Never use the clutch brake when downshifting, or as a brake to slow the vehicle.

Eaton Fuller Deep-Reduction Transmissions

Refer to the Eaton website for additional information, **www.roadranger.com**.

General Information, Deep Reduction

10-Speed RT, RTO and RTX Models

Eaton Fuller 10-speed deep-reduction transmissions have a 5-speed front section, and a 2-speed rear-range section, with a deep reduction gear. The low-low, deep reduction gear is used only when operating under adverse conditions. Low gear in the front section is used only for rough, off-highway conditions, as a starting ratio. The remaining four forward positions are used once in the low range and once in the high range. See **Fig. 8.19** for the shift pattern.

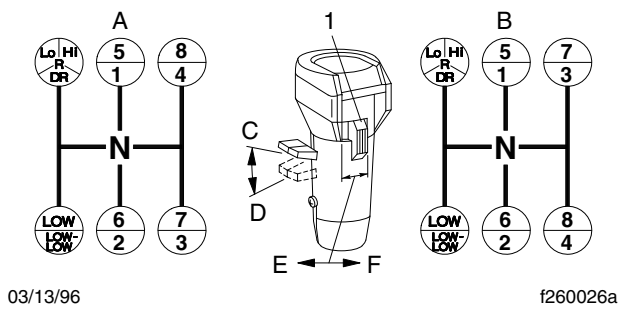

03/13/96 f260026a

A. All RTO Transmissions
B. All RT and RTX Transmissions
C. High Range
D. Low Range
E. Deep Reduction IN (forward)
F. Deep Reduction OUT (rearward)
1. Deep Reduction Button

Fig. 8.19, Eaton Fuller 10-Speed RT, RTO and RTX Model Transmissions Shift Patterns

NOTE: The 3rd/7th and 4th/8th shift positions in the RT and RTX-LL transmissions are opposite of the RTO-LL transmissions.

15-Speed RT, RTO, and RTX Models

Eaton Fuller 15-speed deep-reduction transmissions have a 5-speed front section, and a 2-speed rear-range section. They also have five additional deep reduction ratios. The 5-speed front section, and the low and high range sections provide ten evenly and progressively spaced forward speeds. The five deep reduction ratios are also evenly and progressively spaced; however, they do overlap the low range ratios, and should be used only when operating under adverse conditions. See **Fig. 8.20** for the shift patterns.

NOTE: The 4th/9th, and the 5th/10th shift positions in the RT (direct ratio) and RTX (overdrive ratio) transmissions are directly opposite in the RTO (overdrive ratio) transmissions.

Operation, Deep Reduction

IMPORTANT: The shifter knob has an interlock feature that prevents the deep reduction button from being moved forward when the range preselection lever is up (in high range); when in low range and the deep reduction button is in the

https://truckmanualshub.com/

forward position, the range preselection lever cannot be moved up.

1. For all driving conditions, use the highest gear that is still low enough to start the vehicle moving with the engine idling, and without slipping the clutch excessively.
2. Use the clutch brake to stop gear rotation when shifting into low-low, low-1st (whichever is used as a starting ratio) or reverse, when the vehicle is stationary. The clutch brake is actuated by depressing the clutch pedal all the way to the floor.

   For normal upshifts and downshifts, only a partial disengagement of the clutch is necessary to break engine torque.
8. Do not make range shifts with the vehicle moving in reverse gear.
9. Never attempt to move the range preselection lever with the gear shift lever in neutral while the vehicle is moving. Preselection with the range preselection lever must be made prior to moving the shift lever out of gear into neutral.
10. After your shifting ability improves, you may want to skip some of the ratios. This may be done only when operating conditions permit, depending on the load, grade, and road speed.

Upshifting

There are several patterns of upshifting, depending

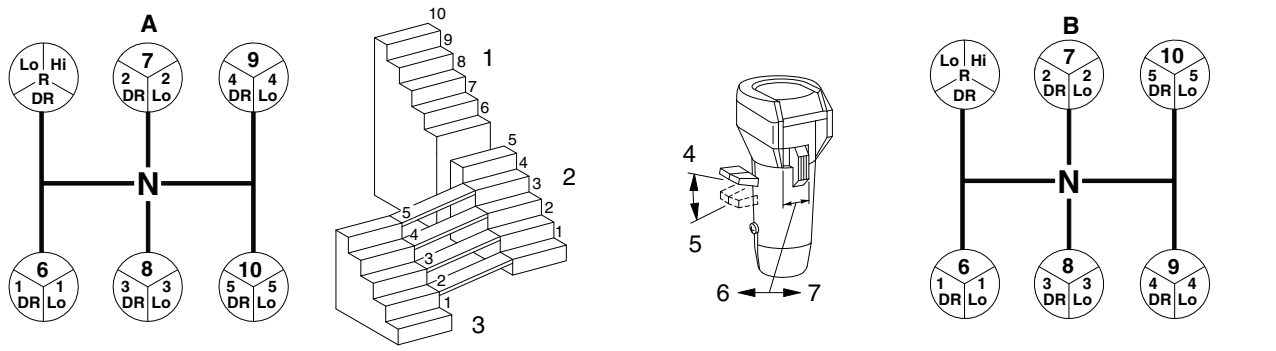

A. Eaton Fuller RT and RTX transmissions shift pattern
1. High Range
2. Low Range
3. Deep Reduction
4. High Range
5. Low Range

B. Eaton Fuller RTO transmissions shift pattern
6. Forward for IN
7. Rearward for OUT

Fig. 8.20, Eaton Fuller 15-Speed RT, RTO and RTX Model Transmissions Shift Patterns

3. Double-clutch between all upshifts and downshifts.
4. Never move the shift lever into low gear while in high range.
5. Do not preselect with the deep reduction button. When making the shift from a deep reduction ratio to a low range ratio, move the deep reduction button from a forward position to a rearward position, then complete the shift immediately.
6. Never move the deep reduction button from a rearward position to a forward position when the transmission is in high range.
7. Do not shift from high range to low range at high vehicle speeds.

on the vehicle load and the road conditions. See **Table 8.2** for suggested shifting sequences. Deep reduction gears are best suited for heavy loads and steep inclines. Low gear (in 10-speed transmissions) is best suited for off-highway use.

The following instructions are recommended for starting a loaded vehicle moving, under adverse conditions.

1. Position the gear shift lever in neutral. Start the engine, and bring the vehicle air system pressure up to 100 to 120 psi (689 to 827 kPa).
2. Position the range preselection lever down, into low range.
3. Move the deep reduction button to the forward position, to engage the deep reduction gears.

https://truckmanualshub.com/

4. Depress the clutch pedal to the floor; shift into low-low gear (10-speed transmissions) or 1st gear of deep reduction (15-speed transmissions); then engage the clutch, with the engine at or near idle speed, to start the vehicle moving. Accelerate to 80 percent of engine governed speed.

Eaton Fuller Shift Progressions				
TRANSMISSION MODEL	DEEP REDUCTION	LOW RANGE		HIGH RANGE
	Adverse Conditions Only	Off-Highway and Adverse Conditions	On-Highway and Ideal Conditions	All Conditions
10-Speed RTO	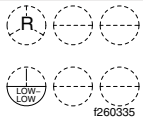 f260335	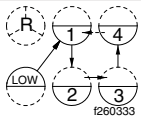 f260333	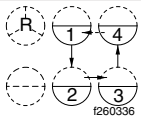 f260336	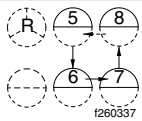 f260337
10-Speed RTX	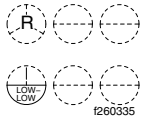 f260335	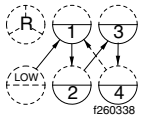 f260338	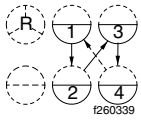 f260339	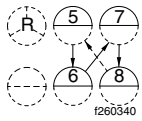 f260340
15-Speed RTO	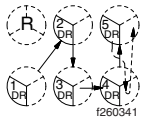 f260341	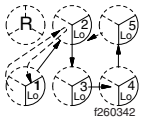 f260342	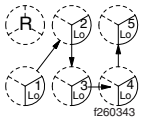 f260343	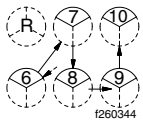 f260344
15-Speed RT and RTX	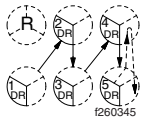 f260345	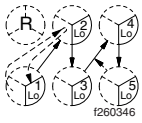 f260346	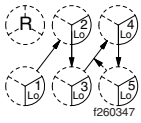 f260347	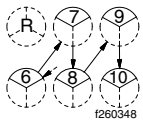 f260348

Table 8.2, Eaton Fuller Shift Progressions

5. For 10-speed transmissions:

   When ready for the next upshift, move the deep reduction button rearward, then break the torque on the gears by momentarily releasing the accelerator or depressing the clutch pedal. Do not move the shift lever.

   For 15-speed transmissions:

   Shift upward from 1st gear of deep reduction to 5th gear of deep reduction, double-clutching between shifts and accelerating to 80 percent of engine governed speed. See **Table 8.2**.

   When ready for the next upshift, move the deep reduction button from the forward position to the rearward position, then double-clutch through neutral, and move the shift lever to the 4th gear position in the low range.

6. Shift upward from low gear (10-speed transmissions) or 4th gear (15-speed transmissions), to the top gear in low range (see **Table 8.2**), double-clutching between shifts, and accelerating to 80 percent of engine governed speed.

7. While in the top gear of the low-range shift pattern, and ready for the next upshift, flip the range preselection lever up into high range. Double-clutch through neutral, and shift into the bottom gear in high range (see **Table 8.2**). As the shift lever passes through neutral, the transmission will automatically shift from low range to high range.

8. With the transmission in high range, shift progressively upward through each of the high range gears (see **Table 8.2**), double-clutching between shifts.

Alternate Upshifting Procedures (15-Speed Transmissions Only)

The shift from deep reduction to low range can also be made from 2nd, 3rd, or 4th gear of deep reduction, but must be made to the next gear lower in the low range. The shift from 2nd gear of deep reduction to 1st gear in low range (or 3rd gear of deep reduction to 2nd gear in low range, and 4th gear of deep reduction to 3rd gear in low range), is an upshift, and the same procedure should be followed as that shown for shifting from 5th gear of deep reduction to

https://truckmanualshub.com/

4th gear in low range. See the above steps, under the heading "Upshifting."

Downshifting

1. With the transmission in high range, shift progressively downward to the bottom gear in high range, double-clutching between shifts.
2. When in the bottom gear of the high-range shift pattern, and ready for the next downshift, push the range preselection lever down into low range. Double-clutch through neutral, and shift into the top gear of the low-range shift pattern. As the shift lever passes through neutral, the transmission will automatically shift from high range to low range.
3. With the transmission in low range, downshift through the low range gears, as conditions require.

IMPORTANT: Never use the clutch brake when downshifting, or as a brake to slow the vehicle.

Meritor Range-Shift Transmissions

Refer to the Meritor website for additional information, **www.meritor.com**.

General Information, Meritor Range-Shift

9-Speed RM, RMO, and RMX Models

Meritor 9-speed transmissions have a 5-speed front section, and a 2-speed auxiliary section. The low gear in the front sections of the "A" and "B" ratio transmissions is used only as a starting ratio. The high gear in the front section of the "R" ratio transmissions is used only as the top gear. The remaining gear positions of the above transmissions are used once in the low range and once in the high range. See **Fig. 8.21** for the shift patterns.

NOTE: The 3rd/7th and 4th/8th shift positions in the RM and RMX (direct ratio) are opposite of the RMO (overdrive ratio) transmissions. The RMX-R ratio transmissions have the 1st/5th shift positions where low is in the A and B ratio transmissions. The top gear in the RMX-R ratio transmissions is called 9th gear.

10-Speed RM and RMX Models

Meritor 10-speed transmissions have ten evenly-spaced forward ratios. Each transmission consists of a 5-speed front section, and a 2-speed auxiliary section. The ten forward speeds are obtained by twice using a 5-speed shift pattern: the first time in low range; the second time in high range. See **Fig. 8.22** for the shift pattern.

Operation, Meritor Range-Shift

Reverse

To drive in reverse, push the range selector lever down to put the transmission in the low range. Push the clutch pedal to the bottom of travel so the clutch brake slows the transmission for initial gear engagement. Holding the clutch pedal at the bottom of travel, shift into reverse.

Slowly release the clutch pedal to move the vehicle in reverse.

Upshifting

1. To drive forward, make sure the vehicle is completely stopped and the range selector lever is pushed down to put the transmission in the low range.

   Push the clutch pedal to the bottom of travel so the clutch brake slows the transmission for initial gear engagement; holding the clutch pedal at the bottom of travel, shift into low.
2. Slowly release the clutch pedal to begin moving the vehicle forward.
3. To upshift into 1st gear, only partial depression of the clutch pedal is needed. Do not push the clutch pedal all the way to the floor and engage the clutch brake; instead, partially depress the clutch pedal, and move the shift lever into neutral.
4. Release the clutch, and allow the engine to decelerate until the road speed and the engine rpm match.
5. Partially depress the clutch pedal, and move the shift lever into first gear.
6. Double-clutch and continue upshifting until you reach the top gear in the low range, 4th gear in 9-speed models and 5th gear in 10-speed models. See **Table 8.3**.
7. To upshift into high range—with the transmission still in the highest low-range gear—move the

https://truckmanualshub.com/

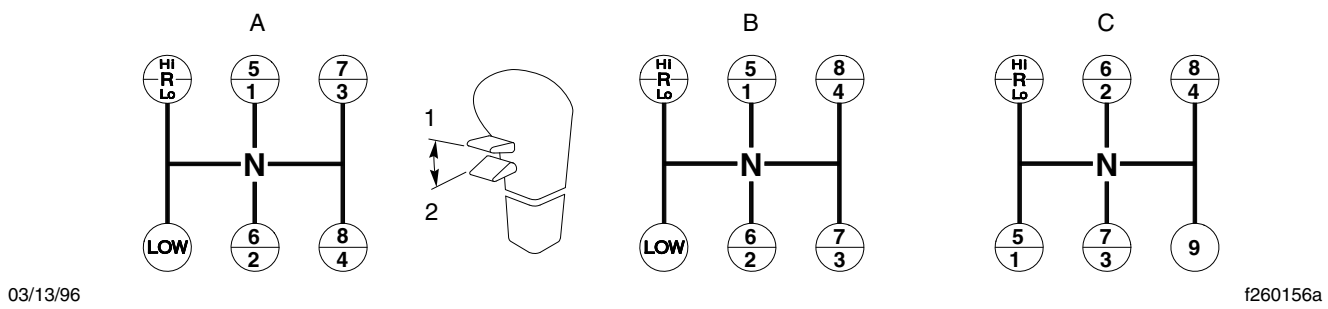

A. All RM and RMX Transmissions
B. All RMO Transmissions
C. All RMX-R Transmissions
1. High Range
2. Low Range

Fig. 8.21, Meritor 9-Speed RM, RMO and RMX Model Transmissions Shift Patterns

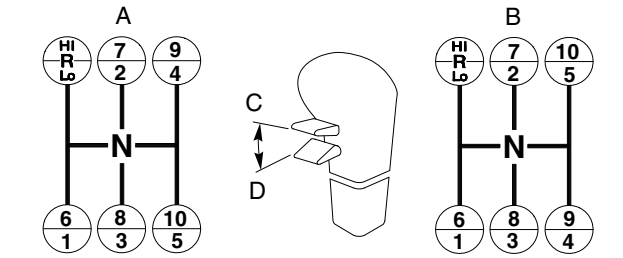

A. All RM and RMX Transmissions
B. All RMO Transmissions
C. High Range
D. Low Range

Fig. 8.22, Meritor 10-Speed RM, RMO and RMX Model Transmissions Shift Patterns

range selector lever up to put the transmission into high range, then partially depress the clutch pedal and move the shift lever into neutral. As the shift lever passes through neutral, the transmission will automatically shift from low range to high range.

8. Release the clutch pedal, and let the engine slow until the road speed and engine rpm match.

9. Partially depress the clutch pedal, and move the shift lever into the lowest gear in the high range, 5th gear in 9-speed models and 6th gear in 10-speed models.

Meritor Shift Progressions			
TRANS. MODEL	LOW RANGE		HIGH RANGE
	Off-Highway	On-Highway	
9-Speed Direct or Overdrive (RM or RMX)	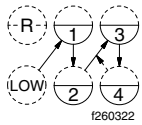 f260322	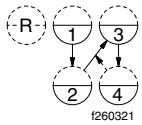 f260321	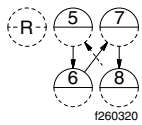 f260320
9-Speed Direct (RMX-R)	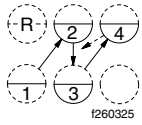 f260325	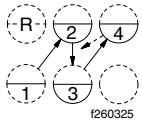 f260325	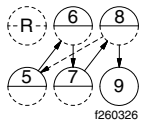 f260326
9-Speed Overdrive (RMO)	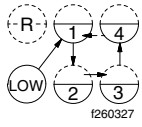 f260327	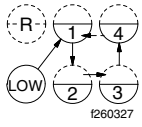 f260327	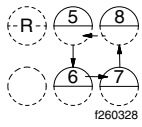 f260328
10-Speed Direct or Overdrive (RM or RMX)	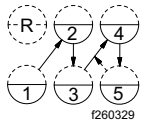 f260329	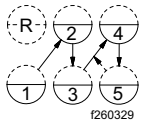 f260329	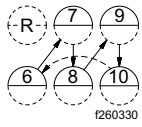 f260330
10-Speed Overdrive (RMO)	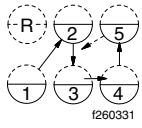 f260331	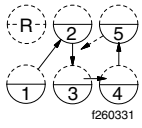 f260331	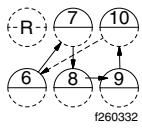 f260332

Table 8.3, Meritor Shift Progressions

10. Double-clutch to continue upshifting.

Downshifting

1. With the transmission in high range, shift progressively downward to the bottom gear in high range, 5th gear in 9-speed models and 6th gear in 10-speed models. Double-clutch between shifts. See **Table 8.3**.

https://truckmanualshub.com/

2. When in the bottom gear of the high-range shift pattern, and ready for the next downshift, push the range selection lever down into low range. Double-clutch through neutral, and shift into the top gear of the low-range shift pattern. As the shift lever passes through neutral, the transmission will automatically shift from high range to low range.
3. With the transmission in low range, downshift through the low range gears as conditions require.

IMPORTANT: Never use the clutch brake when downshifting, or as a brake to slow the vehicle.

Meritor Splitter and Range-Shift Transmissions

Refer to the Meritor website for additional information, **www.meritor.com**.

General Information, Meritor Splitter and Range-Shift

13-Speed RMO Models

The Meritor RMO13–145A transmission has thirteen forward speeds and two reverse speeds. Each transmission consists of a 5-speed front section, and a 3-speed auxiliary section. The auxiliary section contains low and high range ratios, plus, an overdrive splitter gear. See **Fig. 8.23**.

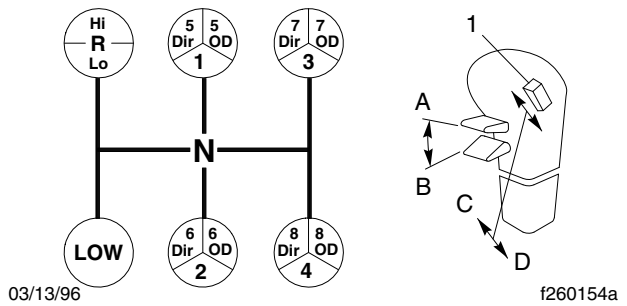

A. High Range
B. Low Range
C. Overdrive
D. Direct Drive
1. Splitter Control Button

Fig. 8.23, Meritor 13-Speed RMO Model Transmission Shift Pattern

All of the thirteen speeds are controlled with one shift lever. Built into the shift knob of the lever, are a range selection lever and a splitter control button (on the side of the shift knob), that control range selection and gear splits, respectively.

Low gear in the front section is used only as a starting ratio. The remaining four forward positions are used once in the low range and once in the high range. However, each of the four high range gear positions can be split with the overdrive ratio of the splitter gear. Ratios cannot be split while the transmission is in low range.

Operation, Meritor Splitter and Range-Shift

IMPORTANT: The shifter knob has an interlock feature that prevents the splitter control button from being moved up when the range selection lever is down (in the low range); when the transmission is in the high range, and the splitter control button is up, the range selection lever cannot be moved down.

Reverse

To drive in reverse, push the range selector lever down to put the transmission in the low range. Push the clutch pedal to the bottom of travel so the clutch brake slows the transmission for initial gear engagement; holding the clutch pedal at the bottom of travel, shift into reverse.

Slowly release the clutch pedal to move the vehicle in reverse.

Upshifting

1. To drive forward, make sure the vehicle is completely stopped and the range selector lever is pushed down to put the transmission in the low range.

   Push the clutch pedal to the bottom of travel so the clutch brake slows the transmission for initial gear engagement; holding the clutch pedal at the bottom of travel, shift into low.
2. Slowly release the clutch pedal to begin moving the vehicle forward.
3. To upshift into 1st gear, only partial depression of the clutch pedal is needed. Do not push the clutch pedal all the way to the floor and engage the clutch brake; instead, partially depress the clutch pedal, and move the shift lever into neutral.

https://truckmanualshub.com/

4. Release the clutch pedal, and allow the engine to decelerate until the road speed and the engine rpm match.
5. Partially depress the clutch pedal, and move the shift lever into 1st gear.
6. Double-clutch to continue upshifting until in fourth gear. See **Table 8.3**.
7. To upshift into high range—with the transmission still in 4th gear—push the range selection lever up to put the transmission into high range, then partially depress the clutch pedal and move the shift lever into neutral. As the shift lever passes through neutral, the transmission will automatically shift from low range to high range.
8. Release the clutch pedal, and let the engine slow until the road speed and engine rpm match.
9. Partially disengage the clutch, and move the shift lever into 5th gear.
10. To upshift from 5th gear into 5th overdrive, flip the splitter control button up to the overdrive position; then, immediately release the accelerator, and press and release the clutch pedal. It is not necessary to move the shift lever when shifting from direct to overdrive; the transmission will shift when synchronization with the engine's speed is reached. Accelerate the engine only after the transmission has shifted.
11. To shift from 5th overdrive to 6th direct, partially disengage the clutch, shift into 6th—but before engaging the clutch—flip the splitter control button down into the direct drive position; then engage the clutch, and accelerate the engine.

    Do not move the control button while the shift lever is in neutral.
12. Shift upward through each of the high range gears, alternating the procedures in steps 10 and 11, above.

Downshifting

1. Downshift from 8th overdrive to 8th direct without moving the shift lever. Flip the splitter control button down to the direct drive position, then immediately release the accelerator, and press and release the clutch pedal. Accelerate the engine only after the transmission has shifted.
2. To downshift from 8th direct to 7th overdrive, flip the splitter control button up to the overdrive position, then immediately double-clutch through neutral, moving the shift lever from 8th to 7th gear.
3. Downshift through each of the high range gears alternating the procedures in steps 1 and 2, above, until reaching 5th direct.
4. While in 5th direct, and ready for the next downshift, push the range selection lever down into low range. Double-clutch through neutral, and shift into 4th gear. See **Fig. 8.23**. As the shift lever passes through neutral, the transmission will automatically shift from high range to low range.
5. With the transmission in low range, downshift through the low range gears as conditions require.

IMPORTANT: Never use the clutch brake when downshifting, or as a brake to slow the vehicle.

Eaton Fuller AutoSelect Automated Transmissions

Refer to the Eaton website for additional information, **www.roadranger.com**.

General Information, AutoSelect

Eaton Fuller 10-speed AutoSelect automated transmissions have 10 forward speeds and two reverse speeds. The transmission consists of a 5-speed front section and a 2-speed rear section. The driver must use the clutch to start and stop the vehicle.

10-Speed RTAO Models

Eaton Fuller 10-speed transmissions have 10 forward speeds and two reverse speeds. The transmission consists of a 5-speed front section and a 2-speed rear section. The driver must use the clutch to start and stop the vehicle.

When conditions are right for a shift, the transmission Electronic Control Unit (ECU) notifies the driver with a tone from the Driver Command Console (DCC). See **Fig. 8.24**. The driver, when ready to shift, breaks torque and the transmission goes to Neutral. The driver then either increases or decreases engine speed to synchronize the shift. When engine speed is correct, the transmission shifts automatically.

The AutoSelect system consists of the following components.

https://truckmanualshub.com/

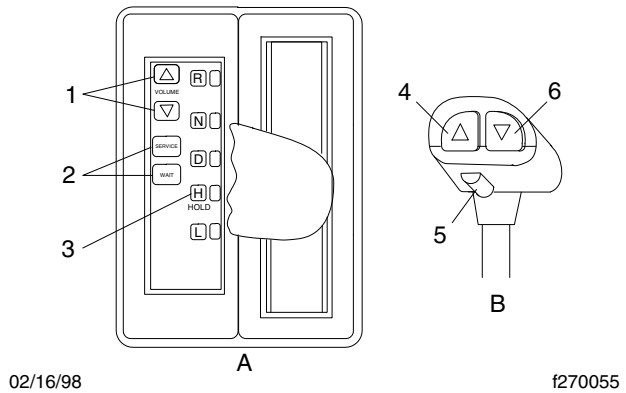

02/16/98 f270055

A. Console Top View
B. Select Handle Side View

1. Shift Tone Volume Buttons
2. Indicator Lamps
3. Gear Position Indicator
4. Upshift Button
5. Detent Button
6. Downshift Button

Fig. 8.24, Driver Command Console (DCC)

- The Driver Display Module, or DDM (**Fig. 8.25**), mounted on the dashboard, indicates gear position and the direction engine rpm needs to go for the next gear engagement. When the gear select lever is in the "D" position, the display module indicates what the driver must do to engage the next gear (decelerate or accelerate) by down and up arrows. When the gear number is solid on the display, that gear is fully engaged. When the gear number is flashing the transmission is either out of gear, waiting for the engine and transmission to synchronize, or the next gear engagement is in process.
- The Driver Command Console, or DCC (**Fig. 8.24**), replaces the shift lever and controls the transmission's shift patterns. There are indicators for the three forward positions: drive, hold, and low, plus reverse and neutral positions. Shift tone volume buttons and service and wait lamps are also located on the console. The gear select handle contains upshift and downshift buttons and a gear select lever detent button.
- The shifter performs shifts at the front portion of the transmission. It preselects the shift to Neutral and completes the gear change after driver input.

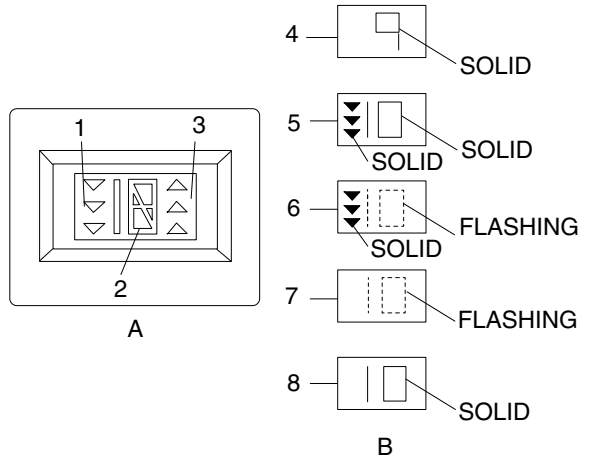

02/25/98 F270056

A. Driver Display Module
B. Driver Display Module Detail

1. Decrease Engine rpm Arrows
2. Current Gear Position
3. Increase Engine rpm Arrows
4. 9th Gear Engaged
5. In 9th Gear, Preselected Toward 10th
6. Out Of Gear, Waiting For Engine/Transmission rpm To Synchronize
7. Engine/Transmission rpm Synchronized, Gear Engagement In Process
8. 10th Gear Engaged

Fig. 8.25, Driver Display Module (DDM)

- The Electronic Control Unit (ECU) consists of two controllers: a transmission ECU and a system ECU. The transmission ECU controls all transmission shift functions and the system ECU manages all vehicle interfaces for transmission shift functions.
- An electronic range valve, controlled by the transmission ECU, is used to perform range shifts.

Operation, AutoSelect

⚠ WARNING

If the engine cranks in any gear other than neutral, have the vehicle serviced immediately. If the vehicle is started in gear it will suddenly move forward or backward, which could result in personal injury and damage to property and the transmission.

https://truckmanualshub.com/

Reverse

NOTE: To drive in reverse, first depress the clutch.

1. Move the gear select lever to the "R" position.
2. Select either LO or HI reverse by depressing either the downshift or upshift button (**Fig. 8.24**) on the gear select handle.
3. Release the clutch.

NOTE: The clutch must be used for starting and stopping.

Upshifting ("D" and "H" modes)

NOTE: It is the driver who decides when to upshift or downshift. When in the "D" (drive) mode, an upcoming shift can be cancelled by putting the gear select lever in the "H" mode or by using the gear select handle buttons. When in the "H" (hold) mode, it is possible to skip shift gears if the road and load conditions permit.

1. Accelerate.

NOTE: In the "H" mode, depress the upshift button on the gear select handle. Depress twice to skip shift.

2. An audible tone sounds from the Driver Command Console when the transmission is ready to shift. The arrows on the Driver Display Module (**Fig. 8.25**) indicate the direction engine rpm needs to go to synchronize the next shift. The next gear is shown on the display. See **Fig. 8.25**.
3. Release the throttle for the shift to neutral. The upcoming gear flashes on the display when neutral is engaged. The arrows disappear, the current gear position stops flashing, and engine rpm decreases and becomes steady.
4. Apply the throttle.

NOTE: If the shift is missed, control engine speed in the direction indicated by the arrows on the display to synchronize engine rpm with the transmission's speed.

Downshifting ("D" and "H" modes without an engine load)

1. Decelerate.

NOTE: In the "H" mode, depress the downshift button on the gear select handle. Depress twice to skip shift.

2. An audible tone sounds from the Driver Command Console when the transmission is ready to shift. The arrows on the Driver Display Module indicate the direction engine rpm needs to go to synchronize the next shift. The next gear is shown on the display.
3. Gently roll on the throttle. The upcoming gear flashes on the display when neutral is engaged. The arrows disappear, the current gear position stops flashing, and engine rpm increases and becomes steady.
4. Continue decelerating.

NOTE: If the shift is missed, control engine speed in the direction indicated by the arrows on the display to synchronize engine rpm with the transmission's speed.

Downshifting ("D" and "H" modes with an engine load)

1. Decelerate.

NOTE: In the "H" mode, depress the downshift button on the gear select handle. Depress twice to skip shift.

2. An audible tone sounds from the Driver Command Console when the transmission is ready to shift. The arrows on the Driver Display Module indicate the direction engine rpm needs to go to synchronize the next shift. The next gear is shown on the display.
3. Release the throttle. The upcoming gear flashes on the display when neutral is engaged.
4. Apply throttle to synchronize engine rpm with the transmission's speed. The arrows disappear, the current gear position stops flashing, and engine rpm increases and becomes steady.

NOTE: If the shift is missed, control engine speed in the direction indicated by the arrows on the display to synchronize engine rpm with the transmission's speed.

https://truckmanualshub.com/

Eaton Fuller Top 2 and Lightning Semi-Automated Transmissions

Refer to the Eaton website for additional information, **www.roadranger.com**.

General Information, Top 2 and Lightning

10-Speed RTL/ RTLO and 13-Speed/18-Speed RTLO Models

Top 2 and Lightning transmissions have 10 selective forward ratios and a 2-speed rear section. Half of the 10 speed ratios are shifted with the shift lever and the other half are shifted by moving the shift button. They shift automatically between the two top gears. See **Fig. 8.26** for the Top 2 shift knob, and **Fig. 8.27** for the Lightning shift knob.

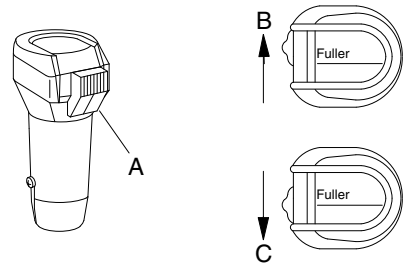

09/25/96 f260399

A. Shift Button
B. Gears 2, 4, 6, 8, 10 when button is forward
C. Gears 1, 3, 5, 7, 9 when button is rearward

Fig. 8.26, Top 2 Shift Knob

There are three types of shifts used with these transmissions. Button-only and combination button/lever shifts are both full gear changes. The lever-only shift skips a gear.

- The button-only shift is a gear split shift that occurs by moving the shift button.
- The lever-only shift occurs when the shift lever is moved without moving the shift button.
- The combination button/lever shift is a gear ratio change that occurs when both the shift button and the shift lever are moved.

The small red service light on the Lightning shift knob illuminates for a few seconds when the engine

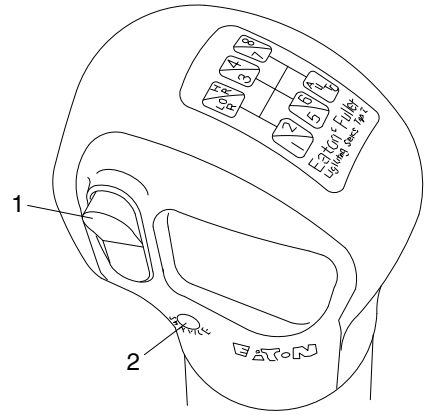

09/12/2002 f261190

1. Shift Button
2. Service Light

Fig. 8.27, Lightning Shift Knob

is turned on. This confirms that the transmission electronics are operating properly.

NOTE: If the service light stays on or flashes, or does not illuminate when the engine starts, take the vehicle to an authorized Freightliner or Eaton service facility as soon as possible.

See **Fig. 8.28** for the shift patterns for Lightning and 10-speed Top 2, 13-speed Top 2, and 18-speed Top 2.

Operation, Top 2/Lightning

CAUTION

Keep the transmission in gear at all times while the vehicle in motion. Coasting in neutral could lead to transmission damage.

1. When operating off-highway, or under adverse conditions, always use low gear (if so equipped) when starting to move the vehicle.

   When operating on-highway, with no load, or under ideal conditions, use 1st gear when starting to move the vehicle.

   For all conditions, use the highest gear that is still low enough to start the vehicle moving with engine idling, and without slipping the clutch excessively.

2. Use the clutch brake to stop gear rotation when shifting into 1st or reverse when the vehicle is

https://truckmanualshub.com/

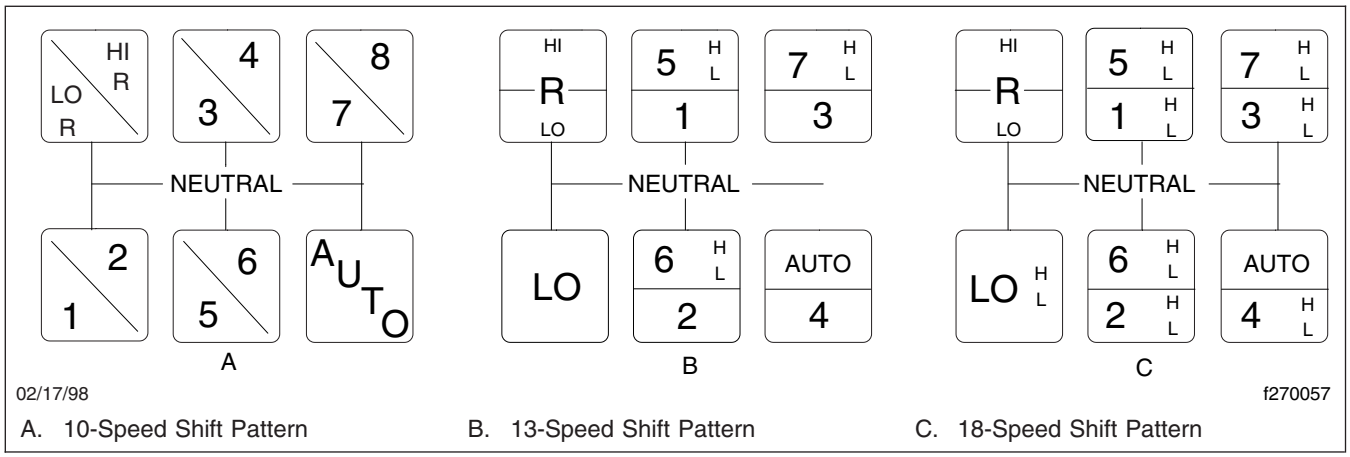

A. 10-Speed Shift Pattern B. 13-Speed Shift Pattern C. 18-Speed Shift Pattern

Fig. 8.28, Eaton Fuller Top 2 Shift Patterns

stationary. The clutch brake is actuated by depressing the clutch pedal all the way to the floor.

For normal upshifts and downshifts, only a partial disengagement of the clutch is necessary to break engine torque.

3. Do not make range shifts with the vehicle moving in reverse gear.
4. The shift lever should not be moved to the center or left rail positions at vehicle speeds above 40 mph (65 km/h).
5. Double-clutch between all upshifts and downshifts.
6. After your shifting ability improves, you may want to skip some of the ratios. This may be done only when operating conditions permit, depending on the load, grade, and road speed.
7. Avoid hunting for neutral by moving the gear shift lever from the left rail to right rail. This action can cause excessive transmission wear.

Upshifting

1. Position the gear shift lever in neutral. Start the engine, and bring the air system pressure up to 100 to 120 psi (689 to 827 kPa).
2. Depress the clutch pedal to the floor. Shift into 1st gear, then engage the clutch, with the engine at or near idle speed, to start the vehicle moving.
3. Button-only shift—Preselect the next gear by sliding the shift button forward. Break torque by releasing the throttle or by depressing the clutch pedal. Decrease engine speed to synchronize the engine speed with the transmission speed.

   The shift will complete when the engine rpm has decreased to the proper speed.

   The button-only shift is used for gear changes from 1st to 2nd, 3rd to 4th, 5th to 6th, 7th to 8th, and 9th to 10th.
4. Lever-only shift—Break torque by releasing the throttle and depressing the clutch pedal. Double-clutching, move the shift lever to the next desired gear position. Decrease engine speed to synchronize the engine speed with the transmission speed. The shift will complete when the engine rpm has decreased to the proper speed.

   The lever-only shift is used to skip a full gear. With the shift button rearward—1st to 3rd, 3rd to 5th, 5th to 7th, and 7th to 9th. With the shift button forward—2nd to 4th, 4th to 6th, 6th to 8th, 8th to 10th.

NOTE: Lever-only shifts skip an entire gear ratio and will require the engine rpm to decrease twice the amount of a normal shift.

5. Combination button/lever shift—Preselect the next gear by sliding the shift button rearward. Break torque by releasing the throttle and depressing the clutch pedal. Double-clutch and move the shift lever to the next desired gear position.

   The combination button/lever shift is used for gear changes from 2nd to 3rd, 4th to 5th, 6th to 7th and 8th to 9th.

https://truckmanualshub.com/

Downshifting

CAUTION

Do not attempt a button-only downshift at too high an engine speed (generally above 1400 rpm). Doing so could result in damage to the engine, transmission, and/or driveline.

1. Button-only shift—With the throttle still applied, preselect the next gear by sliding the shift button rearward. Break torque by releasing the throttle or by depressing the clutch pedal. Increase engine speed to synchronize the engine speed with the transmission speed. The shift will complete when the engine rpm has increased to the proper speed.

   The button-only shift is used for gear changes from 10th to 9th, 8th to 7th, 6th to 5th, 4th to 3rd, and 2nd to 1st.

CAUTION

Do not attempt a lever-only downshift at too high an engine speed (generally above 1000 rpm). Doing so could result in damage to the engine, transmission, and/or driveline.

2. Lever-only shift—Break torque by releasing the throttle and depressing the clutch pedal. Double-clutching, move the shift lever to the next desired gear position.

   The lever-only shift is used to skip a full gear. With the shift button rearward—9th to 7th, 7th to 5th, 5th to 3rd, and 3rd to 1st. With the shift button forward—10th to 8th, 8th to 6th, 6th to 4th and 4th to 2nd.

IMPORTANT: Never use the clutch brake when downshifting, or as a brake to slow the vehicle.

CAUTION

Do not attempt a combination button/lever downshift at too high an engine speed (generally above 1400 rpm). Doing so could result in damage to the engine, transmission, and/or driveline.

3. Combination button/lever shift—With the throttle still applied, preselect the next gear by sliding the shift button forward. Break torque by releasing the throttle and depressing the clutch pedal. Double-clutch and move the shift lever to the next desired gear position.

   The combination button/lever shift is used for gear changes from 9th to 8th, 7th to 6th, 5th to 4th, and 3rd to 2nd.

Meritor Engine Synchro Shift (ESS) Automated Models

Refer to the Meritor website for additional information, **www.meritor.com**.

General Information, ESS

9–Speed and 10–Speed M, MO, RS, and RSX Models

Meritor 9-speed and 10-speed automated transmissions do not require use of the clutch except to start and stop the vehicle.

NOTE: Meritor M and MO series ESS transmissions are available only on vehicles equipped with either Caterpillar or Cummins electronic engines. Meritor RS and RSX series ESS transmissions are only available on vehicles equipped with Detroit Diesel electronic engines.

The ESS system works with the engine fuel control system to automatically synchronize engine rpm to road speed during gear changes. Use the clutch only to start and stop the vehicle and to shift into forward or reverse. The HI and LO ranges are automated, so the driver does not have to select ranges. A "break torque" feature allows the driver to move the shift lever and take the transmission out of gear without changing throttle position. Throttle position can be maintained while braking and downshifting through the gears when stopping the vehicle, as well as on steep grades.

The major components of the ESS system are the system switch, shift-intent switch, input and output shaft speed sensors, a Neutral position sensor, and an electro-pneumatic solenoid.

Operation, ESS

The ESS system collects and relays information pertaining to the positions of the shift-intent and system switches (**Fig. 8.29**), transmission input and output shaft speeds, and shift lever position. The information is received by the engine Electronic Control Module (ECM) which signals the fuel control system to increase or decrease engine rpm to match road

https://truckmanualshub.com/

speed. The ECM also controls HI and LO range selection in the auxiliary case on the rear of the transmission.

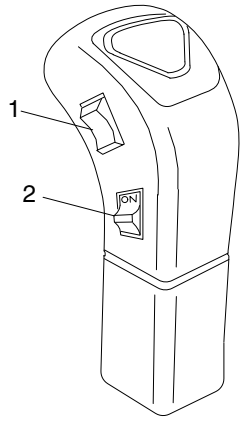

02/17/98 f270058

1. Shift-Intent Switch 2. System Switch

Fig. 8.29, ESS Shift Handle

The system switch (**Fig. 8.29**) is the lower switch located on the driver's side of the shift handle. It controls ESS system operation. When in the down position, the system is operating and the word ON is visible on the switch. In the up position, the word OFF is visible, the system is not operating, and the transmission can be shifted manually.

The shift-intent switch (**Fig. 8.29**) is the upper switch on the driver's side of the shift handle. It has four positions and controls upshifting and downshifting by communicating to the ECM the driver's intention of changing gears.

NOTE: If the system switch is OFF, use the shift-intent switch to select between ranges. Push the top of the switch (**Fig. 8.30**) to select the HI range on upshifts and the bottom of the switch (**Fig. 8.31**) to select the LO range on downshifts.

WARNING

Make sure that the transmission is in neutral (N) when you start the vehicle. If the vehicle is started in gear, it will suddenly move forward or backward which could result in personal injury and damage to property and the transmission.

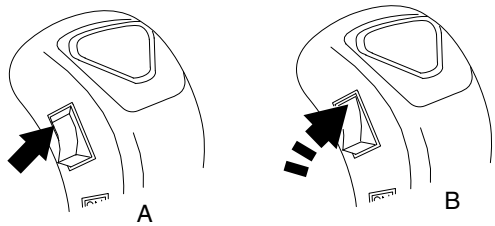

02/17/98 f270059

A. Press the top portion (engage the first position) of the shift-intent switch to begin an upshift.
B. Press the top portion again (engage the second position) to break torque.

Fig. 8.30, ESS Upshifting Using the Shift-Intent Switch

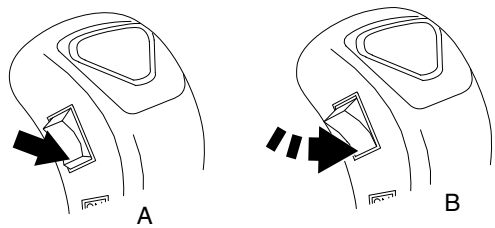

02/17/98 f270060

A. Press the bottom portion (engage the first position) of the shift-intent switch to begin a downshift.
B. Press the bottom portion again (engage the second position) to break torque.

Fig. 8.31, ESS Downshifting Using the Shift-Intent Switch

Starting The Vehicle

1. Ensure that the shift lever is in the neutral (N) position.
2. Push the clutch pedal to the bottom of its travel to engage the clutch brake.
3. Start the engine.
4. Slowly release the clutch pedal.
5. Allow the system air to build up to the range specified on the gauge.
6. Release the parking brake.

Shifting Into a Starting Gear

CAUTION

Always use the proper starting gear. Do not shift into neutral and coast, as this will result in damage to the transmission.

https://truckmanualshub.com/

1. Press the system switch down, into the ON position, to activate the ESS system.
2. Press the top portion of the shift-intent switch.

IMPORTANT: Use the clutch brake only when initially engaging a gear with the vehicle standing still.

3. Push the clutch pedal to the bottom of its travel so that the clutch brake stops the transmission input shaft from rotating.
4. Move the shift lever and engage a starting gear.
5. Slowly release the clutch pedal.

NOTE: If you do not shift the transmission out of neutral into a gear within two seconds, the ESS system will "time out" and deactivate. The transmission returns to manual operation. To reactivate the ESS system, press the shift-intent switch again. See the following procedures for upshifting and downshifting for instructions on how to use the shift-intent switch.

Upshifting

1. To upshift into the next higher gear:
   - 1.1 Press the top portion of the shift-intent switch.
   - 1.2 Apply pressure with the shift lever toward the neutral position.
   - 1.3 Press the top portion of the shift-intent switch again, far enough so that the switch goes into a second position inside the body of the shift handle. Then release the switch. See **Fig. 8.30**. This will break torque.
   - 1.4 Immediately move the shift lever to the neutral position.
   - 1.5 Allow engine rpm to slow down enough to synchronize with road speed.
   - 1.6 Move the shift lever to the next higher gear.
2. To upshift through the rest of the gears, repeat the substeps above. Before each upshift, push the top of the shift-intent switch into the shift handle body to break torque. The range shift is automatic.
3. To skip a gear, press the shift-intent switch into the shift handle body, while in Neutral, one time for every gear that is skipped.

Downshifting

1. To downshift into the next lower gear.
   - 1.1 Press the bottom portion of the shift-intent switch.
   - 1.2 Apply pressure with the shift lever toward the neutral position.
   - 1.3 Press the bottom portion of the shift-intent switch again, far enough so that the switch goes into a second position inside the body of the shift knob. Then release the switch. See **Fig. 8.31**. This will break torque.
   - 1.4 Immediately move the shift lever to the neutral position.
   - 1.5 Allow engine rpm to speed up enough to synchronize with road speed.
   - 1.6 Move the shift lever to the next lower gear.
2. To downshift through the rest of the gears, repeat the substeps above. Before each downshift, push the bottom of the shift-intent switch into the shift handle body to break torque. The range shift is automatic.
3. To skip a gear, press the shift-intent switch into the shift handle, while in neutral, one time for every gear that is skipped.

Reverse

1. Press the system switch on the shift handle so that it is in the ON position and the ESS system is activated.
2. Push the clutch pedal to the bottom of its travel so that the clutch brake stops the transmission input shaft from rotating.
3. Move the shift lever and engage reverse.
4. Slowly release the clutch pedal and move the vehicle in the reverse direction.

NOTE: If a HI reverse range is required, follow the steps below.

5. Press the system switch on the shift handle so that it is in the OFF position and the ESS system is deactivated.

https://truckmanualshub.com/

6. Press the top portion of the shift-intent switch to engage the HI range.
7. Push the clutch pedal to the bottom of its travel so that the clutch brake stops the transmission input shaft from rotating.
8. Move the shift lever and engage reverse.
9. Slowly release the clutch pedal and move the vehicle in the reverse direction.

   See **Fig. 8.32** for two ESS 9-speed shift patterns and one ESS 10-speed shift pattern.

Allison Automatic Transmissions

Refer to the Allison website for additional information, **www.allisontransmission.com**.

General Information, Allison

HD-series automatic transmissions have six forward speeds and one reverse speed. See **Fig. 8.33**. These transmissions have electronic shift controls that can be programmed to allow the use of different numbers of geared speeds. For instance, the transmission can be programmed to operate as a 4-speed, 5-speed, or 6-speed unit in the "primary" shift mode. If needed, a "secondary" shift mode can be programmed to provide another shift configuration to optimize vehicle use under different operating conditions. To activate a secondary shift mode, or other special function programmed into the electronic control unit (ECU), depress the Mode button. "Mode On" is displayed in the indicator panel just above the push buttons. A label just above the Mode button identifies the special function.

NOTE: Each time a push button is depressed on the shift selector, a short beep will be heard. This indicates that the ECU has received input to change operation.

The HD-series transmission system is designed to warn the driver of transmission malfunctions. The driver of a vehicle equipped with these transmissions should know the extent of the warning system in order to safely operate the vehicle. See **Chapter 2** for information on the warning system.

Operation, Allison

CAUTION

The engine should never be operated for more than 30 seconds at full throttle with the transmission in gear and the output stalled. Prolonged operation of this type will overheat the transmission fluid and will result in severe damage to the transmission.

1. Start the engine, then check the digital display on the "push button shift selector." Under "Select" at the top of the unit, the display should always show the "primary" shift mode. Under "Monitor," the gear the transmission is in should be displayed.

WARNING

Never shift from neutral (N) to drive (D) or reverse (R) at engine speeds above idle. The vehicle will lurch forward or backward, which could cause property damage and personal injury.

2. Use reverse (R) to back the vehicle. Completely stop the vehicle before shifting from a forward gear to reverse or from reverse to forward. There is only one reverse gear.
3. Select drive (D) for all normal driving conditions. The vehicle will start out in 1st gear, and as speed increases, the transmission will upshift through each gear automatically. As the vehicle slows down, the transmission will downshift to the correct gear automatically.

   The pressure of your foot on the accelerator pedal influences the automatic shifting. When the pedal is fully depressed, the transmission will automatically upshift near the governed speed of the engine. A partially depressed position of the pedal will cause the upshifts to occur at a lower engine speed.
4. Occasionally the road, load, or traffic conditions make it desirable to restrict the automatic shifting to a lower range. The lower the gear range, the greater the engine braking power.

   Use the up or down arrow buttons on the shift selector to reach the desired gear. The "Select" indicator will display your choice, and the "Monitor" indicator will show the selected gear once it is reached.

https://truckmanualshub.com/

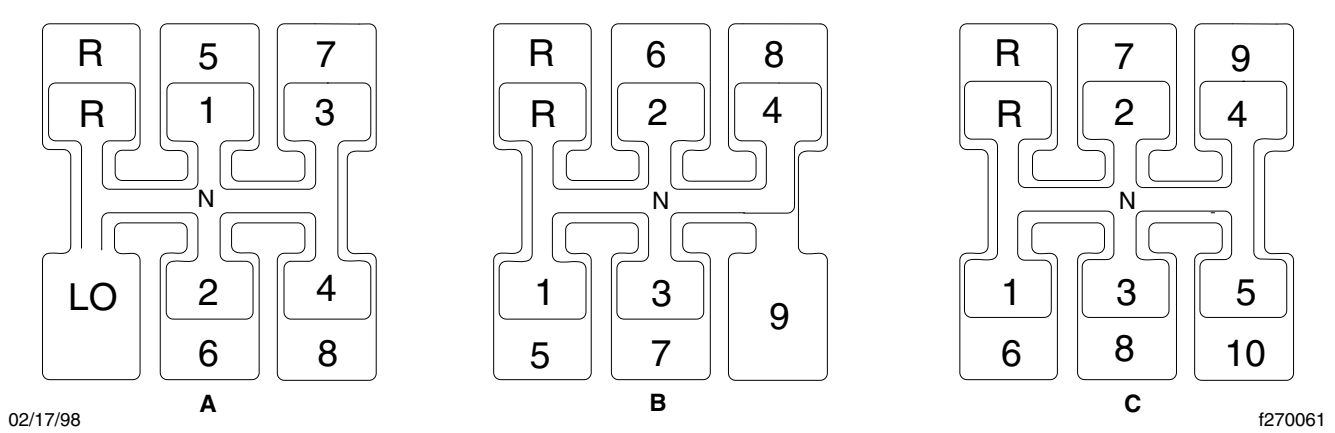

A. 9-Speed Shift Pattern with LO Gear
B. 9-Speed Shift Pattern
C. 10-Speed Shift Pattern

Fig. 8.32, Meritor ESS 9- and 10-Speed Shift Patterns

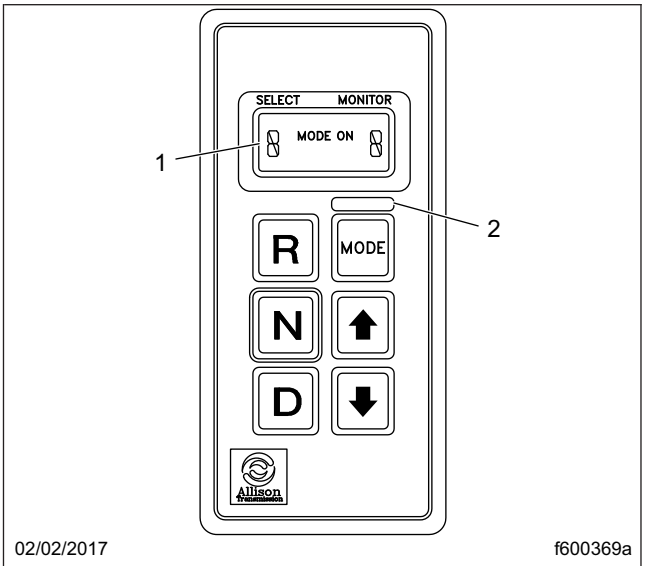

1. Indicator Panel
2. Mode ID

Fig. 8.33, Allison Push Button Shift Selector

NOTE: In the lower gear ranges, the transmission will not upshift above the highest gear selected unless the engine governed speed is exceeded.

5. Use neutral (N) and apply the parking brake when the vehicle is parked with the engine running.

CAUTION

Do not allow the vehicle to coast in neutral. This can result in severe transmission damage. Also, no engine braking is available.

https://truckmanualshub.com/

9

Rear Axles

Meritor Single Drive Axles With Traction Equalizer 9.1
Meritor Drive Axles With Main Differential Lock 9.1
Meritor Main Differential Lock Operation 9.1
Meritor Tandem Drive Axles With Interaxle Differential 9.2
Meritor Interaxle Differential Lockout Operation 9.2
Eaton Single Reduction Axles With Controlled Traction Differential 9.2
Eaton 2-Speed Tandem Axles 9.3
Eaton Interaxle Differential Lockout Operation 9.3

https://truckmanualshub.com/

Meritor Single Drive Axles With Traction Equalizer

Some Meritor single drive axles are equipped with a traction equalizer which is a load sensing, self-actuating feature. A traction equalizer provides normal differential action where traction is good. When one wheel begins to spin faster than the other, clutch plates in the differential housing automatically engage, delivering power to both wheels. There is no operator control with this feature.

A traction equalizer occasionally tends to slip in a jerking motion, producing irregular intervals of sharp noises. This generally occurs when the vehicle is operating at low speeds on fairly sharp turns. This condition, called slip-stick, is corrected by adding a friction modifier to the axle lubricant. This additive tends to reduce the static coefficient of friction to a value equal to, or lower than, the sliding coefficient.

See **Group 35** of the *Century Class Trucks Maintenance Manual* for additional information on friction modifiers and when to add them to axle lubricants.

CAUTION

Tire sizes on both rear wheels should be the same on axles equipped with a traction equalizer. If not, excessive wear may occur in the traction equalizer.

Meritor Drive Axles With Main Differential Lock

The Meritor main differential lock is a driver-controlled traction device operated from the vehicle cab. A switch allows the driver to lock or unlock the differential. An indicator light comes on when the differential lock is engaged. An optional buzzer can also be used to indicate differential lock engagement.

The main differential lock provides maximum traction under slippery conditions. When the differential lock is engaged, the clutch collar completely locks the differential case, gearing, and axle shafts together, maximizing traction of both wheels and protecting against spinout. Under normal traction conditions, do not engage the differential lock. Operate the axle with differential action between both wheels.

WARNING

Be especially careful when driving under slippery conditions with the differential locked. Though forward traction is improved, the vehicle can still slip sideways, causing possible loss of vehicle control, personal injury, and property damage.

Meritor Main Differential Lock Operation

To lock the main differential and obtain maximum traction under slippery conditions, move the control switch to the lock position.

WARNING

Lock the main differential only when the vehicle is standing still or moving less than 25 mph (40 km/h). Never lock the main differential when the vehicle is traveling down steep grades or when the wheels are slipping. This could damage the differential or lead to loss of vehicle control, causing personal injury and property damage.

NOTE: On some vehicles, the differential lock system is connected through the low speed range of the transmission. If this system is used, the transmission must be in the low speed range for the differential to fully lock.

If the vehicle is moving, maintain a constant vehicle speed while engaging the differential lock. Briefly let up on the accelerator to relieve torque on the gearing, allowing the differential to fully lock. The indicator light should come on and the buzzer should sound on vehicles so equipped. When the differential is fully locked, the turning radius will increase because the vehicle understeers. See **Fig. 9.1**. Drive cautiously and do not exceed 25 mph (40 km/h).

To unlock the main differential, move the control switch to the unlock position. Briefly let up on the accelerator to relieve torque on the gearing, allowing the differential to fully unlock.

NOTE: If the differential lock system is connected through the low speed range of the transmission, shifting out of low speed range will also unlock the differential.

When the differential lock disengages, the indicator light will go off and the buzzer will stop.

https://truckmanualshub.com/

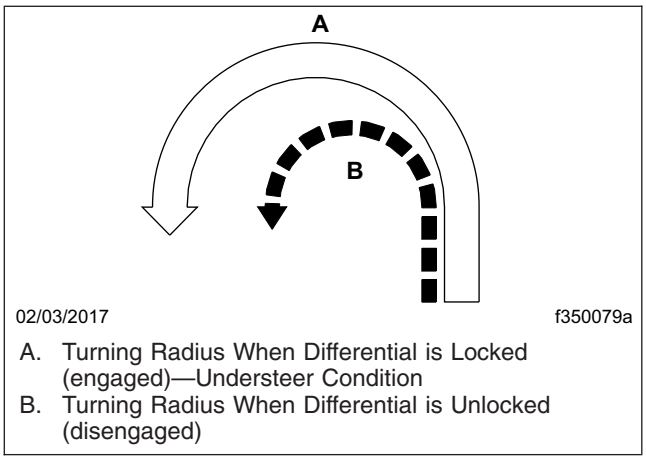

A. Turning Radius When Differential is Locked (engaged)—Understeer Condition
B. Turning Radius When Differential is Unlocked (disengaged)

Fig. 9.1, Turning Radius

Meritor Tandem Drive Axles With Interaxle Differential

Meritor tandem drive axles with an interaxle differential have a lockout feature. Differential lockout is controlled by a switch (**Fig. 9.2**) on the control panel.

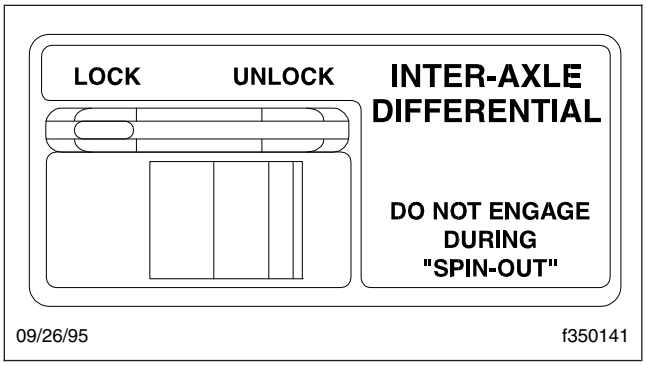

Fig. 9.2, Interaxle Differential Control

In the UNLOCK position, there is differential action between the two axles. The differential compensates for different wheel speeds and variations in tire size. Keep the interaxle differential unlocked for normal driving on roads where traction is good.

In the LOCK position, the interaxle differential is locked out and the driveshaft becomes a solid connection between the two axles. Power entering the forward axle is also transmitted straight through to the rear axle, so both axles turn together at the same speed. The LOCK position should be used when the vehicle encounters poor traction conditions; however, it also increases drivetrain and tire wear and should be used only when improved traction is required.

Meritor Interaxle Differential Lockout Operation

To lock the interaxle differential and achieve maximum pulling power when approaching slippery or poor road conditions, move the lockout control valve to LOCK while maintaining vehicle speed, before encountering the poor road conditions. Let up momentarily on the accelerator to engage the differential lock. Proceed over poor road conditions with caution. Do not wait until traction is lost and the tires are spinning before locking the interaxle differential.

CAUTION

Do not actuate the interaxle differential control valve while the tires are slipping. Do not operate the vehicle continuously with the interaxle differential locked during extended good road conditions. To do so could result in damage to the axle gearing and excessive tire wear.

To unlock the interaxle differential, move the lockout control valve to UNLOCK while maintaining vehicle speed, after leaving the poor road conditions. Let up momentarily on the accelerator to allow the shift, then resume driving at normal speed.

Eaton Single Reduction Axles With Controlled Traction Differential

The controlled traction differential system is a differential assembly designed to transfer torque from the slipping wheel to the one with traction.

A control valve (**Fig. 9.3**) in the cab is actuated by the driver to engage and disengage the controlled traction feature.

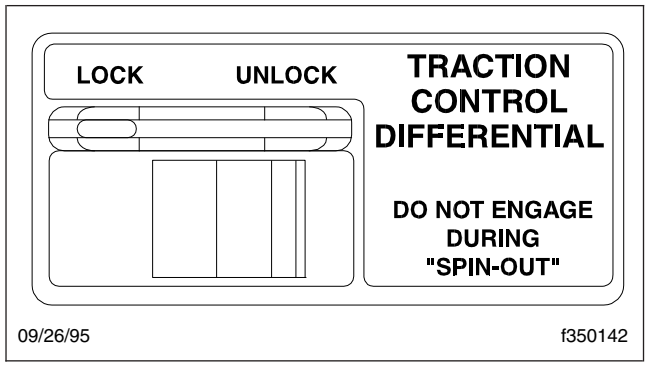

Fig. 9.3, Traction Control Differential Control

https://truckmanualshub.com/

Disengaged, the axle has differential action all the time. One wheel will spin independently of the other, if slippery conditions are encountered.

Engaged, wheel slippage and spinout are minimized.

NOTE: The controlled traction differential can be engaged at any speed, except during spinout.

Eaton 2-Speed Tandem Axles

Each axle of the 2-speed tandem contains a high range single reduction gear set and a low range double reduction gear set. The operator selects the desired axle range by moving the range preselection lever located on the shifter knob. See **Fig. 9.4**.

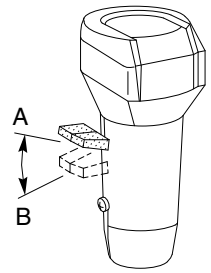

01/19/95 f260056a

A. High Range B. Low Range

Fig. 9.4, Range Preselection Lever

Dual Range 2-Speed Tandem Axle Operation with Multispeed Transmissions

NOTE: Refer to **Chapter 8**, "Transmissions," for detailed information on how to use the range preselection lever.

On multispeed transmission applications, the 2-speed axle should be used as a dual range. Use the low range when operating off-highway or when starting out with a heavy load on-highway. After the vehicle is moving on the highway, the axle can be shifted to high range.

To shift the axle to the high range: Make sure the interaxle differential lockout is disengaged; keep the throttle pedal down; move the range preselection lever to high; release the throttle pedal until the axle shifts; then accelerate.

To shift the axle to the low range: Keep the throttle pedal down; move the range preselection lever to low; release and depress the throttle pedal quickly to increase engine rpm. The axle will shift to low range.

NOTE: When parking the vehicle, put the axle in the low range with the engine running. Engage the clutch and transmission to be sure the axle has completed the shift into the low range. Some vehicle motion is required to ensure engagement of the axle.

IMPORTANT: Refer to "Eaton Interaxle Differential Lockout Operation" for precautions that must be taken when shifting axles in relation to the interaxle differential lockout.

Eaton Interaxle Differential Lockout Operation

Interaxle differential lockout systems include a lockout control valve (**Fig. 9.2**) located in the cab, and an air-operated shift unit mounted on the forward rear axle.

When the interaxle differential lockout control valve is in the LOCK position, the interaxle differential is locked out and the driveshaft becomes a solid connection between the two axles. Power entering the forward axle is also transmitted straight through to the rear axle, so both axles turn together at the same speed. The LOCK position should be used when additional traction is needed.

⚠ CAUTION

Engage the lockout only when stopped or at slow speeds and never when the wheels are spinning. Do not operate the axles on dry pavement with the lockout engaged for prolonged periods. Use only when additional traction is needed under adverse road conditions. Disengage the interaxle differential lockout before shifting the axle to a higher range.

When the interaxle differential lockout control valve is in the UNLOCK position, the interaxle differential allows differential action between the axles thereby compensating for different wheel speeds and variations in tire size. Keep the interaxle differential lockout in the UNLOCK position for normal driving on roads where traction is good. On 2-speed axles, the interaxle differential must be in the UNLOCK position before attempting to shift the axles out of low or high range.

https://truckmanualshub.com/

10

Fifth Wheels and Trailer Couplings

Holland Fifth Wheels 10.1
ASF Castloc II and Simplex Series Fifth Wheels 10.5
Fontaine Fifth Wheels 10.10
Premier Trailer Couplings 10.15
Holland Trailer Coupling 10.16

https://truckmanualshub.com/

Holland Fifth Wheels

General Information

The 2535 sliding fifth wheel models incorporate a Model 3500 fifth wheel (**Fig. 10.1**), equipped with either an air-operated release slide, or a manual release slide. Sliding fifth wheel assemblies are mounted on a baseplate which permits forward and rear movement along notched rails. Plungers are meshed into teeth on the baseplate to lock the sliding mechanism. Disengagement of the sliding member is accomplished when the plungers are withdrawn (manually or air-operated), releasing the fifth wheel assembly so that it can be positioned for optimum weight distribution over the tractor axles.

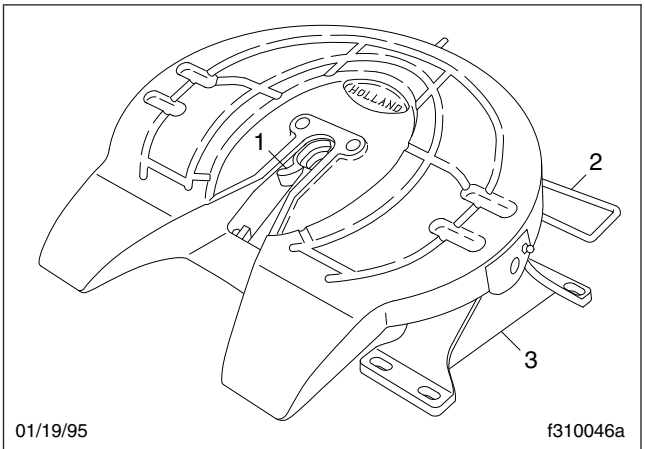

01/19/95 f310046a

1. Kingpin Lock Mechanism
2. Kingpin Control Handle
3. Mounting Bracket

Fig. 10.1, Holland Fifth Wheel

The air-operated release slide assembly (**Fig. 10.2**) contains a double-ended air cylinder which locks and unlocks both sides of the sliding member at the same time. The air cylinder is activated by a two-position air-control valve in the tractor cab.

The manual release slide assembly (**Fig. 10.3**) is equipped with a single release lever. Pulling on the release lever unlocks both plungers.

Type "B" Kingpin Lock Mechanism (Fig. 10.4)

The Type "B" kingpin lock mechanism utilizes two spring-loaded lock halves. The final forward motion of the kingpin into the open lock halves forces the locks to close in a 360 degree grip around the shoulder and neck of the kingpin, positioning sliding yokes between the lock halves and tapered rib members of the fifth wheel understructure. The kingpin can be released only by manually operating the kingpin lock control handle. The adjustment nut will compensate for wear on the lock or kingpin.

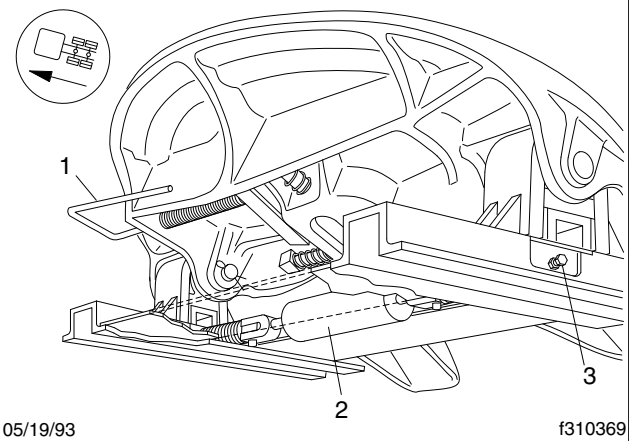

05/19/93 f310369

NOTE: Baseplate rails not shown.

1. Kingpin Lock Control Handle
2. Double-Ended Air Cylinder
3. Slide Plunger Release

Fig. 10.2, Air-Operated Release Slide Assembly

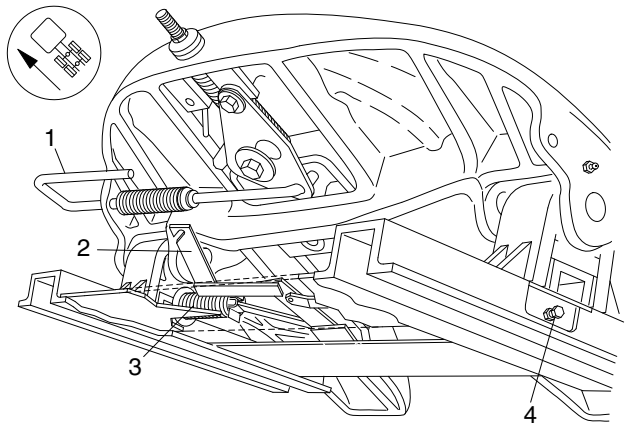

02/01/96 f310438

NOTE: Baseplate rails not shown.

1. Kingpin Lock Control Handle
2. Plunger Release Handle
3. Plunger Release Spring
4. Plunger

Fig. 10.3, Manual Release Slide

https://truckmanualshub.com/

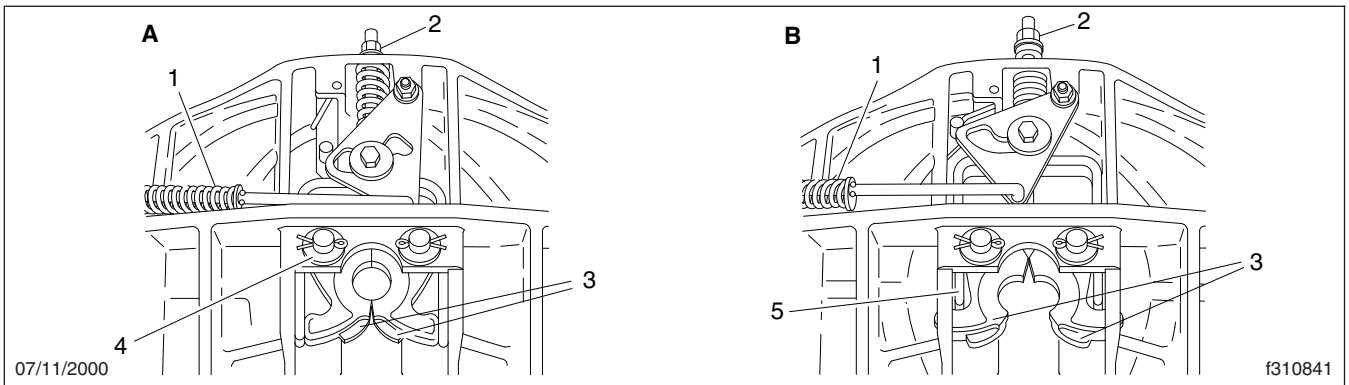

A. Closed Position, Locked
1. Release Handle and Spring
2. Adjustment Nut
3. Lock Halves
4. Lock Pivot

B. Open Position, Unlocked
5. Sliding Yoke

Fig. 10.4, Type "B" Kingpin Lock Mechanism (bottom view)

Lockguard (Fig. 10.4)

The Holland lockguard is a device that prevents a false lockup, and is used on all models. The Lockguard is a spring-tensioned, smooth-surfaced tongue that the kingpin passes over and depresses when entering the lock mechanism. The Lockguard will prevent the locks from engaging before the kingpin fully enters the locks. If the kingpin enters the fifth wheel incorrectly and does not depress the tongue, the locks are unable to close.

Fifth Wheel Locking Operation

Locking the Fifth Wheel Mechanism

NOTICE

Before attempting to lock or unlock the fifth wheel lock mechanism of a sliding type fifth wheel, the slide release plungers must be in the locked position. This prevents the sliding member from moving rapidly to the far forward or rearward position, which could damage the fifth wheel or kingpin.

1. Chock the front and rear of the trailer tires to prevent the trailer from moving.

⚠ WARNING

Keep the fifth wheel plate lubricated to prevent binding between the tractor and trailer. A binding fifth wheel could cause erratic steering and loss of vehicle control, possibly resulting in serious personal injury or death.

2. The kingpin lock mechanism must be fully open, and the fifth wheel plate must be completely lubricated with chassis grease. For lubrication instructions, see **Group 31** of the *Century Class Trucks Maintenance Manual*.
3. Position the tractor so that the fifth wheel lock opening is in line (both vertically and horizontally) with the trailer kingpin. The kingpin should be in a position to enter the throat of the locking mechanism, to prevent a false lockup. See Fig. 10.5. Adjust the trailer landing gear to give enough alignment height so that the fifth wheel picks up the trailer on the fifth wheel ramps.
4. With the fifth wheel lock opening aligned with the trailer kingpin, back the tractor slowly toward the trailer, making sure that the kingpin correctly enters the throat of the locking mechanism. When the trailer is picked up by the fifth wheel, stop the tractor, then continue slow backward motion until positive lockup occurs.
5. Apply the tractor parking brakes.

⚠ WARNING

Adjust the locks correctly to a maximum clearance of 1/8 inch (3 mm). Incorrect adjustment of the lock could cause the trailer to disconnect, possibly resulting in serious personal injury or death.

6. Make a visual check for proper kingpin lockup. Release the tractor parking brakes. Test for kingpin lockup by pulling on the trailer against the chocks. Check for correct maximum clearance

https://truckmanualshub.com/

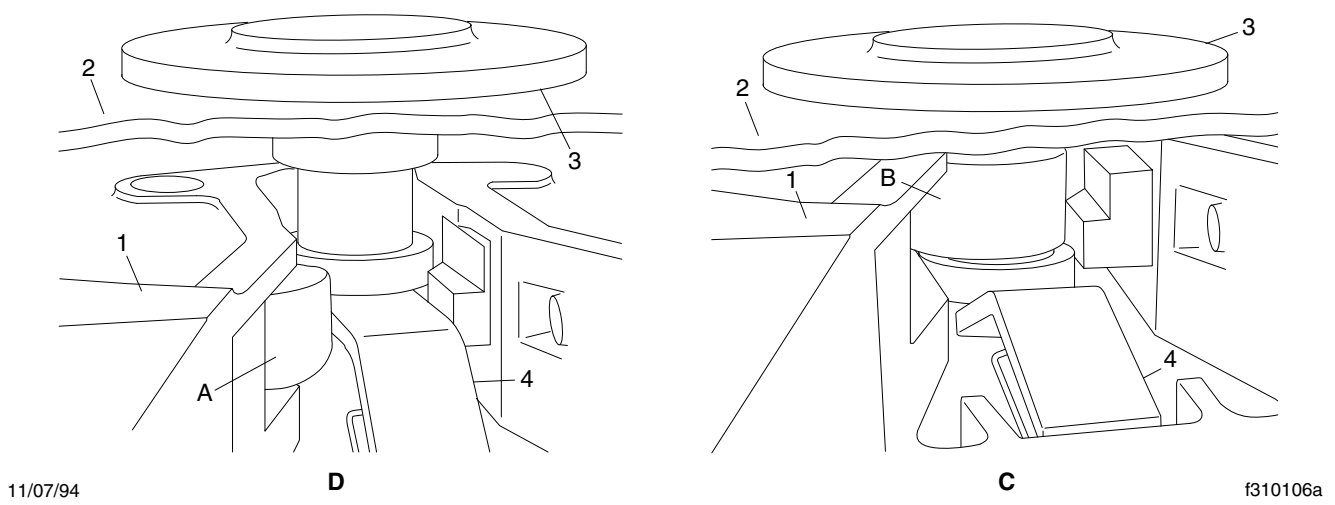

A. Locks open.
B. Locks closed.
C. Kingpin correctly entering the lock. Note how the depressed tongue allows lock halves to close completely around the neck and shoulder of the kingpin.
D. Kingpin incorrectly entering the lock. Note how the steel tongue prevents lock halves from closing, preventing false lockup.

1. Fifth Wheel Plate
2. Trailer
3. Kingpin
4. Lockguard

Fig. 10.5, Lockguard Mechanism (rear view)

between the lock halves. If more than 1/8-inch (3.2-mm) clearance exists between the lock halves, the lock must be adjusted. See **Group 31** of the *Century Class Trucks Workshop Manual* for adjustment procedures.

NOTICE

Always make sure the connect-hanger/support keeps the trailer air hoses and electrical cables positioned so that they do not rub on anything. Rubbing may wear through hoses or cables, resulting in air leaks, or exposed or broken wires, potentially affecting trailer brake or electrical systems.

7. After lockup is completed, connect the tractor-to-trailer air system lines and electrical cable to the trailer. Take care to prevent dirt or foreign material from entering the air lines.
8. Charge the air brake system with air. Make sure that the air connections do not leak.
9. Retract the trailer landing gear and secure the ratchet handle.
10. Remove the chocks from the trailer tires.
11. The load distribution on the front steering axle and rear drive axle(s) will have a direct effect on the steering control of the vehicle.

    Determine the front and rear axle weights by weighing the vehicle on scales designed for this purpose.

    The maximum axle weight ratings are shown on the Federal Motor Vehicle Safety Standard (FMVSS) label or Canadian Motor Vehicle Safety Standard (CMVSS) label attached to the left rear door post of the tractor. The desired load on the axle is no less than 80 percent of the maximum axle weight rating, but in no instances should the axle load exceed the maximum axle weight rating given on the FMVSS or CMVSS label.

⚠ WARNING

Do not overload any tractor axle by improperly loading the trailer. This could cause erratic steering and loss of vehicle control, possibly resulting in serious personal injury or death.

https://truckmanualshub.com/

Unlocking the Fifth Wheel Lock Mechanism

1. Apply the tractor parking brakes.
2. Pull the trailer air supply valve to cut off the air supply to the trailer.
3. Chock the front and rear of the trailer tires to prevent the trailer from moving.

⚠ WARNING

Do not use the trailer air supply for parking trailers not equipped with spring parking brakes. This applies the trailer service brakes only. As air bleeds from the trailer brake system, brake application is lost. This could allow the unattended vehicle to roll away, possibly resulting in serious personal injury or death.

4. Lower the trailer landing gear until the weight is removed from the fifth wheel.
5. Disconnect the tractor-to-trailer air system lines and electrical cable. Plug the air lines to prevent dirt or foreign material from entering the lines.

NOTICE

Before attempting to lock or unlock the fifth wheel lock mechanism of a sliding type fifth wheel, the slide release plungers must be in the locked position. This prevents the sliding member from moving rapidly to the far forward or rearward position, which could damage the fifth wheel or kingpin.

6. Release the kingpin locking mechanism by pulling the kingpin lock control handle (**Fig. 10.1**) to the outward position.
7. Slowly drive the tractor away from the trailer.

Fifth Wheel Slide Operation

1. Connect the trailer kingpin to the tractor fifth wheel. For instructions, refer to Holland "Fifth Wheel Locking Operation" in this chapter.
2. After positive lockup of the fifth wheel lock mechanism has been accomplished, release the sliding member using one of the following methods:

   2.1 For air-operated models, set the cab-operated control switch (**Fig. 10.6**) to UNLOCK.

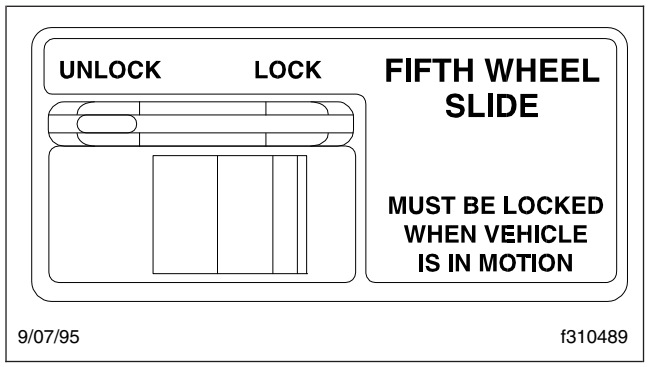

Fig. 10.6, Cab Control, Fifth Wheel Slide

   2.2 For manual release models, pull the release lever (**Fig. 10.3**) using a release hook, or other suitable tool. Make sure both slide plungers have released. See **Fig. 10.7**. If the plungers have not released (come out), lower the trailer landing gear to relieve pressure on the plungers.

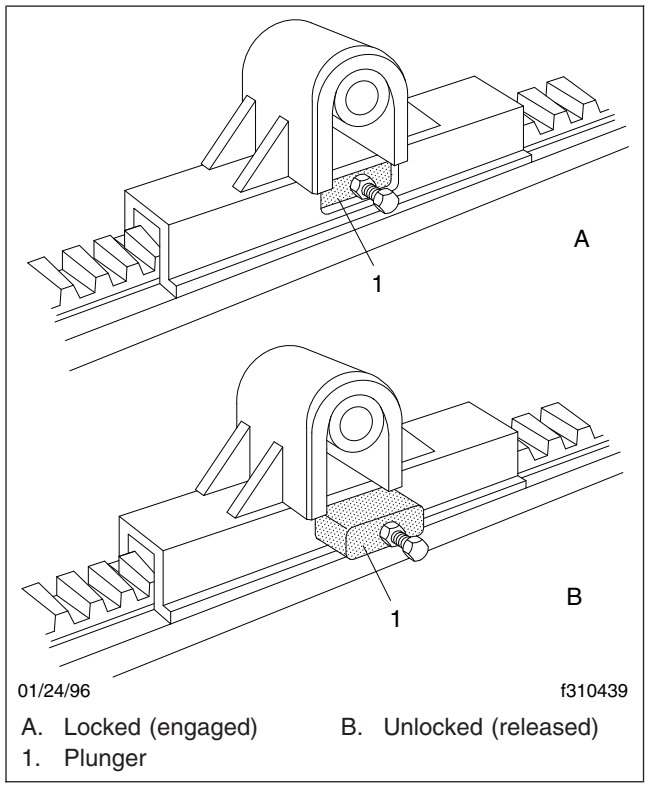

A. Locked (engaged) B. Unlocked (released)
1. Plunger

Fig. 10.7, Plunger Positions

3. Lower the trailer landing gear just enough to remove the weight from the tractor.

https://truckmanualshub.com/

4. Pull the trailer air supply valve to cut off the air supply to the trailer.
5. Chock the front and rear of the trailer tires to prevent the trailer from moving.

WARNING

Do not use the trailer air supply for parking trailers not equipped with spring parking brakes. This applies the trailer service brakes only. As air bleeds from the trailer brake system, brake application is lost. This could allow the unattended vehicle to roll away, possibly resulting in serious personal injury or death.

NOTICE

After moving the fifth wheel to the desired position, be sure the trailer landing gear will not, at any time, come in contact with the tractor frame or other components. Make sure that the front of the trailer will not come in contact with the rear of the cab or with other components if they extend beyond the rear of the cab.

6. Slowly move the tractor forward or backward until the fifth wheel is in the desired location.
7. Apply the tractor parking brakes.

NOTE: The fifth wheel may have to be moved slightly to enable the locking plungers to enter the fully locked position.

8. Lock the sliding member into position using one of the following methods:

WARNING

Check to be sure that the slide plungers are in the locked position. Failure to achieve complete lockup may allow disengagement of the tractor from the trailer, possibly resulting in serious personal injury or death.

8.1 For air-operated models, set the cab-operated control switch to LOCK. Visually check the slide plungers to make sure they are engaged in the fully locked position. See **Fig. 10.7**.

8.2 For manual release models, trip the release lever (**Fig. 10.3**) using a release hook or other suitable tool. Make sure that both plungers have locked (retracted into their pockets), and are fully engaged in the rack teeth. See **Fig. 10.7**. It may be necessary to move the tractor slightly while keeping the trailer brakes locked.

9. The amount of load distribution on the front steering axle and rear drive axle(s) will have a direct effect on the steering control of the vehicle.

   Determine the front and rear axle weights by weighing the vehicle on scales designed for this purpose.

   The maximum axle weight ratings are shown on the Federal Motor Vehicle Safety Standard (FMVSS) label or Canadian Motor Vehicle Safety Standard (CMVSS) label attached to the left rear door post of the tractor. The desired load on the axle is no less than 80 percent of the maximum axle weight rating, but in no instances should the axle load exceed the maximum axle weight rating given on the FMVSS or CMVSS label.

WARNING

Do not overload any tractor axle by improperly loading the trailer. This could cause erratic steering and loss of vehicle control, possibly resulting in serious personal injury or death.

Fifth Wheel Lubrication

For lubrication instructions, see **Group 31** of the *Century Class Trucks Maintenance Manual*.

ASF Castloc II and Simplex Series Fifth Wheels

General Information

The ASF Castloc® II and Simplex® series fifth wheels are used for pulling trailers having the standard 2-inch (51-mm) diameter kingpin. When installed as a stationary fifth wheel (**Fig. 10.8**), they are bracket-mounted to the tractor frame in a position that best distributes the trailer load over the tractor axles. When used as a sliding fifth wheel (**Fig. 10.9**), they are mounted on the Taperloc® sliding mount (air-operated or manual release).

The fifth wheel lock mechanism for the trailer kingpin consists of a rotating jaw that grips the trailer kingpin and a spring-actuated lock. The jaw rotates on a jaw pin during coupling and uncoupling operations. Kingpin lockup occurs when the kingpin is forced into the jaw and the operating rod handle moves to the

https://truckmanualshub.com/

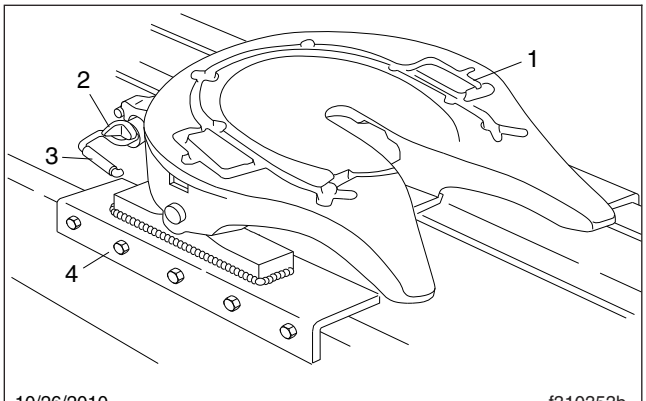

10/26/2010 f310353b

1. Lubricant Grooves
2. Safety Latch
3. Operating Rod
4. Mounting Bracket

Fig. 10.8, Simplex Stationary Fifth Wheel

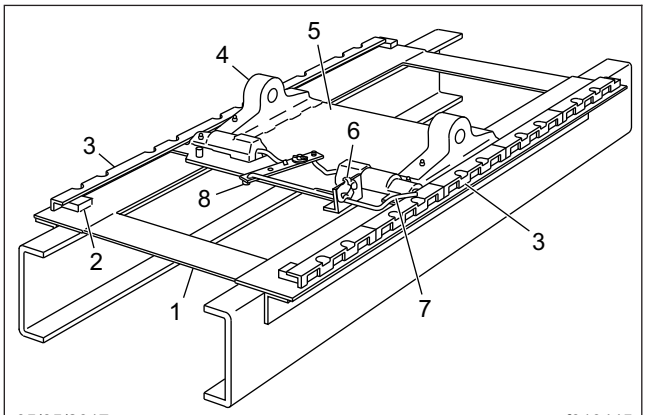

05/05/2017 f310445

1. Baseplate
2. Bolted Stop
3. Baseplate Rail
4. Fifth Wheel Mount
5. Slider Saddle Plate
6. Safety Latch
7. Operating Rod
8. Operating Lever

Fig. 10.9, Taperloc Slide, Manually-Operated Release

locked position. The kingpin is released either by activating a manual operating rod, or if equipped with Touchloc®, by a dash mounted release-knob, which activates an air cylinder underneath the top plate. The air cylinder activates the operating rod. The operating rod is located on the left side of the fifth wheel for Castloc II and Simplex II fifth wheels, and on the right side for the Simplex fifth wheel assembly.

On sliding fifth wheels, the top plate is mounted on a sliding saddle plate, which slides along the baseplate attached to the tractor frame. The baseplate rails allow forward and rear movement of the slide assembly, for optimum weight distribution over the tractor axles.

Tapered slots in the baseplate rails, aligned in 4-inch (102-mm) increments, provide for location of the fifth wheel along the baseplate. Retractable, spring-actuated lockpins are positioned through the slots to hold the fifth wheel in the desired position. The lockpins are retracted either manually or by an air-operated cylinder controlled from the cab.

The manually-operated slide contains an operating rod (**Fig. 10.9**) which unlocks both sides of the plate at the same time.

The air-operated sliding saddle plate contains an air cylinder which moves the operating lever to unlock both sides of the plate at the same time. The air cylinder is activated by a two-position air-control valve in the tractor cab.

Fifth Wheel Lock Mechanism for Trailer Kingpin (Fig. 10.10)

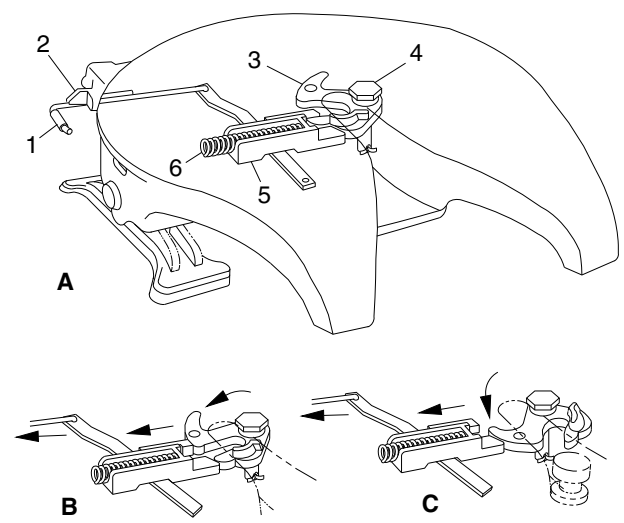

10/26/2010 f310446

A. Locked Position
B. Jaw movement compresses spring.
C. Fully open.

1. Operating Lever
2. Safety Latch
3. Jaw
4. Jaw Eccentric Pin
5. Lock
6. Spring

Fig. 10.10, ASF Castloc II and Simplex Series Kingpin Locking Mechanism Operation

The Castloc II and Simplex Series fifth wheel lock mechanism consists of a rotating jaw and a spring-actuated lock that grips the trailer kingpin. The jaw

https://truckmanualshub.com/

rotates on an eccentric pin during coupling and uncoupling operations. The spring-actuated lock holds the jaw in the locked position once kingpin lockup has occurred.

In the locked position, there is approximately 1/16-inch (1.6-mm) clearance between the jaw and kingpin. The jaw eccentric pin can be removed and rotated to compensate for wear and maintain an approximate 1/16-inch (1.6-mm) clearance during service.

Placing the operating rod in the lockset position moves the lock away from the jaw. This action unlocks the jaw so that it can be rotated by movement of the kingpin. When the tractor is moved out from under the trailer, the kingpin will rotate the jaw until the jaw is in the unlocked position, allowing the kingpin to move out of the mechanism. With the jaw in the fully open position, the operating rod drops out of the lockset position, and the fifth wheel is ready for coupling. See **Fig. 10.11**.

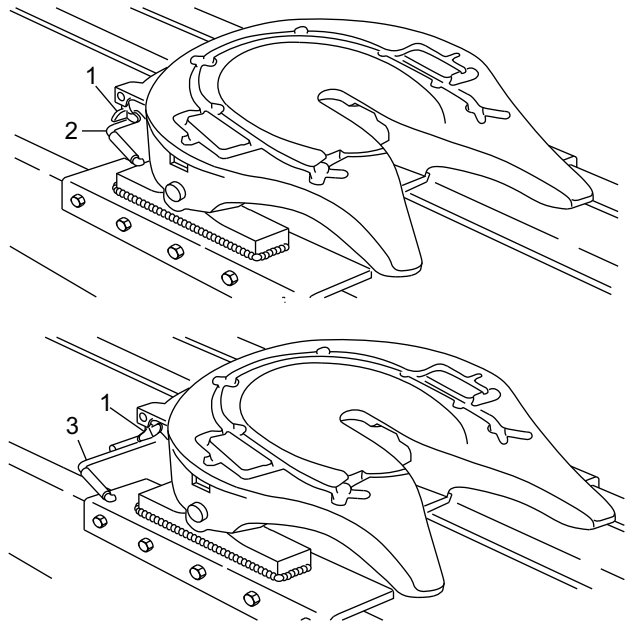

04/19/2017 f310447

1. Safety Latch
2. Operating Rod (locked)
3. Operating Rod (unlocked)

Fig. 10.11, Simplex Kingpin Locking Mechanism, Locking and Unlocking

During coupling, the kingpin contacts and rotates the jaw into the locked position. This action automatically moves the operating rod into the locked position. This securely locks the jaw around the kingpin. In the locked position the safety latch swings freely over the operating rod. See **Fig. 10.12**.

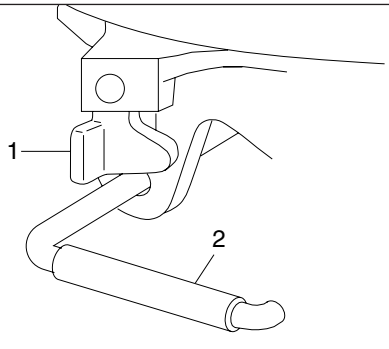

10/26/2010 f310448

1. Safety Latch 2. Operating Rod

Fig. 10.12, Simplex Kingpin Locking Mechanism, Safety Latch (locked position)

Fifth Wheel Locking and Unlocking

Locking the Fifth Wheel Lock Mechanism

1. Chock the front and rear of the trailer tires to prevent the trailer from moving.

NOTICE

Before attempting to lock or unlock the fifth wheel lock mechanism of a sliding type fifth wheel, the slide release pull handle, if so equipped, and the slide locking wedges must be in the locked position. This prevents the sliding member from moving rapidly to the far forward or rearward position, which could damage the fifth wheel member or kingpin.

2. The fifth wheel jaw must be fully open. Make sure that the operating rod is in the unlocked position. The fifth wheel must be completely lubricated with chassis or multi-purpose grease. For lubrication instructions, see **Group 31** of the *Century Class Trucks Maintenance Manual*.

⚠ WARNING

Keep the fifth wheel plate lubricated to prevent binding between the tractor and trailer. A binding fifth wheel could cause erratic steering and loss of vehicle control, possibly resulting in serious personal injury or death.

3. Make sure the fifth wheel top plate is tilted so the ramps are as low as possible. If equipped with

https://truckmanualshub.com/

an air suspension, make sure the air bags are completely inflated.

4. Position the tractor so that the center of the fifth wheel is in line with the trailer kingpin. The kingpin should be in a position to enter the throat of the locking mechanism. See **Fig. 10.10**. Adjust the trailer landing gear so that the lower front trailer edge contacts the top surface of the tilted fifth wheel plate, approximately 8 inches (20 cm) before the fifth wheel center.
5. With the fifth wheel lock opening aligned with the trailer kingpin, back the tractor slowly toward the trailer, making sure that the kingpin enters the throat of the locking mechanism. Continue backward motion until positive lockup occurs.
6. Apply the tractor parking brakes.
7. Make a visual check (even if equipped with the Touchloc air-operated system) for positive kingpin lockup. The trailer bed plate must be flush on the fifth wheel plate surface. When positive lockup has occurred, the fifth wheel operating rod will have moved inward to the locked position, and the safety latch will swing freely over the operating rod. See **Fig. 10.12**.

NOTE: Only when the operating rod is fully retracted in the locked position will the safety latch be freely rotated down.

8. Release the tractor parking brakes. Test for kingpin lockup by pulling on the trailer against the chocks.

NOTICE

Always make sure the connect-hanger/support keeps the trailer air hoses and electrical cables positioned so that they do not rub on anything. Rubbing may wear through hoses or cables, resulting in air leaks, or exposed or broken wires, potentially affecting trailer brake or electrical systems.

9. After lockup is completed, connect the tractor-to-trailer air system lines and electrical cable to the trailer. Take care to prevent dirt or foreign material from entering the air system lines.
10. Charge the air brake system with air. Make sure that the air connections do not leak.

⚠ WARNING

Adjust the jaw pin if there is more than 1/8-inch (3-mm) clearance between the kingpin and the lock. Incorrect adjustment could cause the trailer to disconnect, possibly resulting in serious personal injury or death.

11. With the trailer wheels chocked and the brakes set, check for clearance between the kingpin and the fifth wheel jaws by moving the tractor forward and backward against the locked kingpin. A clearance of approximately 1/16 inch (1.6 mm) between the jaw and kingpin is allowable. When clearance between the jaw and kingpin exceeds 1/8 inch (3 mm), adjust the jaw to restore the 1/16-inch (1.6-mm) clearance between the jaw and kingpin. For instructions, see **Group 31** of the *Century Class Trucks Workshop Manual*.
12. Retract the trailer landing gear, and secure the ratchet handle.
13. Remove the chocks from the trailer tires.
14. The load distribution on the front steering axle and rear drive axle(s) will have a direct effect on the steering control of the vehicle.

    Determine the front and rear axle weights by weighing the vehicle on scales designed for this purpose.

    The maximum axle weight ratings are shown on the Federal Motor Vehicle Safety Standard (FMVSS) label or Canadian Motor Vehicle Safety Standard (CMVSS) label attached to the left rear door post of the tractor. The desired load on the axle is no less than 80 percent of the maximum axle weight rating, but in no instances should the axle load exceed the maximum axle weight ratings given on the FMVSS or CMVSS label.

⚠ WARNING

Do not overload any tractor axle by improperly loading the trailer. This could cause erratic steering and loss of vehicle control, possibly resulting in serious personal injury or death.

Unlocking the Fifth Wheel Lock Mechanism

1. Apply the tractor parking brakes.
2. Pull the trailer air supply valve to cut off the air supply to the trailer.

https://truckmanualshub.com/

WARNING

Do not use the trailer air supply for parking trailers not equipped with spring parking brakes. This applies the trailer service brakes only. As air bleeds from the trailer brake system, brake application is lost. This could allow the unattended vehicle to roll away, possibly resulting in serious personal injury or death.

3. Chock the front and rear of the trailer tires to prevent the trailer from moving.
4. Lower the trailer landing gear until the trailer rises about 1/2 inch (13 mm).
5. Disconnect the tractor-to-trailer air system lines and electrical cable. Plug the air lines to prevent dirt or foreign material from entering the lines.

NOTICE

Before attempting to unlock the fifth wheel lock mechanism of a sliding type fifth wheel, the slide operating rod (Fig. 10.9) must be in the locked position, and the slide lockpins must be in the locked position (fully inserted in baseplate rail slots). This prevents the sliding member from moving rapidly to the far forward or rearward position, which could damage the fifth wheel member or kingpin.

6. *If equipped with a manual kingpin lock release:* Release the kingpin lock mechanism by raising the safety latch to the rear and pulling the lock operating rod out and up into the lockset position. See **Fig. 10.11**. The offset of the lock control upper rod should bottom against the plate casting above the hole. If the operating rod cannot be pulled to the lockset position, back the tractor slightly to release the kingpin force against the jaw.

   If equipped with an air-operated kingpin lock release: Pull the air-release knob on the dash. *From outside the cab,* visually check that the operating rod has bottomed out against the plate casting above the hole. See **Fig. 10.11**. If the operating rod isn't in the unlocked position, back the tractor slightly to release the kingpin force against the jaw.

IMPORTANT: If equipped with an air-operated lock release, you still must make a visual check of the operating rod to make sure it is in the unlocked position

7. Slowly drive the tractor away from the trailer.

Fifth Wheel Slide Operation

1. Chock the front and rear of the trailer tires to prevent the trailer from moving.
2. Connect the trailer kingpin to the tractor fifth wheel. For instructions, refer to "Fifth Wheel Locking Operation," in this chapter.
3. After positive lockup of the fifth wheel lock mechanism has been accomplished, release the slide using one of the following methods:

   3.1 For air-operated models, set the cab-operated control switch (**Fig. 10.6**) to UNLOCK.

   3.2 For manually-operated models, raise the safety latch and pull the slide operating rod (**Fig. 10.9**) outward until the shoulder is outside of the operating rod support, then lower the operating rod as far as it will go.
4. Lower the trailer landing gear just enough to remove the weight from the tractor.
5. Pull the trailer air supply valve to cut off the air supply to the trailer.

NOTICE

After moving the fifth wheel to the desired position, be sure the trailer landing gear will not, at any time, come in contact with the tractor frame or other components. Make sure that the front of the trailer will not come in contact with the rear of the cab or with other components if they extend beyond the rear of the cab.

6. Slowly move the tractor forward or backward until the fifth wheel is in the desired location.
7. Apply the tractor parking brakes.

WARNING

Check to be sure that the lockpins are seated in the holes and that the operating rod is in the locked position with the safety latch securing the operating rod. Failure to achieve complete lockup may cause the trailer to detach from the tractor, possibly resulting in serious personal injury or death.

https://truckmanualshub.com/

NOTE: The fifth wheel may have to be moved slightly to enable the locking pins to enter the fully locked position.

8. Lock the sliding member into position using one of the following methods:

   For air-operated models: Set the cab-operated control switch to LOCK. Visually inspect the lockpins to make sure they have seated in the baseplate rail holes.

   For manually-operated models: Raise the operating rod so that it is free to move inward. Make sure that the lockpins have seated in the baseplate rail holes and the operating rod moves into the locked position. Also, the safety latch must drop downward so that it holds the operating rod in the locked position.

9. The amount of load distribution on the front steering axle and rear drive axle(s) will have a direct effect on the steering control of the vehicle.

   Determine the front and rear axle weights by weighing the vehicle on scales designed for this purpose.

   The maximum axle weight ratings are shown on the Federal Motor Vehicle Safety Standard (FMVSS) label or Canadian Motor Vehicle Safety Standard (CMVSS) label attached to the left rear door post of the tractor. The desired load on the axle is no less than 80 percent of the maximum axle weight rating, but in no instances should the axle load exceed the maximum axle weight rating given on the FMVSS or CMVSS label.

⚠ WARNING

Adjust the fifth wheel slide correctly, and do not overload any tractor axle by incorrectly loading the trailer. Incorrect slide adjustment or improper axle loading could cause erratic steering and loss of vehicle control, possibly resulting in serious personal injury or death.

Fifth Wheel Lubrication

⚠ WARNING

Keep the fifth wheel plate lubricated to prevent binding between the tractor and trailer. A binding fifth wheel could cause erratic steering and loss of vehicle control, possibly resulting in personal injury or death.

The fifth wheel plate must be kept well lubricated with chassis grease to prevent friction and binding between the tractor fifth wheel plate and the trailer. For lubrication instructions, see **Group 31** of the *Century Class Trucks Maintenance Manual*.

Fontaine Fifth Wheels

General Information

The Fontaine sliding fifth wheel mount is designed to provide optimum axle loading for maximum tractor use with different lengths and types of trailers. The sliding fifth wheel mount is used with the Fontaine H5092 series, and 6000/7000 No-Slack II series fifth wheels, and is equipped with either an air-operated release slide (AWB or HAWB models), or a manual release slide (MWS or HMWS models).

On Fontaine fifth wheels kingpin release is accomplished by activating a manual lock control handle located on either the right side or left side of the fifth wheel. Kingpin lockup occurs when the kingpin is forced into the jaws and the lock control handle moves to the locked position.

The fifth wheel top plate is mounted on a slide assembly, which is attached to slide rails that are mounted on the vehicle frame. The slide rails permit forward and rearward movement of the slide assembly, allowing for optimum weight distribution over the tractor axles.

Slots are evenly spaced along the slide rails, and retractable tapered wedges are positioned through the slots to hold the fifth wheel in the desired position. See **Fig. 10.13** or **Fig. 10.14**.

The slide portion of the sliding model may be attached to either an air-operated release slide, or a manual release slide.

The air-operated release slide contains an air cylinder that locks and unlocks the fifth wheel slide. See **Fig. 10.13**. The air cylinder is activated by a two-position air-control valve in the tractor cab.

The manual release slide contains a slide release pull handle, located on the left side of the fifth wheel, which locks or unlocks the fifth wheel slide. See **Fig. 10.14**.

Fifth Wheel Lock Mechanism for Trailer Kingpin (Fig. 10.15)

The Fontaine fifth wheel lock mechanism for the trailer kingpin consists of a spring-loaded jaw and a sliding wedge.

https://truckmanualshub.com/

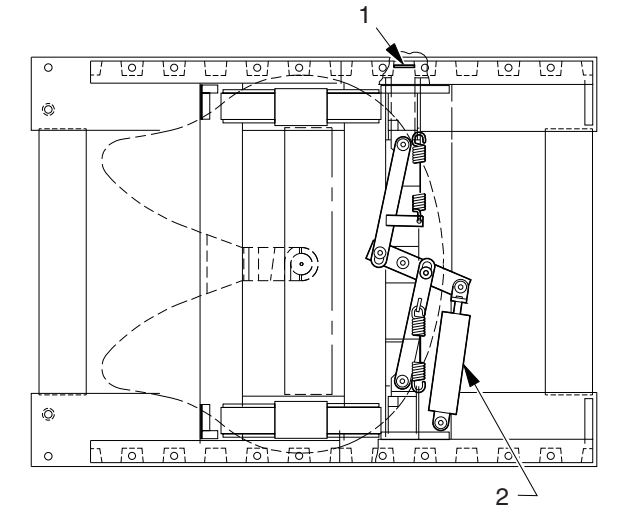

07/25/95 f310189

1. Locking Wedge
2. Air Cylinder

Fig. 10.13, Air-Operated Sliding Fifth Wheel Mount, AWB Model

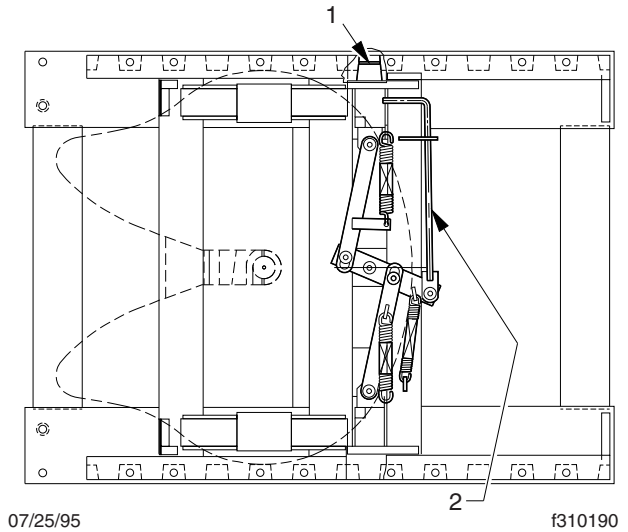

07/25/95 f310190

1. Locking Wedge
2. Slide Release Pull Handle

Fig. 10.14, Manual Release Sliding Fifth Wheel Mount, MWS Model

The jaw and wedge each have a pin permanently attached. The pin on the jaw and the pin on the wedge fit into elongated notches in the lock control handle. The notches in the handle control the limit of movement for both the jaw and wedge. The notches are arranged so that the wedge is actuated first during release of the kingpin.

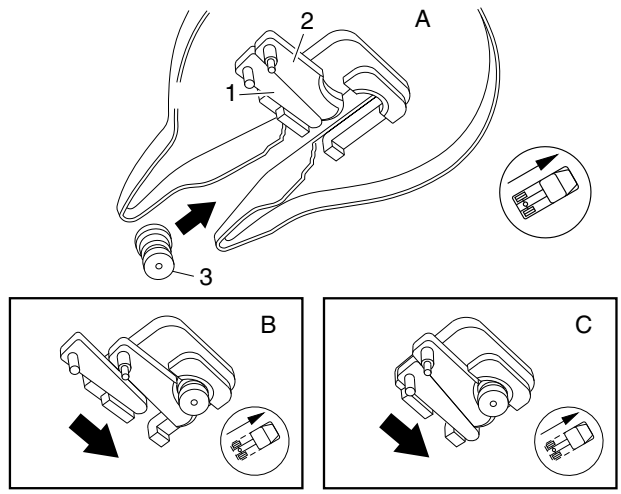

10/26/2010 f310184c

A. Unlocked Position
B. Locking
C. Locked
1. Wedge
2. Jaw
3. Trailer Kingpin

Fig. 10.15, Fontaine Kingpin Lock Mechanism

During lockup, the jaw is moved first with the spring-loaded wedge being allowed to slip in place against the jaw. A timing bracket ensures that the wedge and jaw are moved at the proper time.

Placing the lock control handle in the unlocked position moves the wedge away from the jaw. This action unlocks the jaw so that it can be moved by the trailer kingpin. When the tractor is moved out from under the trailer, the kingpin moves the jaw until the kingpin is out of the mechanism. With the jaw in the unlocked position, the lock control handle will remain in the unlocked position until manually moved by the operator.

During coupling (**Fig. 10.15**), the motion of the kingpin entering the jaw will actuate the jaw and wedge. The jaw will move behind the kingpin, followed by the wedge. The purpose of the wedge is to reinforce the jaw and take up slack around the pin. Any wear on the jaw is immediately taken up by the wedge so there is no slack in the connection.

https://truckmanualshub.com/

Fifth Wheel Locking Operation

Locking the Fifth Wheel Lock Mechanism

NOTICE

Before attempting to lock or unlock the fifth wheel lock mechanism of a sliding type fifth wheel, the slide release pull handle, if so equipped, and the slide locking wedges must be in the locked position. This prevents the sliding member from moving rapidly to the far forward or rearward position, which could damage the fifth wheel member or kingpin.

1. Chock the front and rear of the trailer tires to prevent the trailer from moving.

WARNING

Keep the fifth wheel plate lubricated to prevent binding between the tractor and trailer. A binding fifth wheel could cause erratic steering and loss of vehicle control, possibly resulting in serious personal injury or death.

2. The kingpin lock mechanism must be fully open, the fifth wheel plate must be completely lubricated with chassis grease. For lubrication instructions, see **Group 31** of the *Century Class Trucks Maintenance Manual*.
3. Position the tractor so that the fifth wheel lock opening is in line (both vertically and horizontally) with the trailer kingpin. The kingpin should be in a position to enter the throat of the locking mechanism (**Fig. 10.15**). Adjust the trailer landing gear to give enough alignment height for positive kingpin lockup.
4. With the fifth wheel lock opening aligned with the trailer kingpin, back the tractor slowly toward the trailer, making sure that the kingpin enters the throat of the locking mechanism. Continue backward motion until positive lockup occurs.
5. Apply the tractor parking brakes.
6. Make a visual and physical check for positive kingpin lockup. When lockup has occurred, the fifth wheel control handle will have moved to the locked position. Make sure that the safety latch is down over the lock control handle. See **Fig. 10.16**. This will hold the control handle in the locked position.
7. Release the tractor parking brakes. Test for kingpin lockup by pulling on the trailer against the chocks.

NOTICE

Always make sure the connect-hanger/support keeps the trailer air hoses and electrical cables positioned so that they do not rub on anything. Rubbing may wear through hoses or cables, resulting in air leaks, or exposed or broken wires, potentially affecting trailer brake or electrical systems.

8. After lockup is completed, connect the tractor-to-trailer air system lines and the electrical cable to the trailer. Take care to prevent dirt or foreign material from entering the air system lines.
9. Charge the air brake system with air. Make sure that the air connections do not leak.

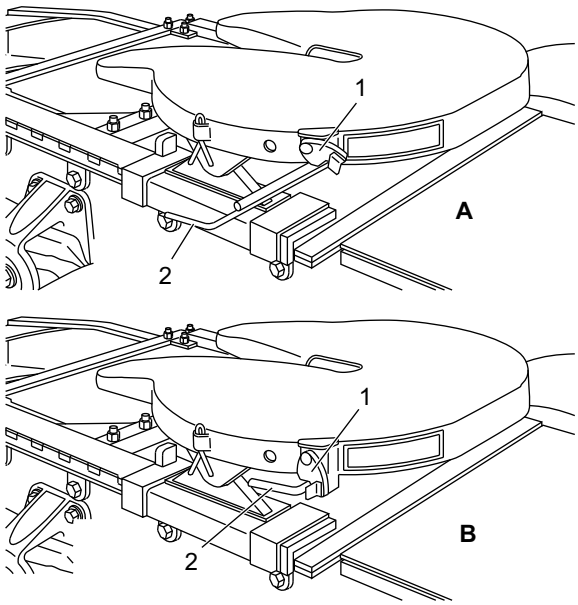

04/06/2017 f310110a

NOTE: Make sure the safety latch is down when the control handle is locked.

A. Unlocked
B. Locked
1. Safety Latch
2. Lock Control Handle

Fig. 10.16, Fontaine Fifth Wheel, Locking and Unlocking

https://truckmanualshub.com/

⚠ WARNING

Incorrect fifth wheel lock adjustment could cause the trailer to disconnect, possibly resulting in serious personal injury or death.

10. With the trailer wheels chocked and the brakes set, check for clearance between the kingpin and the fifth wheel jaws by moving the tractor forward and backward against the locked kingpin. There should be no slack between the tractor and the trailer. If slack is present, uncouple the trailer.

    For adjustment instructions, refer to the applicable manufacturer's service information.

11. Retract the trailer landing gear, and secure the ratchet handle. Remove the chocks from the trailer tires.

12. The load distribution on the front steering axle and rear drive axle(s) will have a direct effect on the steering control of the vehicle.

    Determine the front and rear axle weights by weighing the vehicle on scales designed for this purpose.

    The maximum axle weight ratings are given on the Federal Motor Vehicle Safety Standard (FMVSS) label or Canadian Motor Vehicle Safety Standard (CMVSS) label attached to the left rear door post of the tractor. The desired load on the axle is no less than 80 percent of the maximum axle weight rating, but in no instances should the axle load exceed the maximum axle weight rating given on the FMVSS or CMVSS label.

⚠ WARNING

Do not overload any tractor axle by improperly loading the trailer. This could cause erratic steering and loss of vehicle control, possibly resulting in serious personal injury or death.

Unlocking the Fifth Wheel Lock Mechanism

1. Apply the tractor parking brakes.
2. Pull the trailer air supply valve to cut off the air supply to the trailer.

⚠ WARNING

Do not use the trailer air supply for parking trailers not equipped with spring parking brakes. This applies the trailer service brakes only. As air bleeds from the trailer brake system, brake application is lost. This could allow the unattended vehicle to roll away, possibly resulting in serious personal injury or death.

3. Chock the front and rear of the trailer tires to prevent the trailer from moving.
4. Lower the trailer landing gear until the weight is removed from the fifth wheel.
5. Disconnect the tractor-to-trailer air system lines and electrical cable. Plug the air lines to prevent dirt or foreign material from entering the lines.

NOTICE

Before attempting to lock or unlock the fifth wheel lock mechanism of a sliding type fifth wheel, the slide release pull handle, if so equipped, and the slide locking wedges must be in the locked position. This prevents the sliding member from moving rapidly to the far forward or rearward position, which could damage the fifth wheel member or kingpin.

6. Release the kingpin locking mechanism by lifting the safety latch and pulling the lock control handle to the unlocked position. See **Fig. 10.16**.
7. Slowly drive the tractor away from the trailer.

Fifth Wheel Slide Operation

1. Connect the trailer kingpin to the tractor fifth wheel. For instructions, refer to Fontaine "Fifth Wheel Locking Operation," in this chapter.
2. After positive lockup of the fifth wheel lock mechanism has been accomplished, release the slide using one of the following methods:

   2.1 For air-operated release models, set the cab-operated control switch (**Fig. 10.6**) to UNLOCK.

   2.2 For manual release models, lift the slide release pull handle to disengage it from the guide plate. Then, pull out the handle (**Fig. 10.17**) until it is in the unlocked position and can be positioned against the guide plate to hold it out. The slide release pull handle will stay in the unlocked position until it is manually disengaged from the guide plate.

3. Lower the trailer landing gear just enough to remove the weight from the tractor.

https://truckmanualshub.com/

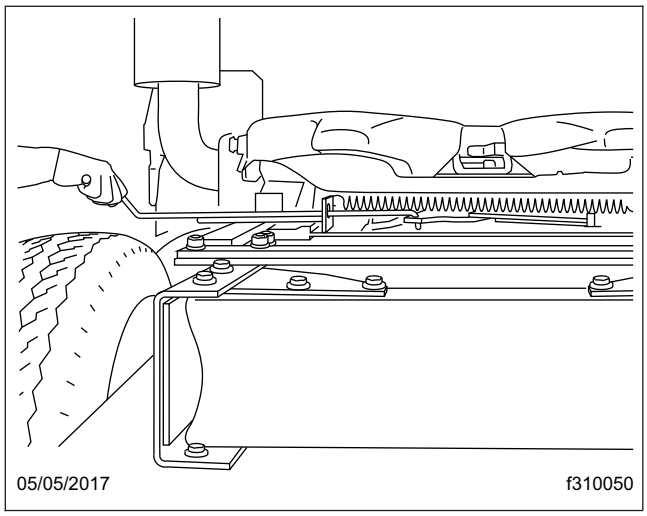

Fig. 10.17, Fontaine Sliding Fifth Wheel Manual Release

4. Pull the trailer air supply valve to cut off the air supply to the trailer.

WARNING

Do not use the trailer air supply for parking trailers not equipped with spring parking brakes. This applies the trailer service brakes only. As air bleeds from the trailer brake system, brake application is lost. This could allow the unattended vehicle to roll away, possibly resulting in serious personal injury or death.

5. Chock the front and rear of the trailer tires to prevent the trailer from moving.

NOTICE

After moving the fifth wheel to the desired position, be sure the trailer landing gear will not, at any time, come in contact with the tractor frame or other components. Make sure that the front of the trailer will not come in contact with the rear of the cab or with other components if they extend beyond the rear of the cab.

6. Slowly move the tractor forward or backward until the fifth wheel is in the desired location.
7. Apply the tractor parking brakes.

NOTE: The fifth wheel may have to be moved slightly to enable the locking wedges to enter the fully locked position.

8. Lock the sliding member in position using one of the following methods:

WARNING

Check to be sure that the lockpins are seated in the holes. Failure to achieve complete lockup may cause the trailer to detach from the tractor, possibly resulting in serious personal injury or death.

8.1 For air-operated release models, set the cab-operated slide control switch to LOCK. Visually inspect the locking wedges to make sure that they are fully inserted in the slide rail slots.

8.2 For manual release models, disengage the slide release pull handle from the guide plate. The slide release pull handle is spring-loaded in the locked position and will seek the locked position when disengaged from the guide plate. The fifth wheel may have to be moved slightly to enable the locking wedges to fully enter the locked position. When the slide release pull handle returns to the fully locked position, visually and physically check the locking wedges to make sure they are fully inserted into the slots in the slide rails. Make sure the slide release pull handle is locked in position against the guide plate.

9. The amount of load distribution on the front steering axle and rear drive axle(s) will have a direct effect on the steering control of the vehicle.

   Determine the front and rear axle weights by weighing the vehicle on scales designed for this purpose.

   The maximum axle weight ratings are given on the Federal Motor Vehicle Safety Standard (FMVSS) label or Canadian Motor Vehicle Safety Standard (CMVSS) label attached to the left rear door post of the tractor. The desired load on the axle is no less than 80 percent of the maximum axle weight rating, but in no instances should the axle load exceed the maximum axle weight rating given on the FMVSS or CMVSS label.

WARNING

Adjust the fifth wheel slide correctly, and do not overload any tractor axle by incorrectly loading

https://truckmanualshub.com/

the trailer. Incorrect slide adjustment or improper axle loading could cause erratic steering and loss of vehicle control, possibly resulting in serious personal injury or death.

Fifth Wheel Lubrication

⚠ WARNING

Keep the fifth wheel plate lubricated to prevent binding between the tractor and trailer. A binding fifth wheel could cause erratic steering and loss of vehicle control, possibly resulting in serious personal injury or death.

For lubrication instructions, see **Group 31** of the *Century Class Trucks Maintenance Manual*.

Premier Trailer Couplings

IMPORTANT: Before operating the Premier coupling, refer to the Premier web site at **www.premier-mfg.com** for complete safety, operation, and maintenance instructions.

General Information

Trailer couplings, used only on trucks, are attached to the rear closing crossmember.

coupling, operates a pushrod, which pushes against a shoe inside the coupling. The shoe maintains constant pressure on the eye of the trailer drawbar when it's over the pintle hook. This takes up any slack in the trailer connection, providing smoother towing and less wear on the pintle hook. The air pressure is activated when the trailer brakes are released.

The Premier 690 trailer coupling (**Fig. 10.19**) has a moveable pintle hook, and is non-air adjusted. It is used for heavy-duty applications.

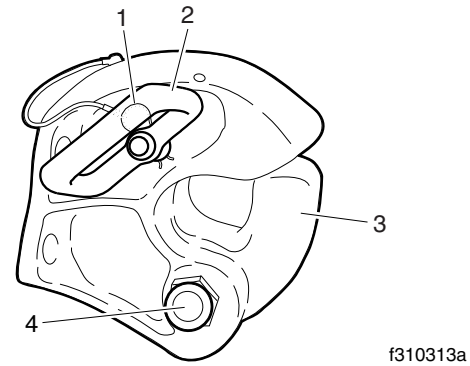

1. Linch Pin
2. Handle
3. Pintle Hook
4. 294 Bolt

Fig. 10.19, Premier 690 Trailer Coupling

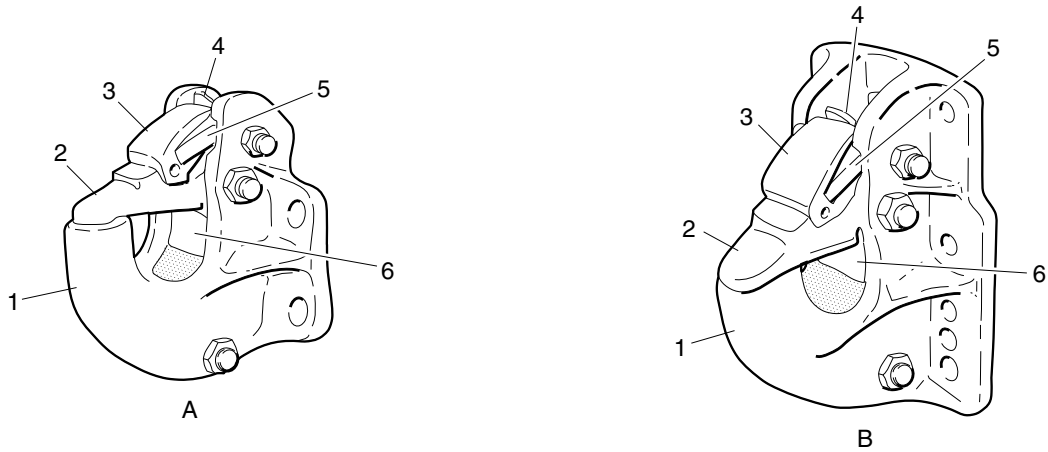

A. Model 260
1. Pintle Hook
2. Latch
3. Pawl Assembly
4. Pawl Lock
B. Model 460
5. Pawl Wedge
6. Shoe

Fig. 10.18, Premier 260 and 460 Trailer Couplings

The Premier 260 and 460 trailer couplings (**Fig. 10.18**) have a rigid pintle hook, and are air-adjusted. An air chamber, mounted forward of the

https://truckmanualshub.com/

Operation

WARNING

If at any time the 690 coupling is bound up (jack-knifed), the 294 bolt MUST be replaced immediately! Do not use the coupling until the bolt has been replaced. In addition, carefully inspect the 690 coupling, drawbar, drawbar eye, front end assembly, and tail board for damage. Failure to do so may result in trailer separation from the truck while in use, resulting in serious personal injury or property damage.

Trailer Hookup

1. Chock the front and rear tires of the trailer.
2. Open the coupling.

   Models 260 and 460 (**Fig. 10.18**): Pull up on the pawl lock; then, while squeezing the pawl wedges together, lift up the pawl assembly. Lift up the latch, and push it up against the pawl assembly, locking the latch in place.

   Model 690 (**Fig. 10.19**): Remove the linch pin from the handle, then push in on the handle and turn it toward you. Open the pintle hook by pulling it down and toward you. Release the handle, locking the pintle hook open.
3. *Models 260 and 460:* Back up the vehicle until the drawbar eye is over the pintle hook, then lower the trailer.

   Model 690: Back up the vehicle until the drawbar eye enters the open jaw, contacts the back of the pintle hook, and closes the coupling.
4. Close the coupling.

   Models 260 and 460: Push in on the pawl wedges and lift the pawl assembly. The latch will drop into the closed position. Lock the latch by lowering the pawl assembly.

   Model 690: The pintle hook will automatically close and lock from the pressure of the drawbar eye against it. Install the linch pin.

NOTICE

Always make sure the connect-hanger/support keeps the trailer air hoses and electrical cables positioned so that they do not rub on anything. Rubbing may wear through hoses or cables, resulting in air leaks, or exposed or broken wires, potentially affecting trailer brake or electrical systems.

5. Hook up the trailer's electrical and air lines.
6. Remove the chocks from the trailer's tires.

Trailer Release

1. Apply the truck and trailer parking brakes.

WARNING

Do not use the trailer air supply for parking trailers not equipped with spring parking brakes. This applies the trailer service brakes only. As air bleeds from the trailer brake system, brake application is lost. This could allow the unattended vehicle to roll away, possibly resulting in serious personal injury or death.

2. Chock the front and rear tires of the trailer.
3. Disconnect the trailer air and electrical lines. Plug the air lines to keep out dirt.
4. Take the weight of the trailer drawbar eye off the pintle hook.
5. Open the coupling.

   Models 260 and 460: Pull up on the pawl lock; then, while squeezing the pawl wedges together, lift up the pawl assembly. Lift up the latch, and push it up against the pawl, locking the latch in place.

   Model 690: Remove the linch pin from the handle, then push in on the handle and turn it toward you. Open the pintle hook by pulling it down and toward you. Release the handle, locking the pintle hook open.
6. Slowly drive the vehicle away from the trailer.

Holland Trailer Coupling

General Information

The Holland PH–T–60–AL trailer coupling is designed for use with trailers having a maximum gross weight of 10,000 lbs. It is a rigid type pintle hook, used only on truck applications, and is fastened to the rear closing crossmember of the vehicle. See **Fig. 10.20**. It is a non-air adjusted coupling.

https://truckmanualshub.com/

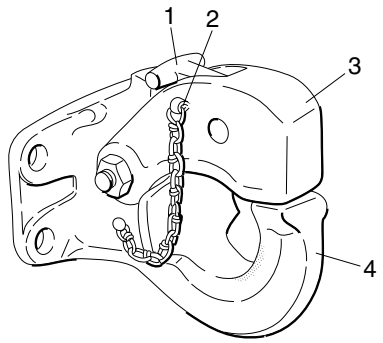

01/20/95 f310314a

1. Lock
2. Cotter Pin
3. Latch
4. Pintle Hook

Fig. 10.20, Holland PH-T-60-AL Trailer Coupling

Operation

Trailer Hookup

1. Chock the front and rear tires of the trailer.
2. Remove the cotter pin, then lift the lock and raise the latch.
3. Back up the vehicle until the drawbar eye is over the pintle hook.
4. Lower the trailer until the drawbar eye rests on the pintle hook.
5. Close the latch, then insert the cotter pin.

NOTICE

Always make sure the connect-hanger/support keeps the trailer air hoses and electrical cables positioned so that they do not rub on anything. Rubbing may wear through hoses or cables, resulting in air leaks, or exposed or broken wires, potentially affecting trailer brake or electrical systems.

6. Hook up the trailer's electrical and air lines.
7. Remove the chocks from the trailer's tires.

Trailer Release

1. Apply the truck and trailer parking brakes.

⚠ WARNING

Do not use the trailer air supply for parking trailers not equipped with spring parking brakes. This applies the trailer service brakes only. As air bleeds from the trailer brake system, brake application is lost. This could allow the unattended vehicle to roll away, possibly resulting in serious personal injury or death.

2. Chock the front and rear tires of the trailer.
3. Disconnect the trailer air and electrical lines. Plug the air lines to keep out dirt.
4. Take the weight of the trailer drawbar off the pintle hook.
5. Open the latch by first removing the cotter pin; then lift up the lock and raise the latch.
6. Slowly drive the vehicle away from the trailer.

https://truckmanualshub.com/

11

Pretrip and Post-Trip Inspections and Maintenance

Pretrip and Post-Trip Inspection Checklists 11.1
Daily Pretrip Inspection and Maintenance 11.2
Weekly Post-Trip Inspection and Maintenance 11.9
Monthly Post-Trip Inspection and Maintenance 11.11

https://truckmanualshub.com/

Pretrip and Post-Trip Inspection Checklists

Periodic Inspections and Maintenance, General Information

Regulations in Canada and the U.S. clearly indicate that it is the driver's responsibility to perform an inspection, and ensure the complete road-worthiness of a vehicle, before placing it into service. Commercial vehicles may be subject to inspection by authorized inspectors, and an unsafe vehicle can be taken out of service until the driver or owner repairs it.

Use the following checklists to ensure that vehicle components are in good working condition before each trip. Careful inspections eliminate stops later to fix overlooked or forgotten items.

The checklists in this chapter can be copied and kept as a record that the procedures have been completed. For details on how to inspect each item on the checklists, see the corresponding procedure later in this chapter.

Checklists

Daily Pretrip Inspection Checklists

See the following tables for a list of procedures that should be performed daily, before the first trip. Place a check mark in the complete (**Comp.**) column to indicate a procedure has been performed.

Inspector	Date

	Suspension and Slack Adjusters	Comp.
1	Suspension components	
2	Slack adjusters	

	Wheels and Tires	Comp.
1	Tire condition	
2	Tire inflation	
3	Rim and wheel components	
4	Wheel bearing oil seals and lubrication levels	
6	Mud Flaps	

	Saddle Tank Areas	Comp.
1	Drain air reservoirs (without automatic drain valves)	
2	Fuel tank(s) secure	
3	Frame rails and crossmembers	
4	Visible exhaust components	

	Engine Compartment	Comp.
1	Leakage under engine	
2	Air intake system	
3	Engine oil level	
4	Power steering reservoir level	
5	Engine coolant level	
6	Visible engine wiring	
7	Frame rails	

	Cab	Comp.
1	Reset dash-mounted air intake restriction indicator	
2	Air-pressure warning systems	
3	Air governor cut-in and cut-out pressures	
4	Air pressure build-up time	
5	Air system leakage	
6	Air pressure reserve	
7	Mirrors, windows, windshield	
8	Horn, windshield wipers, windshield washers	
9	Heater and defroster	
10	Interior lights	
11	Exterior lights	
12	Seat belts and tether belts	
13	Fuel level	
14	Mirror adjustment	
15	Service brakes	
16	Backup alarm	

Weekly Post-trip Inspection Checklist

See the following table for procedures that should be performed weekly, post-trip. Place a check mark in the complete (**Comp.**) column to indicate a procedure has been performed.

https://truckmanualshub.com/

Inspector	Date

	Engine Compartment	Comp.
1	Windshield washer reservoir level	
2	Air intake restriction indicator	
3	Automatic transmission fluid level	
4	Water in fuel/water separator	
5	Steering components	
6	Serpentine drive belts	

Monthly Post-trip Inspection Checklists

See the following tables for procedures that should be performed monthly, post-trip. Place a check mark in the complete (**Comp.**) column to indicate a procedure has been performed.

Inspector	Date

	Brake Components	Comp.
1	Brake system components	
2	Brake chambers	
3	Air brake lines	
4	Flex air lines	
5	Brake linings and brake drums	
6	Brake lining thickness	

	Saddle Tank Areas	Comp.
1	Drain air reservoirs (with automatic drain valves)	
2	Batteries (location may vary)	

	Engine Compartment	Comp.
1	Hydraulic clutch reservoir	
2	Radiator and heater hoses	
3	Steering wheel play	

Fluids Added

Use the following table to note any fluids that were added during the inspection and maintenance procedures.

Fluids Added During Inspection	
Fluid	**Amount Added**
Wheel Bearing Lubricant	
Engine Oil	
Power Steering Fluid	
Engine Coolant	

Fluids Added During Inspection	
Fluid	**Amount Added**
Windshield Washer Fluid	
Automatic Transmission Fluid	
Hydraulic Clutch Fluid (DOT 4 brake fluid)	

Daily Pretrip Inspection and Maintenance

Complete the following inspection and maintenance procedures to ensure that vehicle components are in good working condition before each trip. A driver who is familiar with the vehicle and drives it regularly can perform the daily inspections, then add the weekly and monthly post-trip inspections as scheduled.

If the driver does not operate the vehicle on a consistent basis, all daily, weekly, and monthly inspection and maintenance procedures should be performed before the trip.

https://truckmanualshub.com/

IMPORTANT: The pre- and post-trip checklists, inspections, and maintenance procedures detailed in this chapter are **not all-inclusive**. Refer to other component and body manufacturers' instructions for specific inspection and maintenance instructions, as well as local, state, and federal guidelines.

NOTE: If any system or component does not pass this inspection, it must be corrected before operating the vehicle. Whenever equipment requires adjustment, replacement, and/or repair, see the *Century Class Trucks Workshop Manual* for procedures and specifications.

Suspension and Slack Adjuster Inspection

Walk around the vehicle and visually inspect suspension and slack adjuster components.

1. Inspect the following suspension components for signs of structural damage, cracks, or wear.
   - springs
   - spring hangers
   - shocks
   - suspension arms
   - suspension brackets
   - axle seats
   - bushings
2. Inspect slack adjusters for signs of damage. See **Fig. 11.1**, **Fig. 11.2**, or **Fig. 11.3**.
   - Inspect slack adjuster boots, if equipped, for cuts or tears.
   - Inspect anchor straps, if equipped, for damage.
   - Look for worn clevis pins on brake chamber pushrods.
   - Look for missing or damaged cotter pins on the clevis pins.
   - Ensure chamber piston rods are in line with the slack adjusters.

Wheel and Tire Inspection

Walk around the vehicle and visually inspect each wheel and tire assembly.

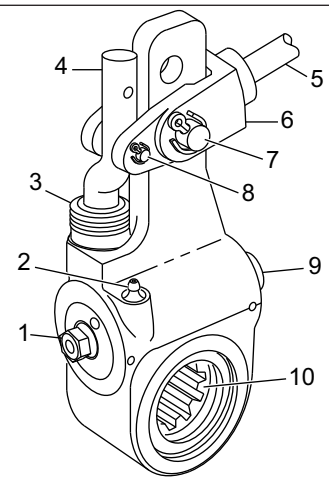

02/03/2017 f421398

1. 7/16-inch Adjusting Nut
2. Grease Fitting
3. Boot
4. Link
5. Brake Chamber Piston Rod
6. Clevis
7. 1/2-inch Clevis Pin
8. 1/4-inch Clevis Pin
9. Grease Relief Opening
10. Slack Adjuster Spline

Fig. 11.1, Gunite Automatic Slack Adjuster

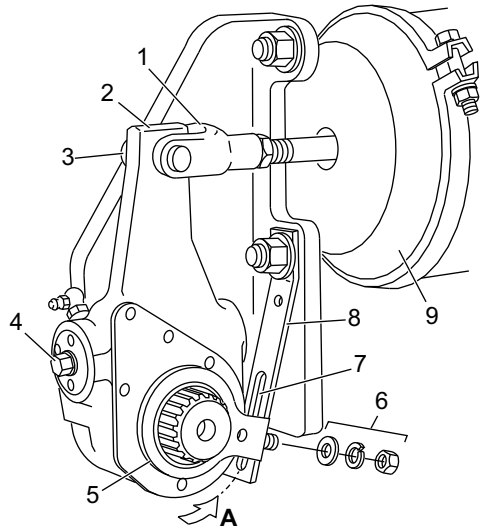

02/03/2017 f421397

A. Rotate the control arm toward the brake chamber until it can be felt contacting the internal stop.

1. Clevis
2. Slack Adjuster
3. Clevis Pin
4. Manual Adjusting Nut
5. Control Arm
6. Control-Arm Washers and Nut
7. Anchor Strap Slot
8. Anchor Strap
9. Brake Chamber

Fig. 11.2, Haldex Automatic Slack Adjuster

https://truckmanualshub.com/

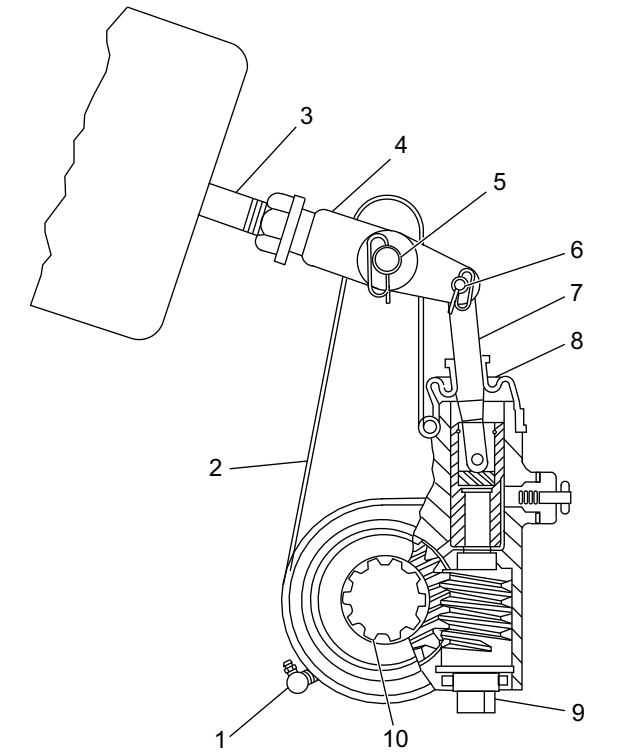

1. Grease Fitting (if equipped)
2. Slack Adjuster Housing
3. Brake Chamber Pushrod
4. Clevis
5. Clevis Pin (large)
6. Clevis Pin (small)
7. Actuator Rod
8. Boot
9. Manual Adjusting Nut
10. Camshaft Splines

Fig. 11.3, Meritor Automatic Slack Adjuster

1. Inspect tire condition for the following:
   - valve stem caps on every tire, screwed on finger-tight
   - bulges, cracks, cuts, and penetrations
   - oil contamination (petroleum derivatives will soften the rubber and destroy the tire)
   - tread depth—if tread is less than 4/32 inch (3 mm) on any front tire, or less than 2/32 inch (1.5 mm) on any rear tire, replace the tire
   - debris lodged between duel tire sets
2. Check tire inflation.

   For inflation pressures and maximum loads, see the tire manufacturer's guidelines. Inflate the tires to the applicable pressures if needed.

   If a tire has been run flat or under-inflated, check the wheel and tire for damage before adding air.

   Keep compressed air reservoirs and lines dry during tire inflation. Use well-maintained inline moisture traps and service them regularly.

⚠ WARNING

Do not operate the vehicle with underinflated or overinflated tires. Incorrect inflation can stress the tires and make the tires and rims more susceptible to damage, possibly leading to rim or tire failure and loss of vehicle control, resulting in serious personal injury or death.

NOTICE

A weekly pressure loss of 4 psi (28 kPa) or more in a tire may indicate damage. The tire should be inspected and, if necessary, repaired or replaced by a qualified tire service facility.

IMPORTANT: The load and cold inflation pressure must not exceed the rim or wheel manufacturer's recommendations, even though the tire may be approved for a higher load inflation. Consult the rim or wheel manufacturer for the correct tire inflation pressure for the vehicle load.

3. Examine each rim and wheel component.

   3.1 Remove all dirt and debris from the assembly. Rust streaks or metal build-up around stud holes, or out-of-round or worn stud holes, may be caused by loose wheel nuts.

⚠ WARNING

Have any worn or damaged wheel components replaced by a qualified person using the wheel manufacturer's instructions and the wheel industry's standard safety precautions and equipment. Otherwise a vehicle or workshop accident could occur, possibly resulting in serious personal injury or death.

   3.2 Inspect for broken, cracked, badly worn, bent, rusty, or sprung rings and rims.

https://truckmanualshub.com/

NOTICE

Use the recommended torque values and follow the proper tightening sequence. Insufficient wheel nut torque can cause wheel shimmy, resulting in wheel damage, stud breakage, and extreme tire tread wear. Excessive wheel nut torque can break studs, damage threads, and crack discs in the stud hole area.

3.3 Make sure all wheel nuts are tightened. If tightening is necessary, use the tightening pattern in **Fig. 11.4** or **Fig. 11.5** to initially tighten the flange nuts 50 to 100 lbf·ft (68 to 136 N·m). Then tighten the flange nuts 450 to 500 lbf·ft (610 to 678 N·m).

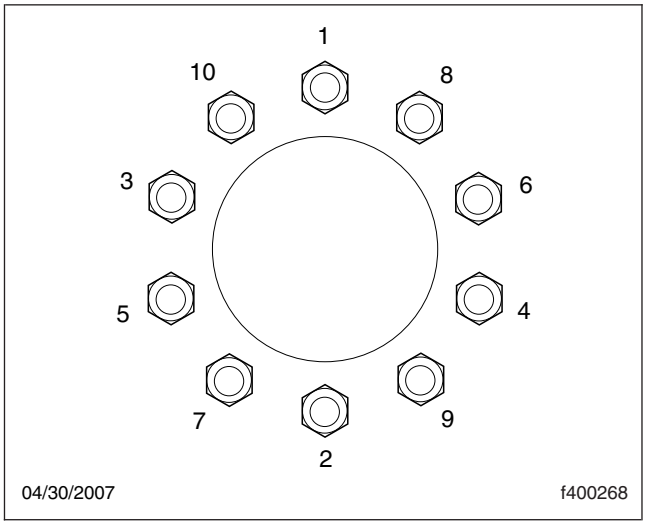

Fig. 11.4, Tightening Pattern, 10-Stud Disc Wheel

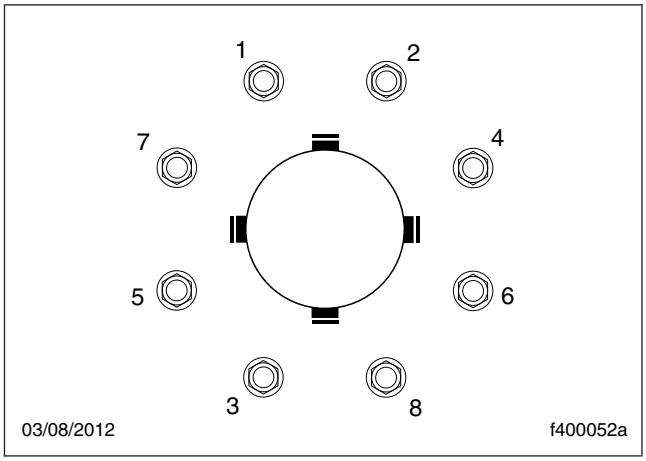

Fig. 11.5, Tightening Pattern, 8-Stud Disc Wheel

4. Inspect the outboard side of all wheel hubs and the hub oil seal area on the inboard side of each wheel for signs of oil leakage. If any oil is found on wheel and tire or brake components, remove the vehicle from service until the leak has been fixed.

   If needed, fill the hubs to the level indicated on the hub cap. See **Group 35** of the *Century Class Trucks Maintenance Manual* for recommended lubricants.

5. Check that mud flaps are undamaged and hang 10 inches (25 cm) or less from the ground.

Saddle Tank Areas Inspection

⚠ WARNING

When draining the air reservoir, do not look into the air jets or direct them toward anyone. Dirt or sludge particles may be in the airstream and could cause injury.

NOTICE

If the water drained from the air reservoirs is cloudy or oily, it may indicate a problem with the compressor. If oil is allowed to contaminate the air dryer, it will not remove the water from the air brake system, which could adversely affect braking.

1. Drain the brake system air reservoirs (reservoirs without automatic drain valves only).

⚠ WARNING

Never operate the engine with the fuel tank shutoff valves partially closed. This could damage the fuel pump, causing sudden loss of engine power, possibly resulting in serious personal injury due to reduced vehicle control.

2. Ensure that fuel tanks are secured to their mounting brackets and that the mounting brackets are secured to the frame.

   If equipped with fuel tank shutoff valves, be sure the valves are fully open.

3. Inspect visible frame rails for missing bolts, shiny areas, or rust streaks. Check all visible crossmembers for damage or signs of looseness.

4. Inspect visible components of the exhaust system to ensure connections are tight.

https://truckmanualshub.com/

Inspect upstream of the aftertreatment device (ATD), if equipped, for cracking or signs of leaks, such as soot trails. Inspect downstream of the ATD for signs of exhaust leaks, such as blistering or warping of nearby components.

Engine Compartment Inspection

1. Check the ground underneath the engine for fuel, oil, or coolant leaks.
2. Inspect the air intake system for leaks or damage.

NOTICE

Failure to maintain a sealed air intake system could allow the entry of dirt and contaminants into the engine. This could adversely affect engine performance and result in engine damage.

2.1 Push the reset button on the air intake restriction indicator located on the air cleaner, if equipped.

2.2 Check the air intake duct from the air cleaner to the engine intake. Make sure the duct components are secure and airtight.

3. Check the engine oil level.

NOTICE

Operating the engine with the oil level below the minimum fill (or "add") mark or above the maximum fill (or "full") mark could result in engine damage.

3.1 Check the oil level with the vehicle parked on a level surface. See the engine manufacturer's guidelines for engine shutdown time requirements prior to checking the oil level.

IMPORTANT: On engines that comply with EPA07 regulations, use CJ-4 engine oil with less than 1% sulfated ash. Failure to use CJ-4 oil may void the warranty on emission aftertreatment components.

3.2 If the oil level is at or below the minimum fill (or "add") mark on the dipstick, add enough oil to maintain the level between the minimum and maximum fill marks. See the engine operation manual for recommended lubricants.

4. Check the power steering reservoir fluid level.

The power steering fluid level should be between the MIN COLD mark and the middle mark just above it. See **Fig. 11.6**. If needed, fill the reservoir with automatic transmission fluid that meets Dexron III or TES-389 specifications.

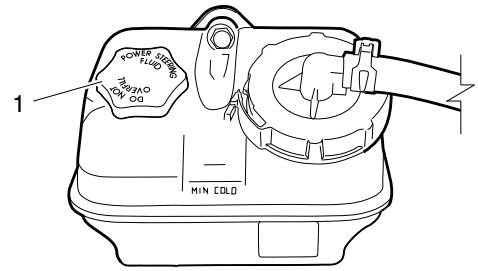

05/21/2007 f462079

NOTE: Typical reservoir shown; configurations may vary.

1. Filler Cap

Fig. 11.6, Power Steering Fluid Reservoir

NOTICE

Low coolant could result in engine overheating, which could cause engine damage.

IMPORTANT: The surge tank must be cool to check the coolant level.

5. Check the engine coolant level in the radiator surge tank. See **Fig. 11.7**.

NOTICE

Coolant must be filled to the COLD MAX line of the surge tank. Low coolant could result in engine overheating, which could cause engine damage.

5.1 If the coolant is low, fill the surge tank to the MAX line with a 50/50 mixture of water and the type of antifreeze currently installed in the vehicle.

5.2 If the surge tank was empty, start the engine after refilling and check the level again when the engine is at operating temperature.

https://truckmanualshub.com/

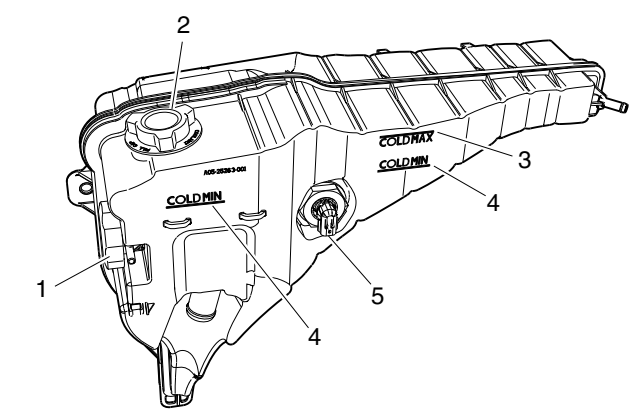

02/05/2013 f500390

1. Pressure Relief Cap
2. Filler Cap
3. COLD MAX Fill Line
4. COLD MIN Fill Line
5. Coolant Level Sensor

Fig. 11.7, Coolant Surge Tank

6. Inspect visible engine wiring for damage or looseness. Check for loose wiring, chafed insulation, and damaged or loose hold-down clamps.
7. Inspect visible frame rails for missing bolts, shiny areas, or rust streaks.

Cab Inspection

1. Push the reset button on the dash-mounted air intake restriction indicator, if equipped.
2. With the ignition switch in the OFF position, check the air-pressure warning system.
   - 2.1 If not previously drained, drain the air reservoirs using moderate brake applications until pressure in both reservoirs is less than 70 psi (483 kPa).
   - 2.2 Turn the ignition to the ON position. The instrument cluster will complete a full gauge sweep and bulb check, and an audible warning will sound. Ensure the low air pressure lamp (BRAKE AIR) remains illuminated and an audible warning continues to sound after the gauge sweep is complete.
3. Check air governor cut-in and cut-out pressures.
   - 3.1 Start the engine and ensure the BRAKE AIR lamp goes out and the buzzer silences when pressure reaches approximately 70 psi (483 kPa) in both air reservoirs.

     The air governor should cut out at approximately 120 psi (827 kPa). For vehicles with an optional dryer reservoir module (DRM), the cut-out pressure is approximately 130 psi (896 kPa).
   - 3.2 With the engine idling, apply the brake pedal several times. The air governor should cut in when pressure in the primary air reservoir (top air gauge) reaches approximately 100 psi (690 kPa).
4. Check air pressure build-up time.
   - 4.1 With the air system fully charged, make one full brake application and note the air pressure reading on the primary air gauge.
   - 4.2 Further reduce air pressure using moderate brake applications, then run the engine at governed rpm.
   - 4.3 Note the time that the pressure reaches the previously noted reading on the primary air gauge, then note the time that the air pressure reaches cut-out pressure.
   - 4.4 If it takes longer than 30 seconds to reach cut-out pressure after the primary air gauge passes the previously noted pressure (noted after one full brake application), eliminate any leaks or replace the air compressor before operating the vehicle.
5. Check air leakage in the system.
   - 5.1 With the parking brake applied, the transmission out of gear, and the air system fully charged, release the service brakes and shut down the engine.
   - 5.2 Wait one minute and note the air pressure drop in psi (kPa) per minute from the primary air reservoir.

     If the pressure drop exceeds the limits shown in **Table 11.1**, eliminate any leaks before operating the vehicle.
6. Check the air pressure reserve.

   With the engine still off, make one full brake application and observe the pressure drop on the primary air gauge. If pressure drops more than 25 psi (172 kPa), eliminate any leaks before operating the vehicle.

https://truckmanualshub.com/

Maximum Allowable Air Leakage		
Description	Pressure Drop: psi (kPa) Per Minute	
	Released	Applied
Truck or Tractor Only	2 (14)	3 (21)
Truck or Tractor w/Single Trailer	3 (21)	4 (28)
Truck or Tractor w/Two Trailers	5 (34)	6 (41)

Table 11.1, Maximum Allowable Air Leakage

WARNING

When cleaning windshields and windows, always stand on the ground or on a secure ladder or platform. Use a long-handled window cleaner. Do not use the cab steps, tires, fenders, fuel tanks, engine, or under-hood components to access the windshield or windows. Doing so could cause a fall and result in an injury.

7. Inspect the mirrors, window glass, and windshield for cracks or other damage.
8. Ensure that the horn, windshield wipers, and windshield washers are operating properly. These devices must be in good working order for safe vehicle operation.
9. Ensure the heater and defroster are operating properly.
10. Check the operation of all interior lights.
    - 10.1 Turn on the headlights and leave them on. Ensure all equipped gauge bulbs illuminate in the dash message center.
    - 10.2 Ensure all equipped driver control switches illuminate.
    - 10.3 Ensure both turn signal indicator bulbs illuminate in the dash message center when the turn signal switch is activated.
11. Check the operation of all exterior lights. See **Fig. 11.8**.
    - 11.1 Activate the high-beam headlights and hazard warning lights.
    - 11.2 Exit the cab and check that all exterior lights and reflectors are clean and intact.
    - 11.3 Check that the brake lights, taillights, headlights, turn signals, marker lights, identification lights, and clearance lights are working properly.

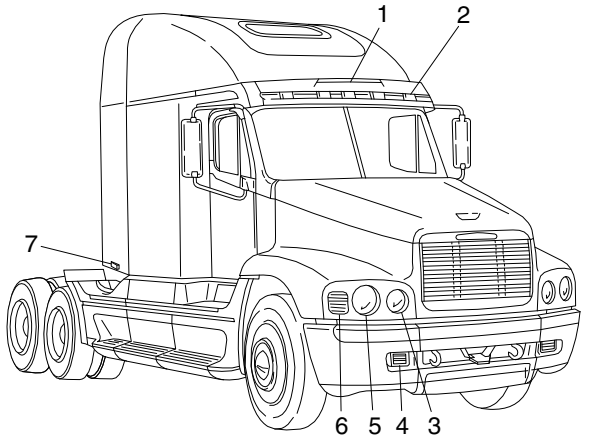

9/07/95 f600903

1. Identification Lights
2. Clearance Lights
3. Daytime Running Lights
4. Road Lights
5. Headlights
6. Turn Signals and Side-Marker Lights
7. Marker Lights

Fig. 11.8, Exterior Lights

12. Inspect the seat belts and tether belts.

WARNING

Inspect and maintain seat belts. When any part of a seat belt system needs replacement, the entire seat belt must be replaced, both retractor and buckle side. Any time a vehicle is involved in an accident, and the seat belt system was in use, the entire vehicle seat belt system must be replaced before operating the vehicle. Do not attempt to modify the seat belt system; doing so could change the effectiveness of the system. Failure to replace worn or damaged seat belts, or making any modifications to the system, may result in personal injury or death.

- 12.1 Check the web for fraying, cuts, extreme dirt and dust, or for severe fading from exposure to sunlight, especially near the buckle latch plate and in the D-loop guide area.
- 12.2 Check operation of the buckle, latch, Komfort Latch or Sliding Komfort Latch (if equipped), web retractor, and upper seat belt mount on the door pillar. Check all visible components for wear or damage.
- 12.3 Check the seat belt and tether belt connection points and tighten any that are loose.

https://truckmanualshub.com/

WARNING

Never fill fuel tanks to more than 95 percent of their liquid capacity. This could make them more likely to rupture from impact, possibly causing fire and resulting in serious personal injury or death by burning.

Do not mix gasoline or alcohol with diesel fuel. This mixture could cause an explosion, possibly resulting in serious personal injury or death. Do not fill the fuel tanks in the presence of sparks, open flames, or intense heat. These could ignite the fuel, possibly causing severe burns.

IMPORTANT: On engines that comply with EPA07 regulations, use ultralow-sulfur diesel (ULSD) with 15 ppm sulfur content or less. Failure to use ULSD fuel may void the warranty on emission components.

13. Check the fuel level in the fuel tank(s). To keep condensation to a minimum, fuel tanks should be filled at the end of each day.
14. Adjust the rearview and down view mirrors as necessary.
15. Test the service brakes.
    - 15.1 With the engine running and air system fully charged, set the parking brake.
    - 15.2 Put the vehicle in the lowest gear and gently attempt to move it forward. The vehicle should not move.

      If the vehicle moves, the parking brakes are not operating correctly and must be repaired before the vehicle is operated.
16. Test the backup alarm.
    - 16.1 Release the parking brake and put the transmission in reverse.
    - 16.2 Move the vehicle slightly backward to ensure that the backup alarm is operating correctly.

Weekly Post-Trip Inspection and Maintenance

Engine Compartment Inspection

WARNING

Washer fluids may be flammable and poisonous. Do not expose washer fluid to an open flame or any burning material, such as a cigarette. Always comply with the washer fluid manufacturer's recommended safety precautions.

1. Check the windshield washer reservoir fluid level.
2. After resetting the air intake restriction indicator during the daily pretrip inspection, check the indicator again with the engine off.
    - 2.1 Check an indicator with graduations to see if air restriction exceeds the value shown in **Table 11.2**.

      Check a go/no-go indicator without graduations to see if the colored bar shows through the clear window.

Air Intake Maximum Restriction Values: (inH $_2$O)		
Engine Make	**Pre-EPA07 Engines**	**EPA07 Engines**
Caterpillar	25	—
Cummins	25	25
Detroit™	20	22
Mercedes-Benz	22	22

Table 11.2, Air Intake Maximum Restriction Values

    - 2.2 If air restriction exceeds the maximum allowable value, operate the vehicle for one more day, making sure not to run the engine over rated rpm. Refer to the engine operation manual for more information on rated rpm for your engine.
    - 2.3 If air restriction exceeds the maximum value again, replace the air cleaner element. For instructions, refer to **Group 09** of the *Century Class Trucks Workshop Manual*.
3. If the vehicle is equipped with an Allison automatic transmission, check the automatic transmission fluid level.
4. Check for water in the fuel/water separator, if equipped.

https://truckmanualshub.com/

IMPORTANT: When draining fluid from a fuel/water separator, drain the fluid into an appropriate container and dispose of it properly. Many jurisdictions now issue fines for draining fuel/water separators onto the ground.

4.1 Place a suitable container under the fuel/water separator.

NOTE: A hose may be used to direct water into the container. Use a hose with a ½-inch pipe thread on DAVCO models.

4.2 If the engine is equipped with a built-in water separator, loosen the drain valve, and allow the water to run out. Close the drain valve, taking care not to overtighten it.

4.3 *Alliance/Racor Models*: Turn the drain plug counterclockwise to open it. See **Fig. 11.9**.

DAVCO Models: Remove the vent cap and open the drain. See **Fig. 11.10**.

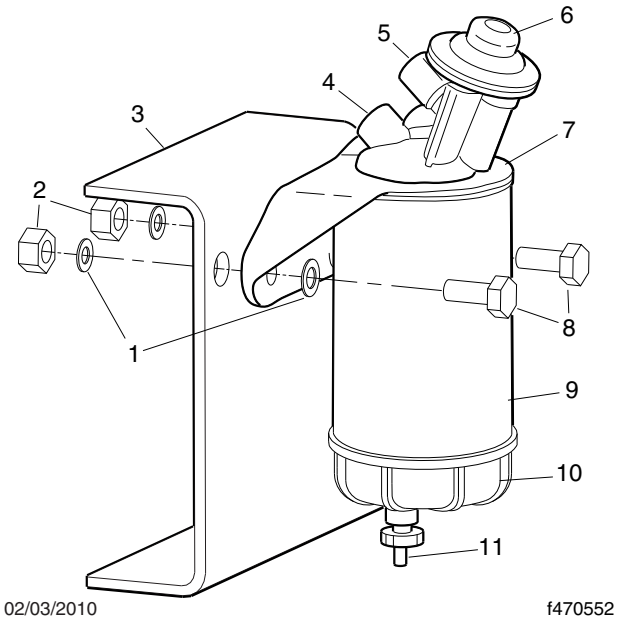

02/03/2010 f470552

1. Washers (qty 2)
2. Nuts (qty 2)
3. Frame Rail
4. Fuel Outlet Port
5. Fuel Inlet Port
6. Priming Pump
7. Mounting Head
8. Mounting Bolts (qty 2)
9. Filter Element
10. Sight Bowl
11. Drain Plug

Fig. 11.9, Alliance Fuel/Water Separator Assembly and Installation

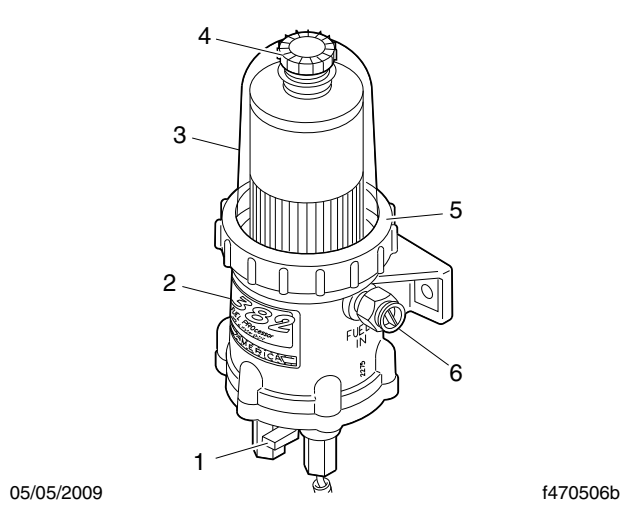

05/05/2009 f470506b

1. Drain Valve
2. Lower Housing
3. Clear Cover
4. Vent Cap
5. Collar
6. Inlet Port/Check Valve

Fig. 11.10, DAVCO Fuel/Water Separator (Fuel Pro 382 shown)

IMPORTANT: Water in the fuel/water separator will appear as beads. Drain the fuel/water separator only enough to remove the water. Stop draining fluid when fuel begins to drain out. If the fuel/water separator is drained of fuel, it will be necessary to prime the fuel system before the vehicle can be started again.

4.4 Stop draining fluid when fuel begins to drain out.

Alliance/Racor Models: Turn the drain plug clockwise to close it.

DAVCO Models: Close the drain valve. Install and hand-tighten the vent cap.

5. Inspect the steering components.

5.1 Inspect tie rods, steering arms, and the drag link for signs of looseness (i.e., shiny spots or rust tracks). See **Fig. 11.11**.

5.2 Check the steering gear mounting bolts and pitman arm nut, if equipped, for signs of looseness.

5.3 Check the drag link nuts for missing cotter pins.

5.4 Inspect the steering intermediate shaft and end yokes for excessive looseness or other damage.

https://truckmanualshub.com/

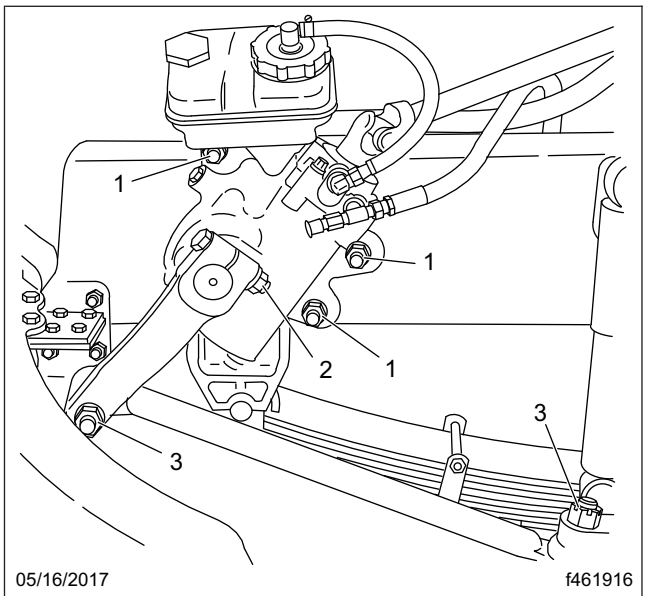

1. Steering Gear Mounting Bolts
2. Pitman Arm Pinch Bolt Nut
3. Drag Link Nut

Fig. 11.11, Integral Steering Gear Fasteners

NOTICE

Do not drive with a drive belt that is visibly worn or damaged. If it fails, the lack of coolant flow could rapidly cause damage to engine components.

6. Inspect the serpentine drive belts for signs of glazing, frayed edges, breaks, cracks, or oil contamination.

Monthly Post-Trip Inspection and Maintenance

Brake Component Inspection

Walk around the vehicle and inspect brake system components for visible damage.

1. Inspect all visible brake system components for missing fasteners or signs of looseness, such as rust tracks.

NOTICE

If the external breather tube or breather cap is missing or incorrectly installed, road dirt and debris can adversely affect the operation of the brake chamber. Once inside of the chamber, dirt and debris can cause the internal parts of the chamber to deteriorate faster.

2. Inspect the exterior surfaces of brake chambers for damage. Make sure that breather holes are open and free of debris.

NOTE: Do not route air brake lines on top of anything likely to be stepped on.

3. Inspect air brake lines for dents, swelling, kinks, twisting, abrasion, and damage, especially near moving parts.
4. Inspect flex air lines for deterioration or signs of abrasion.
5. Inspect for cracked, worn, or oil-contaminated brake linings and brake drums (or rotors).
6. Check the thickness of the brake linings. Replace brake linings on all brake assemblies on the axle if any brake linings are worn to less than approximately 1/4 inch (6.4 mm) at the thinnest point.

Saddle Tank Areas Inspection

WARNING

When draining the air reservoir, do not look into the air jets or direct them toward anyone. Dirt or sludge particles may be in the airstream and could cause injury.

NOTICE

If the water drained from the air reservoirs is cloudy or oily, it may indicate a problem with the compressor. If oil is allowed to contaminate the air dryer, it will not remove the water from the air brake system, which could adversely affect braking.

1. Drain the brake system air reservoirs (reservoirs with automatic drain valves only).

NOTE: Battery locations vary between vehicles.

2. Inspect the batteries.

WARNING

Battery posts, terminals, and related accessories contain lead and lead compounds, chemicals known to the State of California to cause cancer

https://truckmanualshub.com/

and reproductive harm. To prevent possible personal injury, always wash your hands after handling battery parts and related accessories.

2.1 Remove the battery box cover and inspect all visible battery cables for loose wiring or damage.

2.2 Check that the battery hold-down is secure.

Engine Compartment Inspection and Adjustments

1. Check the hydraulic clutch reservoir, if equipped. If necessary, add DOT 4 brake fluid.
2. Inspect the radiator and heater hoses, including the clamps and support brackets.

2.1 Inspect the radiator and charge air cooler for damage and accumulated debris. Straighten bent or damaged fins to permit airflow across all areas of the cores.

NOTE: When traveling through areas of high insect concentration, it may be necessary to clean the exterior of the radiator or the charge air cooler core as often as every 200 miles (322 km).

2.2 Make sure the radiator inlet and outlet hoses are pliable and are not cracking or ballooning.

2.3 Make sure the heater hoses are pliable and are not cracking or ballooning.

2.4 Tighten hose clamps as necessary.

IMPORTANT: Do not overtighten hose clamps, as hose life can be adversely affected.

2.5 Ensure hose support brackets are securely fastened. Make sure hoses are not located near sources of wear, abrasion, or high heat.

IMPORTANT: When replacing hoses, install service-type knitted or braided-yarn reinforced neoprene hose. Extended-service-life silicone hoses may also be used. See the Alliance Parts Catalog at **www.alliancebrandparts.com** or contact a Freightliner Dealer.

3. Check the steering wheel for excessive play.

3.1 Start the engine. With the front tires straight ahead, turn the steering wheel until motion is observed at the front wheels.

3.2 Align a reference mark on the steering wheel to a rule, then slowly turn the steering wheel in the opposite direction until motion is again detected at the wheels.

3.3 Measure the lash (free play) at the rim of the steering wheel. Excessive lash exists if steering wheel movement exceeds 2-1/2 inches (64 mm) with a 20-inch (508-mm) steering wheel, or 2-1/4 inches (57 mm) with an 18-inch (457-mm) steering wheel.

3.4 If there is excessive lash, check the steering system for wear or incorrect adjustment before operating the vehicle.

https://truckmanualshub.com/

https://truckmanualshub.com/

12

Cab Appearance

Cab Washing and Polishing 12.1
Care of Fiberglass Parts 12.1
Care of Chrome Parts 12.1
Care of Exterior Lights 12.1
Dashboard Care 12.1
Vinyl Upholstery Cleaning 12.2
Velour Upholstery Cleaning 12.2

https://truckmanualshub.com/

Cab Washing and Polishing

To protect the finish of your new vehicle, follow these guidelines carefully:

- During the first 30 days, rinse your vehicle frequently with water. If the vehicle is dirty, use a mild liquid soap. Do not use detergent.
- During the first 30 days, do not use anything abrasive on your vehicle. Brushes, chemicals, and cleaners may scratch the finish.
- During the first 120 days, do not wax your vehicle.

To extend the life of your vehicle's finish, follow these guidelines:

- Avoid washing your vehicle in the hot sun.
- Always use water. After the cab is completely washed, dry it with a towel or chamois.
- Do not dust painted surfaces with a dry cloth, as this will scratch the paint.
- Do not remove ice or snow from a painted surface with a scraper of any sort.
- To prevent damage to the finish, wax it regularly. Before waxing, if the finish has become dull, remove oxidized paint using a cleaner specifically designed for this purpose. Remove all road tar and tree sap before waxing. Freightliner recommends that a quality brand of cleaner or cleaner-polish and polishing wax be used.
- Do not let diesel fuel or antifreeze stand on a painted surface. If either should occur, rinse the surface off with water.
- To prevent rust, have any nicks or other damage on the finish touched up as soon as possible.
- Park your vehicle in a sheltered area whenever possible.

Care of Fiberglass Parts

Wash unpainted fiberglass air fairings and shields monthly with a mild detergent, such as dishwashing liquid. Avoid strong alkaline cleansers.

Apply a wax specifically designed for fiberglass.

Care of Chrome Parts

To prevent rust, keep chrome parts clean and protected at all times. This is especially important during winter driving and in coastal areas where there is exposure to salt air.

When cleaning chrome parts, use clean water and a soft cloth or sponge. A mild detergent may also be used.

Sponge gently, then rinse. If necessary, use a non-abrasive chrome cleaner to remove stubborn rust or other material. Do not use steel wool.

To help protect the chrome after cleaning, apply a coat of polishing wax to the surface. Never use wax on parts that are exposed to high heat, such as exhaust pipes.

Care of Exterior Lights

Clean the headlight lenses by hand only, using a flannel cloth with mild, non-caustic soap or detergent, and water.

CAUTION

Do not use a power buffer, paper towels, chemical solvents, or abrasive cleaners on the headlight lens, all of which can remove the UV coating from the surface, and result in yellowing of the lens.

Dashboard Care

NOTICE

When cleaning the dashboard, instrument panel, or gauge lens covers, do not use Armor-All Protectant®, STP Son-of-a-Gun®, window cleaner, or other equivalent treatments. These cleaners contain vinyl plasticizers which can cause stress crazing in the interior plastic panels and can result in cracking of the panels. Some cleaners can also have an adverse effect on the clear plastic of instrument panels and gauge lens covers, resulting in a foggy or cloudy appearance. This type of damage is not covered by vehicle warranty.

To clean the dashboard, instrument panel, and gauge lens covers, use a cloth dampened with warm soapy water. Make certain to wring the cloth out well before

https://truckmanualshub.com/

cleaning, as excess water will damage the electrical components.

Vinyl Upholstery Cleaning

To prevent soiling, frequent vacuuming or light brushing to remove dust and dirt is recommended. Harsh cleaning agents can cause permanent damage to vinyl upholstery. To preserve the upholstery and prevent damage, carefully review the following sections for recommended cleaning procedures. Waxing or refinishing improves soil resistance and cleanability for all vinyls. Any hard wax, such as that used on automobiles, may be used.

Ordinary Dirt

Wash the upholstery with warm water and mild soap, such as saddle or oil soap. Apply soapy water to a large area and allow to soak for a few minutes, then rub briskly with a cloth to remove the dirt. This can be repeated several times, as necessary.

If dirt is deeply imbedded, use a soft bristle brush after applying the soap.

If dirt is extremely difficult to remove, wall-washing preparations normally found around the home can be used. Powdered cleaners, such as those used for sinks and tiles, are abrasive and must be used with caution as they can scratch the vinyl or give it a permanent dull appearance.

Chewing Gum

Harden the gum with an ice cube wrapped in a plastic bag, then scrape it off with a dull knife. Any remaining traces of gum can be removed with an all-purpose light oil (peanut butter will also work) and wiped off.

Tars, Asphalts, and Creosote

Each of these items stains vinyl after prolonged contact. They should be wiped off immediately and the area carefully cleaned, using a cloth dampened with naphtha.

Paint, Shoe Heel Marks

Paint should be removed immediately. Do not use paint remover or liquid-type brush cleaner on vinyl. An unprinted cloth, dampened with naphtha or turpentine may be used. Use care to prevent contact with parts of the upholstery that are not vinyl.

Sulfide Stains

Sulfide compounds, such as those found in eggs and some canned goods, can stain after prolonged contact with vinyl. These stains can be removed by placing a clean, unprinted piece of cloth over the spotted area and pouring a liberal amount of 6 percent hydrogen peroxide onto the cloth. Allow the saturated cloth to remain on the spot for 30 to 60 minutes. For stubborn spots, allow the hydrogen-peroxide saturated cloth to remain on the area overnight. Use caution to prevent the solution from seeping into the seams, or it will weaken the cotton thread.

Nail Polish and Nail Polish Remover

Prolonged contact with these substances causes permanent damage to vinyl. Careful blotting immediately after contact minimizes damage. Do not spread the liquid during removal.

Shoe Polish

Most shoe polishes contain dyes which penetrate vinyl and stain it permanently. Shoe polish should be wiped off as quickly as possible using naphtha or lighter fluid. If staining occurs, try the procedure used for sulfide stains.

Ball Point Ink

Ball point ink can sometimes be removed if rubbed immediately with a damp cloth, using water or rubbing alcohol. If this does not work, try the procedure used for sulfide stains.

Miscellaneous

If stains do not respond to any of the treatments described above, it is sometimes helpful to expose the vinyl to direct sunlight for up to 30 hours. Mustard, ball point ink, certain shoe polishes, and dyes often bleach out in direct sunlight, leaving the vinyl undamaged.

Velour Upholstery Cleaning

To prevent soiling, frequent vacuuming or light brushing to remove dust and dirt is recommended. Spot clean with a mild solvent or an upholstery shampoo, or the foam from a mild detergent. When using a solvent or a dry-cleaning product, follow the instructions carefully, and clean only in a well-ventilated area. Avoid any product that contains carbon tetrachloride or other toxic materials. With either method, pretest a small area before proceeding. Use a professional

https://truckmanualshub.com/

upholstery cleaning service when extensive cleaning is needed.

Grease and Oil-Based Stains

Dampen a small absorbent cloth with dry-cleaning solvent or spot remover. Apply the cloth carefully to the spot from the outer edge to the center. Pat and blot the spot with a clean, dry cloth. Repeat several times, as necessary, turning the cloths so that the stain does not redeposit on the fabric.

Sugar and Water-Based Stains

Apply water-based detergent or cleaner, working in circular motions. Pat and blot as dry as possible. Repeat, if necessary, before drying thoroughly.

Chewing Gum or Wax

Harden the gum or wax with an ice cube wrapped in a plastic bag, then scrape it off with a dull knife. Excess wax can be absorbed by placing a thick white blotter over the wax and heating with a warm (not hot) iron. Remove the remainder by using the procedure for grease and oil-based stains.

Mildew

Brush the dry fabric with a soft brush. Sponge with detergent, and blot. If the fabric is colorfast, dilute a teaspoon of bleach in one quart (one liter) of cool water. Apply with a swab, directly on the mildew stain. Dab repeatedly with clear, cool water, and blot dry.

https://truckmanualshub.com/

13

In an Emergency

Hazard Warning Lights 13.1
Fire Extinguisher 13.1
Emergency Kit, Optional 13.1
Towing 13.1
Emergency Starting With Jumper Cables 13.3
Fire in the Cab 13.4

https://truckmanualshub.com/

Hazard Warning Lights

The hazard warning light switch tab is located on the turn signal control lever. See **Fig. 13.1**.To operate the hazard lights, pull the tab out. All of the turn signal lights and both of the indicator lights on the control panel will flash.

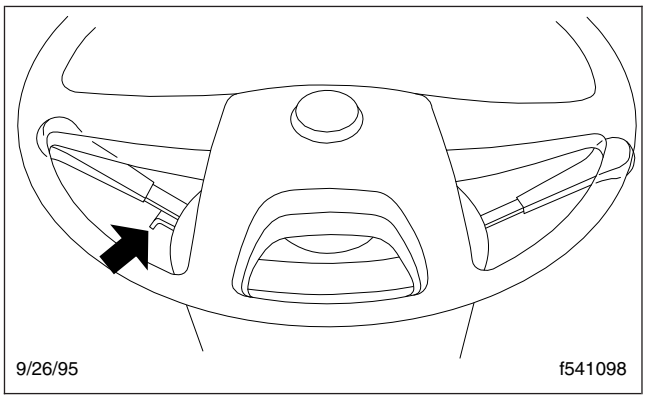

Fig. 13.1, Hazard Warning Light Switch Tab (left-hand drive shown)

To cancel the hazard warning lights, push the turn signal control lever either up or down, then return the lever to its neutral position.

Fire Extinguisher

A fire extinguisher is located in the cab by the driver's door.

Emergency Kit, Optional

An optional emergency kit package is located between the seats, at the front of the center console, if the vehicle does not have a sleeper compartment. If there is a sleeper compartment, the emergency kit is located elsewhere, depending on vehicle configuration. The package includes one or more of each of the following: first aid kit, a reflective vest, and a triangular reflector and flare kit.

If there is an emergency while driving, cautiously pull off the road, paying attention to other traffic. Turn on the hazard warning lights. Place the flares and reflector along the side of the road, to alert other drivers that an emergency situation exists.

⚠ WARNING

Use extreme care when placing flares in emergency situations that involve exposure to flammable substances such as fuel. An explosion or fire could occur causing serious personal injury.

Towing

When it is necessary to tow the vehicle, make sure the instructions below are closely followed to prevent damage to the vehicle.

⚠ WARNING

Do not tow an unbraked vehicle if the combined weight of both vehicles is more than the sum of the gross axle weight ratings (GAWR) of the towing vehicle. Otherwise brake capacity will be inadequate, which could result in personal injury or death.

NOTICE

If the vehicle is equipped with the AirLiner front suspension or the Hendrickson STEERTEK axle, it is required that tow straps be used when towing the vehicle. A tow strap should be connected to the tow hooks, if equipped, or wrapped around the front axle. Using a tow chain around the front axle will damage the axle.

Front Towing Hookup

1. Disconnect the battery ground cables.

NOTICE

Failure to remove the driveline(s) or the drive axle shafts when towing the vehicle with the rear wheels on the ground could result in damage to the transmission and other parts.

2. Remove the driveline and the interaxle driveline (if equipped), or the axle shafts for each axle that may touch the ground during the towing process.
3. For any axle shaft that has been removed, cover the ends of the hubs with metal plates or plywood cut to fit the axle opening, and drilled to fit the axle shaft studs. This prevents lubricant from leaking out and will keep contaminants from getting into and damaging the wheel bearings and axle lubricant.

   If the driveline(s) were removed, ensure the U-joint caps are secure so they will not come off.

https://truckmanualshub.com/

NOTICE

Failure to protect the frame rails from the chains could cause damage, leading to eventual frame failure.

4. On dual drive axles, if the vehicle is to be lifted and towed, chain the forward rear-axle assembly to the vehicle frame. Use protection to keep the chains from damaging the frame.
5. Remove the bumper extension and chrome bumper, if so equipped. Remove the bumper fairing, if so equipped.
6. On vehicles equipped with an air fairing, adjust the trim tab to the lowest position.

NOTICE

Do not pass a sling (for example, a rope or chain) from one tow hook to another to fasten for towing (see Fig. 13.2). Known as reeving, this practice is *not* permissible in most industrial applications of towing and hoisting. Reeving can overload the hooks and result in damage to the vehicle.

7. Attach the towing device. Due to the many variables that exist in towing, positioning the lifting and towing device is the sole responsibility of the towing-vehicle operator.
8. On vehicles equipped with an air fairing, measure the distance from the ground to the bumper, or from the ground to a frame bracket.
9. Lift the vehicle, and secure the safety chains. If extra towing clearance is needed, remove the front wheels.

WARNING

Failure to lower the vehicle could result in the air fairing striking an overhead obstruction, such as a bridge or overpass, and causing vehicle damage or personal injury.

10. On vehicles equipped with an air fairing, repeat the measurement taken in step 8. The difference between the two measurements must not exceed 14 inches (36 cm). If necessary, lower the vehicle.
11. Connect the clearance lights, taillights, and signal lights. Connect any special towing lights required by local regulations.

WARNING

Failure to chock the tires or connect the tow truck's air brake system before releasing the spring parking brakes could allow the disabled vehicle to suddenly roll. This could cause property damage or personal injury.

12. Chock the disabled vehicle's tires, and connect the towing vehicle's air brake system to the vehicle being towed. Then, release the spring parking brakes and remove the chocks.

Rear Towing Hookup

NOTICE

Using a rear towing hookup on a vehicle equipped with a roof fairing could cause damage to the cab structure.

If reverse towing at speeds above 45 mph (70 kph) is necessary, hold down the cab with tension straps looped over the cab shocks and under the frame rails. Failure to do so could allow the wind load to lift the cab unexpectedly, resulting in damage to the air springs and other components.

1. If the vehicle is equipped with cab air suspension, and reverse towing at speeds above 45 mph (70 kph) is necessary, hold down the cab as follows:
   - 1.1 Drain the air from the cab air springs.
   - 1.2 Loop a 2-inch (5-cm) ratchet-style tension strap (rated 2000 lb [900 kg] minimum work load) over the top of the cab shock and under the frame rail. Tighten the strap for a snug fit. If the cab is equipped with two or more shocks, restrain the aftmost shock on each side of the vehicle.
2. Place the front tires straight forward and secure the steering wheel in this position.
3. Disconnect the battery ground cables.

NOTICE

Failure to protect the frame rails from the chains could cause damage, leading to eventual frame failure.

https://truckmanualshub.com/

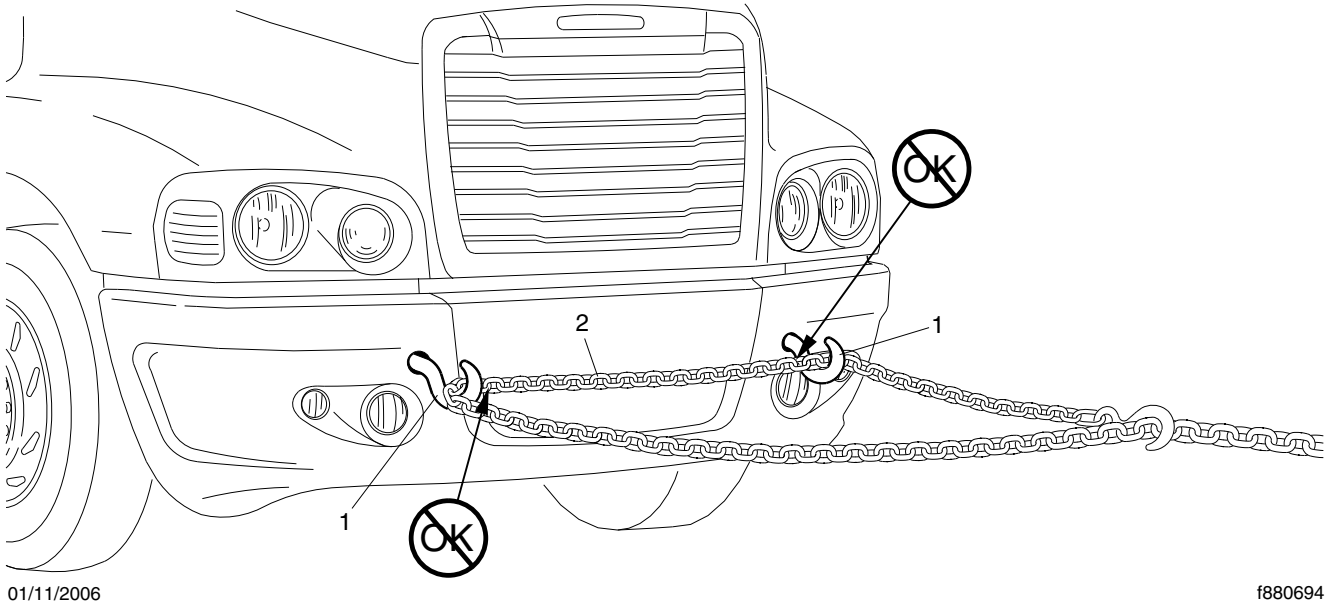

IMPORTANT: Do not reeve when towing.

1. Tow Hook
2. Chain

Fig. 13.2, Reeving

4. On dual drive axles, using protection to keep the chains from damaging the vehicle frame, chain the forward-rear drive axle to the frame.
5. Attach the towing device.

NOTE: Due to the many variables that exist in towing, positioning the lifting and towing device is the sole responsibility of the towing-vehicle operator.

6. Lift the vehicle and secure the safety chains. If extra clearance is needed, remove the bumper extension if equipped.
7. Connect the clearance lights, taillights, and signal lights. Also connect any special towing lights required by local regulations.

Emergency Starting With Jumper Cables

When using jumper cables, follow the instructions below.

⚠ WARNING

Batteries release explosive gas. Do not smoke when working around batteries. Put out all flames and remove all sources of sparks or intense heat in the vicinity of the battery. Do not allow the vehicles to touch each other. Do not lean over the batteries when making connections, and keep all other persons away from the batteries. Failure to follow these precautions could lead to severe personal injury as a result of an explosion or acid burns.

NOTICE

Make sure both starting systems have the same voltage outputs, and avoid making sparks. Otherwise the vehicle charging systems could be severely damaged. Also, do not attempt to charge isolated, deep-cycle batteries with jumper cables. Follow the battery manufacturer's instructions when charging deep-cycle batteries.

NOTE: On vehicles equipped with an optional jump-start post, attach the positive cable clamp to that post instead of to the battery.

1. Apply the parking brakes and turn off the lights and all other electrical loads.
2. Connect an end of one jumper cable to the positive terminal of the booster battery (or jump-start post, if equipped), and connect the other end of

https://truckmanualshub.com/

the cable to the positive terminal of the discharged battery (or jump-start post, if equipped). See **Fig. 13.3**.

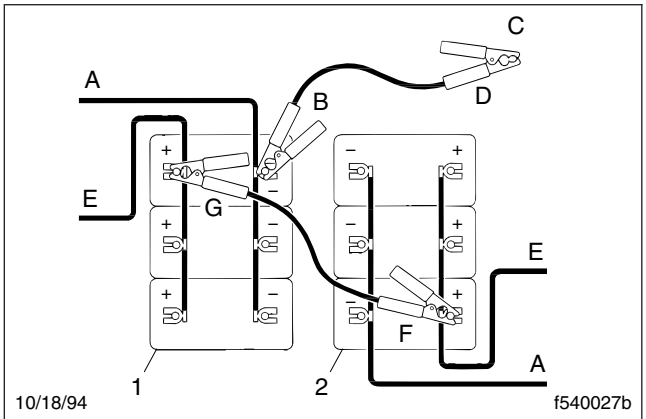

A. To Ground
B. Connect 3rd
C. To Frame (ground)
D. Connect Last
E. To Starter
F. Connect 2nd
G. Connect 1st
1. Booster Battery
2. Discharged Battery

Fig. 13.3, Jumper Connections

⚠ WARNING

Do the next step exactly as instructed and do not allow the clamps of one cable to touch the clamps of the other cable. Otherwise, a spark could occur near a battery, possibly resulting in severe personal injury from explosion or acid burns.

3. Connect one end of the second jumper cable to the negative terminal of the booster battery, and connect the other end of the cable to a ground at least 12 inches (300 mm) away from the batteries of the vehicle needing the start. The vehicle frame is usually a good ground. Do *not* connect the cable to or near the discharged batteries.
4. Start the engine of the vehicle with the booster batteries, and let the engine run a few minutes to charge the batteries of the other vehicle.
5. Attempt to start the engine of the vehicle with the batteries receiving the charge. Do not operate the starter longer than 30 seconds, and wait at least two minutes between starting attempts to allow the starter to cool.
6. When the engine starts, let it idle a few minutes.

⚠ WARNING

Do the next step exactly as instructed and do not allow the clamps of one cable to touch the clamps of the other cable. Otherwise, a spark could occur near a battery, possibly resulting in severe personal injury from explosion or acid burns.

7. Disconnect the grounded cable from the frame or other non-battery location, then disconnect the other end of the cable.
8. Disconnect the remaining cable from the newly charged battery (or jump-start post, if equipped) first, then disconnect the other end.

Fire in the Cab

The incidence of fire in heavy- and medium-duty trucks is rare, according to data from the National Highway Traffic Safety Administration. Federal Motor Vehicle Safety Standard #302 limits the flammability of specified materials used inside the cab, but despite this, most materials will burn. The cab of this vehicle contains urethane foam, which is flammable.

⚠ WARNING

Urethane foam is flammable! Do not allow any flames, sparks, or other heat sources such as cigarettes or light bulbs to contact urethane foam. Urethane foam in contact with such heat sources could cause a serious, rapid fire, which could result in death, severe burns, or gas poisoning, as well as damage to the vehicle.

In Case of a Cab Fire

As quickly as possible, bring the vehicle to a safe stop, apply the parking brake, turn off the ignition, and get out of the vehicle.

https://truckmanualshub.com/

Index

Subject — Page

A

Air Bag, Optional . . . 5.9
- Air Bag Safety Guidelines . . . 5.10

Allison Automatic Transmissions . . . 8.34
- General Information, Allison . . . 8.34
- Operation, Allison . . . 8.34

ASF Castloc II and Simplex Series Fifth Wheels . . . 10.5
- Fifth Wheel Locking and Unlocking . . . 10.7
- Fifth Wheel Lubrication . . . 10.10
- Fifth Wheel Slide Operation . . . 10.9
- General Information . . . 10.5

B

Back-of-Cab Grab Handles, Steps, and Deck Plate . . . 3.5
- Back-of-Cab Access Points (typical) . . . 3.5
- Exiting Back-of-Cab . . . 3.6

Baggage Compartment Doors . . . 3.4

Battery Box Cover . . . 3.6

Blend Air Heater and Air Conditioner System . . . 4.1
- Cab Climate Control Panel . . . 4.1
- Constant Discharge Temperature Control . . . 4.1
- Sleeper Climate Control Panel . . . 4.3

Brake System . . . 6.1
- Automatic Slack Adjusters . . . 6.6
- Brake System Operation . . . 6.2
- General Information . . . 6.1
- Meritor WABCO® Antilock Braking System (ABS) . . . 6.3
- Meritor WABCO® Electronic Braking System (EBS) . . . 6.5

C

Cab Amenities . . . 3.9
- Ash Tray and Cigar Lighter . . . 3.10
- Cup Holders . . . 3.9
- Dash Storage Bin . . . 3.10
- Footwell Lights . . . 3.11
- Glove Box . . . 3.10
- Map Holder . . . 3.10
- Overhead Lights . . . 3.11
- Waste Bin . . . 3.9

Cab Door Locks and Handles . . . 3.1

Cab Washing and Polishing . . . 12.1

Cab-to-Sleeper Access . . . 3.4

Canadian Motor Vehicle Safety Standard (CMVSS) Labels . . . 1.1

Care of Chrome Parts . . . 12.1

Care of Exterior Lights . . . 12.1

Care of Fiberglass Parts . . . 12.1

Circuit Breaker/Relay Panel . . . 3.4

Clutches . . . 7.22
- Clutch Operation . . . 7.22
- General Information . . . 7.22
- Lubrication . . . 7.24

Cold-Weather Operation—CAT, Cummins, DDE S60, M-B . . . 7.15
- Caterpillar . . . 7.15
- Cummins . . . 7.16
- DDE S60 . . . 7.17
- Mercedes-Benz . . . 7.17

Controls . . . 2.18
- Axle Switches . . . 2.18
- Brake Controls . . . 2.18
- Cruise Control Switches . . . 2.19
- Engine Fan Switch . . . 2.20
- Ignition Switch . . . 2.20
- Lighting Controls . . . 2.21
- PTO Switch . . . 2.23
- Steering Column Tilt/ Telescope Control . . . 2.23
- Suspension/Trailer Connection Controls . . . 2.24
- Windshield Wiper/Washer Controls . . . 2.24

D

Daily Pretrip Inspection and Maintenance . . . 11.2
- Cab Inspection . . . 11.7
- Engine Compartment Inspection . . . 11.6
- Saddle Tank Areas Inspection . . . 11.5
- Suspension and Slack Adjuster Inspection . . . 11.3
- Wheel and Tire Inspection . . . 11.3

Dashboard Care . . . 12.1

DD15 Heavy-Duty Engine . . . 7.3
- DDEC VI Driving Tips . . . 7.3
- Engine Protection . . . 7.3

Door Windows . . . 3.4

Driver Message Center . . . 2.5
- ICU2M . . . 2.10
- ICU4M . . . 2.6

https://truckmanualshub.com/

Subject Page

E

Eaton 2-Speed Tandem Axles 9.3
Dual Range 2-Speed Tandem Axle Operation with Multispeed Transmissions 9.3
Eaton Fuller AutoSelect Automated Transmissions 8.26
General Information, AutoSelect 8.26
Operation, AutoSelect 8.27
Eaton Fuller AutoShift Automated Transmissions 8.1
General Information, AutoShift 8.1
Operation, AutoShift (without SmartShift) 8.5
Operation, SmartShift With Eaton Fuller AutoShift 8.3
Eaton Fuller Deep-Reduction Transmissions 8.20
General Information, Deep Reduction 8.20
Operation, Deep Reduction 8.20
Eaton Fuller Range-Shift Transmissions 8.15
General Information, Eaton Range-Shift 8.15
Operation, Eaton Range-Shift 8.15
Eaton Fuller Splitter and Range-Shift Transmissions 8.17
General Information, Eaton Splitter and Range-Shift 8.17
Operation, Eaton Splitter and Range-Shift 8.18
Eaton Fuller Top 2 and Lightning Semi-Automated Transmissions 8.29
General Information, Top 2 and Lightning 8.29
Operation, Top 2/Lightning 8.29
Eaton Interaxle Differential Lockout Operation 9.3
Eaton Single Reduction Axles With Controlled Traction Differential 9.2
Eaton UltraShift DM 8.6
General Information, UltraShift™ DM 8.6
Operation, UltraShift DM 8.7
Ultrashift Diagnostics 8.10
Emergency Kit, Optional 13.1
Emergency Starting With Jumper Cables 13.3

Subject Page

Engine Braking System—CAT, Cummins, DDE S60, M-B 7.19
Constant-Throttle Valves (MBE4000 only) 7.21
Jacobs Engine Brake 7.19
Turbo Brake (MBE4000 only) 7.20
Engine Break-In—CAT, Cummins, DDE S60, M-B 7.10
Caterpillar 7.10
Cummins 7.10
DDE S60 . . . . . 7.10
Mercedes-Benz 7.10
Engine Operation—CAT, Cummins, DDE S60, M-B 7.10
Caterpillar 7.11
Cummins 7.12
DDE S60 . . . . . 7.12
Mercedes-Benz 7.14
Engine Shutdown—CAT, Cummins, DDE S60, M-B 7.18
Caterpillar 7.18
Cummins 7.18
DDE S60 . . . . . 7.19
Mercedes-Benz 7.19
Engine Starting—CAT, Cummins, DDE S60, M-B 7.5
Cold-Weather Starting 7.8
Normal Starting 7.5
EPA Emission Control 1.2
EPA07 Exhaust Emissions Regulations 1.2
Vehicle Noise Emission Control Label 1.2
EPA07 Aftertreatment System (ATS) 7.1
Exhaust Braking System—CAT, Cummins, DDE S60, M-B 7.21
General Information 7.21

F

Federal Motor Vehicle Safety Standard (FMVSS) Labels 1.1
Fire Extinguisher 13.1
Fire in the Cab 13.4
In Case of a Cab Fire 13.4
Fontaine Fifth Wheels 10.10
Fifth Wheel Locking Operation 10.12
Fifth Wheel Lubrication 10.15
Fifth Wheel Slide Operation 10.13
General Information 10.10
Freightliner SmartShift Shift Control 8.1

https://truckmanualshub.com/

Index

Subject **Page**

General Information, SmartShift™ 8.1

G

Grab Handles and Access Steps 3.1
- Entering the Driver's Side for Right-Hand-Drive Vehicles 3.3
- Entering the Driver's Side 3.2
- Entering the Passenger's Side for Right-Hand-Drive Vehicles 3.3
- Entering the Passenger's Side 3.2
- Exiting the Driver's Side for Right-Hand-Drive Vehicles 3.3
- Exiting the Driver's Side 3.2
- Exiting the Passenger's Side for Right-Hand-Drive Vehicles 3.4
- Exiting the Passenger's Side 3.3

H

Hazard Warning Lights 13.1
High-Altitude Operation—CAT, Cummins, DDE S60, M-B 7.17
Holland Fifth Wheels 10.1
- Fifth Wheel Locking Operation 10.2
- Fifth Wheel Lubrication 10.5
- Fifth Wheel Slide Operation 10.4
- General Information 10.1

Holland Trailer Coupling 10.16
- General Information 10.16
- Operation 10.17

Hood Tilting 3.6
- To Return the Hood 3.6
- To Tilt the Hood 3.6

I

Ignition and Lock Key 3.1
Instrumentation Control Units 2.1
- Ignition Sequence 2.2

Instruments 2.13
- Air Intake Restriction Gauge 2.13
- Ammeter 2.14
- Application Air Pressure Gauge 2.14
- Coolant Temperature Gauge 2.14
- Drive Axle Oil Temperature Gauges 2.16

Subject **Page**

- Engine Oil Pressure Gauge 2.16
- Engine Oil Temperature Gauge 2.16
- Fuel Gauge 2.16
- Primary and Secondary Air Pressure Gauges 2.17
- Pyrometer 2.17
- Speedometer 2.17
- Tachometer 2.17
- Transmission Fluid Temperature Gauge 2.17
- Turbocharger Boost Pressure Gauge 2.17
- Voltmeter 2.17

K

Keyless Security System, Optional 3.7
- Fob Battery Replacement 3.9
- Fob Programming 3.8
- General Information 3.7
- How It Works 3.7

L

Lane Departure Warning Controls 2.36

M

Meritor Drive Axles With Main Differential Lock 9.1
Meritor Engine Synchro Shift (ESS) Automated Models 8.31
- General Information, ESS 8.31
- Operation, ESS 8.31

Meritor Interaxle Differential Lockout Operation 9.2
Meritor Main Differential Lock Operation 9.1
Meritor Range-Shift Transmissions 8.23
- General Information, Meritor Range-Shift 8.23
- Operation, Meritor Range-Shift 8.23

Meritor Single Drive Axles With Traction Equalizer 9.1
Meritor Splitter and Range-Shift Transmissions 8.25
- General Information, Meritor Splitter and Range-Shift 8.25
- Operation, Meritor Splitter and Range-Shift 8.25

https://truckmanualshub.com/

Subject	Page
Meritor SureShift	8.11
Operation, Meritor SureShift	8.11
Meritor Tandem Drive Axles With Interaxle Differential	9.2
Meritor WABCO® Antilock Braking System	2.29
Automatic Traction Control	2.30
Trailer ABS Compatibility	2.30
Monthly Post-Trip Inspection and Maintenance	11.11
Brake Component Inspection	11.11
Engine Compartment Inspection and Adjustments	11.12
Saddle Tank Areas Inspection	11.11

P

Parked HVAC	4.8
Operation	4.8
Overview	4.8
Premier Trailer Couplings	10.15
General Information	10.15
Operation	10.16
Pretrip and Post-Trip Inspection Checklists	11.1
Checklists	11.1
Fluids Added	11.2
Periodic Inspections and Maintenance, General Information	11.1

R

Roll Stability Advisor and Control System	2.25
Hard-Braking Advisor	2.25
Roll Stability Advisor	2.25
Roll Stability Control	2.25
Trip/Leg Totals	2.26

S

Seat Belts and Tether Belts	5.6
General Information	5.6
Seat Belt Inspection	5.6
Seat Belt Operation	5.6
Seats	5.1
ABTS Seat	5.5
Dura-Form Fleetcruiser Seat	5.4
EzyRider® Seat	5.2
Freightliner/Bostrom Seat	5.3
General Information	5.1
National 2000 Series Seat	5.4
Sleeper Bunk Latches	3.4
Sleeper Compartment Restraints	5.8
Bunk Restraint Adjustment	5.8
Bunk Restraint Operation	5.9
General Information	5.8
Sleeper Compartment Vents	3.4
Sleeper Door	3.4
SPACE System, Optional	5.10
Safety Guidelines for the SPACE System	5.11
Starting After Extended Shutdown or Oil Change—CAT, Cummins, DDE S60, M-B	7.9
Steering System	6.1
General Information	6.1
Power Steering System	6.1
Supplemental Restraint System, Optional	5.9

T

Tire and Rim Labels	1.2
Towing	13.1
Front Towing Hookup	13.1
Rear Towing Hookup	13.2

V

Vehicle Specification Decal	1.1
Velour Upholstery Cleaning	12.2
Chewing Gum or Wax	12.3
Grease and Oil-Based Stains	12.3
Mildew	12.3
Sugar and Water-Based Stains	12.3
Vinyl Upholstery Cleaning	12.2
Ball Point Ink	12.2
Chewing Gum	12.2
Miscellaneous	12.2
Nail Polish and Nail Polish Remover	12.2
Ordinary Dirt	12.2
Paint, Shoe Heel Marks	12.2
Shoe Polish	12.2
Sulfide Stains	12.2
Tars, Asphalts, and Creosote	12.2
Voltage and Fuel Efficiency Controls	2.27
Cab Load Disconnect Switch	2.27

https://truckmanualshub.com/

Index

Subject **Page**

Idle Shutdown Timer 2.27
Low Voltage Disconnect Feature 2.27
Optimized Idle® 2.27
VORAD VS-400 System 2.31
Collision Warning System 2.33
Driver Interface Unit 2.31
Failure Display Mode/Fault Codes 2.36
Maintenance 2.36
Side Object Detection 2.35
SmartCruise 2.35
Special Road Situations 2.35

W

Warning and Indicator Lights 2.2
Engine Protection System 2.2
Water-Valve-Controlled Heater and Air Conditioner System 4.4
Air Conditioning, Sleeper Heater and Air Conditioner 4.8
Air Conditioning 4.6
Defogging and Defrosting Using Fresh Air 4.5
Fresh Air 4.7
General Information 4.4
Heating, Sleeper Heater and Air Conditioner 4.7
Heating 4.6
Weekly Post-Trip Inspection and Maintenance 11.9
Engine Compartment Inspection 11.9
Windshield Washer Reservoir 3.11

Z

ZF Meritor FreedomLine Automated Transmissions 8.13
General Information, FreedomLine 8.13
Operation, FreedomLine 8.13