https://truckmanualshub.com/

PARTS MANUAL

H2.0FT-H3.5FT (L177)

CUSTOMER EDITION

HYSTER

1599951
06/2005

©2005 Hyster Company

https://truckmanualshub.com/

SECTIONS

1	FRAME
2	ENGINES
3	FUEL SYSTEM
4	ELECTRICAL SYSTEM
5	TRANSMISSION
6	DRIVE AXLE
7	STEERING SYSTEM
8	BRAKE SYSTEM
9	HYDRAULIC SYSTEM
10	MAST-TWO STAGE LIMITED FREE-LIFT
11	MAST-TWO STAGE FULL FREE-LIFT
12	MAST-THREE STAGE FULL FREE-LIFT
13	OPTIONS
14	NUMERICAL INDEX

This Parts Manual is divided into 14 major sections which are listed above. Quick reference to these sections can be made by placing the right thumb on the tab of the desired section, bending the book back and thumbing the pages to the corresponding tab.

https://truckmanualshub.com/

1 FRAME

https://truckmanualshub.com/

SECTION 1
FRAME

DESCRIPTION **PAGE**

CAB
- FRAME AND ATTACHING PARTS 1-28
- INTERIOR PANELS 1-26
- LH DOOR 1-20
- RH DOOR AND HEATER ASSEMBLY 1-22
- WINDOWS AND WINDOW WIPER SYSTEM 1-24

CAB AND ATTACHING PARTS 1-18
COUNTERWEIGHTS 1-14
COWL MOUNT 1-12
FENDER EXTENSIONS 1-10
FLOORPLATES AND COVERS 1-6
FORKS 1-48
- OPTIONAL 1-49

HOOD ASSEMBLY 1-2
LABELS
- CONTROL LEVER 1-42
- ELECTRONIC LEVER 1-44
- EXTERIOR 1-38
- INTERIOR 1-40
- JOYSTICK 1-46

LOAD BACK REST EXTENSION 1-50
OVERHEAD GUARD 1-16
SEAT
- FULL SUSPENSION
  - WITH AND WITHOUT ELECTRONIC CONTROLS 1-30
- NON-SUSPENSION
  - WITHOUT ELECTRONIC CONTROLS 1-34
- SEMI-SUSPENSION
  - WITH AND WITHOUT ELECTRONIC CONTROLS 1-32
- SWIVEL
  - WITH AND WITHOUT ELECTRONIC CONTROLS 1-36

©2005 HYSTER COMPANY

HOOD ASSEMBLY (Figure 1-1)

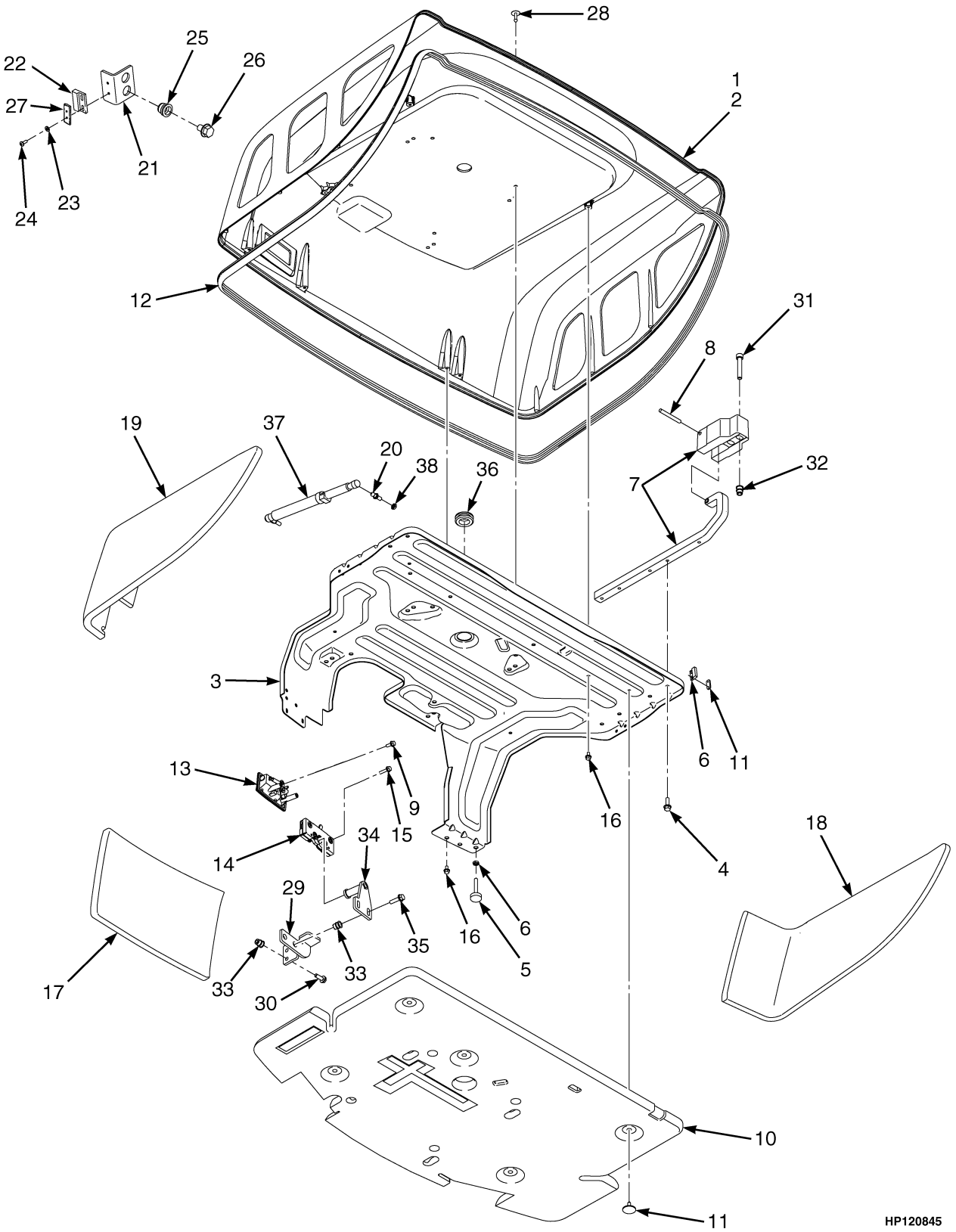

©2005 HYSTER COMPANY

https://truckmanualshub.com/

HOOD ASSEMBLY

ITEM		PART NO.	DESCRIPTION	QTY
1	b	1589667	Hood Assembly (Low Noise)	1
1	c	1543994	Hood Assembly (Standard)	1
1		1594927	Hood Assembly (Vented)	1
1	ac	1603215	Hood Assembly (Non-Vented)	1
1	ab	1605122	Hood Assembly (Low Noise)	1
1	a	1603216	Hood Assembly (Vented)	1
2	b	1590149	Hood (Low Noise)	1
2	c	1543995	Hood (Standard)	1
2		1594926	Hood (Vented)	1
2	ac	1603212	Hood (Non-Vented)	1
2	ab	1605121	Hood (Low Noise)	1
2	a	1603214	Hood (Vented)	1
3		1544846	Reinforcement Assembly	1
4		1510113	Capscrew	8
5		1528906	Stop Screw	2
6		329069	Nut	4
7		1548618	Hinge Assembly	2
8		302380	Pin	2
9		1527876	Capscrew	2
10		1545387	Hood Liner	1
11		1304971	Fastener	4
12		1580652	Seal	1
13		1582287	Handle	1
14		1582286	Latch Rotor	1
15		1527878	Capscrew	4
16		1534417	Capscrew	6
17	b	1552010	Liner (Front Panel) (Low Noise)	1
18	b	1552011	Liner (LH Panel) (Low Noise)	1
19	b	1552012	Liner (RH Panel) (Low Noise)	1
20	c	1563369	Ball Stud	4
20	b	1563369	Ball Stud	3
20	b	1606659	Ball Stud	1
21		1527228	Bracket (Hood Switch)	1
22		1565545	Magnet (Reed Switch)	1
23		320152	Washer	4
24		302010	Screw	4
25		1531557	Insert	2
26		1583611	Capscrew	2
27		1585765	Plate	1
28		1347045	Fastener	8
29		1583672	Bumper Rest	1
30		1583611	Capscrew	2
31		296032	Capscrew	4
32		1530244	Insert	4
33		1530243	Insert	4
34		1584617	Striker Bolt	1
35		1527881	Capscrew	2
36		1561015	Grommet	1
37	c	1563497	Gas Spring	2
37	b	1560647	Gas Spring (LH)	1
37	b	1563836	Gas Spring (RH)	1

https://truckmanualshub.com/

HOOD ASSEMBLY

ITEM	PART NO.	DESCRIPTION	QTY
38	329069	Nut	2
	a 1585592	Plug (Not Illustrated)	1

FOOTNOTES:
a Use With Swivel Seat
b With Cab
c With Overhead Guard

©2005 HYSTER COMPANY

FLOORPLATES AND COVERS (Figure 1-2)

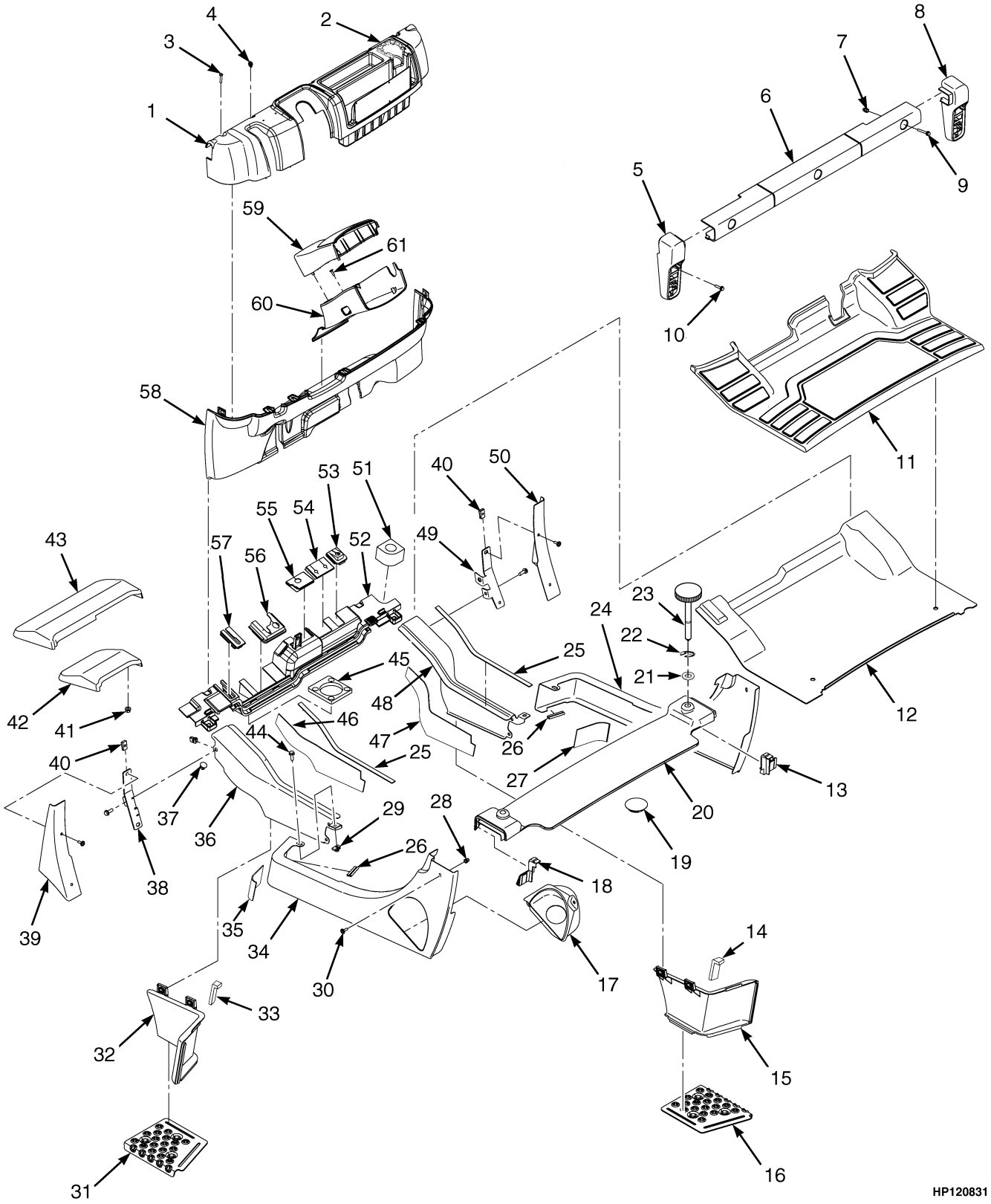

©2005 HYSTER COMPANY

FLOORPLATES AND COVERS

KEY:
A: With Cab
B: With Overhead Guard

ITEM	PART NO.	DESCRIPTION	QTY A	QTY B
1	1517420	Dash Assembly (Manual Valve)	1	1
1	1517421	Dash Assembly (Electronic Valve)	1	1
2	2070975	Cup Holder	1	1
3	2071261	Capscrew	5	5
4	2065667	Clip	6	6
5	2056822	Bracket (Tail Light) (LH)	1	1
6	2069203	Cover (Rear)	..	1
7	1531001	Insert	..	8
7	1531001	Insert	5	..
8	2056823	Bracket (Tail Light) (RH)	1	1
9	1540643	Capscrew	3	3
10	1586495	Capscrew	4	4
11	2071262	Floor Mat	1	1
12	1573774	Floor Plate	1	1
13	2070274	Seal Panel (RH)	1	1
14	1596624	Seal (RH)	1	1
15	1574277	Step Panel (RH)	1	1
16	1544415	Plate (RH)	1	1
17	1517656	Splash Shield (Diesel)	1	1
18	2070273	Seal Panel (LH)	1	1
19	2021395	Cap (LPG)	1	1
20	1547466	Radiator Cover Assembly	..	1
20	1547467	Seal (LH)	..	1
20	1547468	Seal (RH)	..	1
21	320157	Washer	..	2
22	353206	Snap Ring	..	2
23	1520970	Screw	..	2
24	1527946	Rear Panel (RH)	1	1
25	1564529	Seal	2	2
26	1582072	Trim Seal	2	2
27	1597058	Damping Sheet (RH Rear Panel)	1	1
28	1609707	Sound Liner	1	..
29	1609709	Sound Liner	1	..
30	1609708	Sound Liner	1	..
31	1609706	Sound Liner	1	..
32	1531558	Insert	6	6
33	1480237	Clip Nut (Diesel)	23	23
33	1480237	Clip Nut (LPG)	21	21
34	1530019	Screw	6	6
35	1544413	Plate (LH)	1	1
36	1574275	Step Panel (LH)	1	1
37	1596625	Seal (LH)	1	1
38	1527939	Panel (Rear) (LH, Diesel)	1	1
38	1527940	Panel (Rear) (LH, LPG)	1	1
39	1597052	Damping Sheet (LH Rear Panel)	1	1
40	1540860	Front Panel (LH)	1	1

https://truckmanualshub.com/

FLOORPLATES AND COVERS

ITEM	PART NO.	DESCRIPTION	QTY A	QTY B
41	1581079	Plug	4	4
42	1590145	Bracket (LH) (Fender Cover)	1	1
43	1563881	Cover (LH) (Fender)	1	1
44	1350215	Nut (Foldover)	4	4
45	1544153	Lock Nut (Standard Tread, Wide Tread)	4	4
45	1544153	Lock Nut (Dual Tread)	6	6
46	2069008	Mud Guard (Standard Tread)	2	2
46	2069545	Mud Guard (RH, Wide Tread)	1	1
46	2069954	Mud Guard (RH, Dual Tread)	1	1
47	2069544	Mud Guard (LH, Wide Tread)	1	1
47	2069550	Mud Guard (LH, Dual Tread)	1	1
48	1583611	Capscrew (Diesel)	23	23
48	1583611	Capscrew (LPG)	21	21
49	1579837	Seal (Wet Brake)	1	1
49	1580093	Seal (Dry Brake)	1	1
50	1597051	Damping Sheet (LH, Front Panel)	1	1
51	1597070	Damping Sheet (RH, Front Panel)	1	1
52	1540870	Front Panel (RH)	1	1
53	1590147	Bracket (RH) (Fender Cover)	1	1
54	1563883	Cover (RH) (Fender)	1	1
55	1530135	Grommet (RH)	1	1
56	1563840	Seal Plate Assembly	1	1
56	1529427	Seal	1	1
57	2069464	Seal	1	..
58	2065799	Seal (Manual Valve)	1	..
58	2065826	Seal (Electronic Valve)	1	..
59	2065798	Seal (Manual Valve)	1	..
59	2065827	Seal (Electronic Valve)	1	..
60	2065797	Seal	1	..
61	2065796	Seal	1	..
62	2071595	Kick Panel (Single Brake Pedal)	1	1
63	2065668	Cover (Steering Column) (Upper)	1	1
63	2071596	Kick Panel (Dual Brake Pedal)	1	1
64	2065666	Cover (Steering Column) (Lower)	1	1
65	2027655	Screw	2	2

See Service Manual for service procedures.
©2005 HYSTER COMPANY

https://truckmanualshub.com/

FENDER EXTENSIONS (Figure 1-3)

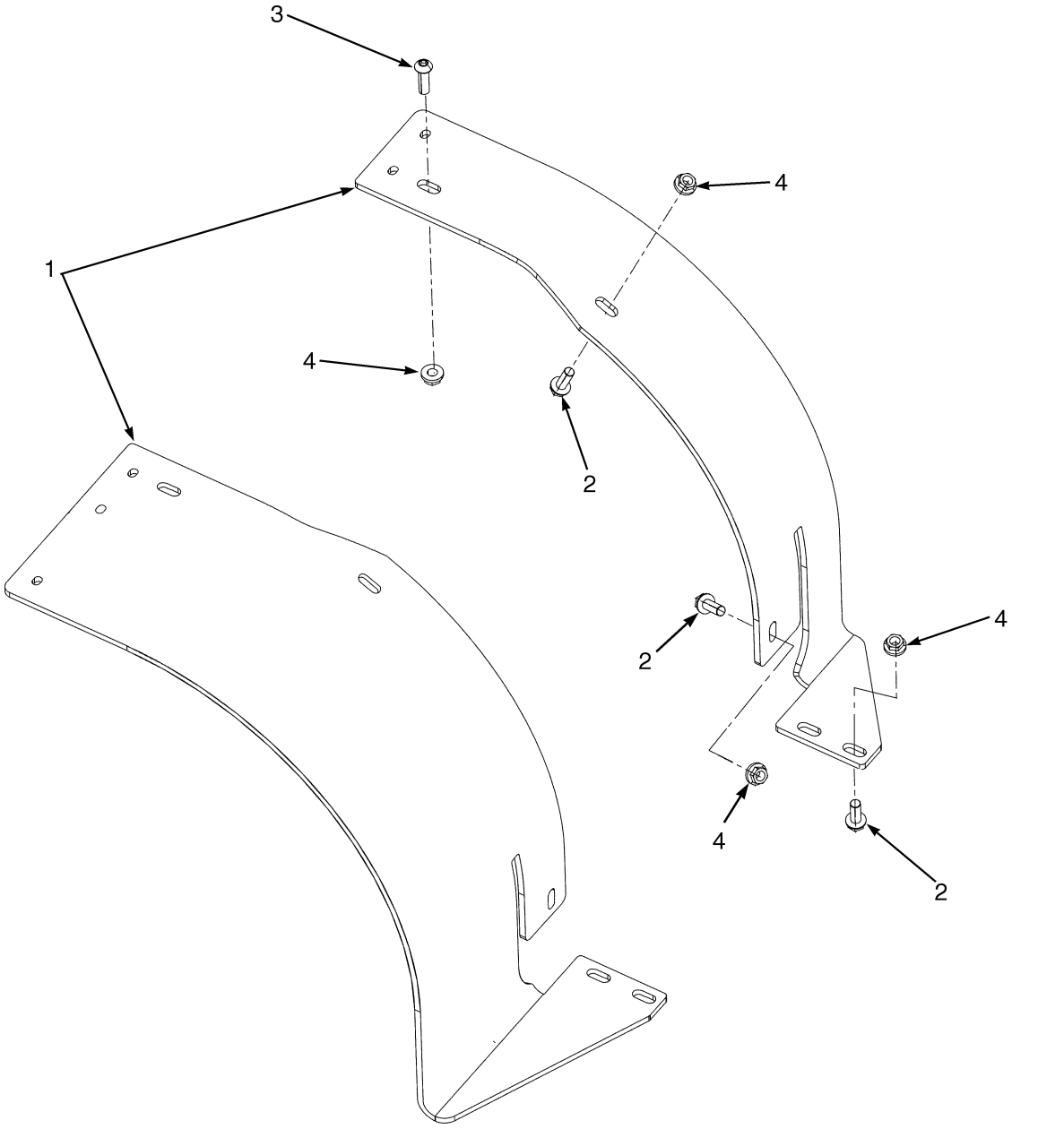

©2005 HYSTER COMPANY

https://truckmanualshub.com/

FENDER EXTENSIONS

ITEM	PART NO.	DESCRIPTION	QTY
1	1562359	Fender (Wide Width) (LH)	1
1	1562361	Fender (Dual) (LH)	1
1	1562360	Fender (Wide Width) (RH)	1
1	1562362	Fender (Dual) (RH)	1
2	1586630	Capscrew	8
3	2076289	Capscrew	2
4	1586432	Nut	10

https://truckmanualshub.com/

COWL MOUNT (Figure 1-4)

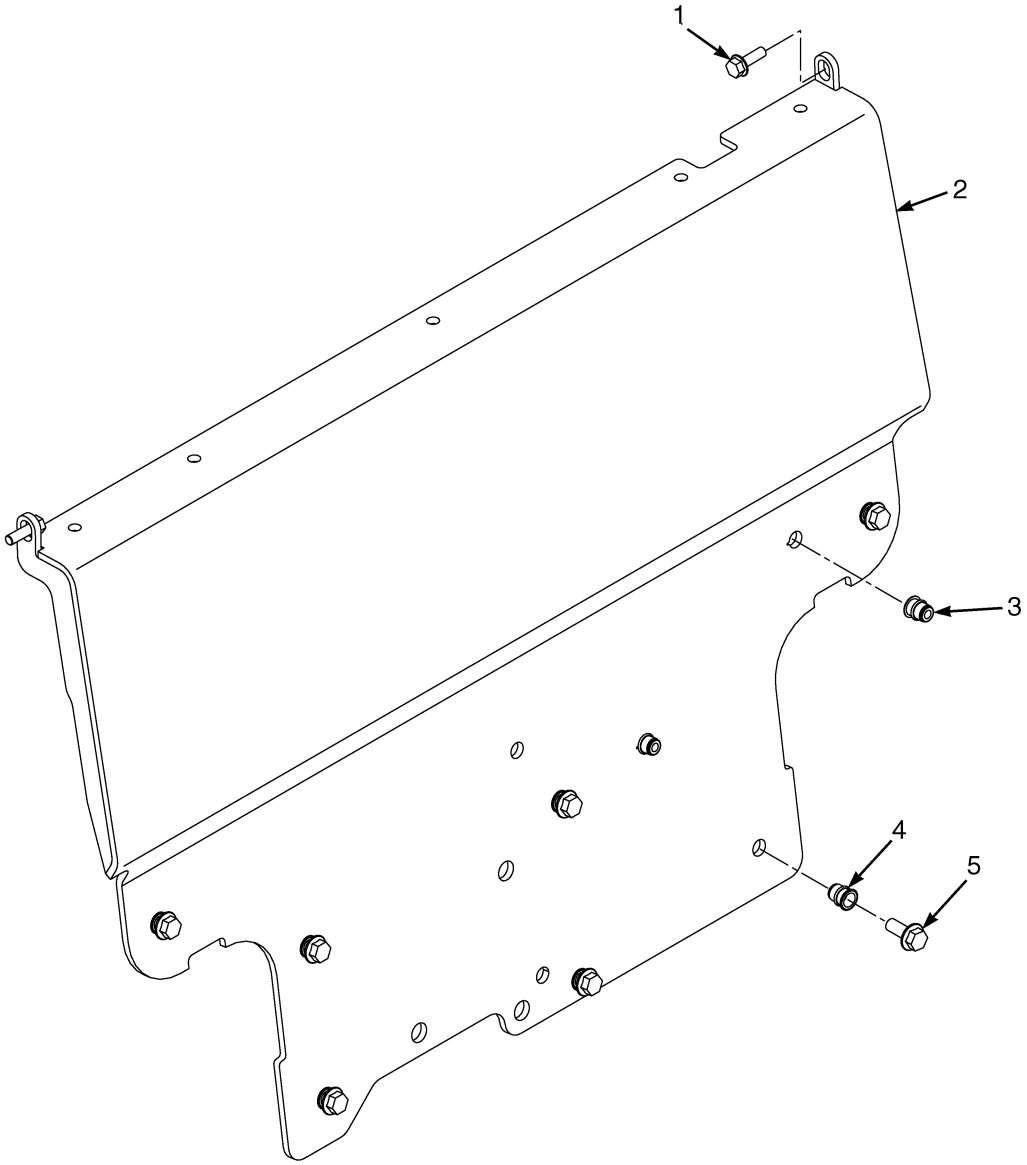

HP120730

ITEM	PART NO.	DESCRIPTION	QTY
1	1583611	Capscrew	2
2	1586815	Cowl	1
3	1530243	Insert	2
4	1530244	Insert	7
5	1605990	Capscrew	7

See Service Manual for service procedures.
©2005 HYSTER COMPANY

COUNTERWEIGHTS (Figure 1-5)

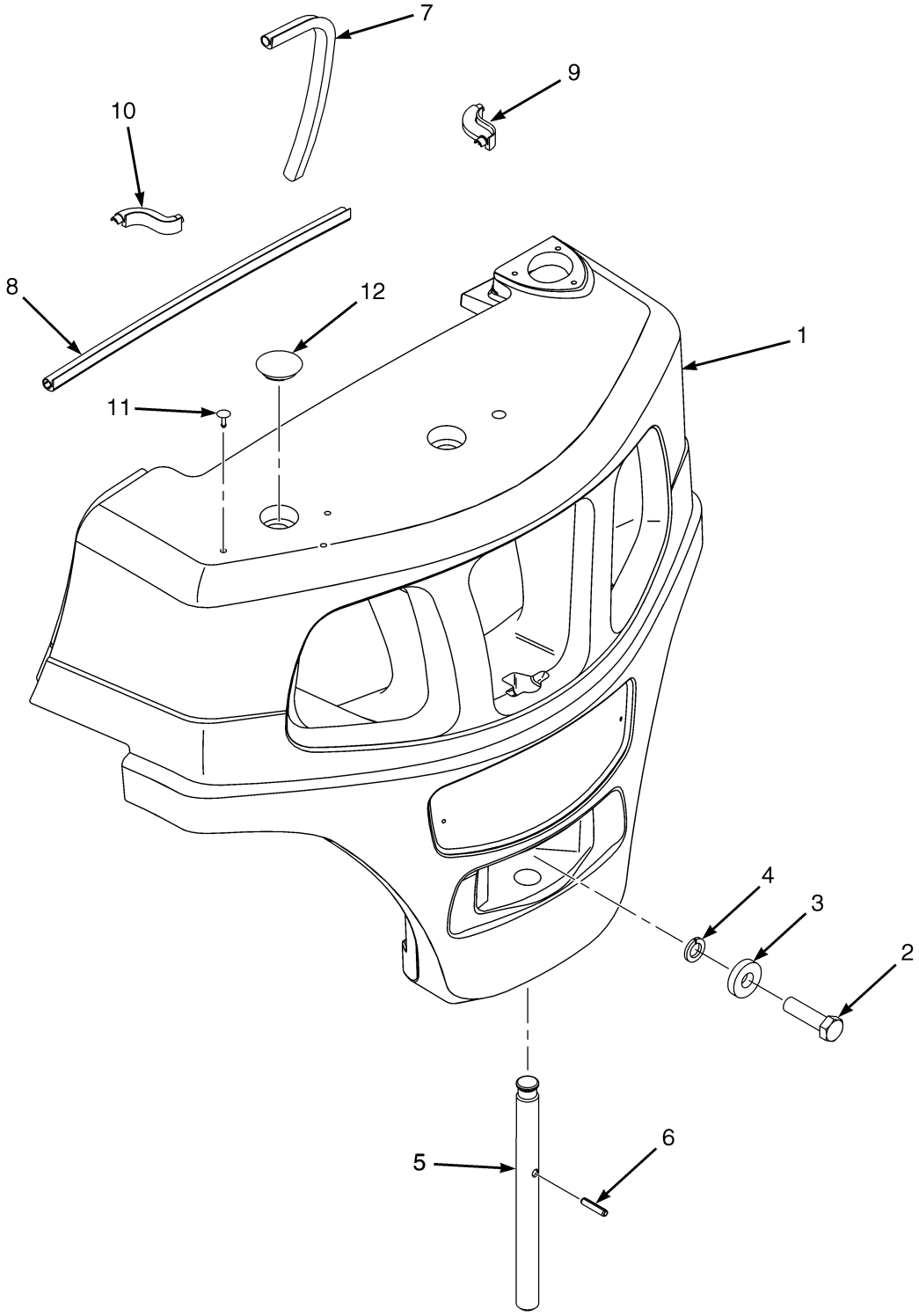

HP120833

©2005 HYSTER COMPANY

https://truckmanualshub.com/

COUNTERWEIGHTS

ITEM		PART NO.	DESCRIPTION	QTY
1		1533597	Counterweight (H2.0FT)	1
1		1533598	Counterweight (H2.5FT)	1
1		1533599	Counterweight (H3.0FT)	1
1		1533601	Counterweight (H3.5FT)	1
2	**a**	292608	Capscrew (101,6 mm)	1
2	**b**	292613	Capscrew (152,4 mm)	1
3		1375214	Washer	1
4		292689	Lockwasher	1
5		1533596	Pin	1
6		302491	Pin	1
7		1590279	Seal (Counterweight)	1
8		1590280	Seal (Counterweight) (Top)	1
9		1590152	Seal (RH)	1
10		1590153	Seal (LH)	1
11		1347045	Fastener	4
12		2021395	Cap	2

FOOTNOTES:

a H2.0FT

b H2.5-3.5FT

https://truckmanualshub.com/

OVERHEAD GUARD (Figure 1-6)

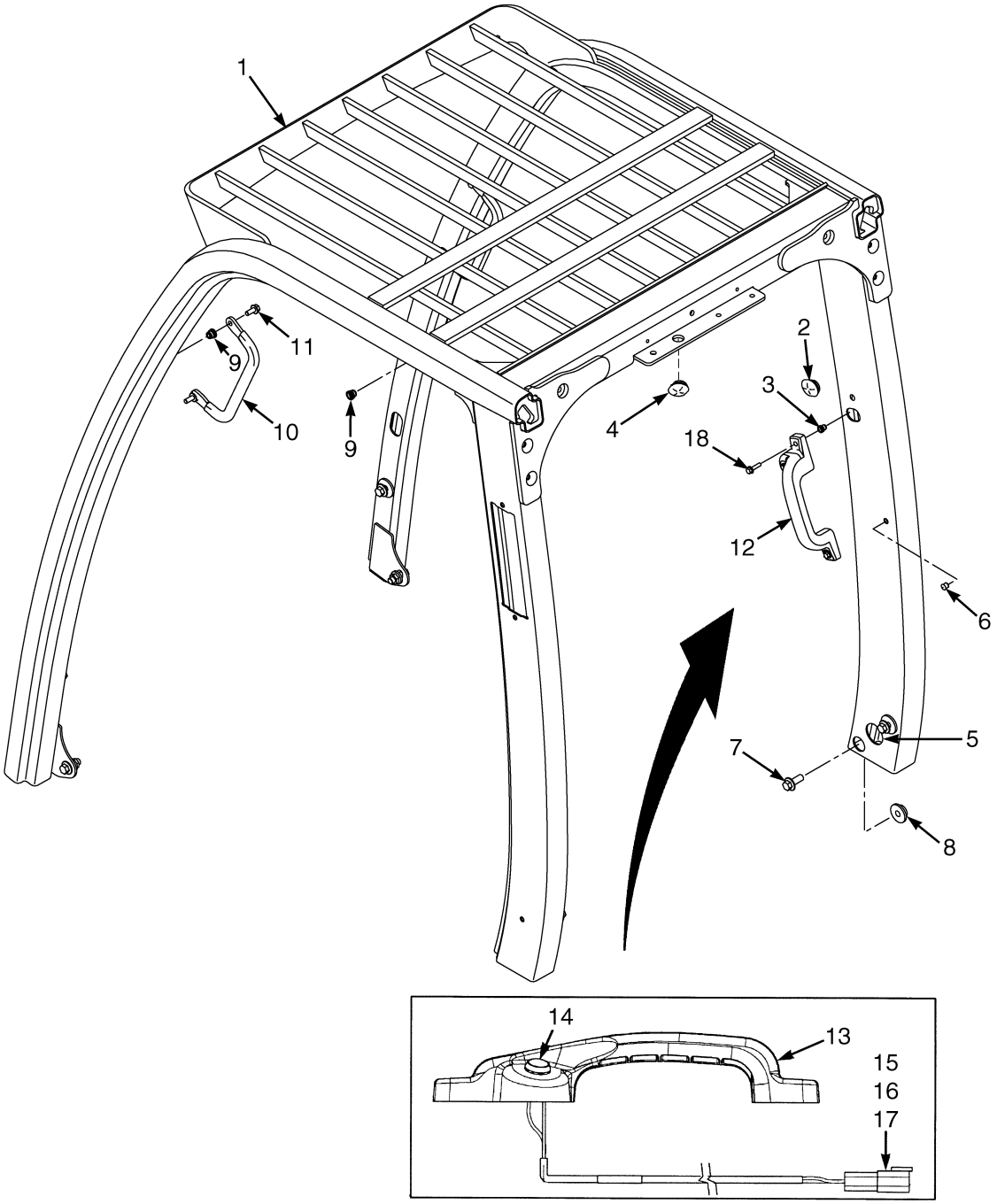

©2005 HYSTER COMPANY

https://truckmanualshub.com/

OVERHEAD GUARD

ITEM	PART NO.	DESCRIPTION	QTY
1	1556574	Overhead Guard (High)	1
1	1556713	Overhead Guard (Low)	1
2	1558219	Grommet	3
3	1531558	Insert	2
4	1560671	Grommet	1
5	1581654	Grommet	1
6	1494888	Plug	2
7	1528889	Capscrew	8
8	1528888	Nut	2
9	1531557	Insert	4
10	1536813	Handle (Grab)	1
11	1583611	Capscrew	2
12	2070223	Handle Assembly (RH, Rear)	1
13	2069454	Handle	1
14	1566726	Switch (Horn)	1
15	1493465	Connector	1
16	1330414	Secondary Lock	1
17	1330437	Terminal (Pin)	2
18	1586495	Capscrew	2

https://truckmanualshub.com/

CAB AND ATTACHING PARTS (Figure 1-7)

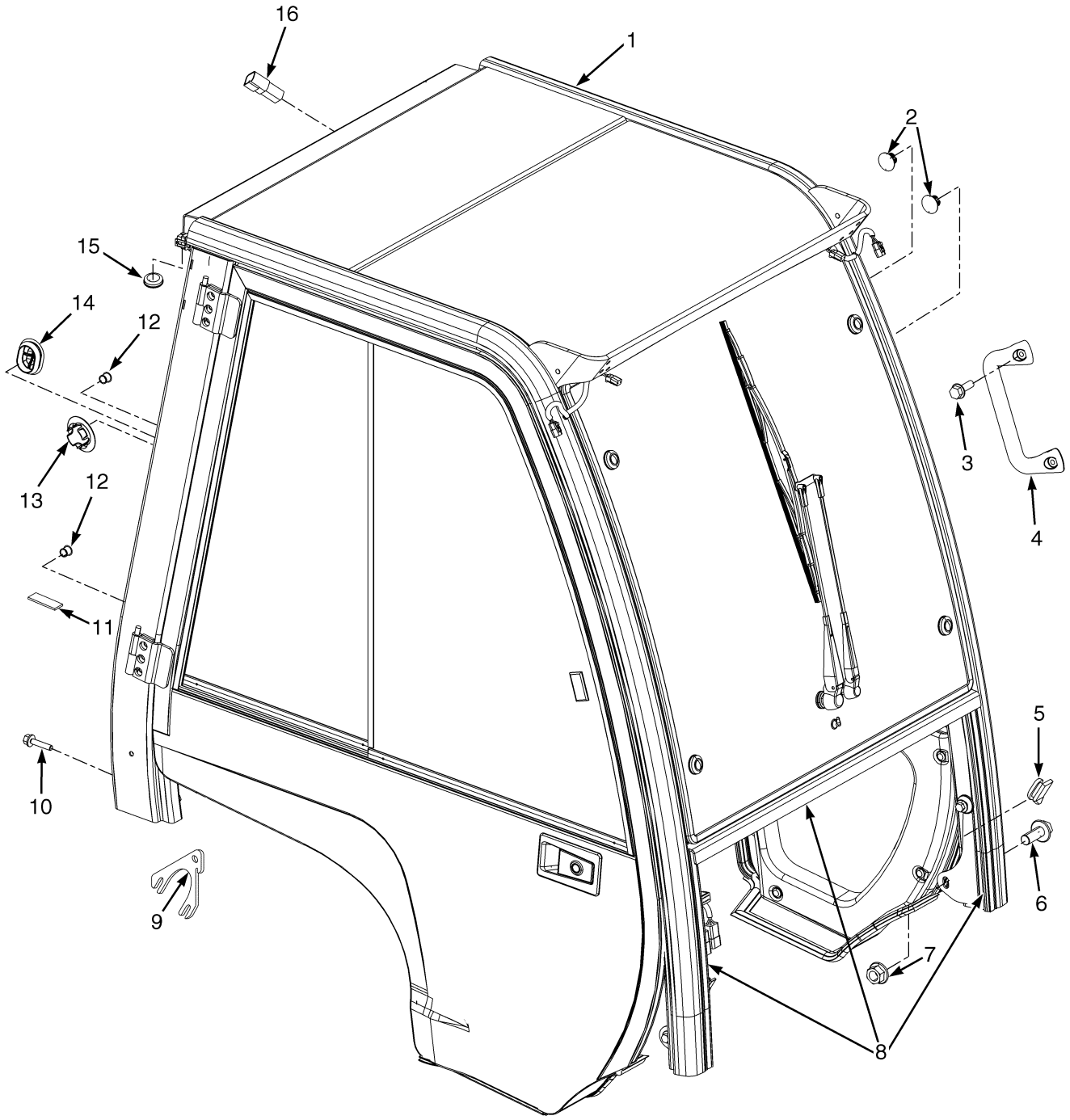

©2005 HYSTER COMPANY

https://truckmanualshub.com/

CAB AND ATTACHING PARTS

ITEM	PART NO.	DESCRIPTION	QTY
1	1519232	Cab Assembly (☞ Figure 1-8, ☞ Figure 1-9, ☞ Figure 1-10, ☞ Figure 1-11, ☞ Figure 1-12)	1
2	1574301	Plug	8
3	1583611	Capscrew	8
4	1536813	Handle (Grab)	1
5	1589787	Seal	2
6	1528889	Capscrew	8
7	1528888	Nut	2
8	1611140	Seal (Three Piece)	1
9	1610890	Shim	AR
10	1586495	Capscrew	6
11	1609621	Seal	1
12	1494888	Plug	2
13	1599415	Plug	1
14	1558219	Grommet	1
15	1560671	Grommet	1
16	1351681	Connector	1

CAB (Figure 1-8)
LH DOOR

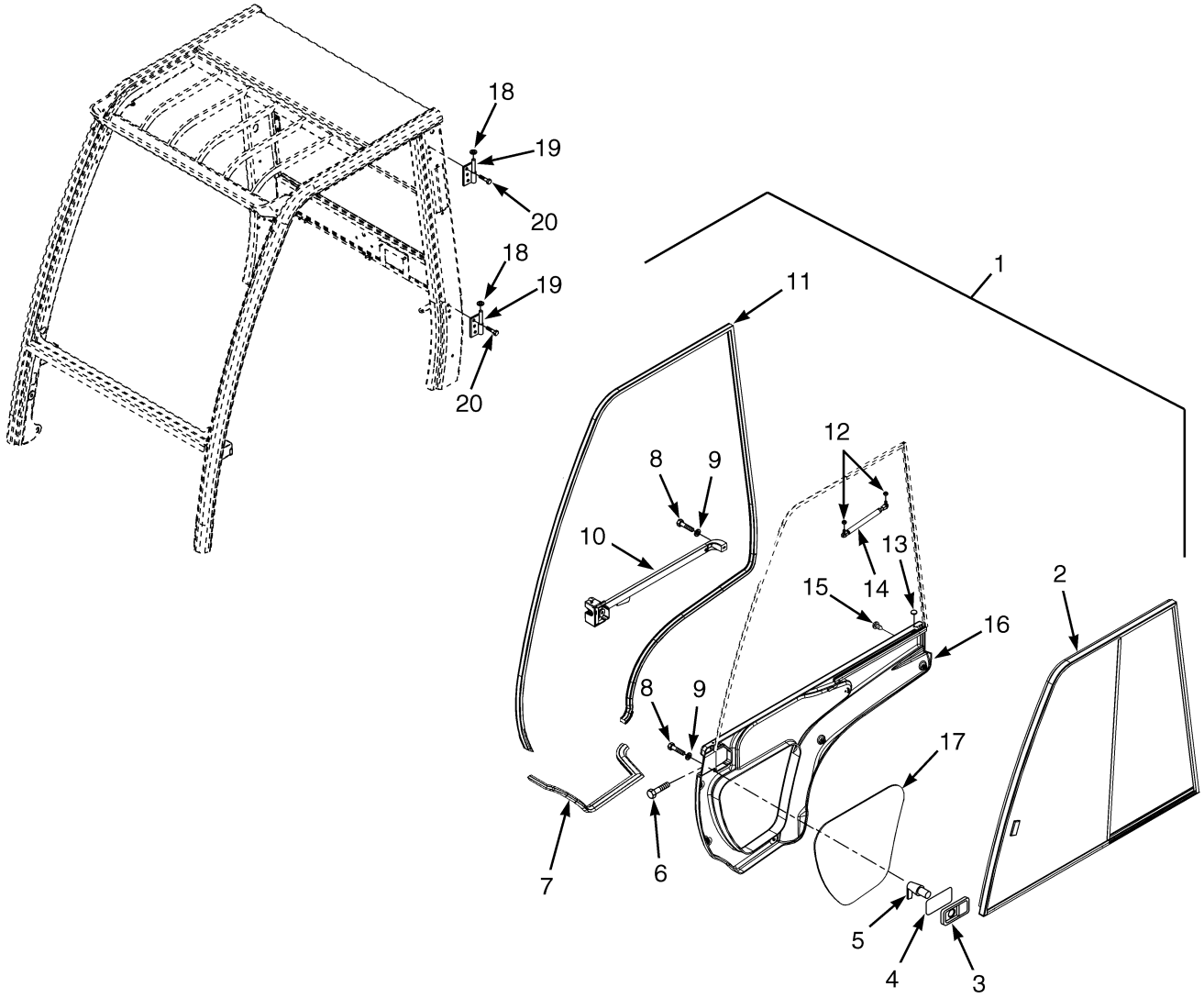

©2005 HYSTER COMPANY

https://truckmanualshub.com/

CAB
LH DOOR

ITEM	PART NO.	DESCRIPTION	QTY
	1519232	Cab Assembly	1
1	1598417	Door Assembly (LH)	1
2	1598396	Sliding Window (LH)	1
3	1598393	Grip	1
4	1598394	Shim	1
5	1598392	Lever	1
6	296229	Capscrew	2
7	1393539	Seal	AR
8	302047	Screw	5
9	320156	Washer	5
10	1393479	Handle and Latch (LH)	1
11	1515337	Seal	AR
12	316835	Nut	2
13	1598390	Plug	2
14	1598397	Gas Spring	1
15	1598389	Fastener	5
16	1598391	Cover (Door, LH)	1
17	1598395	Screen (Door, Lower, LH)	1
18	1468312	Washer	2
19	1503958	Hinge (LH)	2
20	1493308	Bolt	12
	a 1598390	Plug	5

FOOTNOTES:
a Not Illustrated

CAB (Figure 1-9)
RH DOOR AND HEATER ASSEMBLY

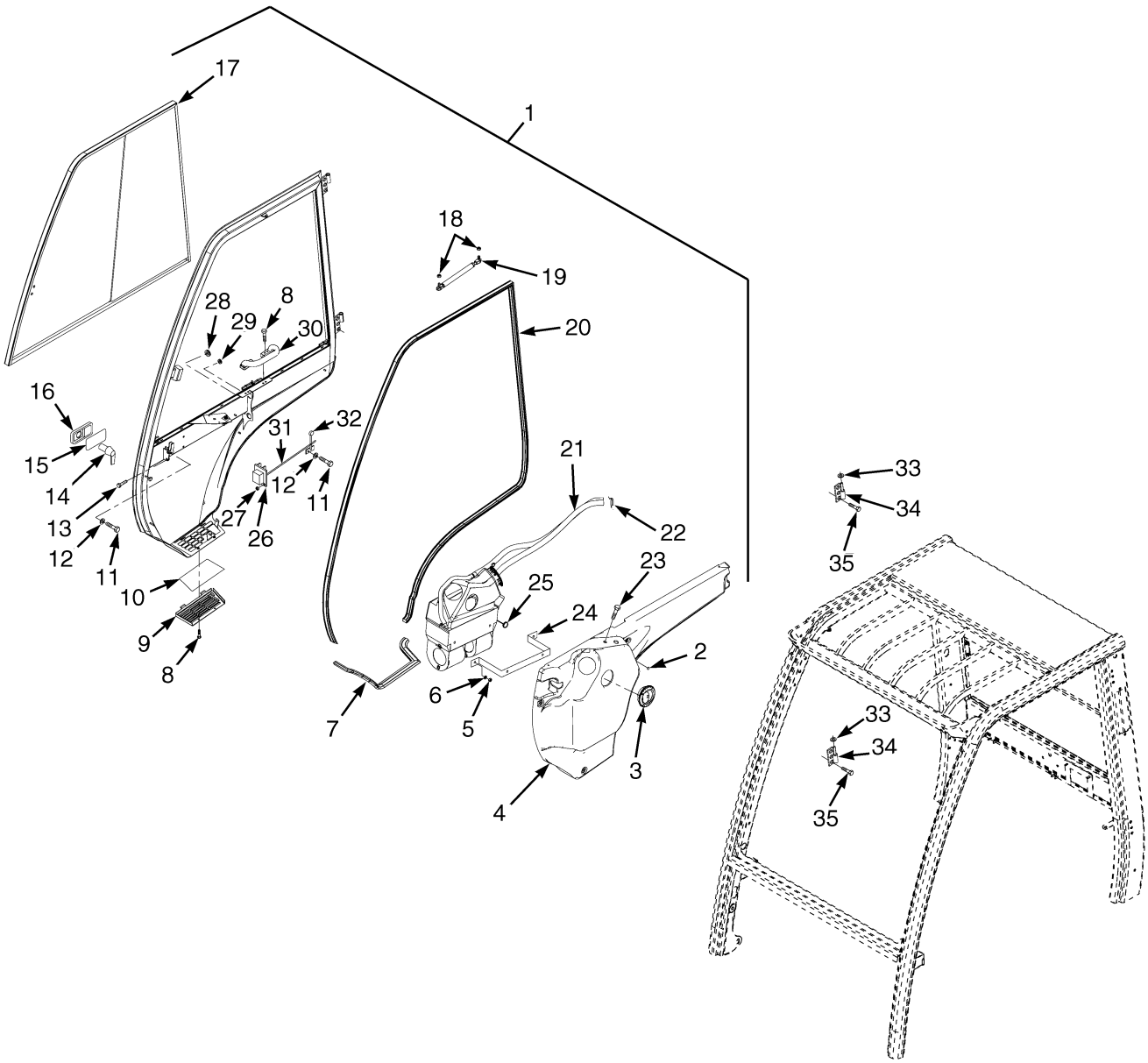

HP120863

©2005 HYSTER COMPANY

https://truckmanualshub.com/

CAB
RH DOOR AND HEATER ASSEMBLY

ITEM	PART NO.	DESCRIPTION	QTY
	1519232	Cab Assembly	1
1	1598416	Door Assembly (RH)	1
2	1598389	Fastener	6
3	1598398	Nozzle	3
4	1598407	Cover (Door, RH)	1
5	239503	Nut	2
6	320158	Washer	2
7	1393539	Seal	AR
8	1598399	Screw	6
9	1598401	Bracket	1
10	1598400	Filter	1
11	302047	Screw	6
12	320156	Washer	6
13	296229	Capscrew	2
14	1598411	Lever	1
15	1598394	Shim	1
16	1598393	Grip	1
17	1598413	Sliding Window (RH)	1
18	316835	Nut	2
19	1598414	Gas Spring	1
20	1515337	Seal	AR
21	1598404	Heater Assembly	1
21	1598675	Heater	1
21	1598674	Hose	4
21	1598673	Switch	1
21	1598672	Valve	1
21	1598671	Wire Harness	1
21	1598670	Connector	2
22	1393499	Clamp	1
23	1598403	Screw	4
24	1598669	Bracket	1
25	1598390	Plug	5
26	1598412	Lock (RH)	1
27	1598408	Nut	2
28	1579116	Grommet	2
29	1598402	Grommet	1
30	1598406	Handle	1
31	1598409	Release Bar	1
32	1598410	Lever	1
33	1468312	Washer	2
34	1503959	Hinge (RH)	2
35	1493308	Bolt	12

https://truckmanualshub.com/

CAB (Figure 1-10)
WINDOWS AND WINDOW WIPER SYSTEM

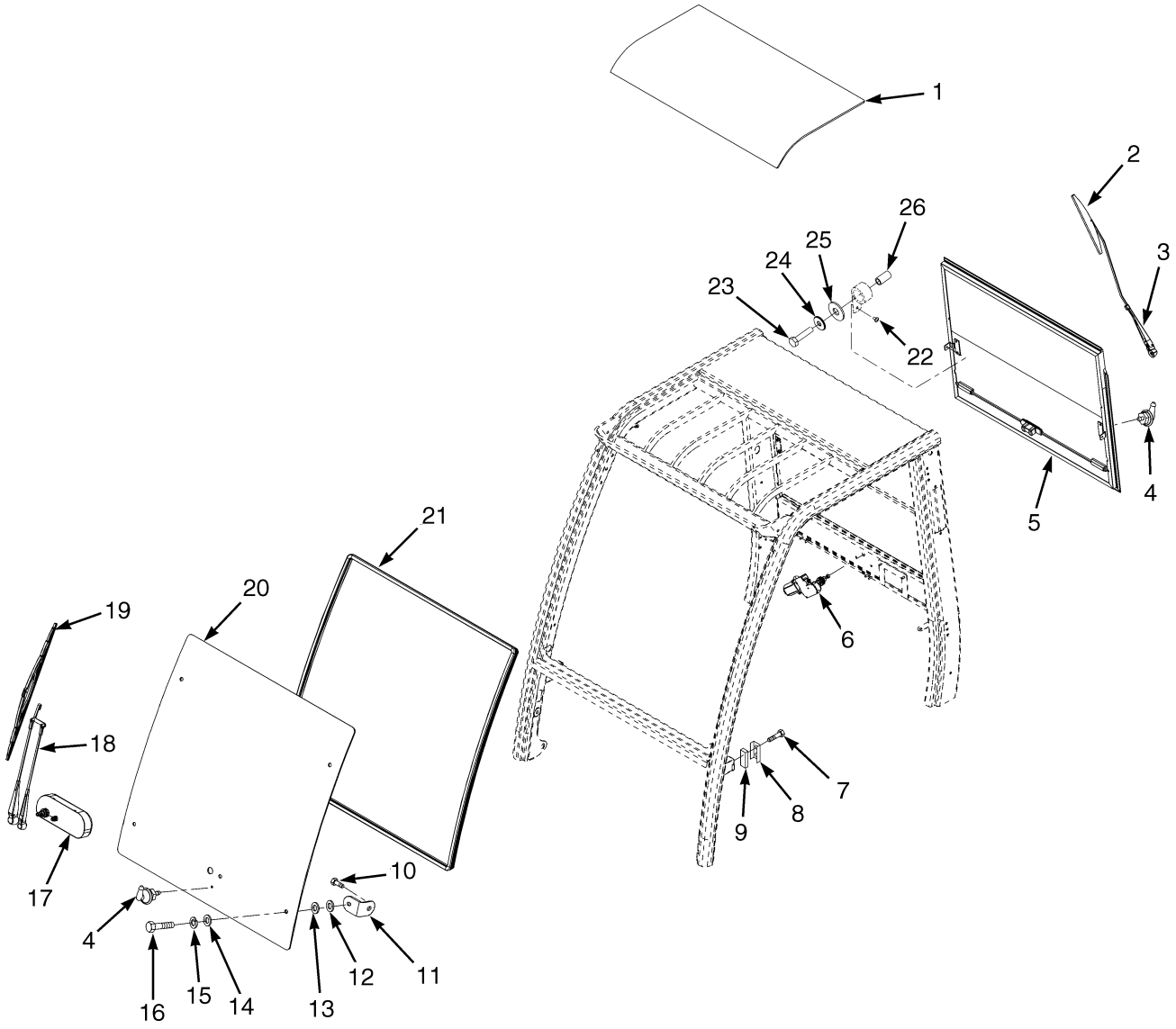

©2005 HYSTER COMPANY

https://truckmanualshub.com/

CAB
WINDOWS AND WINDOW WIPER SYSTEM

ITEM	PART NO.	DESCRIPTION	QTY
	1519232	Cab Assembly	1
1	1598293	Window (Roof)	1
2	1598297	Wiper Blade (Rear)	1
3	1598296	Wiper Arm (Rear)	1
4	1493336	Connector	2
5	1598290	Sliding Window (Rear)	1
6	1598295	Wiper Motor (Rear)	1
7	1598300	Bolt	2
8	1393541	Guard	2
9	1393488	Block	2
10	1493308	Bolt	4
11	1598210	Bracket	4
12	1598211	Washer	4
13	1468317	Washer	4
14	1468316	Washer	4
15	1468315	Washer	4
16	1468314	Screw	4
17	1598294	Wiper Motor (Front)	1
18	1598298	Wiper Arm (Front)	1
19	1598299	Wiper Blade (Front)	1
20	1598209	Screen (Front)	1
21	1581657	Seal	AR
22	302019	Screw	2
23	1598291	Screw	2
24	1558052	Washer	2
25	1598302	Spacer	2
26	1598301	Bushing	4

CAB (Figure 1-11)
INTERIOR PANELS

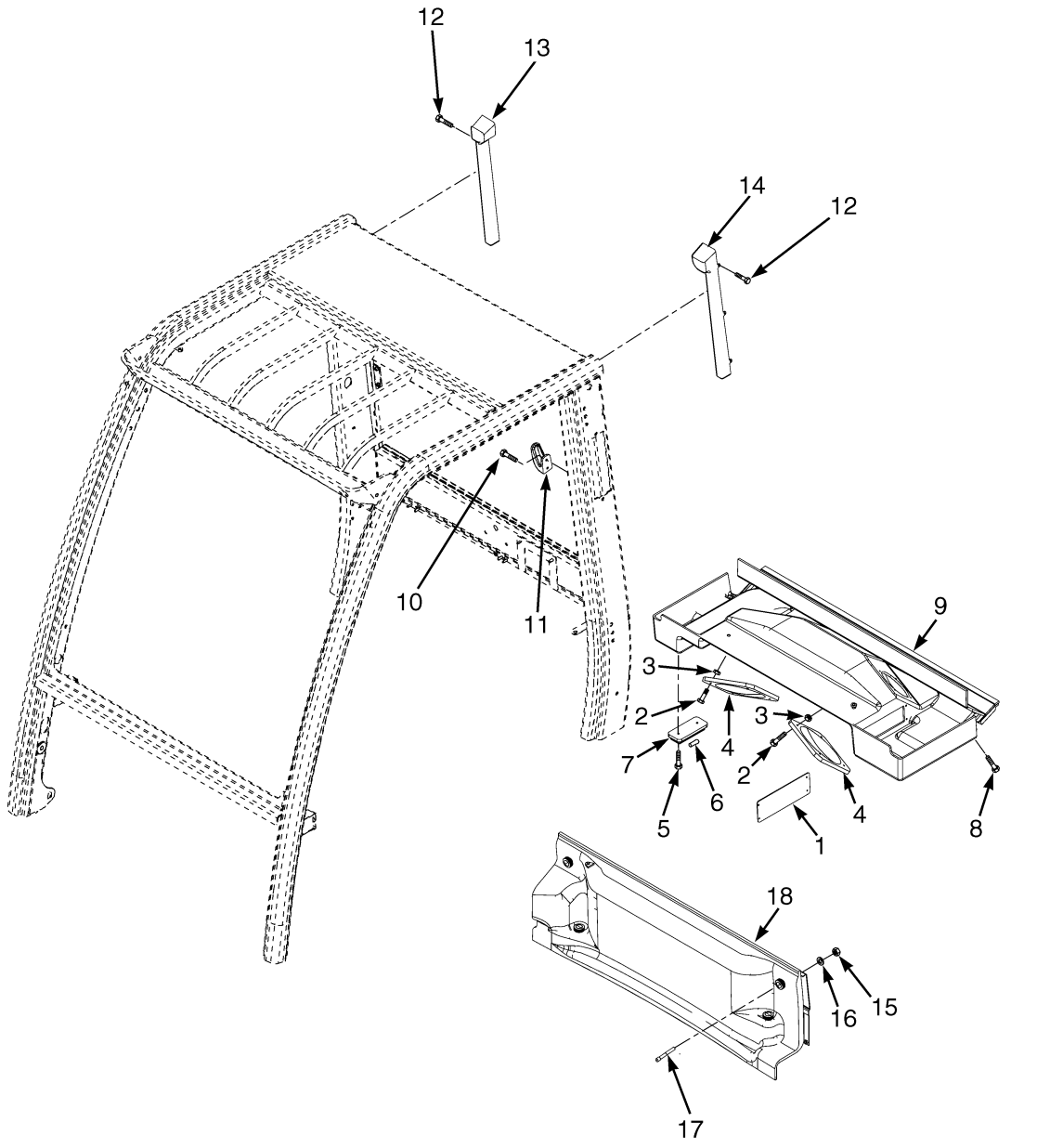

©2005 HYSTER COMPANY

https://truckmanualshub.com/

CAB
INTERIOR PANELS

ITEM	PART NO.	DESCRIPTION	QTY
	1519232	Cab Assembly	1
1	1571628	Cover (Radio)	1
2	1468320	Screw	8
3	1598420	Nut	8
4	1598421	Cover (Speakers)	2
5	1468319	Screw	2
6	1393527	Bulb	1
7	1393528	Dome Light	1
8	1493308	Bolt	4
9	1598422	Console (Radio)	1
10	1598423	Screw	2
11	1393458	Hanger	1
12	1468319	Screw	6
13	1598424	Support (RH)	1
14	1598425	Support (LH)	1
15	1598426	Nut	4
16	320158	Washer	4
17	1598427	Screw	4
18	1598428	Cover (Radiator)	1

©2005 HYSTER COMPANY

https://truckmanualshub.com/

CAB (Figure 1-12)
FRAME AND ATTACHING PARTS

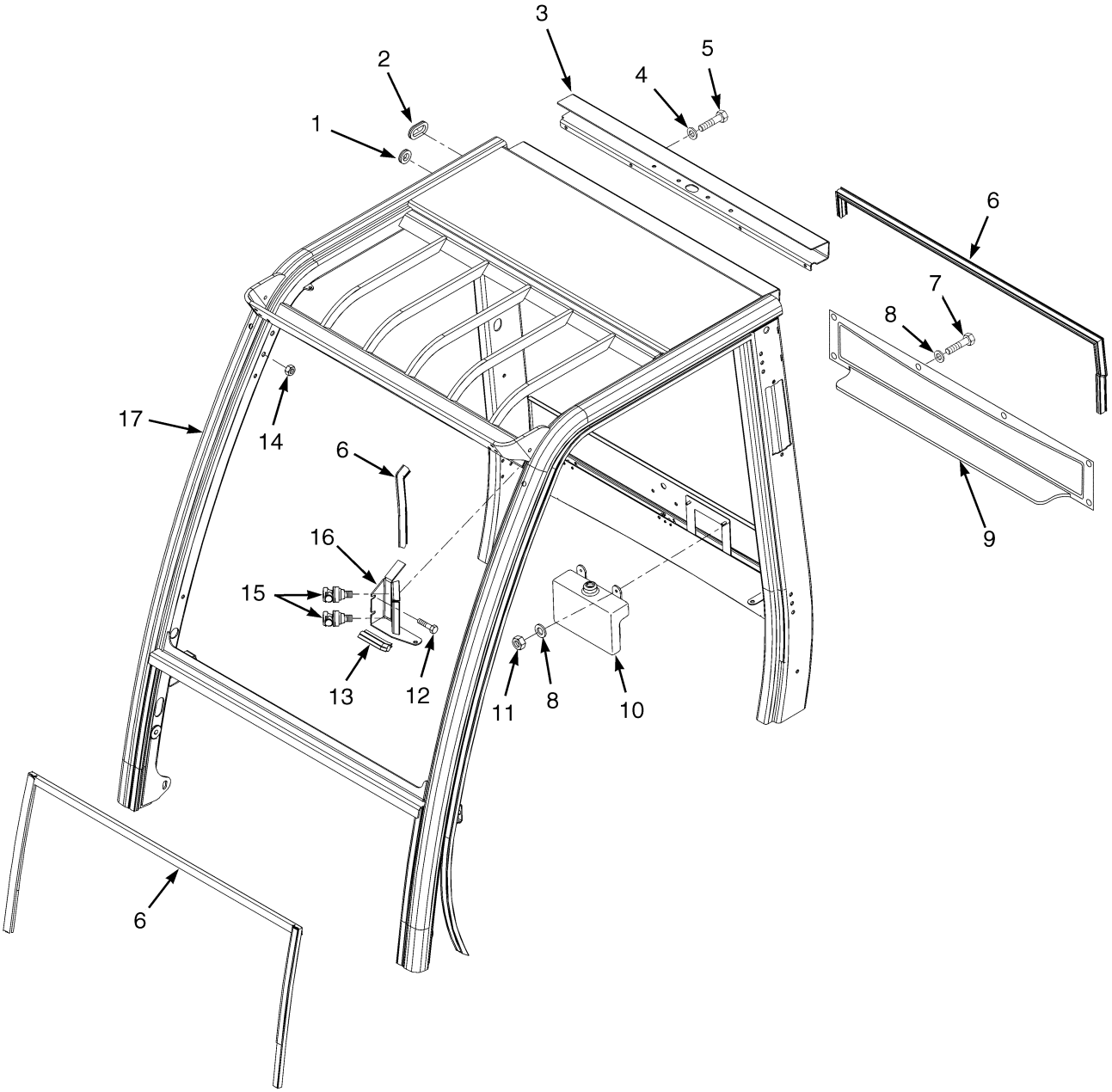

BP120158

©2005 HYSTER COMPANY

https://truckmanualshub.com/

CAB
FRAME AND ATTACHING PARTS

ITEM	PART NO.	DESCRIPTION	QTY
	1519232	Cab Assembly	1
1	1579116	Grommet	3
2	1598332	Grommet	2
3	1598321	Cover (Cable)	1
4	320158	Washer	4
5	136681	Capscrew	4
6	1515337	Seal	AR
7	1571775	Screw	5
8	320156	Washer	7
9	1598668	Cover (Rear)	1
10	1598329	Water Tank	1
11	136687	Nut	2
12	1598323	Screw	2
13	1393539	Seal	AR
14	1468308	Nut	6
15	1598327	Connector	2
16	1598325	Bracket	1
17	**a**	Frame 2	1

FOOTNOTES:
a Not Serviced Separately

https://truckmanualshub.com/

BUY NOW

Then Instant Download the Complete Manual

Thank you very much!