# PART 2
# FORKLIFT HYDRAULIC SYSTEM

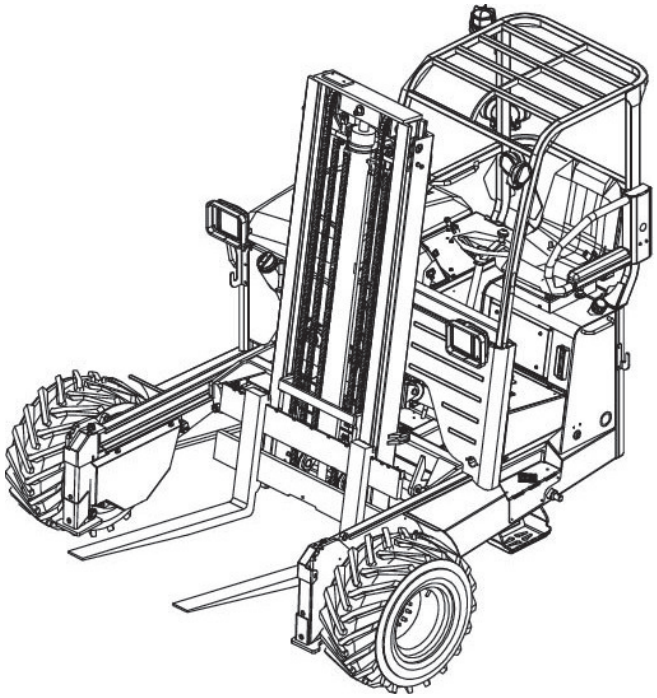

## Chapter 1

## Description and Operation


| | |
|---|---|
| **Component Locations & Circuit Layouts** | **1** |
| **Hydraulic Pump** | **11** |
| **Control Valve** | **14** |
| **Valve Section Oil Flows** | **15** |
| **Anti-Cavitation Valve** | **22** |
| **Velocity Fuses** | **24** |
| **Lower and Go Valve Kit** | **26** |

FORKLIFT HYDRAULIC SYSTEM - DESCRIPTION & OPERATION

# MOFFETT MODEL RANGE

The information in the Service Manual covers several models of the Moffett- range.

Many of the components, systems, their testing and overhaul are similar for the models covered in the manual, therefore the manual references, as shown below, will only be used where the information is unique to a particular model.

| Manual Reference | Group |
|---|---|
| American Model Designation | M50 / M40 |
| Rest of the Word Model Designation | M8 / M5 |

# NOTES

# FORKLIFT HYDRAULIC SYSTEM - DESCRIPTION AND OPERATION

This chapter covers the function and operation of the forklift hydraulic system, the construction and operation of the mast and carriage are covered separately in Part 1, Chapter 1.

All the hydraulic cylinders are double acting, the lowering function of the lift cylinder is used to lift the Forklift into the transport position on the rear of the truck.

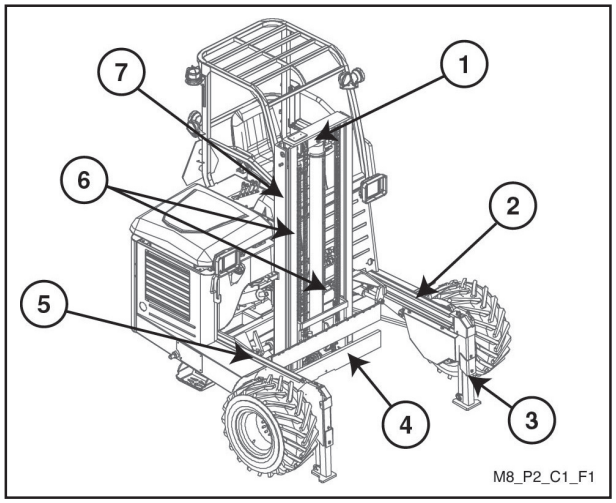


**FIGURE 1. FORKLIFT COMPONENTS**

1. *Inner Mast*
2. *Frame*
3. *Stabiliser*
4. *Fork Carriage*
5. *Mast Carriage*
6. *Lift Chains*
7. *Outer Mast*

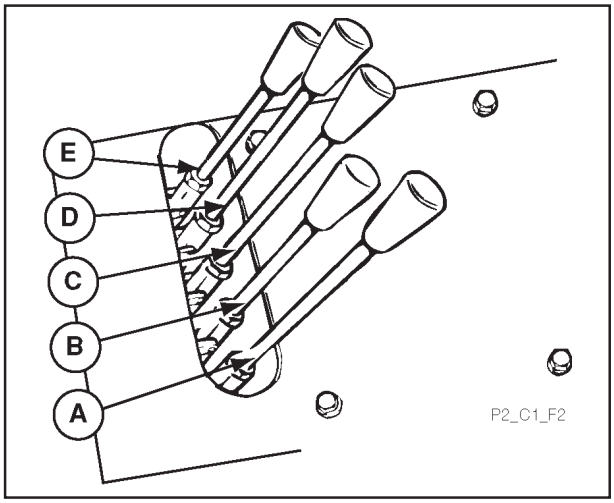


**FIGURE 2. FORKLIFT CONTROL LEVERS**

| | | |
|---|---|---|
| A. | *Mast* | *Raise and Lower* |
| B. | *Mast Carriage* | *In and Out* |
| C. | *Forks* | *Tilt - Up and Down* |
| D. | *Mast* | *Side Shift* |
| E. | *Stabilisers* | *Raise and Lower* |

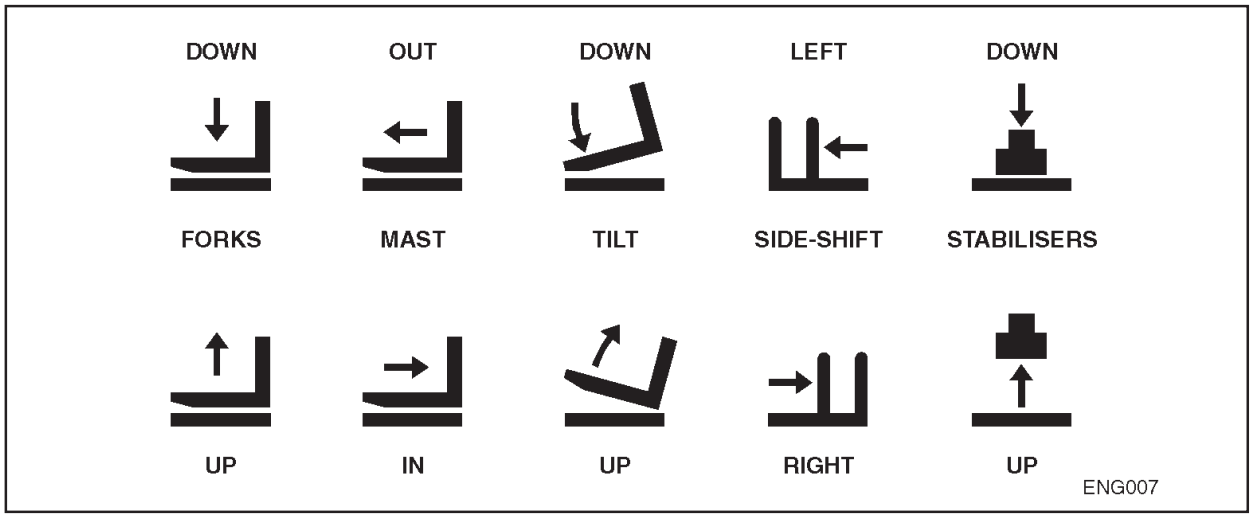


**EXAMPLE DASHBOARD DECAL - LEVER CONTROL**

# FORKLIFT HYDRAULIC SYSTEM - DESCRIPTION AND OPERATION

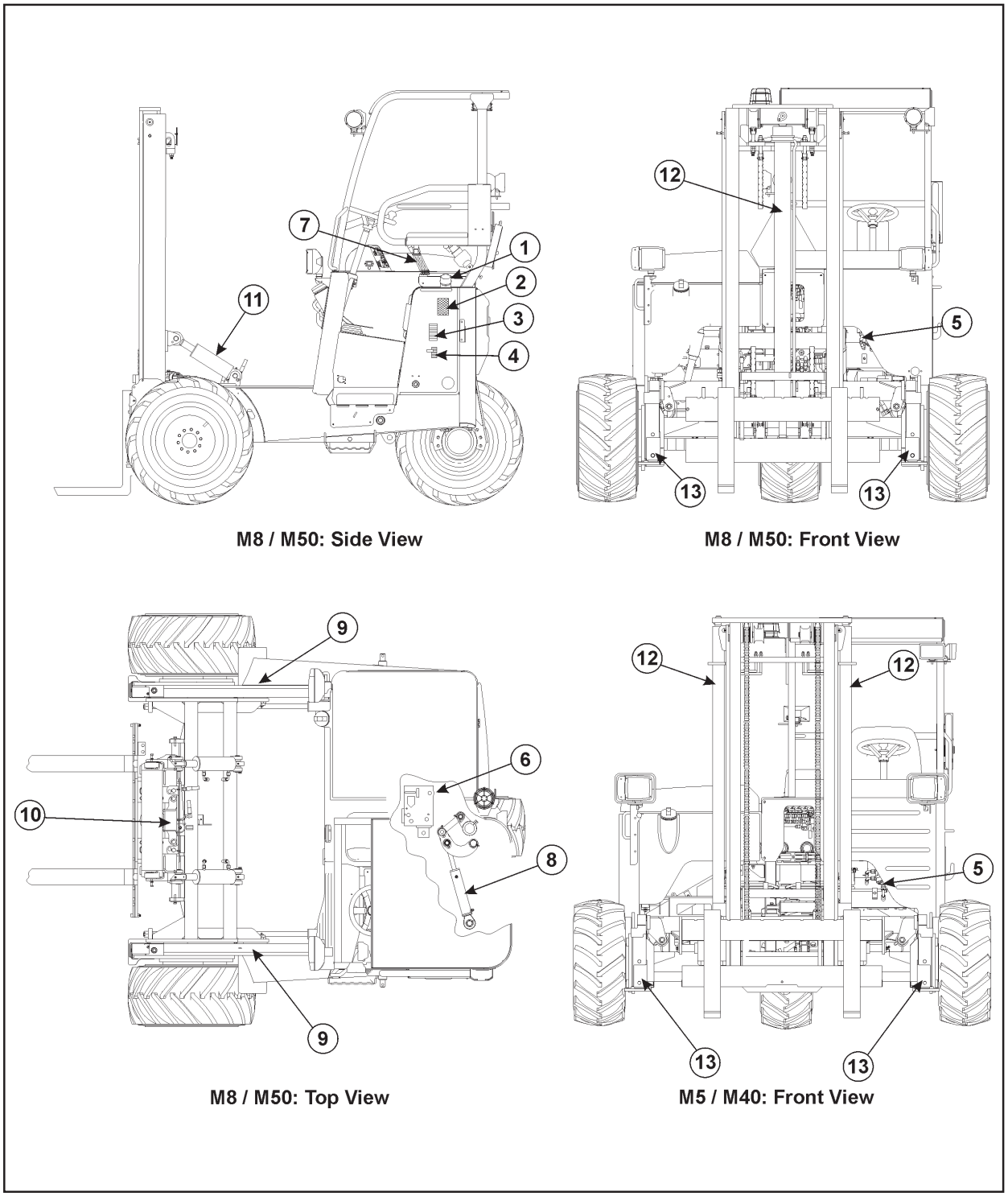


**FIGURE 3. HYDRAULIC SYSTEM COMPONENT LOCATIONS**

1. *Hydraulic Oil Reservoir*
2. *Hydraulic Return Filter*
3. *Hydraulic Suction Filter*
4. *Hydraulic System Oil Shut Off Valve*
5. *Steering Priority Valve*
6. *Hydraulic Pump*
7. *Forklift Control Valve*
8. *Steering Cylinder*
9. *Carriage Cylinders*
10 *Side Shift Cylinder*
11. *Tilt Cylinders (2)*
12. *Lift Cylinder(s)*
13. *Stabiliser Cylinders*

# FORKLIFT HYDRAULIC SYSTEM - DESCRIPTION AND OPERATION

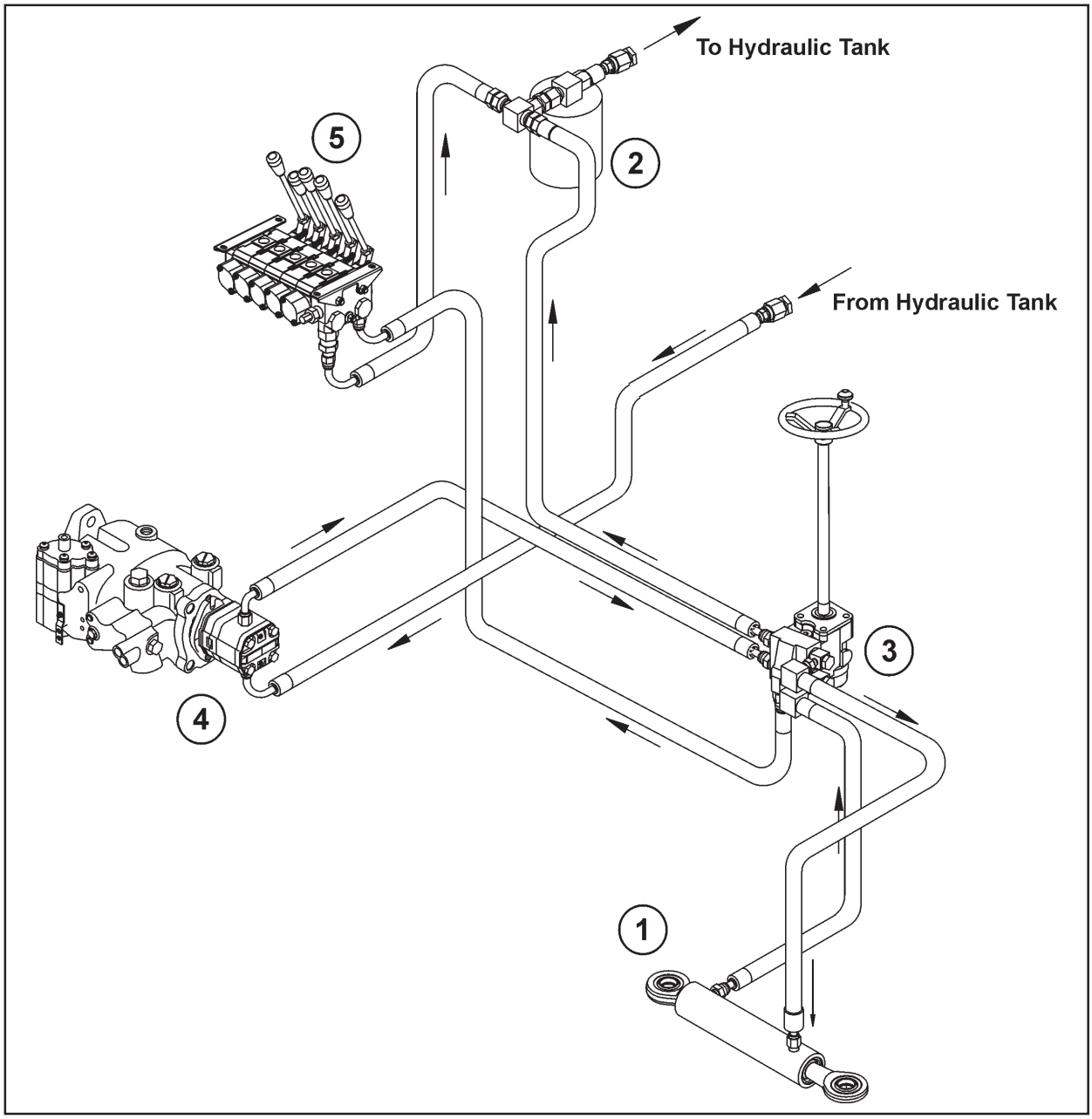


**FIGURE 4. HYDRAULIC SYSTEM COMPONENT LAYOUT**

1. *Steering Cylinder*
2. *Return Filter*
3. *Steering with Priority Valve*
4. *Pump*
5. *Valve Bank*

- -The hydraulic pump draws oil from the reservoir through a suction straine and then supplies the oil to the steering priority valve and the hydraulic control valve.
- Return oil from the steering and hydraulic systems flows through the replaceable element return filter.

# FORKLIFT HYDRAULIC SYSTEM - DESCRIPTION AND OPERATION

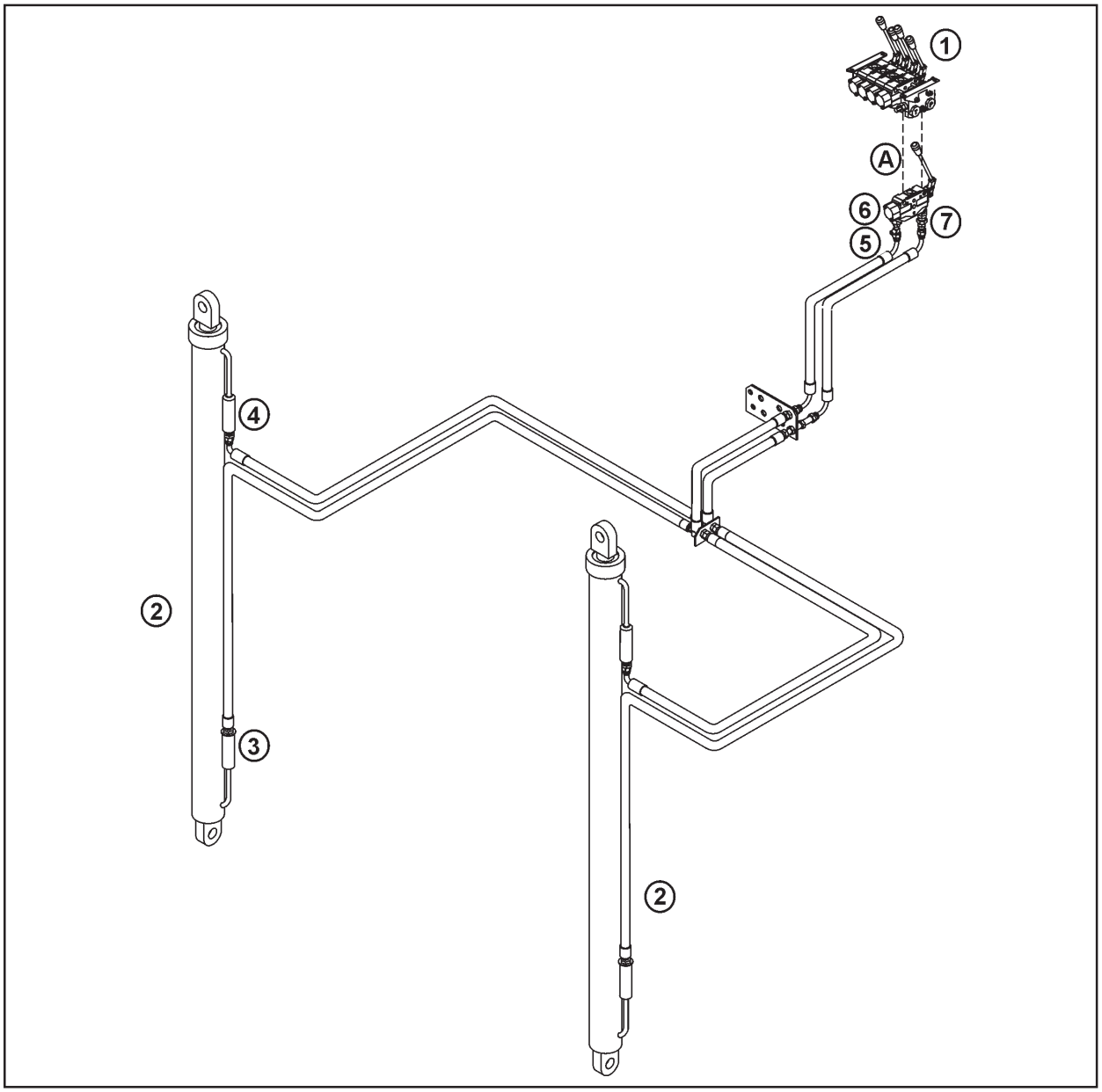


**FIGURE 5. LIFT CIRCUIT COMPONENT LAYOUT**

1. *Control Valve*
2. *Lift Cylinder*
3. *Velocity Fuse*
4. *Velocity Fuse*
5. *One Way Restrictor*
6. *Service Port Relief Valve - Cyl Piston End **
7. *Service Port Relief Valve - Cyl Rod End **

A. *Valve Lift Section*

** NB The Service Port Relief Valves incorporate an anti-cavitation function.*

- The lift circuit controls the operation of the forks.
- The cylinder is protected by two valve service port relief valves.
- A one way restrictor in the control valve limits the cylinder drop rate under load.
- Velocity fuses located in the cylinder to slow cylinder travel in the event of a hose failure.

# FORKLIFT HYDRAULIC SYSTEM - DESCRIPTION AND OPERATION

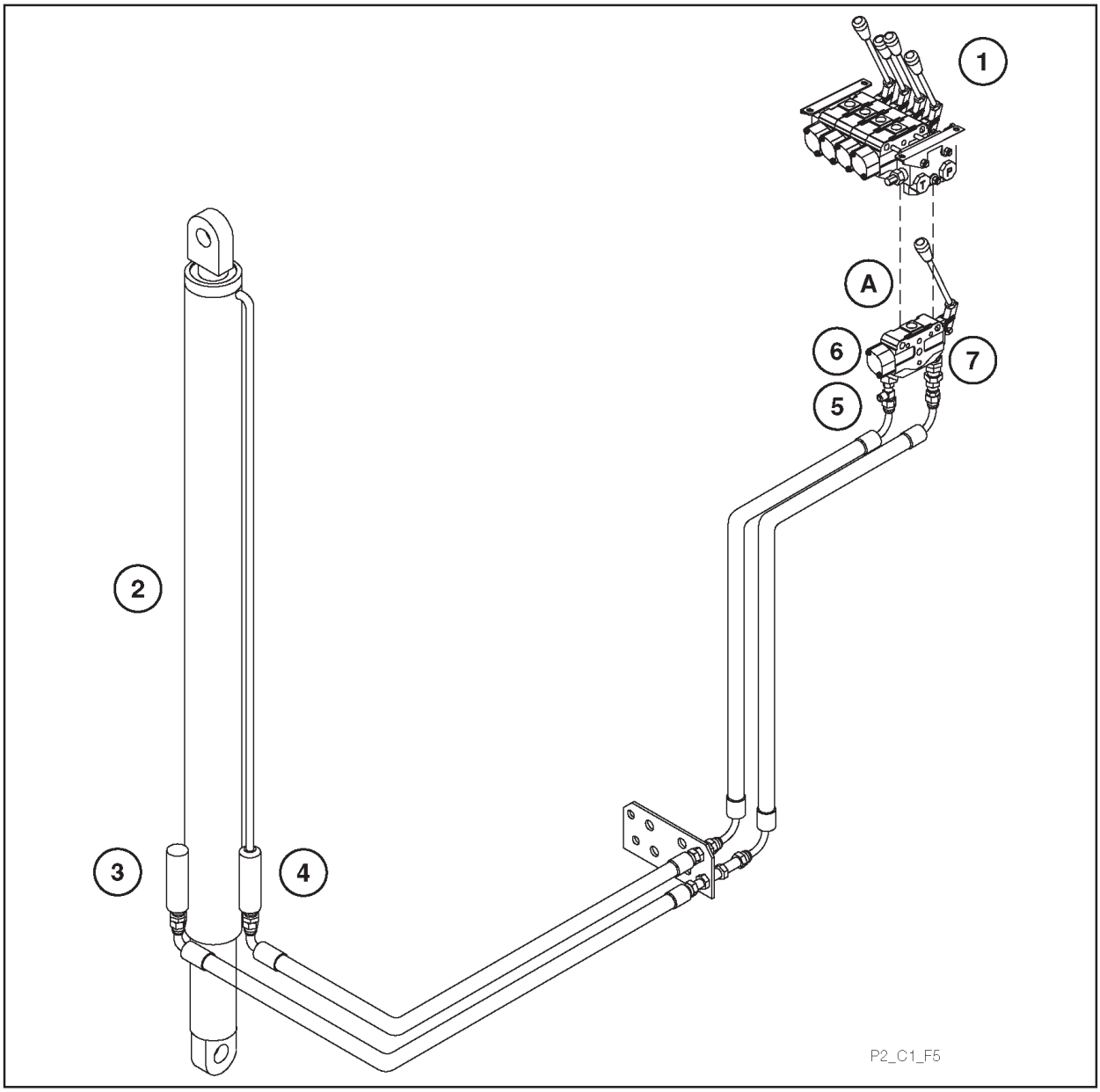


**FIGURE 5. LIFT CIRCUIT COMPONENT LAYOUT**

1. *Control Valve*
2. *Lift Cylinder*
3. *Velocity Fuse*
4. *Velocity Fuse*
5. *One Way Restrictor*
6. *Service Port Relief Valve - Cyl Piston End **
7. *Service Port Relief Valve - Cyl Rod End **

A. *Valve Lift Section*

** NB The Service Port Relief Valves incorporate an anti-cavitation function.*

# FORKLIFT HYDRAULIC SYSTEM - DESCRIPTION AND OPERATION

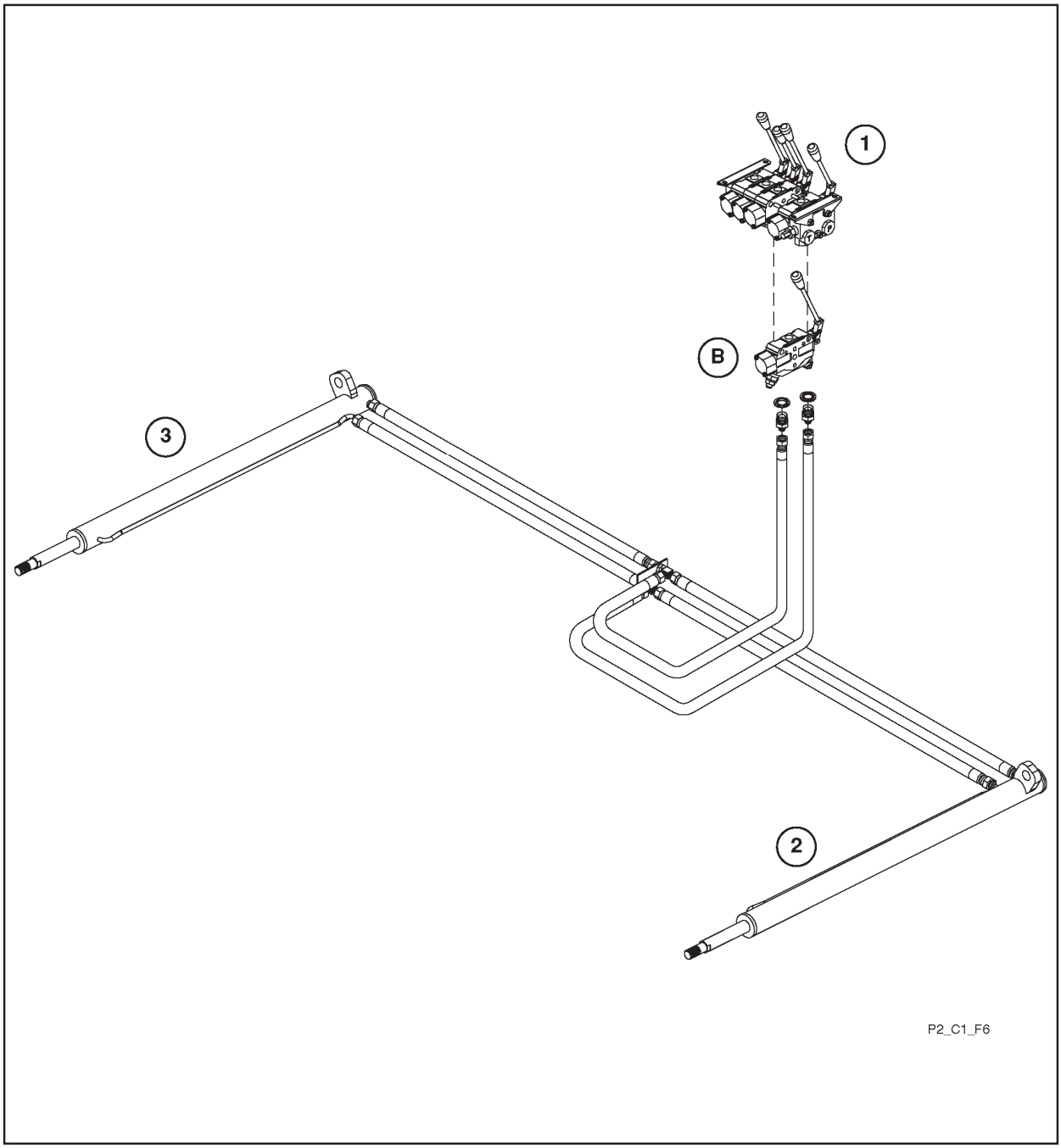


**FIGURE 6. CARRIAGE CIRCUIT COMPONENT LAYOUT**

1. *Control Valve*
2. *Left Hand Carriage Cylinder*
3. *Right Hand Carriage Cylinder*

B. *Carriage Valve Section*

- The carriage circuit controls the position of the fork lift mast in the frame, the mast being positioned forward to pick up loads forward of the front wheels and rearwards for transporting the load between the wheel base.

# FORKLIFT HYDRAULIC SYSTEM - DESCRIPTION AND OPERATION

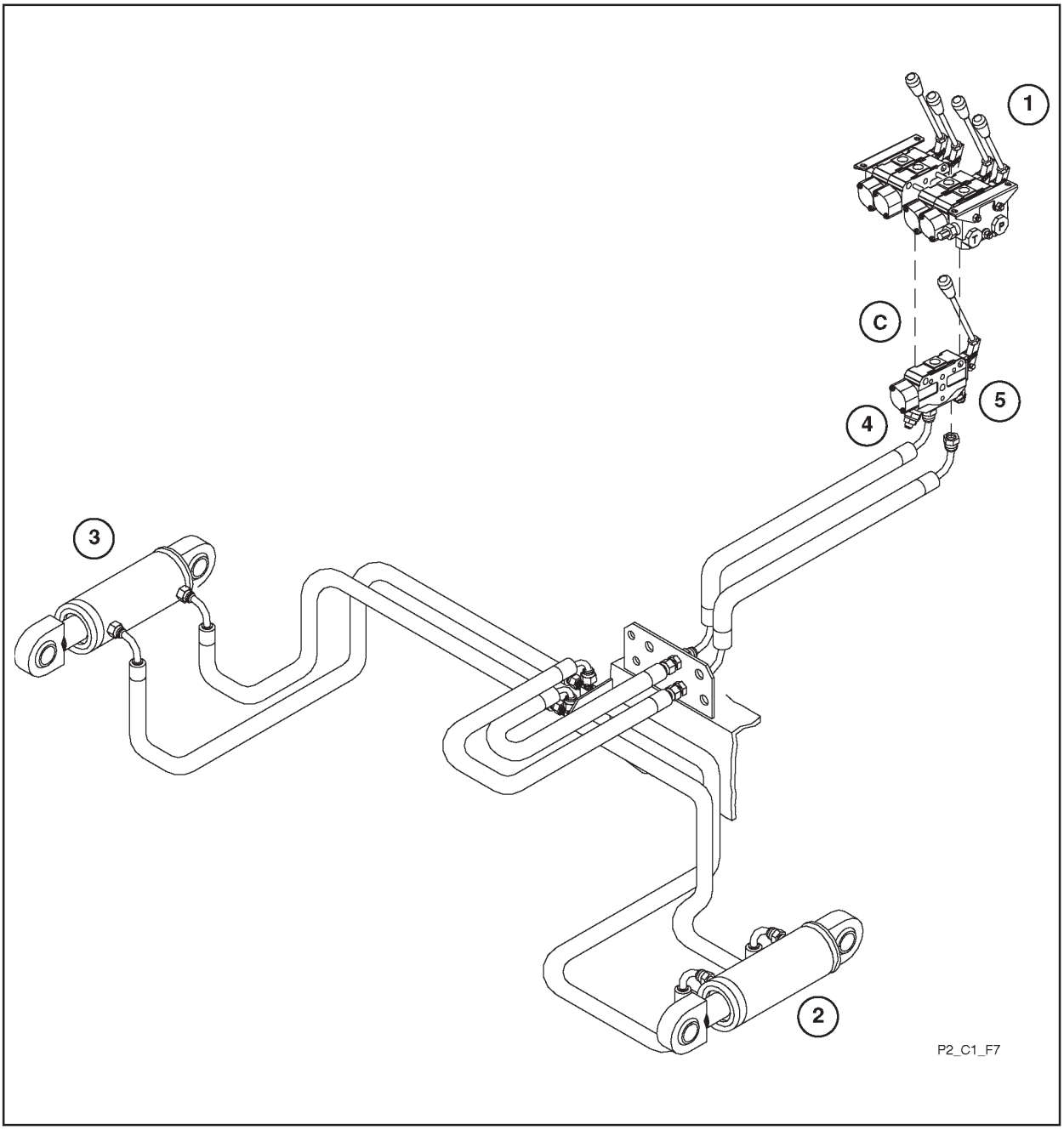


**FIGURE 7. TILT CIRCUIT COMPONENT LAYOUT**

1. *Control Valve*
2. *Left Hand Tilt Cylinder*
3. *Right Hand Tilt Cylinder*
4. *One Way Restrictor*
5. *Anti-cavitation Valve*

C. *Tilt Valve Section*

- The tilt circuit controls the angle of the mast and forks, the mast being tilted back for transport.
- An anti-cavitation valve and a one way restrictor valve located in the valve ports prevent cylinder cavitation, when extending the cylinder to rotate the load forwards, or when releasing the pressure with the unit on the truck mounting kit.

# FORKLIFT HYDRAULIC SYSTEM - DESCRIPTION AND OPERATION

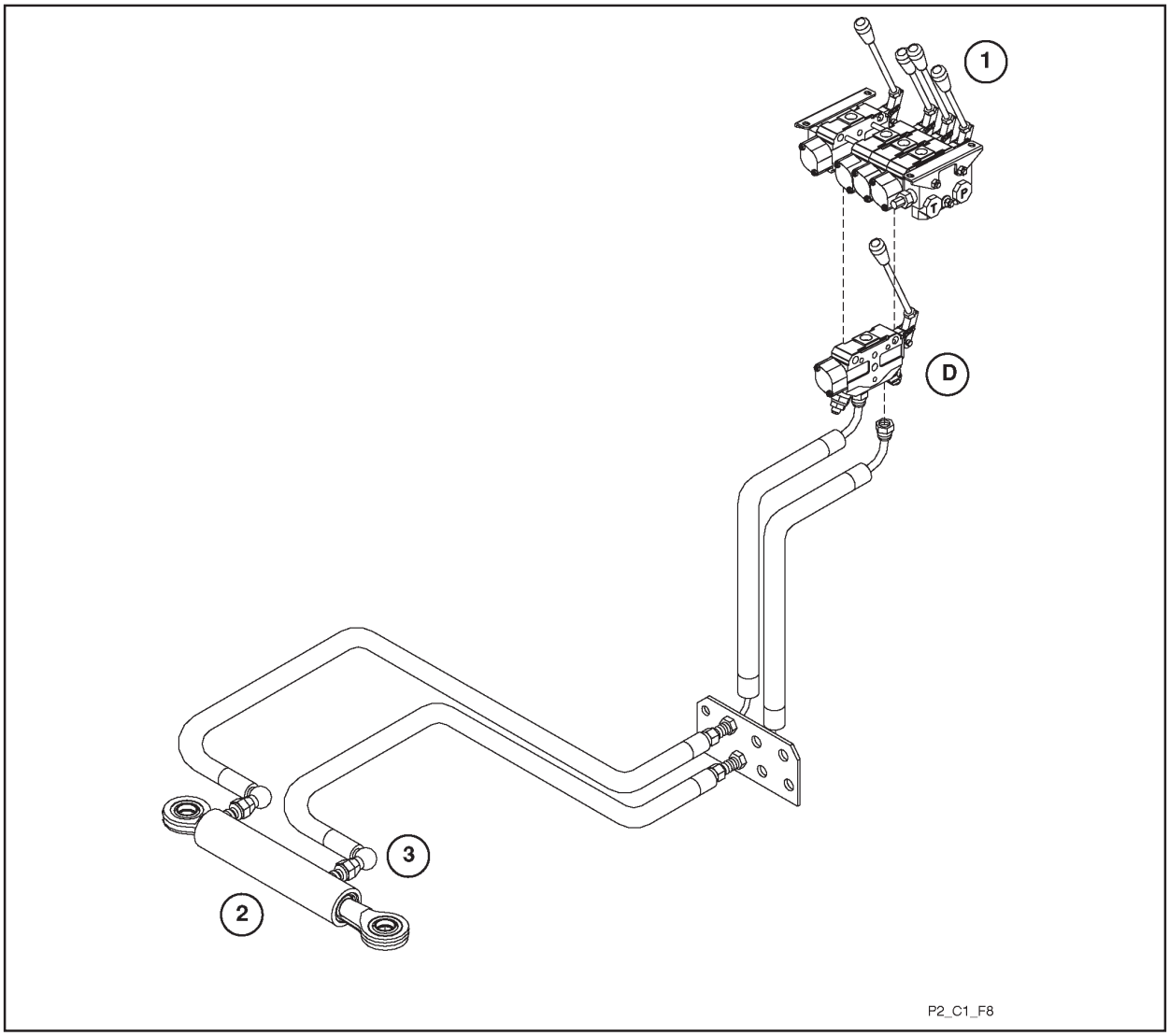


**FIGURE 8. SIDE SHIFT CIRCUIT COMPONENT LAYOUT**

1. *Control Valve*
2. *Side Shift Cylinder*
3. *One Way Restrictor - Cylinder Piston End*

D. *Side Shift Valve Section*

- The side shift circuit controls the position of the mast and forks in the frame.
- A restrictor located in the cylinder piston end port, restricts cylinder retraction and extension speed preventing instability, resulting from rapid side shifting with an elevated load.

# FORKLIFT HYDRAULIC SYSTEM - DESCRIPTION AND OPERATION

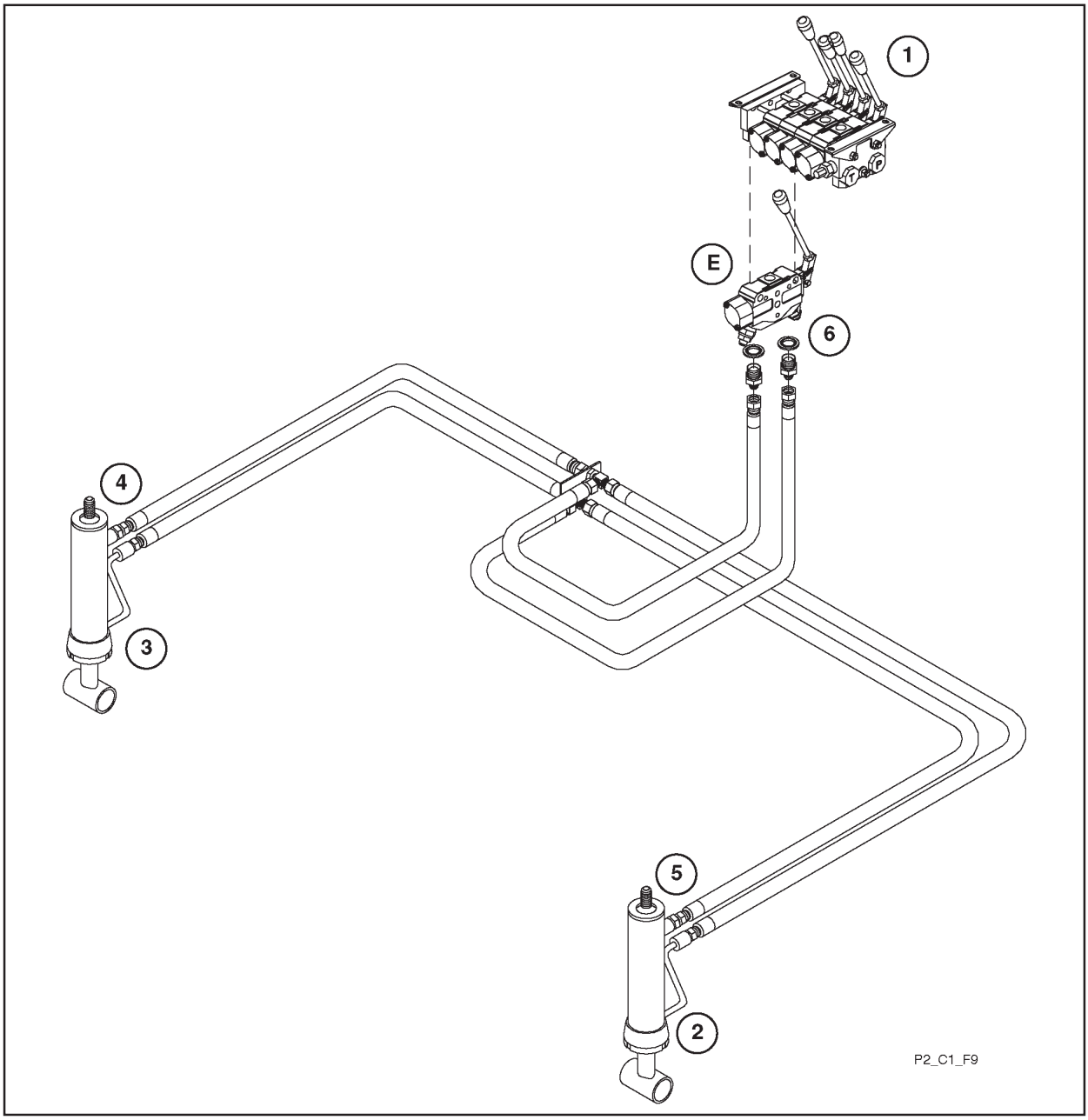


**FIGURE 9. STABILISER CIRCUIT COMPONENT LAYOUT**

1. *Control Valve*
2. *Left Hand Stabiliser Cylinder*
3. *Right Hand Stabiliser Cylinder*
4. *Velocity Fuse*
5. *Velocity Fuse*
6. *One Way Restrictor*

E. *Stabiliser Valve Section*

- The stabiliser circuit controls the jack legs which are lowered to enable the unit to pick up loads with the mast fully forward.
- The one way restrictor located in the valve piston end port restricts cylinder retraction when raising the legs with loaded forks.
- Velocity fuses located in the cylinder piston ports prevent rapid cylinder retraction in the event of hose failure.

# FORKLIFT HYDRAULIC SYSTEM - DESCRIPTION AND OPERATION

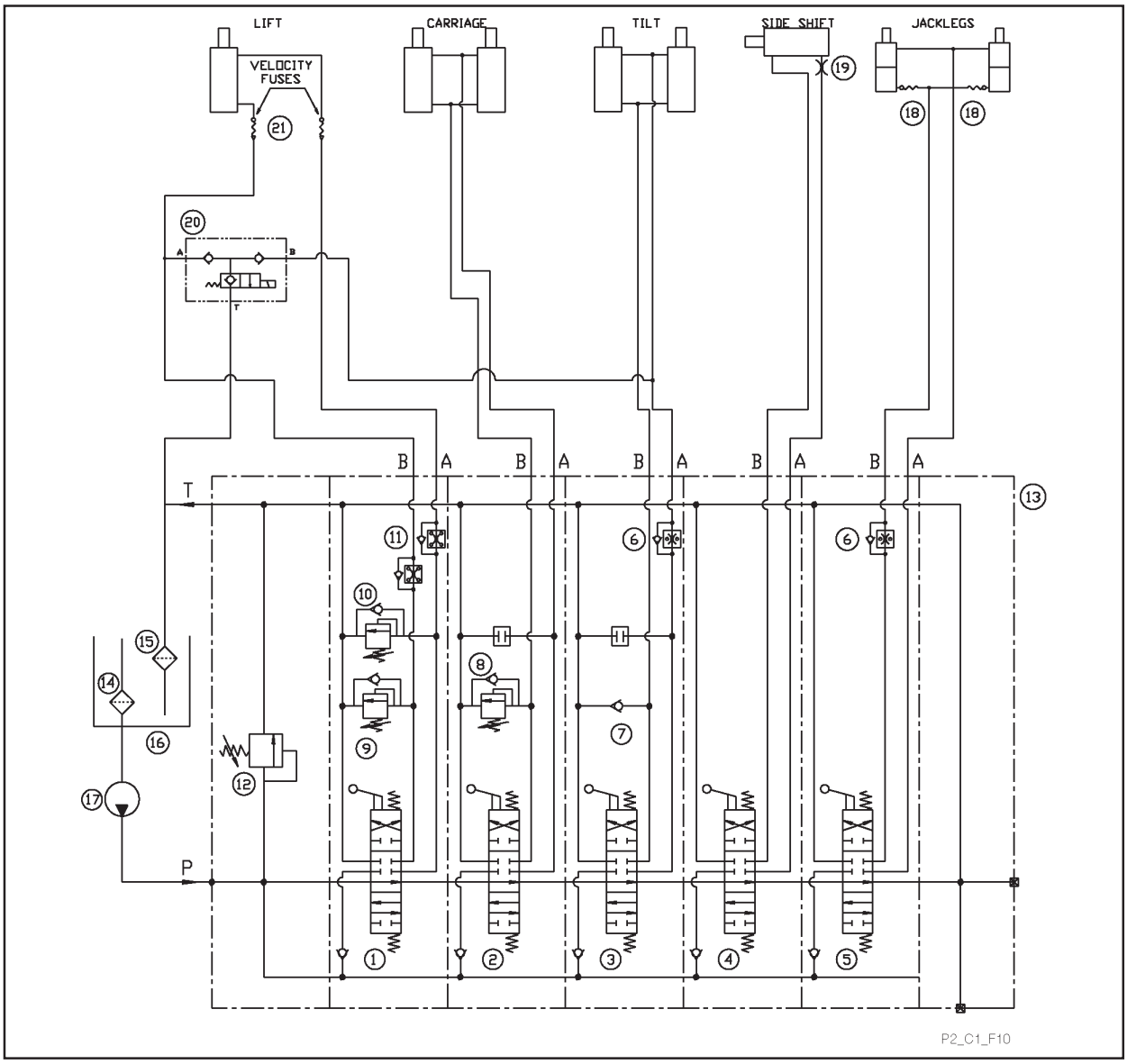


**FIGURE 10. HYDRAULIC SYSTEM CIRCUIT DIAGRAM**

*The above illustrates the forklift hydraulic system circuit layout and connections using international symbols to represent the components.*

1. *Lift Section Spool Valve*
2. *Carriage Section*
3. *Tilt Section*
4. *Side Shift Section*
5. *Jackleg Section*
6. *One Way Restrictor - 2 Hole*
7. *Anti-Cavitation Valve*
8. *Service Port Relief - Carriage*
9. *Service Port Relief - Lift R*
10. *Service Port Relief - Life P*
11. *One Way Restrictor - 4 Hole*
12. *System Relief Valve*
13. *Valve Bank*
14. *SuctionFilter*
15. *Return Filter**
16. *Hydraulic Tank*
17. *Hydraulic Pump*
18. *Velocity Fuse 3/8”*
19. *Restrictor - Side Shift P*
20. *Hydraulic Release Valve*
21. *Velocity Fuse 1/2”*

***Note: M5/M40 Models Use A Return Line and Suction Boost Filter (RKM).***

# FORKLIFT HYDRAULIC SYSTEM - DESCRIPTION AND OPERATION

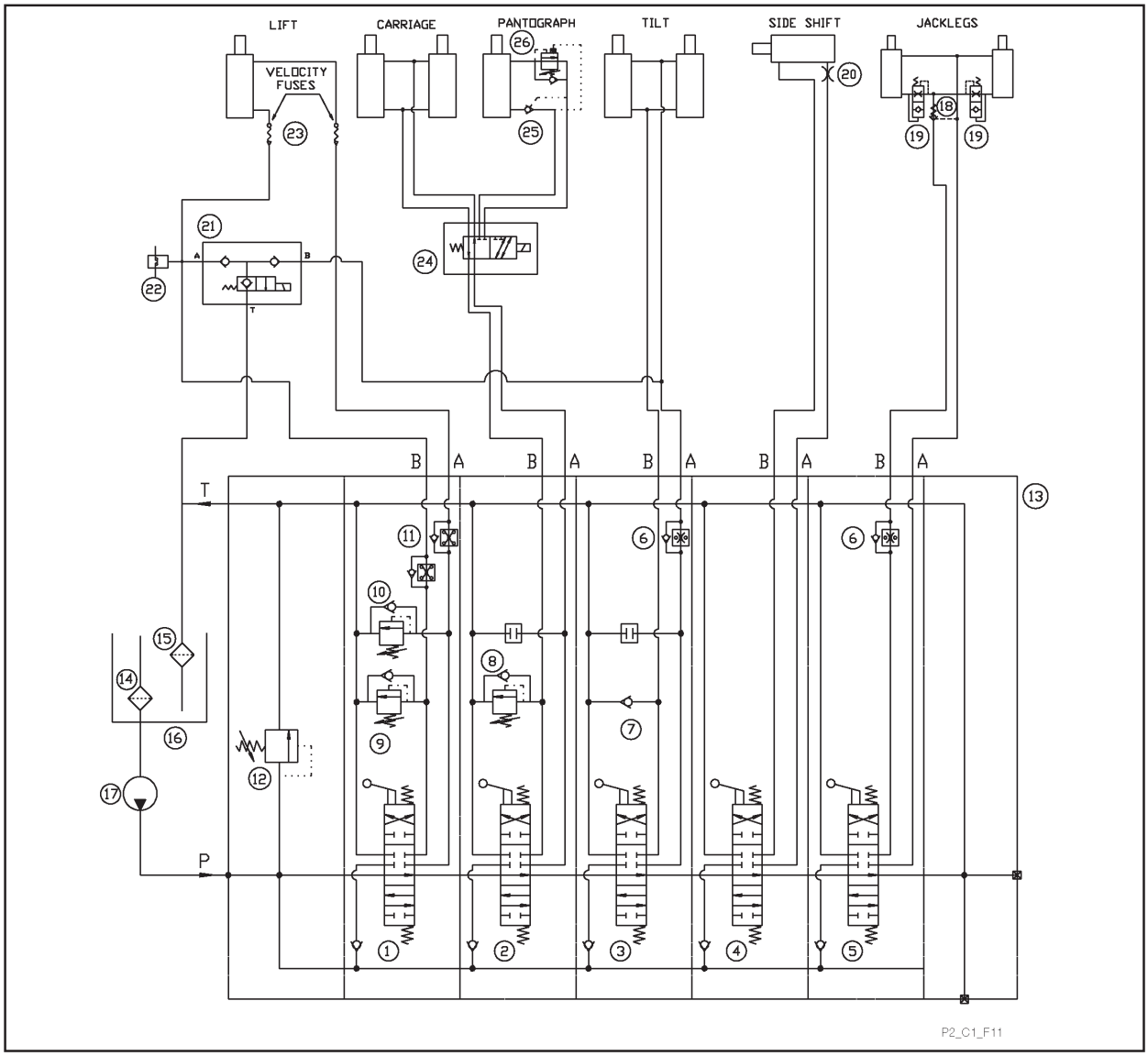


**FIGURE 11. PANTOGRAPH SYSTEM CIRCUIT DIAGRAM**

*The above illustrats the pantograph system circuit layout and connections using International symbols to represent the components.*

1. *Lift Section Spool Valve*
2. *Carriage Section*
3. *Tilt Section*
4. *Side Shift Section*
5. *Jackleg Section*
6. *One Way Restrictor - 2 Hole*
7. *Anti-Cavitation Valve*
8. *Service Port Relief - Carriage*
9. *Service Port Relief - Lift R*
10. *Service Port Relief - Life P*
11. *One Way Restrictor - 4 Hole*
12. *System Relief Valve*
13. *Valve Bank*
14. *Suction Filter*
15. *Return Filter**
16. *Hydraulic Tank*
17. *Hydraulic Pump*
18. *Velocity Fuse 3/8"*
19. *Restrictor - Side Shift P*
20. *Hydralic Release Valve*
21. *Velocity Fuse 1/2"*
22 *Lift Cylinder Pressure Switch R*
23. *Velocity Fuse 1/2"*
24. *Pantograph Changeover Valve*
25. *Pilot Operator Check Valve*
26. *Counterbalance Valve*

***Note: M5/M40 Models Use A Return Line and Suction Boost Filter (RKM).***

# FORKLIFT HYDRAULIC SYSTEM - DESCRIPTION AND OPERATION

## HYDRAULIC PUMP

- The gear type hydraulic pump is mounted on the hydrostatic pump.
- The pumps are driven directly from the engine flywheel through a splined coupling.

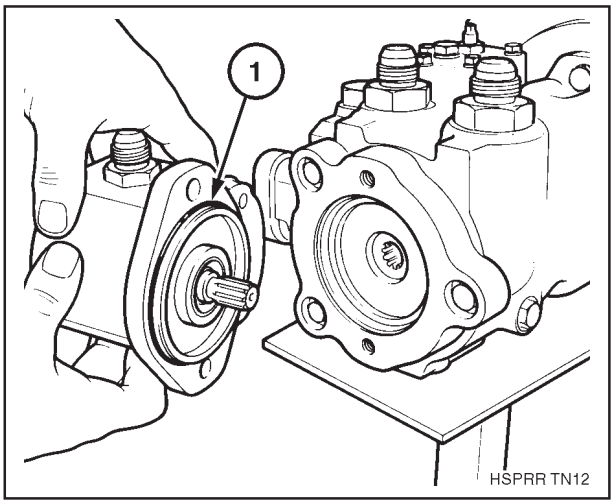


**FIGURE 12. HYDRAULIC PUMP MOUNTING**

*1. 'O' Ring*

- The driving and driven gears rotate within the pump body, clearance between the gear teeth and the body is minimal.
- Rotation of the gears draws oil through the suction strainer to the pump inlet port. Oil is carried around the outside of the gears between the gear teeth and the body, and forced out of the outlet port by the action of the meshing gear teeth.

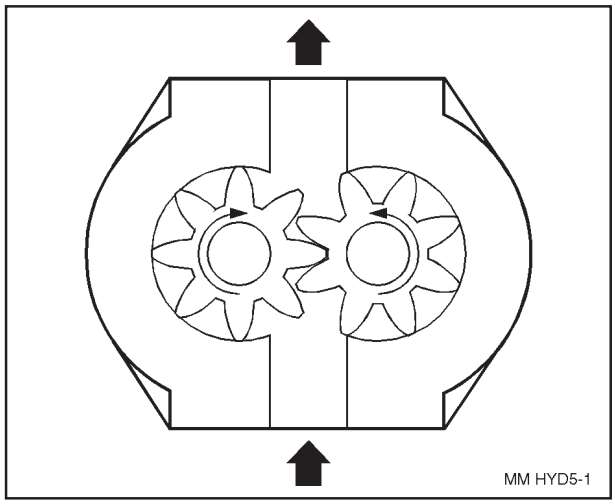


**FIGURE 14. GEAR PUMP OIL FLOW**

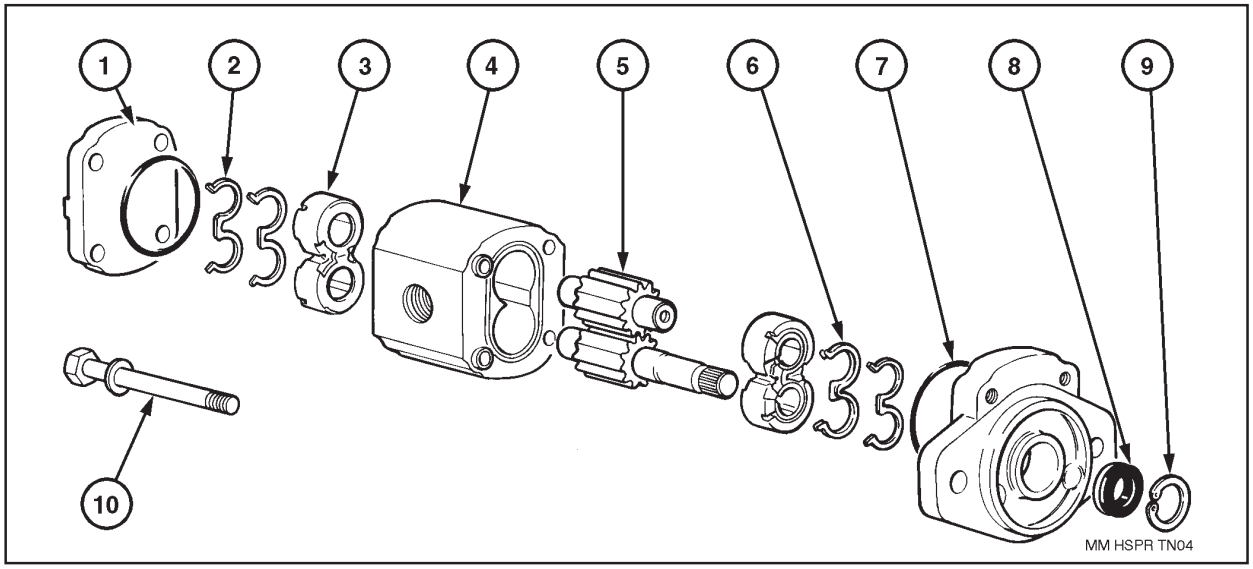


**FIGURE 13. HYDRAULIC PUMP - EXPLODED VIEW**

1. *End Cover & 'O' Ring*
2. *Back-up Seal*
3. *Bushes (Bearing Blocks)*
4. *Pump Body*
5. *Drive & Driven Gears*
6. *Seal*
7. *Flange & 'O' Ring*
8. *Shaft Seal*
9. *Circlip*
10. *Through Bolt*

# FORKLIFT HYDRAULIC SYSTEM - DESCRIPTION AND OPERATION

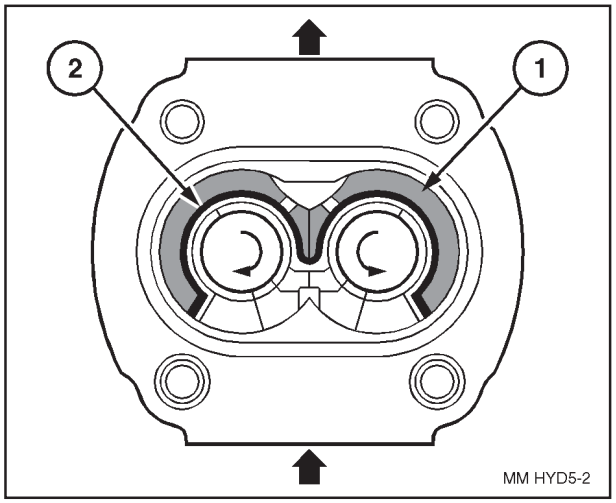


**FIGURE 15. PRESSURE COMPENSATION AREA**

- The pump creates oil flow, the circuit loads create pressure.
- When under load, pressure is developed as the gear teeth mesh, creating an unbalanced outward loading on the bearing blocks. To maintain a balanced and inward loading on the bearing blocks and to maintain minimal clearance between the gears and bearings, the pump has pressure compensated bearing blocks.
- 'E' shaped seals are fitted between the pump body and the outer surface of the bearing blocks. This allows generated pump pressure to load the outer surface area of the bearing blocks, thus maintaining the bearing blocks evenly against the gears when under load.
- The pressure compensated bearing blocks maintain maximum pump efficiency under load.
- Regular scheduled maintenance of the hydraulic system filters will ensure maximum pump service hours.
- Contaminated oil will create rapid wear tracks in the body increasing gear tooth clearance and resultant reduced pump efficiency.

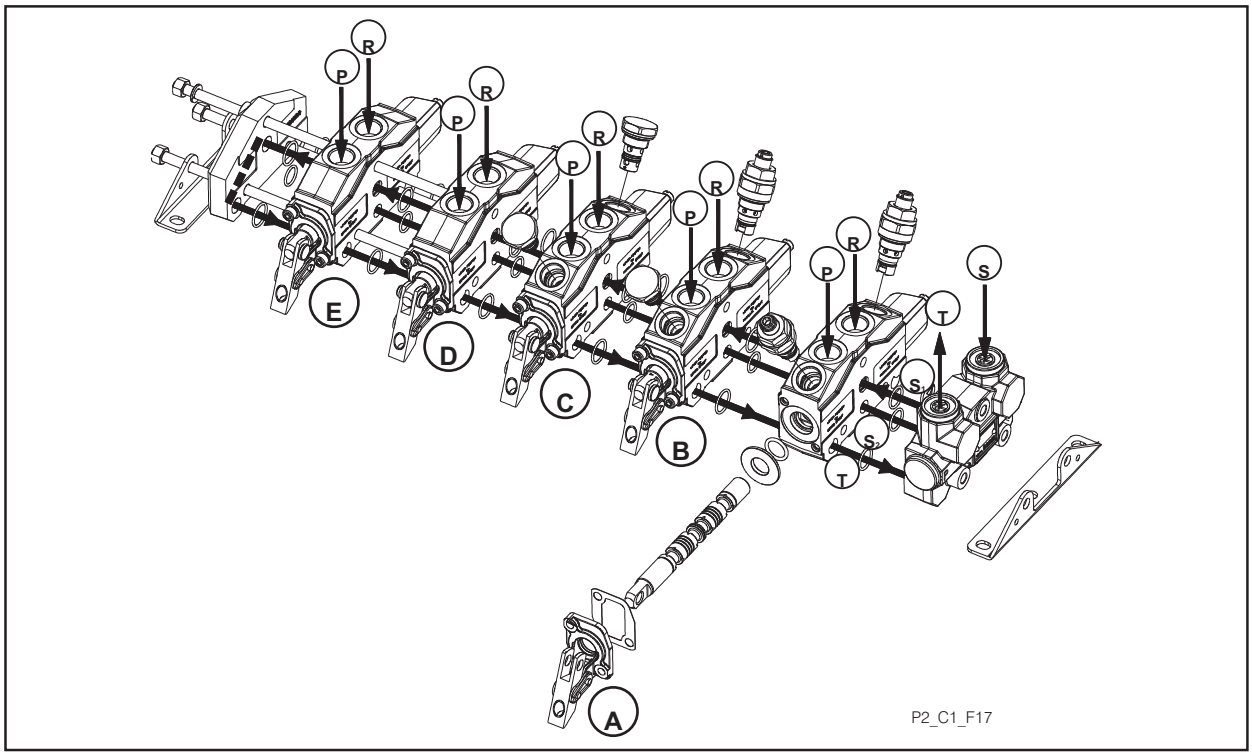


**FIGURE 16. CONTROL VALVE OIL GALLERY AND PORT IDENTIFICATION**

| | | |
|---|---|---|
| **VALVE SECTIONS:** | A. LIFT: B. CARRIAGE: C. TILT: D. SIDE SHIFT: E. STABILISERS: | |
| **VALVE PORTS:** | P. CYLINDER PISTON END<br>S. PUMP PRESSURE OIL | R. CYLINDER ROD END<br>T. RETURN OIL TO RESERVOIR |
| **OIL GALLERIES:** | S1: OPEN CENTRE GALLERY<br>T: RESERVOIR RETURN GALLERY | S2: PARALLEL GALLERY |

# FORKLIFT HYDRAULIC SYSTEM - DESCRIPTION AND OPERATION

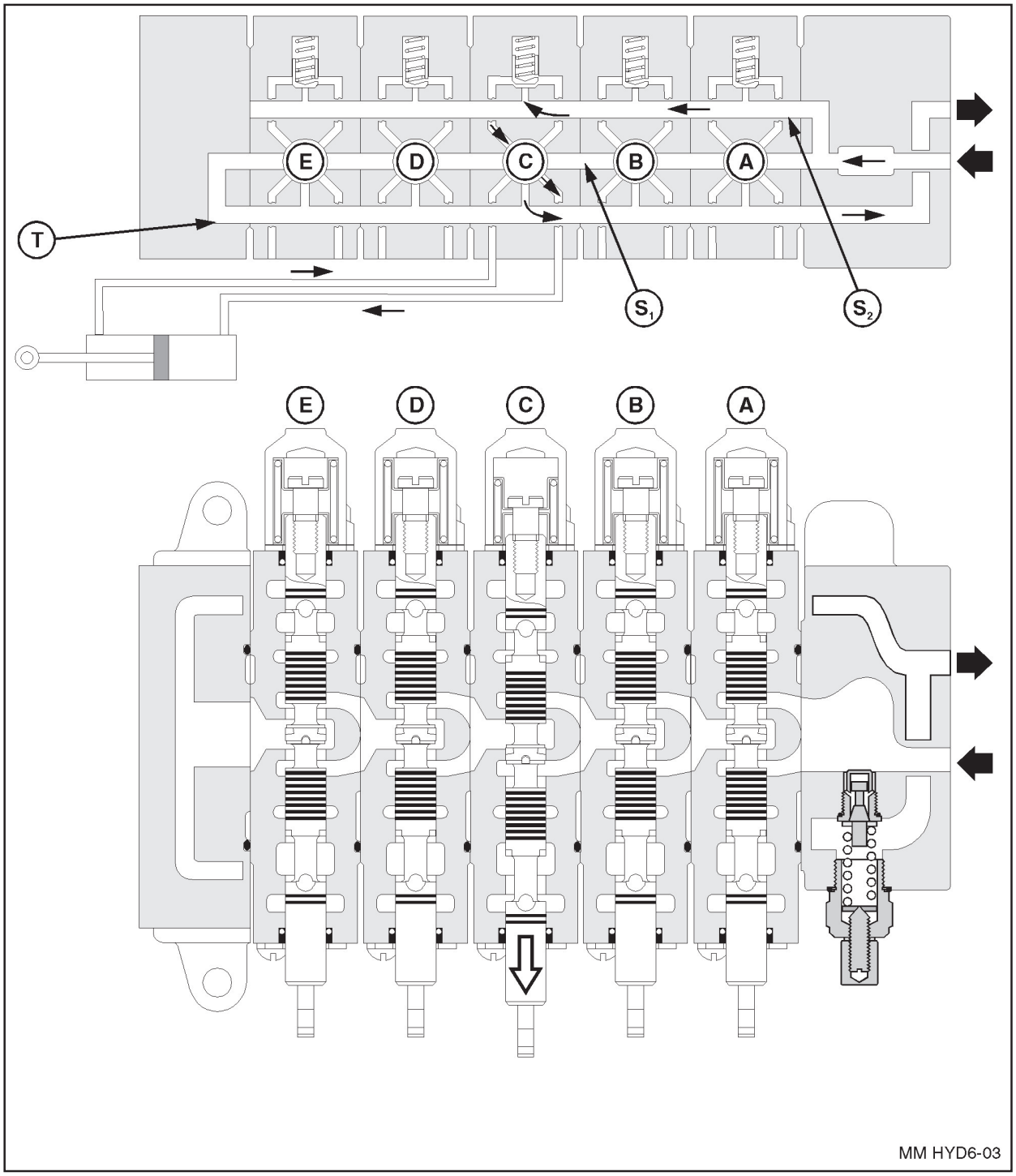


**FIGURE 17. CONTROL VALVE OIL FLOW SCHEMATIC**

**VALVE SECTIONS:** A. LIFT: B. CARRIAGE: C. TILT: D. SIDE SHIFT: E. STABILISERS:

**OIL GALLERIES:** S1: OPEN CENTRE GALLERY S2: PARALLEL GALLERY
T: RESERVOIR RETURN GALLERY

# FORKLIFT HYDRAULIC SYSTEM - DESCRIPTION AND OPERATION

## CONTROL VALVE OIL GALLERIES

The control valve oil flows are described below and reference figures 16 and 17. Section oil flows are described with reference to figures 21, 22 and 23.

- The main oil galleries run longitudinally through the valve sections between the end covers.
- The open centre gallery, 'S1', extends from the inlet end cover to the opposite end cover, where it runs into the reservoir return galleries, 'T'. The return galleries run through either side of the valve sections back to the inlet end cover. The parallel gallery, 'S2', extends from the inlet end cover through the sections but, terminates at the last valve section E, this gallery is always under pump pressure.
- With the spools in neutral, pump oil flows into port 'S' along the staggered open centre gallery into the end cover, where it returns to port 'T' along the return galleries.
- When one of the control spools is moved from neutral to operate a circuit, the centre portion of the spool blocks the open centre gallery, resultant pressure build up in the parallel gallery opens the valve section check valve and pump oil flows by the control spool to the cylinder.
- Return oil from the opposite end of the cylinder flows across the control spool to the return gallery.

The operation of the system and service port relief valves, anti-cavitation and restrictor valves located in the control valve assembly are described in the following sections.

## SYSTEM RELIEF VALVE

The system relief valve protects the pump from excess operating pressure and is located in the inlet end cover between the pump supply gallery 'S1' and the reservoir return gallery 'T'.

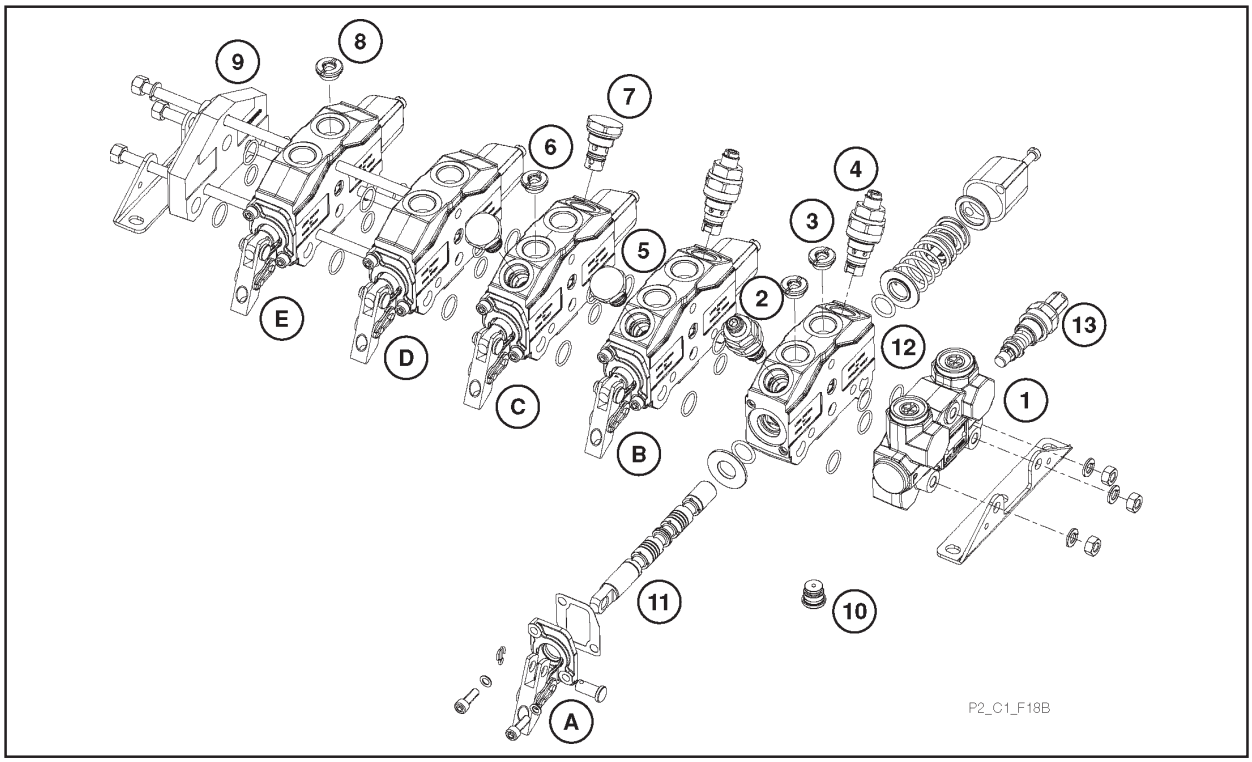


**FIGURE 18. CONTROL VALVE - EXPLODED VIEW**

**VALVE SECTIONS:** **A. LIFT: B. CARRIAGE: C. TILT: D. SIDE SHIFT: E. STABILISERS:**

1. *Inlet End Section*
2. *Service Port Relief Valve - Piston End*
3. *Restrictor (4 hole)*
4. *Service Port Relief Valve - Rod End*
5. *Plug*
6. *Restrictor (2 hole) Tilt Rod End*
7. *Anti-cavitation Valve*
8. *Restrictor (2 hole) - Stabiliser Piston End*
9. *End Cover*
10. *Check Valve (1 per section)*
11. *Control Valve Spool*
12. *Valve Section Housing*
13. *System Relief Valve*

# FORKLIFT HYDRAULIC SYSTEM - DESCRIPTION AND OPERATION

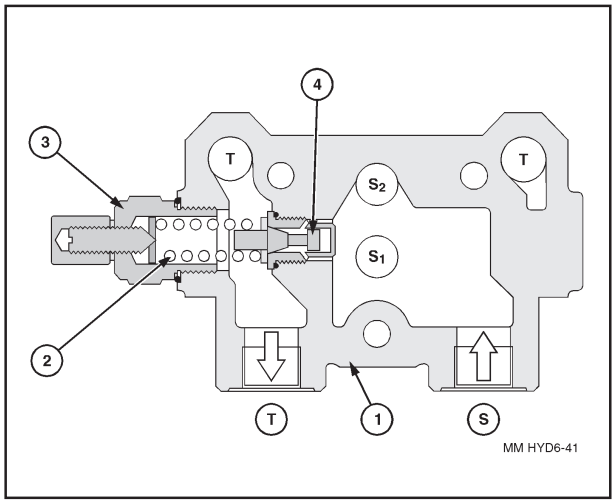


**FIGURE 19. SYSTEM RELIEF VALVE CLOSED**

- If the pump supply pressure exceeds the system relief valve setting, the pressure will open the valve against the spring pressure allowing oil to flow from gallery 'S1' to gallery 'T' and limiting the maximum pump pressure to 193 bar / 2800 lbf/in$^2$.
- The piston portion of the relief valve prevents the valve oscillating when operating at blow off pressure.
- The relief valve is adjustable.

## SECTION OIL FLOWS

The valve section oil flows are described below and are reference by figures 21, 22 and 23.

- In neutral the centralised valve spool position allows pump oil to flow along the open centre gallery to the return gallery in the end cover. The outer sections of the valve spool trap the oil in both ends of the cylinder.
- When the valve spool is moved to extend or retract the cylinder, the centre section of the spool blocks the open centre gallery. Pump pressure rises rapidly in the parallel gallery until the check valve opens against residual cylinder pressure, allowing pump oil to flow to the cylinder port via the check valve gallery and the valve spool.
- Return oil from the opposite end of the cylinder flows across the valve spool into the return gallery.
- The section check valve prevents residual cylinder pressure feed back to the pump and so prevents initial negative cylinder movement during pump pressure build up.

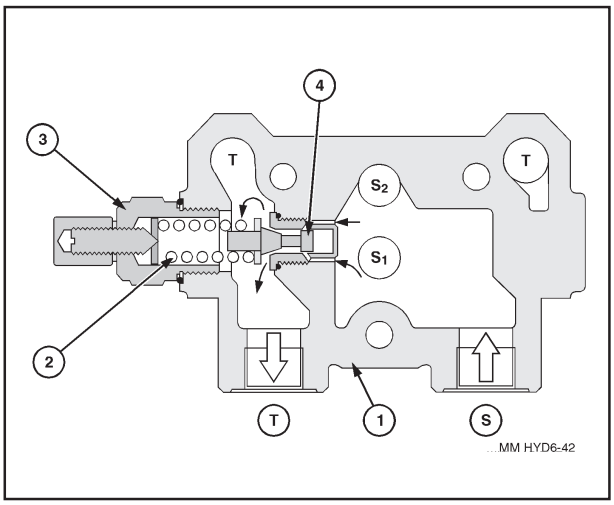


**FIGURE 20. SYSTEM RELIEF VALVE OPEN**

**OIL GALLERIES:** S1: OPEN CENTRE GALLERY
S2: PARALLEL GALLERY
T: RESERVOIR RETURN GALLERY

*1. Inlet End Section* *2. Relief Valve Spring*
*3. Valve Body* *4. Relief Valve*

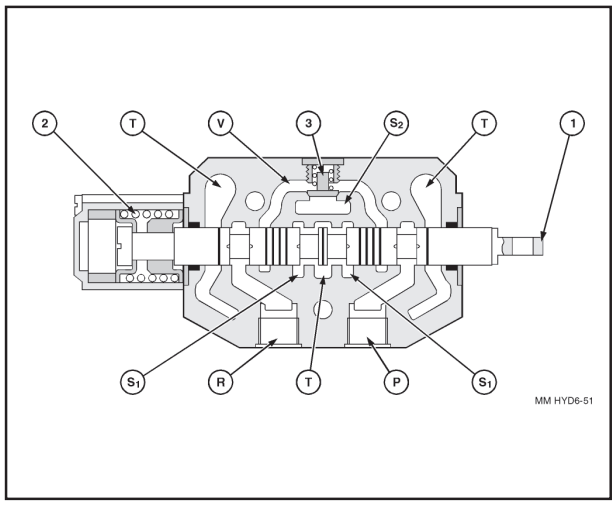


**FIGURE 21. SYSTEM RELIEF VALVE OPEN**

**OIL GALLERIES:** S1: OPEN CENTRE GALLERY
S2: PARALLEL GALLERY
T: RESERVOIR RETURN GALLERY
V: CHECK VALVE GALLERY

**VALVE PORTS:** P. CYLINDER PISTON END
R. CYLINDER ROD END

*1. Valve Spool* *2. Centring Spring*
*3. Check Valve*

# FORKLIFT HYDRAULIC SYSTEM - DESCRIPTION AND OPERATION

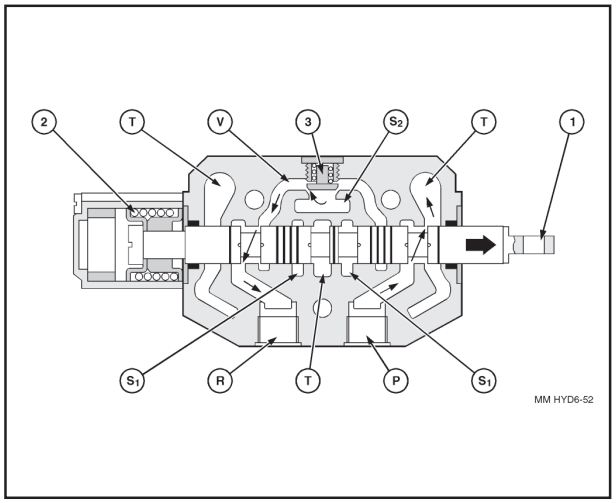


**FIGURE 22. CONTROL VALVE SECTION OIL FLOW - CYLINDER EXTENDING**

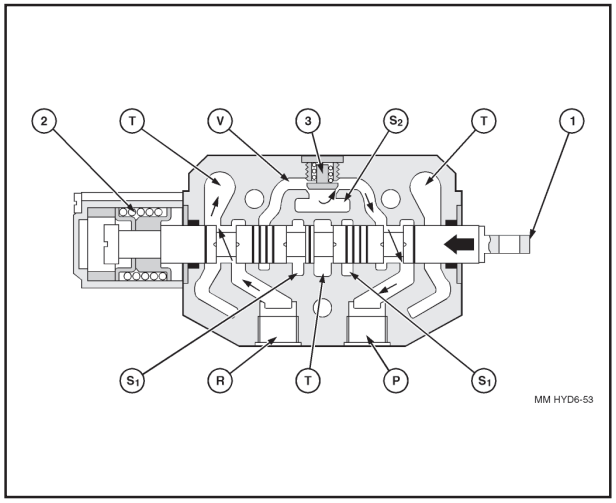


**FIGURE 23. CONTROL VALVE SECTION OIL FLOW - CYLINDER RETRACTING**

**OIL GALLERIES:** S1: OPEN CENTRE GALLERY
S2: PARALLEL GALLERY
T: RESERVOIR RETURN GALLERY
V: CHECK VALVE GALLERY

**VALVE PORTS:** P. CYLINDER PISTON END
R. CYLINDER ROD END

*1. Valve Spool* *2. Centring Spring*
*3. Check Valve*

## SERVICE PORT RELIEF VALVES

- The service port relief valves fitted to the control valve lift section have a relief valve and anti-cavitation function.
- If the pressure in gallery 'C' exceeds the relief valve setting, the valve will open to allow low pressure oil to pass from gallery 'C' to gallery 'T'.

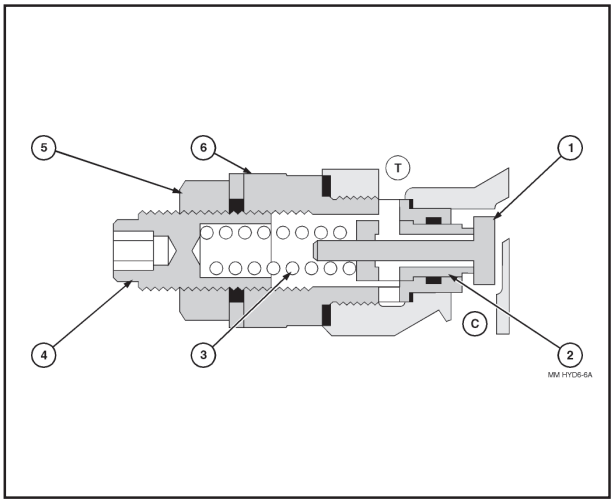


**FIGURE 24. SERVICE PORT RELIEF VALVE**

**OIL GALLERIES:** C: CYLINDER GALLERY
T: RESERVOIR RETURN GALLERY

*1. Anti-cavitation Valve* *4. Spring Adjuster*
*2. Relief Valve* *5. Locknut*
*3. Spring* *6. Valve Body*

- If the pressure in gallery 'C' drops below the pressure in gallery 'T', the anti-cavitation valve will open to allow the flow from gallery 'T' to the cylinder gallery 'C'.
- The functions are shown in lift circuit operational conditions in figures 26 to 30.
- The one way restrictor fitted in the valve port restricts the lift cylinder drop rate.

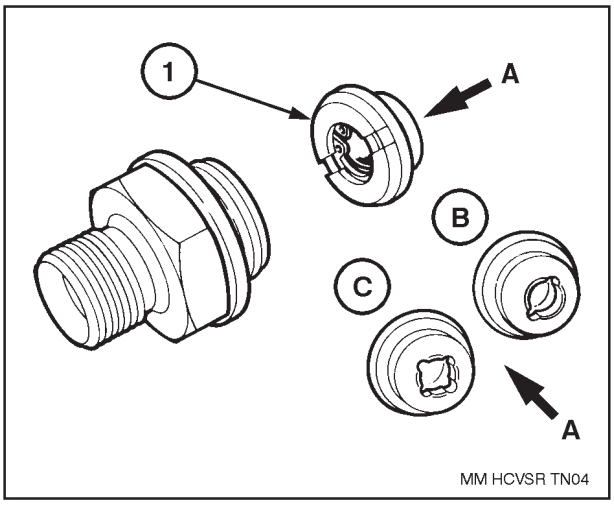


**FIGURE 25. VALVE PORT ONE WAY RESTRICTORS**

*1. Restrictor* *A. Top Side View*
*B. Two Hole Type* *C. Four Hole Type*

# FORKLIFT HYDRAULIC SYSTEM - DESCRIPTION AND OPERATION

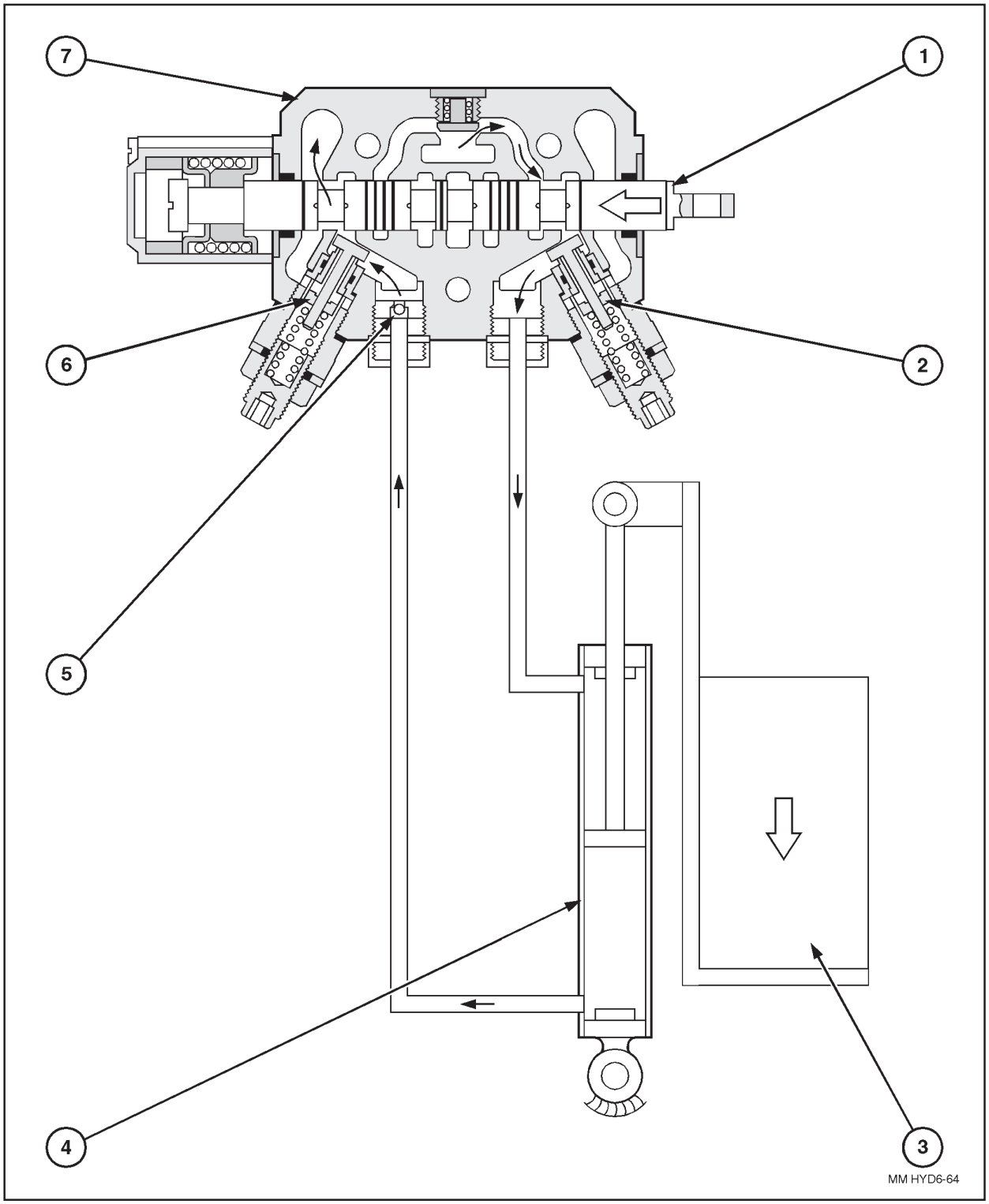


**FIGURE 26. LIFT CIRCUIT OIL FLOW - NORMAL OPERATION**

1. *Valve Spool*
2. *Rod End Port Relief Valve*
3. *Load on Forks*
4. *Lift Cylinder*
5. *One Way Restrictor*
6. *Piston End Port Relief Valve*
7. *Control Valve Lift Section*

# FORKLIFT HYDRAULIC SYSTEM - DESCRIPTION AND OPERATION

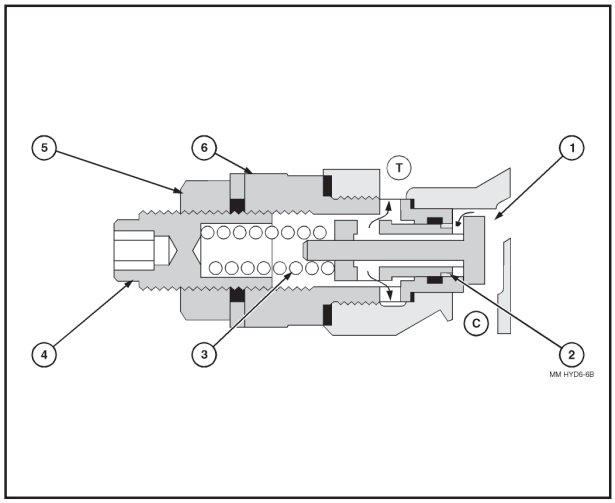


**FIGURE 27. SERVICE PORT RELIEF VALVE OIL FLOW - PRESSURE RELIEF FUNCTION**

***OIL GALLERIES:*** *C: CYLINDER GALLERY*
*T: RESERVOIR RETURN GALLERY*

1. *Anti-cavitation Valve*
2. *Relief Valve*
3. *Spring*
4. *Spring Adjuster*
5. *Locknut*
6. *Valve Body*

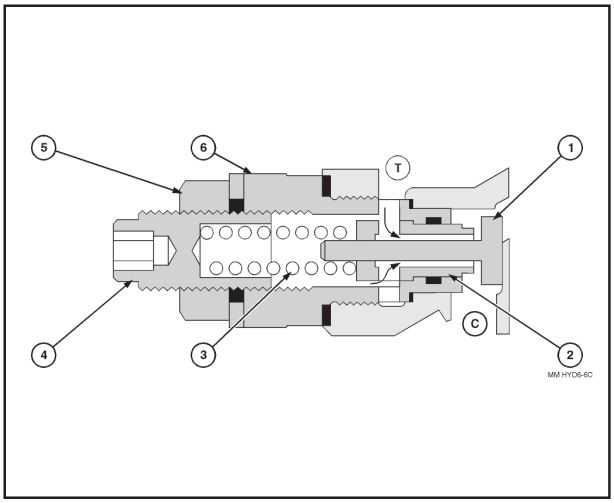


**FIGURE 28. SERVICE PORT RELIEF VALVE - ANTI-CAVITATION FUNCTION**

***OIL GALLERIES:*** *C: CYLINDER GALLERY*
*T: RESERVOIR RETURN GALLERY*

1. *Anti-cavitation Valve*
2. *Relief Valve*
3. *Spring*
4. *Spring Adjuster*
5. *Locknut*
6. *Valve Body*

- The service port relief valve pressures are set lower than the system relief valve to limit the maximum lift and lower effort and protect the unit from mechanical overload.
- The service port relief valve located in the valve piston end port limits the maximum lift cylinder pressure to 165 bar / 2400 lbf/in$^2$. This limits lift capacity to maintain forklift truck stability.
- The lift circuit in figure 29 shows the relief valve action when attempting to lift excessive weight.
- The service port relief valve located in the valve rod end limits the maximum lowering pressure to 172 bar / 2500 lbf/in$^2$ . This limits the down thrust on the forks and prevents damage to the truck transport mountings.
- The relief valves are adjustable.

- The service port relief valve also acts as a shock relief valve to protect the lift cylinder from excessive generated pressure if the control valve is suddenly returned to neutral while lowering a heavy load.
- This condition is shown in the lift circuit in figure 30, where excessive cylinder pressure below the piston is limited by the service port relief valve providing a progressive deceleration of the load.
- As the cylinder drops a short distance after the control spool has been returned to neutral, the piston creates a negative pressure in the rod end.
- The reduced pressure opens the rod end service port relief valve anti-cavitation valve allowing reservoir oil to fill the cylinder to prevent cavitation.

# FORKLIFT HYDRAULIC SYSTEM - DESCRIPTION AND OPERATION

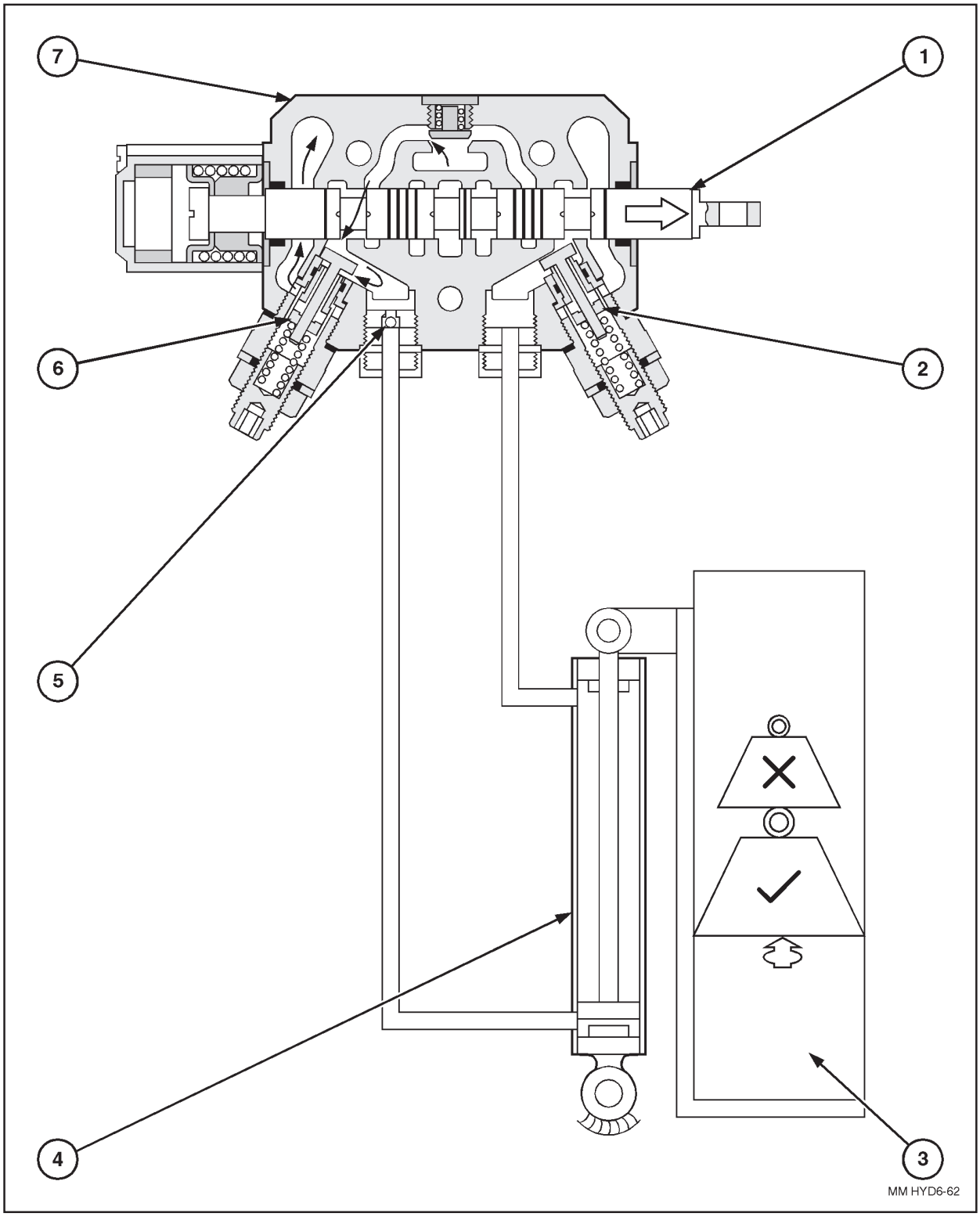


**FIGURE 29. LIFT CIRCUIT OIL FLOW WITH OVERLOAD**

1. *Valve Spool*
2. *Rod End Port Relief Valve*
3. *Load on Forks*
4. *Lift Cylinder*
5. *One Way Restrictor*
6. *Piston End Port Relief Valve*
7. *Control Valve Lift Section*

# FORKLIFT HYDRAULIC SYSTEM - DESCRIPTION AND OPERATION

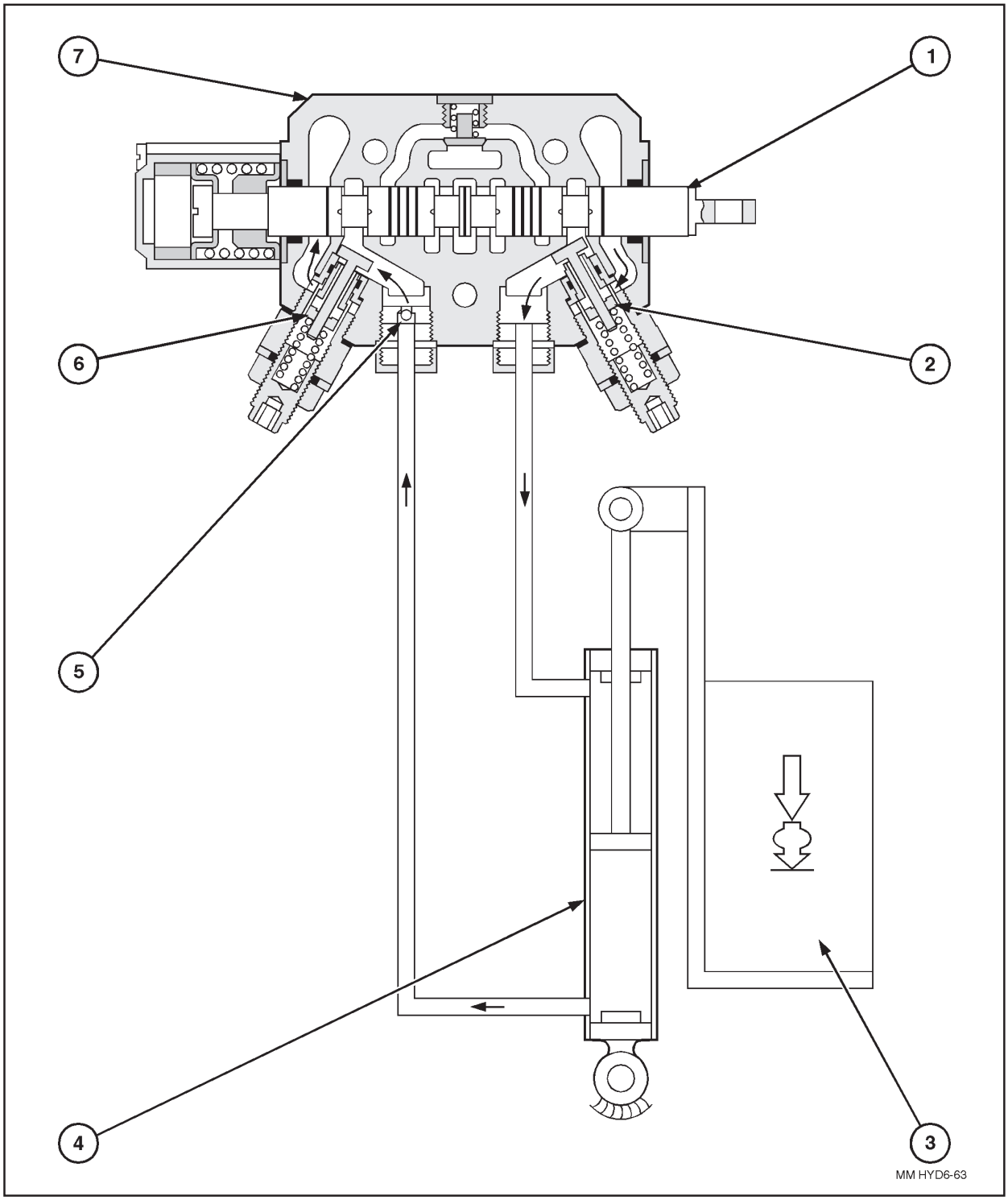


**FIGURE 30. LIFT CIRCUIT IN SHOCK RELIEF CONDITION**

1. *Valve Spool*
2. *Rod End Port Relief Valve*
3. *Load on Forks*
4. *Lift Cylinder*
5. *One Way Restrictor*
6. *Piston End Port Relief Valve*
7. *Control Valve Lift Section*

# FORKLIFT HYDRAULIC SYSTEM - DESCRIPTION AND OPERATION

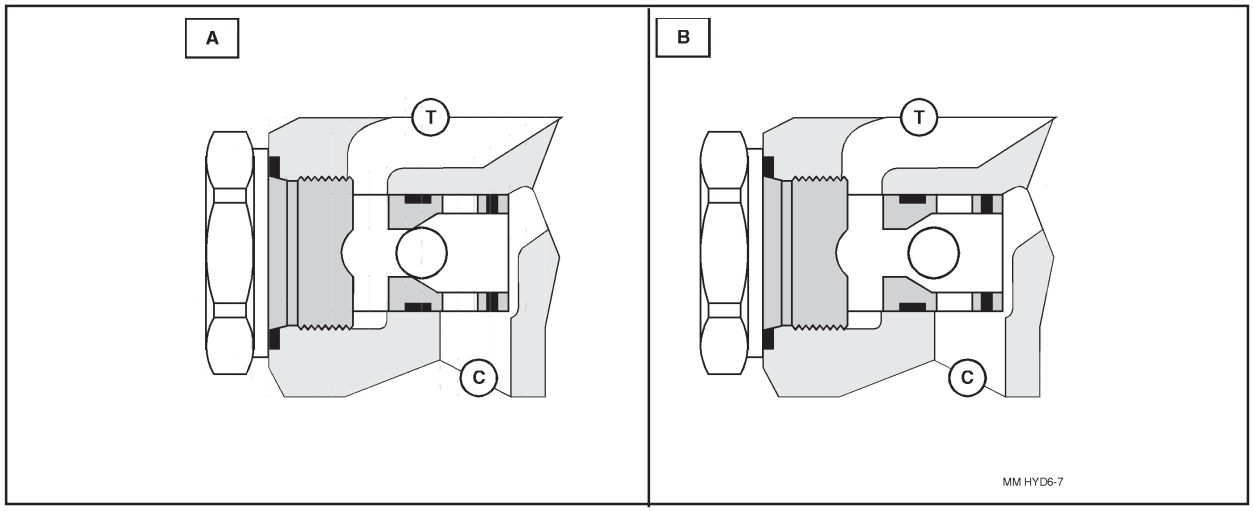


**FIGURE 31. TILT CIRCUIT OPERATION ANTI-CAVITATION VALVE OPERATION**

*A. VALVE CLOSED* *B. VALVE OPEN*
*C. Cylinder Gallery* *T. Reservoir Return Gallery*

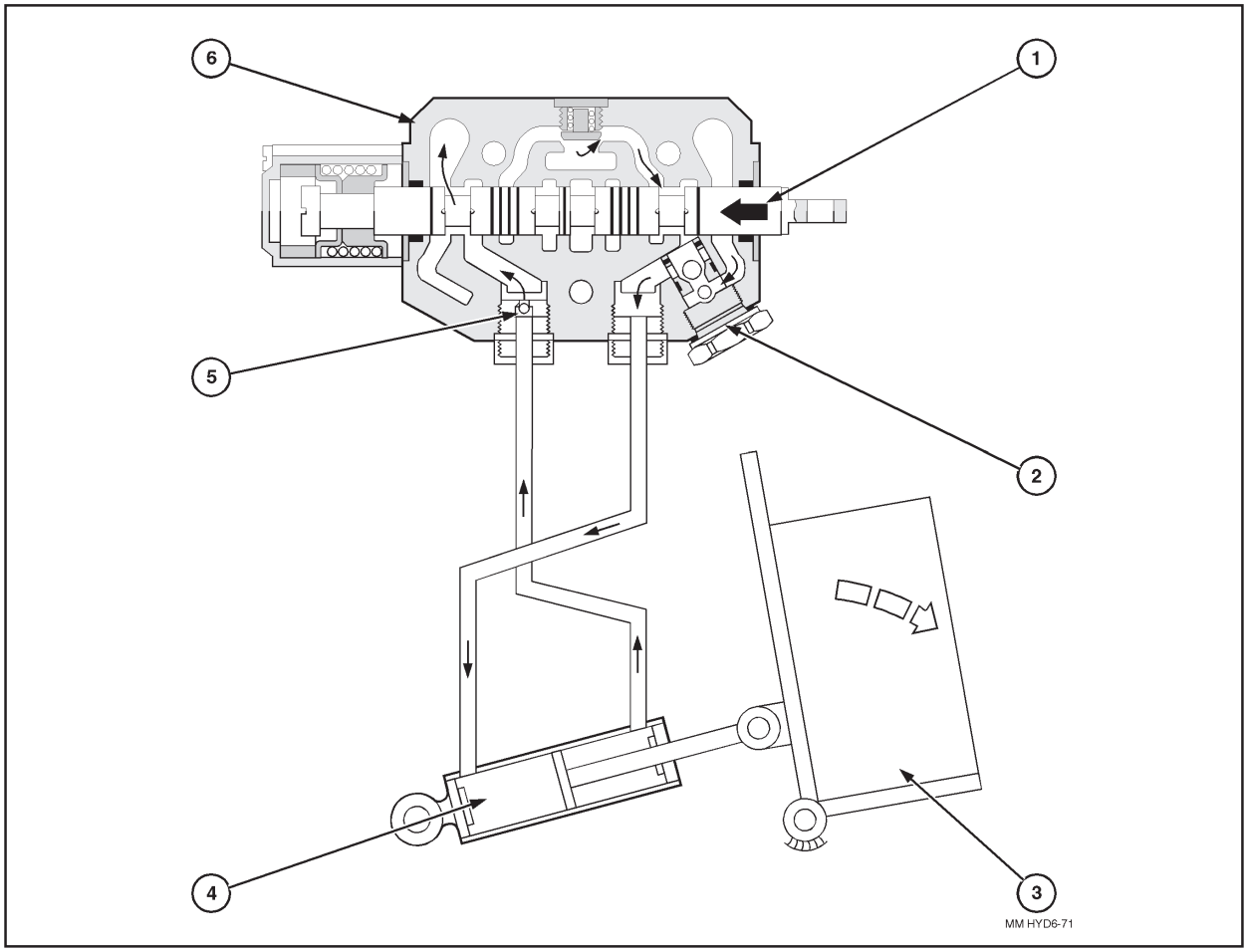


**FIGURE 32. TILT CIRCUIT OPERATION - FORWARD ROTATION**

*1. Valve Spool* *2. Anti-cavitation Valve* *3. Load on Forks*
*4. Tilt Cylinder* *5. One Way Restrictor* *6. Valve Tilt Section*

# FORKLIFT HYDRAULIC SYSTEM - DESCRIPTION AND OPERATION

## ANTI-CAVITATION VALVE

- An anti-cavitation valve is located in the tilt section piston end valve port to prevent cavitation of the tilt cylinder (refer to figure 31).
- The anti-cavitation valve remains closed whenever the pressure in gallery 'C' exceeds the pressure in gallery 'T', however, if the pressure in gallery 'C' drops below reservoir return pressure in gallery 'T', the valve opens.
- Cylinder cavitation can occur when a heavy fork load is being tilted forward, figure 32, or when the unit is located on truck mounting and chained and the pressures are released after stopping the engine.
- As the cylinder extends under load in either of the above conditions, the pressure in the cylinder piston end circuit drops below reservoir pressure.
- The anti-cavitation valve opens and reservoir oil flows from the reservoir return gallery into the cylinder to supplement pump oil and prevent cylinder cavitation.
- The one way restrictor located in the rod end valve port restricts cylinder extension when rotating the load forwards.

## HYDRAULIC CYLINDERS

- The forklift cylinders are all of similar double acting design, the piston and gland sealing arrangements vary between cylinders. Typical cylinder components are illustrated in figures 33 and 34.
- A typical cylinder sectional view is illustrated on the next page.

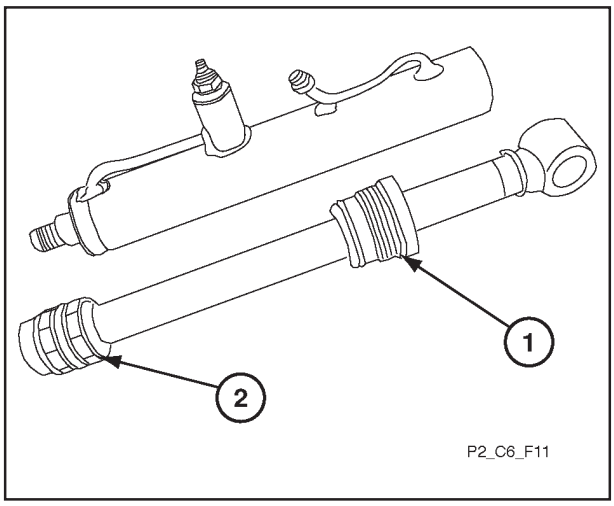


**FIGURE 33. TYPICAL CYLINDER COMPONENTS**

*1. Gland Assembly*
*2. Piston Assembly*

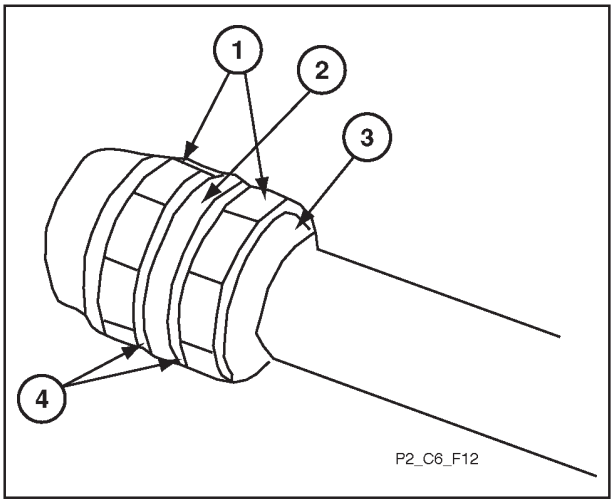


**FIGURE 34. PISTON AND GLAND**

*1. Piston Wear Rings*
*2. Gland 'O' Ring Seal*
*3. Gland Assembly*
*4. Piston Seals and Retaining Rings*

# FORKLIFT HYDRAULIC SYSTEM - DESCRIPTION AND OPERATION

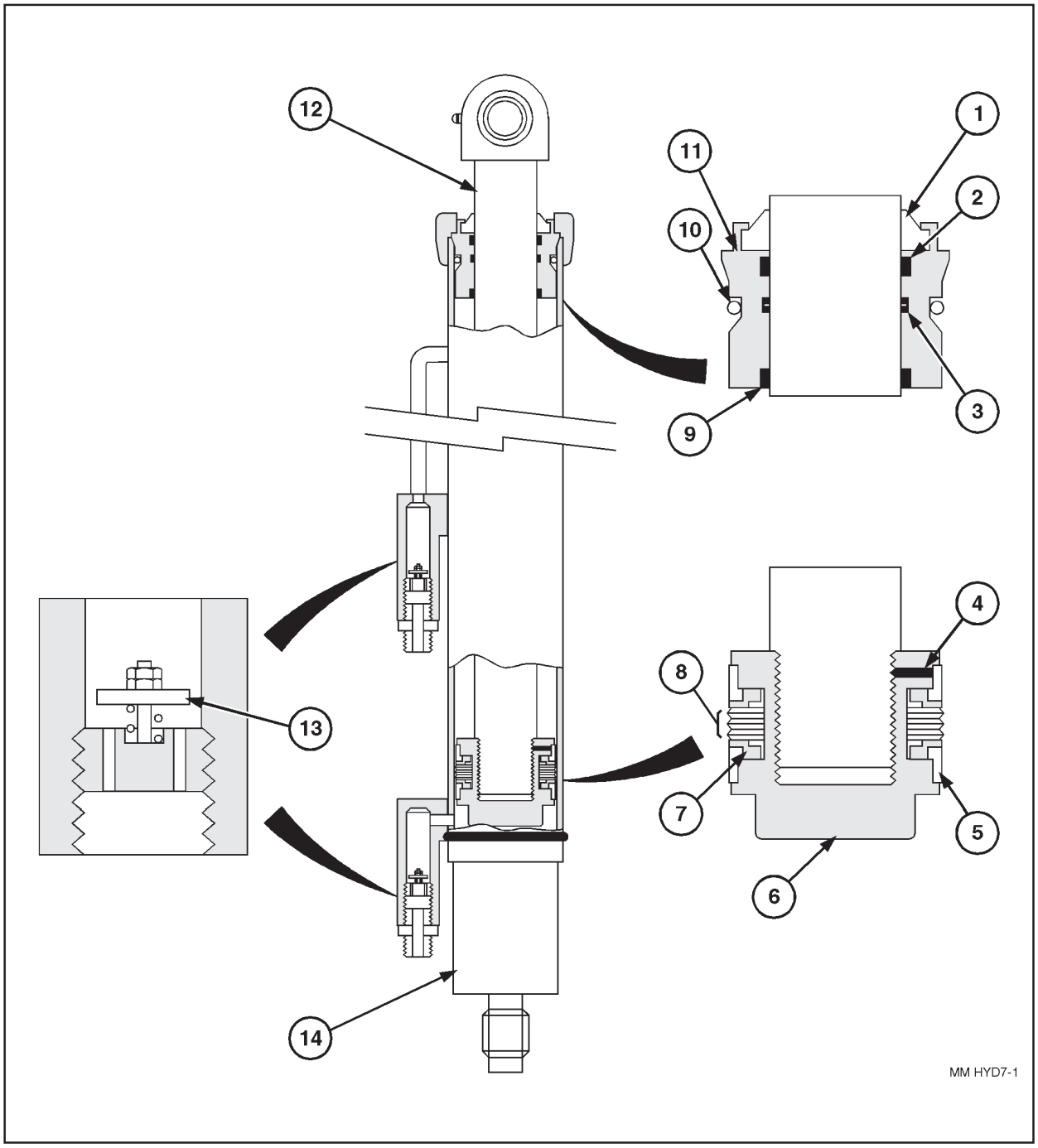


**FIGURE 35. TYPICAL CYLINDER SECTIONAL VIEW**

1. *Wiper Seal*
2. *Split Wear Ring*
3. *Rod Oil Seal*
4. *Piston Locking Screw*
5. *Piston Wear Rings*
6. *Piston*
7. *Seal Retaining Rings*
8. *Piston Seals*
9. *Split Wear Ring*
10. *'O' Ring Seal*
11. *Gland*
12. *Piston Rod*
13. *Velocity Fuse*
14. *Cylinder Barrel*

# FORKLIFT HYDRAULIC SYSTEM - DESCRIPTION AND OPERATION

## VELOCITY FUSES

- Velocity fuses are a safety device fitted to the lift and stabiliser cylinders to prevent cylinder retraction or extension in the event of a hose bursting.
- The velocity fuse valve plate will close the drillings in the body if there is rapid loss of oil from the cylinder due to a burst hose, trapping oil in the cylinder.
- Velocity fuses are fitted to the lift and stabiliser cylinders at the piston end to prevent rapid cylinder retraction under load.
- A velocity fuse is also fitted to the lift cylinder rod end to prevent rapid cylinder extension when lowering the forklift on truck mounting.

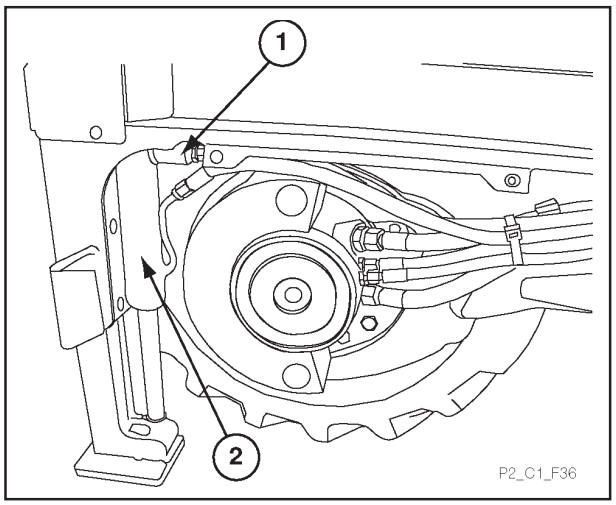


**FIGURE 36. STABILISER CYLINDER**

1. *Velocity Fuse Location*
2. *Right Hand Stabiliser Cylinder*

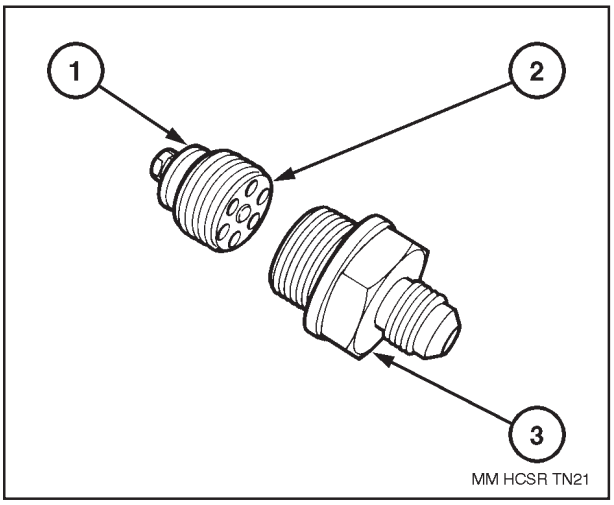


**FIGURE 37. VELOCITY FUSE**

1. *Valve Plate*
2. *Body*
3. *Hose Adaptor*

# FORKLIFT HYDRAULIC SYSTEM - DESCRIPTION AND OPERATION

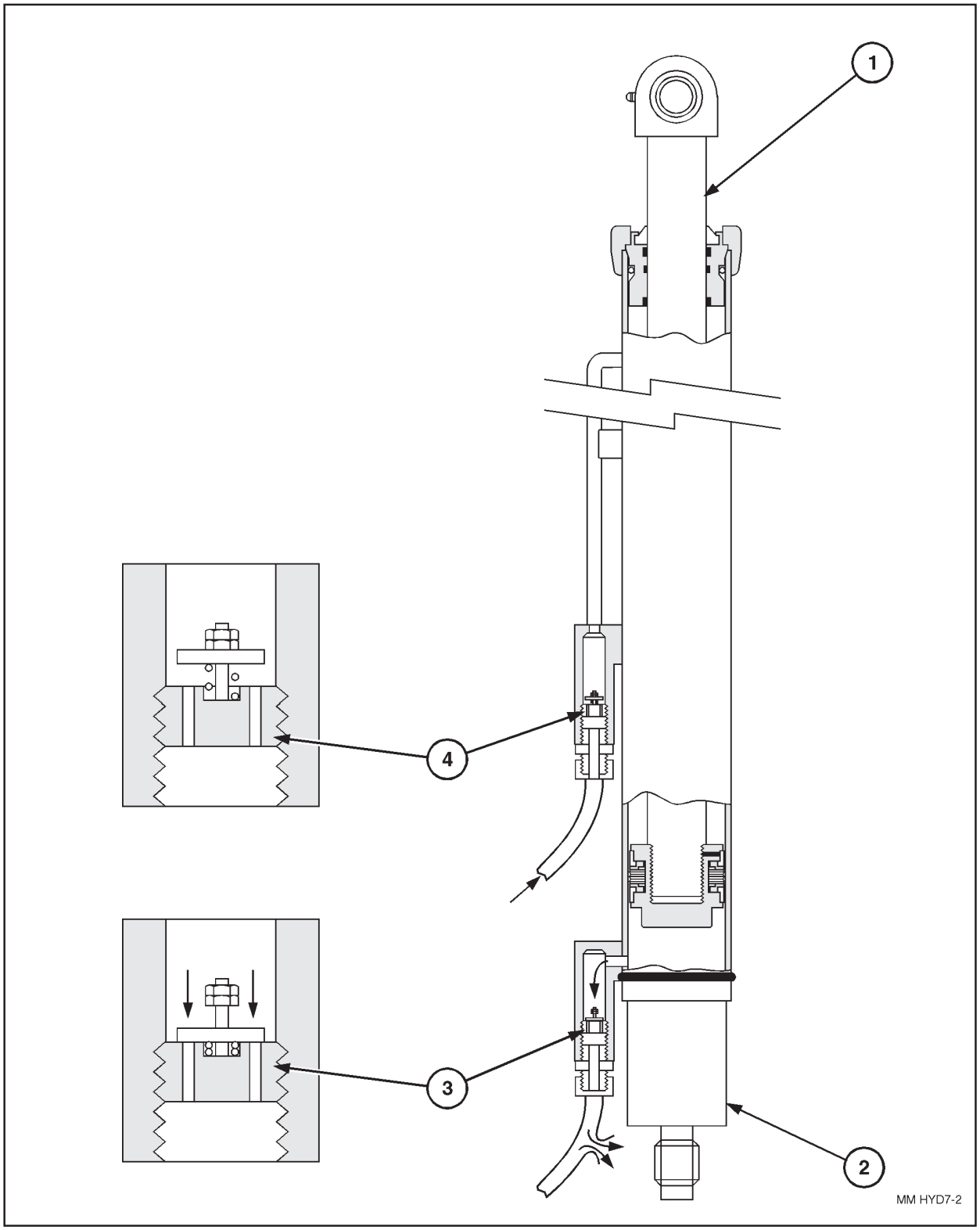


**FIGURE 38. LIFT CYLINDER VELOCITY FUSE OPERATION**

1. *Cylinder Rod*
2. *Cylinder Barrel*
3. *Velocity Fuse Closed*
4. *Velocity Fuse Open*

# FORKLIFT HYDRAULIC SYSTEM - DESCRIPTION AND OPERATION

## LOWER AND GO VALVE KIT

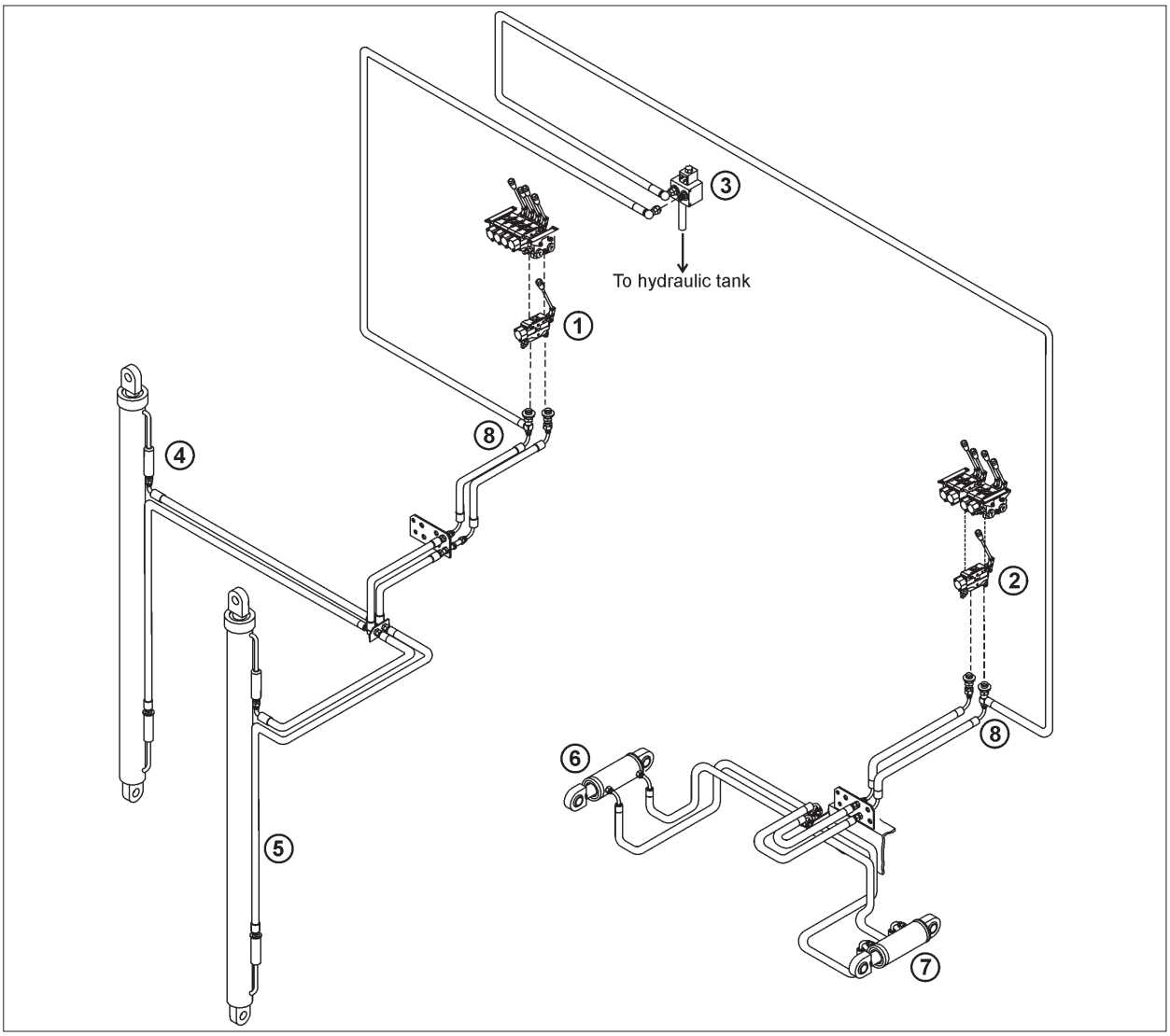


**FIGURE 39. M5 / M40 LOWER AND GO HYDRAULIC SYSTEM COMPONENT LAYOUT**

1. *Lift Valve Section*
2. *Tilt Valve Section*
3. *Hydraulic Release Dump Valve*
4. *Right Hand Lift Cylinder*
5. *Left Hand Lift Cylinder*
6. *Right Hand Tilt Cylinder*
7. *Left Hand Tilt Cylinder*
8. *T-Piece (x2)*

- The Lower and Go Valve Kit is fitted to simplify the truck mounting procedure of the forklift.
- It allows the driver of the forklift to release the hydraulic pressure from the lift and tilt circuits, after the forklift has been mounted on the truck and the transport chains are attached, without having to re-mount the forklift.
- The Lower and Go button, mounted on the side of the forklift, activates a solenoid valve which dumps the pressure in the lift and tilt circuit allowing the forklift to rest in the transport position.
- The button should be depressed for a minimum of 5-10 seconds.

# FORKLIFT HYDRAULIC SYSTEM - DESCRIPTION AND OPERATION

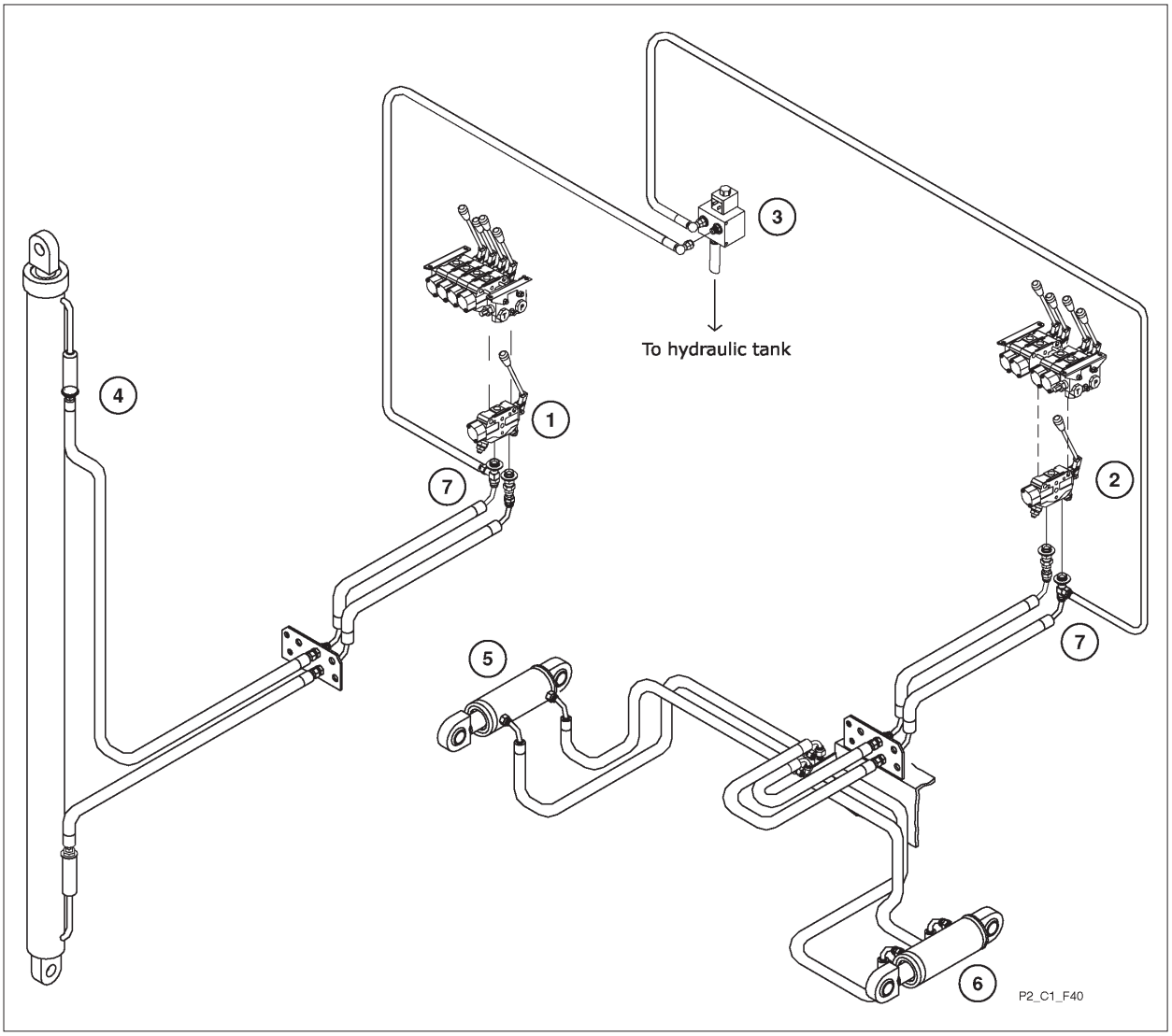


**FIGURE 39 A. M8 / M50 LOWER AND GO HYDRAULIC SYSTEM COMPONENT LAYOUT**

1. *Lift Valve Section*
2. *Tilt Valve Section*
3. *Hydraulic Release Dump Valve*
4. *Lift Cylinder*
5. *Right Hand Tilt Cylinder*
6. *Left Hand Tilt Cylinder*
7. *T-Piece (x2)*

# FORKLIFT HYDRAULIC SYSTEM - DESCRIPTION AND OPERATION

This chapter covers the function and operation of the forklift hydraulic system, the construction and operation of the mast and carriage are covered separately in Part 1, Chapter 1.

All the hydraulic cylinders are double acting, the lowering function of the lift cylinder is used to lift the Forklift into the transport position on the rear of the truck.

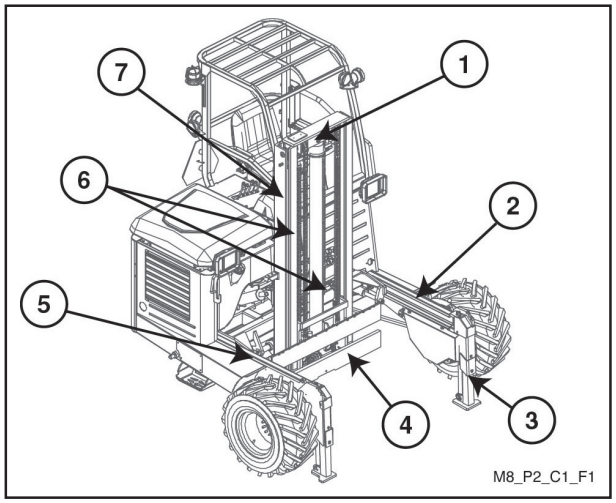


**FIGURE 1. FORKLIFT COMPONENTS**

1. *Inner Mast*
2. *Frame*
3. *Stabiliser*
4. *Fork Carriage*
5. *Mast Carriage*
6. *Lift Chains*
7. *Outer Mast*

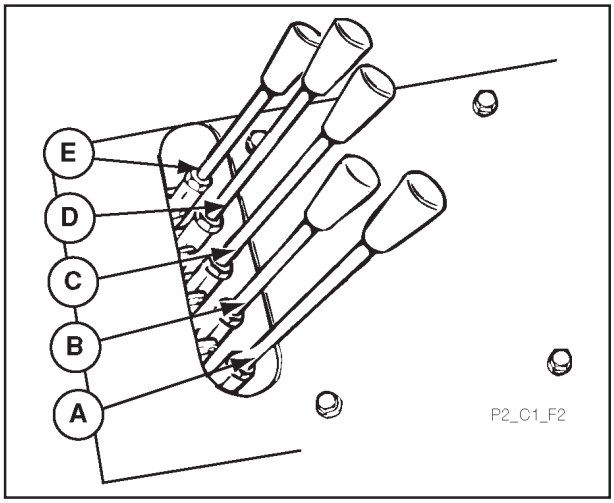


**FIGURE 2. FORKLIFT CONTROL LEVERS**

| | | |
|---|---|---|
| A. | *Mast* | *Raise and Lower* |
| B. | *Mast Carriage* | *In and Out* |
| C. | *Forks* | *Tilt - Up and Down* |
| D. | *Mast* | *Side Shift* |
| E. | *Stabilisers* | *Raise and Lower* |

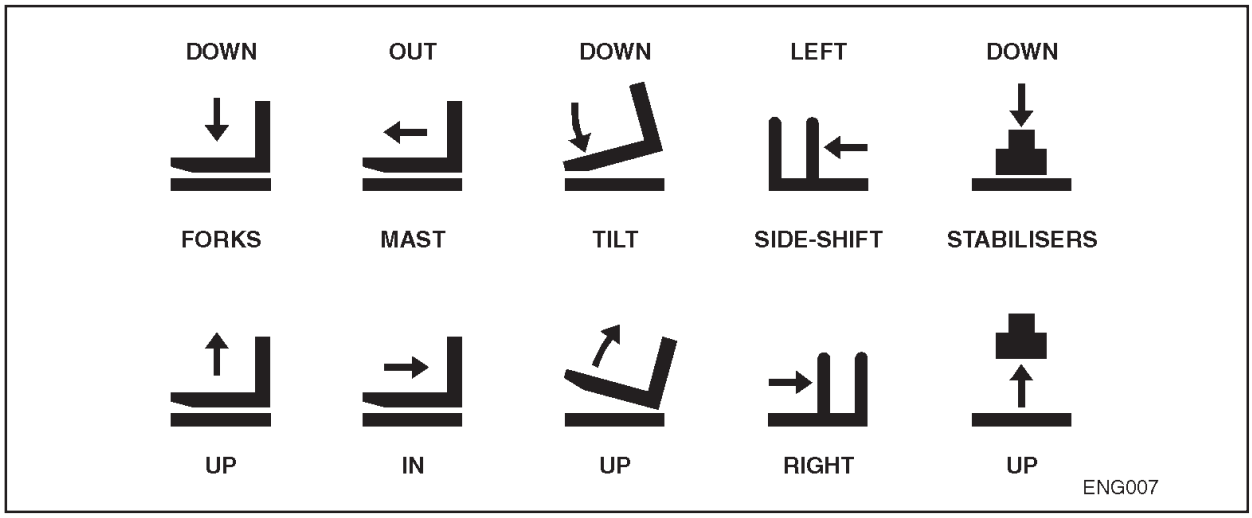


**EXAMPLE DASHBOARD DECAL - LEVER CONTROL**

# FORKLIFT HYDRAULIC SYSTEM - DESCRIPTION AND OPERATION

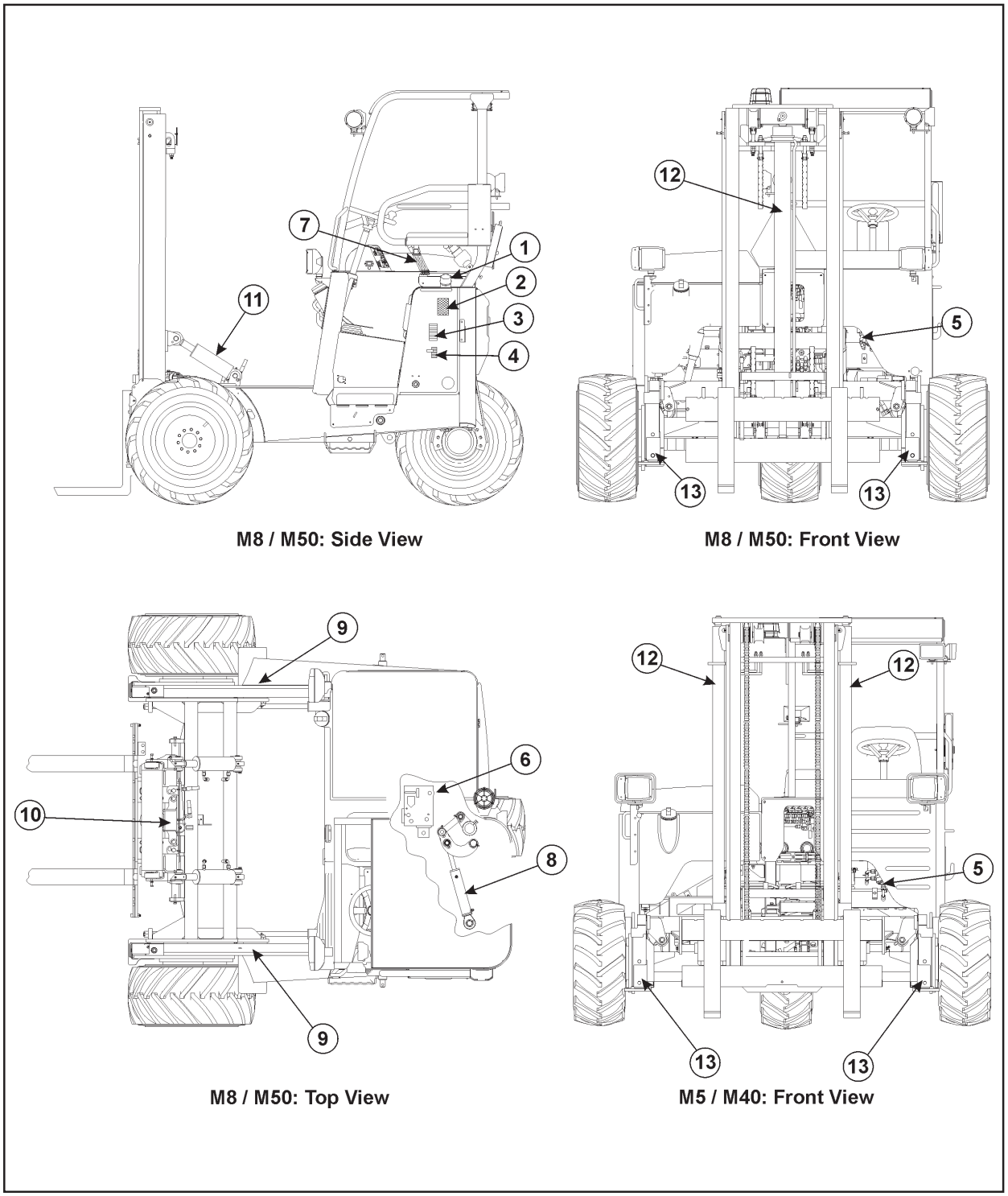


**FIGURE 3. HYDRAULIC SYSTEM COMPONENT LOCATIONS**

1. *Hydraulic Oil Reservoir*
2. *Hydraulic Return Filter*
3. *Hydraulic Suction Filter*
4. *Hydraulic System Oil Shut Off Valve*
5. *Steering Priority Valve*
6. *Hydraulic Pump*
7. *Forklift Control Valve*
8. *Steering Cylinder*
9. *Carriage Cylinders*
10 *Side Shift Cylinder*
11. *Tilt Cylinders (2)*
12. *Lift Cylinder(s)*
13. *Stabiliser Cylinders*

# FORKLIFT HYDRAULIC SYSTEM - DESCRIPTION AND OPERATION

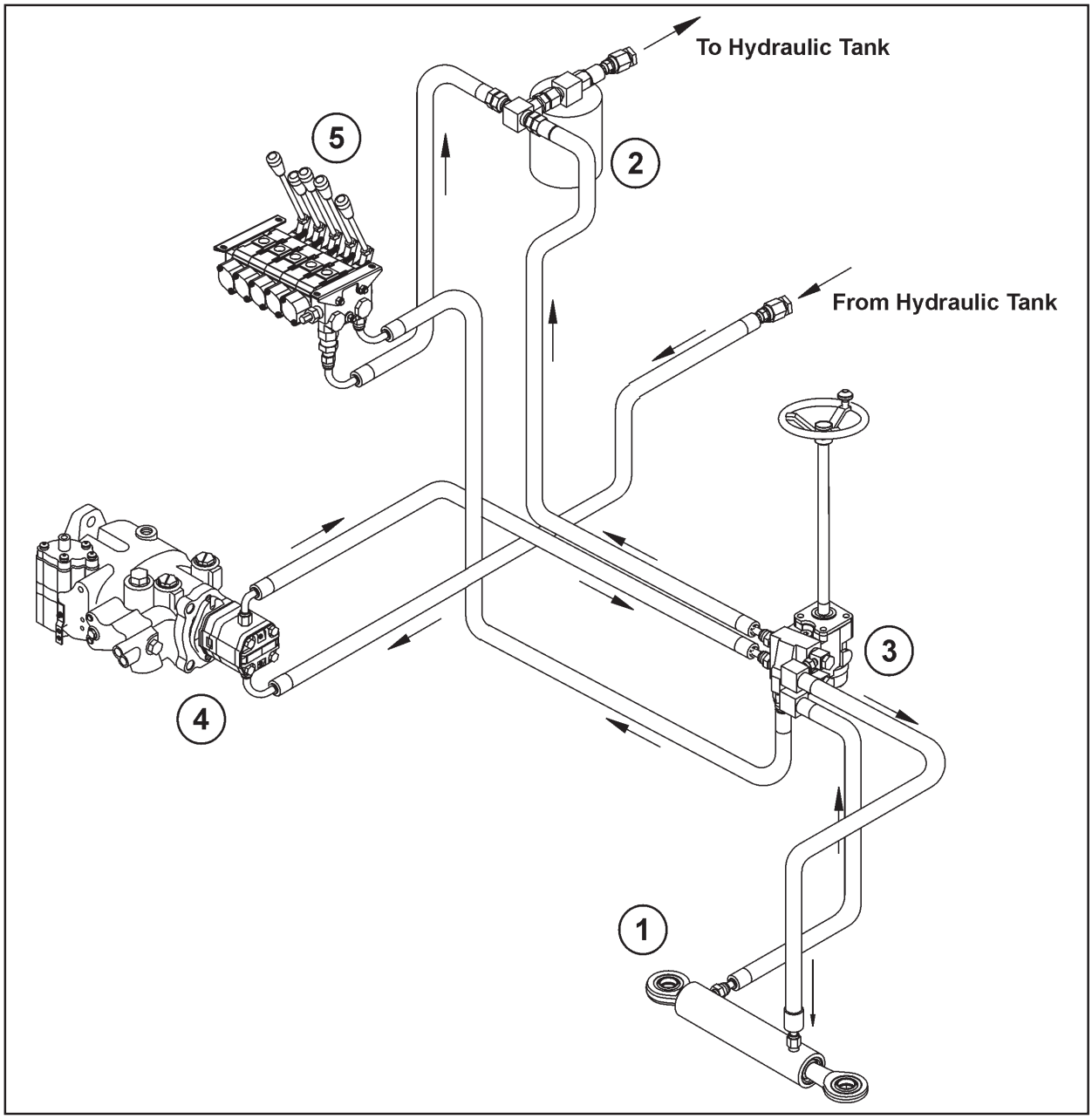


**FIGURE 4. HYDRAULIC SYSTEM COMPONENT LAYOUT**

1. *Steering Cylinder*
2. *Return Filter*
3. *Steering with Priority Valve*
4. *Pump*
5. *Valve Bank*

- -The hydraulic pump draws oil from the reservoir through a suction straine and then supplies the oil to the steering priority valve and the hydraulic control valve.
- Return oil from the steering and hydraulic systems flows through the replaceable element return filter.

# FORKLIFT HYDRAULIC SYSTEM - DESCRIPTION AND OPERATION

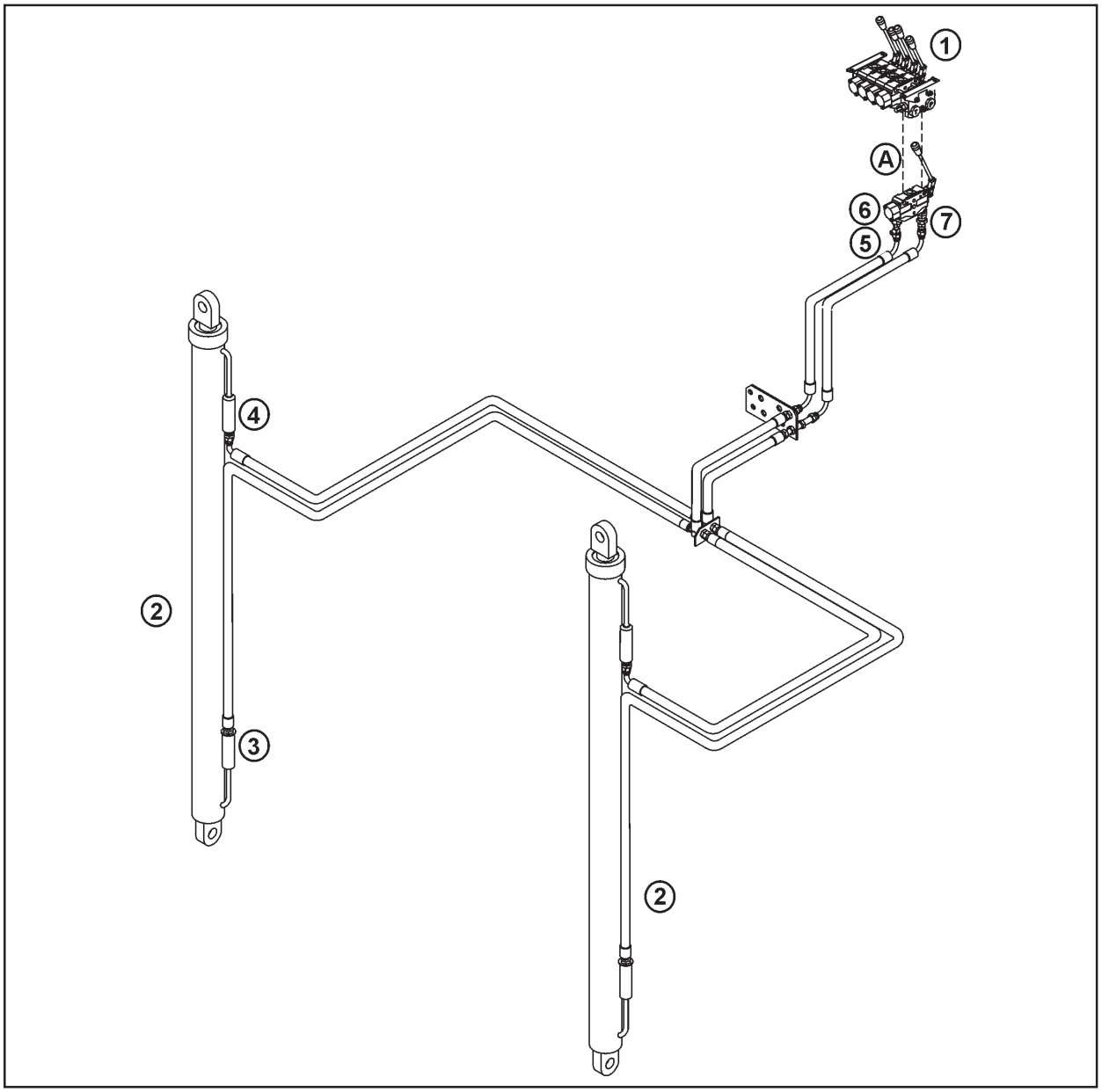


**FIGURE 5. LIFT CIRCUIT COMPONENT LAYOUT**

1. *Control Valve*
2. *Lift Cylinder*
3. *Velocity Fuse*
4. *Velocity Fuse*
5. *One Way Restrictor*
6. *Service Port Relief Valve - Cyl Piston End **
7. *Service Port Relief Valve - Cyl Rod End **

A. *Valve Lift Section*

** NB The Service Port Relief Valves incorporate an anti-cavitation function.*

- The lift circuit controls the operation of the forks.
- The cylinder is protected by two valve service port relief valves.
- A one way restrictor in the control valve limits the cylinder drop rate under load.
- Velocity fuses located in the cylinder to slow cylinder travel in the event of a hose failure.

# FORKLIFT HYDRAULIC SYSTEM - DESCRIPTION AND OPERATION

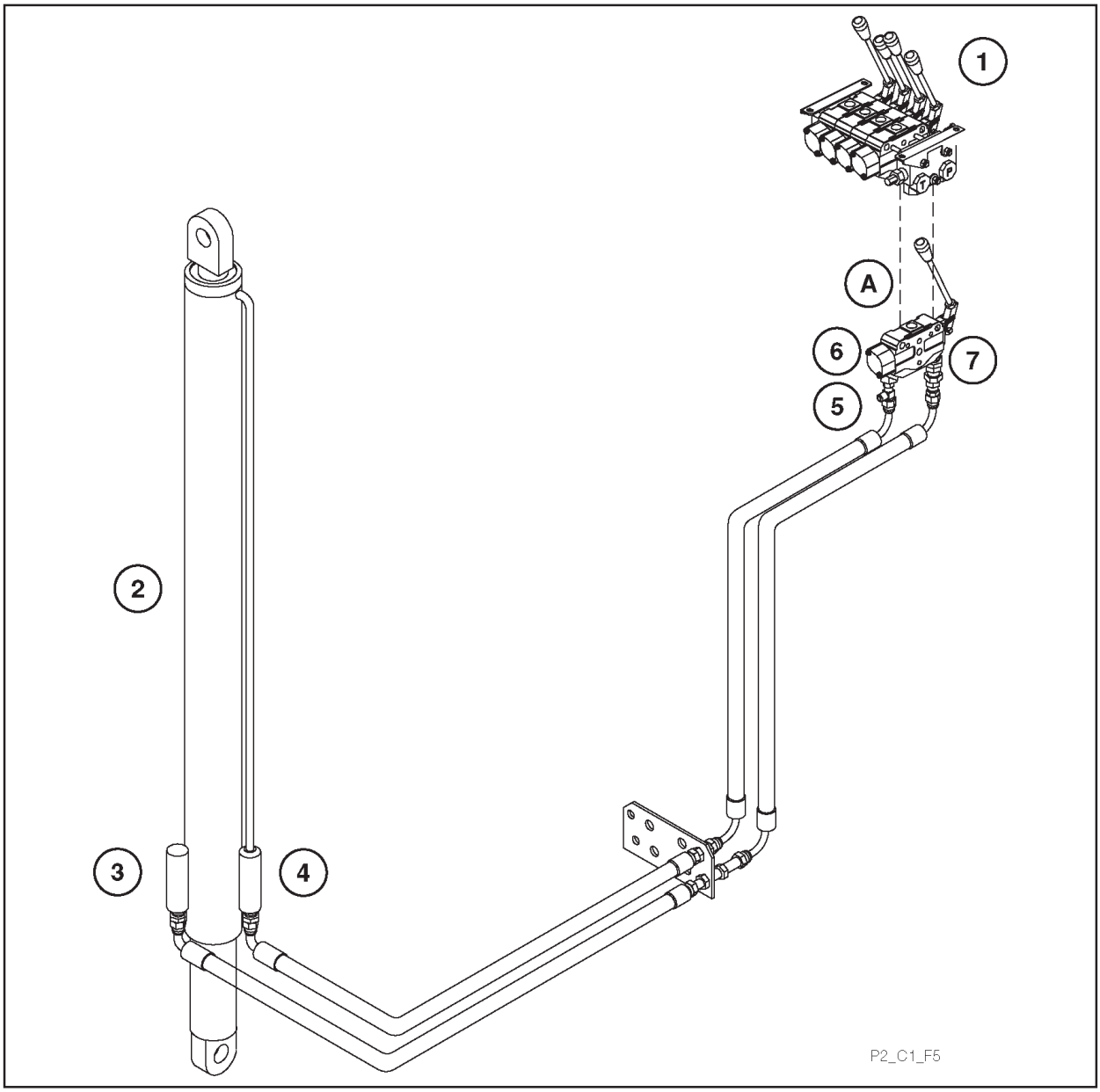


**FIGURE 5. LIFT CIRCUIT COMPONENT LAYOUT**

1. *Control Valve*
2. *Lift Cylinder*
3. *Velocity Fuse*
4. *Velocity Fuse*
5. *One Way Restrictor*
6. *Service Port Relief Valve - Cyl Piston End **
7. *Service Port Relief Valve - Cyl Rod End **

A. *Valve Lift Section*

** NB The Service Port Relief Valves incorporate an anti-cavitation function.*

# FORKLIFT HYDRAULIC SYSTEM - DESCRIPTION AND OPERATION

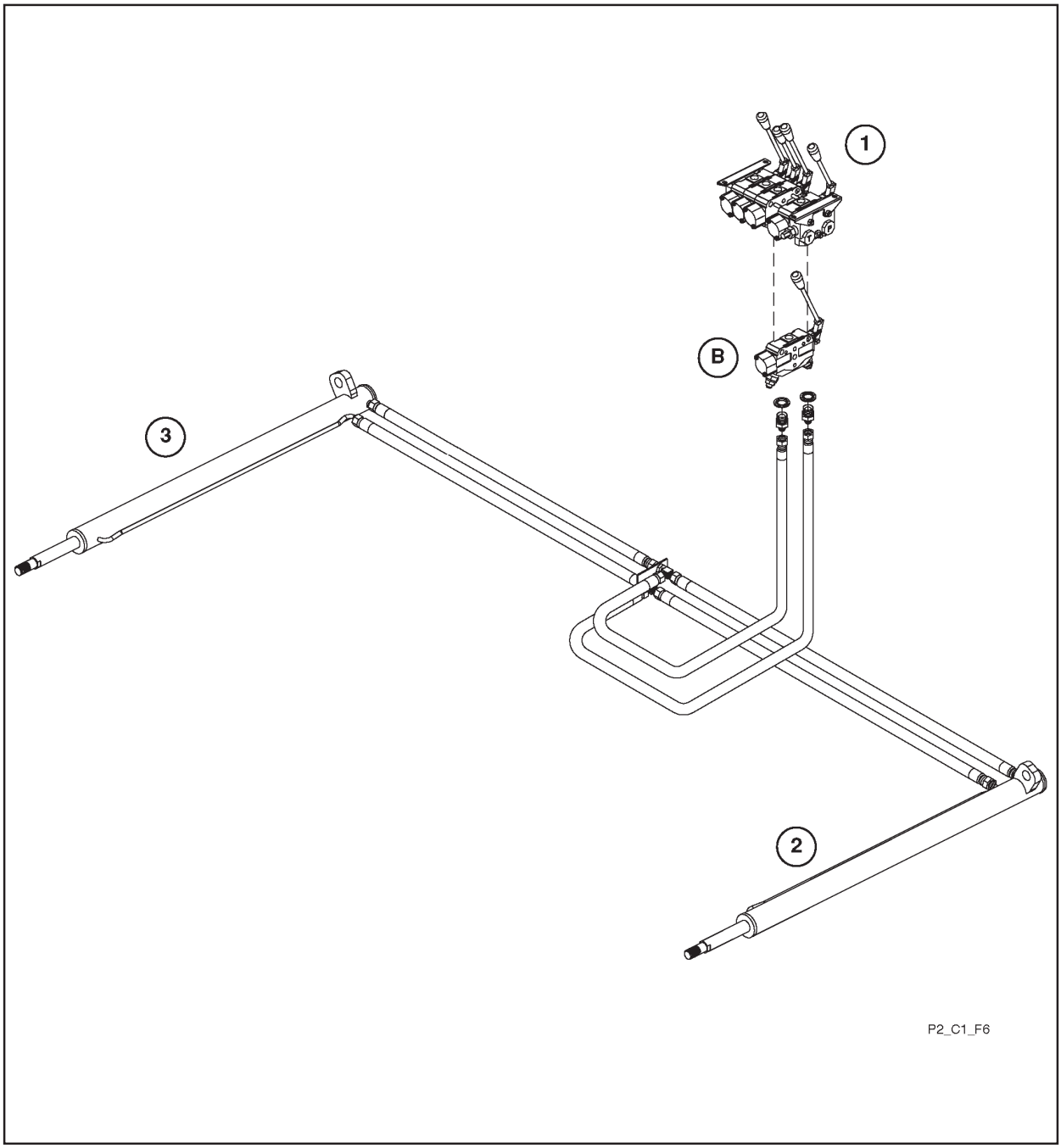


**FIGURE 6. CARRIAGE CIRCUIT COMPONENT LAYOUT**

1. *Control Valve*
2. *Left Hand Carriage Cylinder*
3. *Right Hand Carriage Cylinder*

B. *Carriage Valve Section*

- The carriage circuit controls the position of the fork lift mast in the frame, the mast being positioned forward to pick up loads forward of the front wheels and rearwards for transporting the load between the wheel base.

# FORKLIFT HYDRAULIC SYSTEM - DESCRIPTION AND OPERATION

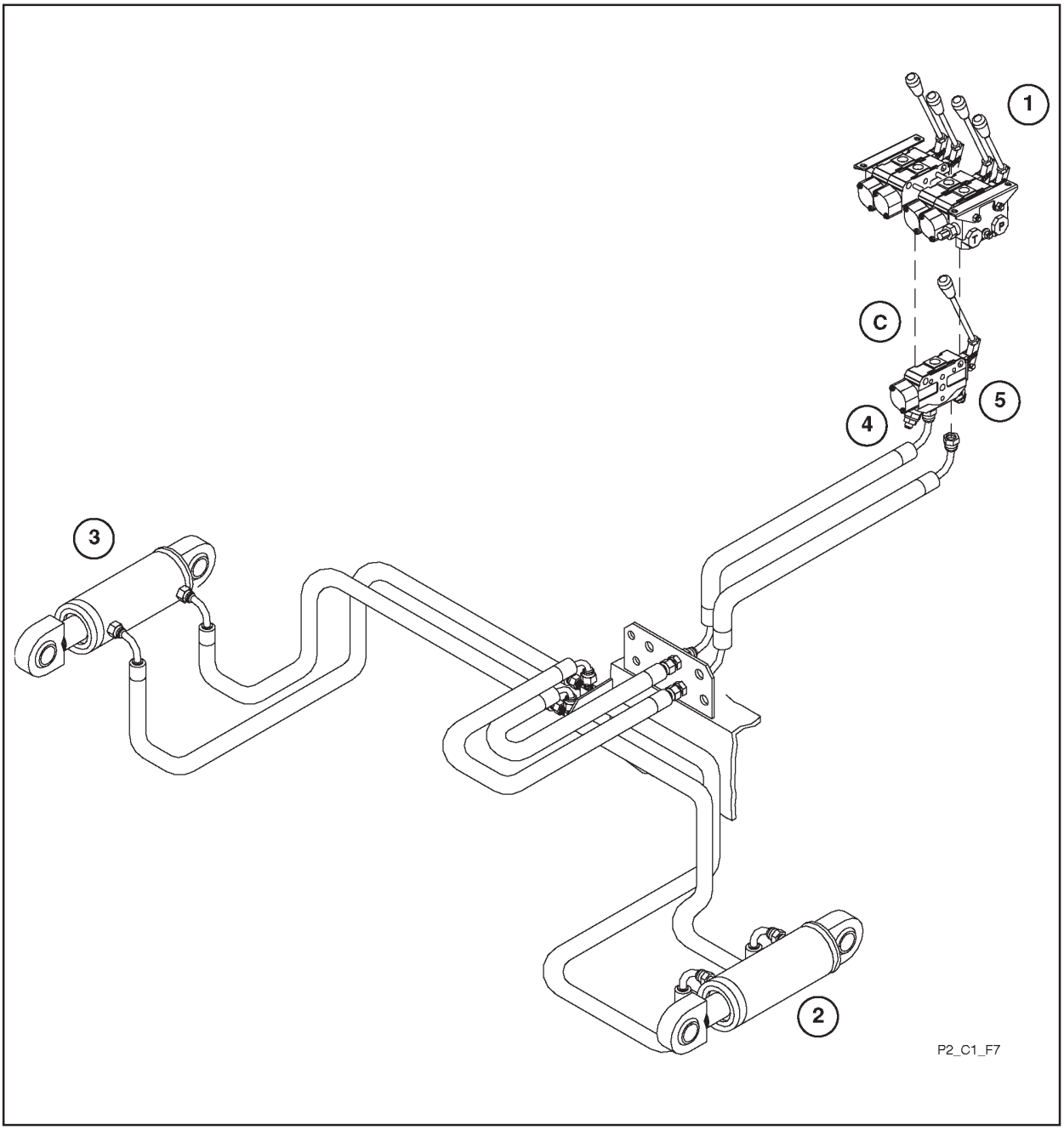


**FIGURE 7. TILT CIRCUIT COMPONENT LAYOUT**

1. *Control Valve*
2. *Left Hand Tilt Cylinder*
3. *Right Hand Tilt Cylinder*
4. *One Way Restrictor*
5. *Anti-cavitation Valve*

C. *Tilt Valve Section*

- The tilt circuit controls the angle of the mast and forks, the mast being tilted back for transport.
- An anti-cavitation valve and a one way restrictor valve located in the valve ports prevent cylinder cavitation, when extending the cylinder to rotate the load forwards, or when releasing the pressure with the unit on the truck mounting kit.

# FORKLIFT HYDRAULIC SYSTEM - DESCRIPTION AND OPERATION

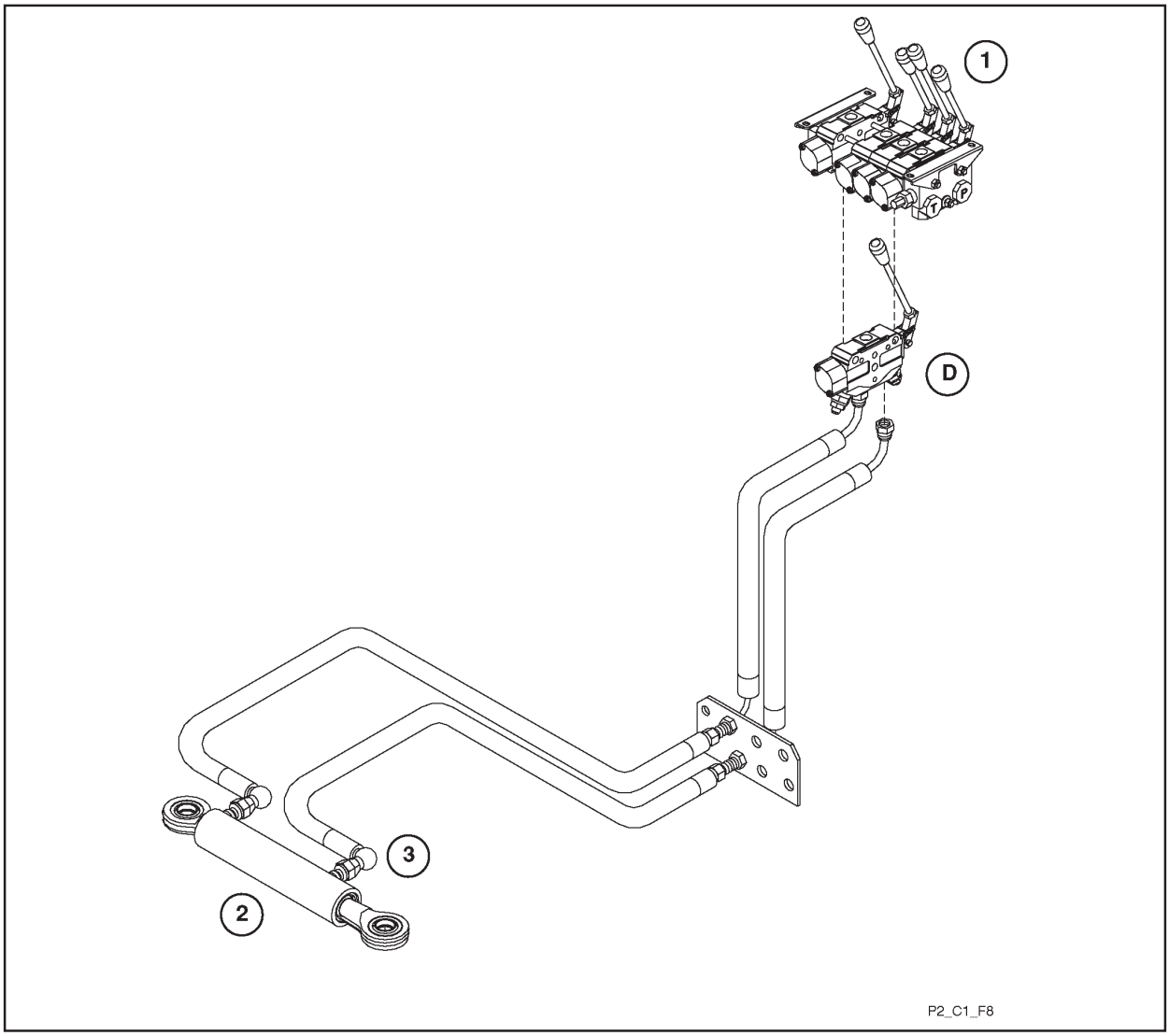


**FIGURE 8. SIDE SHIFT CIRCUIT COMPONENT LAYOUT**

1. *Control Valve*
2. *Side Shift Cylinder*
3. *One Way Restrictor - Cylinder Piston End*

D. *Side Shift Valve Section*

- The side shift circuit controls the position of the mast and forks in the frame.
- A restrictor located in the cylinder piston end port, restricts cylinder retraction and extension speed preventing instability, resulting from rapid side shifting with an elevated load.

# FORKLIFT HYDRAULIC SYSTEM - DESCRIPTION AND OPERATION

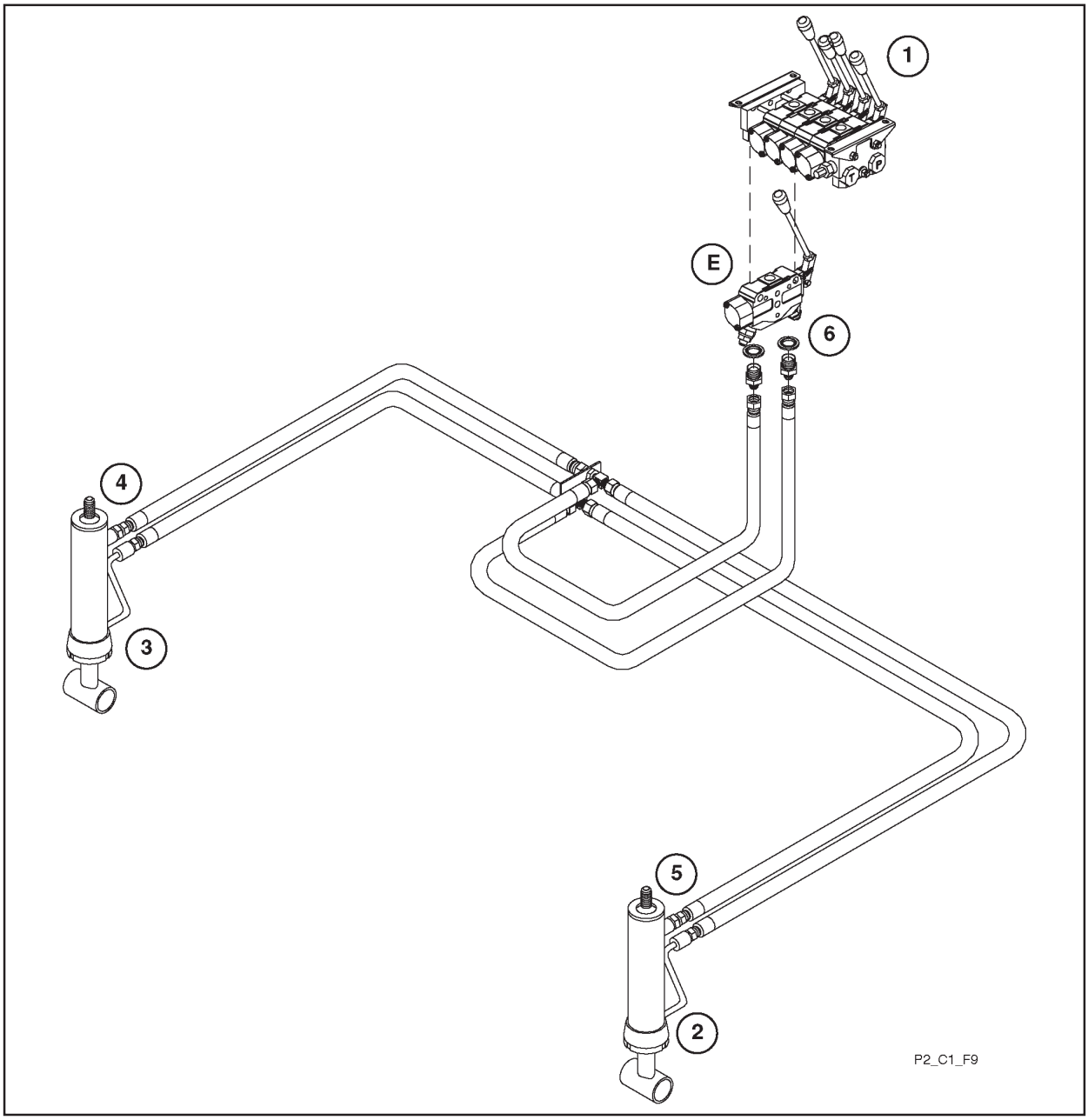


**FIGURE 9. STABILISER CIRCUIT COMPONENT LAYOUT**

1. *Control Valve*
2. *Left Hand Stabiliser Cylinder*
3. *Right Hand Stabiliser Cylinder*
4. *Velocity Fuse*
5. *Velocity Fuse*
6. *One Way Restrictor*

E. *Stabiliser Valve Section*

- The stabiliser circuit controls the jack legs which are lowered to enable the unit to pick up loads with the mast fully forward.
- The one way restrictor located in the valve piston end port restricts cylinder retraction when raising the legs with loaded forks.
- Velocity fuses located in the cylinder piston ports prevent rapid cylinder retraction in the event of hose failure.

# FORKLIFT HYDRAULIC SYSTEM - DESCRIPTION AND OPERATION

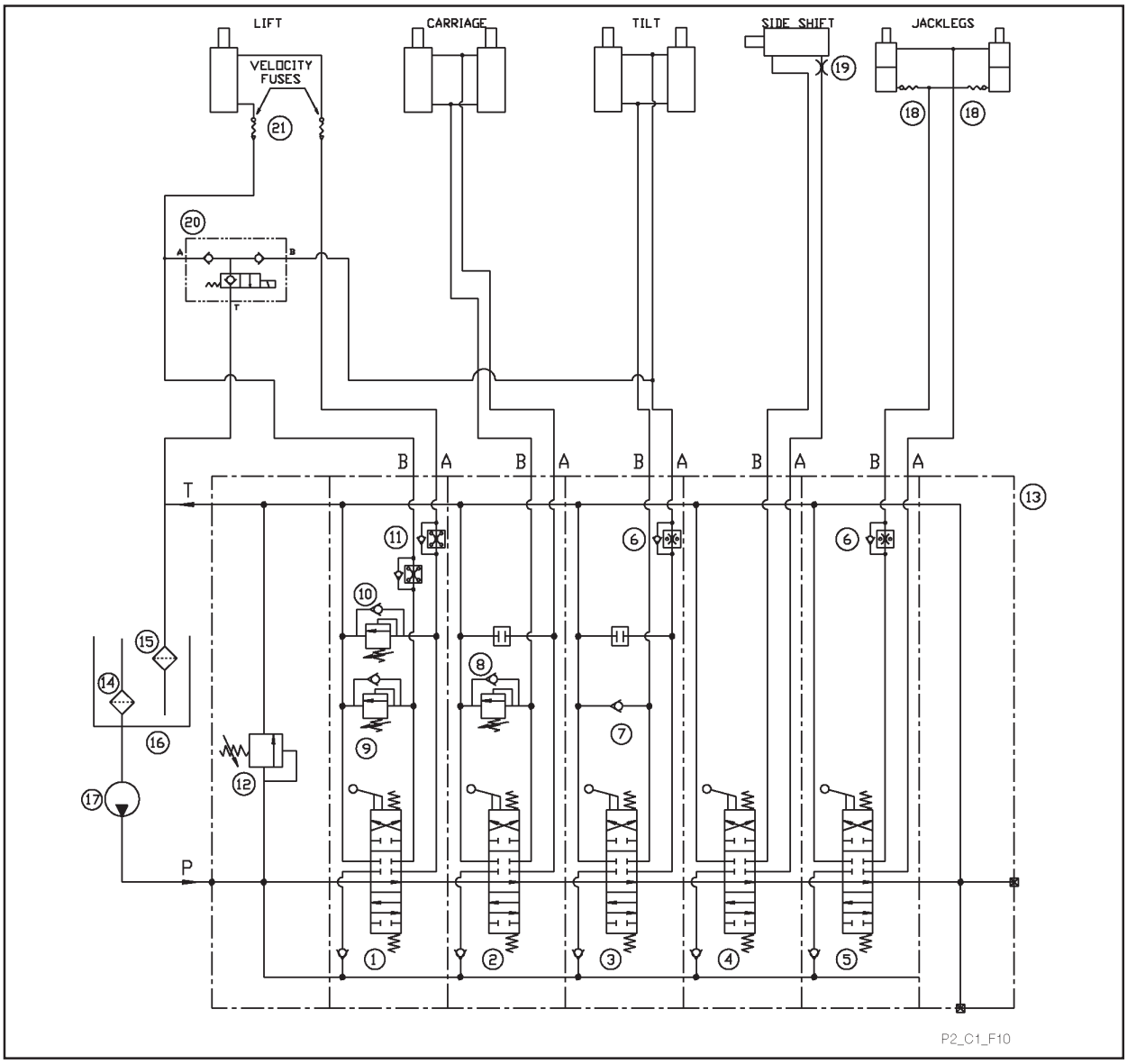


**FIGURE 10. HYDRAULIC SYSTEM CIRCUIT DIAGRAM**

*The above illustrates the forklift hydraulic system circuit layout and connections using international symbols to represent the components.*

1. *Lift Section Spool Valve*
2. *Carriage Section*
3. *Tilt Section*
4. *Side Shift Section*
5. *Jackleg Section*
6. *One Way Restrictor - 2 Hole*
7. *Anti-Cavitation Valve*
8. *Service Port Relief - Carriage*
9. *Service Port Relief - Lift R*
10. *Service Port Relief - Life P*
11. *One Way Restrictor - 4 Hole*
12. *System Relief Valve*
13. *Valve Bank*
14. *SuctionFilter*
15. *Return Filter**
16. *Hydraulic Tank*
17. *Hydraulic Pump*
18. *Velocity Fuse 3/8”*
19. *Restrictor - Side Shift P*
20. *Hydraulic Release Valve*
21. *Velocity Fuse 1/2”*

***Note: M5/M40 Models Use A Return Line and Suction Boost Filter (RKM).***

# FORKLIFT HYDRAULIC SYSTEM - DESCRIPTION AND OPERATION

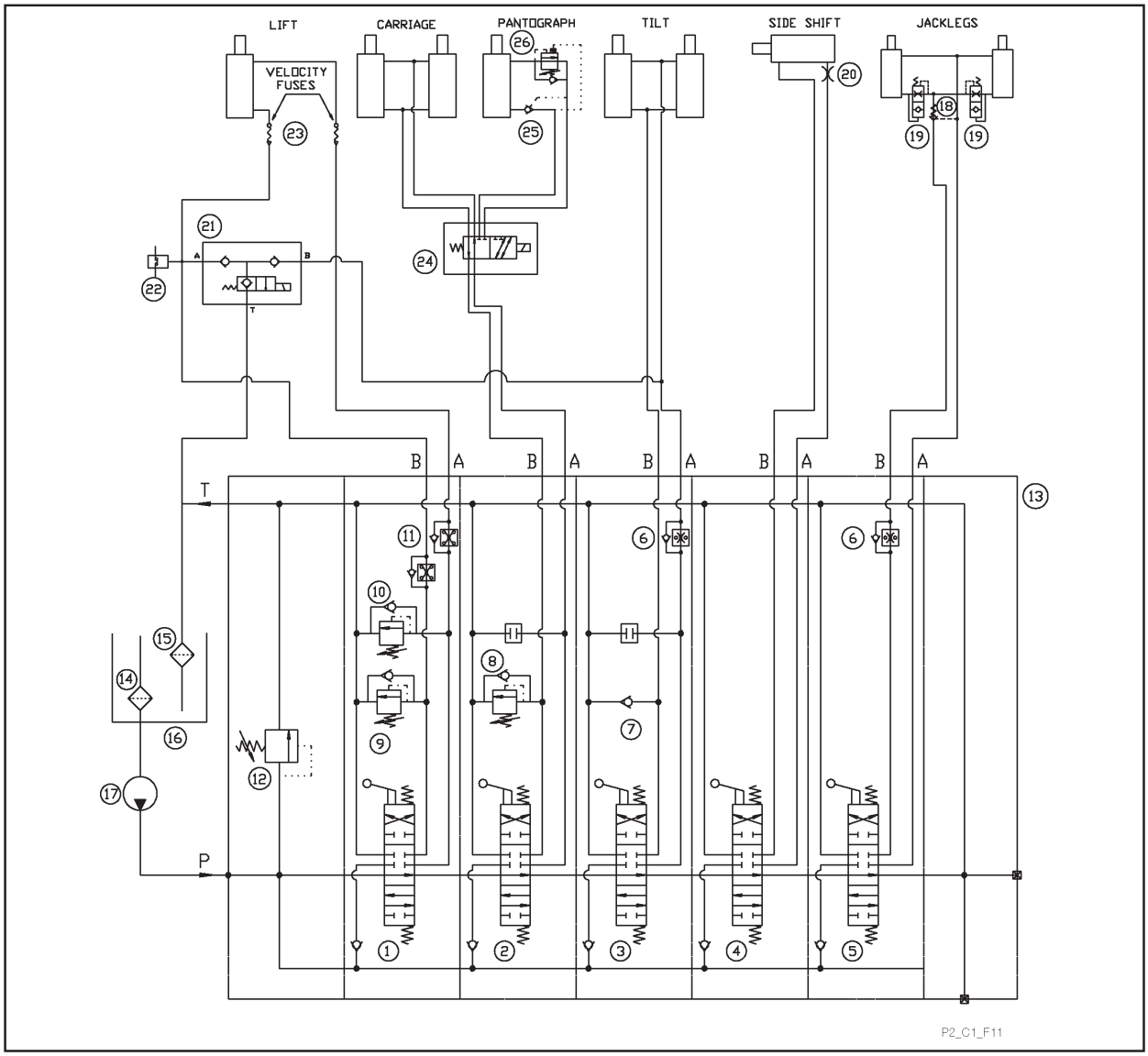


**FIGURE 11. PANTOGRAPH SYSTEM CIRCUIT DIAGRAM**

*The above illustrats the pantograph system circuit layout and connections using International symbols to represent the components.*

1. *Lift Section Spool Valve*
2. *Carriage Section*
3. *Tilt Section*
4. *Side Shift Section*
5. *Jackleg Section*
6. *One Way Restrictor - 2 Hole*
7. *Anti-Cavitation Valve*
8. *Service Port Relief - Carriage*
9. *Service Port Relief - Lift R*
10. *Service Port Relief - Life P*
11. *One Way Restrictor - 4 Hole*
12. *System Relief Valve*
13. *Valve Bank*
14. *Suction Filter*
15. *Return Filter**
16. *Hydraulic Tank*
17. *Hydraulic Pump*
18. *Velocity Fuse 3/8"*
19. *Restrictor - Side Shift P*
20. *Hydralic Release Valve*
21. *Velocity Fuse 1/2"*
22 *Lift Cylinder Pressure Switch R*
23. *Velocity Fuse 1/2"*
24. *Pantograph Changeover Valve*
25. *Pilot Operator Check Valve*
26. *Counterbalance Valve*

***Note: M5/M40 Models Use A Return Line and Suction Boost Filter (RKM).***

# FORKLIFT HYDRAULIC SYSTEM - DESCRIPTION AND OPERATION

## HYDRAULIC PUMP

- The gear type hydraulic pump is mounted on the hydrostatic pump.
- The pumps are driven directly from the engine flywheel through a splined coupling.

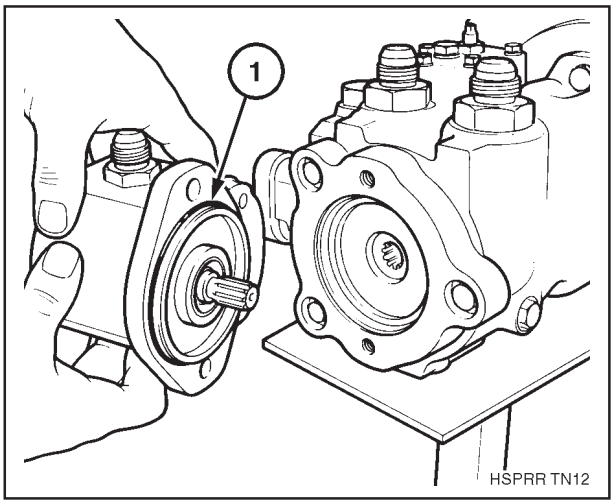


**FIGURE 12. HYDRAULIC PUMP MOUNTING**

*1. 'O' Ring*

- The driving and driven gears rotate within the pump body, clearance between the gear teeth and the body is minimal.
- Rotation of the gears draws oil through the suction strainer to the pump inlet port. Oil is carried around the outside of the gears between the gear teeth and the body, and forced out of the outlet port by the action of the meshing gear teeth.

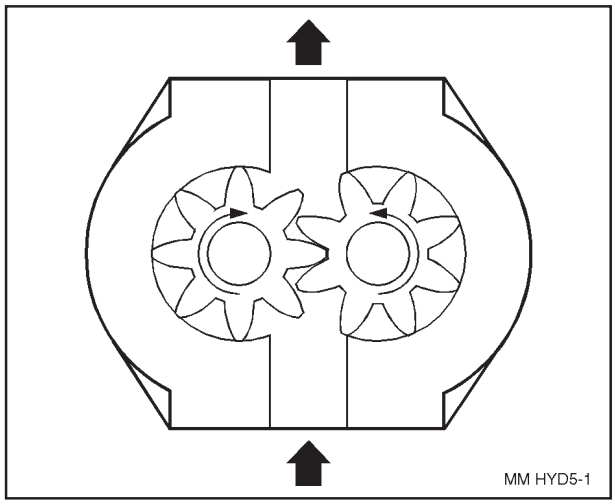


**FIGURE 14. GEAR PUMP OIL FLOW**

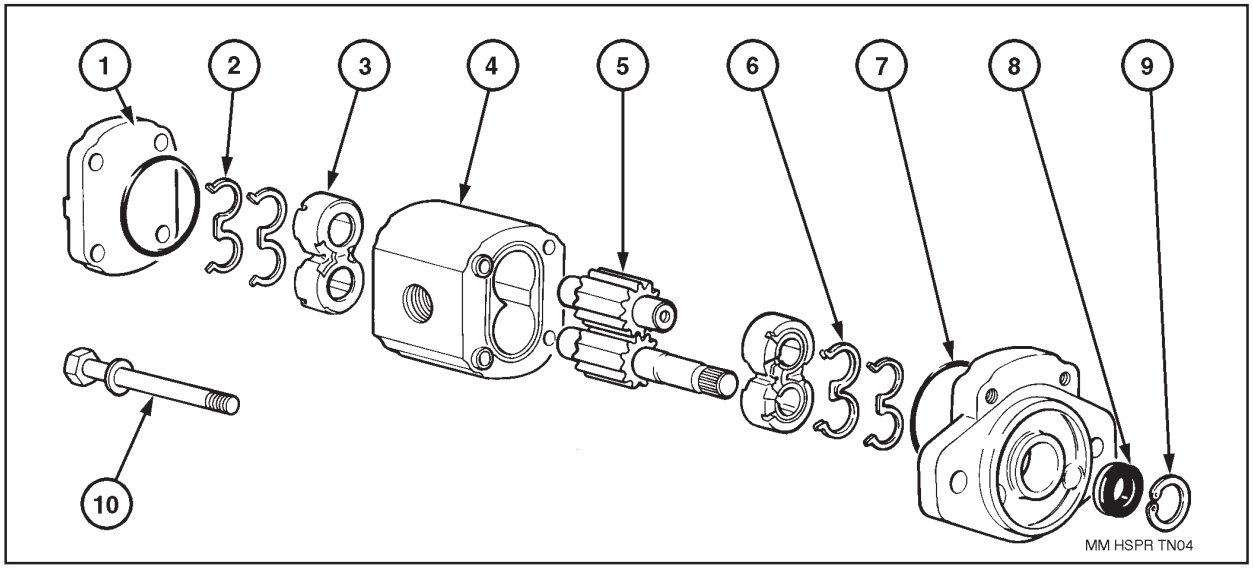


**FIGURE 13. HYDRAULIC PUMP - EXPLODED VIEW**

1. *End Cover & 'O' Ring*
2. *Back-up Seal*
3. *Bushes (Bearing Blocks)*
4. *Pump Body*
5. *Drive & Driven Gears*
6. *Seal*
7. *Flange & 'O' Ring*
8. *Shaft Seal*
9. *Circlip*
10. *Through Bolt*

# FORKLIFT HYDRAULIC SYSTEM - DESCRIPTION AND OPERATION

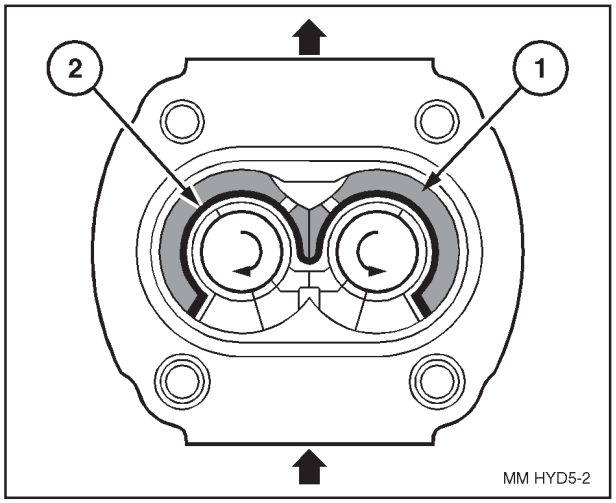


**FIGURE 15. PRESSURE COMPENSATION AREA**

- The pump creates oil flow, the circuit loads create pressure.
- When under load, pressure is developed as the gear teeth mesh, creating an unbalanced outward loading on the bearing blocks. To maintain a balanced and inward loading on the bearing blocks and to maintain minimal clearance between the gears and bearings, the pump has pressure compensated bearing blocks.
- 'E' shaped seals are fitted between the pump body and the outer surface of the bearing blocks. This allows generated pump pressure to load the outer surface area of the bearing blocks, thus maintaining the bearing blocks evenly against the gears when under load.
- The pressure compensated bearing blocks maintain maximum pump efficiency under load.
- Regular scheduled maintenance of the hydraulic system filters will ensure maximum pump service hours.
- Contaminated oil will create rapid wear tracks in the body increasing gear tooth clearance and resultant reduced pump efficiency.

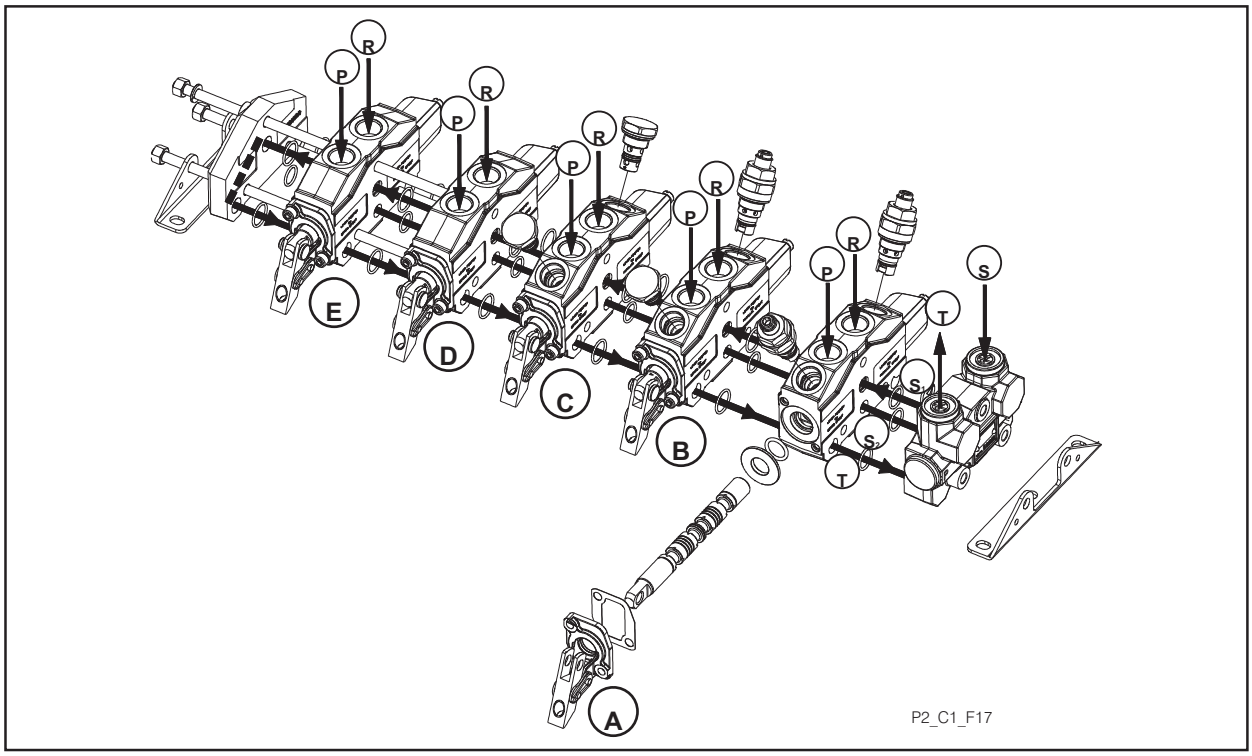


**FIGURE 16. CONTROL VALVE OIL GALLERY AND PORT IDENTIFICATION**

| | | |
|---|---|---|
| **VALVE SECTIONS:** | A. LIFT: B. CARRIAGE: C. TILT: D. SIDE SHIFT: E. STABILISERS: | |
| **VALVE PORTS:** | P. CYLINDER PISTON END<br>S. PUMP PRESSURE OIL | R. CYLINDER ROD END<br>T. RETURN OIL TO RESERVOIR |
| **OIL GALLERIES:** | S1: OPEN CENTRE GALLERY<br>T: RESERVOIR RETURN GALLERY | S2: PARALLEL GALLERY |

# FORKLIFT HYDRAULIC SYSTEM - DESCRIPTION AND OPERATION

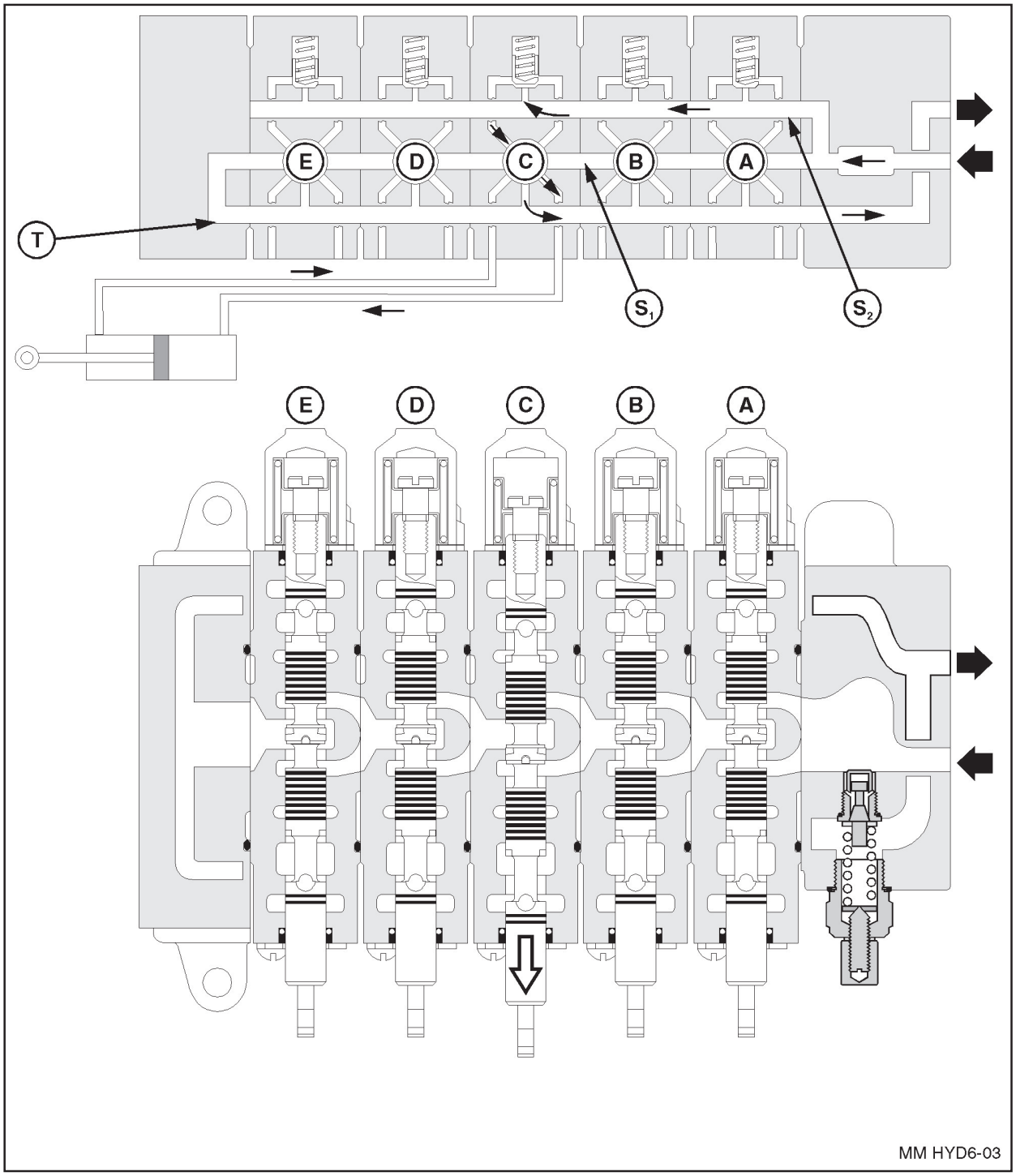


**FIGURE 17. CONTROL VALVE OIL FLOW SCHEMATIC**

**VALVE SECTIONS:** A. LIFT: B. CARRIAGE: C. TILT: D. SIDE SHIFT: E. STABILISERS:

**OIL GALLERIES:** S1: OPEN CENTRE GALLERY S2: PARALLEL GALLERY
T: RESERVOIR RETURN GALLERY

# FORKLIFT HYDRAULIC SYSTEM - DESCRIPTION AND OPERATION

## CONTROL VALVE OIL GALLERIES

The control valve oil flows are described below and reference figures 16 and 17. Section oil flows are described with reference to figures 21, 22 and 23.

- The main oil galleries run longitudinally through the valve sections between the end covers.
- The open centre gallery, 'S1', extends from the inlet end cover to the opposite end cover, where it runs into the reservoir return galleries, 'T'. The return galleries run through either side of the valve sections back to the inlet end cover. The parallel gallery, 'S2', extends from the inlet end cover through the sections but, terminates at the last valve section E, this gallery is always under pump pressure.
- With the spools in neutral, pump oil flows into port 'S' along the staggered open centre gallery into the end cover, where it returns to port 'T' along the return galleries.
- When one of the control spools is moved from neutral to operate a circuit, the centre portion of the spool blocks the open centre gallery, resultant pressure build up in the parallel gallery opens the valve section check valve and pump oil flows by the control spool to the cylinder.
- Return oil from the opposite end of the cylinder flows across the control spool to the return gallery.

The operation of the system and service port relief valves, anti-cavitation and restrictor valves located in the control valve assembly are described in the following sections.

## SYSTEM RELIEF VALVE

The system relief valve protects the pump from excess operating pressure and is located in the inlet end cover between the pump supply gallery 'S1' and the reservoir return gallery 'T'.

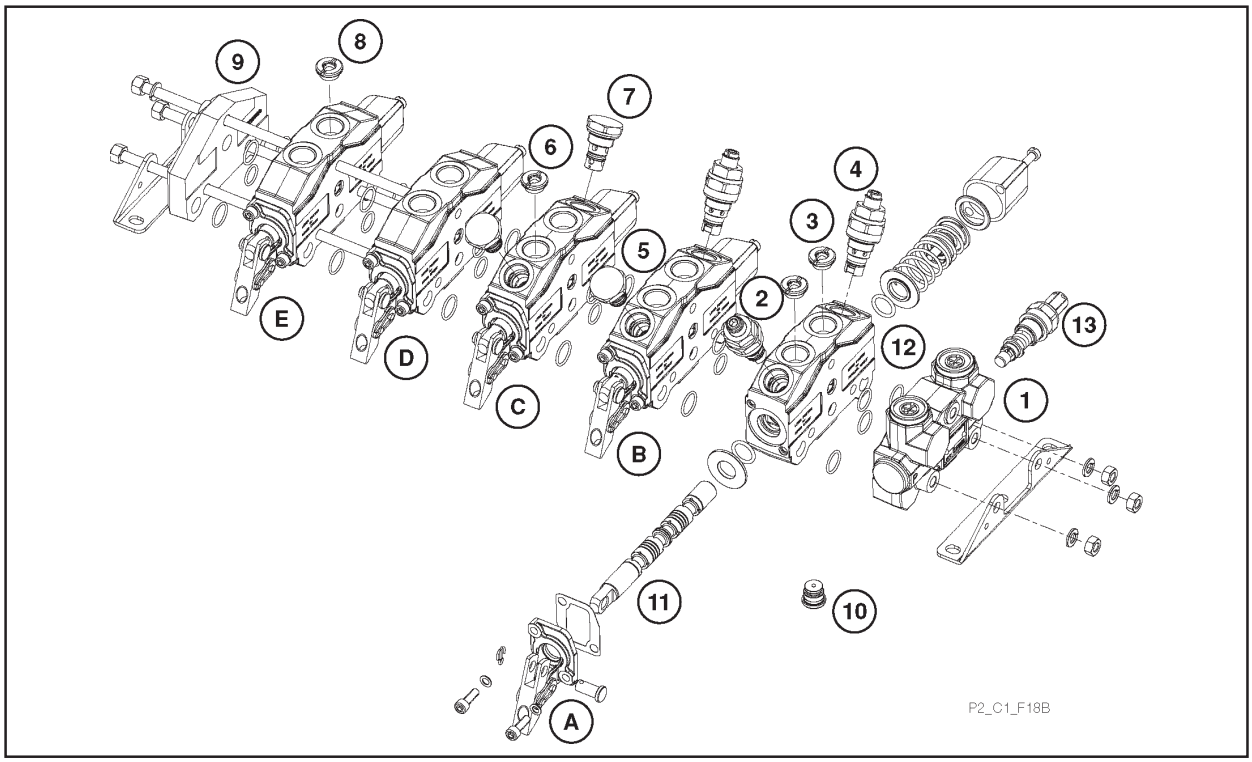


**FIGURE 18. CONTROL VALVE - EXPLODED VIEW**

**VALVE SECTIONS:** **A. LIFT: B. CARRIAGE: C. TILT: D. SIDE SHIFT: E. STABILISERS:**

1. *Inlet End Section*
2. *Service Port Relief Valve - Piston End*
3. *Restrictor (4 hole)*
4. *Service Port Relief Valve - Rod End*
5. *Plug*
6. *Restrictor (2 hole) Tilt Rod End*
7. *Anti-cavitation Valve*
8. *Restrictor (2 hole) - Stabiliser Piston End*
9. *End Cover*
10. *Check Valve (1 per section)*
11. *Control Valve Spool*
12. *Valve Section Housing*
13. *System Relief Valve*

# FORKLIFT HYDRAULIC SYSTEM - DESCRIPTION AND OPERATION

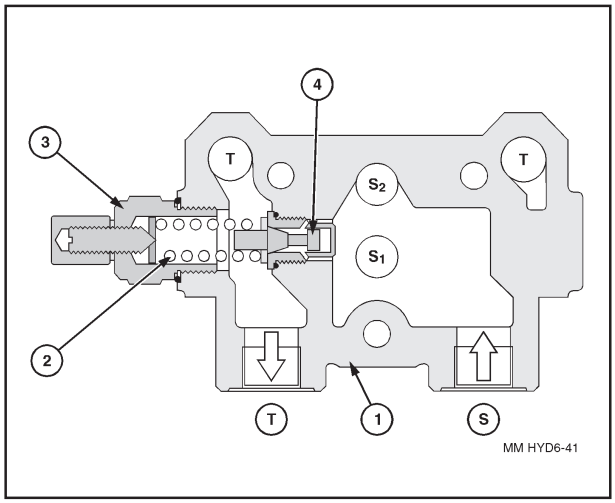


**FIGURE 19. SYSTEM RELIEF VALVE CLOSED**

- If the pump supply pressure exceeds the system relief valve setting, the pressure will open the valve against the spring pressure allowing oil to flow from gallery 'S1' to gallery 'T' and limiting the maximum pump pressure to 193 bar / 2800 lbf/in$^2$.
- The piston portion of the relief valve prevents the valve oscillating when operating at blow off pressure.
- The relief valve is adjustable.

## SECTION OIL FLOWS

The valve section oil flows are described below and are reference by figures 21, 22 and 23.

- In neutral the centralised valve spool position allows pump oil to flow along the open centre gallery to the return gallery in the end cover. The outer sections of the valve spool trap the oil in both ends of the cylinder.
- When the valve spool is moved to extend or retract the cylinder, the centre section of the spool blocks the open centre gallery. Pump pressure rises rapidly in the parallel gallery until the check valve opens against residual cylinder pressure, allowing pump oil to flow to the cylinder port via the check valve gallery and the valve spool.
- Return oil from the opposite end of the cylinder flows across the valve spool into the return gallery.
- The section check valve prevents residual cylinder pressure feed back to the pump and so prevents initial negative cylinder movement during pump pressure build up.

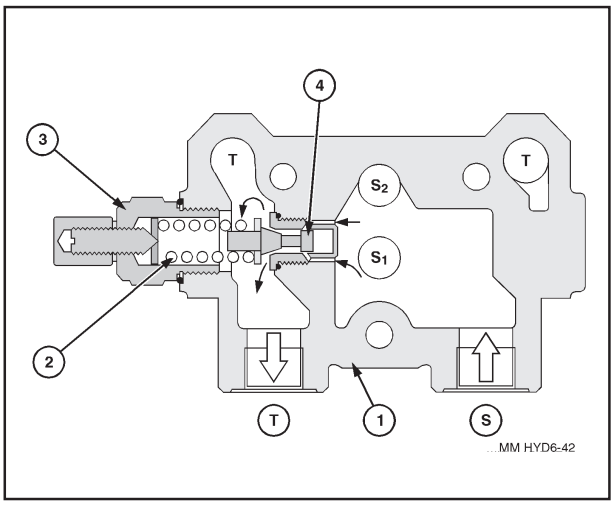


**FIGURE 20. SYSTEM RELIEF VALVE OPEN**

**OIL GALLERIES:** S1: OPEN CENTRE GALLERY
S2: PARALLEL GALLERY
T: RESERVOIR RETURN GALLERY

*1. Inlet End Section* *2. Relief Valve Spring*
*3. Valve Body* *4. Relief Valve*

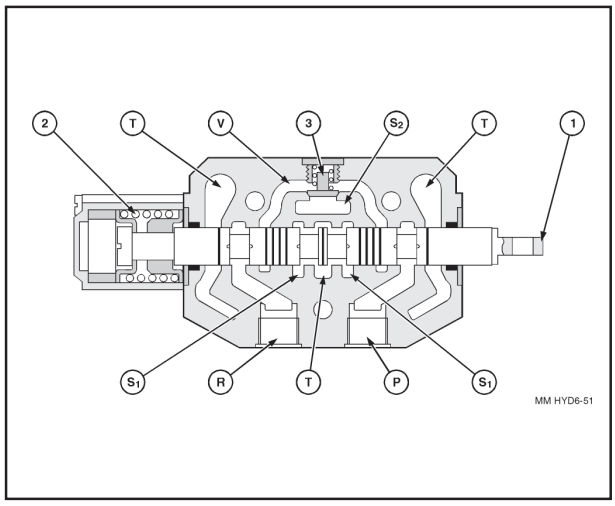


**FIGURE 21. SYSTEM RELIEF VALVE OPEN**

**OIL GALLERIES:** S1: OPEN CENTRE GALLERY
S2: PARALLEL GALLERY
T: RESERVOIR RETURN GALLERY
V: CHECK VALVE GALLERY

**VALVE PORTS:** P. CYLINDER PISTON END
R. CYLINDER ROD END

*1. Valve Spool* *2. Centring Spring*
*3. Check Valve*

# FORKLIFT HYDRAULIC SYSTEM - DESCRIPTION AND OPERATION

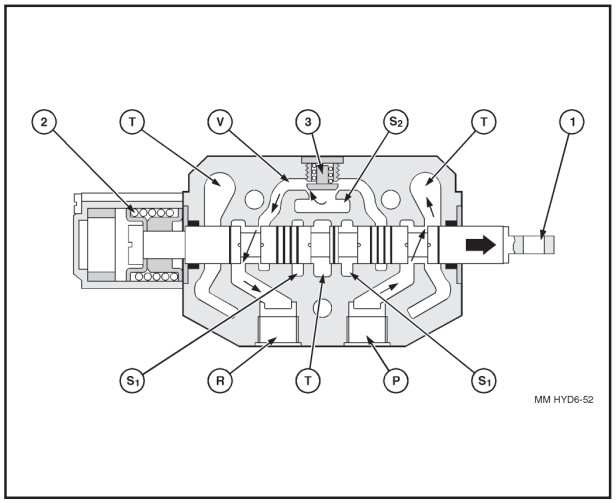


**FIGURE 22. CONTROL VALVE SECTION OIL FLOW - CYLINDER EXTENDING**

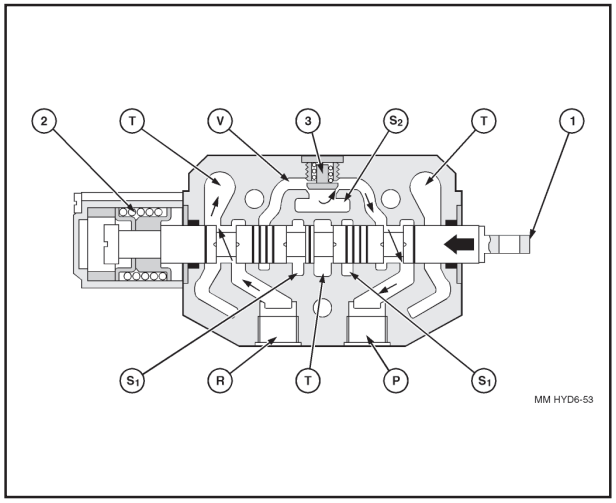


**FIGURE 23. CONTROL VALVE SECTION OIL FLOW - CYLINDER RETRACTING**

**OIL GALLERIES:** S1: OPEN CENTRE GALLERY
S2: PARALLEL GALLERY
T: RESERVOIR RETURN GALLERY
V: CHECK VALVE GALLERY

**VALVE PORTS:** P. CYLINDER PISTON END
R. CYLINDER ROD END

*1. Valve Spool* *2. Centring Spring*
*3. Check Valve*

## SERVICE PORT RELIEF VALVES

- The service port relief valves fitted to the control valve lift section have a relief valve and anti-cavitation function.
- If the pressure in gallery 'C' exceeds the relief valve setting, the valve will open to allow low pressure oil to pass from gallery 'C' to gallery 'T'.

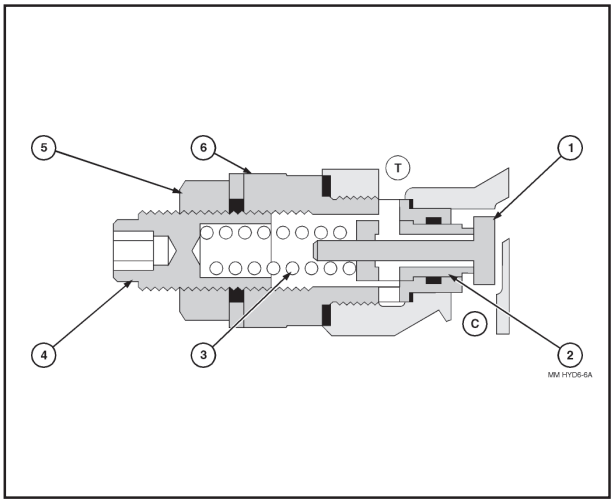


**FIGURE 24. SERVICE PORT RELIEF VALVE**

**OIL GALLERIES:** C: CYLINDER GALLERY
T: RESERVOIR RETURN GALLERY

*1. Anti-cavitation Valve* *4. Spring Adjuster*
*2. Relief Valve* *5. Locknut*
*3. Spring* *6. Valve Body*

- If the pressure in gallery 'C' drops below the pressure in gallery 'T', the anti-cavitation valve will open to allow the flow from gallery 'T' to the cylinder gallery 'C'.
- The functions are shown in lift circuit operational conditions in figures 26 to 30.
- The one way restrictor fitted in the valve port restricts the lift cylinder drop rate.

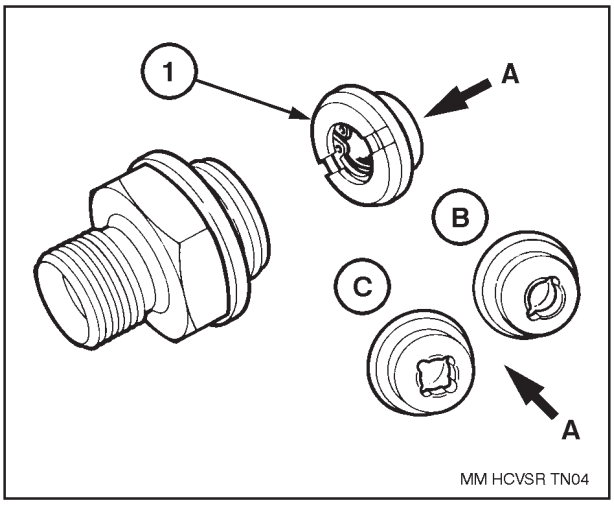


**FIGURE 25. VALVE PORT ONE WAY RESTRICTORS**

*1. Restrictor* *A. Top Side View*
*B. Two Hole Type* *C. Four Hole Type*

# FORKLIFT HYDRAULIC SYSTEM - DESCRIPTION AND OPERATION

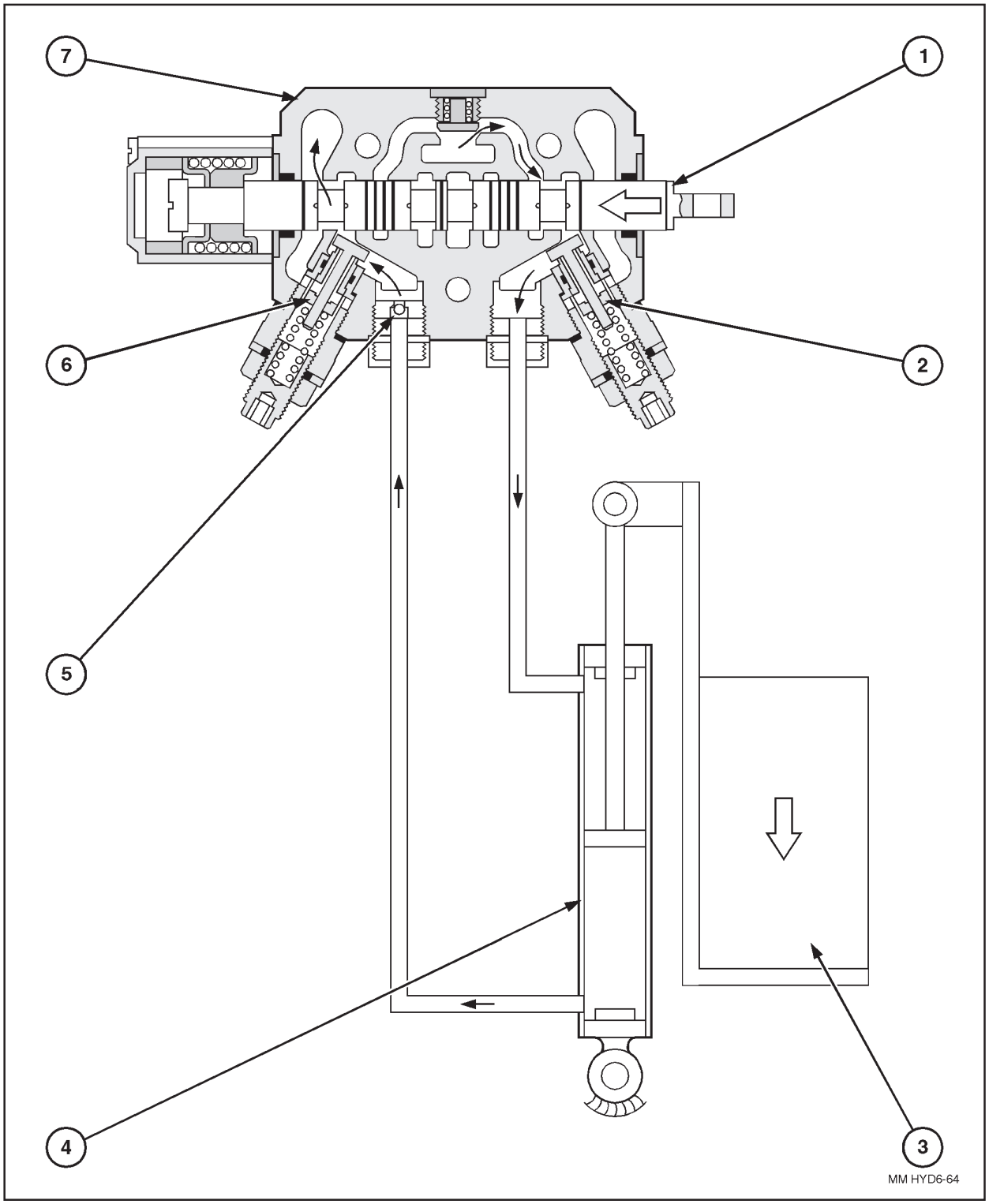


**FIGURE 26. LIFT CIRCUIT OIL FLOW - NORMAL OPERATION**

1. *Valve Spool*
2. *Rod End Port Relief Valve*
3. *Load on Forks*
4. *Lift Cylinder*
5. *One Way Restrictor*
6. *Piston End Port Relief Valve*
7. *Control Valve Lift Section*

# FORKLIFT HYDRAULIC SYSTEM - DESCRIPTION AND OPERATION

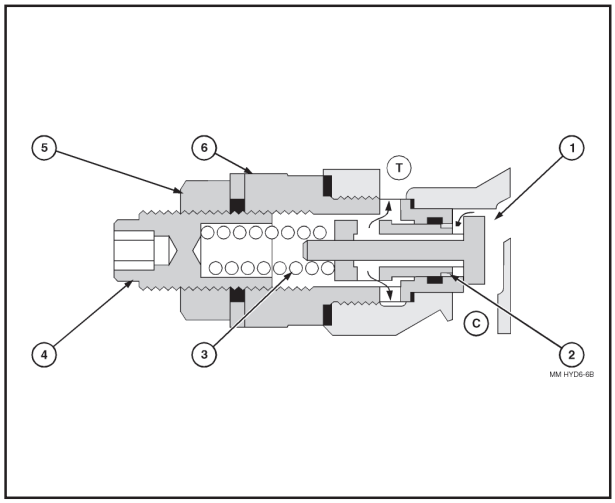


**FIGURE 27. SERVICE PORT RELIEF VALVE OIL FLOW - PRESSURE RELIEF FUNCTION**

***OIL GALLERIES:*** *C: CYLINDER GALLERY*
*T: RESERVOIR RETURN GALLERY*

1. *Anti-cavitation Valve*
2. *Relief Valve*
3. *Spring*
4. *Spring Adjuster*
5. *Locknut*
6. *Valve Body*

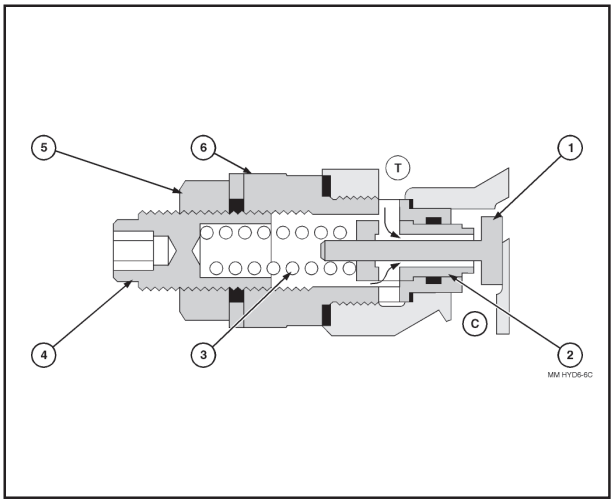


**FIGURE 28. SERVICE PORT RELIEF VALVE - ANTI-CAVITATION FUNCTION**

***OIL GALLERIES:*** *C: CYLINDER GALLERY*
*T: RESERVOIR RETURN GALLERY*

1. *Anti-cavitation Valve*
2. *Relief Valve*
3. *Spring*
4. *Spring Adjuster*
5. *Locknut*
6. *Valve Body*

- The service port relief valve pressures are set lower than the system relief valve to limit the maximum lift and lower effort and protect the unit from mechanical overload.
- The service port relief valve located in the valve piston end port limits the maximum lift cylinder pressure to 165 bar / 2400 lbf/in$^2$. This limits lift capacity to maintain forklift truck stability.
- The lift circuit in figure 29 shows the relief valve action when attempting to lift excessive weight.
- The service port relief valve located in the valve rod end limits the maximum lowering pressure to 172 bar / 2500 lbf/in$^2$ . This limits the down thrust on the forks and prevents damage to the truck transport mountings.
- The relief valves are adjustable.

- The service port relief valve also acts as a shock relief valve to protect the lift cylinder from excessive generated pressure if the control valve is suddenly returned to neutral while lowering a heavy load.
- This condition is shown in the lift circuit in figure 30, where excessive cylinder pressure below the piston is limited by the service port relief valve providing a progressive deceleration of the load.
- As the cylinder drops a short distance after the control spool has been returned to neutral, the piston creates a negative pressure in the rod end.
- The reduced pressure opens the rod end service port relief valve anti-cavitation valve allowing reservoir oil to fill the cylinder to prevent cavitation.

# FORKLIFT HYDRAULIC SYSTEM - DESCRIPTION AND OPERATION

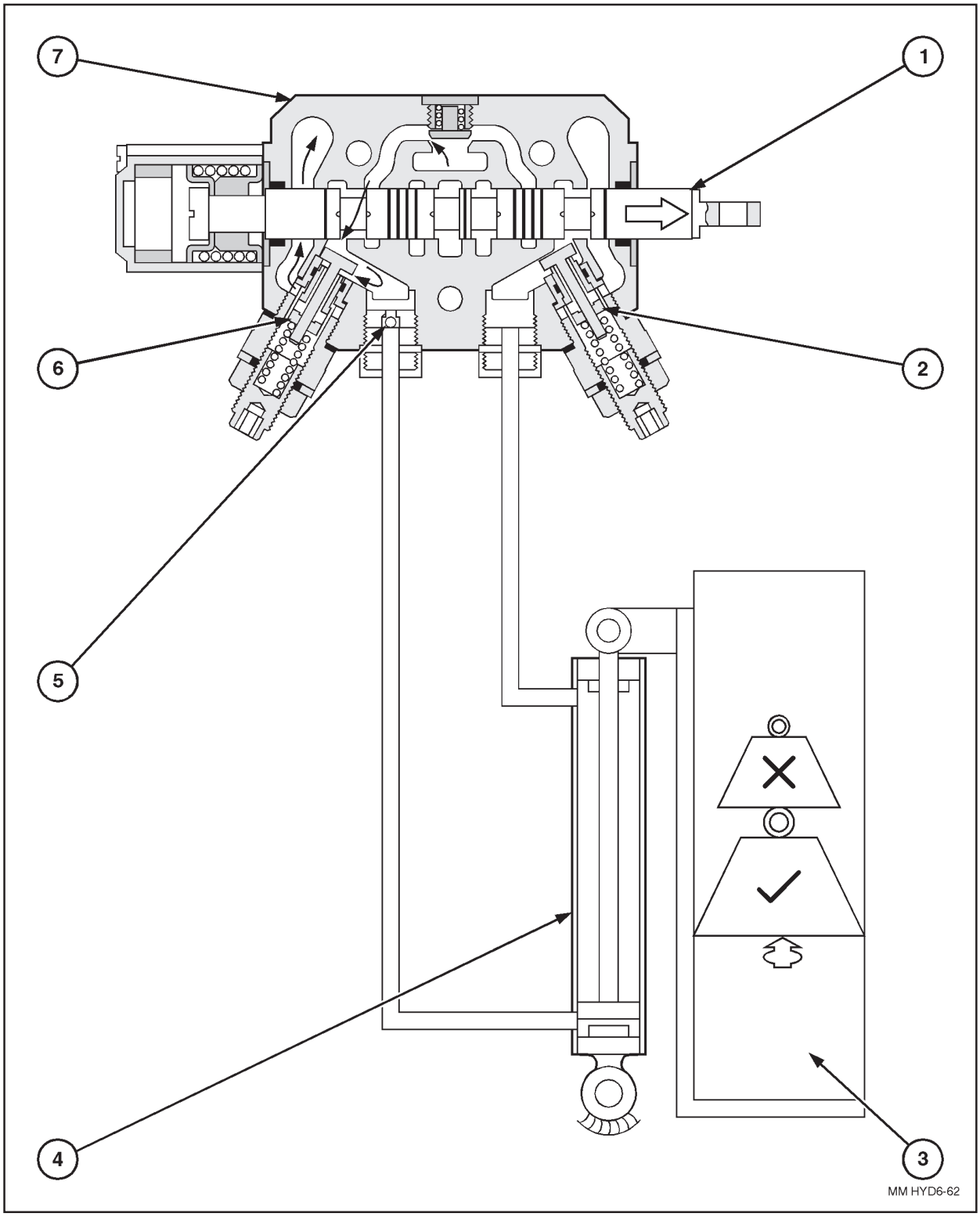


**FIGURE 29. LIFT CIRCUIT OIL FLOW WITH OVERLOAD**

1. *Valve Spool*
2. *Rod End Port Relief Valve*
3. *Load on Forks*
4. *Lift Cylinder*
5. *One Way Restrictor*
6. *Piston End Port Relief Valve*
7. *Control Valve Lift Section*

# FORKLIFT HYDRAULIC SYSTEM - DESCRIPTION AND OPERATION

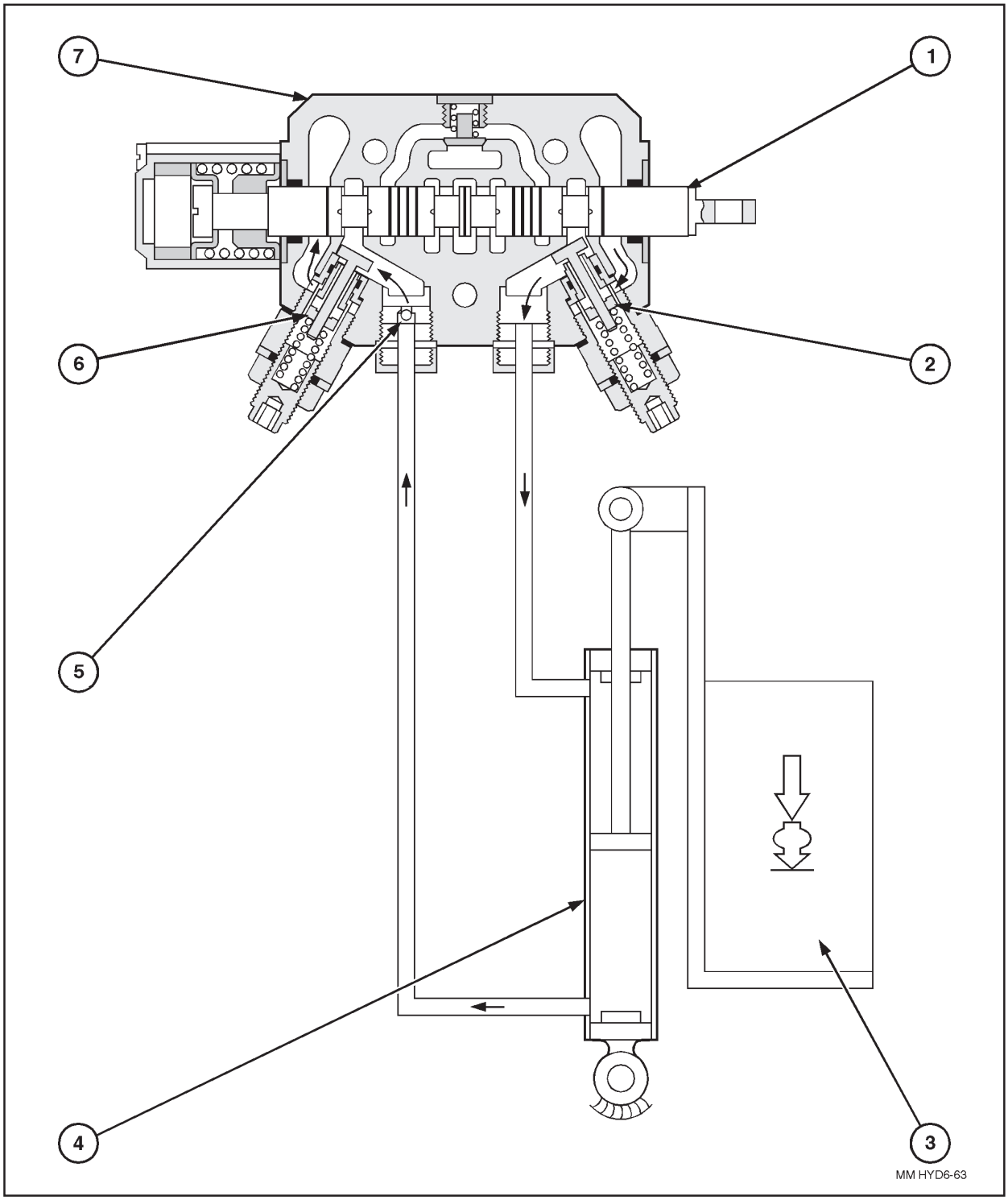


**FIGURE 30. LIFT CIRCUIT IN SHOCK RELIEF CONDITION**

1. *Valve Spool*
2. *Rod End Port Relief Valve*
3. *Load on Forks*
4. *Lift Cylinder*
5. *One Way Restrictor*
6. *Piston End Port Relief Valve*
7. *Control Valve Lift Section*

# FORKLIFT HYDRAULIC SYSTEM - DESCRIPTION AND OPERATION

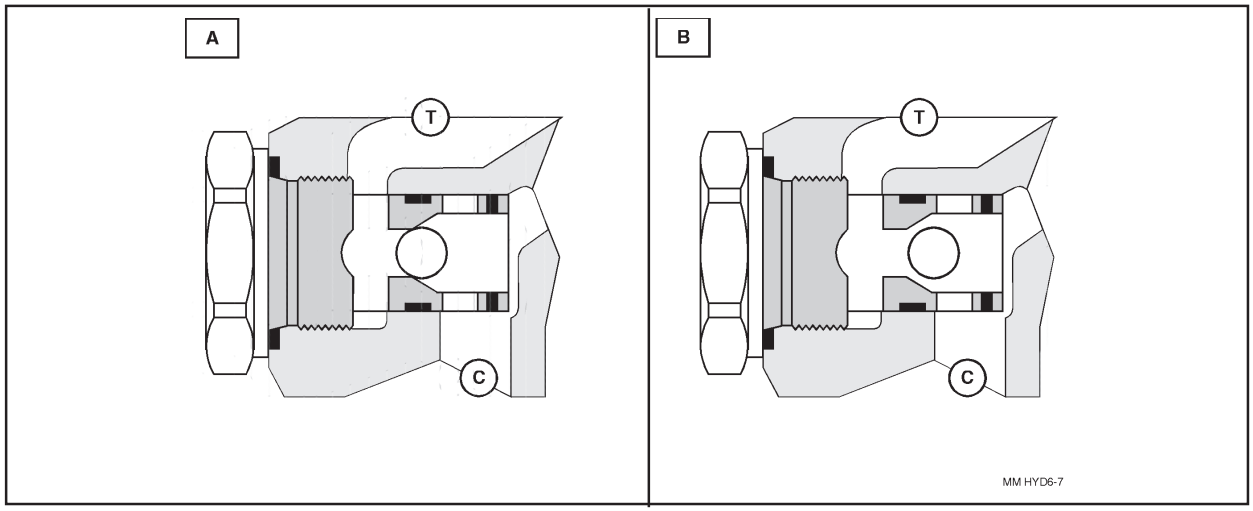


**FIGURE 31. TILT CIRCUIT OPERATION ANTI-CAVITATION VALVE OPERATION**

*A. VALVE CLOSED* *B. VALVE OPEN*
*C. Cylinder Gallery* *T. Reservoir Return Gallery*

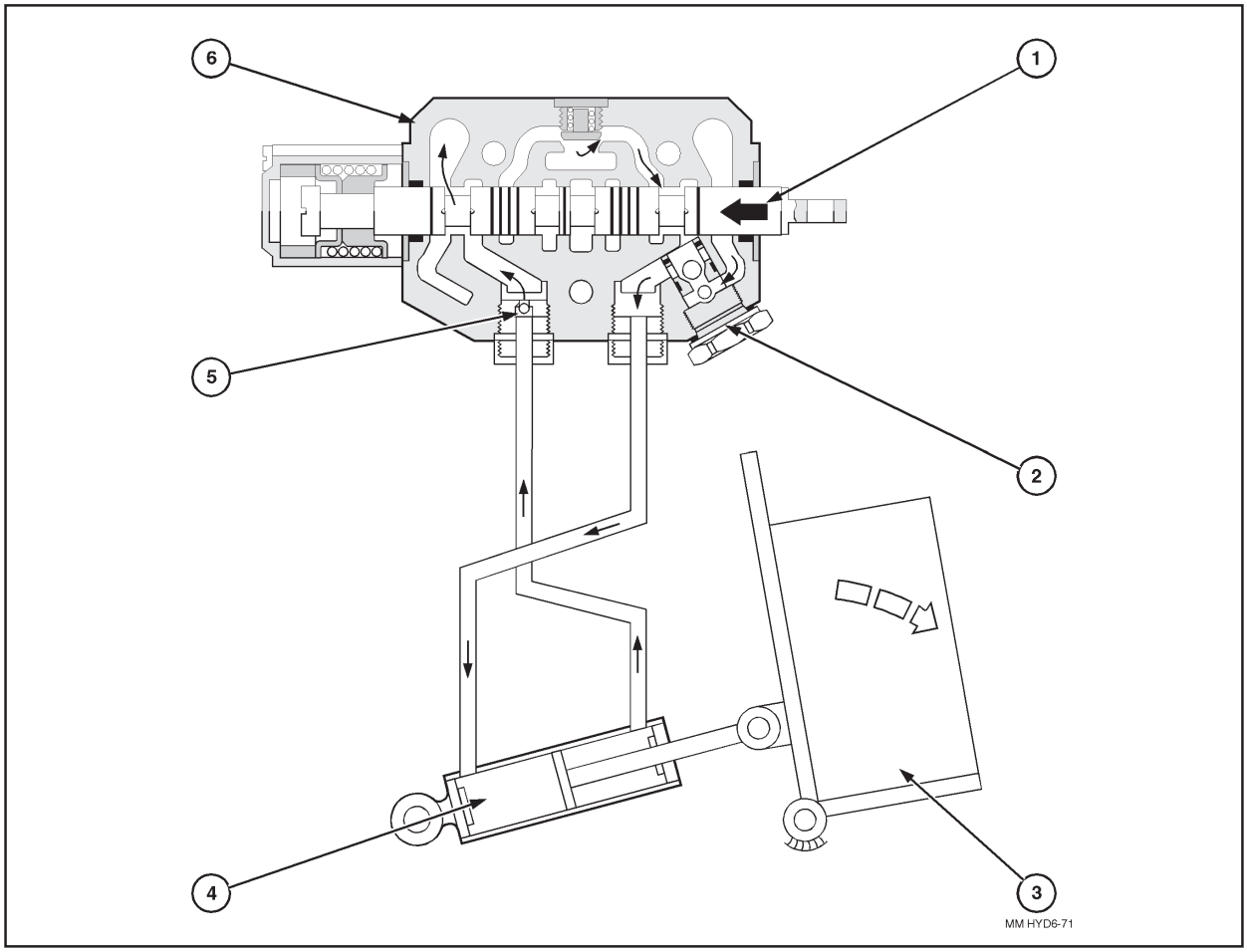


**FIGURE 32. TILT CIRCUIT OPERATION - FORWARD ROTATION**

*1. Valve Spool* *2. Anti-cavitation Valve* *3. Load on Forks*
*4. Tilt Cylinder* *5. One Way Restrictor* *6. Valve Tilt Section*

# FORKLIFT HYDRAULIC SYSTEM - DESCRIPTION AND OPERATION

## ANTI-CAVITATION VALVE

- An anti-cavitation valve is located in the tilt section piston end valve port to prevent cavitation of the tilt cylinder (refer to figure 31).
- The anti-cavitation valve remains closed whenever the pressure in gallery 'C' exceeds the pressure in gallery 'T', however, if the pressure in gallery 'C' drops below reservoir return pressure in gallery 'T', the valve opens.
- Cylinder cavitation can occur when a heavy fork load is being tilted forward, figure 32, or when the unit is located on truck mounting and chained and the pressures are released after stopping the engine.
- As the cylinder extends under load in either of the above conditions, the pressure in the cylinder piston end circuit drops below reservoir pressure.
- The anti-cavitation valve opens and reservoir oil flows from the reservoir return gallery into the cylinder to supplement pump oil and prevent cylinder cavitation.
- The one way restrictor located in the rod end valve port restricts cylinder extension when rotating the load forwards.

## HYDRAULIC CYLINDERS

- The forklift cylinders are all of similar double acting design, the piston and gland sealing arrangements vary between cylinders. Typical cylinder components are illustrated in figures 33 and 34.
- A typical cylinder sectional view is illustrated on the next page.

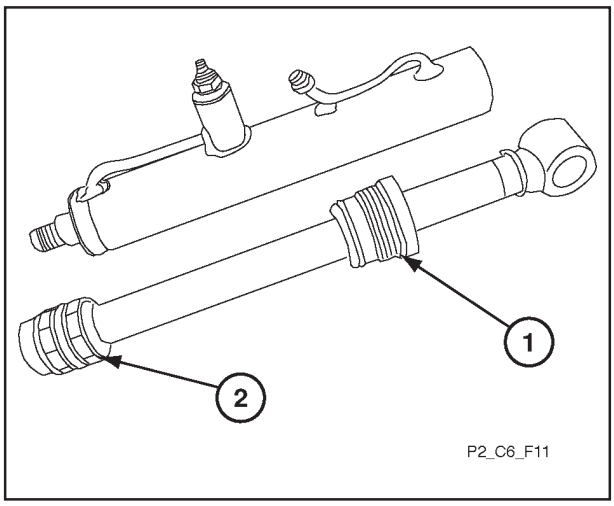


**FIGURE 33. TYPICAL CYLINDER COMPONENTS**

*1. Gland Assembly*
*2. Piston Assembly*

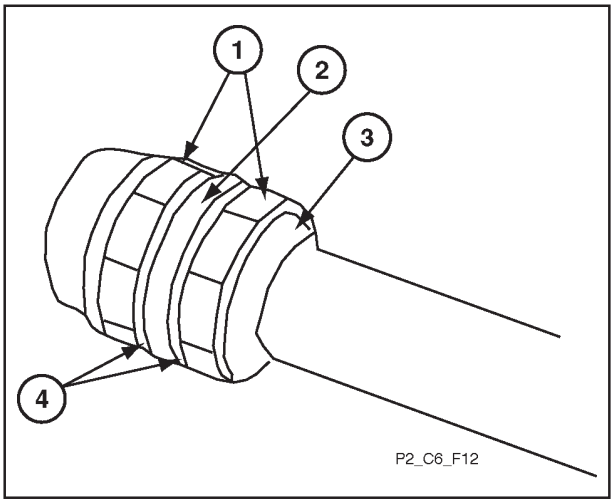


**FIGURE 34. PISTON AND GLAND**

*1. Piston Wear Rings*
*2. Gland 'O' Ring Seal*
*3. Gland Assembly*
*4. Piston Seals and Retaining Rings*

# FORKLIFT HYDRAULIC SYSTEM - DESCRIPTION AND OPERATION

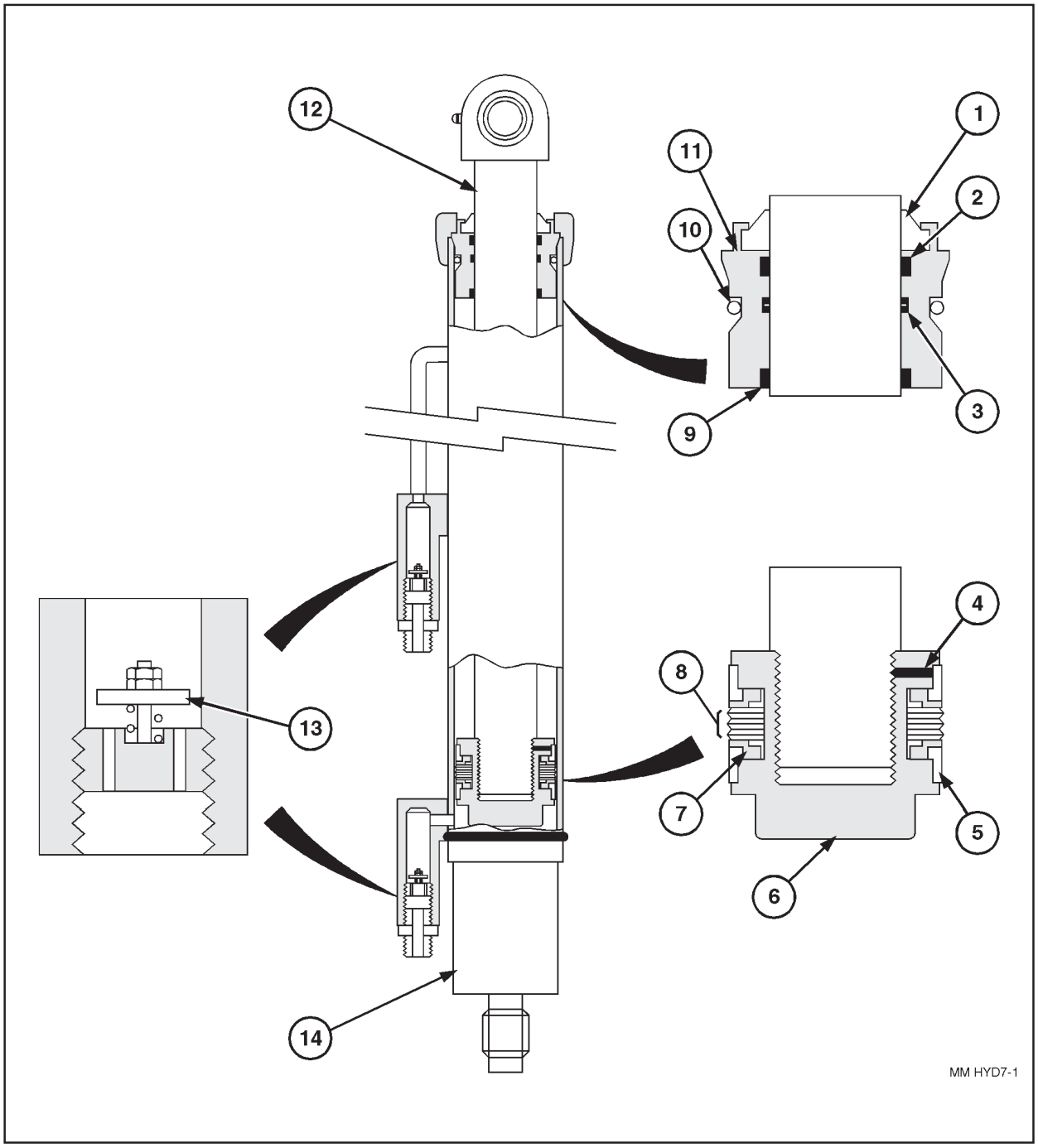


**FIGURE 35. TYPICAL CYLINDER SECTIONAL VIEW**

1. *Wiper Seal*
2. *Split Wear Ring*
3. *Rod Oil Seal*
4. *Piston Locking Screw*
5. *Piston Wear Rings*
6. *Piston*
7. *Seal Retaining Rings*
8. *Piston Seals*
9. *Split Wear Ring*
10. *'O' Ring Seal*
11. *Gland*
12. *Piston Rod*
13. *Velocity Fuse*
14. *Cylinder Barrel*

# FORKLIFT HYDRAULIC SYSTEM - DESCRIPTION AND OPERATION

## VELOCITY FUSES

- Velocity fuses are a safety device fitted to the lift and stabiliser cylinders to prevent cylinder retraction or extension in the event of a hose bursting.
- The velocity fuse valve plate will close the drillings in the body if there is rapid loss of oil from the cylinder due to a burst hose, trapping oil in the cylinder.
- Velocity fuses are fitted to the lift and stabiliser cylinders at the piston end to prevent rapid cylinder retraction under load.
- A velocity fuse is also fitted to the lift cylinder rod end to prevent rapid cylinder extension when lowering the forklift on truck mounting.

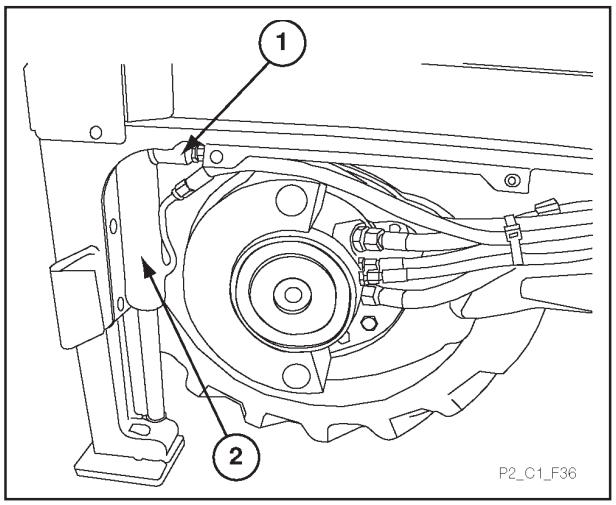


**FIGURE 36. STABILISER CYLINDER**

1. *Velocity Fuse Location*
2. *Right Hand Stabiliser Cylinder*

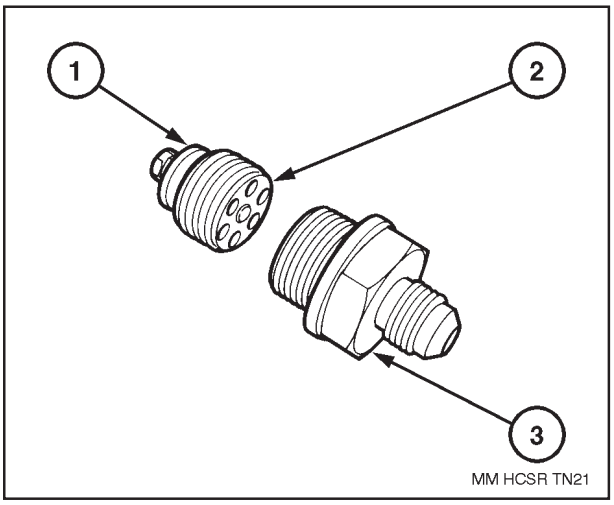


**FIGURE 37. VELOCITY FUSE**

1. *Valve Plate*
2. *Body*
3. *Hose Adaptor*

# FORKLIFT HYDRAULIC SYSTEM - DESCRIPTION AND OPERATION

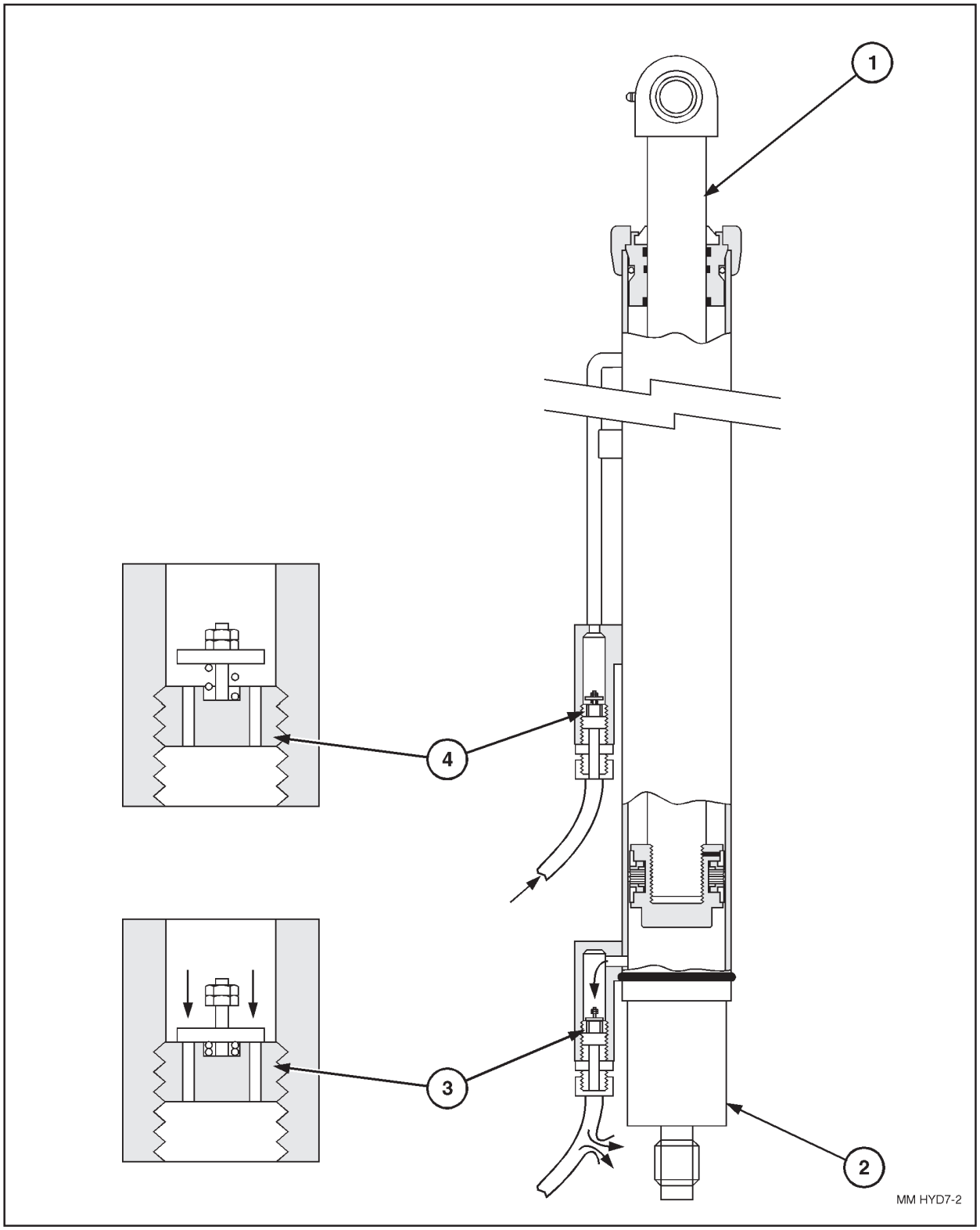


**FIGURE 38. LIFT CYLINDER VELOCITY FUSE OPERATION**

1. *Cylinder Rod*
2. *Cylinder Barrel*
3. *Velocity Fuse Closed*
4. *Velocity Fuse Open*

# FORKLIFT HYDRAULIC SYSTEM - DESCRIPTION AND OPERATION

## LOWER AND GO VALVE KIT

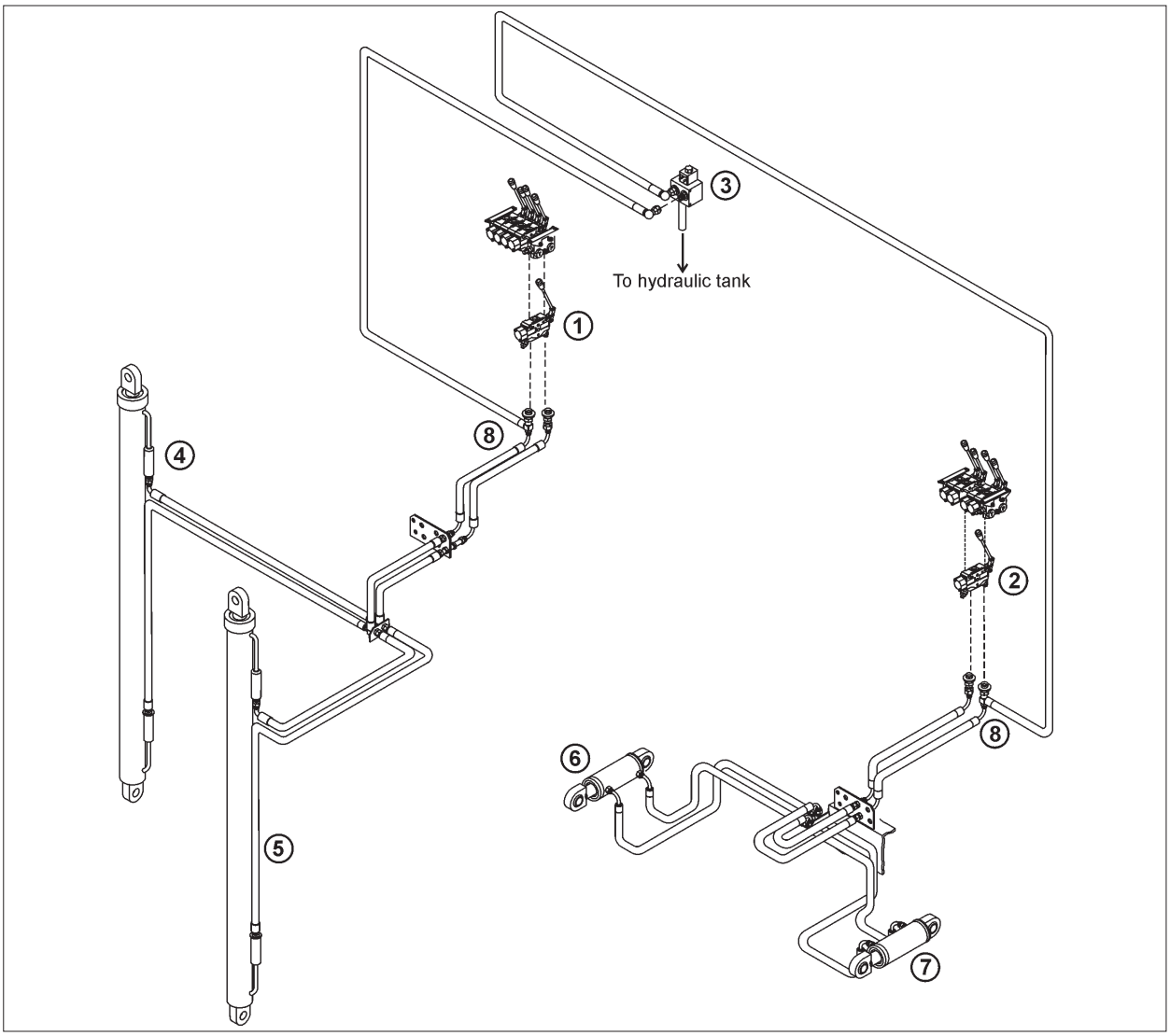


**FIGURE 39. M5 / M40 LOWER AND GO HYDRAULIC SYSTEM COMPONENT LAYOUT**

1. *Lift Valve Section*
2. *Tilt Valve Section*
3. *Hydraulic Release Dump Valve*
4. *Right Hand Lift Cylinder*
5. *Left Hand Lift Cylinder*
6. *Right Hand Tilt Cylinder*
7. *Left Hand Tilt Cylinder*
8. *T-Piece (x2)*

- The Lower and Go Valve Kit is fitted to simplify the truck mounting procedure of the forklift.
- It allows the driver of the forklift to release the hydraulic pressure from the lift and tilt circuits, after the forklift has been mounted on the truck and the transport chains are attached, without having to re-mount the forklift.
- The Lower and Go button, mounted on the side of the forklift, activates a solenoid valve which dumps the pressure in the lift and tilt circuit allowing the forklift to rest in the transport position.
- The button should be depressed for a minimum of 5-10 seconds.

# FORKLIFT HYDRAULIC SYSTEM - DESCRIPTION AND OPERATION

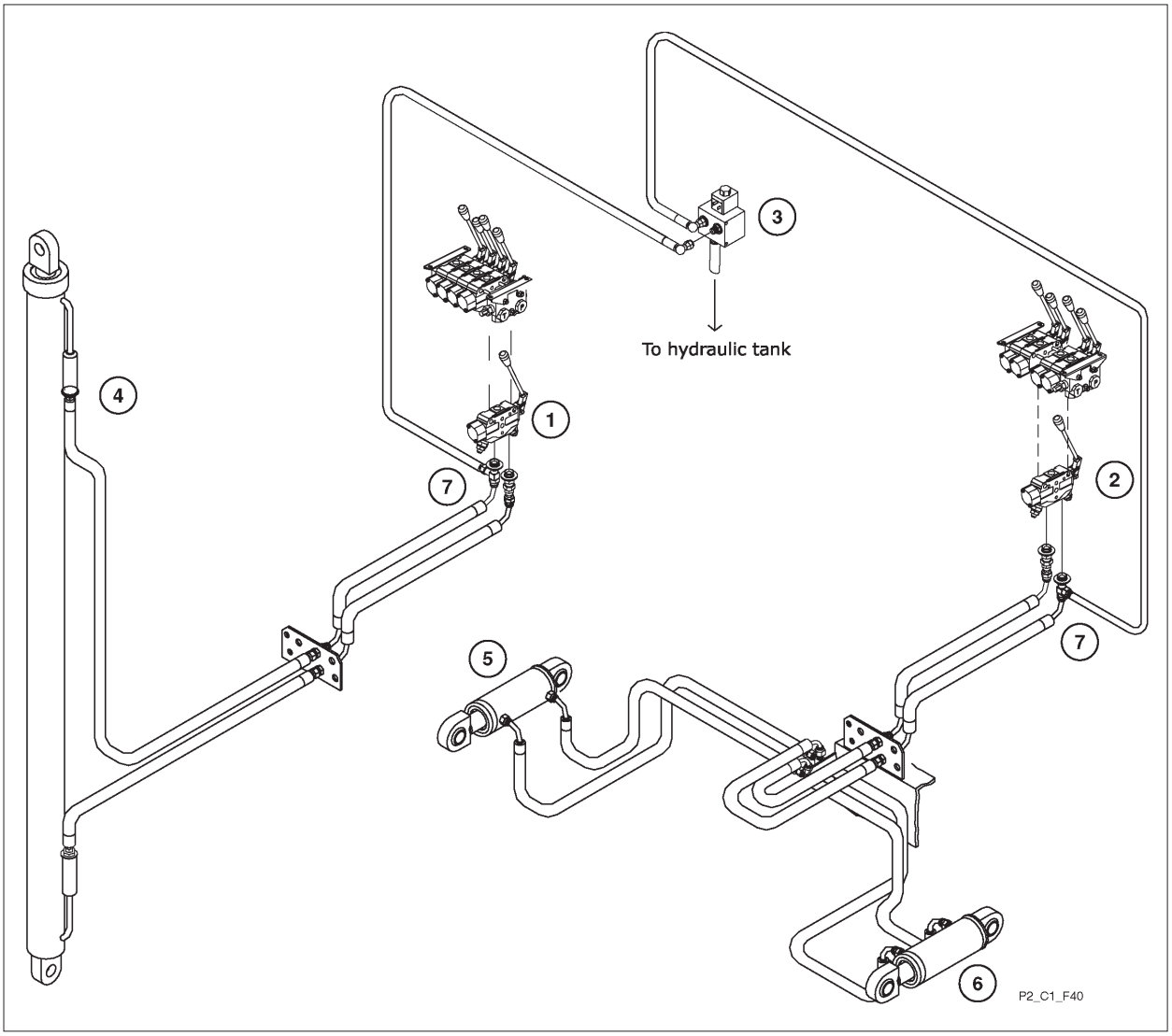


**FIGURE 39 A. M8 / M50 LOWER AND GO HYDRAULIC SYSTEM COMPONENT LAYOUT**

1. *Lift Valve Section*
2. *Tilt Valve Section*
3. *Hydraulic Release Dump Valve*
4. *Lift Cylinder*
5. *Right Hand Tilt Cylinder*
6. *Left Hand Tilt Cylinder*
7. *T-Piece (x2)*