https://truckmanualshub.com/

Genie®
A TEREX COMPANY

Operator's Manual

GTH-844
GTH-842
GTH-644

with Maintenance Information

First Edition
Second Printing
Part No. 114100

Downloaded from www.Manualslib.com manuals search engine

https://truckmanualshub.com/

TABLE OF CONTENTS

SECTION 1	***ROUGH TERRAIN FORK LIFT SAFETY SECTION***	**1-1**
	Introduction	**1-3**
	Standards And Symbols	**1-4**
	Safety	**1-5**
	Training And Knowledge	**1-5**
	Operator's Responsibilities	**1-6**
	Management's Responsibilities	**1-7**
	Maintenance And Repair	**1-8**
	Operation Safety	**1-9**
SECTION 2	***GENERAL SAFETY***	**2-1**
	General Safety Procedures	**2-3**
	Jump Starting	**2-8**
	Proper Load Chart Use	**2-9**
SECTION 3	***CONTROLS AND INSTRUMENTS***	**3-1**
	Operator's Compartment	**3-3**
	Joystick Control Functions	**3-4**
	Joystick Control Functions (Button Pushed)	**3-5**
	Service Brakes	**3-6**
	Low Service Brake Pressure Light	**3-6**
	Parking Brake	**3-7**
	Frame Sway Control	**3-8**
	Gauges	**3-9**
	Hydraulic Pump Destroke Button	**3-9**
	Steering	**3-10**
	Transmission	**3-10**
	Front Axle Differential Lock	**3-11**
SECTION 4	***OPERATION***	**4-1**
	Operation And Safety Guidelines	**4-3**
	Before Starting The Engine	**4-4**
	Starting The Engine	**4-5**
	Before Operating The Forklift	**4-7**
	Transporting A Load	**4-11**
	Placing A Load	**4-13**
SECTION 5	***MAINTENANCE PROCEDURES***	**5-1**
	General Safety Practices	**5-3**
	Daily Maintenance	**5-5**
SECTION 6	***MATERIAL SAFETY DATA***	**6-1**
	Material Safety Data Sheets	**6-3**
	California Proposition 65 Warnings	**6-4**

Downloaded from www.Manualslib.com manuals search engine

https://truckmanualshub.com/

SECTION 1

ROUGH TERRAIN FORK LIFT SAFETY

Downloaded from www.Manualslib.com manuals search engine

https://truckmanualshub.com/

TABLE OF CONTENTS

SECTION 1 - ROUGH TERRAIN FORK LIFT SAFETY

Introduction	1-3
Standards And Symbols	1-4
Safety	1-5
Training And Knowledge	1-5
Operator's Responsibilities	1-6
Management's Responsibilities	1-7
Maintenance And Repair	1-8
Operation Safety	1-9

Downloaded from www.Manualslib.com manuals search engine

https://truckmanualshub.com/

⚠ROUGH TERRAIN FORK LIFT SAFETY⚠

INTRODUCTION

Owners, Users, and Operators:

Genie appreciates your choice of our machine for your application. Our number one priority is user safety, which is best achieved by our joint efforts. We feel that you make a major contribution to safety if you, as the equipment users and operators:

1. **Comply** with OSHA, Federal, State, and Local Regulations.
2. **Read, Understand, and Follow** the instructions in this and other manuals supplied with this machine.
3. **Use Good Safe Work Practices** in a common sense way.
4. **Only have trained/certified operators –** directed by informed and knowledgeable supervision – running the machine.

NOTE: OSHA prohibits the alteration or modification of this machine without written manufacturer's approval. Use only factory approved parts to service or repair this machine.

If there is anything in this manual that is not clear or which you believe should be added, please contact us.
Internet: www.genieind.com
Email: techpub@genieind.com

Thank you!

THIS SYMBOL MEANS YOUR SAFETY IS INVOLVED! READ, UNDERSTAND AND FOLLOW ALL DANGER, WARNING AND CAUTION DECALS ON YOUR ROUGH TERRAIN FORKLIFT.

Downloaded from www.Manualslib.com manuals search engine

https://truckmanualshub.com/

ROUGH TERRAIN FORK LIFT SAFETY

STANDARDS AND SYMBOLS

STANDARDS

Many aspects of rough terrain forklift operation and testing are discussed in standards published by the American National Standards Institute. These Standards are updated on a regular basis with addendas. Genie recommends that you purchase and refer to the following standards.

ANSI B56.6 – Rough Terrain Fork Lifts

This Standard can be purchased from:

American National Standards Institute
25 West 43nd Street, 4th Fl.
New York, New York, 10036
Tel. 212.642.4900
Fax. 212.398.0023

SYMBOLS

The symbols below are used to inform the operator of important information concerning the operation of this machine.

DANGER – Indicates an imminently hazardous situation which, if not avoided, will result in death or serious injury.

WARNING – Indicates a potentially hazardous situation which, if not avoided, could result in death or serious injury.

CAUTION – Indicates a potentially hazardous situation which, if not avoided, may result in minor or moderate injury.

ATTENTION – Indicates a situation which, if not avoided, may result in property or equipment damage.

Downloaded from www.Manualslib.com manuals search engine

https://truckmanualshub.com/

ROUGH TERRAIN FORK LIFT SAFETY

SAFETY

WARNING

These are general safety rules, which must be followed. You are also required to read and understand the Operator's Manual as there are instructions, which are more detailed specific to this machine.

TRAINING AND KNOWLEDGE

1. Safety must always be the operator's most important concern.
2. This machine must only be operated by trained personnel, who have demonstrated their ability to do so safely.
3. Comply with the requirements of current Occupational Safety and Health Administration (OSHA) standards, including 29CFR1910.178; and the American National Standards Institute (ANSI) B56.6 latest edition.
4. Read and Understand all Decals and Warnings.
5. Read and Understand the Rating Chart.
6. Know that the machine can safety lift each load before attempting to lift.

Downloaded from www.Manualslib.com manuals search engine

https://truckmanualshub.com/

⚠ROUGH TERRAIN FORK LIFT SAFETY⚠

OPERATOR'S RESPONSIBILITIES

1. Read and understand the Operator's Manual.
2. Know the location and the purpose of the controls, instruments and indicator lights.
3. Make sure the machine is in proper order and all operational aids and warning signals are functional before operating.
4. Keep the machine clean, including all instrumentation, windows, lights and other glazed surfaces.
5. Use protective clothing and safety equipment. Always use approved safety equipment such as: gloves, safety boots, hard hats, safety glasses and ear protection where necessary.
6. Wear protective clothing that is snug and belted where required.
7. Store tools and other necessary items in the toolbox.
8. Never lift a load without a Load Rating Chart in the cab.
9. Know the load to be lifted.
10. Be alert, physically fit and free from the influences of alcohol, drugs or medications that might affect the operator's eyesight, hearing, or reactions.
11. Keep people, equipment and material out of the work area.
12. Keep a fully charged fire extinguisher and first aid kit in the cab at all times, and be familiar with how to use these items.
13. Know about movements of other machinery, trucks and personnel at the jobsite.
14. Make sure everyone is in a safe place before moving the boom, forks, load or outriggers (if so equipped.)
15. Start and stop movements smoothly and swing at speeds that will keep the load under control.

Downloaded from www.Manualslib.com manuals search engine

https://truckmanualshub.com/

⚠ROUGH TERRAIN FORK LIFT SAFETY⚠

MANAGEMENT'S RESPONSIBILITIES

1. Ensure operators are competent, physically fit, trained and if required licensed.
2. Have a supervisor at the job site to be responsible for job safety.
3. Crew members given specific safety responsibilities and instructed to report any unsafe conditions to the supervisor.
4. Supply the weight on the load to be lifted to the operator.
5. Verify that all crewmembers are familiar with OSHA, ANSI B56.6 requirements as well as instructions in the manuals.

Downloaded from www.Manualslib.com manuals search engine

https://truckmanualshub.com/

⚠ROUGH TERRAIN FORK LIFT SAFETY⚠

MAINTENANCE AND REPAIR

1. Practice safe maintenance procedures. Perform all maintenance and repairs in accordance with instructions provided by the manufacturer in the manuals. Also heed the warnings on the placards and decals on the machine.

2. Always use supports and braces when working on, under or around the machine or forks.

3. Shut off the engine and lockout the machine while working on the machine unless instructions specifically require the engine to be running.

4. Always make sure the machine is stationary prior to performing adjustments or lubrication.

5. Replace all shields and guards after performing service.

6. Always use a piece of cardboard or paper to search for leaks.

7. When performing work on the hydraulic system:

   i. Lower the boom to horizontal.
   ii. Support the boom with supports or braces.
   iii. Shut down the engine.
   iv. Relieve all pressure before disconnecting lines.
   v. Ensure all connections are tight before applying pressure.
   vi. Repair or replace any damaged line, hose or fitting before applying pressure.

8. Always have tires serviced and mounted by a qualified person with the proper tools and guards.

9. Always use an inflation cage during tire inflation.

10. Only perform welding on the machine with approval from the manufacturer.

Downloaded from www.Manualslib.com manuals search engine

https://truckmanualshub.com/

⚠ROUGH TERRAIN FORK LIFT SAFETY⚠

OPERATION SAFETY

1. Always inspect the machine daily. Check for leaks, worn hoses, loose belts, broken structures, and loose or missing bolts. Repair or replace any worn, damaged or leaking parts prior to operation of the machine.

2. Only inspect the coolant level when the engine and coolant are cool.

3. Be sure that all guards and screens are secure and in the proper place.

4. Inspect for and clear the work area of any obstructions that could interfere with proper machine operation. Any obstructions that cannot be cleared should be clearly marked and avoided during operation.

5. Refueling:

   i. Always stop the engine before refueling the machine.
   ii. Fill the fuel tank outdoors.
   iii. Handle fuel with care, as it is highly flammable. Do not refuel the machine while smoking or near open flames.
   iv. Always clean up spilled fuel.

6. Make sure the machine and access system is clean and free of dirt, oil, grease or debris.

7. When getting on and off the machine, face the machine, use the steps and handrails provided, and always maintain a three point contact.

8. Always remain completely inside the cab enclosure while operating the machine.

9. Always wear the seat belt while operating the machine.

10. Always completely lower the boom with the forks resting on the ground before any work is performed on or around the machine.

11. Do not operate the machine while people are under or near an elevated boom whether the boom is loaded or unloaded. Falling objects from the forks or attachment may cause serious injury or death.

Downloaded from www.Manualslib.com manuals search engine

https://truckmanualshub.com/

⚠ROUGH TERRAIN FORK LIFT SAFETY⚠

OPERATION SAFETY

12. Maintain an appropriate clearance from electrical power lines. See the chart below for minimum safe approach distances.

Minimum Safe Approach Distance	
Power Line Voltage	Required Clearance
0 to 50 kV	10 ft. (3.00 m)
50 to 200 kV	15 ft. (4.60 m)
200 to 350 kV	20 ft. (6.10 m)
350 to 500 kV	25 ft. (7.62 m)
500 to 750 kV	35 ft. (10.67 m)
750 to 1000 kV	45 ft. (13.72 m)

13. Lifting Loads:
    i. Using the load chart, confirm that the load is within the rated capacity of the machine for the required configuration.
    ii. Level the machine using the level gauge before lifting loads. Use the sway control to level the machine only when the boom is at horizontal or lower. Using the sway control with the boom above horizontal may cause the machine to overturn.
    iii. Verify that the load is secured on the forks before performing a lift. Rearrange the load if necessary.
    iv. Before lowering a maximum load, always retract the boom completely.
    v. Use proper attachments, such as a truss boom, to lift suspended loads.

14. If the load to be lifted exceeds the capacity of the machine for the given configuration:
    i. Move the machine closer to the load so that the weight of the load will be within the allowable load chart specifications.
    ii. Divide the load into smaller pieces.
    iii. Get a larger machine capable of handling the load.

15. Always move a load so that you have maximum machine stability and visibility is not obstructed. Keep the boom at or below horizontal, with the load close to the ground.

16. Tilt the forks back towards the machine slightly during travel to ensure stability of the load.

Downloaded from www.Manualslib.com manuals search engine

https://truckmanualshub.com/

⚠ROUGH TERRAIN FORK LIFT SAFETY⚠

OPERATION SAFETY

17. Inspect the path of travel before beginning movement. Avoid holes and dropoffs.

18. Traveling on slopes/grades.
    - i. Ascend and descend slowly and with caution.
    - ii. When loaded, always travel with the load uphill.
    - iii. When unloaded,travel with the attachment downhill.
    - iv. Avoid turning, travel straight up and down.

19. Always position all wheels in line with the machine before switching the steering mode.

20. Always position the machine and set the park brake before lifting a load.

21. Do not allow riders on the machine or forks.

22. Do not transport or lift personnel into position with this forklift.

23. When leaving the operator's station:
    - i. Place the directional controls in neutral.
    - ii. Apply the parking brake.
    - iii. Lower the attachment to the ground.

Downloaded from www.Manualslib.com manuals search engine

https://truckmanualshub.com/

NOTES

Downloaded from www.Manualslib.com manuals search engine

https://truckmanualshub.com/

SECTION 2

GENERAL SAFETY

Downloaded from www.Manualslib.com manuals search engine

https://truckmanualshub.com/

TABLE OF CONTENTS

SECTION 2 - GENERAL SAFETY

General Safety Procedures	2-3
Jump Starting	2-8
Proper Load Chart Use	2-9

Downloaded from www.Manualslib.com manuals search engine

https://truckmanualshub.com/

⚠ GENERAL SAFETY ⚠

GENERAL SAFETY PROCEDURES

SAFETY ALERT SYMBOL

Stop and take time to read **ALL** safety alert messages. Follow all safety messages to avoid injury and/or death.

⚠ WARNING

ALWAYS wear eye protection and personal safety equipment.

THE OPERATOR

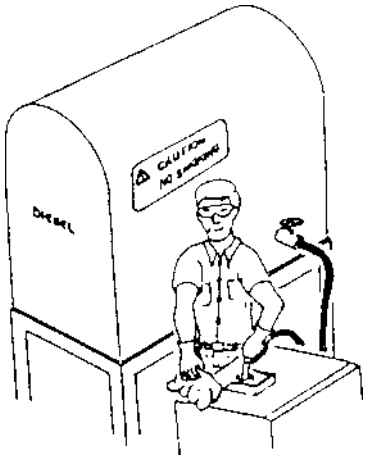

The operator must be fully trained and qualified to operate this machine.

Before start-up or machine operation, the operator must learn the location and purpose of the:

1. Controls
2. Instruments
3. Indicator lights
4. Safety and instruction labels

ACCIDENT PREVENTION

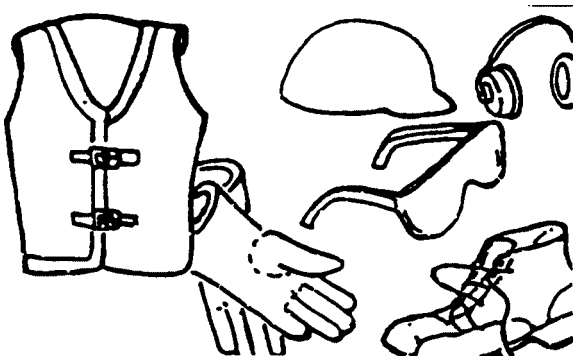

Use protective clothing and safety equipment. Always use approved safety equipment such as: gloves, safety boots, safety hard hats, goggles and ear protection when necessary.

Wear protective clothing that is snug and belted where required.

FIRE PREVENTION/FIRST AID

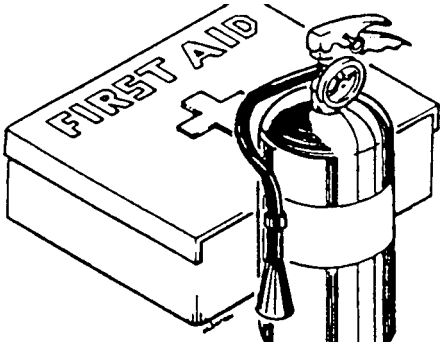

Install a first-aid kit and fire extinguisher in the operator's cab.

KEEP THE FIRST-AID KIT and **FIRE EXTINGUISHER** properly maintained. Follow the instructions provided with the first-aid kit and fire extinguisher.

Downloaded from www.Manualslib.com manuals search engine

https://truckmanualshub.com/

GENERAL SAFETY

GENERAL SAFETY PROCEDURES

WELDING PRECAUTIONS

CAUTION

Any unauthorized welding can cause structural failure or possible personal injury. **DO NOT** weld on any structural member. All unauthorized welding will void the warranty.

HAND HOLDS AND STEPS

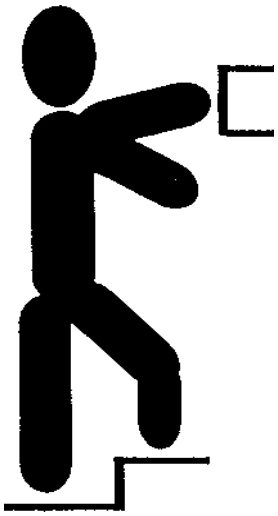

WARNING

Slips and falls can cause serious injury.

When getting on and off the machine, always maintain a three point contact with steps and hand rails while facing the machine.

DO NOT use the steering wheel or any other controls as handrails.

NEVER jump on or off the machine.

Be careful of slippery conditions on platforms, steps and handrails when getting on and off the machine.

ALWAYS shut off the engine before leaving the operator's station.

REFUELING

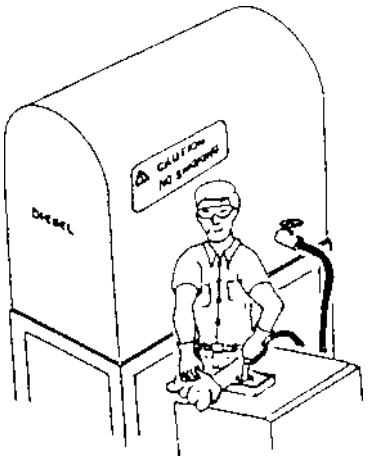

WARNING

Fires can cause death or severe personal injury.

Handle fuel with care. It is highly flammable. **DO NOT** refuel the machine while smoking or when near open flames or sparks.

ALWAYS stop the engine before refueling the machine. Fill the fuel tank outdoors.

Prevent fires by keeping the machine clean of trash, grease and debris. **ALWAYS** clean up spilled fuel.

Downloaded from www.Manualslib.com manuals search engine

https://truckmanualshub.com/

GENERAL SAFETY

GENERAL SAFETY PROCEDURES

HYDRAULIC SAFETY

WARNING

Hot hydraulic oil can cause severe burns. **DO NOT** work on the hydraulic system if the oil temperature exceeds 120 degrees F. (49 degrees C).

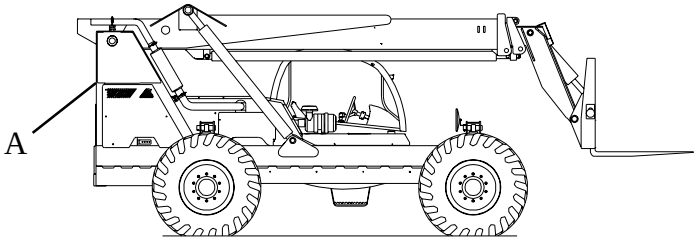

Before **ANYONE** works on the hydraulic system:

1. Lower the boom to the horizontal position.
2. Support the boom to avoid unintentional lowering.
3. Shutdown the engine.
4. Remove the key from the ignition.
5. Clean the area around the oil reservoir cap (A).

FLUIDS UNDER PRESSURE

WARNING

Escaping fluid under pressure can penetrate the skin and can cause serious personal injury.

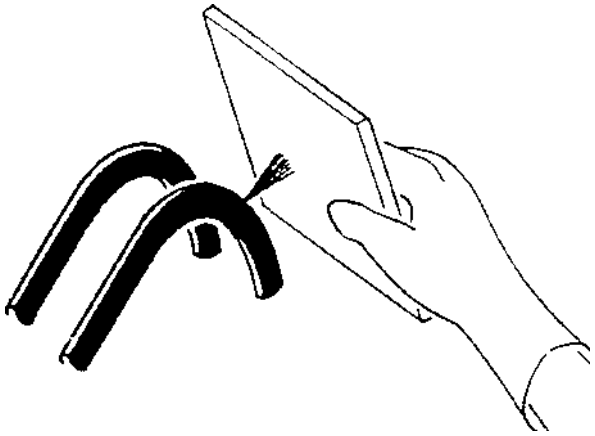

Use a piece of cardboard or paper to search for leaks. **DO NOT** use hands. Before disconnecting hydraulic lines, be sure to relieve all line pressure. Before applying pressure to the system, be sure that all connections are tight. **DO NOT** apply pressure to a damaged line, hose or fitting.

If injured by escaping fluid, see a doctor at once. Proper medical treatment must be administered immediately. A serious infection or reaction can result without proper medical treatment.

SERVICE TIRES SAFELY

WARNING

An improperly mounted over-pressurized tire can result in tire explosion causing possible personal injury. An inflation cage or other safety device must be used during tire inflation.

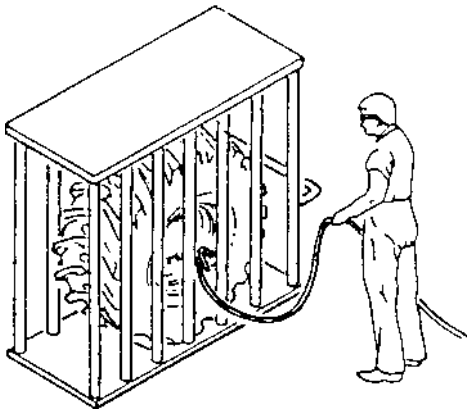

DO NOT attempt to mount a tire unless you have the proper equipment and experience to perform the job. If you do not have the proper qualifications to perform the job have your dealer or qualified repair service perform the repair.

Downloaded from www.Manualslib.com manuals search engine

https://truckmanualshub.com/

GENERAL SAFETY

GENERAL SAFETY PROCEDURES

CAUTION

USE SEAT BELT

Always wear the seat belt while operating the machine to reduce the risk of personal injury.

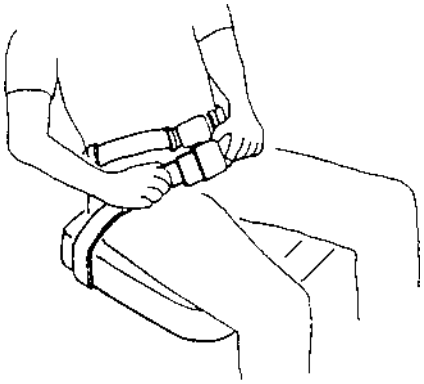

CAUTION

PRACTICE SAFE MAINTENANCE

Unauthorized modifications to the machine may impair the safety, machine function and/or affect machine life.

ALWAYS use a safety support or brace when working on, under, or around the machine or forks.

DO NOT adjust or lubricate the machine while it is in motion.

SHUT OFF the engine and **LOCKOUT** the ignition while working on the machine unless maintenance instructions require the engine to be running.

REPLACE all the shields and guards after servicing.

NEVER use the machine as a platform for lifting personnel.

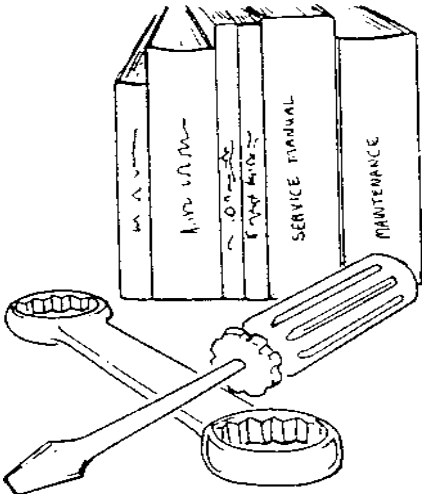

CAUTION

BOOM SAFETY

DO NOT enter the **DANGER AREA** under or around the boom when the forks are off the ground or while the engine is running. **(See diagram at right for DANGER AREA)**.

Serious personal injury could result if the boom should unexpectedly drop.

Before **ANY** work is performed in the **DANGER AREA** the boom must be **COMPLETELY** lowered and the forks must be resting on the ground.

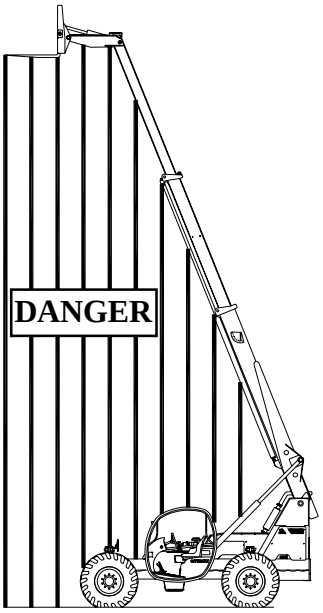

Downloaded from www.Manualslib.com manuals search engine

https://truckmanualshub.com/

GENERAL SAFETY

GENERAL SAFETY PROCEDURES

AVOID ELECTRICAL POWER LINES

DANGER

REQUIRED CLEARANCE FOR NORMAL VOLTAGE IN OPERATION NEAR HIGH VOLTAGE POWER LINES AND OPERATION IN TRANSIT WITH NO LOAD AND BOOM OR MAST LOWERED.

Normal Voltage, kV (Phase to Phase)	Minimum Required Clearance, ft. (m)
Operation Near High Voltage Power Lines	
to 50	10 (3.05)
Over 50 to 200	15 (4.60)
Over 200 to 350	20 (6.10)
Over 350 to 500	25 (7.62)
Over 500 to 750	35 (10.67)
Over 750 to 1000	45 (13.72)
Operation in Transit With No Load and Boom Lowered	
to 0.75	4 (1.22)
Over 0.75 to 50	6 ((1.83)
Over 50 to 345	10 (3.05)
Over 345 to 750	16 (4.87)
Over 750 to 1000	20 (6.10)

WARNING

Always remain completely inside the cab enclosure while operating the machine.

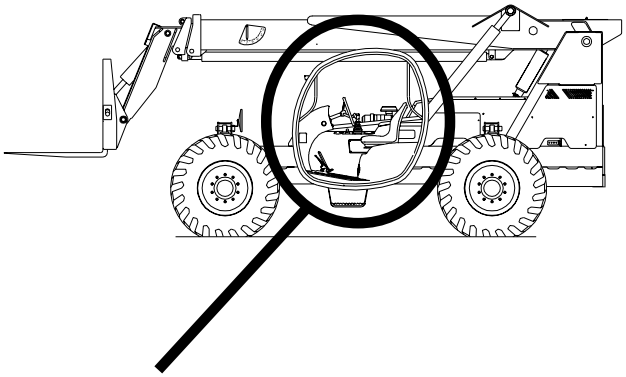

WARNING

Never operate this machine under the influence of drugs, alcohol and/or medication which can cause drowsiness.

WARNING

Never transport or lift personnel into position with this forklift. It is not designed as a personnel lifting device.

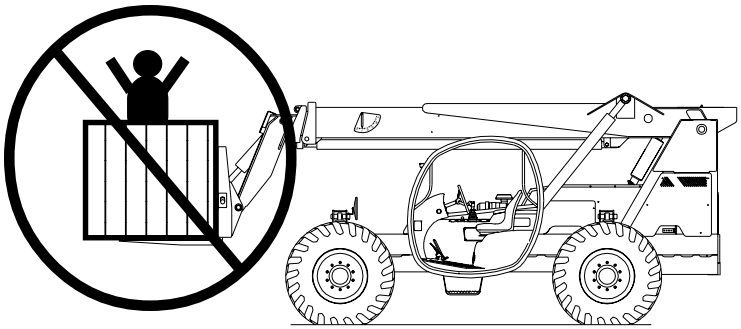

Downloaded from www.Manualslib.com manuals search engine

https://truckmanualshub.com/

GENERAL SAFETY

JUMP STARTING

Location: The battery is located under the fuel tank / battery box cover (A).

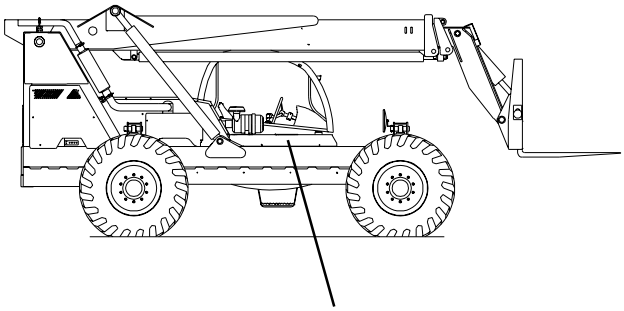

JUMP STARTING

Jump starting at the battery or battery replacement is required when the battery is discharged to the point where the battery will not crank the starter.

WARNING

Battery posts, terminals, and related accessories contain lead and lead compounds, chemicals known to the State of California to cause cancer and reproductive harm.

Batteries also contain other chemicals known to the State of California to cause cancer.

Wash hands after handling.

WARNING

Never jump start the machine directly to the starter or the starter solenoid. Serious injury or death could result from the machine moving forward or backward.

WARNING

To avoid personal injury when jump starting with another machine, be certain that the machines are not touching. Never jump start a frozen battery as it will explode. Keep sparks and flames away from the battery. Lead acid batteries generate explosive gases when charging. Wear safety glasses when working near batteries.

The booster battery must be a 12 volt type. The machine used for jump starting must have a negative ground electrical system. To jump start the machine, proceed as follows:

1. Connect the positive (+) jumper cable to the positive (+) post of the discharged battery.
2. Connect the other end of the same jumper cable to the positive (+) post of the booster battery.
3. Connect one end of the second jumper cable to the negative (-) post of the booster battery.
4. Make the final cable connection to the engine block or the furthest ground point away from the battery.
5. Start the engine.
6. Remove the jumper cables in the reverse order of their connection (i.e. negative cable ground connection first, etc.)

Downloaded from www.Manualslib.com manuals search engine

https://truckmanualshub.com/

GENERAL SAFETY

PROPER LOAD CHART USE

WARNING

NEVER raise a load and drive to position it. This can cause the machine to turnover. When placing a load, always move a loaded machine with the boom angle indicator (B) at 0 degrees or less. When the machine is as close as possible to where the load needs to be placed, set the parking brake, raise the load, then place the load into position.

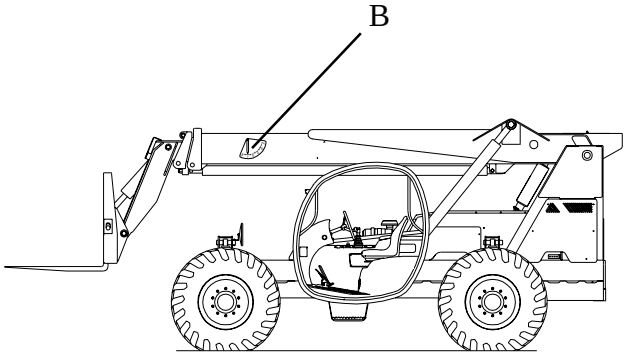

The load chart shows the operating limits of a properly maintained and operated machine. To use the load chart the operator must know the weight of the load and how far "out" and "up" it is to be placed. If the load is heavier than stated on the load chart, three options can be used:

1. Move the machine closer to the load so that the weight of the load will fall within the load chart specifications.

2. Divide the load into smaller pieces so that each piece falls into load chart specifications.

3. Get a larger machine capable of handling the load within specifications.

Downloaded from www.Manualslib.com manuals search engine

https://truckmanualshub.com/

GENERAL SAFETY

PROPER LOAD CHART USE

Genie
A TEREX COMPANY

PO Box 97030
18340 NE 76th St
Redmond WA 98073

Manufacturer's recommended capacity is per ANSI B56.6 Stability Tests using standard homogeneous cubes 4 x 4 x 4 ft / 1.2 x 1.2 x 1.2 m.

Load capacities at 24 in / 60 cm load center with standard fork frame.

Rated lift capacities shown are with machine on a firm level surface with undamaged, properly inflated calcium chloride solution filled tires or optional foam filled tires. Rear axle lock-up engaged.

Load Limits / Horizontal Boom

Last Fully Visible Letter	
Retracted	6000 lbs
A Letter Visible	4000 lbs
B Letter Visible	3000 lbs
C Letter Visible	2000 lbs

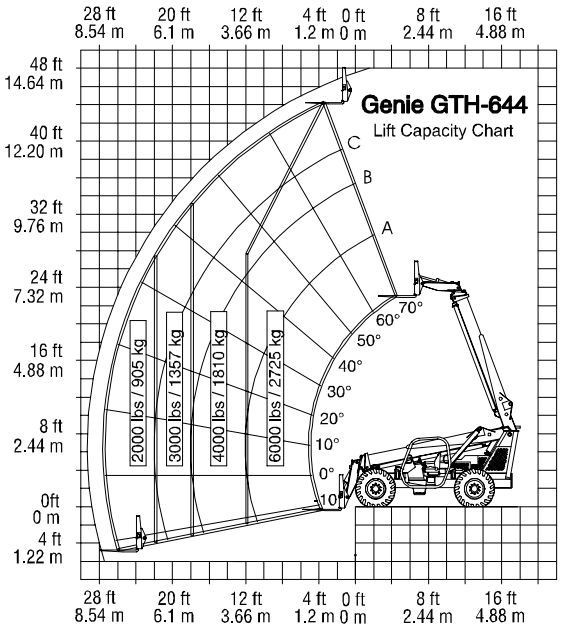

Genie
A TEREX COMPANY

PO Box 97030
18340 NE 76th St
Redmond WA 98073

Manufacturer's recommended capacity is per ANSI B56.6 Stability Tests using standard homogeneous cubes 4 x 4 x 4 ft / 1.2 x 1.2 x 1.2 m.

Load capacities at 24 in / 60 cm load center with standard fork frame.

Rated lift capacities shown are with machine on a firm level surface with undamaged, properly inflated calcium chloride solution filled tires or optional foam filled tires. Rear axle lock-up engaged.

Load Limits / Horizontal Boom

Last Fully Visible Letter	
Retracted	8000 lbs
A Letter Visible	6000 lbs
B Letter Visible	4000 lbs
C Letter Visible	3000 lbs
D Letter Visible	2000 lbs

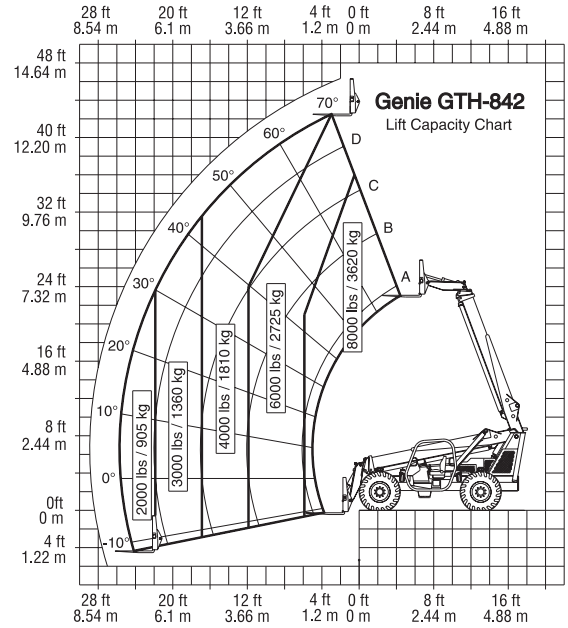

Downloaded from www.Manualslib.com manuals search engine

https://truckmanualshub.com/

GENERAL SAFETY

PROPER LOAD CHART USE

Genie
A TEREX COMPANY

PO Box 97030
18340 NE 76th St
Redmond WA 98073

Manufacturer's recommended capacity is per ANSI B56.6 Stability Tests using standard homogeneous cubes 4 x 4 x 4 ft / 1.2 x 1.2 x 1.2 m.

Load capacities at 24 in / 60 cm load center with standard fork frame.

Rated lift capacities shown are with machine on a firm level surface with undamaged, properly inflated calcium chloride solution filled tires or optional foam filled tires. Rear axle lock-up engaged.

Load Limits / Horizontal Boom

Last Fully Visible Letter	
Retracted	8000 lbs
A Letter Visible	6000 lbs
B Letter Visible	4000 lbs
C Letter Visible	3000 lbs
D Letter Visible	2000 lbs

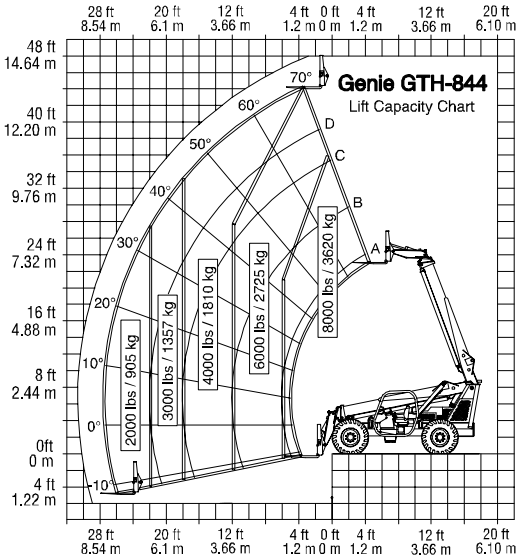

114071 A

Downloaded from www.Manualslib.com manuals search engine

https://truckmanualshub.com/

NOTES

Downloaded from www.Manualslib.com manuals search engine

https://truckmanualshub.com/

SECTION 3

CONTROLS AND INSTRUMENTS

Downloaded from www.Manualslib.com manuals search engine

https://truckmanualshub.com/

TABLE OF CONTENTS

SECTION 3 - CONTROLS AND INSTRUMENTS

Operator's Compartment	3-3
Joystick Control Functions	3-4
Joystick Control Functions (Button Pushed)	3-5
Service Brakes	3-6
Low Service Brake Pressure Light	3-6
Parking Brake	3-7
Frame Sway Control	3-8
Gauges	3-9
Hydraulic Pump Destroke Button	3-9
Steering	3-10
Transmission	3-10
Front Axle Differential Lock	3-11

Downloaded from www.Manualslib.com manuals search engine

https://truckmanualshub.com/

CONTROLS AND INSTRUMENTS

OPERATOR'S COMPARTMENT

1. Accelerator Pedal
2. Joystick 4-way Controller
3. Transmission Control Lever
4. Steering Selector
5. Service Brake Pedal
6. Rear Wiper Switch
7. Load Chart
8. Hourmeter
9. Gauges
10. Machine Level Gauge
11. Plug / 12 Volt Access.
12. Seat
13. Frame Level Switch
14. Seat Belt
15. Parking Brake Switch
16. Pump Off Button
17. Front Wiper Switch
18. Ignition Switch
19. Auxiliary Hydraulics
20. Steering Wheel
21. Headlight Switch
22. Heater Switch
23. Plug / Turn Signal Wires
24. Interior Rear View Mirror
25. Frt.Axle Differential Lock
26. Low Brake Press. Light
27. Work Lights Switch

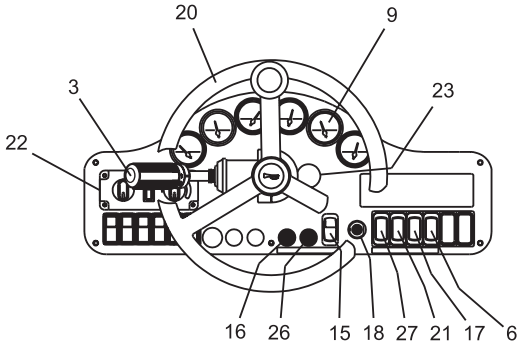

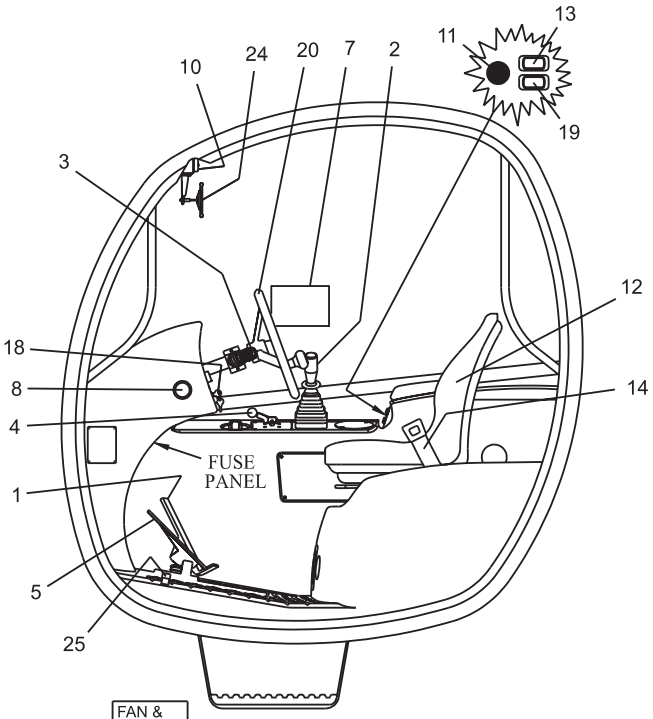

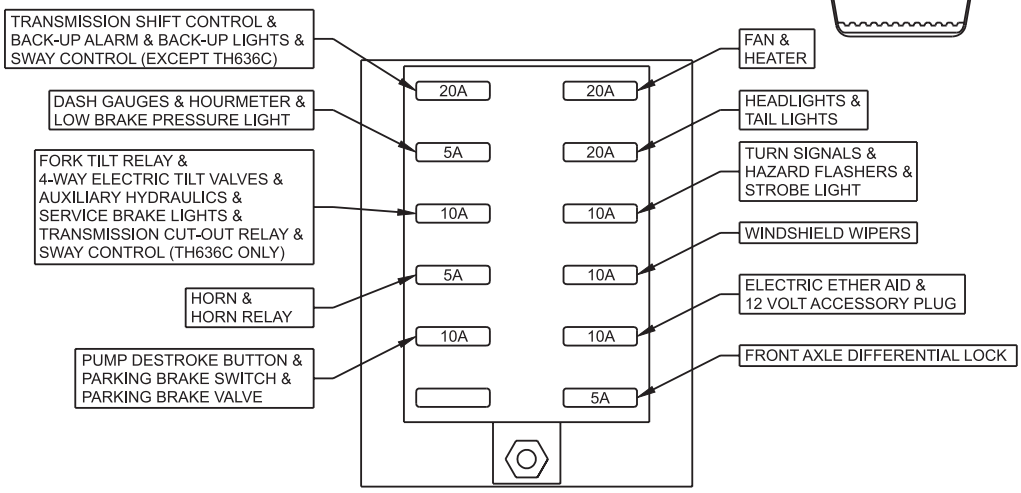

FUSE PANEL VIEW

Downloaded from www.Manualslib.com manuals search engine

https://truckmanualshub.com/

CONTROLS AND INSTRUMENTS

JOYSTICK CONTROL FUNCTIONS

A - Boom Down

B - Boom Up

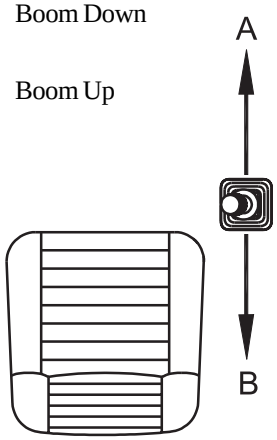

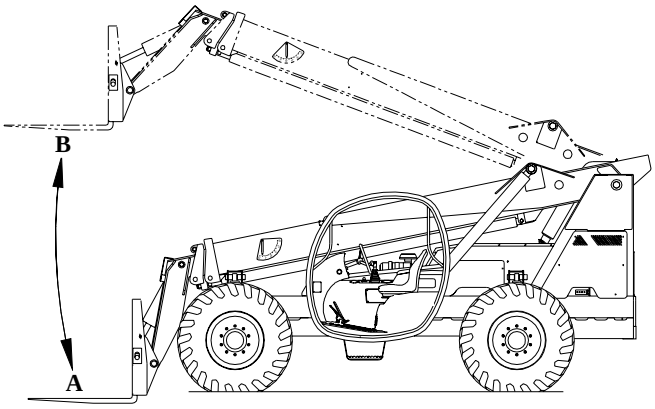

C - Boom Out

D - Boom In

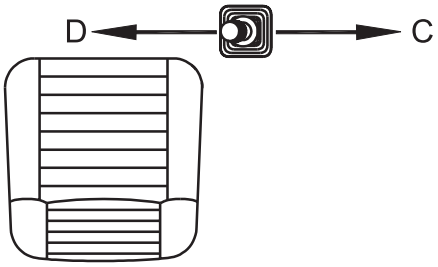

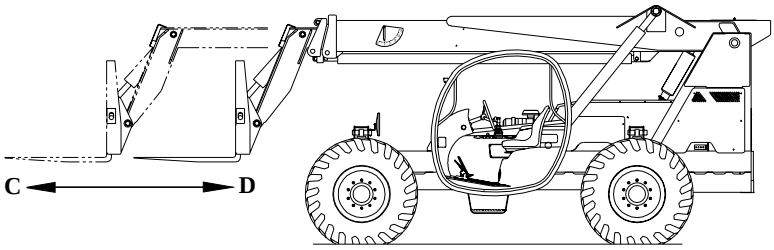

E - Boom Down and Out

F - Boom Up and In

G - Boom Up and Out

H - Boom Down and In

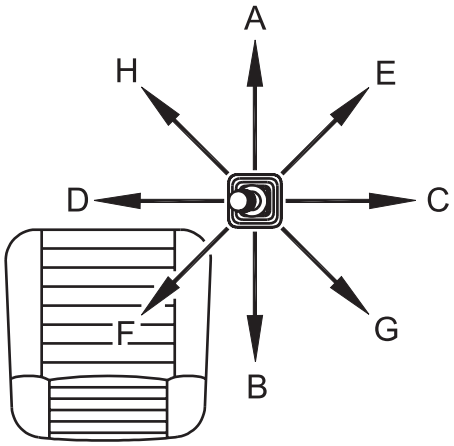

Downloaded from www.Manualslib.com manuals search engine

https://truckmanualshub.com/

CONTROLS AND INSTRUMENTS

JOYSTICK CONTROL FUNCTIONS (BUTTON PUSHED)

A - Tilt Down

B - Tilt Back

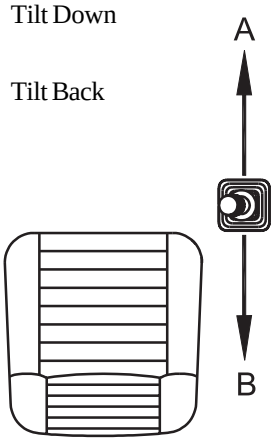

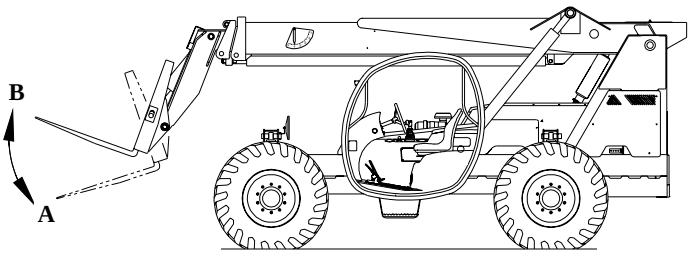

Downloaded from www.Manualslib.com manuals search engine

https://truckmanualshub.com/

CONTROLS AND INSTRUMENTS

SERVICE BRAKES

The brake pedal is the operator's control for the service brakes. Pushing the service brake pedal **(A)** activates the service brakes for all four wheels.

The brakes should be applied during normal operation to stop machine movement.

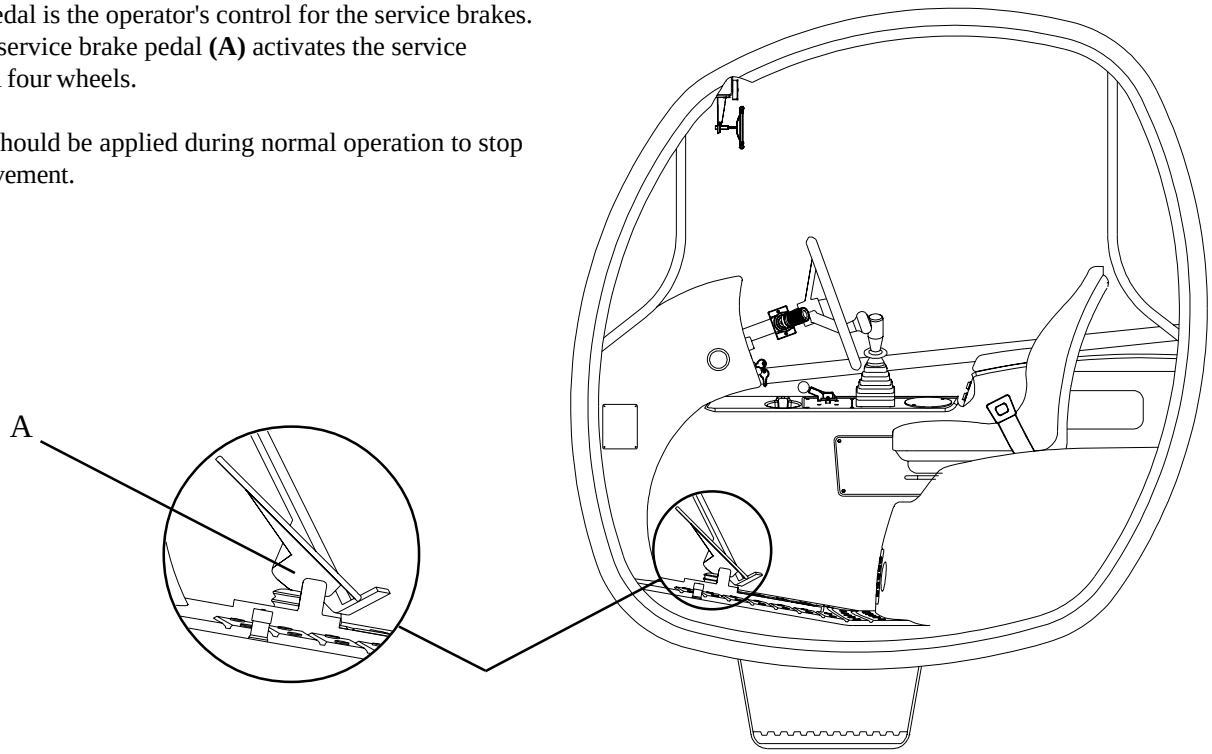

LOW SERVICE BRAKE PRESSURE LIGHT

WARNING

Insufficient hydraulic pressure to the service brakes may result in increased stopping distances causing possible injury or death and/or damage to the machine or property.

The illumination of the "LOW BRAKE PRESSURE" light (B) when the machine is running indicates this potentially hazardous condition. Should this condition ever exist, discontinue use of the machine immediately. Contact a qualified service technician to resolve this problem.

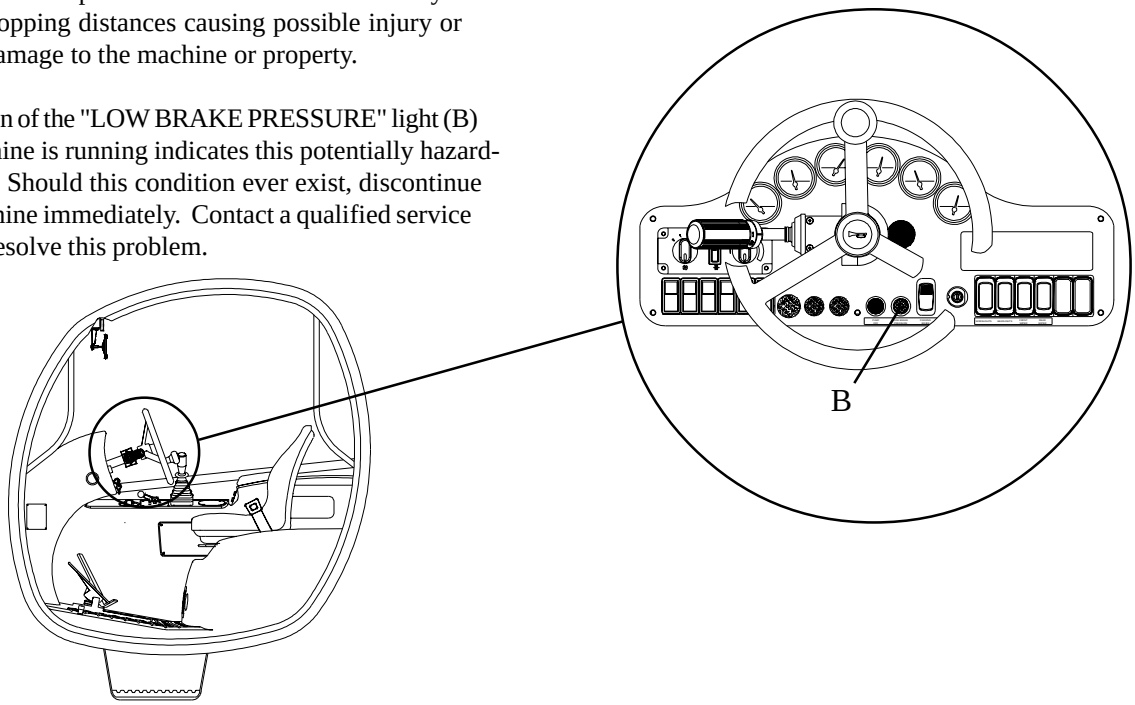

Downloaded from www.Manualslib.com manuals search engine

https://truckmanualshub.com/

CONTROLS AND INSTRUMENTS

PARKING BRAKE

WARNING

Failure to set the parking brake before leaving the machine may result in unintended machine movement and possible injury or death and/or damage to the machine or property.

The parking brake should be engaged anytime the operator gets off the machine. To engage the parking brake, toggle the parking brake switch (C) forward. The red light in the upper part of the parking brake switch should illuminate.

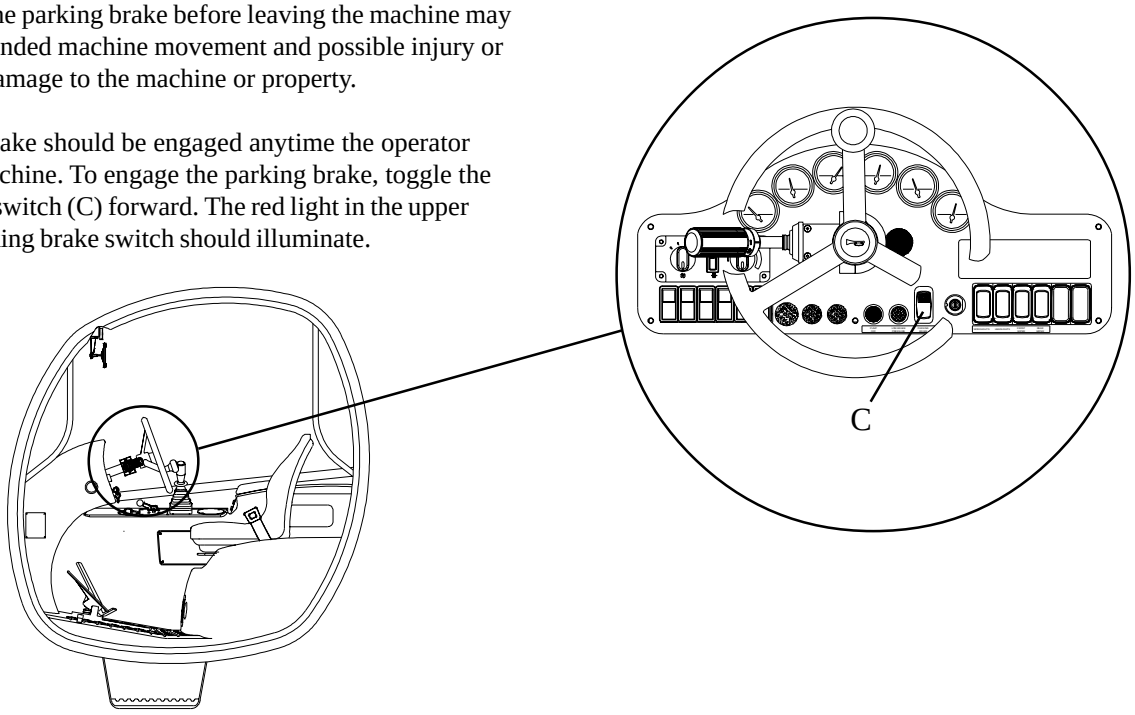

Downloaded from www.Manualslib.com manuals search engine

https://truckmanualshub.com/

CONTROLS AND INSTRUMENTS

FRAME SWAY CONTROL

⚠ WARNING

Always ensure that the machine level indicator (B) is at zero (0) degrees before raising the boom. Raising the boom with an unlevel machine may cause the machine to overturn, resulting in injury or death.

⚠ WARNING

Use the frame sway control to level the machine only when the boom angle indicator is at 0 degrees or less. Using the frame sway control when the angle indicator is more than 0 degrees may cause the machine to overturn, resulting in injury or death.

The frame sway control (A) is located on the forward side of the right arm rest. The frame sway control is used in conjunction with the machine level indicator (B) located in the center of the cross support that the interior rear view mirror is mounted on. The sway control switch is either toggled to the left or right depending on the particular requirement.

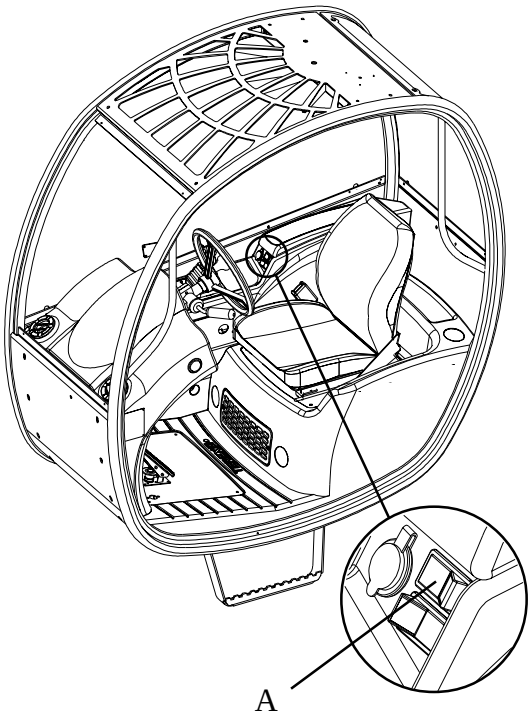

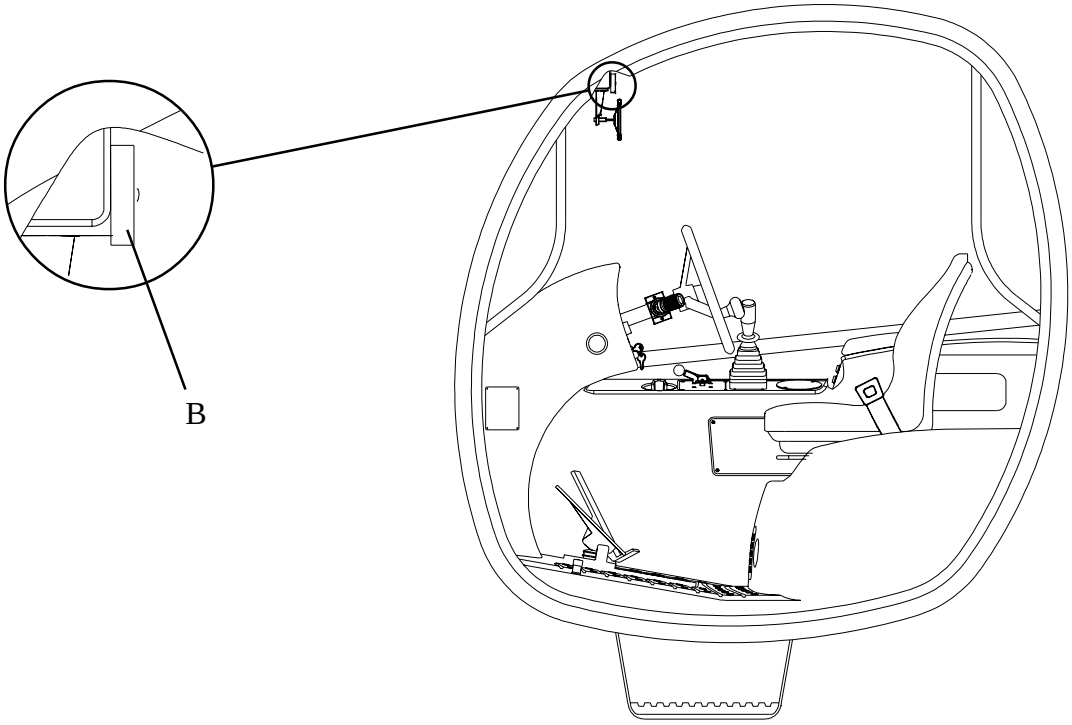

Downloaded from www.Manualslib.com manuals search engine

https://truckmanualshub.com/

CONTROLS AND INSTRUMENTS

GAUGES

The following gauges are used to monitor the machine:

1 - Fuel Level

2 - Water Temperature, Engine

3 - Oil Pressure, Engine

4 - Oil Temperature, Powershift Transmission

5 - Oil Pressure, Powershift Transmission

6 - Voltmeter

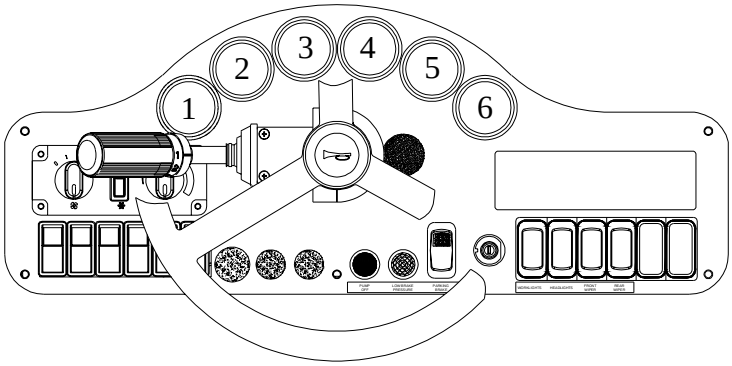

HYDRAULIC PUMP DESTROKE BUTTON

DANGER

Depressing the pump destroke button while operating the machine will cause an immediate loss of hydraulic power, possibly creating a very dangerous situation. Hydraulic functions that will be affected are: **FORK TILT, LIFT, BOOM EXTEND** and **RETRACT, PARKING BRAKE and SWAY**. None of these functions will operate as long as the button is depressed. The service brakes will continue to function if the accumulator backup has a sufficient gas charge.

The pump destroke button (C) is the black push button switch located on the dash panel.

For example, when starting the machine for the first time on a 30 degree F. day, depress the pump destroke button while starting the engine. Continue to depress the button for 15 to 20 seconds after the engine starts. Once the engine is running smoothly, release the button and the hydraulic pump will engage. Depressing the pump destroke button will not be required for all other starts of the day, unless the engine has been allowed to cool completely.

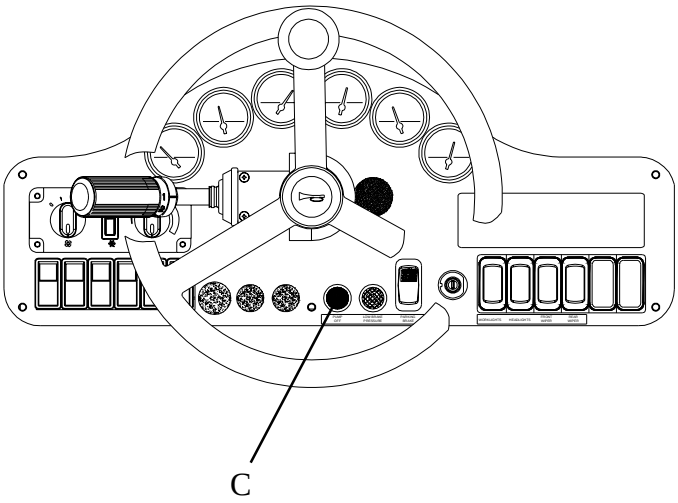

Downloaded from www.Manualslib.com manuals search engine

https://truckmanualshub.com/

CONTROLS AND INSTRUMENTS

STEERING

In addition to the steering wheel, the machine has another steering control, the steering selector switch.

The steering selector switch (A) is a three-position switch. The three positions are: 4-wheel, 2-wheel , and oblique. Switch positions are selected and function as follows:

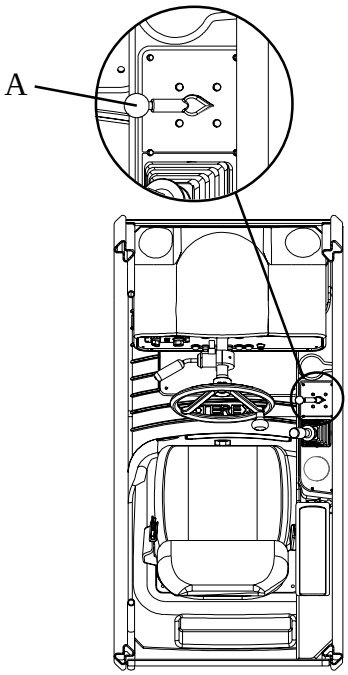

4-WHEEL	*Handle rotated forward*
2-WHEEL	*Handle directly centered*
OBLIQUE (CRAB)	*Handle rotated rearward*

⚠ CAUTION

Before changing steering selections, make sure all four wheels are in line. Failure to align the wheels to the proper settings before changing steering positions may cause haphazard steering. This may result in injury to personnel and/or damage to the machine or property.

TRANSMISSION

The transmission control (B) has one lever that controls both directional and speed requirements. It is located on the left side of the steering column.

To shift into **Forward** gear gently pull the lever toward you and move the lever upward.

To shift into **Neutral** move the lever to the center position.

To shift into **Reverse** gear gently pull the lever toward you and move the lever downward.

To shift into a lower speed rotate the lever clockwise.

To shift into a higher speed rotate the lever counter-clockwise.

When shifting the transmission from forward to reverse while the machine is in motion the transmission control (B) **must** be in 1st or 2nd gear **only**.

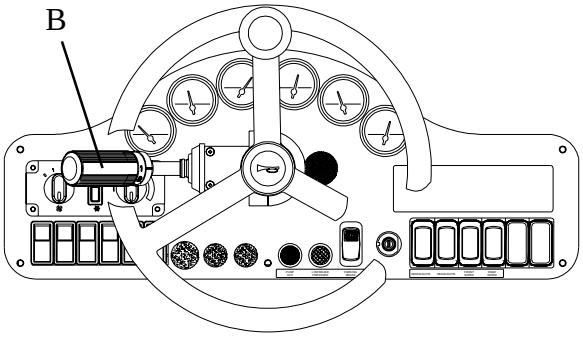

Forward / 1st	*Low speed/High torque*
Forward / 2nd	*Medium speed/Medium torque*
Forward / 3rd	*High speed/Low torque*

Downloaded from www.Manualslib.com manuals search engine

https://truckmanualshub.com/

CONTROLS AND INSTRUMENTS

FRONT AXLE DIFFERENTIAL LOCK

The front axle differential lock switch (C) is located near the operator's left foot. It is a standard feature on all GTH-842 & GTH-844 models. The purpose for this device is to lock the front axle differential to gain added traction under certain conditions.

The front axle differential lock switch must be depressed and held in order to activate the axle differential lock. Releasing the switch disengages the axle differential lock.

Use this differential lock when you are unable to drive through certain types of terrain such as sand, mud, snow, etc.

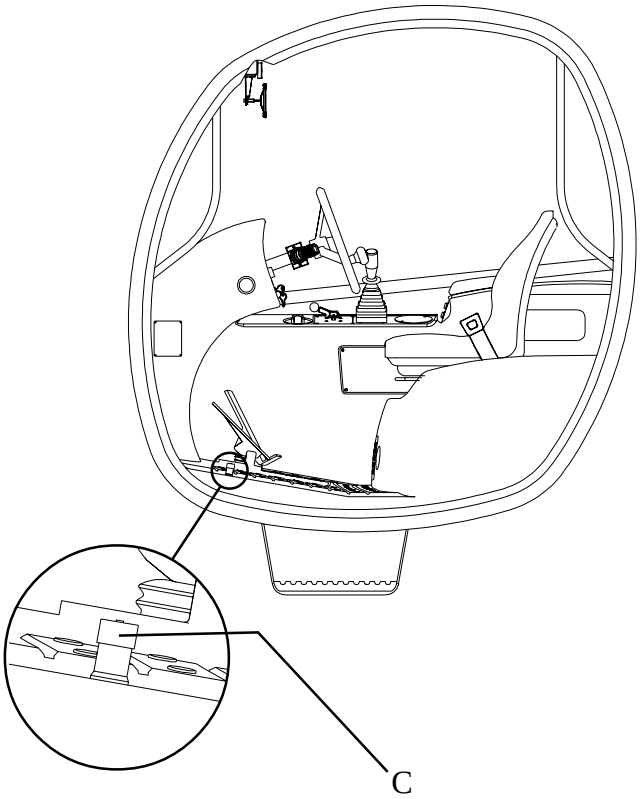

⚠ WARNING

Always bring the front tires to a complete stop before engaging the front axle differential lock.

Failure to stop the front tires before engaging the front axle differential lock may result in damage to the front axle.

Never steer the front tires while using the front axle differential lock.

Steering while the front axle differential lock is engaged may result in damage to the front axle.

Downloaded from www.Manualslib.com manuals search engine

https://truckmanualshub.com/

NOTES

Downloaded from www.Manualslib.com manuals search engine

https://truckmanualshub.com/

SECTION 4

OPERATION

Downloaded from www.Manualslib.com manuals search engine

https://truckmanualshub.com/

TABLE OF CONTENTS

SECTION 4 - OPERATION

Operation And Safety Guidelines	4-3
Before Starting The Engine	4-4
Starting The Engine	4-5
Before Operating The Forklift	4-7
Transporting A Load	4-11
Placing A Load	4-13

Downloaded from www.Manualslib.com manuals search engine

https://truckmanualshub.com/

OPERATION

OPERATION AND SAFETY GUIDELINES

⚠ WARNING

Your safety and the safety of those around you depends upon you using care and judgement in the operation of this equipment. Know the positions and functions of all controls before attempting to operate this machine. All equipment has limitations. Understand the speed, braking, steering, stability, and load chart characteristics of this machine before operating. Read the Operator's Manual and ask questions of your supervisor until you know the machine's limitations. It is very important to read, fully understand, and follow these operation and safety guidelines.

1. **DO NOT** operate this machine while people are under or near an elevated boom whether the boom is loaded or unloaded. Falling objects from the forks or attachment may cause serious injury or death.

2. **ALWAYS** remain completely within the cab enclosure while operating this machine. Falling debris can cause serious personal injury or death.

3. **NEVER** extend a load beyond the load chart band. Machine turn over, component damage, injury or death could occur.

4. **ABSOLUTELY NO RIDERS SHOULD BE ALLOWED ON THIS MACHINE OR ATTACHMENTS.**

5. **NEVER** lower a maximum load before retracting it. Machine turn over, component damage, injury or death could occur.

6. **INSPECT** and clear the working area of any obstructions (rocks, fence, wire, etc.) that could cause machine damage. If obstructions cannot be cleared, mark the obstructions with a stake or other marker that will be clearly visible to the operator.

7. **DO NOT** check the engine coolant level if the engine has recently been run. Injury could occur from escaping hot pressurized coolant.

8. **ALWAYS** wear the seat belt when operating this machine.

9. **ALWAYS** inspect the machine daily. Check for leaks, worn hoses, loose belts, or anything out of the ordinary. Repair and/or replace any worn, damaged or leaking parts immediately. Failure to do so can cause injury or death.

10. **CHECK** to be sure that all guards and screens are secure and in their proper place.

11. **CHECK** to be sure that all safety devices such as parking brake, service brake, level gauge, neutral start safety switch, back-up alarm, and horn are functioning properly. Always make sure mirror is adjusted properly.

12. **DO NOT** travel on terrain or in dangerous areas that could cause the machine to tip over.

13. **DO NOT** attempt to start the engine by towing or pushing. Damage to the powershift transmission could result.

14. **CARRY A LOAD** so that you have maximum machine stability and visibility is not obstructed.

15. **ALWAYS** level the machine as indicated on the machine level indicator before raising boom. Raising the boom with an unlevel machine may cause the machine to overturn causing injury or death.

16. **USE** the frame sway control to level the machine only when the boom position is horizontal or lower. Using the frame sway control when the boom is higher than a horizontal position may cause the machine to overturn causing injury or death.

17. **DO NOT** depress the pump destroke button while operating the machine. This button should be used **only** during cold start ups. Depressing the button while operating the machine will cause an immediate loss of hydraulic power that will affect fork tilt, lift, boom extend and retract, sway and all other hydraulic functions. Brakes will continue to function if the accumulator backup has a sufficient gas charge.

Downloaded from www.Manualslib.com manuals search engine

https://truckmanualshub.com/

OPERATION

BEFORE STARTING THE ENGINE

WARNING

Before starting the engine, be sure that all daily maintenance items have been performed. See Maintenance section.

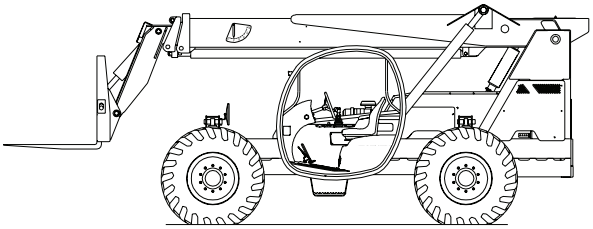

Walk around the machine and check for any parts that are missing, worn, damaged, or leaking. Repair and/or replace damaged parts.

Downloaded from www.Manualslib.com manuals search engine

https://truckmanualshub.com/

OPERATION

STARTING THE ENGINE

⚠ DANGER

Any problems discovered in the steps prior to "BEFORE STARTING THE ENGINE" should be corrected before the machine is started.

⚠ DANGER

NEVER attempt to start the machine without being seated in the operator's compartment, the parking brake switch (B) toggled forward in the on position and the transmission control (C) in the neutral position. Attempting to start the machine from outside the operator's compartment may result in property damage, serious injury or death.

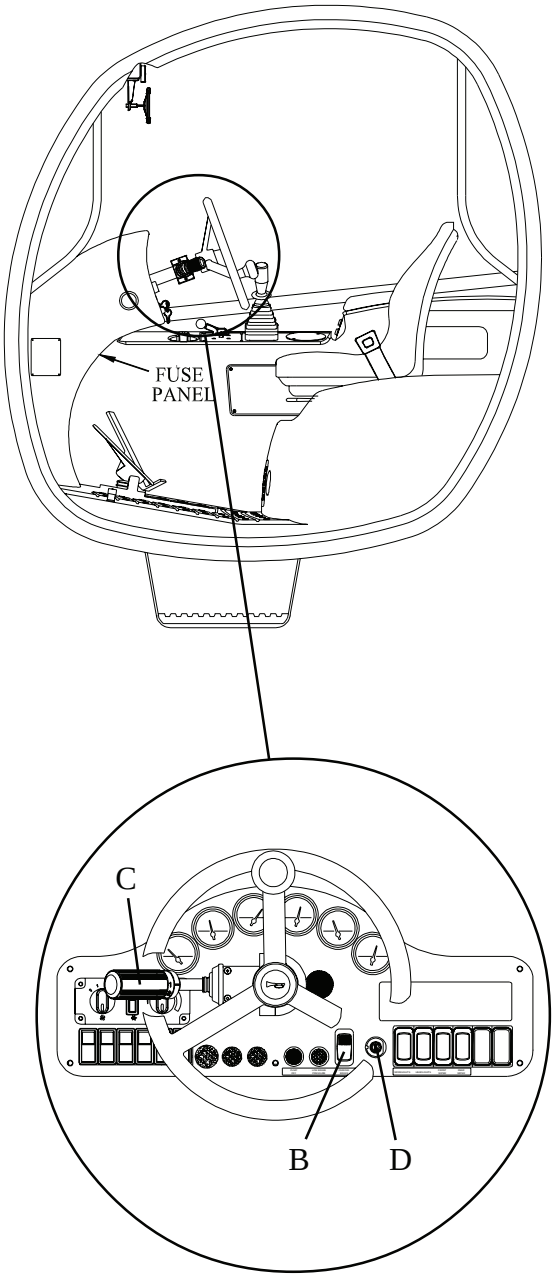

⚠ DANGER

If the machine should start with the transmission control lever (C) in gear, stop operation at once or property damage, serious injury or death may occur. Have a qualified service technician repair the machine.

Insert the ignition key in the ignition switch (D). Rotate the key clockwise until the engine starts. Release the key when the engine starts.

Downloaded from www.Manualslib.com manuals search engine

https://truckmanualshub.com/

OPERATION

STARTING THE ENGINE

CAUTION

If the engine fails to start within 30 seconds release the key, wait at least 2 minutes to allow the starter motor to cool before trying again. If the engine fails to start after four attempts, trouble shoot and correct the problem. DO NOT turn the key if the engine is running. This may cause damage to the starter motor.

CAUTION

Attempting to start the engine by towing or pushing the machine will result in damage to the powershift transmission and will not start the engine! It also is an unsafe practice that could cause personal injury.

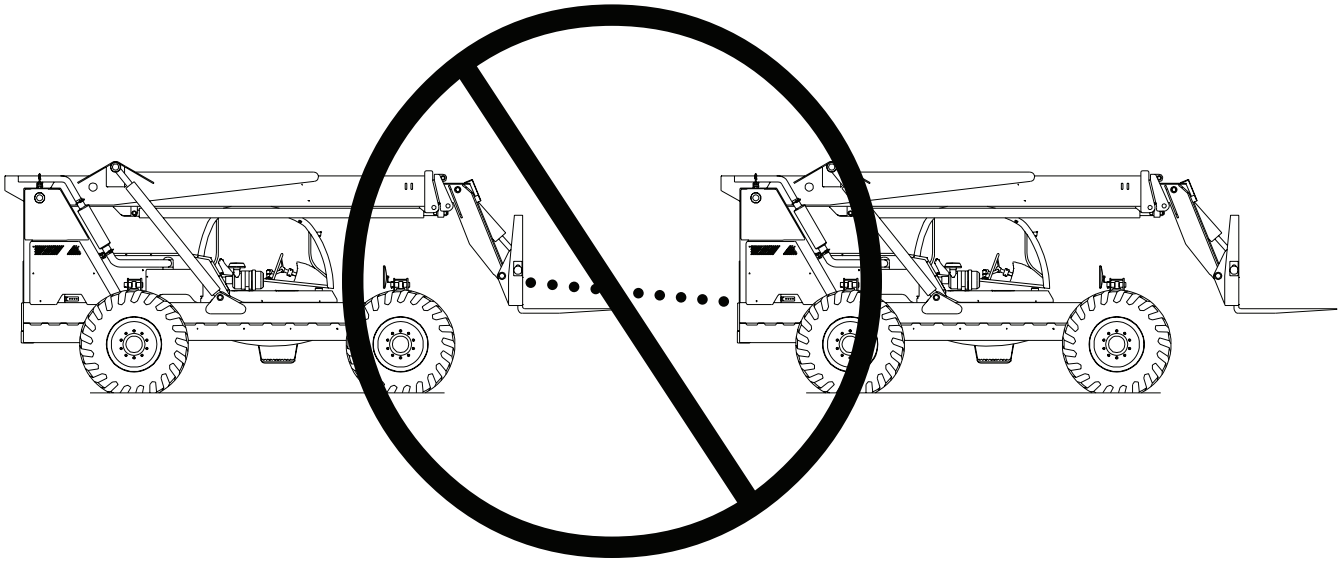

Downloaded from www.Manualslib.com manuals search engine

https://truckmanualshub.com/

OPERATION

BEFORE OPERATING THE FORKLIFT

⚠ CAUTION

If any gauge reading does not fall within the set tolerances the machine must be repaired before operation.

Check the dash mounted gauges for logical readings.

(1)	**Fuel Level**	**1/2 to Full**
(2)	**Engine Water Temperature**	**180°F to 200°F**
(3)	**Engine Oil Pressure**	**40 to 80 PSI**
(4)	**Transmission Oil Temperature**	**180°F to 200°F**
(5)	**Transmission Oil Pressure**	**240 to 280 PSI**
(6)	**Voltmeter**	**12 to 14 Volts**

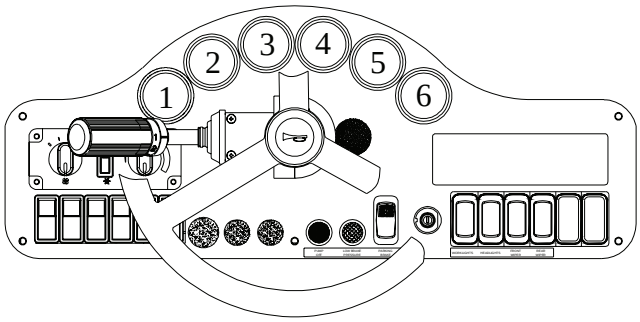

Operate the joystick controller momentarily in all directions.

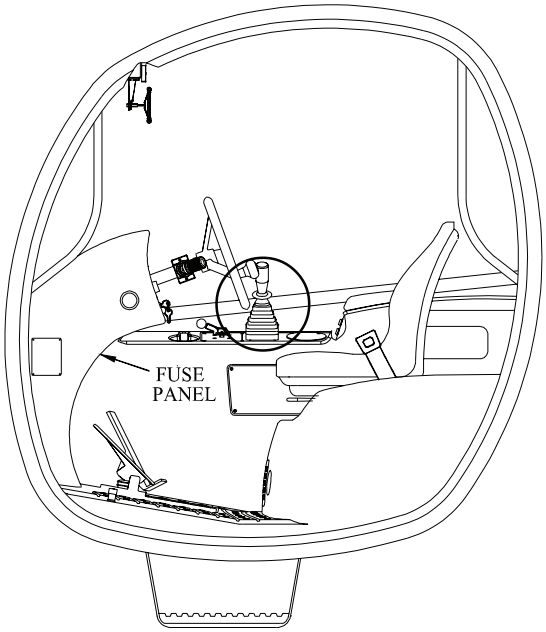

STANDARD JOYSTICK FUNCTIONS

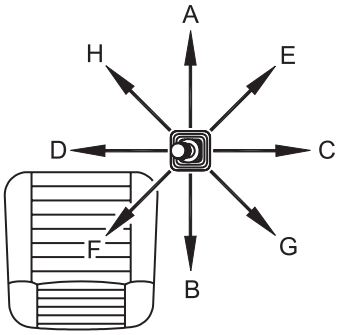

A - *Boom Down*
B - *Boom Up*
C - *Boom Out*
D - *Boom In*
E - *Boom Down and Out*
F - *Boom Up and In*
G - *Boom Up and Out*
H - *Boom Down and In*

BUTTON DEPRESSED FUNCTIONS

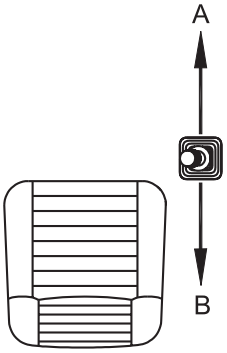

A - *Tilt Forward*

B - *Tilt Back*

Downloaded from www.Manualslib.com manuals search engine

https://truckmanualshub.com/

OPERATION

BEFORE OPERATING THE FORKLIFT

Operate the frame sway control (A) momentarily right and left.

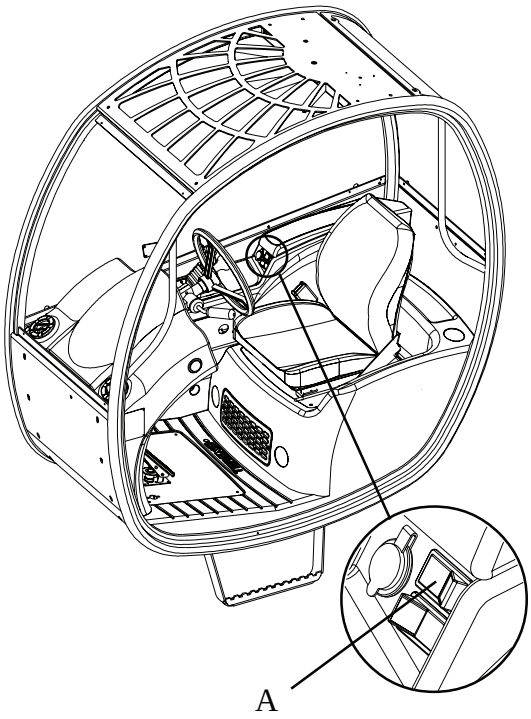

Check the steering operation by turning the steering wheel (B) approximately 1/4 turn in each direction. If the front and rear tires are not aligned properly, straighten the rear wheels with the steering selector valve (C) in the "4 wheel" position. Move the steering selector valve to the "2 wheel" position. Bring the front tires into alignment with the rear tires. Place the steering selector valve back into the "4 wheel" position.

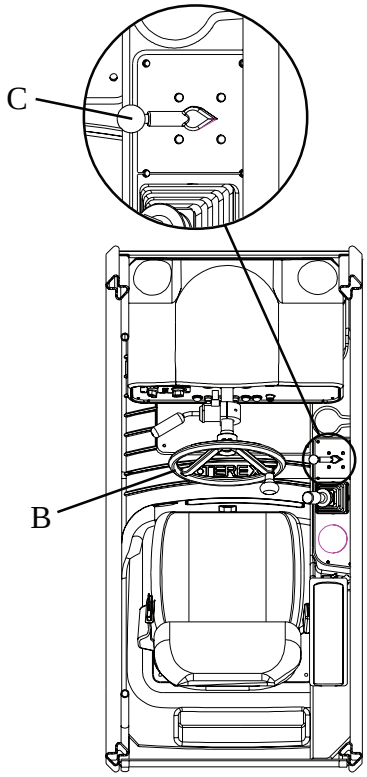

Downloaded from www.Manualslib.com manuals search engine

https://truckmanualshub.com/

OPERATION

BEFORE OPERATING THE FORKLIFT

⚠ DANGER

Any problems with the service brakes or the parking brake found while conducting the daily inspection should be corrected immediately. Failure to do so could result in injury or death.

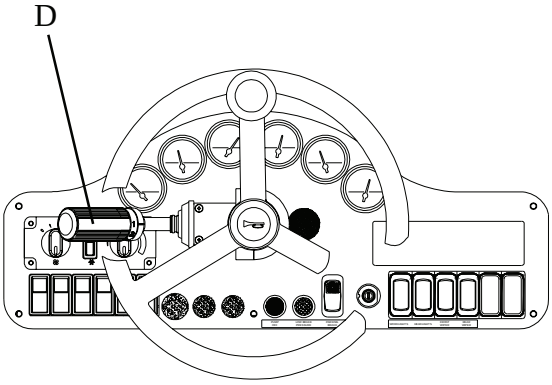

Activate the transmission using the transmission control lever (D). As soon as the machine starts to move, apply the service brake pedal. The machine should stop immediately.

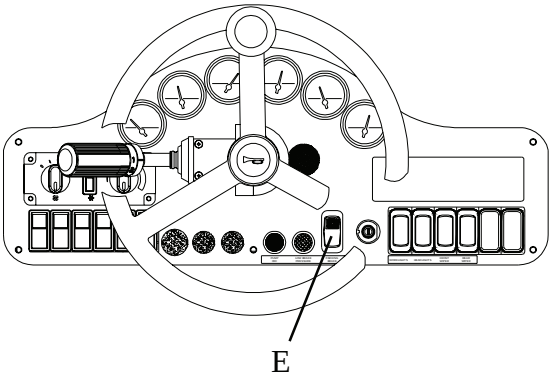

Apply the parking brake by toggling the parking brake switch (E) forward. The red light in the upper part of the parking brake switch should illuminate. The machine should not be able to be driven with the parking brake in the forward / on position. Release the parking brake by toggling the parking brake switch rearward.

Downloaded from www.Manualslib.com manuals search engine

https://truckmanualshub.com/

OPERATION

BEFORE OPERATING THE FORKLIFT

⚠ DANGER

Never operate the machine with a faulty backup alarm. Doing so may result in serious injury or death.

Place the transmission control lever (A) in reverse. The backup alarm should sound. If it does not sound, have the backup alarm repaired immediately.

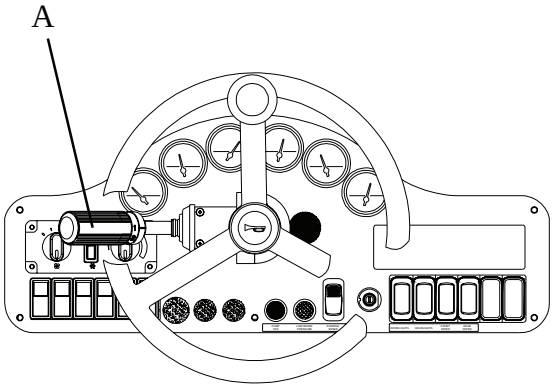

Check and adjust both the interior rear view mirror (B) and the exterior right hand mirror (C) if required.

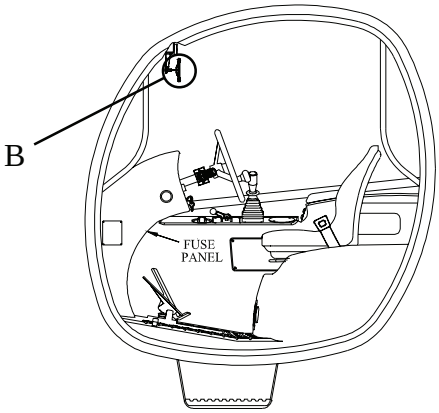

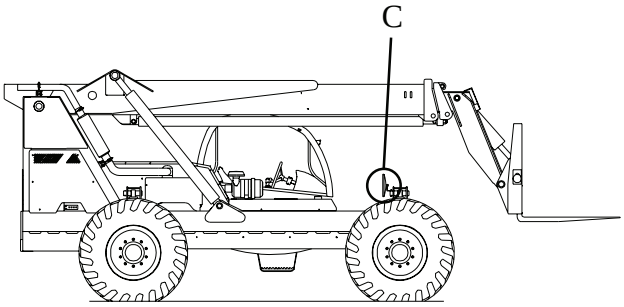

Downloaded from www.Manualslib.com manuals search engine

https://truckmanualshub.com/

OPERATION

TRANSPORTING A LOAD

WARNING

Transporting a load with the boom extended and the boom angle indicator arrow (D) reading more than 0 degrees could cause a roll over hazard.

WARNING

At no time should any load be suspended from the forks by use of chains, ropes, straps etc. If a load must be suspended the use of a truss (jib) boom is mandatory. Proper rigging procedures should always be followed.

The forks should always be tilted back slightly during transportation to ensure stability of the load.

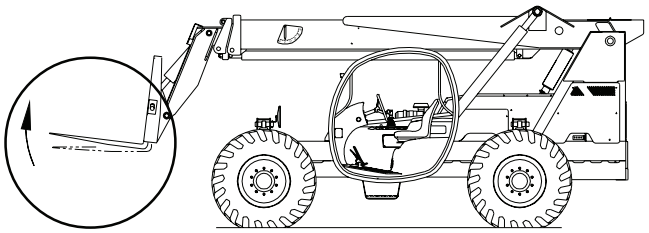

The load should be kept as low to the ground as possible while traveling. Always move a loaded machine with the boom angle indicator (D) at 0 degrees or less.

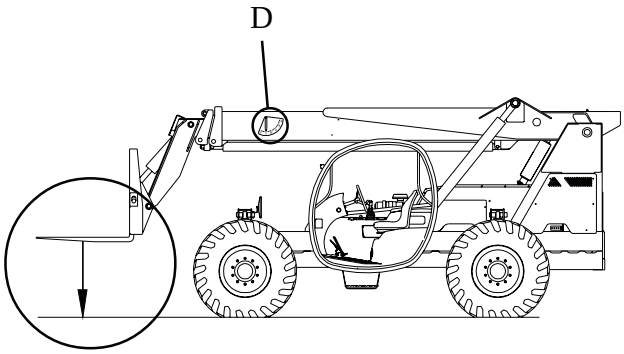

Downloaded from www.Manualslib.com manuals search engine

https://truckmanualshub.com/

OPERATION

TRANSPORTING A LOAD

WARNING

Slower speeds should be used whenever transporting a load. Always bring the machine to a complete stop before reversing the transmission control lever (A). Failure to do so can result in damage to the load, the machine and/or bystanders.

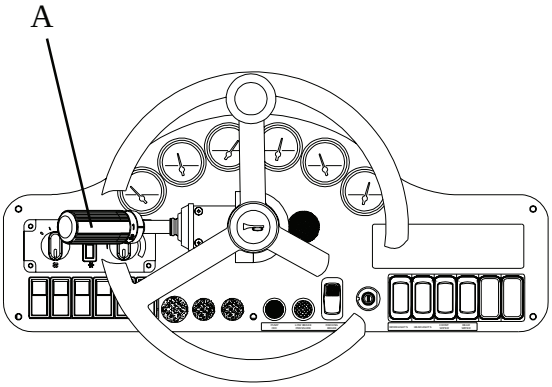

Always keep the boom retracted to ensure greater stability.

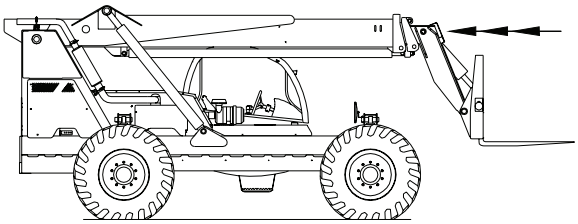

Always place the load in the center and completely against the back of the fork frame. By doing so greater stability will result.

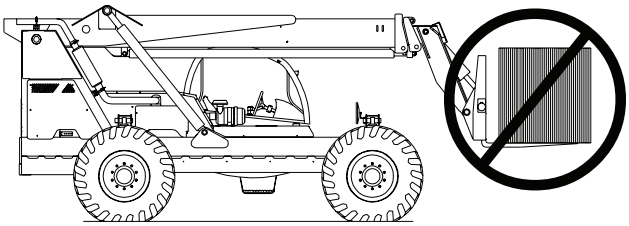

IMPORTANT: Never attempt to use the forks and/or attachments for prying wedged or frozen loads free. Damage to the load, pallet and/or machine could result.

Downloaded from www.Manualslib.com manuals search engine

https://truckmanualshub.com/

OPERATION

PLACING A LOAD

WARNING

Do not sway the machine with the boom angle indicator arrow (B) at more than 0 degrees. By doing so you could cause a roll over hazard which may result in injury or death.

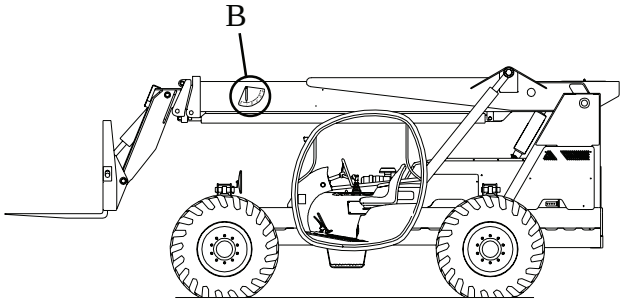

DANGER

Always apply the parking brake by toggling the parking brake switch (C) forward before lifting and/or placing a load. Failure to do so could allow the machine to roll over which may result in injury or death.

CAUTION

Always bring the machine to a complete stop before applying the parking brake (C). Failure to do so will damage the parking brake disc packs, which may void the axle warranty.

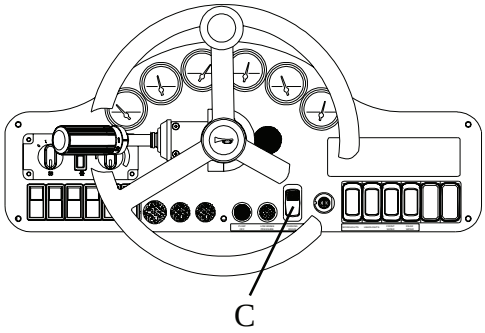

Before placing a load, the frame should be leveled. This can be done by the use of the switch labeled sway control (D) located on the forward side of the right arm rest. The frame sway control is used in conjunction with the machine level indicator (E) located in the center of the cross support that the interior rear view mirror is mounted on. The sway control switch is either toggled left or right depending on the particular requirement. Adjust the sway control (D) until the indicator ball on the level gauge (E) is on the 0 degree mark.

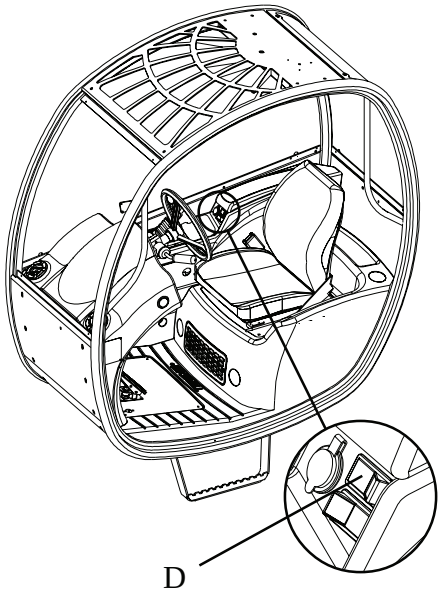

WARNING

Always ensure that the machine level indicator (E) is at zero (0) degrees before raising the boom. Raising the boom with an unlevel machine may cause the machine to overturn, resulting in injury or death.

WARNING

Use the frame sway control to level the machine only when the boom angle indicator (B) is at 0 degrees or less. Using the frame sway control when the angle indicator is more than 0 degrees may cause the machine to overturn, resulting in injury or death.

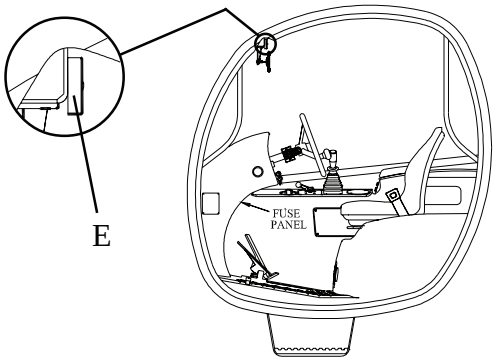

Downloaded from www.Manualslib.com manuals search engine

https://truckmanualshub.com/

OPERATION

PLACING A LOAD

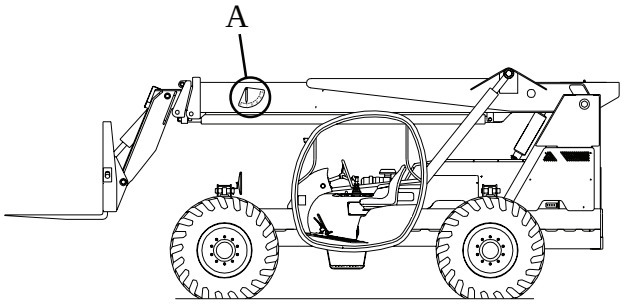

DANGER

Traveling with a reading of more than 0 degress on the boom angle indicator arrow (A) may cause a rollover hazard.

Gradually move the 4-way controller towards the letter (B) to lift the load vertically. Hold the controller back until the required height has been achieved.

Gradually move the 4-way controller towards the letter (E) to bring the load DOWN and OUT into final position. Lower the load until the weight is completely off the forks.

Gradually move the 4-way controller towards the letter (F) to bring the boom UP and IN. This will bring the forks out of the load. Once the forks are clear of the load the boom can be lowered.

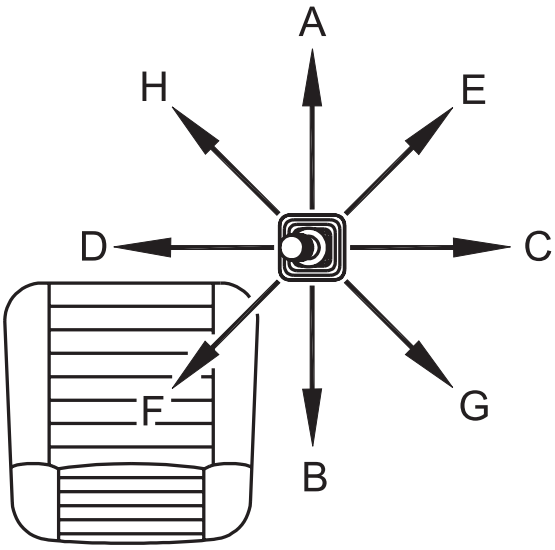

Downloaded from www.Manualslib.com manuals search engine

https://truckmanualshub.com/

PLACING A LOAD

GTH-644, GTH-842, GTH-844

When placing a load with the Model GTH-644, GTH-842, or the GTH-844 the rear axle stabilizing cylinders need to be taken into consideration. When the boom reaches an angle of **60 DEGREES**, all frame leveling and transmission functions are disabled and the rear axle stabilizing cylinders become locked. This **DOES NOT** affect any boom or fork functions. To unlock the rear axle stabilizing cylinders and enable the transmission functions, lower the boom to a position less than 60 degrees.

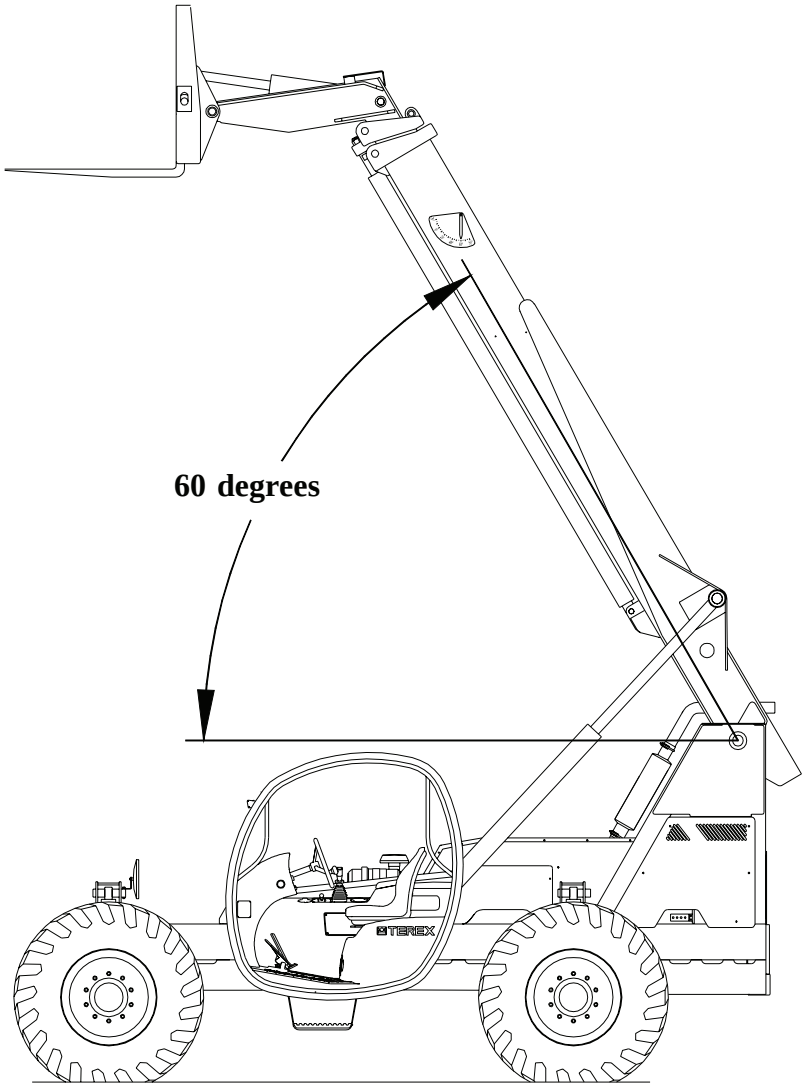

Downloaded from www.Manualslib.com manuals search engine

https://truckmanualshub.com/

NOTES

Downloaded from www.Manualslib.com manuals search engine

https://truckmanualshub.com/

SECTION 5

MAINTENANCE PROCEDURES

Downloaded from www.Manualslib.com manuals search engine

https://truckmanualshub.com/

TABLE OF CONTENTS

SECTION 5 - MAINTENANCE PROCEDURES

General Safety Practices	5-3
Daily Maintenance	5-5

Downloaded from www.Manualslib.com manuals search engine

https://truckmanualshub.com/

MAINTENANCE PROCEDURES

GENERAL SAFETY PRACTICES

BEFORE SERVICING

Read the entire Maintenance Procedure Section.

Familiarize yourself with all the safety precautions listed in Sections 1 & 2.

Pay close attention to all the safety alert symbols.

Be sure you understand the procedures detailed in this section.

Wear personal protective equipment.

Remove rings and jewelry.

Move the machine to a safe level work place.

Lower the boom and support all raised equipment.

Shut down the machine.

Remove the key from the ignition.

Be careful not to spill fuels and lubricants.

Do not fill or refuel the fuel tank while the engine is running or hot. Doing so could cause a fire and/or an explosion.

Do not smoke while refueling or working with fuel to avoid a fire and/or explosion.

IMPORTANT! Always clean up spilled fuel and/or lubricants to avoid polluting the earth.

Downloaded from www.Manualslib.com manuals search engine

https://truckmanualshub.com/

MAINTENANCE PROCEDURES

GENERAL SAFETY PRACTICES

HYDRAULIC SAFETY

WARNING

Hot hydraulic oil can cause severe burns. **DO NOT** work on the hydraulic system if the oil system temperature exceeds 120 degrees F. (49 degrees C.)

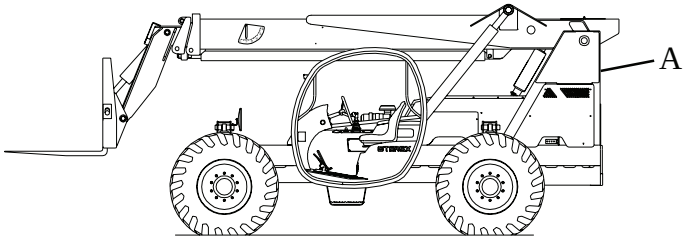

Before **ANYONE** works on the hydraulic system:

1. Lower the boom to the horizontal position.
2. Support the boom to avoid unintentional lowering.
3. Shutdown the engine.
4. Remove the key from the ignition.
5. Clean the area around the oil reservoir cap (A).

FLUID UNDER PRESSURE

WARNING

Escaping fluid under pressure can penetrate the skin and can cause serious personal injury.

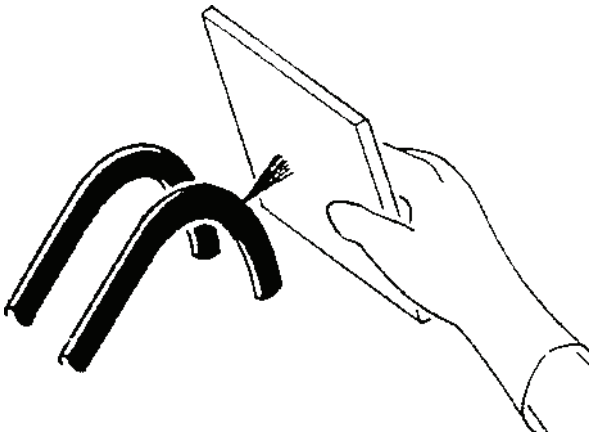

Use a piece of cardboard or paper to search for leaks. **DO NOT** use hands! Before disconnecting hydraulic lines, be sure to relieve all line pressure. Before applying pressure to the system, be sure that all connections are tight. **DO NOT** apply pressure to a damaged line, hose or fitting.

If injured by escaping fluid, see a doctor at once. Proper medical treatment must be administered immediately. A serious infection or reaction can result without proper medical treatment.

WELDING PRECAUTIONS

WARNING

DO NOT weld on any structural member. Any unauthorized welding can cause structural failure or possible personal injury. All unauthorized welding or repair procedures will void the machine warranty.

Before performing any authorized welding, be sure to disconnect the positive lead from the battery. Properly attach the ground cable of the welder to the frame member that is being welded. Failure to do so can cause electrical system damage.

Downloaded from www.Manualslib.com manuals search engine

https://truckmanualshub.com/

MAINTENANCE PROCEDURES

DAILY MAINTENANCE

SCHEDULED MAINTENANCE

Maintenace performed quarterly, annually and every two years must be completed by a person trained and qualified to perform maintenance on this machine according to the procedures found in the service manual for this machine.
Machines that have been out of service for more than three months must receive the quarterly inspection before they are put back into service.

PERFORM ENGINE MAINTENANCE

Refer to engine operator's manual.

Check engine oil.

Check coolant level.

Check engine fan.

Open water separator.

PERFORM TRANSMISSION MAINTENANCE

Refer to the transmission operator's manual.

Check transmission oil level.

Downloaded from www.Manualslib.com manuals search engine

https://truckmanualshub.com/

MAINTENANCE PROCEDURES

DAILY MAINTENANCE

CHECK HYDRAULIC OIL LEVEL

Location: Sight glass (B). Behind the rear panel.

To Check: Move the machine to level ground.

Level the frame.

Completely retract the boom.

Position the forks level.

Lower the boom to the ground.

Oil should be visible 1/2 way in sight glass (B).

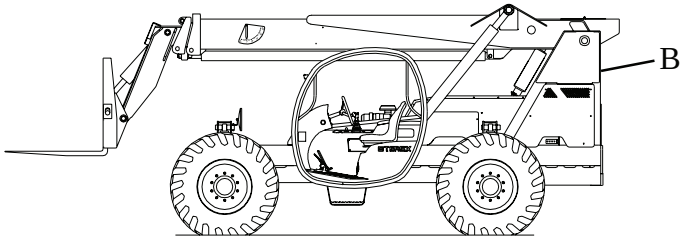

CHECK TIRE FOR PROPER INFLATION

Location: Wheel ends.

To Check: With the valve stem (C) positioned to the top of the tire, check the tire pressure with the tire cold and a properly functioning air pressure gauge.

Setting: 50 PSI.

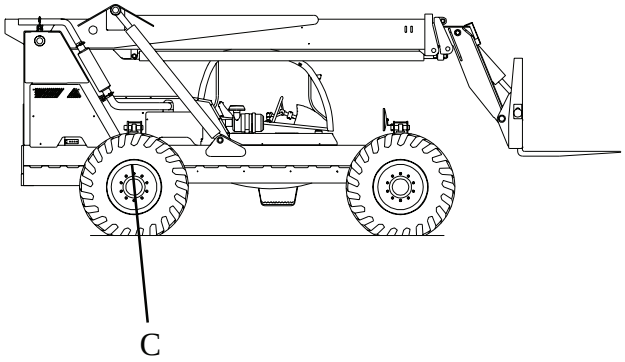

⚠ DANGER

All tires require a calcium chloride ballast or an optional foam fill to be operated safely. The loss of ballast can affect the machine's stability and cause a rollover hazard, resulting in damage, injury or death.

Downloaded from www.Manualslib.com manuals search engine

https://truckmanualshub.com/

SECTION 6

MATERIAL SAFETY DATA

Downloaded from www.Manualslib.com manuals search engine

https://truckmanualshub.com/

TABLE OF CONTENTS

SECTION 6 - MATERIAL SAFETY DATA

Material Safety Data Sheets	6-3
California Proposition 65 Warnings	6-4

Downloaded from www.Manualslib.com manuals search engine

https://truckmanualshub.com/

MATERIAL SAFETY DATA

MATERIAL SAFETY DATA SHEETS (MSDS)

The Federal Occupational, Safety and Health Administration (OSHA) Standard 29 ctr 1910.1200, and in some cases state and local Right-To-Know laws, may require specific MSDS be available to employees prior to operating this equipment. This may include information on substances contained in the equipment such as antifreeze, brake fluid, battery acid and hydraulic fluid.

Genie will provide, at no cost, Material Safety Data Sheets which are applicable to their product line. Simply request them from your local Genie dealer or contact us at:

Genie Industries
PO Box 97030
Redmond, WA 98073-9730

To ensure a prompt response, please be sure to include your return address and zip code, along with the machine model and serial number.

Downloaded from www.Manualslib.com manuals search engine

https://truckmanualshub.com/

MATERIAL SAFETY DATA

CALIFORNIA PROPOSITION 65 WARNINGS

The following warnings are required on all off road equipment operating in the State of California. If you are operating a Genie in the State of California and do not see the approved warning labels, please contact us for a replacement at no charge. Our address is:

Genie Industries
PO Box 97030
Redmond, WA 98073-9730

CALIFORNIA
Proposition 65 Warning

Diesel engine exhaust and some of its constituents are known to the State of California to cause cancer, birth defects, and other reproductive harm.

CALIFORNIA
Proposition 65 Warning

Battery posts, terminals, and related accessories contain lead and lead compounds, chemicals known to the State of California to cause cancer and reproductive harm.

Batteries also contain other chemicals known to the State of California to cause cancer.

Wash hands after handling.

Downloaded from www.Manualslib.com manuals search engine