https://truckmanualshub.com/ 1

Schäffer

3545 | 3550 | 4250

Low style loaders:
3550 SLT

COMPACT LOADERS

Optimised ergonomics and power

https://truckmanualshub.com/ 2

SCHÄFFER

For over 60 years, we have been developing loaders to meet individual requirements. Customer satisfaction has made us what we are today: one of the most capable and successful suppliers of farm loaders, wheel loaders and telescopic wheel loaders ever. Every day our employees create new, customised solutions.

Every Schäffer loader is the result of years of experience and innovative thinking. Our products set the standard in terms of the highest possible reliability and durability. You can rely on Schäffer for lower costs throughout the whole operating life, and for performance, safety and driving comfort for many years to come.

Schäffer loaders in action:
www.schaeffer.de/en/videos

THE SCHÄFFER COMPACT CLASS: OPTIMISED ERGONOMICS AND POWER

The Schäffer 3500/4200 compact series are ideal for use in hard to reach areas where power and ease of use must be combined with compact machine dimensions. Schäffer leads the way in this segment.

The compact machines are very sturdy and tried and tested for use even at extreme temperatures, be it -30° C in Iceland or 45° C in Australia. The reliability and power of Schäffer loaders is legendary. They can be used for a wide range of tasks in sectors such as agriculture, equestrianism, municipal services and warehousing. With Schäffer, you can move more in less time.

The compact class:

3545 33 kW (45 HP)

3550 37 kW (50 HP)

3550 SLT 37 kW (50 HP)

4250 37 kW (50 HP)

https://truckmanualshub.com/ 3

SCHÄFFER 3500 AND 4200 SERIES: 20 KM/H AS STANDARD AND QUALITY THROUGHOUT

The 3500 and 4200 series underline Schäffer's claim to build extremely dynamic and ergonomic loaders. The revs of the diesel engines are speed reduced, and a larger hydrostatic drive is used. This converts the power of the engines into even higher thrust forces via the original Schäffer axles.

All loaders in these series come equipped as standard with a high speed gear switchable under load up to 20 km/h. Hydraulic tool locking is also standard. Schäffer loaders uniquely combine agility, power, comfort and safety.

With the Schäffer headstock SWH, coupling of any attachment is a breeze. Hydraulic lock is standard. Genuine Schäffer attachments are also equipped with the double hook frame so that roll back and dump angle are easy to adjust. This pays dividends with materials such as grain, where a larger roll back angle is preferable, as well as other materials such as soil. Simple, flexible, ingenious engineering from Schäffer.

3550 SLT: THE POWER MACHINE FOR LOW PASSAGES

The SLT variant is a lower machine, with an overall height of just 2.02 m. The makes the 3550 SLT perfect for low passages or doorways, whilst the deep centre of gravity allows greater stability and bigger tipping loads. The unique combination of compact machine size, high manoeuvrability, excellent reach and lifting height makes the 3550 SLT a very versatile machine.

https://truckmanualshub.com/ 4

SCHÄFFER 3545 | 3550 4250 | 3550 SLT

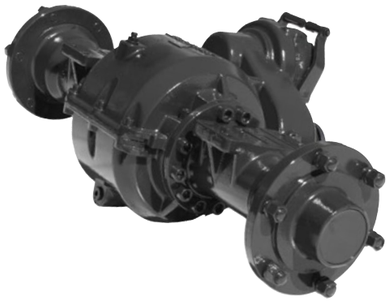

Schäffer axles for greater safety and stability

Original Schäffer axles are adjusted to each particular loader – that's the secret of their outstanding pushing power, as proved by independent tests. The force of the hydrostatic drive system is converted into high pushing forces. For this series, the permitted load bearing capacity is 7 t per axle – you'll be pushed to find better. The new HTF drive automatically delivers the highest thrust in high gear.

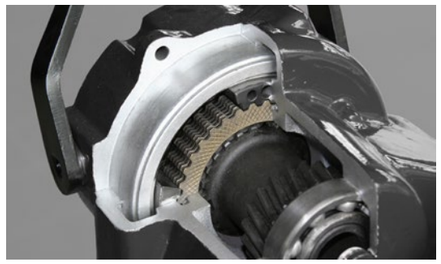

Schäffer 'Easy-Brake': the brake you can rely on

All Schäffer loaders with propshaft also have our 'Easy-Brake' system with multiple discs. They are in an oil bath which is completely sealed against moisture and dirt, which means outstanding performance with virtually no wear and maintenance.

The Schäffer difference

All articulated pendulum joints of the compact class are fully maintenance-free. That is why we offer you a warranty for this component of 3 years or 3000 operating hours.

HTF: MAXIMUM THRUST, EVEN IN HIGH GEAR

HTF, or 'High Traction Force', automatically regulates the thrust so the loader can supply the highest possible thrust even in a high gear. HTF uses a new axial piston-bent axis motor that regulates speed automatically depending on the traction. This is particularly useful in an uphill position as the driver does not have to switch to first gear.

HTF comes into its own when digging into aggregate material - if more thrust is required, the hydraulic motor adapts automatically, without the driver having to interfere manually. This means most of the work can be done in fast gear, increasing driving comfort and speeding up work. The Schäffer **3545, 3550, 3550 SLT** and **4250** are equipped and delivered with the HTF-drive as standard.

Benefits:

- Very high thrust forces
- No need to manually shift down a gear when going uphill
- Even at high speed the maximum thrust is always available, e.g. when driving in muck heaps
- Enhanced driving comfort, faster working

THE 3500/4200 SERIES OF SCHÄFFER: ADVANTAGES AT A GLANCE

https://truckmanualshub.com/ 6

SPT

ELECTRONICALLY REGULATED DRIVE OFFERING MORE COMFORT

Our new Kubota motor offers the highest possible torque in its class and is unique in the market of 37 kW / 50 HP loaders due to an electronically regulated drive – SPT or 'Schäffer Power Transmission'. The drive is adapted to the torque of the diesel engine, offering the driver a multitude of advantages: operating costs decrease as the diesel fuel consumption is reduced. Hill starts are a lot easier as the start-up assistant helps prevent the vehicle moving backwards.

The optional potentiometer acts as a cruise control. The loader keeps a constant speed automatically and independently from the motor speed – especially convenient when working with fodder dosing devices, straw distributors, mulchers or sweepers.

Additionally, there are several new safety functions, for example protection from overheating and motor over-revving protection, making working with the loader even safer and more reliable. SPT is standard on the **4250**.

Benefits:

- Higher efficiency, lower fuel consumption and reduced operating costs
- Extra safety functions including overheating and over rotation protection to make the loader safer and more reliable
- 'Start up assistant' to make hill starts easier
- Different parameters for different drive characteristics
- Optional potentiometer that works to maintain a constant speed regardless of the motor speed. This is particularly useful when working with feed dosing units, straw spreaders, mulchers or sweepers
- Greater agility and more driving fun!

https://truckmanualshub.com/ 7

PURE ERGONOMICS

ERGONOMICS AT ITS BEST

Driver comfort was our top priority when designing the cabin of the 4250. A range of features contribute to a very comfortable work environment, so the driver can feel fresh, even after long working days. All operating and control instruments are clearly laid out and user-friendly, and easily accessed from the comfortable seat with impressive legroom. The generous use of glass delivers perfect visibility for working and manoeuvring. The third control circuit is integrated in the joystick, with no need to change the handle to operate the additional control circuit.

Perfect view upwards with roller blind

STANDARD ON 4250 WITH CAB:

2x Dual Power working lamp front, 1x Single Power rear

Switch bar, electric plug

Multifunctional joystick

Bottle holder, battery switch

https://truckmanualshub.com/ 8

TECHNICAL DATA

	3545	3550	3550 SLT	4250
Engine	4 Cyl. Kubota Turbo 33 kW (45 HP)	4 Cyl. Kubota 37 kW (50 HP)	4 Cyl. Kubota 37 kW (50 HP)	4 Cyl. Kubota, 37 kW (50 HP), electronically regulated drive (SPT)
Traction hydraulics	hydrostatic-automotive, HTF (High Traction Force)			
Tyres	10.0/75 - 15.3 AS Option I 11.5/80 - 15.3 AS Option II 31 x 15.5 - 15 Option III 15.0/55 - 17	11.5/80 - 15.3 AS Option I 31 x 15.5 - 15 Option II 15.0/55 - 17 Option III 425/55 R17	11.5/80 - 15.3 AS Option I 31 x 15.5 - 15 Option II 15.0/55 - 17 Option III 425/55 R17	11.5/80 - 15.3 AS Option I 15.0/55 - 17 Option II 425/55 R17
Service braking system	Combined brake hydrostatic and multi-disc brake			
Parking brake	Multi-disc brake running in oil bath			
Working hydraulics Output/pressure	Delivery rate: from 42 l/min Operating pressure: 200 bar	Delivery rate: from 46 l/min Operating pressure: 200 bar	Delivery rate: from 46 l/min Operating pressure: 200 bar	Delivery rate: from 52 l/min Operating pressure: 200 bar
Steering	Fully hydraulic articulated-swivel steering			
Operating weight	2,650 kg 2,850 kg with cabine	2,800 kg 3,000 kg with cabine	2,800 kg	3,100 kg 3,300 kg with cabine
Lifting capacity	2,000 kg	2,000 kg	2,000 kg	2,300 kg
Tipping load, straight*1 pallet fork bucket	 1,523 - 1,648 kg 1,911 - 2,078 kg	 1,621 - 1,739 kg 2,002 - 2,191 kg	 1,621 - 1,739 kg 2,002 - 2,191 kg	 1,783 - 1,913 kg 2,010 - 2,201 kg
Axles	Original Schäffer axles, 6 wheel nut rim; Option: automatic limited-slip differential			
Speed	0 - 20 km/h	0 - 20 km/h in 2 gear switchable under load, Option: 0 –28 km/h	0 - 20 km/h in 2 gear switchable under load, Option: 0 –28 km/h	0 - 20 km/h in 2 gear switchable under load, Option: 0 –28 km/h
Electric system	Operating voltage: 12 V			
Fill quantities	Fuel: 48 l Hydraulic oil: 50 l	Fuel: 55 l Hydraulic oil: 50 l	Fuel: 55 l Hydraulic oil: 50 l	Fuel: 85 l Hydraulic oil: 60 l
Sound pressure level LpA	84 dB (A)	85 dB(A)	85 dB(A)	85 dB(A)
Sound power level guaranteed LwA equivalent LwA	 101 dB (A) 100 dB (A)	 101 db(A) 100 db(A)	 101 db(A) 100 db(A)	 101 db(A) 100 db(A)
Hand/arm vibration *2	<2.5 m/s²	< 2.5 m/s²	< 2.5 m/s²	< 2.5 m/s²
Total body vibration *2	<0.5 m/s²	< 0.5 m/s²	< 0.5 m/s²	< 0.5 m/s²
HTF	X	X	X	X
SPT	-	-	-	X

*1 acc. to ISO 8313 *2 acc. to ISO 8041 X = as standard

Tyre dimensions and additionals equipment can change the operating weight, tipping load and payload.

DIMENSIONS

		3545	3550	3550 SLT	4250
A	Wheelbase [mm]	1,800	1,800	1,800	1,840
B	Chassis length [mm]	3,485	3,485	3,485	3,680
C	Overall length with standard bucket [mm]	4,185	4,185	4,185	4,500
D	Digging depth [mm]	90	90	90	130
E	Reach [mm]	3,550/3,800*	3,550/3,800*	3,550	4,100
F	Max, bucket pivot point, [mm]	2,950/3,200*	2,950/3,200*	2,950	3,250
G	Loading height with pallet forks [mm]	2,810/3,010*	2,810/3,010*	2,810	3,070
H	Max, dumping height [mm]	2,140/2,390*	2,140/2,390*	2,140	2,420
I	Front end height [mm]	1,700/1,790*	1,700/1,790*	1,700	1,850
J	Dumping width [mm]	560	560	560	300
K	Seat height [mm]	1,150	1,150	1,030	1,270
L	Protective roof height [mm] Cab height [mm]	2,270 2,230	2,270 2,230	ab 2,020 –	2,270 2,220
N	Overall width [mm]	1,020 - 1,390	1,020 - 1,680	1,020 - 1,680	1,220 - 1,680
O	Inner turning radius [mm]	1,100	1,100	1,100	1,310
P	Outer turning radius [mm]	2,120	2,120	2,120	2,530
Q	Outer radius with standard bucket [mm]	2,500	2,500	2,500	2,880

* Option: high lift

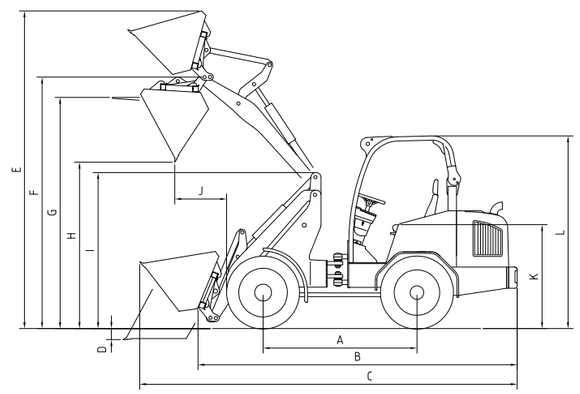

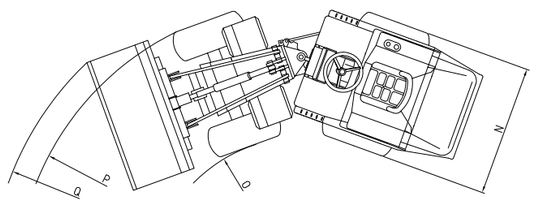

All technical specifications in this brochure refer to serial models and describe their standard functions. The equipment components and their functions as well as the accessories depend on the individual model and the product options and also on the country and customer specific requirements (the maximum values for tipping loads and payloads can only be reached with additional ballasting). Images may contain products or equipment components which are not mentioned or cannot be obtained as a standard. The descriptions, measurements, images, weight specifications and technical data correspond to the state of the art at the time of printing and are non-binding. We reserve changes in the field of construction, equipment, optics and technology without prior notice, due to the continuous development of the products. In case of doubts concerning the performance or the mode of operation of our products due to special circumstances, we recommend the execution of work samples under controlled conditions. We cannot exclude deviations from images or measurements, calculation errors, printing errors or incompleteness in the prospectus despite all due care. We do therefore not accept any liability for the correctness and completeness of the specifications in this prospectus. We do guarantee the proper functioning of our products within the scope of our General Terms and Conditions. Any guarantees that go beyond these are on principle not provided. Any liability beyond the ones set out in our General Terms and Conditions is excluded.

https://truckmanualshub.com/ 9

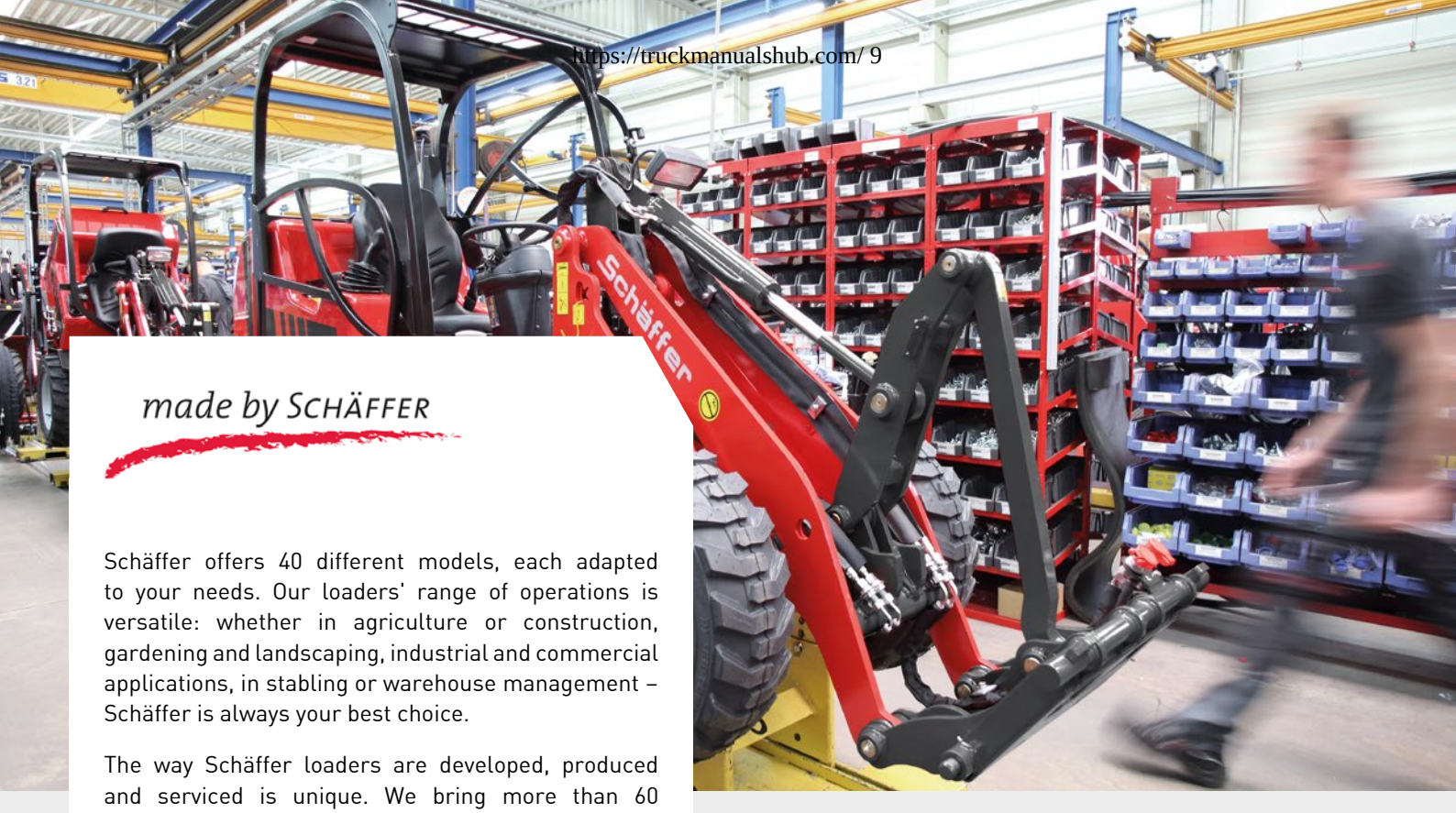

made by SCHÄFFER

Schäffer offers 40 different models, each adapted to your needs. Our loaders' range of operations is versatile: whether in agriculture or construction, gardening and landscaping, industrial and commercial applications, in stabling or warehouse management – Schäffer is always your best choice.

The way Schäffer loaders are developed, produced and serviced is unique. We bring more than 60 years' experience, and we always put the end-user first, working to make your job safer, more comfortable and more profitable. Additionally, at our Erwitte location in Germany we use state-of-the-art development and production technologies. Ultimately, it is our employees who continuously develop new solutions, in close contact with the end user. Years of company service together with an enduring spirit form the basis for the special competence and for our global success.

The Schäffer name does not just mean unique product quality. It also stands for safety and the optimal service that we guarantee in Germany, Europe and around the globe.

Purchasing a Schäffer loader is the beginning of a long-term relationship. Your machine will only remain a 100% genuine Schäffer if you use original replacement parts. Only then will it guarantee the reliability you need, and have the right to expect. We offer you and our service partners a 24 hour delivery service – 7 days a week, 365 days a year.

YOUR DEALER:

Schäffer

Schäffer Maschinenfabrik GmbH
Postfach 10 67 | D-59591 Erwitte
fon +49 (0)2943 9709-0
fax +49 (0)2943 9709-50
info@schaeffer.de

WWW.SCHAEFFER.DE/EN

1.0/10.17/WD. Technical changes reserved. Dimensions are approximate. In some cases, illustrations show models with custom designs.