https://truckmanualshub.com/

MICHI

Operation Manual

with Maintenance Information

SP14DJ

NOTICE

Read this manual before operating the machine.

CE

[Original Instructions]

https://truckmanualshub.com/

IMPORTANT NOTICE AND DISCLAIMER:

Read this manual before operating the machine.

This manual should be followed in conjunction with a health and safety program at your worksite. This manual does not replace the need for employers to ensure that their workers are trained and competent in the safe use of equipment in a workplace. Adherence to this manual does not absolve an employer from potential liability under applicable law in cases where the employer is determined not to be in compliance with applicable law.

In case of any inconsistency between this manual and applicable law, which includes, but is not limited to, applicable workplace health and safety legislation and regulations, such applicable law will prevail. Applicable law changes from time to time with new legislation, amendments to existing legislation, new regulations, amendments to existing regulations, and decisions from the courts. Employers should keep up with these changes and keep their workers informed of the current applicable law. To the full extent permitted by applicable law and without prejudice to any other exclusions of liability under any contract for supply of the machine, AICHI is not responsible for injury, death, damages, direct or indirect loss, or other injury or expenses incurred due to abuse, alteration, or improper use of the machine, including failure to follow all of the operating and maintenance procedures and safety guidance provided in this manual and those prescribed by applicable law.

Models Covered: SP14D1JM
(Commercial Names: SP14DJ)
Serial Number Range: after 795161 – Current
Part Number: GS-456S
Effective date of this manual: February 2020

Copyright

© 2020 Aichi Corporation. All rights reserved.

No part of this manual may be reproduced in any form, in an electronic retrieval system or otherwise, without the written permission from AICHI, except for personal use or other cases permitted by copyright laws.

Contact us:

Head office
AICHI CORPORATION
1152 Ryoke Ageo Saitama 362-8550 Japan
TEL: +81-48-781-1111
http://www.aichi-corp.co.jp

This machine has been manufactured to conform to European Machinery Directive 2006/42/EC and European Standard EN280.

CE

https://truckmanualshub.com/

Important Information

Thank you very much for making your purchase from AICHI.

Please operate and use the machine correctly.

- Operation of the machine must be done in accordance with this manual. Failure to operate, inspect and maintain the machine correctly and in accordance with this manual may lead to death or serious injury, or damage to the machine or other property.
- Read, understand and follow the instructions in this manual before using, inspecting or maintaining the machine.
- Read, understand, and obey all applicable employer and job site safety rules, and local, state, provincial, territorial and federal laws, rules, and regulations.
- Not all accidents or incidents are foreseeable, and thus, cannot be addressed in this manual. Therefore, the machine must be operated by following safe practices, and by using caution, common sense and good judgment to control the machine at all times.
- Operators of the machine must be qualified, trained and certified to operate the machine.
- The machine is designed to lift people and equipment. It is designed for use in assembly and repair work in high places (work on ceilings, roofs, buildings, etc.). It is strictly prohibited to use the machine for any other purposes.
- Do not use the machine in a dusty environment such as sand or shot blasting work.
- To the full extent permitted by applicable law and without prejudice to any other exclusions of liability under any contract for supply of the machine, AICHI is not responsible for injury, death, damages, direct or indirect loss, or other injury or expenses incurred due to abuse, alteration, or improper use of the machine, including failure to follow all of the operating and maintenance procedures and safety guidance provided in this manual and those prescribed by applicable law.
- Proper maintenance must be done including the replacement of parts that are worn out or have reached the end of their service lives. Refer to the separate service manual and follow the replacement standards of that manual. Contact AICHI or an AICHI dealer to do the replacement.
- Use only AICHI's genuine spare parts to replace those parts that affect the safety and stability of the machine.
- Modifications or additions to the machine are to be made only with the prior written permission of the manufacturer. Consult with AICHI or an AICHI dealer before making any modifications or additions to obtain the required prior written permission from AICHI.
- Perform all maintenance described in this manual and in the designated service manual for the machine.
- This manual covers the entire array of options and equipment available with a specific model. There may be explanations in this manual for equipment not specified for your machine.
- All specifications provided in this manual are current at the time of publication noted above. However, continuous product improvement is an AICHI policy, and therefore, product specifications and design are subject to change without notice.
- The illustrations in this manual are intended as representative reference views only. They may depict shapes and equipment that are different than your machine.
- This manual must be kept with the machine and immediately available for use at all times. Keep the manual in the manual holder of the machine.
- When you transfer the use or ownership of the machine, please make sure to leave this manual with the machine.
- The original of this manual is written in English. If this manual is not written in English, it is a translated one. In the event of a discrepancy between the original and translated manuals, the original manual prevails.
- Safety Data Sheets (SDSs) are to be submitted by material suppliers in accordance with applicable health and safety legislation. The recommended precautions and procedures of the manufactures must be followed.
- This manual describes the correct operation and handling procedures for the self-propelled mobile elevating work platform:

Commercial Names	Model Codes	Engine Type	Height, Platform Max
SP14DJ	SP14D1JM	Yanmar 4TNV88	13.9 m

https://truckmanualshub.com/

Safety Alert Symbol and Signal Words

This is the safety alert symbol. It is used to alert you to the risk of hazards that can lead to serious personal injury or death. Obey all safety messages that follow this symbol to avoid possible injury or death.

The signal words, “DANGER,” “WARNING,” and “CAUTION” identify the degree of hazard and its level of seriousness.

DANGER

Indicates a hazardous situation which, if not avoided, will result in death or serious injury.

WARNING

Indicates a hazardous situation which, if not avoided, could result in death or serious injury.

CAUTION

Indicates a hazardous situation which, if not avoided, could result in minor or moderate injury.

NOTICE

Indicates a hazardous situation which, if not avoided, could result in property damage. It may also be used to provide special information to assist in the machine operation.

Symbols Used in Illustrations

Throughout this manual, you will also see the symbol of a circle with a backslash through it.

This means “DO NOT,” “DO NOT DO THIS,” or “DO NOT LET THIS HAPPEN.”

Owner and User Responsibilities

All owners and users of the machine must read, understand, and comply with all applicable law, rules and regulations. Ultimate compliance to national safety regulations is the responsibility of the user and user’s employer.

Operator Qualifications

Operator of the machine must receive safety training to ensure safe operations.

Incorrect use of the machine can cause serious injury or death.

All personnel are requested to receive safety training and only trained and authorized personnel are permitted to operate the machine.

This manual must be used in conjunction with safety training.

Operator of the machine must not undertake responsibility for the machine operation until enough training has been given by qualified and authorized persons.

https://truckmanualshub.com/

Environmental Protection

Various laws and regulations specify specific procedures for disposing of parts and oil.
When disposing of parts or oil yourself, you are responsible for ensuring that all actions comply with applicable law and regulations.

● Considerations before operations

- Look around the machine and confirm the absence of oil or water leaks.

  Oil or water leaking from the machine may cause soil contamination or water pollution if allowed to seep into the ground or waterways. Always collect and wipe up any waste fluids.
- Start the engine and allow the engine to warm up. Operating the engine before it has warmed up sufficiently will increase exhaust emissions and may lead to engine problems.

● Considerations during operations

- Do not operate at loads exceeding the rated load. Overloading the machine may increase exhaust emissions and cause overheating.
- Do not rev the engine or start or accelerate the vehicle suddenly.
- Avoid unnecessary engine idling or revving.
- Be considerate towards residents in the vicinity when operating the machine. Take special care with noise and direction of lights at night or early in the morning.

● Considerations for inspections and replacement

- Oil- or grease-soaked rags or other materials used for cleaning or inspection work must be stored in specified locations. Leaving rags or other materials outside after use may result in ground contamination due to rain seepage or fire.
- Old oil, filters, and lamps must be disposed of by a waste disposal contractor after replacement.
- The batteries contain lead and dilute sulfuric acid. Improper disposal will harm the environment. Please contact AICHI or an AICHI dealer to replace batteries.
- Burning old tires produces toxic gases and will harm the environment.

  To replace the tires, contact AICHI or an AICHI dealer. If you wish to dispose of tires yourself, contact a waste disposal contractor.

● Correct disposal of waste materials

- Consult with AICHI or an AICHI dealer to dispose of the machine after a number of years of use. Dispose of the machine in the appropriate manner. Improper disposal can be harmful to the environment.
- Dispose of waste such as old tires, batteries, coolant, and hydraulic oil appropriately and in compliance with applicable law and regulations after replacement.

https://truckmanualshub.com/

This page intentionally left blank.

https://truckmanualshub.com/

Table of Contents

Chapter 1 **Safety Rules 1**
1. Electrocution Hazards 1
2. Tip Over Hazards 1
3. Fall Hazards 4
4. Collision Hazards 4
5. Damaged Machine Hazards 6
6. Fire and Explosion Hazards 6
7. Battery Safety 6
8. Engine Safety 6
9. Personal Safety 7

Chapter 2 **Decals 8**
1. Symbol and Pictorials Definitions 8
2. Safety Signs and Locations 10

Chapter 3 **Safety Systems & Devices 18**
1. List of Safety Systems 18
2. Travel Speed Limit System 20
3. Travel Function Limit System 20

Chapter 4 **Part Names and Functions 21**
1. Part Names 21
2. Upper Controls 22
3. Lower Controls 25

Chapter 5 **Workplace Check 28**

Chapter 6 **Pre-operation Checks 29**
1. Visual Check 29
2. Function Check 30
2–1 Preparations for Function Check 30
2–2 Lower Controls Check 30
2–3 Upper Controls Check 31
2–4 Limited Travel Speed Check 32
2–5 Tilt Warning Check 32
2–6 Oscillation Axle Checks 32
2–7 Last Check 33

Chapter 7 **Operator Maintenance 34**
1. Storage Method 34
2. Daily Maintenance 34
2–1 Refuel the Machine 34
2–1–1 Diesel Fuel Specifications 35
2–2 Check the Hydraulic Oil Level 35
2–2–1 Hydraulic Oil Specifications 36
2–3 Check the Battery Fluid Level 36
2–4 Check the Engine Oil Level 37
2–4–1 Engine Oil Specifications 37
2–4–2 Engine Oil Viscosity 38
2–5 Check the Cooling System 38
2–5–1 Engine Coolant Specifications 38
3. Periodic Maintenance 39
3–1 Monthly and Annual Inspection 39
3–2 Precautions concerning vehicle rust and corrosion 39
3–3 Lubrication 40
3–3–1 List of Recommended Lubricants 40
3–3–2 Lubricate Every 100 Hours or 1 Month 41
3–4 Change Oil Every 1200 Hours or 12 Months 42
3–5 Engine Maintenance 43
3–5–1 Periodic Maintenance 43
3–5–2 Periodic Maintenance Schedule 44
3–5–3 DPF Maintenance 44
3–6 Fuse 45
3–7 Control box 45

Chapter 8 **Operation 46**
1. Starting the Engine 46
1–1 Starting from Ground 46
1–2 Starting from Platform 47
2. Stopping the Engine 49
3. Upper Controls (from Platform) 49
3–1 Foot Switch 50
3–2 Traveling 50
3–2–1 Travel Speed Select 51
3–2–2 Forward and Backward 51
3–2–3 Steering 52
3–3 Boom Operation 52
3–3–1 Boom Elevating 52
3–3–2 Boom Rotating 53
3–3–3 Boom Telescoping 53
3–3–4 Fly Jib Elevating 53
3–4 Platform Rotating Operation 53
3–5 Horn Button 53
3–6 Touch Switch 54

https://truckmanualshub.com/

3–6–1 Restoring Functions 54
4. Lower Controls (from Ground) 54
4–1 Enable Switch 54
4–2 Boom Operation 55
4–2–1 Boom Elevating 55
4–2–2 Boom Rotating 55
4–2–3 Boom Telescoping 55
4–2–4 Fly Jib Elevating 55
4–3 Platform Rotating Operation 56
5. Platform Leveling System 56
5–1 Platform Level Adjustment 56
5–2 Bleeding Air from Platform Leveling System 57
6. Oil Overheating Alarm 58
7. Hydraulic Generator (if equipped) 59
7–1 To Start the Hydraulic Generator 59
7–2 To Restore Normal Operation 59
8. Diesel Particulate Filter (DPF) System 60
8–1 Types of DPF Regeneration 60
8–2 Flow of DPF Regeneration 61
8–3 DPF Reset Regeneration (Automatic Regeneration) 62
8–4 DPF Stationary Regeneration (Manual Regeneration) 63
8–5 DPF Failure Status (Backup Mode) 64

Chapter 9 **Emergency Operation 65**
1. Emergency Stop 65
2. Emergency Lowering 65
2–1 Upper Controls (from Platform) 65
2–2 Lower Controls (from Ground) 66
3. Override switch 66
3–1 Lowering the platform 66
3–2 Escape from work site 67
3–3 Canceling the touch switch 67
4. Towing 68
4–1 Releasing the Parking Brake 68
4–2 Restoring the Parking Brake 69

Chapter 10 **Transporting 70**
1. Preparations for Transporting 70
2. Loading the Machine 71
3. Tie Down 72
4. Unloading the Machine 72
5. Hoisting the Machine 73
6. Hoisting with Boom Raised 74

Chapter 11 **Storage 75**

Chapter 12 **Troubleshooting 76**
1. Troubleshooting Chart 76
1–1 Upper Controls 76
1–2 Lower Controls 78
2. Diagnostic Codes Chart 79

Chapter 13 **Specifications 83**
1. Dimensions 83
2. General Specifications 84
3. Work Range Diagram 85
3–1 SP14D1JM 85
4. Supplementary Information 85

Appendix A **Test Report 87**
1. Static Test (EN280; 6.1.4.2.1) 87
1–1 SP14DJ 87
2. Dynamic Test (EN280; 6.1.4.2.2) 88
2–1 SP14DJ 88

Appendix B **Declaration of Conformity 89**

Appendix C **Engine Information 91**
1. TNV-CR Explanations of the Possible Malfunctions of the Emissions Control System 92
2. Emission Diagnosis Required in European Stage V (19-56kW) 93
3. J1939 data and NCD lamp actions in Inducement 93

Appendix D **Daily Inspection Check Sheet . 95**

https://truckmanualshub.com/

Chapter 1
Safety Rules

1. Electrocution Hazards

DANGER

- **This machine is not electrically insulated. Do not use the machine near electric power lines.**

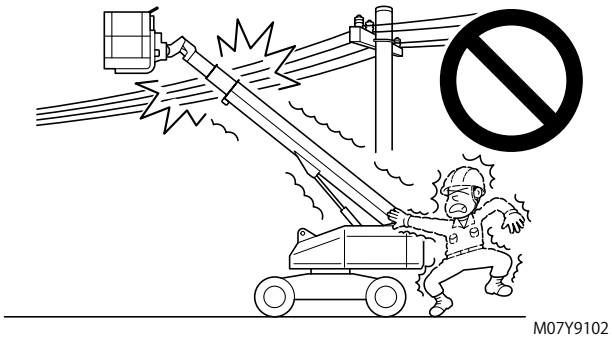

Fig. 1–1

- **Keep a safe distance from electric power lines and apparatus. For safe distance, check your national or local regulations. If no national or local regulation is available, use the table below.**

Table 1–1 Minimum Safe Approach Distance

Voltage (Phase to Phase)	Minimum Approach Distance
0 to 300 V	Avoid Contact
over 300 V to 50 kV	3.05 m
over 50 kV to 200 kV	4.60 m
over 200 kV to 350 kV	6.10 m
over 350 kV to 500 kV	7.62 m
over 500 kV to 750 kV	10.67 m
over 750 kV to 1000 kV	13.72 m

- **Keep away from the machine if it contacts energized power lines. Until energized power lines are shut down, any persons in the platform must not operate the machine and any persons on the ground must not touch the machine.**

WARNING

- **Do not use the machine during lightning or storms. Stop operation in bad weather.**
- **Do not use the machine as a ground for welding.**

2. Tip Over Hazards

DANGER

- **Do not exceed the platform capacity as indicated on the serial number plate.**

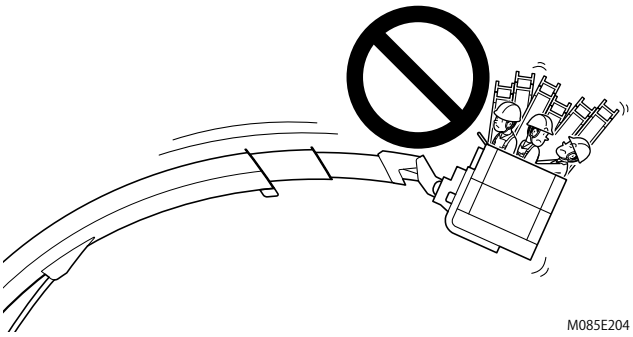

Fig. 1–2

- **Do not place things such as steel beams or power lines across the platform, and use the boom to lift them.**

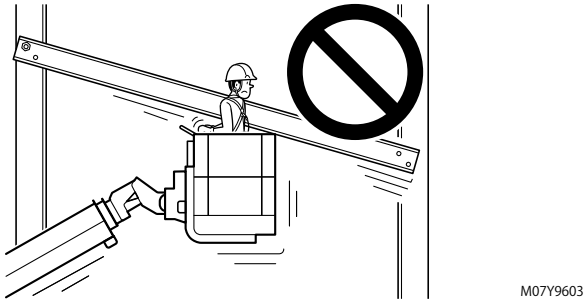

Fig. 1–3

- **Do not use the boom or platform to push or pull power lines or other objects. Pressing the boom or platform hard against them could cause the machine to tip over or be damaged.**

https://truckmanualshub.com/

- **Do not push or pull any object outside of the platform.**

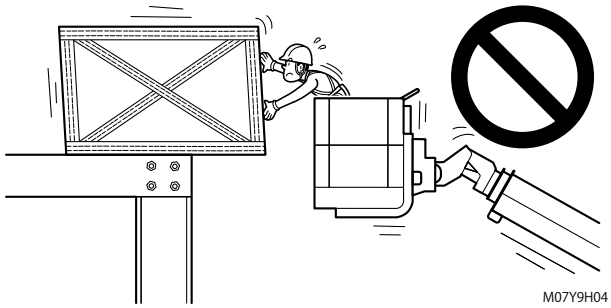

Fig. 1–4

- **Stop operation in bad weather.**

  Criteria of bad weather:
  - Average wind speed over 10-minute period is over 12.5 m/s
  - Rainfall of 50 mm or more
  - Settled snow of 250 mm or more
  - Thunder / Lightning

  Even in conditions below the criteria above, follow the instructions of your supervisor.
- **Do not operate the machine in windy or gusty conditions.**
- **Do not elevate the platform when wind speeds may exceed 12.5 m/s.**

  If wind speeds exceed 12.5 m/s when the platform is elevated, lower the platform and do not continue to operate the machine.

Table 1–2 Beaufort Scale (For Reference Only)

Beaufort Rating	Wind Speed [m/s]	Ground Conditions
4	5.5 – 7.9	Raises dust and loose paper; small branches are moved
5	8.0 – 10.7	Small trees in leaf begin to sway; crested wavelets form on inland waters
6	10.8 – 13.8	Large branches in motion; whistling heard in telegraph wires; umbrellas used with difficulty
7	13.9 – 17.1	Whole trees in motion; inconvenience felt when walking against wind

- **Do not increase the surface area that can catch wind, such as covering the platform with a sheet. The stability of the machine will decrease.**
- **Do not use on a slippery or icy surface.**
- **If an earthquake occurs when you are operating the machine, immediately stop operating the machine.**
  After the earthquake, check for damage or deformation in the machine. As needed, contact AICHI or an AICHI dealer for inspections.

⚠WARNING

- **Do not hang or attach loads to the machine. Spread loads evenly on the platform.**
- **Do not place loads outside of the platform.**
- **Do not use the machine as a crane or lift.**

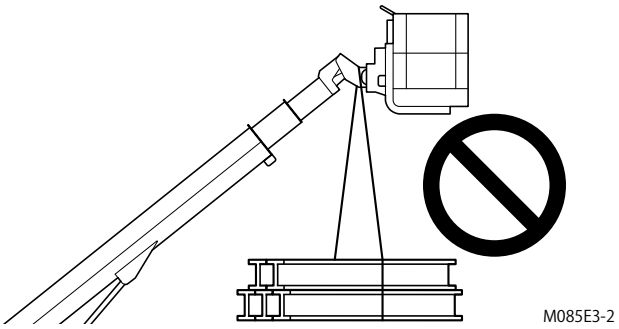

Fig. 1–5

- **Do not elevate the platform on soft or uneven ground. Always perform the workplace checks before moving the machine to the workplace. (Refer to Chapter 5 for workplace checks.)**

  Do not travel the machine on surfaces with bumps and obstructions or do not attempt to travel over them.

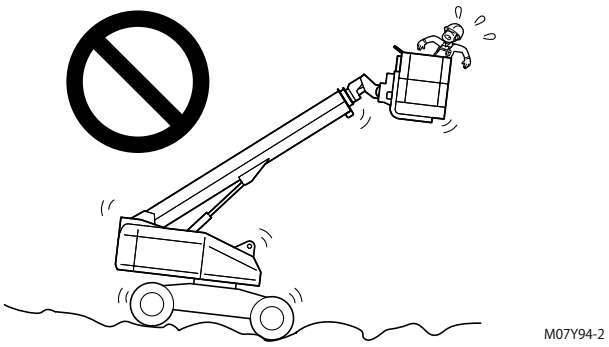

Fig. 1–6

https://truckmanualshub.com/

- **Do not use the machine on a moving or mobile surface or vehicle.**

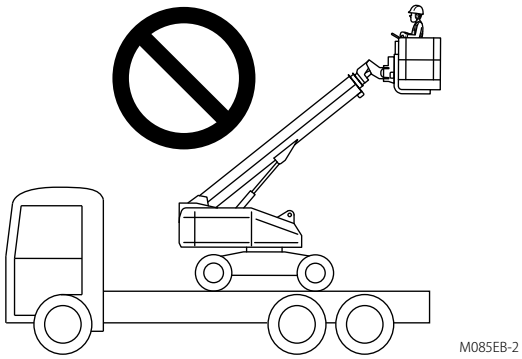

Fig. 1–7

- **Do not elevate the platform on a slope.**
- **Do not use the machine on a slope more than the maximum allowable tilt angle. When the machine tilt more than the maximum allowable tilt angle, the tilt warning light goes on and the tilt alarm buzzer sounds. Never continue working after alarm sounds.**
- **If the tilt alarm buzzer sounds when the platform is elevated, immediately lower the platform and move to a firm, level surface. Never continue working after alarm sounds. Do not depend on the tilt alarm buzzer as a level indicator. Operate the boom only when the machine is on a firm, level surface.**

  Maximum allowable tilt angle: 5° (8.7%)

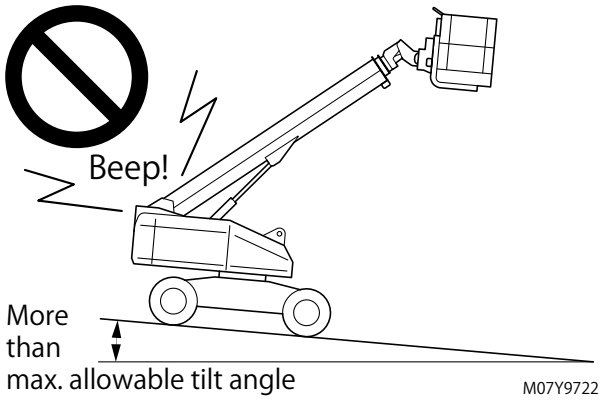

Fig. 1–8

- **If traveling on a slope more than maximum allowable tilt angle is unavoidable, make sure to fully retract the boom and lower the boom under the horizontal. Travel with the counterweight uphill.**
- **Do not travel a slope exceeding the machine gradeability.**
- **Do not travel a slope except purpose of the machine transportation.**

  Maximum allowable tilt angle: 5° (8.7%)

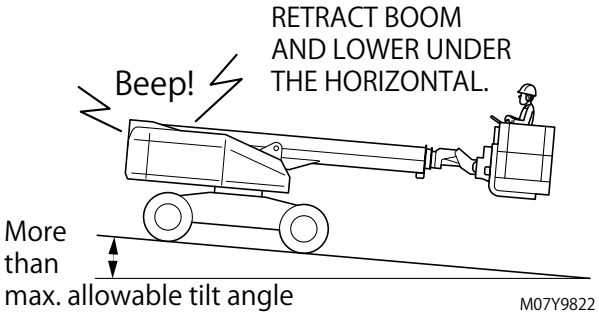

Fig. 1–9

- **Do not touch or attach the platform to any nearby structures.**

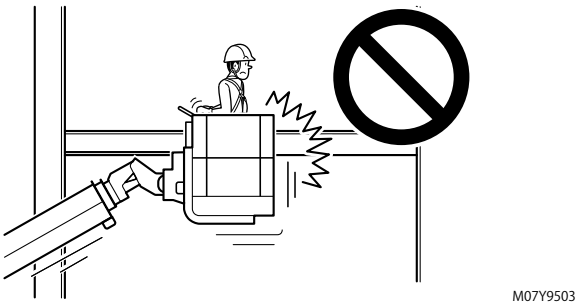

Fig. 1–10

- **Do not modify the machine without obtaining the manufacturer's approval. Never use the machine with the counterweight detached.**
- **Do not disable or alter the machine's components that have an effect on safety and stability in any way.**

⚠CAUTION

- **Do not tie down the machine chassis, boom, or platform to other structures when working.**

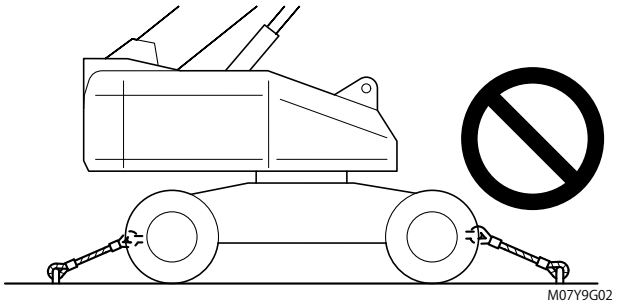

Fig. 1–11

https://truckmanualshub.com/

3. Fall Hazards

DANGER

- Do not place ladders, scaffolds or other devices in the platform or against any part of the machine.
- Do not use a ladder or step in the platform.

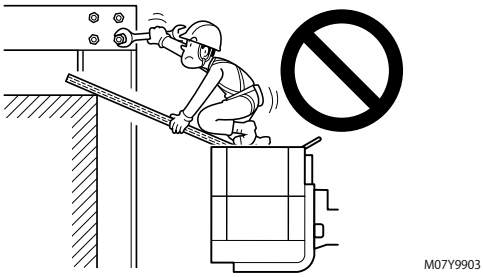

Fig. 1–12

- Do not sit, stand, or climb on the guardrails. Always keep both feet firmly on the platform floor and conduct operation with stable posture.

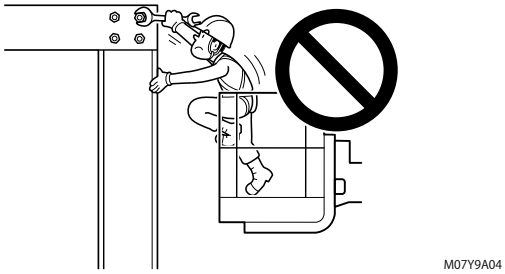

Fig. 1–13

- Do not jump from the platform to another structure.

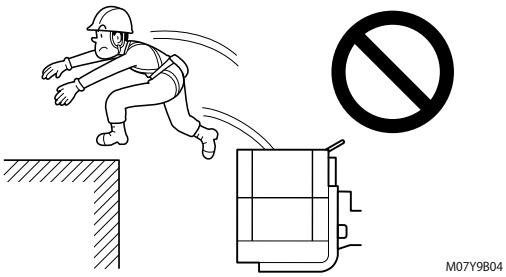

Fig. 1–14

- Do not climb up/down from the platform when it is raised.
- After getting on the platform, always close the entry gate or lower the platform entry bar. Do not operate the machine with the gate open.

WARNING

- When getting on/off the platform, be especially careful and lower the platform to the lowest position.
- When getting on/off, stop all movement of the machine, face the machine, and always use three-point support (for example, two arms and one leg, or one arm and two legs).
- Do not jump off from the machine.
- Do not get on/off with tools in your hand.
- Do not hold on to controllers for purpose of getting on/off the platform.
- Do not operate the machine roughly. The operator may be thrown from the platform.

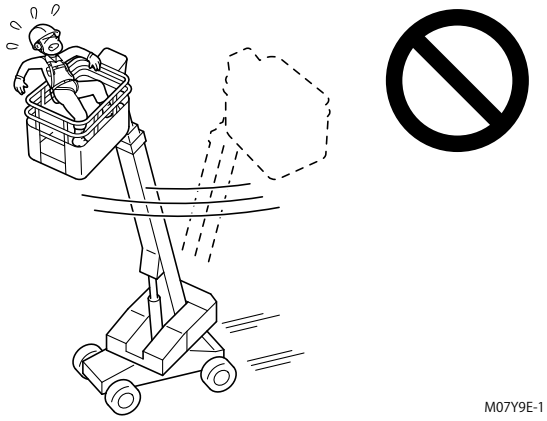

Fig. 1–15

- Keep the platform neat and tidy always. To avoid slips, clear the water, oil, snow, ice off the platform.
- Do not step on any places other than the platform.
- To help prevent incorrect operation, illuminate the control panel in the dark.

4. Collision Hazards

DANGER

- Do not hit a obstacle with the platform and/or counterweight. If they hit, their mounting units may be damaged. Contact AICHI or an AICHI dealer for inspections.

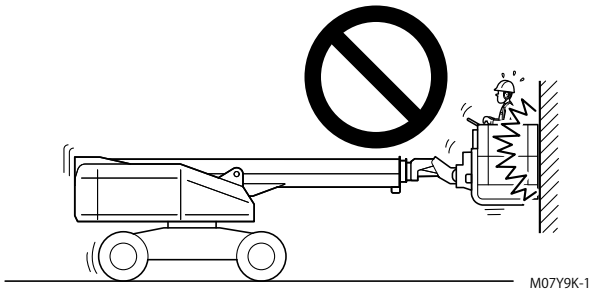

Fig. 1–16

https://truckmanualshub.com/

- Once the platform is raised, do not allow people or things under the platform.

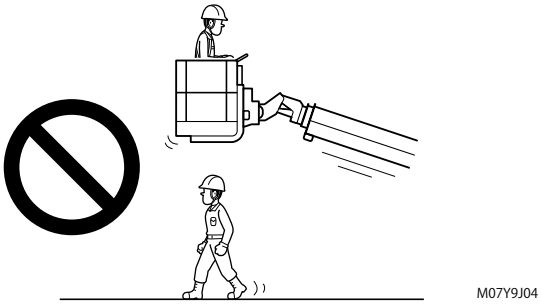

Fig. 1–17

- Do not lower the boom unless the area below is clear of persons and obstacles.
- When you are obliged to get under the boom and platform to perform the inspections or repairs, use a safety support to prevent the boom and the platform from unexpected descent.
- The turntable protrudes 0.85 m beyond the width of the chassis when rotating the boom, so watch the turntable movement and make sure that no person or obstacle is around the turntable.

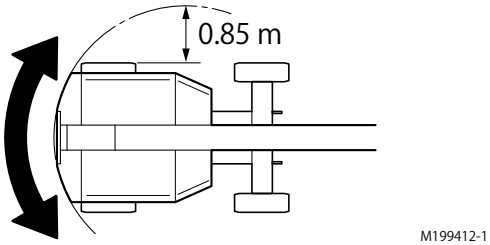

Fig. 1–18

WARNING

- Before traveling, check the arrow decals affixed on the chassis to ensure proper traveling direction of the machine.

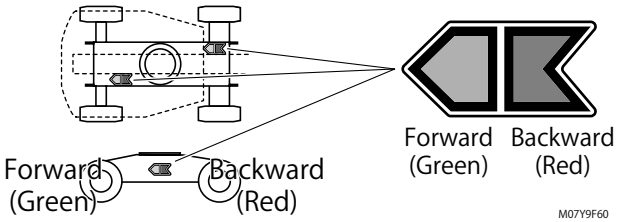

Fig. 1–19

- Make sure that no person or obstacle is around the machine. Be aware of blind spots when traveling or operating.

  If your field of view is obstructed, have a guide assist you.

- While traveling, check the work area for overhead obstacles or other possible hazards. When raising or lowering the platform, check that there is enough space above, below, and on all sides of the machine.
- Do not hit the ground with the platform.

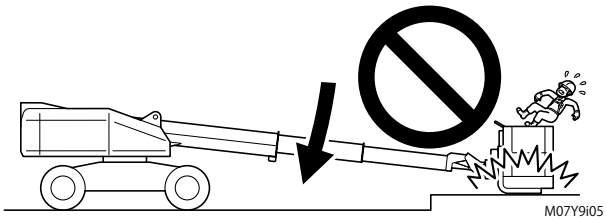

Fig. 1–20

- Do not drop things from the platform. There is a hazard that falling objects will hit cars, or people that are passing by.

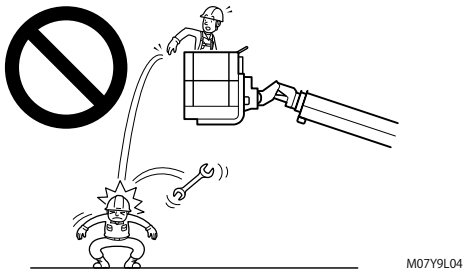

Fig. 1–21

- Do not place loads outside of the platform. Keep equipment and tools stable when loading on the platform. Unstable loads could be falling off.
- The machine is not allowed to travel on public highways.

CAUTION

- Take care that your hands on the guardrails are not caught in other obstacles.
- If there is other machine in workplace, pay attention to other machine operating and avoid to operate at the same time. Take measures to prevent a collision. Have another person observe work to warn you.
- Do not operate the machine in the path of motion of cranes unless the controls of the cranes are locked out or the precautions are taken to prevent a potential collision.
- Check the control panel to ensure proper direction of the movement. Look in the direction of the movement and operate the controls.

https://truckmanualshub.com/

5. Damaged Machine Hazards

⚠WARNING

- Do not use a damaged or malfunctioning machine. Have it checked and repaired immediately.
- If you feel an abnormality on the machine during work, stop using it immediately and inspect.
- When operators change a work shift, perform the pre-operation checks at every change. It is the operator's responsibility to perform a pre-operation check.
- Perform the pre-operation checks on firm, level surface, with the platform lowered.
- If the pre-operation checks reveal any abnormalities, put an "Out of Order" sign on the machine, and stop using the machine. Report the problem to your supervisor.

⚠CAUTION

- Perform all maintenance described in this manual and in the designated service manual for the machine.
- Make sure all decals are in place and that no decal is missing or damaged. Any decal missing or damaged is a machine malfunction.

6. Fire and Explosion Hazards

⚠WARNING

- When handling flammables (fuel, oil, etc.), be aware of anything that can cause fire.
- Never remove the fuel cap with the engine running.
- Only fill the fuel tank with diesel fuel. Filling the fuel tank with gasoline may result in a fire and will damage the engine.
- Never refuel with the engine running.
- Wipe up any spills immediately.
- Keep sparks, open flames or any other form of ignition (match, cigarette, static electric source) well away when refueling.
- Fill the fuel tank. Store any containers containing fuel in a well-ventilated area, away from any combustibles or sources of ignition.
- If the machine is to be used in a location where flammable gas is produced, only use the machine after sufficient ventilation.
- Never park the machine close to oil or other combustible material, such as dead leaf or waste paper, during engine operation or shortly after shutdown. The muffler and exhaust pipes are extremely hot while the engine is operating.
- Have a first-aid kit and a fire extinguisher ready in case of an accident or fire.

7. Battery Safety

Burn Hazards

⚠CAUTION

- The battery fluid contains corrosive acid. When dealing with the battery, always wear appropriate protective clothing and equipment to protect your hands, eyes, face and body, and avoid contacting battery fluid.
- If battery fluid gets on the skin or on clothing, wash it away immediately with cold water. If it gets into the eye, wash immediately with cold water, and seek medical treatment immediately.

Explosion Hazard

⚠WARNING

- The battery produces flammable hydrogen gas, and there is a possibility of explosion. Never allow anything that can cause fire to be close to the battery. Charge the battery only under good ventilation.
- If the electrolyte is frozen, slowly warm the battery before you recharge it.

8. Engine Safety

Scald Hazards

⚠WARNING

- Never remove the radiator cap if the engine is hot. Steam and hot engine coolant will spurt out and seriously burn you. Allow the engine to cool down before you attempt to remove the radiator cap.

https://truckmanualshub.com/

- Tighten the radiator cap securely after you check the radiator. Steam can spurt out during engine operation if the cap is loose.
- Keep your hands or any part of the body away from the surface of the silencer, exhaust pipe, engine block, and engine side of the turntable cover, etc. while driving the machine or immediately after the engine stops. During driving, the surface of the engine is very hot, and you may severely burn yourself.

Exhaust Hazard

⚠WARNING

- Never operate the machine in an enclosed area such as a garage, tunnel, or underground room without proper ventilation.
- Never block windows, vents, or other means of ventilation if the machine is operating in an enclosed area. The engine creates carbon monoxide gas during operation. Accumulation of this gas within an enclosure could cause illness or even death.

Coolant Hazard

⚠CAUTION

- Wear eye protector and rubber gloves when you handle long life or extended life engine coolant. If contact with the eyes or skin should occur, flush eyes and wash immediately with clean water.

9. Personal Safety

Fall Hazards

⚠DANGER

- Always use a safety harness in the platform. All persons in the platform must comply with employer, work area, and local and national safety regulations regarding the use of personal protective equipment.
- All personal fall protective equipment must be attached to only the authorized lanyard anchorage points provided in the platform.

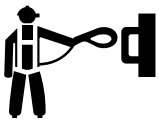

⚠WARNING

All personal protective equipment must comply with applicable regulations, and must be inspected and used in accordance with the manufacturer's instructions.

Entanglement Hazard

⚠WARNING

Keep hands and other body parts away from moving / rotating parts such as the cooling fan, flywheel or pinion.

Exposure Hazards

⚠WARNING

- Wear personal protective equipment such as gloves, work shoes, eye and hearing protection as required by the task at hand.
- Never wear jewelry, unbuttoned cuffs, ties or loose-fitting clothing when you are working near moving/rotating parts such as the cooling fan, flywheel or pinion.
- Always tie back long hair when you are working near moving/rotating parts such as a cooling fan, flywheel or pinion.
- Never operate the machine while wearing a headset to listen to music or radio because it will be difficult to hear the alert signals.

Alcohol and Drug Hazards

⚠WARNING

- Never operate the machine while you are under the influence of alcohol or drugs.
- Never operate the machine when you are feeling ill.

https://truckmanualshub.com/

Chapter 2

Decals

1. Symbol and Pictorials Definitions

Read operation manual.	Read service manual.	Crush Hazard	Crush Hazard	Burn Hazard	Body Injury Hazard	Maintain required clearance.
Do not wash by high pressure.	Do not step. Keep off.	Keep away. Do not touch.	No smoking	No open flame	Do not travel elevated on/ near soft or uneven surfaces.	Do not elevate platform unless machine is on firm level surface.
Do not contact power lines; do not touch energized machine.	Do not lift.	Lift Point	Tie-down Point	Lanyard Anchorage Point	Sound Power Level in Decibels	Maximum Wheel Load
Maximum Side Slope Rating	Maximum Slope Rating	Platform Capacity	Maximum Wind Speed	Maximum Manual Force	Maximum Manual Force	Loads (Personnel and Tools)
Upper Key Switch	NCD System Failure	DPF Regeneration Request / Exhaust Temperature Warning	DPF Regeneration Approval / Abnormal Combustion	DPF Stationary Regeneration	Platform Overload	System Failure
Outreach Limit	Tilt Warning	Platform Contact	Hydraulic Oil	Battery	Fuel	Diesel Fuel

https://truckmanualshub.com/

Symbol and Pictorials Definitions (continued)

LPG Fuel	Fuel Level	Engine Failure	Engine Preheat	Oil Pressure	Water Temperature	Air Filter
Engine Start	Emergency Pump	Pre-operation Check	Enable Switch	ON and OFF	Horn	Fast
Slow	High Torque	Beacon	Working Light	Head Light	Generator	Platform Leveling
Horizontal / Vertical Movements	Platform Rotation	Boom Rotation	Boom Telescope	Boom Elevation	Steer: Left / Right	Travel: Forward / Backward
Upper Controls / OFF / Lower Controls Selection						

https://truckmanualshub.com/

2. Safety Signs and Locations

Left Side View, Top View

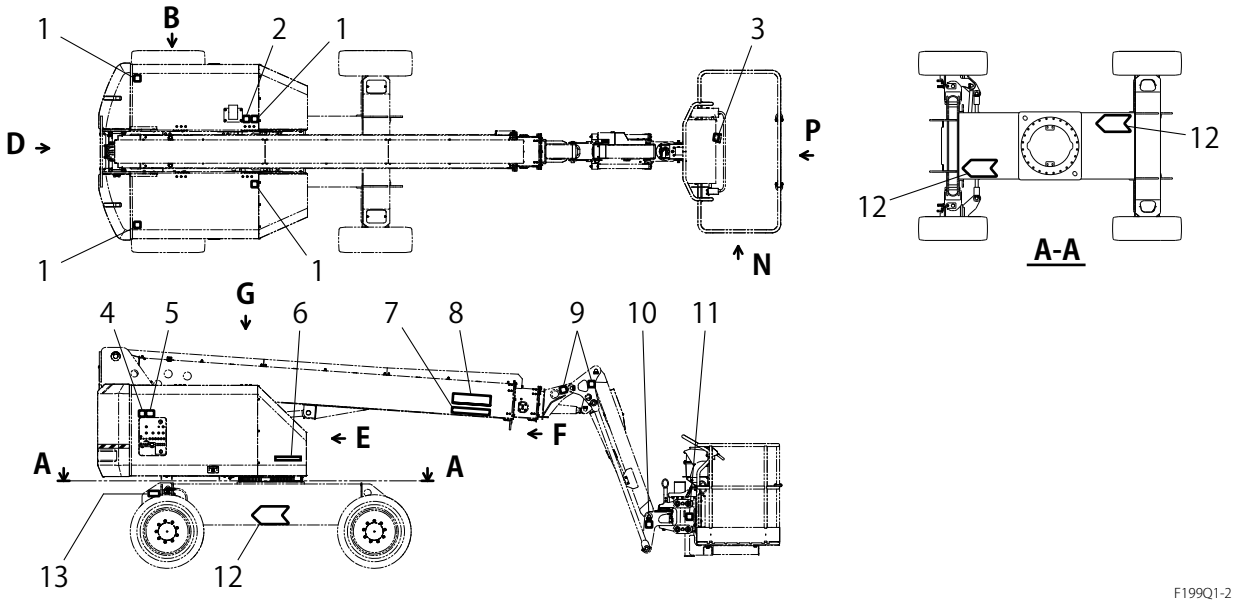

No.		No.	
1	491-0000654	5	491-0000696 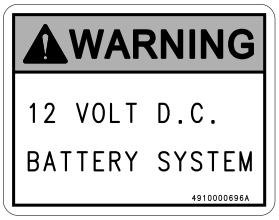
2	491-0000693	6	5Y6-08450-00
3	491-0000152 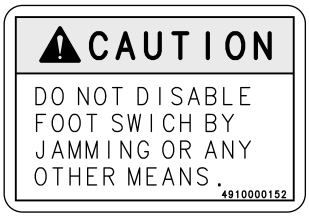	7	494-0000253
4	491-0000653 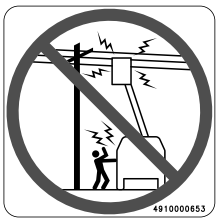	8	182-01002

https://truckmanualshub.com/

Left Side View, Top View (Continued)

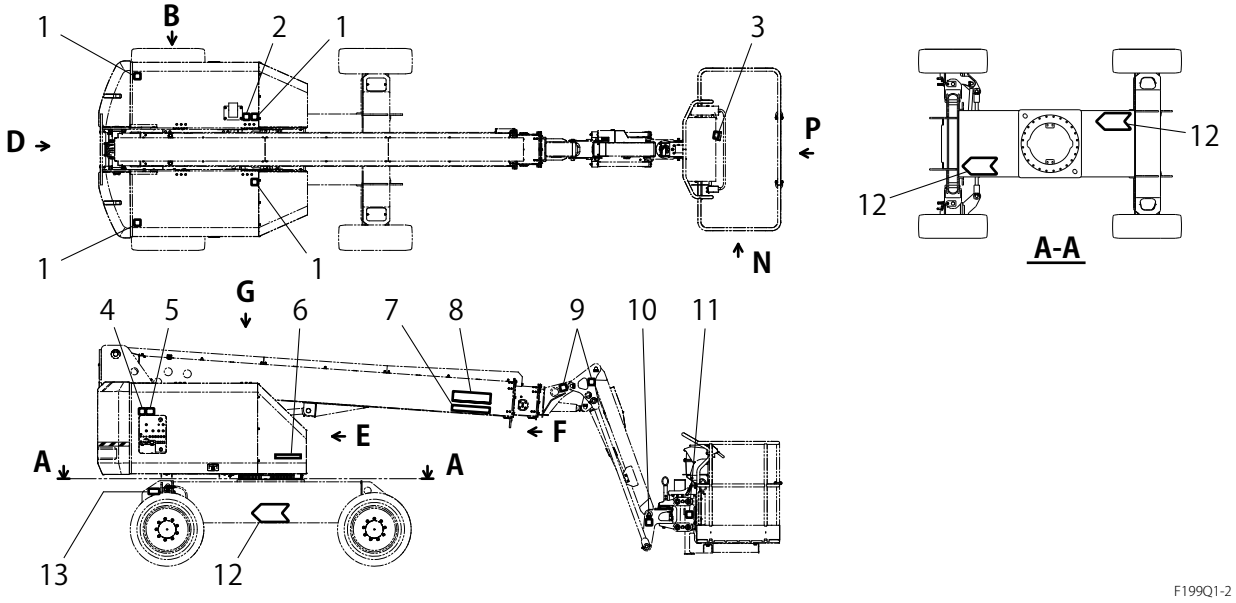

No.		No.	
9	491-000670	13	5Y6-03876-00 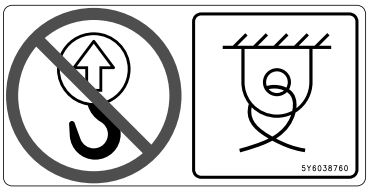
10	491-0000650		
11	491-0001041		
12	5Y6-03883-00 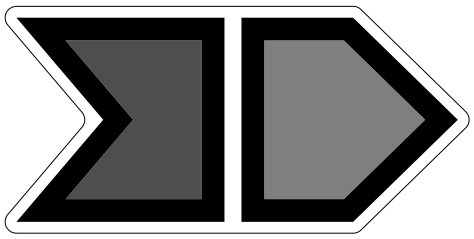		

https://truckmanualshub.com/

Right Side View, 1st Boom Tip

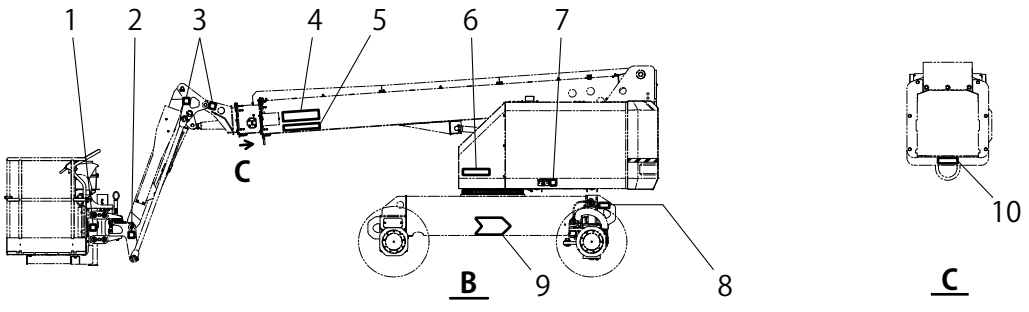

No.		No.	
1	491-0001041 	6	5Y6-08450-00
2	491-0000650 	7	491-0000693
3	491-0000670 	8	5Y6-03876-00 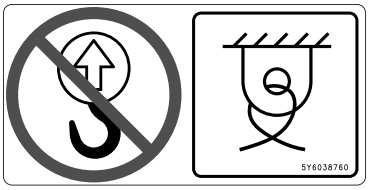
4	182-01002 	9	5Y6-03883-00 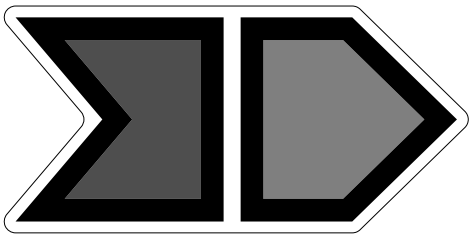
5	494-0000253 	10	491-0000557 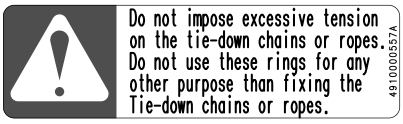

https://truckmanualshub.com/

Front View, Back View

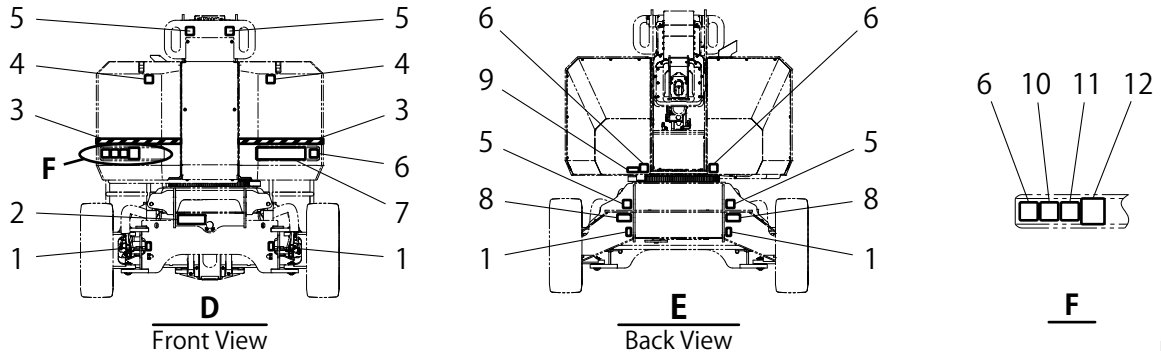

No.		No.	
1	5Y6-08534-00 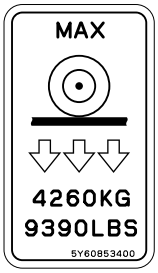 	7	182-01002
2	493-0000065 (Serial number Plate) 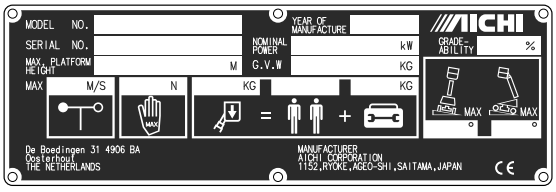 	8	5Y6-03876-00 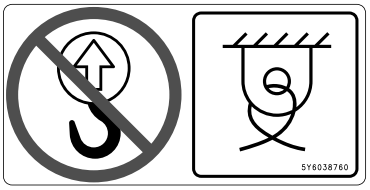
3	494-0000994 (Caution Stripe)	9	494-0000170 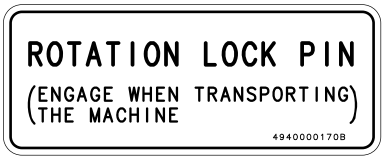
4	491-0001039 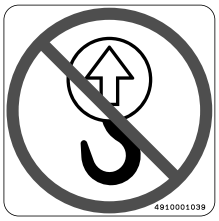 	10	491-0000682
5	494-0000575 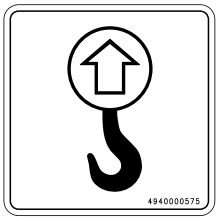 	11	494-0000578 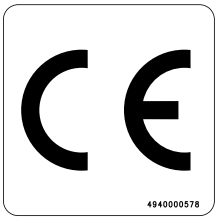
6	491-0000650 	12	S49431-11 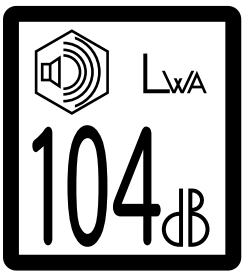

https://truckmanualshub.com/

Inside Turntable Cover

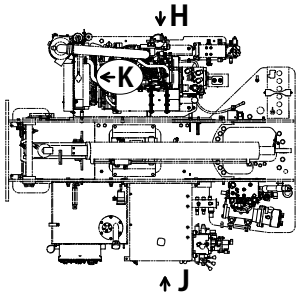

G
Inside Turntable Cover

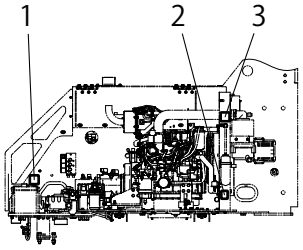

H
Inside Turntable Cover

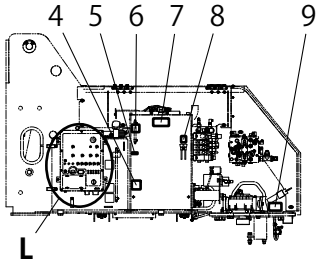

J
Inside Turntable Cover

No.		No.	
1	491-0000673	**6**	494-01582 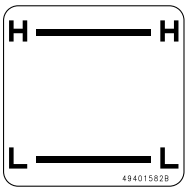
2	491-00891 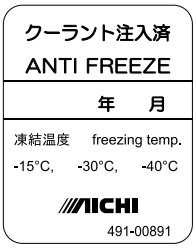	**7**	491-0000706
3	491-0000669	**8**	491-0000701
4	491-0000693	**9**	494-0000877
5	378-0000024 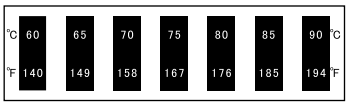		

架装物樹脂材料表 / Resin Materials List of Unit		
部品名	PART NAME	材料(materials)
操作レバー	LEVER,operation	PA
シリンダブーツ	BOOT,cylinder	NBR
スイーパー	BOOM,sweeper	U
ホースガイド	GUIDE,hose	PA,PE
スライダ	SLIDER	PA,PE
クッションゴム	CUSHION,rubber	CR,EPDM
ゴムクランプ	CLAMP,rubber	CR
グロメット	GROMMET	CR
下部操作パネル	PANEL,control	AES
タイヤ	TIRE	NBR
輪止め(OPT)	CHOCK,wheel	PE

■ 機種・仕様により表内部品が付いてない場合があります。
Parts in list may not equip by model, specification. 4940000877A

https://truckmanualshub.com/

Inside Turntable Cover

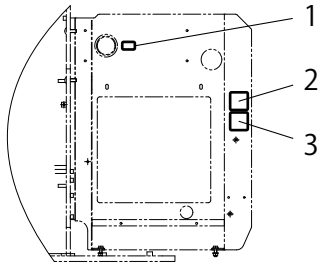

K
Raditor Bracket

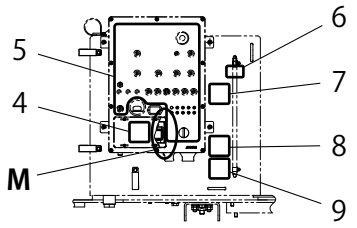

L
Lower Controls

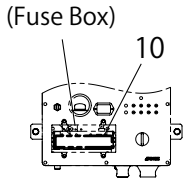

M
Inside Fuse Cover

F199Q5-2

No.		No.	
1	5Y6-08625-00 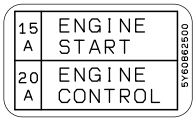 	6	494-0000995 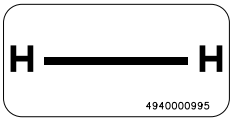
2	491-0000693 	7	494-0000574 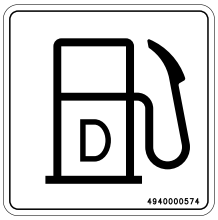
3	491-0000652 	8	491-0000673
4	491-0000669 	9	491-0000649
5	5Y6-08411-00 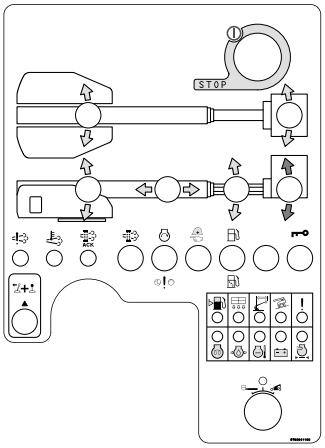 	10	5Y6-08535-00 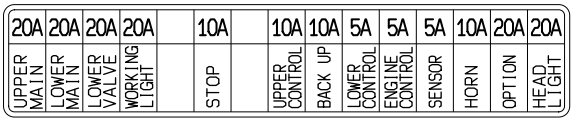 20A UPPER MAIN 20A LOWER MAIN 20A LOWER VALVE 20A WORKING LIGHT 10A STOP 10A UPPER CONTROL 10A BACK UP 5A LOWER CONTROL 5A ENGINE CONTROL 5A SENSOR 10A HORN 20A OPTION 20A HEAD LIGHT

https://truckmanualshub.com/

Platform

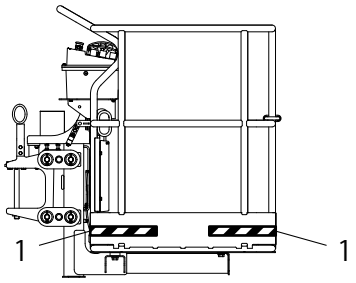

N
Platform

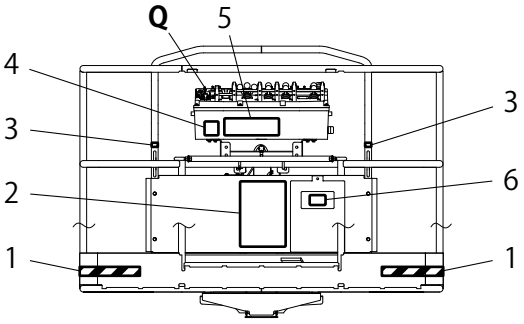

P
Platform

F199Q6-2

No.		No.	
1	494-0000549 (Caution Stripe)	4	491-0000669
2	5Y6-03843-00 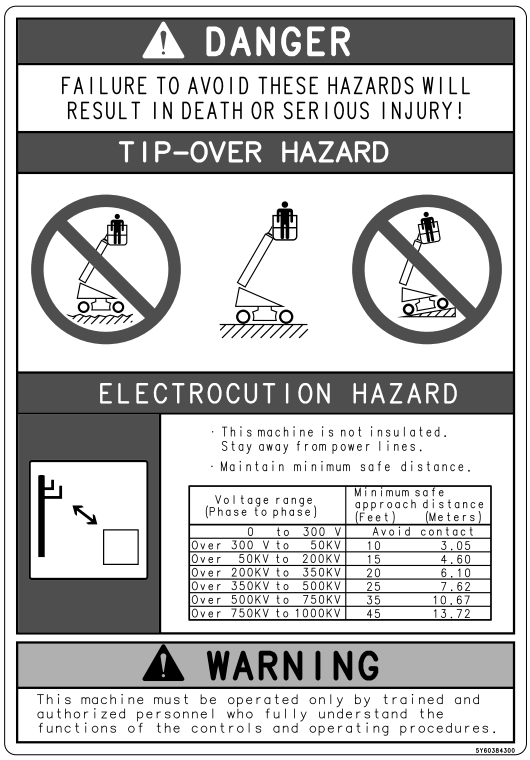	5	5Y6-08550-00 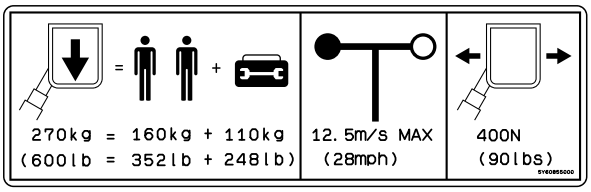
3	491-0000951	6	494-0000557 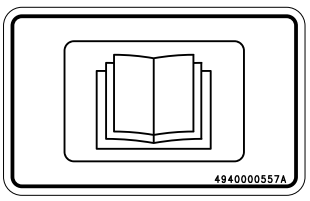

https://truckmanualshub.com/

Upper Controls

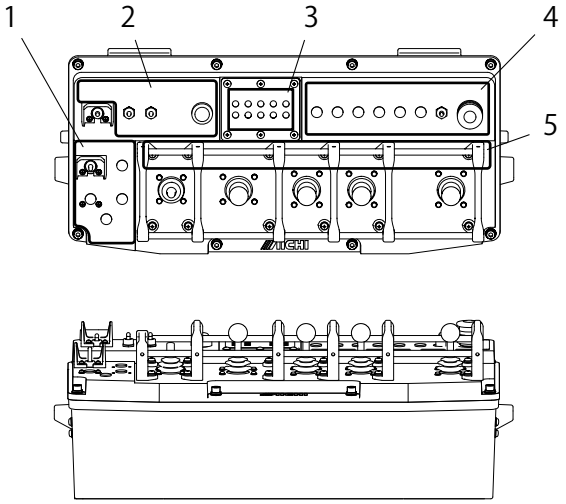

Q
Upper Controls

M14Y5620

No.		No.	
1	5Y6-03860-00 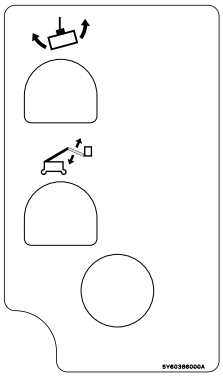	3	5Y6-06930-00 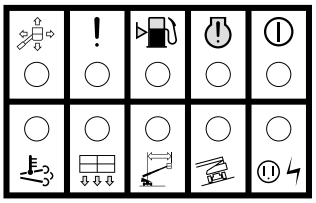
2	5Y6-03858-00 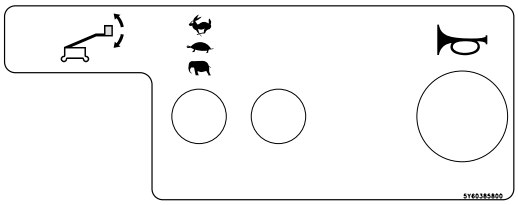	4	5Y6-03857-00 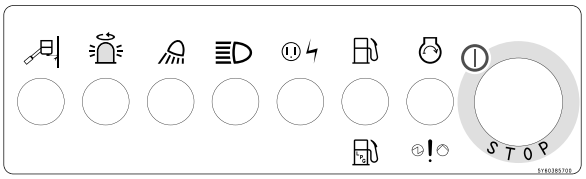
5	5Y6-03859-00 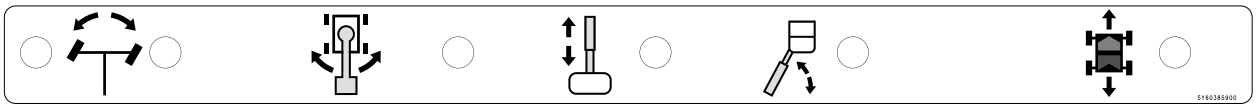		

https://truckmanualshub.com/

Chapter 3

Safety Systems & Devices

⚠WARNING

It is strictly forbidden to make modifications to the machine without obtaining AICHI's written approval. Do not disable or alter the machine's components that have an effect on safety and stability in any way.

Failure to heed warnings could result in decreasing safety, stability, and strength of the machine, or other hazards leading to death or serious injury.

1. List of Safety Systems

(1) Relief Valve

Protect the hydraulic components by relieving abnormally high pressure in the hydraulic system.

(2) Holding Valve n Boom Elevation Cylinder

Prevents the boom from natural descent in the event of hydraulic hose breakage.

(3) Holding Valve n Boom Telescope Cylinder

Prevents the boom from natural descent in the event of hydraulic hose breakage.

(4) Double Holding Valve on Fly jib Cylinder

Prevents the fly jib from natural descent in the event of hydraulic hose breakage.

(5) Holding Valve on Upper Leveling Cylinder

Maintains the platform level in the event of hydraulic hose breakage.

(6) Emergency Stop Button

The machine is equipped with readily identifiable emergency stop buttons, located at both the upper and lower controls.

Shuts down the engine and stops all of the movements of the machine when this switch is pressed.

(7) Tilt Alarm Buzzer

The tilt light goes on and the alarm buzzer sounds when the machine tilts more than 5 degrees. Even If the tilt alarm buzzer sounds the movements of the machine does not stop.

(8) Travel Speed Limit System

This system automatically limits the travel speed corresponding to various boom statuses.

For the specific function of this system, see the Section 2 "Travel speed limit system."

(9) Travel Function Limit System

This system automatically disables the travel function corresponding to the boom status and the tilt angle of the machine.

For the specific function of this system, see the Section "3. Travel function limit system."

(10) Rotation Lock Pin

Fixes the turntable to the chassis to prevent the turntable from being rotated when transporting the machine.

(11) Emergency Pump

Auxiliary hydraulic pump driven by the battery. Used to lower the platform in the event of an engine or main pump failure.

(12) Oscillation Axle Locking System

The system locks the oscillation axle unless the boom is rotated to rear center of the chassis, or the boom is retracted and lowered under the horizontal.

(13) Guardrails

There are guardrails on all sides of the platform to help prevent persons in the platform from falling off the platform. The entry gate is part of the guardrail system and must be securely fastened after entering the platform.

(14) Lanyard Anchorage Point

The lanyard anchorage points are to hook the safety harness to, in order to prevent falls.

(15) Travel Alarm Buzzer

The travel alarm buzzer sounds while traveling to warn the people nearby.

(16) Alarm horn

Before moving the machine, sound the alarm horn to warn the personnel around the machine.

https://truckmanualshub.com/

(17) Boom Motion Alarm Buzzer

The boom motion alarm buzzer sounds to warn the people nearby while operating the boom.

(18) Overload Sensing System

This system disables all of the functions, flashes the overload warning light, and sounds the overload warning buzzer when the platform is overloaded.

(19) Boom / Travel Function Interlock System

This system stops all of the functions when the travel and boom operations are conducted simultaneously.

(20) Boom Wire Rope Failure Detecting System

This system disables the boom extending functions in the event of the boom extension wire rope failure.

(21) Touch switch

This switch helps prevent an incorrect operation caused by an operator falling down onto controls.

Shuts down the engine and stops all of the movements of the machine when you touch this switch on the platform.

(22) Foot Switch, Enable Switch

To help prevent a misoperation; the boom, platform, and traveling functions are disabled unless the foot switch is depressed or the enable switch is operated.

(23) Foot Switch Cancel System

This system cancels the foot switch/enable switch if any of the boom, platform, and traveling functions are not operated for more than 20 seconds after operating the foot switch/enable switch.

The system also cancels the functions if the foot switch/enable switch is not operated for more than 20 seconds after operating any of the boom, platform, and traveling functions.

At this time, the power indicator light (on the upper controls) or the preheat light (on the lower controls) starts flashing to alert you.

In this case, release all controls and the power indicator light will turn on or the preheat light will turn off. And then operate again to enable the functions.

https://truckmanualshub.com/

2. Travel Speed Limit System

This system automatically limits the travel speed corresponding to the boom status as follows.

Table 3–1 Boom Status of Travel Speed Limit System

Area	Boom Status	Boom rotation	Travel Speed Select Switch	Travel Speed
A	Elevation: ≥ 5 ° Telescope: min. – max.	Regardless	Regardless	1.2 km/h
B	Elevation: < 5 ° Telescope: not fully retracted	Regardless		
C	Elevation: < 5 ° Telescope: fully retracted	Except rear center		
		Rear center (±20 °)	"🐢" (LOW SPEED)	
			"🐇" (HIGH SPEED)	7.2 km/h

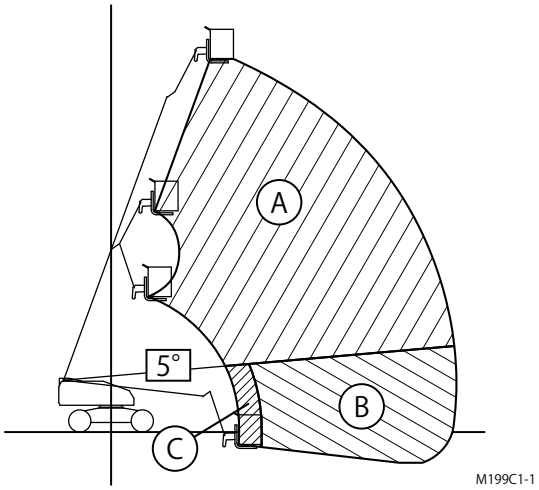

Fig. 3–1

3. Travel Function Limit System

This system disables the travel function corresponding to the boom status and the machine tilt angle as follows, regardless of the boom rotation angle.

Table 3–2 Boom Status of Travel Function Limit System

Area	Boom Status	Machine Tilt Angle	Function
A	Elevation: ≥45° Telescope: min. – max.	≥ 5°	Disable
		< 5°	Available
B	Elevation: < 45° Telescope: not fully retracted	≥ 5°	Disable
		< 5°	Available
C	Elevation: < 45° Telescope: fully retracted	Regardless (within the gradeability)	Available

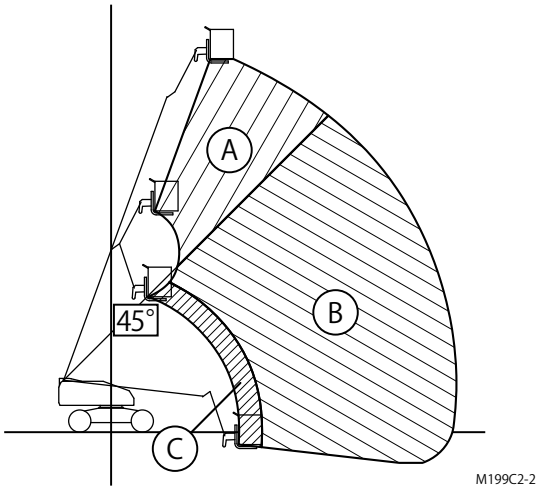

Fig. 3–2

https://truckmanualshub.com/

Chapter 4
Part Names and Functions

1. Part Names

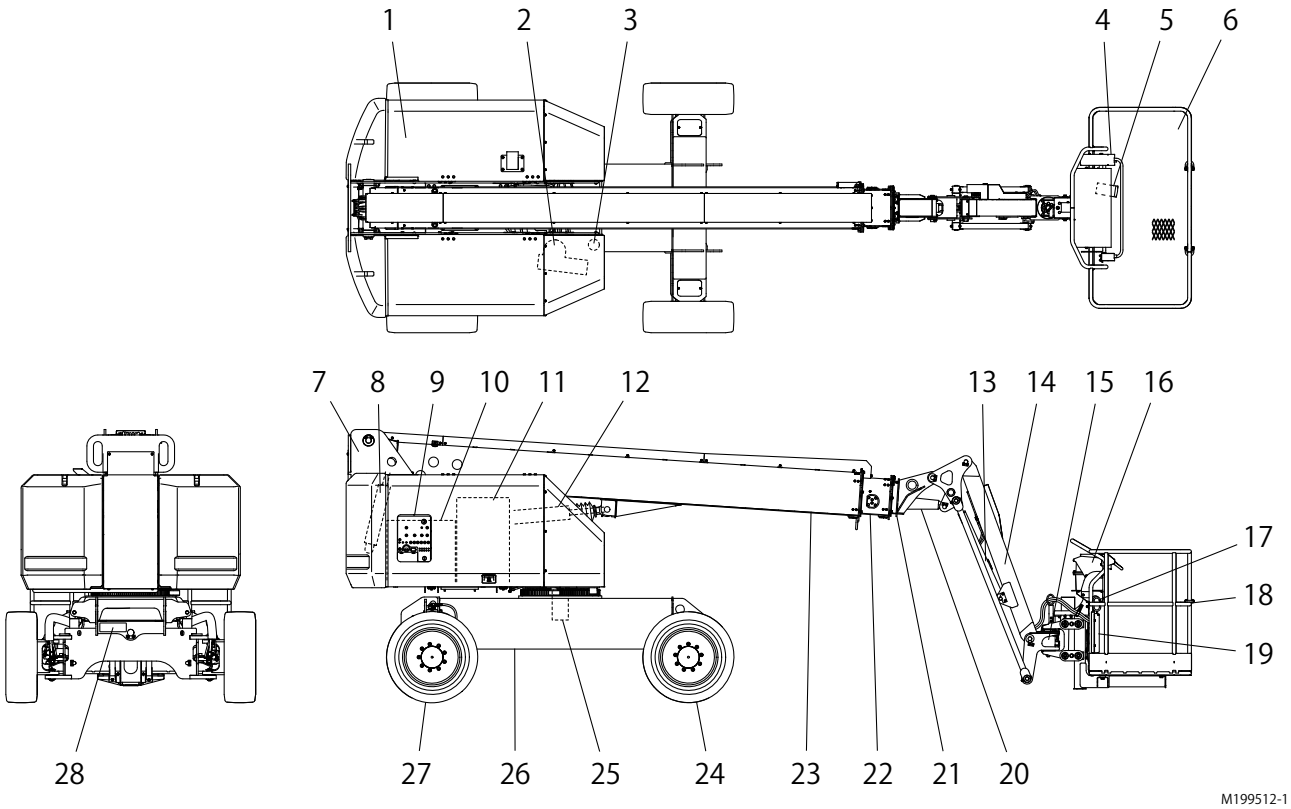

Fig. 4–1

(1) Engine Compartment
(2) Rotation Gear Box
(3) Rotation Lock Pin
(4) Touch Switch
(5) Foot Switch
(6) Platform
(7) Turntable
(8) Platform Leveling Cylinder, Lower
(9) Lower Controls
(10) Fuel Tank
(11) Hydraulic Oil Tank
(12) Elevation Cylinder
(13) Fly Jib Cylinder
(14) Fly Jib
(15) Rotary Actuator
(16) Upper Controls
(17) Lanyard Anchorage Points
(18) Entry Gate Bar
(19) Manual Holder
(20) Platform Leveling Cylinder, Upper
(21) 3rd Boom Section
(22) 2nd Boom Section
(23) 1st Boom Section
(24) Traveling Wheel
(25) Swivel Joint
(26) Chassis
(27) Steering Wheel
(28) Serial Number Plate

https://truckmanualshub.com/

2. Upper Controls

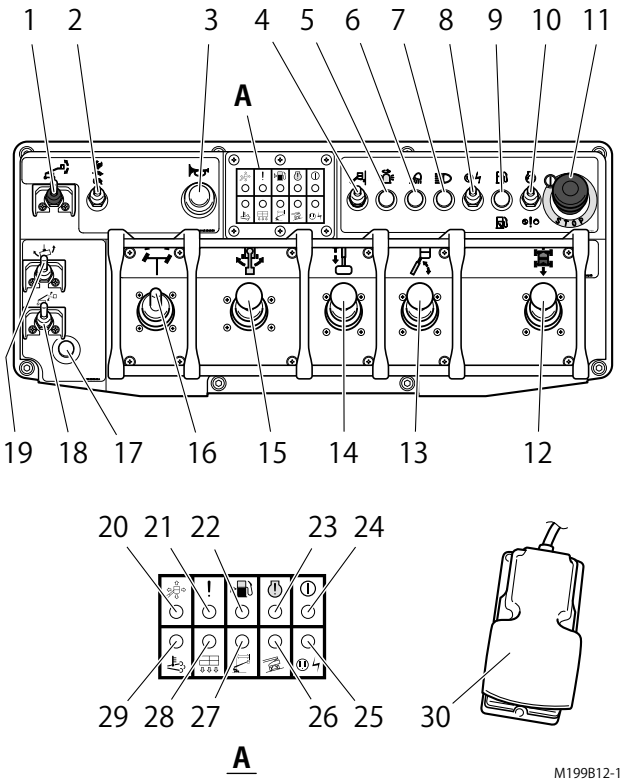

Fig. 4–2

1. Platform Level Adjust Switch
   Operate this switch up and the platform level will tilt up. Operate this switch down and the platform level will tilt down.

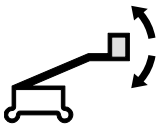

2. Travel Speed Select Switch
   - Select "🐇" (RABBIT) for a "HIGH SPEED" traveling.
   - Select "🐢" (TURTLE) for a "LOW SPEED" traveling.
   - Select "🐘" (ELEPHANT) for a "HIGH TORQUE" when traveling on a slope.

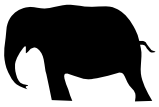

3. Horn Button
   Push the horn button and the alarm horn will sound. Release the horn button and the alarm horn will stop.
   Before moving the machine, sound the horn to warn the personnel around the machine.

4. Not used

5. Rotating Beacon Switch (option)
   Turn on this switch and the rotating beacon will light on.

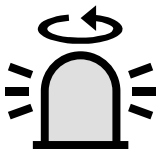

6. Work Light Switch (option)
   Turn on this switch and the work light will light on.

7. Head Light Switch (option)
   Turn on this switch and the head light will light on.

8. Hydraulic Generator Switch
   Turn on this switch to use the hydraulic generator (if equipped).

9. Not used

10. Engine Start Switch / Emergency Pump Switch
    - Operate this switch up without pressing the foot switch and the engine will start.
    - Hold this switch down to operate the machine with emergency pump. (Refer to Chapter 9 for details)

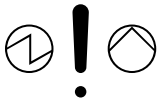

11. Emergency Stop Button
    Push in this button to "OFF" and all functions will stop. Pull out this button to "ON" and the machine will operate.

12. Travel Joystick Controller
    Operate this joystick controller up and the machine will travel forward. Operate this joystick controller down and the machine will travel backward.

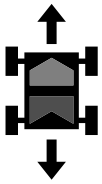

13. Boom Elevation Joystick Controller
    Operate this joystick controller up and the boom will raise. Operate this joystick controller down and the boom will lower.

14. Boom Telescope Joystick Controller
    Operate this joystick controller up and the boom will extend. Operate this joystick controller down and the boom will retract.

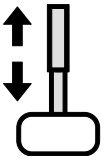

https://truckmanualshub.com/

15. Boom Rotation Joystick Controller

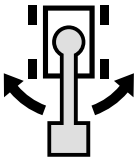

Operate this joystick controller to the left and the boom will rotate clockwise. Operate this joystick controller to the right and the boom will rotate counterclockwise.

16. Steering Switch

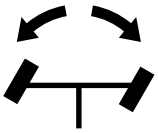

Operate this switch to the left and the machine will steer to the left. Operate this switch to the right and the machine will steer to the right. This operation is possible even when traveling. Even when this switch is returned to neutral, steering will not return to neutral.

17. Not used

18. Platform Rotation Switch

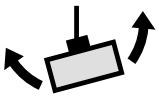

Operate this switch to the left and the platform will rotate clockwise. Operate this switch to the right and the platform will rotate counterclockwise.

19. Fly Jib Switch (if equipped)

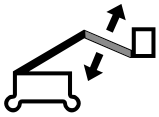

Operate this switch up and the fly jib will raise. Operate this switch down and the fly jib will lower.

20. H/V Control Light

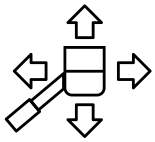

This light goes on when turning on the H/V control select switch and the horizontal/vertical movement function is activated.

21. System Failure Light

This light flashes in the event of a computer control system failure.

⚠CAUTION

Stop using the machine and contact AICHI or an AICHI dealer for inspections, if this light goes on or flashes.

22. Fuel Level Light

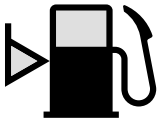

This light goes on when the fuel level is low. Refill the fuel.

(On a level surface, the fuel level light goes on at about 30 liters.)

NOTICE

- **When the fuel level light goes on, refill the diesel fuel.**
- **The capacity of the fuel tank is 120 liters.**

23. Engine Failure Light

This light goes on in the event of an engine failure.

24. Power Indicator Light

This light goes on when the key switch on the lower controls turns to "▭—" (UPPER CONTROLS).

NOTICE

If this light is flashing, operations of the machine are disabled. In that case, release all controls and then operate controls. (See "30. Foot Switch".)

25. Hydraulic Generator Light

- This light will go on when the hydraulic generator switch is turned on.
- This light flashes when the hydraulic oil temperature goes up abnormally.

NOTICE

- **If this light flashes, stop operation of the machine (Turn off the hydraulic generator switch if equipped with the hydraulic generator).**

  Keep the engine running at idling speed and wait until this light goes off.
- **Refer to Section 6 of Chapter 8 for details.**

https://truckmanualshub.com/

26. Tilt Light

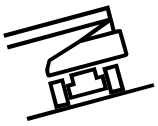

- This light goes on and the alarm buzzer sounds when the machine tilts more than max allowable tilt angle. (See "(7) Tilt Alarm Buzzer" under Section 1 of Chapter 3 for details.)
- When the boom is raised to 60° or more, this light flashes and the travel function is disabled. (See Section 3 of Chapter 3 for details.)

27. Not used

28. Overload Warning Light / Oil Temperature Light

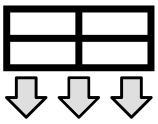

When the platform is overloaded, this light flashes, the alarm buzzer sounds and all of the functions are disabled.

29. DPF Regeneration Request / Exhaust Temperature Warning Light

- This light flashes when a DPF stationary regeneration is required.
- While the DPF stationary regeneration is working, the light goes on to indicate that the exhaust gas temperature is getting high. The light also goes on when the exhaust gas temperature gets high during the DPF reset regeneration (automatic regeneration).

⚠WARNING

- **When this light flashes, immediately stop using the machine and execute the stationary regeneration.**

  Resuming use of the machine while the light is flashing may lead to DPF damage or cause fire.
- **When the light goes on, the exhaust gas is at a very high temperature. (It may soar up to 450°C or so.)**

  It may cause a fire if any combustible objects are left in the vicinity. Also, there is a risk of suffering from a burn due to the high temperature exhaust gas.

30. Foot Switch

Depress this switch to operate the machine on the platform.

NOTICE

Operate controls within 20 seconds after depressing the foot switch. Failure to do so, the power indicator light starts flashing and all controls become disabled even when the foot switch has been depressed. (See "(28) Power Indicator Light.")

In that case, release all controls and then operate again.•

https://truckmanualshub.com/

3. Lower Controls

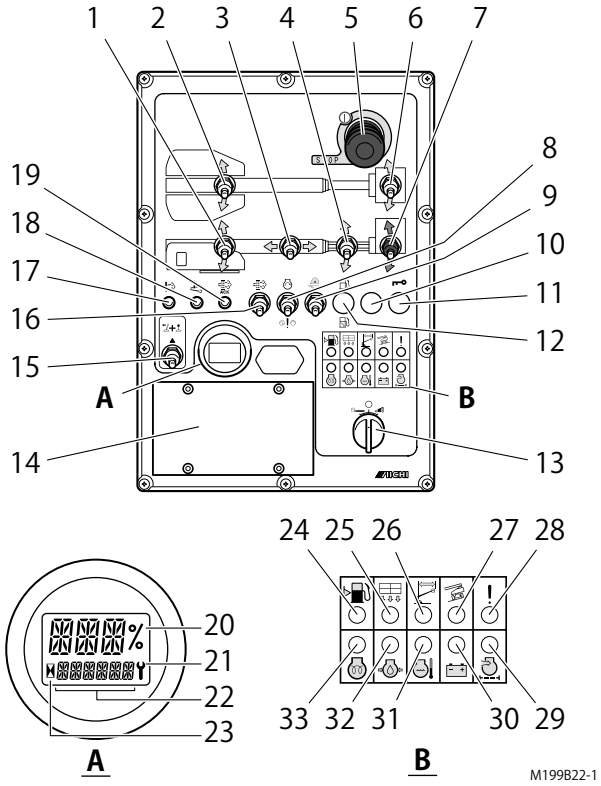

Fig. 4–3

1. Boom Elevation Switch
   Operate this switch up and the boom will raise. Operate this switch down and the boom will lower.
2. Boom Rotation Switch
   Operate this switch up and the boom will rotate counterclockwise. Operate this switch down and the boom will rotate clockwise.
3. Boom Telescope Switch
   Operate this switch to the left and the boom will retract. Operate this switch to the right and the boom will extend.
4. Fly jib Switch
   Operate this switch up and the fly jib will raise. Operate this switch down and the fly jib will lower.
5. Emergency Stop Button
   Push in this button to "OFF" and all functions will stop. Pull out this button to "ON" and the machine will operate.

6. Platform Rotation Switch
   Operate this switch up and the platform will rotate counterclockwise. Operate this switch down and the platform will rotate clockwise.
7. Platform Leveling Switch
   Operate the platform leveling switch to adjust the platform level.
8. Engine Start Switch / Emergency Pump Switch

   - Operate this switch up without operating the enable switch and the engine will start.
   - Hold this switch down to operate the machine with emergency pump. (Refer to Chapter 9 for details)

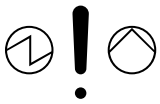

9. Pre-operation Check Switch
   Follow the instruction and hold this switch up when the pre-start check is performed.

10. Not used
11. Not used
12. Not used
13. Key Switch for Upper Control / Off / Lower Control Selection
    - Turn the key switch to the left and the upper controls will operate.

    - Turn the key switch to center position and the machine will be off.

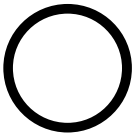

    - Turn the key switch to the right and the lower controls will operate.

NOTICE

To prevent a flat battery, turn off the key switch while the engine is stopped. The engine cannot be started if the battery has gone flat.

14. Fuse Holder
15. Hour Meter
    The hour meter works only when the engine is in motion.
15. Enable Switch
    Hold this switch up to operate the machine on the ground.

https://truckmanualshub.com/

16. DPF Stationary Regeneration Switch

    When the DPF regeneration request light is flashing, holding the DPF stationary regeneration switch upward for 3 seconds or more causes the stationary regeneration to start.

17. NCD System Failure Light

    This light goes on in the event of a NOx control diagnostic system failure.

WARNING

When this light goes on, immediately stop using the machine.

Resuming use of the machine while the light is lit may lead to engine damage or cause fire.

18. DPF Regeneration Request / Exhaust Temperature Warning Light
    - This light flashes when a DPF stationary regeneration is required, followed by beeping of the alarm.
    - While the DPF stationary regeneration is working, the light goes on to indicate that the exhaust gas temperature is getting high. The light also goes on when the exhaust gas temperature gets high during the DPF reset regeneration (automatic regeneration).

WARNING

- **When this light flashes, immediately stop using the machine and execute the stationary regeneration.**

  Resuming use of the machine while the lamp is flashing may lead to DPF damage or cause fire.
- **When the light comes on, the exhaust gas is at a very high temperature. (It may soar up to 450°C or so.)**

  It may cause a fire if any combustible objects are left in the vicinity. Also, there is a risk of suffering from a burn due to the high temperature exhaust gas.

19. DPF Regeneration Approval / Abnormal Combustion Light
    - The light comes on by operating the DPF stationary regeneration switch to start the DPF stationary regeneration.
    - The light flashes when DPF has an abnormality, and thus the DPF regeneration (reset regeneration and stationary regeneration) is not possible.

CAUTION

When this light flashes, immediately stop using the machine and have it inspected.

Resuming use of the machine may cause damage to DPF and the engine.

20. Digital Display
    - Under normal conditions, nothing is shown on the digital display.
    - When a problem occurs, a diagnostic code such as “LMT” or “ERR” will appear on the digital display. Then, a three digit number related to the diagnostic code will appear on the digital display. When more than one set of diagnostic code and number exists, each set will appear on the digital display for 3 seconds before changing on to next set. After the last set appears, the battery level will appear and then the display will return back to the first set.

NOTICE

For the diagnostic codes and numbers and their descriptions, refer to Section 2 of Chapter 12 for “Diagnostic Codes Chart”.

21. Wrench Icon

    When a problem occurs, the wrench icon will display on the multi-function Indicator.

22. Hour Meter

    The hour meter works only when the machine is in motion.

23. Hour Meter Icon

    When the hour meter is running, the hour meter icon displays and flashes on the multi-function display.

https://truckmanualshub.com/

24. Fuel Level Light
    This light goes on when the fuel level is low. Refill the fuel.

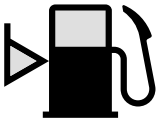

25. Overload Warning Light
    When the platform is overloaded, this light flashes, the alarm buzzer sounds and all of the functions are disabled.

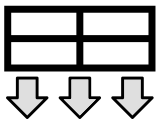

26. Not used
27. Tilt Light
    This light goes on and the alarm buzzer sounds when the machine tilts more than max. allowable tilt angle.

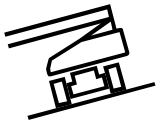

28. System Failure Light
    This light goes on or flashes in the event of a computer control system failure.

⚠CAUTION

Stop using the machine and contact AICHI or an AICHI dealer for inspections, if this light goes on or flashes.

29. Air Filter Clog Light
    This light goes on when the air filter is clogged.
    If this light goes on while the engine is in motion, clean or replace the air filter element.

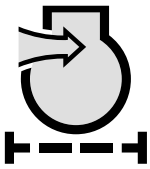

30. Charge Light
    After starting the engine, this light goes off.
    If this light goes on while the engine is in motion, check the charging system, e.g. alternator and fan belt.

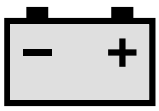

31. Water Temperature Light
    When the engine cooling water temperature goes up abnormally, the engine stops and this light goes on to protect the engine from overheat.

⚠CAUTION

If this light goes on during operations, stop using the machine and check the engine cooling system, e.g., shortage of cooling water and broken fan belt.

⚠DANGER

When the engine is overheated, do not remove the radiator cap, as the heated water will splash out, resulting in scald.

32. Oil Pressure Light
    After starting the engine, this light goes off. Check the engine lubrication system, e.g., shortage of engine oil, if this light goes on while the engine is in motion.

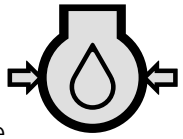

33. Preheat Light
    This light goes on when the key switch is turned to "" (LOWER CONTROLS) or "" (UPPER CONTROLS) and goes off when the preheating is completed.

https://truckmanualshub.com/

Chapter 5
Workplace Check

⚠ DANGER

Do not move the machine to the workplace until the workplace check is performed.

- Make sure to check the workplace before starting operation. Make sure there is none of the following hazards:
  - Near electric power lines and apparatus
  - Drop-offs or holes, including those concealed by water, ice, mud, etc.
  - Slop(s)
  - Slippery or icy surfaces
  - Inadequate surface support to withstand all load forces imposed by the machine in all operating configurations
  - Bumps and floor obstructions and electrical conductors
  - Curbs
  - Debris
  - Overhead obstructions
  - Wind and weather conditions
  - Dark workplace (night work)
  - Presence of unauthorized persons
  - Other possible unsafe conditions

- Remove the hazards, if any, after the workplace check. If it is not possible to remove them, do not move the machine to the workplace.
- The machine can be used only on surfaces which are firm and for which all 4 wheels can maintain contact evenly with the ground.
- During work, always pay attention to surroundings and make sure there is no hazard.
- To prevent collision, place warning signs, indicate detours and install collision-prevention guards around the workplace, so that pedestrian and cars can pass safely.
- When traveling on a surface-coated concrete or blue sheet, the machine could be charged electrostatically. To help prevent breakage of the machine due to static electricity, install an antistatic strap to the machine or take another measure to suppress charge of static electricity.

https://truckmanualshub.com/

Chapter 6
Pre-operation Checks

⚠ DANGER

If the pre-operation checks reveal any abnormalities, immediately put an "Out of Order" sign on the machine, and stop using the machine and follow proper lockout procedures. The use of the machine not repaired can cause serious injury or death. After repairs are completed, perform all pre-operation checks again from the beginning.

⚠ WARNING

- **Do not operate the machine before performing all pre-operation checks described in this manual. Ensure that pre-operation checks are performed every time before you operate the machine.**
- **Perform the pre-operation checks on a firm, level surface. Begin the checks with the platform lowered.**
- **If there is damage, such as cracks, on the welds of the platform guardrail, or on the guardrail pipes, replace the guardrails immediately.**
- **If there is damage, such as cracks or deformation, on the floor of the platform, immediately contact AICHI or an AICHI dealer for repairing.**
- **Make sure to perform the checks with no load on the platform, because if there is a load on the platform, the checks will not be accurate.**

⚠ CAUTION

Damage and stains to the decals will obstruct correct handling. Immediately remove the stain, or replace the decals.

NOTICE

- **The motion alarm buzzer sounds when the machine is in motion to warn to the people nearby.**
- **Make a copy of the daily inspection check sheet (at the end of this manual). Make a check in the appropriate box on the sheet while performing the pre-operation checks.**

1. Visual Check

Step 1

Circle the machine once and check visually that there are no oil leaks, and no damage to the decals or to the machine.

In winter or cold climate, remove snow and ice from the machine for safety before using the machine. At the time, do not pour hot water to the machine to melt snow and ice.

Step 2

Check for cracks, deformation, or damage in the boom, platform, and other parts. Check that all the covers are closed securely and all the guardrails are attached properly. Check for loose, damaged, or missing bolts.

Step 3

If the cover and/or links (both sides) of the overload sensing system are damaged or deformed, contact AICHI or an AICHI dealer for inspections.

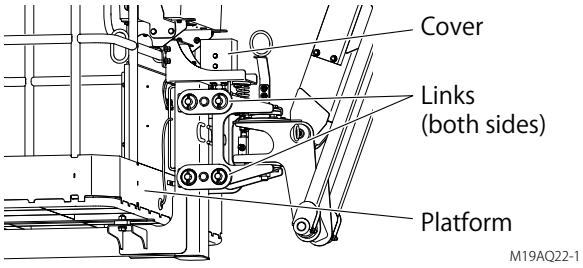

Fig. 6–1

https://truckmanualshub.com/

Step 4

Check that all decals are in place, legible and not damaged. Replace any missing or damaged decals. Use mild soap and water to clean decals. Refer to Chapter 2 for decals and their locations.

Step 5

Check the fuel, hydraulic oil, battery fluid, engine oil, and coolant levels when the platform completely lowered. Refer to Chapter 7 for details.

Step 6

Check that greasing points are lubricated sufficiently.

Step 7

Check all tires for damage, chippings of block, or uneven wear. Check that all wheels are properly secured and no missing bolts.

2. Function Check

WARNING

If the boom stops automatically during operation and the system failure light on the lower controls flashes, the control system may have failed. Immediately contact AICHI or an AICHI dealer for inspections.

NOTICE

- **The machine cannot be operated when the upper or lower emergency stop button is pushed in. Pull out both of the upper and lower emergency stop buttons before pre-operation checking.**
- **The platform leveling system may not work properly when ambient temperature is low. Perform warming-up operation of the machine to raise the hydraulic oil temperature.**

2–1 Preparations for Function Check

Step 8

Make sure the rotation lock pin is unlocked.

NOTICE

Operating with rotation locked will result in machine damage.

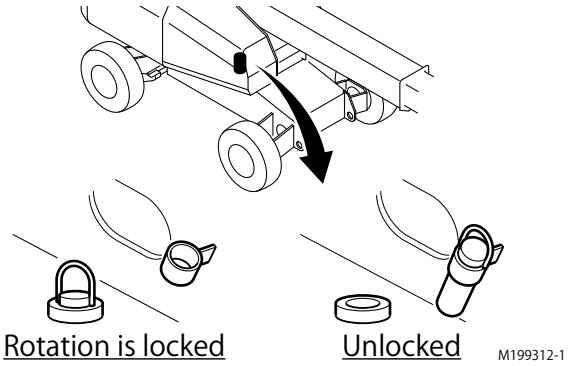

Fig. 6–2

Step 9

Put the machine on a firm, level surface.

Step 10

Set up the machine in the following state:

- Platform rotation: center
- Platform load: 0 kg
- Boom elevation: fully lowered
- Boom rotation: rear center
- Boom telescope: fully retracted
- Fly jib angle: horizontal

2–2 Lower Controls Check

Do the checks first with the lower controls, then with the upper controls. In steps from 1 to 18, operate the boom using the lower controls.

Step 11

Turn the key switch to "" (LOWER CONTROLS) and make sure that the alarm buzzer sounds for about 3 seconds, just after turning on.

Step 12

Hold the pre-operation check switch up.

Make sure the alarm buzzer sounds for about 3 seconds after the pre-operation check switch has been held up.

WARNING

If the buzzer does not sound properly, the machine is faulty. Do not use the faulty machine.

https://truckmanualshub.com/

NOTICE

If the buzzer does not stop sounding , the boom functions are disabled.

Step 13

Start the engine and, idle the engine for warming up.

Step 14

Make sure there are no strange sounds come from any part.

Step 15

Check that all safety systems are functioning properly.

- Emergency stop: push the emergency stop button while operating the boom, and make sure that both the boom operation and the engine stop.
- Emergency pump: Make sure that the boom can be operated while the emergency pump is being operated.

Step 16

Check that no oil is leaking from the hydraulic components, hoses and pipes.

Step 17

Raise the boom fully, and check the boom extension wire ropes for any damage.

- No wobbling or unsteady movements when telescoping the boom. (No delay in starting the movement of the 3rd boom relative to the 2nd boom.)
- No abnormalities such as loose nuts or loose brackets at the wire rope ends.

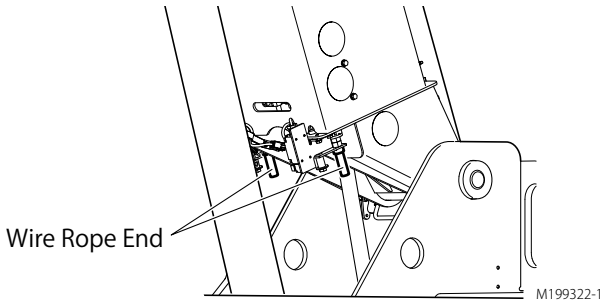

Fig. 6–3

Step 18

With the boom fully raised, rotate the boom 360° (1 rotation). Then fully extend the boom.

Step 19

Leave the machine for a few minutes with the boom fully extended and fully raised. Check visually that the boom does not descend on its own. Make sure there are no strange sounds coming from any of the parts.

Step 20

Retract the boom fully and lower the boom fully to lower the platform to the ground.

Step 21

Get on the platform to apply a weight of about 50–100 kg. Make sure that the clearance between limit switches and bolts is reduced by about 1–2 mm. (Refer to Fig. 6–4.)

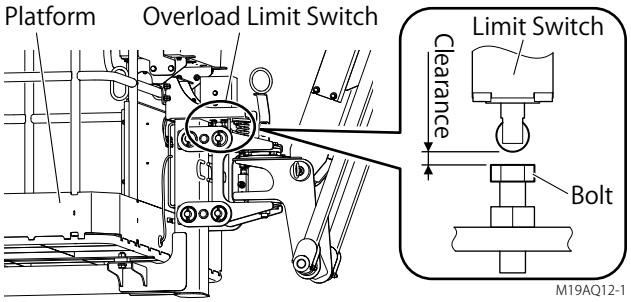

Fig. 6–4

2–3 Upper Controls Check

If no abnormalities are revealed in steps up to the previous section, check the following using the upper controls.

WARNING

- **Retract the boom fully and lower the boom under the horizontal prior to the upper controls check.**
- **Securely close and lock the doors of the covers before operating. Doors opening suddenly through the movements of the machine is hazardous.**

Step 22

Turn the key switch to "▭" (UPPER CONTROLS).

Step 23

Wear the safety harness and get on the platform and close gate. After getting on the platform, immediately hook the safety harness to the lanyard anchorage point. (See Section 3 of Chapter 8.)

https://truckmanualshub.com/

Step 24

Start the engine.

Step 25

Rotate the platform and make sure that the platform rotates smoothly without excessive free play.

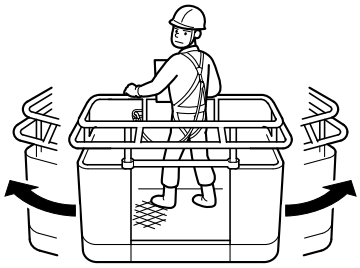

Fig. 6–5

Step 26

Check that all safety systems are functioning properly.

- Emergency stop: Push the emergency stop button while operating the boom, and make sure that both the boom operation and the engine stop.
- Foot switch: while operating the boom, release the foot switch, and make sure the boom operation stops.
- Emergency pump: Make sure that the boom can be operated while the emergency pump is being operated.
- Touch switch: Push the center of the touch switch toward the upper controls while operating the boom, and make sure that both the boom operation and the engine stop.

NOTICE

When stopping the engine with the touch switch, push in the emergency stop button. After a lapse of 1 second, pull out the emergency stop button and the machine functions will be restored.

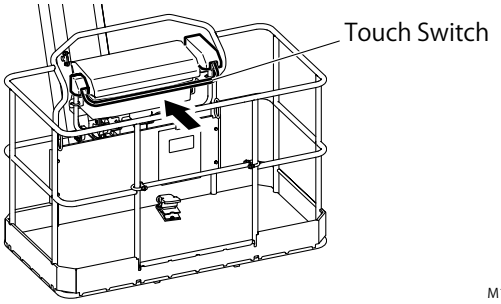

Fig. 6–6

2–4 Limited Travel Speed Check

If no abnormalities are revealed in steps up to the previous section, check the following using the upper controls.

Step 27

Put the machine on a firm, level surface.

Step 28

Set up the machine in the following state:

- Platform load: 1 operator
- Boom elevation: below horizontal
- Boom telescope: fully retracted

Step 29

Select the travel speed select switch to "🐇" (HIGH SPEED) and attempt to travel at high speed.

Make sure that the machine travels at low speed and the travel alarm buzzer sounds.

2–5 Tilt Warning Check

Step 30

Set up the machine in the following state:

- Platform load: 1 operator
- Boom elevation: horizontal
- Boom telescope: fully retracted
- Fly jib angle: horizontal

Step 31

Make sure the tilt light goes on and alarm buzzer sounds when the machine tilts more than 5°, e.g. by traveling up onto a slope (within the gradeability).

2–6 Oscillation Axle Checks

If no abnormalities are revealed in steps up to the previous section, check the oscillation axle as follows.

Step 32

Put the machine on a firm, level surface.

Step 33

Set up the machine in the following state:

- Platform position: center
- Platform load: 1 operator
- Boom elevation: horizontal
- Boom rotation: rear center
- Boom telescope: approx. 1 m extended
- Fly jib angle: horizontal

https://truckmanualshub.com/

Step 34

Rotate the boom clockwise approx. 20° from rear center and raise the boom up to approx. 30° from horizontal.

Result: the oscillation axles should be locked.

Step 35

Travel the left steer tire up onto a 10 cm block or curb.

Result: the machine chassis should be tilted.

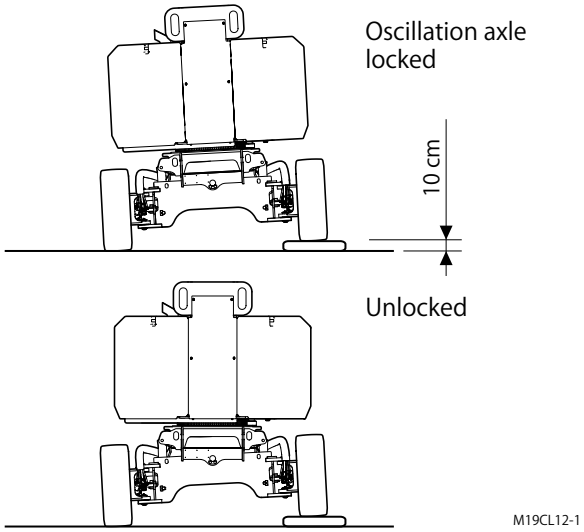

Fig. 6–7

Step 36

Position the boom rear center while in tilt position and then operate the travel function.

Result: the oscillation axles should unlock and the machine chassis should be in level.

Step 37

Travel to get off the block or curb.

Step 38

Rotate the boom counterclockwise approx. 20° from rear center and raise the boom up to approx. 30° from horizontal.

Result: the oscillation axles should be locked.

Step 39

Travel the right steer tire up onto a 10 cm block or curb.

Result: the machine chassis should be tilted.

Step 40

Position the boom rear center while in tilt position and then operate the travel function.

Result: the oscillation axles should unlock and the machine chassis should be in level.

Step 41

Travel to get off the block or curb.

Step 42

Rotate the boom clockwise approx. 20° from rear center and raise the boom up to approx. 30° from horizontal.

Result: the oscillation axles should be locked.

Step 43

Travel the left steer tire up onto a 10 cm block or curb.

Result: the machine chassis should be tilted.

Step 44

Position the boom horizontal while in tilt position and then operate the travel function.

Result: the oscillation axles should unlock and the machine chassis should be in level.

Step 45

Travel to get off the block or curb.

Step 46

Rotate the boom clockwise approx. 20° from rear center and extend the boom approx. 1 m.

The oscillation axles should be locked.

Step 47

Travel the left steer tire up onto a 10 cm block or curb.

Result: the machine chassis should be tilted.

Step 48

Retract the boom fully while in tilt position and then operate the travel function.

Result: the oscillation axles should unlock and the machine chassis should be in level.

Step 49

Travel to get off the block or curb.

2–7 Last Check

Step 50

Retract the boom fully and lower the boom fully.

Step 51

Put the machine on a firm, level surface and turn the key switch to "◯" (OFF) to shut down the engine.

Step 52

Circle the machine and check visually that there are no oil leaks.

The pre-operation check is now complete.

https://truckmanualshub.com/

Chapter 7
Operator Maintenance

1. Storage Method

WARNING

After use the machine, beware of hot parts such as engine and hydraulic oil tank. Contact with hot parts may cause severe burns.

After each use, store the machine as follows:

Step 1

Park the machine on a firm, level surface.

Step 2

Take all tools and materials from the platform.

Step 3

Retract and lower the boom fully.

Step 4

Turn the key switch to "◯" (OFF) to shut down the engine, remove the key to prevent using the machine without permission, and store it suitably.

Step 5

Chock the wheels.

Step 6

Perform the daily maintenance.

2. Daily Maintenance

NOTICE

Only daily maintenance items that specified in this manual shall be performed by the operator.

2–1 Refuel the Machine

WARNING

- **Never refuel with the engine running. Keep open flames or any other form of ignition well away when refueling.**
- **If using a fuel carrying can, refuel in a stable posture using a scaffold such as stools.**

NOTICE

- **After work is completed, always fill up the tank to prevent mixing of moisture into fuel in the tank.**
- **Pay attention so as not to mix dirt and debris during filling the fuel tank.**

Step 1

Check fuel level with the fuel level gauge located on the fuel tank.

Step 2

Pour fuel into the fuel tank carefully. Do not refuel beyond the maximum level.

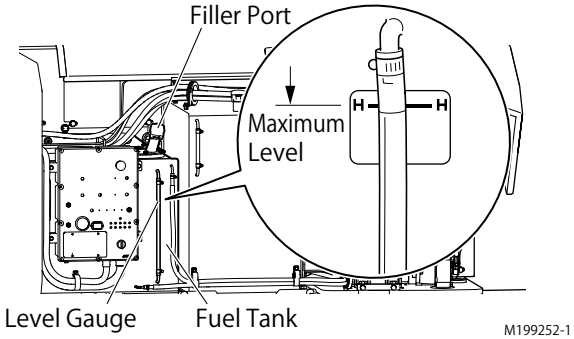

Fig. 7–1

https://truckmanualshub.com/

2–1–1 Diesel Fuel Specifications

Diesel fuel should comply with the following specifications. The table lists several worldwide specifications for diesel fuels. (See table below.)

Table 7–1 Diesel Fuel Specifications

Diesel Fuel Specification	Location
EN590 (2009)	European Union
ASTM D975 No. 1D S15 No. 2D S15	USA
ISO 8217 DMX	International
BS 2869-A1 or A2	United Kingdom
JIS K2204 Grade No.2	Japan
KSM-2610	Korea
GB252	China

■ Additional technical fuel requirements

- When operating the engine in cold districts or high altitudes, the fuel cetane number should be equal to 45 or higher.
- The sulfur content must not exceed 15 ppm by volume. A higher sulfur content fuel may cause sulfuric acid corrosion in the cylinders of the engines. Especially in U.S.A. and Canada, Ultra Low Sulfur Diesel (ULSD) fuel must be used.
- Use the fuel that can be used where the temperature is 12 ° C (53.6 ° F) lower than the expected lowest temperature to prevent the fuel from freezing.
- Water and sediment in the fuel should not exceed 0.05 % by volume.
- Ash content not to exceed 0.01 % by volume.
- Carbon residue content not to exceed 0.35 % by volume. Less than 0.1 % is preferred.
- Total aromatics content should not exceed 35 % by volume. Less than 30 % is preferred.
- PAH (Polycyclic Aromatic Hydrocarbons) content should be below 10 % by volume.
- Metal content of Mg, Si, and Al should be equal to or lower than 1 mass ppm. (Test analysis method JPI-5S-44-95)
- The diesel fuel should be free from Zn and Na.
- Lubricity: Wear mark of WS1.4 should be Max. 0.018 in. (460 μm) at HFRR test.

■ Precautions and concerns regarding the use of diesel fuel

- Never use kerosene.
- Never mix kerosene or used engine oil with the diesel fuel.
- Never use residual fuels that cause diesel fuel filter clogging and carbon deposits on the nozzles.
- Never use fuels stored for long time in a drum can or the like.
- Never keep fuel in containers with zinc plating on the inside.
- Never use fuels purchased from unauthorized dealer.
- Fuel additives are not recommended. Some fuel additives may cause poor engine performance.

  Consult AICHI or an AICHI dealer for more information.

2–2 Check the Hydraulic Oil Level

- Maintaining the hydraulic oil at sufficient level is very important for the machine operation. Deficient of the hydraulic oil level can damage hydraulic parts.
- Daily checks from the oil level gauge can confirm the change of the hydraulic oil level that might show the hydraulic system problems.

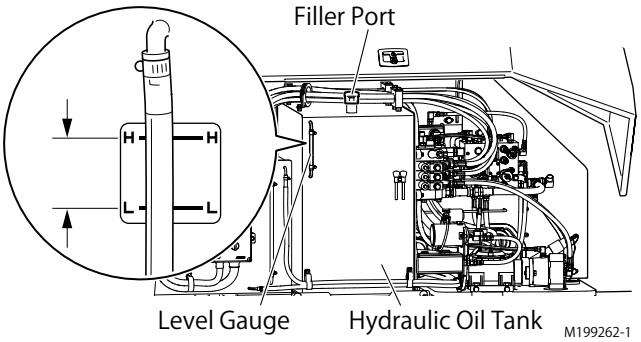

Fig. 7–2

Step 1

Make sure the machine is level.

Step 2

Make sure the boom is retracted and lowered fully.

Step 3

Check the oil level gauge located on the side of the hydraulic oil tank.

Step 4

Add the hydraulic oil if necessary.

https://truckmanualshub.com/

2–2–1 Hydraulic Oil Specifications

Select the hydraulic oil types by referring to the following figure:

Table 7–2 Hydraulic Oil Specifications

Type	Specified brand	Grade
Intended for general usage	Shell Tellus S2 M 22 or equivalent	ISO VG 22
For cold region	JXTG Nippon Oil & Energy Hydlux LT 15 or equivalent	—

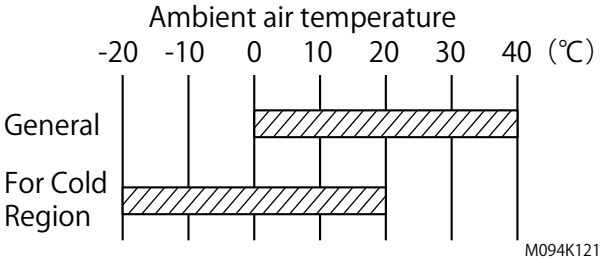

Fig. 7–3

NOTICE

- **When the outdoor atmospheric temperature is lower than the serviceable temperature range of the hydraulic oil being used in the machine, first raise the hydraulic oil temperature by allowing the machine to run idle for warm up before starting work.**
- **The hydraulic oil temperature curve differs with the operation time and work details. If the hydraulic oil temperature overshoots in an abnormal way by the long-time operation or by the high load work, interrupt the work to allow the hydraulic oil temperature to go down.**
- **Contact AICHI or an AICHI dealer for the replacement work.**
- **For other oils, refer to Section 3–3–1 "List of Recommended Lubricants" in this chapter.**

2–3 Check the Battery Fluid Level

CAUTION

The battery fluid contains corrosive acid. When dealing with the battery, always wear appropriate protective clothing and equipment to protect your hands, eyes, face and body, and avoid contacting battery fluid.

Step 1

Check the battery fluid level in each cell. It should be between the "UPPER LEVEL" and "LOWER LEVEL" lines.

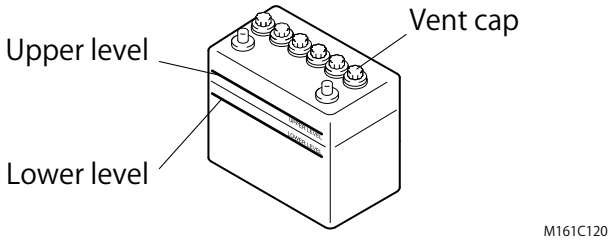

Fig. 7–4

Step 2

When the amount of fluid nears the "LOWER LEVEL" line, open the cap and fill with distilled water so it is at the "UPPER LEVEL" line.

NOTICE

- **If operation continues with insufficient battery fluid, the battery life is shortened, and the battery may overheat and explode.**
- **Do not overfill.**
- **Do not add anything other than distilled water. Failure to obey this instruction could shorten the battery life.**

Step 3

Wipe up any spills immediately. Keep the terminals and the upper surface of the battery clean.

https://truckmanualshub.com/

2–4 Check the Engine Oil Level

WARNING

- **Stop the engine and cool down before checking the engine oil level to avoid being burned.**
- **Never leave the key in the key switch when checking the engine oil level. Someone may accidentally start the engine without realizing it while checking the engine oil level. Such accidents could result in a serious injury.**

NOTICE

- **Only use the engine oil specified. Other engine oils may affect warranty coverage, cause internal engine components to seize and/or shorten engine life.**
- **Prevent dirt and debris from contaminating the engine oil. Carefully clean the oil cap/dipstick and the surrounding area before you remove the cap.**
- **Never mix different types of engine oil. This may adversely affect the lubricating properties of the engine oil.**
- **Never overfill. Overfilling may result in white exhaust smoke, engine overspeed or internal damage.**
- **Be sure the engine oil, engine oil storage containers, and engine oil filling equipment are free of sediments and water.**
- **Change the engine oil after the first 50 hours of operation and then at every 250 hours thereafter.**
- **Select the oil viscosity based on the ambient temperature where the engine is being operated. See the SAE service grade viscosity chart (Fig. 7–6).**
- **AICHI does not recommend the use of engine oil "additives".**
- **Never mix different brands of lubricating oils.**

Daily checking is important to keep the engine in good operating condition.

Step 1

Make sure the machine is level.

Step 2

Turn the key switch to "○" (OFF) to shut down the engine and remove the key.

Step 3

Remove dipstick (Fig. 7–5, 1) and wipe with clean cloth.

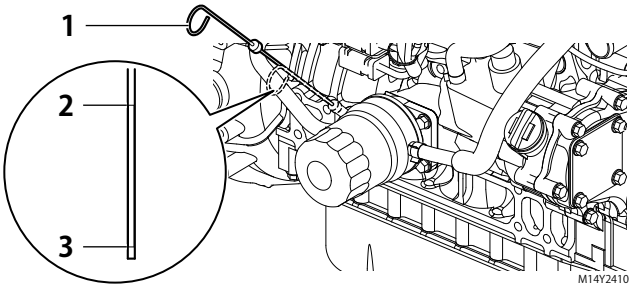

Fig. 7–5

Step 4

Fully reinsert dipstick.

Step 5

Remove dipstick. The oil level should be between upper (Fig. 7–5, 2) and lower (Fig. 7–5, 3) lines on the dipstick.

Step 6

Fully reinsert dipstick.

Step 7

Add the engine oil if necessary.

2–4–1 Engine Oil Specifications

Use an engine oil that meets or exceeds the following guidelines and classifications:

■ Service categories

- API service categories CJ-4/CK-4
- ACEA service categories E6
- JASO service category DH-2

■ Definitions

- API classification (American Petroleum Institute)
- ACEA classification (Association des Constructeurs Européens d'Automobilies)
- JASO (Japanese Automobile Standards Organization)

■ Additional technical engine oil requirements:

The engine oil must be changed when the Total Base Number (TBN) has been reduced to 1.0 mgKOH/g. TBN (mgKOH/g) test method; JIS K-201-5.2-2 (HCl), ASTM D4739 (HCl).

https://truckmanualshub.com/

2–4–2 Engine Oil Viscosity

Select the appropriate engine oil viscosity based on the ambient temperature and use the SAE Service Grade Viscosity Chart in figure below.

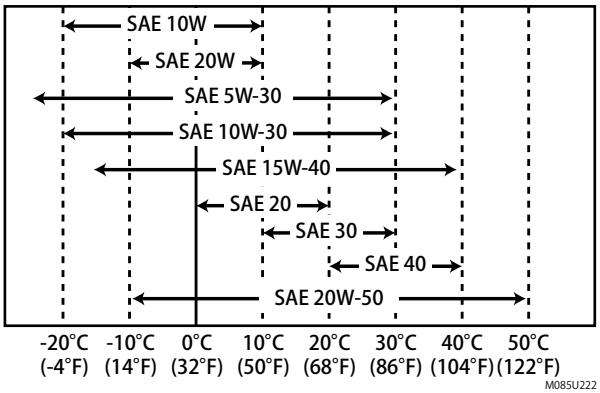

Fig. 7–6

2–5 Check the Cooling System

WARNING

- **Stop the engine and cool down before checking the cooling system to avoid being burned.**
- **Never leave the key in the key switch when checking the cooling system. Someone may accidentally start the engine without realizing it while checking the cooling system. Such accidents could result in a serious injury.**

CAUTION

Wear eye protector and rubber gloves when handling the engine coolant. If contact with the eyes or skin should occur, flush eyes and wash immediately with clean water.

NOTICE

Do not remove the radiator cap.

Step 1

Make sure the machine is level.

Step 2

Turn the key switch to "◯" (OFF) to shut down the engine and remove the key.

Step 3

Check the level of engine coolant in the reserve tank (Fig. 7–7, 1). The coolant level in the tank should be between the "LOW" mark (Fig. 7–7, 1) and "FULL" mark (Fig. 7–7, 3).

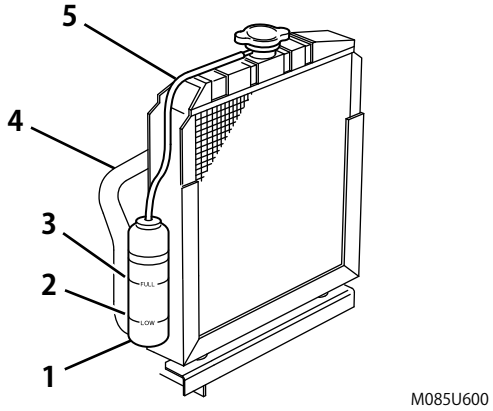

Fig. 7–7

Step 4

Add additional engine coolant to the reserve tank if necessary.

Step 5

Check the radiator hoses (Fig. 7–7, 4) for cracks, abrasions, cuts or other damage. Replace as necessary.

Step 6

Check the hose (Fig. 7–7, 5) that connects the reserve tank (Fig. 7–7, 1) to the radiator. Be sure it is securely connected and there are no cracks or damage. If the hose is damaged, engine coolant will leak out instead of going into the reserve tank.

2–5–1 Engine Coolant Specifications

Use a Long Life Coolant (LLC) or an Extended Life Coolant (ELC) that meets or exceeds the following guidelines and specifications.

- ASTM D3306 (US)
- JIS K-2234 (Japan)
- SAE J814 or J1034 (International)

■ Alternative engine coolant

If an Extended or Long Life Coolant is not available, alternatively, you may use an ethylene glycol or propylene glycol based conventional coolant (green).

https://truckmanualshub.com/

NOTICE

- **Always use a mix of coolant and water. Never use water only.**
- **Mix coolant and water per the mixing instructions on the coolant container. AICHI approves the use of coolant with a concentration of 30% to 60% by volume.**
- **Water quality is important to coolant performance. AICHI recommends that soft, distilled or demineralized water be used to mix with coolants.**
- **Never mix extended or long life coolants and conventional (green) coolants.**
- **Never mix different types and/or colors of extended life coolants.**
- **Replace the coolant every 1000 engine hours or once a year.**

3. Periodic Maintenance

⚠WARNING

Periodic maintenance shall only be performed by qualified service technicians.

3–1 Monthly and Annual Inspection

- Perform a monthly and annual inspection referring to the separate service manual.
  - Depending on the laws of the country in which the machine is being used, keep the records of the checks for the required number of years.
  - For any doubts you may have about handling, inspection or spare parts, contact AICHI or an AICHI dealer.
  - Refer to the separate service manual for what must be checked regularly.
- If the machine has not been used for over one month, make sure to perform the monthly inspection before use.

3–2 Precautions concerning vehicle rust and corrosion

⚠WARNING

Disregarding rust and corrosion on vehicle structural members may impair strength and may lead to unforeseen accidents. Even where no external rust or corrosion is visible, corrosion inside structural members such as the boom interior may impair structural integrity and unforeseen accidents.

Do the following to prevent corrosion:

1) Wash the vehicle thoroughly to remove any salt, including mud or deicing agent adhering to structural members.
2) Inspect regularly for rust and corrosion. Apply anti-rust paint, where necessary.
3) Consult with AICHI or an AICHI dealer for advice when rectifying the anticorrosion paint on the following vehicles:
   - Vehicles used for extended periods
   - Vehicles used or driven in coastal areas
   - Vehicles driven frequently on roads coated with deicing agent

https://truckmanualshub.com/

3–3 Lubrication

3–3–1 List of Recommended Lubricants

Service life of the machine is significantly affected by the quality of oils and greases employed.

We recommend the use of specified oils and greases (described below) that are best fit to the machine (hereafter referred to as "specified brand").

If those other than the specified brands are to be used, employ those that are equivalent to the specified brands.

Table 7–3 Recommended Hydraulic Oil

Used spot	Specified brand			Grade	Type
	Shell Oil	JXTG Nippon Oil & Energy	Idemitsu Kosan		
Hydraulic Oil Reservoir	Shell Tellus S2 M 22	Hyrando Wide 22	Daphne Super Hydro 22X	ISO VG 22	Intended for general usage

Table 7–4 Recommended Gear Oil

Used spot	Specified brand				
	Shell Oil	JXTG Nippon Oil & Energy	Idemitsu Kosan	ExxonMobil	Cosmo Oil
Rotation Gearbox	Shell Spirax EP90	Gear oil GL-4 90	Apolloil Gear HE-90S	IMobilube GX80W-90	Cosmo Gear GL-4-90

Table 7–5 Recommended Grease

Used spot	Specified brand			Remarks
	Shell Oil	JXTG Nippon Oil & Energy	Nihon Parkerizing	
• Circumference of cylinder pin • Rotation bearing and the like	Shell Alvania EP Grease 2	Epnoc Grease AP 2	—	General grease
Rust prevention of wire ropes	Shell Malleus Fluid RL	Cranoc Compound 1	NOX RUST 366-20	Gear Compound
Boom Sliding surface	Shell Alvania Grease HDX	—	—	Molybdenum grease

Note: Apply machine oil to the hinges as needed.

https://truckmanualshub.com/

3–3–2 Lubricate Every 100 Hours or 1 Month

WARNING

Perform lubrication work in a stable posture using a scaffold such as stools. Do not climb up the machine to lubricate it.

CAUTION

Do not lubricate when temperatures outdoors are below -10° C.

Lubricant: General grease ➡ Molybdenum grease ⇨

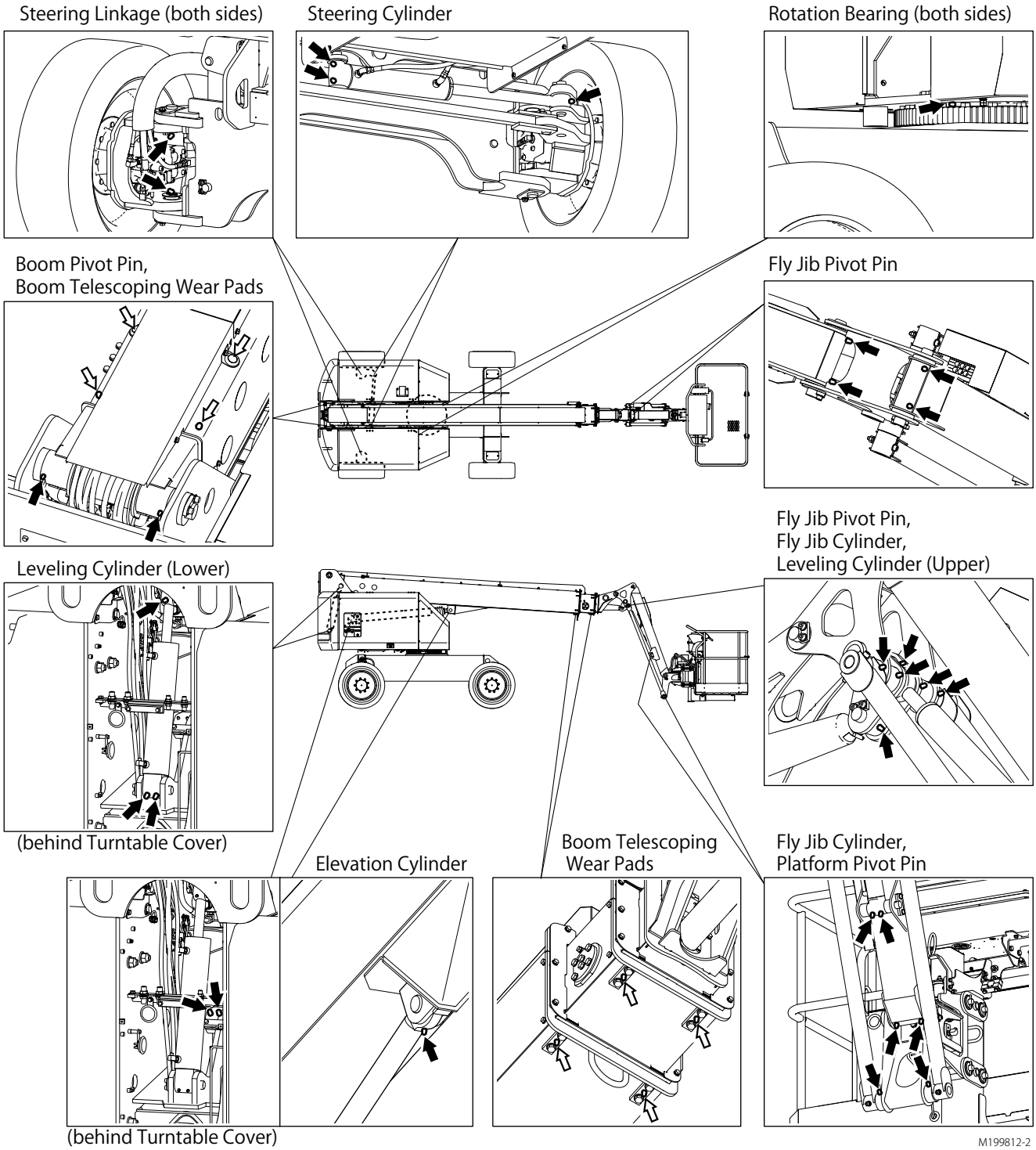

Fig. 7–8

https://truckmanualshub.com/

3–4 Change Oil Every 1200 Hours or 12 Months

(For new machine, change oil after using 300 hours or 3 months.)

WARNING

Perform oil replenishing and changing work in a stable posture using a scaffold such as stools. Do not climb up the machine to replenish or change oil.

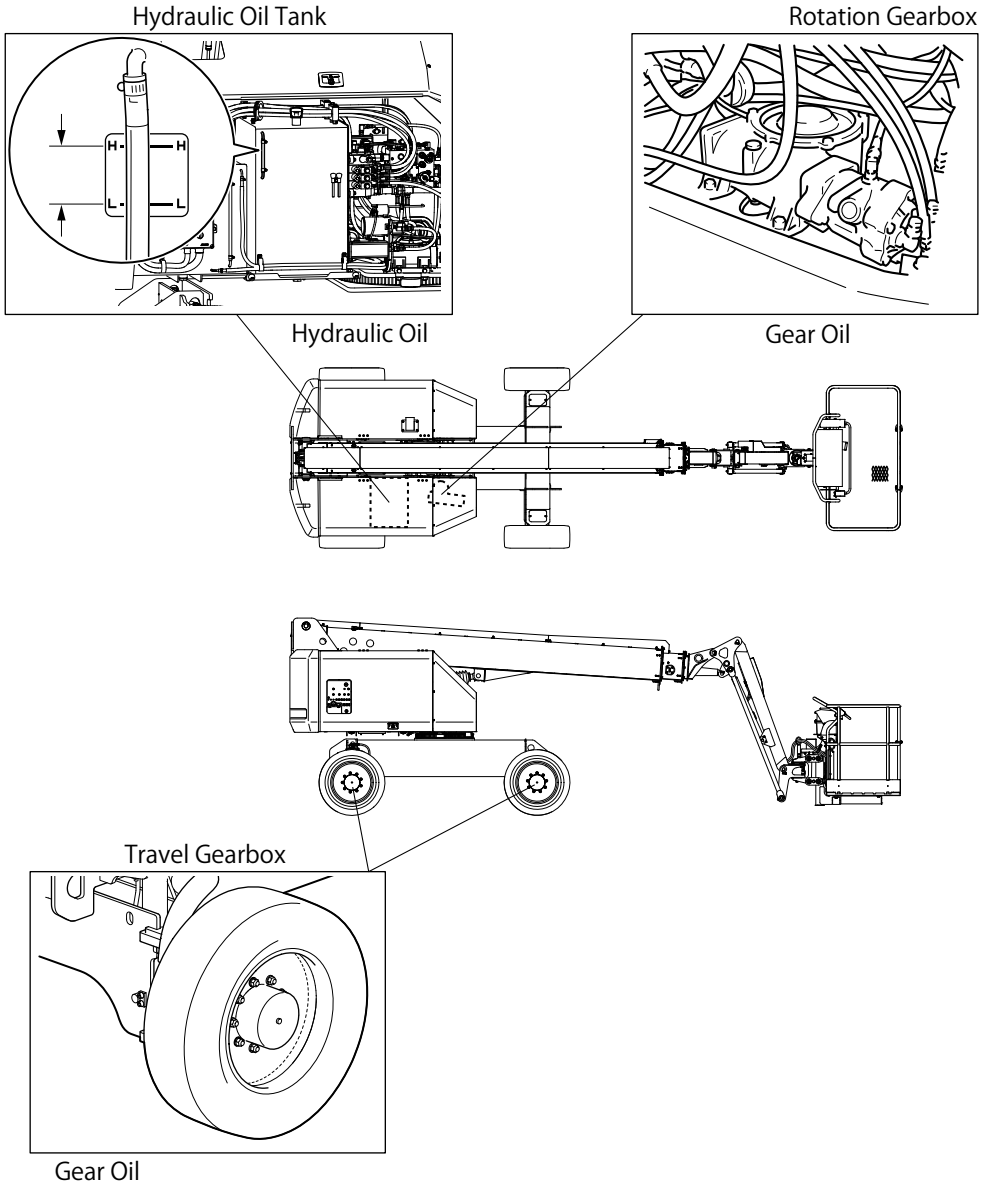

Fig. 7–9

https://truckmanualshub.com/

3–5 Engine Maintenance

Engine deterioration and wear occurs in proportion to length of time the engine has been in service and the conditions the engine is subject to during operation. Periodic maintenance prevents unexpected downtime, reduces the number of accidents due to poor machine performance and helps extend the life of the engine.

NOTICE

- **The engine, including the emissions control system, shall be operated, used and maintained in accordance with the instructions provided to the end-users in order to maintain the emissions performance of the engine.**
- **No deliberate tampering with or misuse of the engine emissions control system should take place.**
- **It is essential to take prompt action to rectify any incorrect operation, use or maintenance of the emissions control system in accordance with the rectification measures indicated by the warnings referred to Table 16–1 (TNV-CR Explanations of the Possible Malfunctions of the Emissions Control System) of Appendix C and each chapters about warning lights of upper and lower control boxes.**
- **The operator will be informed by the operator warning system when the emission control system does not function correctly.**
- **Ignoring the operator warning signals will lead to the activation of the operator inducement system, resulting in an effective disablement of the machine operation.**
  Refer to Table 16–2 (Emission diagnosis required in European Stage Ⅴ) of Appendix C.

3–5–1 Periodic Maintenance

⚠WARNING

Exhaust Hazard!

- **Never operate the engine in an enclosed area such as a garage, tunnel, underground room, manhole or ship's hold without proper ventilation.**
- **Never block windows, vents, or other means of ventilation if the engine is operating in an enclosed area. All internal combustion engines create carbon monoxide gas during operation. Accumulation of this gas within an enclosure could cause illness or even death.**
- **Make sure that all connections are tightened to specifications after repair is made to the exhaust system.**
- **Failure to comply could result in death or serious injury.**

Perform periodic maintenance procedures in an open, level area free from traffic. If possible, perform the procedures indoors to prevent environmental conditions, such as rain, wind, or snow, from damaging the machine.

■ The Importance of Daily Checks

Periodic Maintenance Schedules assume that the daily checks are performed on a regular basis. Make it a habit of performing daily checks before the start of each shift.

■ Keep a Log of Engine Hours and Daily Checks

Keep a log of the number of hours the engine is run each day and a log of the daily checks performed. Also note the date, type of repair (e.g., replaced alternator), and parts needed for any service needed between the periodic maintenance intervals. Periodic maintenance intervals are every 50, 250, 500, 1000, 1500, 2000 and 3000 engine hours. Failure to perform periodic maintenance will shorten the life of the engine.

■ AICHI Replacement Parts

AICHI recommends that you use genuine AICHI parts when replacement parts are needed. Genuine replacement parts help ensure long engine life.

https://truckmanualshub.com/

■ Tools Required:

Before you start any periodic maintenance procedure make sure you have the tools you need to perform all of the required tasks.

■ Ask AICHI or an AICHI Dealer for Help

AICHI professional service technicians have the expertise and skills to help you with any maintenance or service related procedures you need help with.

3–5–2 Periodic Maintenance Schedule

Daily and periodic maintenance is important to keep the engine in good operating condition. The following is a summary of maintenance items by periodic maintenance intervals. Periodic maintenance intervals vary depending on engine application, loads, diesel fuel and engine oil used and are hard to establish definitively. The following should be treated only as a general guideline.

NOTICE

Establish a periodic maintenance plan according to the engine application and make sure you perform the required periodic maintenance at intervals indicated. Failure to follow these guidelines will impair the engine's safety and performance characteristics, shorten the engine's life and may affect the warranty coverage on your engine.

It is recommended to perform water-bleeding of the oil/water separator in particular daily. Protect the supply pump and the injector from seizure.

The engines may inject fuel after general combustion (post-injection) for the purpose of self-regeneration of the DPF. This fuel may enter the oil pan through the cylinder and dilute the engine oil.

Check the oil level daily. If it is above the upper limit of the dipstick, change the oil regardless of the replacement intervals.

Consult AICHI or AICHI dealer for assistance when checking items marked with a ●.

Table 7–6 Periodic Maintenance Chart

○: Check ◇: Replace

System	Check item	Daily	Periodic maintenance interval	
			Every 50 hours	Every 250 hours
Cooling system	Check and refill engine coolant	○		
Electrical equipment	Check indicators	○		
Engine oil	Check engine oil level	○		
	Drain and fill engine oil		◇ 1st time	◇ 2nd and after
	Replace engine oil filter			
Fuel	Check and refill fuel tank level	○		
	Check fuel filter/ water separator	○		

NOTICE

Contact AICHI or an AICHI dealer for the maintenance items other than the table above.

3–5–3 DPF Maintenance

Since a slight amount of incombustible metallic components (ash) remains after regeneration and tends to be accumulated, periodic maintenance service is required.

1. DPF soot filter cleaning: at approx. every 3,000 hours
2. DPF soot filter replacement: at approx. every 9,000 hours
3. DPF diesel oxidation catalyst (DOC) replacement: at approx. every 9,000 hours

NOTICE

Contact AICHI or an AICHI dealer for the DPF maintenance servicing.

https://truckmanualshub.com/

3–6 Fuse

The fuse holders are located on the inside of the lower control box and the engine compartment as shown in the figure below.

For optional equipment, fuses would be installed in other than the lower control box.

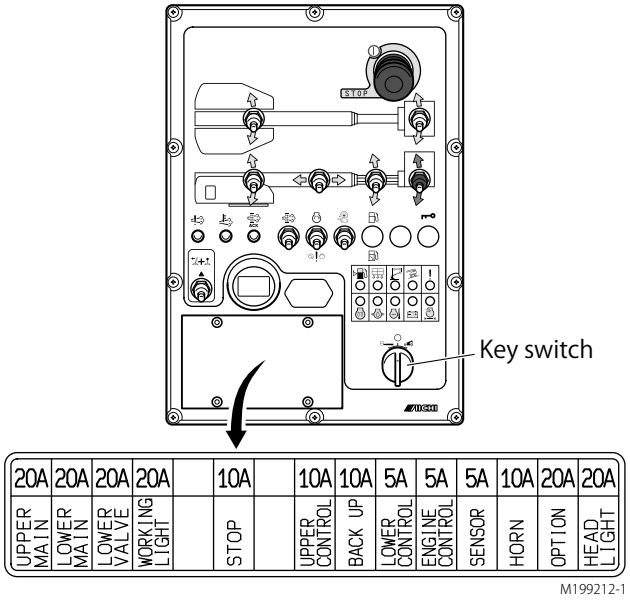

Fig. 7–10 Lower control box inside

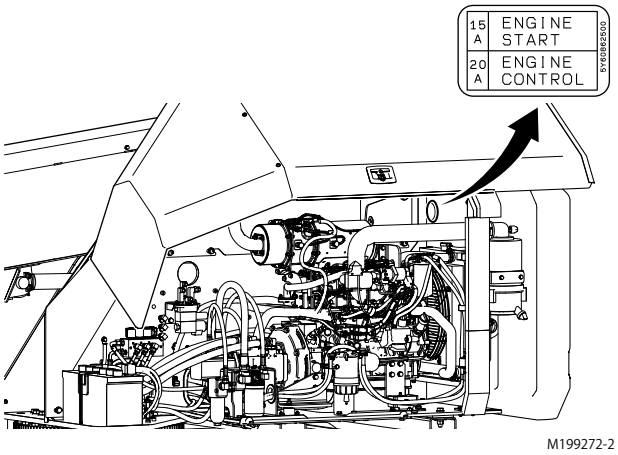

Fig. 7–11 Engine Compartment

3–7 Control box

When cleaning the control box using the thinner, do not splash or spill thinner on the knobs of the joystick controllers. Doing so may cause the knobs to melt.

NOTICE

The lower control box is plastic-made.

If the organic solvent is splashed or spilled on the lower control box surfaces, wipe off the solvent immediately. Leaving adhered the organic solvent may cause the surfaces to melt.

https://truckmanualshub.com/

Chapter 8
Operation

WARNING

- **Perform pre-operation checks before operating the machine, and make sure there are no problems with the machine.**
- **For emergencies, read and understand Chapter 9 "Emergency Operation" before operating the machine.**

NOTICE

- **Refer to Chapter 1 for "Safety Rules" on operation precautions.**
- **If ambient temperature is lower than the allowable range of the hydraulic oil temperature, warm up the machine to raise the hydraulic oil temperature, and then operate the machine.**
- **The motion alarm buzzer sounds when the machine is in motion to warn to the people nearby.**

1. Starting the Engine

1–1 Starting from Ground

Do the following to start the engine from the lower controls.

Step 1

Make sure the fuel filter/water separator fuel cock is in the ON position.

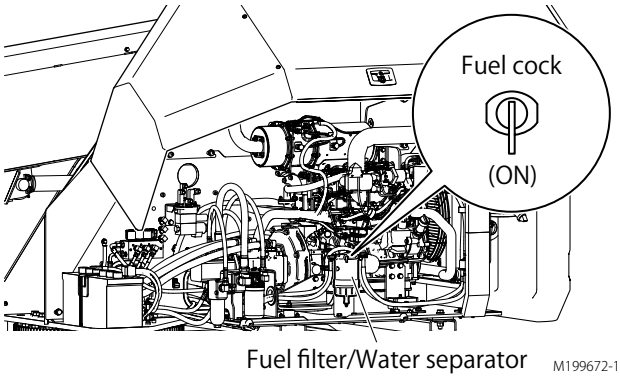

Fig. 8–1

Step 2

Make sure both of the upper and lower emergency stop buttons are pulled out to "ON."

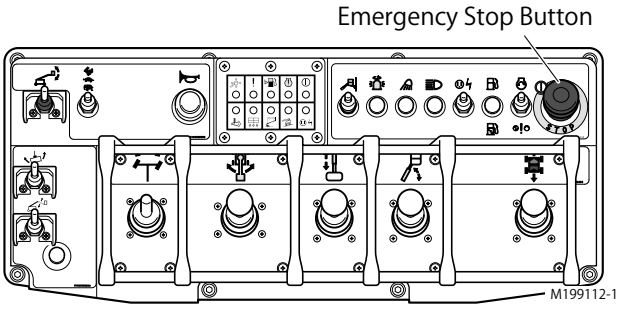

Fig. 8–2

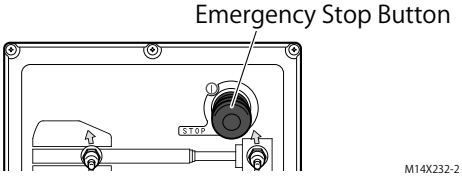

Fig. 8–3

Step 3

Turn the key switch to "" (LOWER CONTROLS). All of indicators will go on and then off. After that, make sure that both of the oil pressure and charge lights go on.

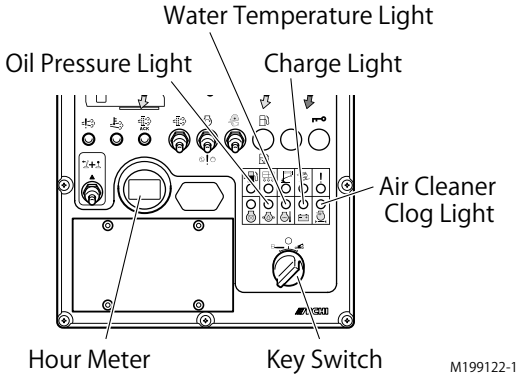

Fig. 8–4

WARNING

- **When the engine is overheated, do not remove the radiator cap, as the heated water will splash out, resulting in scald.**

https://truckmanualshub.com/

- **If any of the lights shown in the figure above are lit while operating, stop using the machine, and inspect as needed. (Refer to Chapter 4 "Part Names and Functions.")**

NOTICE

Before rotating the boom for the first time at the start of work, or during checks, make sure that the rotation lock pin is unlocked. (See figure below.)

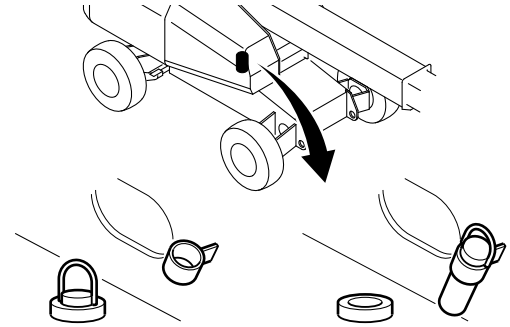

Fig. 8–5

Step 4

Operate the engine start switch up to "ENGINE START" to start the engine.

If the engine does not start easily because of the cold, start the engine after the pre-heat light has gone off.

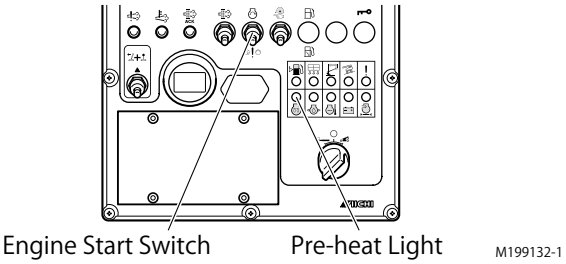

Fig. 8–6

NOTICE

- **Immediately release your hand from the engine start switch once the engine has started.**
- **Do not hold the engine start switch up for 15 seconds or more. Failure to release your hand could result in damage to the starter motor.**
- **Take an interval of 30 seconds or more before re-starting the engine to prevent damaging the engine.**

Step 5

After starting engine, idle the engine for about 5 minutes for warming up.

NOTICE

If ambient temperature is lower than the allowable range of the hydraulic oil temperature, warm up the machine to raise the hydraulic oil temperature, and then operate the machine.

Step 6

Check the fuel level light.

When there is little fuel remaining, this light will be lit. (On a level surface, the fuel level light goes on at about 30 liters.)

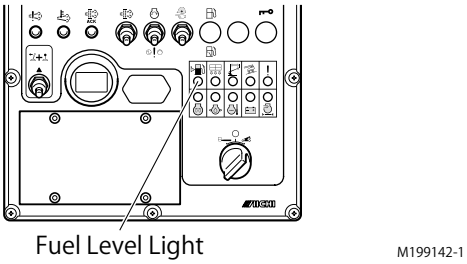

Fig. 8–7

NOTICE

- **When the fuel level light goes on, refill the diesel fuel.**
- **The capacity of the fuel tank is 120 liters.**

1–2 Starting from Platform

Step 1

Make sure both of the upper and lower emergency stop button are pulled out to "ON."

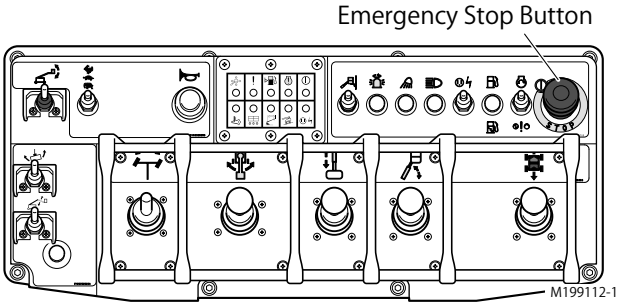

Fig. 8–8

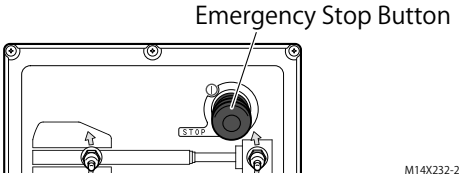

Fig. 8–9

https://truckmanualshub.com/

Step 2

Turn the key switch to "⊟" (UPPER CONTROLS). All of indicators (except for the platform contact light) will go on and then off. After that, make sure that both of the power indicator and engine failure lights go on.

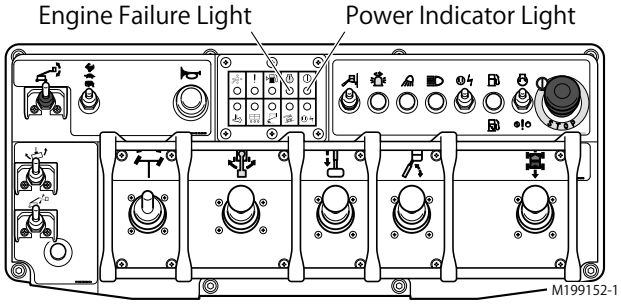

Fig. 8–10

Step 3

Wear the safety harness and get on the platform and close gate.

After getting on the platform, immediately hook the safety harness to the lanyard anchorage point.

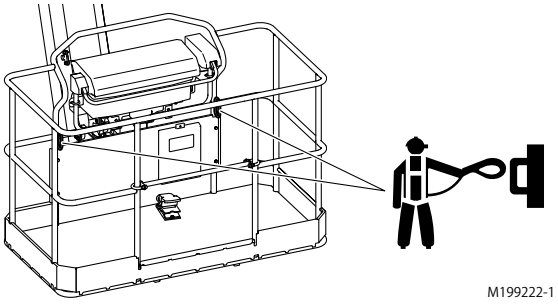

Fig. 8–11

Step 4

Operate the engine start switch up to "ENGINE START" without depressing the foot switch to start the engine.

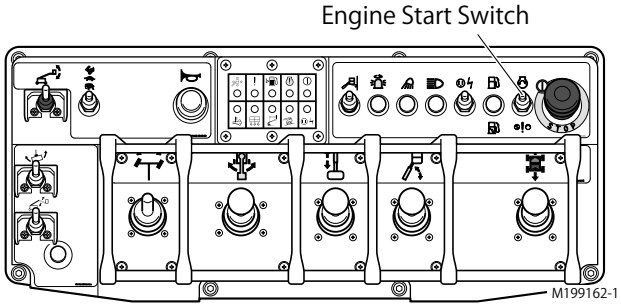

Fig. 8–12

NOTICE

- **Immediately release your hand from the engine start switch once the engine has started.**
- **Do not hold the engine start switch up for 15 seconds or more. Failure to release your hand could result in damage to the starter motor.**
- **Take the interval of 30 seconds or more before re-starting the engine to prevent damaging the engine.**

Step 5

After starting engine, idle the engine for about 5 minutes for warming up.

NOTICE

If ambient temperature is lower than the allowable range of the hydraulic oil temperature, warm up the machine to raise the hydraulic oil temperature, and then operate the machine.

Step 6

Check the fuel level light.

When there is little fuel remaining, this light will be lit. (On a level surface, the fuel level light goes on at about 30 liters.)

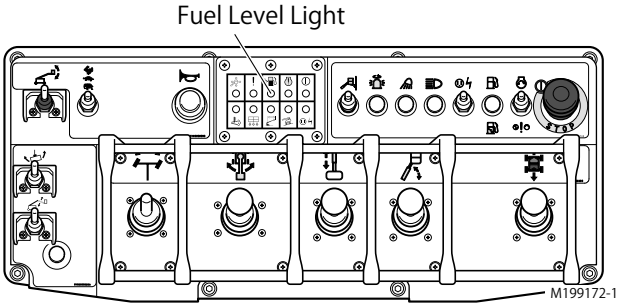

Fig. 8–13

NOTICE

- **When the fuel level light goes on, refill the diesel fuel.**
- **The capacity of the fuel tank is 120 liters.**

https://truckmanualshub.com/

2. Stopping the Engine

⚠WARNING

- **When you stop the boom operation and wish to concentrate on another works, push in the emergency stop button to "OFF" to prevent misoperation.**
- **If the boom lowers slowly after the emergency stop button has been pressed, this may be a natural descent. In that case, start the engine or use the emergency pump to stow the boom and then stop using the machine immediately.**
- **Stop using the machine and contact AICHI or an AICHI dealer for inspections, if the emergency stop button was used due to machine failure.**

Push in either of the upper or lower emergency stop button to "OFF," or turn the key switch to "○" (OFF) to stop all functions and shut off the engine.

- To resume operation, pull out both the upper and lower emergency stop buttons to "ON."
- Push in the emergency stop button in the following cases:
  - When shutting off the machine to save fuel.
  - After setting up the platform in a suitable position and you do not operate the boom for relatively long period. (for misoperation prevention)
  - In case of emergency. (Refer to Section 1 of Chapter 9 for emergency operation.)

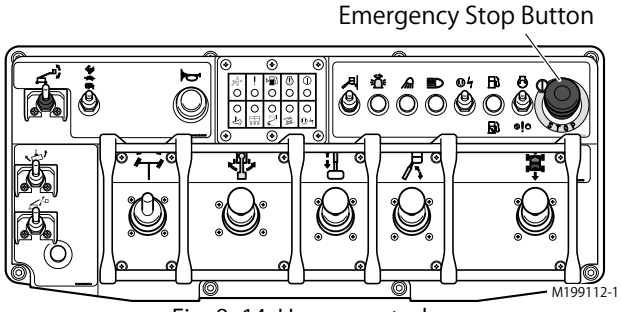

Fig. 8–14 Upper controls

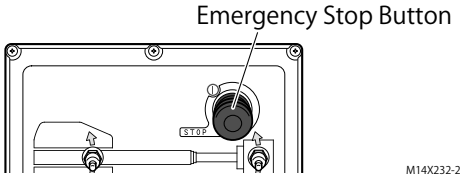

Fig. 8–15 Lower controls

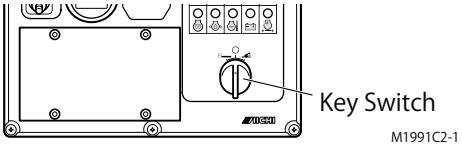

Fig. 8–16 Lower controls

3. Upper Controls (from Platform)

⚠DANGER

When using the upper controls, make sure to wear a safety harness, and put the hook of the safety harness through the lanyard anchorage point. Do not hook to any other place.

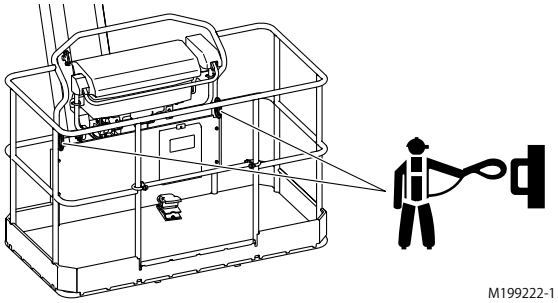

Fig. 8–17

- **Do your work while standing firmly on the platform. If your feet separate from the platform, by climbing on the guardrails, e.g., there is a possibility you will lose your balance, and fall.**

⚠WARNING

- **Before operation, make sure the platform is level. If the platform is tilted, adjust the platform level by referring to Section 5–1 "Platform Level Adjustment".**
- **Keep the platform neat and tidy always. To avoid slips, clear the water, oil, snow, ice off the platform.**
- **Before operating the machine, make sure that no person or obstacle is around the machine.**
- **Be especially careful when rotating the boom. Check that there are no obstacles in the way before rotating.**
- **Do not place small objects near the upper controls. They may catch the controls and cause misoperation.**

https://truckmanualshub.com/

- **When you stop the boom operation and wish to concentrate on another works, push in the emergency stop button to "OFF" to prevent misoperation.**
- **To prevent misoperation, light up the upper controls in the dark.**

NOTICE

When painting, make sure to close the cover of the upper controls after the platform has been put in position, and keep the decal clean.

3–1 Foot Switch

NOTICE

- **Release the foot switch while working or not operating. Do not disable the foot switch in any way e.g. by binding. Failure to comply with instructions, the foot switch cancel system is activated and all controls become disabled. (See Chapter 3).**
- **Operate controls within 20 seconds after depressing the foot switch. Failure to do so, all controls become disabled even when the foot switch has been depressed. In that case, release all controls and then operate again.**

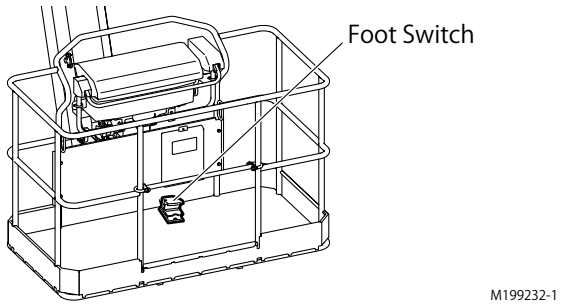

Fig. 8–18

Except for those listed here, you must depress the foot switch on the platform while performing all operations.

- Engine start
- Emergency stop (Stopping the engine)
- Using the horn
- Operating the work light (option)
- Operating the head light (option)
- Operating the rotating beacon (option)

3–2 Traveling

DANGER

- **Before traveling, make sure that no person or obstacle is in the traveling direction.**
- **When traveling, make sure to retract the boom fully.**
- **When traveling, raise the boom so it is almost horizontal, make sure you can see to the front, and make sure you travel safely.**
- **All persons in the platform must comply with employer, work area, and local and national safety regulations regarding the use of personal protective equipment. Always use a safety harness in the platform. Attach the lanyard to the authorized lanyard anchorage point provided in the platform.**

WARNING

- **If traveling on a slope more than maximum allowable tilt angle is unavoidable, make sure to fully retract the boom and lower the boom under the horizontal.**
  - **Maximum allowable tilt angle: 5° (8.7%)**
- **Do not drive the machine on a slope with a lateral inclination exceeding 5°.**
- **Before traveling onto a slope, approach straight to the inclination direction. If traveling obliquely, any wheel could leave from the ground, resulting in tipping over.**
- **When you start traveling, make sure to operate the controls gradually, and to start slowly. It is dangerous to start abruptly. Adjust the traveling speed by turning the travel joystick controller.**
- **Do not change course abruptly. The platform will swing widely, and there is a possibility the operator will be thrown from the platform or the machine will tip over.**

https://truckmanualshub.com/

- **When traveling, make sure there is enough distance between the traveling surface and bottom of the platform, or the tip of the boom. If there is not enough distance, depending on the unevenness of the traveling surface, the bottom of the platform or the tip of the boom may come in contact with the traveling surface, and may be damaged.**
- **If the turntable has been rotated 180°, the traveling direction will be opposite to the joystick controller movements, so be careful.**

  Make sure to check the direction of the arrow on the decal and on the chassis when traveling.

Use the travel joystick controller, the steering switch, and the travel speed select switch to travel the machine.

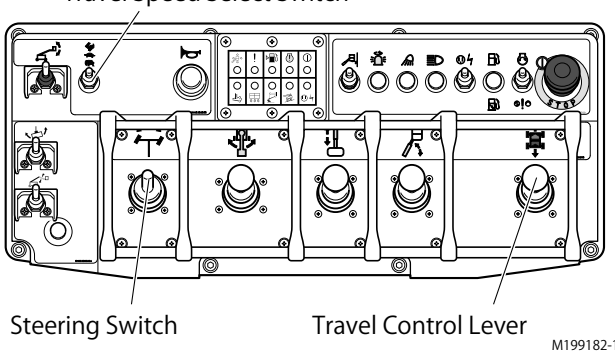

Fig. 8–19

3–2–1 Travel Speed Select

WARNING

Engine rotations become high automatically when high-speed traveling. Do not operate the travel speed select switch while traveling to avoid shocks that are caused by sudden change of the traveling speed.

1. Select "🐇" (RABBIT) for a "HIGH SPEED" traveling.
2. Select "🐢" (TURTLE) for a "LOW SPEED" traveling.
3. Select "🐘" (ELEPHANT) for a "HIGH TORQUE" when traveling on a slope.

NOTICE

- **High-speed traveling is only possible when the boom is retracted fully and the boom elevation angle is less than 5°. In all other situations, even if you turn the travel speed select on "🐇" (HIGH SPEED), you will be able to travel only at low speeds.**
- **Under normal circumstances, keep the travel speed select switch on "🐢" (LOW SPEED).**
- **High-torque traveling is possible when the boom is retracted fully and the boom elevation angle is less than 5°. However, if the tilt of the machine exceeds 10° during traveling, the high-torque traveling will be activated automatically regardless of the selection of the travel speed select switch.**

3–2–2 Forward and Backward

Depress the foot switch and operate the travel joystick controller to the traveling direction.

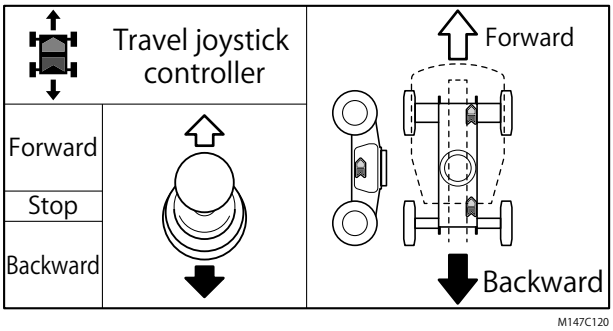

Fig. 8–20

NOTICE

- **A warning buzzer will beep regularly when the travel joystick controller is being operated.**
- **Use the arrow decal to determine which way is forward and which way is backward.**

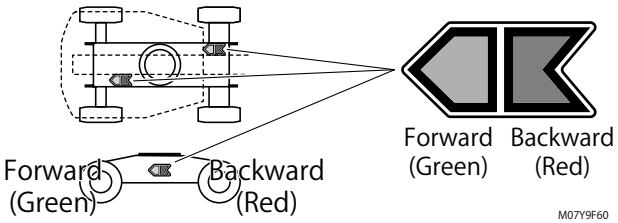

Fig. 8–21

https://truckmanualshub.com/

3–2–3 Steering

In order to change course, step on the foot switch while using the steering switch.

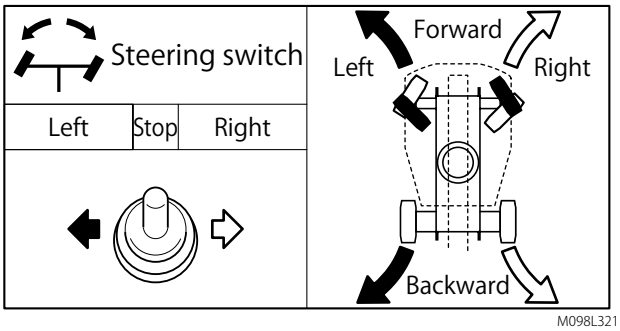

Fig. 8–22

3–3 Boom Operation

DANGER

- **Do not push the boom or platform to the ground, or use them to crash into objects, or push things up.**
- **The turntable protrudes 0.85 m beyond the width of the chassis when rotating the boom.**

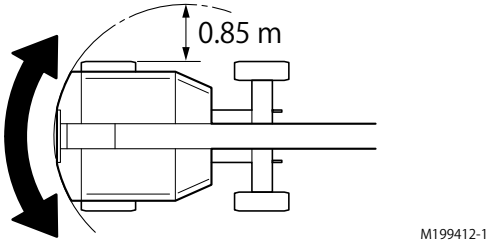

Fig. 8–23

Check that there are no obstacles in the way before rotating.

If your field of vision is obstructed, have a guide assist you.

WARNING

Make sure that no person or obstacle is around the machine before operating the boom.

CAUTION

When the boom is shaken heavily and/ or the platform is pressed hard against the walls during operation, the machine considers it as a sensor error and stops the engine. In this case, restart the engine and resume operation.

NOTICE

- **Before rotating the boom, make sure the rotation lock pin has been unlocked.**

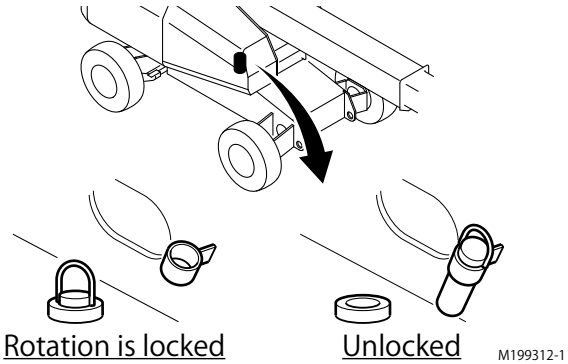

Fig. 8–24

- **The boom may not rotate smoothly when the machine tilts.**

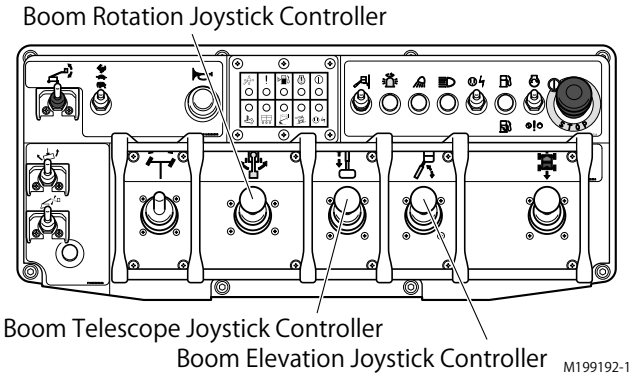

Fig. 8–25

3–3–1 Boom Elevating

Depress the foot switch and operate the boom elevation joystick controller to raise or lower the boom.

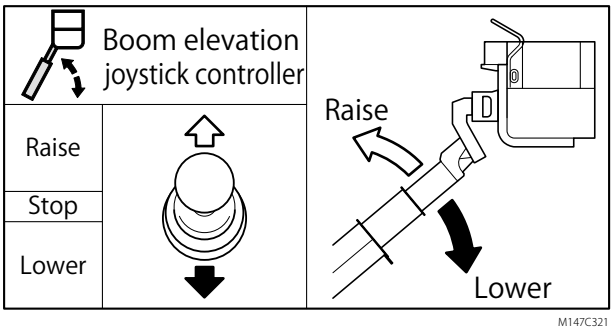

Fig. 8–26

https://truckmanualshub.com/

3–3–2 Boom Rotating

Depress the foot switch and operate the boom rotation joystick controller to rotate the boom.

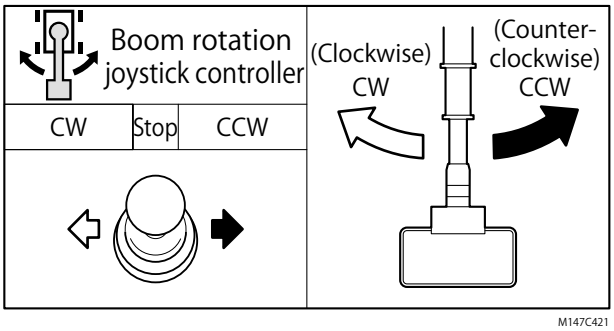

Fig. 8–27

3–3–3 Boom Telescoping

Depress the foot switch and operate the boom telescope joystick controller to extend or retract the boom.

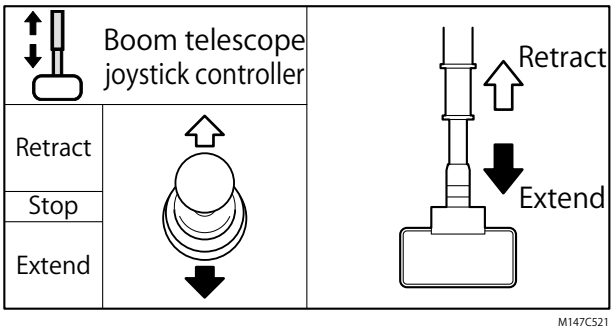

Fig. 8–28

NOTICE

If it is difficult to retract the boom, especially when the platform is near the ground, raise the boom or unload the platform before retracting the boom.

3–3–4 Fly Jib Elevating

Depress the foot switch and operate the fly jib switch to raise or lower the fly jib.

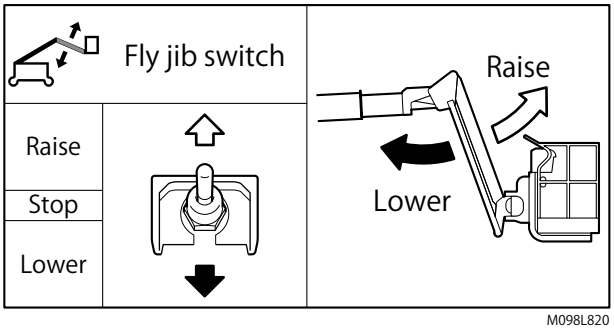

Fig. 8–29

3–4 Platform Rotating Operation

WARNING

When rotating the platform, make sure to stop the machine, and check the safety of the surrounding area.

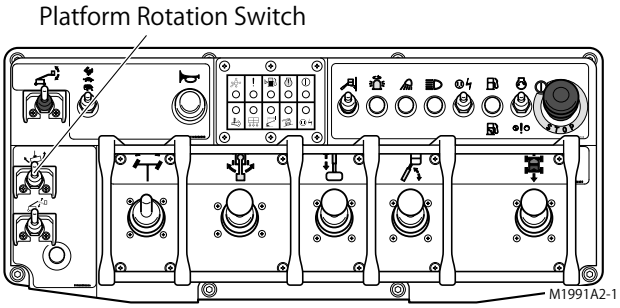

Fig. 8–30

Depress the foot switch and operate the platform rotation switch to rotate the platform.

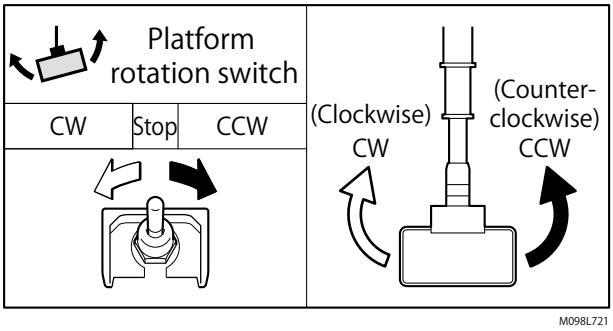

Fig. 8–31

3–5 Horn Button

Use the horn button.

While pressing the horn button, an alarm will sound. Press the horn button before starting work to alert surrounding personnel.

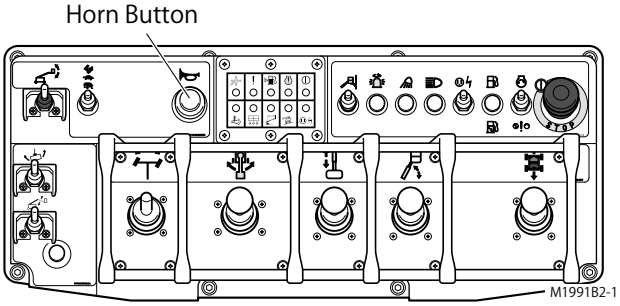

Fig. 8–32

https://truckmanualshub.com/

3–6 Touch Switch

When the touch switch (bar) located in the front of the upper controls is touched, the engine stops and all of the functions are disabled. (Horn also cannot be used.)

WARNING

If the touch switch is damaged, do not operate the machine. Contact AICHI or an AICHI dealer for inspections immediately.

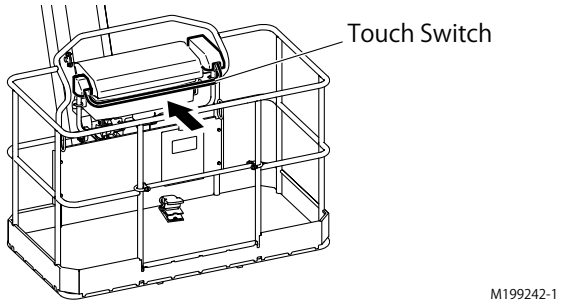

Fig. 8–33

3–6–1 Restoring Functions

Release your hands, feet, and other body part from all of the controls and switches.

Restoring from Platform:

Operate the engine start switch and the machine functions will be restored and the engine will start up.

Restoring from Ground:

(1) Turn the key switch to "◯" (OFF). After a lapse of 1 second, turn the key switch to "⚒" (LOWER CONTROLS) and the machine functions will be restored.

If less than 1 second, it may not be restored.

(2) Operate the engine start switch and the engine will start up.

4. Lower Controls (from Ground)

DANGER

- **Do not push the boom or platform to the ground, or use them to crash into objects, or push things up.**

WARNING

- **Make sure that no person or obstacle is around the machine before operating the boom.**
- **The lower controls are used mainly for the platform level adjustment and the pre-operation checking.**

4–1 Enable Switch

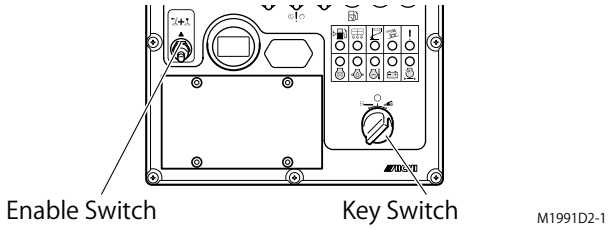

Fig. 8–34

(1) When using the lower controls to operate the machine, turn the key switch to "⚒" (LOWER CONTROLS).

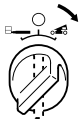

(2) Hold the enable switch up to "ON" while operating the boom or platform from the lower controls.

(3) In case of the following, turn the key switch to "⚒" (LOWER CONTROLS).
- If you are not able to do the operation from the upper controls.
- If you want to operate the boom from the lower controls.

NOTICE

- **If you are using the emergency pump, emergency stopping, or starting the engine from the lower controls, you can operate the machine without turning the enable switch.**
- **Release the enable switch while working or not operating. Do not fix the enable switch in any way e.g. by binding.**

https://truckmanualshub.com/

4–2 Boom Operation

⚠CAUTION

When the boom is shaken heavily and/ or the platform is pressed hard against the walls during operation, the machine considers it as a sensor error and stops the engine. In this case, restart the engine and resume operation.

Hold the enable switch up to "ON" and use the three control switches for the boom elevation, telescope and rotation to operate the boom.

The boom does not move unless the enable switch is hold up.

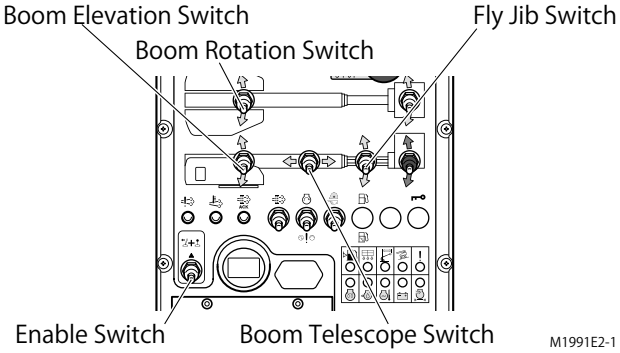

Fig. 8–35

NOTICE

- **The boom may not rotate smoothly when the machine tilts.**
- **Check that there are no obstacles in the way before rotating.**
  If your field of vision is obstructed, have a guide assist you.

4–2–1 Boom Elevating

Hold the enable switch up to "ON" and operate the boom elevation switch to raise or lower the boom.

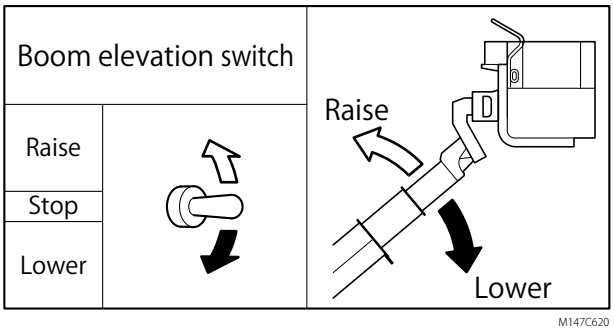

Fig. 8–36

4–2–2 Boom Rotating

Hold the enable switch up to "ON" and operate the boom rotation switch to rotate the boom.

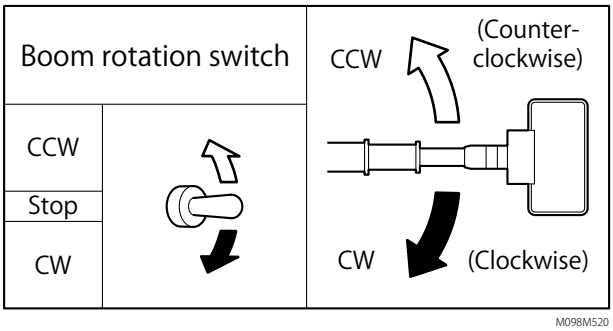

Fig. 8–37

4–2–3 Boom Telescoping

Hold the enable switch up to "ON" and operate the boom telescope switch to extend or retract the boom.

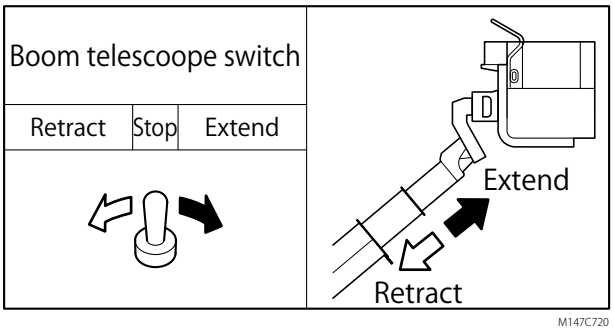

Fig. 8–38

NOTICE

If it is difficult to retract the boom, especially when the platform is near the ground, raise the boom or unload the platform before retracting the boom.

4–2–4 Fly Jib Elevating

Hold the enable switch up to "ON" and operate the fly jib switch to raise or lower the fly jib.

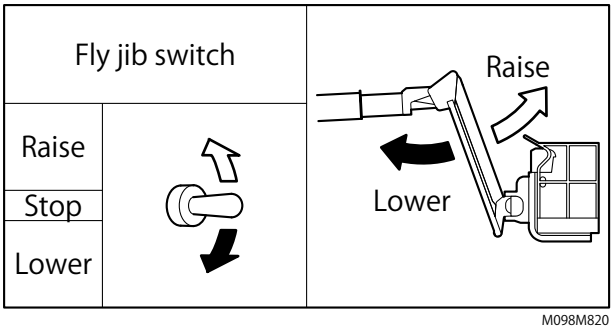

Fig. 8–39

https://truckmanualshub.com/

4–3 Platform Rotating Operation

WARNING

When rotating the platform, make sure to stop the machine, and check the safety of the surrounding area.

Hold the enable switch up to "ON" and operate the platform rotation switch to rotate the platform.

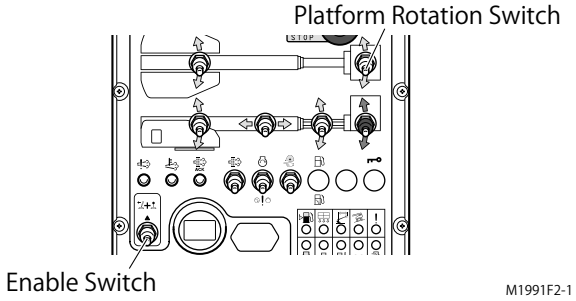

Fig. 8–40

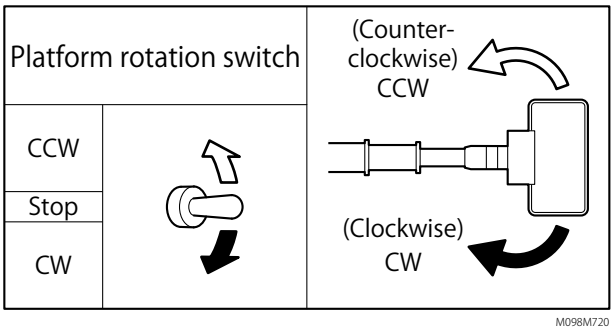

Fig. 8–41

5. Platform Leveling System

5–1 Platform Level Adjustment

If the pre-operation check reveals that the platform is tilted (front-back tilt of about 3° or more), adjust it as follows.

WARNING

- **Do not allow any person or object on the platform when adjusting from the lower controls.**
- **Do not tilt the platform excessively when adjusting from the upper controls. Occupants and load will dump out from the platform.**

NOTICE

Even if the platform tilt is under 3°, adjust it if the tilt makes work hard.

Step 1

Put the machine on a firm, level surface,.

Step 2

Move the boom to a position where it is easy to adjust.

Step 3

Hold the enable switch up to "ON" or depress the foot switch. Operate the platform level adjust switch to adjust the level of the platform.

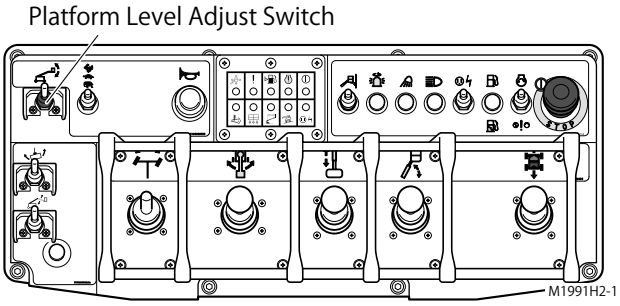

Fig. 8–42

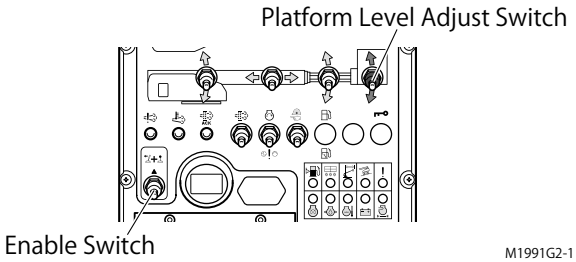

Fig. 8–43

https://truckmanualshub.com/

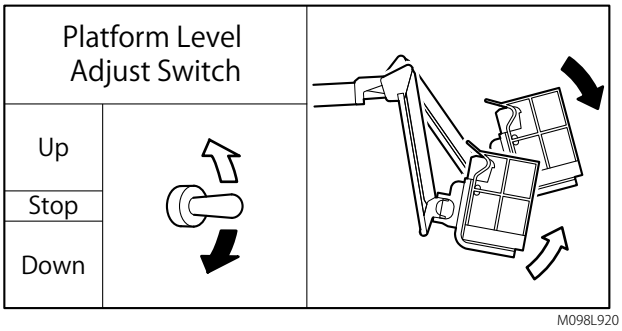

Fig. 8–44

NOTICE

The platform stops automatically after a certain period of time to prevent occupants and load from dumping out. Release the switches to continue adjustment.

5–2 Bleeding Air from Platform Leveling System

WARNING

- **Use the lower controls to bleed air from the platform leveling system.**
- **Do not allow any person or object on the platform when bleeding air.**

If the platform does not stay level after adjustment, air may have entered the platform leveling system. In this case, bleed air from the platform leveling system in the following way.

Step 1

Put the machine on firm, level surface.

Step 2

Move the boom to a position where it is easy to adjust.

Step 3

Hold the enable switch up to "ON". Operate the platform leveling switch on the lower controls to fully tilt the platform forward and backward several times.

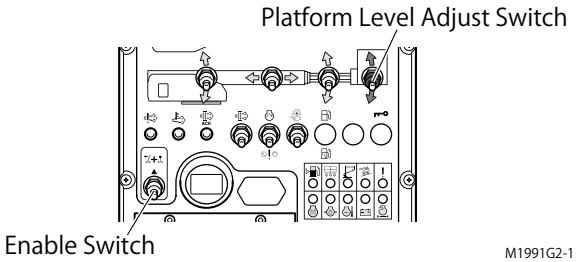

Fig. 8–45

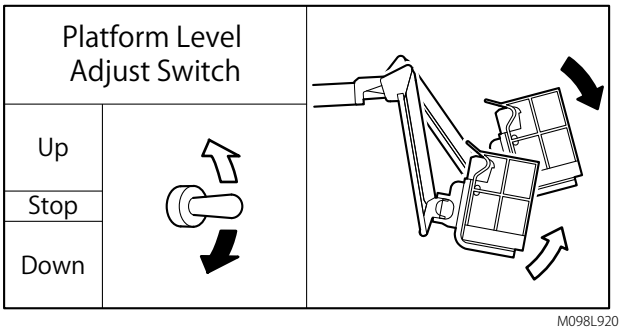

Fig. 8–46

Step 4

Adjust the platform so it becomes level.

Step 5

Repeat the boom raising, lowering and telescoping operations several times and make sure that the platform stays level.

https://truckmanualshub.com/

6. Oil Overheating Alarm

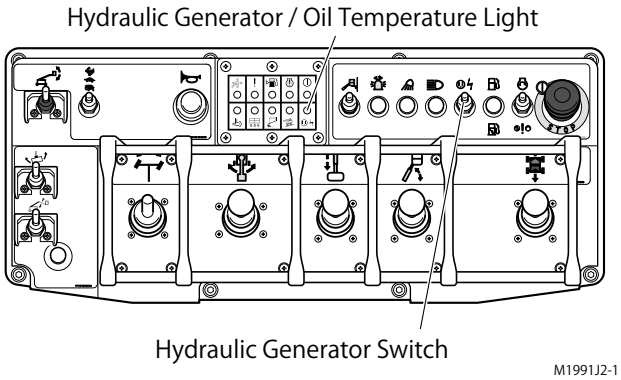

Fig. 8–47

If the oil overheating alarm sounds and the hydraulic generator / oil temperature light flashes, the hydraulic oil is too hot.

Immediately, stop operation of the machine. Keep the engine running at idling speed and wait until the alarm stops and the light turns off.

NOTICE

Too hot hydraulic oil may damage the hydraulic system.

Do not operate the machine continuously while the alarm sounds.

If Equipped with Hydraulic Generator:

(1) If the oil overheating alarm sounds and the hydraulic generator / oil temperature light flashes, turn off the hydraulic generator switch immediately and do not turn on again until the alarm stops.

NOTICE

Too hot hydraulic oil may damage the hydraulic system.

Do not use the hydraulic generator continuously while the alarm sounds.

(2) The hydraulic generator will stop automatically soon if you use it continuously while the alarm sounds to protect the hydraulic system.

⚠ DANGER

Do not plug devices that need continuous electricity into generator such as electro-lifting magnet.

In case the oil overheating alarm sounds or the hydraulic generator / oil temperature light flashes while operating the generator, turn off the hydraulic generator switch and wait until the alarm stops and the light turns off.

Table 8–1 Oil Temperature Light and Oil Overheating Alarm

Hydraulic Generator / Oil Temperature Light	Oil Overheating Alarm	Hydraulic Oil Temperature	Hydraulic Generator (if equipped)	Other Functions
Stays OFF	Stays OFF	Below 85 ℃	Disable	Usable
Stays ON	Stays OFF	↑	Usable	Usable
Flashes slowly (ON: 1 sec. Interval: 1 sec.)	Turns ON (ON: 1 sec. x 3)	85–95 ℃	Stop operation of the hydraulic generator. Turn off the hydraulic generator switch and wait until the hydraulic generator / oil temperature light stays off and the oil overheating alarm stops.	Stop operation of the machine. Keep the engine running at idling speed and wait until the hydraulic generator / oil temperature light stays off and the oil overheating alarm stops.
Flashes quickly (ON: 0.3 sec. Interval: 0.3 sec.)	Turns ON (ON: 3 sec. Interval: 1 sec.)	Above 95 ℃	The hydraulic generator will stop automatically.	↑

https://truckmanualshub.com/

7. Hydraulic Generator (if equipped)

7–1 To Start the Hydraulic Generator

Step 1

Make sure that key switch is in "▭" (UPPER CONTROLS).

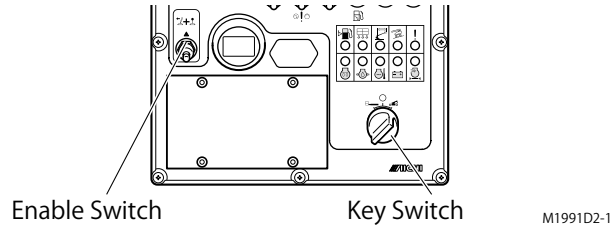

Fig. 8–48

Step 2

Make sure that engine is running.

NOTICE

Warm the hydraulic oil before operating the generator. Cold hydraulic oil may cause generator damage.

Step 3

Make sure that foot switch is not depressed.

NOTICE

Depressing the foot switch while the hydraulic generator switch is "ON" disables the hydraulic generator and enables operation of the machine.

Step 4

To start the hydraulic generator, turn the hydraulic generator switch to "ON" position.

The hydraulic generator light will go on when the hydraulic generator switch is turned on.

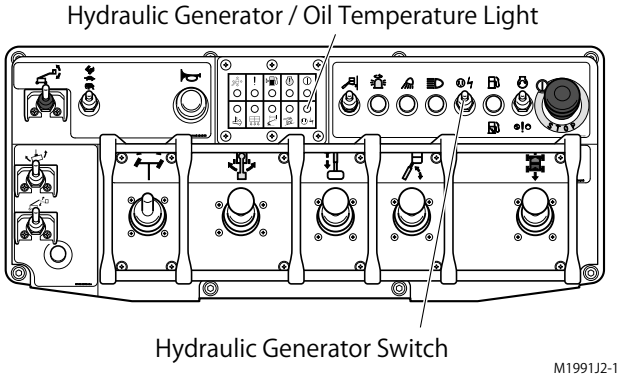

Fig. 8–49

7–2 To Restore Normal Operation

To turn off the hydraulic generator, operate the hydraulic generator switch down to its "OFF" position.

The hydraulic generator light will go off when the hydraulic generator switch is turned off.

NOTICE

- **An engine shut down will turn the hydraulic generator off.**
- **Depressing the foot switch while the hydraulic generator switch is "ON" disables the hydraulic generator and enables operation of the machine.**

⚠ DANGER

Do not plug devices that need continuous electricity into generator such as electro-lifting magnet.

In case the oil temperature warning alarm sounds or the hydraulic generator / oil temperature light flashes while operating the generator, turn off the hydraulic generator switch and wait until the alarm stops and the light goes off.

https://truckmanualshub.com/

8. Diesel Particulate Filter (DPF) System

DPF stands for Diesel Particulate Filter and captures soot (particulate matter) emitted from diesel engines.

Also it maintains the purifying performance of DPF by automatically burning (regenerating) the collected soot.

8–1 Types of DPF Regeneration

Depending on the actual status of time elapse and soot deposition, perform the regeneration specified in the following table.

Table 8–2 Types of DPF regeneration

No.	Types of regeneration	Overview
1	Self-regeneration	Normal operation
2	Reset regeneration (automatic regeneration)	Implement when 100 hours have past since the last reset regeneration / stationary regeneration (ordinary operation of this machine is allowed).
3	Stationary regeneration (manual regeneration)	Use this process when the regeneration is not completed by a reset regeneration (where operation of the machine itself is disabled).
4	Recovery regeneration	In this case, the system turns to a backup mode (failure state) and the regeneration should be carried out at AICHI or an AICHI dealer.

⚠WARNING

During a DPF regeneration (reset or stationary), the exhaust gas temperature is very high. (It goes up to 450°C or so.)

It may cause a fire if any combustible objects are left in the vicinity of DPF or exhaust outlet. Also, there is a risk of suffering from a burn due to the high temperature exhaust gas.

⚠CAUTION

- **When the DPF regeneration request / Exhaust temperature warning light flashes and the buzzer beeps, immediately execute the stationary regeneration process.**
- **When washing the machine, never allow water splashing on the DPF. Otherwise, the equipment may be damaged.**

https://truckmanualshub.com/

8–2 Flow of DPF Regeneration

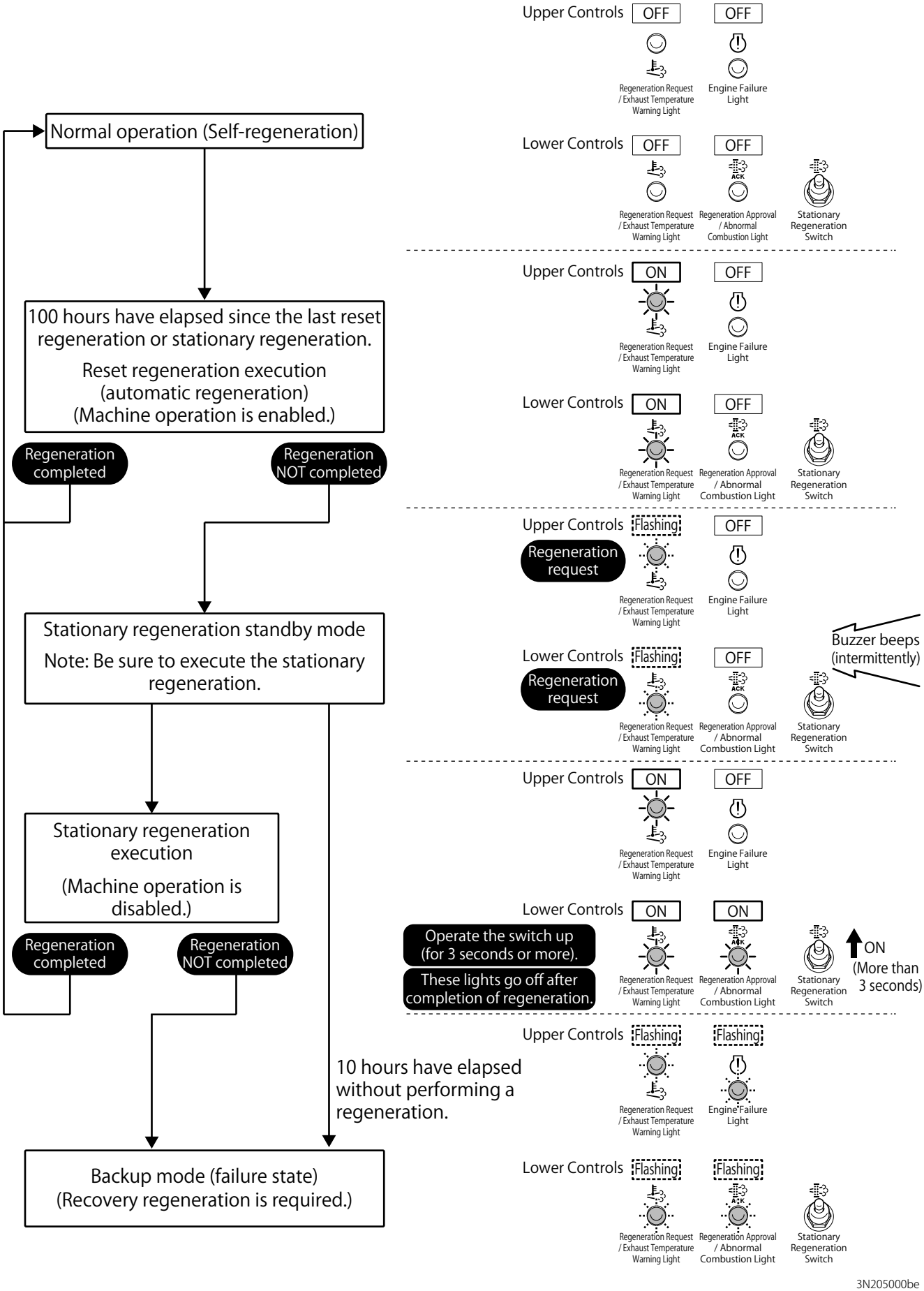

Fig. 8–50

https://truckmanualshub.com/

8–3 DPF Reset Regeneration (Automatic Regeneration)

WARNING

- **During a DPF reset regeneration, the exhaust gas temperature is very high. (It goes up to 450°C or so.)**

  It may cause a fire if any combustible objects are left in the vicinity of DPF or exhaust outlet. Also, there is a risk of suffering from a burn due to the high temperature exhaust gas.
- **When leaving the machine while the engine is kept running, a reset regeneration may be activated. In this case, check to ensure that no combustible object is found in the periphery of the exhaust outlet to prevent a fire.**

Normally, soot collected by DPF is automatically burnt (normal regeneration); however, in order to prevent excessive soot deposition, the automatic thorough combustion (reset regeneration) should be performed at interval of 100 hours of engine operation. When the amount of soot deposition exceeds a specified value, and thus cannot be reduced by a normal regeneration, execute the DPF reset regeneration.

- Even during a reset regeneration, the machine can be operated normally.
- During a reset regeneration, usually engine noise is heard, idling revolution speed varies, and abnormal exhaust gas odor (sour smell) generates.
- Immediately after engine start in cold season, white smoke (water vapor) may come out from the exhaust outlet. The white smoke will become invisible as soon as exhaust temperature goes up.
- As soon as reset regeneration starts, the exhaust temperature warning light comes on.
- The reset regeneration terminates approximately 25 to 30 minutes after starting.

DPF Regeneration Request / Exhaust Temperature Warning Light

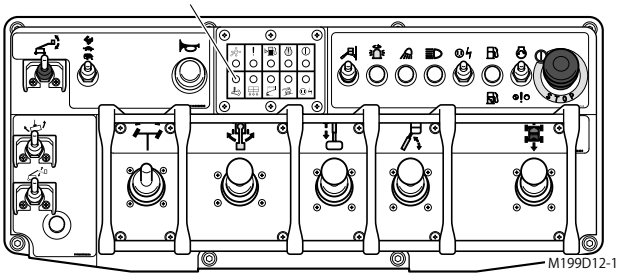

Fig. 8–51

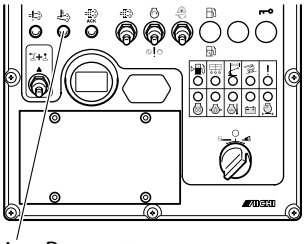

DPF Regeneration Request
/ Exhaust Temperature Warning Light

M199D22-1

Fig. 8–52

CAUTION

When both of the DPF regeneration request / exhaust temperature warning light and the DPF regeneration approval / combustion abnormality light are flashing, the DPF is faulty and consequently the DPF regeneration (both reset and stationary) cannot be executed.

Since continued use of the machine may give rise to the failure of DPF or engine, stop using the machine and promptly have the system inspected.

https://truckmanualshub.com/

8–4 DPF Stationary Regeneration (Manual Regeneration)

WARNING

- **Do not perform DPF stationary regeneration in such a poorly ventilated place as garage and indoor space. Otherwise, carbon monoxide poisoning due to the exhaust gas may occur.**
- **During a DPF stationary regeneration, the exhaust gas temperature is very high. (It goes up to 450°C or so.)**

  It may cause a fire if any combustible objects are left in the vicinity of DPF or exhaust outlet. Also, there is a risk of suffering from a burn due to the high temperature exhaust gas.

CAUTION

If a stationary regeneration is not performed, the system turns to a backup mode (failure state) and the recovery regeneration (a regeneration process carried out at AICHI or an AICHI dealer) is required. When the system turns to a stationary regeneration standby mode, be sure to execute the regeneration.

When a no-load idling or low-load work is frequently required, soot deposited in the DPF may not be burnt (regenerated). In this case, the DPF request light flashes and the alarm (intermittent sound) beeps.

When the DPF regeneration request light flashes, immediately perform the DPF stationary regeneration to thoroughly burn the deposited soot.

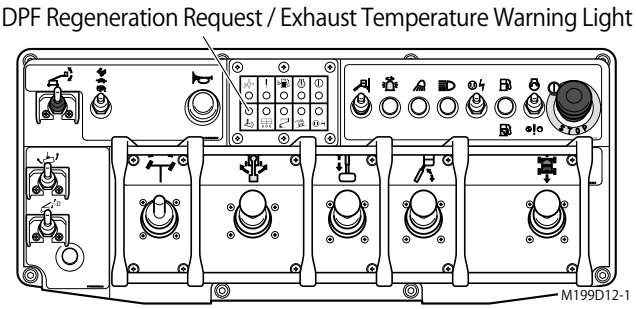

Fig. 8–53

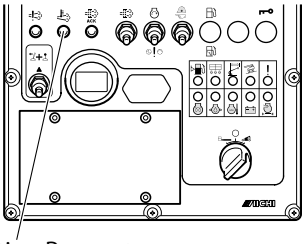

Fig. 8–54

NOTICE

- **In the event one of the above-mentioned lights flashes, promptly execute the stationary regenerating operation.**
- **In the stationary regeneration standby mode, when 10 hours are elapsed or soot deposition amount exceeds the specified value, it automatically changes to backup mode (failure state).**
- **During the stationary regeneration, operation of boom and traveling is disabled.**
- **The stationary regeneration cannot be started unless the boom is retracted fully.**

Step 1

Move the machine to a safe and well ventilated space.

Step 2

Set the key switch of lower controls to "" (LOWER CONTROLS).

Step 3

Start the engine to perform a warm up run.

Step 4

Retract the boom fully.

https://truckmanualshub.com/

Step 5

While running the engine, push up the DPF stationary regeneration switch of the lower controls for 3 seconds or more. Idling revolution speed goes up and the DPF stationary regeneration (manual regeneration) will start.

- As soon as the stationary regeneration is started, the DPF regeneration request / exhaust temperature warning light turns from flashing to continuously lit and the DPF approval indicator light comes on.
- The stationary regeneration lasts for 25 to 30 minutes.
- When the stationary regeneration has to be interrupted, set either key switch to "◯" (OFF) or push in the emergency stop button to stop the engine.

  After interrupting the stationary regeneration process and turn on the machine (either setting the key switch to "▭" (UPPER CONTROLS) or "" (LOWER CONTROLS), or pulling out the pushed-in emergency stop button), if the DPF regeneration request light flashes, restart the stationary regeneration.

Step 6

As soon as the idling revolution speed restores, and thus DPF regeneration approval light and the exhaust temperature warning light goes off, the DPF stationary regeneration will be terminated.

Step 7

After performing the DPF stationary regeneration, the machine can be operated as usual.

⚠CAUTION

When both of the DPF regeneration request / exhaust temperature warning light and the DPF regeneration approval / abnormal combustion light are flashing, the DPF is faulty and consequently the DPF regeneration (both reset and stationary) cannot be executed.

Since continued use of the machine may give rise to the failure of DPF or engine, stop using the machine and promptly have the system inspected.

8–5 DPF Failure Status (Backup Mode)

Even when in stationary regeneration standby mode, if the operation is continued without performing stationary regeneration, it usually turns to backup mode (failure state) automatically when 10 hours have elapsed in stationary regeneration standby mode, or when soot is deposited more than specified. The engine performance is controlled to permit operation in low speed.

The recovery regeneration performed by a service engineer is required. Please contact AICHI or an AICHI dealer for the servicing work.

⚠CAUTION

Do not perform operation in a backup mode (failure state).

NOTICE

- **If no stationary regeneration is performed, the subject machine will show the following state.**

  [Upper Controls]

  (1) Engine failure light flashes.

  (2) DPF regeneration request / Exhaust temperature warning light flashes.

  (3) Even if the accelerator switch is set to "" (HIGH SPEED), the rotation speed does not increase.

  [Lower Controls]

  (1) DPF regeneration request / Exhaust temperature warning light flashes.

  (2) DPF regeneration approval / Abnormal combustion light flashes.

  When such a state is the case, since the recovery regeneration is required, contact AICHI or an AICHI dealer for the servicing work.
- **In the backup mode, while engine output is limited, operation of boom and traveling at a low speed is possible.**

https://truckmanualshub.com/

Chapter 9

Emergency Operation

WARNING

If the emergency operation was done because of a malfunction, immediately stop the operation, and have the machine checked and repaired.

1. Emergency Stop

Use the emergency stop button. When this button is pushed in, the engine stops and all of the functions are disabled.

Push in the emergency stop button in the following cases:

(1) When person in the platform stops all of the machine movements to avoid hazard.

(2) When the person on the ground judges that the operation from the upper control is unsafe.

(3) When the machine is uncontrollable due to malfunction.

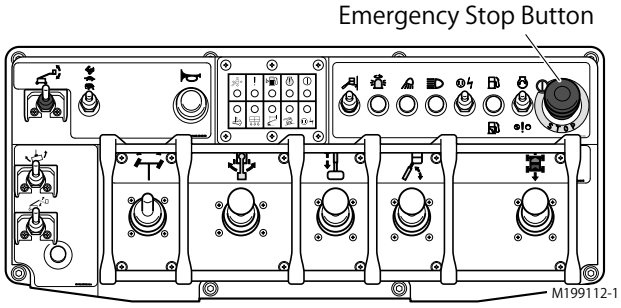

Fig. 9–1 Upper Controls

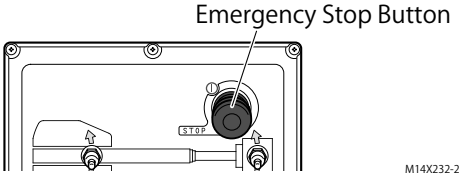

Fig. 9–2 Lower Controls

2. Emergency Lowering

If the engine or main pump fails, use the emergency pump to lower the platform.

NOTICE

- **After using the emergency pump, allow the motor of the pump to cool completely before reusing the emergency pump. Continuous operation of the emergency pump may result in it being damaged.**
- **Traveling operation is not possible when operating with the emergency pump.**
- **The emergency pump runs off the battery.**
- **The engine will stop if operating the emergency pump switch while the engine is running.**

2–1 Upper Controls (from Platform)

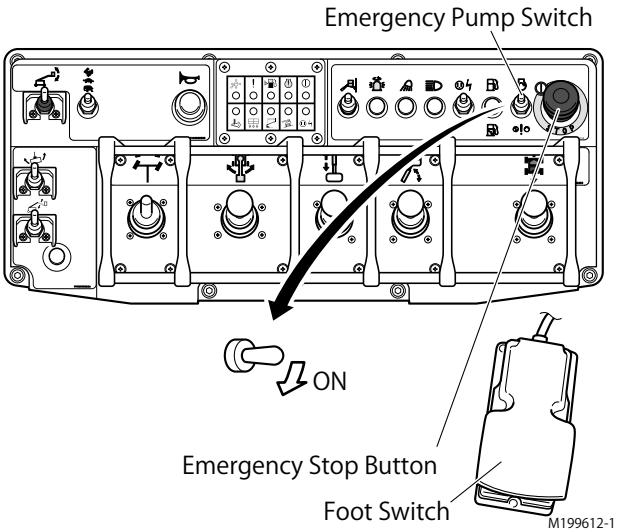

Fig. 9–3

NOTICE

When the upper or lower emergency stop button is pushed in or the key switch is turned to "" (LOWER CONTROLS), operating with the emergency pump from the upper controls is not possible.

https://truckmanualshub.com/

Step 1

Pull out the emergency stop button to "ON."

Step 2

Depress the foot switch.

Step 3

Hold the emergency pump switch down, and activate each function at the same time.

The emergency pump will turn on when both the emergency pump switch and the operation switch are turned on.

2–2 Lower Controls (from Ground)

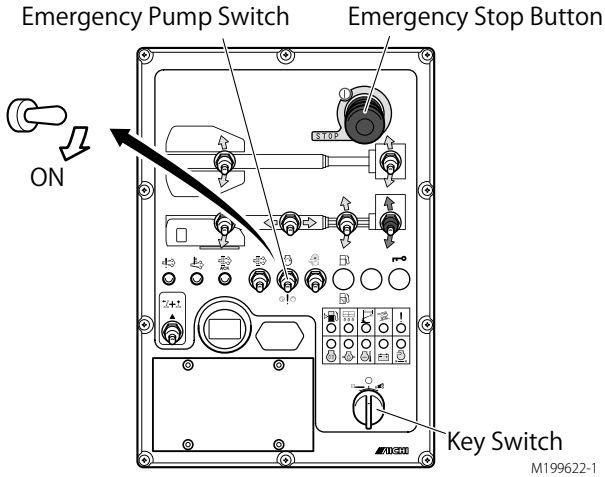

Fig. 9–4

NOTICE

When the upper or lower emergency stop button is pushed in or the key switch is turned to "▭" (UPPER CONTROLS), operating with the emergency pump from the lower controls is not possible.

Step 1

Turn the key switch to "⚙" (LOWER CONTROLS).

Step 2

Pull out the emergency stop button to "ON."

Step 3

Hold the emergency pump switch down, and activate each function at the same time.

The emergency pump will turn on when both the emergency pump switch and the operation switch are turned on.

3. Override switch

⚠WARNING

The platform overload sensing system is disabled when the override switch is operated. Do not put more weight on the platform, or the machine could tip over resulting in death or serious injury. Retract the boom first and then lower the boom to keep the working radius in minimum.

NOTICE

The override switch enables operation from the lower controls even when the emergency stop button on the platform has been pushed in.

When a system failure occurs, the system failure lights on the upper and lower controls flash and some functions will be disabled.

Lower the platform and escape from the work site using the override switch.

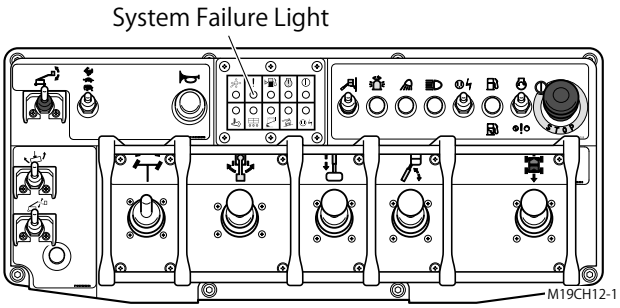

Fig. 9–5

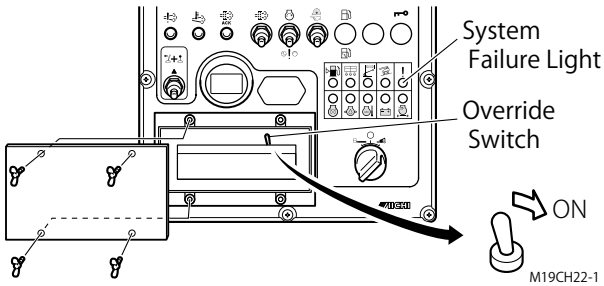

Fig. 9–6

3–1 Lowering the platform

If the boom functions are disabled, lower the platform as follows:

Step 1

Take the cover on the lower control panel off.

Step 2

Hold the override switch and make sure that the warning buzzer sounds.

https://truckmanualshub.com/

Step 3

Operate the boom telescope switch with holding override switch to retract the boom.

Step 4

Operate the boom elevation switch with holding override switch to lower the boom.

3–2 Escape from work site

If the travel functions are disabled, escape from the work site as follows:

Step 1

Lower the platform following above steps.

Step 2

Push the override switch more than one second.

Step 3

Operate the travel joystick controller and the steering switch on the upper controls to escape the machine from the work site.

It enables the travel function for 180 seconds. Alarm buzzer sounds at the same time.

3–3 Canceling the touch switch

The override switch enables operation from the lower controls even when the touch switch on the platform has been pushed / pulled.

If an operator accidentally gets caught between the platform and objects, loses consciousness, and unintentionally presses the touch switch, lower the platform using the lower controls as follows:

Step 1

Take the cover on the lower control panel off.

Step 2

Hold the override switch and make sure that the warning buzzer sounds.

Step 3

Operate Engine start switch with holding override switch to start the engine.

Or operate Emergency pump switch with holding override switch to activate emergency pump.

Step 4

Operate the boom telescope switch with holding override switch to retract the boom.

Step 5

Operate the boom elevation switch with holding override switch to lower the boom.

Step 6

Engine automatically shut off when you release the override switch.

NOTICE

The override switch operation will be recorded each time. The history of override switch operation is possible to read by using adjustment tool.

https://truckmanualshub.com/

4. Towing

WARNING

- **The operation to release the parking brake must be performed by qualified service technicians.**
- **When towing on a slope, use a towing bar. Do not use chains, cables, or wire ropes to tow on a slope. The machine may roll away uncontrollably. Such accident could result in death or serious injury.**

If you are unable to travel the machine because of problems, it is possible to tow the machine provided you release the parking brake. Do the following.

4–1 Releasing the Parking Brake

WARNING

Do not release the parking brake on sloped ground. The machine may roll away uncontrollably. Such accident could result in death or serious injury.

CAUTION

- **In order to steer while being towed, be careful to avoid having the tow rod etc. come into contact with the machine.**
- **Once the parking brake has been released, do not travel the machine using the controls. It will cause trouble.**
- **After towing the machine, restore the parking brake immediately.**

Free the parking brake, then tow the machine to escape the machine from working place, when the travel function is disabled.

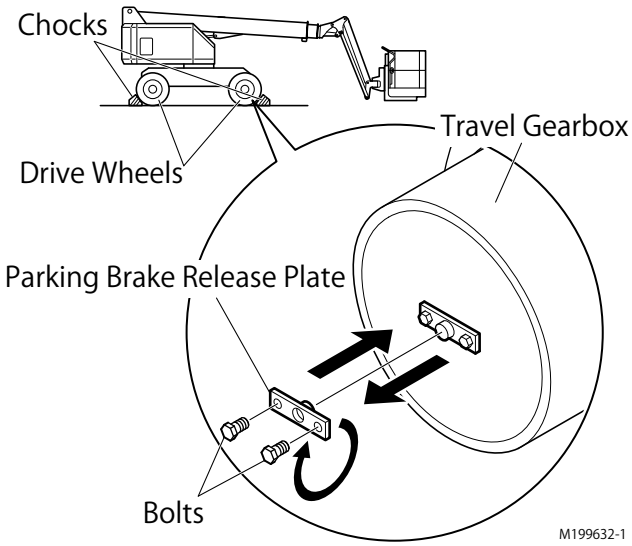

Fig. 9–7

Step 1

Set up the wheel chocks in front and rear of all tires.

Step 2

Firstly release the parking brake in one of the drive wheels.

Remove the bolts that are secured the parking brake release plate on the travel gearbox.

Step 3

Reverse the plate and reinstall it facing the convex portion to the travel gearbox.

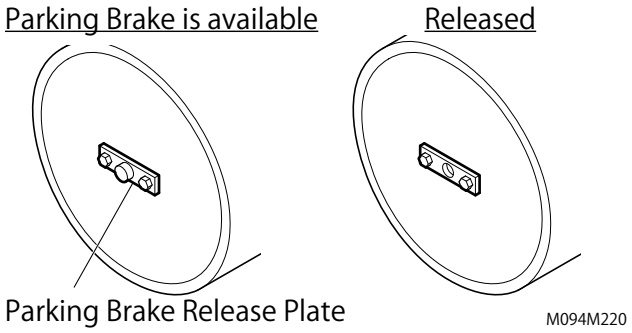

Fig. 9–8

Step 4

Firmly tighten the bolts and fix the plate. Now the parking brake is released.

NOTICE

Make sure to secure the parking brake release plate with the bolts.

Step 5

After releasing one wheel, and release all other wheels in the same manner.

https://truckmanualshub.com/

Step 6

To tow the machine, connect a towing chain or bar to the tie-down eyes installed on the chassis.

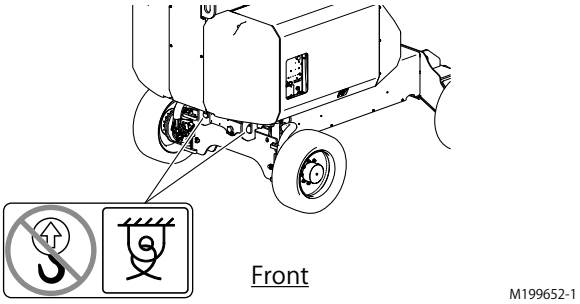

Fig. 9–9

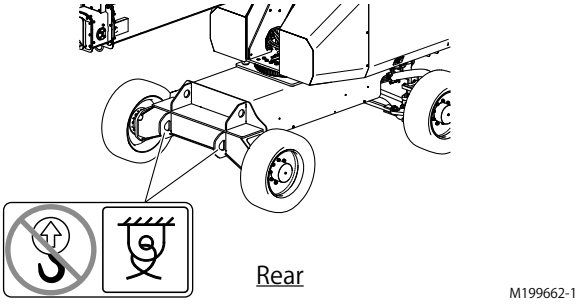

Fig. 9–10

Step 7

Remove the wheel chocks carefully and then tow the machine slowly.

Releasing the parking brake is now complete.

4–2 Restoring the Parking Brake

WARNING

Do not restore the parking brake on a slope. The machine may roll away uncontrollably. Such accident could result in death or serious injury.

After towing the machine, restore the parking brake to follow the procedure below.

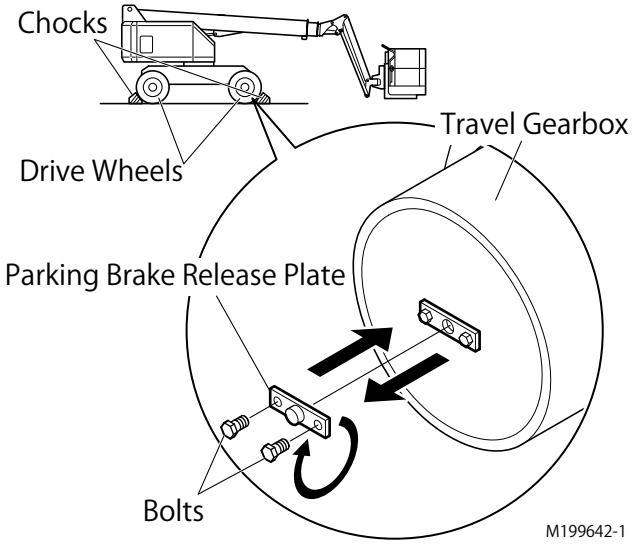

Fig. 9–11

Step 1

Set up the wheel chocks in front and rear of all tires.

Step 2

Firstly restore the parking brake in one of the drive wheels.

Remove the bolts that are secured the parking brake release plate on the travel gearbox.

Step 3

Reverse the plate and reinstall it facing the concave portion to the travel gearbox.

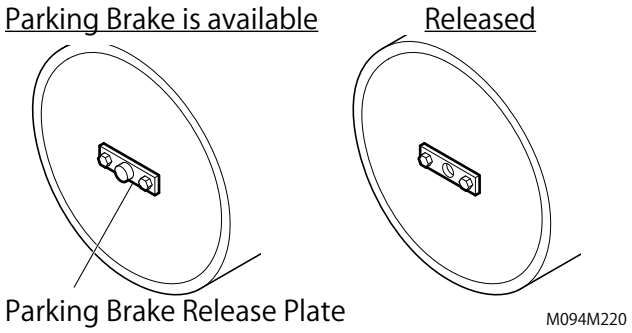

Fig. 9–12

Step 4

Firmly tighten the bolts and fix the plate.

NOTICE

Make sure to secure the parking brake release plate with the bolts.

Step 5

After restoring one wheel, and restore all other wheels in the same manner.

Restoring the parking brake is now complete.

https://truckmanualshub.com/

Chapter 10
Transporting

DANGER

Make sure the transport vehicle capacity, crane capacity, loading surfaces, sling chains and wire ropes are strong enough to withstand the machine weight. See the serial number plate for the machine weight.

NOTICE

- **This information about transporting is offered as a recommendation.**
- **Only the qualified persons shall operate the transport vehicle, crane, forklift, and the machine.**
- **All persons on transportation must comply with employer, work area, and local and national safety regulations regarding the use of these machines.**
- **Each machines must comply with all applicable regulations, and must be inspected and used in accordance with their manufacturer's instructions.**
- **It is the carrier's responsibility to perform proper loading/unloading, tie-down, lift, hoist and transportation.**

1. Preparations for Transporting

When transporting the machine using a transport vehicle, observe the following items:

Step 1

Park the transport vehicle on level and firm surface for loading/unloading the machine to/ from the transport vehicle.

Step 2

Lock the turntable with the turntable lock pin and prevent the turntable from being rotated during the transportation.

WARNING

Make sure to lock the turntable with the turntable lock pin before transporting.

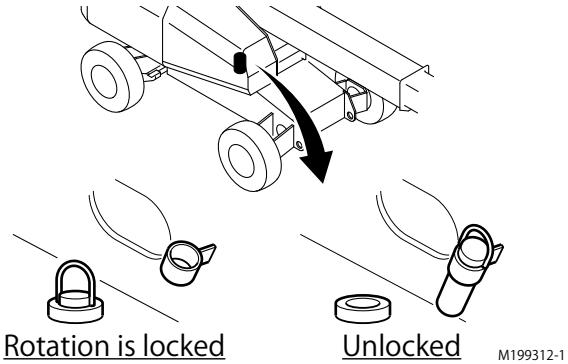

Fig. 10–1

NOTICE

Make sure to unlock the turntable before operating.

Step 3

Remove all lose items from the machine and transport vehicle bed.

Step 4

Check the entire machine for loose bolts, and unfastened locks.

https://truckmanualshub.com/

2. Loading the Machine

DANGER

- **To avoid slip-off and run-off, remove mud or oil from tires and ramp. In rainy condition, do not perform a loading work to avoid slip off the ramp.**
- **Failure to avoid these fall hazards could result in death or serious injury.**

WARNING

- **Do not travel the machine on a slope that exceeds the machine gradeability.**

  Use a winch for loading/unloading, if the ramp is too steep or slippery.
- **If the transport vehicle and the loading ramp are inclined to the left or right excessively, the wheels of the machine may fall off the ramp.**
- **Do not turn the steering of the machine while it is on the ramp, because of the possibility of a fall.**
- **When loading/unloading, be sure to have a guide assist you so that the wheels do not fall off the ramp and the transport vehicle bed.**
- **Travel with the counterweight uphill while the machine is on a slope.**
- **Failure to avoid these fall hazards could result in death or serious injury.**

Step 1

Park the transport vehicle on level firm surface.

Step 2

Chock the wheels of the transport vehicle. (Fig. 10–2, A)

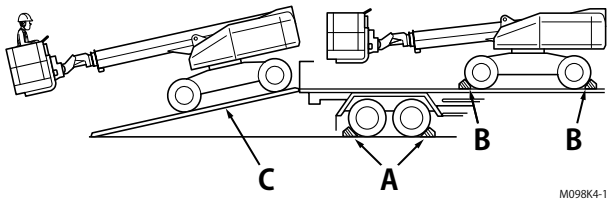

Fig. 10–2

Step 3

Attach the loading ramp at as small an angle as possible. (Fig. 10–2, C)

Step 4

Set the travel speed select switch to "🐢" (LOW SPEED) or "🐘" (HIGH TORQUE).

Step 5

Travel with the counterweight uphill, as shown in Fig. 10–2.

Drive the machine straight forward or backward at low speed onto the ramp, and load the machine onto the transport vehicle.

NOTICE

- **The machine is equipped with a system that automatically changes a travel mode: travel speed and torque, to assist traveling on a slope. The system might momentarily stop or back the machine just after having gone up onto a slope.**
- **If there is a level difference between the loading ramp and the floor surface, the machine may not be able to travel up onto the ramp. In this case, minimize the level difference using threshold ramp or strips.**

Step 6

Shut off the machine and chock the wheels of the machine. (Fig. 10–2, B)

Step 7

Turn the key switch to "◯" (OFF) to shut down the engine, remove the key to prevent using the machine without permission, and store it suitably.

Step 8

Firmly close all the doors of the machine. Make sure to lock all doors that are equipped with a door-lock.

WARNING

Doors opening suddenly through the movements of the machine could hit other loadings, resulting in falling hazard.

https://truckmanualshub.com/

Step 9

Close the upper controls cover and secure it with a tie-down strap (20–30 mm wide and made of nylon or polyester webbing).

NOTICE

Do not tighten the tie-down strap too much. Tighten the tie-down strap to the extent that the upper controls cover does not open during transportation.

Step 10

Remove all lose items from the machine and transport vehicle bed.

3. Tie Down

Step 1

Tie down the chassis of the machine to the transport vehicle bed securely.

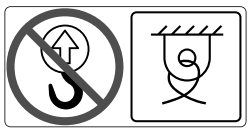

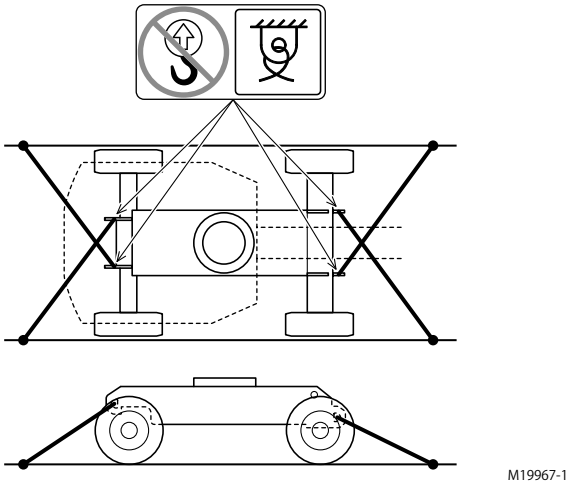

Fig. 10–3

Step 2

Tie down the platform so that it is not swung during the transportation. At this time, be sure to allow the clearance between the bottom of the platform and the transport vehicle bed.

Tie down the platform with placing a wood block under the platform to prevent the platform from bouncing during the transportation.

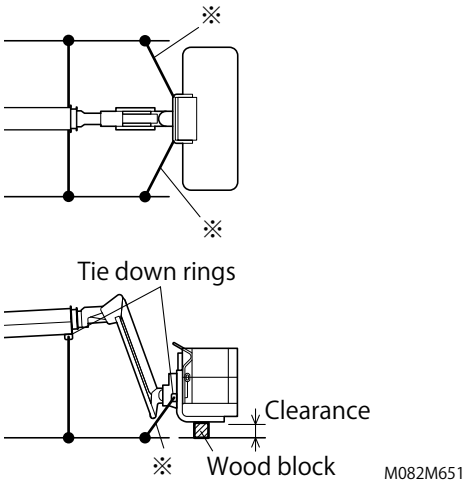

Fig. 10–4

NOTICE

Do not tighten the tie down chains or wire ropes marked (※) too much. Tighten them just so that the platform is not swung or bounced during the transportation.

4. Unloading the Machine

⚠DANGER

- **To avoid slip-off and run-off, remove mud or oil from tires and ramp. In rainy condition, do not perform a unloading work to avoid slip off the ramp.**
- **Failure to avoid these fall hazards could result in death or serious injury.**

⚠WARNING

- **Do not travel the machine on a slope that exceeds the machine gradeability.**

  Use a winch for loading/unloading, if the ramp is too steep or slippery.
- **If the transport vehicle and the loading ramp are inclined to the left or right excessively, the wheels of the machine may fall off the ramp.**
- **Do not turn the steering of the machine while it is on the ramp, because of the possibility of a fall.**
- **When loading/unloading, be sure to have a guide assist you so that the wheels do not fall off the ramp and the transport vehicle bed.**

https://truckmanualshub.com/

- **Travel with the counterweight uphill while the machine is on a slope.**
- **Failure to avoid these fall hazards could result in death or serious injury.**

Step 1

Park the transport vehicle on level firm surface.

Step 2

Chock the wheels of the transport vehicle. (Fig. 10–5, A)

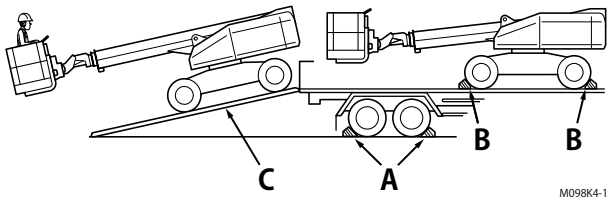

Fig. 10–5

Step 3

Attach the loading ramp at as small an angle as possible. (Fig. 10–5, C)

Step 4

Unchock the wheels of the machine. (Fig. 10–5, B)

Step 5

Set the travel speed select switch to "🐢" (LOW SPEED) or "🐘" (HIGH TORQUE).

Step 6

Travel with the counterweight uphill, as shown in Fig. 10–5.

Drive the machine straight forward or backward at low speed onto the ramp.

Step 7

After unloading the machine, turn the key switch to "◯" (OFF) to shut down the engine, remove the key to prevent using the machine without permission, and store it suitably.

Step 8

Unlock the turntable lock pin.

5. Hoisting the Machine

⚠DANGER

- **Make sure the transport vehicle capacity, crane capacity, loading surfaces, sling chains and wire ropes are strong enough to withstand the machine weight. See the serial number plate for the machine weight.**
- **Do not allow any person to get under the machine while hoisting.**
- **Do not pass the sling chains or wire ropes except designated hoisting eyes.**
- **If there is damage, such as cracks, on the hoisting eyes, immediately contact AICHI or an AICHI dealer for repairs.**
- **Failure to heed warnings could result in breaking, falling, or other hazards leading to death or serious injury.**

⚠CAUTION

When the machine is excessively tilted, battery fluid may leak out.

Step 1

Retract and lower the boom fully.

Step 2

Prepare sling chains or wire ropes according to the Table 10–1.

Step 3

Pass the sling chains or wire ropes through the hoisting eyes located on the turntable as shown in the Fig. 10–6.

Step 4

Adjust the rigging to prevent damage to the machine and to keep the machine level.

Step 5

If necessary, use spreaders of sufficient length to keep the slings from contacting the turntable or booms.

Step 6

When hoisting, the machine should be in the posture of figure below.

https://truckmanualshub.com/

Just before leaving off the ground, check the balance, and operate the boom to adjust the machine level as needed.

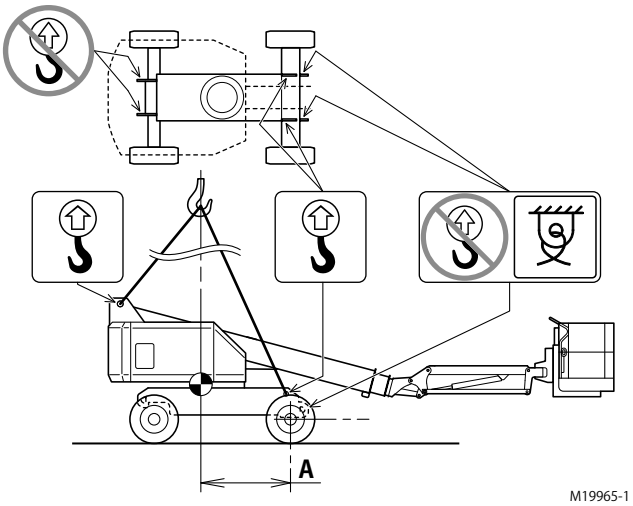

Fig. 10–6

Table 10–1 Hoisting Specifications

Model	SP14DJ
Machine weight *	8 450 kg
Type of hitch	4–leg bridle
Min. breaking load	261 kN (26 600 kgf)
Min. leg length (same length for all)	5 m
Center of gravity to steer wheel (Fig. 10–4, A)	1 530 mm
* See the serial number plate for the machine weight.	

6. Hoisting with Boom Raised

When you are working in a cramped location, you may not have enough room to lower the boom prior to hoisting. In such cases, it is permissible to hoist the machine while the boom is still up. Proceed as follows.

- Prepare sling chains or wire ropes according to Table 10–2.
- Set the boom angle to 60° or lower (that is, at least 10° below the maximum raise angle of 70°).
- If sling chains or wire ropes contact the boom, place pads on the boom to protect it.

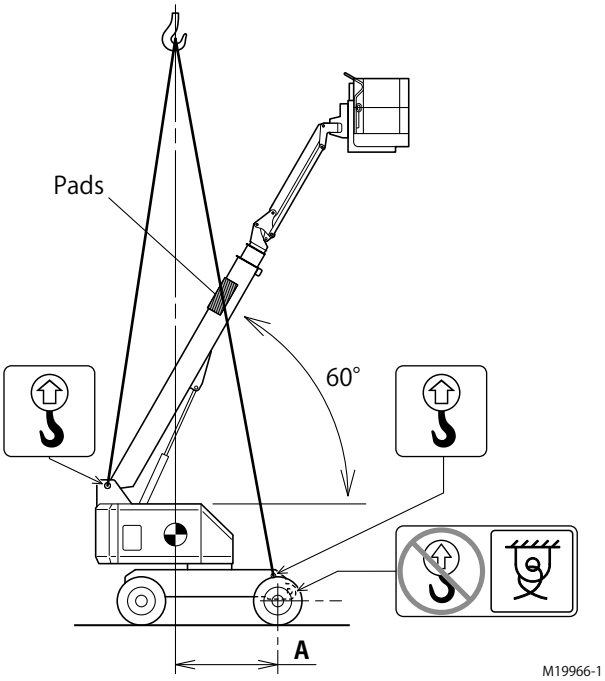

Fig. 10–7

Table 10–2 Hoisting Specifications

Model	SP14DJ
Machine weight *	8 450 kg
Type of hitch	4–leg bridle
Min. breaking load	216 kN (22 000 kgf)
Min. leg length (same length for all)	10 m
Center of gravity to steer wheel (Fig. 10–5, A)	1 750 mm
* See the serial number plate for the machine weight.	

https://truckmanualshub.com/

Chapter 11

Storage

(1) Clean all part of the machine.

Fig. 11–1

NOTICE

Be careful about freezing in winter.

(2) Wipe away dirt from around the electrical parts with a dry cloth.

NOTICE

Do not wash, particularly high-pressure washing, around the electrical parts.

(3) Lubricate each part of the machine thoroughly.

(4) Apply rust prevention oil to the cylinder rods.

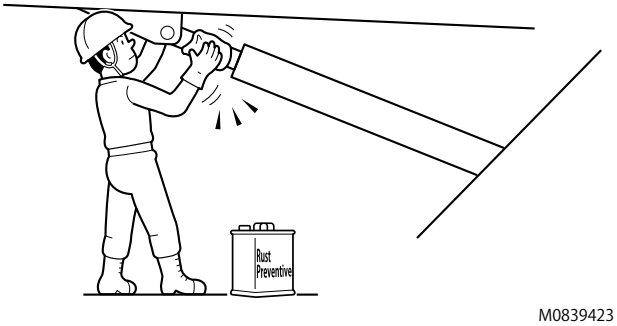

Fig. 11–2

NOTICE

Rusting may occur if rust prevention oil is not applied.

(5) Store the machine in a dry indoor area.
If it is necessary to store the machine out of doors, park it in a flat area.

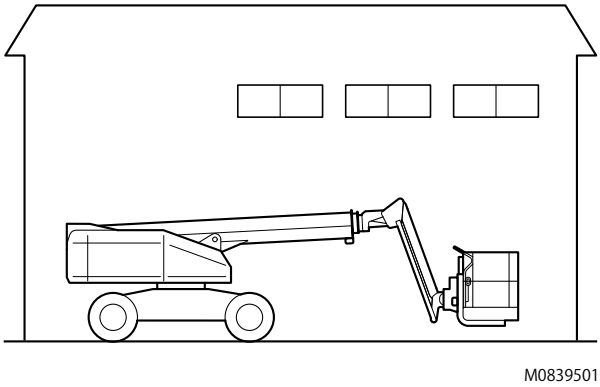

Fig. 11–3

(6) Periodically operate the boom, so as to maintain the oil film on its lubricated parts.

NOTICE

Wipe off the rust prevention oil applied on the cylinder rods before operating the machine.

(7) If the boom is left extended or raised while the hydraulic oil temperature is high, the boom may retract or lower somewhat. This is caused by the contraction of the hydraulic oil confined in the hydraulic cylinders due to a change in the hydraulic oil temperature.

NOTICE

If the hydraulic oil temperature drops 10℃ with the boom fully extended and raised, the boom will retract approx. 30 mm.

This value, however, varies depending on the boom length and the boom angle.

https://truckmanualshub.com/

Chapter 12
Troubleshooting

1. Troubleshooting Chart

1–1 Upper Controls

Symptom	Cause	Remedy	Refer to
Operations from upper controls are not available.	Engine is stopped.	Start the engine.	Chapter 8, Section 1
	Foot switch is not depressed.	Depress the foot switch and operate controls. (except for the engine starting operation)	Chapter 8, Section 3
	Power indicator light on the upper controls is lit off.	Turn the key switch on the lower controls to "▭" (UPPER CONTROLS).	Chapter 8, Section 1
	Power indicator light on the upper controls is flashing.	Release all controls and the power indicator light turns on, then operate again.	Chapter 3, Section 1 Chapter 4, Section 2 Chapter 8, Section 3
	System failure light on the upper controls is lit on or flashing.	Immediately stow the boom and stop using the machine. Contact AICHI or an AICHI dealer for inspections.	Chapter 4, Section 2 Chapter 9, Section 3
Engine does not start.	Power indicator light on the upper controls is lit off.	Pull out both of the upper and lower emergency stop buttons to "ON."	Chapter 8, Section 1
		Turn the key switch on the lower controls to "▭" (UPPER CONTROLS).	Chapter 8, Section 1
		Release the touch switch.	Chapter 8, Section 3
	Foot switch is depressed.	Release the foot switch whenever starting the engine on the upper controls.	Chapter 8, Section 1
	Fuel level light is lit on.	Refill the diesel fuel.	Chapter 4, Section 2 Chapter 12, Section 5
Engine stops even if the emergency stop button is not pushed in.	Emergency pump switch is operated.	Engine will stop if operating the emergency pump switch while the engine is running. This is not a failure.	Chapter 9, Section 2
	Touch switch (bar) is pressed.	Engine will stop when pressing the touch switch (bar). This is not a failure.	Chapter 8, Section 3
	Boom is shaken heavily, or Platform is pressed against the wall strongly.	The safety device would stop the engine. This is not a failure.	Chapter 8, Section 3

https://truckmanualshub.com/

Upper Controls (Continued)

Symptom	Cause	Remedy	Refer to
Boom functions are not available with emergency pump.	Power indicator light on the upper controls is lit off.	Pull out both of the upper and lower emergency stop buttons to "ON."	Chapter 8, Section 1
		Turn the key switch on the lower controls to "▭" (UPPER CONTROLS).	Chapter 8, Section 1
		Release the touch switch.	Chapter 8, Section 3
	H/v control select switch is turned on.	Turn the h/v control select switch off.	Chapter 9, Section 2
Horizontal and vertical movements and traveling functions are not available with emergency pump.	Horizontal and vertical movements and traveling function cannot be operated when operating with the emergency pump.	This is not a failure.	Chapter 9, Section 2
Boom retracts when operating the boom lowering function.	Work range limit system automatically retracts the boom so that the boom continuously lowers along the specific range line when lowering the boom. (Outreach limit light is flashing.)	This is not a failure.	Chapter 3, Section 1
Boom rotating function is not available.	Turntable is locked with the turntable lock pin.	Set the turntable lock pin to unlocked position.	Chapter 3, Section 1 Chapter 6, Section 2 Chapter 8, Section 1
High speed traveling is not available.	Travel speed select switch on the lower controls is selected to "🐢" (LOW SPEED) or center position (MIDDLE SPEED).	Select the travel speed select switch to "🐇" (HIGH SPEED).	Chapter 8, Section 3
	Boom is extended, or Boom elevation angle is 5° or more.	Retract the boom fully and lower the boom to 5° or less.	Chapter 3, Section 2
Traveling operation is not available.	Horizontal/vertical movement operation is in operation.	Horizontal/vertical movement operation and traveling operation are not available simultaneously.	Chapter 8, Section 3
Operation for platform level adjustment stops.	Platform leveling switch on the upper controls is operated for more than 3 seconds continuously.	Platform level adjustment function will temporarily stop if operating the platform leveling switch for 3 seconds continuously. To resume function, release the switch and operate again.	Chapter 8, Section 12
Boom naturally retracts somewhat when the boom is raised and extended while the hydraulic oil temperature is high.	This phenomenon is caused by the contraction of the hydraulic oil confined in the boom telescope cylinder.	This is not a failure.	Chapter 11
Platform tilts when operating functions of the boom elevation and/or the boom telescope.	Hydraulic oil temperature is low.	Increase the hydraulic oil temperature and then bleed air from the platform leveling system.	Chapter 8, Section 12 Chapter 12, Section 4

https://truckmanualshub.com/

1–2 Lower Controls

Symptom	Cause	Remedy	Refer to
Operations from lower controls are not available.	Engine is stopped.	Start the engine.	Chapter 8, Section 1
	Key switch on the lower controls is turned to "◯" (OFF) or "▭" (UPPER CONTROLS).	Turn the key switch on the lower controls to "" (LOWER CONTROLS).	Chapter 8, Section 1
	Enable switch is not held up.	Hold the master switch up and operate the boom from the lower controls.	Chapter 8, Section 4
	Preheat light on the lower controls is flashing.	Release all controls and the preheat light turns off, then operate again.	Chapter 3, Section 1 Chapter 4, Section 3 Chapter 8, Section 4
Engine does not start.	Both of the oil pressure light and the charge light on the lower controls are lit off. (These lights are lit off when the engine is running.)	Turn the key switch on the lower controls to "" (LOWER CONTROLS).	Chapter 8, Section 1
		Pull out both of the upper and lower emergency stop buttons to "ON."	Chapter 8, Section 1
Boom functions are not available with emergency pump.	Both of the oil pressure light and the charge light on the lower controls are lit off. (These lights are lit off when the engine is running.)	Pull out both of the upper and lower emergency stop buttons to "ON."	Chapter 8, Section 1
		Turn the key switch on the lower controls to "" (LOWER CONTROLS).	Chapter 8, Section 1
Warning buzzer sounds when pre-operation check switch is operated.	Platform is not a stowed posture.	Turn the key switch on the lower controls to "◯" (OFF). After checking surrounding safety, start the engine and stow the platform. Then operate the pre-operation check switch again.	Chapter 6, Section 2

https://truckmanualshub.com/

2. Diagnostic Codes Chart

When a problem occurs, a diagnostic code such as “LMT” or “ERR” will appear on the digital display, and then a three digit number related to the diagnostic code will appear.

For further information of the diagnostic code and number, refer to table below.

Table 12–1 Diagnostic Codes Chart

Code	Number	Description	Causes	Countermeasures
LMT	001	Tilt warning (Travel limitation)	Boom ids raised up more than 45 degrees or extended, and the machine is tilted more than 4.5 degrees.	Lower the boom. Retract the boom. Move to level surface.
LMT	005	Overload warning	Platform is overloaded.	Reduce the load on platform.
LMT	009	Enable switch defer error	1. Foot switch is pushed while joystick is already operated. 2. Enable switch is turned on while boom function switch is already operated.	1. Release the joystick and foot switch. 2. Release the boom function switch and enable switch.
LMT	211	Operation Time-out (Upper, Foot switch)	1. Foot switch was already operated when turning Key switch on or pulling up Emergency stop button. 2. Foot switch is operated more than 20 seconds without operating Joysticks / function switches.	1. Release the Foot switch. 2. Release the Foot switch.
LMT	212	Operation Time-out (Upper, Travel joystick)	1. Travel joystick was already operated when turning Key switch on or pulling up Emergency stop button. 2. Travel joystick is operated more than 20 seconds without operating Foot switch.	1. Release the Travel joystick. 2. Release the Travel joystick.
LMT	213	Operation Time-out (Upper, Steering lever)	1. Steering lever was already operated when turning Key switch on or pulling up Emergency stop button. 2. Steering lever is operated more than 20 seconds without operating Foot switch.	1. Release the Steering lever. 2. Release the Steering lever.
LMT	221	Operation Time-out (Lower, Enable switch)	1. Enable switch was already operated when turning Key switch on or pulling up Emergency stop button. 2. Enable switch is operated more than 20 seconds without operating function switches.	1. Release the Enable switch. 2. Release the Enable switch.
LMT	224	Operation Time-out (Lower, Emergency pump switch)	1. Emergency pump switch at lower control was already operated when turning Key switch on or pulling up Emergency stop button. 2. Emergency pump switch at lower control is operated more than 20 seconds without operating function switches.	1. Release the Emergency pump switch. 2. Release the Emergency pump switch.

https://truckmanualshub.com/

Table 12–1 Diagnostic Codes Chart (Continued)

Code	Number	Description	Causes	Countermeasures
LMT	225	Operation Time-out (Lower, Enable switch on optional Remote controller)	Optional remote controller was already operated when turning Key switch on or pulling up Emergency stop button.	Release the buttons on remote controller.
LMT	230	Operation Time-out (Upper, Boom elevation joystick)	1. Boom elevation joystick was already operated when turning Key switch on or pulling up Emergency stop button. 2. Boom elevation joystick is operated more than 20 seconds without operating Foot switch.	1. Release the Boom elevation joystick. 2. Release the Boom elevation joystick.
LMT	231	Operation Time-out (Upper, Boom telescope joystick)	1. Boom telescope joystick was already operated when turning Key switch on or pulling up Emergency stop button. 2. Boom telescope joystick is operated more than 20 seconds without operating Foot switch.	1. Release the Boom telescope joystick. 2. Release the Boom telescope joystick.
LMT	232	Operation Time-out (Upper, Boom rotation joystick)	1. Boom rotation joystick was already operated when turning Key switch on or pulling up Emergency stop button. 2. Boom rotation joystick is operated more than 20 seconds without operating Foot switch.	1. Release the Boom rotation joystick. 2. Release the Boom rotation joystick.
LMT	235	Operation Time-out (Upper, Platform rotation switch)	1. Platform rotation switch was already operated when turning Key switch on or pulling up Emergency stop button. 2. Platform rotation switch is operated more than 20 seconds without operating Foot switch.	1. Release the Platform rotation switch. 2. Release the Platform rotation switch.
LMT	236	Operation Time-out (Upper, Fly-jib switch) SP14DJM only	1. Fly-jib switch was already operated when turning Key switch on or pulling up Emergency stop button. 2. Fly-jib switch is operated more than 20 seconds without operating Foot switch.	1. Release the Fly-jib switch. 2. Release the Fly-jib switch.
LMT	237	Operation Time-out (Upper, Platform leveling switch)	1. Platform leveling switch was already operated when turning Key switch on or pulling up Emergency stop button. 2. Platform leveling switch is operated more than 20 seconds without operating Foot switch.	1. Release the Platform leveling switch. 2. Release the Platform leveling switch.
LMT	240	Operation Time-out (Lower, Boom elevation switch)	1. Boom elevation switch was already operated when turning Key switch on or pulling up Emergency stop button. 2. Boom elevation switch is operated more than 20 seconds without operating Foot switch.	1. Release the Boom elevation switch. 2. Release the Boom elevation switch.

https://truckmanualshub.com/

Table 12–1 Diagnostic Codes Chart (Continued)

Code	Number	Description	Causes	Countermeasures
LMT	241	Operation Time-out (Lower, Boom telescope switch)	1. Platform rotation switch was already operated when turning Key switch on or pulling up Emergency stop button. 2. Platform rotation switch is operated more than 20 seconds without operating Foot switch.	1. Release the Boom telescope switch. 2. Release the Boom telescope switch.
LMT	242	Operation Time-out (Lower, Boom rotation switch)	1. Boom rotation switch was already operated when turning Key switch on or pulling up Emergency stop button. 2. Boom rotation switch is operated more than 20 seconds without operating Foot switch.	1. Release the Boom rotation switch. 2. Release the Boom rotation switch.
LMT	245	Operation Time-out (Lower, Platform rotation switch)	1. Platform rotation switch was already operated when turning Key switch on or pulling up Emergency stop button. 2. Platform rotation switch is operated more than 20 seconds without operating Foot switch.	1. Release the Platform rotation switch. 2. Release the Platform rotation switch.
LMT	246	Operation Time-out (Lower, Fly-jib switch) SP14DJM only	1. Fly-jib switch was already operated when turning Key switch on or pulling up Emergency stop button. 2. Fly-jib switch is operated more than 20 seconds without operating Foot switch.	1. Release the Fly-jib switch. 2. Release the Fly-jib switch.
LMT	247	Operation Time-out (Lower, Platform leveling switch)	1. Platform leveling switch was already operated when turning Key switch on or pulling up Emergency stop button. 2. Platform leveling switch is operated more than 20 seconds without operating Foot switch.	1. Release the Platform leveling switch. 2. Release the Platform leveling switch.
ERR	216	Boom wire rope failure error	Boom extension wire rope is cut or loose.	• Check the Boom extension wire ropes for any damages. • Contact AICHI or an AICHI dealer for Tension adjustment or Replacement of Boom extension wire ropes.
ERR	30B	Pre-operation check error	One or some of ERR30H, ERR30J, ERR30M, ERR30N, ERR381, ERR382, ERR383, ERR384, ERR391 or ERR392 occurs.	• See ERR30H, ERR30J, ERR30M, ERR30N, ERR381, ERR382, ERR383, ERR384, ERR391 and ERR392.
ERR	30H 30J 30M 30N	Pre-operation check error Tilt sensor	Machine is tilted, or Sensor error occurred.	• Set the machine horizontal and perform the Pre-operation check. • If the error persists, contact AICHI or an AICHI dealer for inspections.

https://truckmanualshub.com/

Table 12–1 Diagnostic Codes Chart (Continued)

Code	Number	Description	Causes	Countermeasures
ERR	381 382	Pre-operation check error Boom full retraction limit switch	Boom is extended, or Limit switch error occurred.	• Retract the boom fully and perform the Pre-operation check. • If the error persists, contact AICHI or an AICHI dealer for inspections.
ERR	383 384	Pre-operation check error Boom rotation limit switch	Boom is not at the rear center of the machine, or Limit switch error occurred.	• Rotate the boom to the rear center of the machine and perform the Pre-operation check. • If the error persists, contact AICHI or an AICHI dealer for inspections.
ERR	391 392	Pre-operation check error Boom angle sensor	Boom is not lowered fully, or Sensor error occurred.	• Lower the boom fully and perform the Pre-operation check. • If the error persists, contact AICHI or an AICHI dealer for inspections.
ERR	830	Water temp. error (Water temperature light on the Lower controls goes on.)	Water (Coolant) temperature is higher than 110 degrees C, or Sensor error occurred.	• Stop the engine and wait to cool down the engine. • If the error persists, contact AICHI or an AICHI dealer for inspections.
		Engine oil pressure error (Oil pressure light on the Lower controls goes on.)	Sensor error occurred.	• Turn off the key switch once, and then turn on it. • If the error persists, contact AICHI or an AICHI dealer for inspections.
		Air cleaner error (Air filter clog light on the Lower controls goes on.)	Air cleaner is clogged, or Sensor error occurred.	• Clean or replace the air cleaner element. • If the error persists, contact AICHI or an AICHI dealer for inspections.

NOTICE

If any diagnostic code other than described above appears, the machine may need adjustment or repair. Contact AICHI or an AICHI dealer as soon as possible.

https://truckmanualshub.com/

Chapter 13
Specifications

1. Dimensions

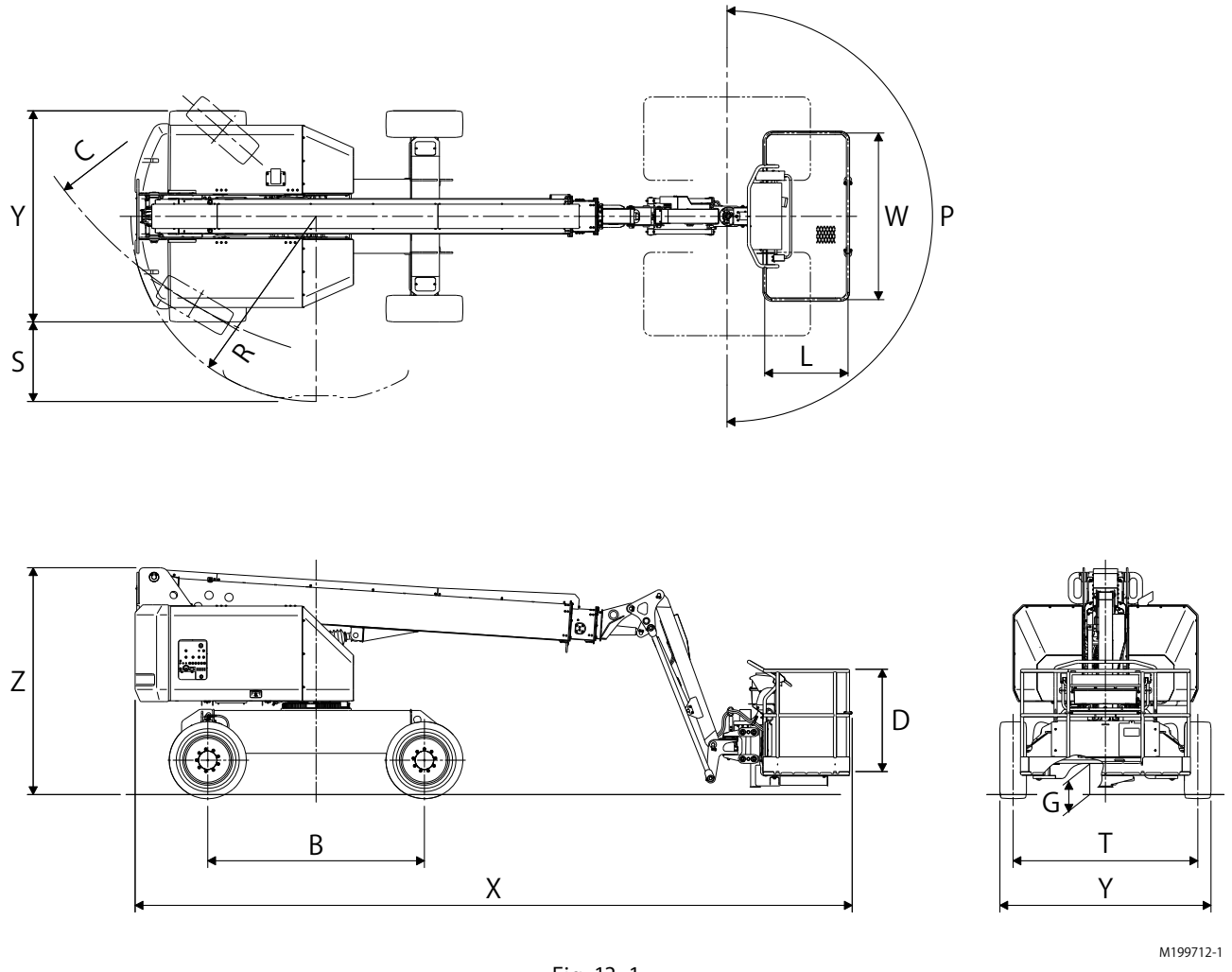

Fig. 13–1

X	Overall Length
Y	Overall Width
Z	Overall Height
R	Turntable Tail Swing Radius
S	Turntable Tail Swing
G	Ground Clearance
B	Wheelbase
T	Tread (Front, Rear)
L	Platform Inner Length (Pipe Center)
W	Platform Inner Width (Pipe Center)
D	Platform Inner Depth (Pipe Center)
P	Platform Rotation
C	Minimum Turning Radius (Center of Outside Wheel)

https://truckmanualshub.com/

2. General Specifications

Model			SP14DJ
Performance	Platform Height Maximum		13.9 m
	Horizontal Outreach Maximum		12.6 m
	Platform Load Capacity (Evenly Distributed)		270 kg or 2 persons
	Platform Rotation [P]		90˚ CW to 90˚ CCW (180˚)
	Turntable Rotation		360˚ (Continuous)
	Max. Allowable Tilt Angle		5˚
	Gradeability (Stowed)*1 *2		47% (25˚)
	Max. Allowable Manual Side Force		400 N (41 kg)
	Min. Turning Radius (Center of Outside Wheel) [C]		5.000 m
	Max. Allowable Wind Speed		12.5 m/s
Measurements	Overall Length [X]		7.745 m
	Overall Width [Y]		2.300 m
	Overall Height [Z]		2.450 m
	Turntable Tail Swing Radius [R]		2.000 m
	Turntable Tail Swing [S]		0.850 m
	Inside Diameter of Platform [LWD]		0.9 x 1.8 x 1.1 m
	Wheel Base [B]		2.340 m
	Tread [T]		2.000 m
	Tires		33x12-20 SOLID
	Ground Clearance [G]		0.330 mm
Weight*3	Gross Weight		8 450 kg
	Max. Tire Loading Force		4 260 kg
	Max. Tire Ground Contact Pressure (POSITIVE)		1 225 kPa (735 Overall)
Power source	Engine		YANMAR 4TNV88-KASV
	Auxiliary Power Unit		12V–DC
	Fuel Type		Diesel Fuel
	Fuel Tank Capacity		120 L
	Recommended Hydraulic Oil		Shell Tellus S2 M 22
	Hydraulic Tank Capacity		190 L
Function speed*1	Elevation	Up	-15 – 70˚ / 39 – 51 s
		Down	-15 – 70˚ / 39 – 51 s
	Telescope	Out	5.77 m / 24 – 36 s
		In	5.77 m / 19 – 31 s
	Turntable Rotation (Stowed)		0.5 rpm (360˚ / 120 – 130 s)
	Jib Elevation	Up	-70 – 60˚ / 20 – 30 s
		Down	-70 – 60˚ / 15 – 25 s
	Platform Rotation		180˚ / 10 – 20 s
	Max. Travel Speed*2 (Level Surface)	Stowed	7.2 km/h
		Elevated	1.2 km/h

- The machine is designed for both indoor and outdoor use.
- Advisable atmospheric temperature range: -20˚C to 40˚C.

*1 Function speeds and gradeability assume that 1 person is on the machine.

*2 Travel speed and gradeability depend on adequate traction and the conditions of the traveling surface.

*3 Weight informations are approximate and do not incorporate different option configurations.

https://truckmanualshub.com/

3. Work Range Diagram

3–1 SP14D1JM

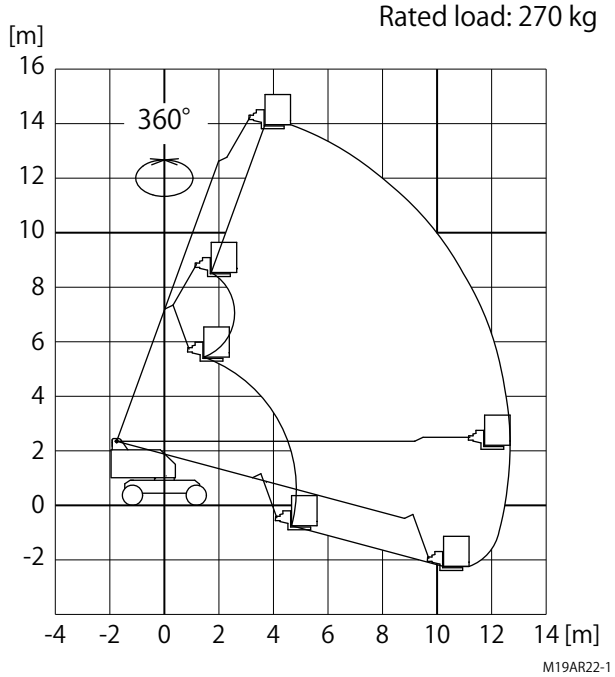

Fig. 13–2

1. The boom deflection is not taken into account in the above working range diagram.
2. The working range is the same in any boom-rotated directions.
3. The working range is a reference measured on a firm level surface.
4. The counter weight should be attached to the specified point.
5. Platform rated load may differ depending on option configurations.

4. Supplementary Information

The following information is provided as supplementary information for the machine.

- The guaranteed Sound Power Level (LWA), tested according to Annex III, Part B, No 1 of the European Directive 2000/14/EC “Noise emission in the environment by equipment for use outdoors”, is 104 dB.
- The vibration total value to which the hand-arm system is subjected does not exceed 2.5 m/s^2.
- The highest root mean square value of weighted acceleration to which the whole body is subjected is 0.61 m/s^2.

https://truckmanualshub.com/

This page intentionally left blank.

https://truckmanualshub.com/

Appendix A
Test Report

1. Static Test (EN280; 6.1.4.2.1)

1–1 SP14DJ

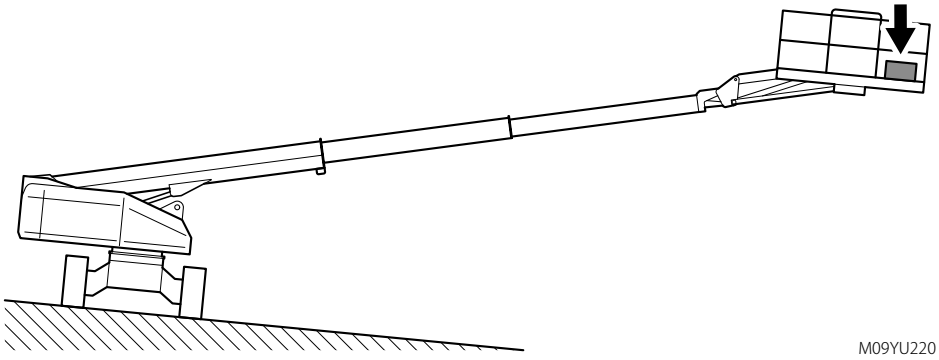

Fig. 14–1

Platform-load [kg]	324 (270+20%)	**Slope [°]**	5.0 + 0.5 = 5.5
Boom Length	Fully extended + jib horizontal	**Boom Angle [°]**	5.5
Weather Conditions	Outdoor; no wind	**Test Passed**	Additional weight for simulating manual forces and wind force

Table 14–1

Result: test passed

https://truckmanualshub.com/

2. Dynamic Test (EN280; 6.1.4.2.2)

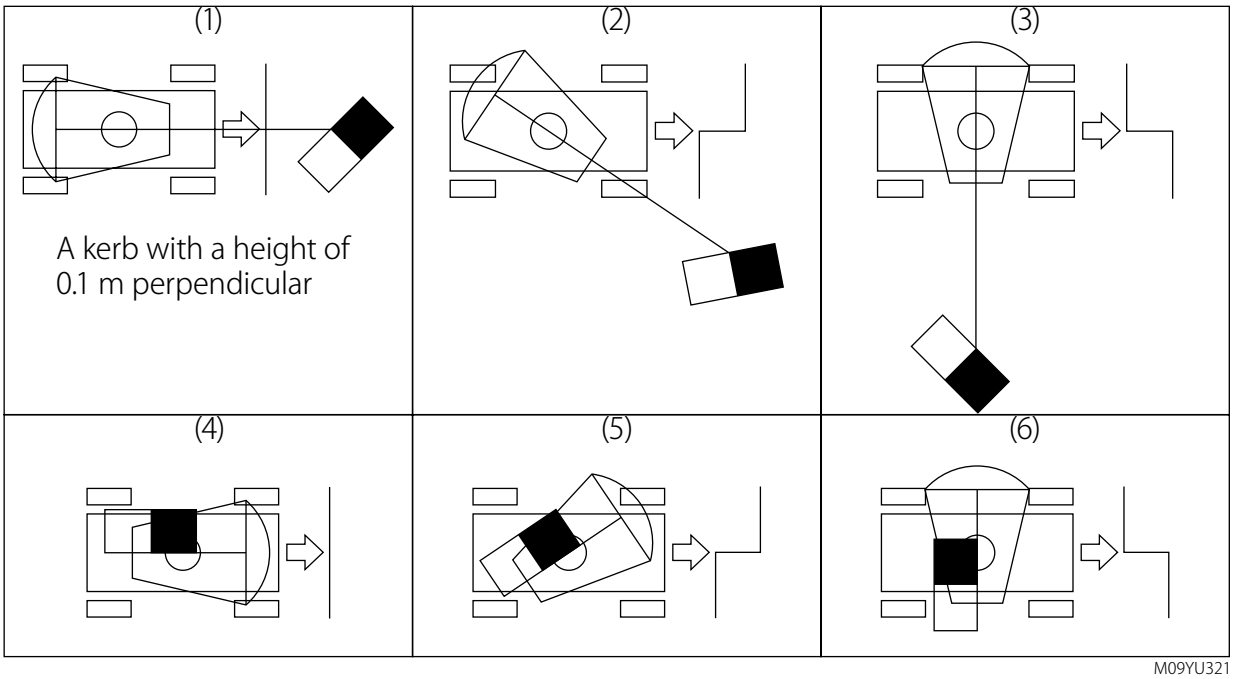

Fig. 14–2

(1) Both leading wheels into the depression
(2) One leading wheel into the depression
(3) One leading wheel into the depression
(4) Both leading wheels into the depression
(5) One leading wheel into the depression
(6) One leading wheel into the depression

2–1 SP14DJ

Result: test passed

(nominal load: 270 kg / 50% of platform; oscillation axle: 5; drive speed: 1.2 km/h; 0.333 m/s)

https://truckmanualshub.com/

Appendix B
Declaration of Conformity

https://truckmanualshub.com/

EC DECLARATION OF CONFORMITY

AICHI CORPORATION

Product: Rotating telescopic boom mobile elevating work platform

Model: SP14DJ

Manufacturer: Aichi Corporation
1152-10, Aza Yamashita Ryoke Oaza Ageo-shi,
Saitama 362-8550
Japan

Technical File: AICHI SALES OFFICE B.V.
De Boedingen 31
4906 BA Oosterhout
THE NETHERLANDS
Contact: R. van Gent / President

Notified body of EC type-examination:
HHC/DRS Inspecties B.V.
Kokkel 4a
NL-1723 HX Noord-Scharwoude.
The Netherlands
Identification number Notified Body: 1869

Certificate Number: 1869/1/SB/2019/MD/EN/AICHI/519131/v1.0

The above products have been evaluated for conformity with provisions of following European Directives:

Directive 2006/42/EC	Machinery Directive
Directive 2014/30/EC	EMC Directive
Directive 2000/14/EC+2005/88/EC	The noise emission in the environment by equipment for use outdoors

Applied Harmonized Standards:
EN 280: 2013+A1: 2015
EN 13309: 2010

Name: Takashi Kimura
Position: Director Development Division
Place: Ageo-shi, Japan
Date: 20th December 2019

This declaration conforms with the requirements of annex II-A of the council directive.
Any modification to the above described machine violates the validity of this declaration.

https://truckmanualshub.com/

Appendix C
Engine Information

https://truckmanualshub.com/

1. TNV-CR Explanations of the Possible Malfunctions of the Emissions Control System

Table 16–1 TNV-CR Explanations of the Possible Malfunctions of the Emissions Control System

Device	Trigger Action	Failsafe (◇: Selectable)															Fault Code			
				Predicted Operation				Actual Operation											J1939	
				Rotation Limit	Max. Injection Amount Limit	Transition Time to Actual Operation		Engine Stop			Rotation Limit			Max. Injection Amount Limit						
		FS Action Level	NCD or PCD Error	Limit 1: Maximum Torque Speed+200 min^{-1}	Limit A: 85%	After 2 hours	After 15 minutes	Without delay	With delay time for 2 hours	With delay time for 15 minutes	Limit 1: Maximum Torque Speed+200 min^{-1}	Limit 2: 1,800 min^{-1}	Limit 3: 1500 min^{-1}	Limit A: 85%	Limit B: 75%	Limit C 50%	DTC	Failure Type	SPN	FMI
EGR Differential Pressure Sensor	1. Wiring Bypass	2	N	●	●		●				●					●	P0238	00	102	3
EGR Differential Pressure Sensor	1. Wiring Disconnection 2. Sensor Removal	2	N	●	●		●				●					●	P0237	00	102	4
EGR Differential Pressure Sensor	1. Pressure Hose Removal 2. Sensor Leave in Atmosphere 3. Dummy Registance	6	N														P1673	00	102	10
Coolant Temperature Sensor	1. Wiring Disconnection 2. Sensor Removal	4	N		●	●										●	P0117	00	110	4
DPF Differential Pressure Sensor	1. Wiring Bypass	2	N	●	●		●				●					●	P2455	00	3251	3
DPF Differential Pressure Sensor	]. Wiring Disconnection 2. Sensor Removal	2	N	●	●		●				●					●	P2454	00	3251	4
DPF Differential Pressure Sensor	1. Pressure Hose Removal 2. SF Removal 3. Sensor Leave in Atmosphere 4. Dummy Registance	6	P														P226D	00	4795	31
DPF Inlet Temperature Sensor	1. Wiring Bypass	2	P	●	●		●				●					●	P1428	00	3242	3
DPF Inlet Temperature Sensor	1. Wiring Disconnection 2. Sensor Removal	2	P	●	●		●				●					●	P1427	00	3242	4
DPF Intermediate Temperature Sensor	1. Wiring Bypass	2	P	●	●		●				●					●	P1434	00	3250	3
DPF Intermediate Temperature Sensor	1. Wiring Disconnection 2. Sensor Removal	2	P	●	●		●				●					●	P1435	00	3250	4
EGR Gas Temperature Sensor	1. Wiring Bypass	3	N		●	●										●	P041D	00	412	3
EGR Gas Temperature Sensor	1. Wiring Disconnection 2. Sensor Removal	3	N		●	●										●	P041C	00	412	4
Intake Manifold Temperature Sensor	1. Wiring Bypass	2	N	●	●		●				●					●	P040D	00	105	3
Intake Manifold Temperature Sensor	1. Wiring Disconnection 2. Sensor Removal	2	N	●	●		●				●					●	P040C	00	105	4
Exhaust Manifold Temperature Sensor	1. Wiring Bypass	4	N		●	●										●	P0546	00	173	3
Exhaust Manifold Temperature Sensor	1. Wiring Disconnection 2. Sensor Removal	3	N		●	●										●	P0545	00	173	4
EGR Valve	1. Wiring Disconnection	3	N		●	●										●	P0403	00	2791	12

https://truckmanualshub.com/

2. Emission Diagnosis Required in European Stage V (19-56kW)

- NOx Control Diagnosis (EGR related) and DPF Diagnosis are required.
- Warning and Inducement are required for malfunctions related to EGR.
- Warning and Incident counter/timer are required for malfunctions related to DPF.
  * For derating condition, Inducement and specific derating level of either more derating will be applied.

Table 16–2 Emission Diagnosis Required in European Stage V (19-56kW)

Diagnosis			Warning (Example)	Actions			
Functions	**Detection targets**				**Low level Inducement**		**Severe Inducement**
NOx Diagnosis (NCD; NOx Control Diagnosis)	●EGR Valve malfunctions	Immediately	Dedicated warning for NCD is necessary	36hr passed	Torque: 75%	64hr passed	Torque: 50% Engine speed: 60% of rated speed
	●Electrical malfunction of EGR control sensors (disconnection, short)						
	◎Tampering with EGR control sensors						
DPF Diagnosis (PCD; Particulate Control Diagnosis)	◎Removing DPF including case and sensors		or STOP	**Incident counter/timer** It is necessary that recording **the number of events and duration** of the incidents that the operator neglects malfunctions detected by DPF Diagnosis for more than 20hrs on non volatile memory in the engine ECU. Authority must have capability to confirm. (can be through service tool.)			
	◎Removing all DPF substrate						
	◎Electrical malfunctions and tampering in PCD						

●: existing ◎: addition

Source: Regulation EU/2017/654

3. J1939 data and NCD lamp actions in Inducement

Actions of Inducement, J1939 data and NCD lamp are as below.

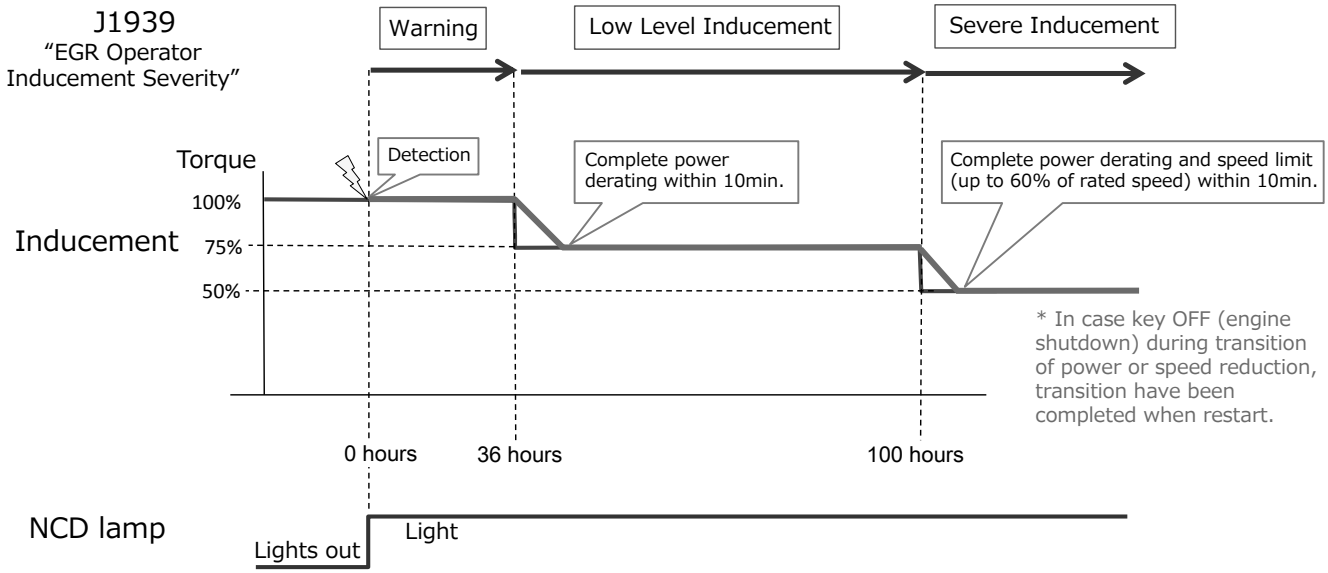

Repeat Offence
・Repaired at Warning → Failure Reoccurs → Time is resumed
・Repaired at Low Level → Failure Recoccurs → Timer is resumed
・Repaired at Sever → Failure Reoccurs → Timer restarts from 95 hours

Condition for Timer Reset
・No error condition to remain for 40 hours

https://truckmanualshub.com/

This page intentionally left blank.

https://truckmanualshub.com/

Appendix D

Daily Inspection Check Sheet

NOTICE

Make a copy of the daily inspection check sheet before performing the pre-operation checks.

Inspect each item in accordance with the pre-operation check procedure described in this manual.

Make a check in the appropriate box on the daily inspection check sheet depending on the inspection result.

https://truckmanualshub.com/

Daily Inspection Check Sheet

Model: _____ Serial number: _____ Year: _____ Month: _____

Item			/ Date	1	2	3	4	5	6	7	8	9	10	11	12	13	14	15	16	17	18	19	20	21	22	23	24	25	26	27	28	29	30	31
Visual check	Machine		Oil leakage																															
			Damage																															
	Scissor arms		Cracks, Deformation, Damage																															
	Platform		Cracks, Deformation, Damage																															
	Other parts		Cracks, Deformation, Damage																															
	AC outlet/Inlet receptacle		Wet, Dirt, Damage																															
	Switches		Wet, Dirt, Damage																															
	Wire harnesses		Damage																															
	Covers		Closed securely																															
	Guardrails		Attached properly																															
	Bolts		Looseness, Damage, Missing																															
	Decals		Missing, Legibility, Damage																															
	Hydraulic oil tank		Hydraulic oil level																															
	Battery		Battery fluid leakage																															
			Battery fluid level																															
	Antistatic strap		Attached properly																															
Function check	Battery Level Check		Battery level																															
	Lower Controls Check	Pre-Operation Check	Buzzer sounds																															
			Stops between the red arrows																															
			Buzzer stops, System failure light goes off																															
		Platform Lift	Strange noise, Vibrations, Rattling																															
		Emergency Stop	All functions are disabled																															
	Natural Descent Check		Natural descent																															
	Pothole Protector Check	Pothole Protector	Damage, Movement																															
		Interlock	Lift up, Travel functions are disabled																															
	Upper Controls Check	Platform Lift	Strange noise, Vibrations, Rattling																															
		Travel	Travel direction, Stop																															
			Strange noise, Vibrations, Rattling																															
		Steering	Strange noise, Vibrations, Rattling																															
		Emergency Stop	All functions are disabled																															
	Tilt Warning Check		Tilt light goes on, alarm buzzer sounds																															
			Platform lift function is disabled																															
	Limited Travel Speed Check	Standard	Travel at slow speed																															
		with Travel Limit System	Travel function is disabled																															

See Operation manual for detailed inspection procedures. Pass: ✓ Fail: ✕ N/A: ⁄