https://truckmanualshub.com/

Operation & Maintenance Manual

UEAM000902

PW130ES-6K

HYDRAULIC EXCAVATOR

SERIAL NUMBER
PW130ES-6K - K34001 and up

WARNING

Unsafe use of this machine may cause serious injury or death. Operators and maintenance personnel must read this manual before operating or maintaining this machine. This manual should be kept inside the cab for reference and periodically reviewed by all personel who will come into contact with the machine.

KOMATSU

https://truckmanualshub.com/

FOREWORD

This manual provides rules and guidelines which will help you use this machine safely and effectively. Keep this manual handy and have all personnel read it periodically. If this manual has been lost or has become dirty and can not be read, request a replacement manual from Komatsu or your Komatsu distributor.

If you sell the machine, be sure to give this manual to the new owners.

Continuing improvements in the design of this machine can lead to changes in detail which may not be reflected in this manual. Consult Komatsu or your Komatsu distributor for the latest available information for your machine or for questions regarding information in this manual.

⚠ WARNING

- **This operation & maintenance manual may contain attachments and optional equipment that are not available in your area. Please consult your local Komatsu distributor for those items you require.**
- **This machine complies with EC directive (89/392/EEC). Machines complying with this directive display the CE mark**
- **Improper operation and maintenance of this machine can be hazardous and could result in serious injury or death.**
- **Operators and maintenance personnel should read this manual thoroughly before beginning operation or maintenance.**
- **Some actions involved in operation and maintenance of the machine can cause a serious accident, if they are not done in a manner described in this manual.**
- **The procedures and precautions given in this manual apply only to intended uses of the machine. If you use your machine for any unintended uses that are not specifically prohibited, you must be sure that it is safe for you and others. In no event should you or others engage in prohibited uses or actions as described in this manual.**
- **Komatsu delivers machines that comply with all applicable regulations and standards of the country to which it has been shipped. If this machine has been purchased in another country or purchased from someone in another country, it may lack certain safety devices and specifications that are necessary for use in your country. If there is any question about whether your product complies with the applicable standards and regulations of your country, consult Komatsu or your Komatsu distributor before operating the machine.**
- **The description of safety is given see “SAFETY INFORMATION” on page 2. and in "SAFETY" from page 15.**

https://truckmanualshub.com/

SAFETY INFORMATION

SAFETY MESSAGES

Most accidents are caused by the failure to follow fundamental safety rules for the operation and maintenance of machines.

To avoid accidents, read, understand and follow all precautions and warnings in this manual and on the machine before performing operation and maintenance.

To identify hazards on the machine pictorial decals are used (see POSITION FOR ATTACHING SAFETY LABELS).

RED WARNING TRIANGLE - This is used on safety labels where there is a high probability of serious injury or death if the hazard is not avoided. These safety messages or labels usually describe precautions that must be taken to avoid the hazard. Failure to avoid this hazard may also result in serious damage to the machine.

ORANGE WARNING TRIANGLE - This is used on safety labels where there is a potentially dangerous situation which could result in serious injury or death if the hazard is not avoided. These safety messages or labels usually describe precautions that must be taken to avoid the hazard. Failure to avoid this hazard may also result in serious damage of the machine

YELLOW SAFETY TRIANGLE - This is used on safety labels for hazards which could result in minor or moderate injury if the hazard is not avoided. This word might also be used for a hazard where the only result could be damage to the machine.

NOTICE - This word is used for precautions that must be taken to avoid actions which could shorten the life of the machine.

Safety precautions are described in SAFETY from page 1-1.

Komatsu cannot predict every circumstance that might involve a potential hazard in operation and maintenance. Therefore the safety message in this manual and on the machine may not include all possible safety precautions. If any procedures or actions not specifically recommended or allowed in this manual are used, you must be sure that you and others can do such procedures and actions safely and without damaging the machine. If you are unsure about the safety of some procedures, contact Komatsu or your Komatsu distributor.

https://truckmanualshub.com/

NOISE

Valid until 31 December 2001

Operator ears noise value (Sound pressure level)

Ambient noise value (Sound power level)

Noise level indicated is the guaranteed value measured by the dynamic test method as specified in the directive 86/662/EEC, as amended by 95/27/EC.

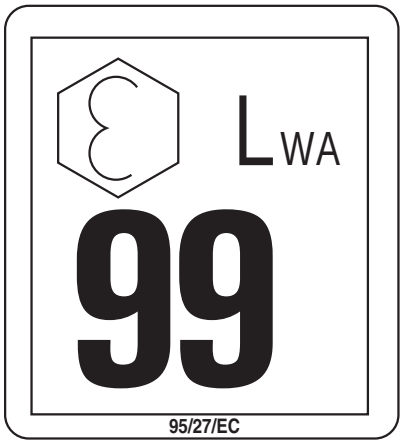

https://truckmanualshub.com/

Valid as of 1 January 2002

- Sound pressure level at the operator's station, measured according to ISO6396 (Dynamic test method, simulated working cycle)

- Sound power level emitted. This is the guaranteed value as specified in European directive 2000/14/EC.

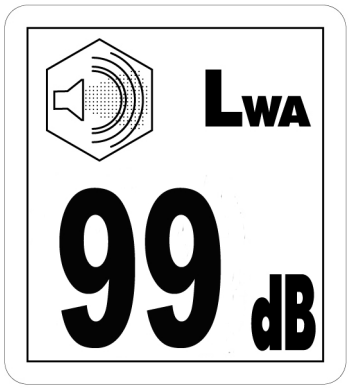

This machine complies with the requirements of RAL (German Institute for quality assurance and marking) pertaining to the award of the environmental mark (blue angel) for low noise.

VIBRATION

- The weighted root mean square acceleration value to which the operator’s arms are subjected does not exceed 2.5 m/s²
- The weighted root mean square acceleration value to which the operator’s body is subjected was measured at 0.64 m/s²

https://truckmanualshub.com/

These results were obtained by accelerometers during trench digging.

EMERGENCY STEERING

This machine is equipped with an emergency steering system and complies to ISO 5010. In the advent of failure of the source of power for the steering system (engine failure) whilst travelling the machine can be steered allowing the machine to be safely stopped.

In such a case the effort required at the steering wheel and the number of turns to steer the machine will increase. To confirm function of emergency steering system raise the front wheels off the ground (using the work equipment) and with the engine off, turn the steering wheel and check movement of the wheels.

https://truckmanualshub.com/

INTRODUCTION

INTENDED USE

This Komatsu HYDRAULIC EXCAVATOR is designed to be used mainly for the following work:

- Digging
- Smoothing work
- Ditching work
- Loading work

See the section “WORK POSSIBLE USING HYDRAULIC EXCAVATOR” on page 132 for further details

Features

- This Komatsu HYDRAULIC EXCAVATOR is equipped with various controls based on an advanced electronics system.
- The monitor panel greatly facilitates daily maintenance and self-diagnosis.
- Working mode & travel speed are selectable.
- Digging and lifting force can be increased by light-touch control. (For details, see operation section.)
- Adjustable wrist control levers make operations smooth and easy.
- Fresh filtered air conditioner assures comfortable operation.
- Low noise level and smart urban style design and colouring.
- Superb operation performance provided by powerful engine and high-performance hydraulic pump.
- Low fuel consumption controlled by an electronic control system provides an environment-friendly machine.

BREAKING IN YOUR NEW MACHINE

Your Komatsu machine has been thoroughly adjusted and tested before shipment.

However, operating the machine under severe conditions at the beginning can adversely affect the performance and shorten the machine life.

Be sure to break in the machine for the initial 100 hours (as indicated by the hour meter.)

During breaking in:

https://truckmanualshub.com/

- Idle the engine for 5 minutes after starting it up.
- Avoid operation with heavy loads or at high speeds.
- Sudden starting or acceleration, unnecessarily abrupt braking and sharp turning should be avoided except in cases of emergency.

Additionally for the first 20 hours

- Avoid operating engine for prolonged periods at constant speed (including idle.)
- Avoid high speed travelling for periods of more than 5 minutes.

Pay particular attention to oil pressure and temperature indicators & check coolant and oil levels frequently during breaking in.

The precautions given in this manual for operating, maintenance, and safety procedures are only those that apply when this product is used for the specified purpose. If the machine is used for a purpose that is not listed in this manual, Komatsu cannot bear any responsibility for safety. All consideration of safety in such operations is the responsibility of the user.

Operations that are prohibited in this manual must never be carried out under any circumstances.

https://truckmanualshub.com/

LOCATIONS OF PLATES, TABLE TO ENTER SERIAL NO. AND DISTRIBUTOR

MACHINE SERIAL NO. PLATE POSITION

On the front right of the undercarriage

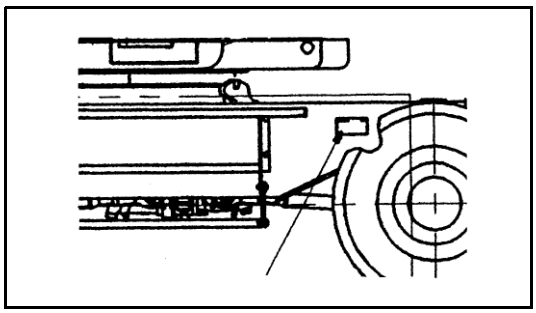

ENGINE SERIAL NO. PLATE POSITION

On the gear case front corner.

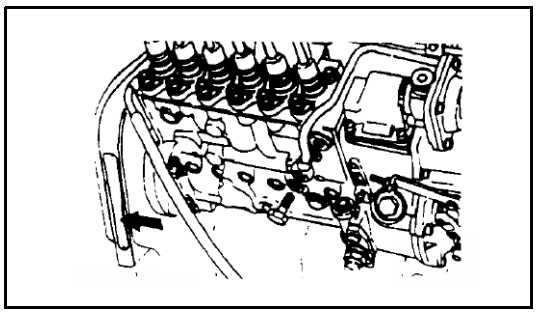

TABLE TO ENTER SERIAL NO. AND DISTRIBUTOR

Machine serial No.:

Engine Serial No.:

Manufacturer’s name: Komatsu UK Ltd.

Address

Durham Road
Birtley
Chester-Le-Street
County Durham DH32QX
United Kingdom

Distributor

Address

Phone

https://truckmanualshub.com/

MACHINE SERIAL PLATES

STANDARD SERIAL PLATE

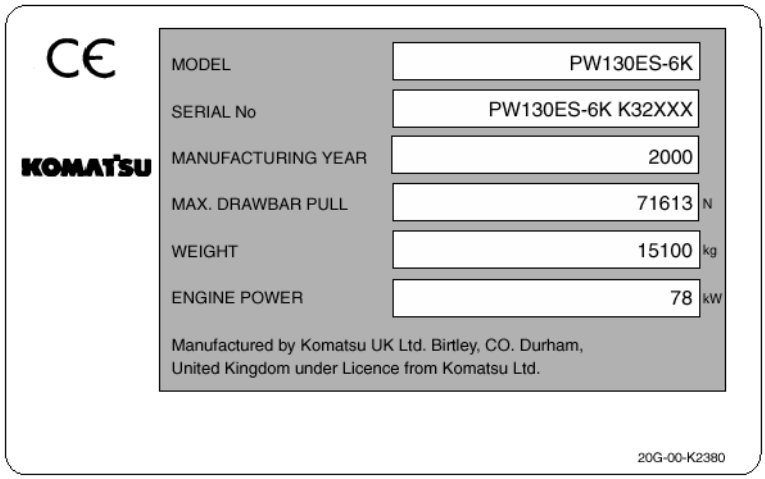

GERMANY SERIAL PLATE

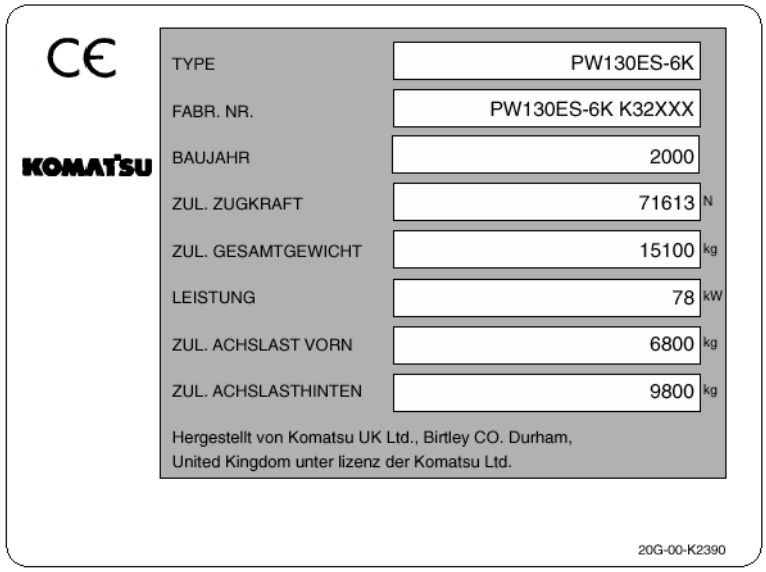

ITALIAN SERIAL PLATE

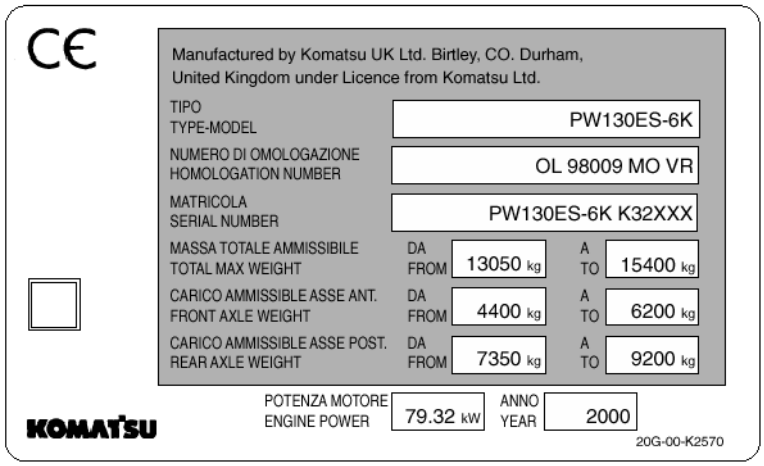

https://truckmanualshub.com/

https://truckmanualshub.com/

CONTENTS

FOREWORD **1**

SAFETY INFORMATION **2**
- SAFETY MESSAGES 2
- NOISE 3
- VIBRATION 4
- EMERGENCY STEERING 5

INTRODUCTION **6**
- INTENDED USE 6
- Features 6
- BREAKING IN YOUR NEW MACHINE 6

LOCATIONS OF PLATES, TABLE TO ENTER SERIAL NO. AND DISTRIBUTOR **8**
- MACHINE SERIAL NO. PLATE POSITION 8
- ENGINE SERIAL NO. PLATE POSITION 8
- TABLE TO ENTER SERIAL NO. AND DISTRIBUTOR 8
- MACHINE SERIAL PLATES 9

SAFETY **15**

GENERAL PRECAUTIONS **16**

PRECAUTION DURING OPERATION **22**
- BEFORE STARTING ENGINE 22
- OPERATING MACHINE 23
- TRANSPORTATION 28
- BATTERY 29
- TOWING 30
- BUCKET WITH HOOK OR BUCKET LINK 32

PRECAUTIONS FOR MAINTENANCE **35**
- BEFORE CARRYING OUT MAINTENANCE 35
- DURING MAINTENANCE 38

POSITION FOR ATTACHING SAFETY LABELS **41**
- POSITION FOR ATTACHING SAFETY LABELS 41

OPERATION **55**

GENERAL VIEW **56**
- GENERAL VIEW OF MACHINE 56
- 56
- GENERAL VIEW OF CONTROLS AND GAUGES 57

https://truckmanualshub.com/

EXPLANATION OF COMPONENTS 59
MACHINE MONITOR 59
SWITCHES 70
CONTROL LEVERS, PEDALS 80
ROOF HATCH 83
FRONT WINDOW 85
DOOR LOCK 88
CAP, COVER WITH LOCK 89
FUSE 90
LUGGAGE TRAY 91
ASHTRAY 91
HEATER 91
AIR CONDITIONER 93
FUSIBLE LINK 96
CONTROLLERS 96
TOOL BOX 96
REFUELLING PUMP 96
CAB RADIO (OPTION) 97
WARNING LAMPS 98
HANDLING THE ACCUMULATOR 99

OPERATION 101
CHECK BEFORE STARTING ENGINE 101
STARTING ENGINE 110
MOVING MACHINE OFF 119
STEERING 121
STOPPING 123
SWINGING (Slewing the upper carriage) 124
OPERATION OF WORK EQUIPMENT 125
WORKING MODE SELECTION 126
PROHIBITIONS FOR OPERATION 128
PRECAUTIONS FOR OPERATION 129
PRECAUTIONS WHEN TRAVELING UP OR DOWN HILLS 130
HOW TO ESCAPE FROM MUD 131
WORK POSSIBLE USING HYDRAULIC EXCAVATOR 132
REPLACEMENT AND INVERSION OF BUCKET 133
PARKING MACHINE 136
CHECK AFTER FINISHING WORK 137
STOPPING ENGINE 137
CHECK AFTER STOPPING ENGINE 138
LOCKING 138
OVERLOAD WARNING DEVICE 138
HANDLING THE WHEELS 138

TRANSPORTATION 144
LOADING, UNLOADING WORK 144
PRECAUTIONS FOR LOADING 146
PRECAUTIONS FOR TRANSPORTATION 148

TRAVELLING POSTURE 149

COLD WEATHER OPERATION 150

PRECAUTIONS FOR LOW TEMPERATURE 150
PRECAUTIONS AFTER COMPLETION OF WORK 151
AFTER COLD WEATHER 152

LONG-TERM STORAGE 153

BEFORE STORAGE 153
DURING STORAGE 153
AFTER STORAGE 154
STARTING MACHINE AFTER LONG-TERM STORAGE 154

TROUBLESHOOTING 155

PHENOMENA THAT ARE NOT FAILURES 155
METHOD OF TOWING MACHINE 156
PRECAUTIONS ON PARTICULAR JOBSITES 156
IF BATTERY IS DISCHARGED 157
OTHER TROUBLE 159

MAINTENANCE. 163

GUIDES TO MAINTENANCE 164

OUTLINES OF SERVICE 167

OUTLINE OF OIL, FUEL, COOLANT 167
OUTLINE OF ELECTRIC SYSTEM 170
OUTLINE OF HYDRAULIC SYSTEM 170

WEAR PARTS LIST 172

USE FUEL, COOLANT AND LUBRICANTS ACCORDING TO AMBIENT TEMPERATURE 173

PROPER SELECTION OF FUEL, COOLANT AND LUBRICANTS 173

STANDARD TIGHTENING TORQUES FOR BOLTS AND NUTS 177

INTRODUCTION OF NECESSARY TOOLS 177
TORQUE LIST 178

PERIODIC REPLACEMENT OF SAFETY CRITICAL PARTS 179

SAFETY CRITICAL PARTS 180

MAINTENANCE SCHEDULE CHART 181

..... 181
MAINTENANCE WHEN USING HYDRAULIC BREAKER 186

SERVICE PROCEDURE 187

INITIAL 250 HOURS SERVICE 187
WHEN REQUIRED 188
CHECK BEFORE STARTING 200

EVERY 50 HOURS 204
EVERY 100 HOURS SERVICE 204
EVERY 250 HOURS SERVICE 209
EVERY 500 HOURS SERVICE 215
EVERY 1000 HOURS SERVICE 221
EVERY 2000 HOURS SERVICE 225
EVERY 4000 HOURS SERVICE 228
EVERY 5000 HOURS SERVICE 228

SPECIFICATIONS. 231

SPECIFICATIONS 232

OPTIONS, ATTACHMENTS 237

GENERAL PRECAUTIONS 238
PRECAUTIONS RELATED TO SAFETY 238
PRECAUTIONS WHEN INSTALLING ATTACHMENTS 239

HANDLING BUCKET WITH HOOK 240
CHECKING FOR DAMAGE TO BUCKET WITH HOOK 240
PROHIBITED OPERATIONS 240
PRECAUTIONS DURING OPERATIONS 240

MACHINES READY FOR ATTACHMENTS 241
GENERAL LOCATIONS 241
HANDLING THE CLAMSHELL BUCKET 243
OPERATION 244
HANDLING ACCUMULATOR 246
LONG-TERM STORAGE 247

INTRODUCTION OF ATTACHMENTS AND EXTENDING MACHINE SERVICE LIFE 248
HYDRAULIC BREAKER 248
POWER RIPPER 251
FORK GRAB 252
GRAPPLE BUCKET 253
SCRAP GRAPPLE 254
CRUSHER & SMASHER 256
HYDRAULIC PILE DRIVER 257
HYDRAULIC EXCAVATOR WITH MULTIPURPOSE CRANE 258
ROTATING ARM 260

https://truckmanualshub.com/

SAFETY

⚠ WARNING

Read and follow all safety precautions. Failure to do so may result in serious injury or death.

This safety section also contains precautions for optional equipment and attachments.

https://truckmanualshub.com/

⚠ WARNING: For reasons of safety, always follow these safety precautions.

GENERAL PRECAUTIONS

SAFETY RULES

- ONLY trained and authorised personnel can operate and maintain the machine.
- Follow all safety rules, precautions and instructions when operating or performing maintenance on the machine.
- When working with another operator or a person on worksite traffic duty, be sure all personnel understand all hand signals that are to be used.

SAFETY FEATURES

- Be sure all guards and covers are in their proper position. Have guards and covers repaired if damaged.
- Use safety features such as safety lock lever properly.
- NEVER remove any safety features. ALWAYS keep them in good operating condition.

  Safety lever see “PARKING MACHINE” on page 136.

- Improper use of safety features could result in serious bodily injury or death.

CLOTHING AND PERSONAL PROTECTIVE ITEMS

- Avoid loose clothing, jewellery, and loose long hair. They can catch on controls or in moving parts and cause serious injury or death. Also, do not wear oily cloths because they are flammable.
- Wear a hard hat, safety glasses, safety shoes, mask or gloves when operating or maintaining the machine. Always wear safety goggles, hard hat and heavy gloves if your job involves scattering metal chips or minute materials, this is so particularly when driving pins with a hammer and when cleaning the air cleaner element with compressed air.
  Check also that there is no one near the machine.

  Driving in pins, see “REPLACEMENT AND INVERSION OF BUCKET” on page 133.

  Cleaning of air cleaner element, see “WHEN REQUIRED” on page 188. in service procedure.

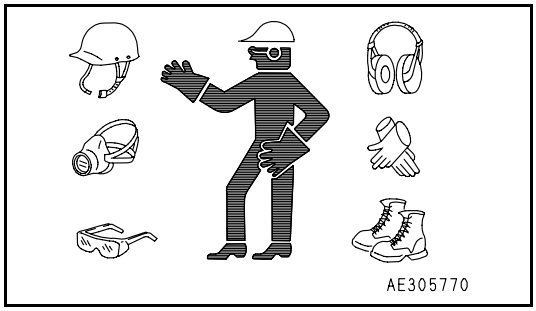

UNAUTHORISED MODIFICATION

- Any modification made without authorisation from Komatsu can create hazards.

https://truckmanualshub.com/

⚠ WARNING: Failure to follow these safety precautions may lead to a serious accident.

- Before making a modification, consult your Komatsu distributor. Komatsu will not be responsible for any injury or damage caused by any unauthorised modification.

ALWAYS APPLY LOCK WHEN LEAVING OPERATOR'S SEAT

- When standing up from the operator's seat, always raise the control lever Pad Safety lock to the LOCK position. If you accidentally touch the travel or swing lever when they are not locked, the work equipment may suddenly move and cause serious injury or damage.
- When leaving the machine, lower the work equipment completely to the ground, set the control lever Pad safety lock lever to the LOCK position, then stop the engine and use the key to lock all the equipment. Always take the key with you.

  Work equipment posture see "PARKING MACHINE" on page 136.

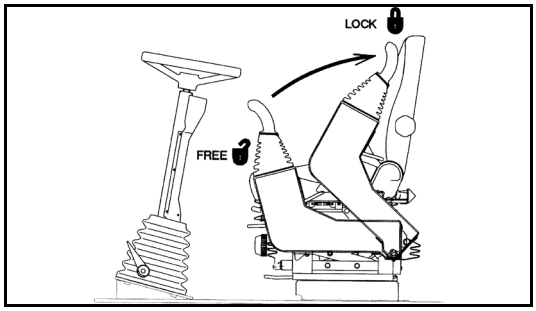

MOUNTING AND DISMOUNTING

- NEVER jump on or off the machine. NEVER get on or off a moving machine.
- When mounting or dismounting, always face the machine and use the handrails, machine or chassis steps.
- Do not hold any control levers when getting on or off the machine.
- Ensure safety by always maintaining at least three-point contact of hands and feet with the handrails, steps or wheels.
- Always remove any oil or mud from the handrails, steps and track shoes. If they are damaged, repair them and tighten any loose bolts.
- If grasping the door handrail when mounting or dismounting or moving on the chassis steps, open and lock the door securely in the open position. Otherwise, the door may move suddenly, causing you to lose balance and fall.

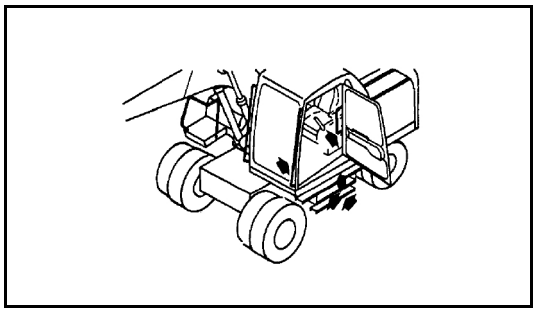

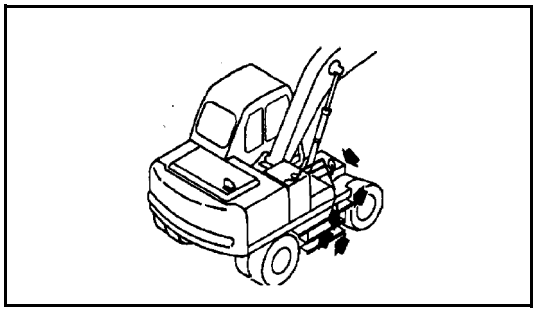

FIRE PREVENTION FOR FUEL AND OIL

Fuel, oil, and antifreeze can be ignited by a flame. Fuel is particularly FLAMMABLE and can be HAZARDOUS.

- Keep flames away from flammable fluids.
- Stop the engine and do not smoke when refuelling.

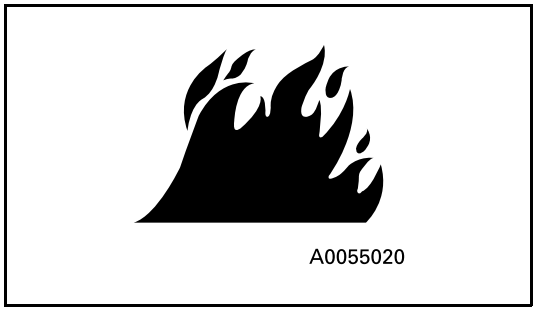

https://truckmanualshub.com/

⚠ WARNING: For reasons of safety, always follow these safety precautions.

- Tighten all fuel and oil caps securely.
- Refuelling and oiling should be carried out in well ventilated areas.

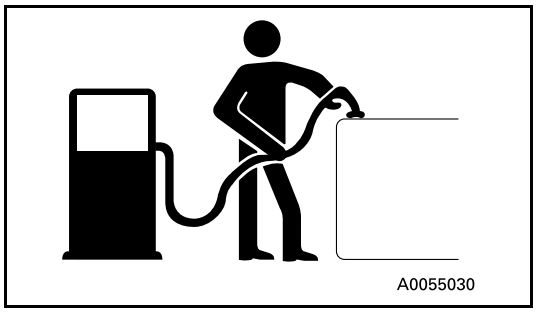

- Keep oil and fuel in a secure place and do not allow unauthorised persons to enter.

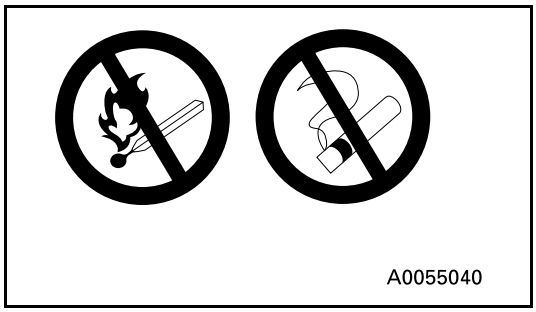

PRECAUTIONS WHEN HANDLING AT HIGH TEMPERATURES

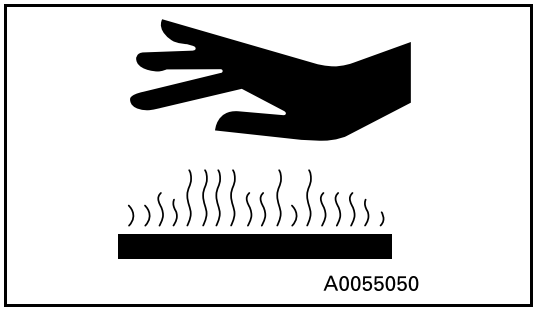

- Immediately after operations are stopped, the engine coolant, engine oil, and hydraulic oil are at high temperatures, and are still under pressure. Attempting to remove the cap, drain the oil or water, or replace the filters may lead to serious burns. Always wait for the temperature to go down, and follow the specified procedures when carrying out these operations.
- To prevent hot water from spurting out:

1. Turn engine off.
2. Allow water to cool.
3. Slowly loosen cap to relieve pressure before removing.

- To prevent hot oil from spurting out:

1. Turn engine off.
2. Allow oil to cool.
3. Slowly loosen cap to relieve pressure before removing.

MACHINES FITTED WITH WHEELS

Never perform any repair work or modifications to wheel rims while the tyres are fitted, and never apply heat in the vicinity on the tyres

https://truckmanualshub.com/

⚠ WARNING: Failure to follow these safety precautions may lead to a serious accident.

ASBESTOS DUST HAZARD PREVENTION

Asbestos dust can be HAZARDOUS to your health if it is inhaled.

Your Komatsu machine and genuine Komatsu spare parts do not contain any asbestos. Use only genuine Komatsu spare parts. If spare parts containing asbestos are used, the following precautions must be observed:

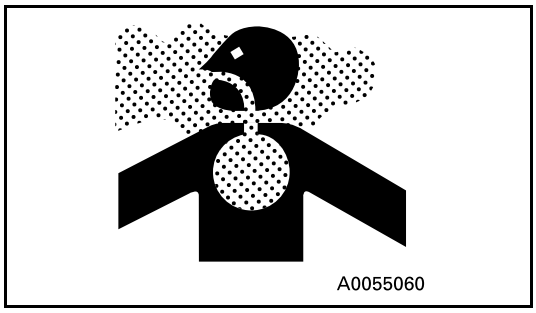
A0055060

- NEVER use compressed air for cleaning.
- Use water for cleaning to keep down the dust.
- Operate the machine with the wind to your back, whenever possible.
- Use an approved respirator if necessary.

CRUSHING OR CUTTING PREVENTION

Do not enter, or put your hand or arm or any other part of your body between movable parts such as between the work equipment and cylinders, or between the machine and work equipment.
If the work equipment is operated, the clearance will change and this may lead to serious damage or personal injury.

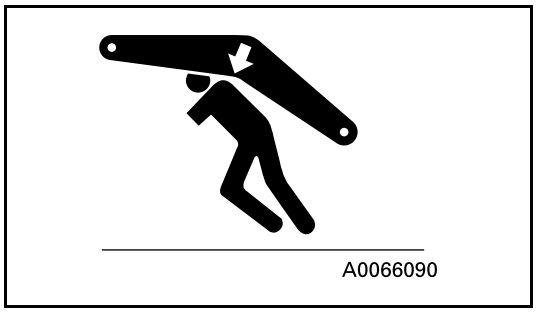
A0066090

FIRE EXTINGUISHER AND FIRST AID KIT

- Know how to use fire extinguisher (if installed).
- Provide a first aid kit at the storage point.
- Know what to do in the event of a fire.
- Be sure you know the phone numbers of persons you should contact in case of an emergency.

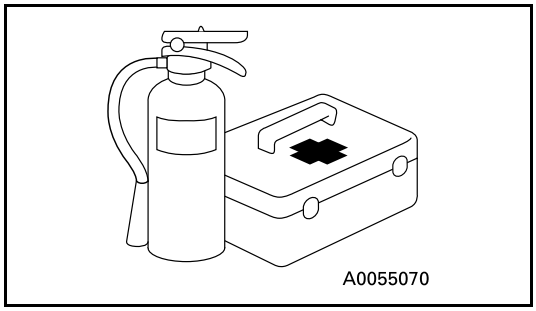
A0055070

PROTECTION AGAINST FALLING OR FLYING OBJECTS

If there is any danger of falling or flying objects hitting the operator, install protective guards in place to protect the operator as required for each particular situation.

- For work with breakers, install a front guard on the windshield. Also, place a laminate coating sheet over the windshield.
- For demolition or shear work, install a front guard on the windshield and a top guard on the cab. Also, place a laminate coating sheet over the windshield.

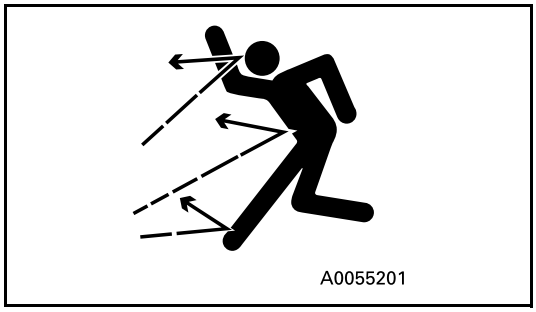
A0055201

https://truckmanualshub.com/

⚠ WARNING: For reasons of safety, always follow these safety precautions.

- For work in mines, quarries, demolition, tunnels or other places where there is danger of falling rocks, put FOPS (falling object protective structure) in place. Also, place a laminate coating sheet over the windshield.

The above comments are made with regards to typical working conditions. By all means you should put on other guards if required by conditions at your particular site.
For details of safety guards, please contact your Komatsu distributor.

Also, even for other types of work, if there is any danger of being hit by falling or flying objects or of objects entering the operator's cab, select and install a guard that matches the working conditions.

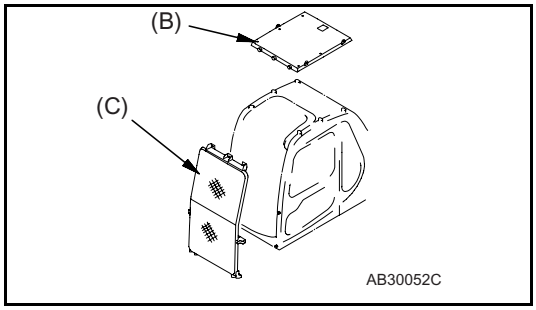

(B): Top guard	(C): Front guard (I)

Be sure to close the front window before commencing work.

When carrying out the above operations, make sure to keep all persons other than the operator outside the range of falling or flying objects. Be particularly sure to maintain a proper distance when carrying out shear operations.

PRECAUTIONS FOR ATTACHMENTS

- When installing and using an optional attachment, read the instruction manual for the attachment and the information related to attachments in this manual.
- Do not use attachments that are not authorised by Komatsu or your Komatsu distributor. Use of unauthorised attachments could create a safety problem and adversely affect the proper operation and useful life of the machine.
- Any injuries, accidents, product failures resulting from the use of unauthorised attachments will not be the responsibility of Komatsu.

MACHINES WITH ACCUMULATOR

On machines equipped with an accumulator, for a short time after the engine is stopped, the work equipment will lower under its own weight when the work equipment control lever is shifted to LOWER. After the engine is stopped, set the PPC lock switch to the off position (and also lock the attachment pedal with the lock pin).

https://truckmanualshub.com/

⚠ WARNING: Failure to follow these safety precautions may lead to a serious accident.

When releasing the pressure inside the work equipment circuit on machines equipped with an accumulator, follow the procedure given in the inspection and maintenance section.

Method of releasing pressure see "HANDLING THE ACCUMULATOR" on page 99.

The accumulator is filled with high-pressure nitrogen gas, and it is extremely dangerous if it is handled in the wrong way. Always observe the following precautions.

- Never make any hole in the accumulator or expose it to flame or fire.
- Do not weld anything to the accumulator.
- When carrying out disassembly or maintenance of the accumulator, or when disposing of the accumulator, it is necessary to release the gas from the accumulator. A special air bleed valve is necessary for this operation, so please contact your Komatsu distributor.

  Gas in accumulator, see "HANDLING THE ACCUMULATOR" on page 99.

EMERGENCY EXIT

- When exit by normal means is prevented in an emergency you can get out through the emergency exit (rear window).
- Pull the ring at the bottom of the window and remove strip. This will allow you to push out glass.

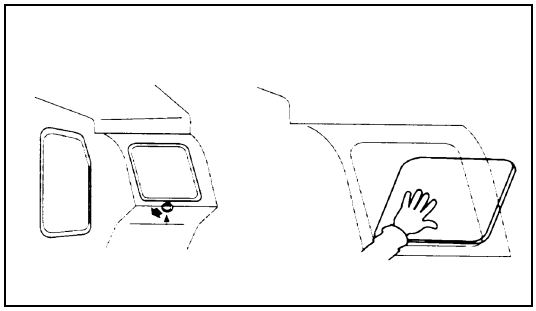

ROTATING BEACON (Option)

- When the machine is operated on or beside a road, a rotating beacon is required to avoid a traffic accident.
- Contact your Komatsu distributor to install beacon lamp.

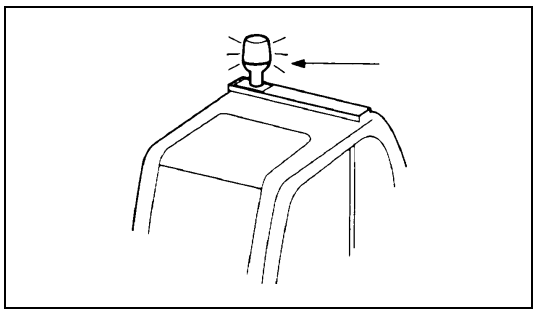

ELECTROMAGNETIC INTERFERENCE

When this machine is operating close to a source of high electromagnetic interference, such as a radar station, some abnormal phenomena may be observed.

- The display on the monitor panel may behave erratically.
- The warning buzzer may sound.

These effects do not signify a malfunction and the machine will return to normal as soon as the source of interference is removed.

https://truckmanualshub.com/

⚠ WARNING: For reasons of safety, always follow these safety precautions.

PRECAUTION DURING OPERATION

BEFORE STARTING ENGINE

SAFETY AT WORKSITE

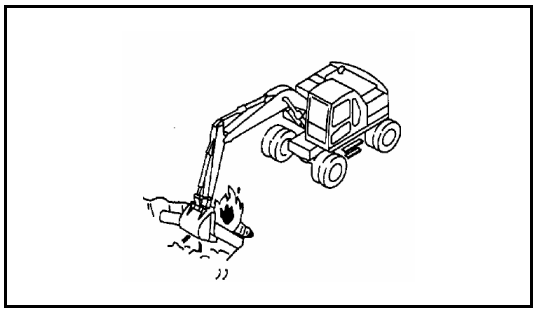

- Before starting the engine, thoroughly check the area for any unusual conditions that could be dangerous.
- Before starting the engine, examine the terrain and soil conditions of the worksite. Determine the best and safest method of operation.
- Make the slope as horizontal as possible before continuing operations.
- If you need to operate on a street, protect pedestrians and cars by designating a person for worksite traffic duty or by installing fences around the worksite.
- If water lines, gas lines, and high-voltage electrical lines may be buried under the worksite, contact each utility and identify their locations. Be careful not to sever or cut any of these lines.
- Check the depth and flow of water before operating in water or crossing a river. NEVER be in water which is in excess of the permissible water depth.

  Permissible water depth, see "PRECAUTIONS FOR OPERATION" on page 129.

FIRE PREVENTION

A0055020

- Thoroughly remove wood chips, leaves, paper and other flammable things accumulated on the engine compartment. They could cause a fire.
- Check fuel, lubrication, and hydraulic systems for leaks. Have any leaks repaired. Wipe up any excess oil, fuel or other flammable fluids.

  Check point, see "WALK-AROUND CHECK" on page 101.
- Be sure a fire extinguisher is present and working.

IN OPERATOR'S CAB

- Do not leave tools or spare parts lying around in the operator's compartment. They may damage or break the control levers or switches. Always put them in the tool box on the front right side of the revolving frame or in the tool boxes on the undercarriage.
- Keep the cab floor, controls, steps and handrails free of oil, grease, snow, and excess dirt.

https://truckmanualshub.com/

⚠ WARNING: Failure to follow these safety precautions may lead to a serious accident.

VENTILATION FOR ENCLOSED AREAS

If it is necessary to start the engine within an enclosed area, provide adequate ventilation. Exhaust fumes from the engine can KILL.

PRECAUTIONS FOR MIRRORS, WINDOWS AND LIGHTS

- Remove all dirt from the surface of the windows and lights to ensure that you can see well.
- Adjust the rear view mirror so that you can see clearly from the operator's seat, and always keep the surface of the mirror clean. If any glass is broken, replace it with a new part.
- Check that the head lamps and working lamps are installed to match the operating conditions. Check also that they light up properly.

OPERATING MACHINE

WHEN STARTING THE ENGINE

- Walk around for machine again just before mounting it, to check for people and objects that might be in the way.
- NEVER start the engine if a warning tag has been attached to the wrist control.
- Before starting the engine, sound the horn as an alert.
- Start and operate the machine only while seated.
- Do not allow anyone other than the operator to ride in the cab or on the machine body.
- For machines equipped with a reverse alarm buzzer, check that the warning device operates correctly.

CHECK DIRECTION BEFORE STARTING MACHINE

Before operating the travel lever, check the direction of the under carriage.
If the fixed axle is at the front, the forward/reverse pedal and steering will function in the opposite direction.

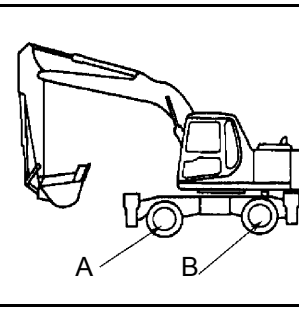

A	Fixed axle
B	Oscillating axle

Travel operations see "MOVING MACHINE OFF" on page 119.

https://truckmanualshub.com/

⚠ WARNING: For reasons of safety, always follow these safety precautions.

CHECK THAT NO ONE IS IN THE AREA BEFORE SWINGING OR TRAVELLING IN REVERSE

- Always position a signalman when operating in dangerous places or places where the view is not clear.
- Make sure that no one comes inside the swing radius or direction of travel.
- Before starting to move, sound the horn or give a signal to warn people not to come close to the machine.

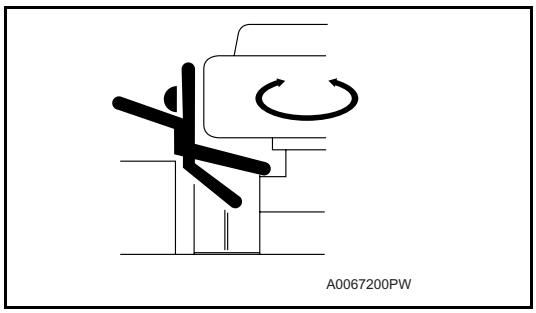

- There are blind spots behind the machine, so if necessary, swing the upper structure to check that there is no one behind the machine before travelling in reverse.

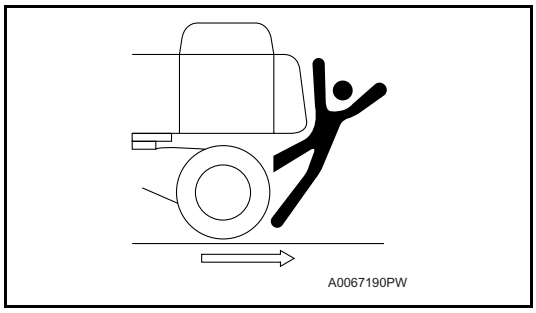

PRECAUTIONS WHEN TRAVELLING

- Fold in the work equipment as shown in the diagram below, and keep it at a height of 40-50 cm from the ground level before starting to travel.
- When travelling on public roads the control lever pad safety lock should be down and the control lever lock switch, in the off position. This prevents operation of the control levers and activates the rear facing brake lamp circuit.
- When travelling on rough ground, travel at low speed, and avoid sudden changes in direction.
- Avoid travelling over obstacles as far as possible. If the machine has to travel over an obstacle, keep the work equipment as close to the ground as possible and travel at low speed. Never travel over obstacles which make the machine tilt strongly (10° or more).

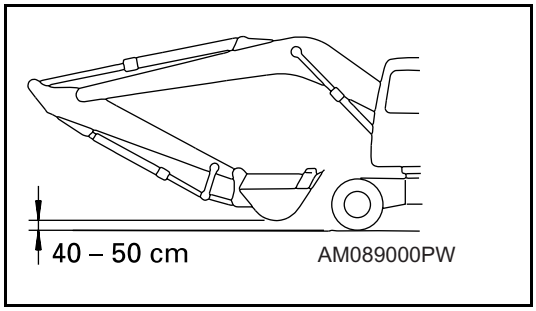

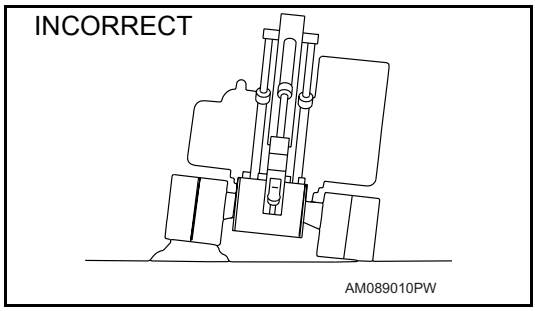

https://truckmanualshub.com/

⚠ WARNING: Failure to follow these safety precautions may lead to a serious accident.

TRAVELLING ON SLOPES

- Travelling on hills, banks or slopes that are steep could result in the machine tipping over or slipping.
- On hills, banks or slopes, carry the bucket closer to the ground, approximately 20 to 30 cm above the ground. In case of emergency, quickly lower the bucket to the ground to help the machine stop and prevent it from tipping over.

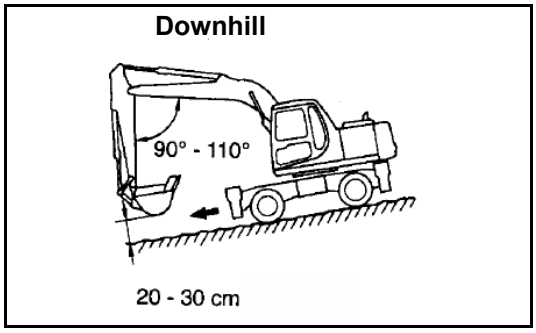

- Do not turn on slopes or travel across slopes. Always go down to a flat place to perform these operations.

  Method of travelling on slopes, see "PRECAUTIONS WHEN TRAVELING UP OR DOWN HILLS" on page 130.

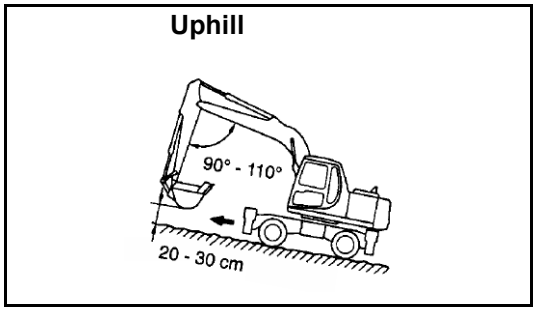

Do not travel up and down on grass, fallen leaves, and wet steel plates. These materials may allow the machine to slip, if it is travelling sideways. Keep travel speed very low.

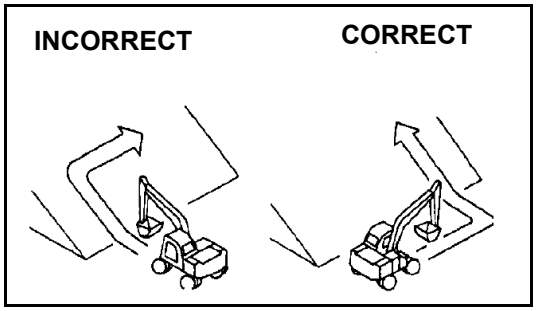

PROHIBITED OPERATIONS

- Do not dig the work face under an overhang. This may cause the overhang to collapse and fall on top of the machine

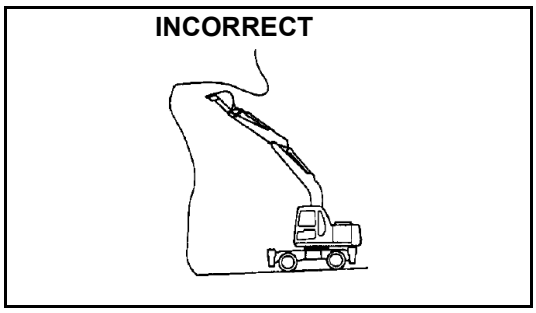

- Do not carry out deep digging under the front of the machine. The ground under the machine may collapse and cause the machine to fall.

.

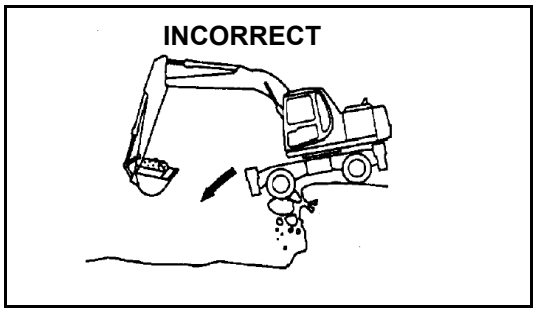

https://truckmanualshub.com/

⚠ WARNING: For reasons of safety, always follow these safety precautions.

DO NOT GO CLOSE TO HIGH-VOLTAGE CABLES

Going close to high-voltage cables can cause electric shock. Always maintain the safe distance given below between the machine and the electric cable.

- The following actions are effective in preventing accidents.
  1) Wear shoes with rubber or leather soles.
  2) Use a signalman to give warning if the machine approaches too close to the electric cable.
- If the work equipment should touch the electric cable, the operator should not leave the operator's compartment.
- When carrying out operations near high voltage cables, do not let anyone come close to the machine.
- Check with the electricity company about the voltage of the cables before starting operations.

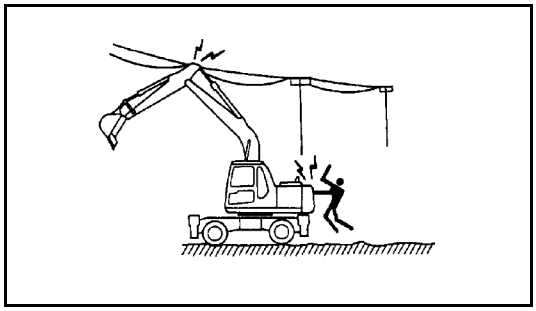

Voltage	Min. safety distance
6.6 kV	3 m
33.0 kV	4 m
66.0 kV	5 m
154.0 kV	8 m
275.0 kV	10 m

DO NOT HIT WORK EQUIPMENT

- When working in places where there are height limits, such as in tunnels, under bridges, under electric cables, or in garages, be extremely careful not to hit the boom or arm.

ENSURE GOOD VISIBILITY

- When working in dark places, install working lamps and head lamps, and set up lighting in the work area if necessary.
- Stop operations if the visibility is poor, such as in mist, snow, or rain, and wait for the weather to improve to a condition that allows the operation to be carried out safely.

OPERATE CAREFULLY ON SNOW

- When working on snow or icy roads, even a slight slope may cause the machine to slip to the side, so always travel at low speed and avoid sudden starting, stopping, or turning.

https://truckmanualshub.com/

⚠ WARNING: Failure to follow these safety precautions may lead to a serious accident.

- When there has been heavy snow, the road shoulder and objects placed beside the road are buried in the snow and cannot be seen, so always carry out snow-clearing operations carefully.

WORKING ON LOOSE GROUND

- Avoid operating your machine too close to the edge of cliffs, overhangs, and deep ditches. If these areas collapse, your machine could fall or tip over and result in serious injury or death. Remember that the soil after heavy rain or blasting is weakened in these areas.
- Earth laid on the ground and the soil near ditches are loose. They can collapse under the weight or vibration of your machine.
- Install the HEAD GUARD (FOPS) if working in areas where there is danger of falling rocks and dirt.

DO NOT HIT THE OPERATOR CAB (for two piece boom only)

- When the second boom cylinder is retracted, the bucket or the attachment can hit the operator cab or chassis.
- Operate work equipment slowly and carefully to avoid any injury and damage.

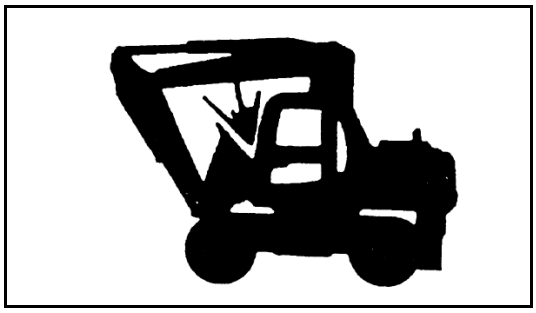

OPERATIONS ON SLOPES

- When working on slopes, there is danger that the machine may lose its balance and turn over when the swing or work equipment are operated. Always carry out these operations carefully.

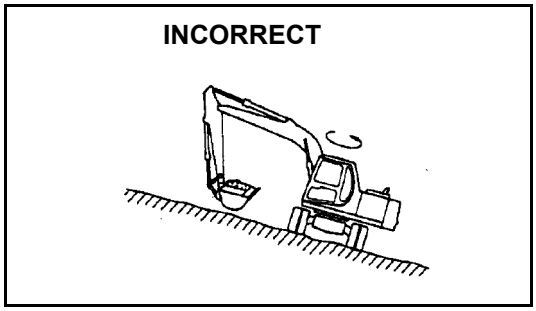

https://truckmanualshub.com/

⚠ WARNING: For reasons of safety, always follow these safety precautions.

- Do not swing the work equipment from the uphill side to the downhill side when the bucket is loaded. This operation is dangerous.
  (See the upper diagram on the right.)

- If the machine has to be used on a slope, pile the soil to make a platform that will keep the machine as horizontal as possible.
  (See the lower diagram on the right.)

  Piled soil on slope see "PRECAUTIONS WHEN TRAVELING UP OR DOWN HILLS" on page 130.

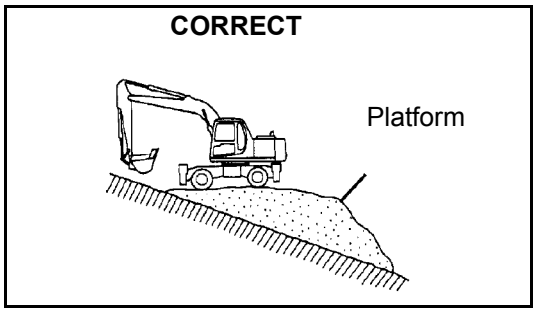

PARKING THE MACHINE

Park on level ground whenever possible. If not possible, chock the wheels, lower the bucket to the ground and thrust the bucket in the ground.

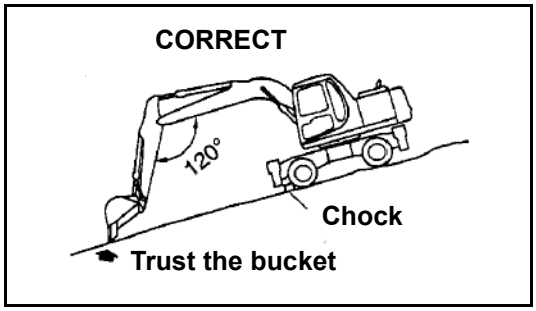

- When parking on public roads, provide fences and signs, such as flags or lights, on the machine to warn passersby to be careful. Be sure that the machine, flags or lights do not obstruct traffic.

  Parking procedure, see "PARKING MACHINE" on page 136.

- When leaving the machine, lower the work equipment completely to the ground, raise the control lever Pad Safety lock to the LOCK position, then stop the engine and use the key to lock all the equipment. Always take the key with you.

  Work equipment posture, see "PARKING MACHINE" on page 136.

  Places to lock, see "LOCKING" on page 138.

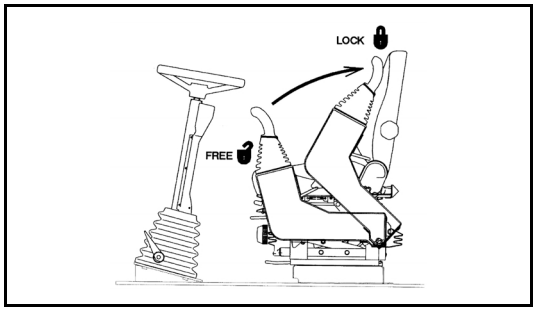

TRANSPORTATION

LOADING AND UNLOADING

- Loading and unloading the machine always involves potential hazards. EXTREME CAUTION SHOULD BE USED.
  When loading or unloading the machine, run the engine at low idling and travel at low speed.

- Perform loading and unloading on firm, level ground only. Maintain a safe distance from the edge of a road.

- ALWAYS block the wheels of the hauling vehicle and place blocks under both ramps before loading and unloading.

- ALWAYS use ramps of adequate strength. Be sure the ramps are wide and long enough to provide a safe loading slope.

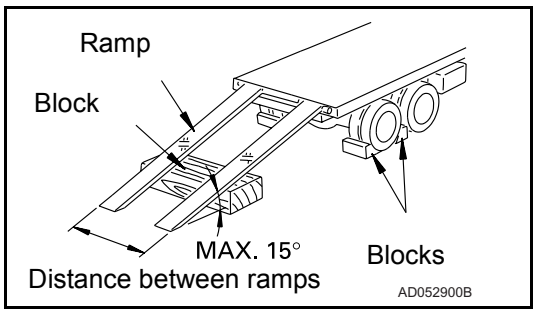

https://truckmanualshub.com/

⚠ WARNING: Failure to follow these safety precautions may lead to a serious accident.

- Be sure that the ramps are securely positioned and fastened, and that the two sides are at the same level as one another.
- Be sure the ramp surface is clean and free of grease, oil, ice and loose materials. Remove dirt from the machine wheels.
- NEVER correct your steering on the ramps. If necessary, drive away from the ramps and climb again.
- Swing the upper structure with extreme care on the trailer to avoid a possible accident caused by body instability.
- After loading, block the machine wheels and secure the machine with tie-downs.

  Loading and unloading, see "TRANSPORTATION" on page 144.

SHIPPING

- When shipping the machine on a hauling vehicle, obey all state and local laws governing the weight, width, and length of a load. Also obey all applicable traffic regulations.
- Determine the shipping route while taking into account the width, height and weight of the load.

BATTERY

BATTERY HAZARD PREVENTION

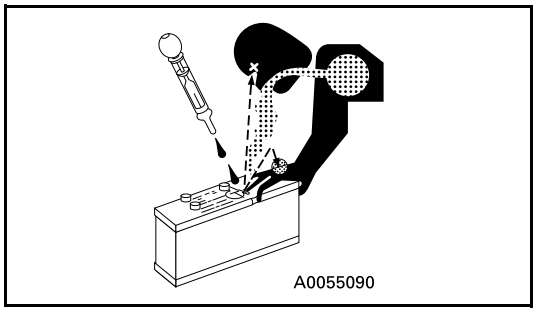

- Battery electrolyte contains sulphuric acid and can quickly burn the skin and eat holes in clothing. If you spill acid on yourself, immediately flush the area with water.
- Battery acid could cause blindness if splashed into the eyes. If acid gets into the eyes, flush them immediately with large quantities of water and see a doctor at once.
- If you accidentally drink acid, drink a large quantity of water or milk, beaten egg or vegetable oil. Call a doctor or poison prevention centre immediately.
- When working with batteries. ALWAYS wear safety glasses or goggles.

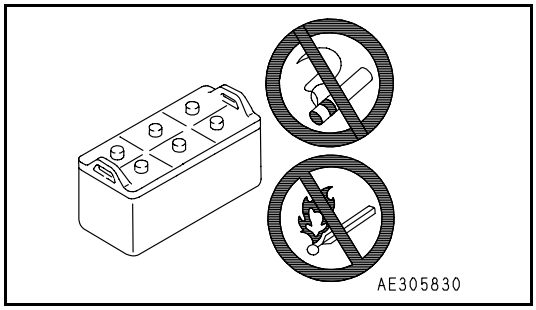

- Batteries generate hydrogen gas. Hydrogen gas is very EXPLOSIVE, and is easily ignited with a small spark or flame.
- Before working with batteries, stop the engine and turn the starting switch to the OFF position.
- Avoid short-circuiting the battery terminals through accidental contact with metallic objects, such as tools, across the terminals.

https://truckmanualshub.com/

⚠ WARNING: For reasons of safety, always follow these safety precautions.

- When removing or installing, check which is the positive (+) terminal and negative (-) terminal.
- Tighten the battery cap securely.
- Tighten the battery terminals securely. Loosened terminals can generate sparks and lead to an explosion.
- When removing battery cap wear rubber groves to prevent electrolyte contact with skin.

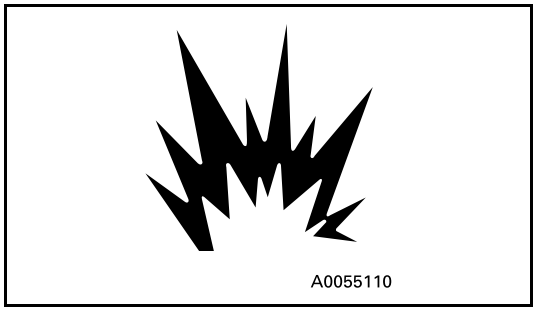

STARTING WITH BOOSTER CABLES

- ALWAYS wear safety glasses or goggles when starting the machine with booster cables.
- When starting from another machine, do not allow the two machines to touch.
- Be sure to connect the positive (+) cable first when installing the booster cables. Disconnect the ground or negative (-) cable first when removing them.
- If any tool touches between the positive (+) terminal and the chassis, it will cause sparks. This is dangerous, so be sure to work carefully.
- Connect the batteries in parallel: positive to positive and negative to negative.
- When connecting the ground cable to the frame of the machine to be started, be sure to connect it as far as possible from the battery.

  Starting with booster cables, see “IF BATTERY IS DISCHARGED” on page 157.

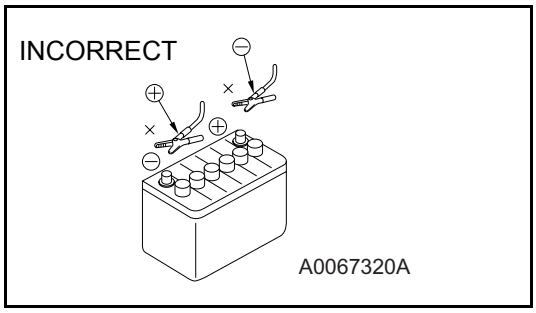

TOWING

WHEN TOWING, ATTACH WIRE TO FRAME

- Injury or death could result if a disabled machine is towed incorrectly.
- If you machine is towed by another machine, ALWAYS use a wire rope with a sufficient towing capacity.
- NEVER allow a disabled machine to be towed on a slope.
- Do not use a chinked or frayed wire rope.
- Do not straddle the towing cable or wire rope.
- When connecting up a towing machine, do not let anyone enter the area between the towing machine and the equipment being towed.

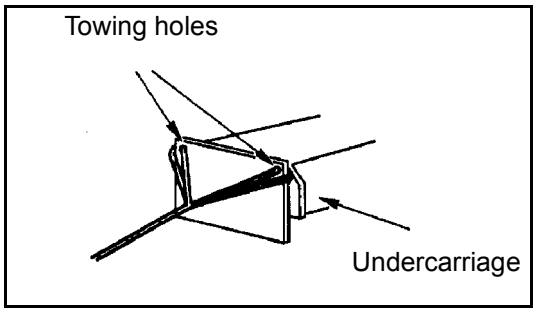

https://truckmanualshub.com/

⚠ WARNING: Failure to follow these safety precautions may lead to a serious accident.

- Set the towing machine and the towing connection of the equipment being towed in a straight line when connecting it.
- Place pieces of wood between the wire ropes and body to protect them from wear of damage.
- Never tow the machine using the light-duty towing hole.

  Towing method, see “METHOD OF TOWING MACHINE” on page 156.

When towing the machine without the engine running or in the advent of loss of hydraulic pressure, its is necessary to manually release the park brake, as follows.

View on transmission from front

Releasing the park brake before towing:

1. Unscrew the lock nuts on the park brake release bolts (A) completely (3 places).
2. Screw in the park brake release bolts (A) until the torque increases sharply. The park brake is now released.

Resetting the park brake (A) after towing:

1. Unscrew the park brake release bolts (A) completely.
2. Screw in the park brake release bolts by hand until a contact can be felt at the bolt end. Lock the bolts with the lock nuts.

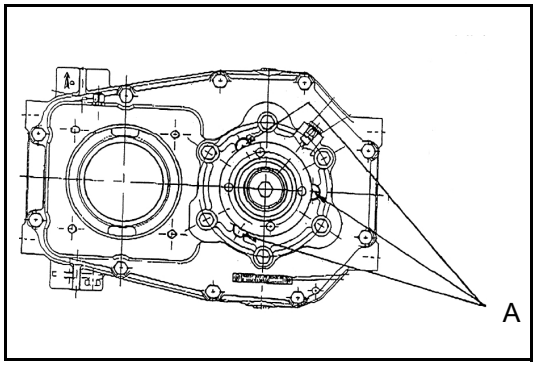

https://truckmanualshub.com/

⚠ WARNING: For reasons of safety, always follow these safety precautions.

BUCKET WITH HOOK OR BUCKET LINK

GENERAL PRECAUTIONS

SPECIAL HOOK

- When carrying out lifting work, the special lifting hook is or lifting eye is necessary.

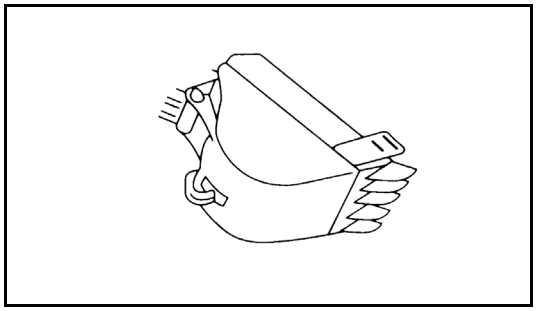

- The following operations are prohibited.
  - ❍ Lifting loads with a wire rope fitted around the bucket teeth.
  - ❍ Lifting loads with the wire rope wrapped directly around the boom or arm.

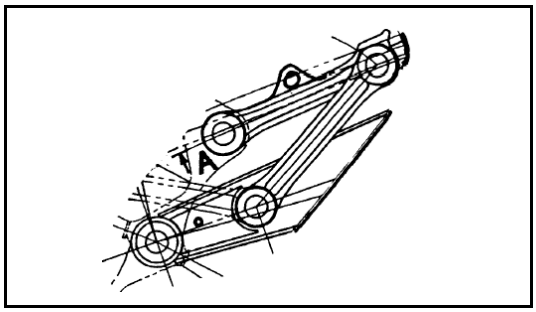

CHECKING HOOK

- When lifting a load, carry out the following checks to confirm that there is no abnormality before starting operations.
  - ❍ Check that there are no cracks or deformation in the lifting equipment.
  - ❍ Check that there is no abnormality in the stopper device.

HOOKING WIRE ROPE SECURELY TO HOOK

- When performing lifting operation, securely hook the wire rope onto the special lifting hook or lifting eye.

PRECAUTIONS FOR MACHINE INSTALLATION

- After carrying out a preliminary inspection of ground conditions, select a flat, solid location. Confirm that the machine can be safely operated without toppling or rolling.

PROHIBITED OPERATIONS OTHER THAN MAIN APPLICATIONS

- When performing lifting operation, never raise or lower a person.

NO PERSONS SHALL BE PERMITTED TO ENTER THE WORKING AREA

- Due to the possible danger of the load falling or of collision with the load, no persons shall be allowed in the working area.

https://truckmanualshub.com/

⚠ WARNING: Failure to follow these safety precautions may lead to a serious accident.

OPERATION SUPERVISOR

- Before performing lifting operation, designate an operation supervisor.
  Always execute operation according to his instructions.
  - Execute operating methods and procedures under his direction.
  - Select a person responsible for signalling. Operate only on signals given by such person.

HANDLING OF WIRE ROPES ETC.

- Wear leather gloves when handling wire ropes.

HANDLING OF FLUIDS

- Some oils and other fluids, such as Antifreeze, can be harmful to you and the environment, you should therefore always follow the manufacturers instructions regarding storage, handling and disposal.

HANDLING OF USED ENGINE OILS

- Avoid contact with used engine oils.
- Refer to engine oils data sheet for handling and storage precautions.

HANDLING OF OILS

- For diesel oils, hydraulic oils and oils used in the swing machinery, PTO, transmission axles and hubs avoid prolonged or frequent contact with skin.
- Refer to manufacturers data sheet for handling and storage precautions.

HANDLING OF FLUIDS

- For antifreeze and grease refer to manufacturers data sheet for handling and storage precautions.

PROTECTING EYES

- Some oils and fluids can damage eyes. Refer to manufactured data sheet for handling and storage instructions.

PRECAUTIONS FOR LIFTING OPERATION

GRADUAL LIFTING OPERATION

- When carrying out lifting operations, run the engine at low idling and use the L.O. (lifting operation mode).
- Avoid sudden lever shifting and acceleration.

https://truckmanualshub.com/

⚠ WARNING: For reasons of safety, always follow these safety precautions.

- Swing speed is three to four times that of movable cranes. Therefore, be especially careful when performing swing operation.

NEVER LEAVE THE OPERATOR'S SEAT

- Never leave the operator's seat while lifting a load.

NEVER CARRY OUT EXCESSIVE OPERATIONS

- Operation exceeding machine performance may result in accident or failure.
- Carry out lifting operation within specified load limit.
- Never carry out operations which may damage the machine such as overload or over-impact-load.

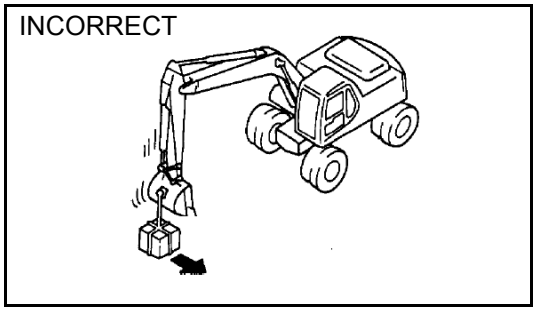

- Never drag a load laterally or longitudinally, nor retract the arm, otherwise, a dangerous situation may result.

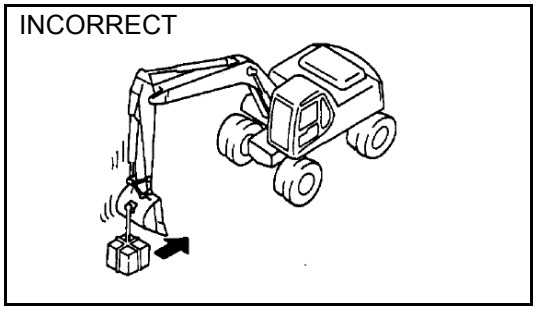

NEVER TRAVELLING WHILE LIFTING A LOAD

- Never travel while carrying a load.

OPERATING POSTURE

- If the machine posture is not correct, the wire ropes or ring may detach from the hook. Confirm that the hook angle is correct to avoid this.

https://truckmanualshub.com/

⚠ WARNING: Failure to follow these safety precautions may lead to a serious accident.

PRECAUTIONS FOR MAINTENANCE

BEFORE CARRYING OUT MAINTENANCE

WARNING TAG

- If others start the engine or operate the controls while you are performing service or lubrication, you could suffer serious injury or death.
- ALWAYS attach the WARNING TAG to the control lever in the operator's cab to alert others that you are working on the machine. Attach additional warning tags around the machine, if necessary.
- These tags are available from your Komatsu distributor. (Part no. 20E-00-K1340)

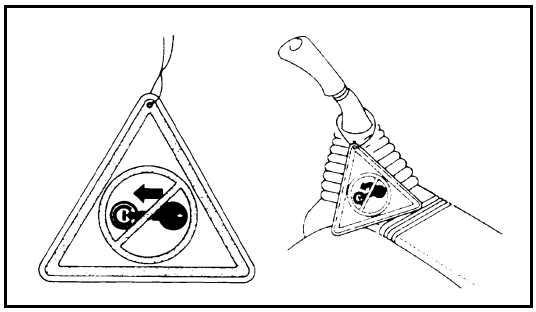

PROPER TOOLS

- Use only tools suited to the task. Using damaged, low quality, faulty, or makeshift tools could cause personal injury.

  Tools, see "INTRODUCTION OF NECESSARY TOOLS" on page 177.

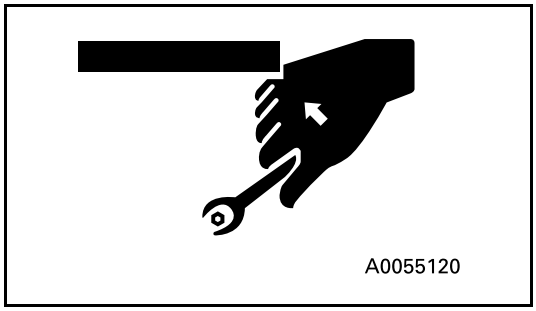

PERIODIC REPLACEMENT OF SAFETY CRITICAL PARTS

- Replace the following fire-related components periodically:
  Fuel system: Fuel hose, spilling hose, and fuel tube cap.
  Hydraulic system: Pump outlet hose.
- Replace these components periodically with new ones, regardless of whether or not they appear to be defective. These components deteriorate over time.
- Replace or repair any such components if any defect is found, event though they have not reached the time specified.

  Replacement of safety critical components,see "PERIODIC REPLACEMENT OF SAFETY CRITICAL PARTS" on page 179.

https://truckmanualshub.com/

⚠ WARNING: For reasons of safety, always follow these safety precautions.

STOP THE ENGINE BEFORE CARRYING OUT INSPECTION AND MAINTENANCE

- Always stop the machine on firm flat ground and stop the engine before carrying out inspection and maintenance.
- If it is necessary to run the engine when carrying out maintenance, such as when cleaning the inside of the radiator, Raise the tilting arm rest to the LOCK position and carry out the operation with two workers.
- One worker should sit in the operator's seat so that he can stop the engine immediately if necessary. He should also be extremely careful not to touch any lever by mistake. Touch the levers only when they have to be operated.
- The worker carrying out the maintenance should be extremely careful not to touch or get caught in the moving parts.

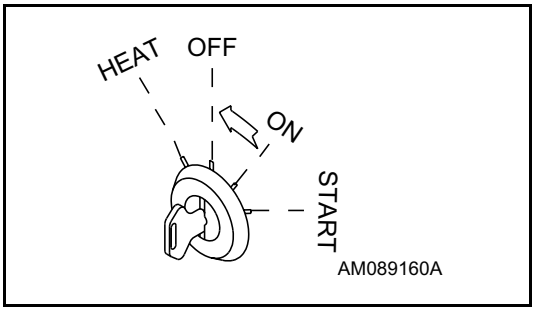

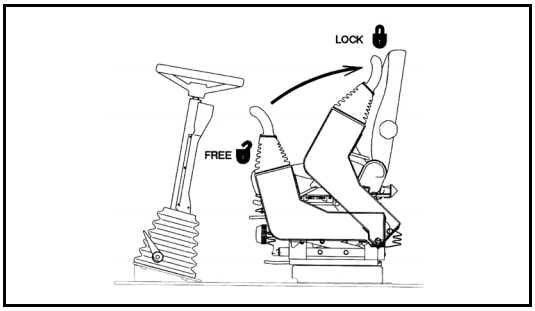

RULES TO FOLLOW WHEN ADDING FUEL OR OIL

- Spilt fuel and oil may cause you to slip, so always wipe it up immediately.

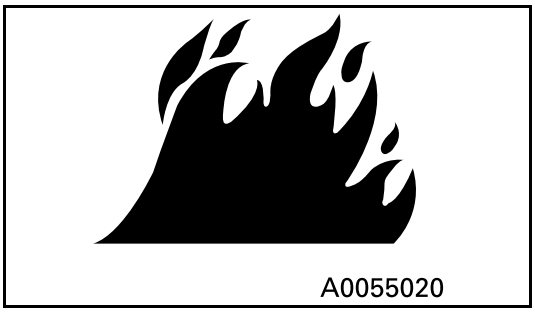

https://truckmanualshub.com/

⚠ WARNING: Failure to follow these safety precautions may lead to a serious accident.

- Always tighten the cap of the fuel and oil fillers securely.
- Never use fuel for washing any parts.

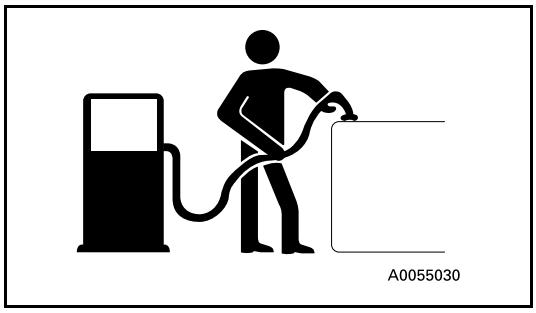

- Always add fuel and oil in a well-ventilated place.

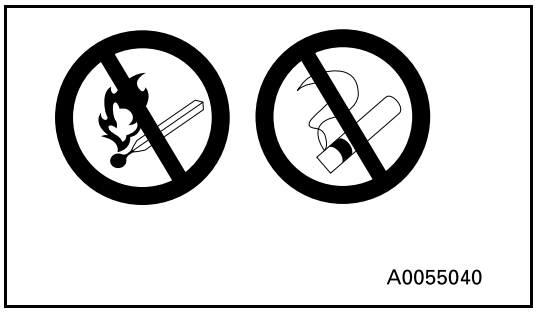

RADIATOR WATER LEVEL

- If it is necessary to add water to the radiator, stop the engine and allow the engine and radiator to cool down before adding the water.

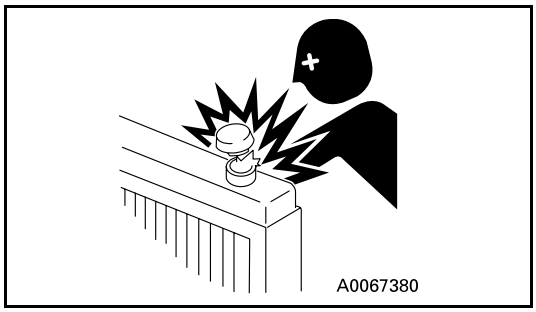

- Slowly loosen the caps to relieve pressure before removing the caps.

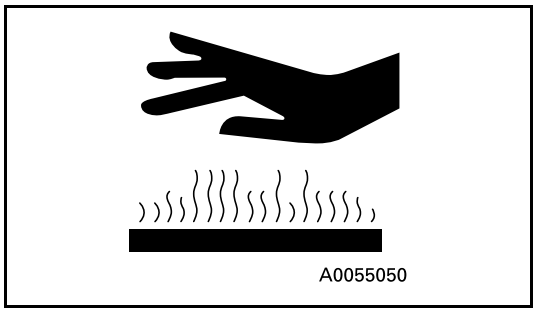

https://truckmanualshub.com/

⚠ WARNING: For reasons of safety, always follow these safety precautions.

USE OF LIGHTING

- When checking fuel, oil, coolant, or battery electrolyte, always use lighting with anti-explosion specifications.
  If such lighting equipment is not used, there is danger of explosion.

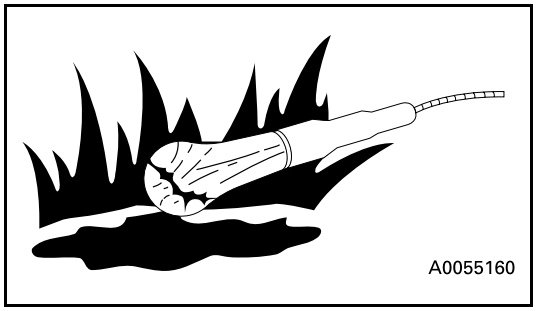

DURING MAINTENANCE

PERSONNEL

- Only authorised personnel can service and repair the machine. Extra precaution should be used when grinding, welding, and using a sledge-hammer.

ATTACHMENTS

- Place attachments that have been removed from the machine in a safe place so that they do not fall. If they fall on you or others, serious injury could result.

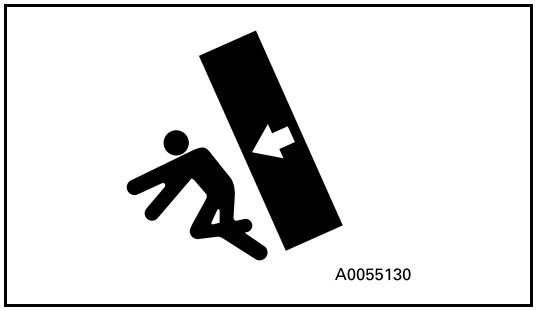

WORK UNDER THE MACHINE

- Always lower all movable work equipment to the ground or to their lowest position before performing service or repairs under the machine.
- Always chock the wheels of the machine securely.
- Never work under the machine if the machine is poorly supported.

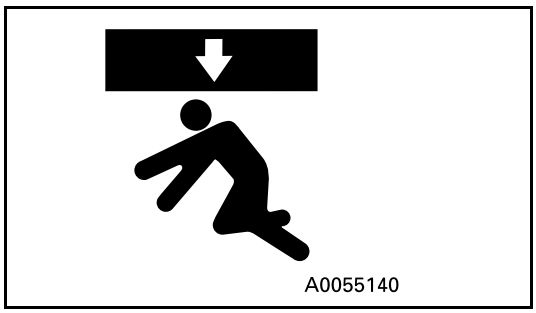

KEEP THE MACHINE CLEAN

- Spilt oil or grease, or scattered tools or broken pieces are dangerous because they may cause you to slip or trip.
  Always keep your machine clean and tidy.

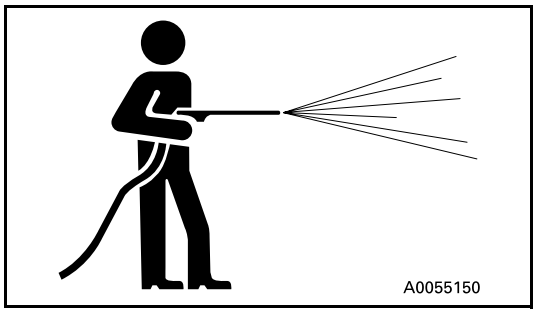

https://truckmanualshub.com/

⚠ WARNING: Failure to follow these safety precautions may lead to a serious accident.

- If water gets into the electrical system, there is danger that the machine may not move or may move unexpectedly.
  Do not use water or steam to clean the sensors, connectors, or the inside of the operator's compartment.

PRECAUTIONS WITH BATTERY

- When repairing the electrical system or when carrying out electrical welding, remove the negative (-) terminal of the battery to stop the flow of current.

HANDLING HIGH-PRESSURE HOSES

- Do not bend high-pressure hoses or hit them with hard objects. Do not use any bent or cracked piping, tubes or hoses. They may burst during use.
- Always repair any loose or broken fuel hoses or oil hoses. If fuel or oil leaks, it may cause a fire.

PRECAUTIONS WITH HIGH PRESSURE OIL

- Do not forget that the work equipment circuits are always under pressure.
- Do not add oil, drain oil, or carry out maintenance or inspection before completely releasing the internal pressure.
- If oil is leaking under high pressure from small holes, it is dangerous if the jet of high-pressure oil hits your skin or enters your eyes. Always wear safety glasses and thick gloves, and use a piece of cardboard or a sheet of wood to check for oil leakage.
- If you are hit by a jet of high-pressure oil, consult a doctor immediately for medical attention.

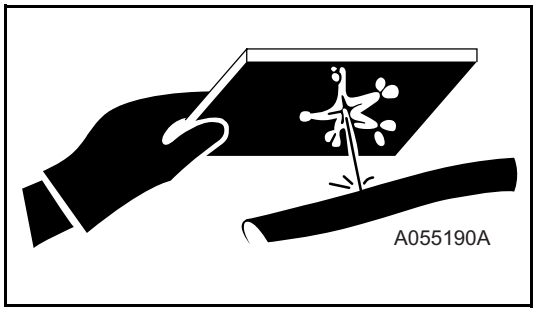

PRECAUTIONS WHEN CARRYING OUT MAINTENANCE AT HIGH TEMPERATURE OR HIGH PRESSURE

- Immediately after stopping operations, the engine cooling water and oil at all parts is at high temperature and under high pressure.
  In this condition, if the cap is removed, or the oil or water are

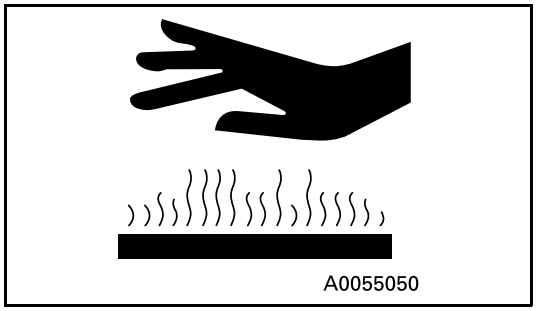

https://truckmanualshub.com/

⚠ WARNING: Failure to follow these safety precautions may lead to a serious accident.

drained, or the filters are replaced, this may result in burns or other injury. Wait for the temperature to go down, then carry out the inspection and maintenance in accordance with the procedures given in this manual.

Cleaning inside or cooling system, see "WHEN REQUIRED" on page 188.

Checking cooling water level, hydraulic oil level, see "CHECK BEFORE STARTING" on page 200.

Checking lubricating oil level, adding oil, see "MAINTENANCE SCHEDULE CHART" on page 181.

Changing oil, replacing filters, see "MAINTENANCE SCHEDULE CHART" on page 181.

ROTATING FAN AND BELT

- Keep away from rotating parts and be careful not to let anything get caught in them.
- If your body or tools touch the fan blades or fan belt, they may be cut off or sent flying, so never touch any rotating parts.

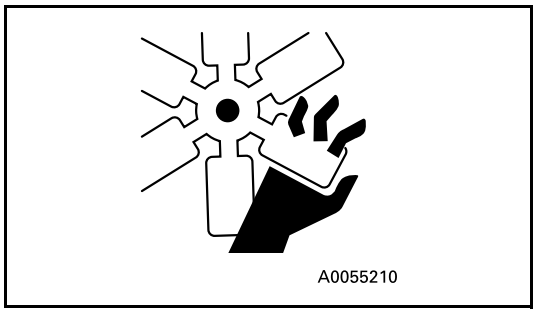

WASTE MATERIALS

- Never dump waste oil in a sewer system, rivers, etc.
- Always put oil drained from your machine in containers. Never drain oil directly on the ground.
- Obey appropriate laws and regulations when disposing of harmful objects such as oil, fuel, coolant, solvent, filters, batteries, and others.

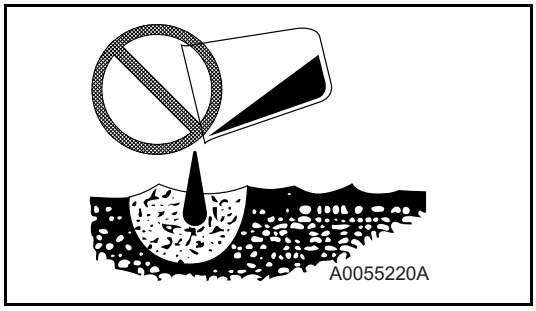

https://truckmanualshub.com/

⚠ WARNING: For reasons of safety, always follow these safety precautions.

POSITION FOR ATTACHING SAFETY LABELS

Always keep these labels clean. If they are lost or damage, attach them again or replace them with a new label
There are other labels in addition to the safety labels listed as follows, so handle them in the same way.

Safety labels are available from your Komatsu distributor.

POSITION FOR ATTACHING SAFETY LABELS

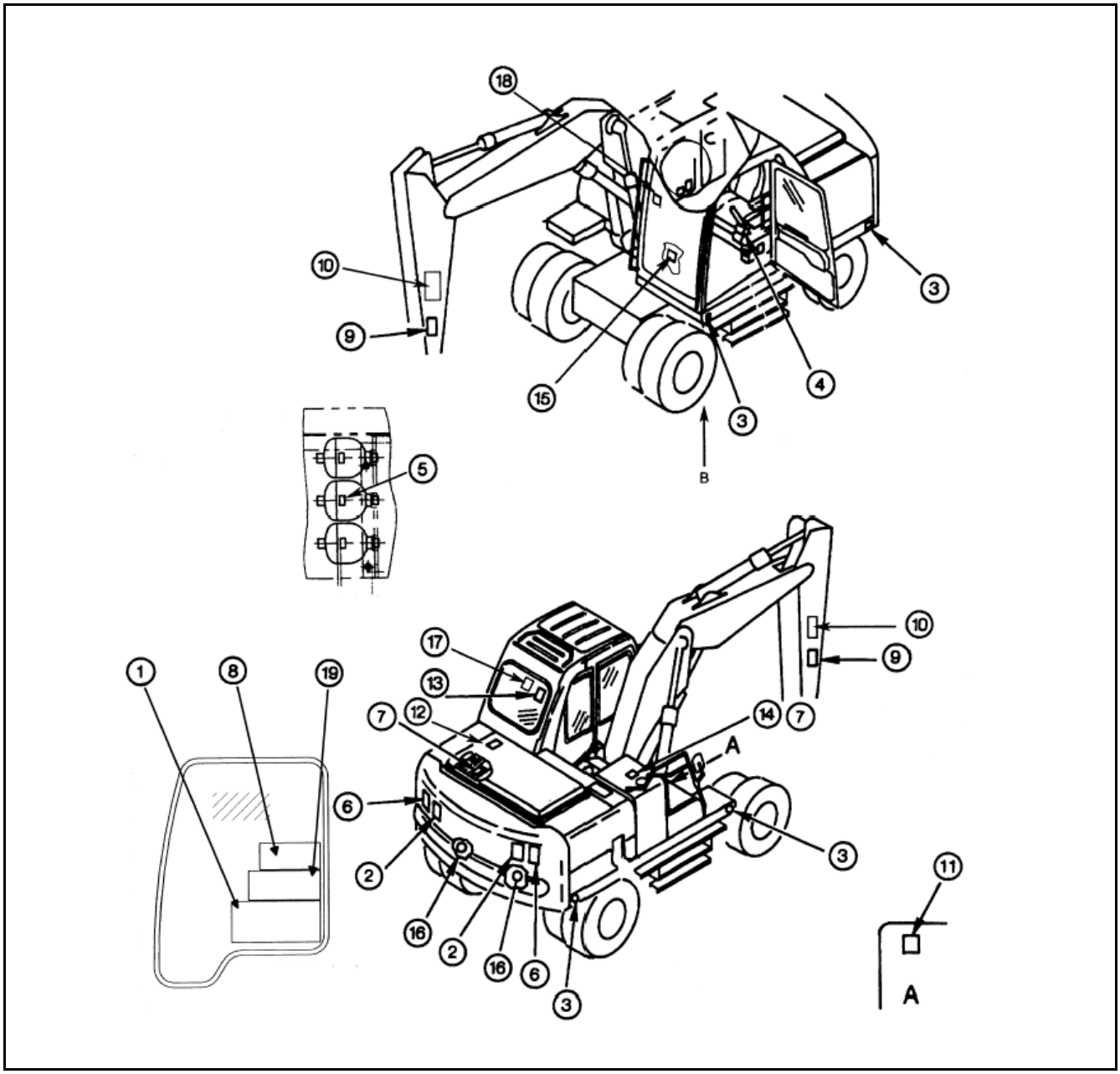

https://truckmanualshub.com/

⚠ WARNING: For reasons of safety, always follow these safety precautions.

1. Warnings for keep clear of swing area, emergency steering, power lines, do not ride on machine, falling objects and bucket cab interference. (20E-00-K1890)

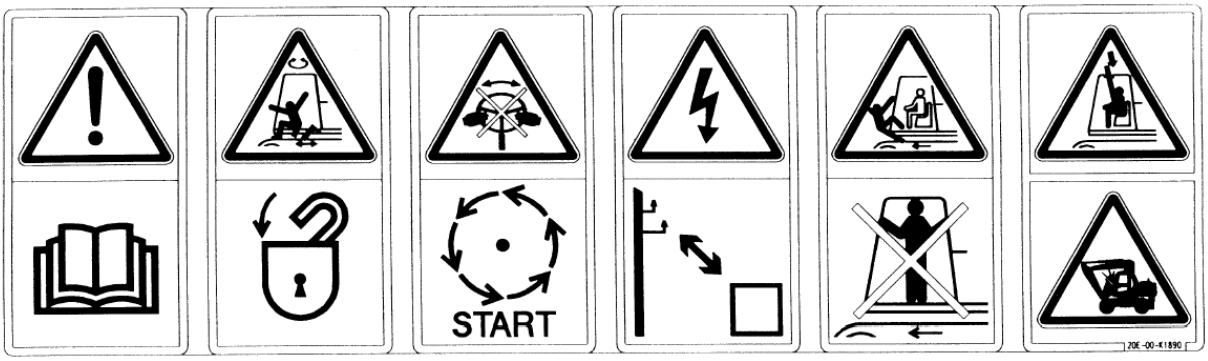

- Improper operation and maintenance can cause serious injury or death.
- Read the manuals before operation.
- Follow instructions and warnings in the manuals and labels on the machine.
- Keep this manual in the machine cab, near operator.
- If this manual is lost, please contact Komatsu distributor for replacement.
- Always apply lock when leaving operators seat.
- Normal steering can only be operated when the engine is running.
- Emergency steering only to be used when stopping the machine safely.
- Serious injury or death can occur if machine or attachments are not kept a safe distance away from electric lines.
- No passengers allowed to ride on machine while it is moving.
- Do not operate where a danger of falling objects exists. Consult your dealer for fitting of FOPS protection.
- Bucket hits operator cab. Read manual before operation.

2. Warning for staying clear (20E-00-K1260)

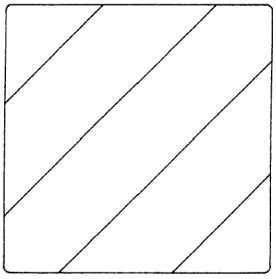

https://truckmanualshub.com/

⚠ WARNING: Failure to follow these safety precautions may lead to a serious accident.

3. Amber reflector (20G-46-K1680)

4. Warning for unsafe machine (20E-00-K1340)
   Do not start

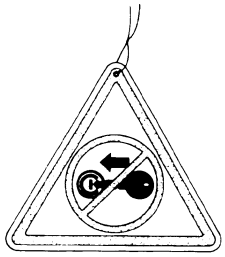

5. Warning for accumulator (20E-00-K1210)

   Warnings for handling accumulator.
   Explosion hazard

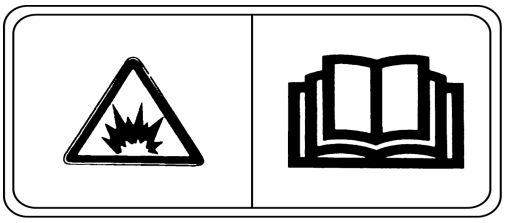

- Keep away from flame.
- Do not weld or drill.
- Read operation manual before operation.

6. Warning for staying clear (20E-00-K1150)

Keeping out of moving area.
To prevent SEVERE INJURY or DEATH.
Do the following before moving the machine or its attachments:

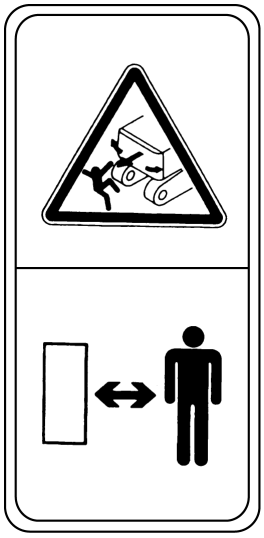

- Sound horn to alert people nearby.
- Be sure no one is on or near machine or in the swing area.
- Rotate cab for full view of travel path if it can be done safely.
- Use spotter if view is obstructed. Follow above even if machine equipped with travel alarm and mirrors.

https://truckmanualshub.com/

⚠ WARNING: For reasons of safety, always follow these safety precautions.

7. Warning for hot objects (20E-00-K1190)

Warning for high temperature coolant and oil, hot water and oil hazard.

To prevent hot water and oil from spurting out:

- Turn engine off.
- Allow water to cool.
- Slowly loosen cap to relieve pressure before removing.
- Read operation manual before operation.

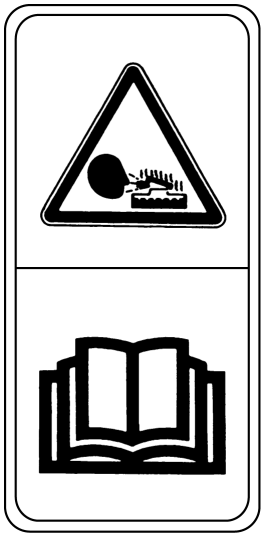

8. Control lever pad safety lock (20E-00-k1850)

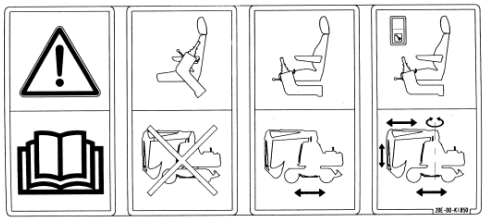

9. Warning for staying clear (20E-00-K1140)

Keeping out of moving area.

To prevent SEVERE INJURY or DEATH.

Do the following before moving the machine or its attachments:

- Sound horn to alert people nearby.
- Be sure no one is on or near machine or in the swing area.
- Rotate cab for full view of travel path if it can be done safely.
- Use spotter if view is obstructed. Follow above even if machine equipped with travel alarm and mirrors.

https://truckmanualshub.com/

⚠ WARNING: Failure to follow these safety precautions may lead to a serious accident.

10. Warnings for staying clear
    (20G-00-K2350) R.H.
    (20G-00-K2360) L.H.

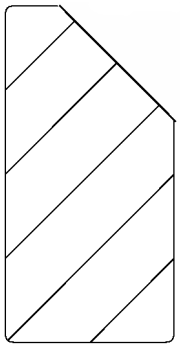

11. Falling from upper structure warning
    (20E-00-K1110)

- WARNING
  falling from upper structure.
- Keep away from sides of machine.
- Keep of counterweight.
- Do not ride on machine when it is moving.

12. Stop engine warning (20E-00-K1310)

- Do not open cover while engine is running.

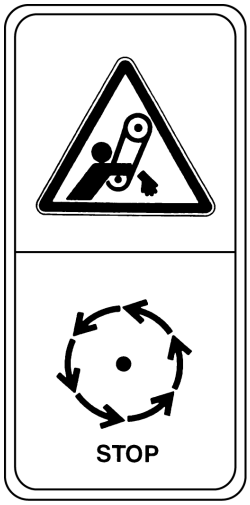

https://truckmanualshub.com/

13. Front windows lock back warning (20E-00-K1230)

- Always apply lock when leaving operator’s seat.

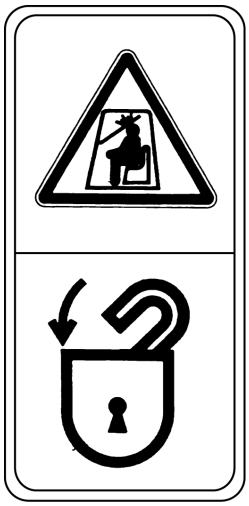

14. High pressure oil warning (20E-00-K1270)

15. 20E-00-K1280

Pump control override switch and swing lock override switch.

Read operation manual before operation.

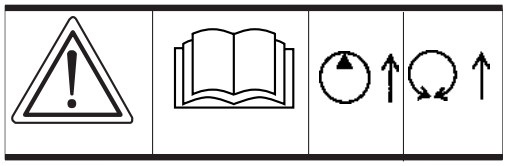

16. Red reflector (20G-47-K1690)

17. 20Y-00-K2220

- Emergency exit
- Read operation manual before operation

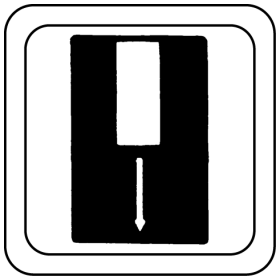

https://truckmanualshub.com/

18. Travel Height -UK spec only (20E-00-K1720)

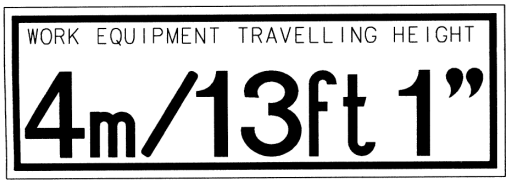

19. Operation of attachments (20G-00-K2273)

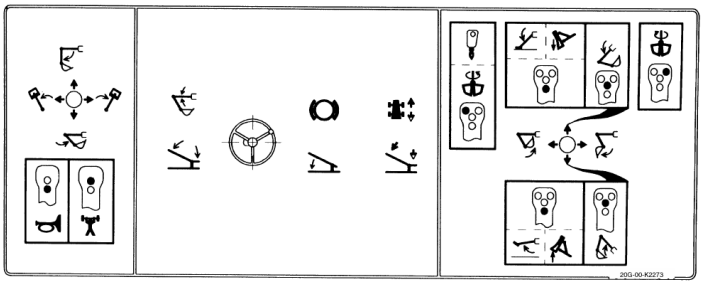

ONE PIECE BOOM Arm length 2,10 m

When removing bucket, linkage or cylinder, lifting capacities can be increased by their respective weights.

A - Reach from swing center

B - Bucket hook height

C - Lifting capacities, including bucket (462 kg), linkage (84 kg) and bucket cylinder (92 kg)

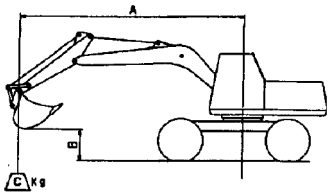

OF: Lifting capacity (rating overfront)
OS: Lifting capacity (Rating overside)

- Rating over rear
- Rating over side or 360 degrees
- Rating at maximum reach

under-carriage	B	A	Max		7,5 m		6,0 m		4,5 m		3,0 m		1,5 m	
			OF	OS	OF	OS	OF	OS	OF	OS	OF	OS	OF	OS
Blade	7.5 m	kg	* 2800	* 2800										
	6.0 m	kg	* 2300	2200					* 3450	* 3300				
	4.5 m	kg	* 2150	1650			* 3550	1950	* 3800	3250				
	3.0 m	kg	* 2200	1450			3850	1850	* 4700	3050	* 6750	5850		
	1.5 m	kg	* 2350	1350			3750	1800	* 5650	2800	* 7400	5250		
	0.0 m	kg	* 2700	1400			3650	1700	6000	2650	* 7550	5000		
	-1.5 m	kg	* 3400	1650			3650	1700	5900	2650	* 8950	5000	* 5800	* 5800
	-3.5 m	kg	* 3850	2250					* 4800	2700	* 7200	5150		

https://truckmanualshub.com/

under-carriage	B	A	Max		7,5 m		6,0 m		4,5 m		3,0 m		1,5 m	
			OF	OS	OF	OS	OF	OS	OF	OS	OF	OS	OF	OS
Blade+ rear outrigger	7.5 m	kg	* 2800	* 2800										
	6.0 m	kg	* 2300	* 2300					* 3450	* 3450				
	4.5 m	kg	* 2150	* 2150			* 3550	2950	* 3800	* 3800				
	3.0 m	kg	* 2200	* 2200			* 3850	2900	* 4700	* 4700	* 6750	* 6750		
	1.5 m	kg	* 2350	2150			* 4000	2800	*5850	4450	* 7400	* 7400		
	0.0 m	kg	* 2700	2250			3950	2700	* 6150	4250	* 7550	* 7550		
	-1.5 m	kg	* 3400	2600			3900	2700	* 6000	4200	* 8950	8650	* 5800	* 5800
	-3.0 m	kg	* 3850	3550					* 4800	4300	* 7200	* 7200		
Rear outrigger	7.5 m	kg	* 2800	* 2800										
	6.0 m	kg	* 2300	* 2300					* 3450	* 3450				
	4.5 m	kg	* 2150	* 2150			* 3550	2450	* 3800	* 3800				
	3.0 m	kg	* 2200	1850			* 3700	2400	* 4700	3900	* 6750	* 6750		
	1.5 m	kg	* 2350	1750			3600	2300	* 5650	3650	* 7400	7050		
	0.0 m	kg	* 2700	1850			3550	2550	5700	3500	* 7550	6800		
	-1.5 m	kg	3350	2150			3500	2250	5650	3450	* 8950	6800	* 5800	* 5800
	-3.0 m	kg	* 3850	2900					* 4800	3550	* 7200	6950		
Without stabilizer	7.5 m	kg	* 2800	* 2800										
	6.0 m	kg	* 2300	1800					* 3450	2750				
	4.5 m	kg	* 2150	1350			3050	1600	* 3800	2700				
	3.0 m	kg	* 2200	1150			3000	1550	* 4700	2700	* 6750	4750		
	1.5 m	kg	2200	1100			2900	1450	4650	2300	* 7400	4200		
	0.0 m	kg	2300	1100			2800	1400	4500	2150	* 7550	3950		
	-1.5 m	kg	2650	1300			2800	1350	4550	2100	* 8950	3950	* 5800	* 5800
	-3.0 m	kg	3700	1850					4550	2200	* 7200	4100		

.Note for lift capacity tables:
1. Ratings are based on ISO 10567
2. Lifting capacities are given for:
   a) 75% of tipping load
   b) rated hydraulic lift capacity 87% of max.
3. Capacities marked with an asterisk (*) are limited by hydraulic capacities

ONE PIECE BOOM Arm length 2,50 m

When removing bucket, linkage or cylinder, lifting capacities can be increased by their respective weights.

A - Reach from swing center

B - Bucket hook height

C - Lifting capacities, including bucket (462 kg), linkage (84 kg) and bucket cylinder (92 kg)

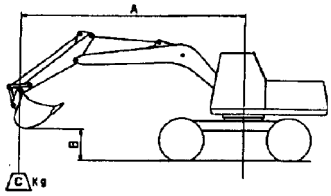

OF: Lifting capacity (rating overfront)
OS: Lifting capacity (Rating overside)

- Rating over rear

- Rating over side or 360 degrees

https://truckmanualshub.com/

- Rating at maximum reach

under-carriage	B	A	Max		7,5 m		6,0 m		4,5 m		3,0 m		1,5 m	
			OF	OS	OF	OS	OF	OS	OF	OS	OF	OS	OF	OS
Blade	7.5 m	kg	* 2200	* 2200					* 2500	* 2500				
	6.0 m	kg	* 1850	* 1850			* 2000	1950						
	4.5 m	kg	* 1750	1500			* 3300	2000	* 3450	* 3300				
	3.0 m	kg	* 1800	1300			* 3700	1900	* 4400	3100	* 6050	* 6050		
	1.5 m	kg	* 1950	1250			3800	1800	* 5400	2900	* 6650	5400		
	0.0 m	kg	* 2200	1300			3700	1750	6000	2700	* 7950	5050		
	-1.5 m	kg	* 2750	1450			3650	1700	5950	2650	* 9300	5000	* 5250	* 5250
	-3.0 m	kg	* 3750	1950					* 5250	2650	* 7900	5100	* 8800	* 8800
Blade+ rear outrigger	7.5 m	kg	* 2200	* 2200					* 2500	* 2500				
	6.0 m	kg	* 1850	* 1850			* 2000	* 2000						
	4.5 m	kg	* 1750	* 1750			* 3300	3000	* 3450	* 3450				
	3.0 m	kg	* 1800	* 1800			* 3700	2950	* 4400	* 4400	* 6050	* 6050		
	1.5 m	kg	* 1950	* 1950			4050	2800	* 5400	4500	* 8650	* 8650		
	0.0 m	kg	* 2200	2050			3950	2750	* 6050	4300	* 7950	* 7950		
	-1.5 m	kg	* 2750	2350			3900	2700	* 6100	4250	* 9300	8650	* 5250	* 5250
	-3.0 m	kg	* 3750	3050					* 5250	4250	* 7900	* 7900	* 8800	* 8800
Rear outrigger	7.5 m	kg	* 2200	* 2200					* 2500	* 2500				
	6.0 m	kg	* 1850	* 1850			* 2000	* 2000						
	4.5 m	kg	* 1750	* 1750			* 3300	2500	* 3450	* 3450				
	3.0 m	kg	* 1800	1700			* 3700	2450	* 4400	3950	* 6050	* 6050		
	1.5 m	kg	* 1950	1650			3650	2350	* 5400	3700	* 6650	7250		
	0.0 m	kg	* 2200	1700			3550	2250	5750	3550	* 7950	6850		
	-1.5 m	kg	* 2750	1900			3500	2250	5850	3450	* 9300	6800	* 5250	* 5250
	-3.0 m	kg	* 3750	2500					* 5250	3450	* 7900	6900	* 8800	* 8800
Without stabilizer	7.5 m	kg	* 2200	* 2200					* 2500	* 2500				
	6.0 m	kg	* 1850	1600			* 2000	1600						
	4.5 m	kg	* 1750	1200			3100	1650	* 3450	2750				
	3.0 m	kg	* 1800	1050			3000	1550	* 4400	2600	* 6050	5000		
	1.5 m	kg	* 1950	1000			2900	1500	4750	2350	* 6650	4350		
	0.0 m	kg	2100	1000			2800	1400	4550	2200	* 7950	4000		
	-1.5 m	kg	2400	1150			2800	1350	4450	2100	* 9300	3950	* 5250	* 5250
	-3.0 m	kg	* 3150	1150					4450	2150	* 7900	4050	* 8800	* 8800

.Note for lift capacity tables:
1. Ratings are based on ISO 10567
2. Lifting capacities are given for:
   a) 75% of tipping load
   b) rated hydraulic lift capacity 87% of max.
3. Capacities marked with an asterisk (*) are limited by hydraulic capacities

https://truckmanualshub.com/

TWO PIECE BOOM Arm length 2,10 m

When removing bucket, linkage or cylinder, lifting capacities can be increased by their respective weights.

A - Reach from swing center

B - Bucket hook height

C - Lifting capacities, including bucket (462 kg), linkage (84 kg) and bucket cylinder (92 kg)

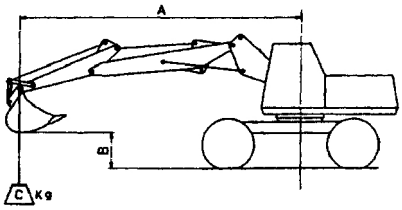

OF: Lifting capacity (rating overfront)
OS: Lifting capacity (Rating overside)

- Rating over rear
- Rating over side or 360 degrees
- Rating at maximum reach

under-carriage	B	A	Max		7,5 m		6,0 m		4,5 m		3,0 m		1,5 m	
			OF	OS	OF	OS	OF	OS	OF	OS	OF	OS	OF	OS
Blade	7.5 m	kg	* 2700	* 2700										
	6.0 m	kg	* 2200	1950					* 3100	* 3100				
	4.5 m	kg	* 2050	1500			* 3250	1900	* 3550	3200				
	3.0 m	kg	* 2050	1300			* 3600	1850	* 4450	3000	* 6700	5800		
	1.5 m	kg	2150	1200			3750	1750	5350	2750				
	0.0 m	kg	2450	1250			3650	1650	5850	2600	5300	4900		
	-1.5 m	kg	2950	1450			3600	1650	5750	2550	8600	4950	4550	4550
	-3.0 m	kg	3500	1950					* 4850	2600	7150	5050		
Blade+ rear outrigger	7.5 m	kg	* 2700	* 2700										
	6.0 m	kg	* 2200	1950					* 3100	* 3100				
	4.5 m	kg	* 2050	* 2050			* 3250	2950	* 3550	* 3550				
	3.0 m	kg	* 2050	* 2050			* 3600	2650	* 4450	* 4450	* 6700	* 6700		
	1.5 m	kg	* 2150	2000			* 4000	2750	* 5350	4400				
	0.0 m	kg	* 2450	2050			3900	2700	* 5850	4200	* 5300	* 5300		
	-1.5 m	kg	* 2950	2350			3900	2650	* 5750	4150	* 8600	8600	* 4550	* 4550
	-3.0 m	kg	3500	3150					* 4850	4250	* 7150	* 7150		
Rear outrigger	7.5 m	kg	* 2700	* 2700										
	6.0 m	kg	* 2200	1600					* 3100	2750				
	4.5 m	kg	* 2050	1200			3050	1650	* 3550	2700				
	3.0 m	kg	* 2050	1000			2950	1600	* 4450	2450	* 6700	4700		
	1.5 m	kg	2050	950			2650	1500	4650	2250				
	0.0 m	kg	2100	1000			2750	1400	4450	2100	* 5300	3850		
	-1.5 m	kg	2400	1150			2750	1400	4400	2050	* 8600	3900	* 4550	* 4550
	-3.0 m	kg	3250	1600					4500	2100	* 7150	4000		

https://truckmanualshub.com/

under-carriage	B	A	Max		7,5 m		6,0 m		4,5 m		3,0 m		1,5 m	
			OF	OS	OF	OS	OF	OS	OF	OS	OF	OS	OF	OS
Without stabilizer	7.5 m	kg	* 2700	* 2700					* 3450	2750				
	6.0 m	kg	* 2200	* 2200			3050	1600	* 3800	2700				
	4.5 m	kg	* 2050	* 2050			3000	1550	* 4700	2500	* 6750	4750		
	3.0 m	kg	* 2050	* 2050			2900	1450	4650	2300	* 7400	4200		
	1.5 m	kg	* 2150	2000			2800	1400	4500	2150	* 7550	3950		
	0.0 m	kg	2450	2050			2800	1400	4500	2150	* 7550	3950		
	-1.5 m	kg	2950	2350			2800	1350	4550	2100	* 8650	3950	* 5800	* 5800
	-3.0 m	kg	3500	3150					4550	2200	* 7200	4100		

.Note for lift capacity tables:
1. Ratings are based on ISO 10567
2. Lifting capacities are given for:
   a) 75% of tipping load
   b) rated hydraulic lift capacity 87% of max.
3. Capacities marked with an asterisk (*) are limited by hydraulic capacities

TWO PIECE BOOM Arm length 2,50 m

When removing bucket, linkage or cylinder, lifting capacities can be increased by their respective weights.

A - Reach from swing center

B - Bucket hook height

C - Lifting capacities, including bucket (462 kg),

linkage (84 kg) and bucket cylinder (92 kg)

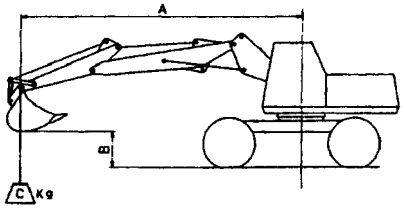

OF: Lifting capacity (rating overfront)
OS: Lifting capacity (Rating overside)

- Rating over rear

- Rating over side or 360 degrees

- Rating at maximum reach

under carriage	B	A	Max		7,5 m		6,0 m		4,5 m		3,0 m		1,5 m	
			OF	OS	OF	OS	OF	OS	OF	OS	OF	OS	OF	OS
Blade	7.5 m	kg	* 2100	* 2100					* 3000	* 3000				
	6.0 m	kg	* 1800	1700			* 2900	1950						
	4.5 m	kg	* 1650	1350			* 3000	1950	* 3200	* 3200				
	3.0 m	kg	* 1650	1200	* 2100	1200	* 3400	1900	* 4150	3100	* 5900	* 5900		
	1.5 m	kg	* 1750	1100	2550	1150	3750	1750	* 5150	2800	* 6300	5300		
	0.0 m	kg	* 2000	1150			3650	1700	* 5800	2650	* 5750	4950		
	-1.5 m	kg	* 2400	1300			3600	1850	* 5850	2550	* 8450	4900		
	-3;0 m	kg	* 3300	1700					* 5200	2600	* 7750	5000		

https://truckmanualshub.com/

under carriage	B	A	Max		7,5 m		6,0 m		4,5 m		3,0 m		1,5 m	
			OF	OS	OF	OS	OF	OS	OF	OS	OF	OS	OF	OS
Blade+ rear outrigger	7.5 m	kg	* 2100	* 2100										
	6.0 m	kg	* 1800	* 1800					* 2900	* 2900				
	4.5 m	kg	* 1650	* 1650			* 3000	3000	* 3200	* 3200				
	3.0 m	kg	* 1650	* 1650	* 2100	1950	* 3400	2900	* 4150	* 4150	* 5900	* 5900		
	1.5 m	kg	* 1750	* 1750	2750	1900	* 3850	2800	* 5150	4450	* 6300	* 6300		
	0.0 m	kg	* 2000	1900			3900	2700	* 5800	4250	* 5700	* 5700		
	-1.5 m	kg	* 2400	2150			3900	2650	* 5850	4200	* 8450	* 8450	* 4200	* 4200
	-3;0 m	kg	* 3300	2700					* 5200	2600	* 7750	5000		
Rear outrigger	7.5 m	kg	* 2100	* 2100										
	6.0 m	kg	* 1800	* 1800			* 2900	2500						
	4.5 m	kg	* 1650	* 1650			* 3000	2500	* 3200	* 3200				
	3.0 m	kg	* 1650	1550	* 2100	1600	* 3400	2900	* 4150	3950	* 5900	* 5900		
	1.5 m	kg	* 1750	1500	2550	1550	* 3850	2300	* 5150	3650	* 6300	* 6300		
	0.0 m	kg	* 2000	1550			3500	2200	5700	3450	* 5700	* 5700		
	-1.5 m	kg	* 2400	1750			3500	2150	5600	3400	* 8450	6750	* 4200	* 4200
	-3;0 m	kg	* 3300	2250					* 5200	3450	* 7750	8650		
Without stabilizer	7.5 m	kg	* 2100	* 2100					* 3000	2750				
	6.0 m	kg	* 1800	1400			* 2900	1600						
	4.5 m	kg	* 1650	1100			* 3000	1600	* 3200	2750				
	3.0 m	kg	* 1650	950	2000	950	3000	1550	* 4150	2550	* 5900	4950		
	1.5 m	kg	* 1750	850	1950	900	2900	1450	4700	2300	6300	4200		
	0.0 m	kg	1950	900			2800	1350	4500	2100	5700	3900		
	-1.5 m	kg	2200	1050			2750	1300	4400	2050	* 8450	3850	* 4200	* 4200
	-3;0 m	kg	2800	1350					4450	2100	* 7750	3950		

.Note for lift capacity tables:
1. Ratings are based on ISO 10567
2. Lifting capacities are given for:
   a) 75% of tipping load
   b) rated hydraulic lift capacity 87% of max.
3. Capacities marked with an asterisk (*) are limited by hydraulic capacities

https://truckmanualshub.com/

ROTATING ARM

Undercarriage	Arm length	Height	max		7.5 m		6.0 m		4.5 m		3.0 m		1.5	
			OF	OS	OF	OS	OF	OS	OF	OS	OF	OS	OF	OS
Front outrigger + rear blade	2600	7.5 m	*1950	* 1950										
		6.0 m	* 1600	* 1600			* 2600	* 2600						
		4.5 m	* 1500	* 1500			* 2650	* 2650	* 2850	* 2850				
		3.0 m	* 1500	* 1500	* 2300	1700	* 3000	2650	* 3700	* 3700	* 5300	* 5300		
		1.5 m	* 1600	1550	2550	1650	* 3450	2500	* 4600	4050	* 6850	* 6850		
		0.0 m	* 1750	1600	* 2200	1600	3600	2350	* 5250	3800	* 5700	* 5700		
		-1.5 m	* 2100	1800			3550	2300	* 5300	3700	* 8250	7750	* 4000	* 4000
		-3 m	* 2900	2350			* 3100	2400	* 4750	3750	* 7150	* 7150	* 7200	* 7200
Front + rear outrigger		7.5 m	*1950	* 1950										
		6.0 m	* 1600	* 1600			* 2600	* 2600						
		4.5 m	* 1500	* 1500			* 2650	* 2650	* 2850	* 2850				
		3.0 m	* 1500	* 1500	* 2300	* 2300	* 3000	* 3000	* 3700	* 3700	* 5300	* 5300		
		1.5 m	* 1600	* 1600	2400	2300	* 3450	3400	* 4600	* 4600	* 6850	* 6850		
		0.0 m	* 1750	* 1750	* 2200	* 2200	3450	2350	* 5250	3800	* 5700	* 5700		
		-1.5 m	* 2100	1800			3550	2300	* 5300	5200	* 8250	* 8250	* 4000	* 4000
		-3 m	* 2900	* 2900			* 3100	* 3100	* 4750	* 4750	* 7150	* 7150	* 7200	* 7200

https://truckmanualshub.com/

OVERLOAD CAUTION

This machine is equipped with an overload caution system which gives a visual warning (on monitor) and an audible warning when lifting a load close to the to the lift capacity of the machine (active in L.o. mode only).

A decal inside the operators cab shows the loads at which the caution warning is given for various work equipment positions.

Due to the simple nature of the system the overload warning is given at a lower load than actually allowable (see full lift capacity charts)

If lifting to the full capacity of the machine is required it is necessary to fit a full overload caution system (with work equipment position sensing to the machine.

Decal showing lifting loads (in kg) at overload warning.

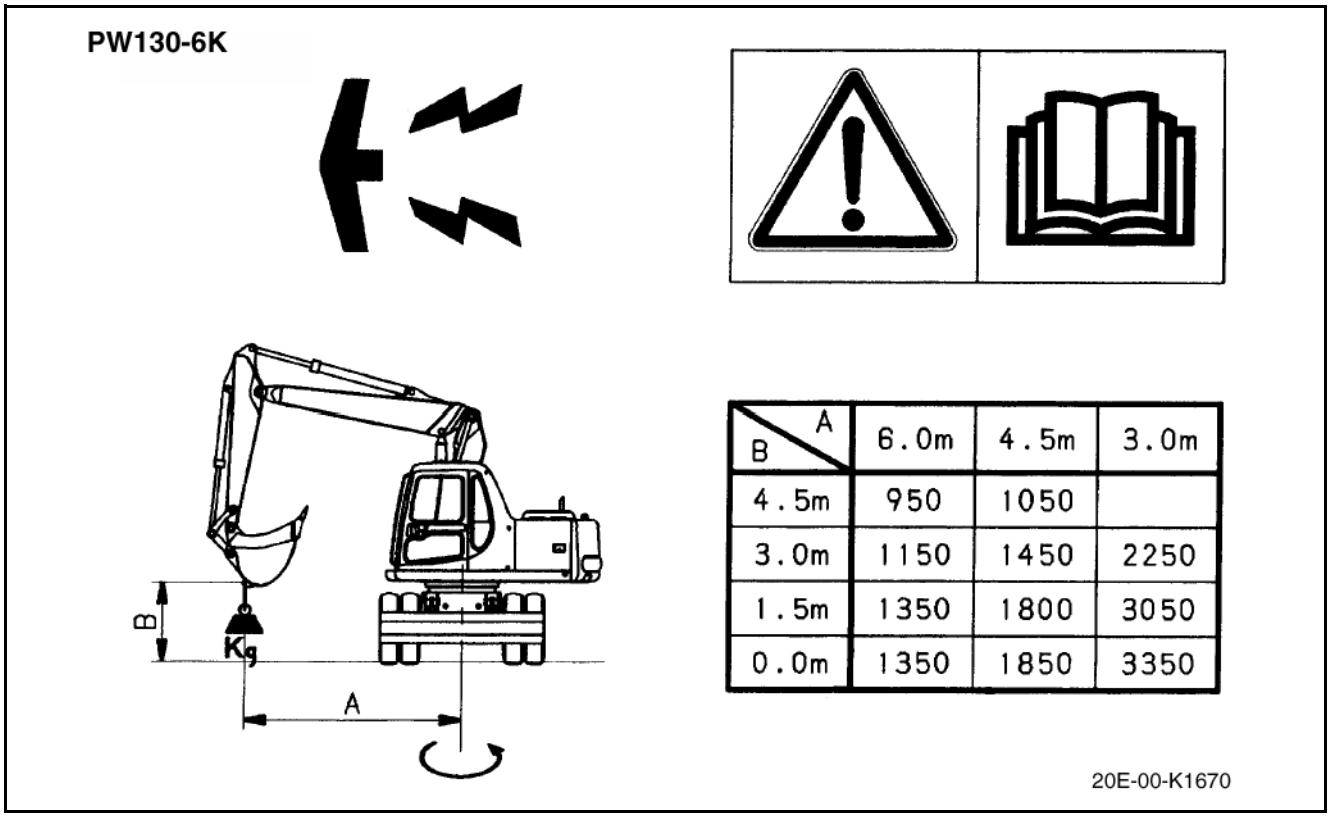

B \ A	6.0m	4.5m	3.0m
4.5m	950	1050	
3.0m	1150	1450	2250
1.5m	1350	1800	3050
0.0m	1350	1850	3350

https://truckmanualshub.com/

OPERATION

https://truckmanualshub.com/

GENERAL VIEW

GENERAL VIEW OF MACHINE

If directions are indicated in this section, they refer to the directions shown by in the arrows in the diagram below.

A: FRONT	B: REAR	C: RIGHT	D: LEFT

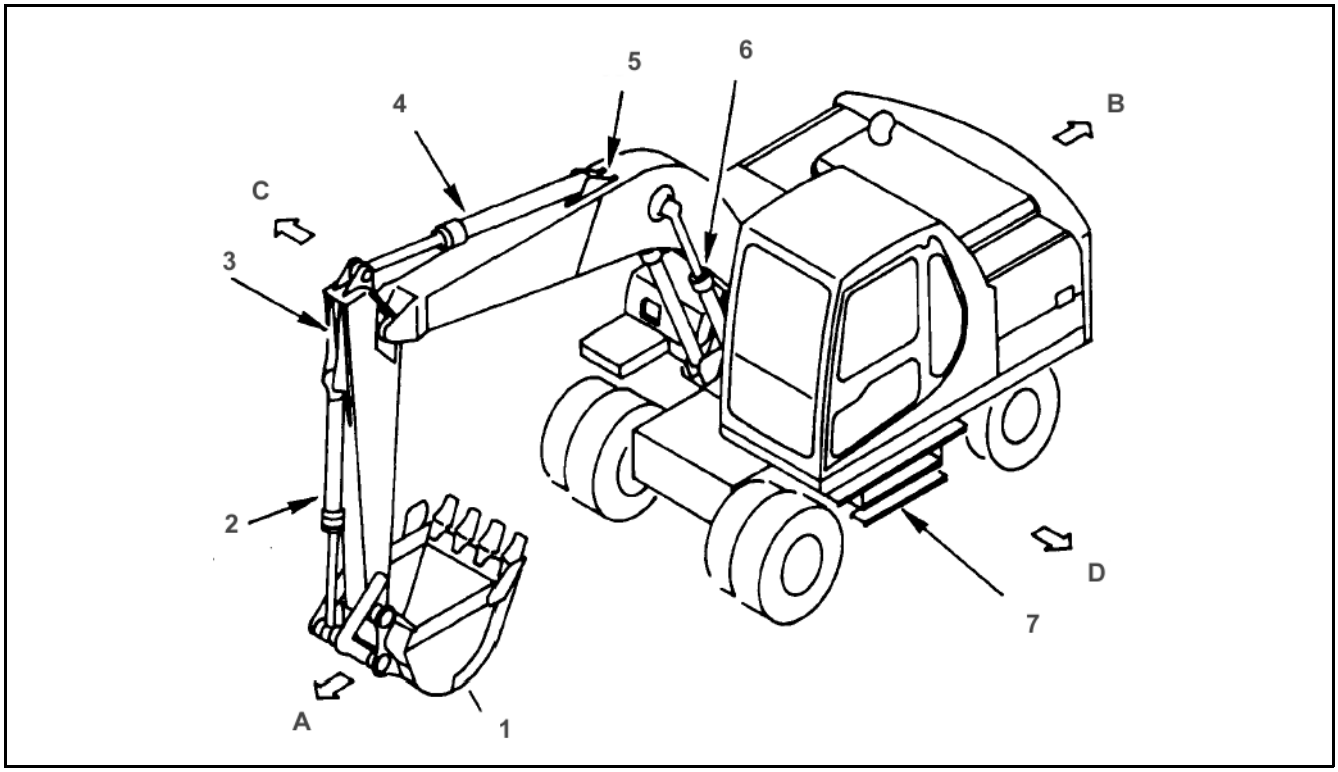

1. Bucket	5. Boom
2. Bucket cylinder	6. Boom Cylinder
3. Arm	7. Undercarriage
4. Arm cylinder	

https://truckmanualshub.com/

GENERAL VIEW OF CONTROLS AND GAUGES

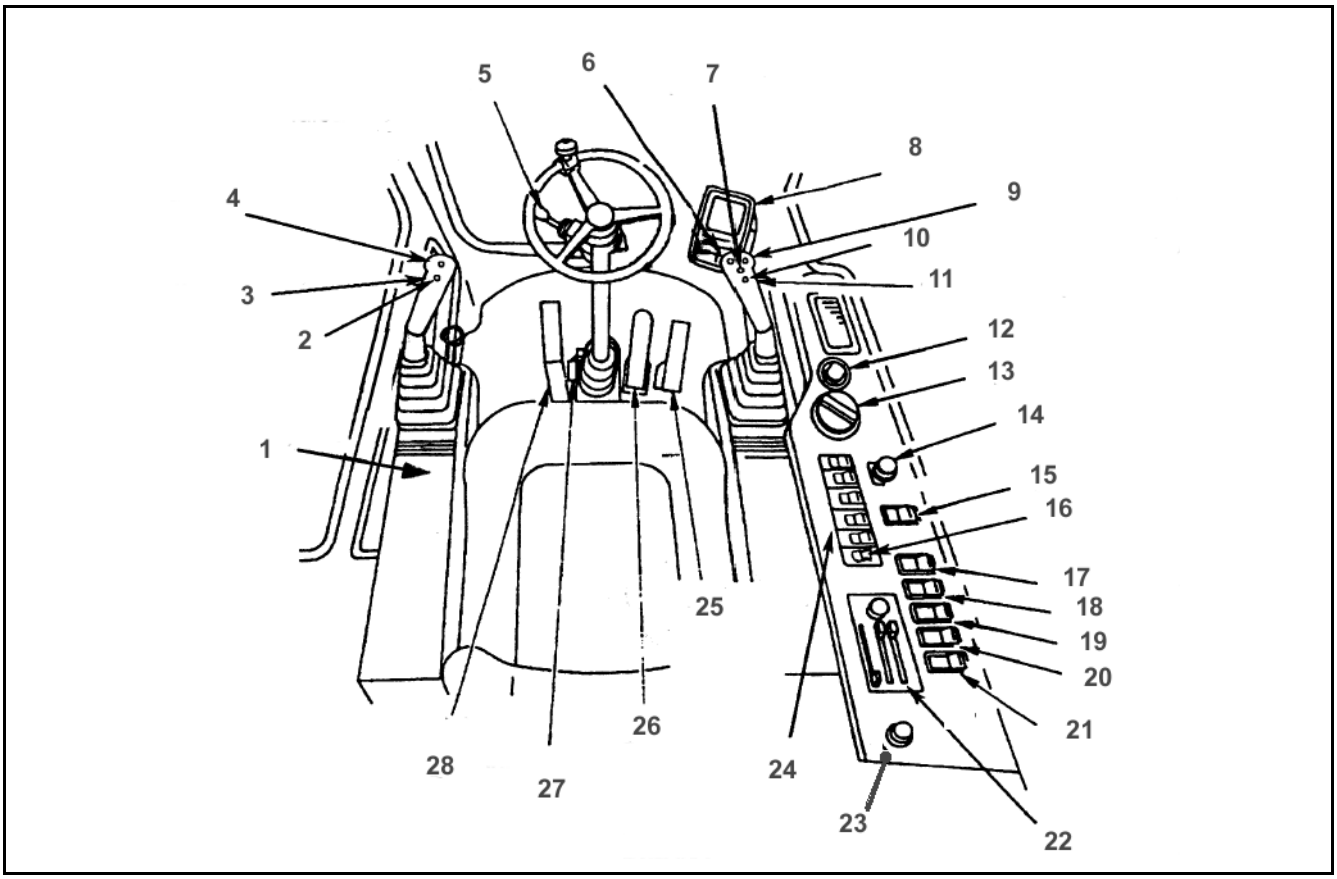

1. Control lever pad safety lock	15. Swing lock switch
2. Horn	16. Control lever lock switch
3. Left work equipment control	17. Lamp switch
4. Power max. Button	18. Alarm buzzer stop switch
5. Horn, wiper, washer, dip/main headlights indicators	19. Lower switch
6. L.H. Clamshell rotation switch	20. Beacon switch
7. Boom switch	21. Heated seat switch
8. Machine monitor	22. Heater/Air conditioner control
9. R.H. Clamshell rotation, switch/breaker switch	23. 12 V power supply
10. Undercarriage attachment switch	24. Outriggers L/R, Hazard, park brake, roadlight, Axle lock switches.
11. Right work equipment control lever	25. Travel pedal
12. Starting switch	26. Brake pedal
13. Fuel control dial	27. Steering column, Release pedal
14. Cigarette lighter	28. piece boom pedal

https://truckmanualshub.com/

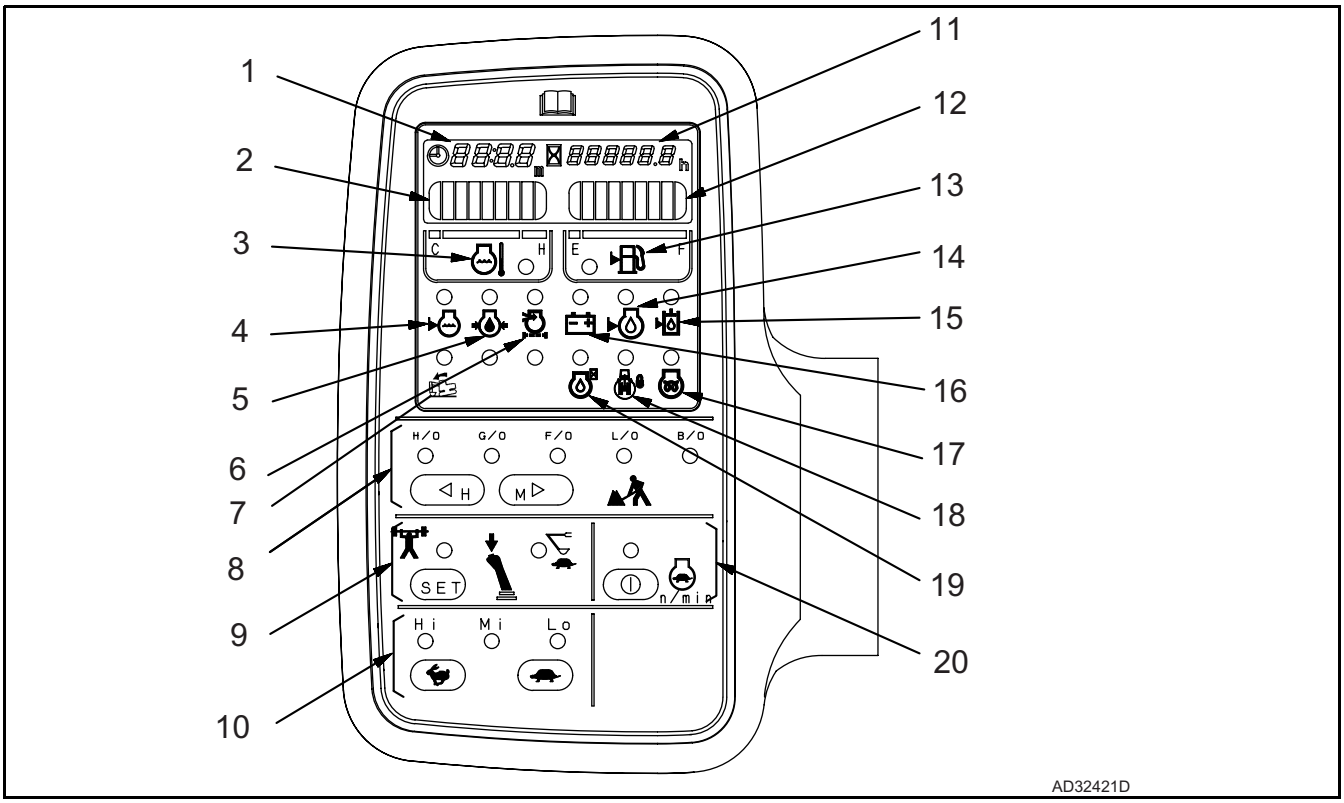

1. Display (for clock and fault indication
2. Engine water temperature gauge
3. Engine water temperature monitor
4. Radiator water level monitor
5. Engine oil pressure monitor
6. Air cleaner clogging monitor
7. Overload caution monitor
8. Working mode selector switch
9. Power-max, swift slow-down switch
10. Travel speed switch
11. Service meter
12. Fuel gauge
13. Fuel level monitor
14. Engine oil level monitor
15. Hydraulic oil level monitor
16. Charge level monitor
17. Engine preheating monitor
18. Swing lock monitor
19. Engine oil replacement monitor
20. Auto-deceleration switch

https://truckmanualshub.com/

EXPLANATION OF COMPONENTS

The following is an explanation of the devices needed for operating the machine.

To carry out suitable operations correctly and safely, it is important to understand fully the methods of operating the equipment and the meanings of the displays.

MACHINE MONITOR

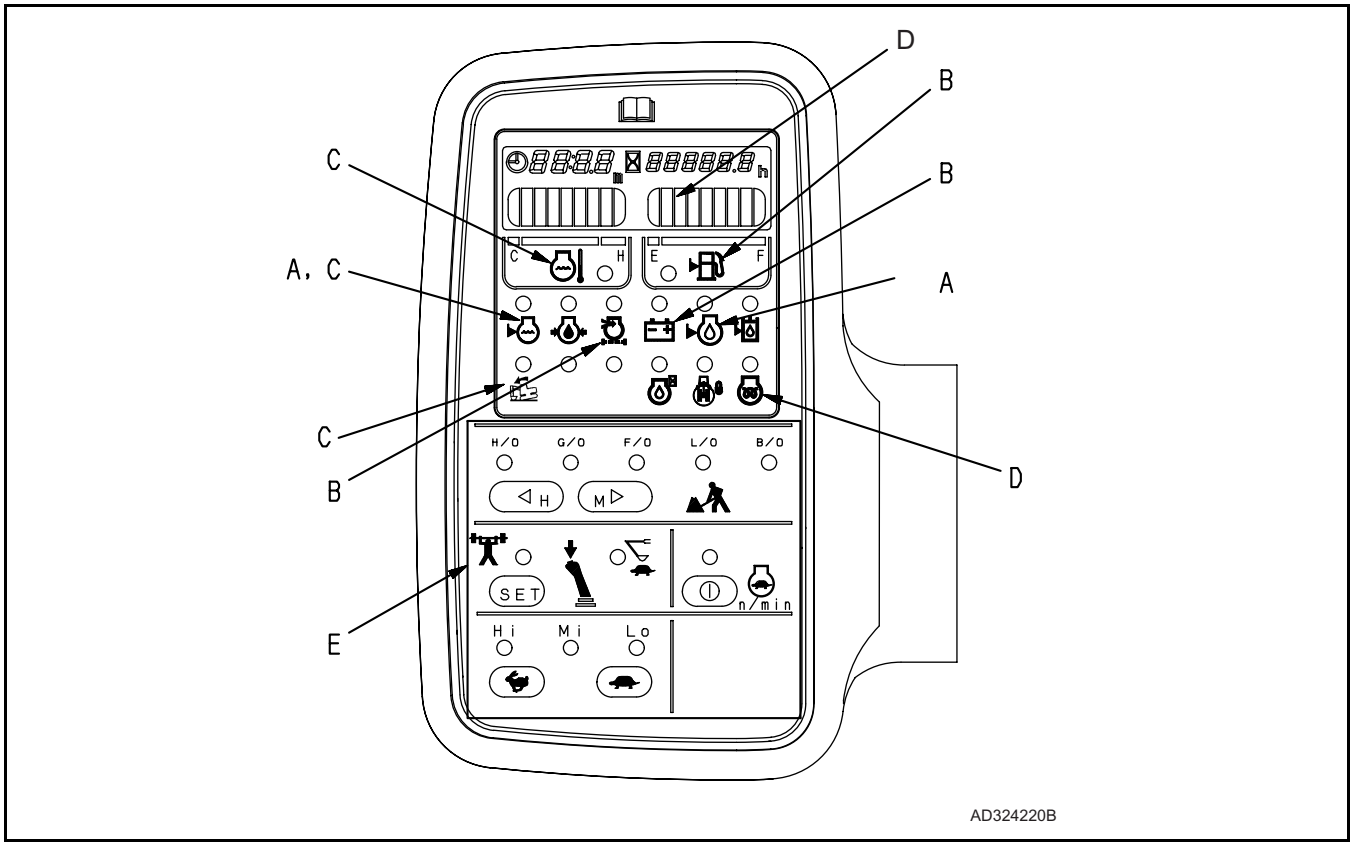

A. BASIC CHECK ITEMS

This displays the basic items that should be checked before starting the engine.
If there is any abnormality, the appropriate monitor lamp will flash.

NOTICE

When carrying out checks before starting, do not simply rely on the monitor. Always refer to the periodic maintenance items or“OPERATION” on page 101 to carry out the checks.

https://truckmanualshub.com/

B. CAUTION ITEMS

⚠ CAUTION

If these monitor items flash, check and repair the appropriate location as soon as possible.

These are items which need to be observed while the engine is running.
If any abnormality occurs, items which need to be repaired as soon as possible are displayed.

If there is any abnormality, the appropriate monitor lamp will flash to indicate the location of the abnormality.

C. EMERGENCY STOP ITEMS

⚠ CAUTION

If these monitors items flash, stop operations immediately, then check and repair the appropriate location.

These are items which need to be observed while the engine is running. If any abnormality occurs, items which need to be repaired immediately are displayed.
If there is any abnormality, the appropriate monitor lamp will flash to indicate the location of the abnormality and the buzzer will sound.

D. METER DISPLAY PORTION

This portion consists of pre-heating monitor, swing lock monitor, engine water temperature gauge, fuel gauge and display.

E. SWITCHES

The switches are used for setting clock time and for selecting working mode and travel speed.

https://truckmanualshub.com/

A: BASIC CHECK ITEMS

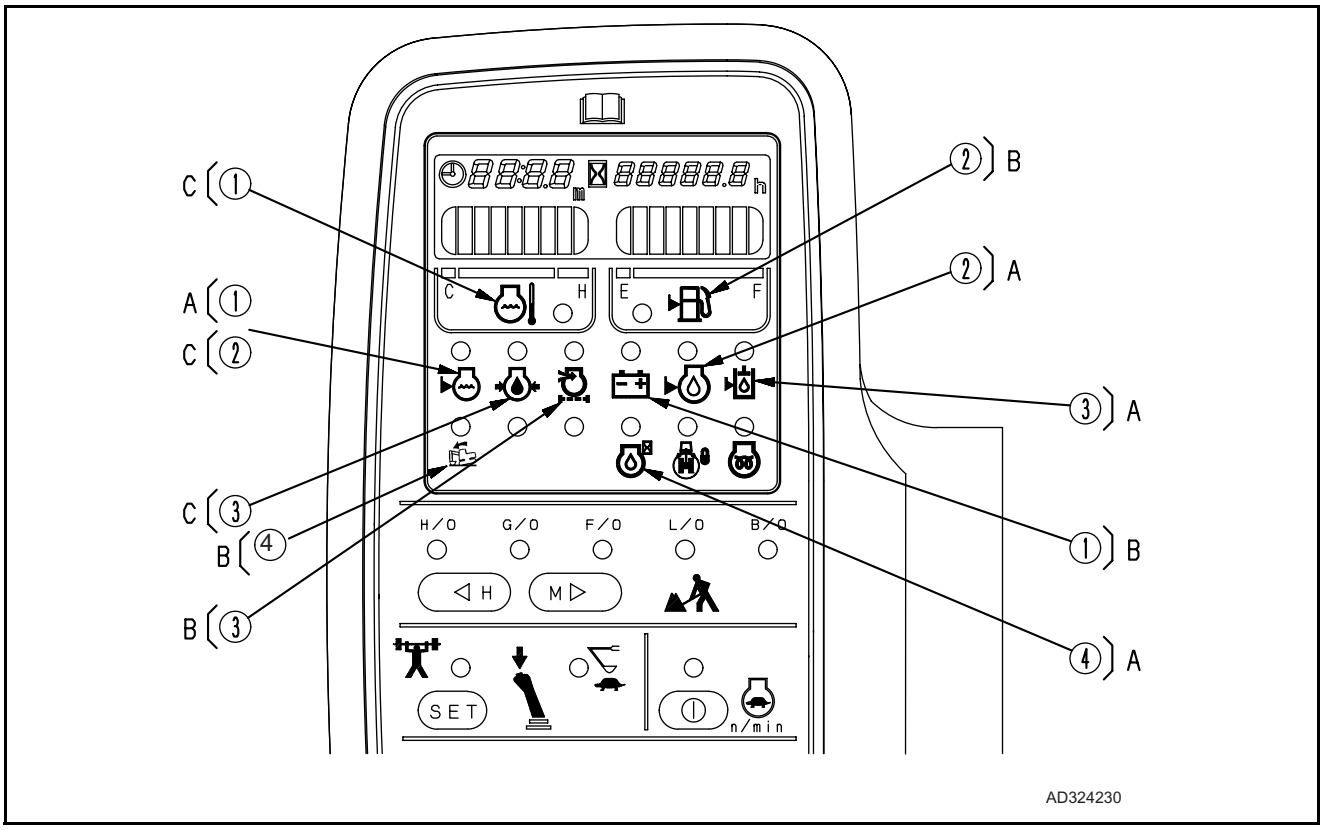

NOTICE

Do not rely on the “BASIC CHECK ITEMS” only for the check before starting

Always refer to the periodic maintenance items or "OPERATION" to carry out the checks.

1. RADIATOR WATER LEVEL

This warns that the radiator cooling water level is too low. If the monitor lamp flashes, check the cooling water level in the radiator and reserve tank, and add water.

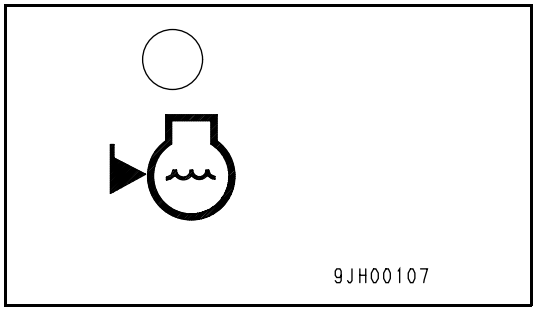

2. ENGINE OIL LEVEL

This warns that the oil level in the engine oil pan is too low. If the monitor lamp flashes, check the oil level in the engine oil pan, and add oil.

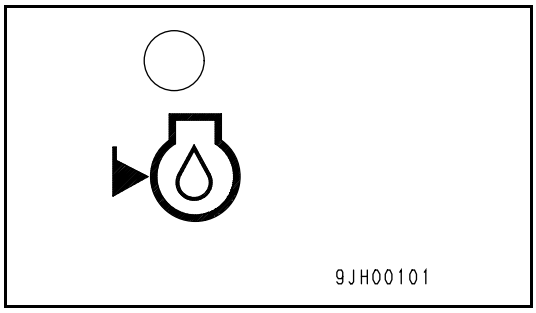

https://truckmanualshub.com/

B: CAUTION ITEMS

⚠ CAUTION

If the caution monitor lamp flashes, repair the problem as soon as possible.

1. CHARGE LEVEL

This monitor indicates an abnormality in the charging system while the engine is running. If the monitor lamp flashes, check the V-belt tension.

If any abnormality is found, see “OTHER TROUBLE” on page 159.

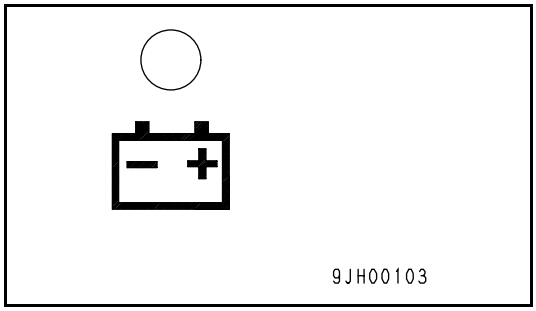

REMARK

While the starting switch is ON, the lamp will remain lit and will go off once the engine is started.

2. FUEL LEVEL

If the fuel drops below 55 liters, the lamp will flash. Top up the fuel before this.

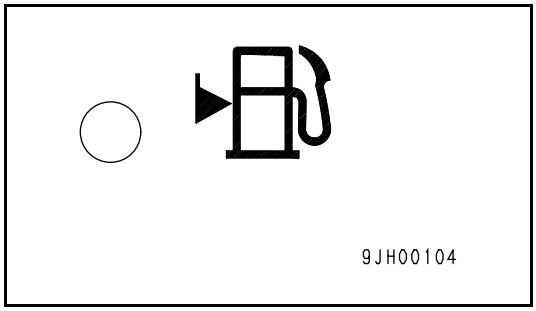

3. AIR CLEANER CLOGGING

This warns that the air cleaner is clogged.
If the monitor lamp flashes, stop the engine then inspect and clean the air cleaner.

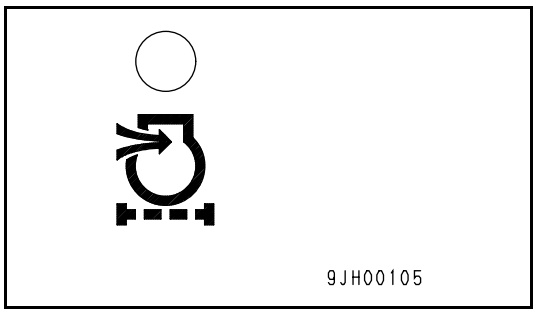

4. OVERLOAD CAUTION (When in LO mode)

This warns that the machine is close to tipping due to the load (an audible warning is also given), if the warning is given lower the load. Refer to the lifting capacity chart for safe load.(see section 10)

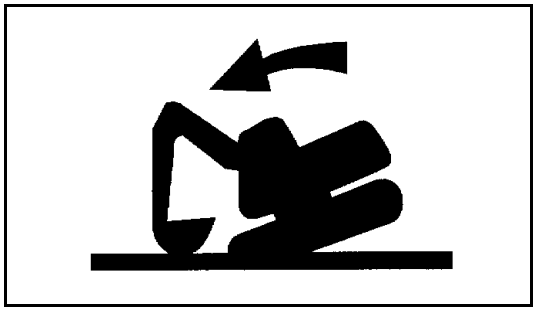

https://truckmanualshub.com/

C: EMERGENCY STOP ITEMS

If any monitor lamp flashes, stop the engine or run it at low idling, and take the following action.

1. ENGINE WATER TEMPERATURE

If the temperature of the engine cooling water becomes abnormally high, the monitor lamp flashes, and the overheat prevention system is automatically actuated to reduce the engine speed.

Stop operations and run the engine at low idling until the engine water temperature gauge enters the green range.

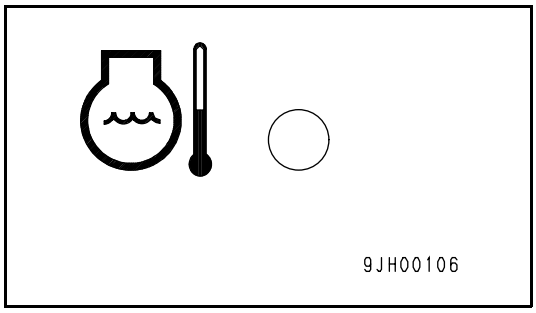

2. RADIATOR WATER LEVEL

If the radiator water level drops, the monitor lamp flashes. Stop the engine, check the radiator water level, and add water if necessary.

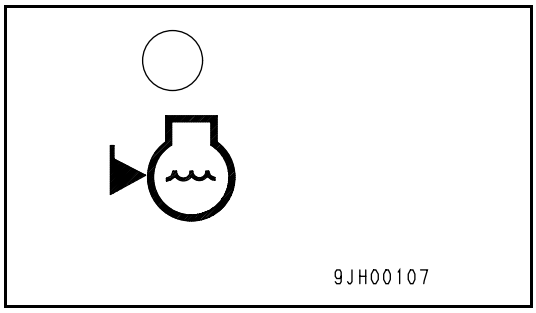

3. ENGINE OIL PRESSURE

If the engine oil pressure drops below the normal pressure, the monitor lamp flashes. At this item, stop the engine and inspect it according to “OTHER TROUBLE” on page 159

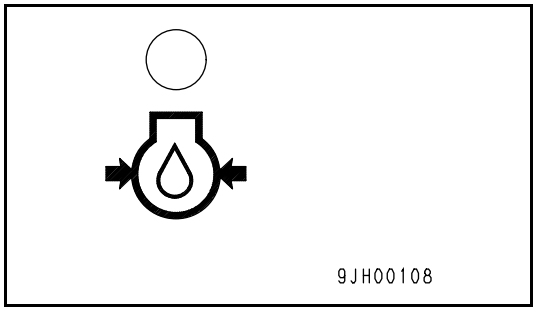

REMARK

While the starting switch is ON, the lamp remains lit and goes off once the engine is started. When the engine starts, the buzzer may sound for a short time, however, this does not indicate a fault.

https://truckmanualshub.com/

D: METER DISPLAY PORTION

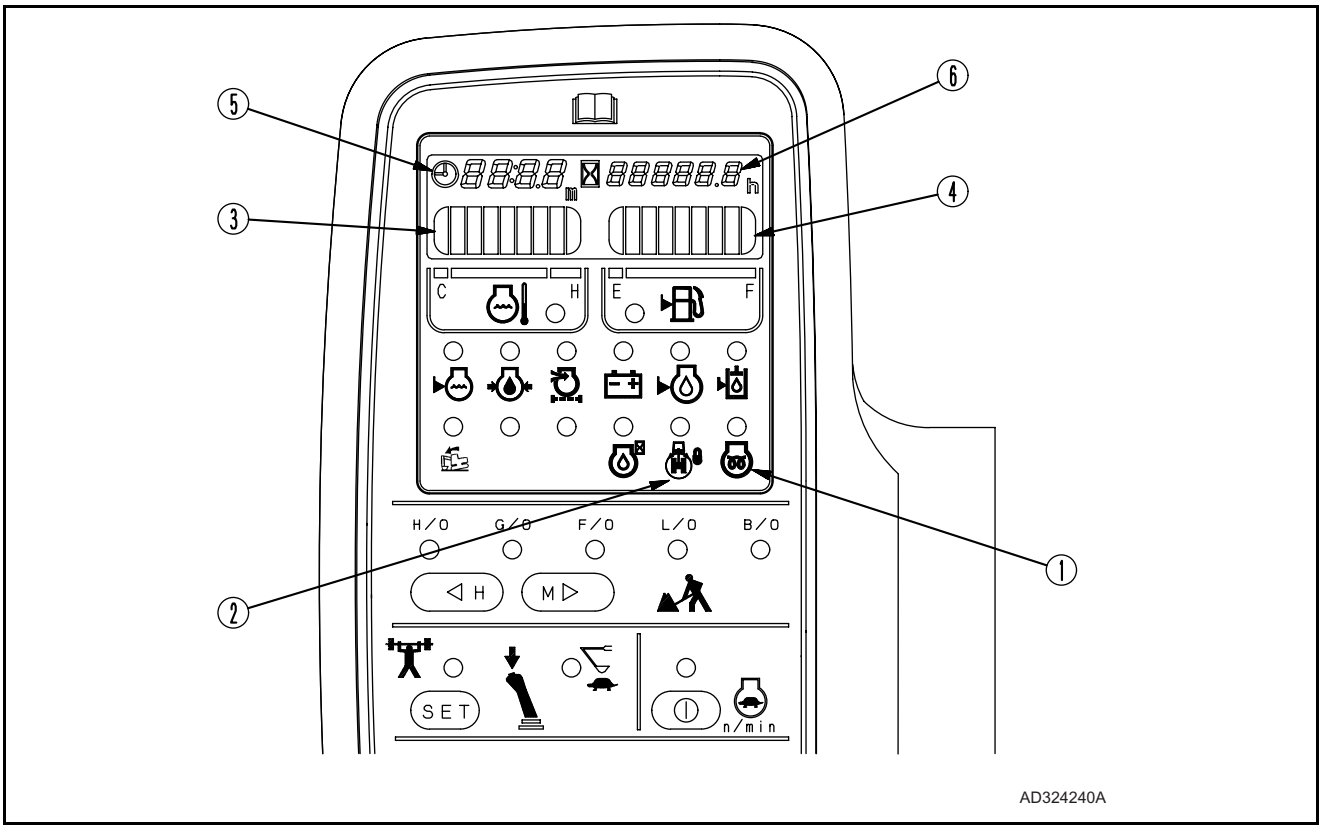

PILOT DISPLAY

When the starting switch is ON, the pilot display lights up when the display items are functioning.

1. ENGINE PRE-HEATING MONITOR

This monitor lamp indicates the pre-heating time required when starting the engine at an ambient temperature below 0°C.
The monitor lamp lights when the starting switch is turned to HEAT position and flashes after about 30 seconds to show that the pre-heating is completed. (The monitor lamp will go off after about 10 seconds.)

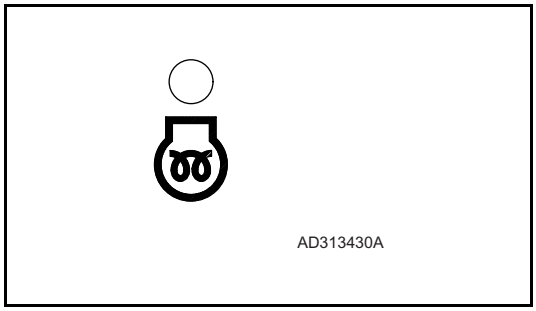

2. SWING LOCK MONITOR

This informs the operator that the swing lock is being actuated.
Actuated: Lights up

When the swing lock switch is turned ON (ACTUATED), the monitor lamp lights up.

When the swing lock override switch is turned on, this monitor lamp flashes.

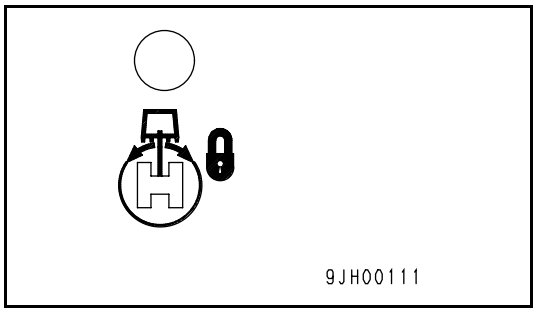

https://truckmanualshub.com/

REMARK

A disc brake is installed in the swing motor to mechanically stop motor rotation.
The brake is always applied while the swing lock is actuated.

METERS

3. ENGINE WATER TEMPERATURE GAUGE

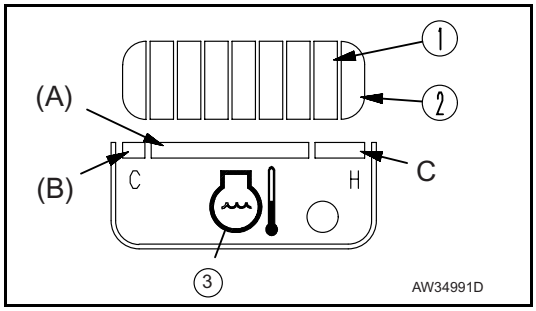

This gauge indicates the engine cooling water temperature.
If the temperature is normal during operation, the green range (A) will light up.

If the red range lights (C) up during operation, the overheat prevention system will be actuated.

The overheat prevention system acts as follows.

Red range (1) lights up:
Output horsepower drops, and water temperature monitor (3) flashes.

When red range (2) lights up:
Engine speed is lowered further to low idling, engine water temperature monitor (3) lights up, and alarm buzzer sounds at the same time.

The overheat prevention system is actuated until the temperature enters the green range.

When red range (2) lights, if the engine water temperature is reduced and the fuel control dial is turned to the low idling position, the display will be cancelled.

4. FUEL GAUGE

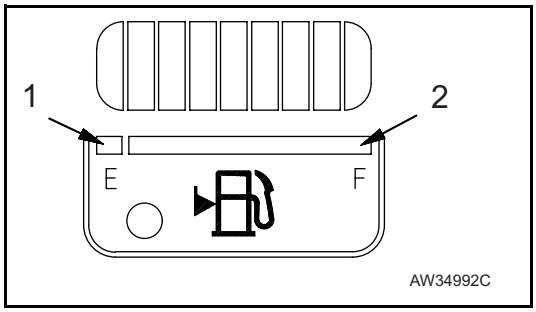

This gauge indicates the amount of fuel in the fuel tank. If the fuel level is normal during operation, the green range (2) will light up.

If only the red range (1) lights up during operation, there is less than 55 liters of fuel remaining in the tank, so check and add fuel.

After the starting switch is turned ON, the correct level may not be displayed for a moment, but this does not indicate any abnormality.

When stopping the engine, turn the starting switch ON and check that the monitor lamps on items A, B, C and D and the meters light up.

https://truckmanualshub.com/

5. DISPLAY

This normally displays the clock time. If there is any abnormality, the type of failure is indicated when the starting switch is turned ON.

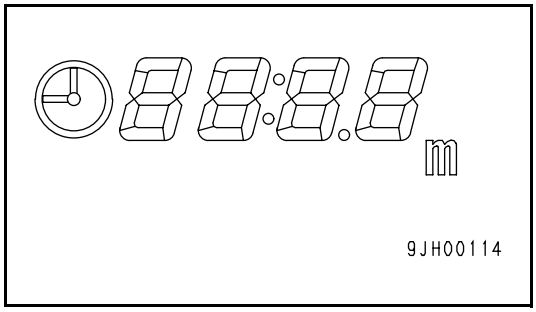

Manual setting

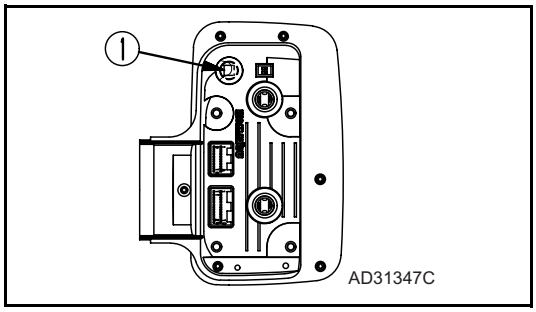

1. When the time is displayed, depress clock switch (1) for 2.5 sec. or more.
2. 2. “TIME” flashes.
3. Pressing H switch (2) increases hours and pressing M switch (3) in-creases minutes. If switch (2) or (3) is pressed for 2.5 seconds or more, hours or minutes increase continuously.
4. When the correct time is reached, press clock switch (1). This completes clock setting.

Correct time setting

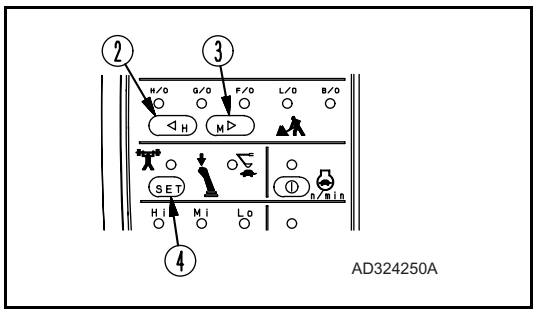

1. When the time is displayed, depress the clock switch for 2.5 sec. or more.
2. “TIME” flashes.
3. 3. When SET switch is pressed, the hour is rounded off for 0 to 14 minutes and rounded up for 45 to 59 minutes.
   [Examples) 10:14 becomes 10:00 /rounded off)
   10:45 becomes 11:00 (rounded up)

   When SET switch (4) is pressed at the time signal or standard clock, the correct time is obtained.
4. When the correct time is reached, press clock switch (1). This, completes clock setting.

If the machine has a fault, error information appears while the starting switch is turned ON. The monitor flashes and displays all error informations sequentially.

Monitor indications	Error mode
E02	PC-EPC valve system error
E03	Swing brake system error
E05	Governor system error
CALL	Non-operating error

If any of these monitors flashes, see “ELECTRONIC CONTROL SYSTEM” on page 162.

https://truckmanualshub.com/

6. SERVICE METER

This displays the accumulated hours of operation of the machine. Use the display to determine the intervals for periodic maintenance.

The service meter will advance while the engine is running even if the machine is not moving.

The service meter reading advances by 1 for every hour that the engine is running, regardless of the engine speed.

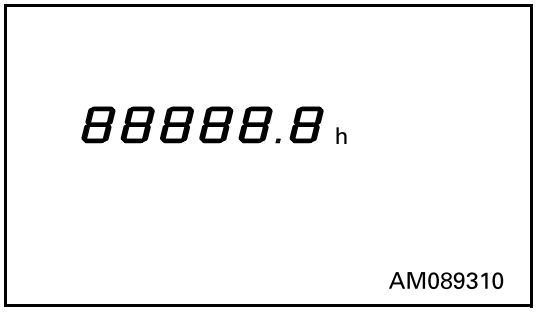

E: SWITCHES

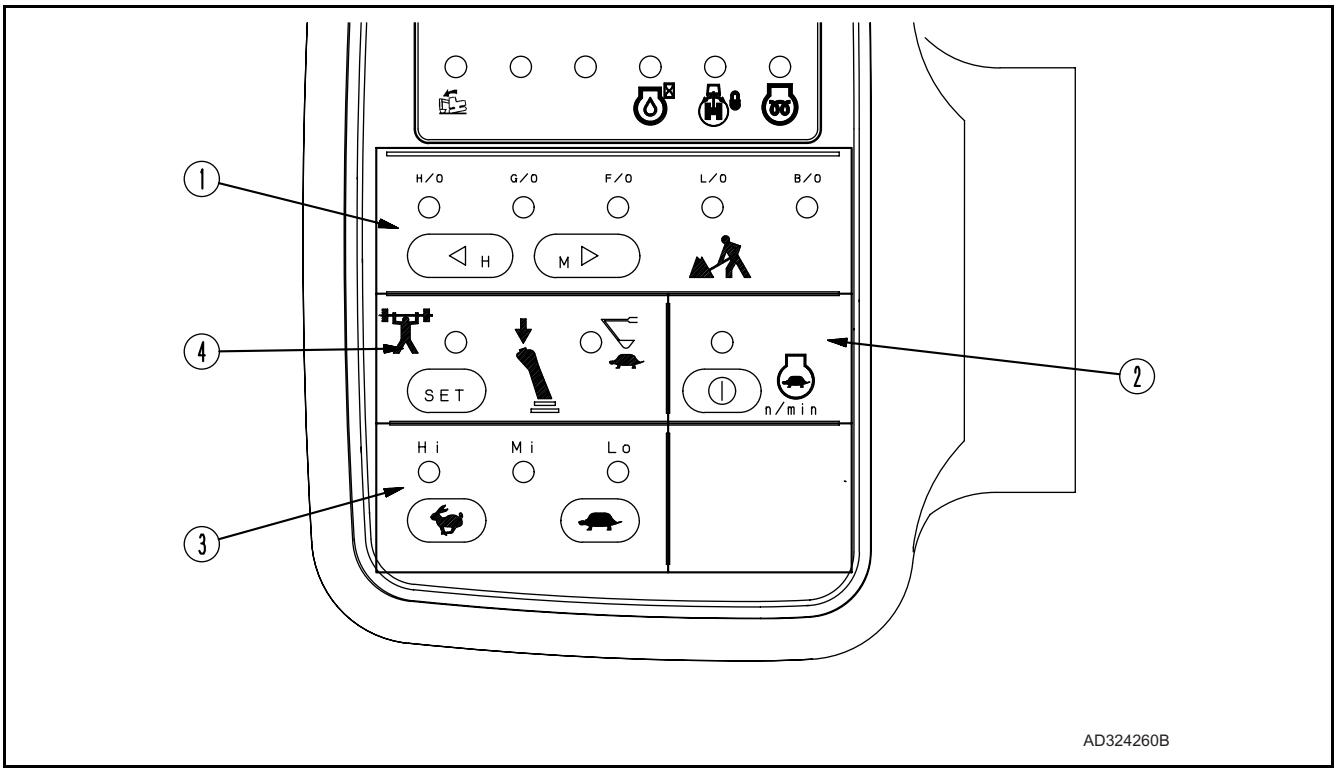

1. WORKING MODE SELECTOR SWITCH (Basic switch)

This switch is used to set the movement or power for the work equipment. By selecting the mode to match the working conditions, it is possible to carry out operations more easily.

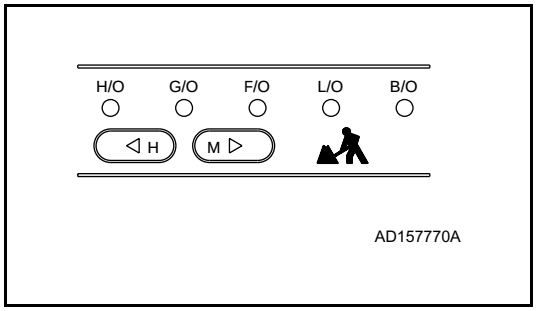

H.O. (heavy-duty operation mode) lights up:
This is used for heavy-duty work.

G.O. (general operation model lights up:
This is used for ordinary work.

F.O. (finishing operation mode) lights up:
This is used for levelling or grading work.

L.O. (lifting operation mode) lights up:
This is used for lifting operation

B.O. (breaker operation mode) lights up:
This is used for breaker work.

https://truckmanualshub.com/

When starting the engine, G.O. (general operation) mode is automatically selected. Each time the switch is pressed, the mode selection changes.

NOTICE

When the breaker is used, never select the H.O. (heavy-duty operation) mode.

REMARK

H switch is also used for setting “hours” in the clock and M switch for setting “minutes”. see “DISPLAY” on page 66.

2. AUTO-DECELERATION SWITCH (Selection switch)

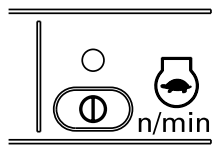

AD157780A

This switch acts to activate the function that automatically lowers the engine speed and reduces fuel consumption when the control lever is at neutral.

ON lights up: Auto-deceleration is actuated.
OFF: Auto-deceleration is cancelled.

Each time the switch is pressed, the auto-deceleration is actuated or cancelled.

3. TRAVEL SPEED SWITCH

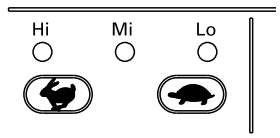

AD157790A

If the Hi-Lo switch is operated when the machine is travelling, the machine may deviate even when travelling in a straight line. To prevent this, always stop the machine before operating the travel speed switch.

This is used to select the three travel speeds.

Lo lights up: Low speed travel
Mi lights up: Mid range speed travel
Hi lights up: High speed travel

When the engine is started, the travel speed is automatically set to Lo.

When travelling in Hi, the travel speed is automatically adjusted to match the travel surface on soft ground or when travelling uphill, so there is no need to operate this switch. The monitor indication keeps lamp Hi lighted.

NOTE: Switching from Hi to Mi or Lo can only be done when the machine is stationary and the service brake is applied (locked).
If the Mi or Lo button is pressed without the service brake applied the indicator lamp will show selection of the desired mode but the machine will remain in Hi mode until such time as the service brake has been fully applied (locked). Switching from Mi to Lo or Hi or from Lo to Mi or Hi can be done at any time and whilst travelling. see “MOVING MACHINE FORWARD” on page 119.

https://truckmanualshub.com/

4. POWER MAX./SWIFT SLOW-DOWN SWITCH

During operations, the digging power can be increased and the speed reduced by a one-touch operation of the knob button /single click while pushing).

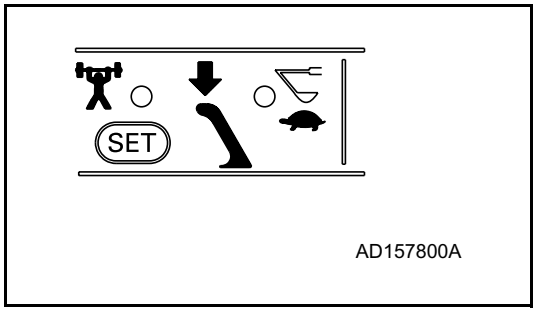

Power max. (power up) lights up:
When the working mode is heavy-duty and general operation mode only, the power can be increased while the knob button is being pressed. Even if the knob button continues to be pressed, the increase in power finishes after approx. 8.5 sec.

Swift slow-down (speed down) lights up:
When the working mode is heavy-duty operation and general operation mode only, the speed is reduced while the knob button is being pressed.

When the engine is started, the power max. lamp lights up. Each time this switch on the monitor panel is pressed, the mode is switched.

https://truckmanualshub.com/

SWITCHES

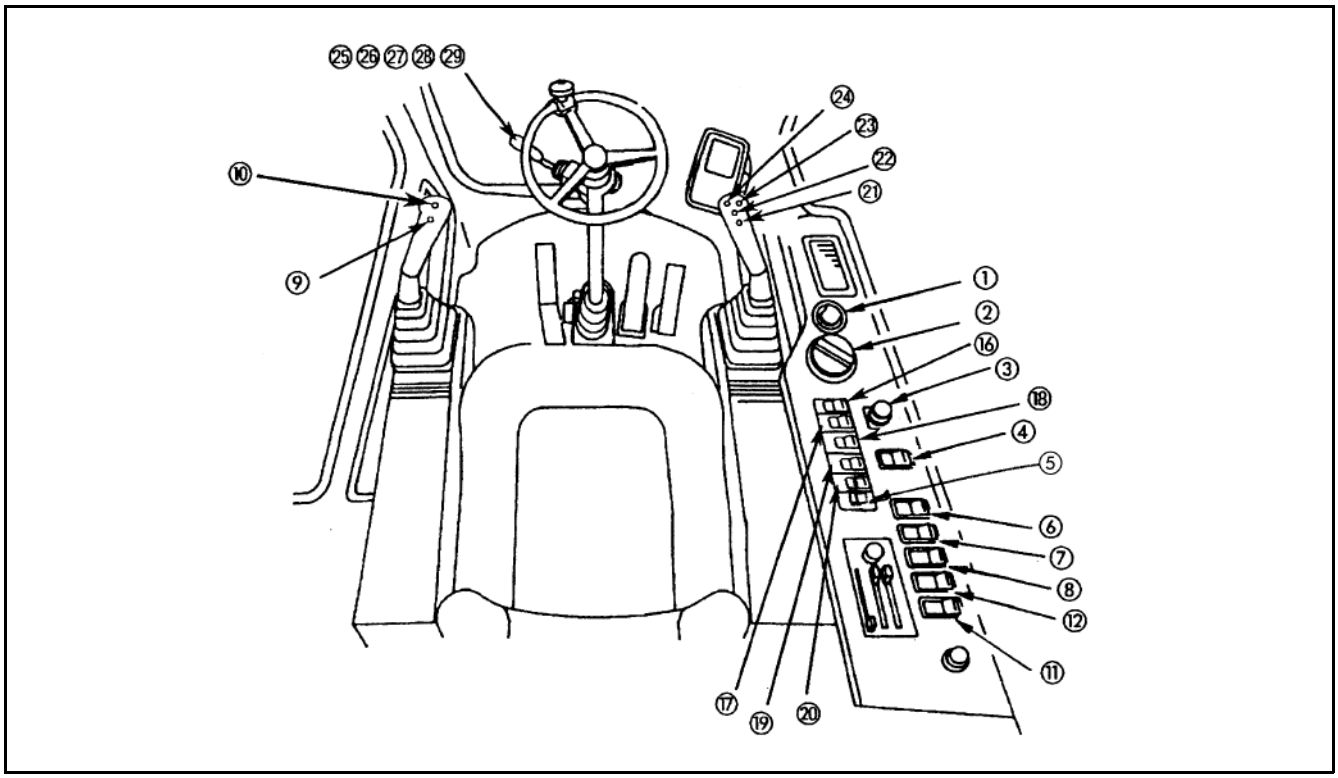

1. STARTING SWITCH

This switch is used to start or stop the engine.

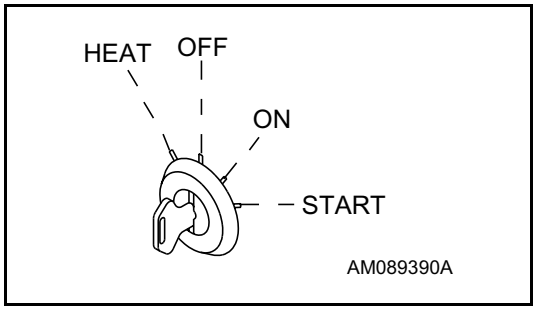

OFF position

The key can be inserted or withdrawn. Except for the cab lamp, radio (if fitted) and clock, the switches for the electric system are all turned off and the engine is stopped.

ON position

Electric current flows in the charging and lamp circuits.
Keep the starting switch key at the ON position while the engine is running.

START position

This is the engine-start position. Keep the key at this position during cranking. Immediately after starting the engine, release the key which will automatically return to the ON position.

HEAT (preheat) position

When starting the engine in winter, set the key to this position. When the key is set to the HEAT position, the pre-heating monitor lights up.

Keep the key at this position until the monitor lamp goes off. Immediately after the pre-heating monitor goes off, release the

https://truckmanualshub.com/

key. The key automatically returns to the OFF position. Then, start the engine by turning the key to the START position.

2. FUEL CONTROL DIAL
(WITH AUTO-DECELERATION MECHANISM)

This adjusts the engine speed and output.

(1) Low idling (MIN): Turned fully to the left
(2) Full speed (MAX): Turned fully to the right

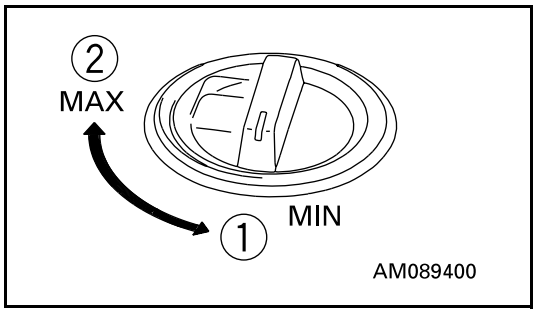

3. CIGARETTE LIGHTER

This is used to light cigarettes. To use, push the lighter in. After a few seconds it will spring back.

Pull out the lighter and light your cigarette.
Nothing may be connected to the cigarette lighter without the prior permission of an authorized Komatsu distributor.

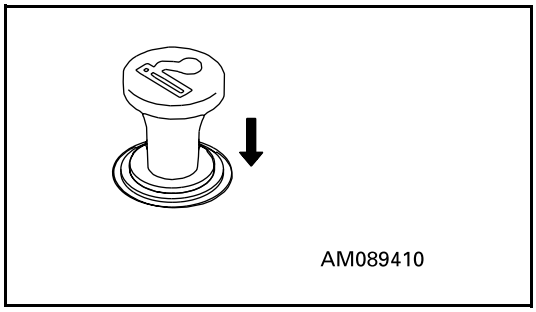

4. SWING LOCK SWITCH

⚠ WARNING

- **When the machine is travelling under its own power, or when the swing is not being operated, always set the switch to the ON (ACTUATED) position.**
- **On a slope, the work equipment may swing to the down side even if the swing lock switch is located at the ON position. Be careful concerning this point.**

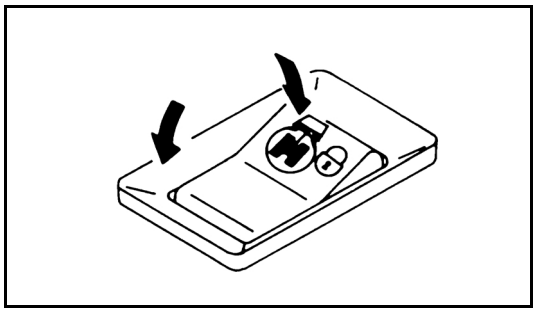

This switch is used to lock the upper structure so that it cannot swing. ON position (actuated):

The swing lock is always applied, and the upper structure will not swing even if the swing is operated. In this condition, the swing lock lamp lights up.

OFF position (cancelled):

The swing lock is applied only when the swing control lever is at neutral; when the swing control lever is operated, it is cancelled.

The swing lock is actuated approx. 4 seconds after the swing lever is placed in neutral.

https://truckmanualshub.com/

5. CONTROL LEVER LOCK SWITCH

⚠ WARNING

When travelling on public roads, set this switch to the off position. This prevents operation of the work equipment and activates the rear facing brake lamp circuits.

This switch enables operation of the work equipment control levers.

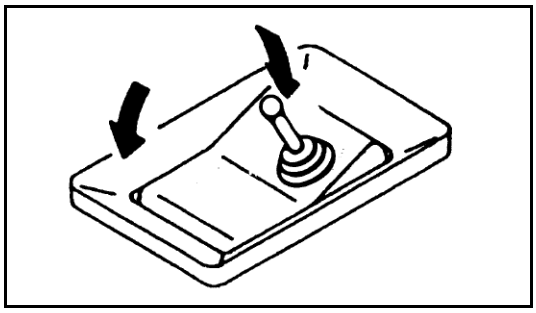

ON position (actuated):
Operation of the control levers must be disabled by use of this switch when the machine is travelling on Public roads.

OFF position (deactivated):

The switch is lit in the on (actuated) position.

6. LAMP SWITCH

This switch turns on the working lamps and monitor illumination.

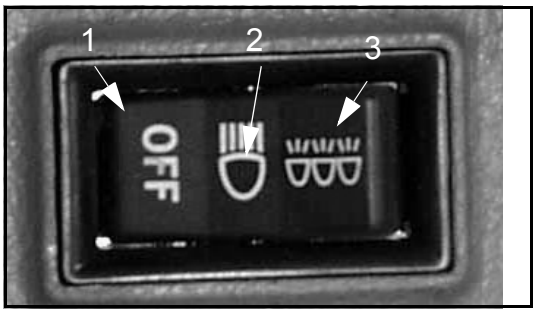

(1)	OFF
(2)	Standard work lamps
(3)	Standard and additional work lamps (if fitted)

7. ALARM BUZZER STOP SWITCH

This is used to stop the alarm buzzer when it has sounded to warn of some abnormality in the EMERGENCY STOP ITEMS while the engine is running.

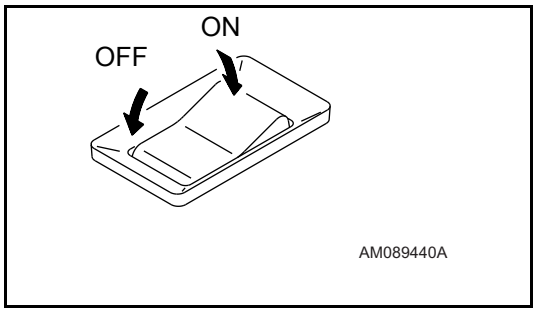

8. LOWER WIPER SWITCH (If fitted)

This switch actuates the front lower wiper.

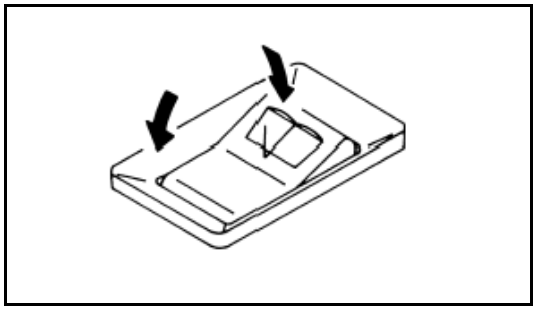

OFF: wiper stops

ON: wiper moves continuously

NB. Do not operate with front lower screen removed.

https://truckmanualshub.com/

9. HORN BUTTON

When the lower button on the left work equipment control lever is pressed, the horn will sound.
Note: Additional horn switch is switch 25.

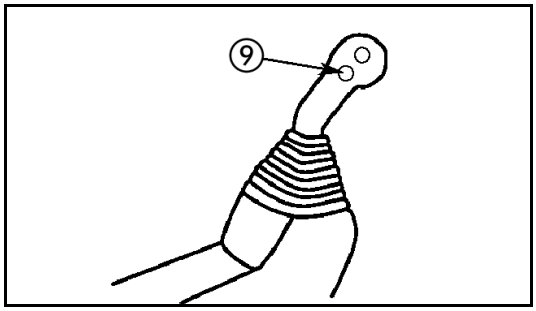

10. KNOB BUTTON

The upper button of the left work equipment control lever is used to actuate the power max./swift slow-down functions. Press the button once (single click) and keep it depressed. In the heavy-duty and general operation modes, the power max. function actuates for max. 8.5 seconds and the swift slow-down function actuates while the button is depressed.

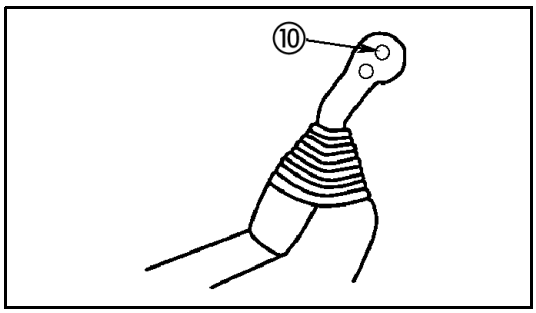

11. HEATED OPERATOR SEAT SWITCH (If fitted)

This switch is used to switch on the heated seat.

OFF: seat not heated
ON: seat heated

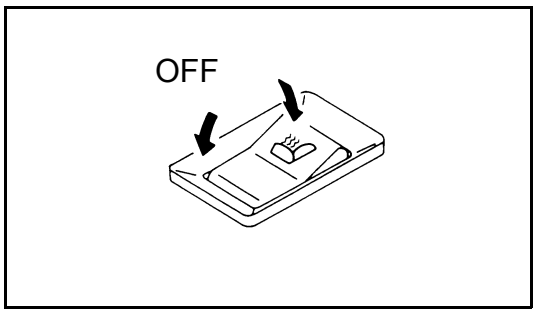

12. BEACON SWITCH (If fitted)

This switch is used to switch on the rotating beacon.

OFF
ON: beacon lights lights and rotates.

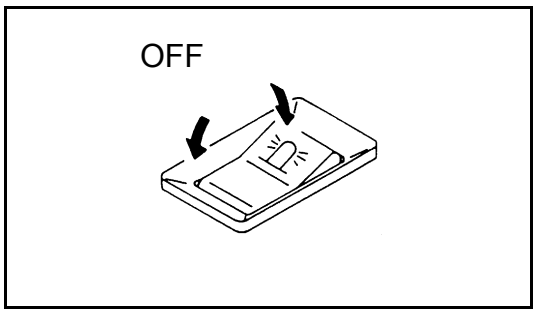

https://truckmanualshub.com/

13. CAB LAMP SWITCH

This lights up the cab lamp.

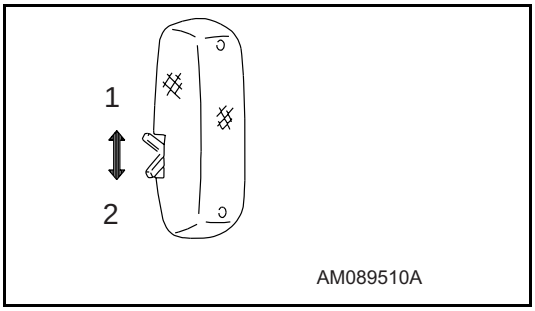

ON position: Lights up
The cab lamp can be turned on even when the starting switch is at the OFF position, so be careful not to leave it on by mistake.

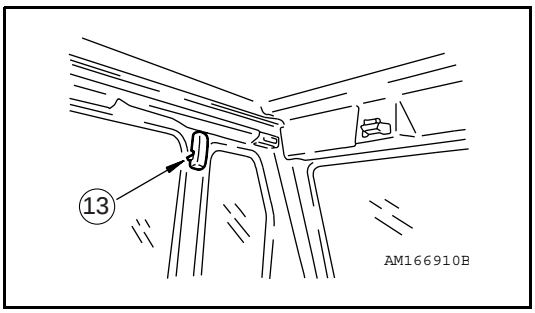

14. PUMP CONTROL OVERRIDE SWITCH

(2) When normal: Switch is down

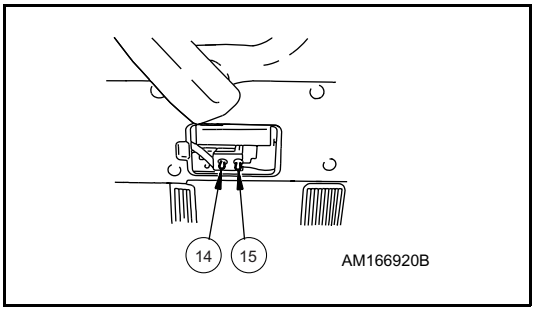

(1) When abnormal: When the monitor display shows E02 (TVC valve system error), it is possible to carry out operation when this switch is moved up. The pump control override switch is designed to allow operations to be carried out for a short period when there is an abnormality in the pump control system (TVC valve system error). The abnormality must be repaired immediately.

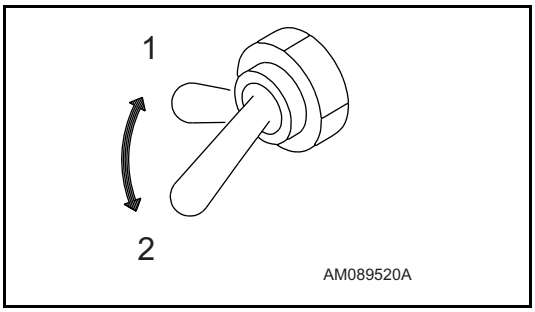

15. SWING LOCK OVERRIDE SWITCH

(2) When normal: Switch is down

(1) When abnormal: When the monitor display shows E03 (swing brake system error), the brake is cancelled and it becomes possible to swing the upper structure when this switch is moved up, so normal operations can be carried out. However, the swing brake remains cancelled.

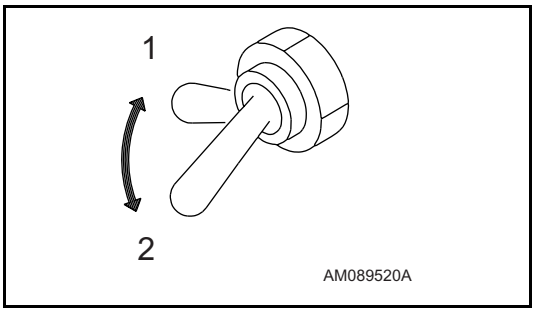

The swing lock override switch is designed to allow operations to be carried out for a short period when there is an abnormality in

https://truckmanualshub.com/

the swing brake electrical system (swing brake system error). The abnormality must be repaired immediately.

16. PARK BRAKE SWITCH

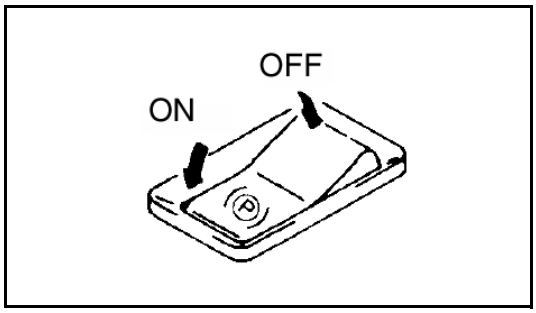

This switch is used to apply and release park brake.

OFF: Park brake released (warning light not illuminated)
ON: Park brake applied (warning light illuminated)

Note1: When moving off from a standstill up an incline it will be necessary to depress the travel pedal slightly before releasing park brake to build pressure to the travel hydraulics and prevent initial rearwards movement

16. CONT.

Note 2: A warning buzzer will sound if the travel pedal is depressed and the park brake is applied.

Do not apply the park brake while the machine is in motion or the park brake may be damaged.

17. SUSPENSION LOCK SWITCH

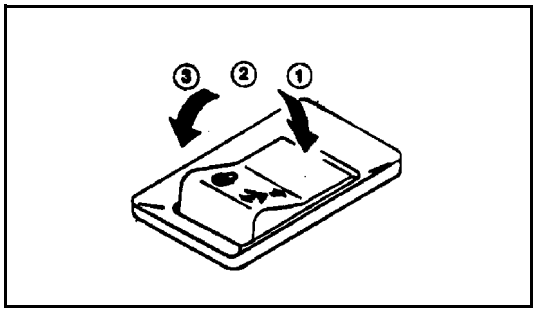

Release the front axle suspension lock, using switch).

Position (1): Front axle suspension travels freely.

Position (2): Front axle suspension is in ‘auto’ mode i.e. when travel pedal is depressed, front axle suspension travels freely and when travel pedal is not depressed, front axle suspension is locked.

Position (3): Front axle is locked.

The lamp within the switch will illuminate when the front axle is locked, and will not be illuminated when the front axle is unlocked.

⚠ WARNING

Take care when using undercarriage attachments to stabilize the machine, and suspension lock simultaneously, as locked front axle may suddenly become free.

When machine is fitted with blade and outriggers it is necessary to Position outrigger switch (20) in its central (R.H. Attachment) Position in order to disengage suspension lock during dozer operations.

https://truckmanualshub.com/

18. ROADLIGHTS SWITCH

This switch is used to switch on the side lights and road lights.

(1)	OFF
(2)	Sidelights (parking lights) on
(3)	Road lights on.

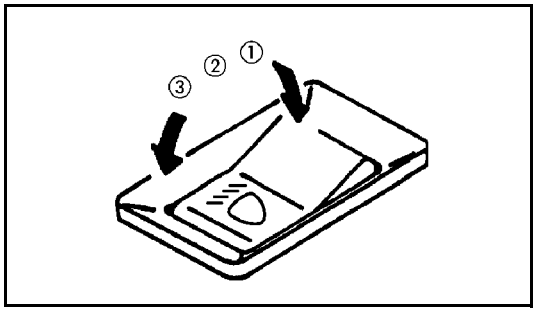

19. HAZARD SWITCH

This switch is used to switch on the hazard warning lights.

OFF: Hazard warning lights off.

ON: Hazard warning lights on.

(Warning light within switch will flash when switched on).

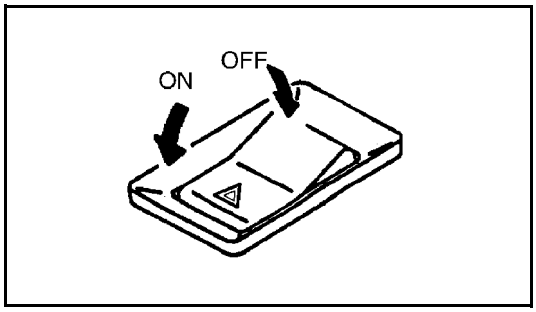

20. OUTRIGGER LEFT/RIGHT SWITCH (IF FITTED)

This switch enables operation of left, right or simultaneous outrigger(s)

(1)	Simultaneous LH + RH
(2)	Right hand attachment
(3)	Left hand attachment

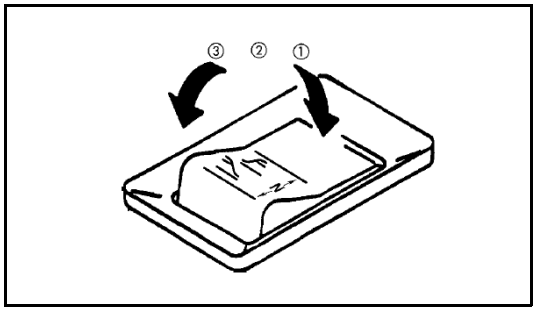

21. UNDERCARRIAGE ATTACHMENT SWITCH

This switch enables operation of outriggers and/or dozer blade.

- Machines equipped with dozer blade only:
  When this button is pressed (a) warning light a in position of switch (20) is activated.
- Machines equipped with outriggers or dozer/outrigger:
  When this button is pressed switch (20) will illumate.

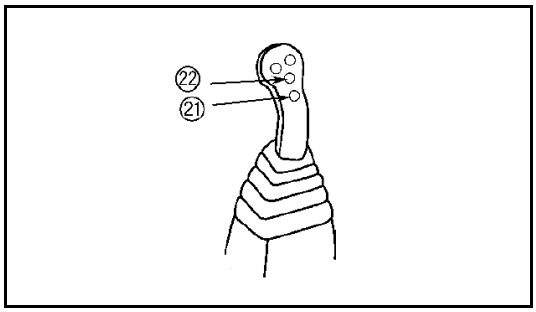

22. BOOM SWITCH

This switch enables operation of the boom when this button is pressed. The warning light in the panel assembly next to switch 20 is not illuminated.

https://truckmanualshub.com/

OPERATION OF DOZER + OUTRIGGERS
(ensure safety lock lever is unlocked and front axle is locked)

A. To operate front attachment(s)

1. Ensure park brake switch (16) is on.
2. Set outrigger left/right switch (20) to appropriate position.
3. Press undercarriage attachment switch (21).
4. Move right hand wrist lever forward to lower the attachment and rear-wards to raise the attachment.

22a. UNDERCARRIAGE ATTACHMENT OPERATION WARNING LAMP (For machines fitted with dozer blade only)

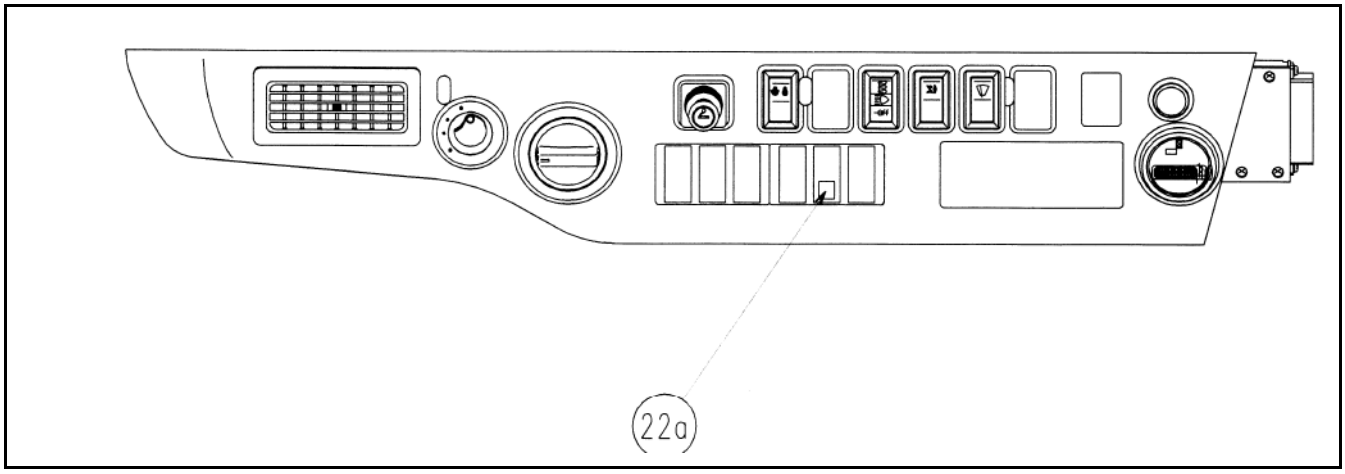

This lamp will illuminate when undercarriage attachment switch has been pressed and indicates that when right hand wrist lever is moved forward or rearwards the undercarriage attachment will move.

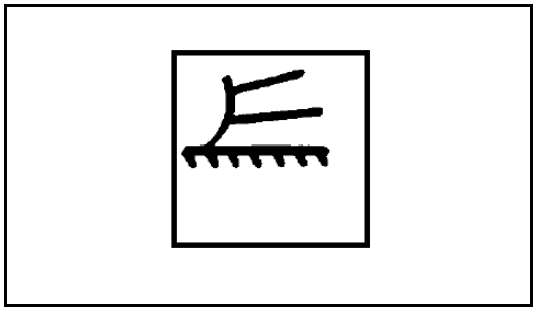

When this lamp is not illuminated the right hand wrist lever will operate the boom raise/lower as normal.

NOTE: If the machine is fitted with outriggers operation of the undercarriage attachment switch will illuminate the outrigger left/right switch (20).

B. TO OPERATE REAR ATTACHMENT(S)

1. Ensure park brake switch (16) is off.
2. Set outrigger left/right switch (20) to appropriate position.
3. Press undercarriage attachment switch (21).
4. Move right hand wrist lever forward to lower the attachment and rearwards to raise the attachment.

https://truckmanualshub.com/

⚠ WARNING

When moving the machine, confirm that the chassis attachment is raised.

PRECAUTIONS FOR USING THE DOZER

1. When using the dozer blade as on outrigger.
   Use the dozer blade in the same way as an outrigger. However, use it only on level ground so that uneven loads will not be applied to the blade.

2. When using the dozer blade with the upper structure facing the rear of the undercarriage, the steering wheel acts in the opposite direction to that normal travel.

3. Refer to item 17 (suspension lock switch) to ensure that suspension lock system is fully free when required for dozing operations.

NOTE: Dozer blade is to be used only for stabilizing and light dozing.

23. CLAMSHELL ROTATION CLOCKWISE/BREAKER SWITCH

This switch operates clockwise rotation of clamshell (if fitted) or operation of breaker (if fitted).

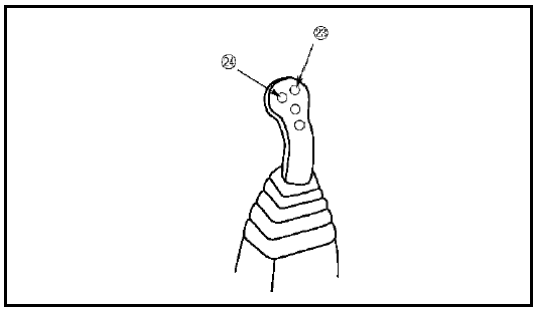

24. CLAMSHELL ROTATION ANTI-CLOCKWISE

This switch operates anti-clockwise rotation of clamshell (if fitted)

25. HORN SWITCH

When the button at the tip of the L.H. steering column stalk is pressed the horn will sound.

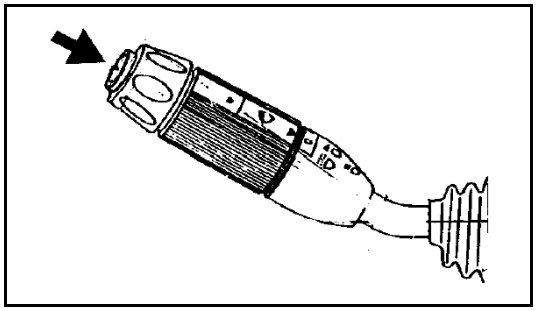

https://truckmanualshub.com/

NOTE: Additional horn switch is switch (9).

26. WINDSCREEN WASH SWITCH

When the sleeve switch on the left hand steering column stalk is pushed towards the steering column the windscreen wash will operate.

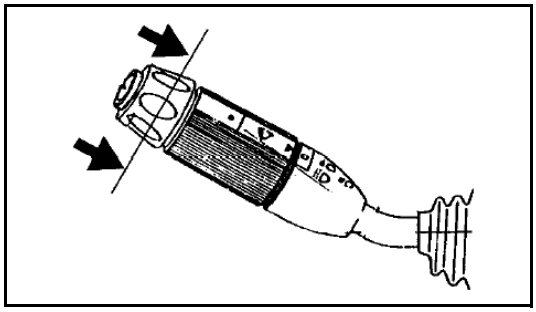

27. DIRECTION INDICATOR SWITCH

This switch is used to indicate the driver's intention to change direction.

(1) Turn right: push lever fully forward

(2) Turn left: pull lever fully back
(Pilot light to the rear of the steering wheel hub will flash and buzzer will sound)

To cancel, return lever to neutral position (no auto-cancel function exists)

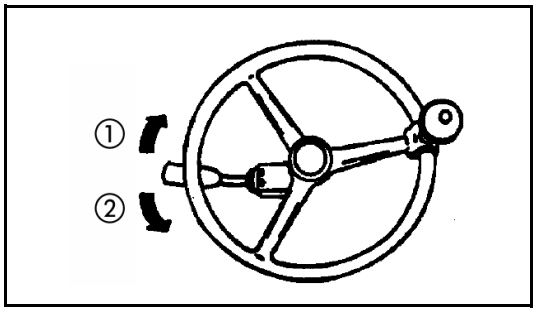

28. ROADLIGHTS DIP/MAIN BEAM/FLASH SWITCH

This switch has two functions.

- To alternate between headlight dipped and main beams. Pull left hand steering column stalk fully upwards and release. (Note road lights switch (18) must be at position (3) for this function)
  A warning light will illuminate on the steering column when main beam headlights are illuminated.
- To flash headlights pull left-hand steering column stalk fully upwards.

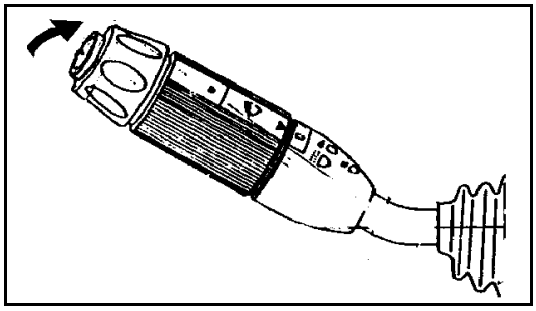

29. MAIN WINDSCREEN WIPER SWITCH

This rotary switch on left hand steering column stalk controls main windscreen wiper.

- Rotate switch 30° away.
  From operator for intermittent wipe
- Rotate switch a further 30° away
  From operator for continuous wipe.

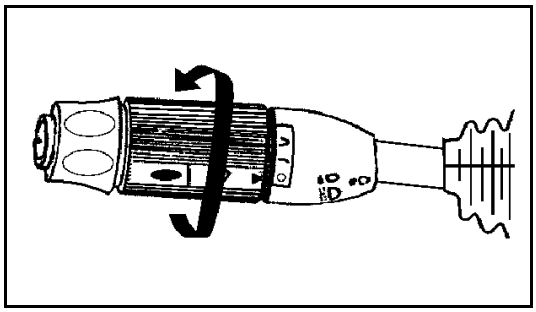

https://truckmanualshub.com/

30. 12V POWER SUPPLY

The 12V socket provided on the right hand panel may be used only for electrical accessorles drawing 1,5 A. maximum. Any accessories attached to this socket must carry the EC mark.

CONTROL LEVERS, PEDALS

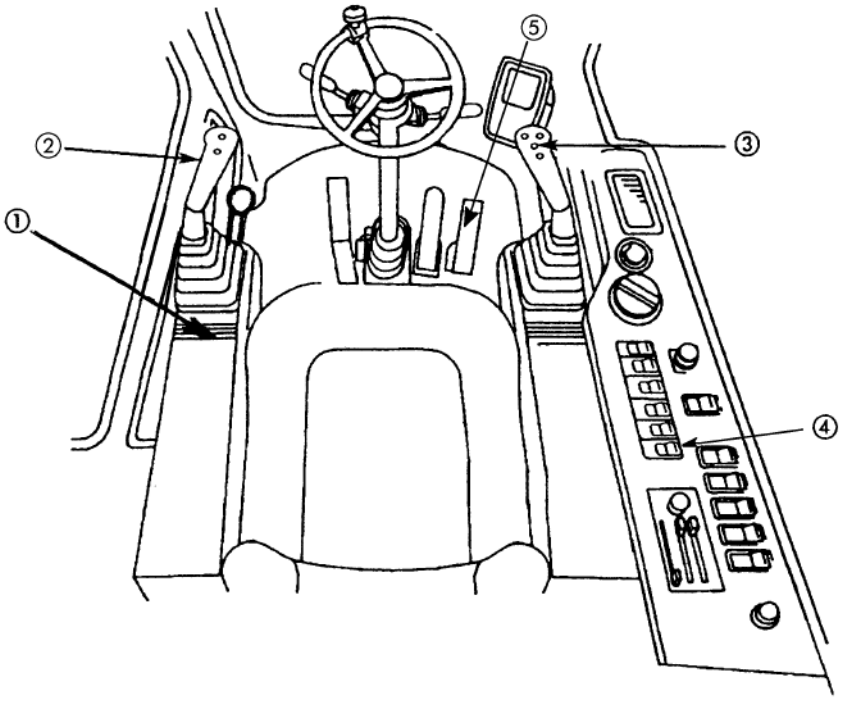

1. CONTROL LEVER PAD SAFETY LOCK

⚠ WARNING

- **When leaving the operator's compartment, switch PPC lock switch to off position, raise the control lever pad to the LOCK position. If the control levers are not locked, and they are touched by mistake, this may lead to a serious accident.**
  If the control lever pad safety lock lever is not placed securely in the LOCK position and lock switch is not off,

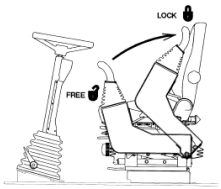

https://truckmanualshub.com/

the control levers may not be properly locked. Check that the situation is as shown in the diagram.

- **When the control lever pad safety lock lever is raised, take care not to touch the work equipment control lever. If the safety lock lever is not properly locked at the upper position, the work equipment and swing will move, creating a potentially dangerous situation.**
- **When the control lever pad safety lock is lowered, take care not to touch the work equipment control lever.**

The control lever pad locks the work equipment, swing and attachment controls.

This device is a hydraulic lock, so even if it is in the lock position, the work equipment control lever will move, but the work equipment and swing motor will not work.

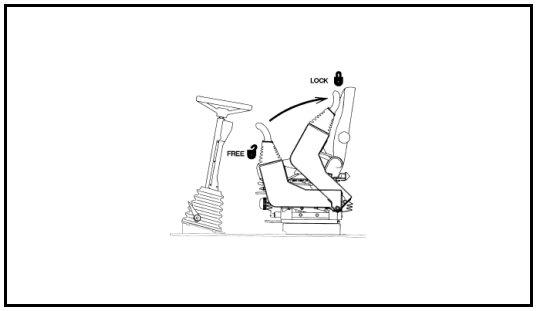

2. LEFT WORK EQUIPMENT CONTROL LEVER (with auto-deceleration device)

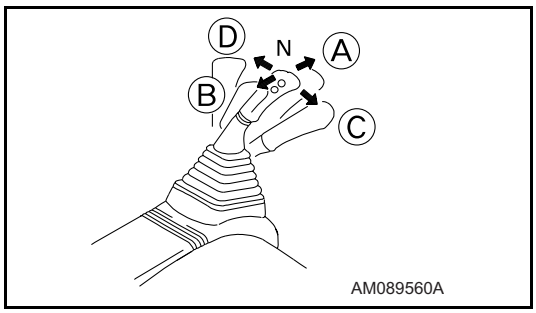

WARNING

If any lever is operated when in the deceleration range, the engine speed will suddenly increase, so be careful when operating the levers.

This lever is used to operate the arm and upper structure.

Arm operation	Swing operation
(A) Arm OUT	(C) Swing to right
(B) Arm IN	(D) Swing to left
N (Neutral)	

https://truckmanualshub.com/

When the lever in this position, the upper structure and the arm will be retained in the position in which they stop.

3. RIGHT WORK EQUIPMENT CONTROL LEVER (with auto-deceleration device)

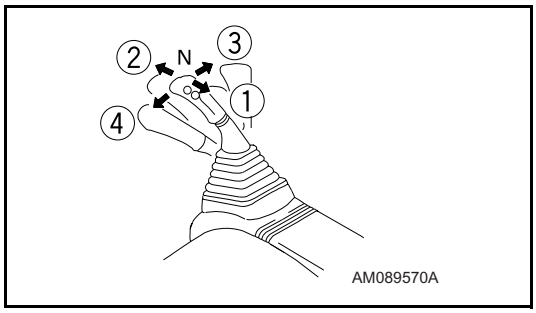

WARNING

If an lever is operated when in the deceleration range, the engine speed will suddenly increase, so be careful when operating the levers.

This lever is used to operate the boom and bucket.

Boom operation	Bucket operation
(1) RAISE	(3) DUMP
(2) LOWER	(4) CURL
N (Neutral)	

When the lever in this position, the boom and the bucket will be retained in the position in which they stop.

For levers (2), (3) and (5), the engine speed changes as follows because of the auto-deceleration mechanism.

- When the travel lever and work equipment control levers are at neutral, even if the fuel control dial is above the mid-range position, the engine speed will drop to a mid-range speed. If any of the levers are operated, the engine speed will rise to the speed set by the fuel control dial.
- If all control levers are set to neutral, the engine speed will drop by approx. 100 rpm, and after approx. 4 seconds, the engine speed will drop to the deceleration speed (approx. 1400 rpm).

4. PPC LOCK SWITCH

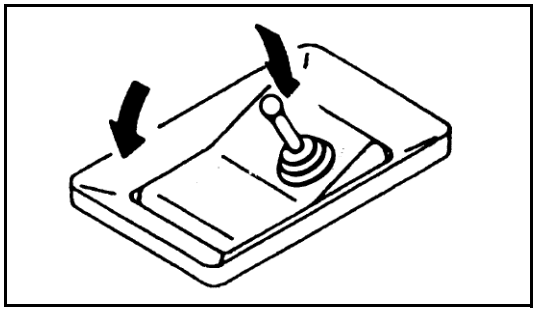

WARNING

When travelling on public roads, set this switch to the off position. This prevents operation of the work equipment and activates the rear facing brake lamp circuits.

This switch enables operation of the work equipment control levers.

ON position (actuated):
Operation of the control levers must be disabled by use of this switch when the machine is travelling on Public roads.

OFF position (deactivated):
The switch is lit in the on (actuated) position.

https://truckmanualshub.com/

5. TRAVEL PEDAL

(1)	Forward
(2)	Neutral
(3	Reverse

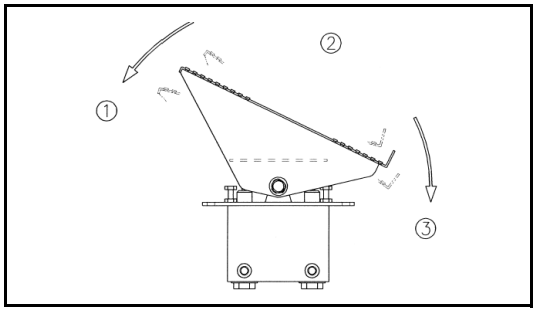

ROOF HATCH

⚠ WARNING

When leaving the operator's compartment, set the control lever pad safety lock securely to the LOCK position.
If the control levers are not locked, and they are touched by mis-take, this may lead to a serious accident.

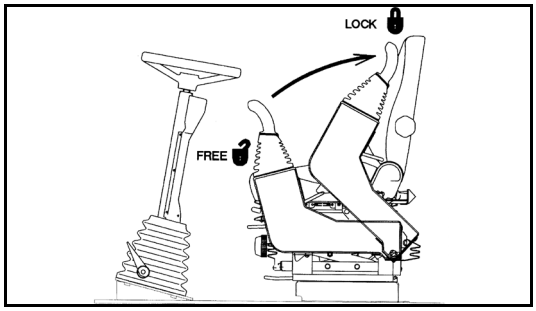

When opening

1. Lock the safety lock lever securely.
2. Open roof hatch by pulling lock (2) located on both sides, then push up and open the ceiling window grasping grip (1).

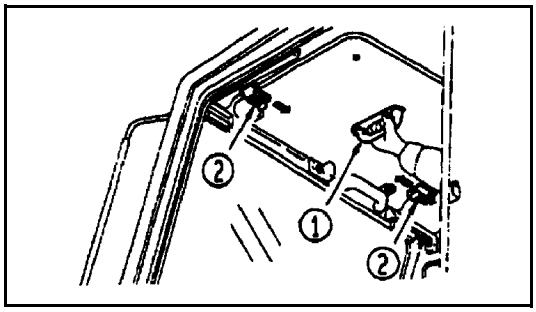

When closing

Close the ceiling window grasping grip (1) and lock it with lock (2). If the lock cannot be applied, open and close the ceiling window again.

https://truckmanualshub.com/

CEILING WINDOW

The operator cab is provided with a fixed clear ceiling widow for improved visibility. An optional guard can be provided for working in areas at risk from damage.

CLEAR RAIN VISOR

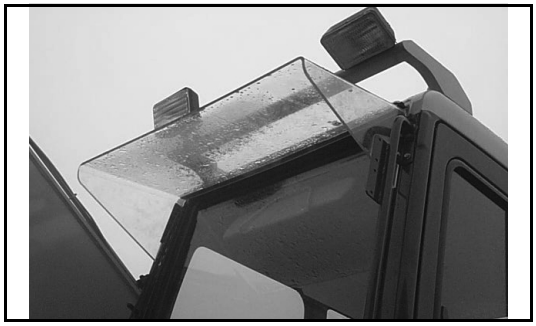

PULL DOWN SUN VISOR

The operator cab is fitted with a pull down sun visor. The visor is simply pulled down and hooked into the retainers mounted on the front window. The position of the retainers can be adjusted to one of three pre-set locations by removing the bolts holding the brackets, and re-attaching to one of the other prepared locations.

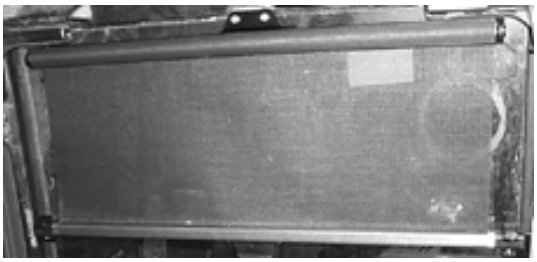

A second set of retainers is positioned at the bottom of the front window to allow coverage of the clear roof when the front window is in the raised position.

A third set of retainers is fitted to the cab roof to allow coverage of the clear roof when the front window is in the normal position.

When the visor is no longer required, remove the shaft from the retainers and allow the blind to return to its' natural position.

https://truckmanualshub.com/

FRONT WINDOW

WARNING

When opening the front window, always hold grip firmly with both hands and pull up. If you use only one hand, your hand may slip and get caught.

It is possible to store (pull up) the front window (top) in the roof of the operator's compartment.

When opening

WARNING

When the front window is open, there is danger that it will fall, so always lock it with left and right lock pins (A).

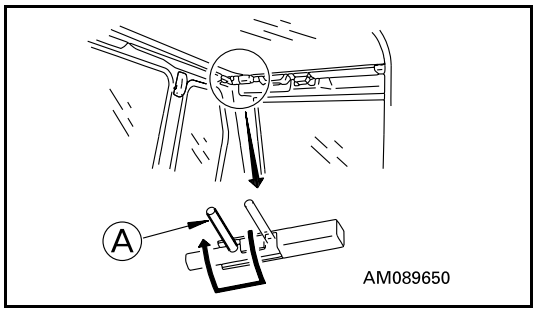

1. Place the work equipment on flat ground and stop the engine.

2. Securely lock the control lever pad safety lock.

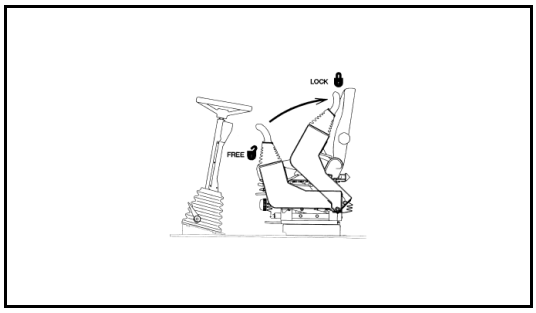

3. Confirm that the wiper is stored inside the right frame.

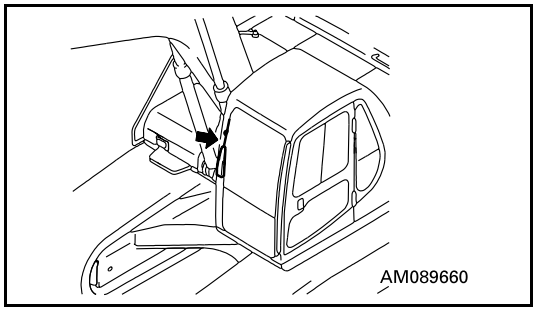

https://truckmanualshub.com/

4. Pull lock pins (A) at the top left and right sides of the front window to the inside to release the lock.

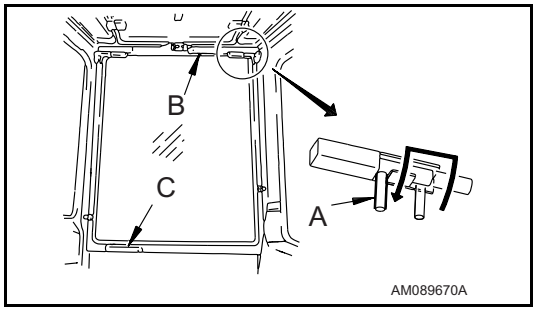

5. From the inside of the operator's cab, hold the bottom grip with the left hand and the top grip with the right hand, pull up the window, and push it in fully until it is locked by catch (C).

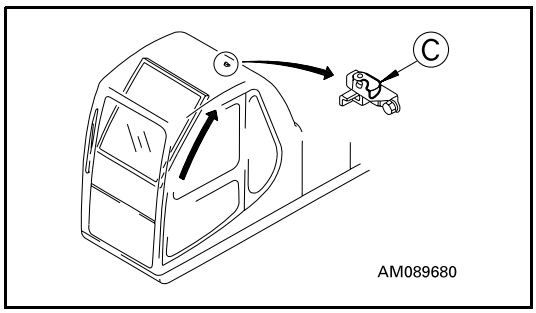

6. Lock with lock pins (A) on the left and right sides.

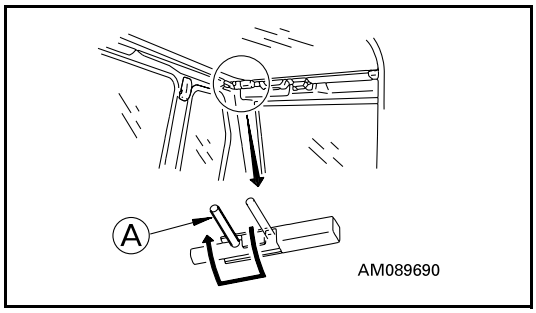

https://truckmanualshub.com/

When closing

WARNING

When closing the window, lower it slowly and be careful not to get your hand caught.

1. Place the work equipment on a flat ground and stop the engine.
2. Securely lock control lever pad safety lock.

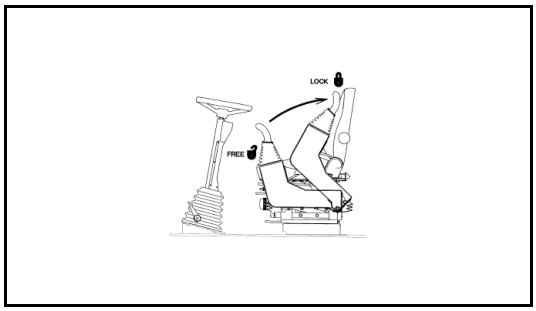

3. Release the lock pin (A).

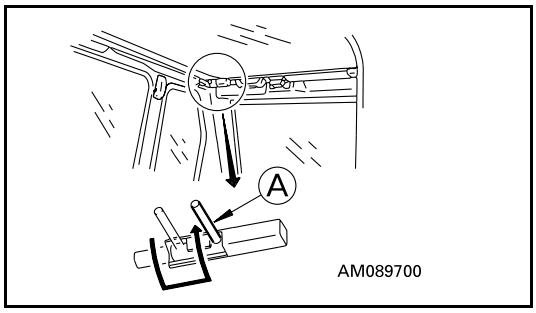

4. Hold the grip at the bottom of the front window with your left hand and the grip at the top with your right hand, release the lock of catch (C) with your right thumb, then pull the top grip slowly and lower the front window. When releasing the lock of

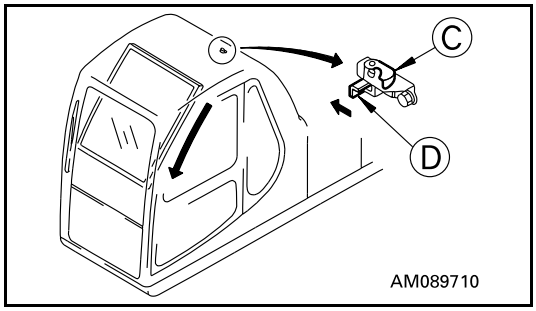

https://truckmanualshub.com/

catch (C), push release lever (D) in the direction of the arrow to release the lock.

5. Lock securely (A) with lock pins at the left and right sides

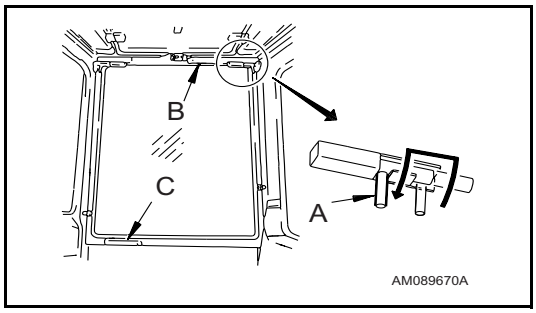

Removing front window (bottom)

Ensure lower wiper (if fitted) is in correct park position.
With the front window open, remove lock pins (E), and the bottom part of the front window can be removed.

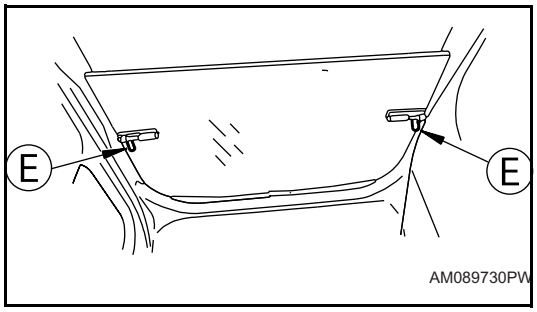

Store the removed bottom part of the front window at the rear of the operator's cab and lock with lock pins (E).

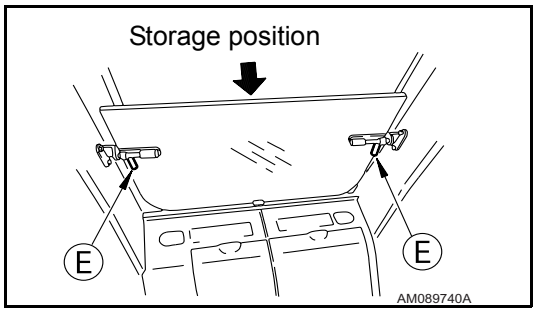

NOTICE

Do not operate lower wiper (if fitted) when front window (bottom) is removed.

DOOR LOCK

Use the door lock to fix the door in position after opening it.

1. The door will become fixed in place when it is pressed against catch (1).

2. To release the lock, press knob (2) down at the left side of the operator's seat to release the catch.
When fixing the door, fix it firmly to the catch.

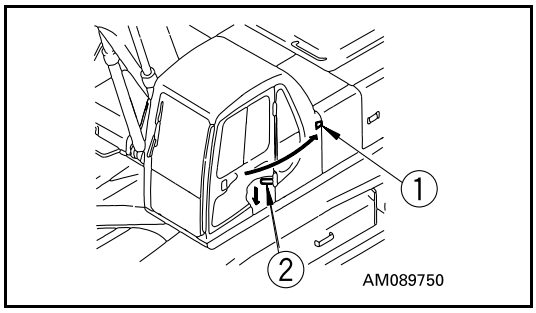

https://truckmanualshub.com/

CAP, COVER WITH LOCK

The fuel filler, operator's cab, engine hood, tool box cover, right side door and left side door of the machine body are fitted with locks.
Use the starting switch key to lock or unlock these places.

METHOD OF OPENING AND CLOSING CAP WITH LOCK (For the fuel tank filler port)

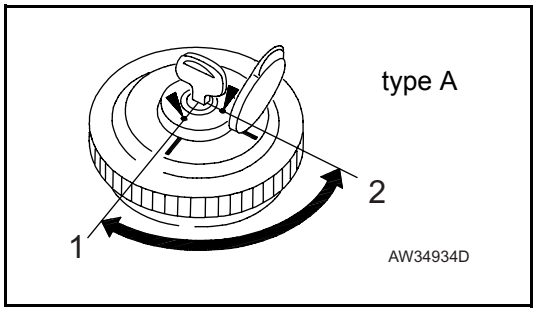

To open the cap

1. Insert the key into the cap.
2. Turn the key clockwise, align the match mark on the cap with the rotor groove, then remove the cap.

To lock the cap

1. Turn the cap into place.
2. Turn the key and take the key out.

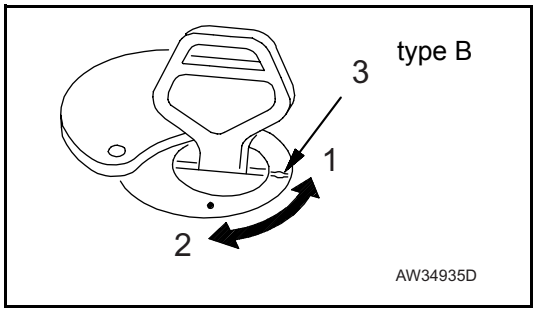

Insert the key as far as it will go. If the key is turned before it is inserted all the way, it may break.

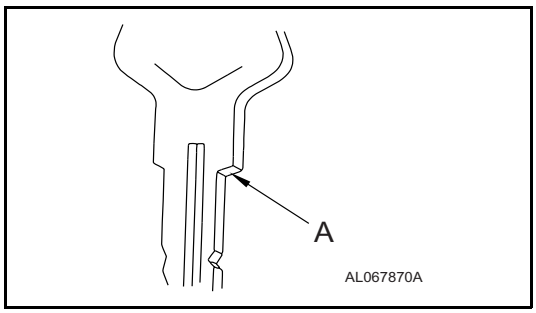

METHOD OF OPENING AND CLOSING COVER WITH LOCK (cover with lock)

To open the cover (locked cover)

1. Insert the key.
2. Turn it counterclockwise and open the cover by pulling the cover grip.

To lock the cover

1. Close the cover and insert the key.
2. Turn the key clockwise and take the key out.

https://truckmanualshub.com/

FUSE

NOTE: Before replacing a fuse, be sure to turn off the starting switch.

The fuses protect the electrical equipment and wiring from burning out.

If the fuse becomes corroded, or white powder can be seen, or the fuse is loose in the fuse holder, replace the fuse.

Replace a fuse with another of the same capacity.

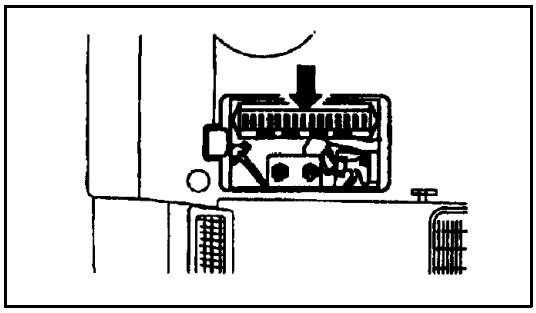

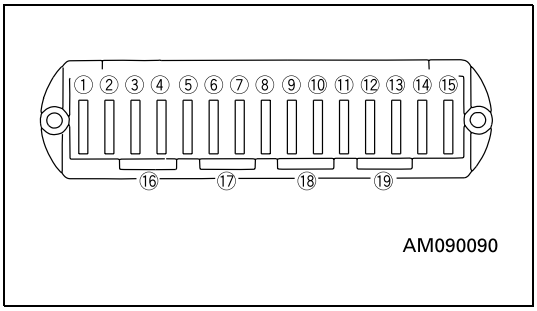

Fuse capacity and name of circuit

No	Fuse capacity	Name of circuit
(1)	20 A	Pump and governor, breaker switch
(2)	10 A	Solenoid valve
(3)	20 A	OPT
(4)	10 A	LH boom + rear work lamps
(5)	10 A	Radio, cigarette lighter, air conditioner panel, heater, windows washer, left knob button
(6)	15 A	Horn
(7)	15 A	Wiper controller
(8)	20 A	Additional (cab) work lamps, beacon
(9)	20 A	Lower wiper, refuelling pump
(10)	10 A	Key switch signal, heated seat, indicators
(11)	20 A	Road lights
(12)	30 A	Headlights, engine room lamp, hazard
(13)	10 A	Alarm signal, monitor
(14)	20 A	Start signal
(15)	10 A	Cab lamp, radio (back up)

https://truckmanualshub.com/

LUGGAGE TRAY

This tray is located to the rear of the operator's seat. Always keep the operation & maintenance manual in this box for easy reading access.

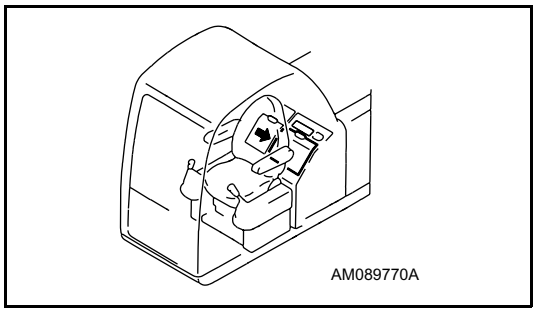

ASHTRAY

This is on the side of the operator's seat. Always make sure that you extinguish the cigarette before closing the lid.

CUP HOLDER

A cup holder is provided for holding cups or cans. Drinks should not be left in the cup holder whilst operating the machine, because spillage may occur.

HEATER

VIEW OF CONTROL PANEL

1. Inlet air control slider

Change between internal air recirculation & external fresh air intake.

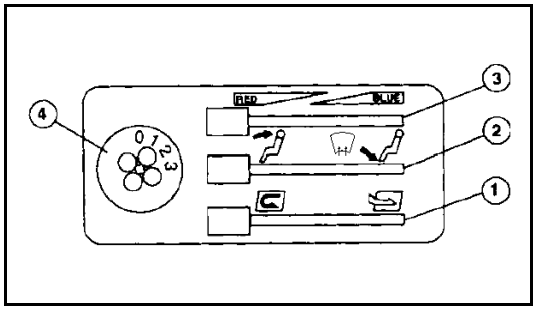

Purpose	Internal air circulation. This is used when wishing to quickly warm the cab	External air intake. This is used for fresh air intake or to remove condensation on windows or when the air inside the cab is stale
Lever position.	AN113590PW	AN113600PW

https://truckmanualshub.com/

2. Air outlet selector slider

The operator can select a suitable outlet as required.

Purpose	Sending air to upper area of operator's seat and defrosting upper part of front window	Sending air to lower area of operator's seat and de-frosting lower part of front window.
Lever position	AN11550PW	AN11560PW
Air outlets	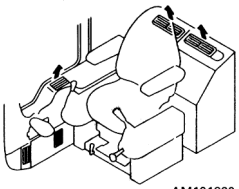 AM101820	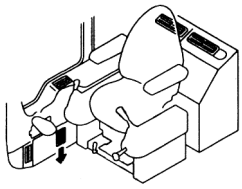 AM101830

For complete defrosting of the front window, set the selector to the mid-point of its stroke.

3. Temperature control slider

This adjust out air temperature
To increase temperature of outlet air: move slides to left (red)
To decrease temperature of outlet air: move slides to right (blue)

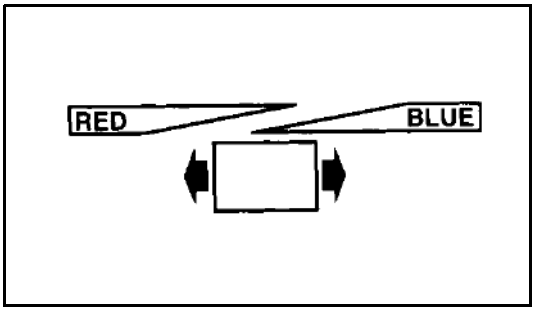

4. Air flow selector switch

This switch adjust air flow in three steps

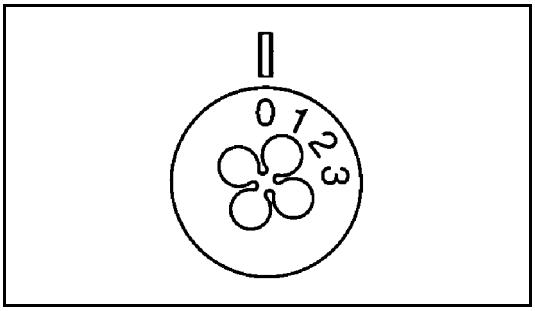

5. Defroster selector lever

This lever is used to remove condensation or ice from the lower part of front window.

Selector lever forward: defrost

Selector lever backward: warms operator's feet

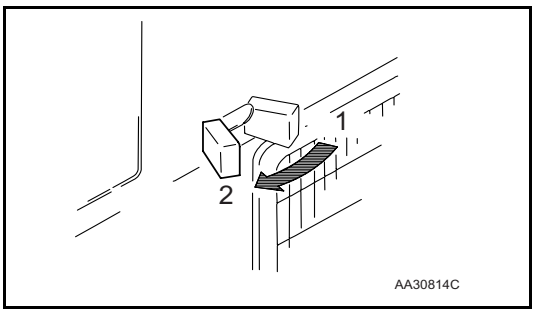

https://truckmanualshub.com/

Defroster is available when air outlet slider is in the position shown marked:

(1)	FEET
(2)	DEFROSTER

AIR CONDITIONER

VIEW OF CONTROL PANEL

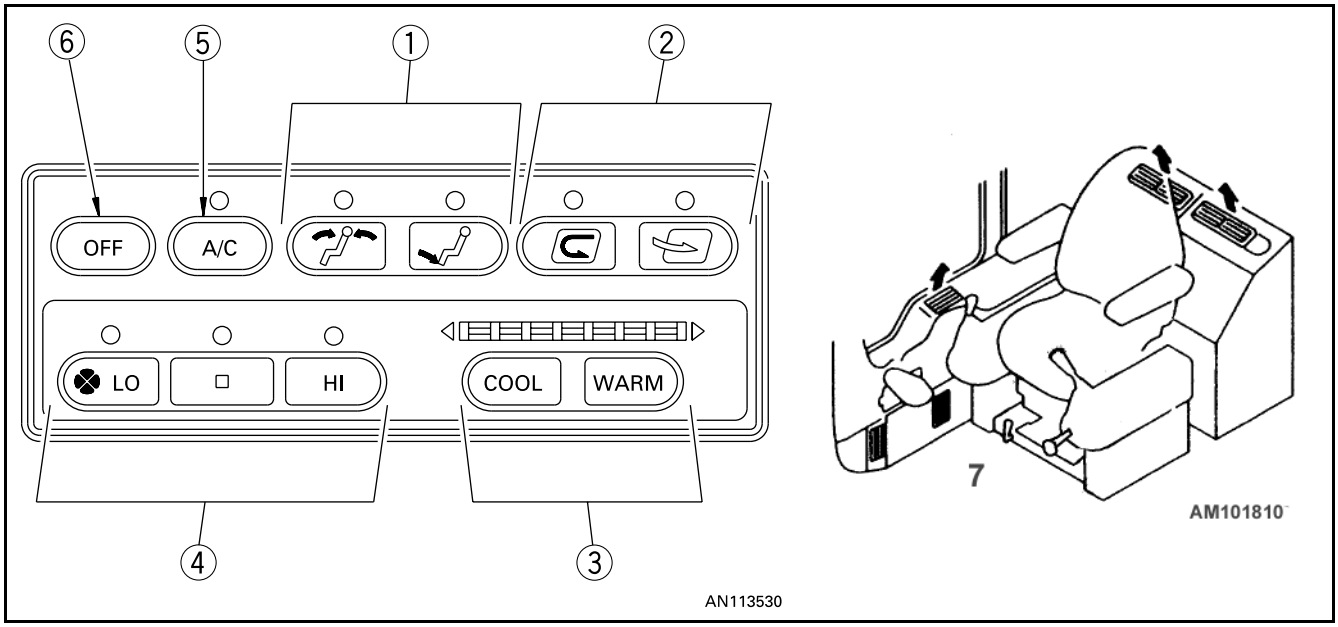

When a function is activated, the related indicator lamp lights up.

1. AIR OUTLET SELECTOR SWICH

The operator can select a suitable outlet as required.

Purpose	Sending air to upper area of operator's seat	Sending air to lower area of operator's seat
Switch	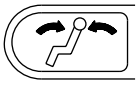 AN113550	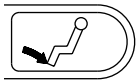 AN113560

https://truckmanualshub.com/

Purpose	Sending air to upper area of operator's seat	Sending air to lower area of operator's seat
Air outlets	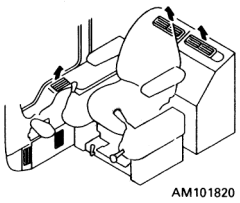 AM101820	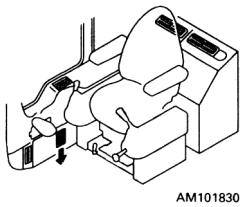 AM101830

2. EXTERNAL/INTERNAL AIR CHANGEOVER SWITCH

Changes between internal air circulation and external air intake.

Purpose	Internal air circuit. This is used when wishing to quickly cool or warm the cab or when the air inside the cab is stale.	External air intake This is used for fresh air intake or to remove condensation on windows
Switch	AN113590	AN113600

3. TEMPERATURE CONTROL SWITCH

This switch continuously adjusts the temperature between high and low.

Purpose	To low temperature	To high temperature
Switch	AN113610	AN113620
	AA30813C	
	Blue range indicates low temperature and red range high temperature. The range is divided into eight steps, each of which is continuously adjustable	

https://truckmanualshub.com/

4. AIR FLOW SELECTOR SWITCH

This switch adjusts air flow in three steps.

Purpose	To "Low"	To "intermediate"	To "High"
Switch	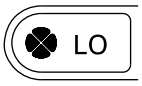 AN113640	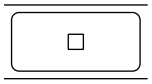 AN113650	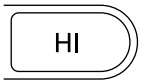 AN113660

5. AIR CONDITIONER SWITCH

This is used to switch the air conditioner ON/OFF.

6. OFF SWITCH

This switch is use to stop the fan.

7. DEFROSTER SELECTOR LEVER

This is used to clear the mist from the front glass in cold or rainy conditions.

Selector lever forward: Defroster (2)
Selector lever back: Foot (1)

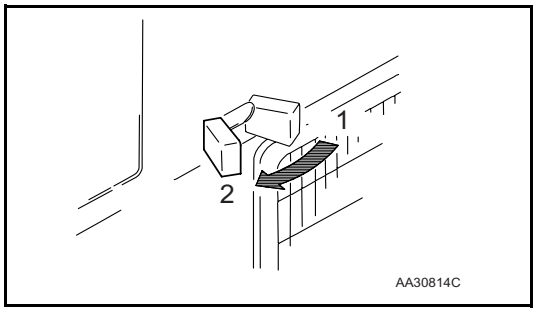

The defroster can be used when the vent selector panel is at the position.

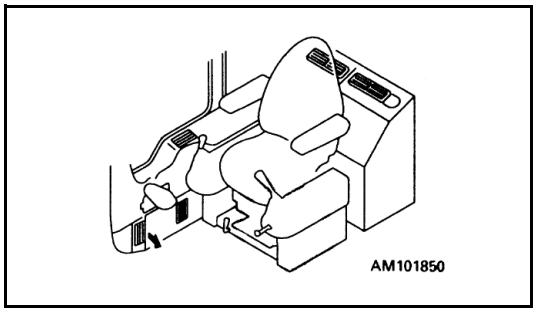

PRECAUTION WHEN USING AIR CONDITIONER

During cooling, ventilate the air from time to time.

- If operator is smoking during cooling, eyes may occasionally smart. In this case, temporarily change the switch to ventilation/cooling to exhaust the smoke.
- When cooling for a long time period, select ventilation/cooling once an hour.

https://truckmanualshub.com/

Avoiding excessive cooling.

- If the operator feels somewhat cool when entering a cooled cab, the temperature (temperature difference between external temperature is 5° to 6°C) is at the optimum level from a health viewpoint. Adjust the cooling temperature carefully.

FUSIBLE LINK

If the starting motor will not rotate when the starting switch is turned ON, a possible cause is disconnection of wire-type fusible link. Open the door on the left side of the machine body to inspect the fusible link and, if necessary, replace it.

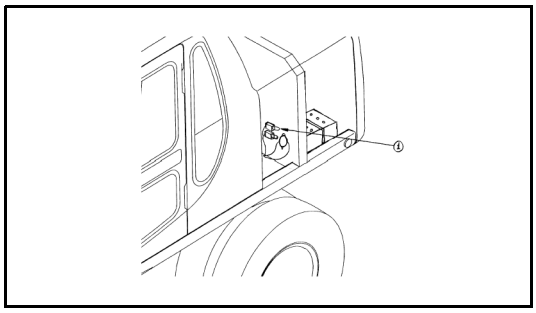

REMARK

A fusible link refers to the large-sized fuse wiring installed in the high current flow portion of the circuit to protect electrical components and wiring from burning, similar to an ordinary fuse.

CONTROLLERS

A pump and governor controller is provided. It is located in the right, rear of the cab underneath panel assy (1).

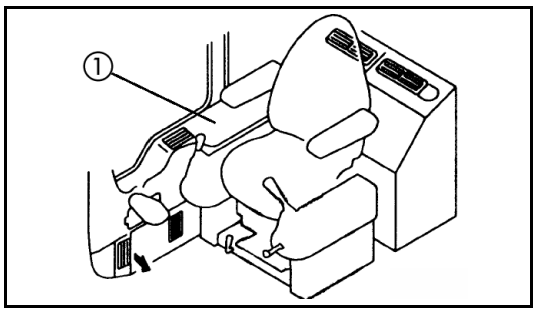

NOTICE

- **Never splash or spill water, mud or drink over the controller as this may cause a fault.**
- **If a fault occurs in the controller, do not attempt repair, but consult your Komatsu distributor.**

TOOL BOX

This is used for keeping the tools.

REFUELLING PUMP

⚠ WARNING

Do not bring fire or sparks near the fuel.

1. When the machine is operated on sites with no fuel container and pump, the machine may be refuelled using the refuelling pump (if fitted) from fuel barrels.
   The refuelling pump is located next to batteries at the front right hand side of the machine.
2. Place the fuel hose (2), which is stored in tray (3) into the fuel barrel placed next to the machine.

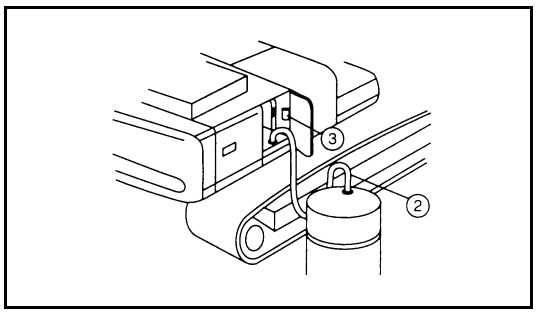

https://truckmanualshub.com/

3. Switch on refuelling pump using switch (1) on the pump assembly when adding fuel, never let the fuel overflow. This may cause a fires.

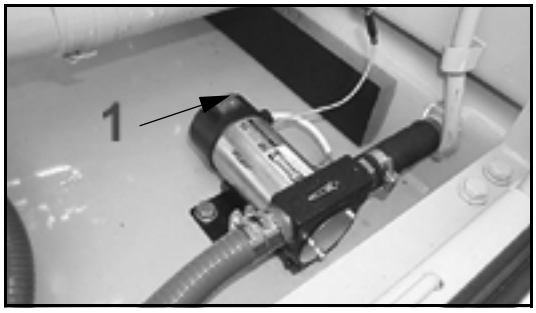

NOTICE

- **This pump is protected by a fuse (5). If pump fails to function check fuse (10A).**
- **Ensure strainer on hose end is clean.**

CAB RADIO (OPTION)

Refer to the separate operation manual for radio cassette.

NOTE: Ensure radio is switched off when leaving the machine for long periods to prevent draining of battery charge.

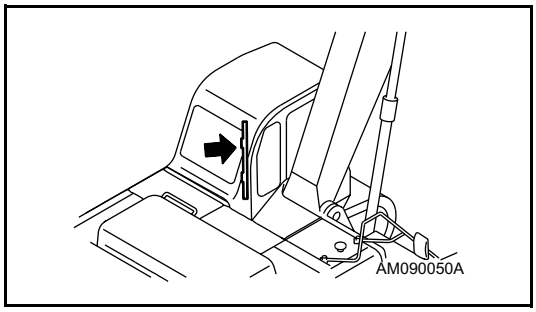

Antenna

If the reception is weak or generates noise, extend the antenna. If the reception is to strong, adjust the sensitivity by retracting the antenna.

NOTICE

When transporting the machine or parking it in a garage, always fully retract the antenna to avoid the possibility of breakage.

PRECAUTION OF USE

- To ensure safe operation, adjust the volume level so that external noise is still audible.
- Ensure no water is splashed over the speaker case or cab radio to prevent malfunction.
- Never use solution such as benzine or thinners to clean the dial or buttons. These should be wiped with a dry, soft cloth. (Use a cloth dipping in alcohol for very dirty surfaces.)
- At battery replacement, all the memory pre-set with the pre-set buttons will be cleared. Perform pre-setting again.

https://truckmanualshub.com/

WARNING LAMPS

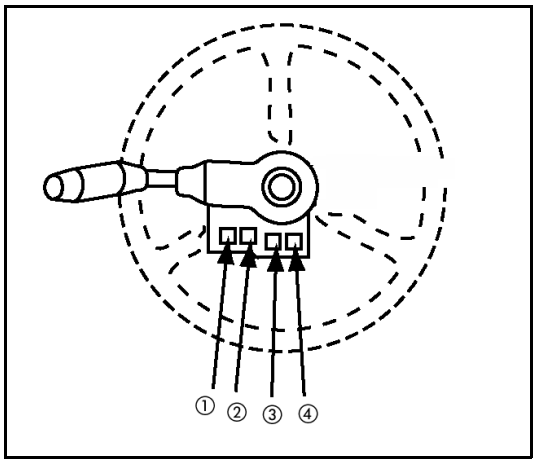

1. INDICATOR WARNING LAMP

This lamp will flash (and buzzer will sound) when indicator lever is not in neutral.

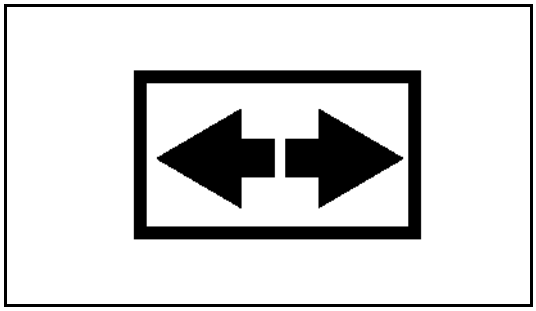

2. WORKLIGHTS WARNING LAMP

This lamp will illuminate when work lamps are switched on.

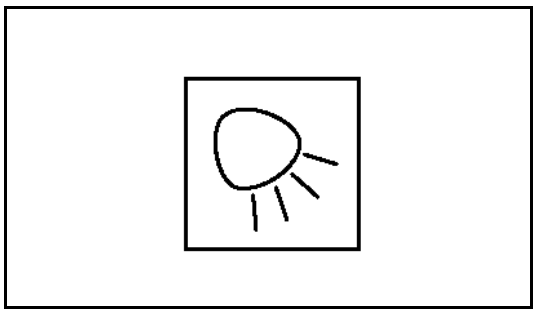

3. LOW BRAKE PRESSURE LAMP

When engine is running and brake system hydraulic pressure is abnormal, this lamp will illuminate.

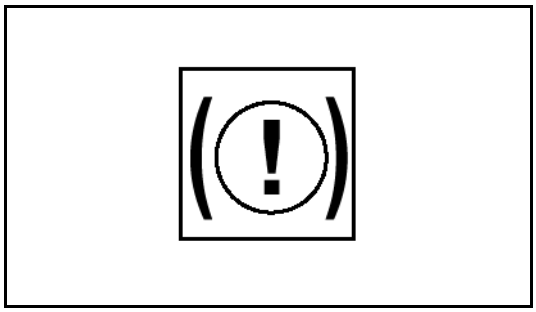

https://truckmanualshub.com/

⚠ CAUTION

Do not drive machine with low brake pressure warning lamp illuminated.

4. MAIN BEAM WARNING LAMP

This lamp will illuminate when road lights main beam is switched on.

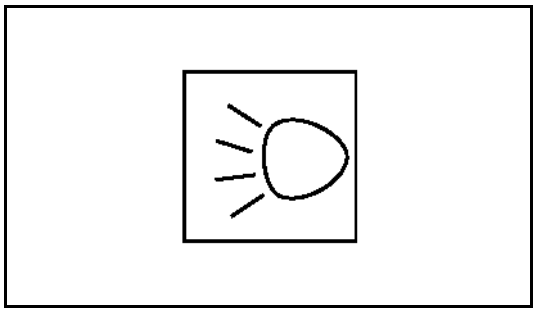

HANDLING THE ACCUMULATOR

⚠ WARNING

After stopping the engine, always place the control lever pad safety lock in the LOCK position and lock the attachment control pedal with the lock pin.

The accumulators are filled with high-pressure nitrogen gas, and it is extremely dangerous if they are handled in the wrong way.
Always observe the following precautions.

- **Never make any hole in the accumulators or expose them to flame or fire.**
- **Do not weld any boss to the accumulators.**
- **When disposing of the accumulators, it is necessary to re lease the gas from the accumulators, so please contact your Komatsu distributor.**

Brake circuit accumulators

This machine is equipped with the accumulator in the brake circuits.

https://truckmanualshub.com/

The accumulator is a device to store the pressure in the circuit, and when it is installed, the circuit can be operated for a short time even after the engine is stopped.

The accumulators are installed to the position shown in the diagram on the right.

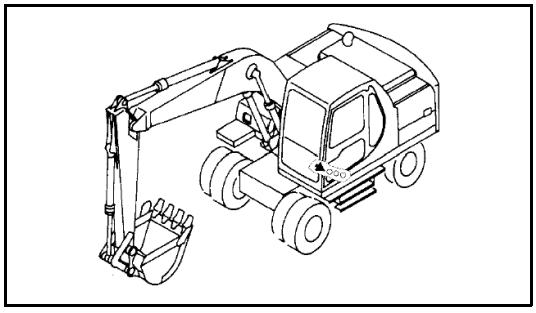

Control circuit accumulator

This machine is equipped with the accumulator in the control circuit. The accumulator is a device to store the pressure in the control circuit, and when it is installed, the control circuit can be operated for a short time even after the engine is stopped. Therefore, if the control lever is moved in the direction to lower the work equipment, it is possible for the work equipment to move under its own weight.

The accumulator is installed to the position shown in the diagram on the right.

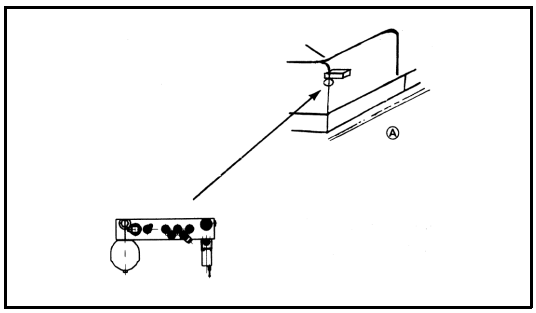

https://truckmanualshub.com/

OPERATION

CHECK BEFORE STARTING ENGINE

WALK-AROUND CHECK

⚠ WARNING

Dirt, oil or fuel around the parts of the engine which reach high temperatures may cause fire and damage to the machine.
Check carefully, and if any abnormality is found, always repair it or contact your Komatsu distributor.

Before starting the engine, look around the machine and under the machine to check for loose nut or bolts, or leakage of oil, fuel, or coolant, and check the condition of the work equipment and hydraulic system.
Check also for loose wiring, play, and collection of dust at places which reach high temperatures.

Always carry out the items in this section before starting the engine each day.

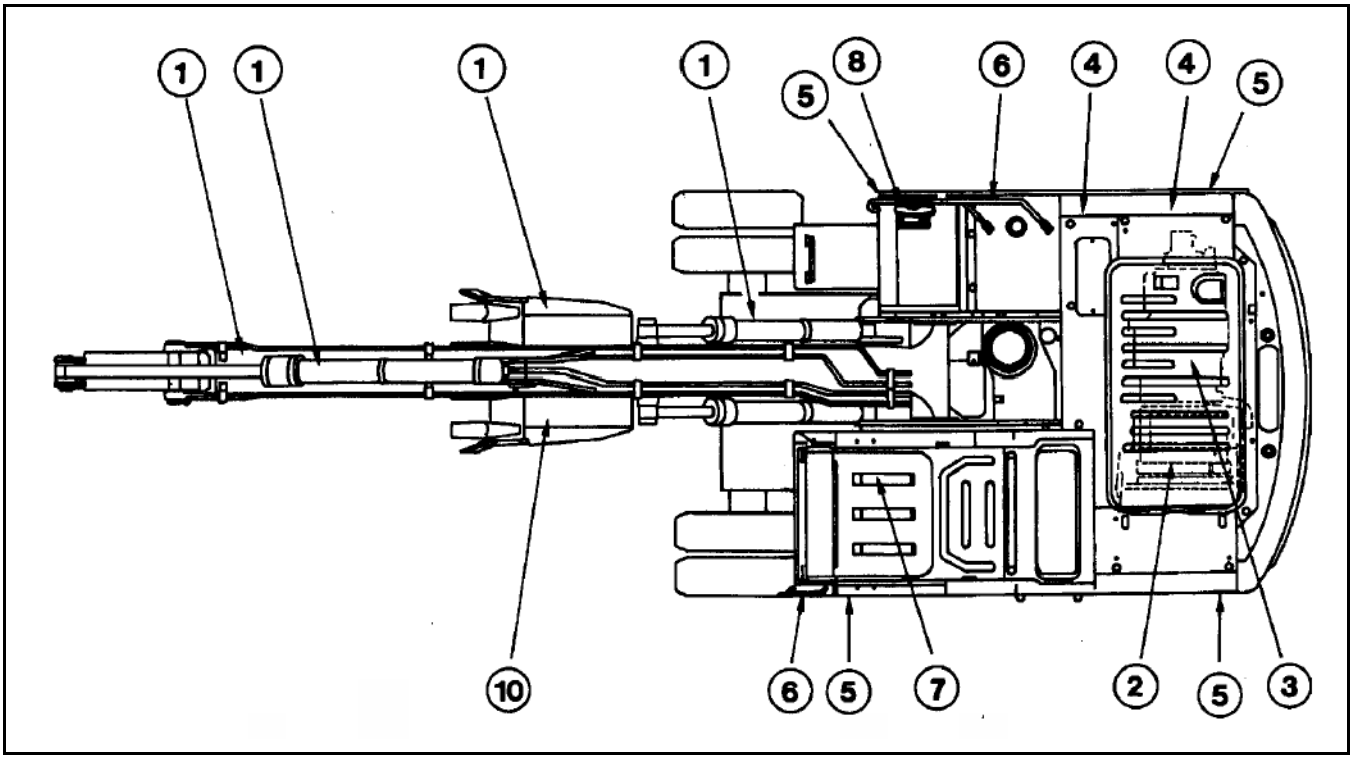

1. Check for damage, wear, play in work equipment, cylinders, linkage, hoses.

Check that there are no cracks, excessive wear, or play in the work equipment, cylinders, linkage, or hoses. If any abnormality is found, repair it.

https://truckmanualshub.com/

2. Remove dirt from around engine, radiator

Check that there is no dirt accumulated around the engine or radiator. If any dirt is found, remove it.

3. Check for leakage of water or oil around engine

Check that there is no leakage of oil from the engine or leakage of water from the cooling system. If any abnormality is found, repair it.

4. Check for oil leakage from hydraulic equipment, hydraulic tank, hoses, joints

Check that there is no oil leakage. If any abnormality is found, repair the place where the oil is leaking.

5. Check for damage to wheels + tyres

6. Check for damage to handrail, loose bolts

Repair any damage and tighten any loose.

7. Check for damage to gauges, monitor, loose bolts

Check that there is no damage to the gauges and monitor in the operator's cab. If any abnormality is found, replace the parts. Clean off any dirt on the surface.

8. Clean rear view mirror, check for damage

Check that there is no damage to the rear view mirror. If it is damaged, replace it with a new mirror. Clean the surface of the mirror and adjust the angle so that the view to the rear can be seen from the operator's seat.

9. Check bucket with hook for damage

Check the hook, catcher and hook foot for damage. If damage is found, contact your Komatsu distributor for repair.

https://truckmanualshub.com/

CHECK BEFORE STARTING

Always carry out the items in this section before starting the engine each day.

CHECK COOLANT LEVEL, ADD WATER

WARNING

Do not open the radiator cap unless necessary. When checking the coolant, always check the radiator reserve tank when the engine is cold.

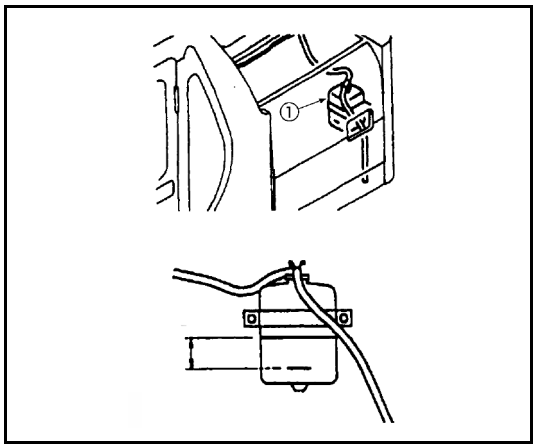

1. Open the rear door on the left side of the machine and check that the cooling water level is between the FULL and LOW marks on radiator reserve tank (1)(shown in the diagram on the right). If the water level is low, add water through the water filler of reserve tank (1) to the FULL level.
2. After adding water, tighten the cap securely.
3. If the reserve tank becomes empty, first inspect for water leaks and then fill the radiator and the reserve tank with water.

CHECK OIL LEVEL IN ENGINE OIL PAN, ADD OIL

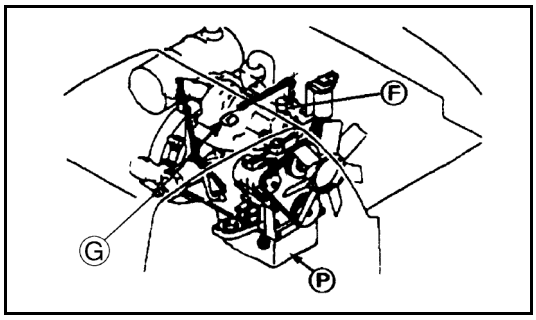

1. Open the engine hood.
2. Remove dipstick (G) and wipe the oil off with a cloth.
3. Insert dipstick (G) fully in the oil filler pipe, then take it out again.
4. The oil level should be between the H and L marks on dipstick (G)

If the oil level is below the L mark, add engine oil through oil filler (F).

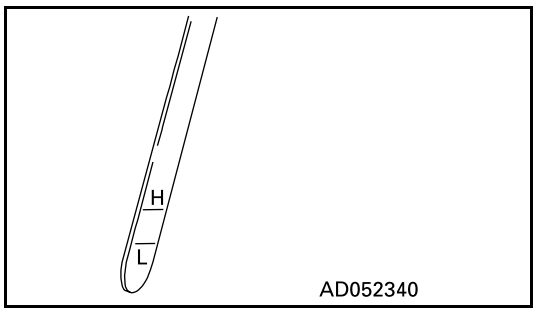

For details of the oil to use, see “USE FUEL, COOLANT AND LUBRICANTS ACCORDING TO AMBIENT TEMPERATURE” on page 173.

5. If the oil is above the H mark, drain the excess engine oil from drain plug (P), and check the oil level again.
6. If the oil level is correct, tighten the oil filler cap securely and close the engine hood.

REMARK

Ensure the machine is level when checking oil level

https://truckmanualshub.com/

WARNING

Allow the engine to cool before checking the oil level to avoid burns by touching hot engine parts.

CHECK FUEL LEVEL, ADD FUEL

WARNING

When adding fuel, never let the fuel overflow. This may cause a fire. If spilling fuel, thoroughly clean up any spillage.

1. Use sight gauge (G) on the front face of the fuel tank to check that the tank is full.
2. If the fuel level is not within the sight gauge, add fuel through filler port (F) while watching sight gauge (G).

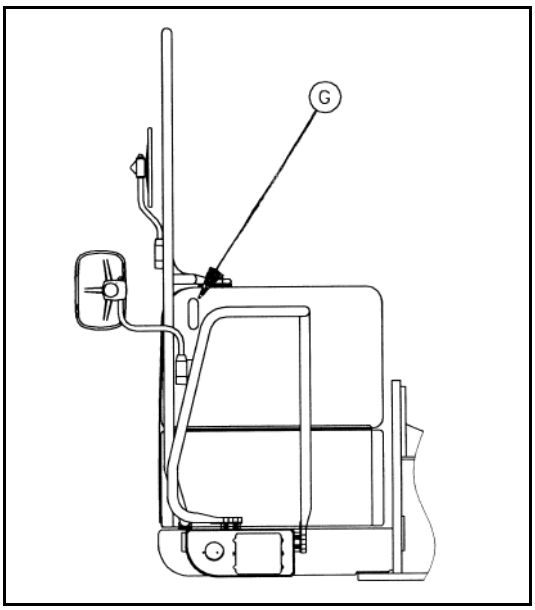

https://truckmanualshub.com/

Fuel capacity: 240 l

For details of the fuel to use, see “USE FUEL, COOLANT AND LUBRICANTS ACCORDING TO AMBIENT TEMPERATURE” on page 173.

3. After adding fuel, tighten the cap securely.

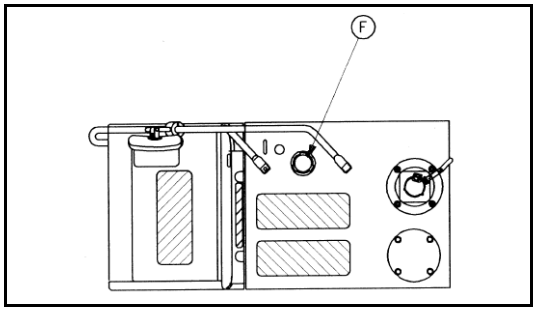

REMARK

If breather holes (1) on the cap is clogged, the pressure in the tank will drop and fuel will not flow.
Clean the hole from time to time.

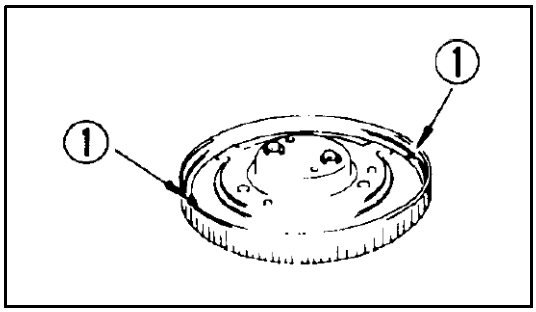

CHECK OIL LEVEL IN HYDRAULIC TANK, ADD OIL

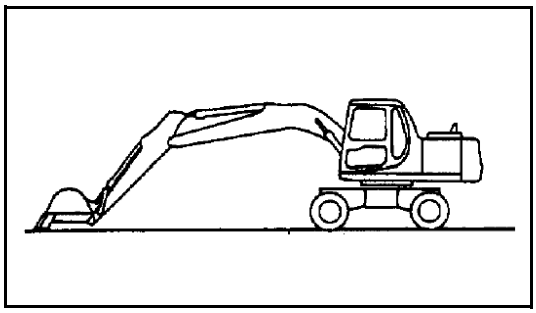

⚠ WARNING

- **When removing the oil filler cap, oil may spurt out, so turn the cap slowly to release the internal pressure before removing the cap.**
- **If oil has been added to above the H mark, stop the engine and wait for the hydraulic oil to cool down, then drain the excess oil from the drain plug (P).**

1. If the work equipment is not in the condition shown in the diagram on the right, start the engine, run the engine at low speed, retract the arm and bucket cylinders, then lower the boom, set the bucket teeth in contact with the ground, and stop the engine.
2. Check sight gauge (G). The oil level is normal if between the H and L marks.

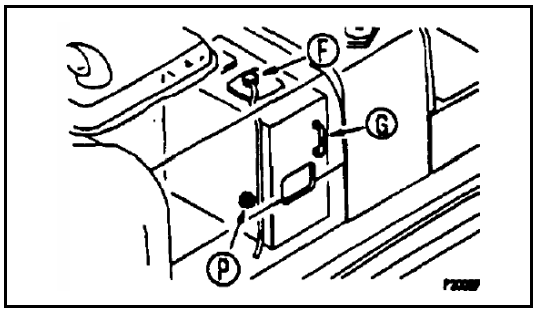

NOTICE

Do not add oil if the level is above the H line. This will damage the hydraulic equipment and cause oil to spurt out.

https://truckmanualshub.com/

3. If the level is below the L mark, remove cap (F) from the hydraulic tank and add oil.

   For details of the oil to use, see "USE FUEL, COOLANT AND LUBRICANTS ACCORDING TO AMBIENT TEMPERATURE" on page 173.

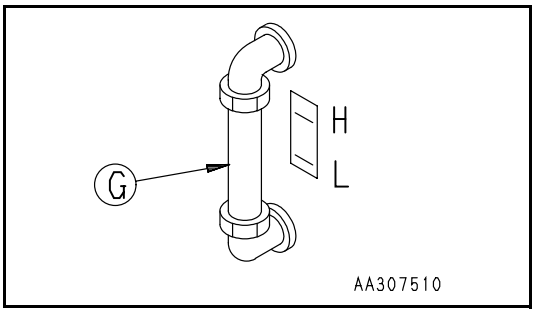

REMARK

The oil level will vary depending upon the oil temperature

Accordingly, use the following as a guide:

- Before operation: around L level
  (Oil temperature 10 to 30°C)
- Normal operation: around H level
  (Oil temperature 50 to 80°C)

CHECK AIR CLEANER FOR CLOGGING

1. Confirm that the air cleaner clogging monitor does not flash
2. If it flashes, immediately clean or replace the element.

   For details of the method of cleaning the element, see "CHECK, CLEAN AND REPLACE THE AIR CLEANER ELEMENT" on page 188.

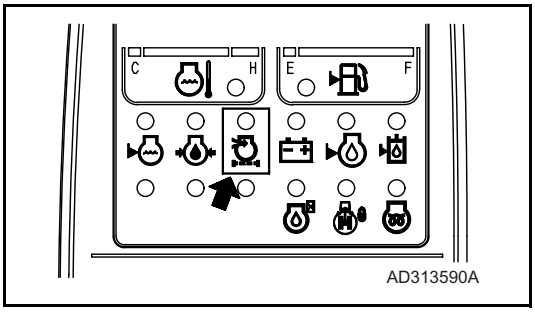

CHECK ELECTRIC WIRING

⚠ WARNING

If the fuse blows frequently, or there are traces of short-circuiting in the electric wiring, always locate and repair the cause.

Check for damage of the fuse and any sign of disconnection or short circuit in the electric wiring. Check also for loose terminals and tighten any loose parts. Check the following points carefully.

- Battery
- Starting motor
- Alternator

Please contact your Komatsu distributor for investigation and correction of the cause.

https://truckmanualshub.com/

CHECK FOR WATER IN FUEL SEDIMENTOR

The fuel sedimentor is mounted in the left hand side compartment.

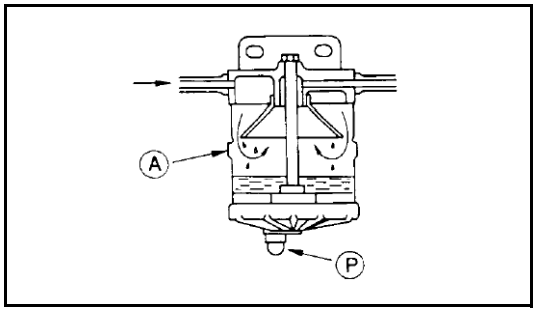

The water separator separates water mixed in the fuel. Before the water level reaches line (A), drain the water from drain plug (P).

For the draining procedure, see section "WHEN REQUIRED".

- Even if a water separator is installed, be sure to check the fuel tank to remove water and sediment in the fuel.

CHECK FOR WATER IN PRIMARY FUEL FILTER, DRAIN WATER

A primary fuel filter is mounted in the radiator compartment.

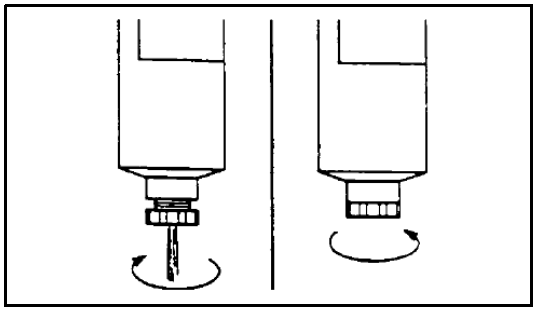

1. With the engine off open the left hand door and locate the water drain at the bottom of the primary fuel filter.
2. To open drain valve, turn the valve counterclockwise approximately 1,5 to 2 turns until draining occurs. Drain the filter sump of water until clear fuel is visible.
3. Turn the valve clockwise to close.

NOTICE

Do not over tighten the valve. Over tightening can damage the threads.

ADJUSTMENT BEFORE OPERATION OPERATOR'S SEAT

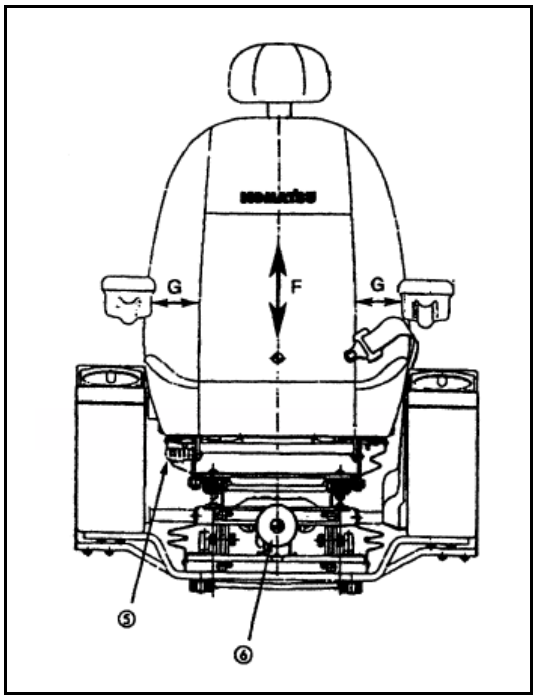

(A) Fore-and-aft adjustment of seat

Pull lever (1) up. After the seat is set to the desired position, release the lever.

NOTE: This operation will not affect relative position of seat and wrist control levers.

(B) Forward/aft adjustment of seat

Pull lever (2) up. After the seat is set to the desired position release the lever.

https://truckmanualshub.com/

NOTE: This operation will affect relative position of seat and wrist control levers.

(C) Adjustment of reclining seat

Pull lever (3) up after the seat back is set to the optimum position for easy operation, release the lever.

(D) Adjustment of arm rest height

Turn thumb wheel (4) to adjust armrest to comfortable height.

(E) Adjustment of tilting seat angle

Lift lever (4) to alter seat angle. Release lever when seat is in required position

(F) Suspension adjustment

When knob (6) is turned clockwise, the suspension becomes harder and when turned anti-clockwise, softer. Adjust the dial so that the suspension best matching the operator's weight is selected.

(G) Lumbar adjustment

Turn knob (7) to adjust lumbar supports

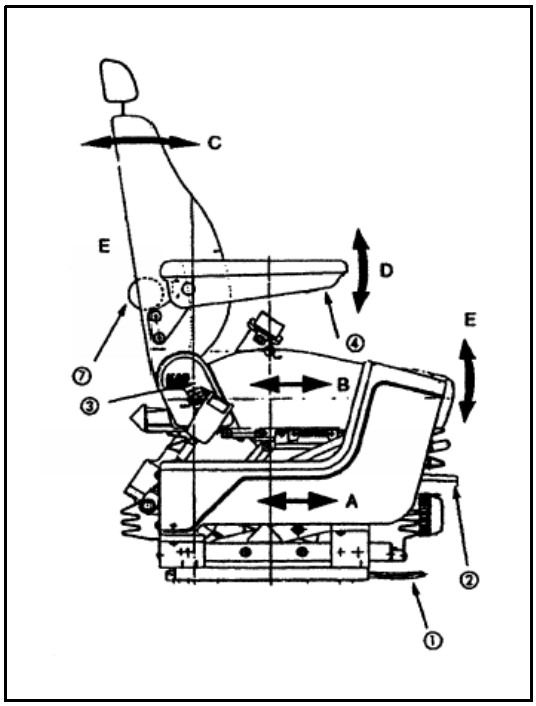

(H) Air suspension adjustment (option).

When button 8 is pressed the air compressor will harden the suspension, and when the button is pulled out, air is released to soften the suspension. Note that the compressor can only be activated when the ignition is on.

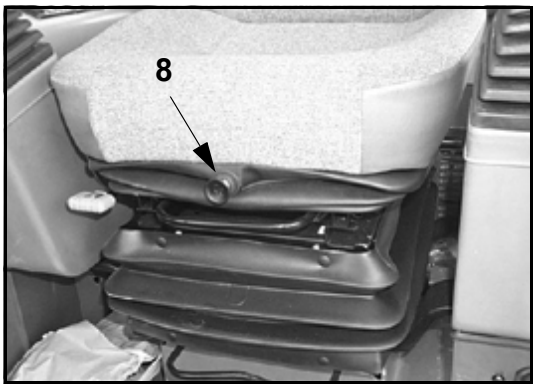

ADJUSTMENT OF MONITOR PANEL ANGLE

Turn the monitor panel so that the operator can view the monitor with ease. When adjusting the angle, the panel should be set to the desired position using both hands. The panel is automatically locked at that position.

Amount of adjustment: 30° (stepless)

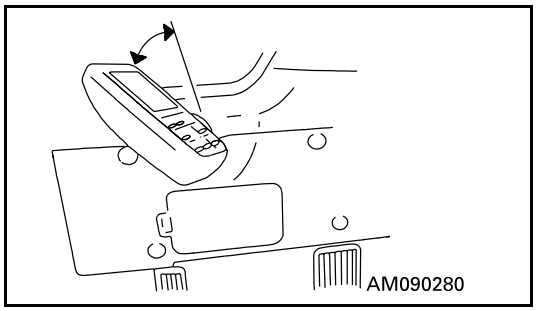

https://truckmanualshub.com/

OPERATIONS AND CHECKS BEFORE STARTING ENGINE

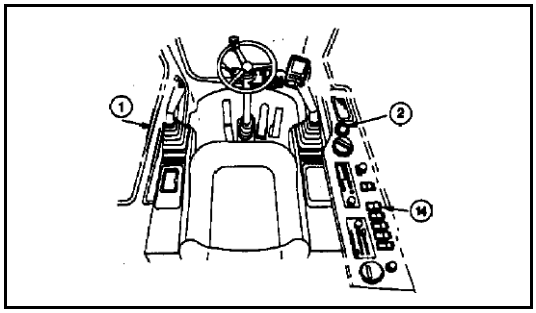

⚠ WARNING

If the control lever is touched by accident, the work equipment or the machine may move suddenly. When leaving the operator's compartment, always set the control lever pad safety lock lever securely to the LOCK position.

1. Check that control lever pad safety lock (1) is at the LOCK position.
2. Check the position of each lever.

Set the control lever to the neutral position.
When starting the engine, never touch the knob button.

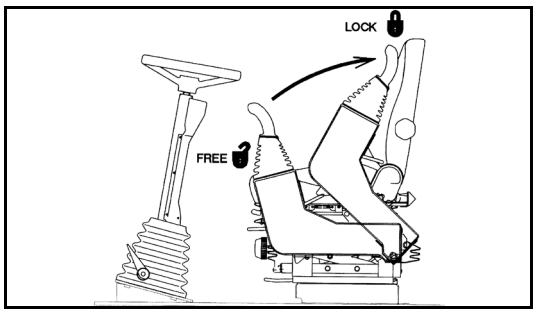

3. Insert the key in starting switch (2), turn the key to the ON position, then carry out the following checks.

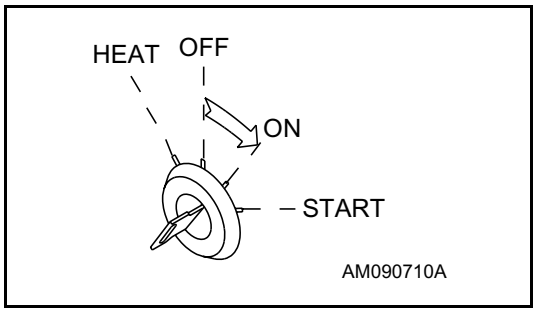

The buzzer will sound for approx. 1 sec., and the following monitors and gauges will light up for approx. 3 sec.

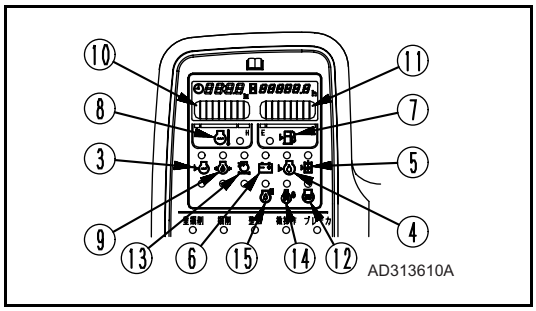

- Radiator water level monitor (3)
- Engine oil level monitor (4)
- Hydraulic oil level monitor (5)
- Charge level monitor (6)
- Fuel level monitor (7)
- Engine water temperature monitor (8)
- Engine oil pressure monitor (9)
- Engine water temperature gauge (10)
- Fuel gauge (11)
- Engine pre-heating monitor (12)
- Air cleaner clogging monitor (13)
- Swing lock monitor (14)

https://truckmanualshub.com/

- Replacement monitor of engine oil (15)

If the monitors or gauges do not light up or the buzzer does not sound, there is probably a broken bulb or disconnection in the monitor wiring, so contact your Komatsu distributor for repairs.

After approx. 3 sec., the following gauges will remain on and the other monitors will go out.

- Engine water temperature gauge (10)
- Fuel gauge (11)

(2) Press lamp switch (14) to turn on the work lamps.

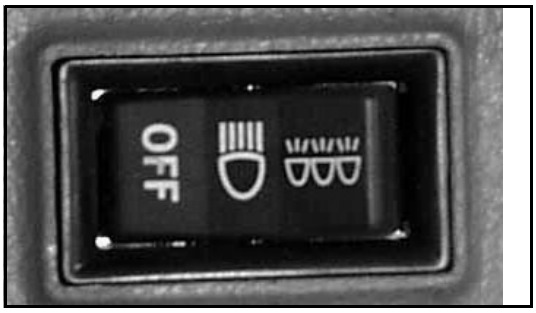

A warning lamp on the steering column will illuminate.
If the lamps do not light up, there is probably a broken bulb or disconnection in the wiring, so contact your Komatsu distributor for repairs.

⚠ CAUTION

It is illegal to travel on the road in certain countries with rearward facing worklights illuminated.

STARTING ENGINE

NORMAL STARTING

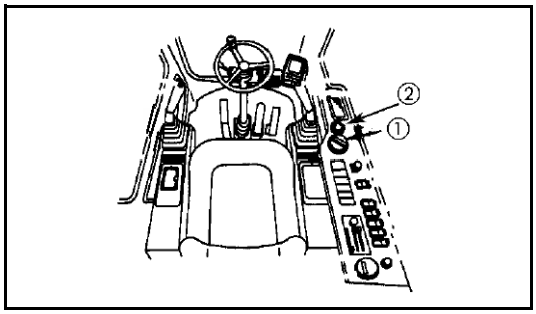

⚠ WARNING

Check that there are no persons or obstacles in the surrounding area, then sound the horn and start the engine.

NOTICE

Do not keep the starting motor rotating continuously for more than 20 seconds.
If the engine will not start, wait for at least 2 minutes before trying to start the engine again.

https://truckmanualshub.com/

1. Set fuel control dial (1) at the low idling (MIN) position.

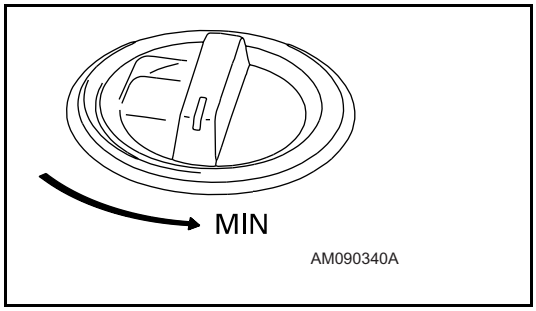

2. Turn the key in starting switch (2) to the START position. The engine will start.

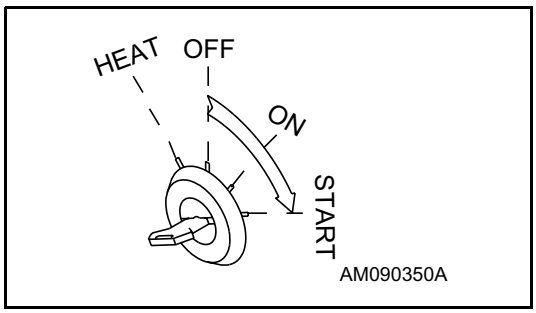

3. When the engine starts, release the key in starting switch (2). The key will return automatically to the ON position.

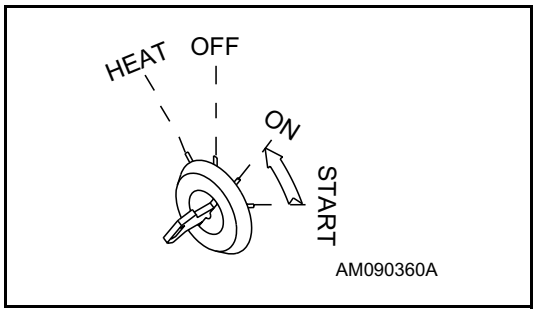

STARTING IN COLD WEATHER

⚠ WARNING

- **Check that there are no persons or obstacles in the surrounding area, then sound the horn and start the engine.**
- **Never use starting aid fluids as they may cause explosions.**

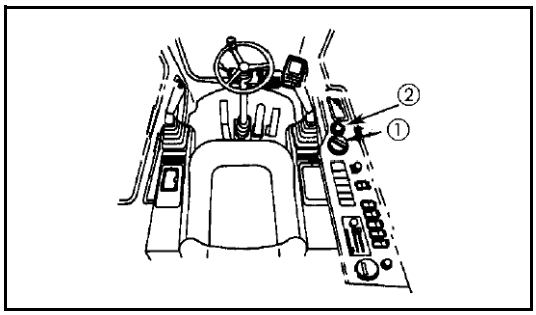

NOTICE

Do not keep the starting motor rotating continuously for more than 20 seconds.
If the engine fails to start, repeat steps from 2 and after waiting for about 2 minutes.

When starting in low temperatures, do as follows.

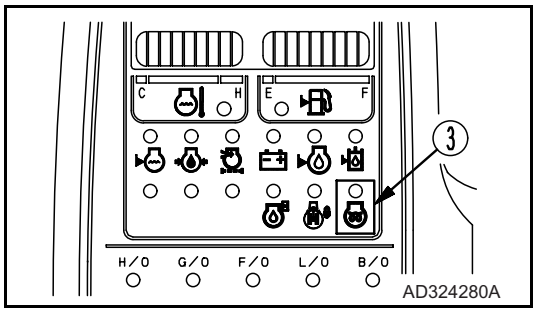

https://truckmanualshub.com/

1. Set fuel control dial (1) at the low idling (MIN) position.

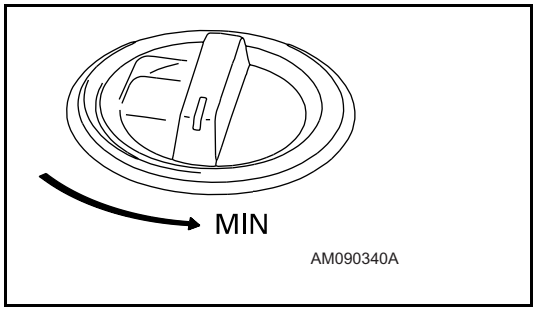

2. Hold the key in starting switch (1) at the HEAT position, and check that preheating monitor (2) lights up.
   After about 30 seconds, preheating monitor lamp (3) will flash for about 10 seconds to indicate that preheating is finished.

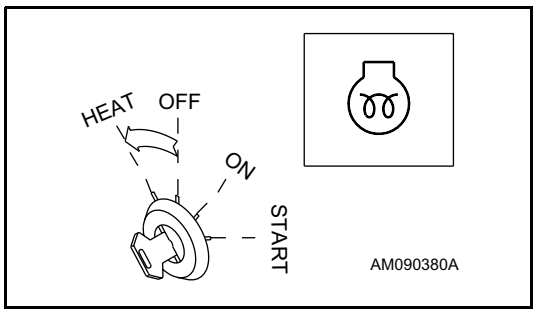

REMARK

The monitor and gauge also light up when the key is at the HEAT position, but this does not indicate any abnormality.

3. When preheating monitor (3) flashes, turn the key in starting switch (2) to the START position to start the engine.

Ambient temperature	Preheating time
Above 0° C	-
0°C to -10°C	20 seconds
-10°C to -20°C	30 seconds

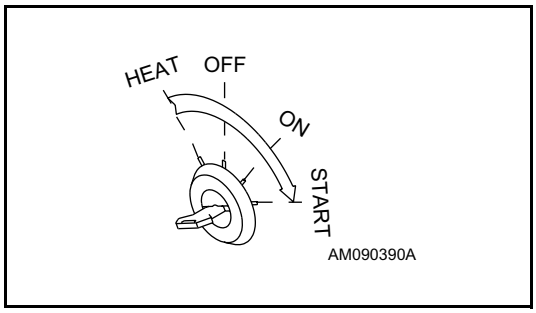

4. When the engine starts, release the key in starting switch(2). The key will return automatically to the ON position.

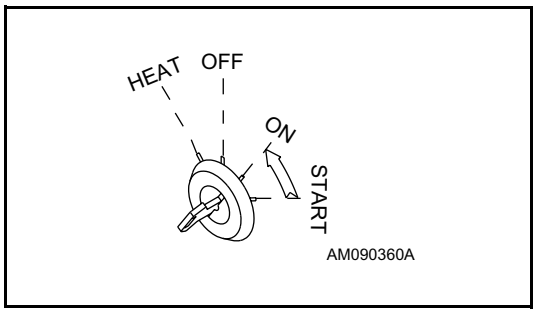

https://truckmanualshub.com/

OPERATIONS AND CHECKS AFTER STARTING ENGINE

⚠ WARNING

- **Emergency stop**
  If there has been any abnormal actuation or trouble, turn the starting switch key to the OFF position.
- **If the work equipment is operated without warming the machine up sufficiently, the response of the work equipment to the movement of the control lever will be slow, and the work equipment may not move as the operator desires, so always carry out the warming-up operation. Particularly in cold areas, be sure to carry out the warming-up operation fully.**

WHEN NORMAL

NOTICE

- **When the hydraulic oil is at a low temperature, do not carry out operations or move the levers suddenly. Always carry out the warming-up operation. This will help to extend the machine life.**
  Do not suddenly accelerate the engine before the warming-up operation is completed.
- **Do not run the engine at low idling or high idling continuously for more than 20 minutes. This will cause leakage of oil from the turbocharger oil supply piping.**
  If it is necessary to run the engine at idling, apply a load from time to time or run the engine at a mid-range speed.

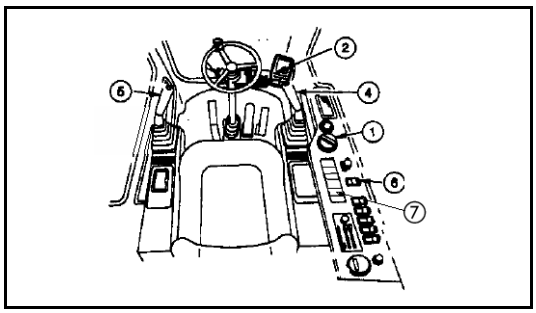

https://truckmanualshub.com/

After starting the engine, do not immediately start operations. First, carry out the following operations and checks.

1. Turn fuel control dial (1) to the center position between LOW IDLING (MIN) and HIGH IDLING (MAX) and run the engine at medium speed for about 5 minutes with no load.

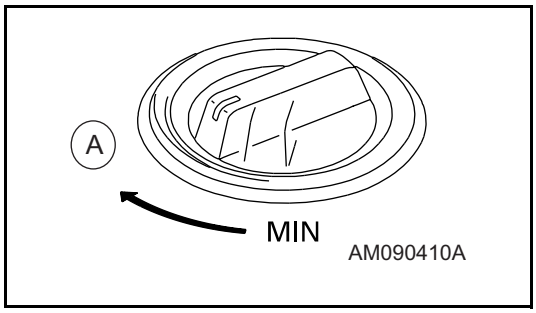

2. While running the engine at medium speed, press working mode switch (2) until the heavy-duty operation mode lamp is turned on.

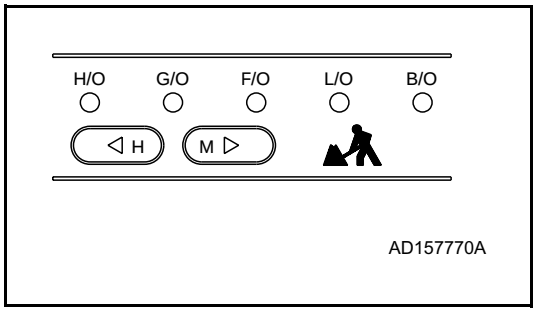

3. Lover the control lever pad (3) to the FREE position, put PPC lock switch (7) to on position and raise the bucket from the ground.

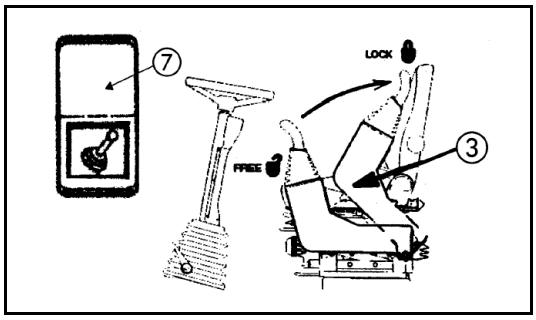

4. Operate bucket control lever (4) and arm control lever (5) slowly to move the bucket cylinder and arm cylinder to the end of the stroke.

(A) IN	(C) CURL
(B) OUT	(D) DUMP

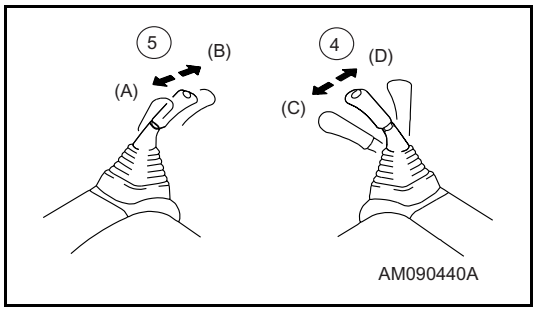

5. Carry out bucket and arm operation for 5 minutes at full stroke, alternating between bucket operation and arm operation at 30 second intervals.
   If the swing lock switch (6) is set to the ON (actuated) position and swing control lever (5) is operated at full stroke, oil temperature rise can be increased earlier.

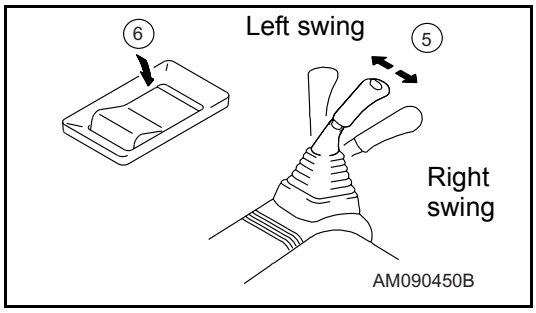

NOTICE

When the work equipment is retracted, take care that it does not interfere with the machine body or ground.

https://truckmanualshub.com/

6. After carrying out the warming-up operation, check that each gauge and monitor lamp is in the following condition.

- Engine water temperature gauge (7): Inside green range
- Fuel gauge (8): Inside green range
- Engine water temperature monitor (9): OUT
- Radiator water level monitor (10): OUT
- Engine oil pressure monitor (11): OUT
- Charge level monitor (12): OUT
- Fuel level monitor (13): OUT
- Air cleaner clogging monitor (14): OUT
- Engine pre-heating lamp (15): OUT
- Engine oil level monitor (16): OUT
- Hydraulic oil level monitor (17): OUT
- Replacement monitor of engine oil (18): OUT

7. Check that there is no abnormal exhaust gas color, noise, or vibration. If any abnormality is found, repair it.

8. Press working mode switch (2) on the monitor panel until the lamp of the mode to be used lights up.

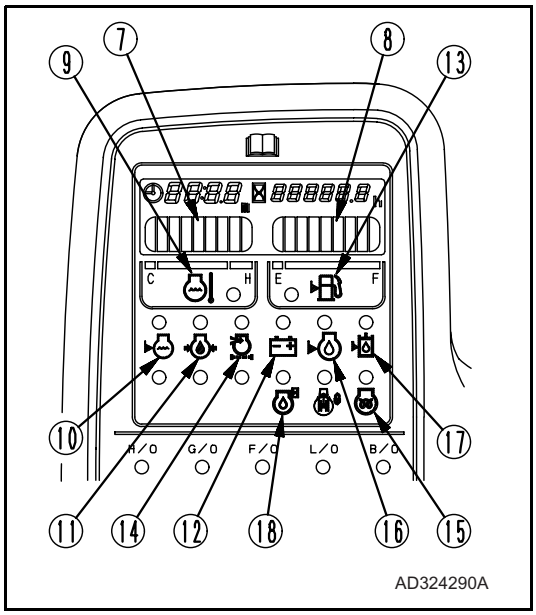

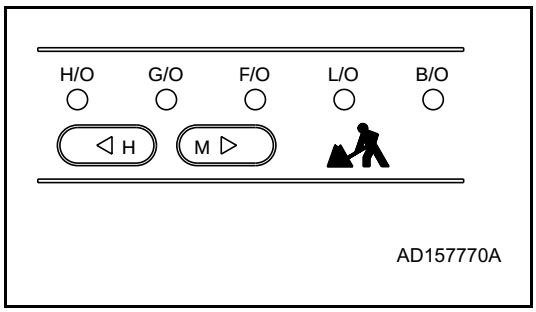

IN COLD AREAS (AUTOMATIC WARMING-UP OPERATION)

When starting the engine in cold areas, carry out the automatic warming-up operation after starting the engine.

When the engine is started, if the engine water temperature is low (below 30°), the warming-up operation is carried out automatically.

The automatic warming-up operation is cancelled if the engine water temperature reaches the specified temperature (30°C) or if the warming-up operation is continued for 10 minutes. If the engine water temperature or hydraulic oil temperature are low after the automatic warming-up operation, warm the engine up further as follows.

https://truckmanualshub.com/

NOTICE

- **When the hydraulic oil is at a low temperature, do not carry out operations or move the levers suddenly. Always carry out the warming-up operation. This will help to extend the machine life.**
- **Do not suddenly accelerate the engine before the warming-up operation is completed.**
  Do not run the engine at low idling or high idling continuously for more than 20 minutes. This will cause leakage of oil from the turbocharger oil supply piping. If it is necessary to run the engine at idling, apply a load from time to time or run the engine at a mid-range speed.

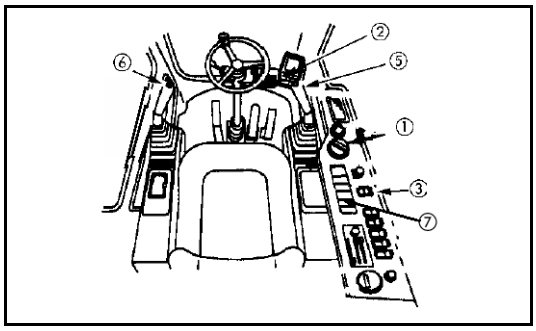

1. Set fuel control dial (1) at the low idling (MIN) position and run the engine for about 5 minutes without load.

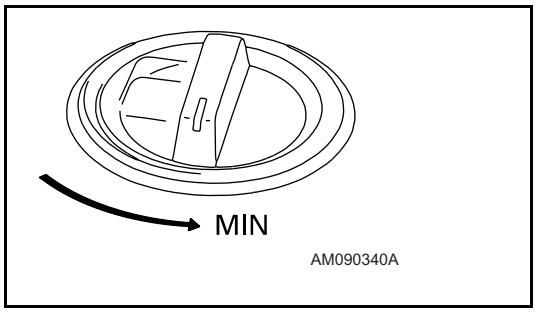

2. When the automatic warming-up operation is completed, press working mode switch (2) on the monitor panel until the heavy-duty operation mode lamp lights up.

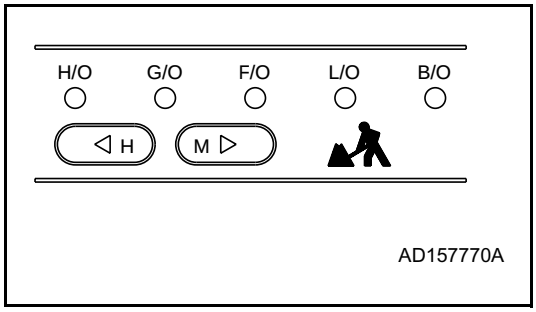

3. Turn fuel control dial (1) to the mid-range speed position and turn swing lock switch (3) ON.

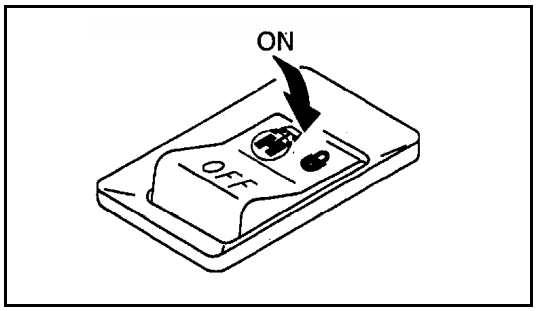

https://truckmanualshub.com/

4. Lower the control lever pad (4) to the FREE position, put PPC lock switch (7) to on position and raise the bucket from the ground.

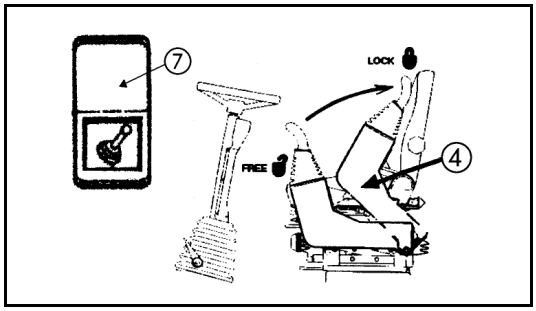

5. Operate boom and bucket control lever (5) and arm control lever (6) slowly to operate the boom cylinder, bucket cylinder, and arm cylinder to the end of their stroke.

A	Left swing
B	Right swing

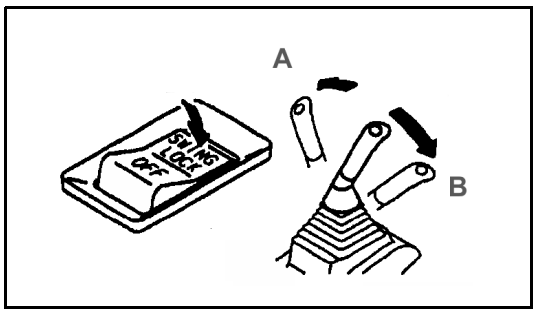

6. Operate the boom and arm slowly at the same time, and repeat this for 30 seconds.
   Next, repeat the same operation with the bucket and swing for 30 seconds. Operate both fully in turn for 5 minutes.

NOTICE

When pulling in the work equipment, be careful not to let it hit the chassis or ground.

7. Turn fuel control dial (1) to the full speed (MAX) position and carry out the operation is Step 6 for 3 -5 minutes.

8. Repeat the following operation 3 - 5 times and operate slowly.

- Boom operation RAISE ↔ LOWER
- Arm operation IN↔ OUT
- Bucket operation CURL↔ DUMP
- Swing operation LEFT↔ RIGHT
- Travel (Lo) operation FORWARD↔ REVERSE

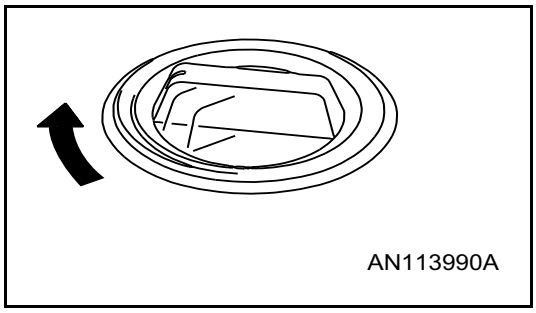

https://truckmanualshub.com/

REMARK

If the above operation is not carried out, there may be a delay in response when starting or stopping each actuator, so continue the operation until it becomes normal.

9. Use working mode switch (2) on the monitor panel to switch to the working mode to be used.

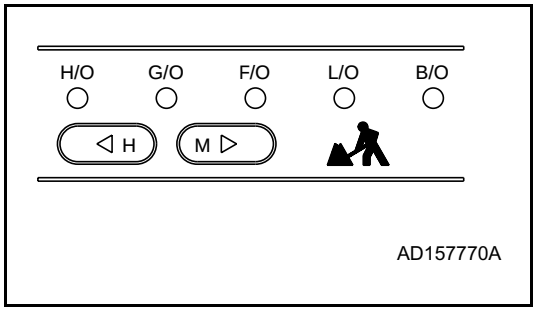

NOTICE

Cancelling automatic warming-up operation

If it becomes necessary in an emergency to lower the engine speed to low idling, cancel the automatic warming-up operation as follows.

1. Turn fuel control dial (1) to the full speed (MAX) position and hold it for 3 seconds.

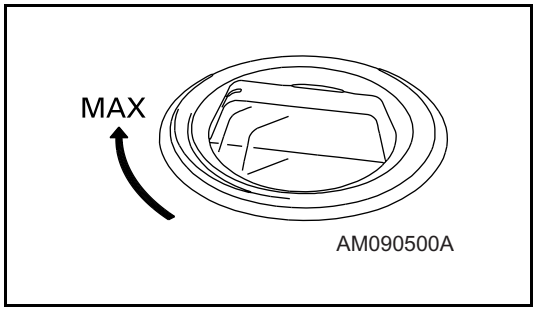

2. When fuel control dial (1) is returned to the low idling (MIN) position, the engine speed will drop.

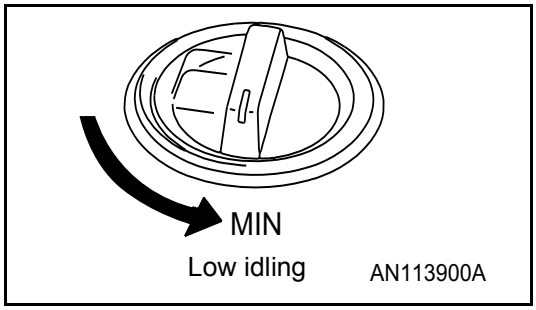

https://truckmanualshub.com/

MOVING MACHINE OFF

MOVING MACHINE FORWARD

⚠ WARNING

- **When moving off, check that the area around the machine is safe, and sound the horn before moving.**
- **Clear all personnel from the machine and the area.**
- **Clear all obstacles from the path of the machine.**
- **If the lever is moved inside the deceleration range, engine speed will rise suddenly. Operate the levers carefully.**
- **Ensure that the undercarriage is in the normal forward direction**
- **Check service brake just after moving off.**
- **Check that low brake pressure warning lamp is off**

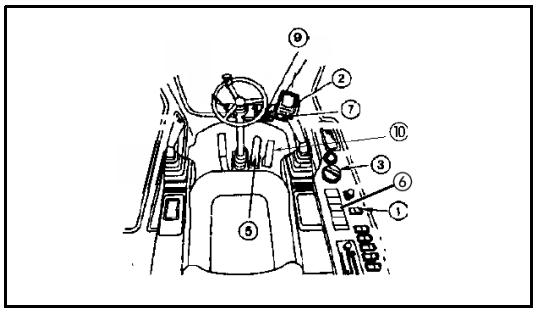

1. Set swing lock switch (1) to the ON (actuated) position and confirm that swing lock monitor lamp (2) lights up. Although the hydraulic swing lock ((1) above) may be adequate for normal job site working, it is a legal requirement in some countries to use a mechanical lock when driving on public roads.
2. Turn fuel control dial (3) towards the high idling position to increase the engine speed.

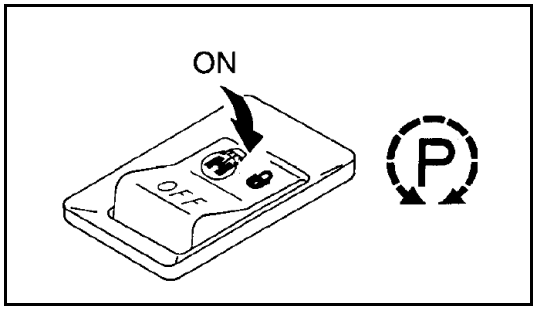

3. Lower the control lever pad (4) to the FREE position set PPC lock switch to on position, fold the work equipment, and raise it 40 - 50 cm from the ground.

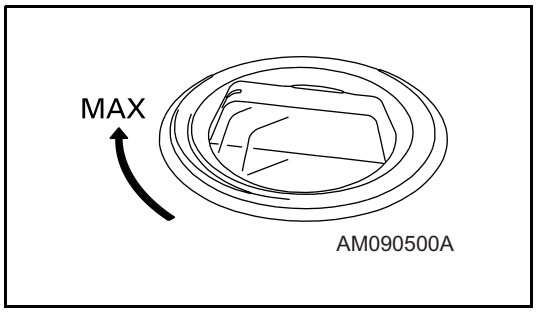

https://truckmanualshub.com/

4. Raise the stabilisers/dozer blade (when fitted). See Section on operation of dozer & outriggers section

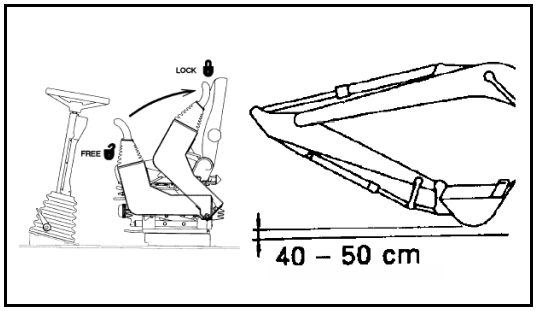

5. Ensure that the wheel brake is off by depressing service brake lock release pedal (5).

A	Service brake lock release pedal
B	Service brake pedal

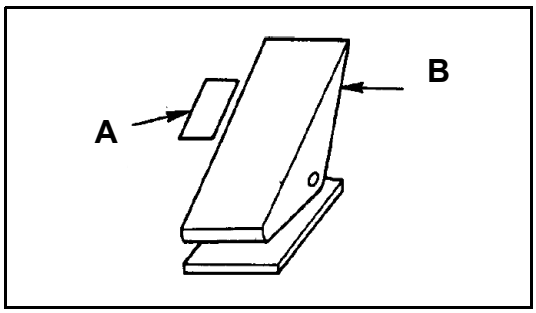

6. Release the front axle suspension lock, using switch (6).

Position (1): Front axle suspension travels freely

Position (2): Front axle suspension is in ‘auto’ mode i.e. when travel pedal is depressed, front axle suspension travels freely and when travel pedal is not depressed, front axle suspension is locked.

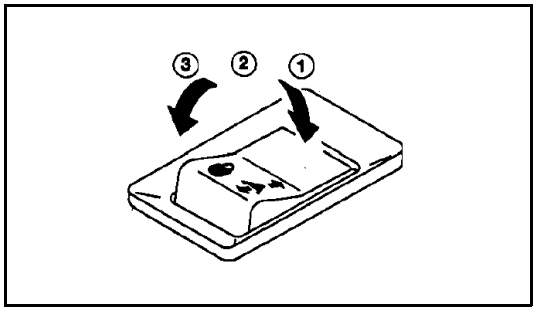

Position (3): Front axle is locked
The lamp within the switch will illuminate when the front axle is locked, and will not be illuminated when the front axle is unlocked.

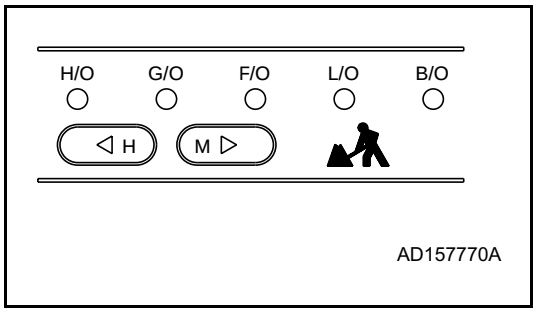

NOTE: Where machine is fitted with combination of blade and outrigger options, it is necessary before dozing operations to position outrigger switch in its central (R.H. Attachment) positions. This is in order to Ensure that the suspension lock stays in the free position.

7. Set working mode switch to H/O as shown

8. Select travel speed using switch (7). According to the ground conditions and type of operation required, as follows:

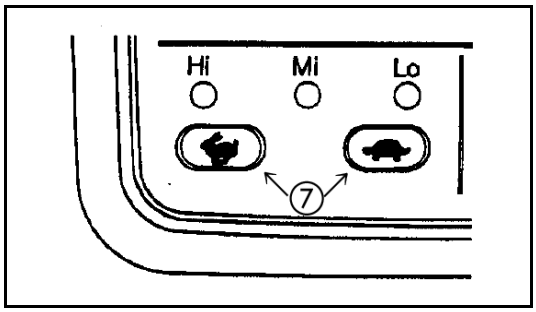

Lo mode is for fine control on smooth flat surfaces speed is restricted to 3.5 km/h (2.7 km/h *).

Mi mode is for traveling on rough surfaces and on steep slopes (up or down), e.g. work sites. Speed is restricted to 10 km/h (8km/h*).

Hi mode is for high speed travel, on smooth surfaces with slopes up to 5 degrees.

https://truckmanualshub.com/

(e.g. concrete or asphalt roads) maximum speed is available.
* (20 km/h specification)

9. Release park brake by using switch (9).

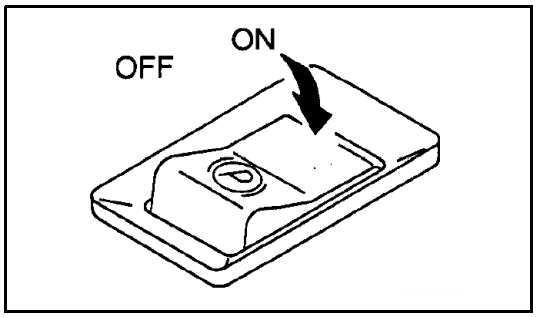

10. Press the travel pedal (10) smoothly. The machine will move off in the selected direction.

- If the undercarriage is not facing the normal forward direction - then the travelling direction will be opposite to that which is selected.
- The front (steering) axle has two suspension locking cylinders mounted above the axle. These can be seen clearly from the operators seat, indicating that the undercarriage is facing in the normal forward direction.
- Engine speed will automatically reduce 4 seconds after selecting forward/reverse if no further operation is made. This saves fuel consumption (Auto-decel function)

11. When changing direction from forward to reverse or vice versa, always allow the machine to stop before changing the position of the travel pedal.

12. When travelling in Hi mode a slight shock may occasionally be heard and/or felt as the automatic transmission clutch operates. This is normal.

STEERING

1. The machine can be steered by turning steering wheel in the desired direction.

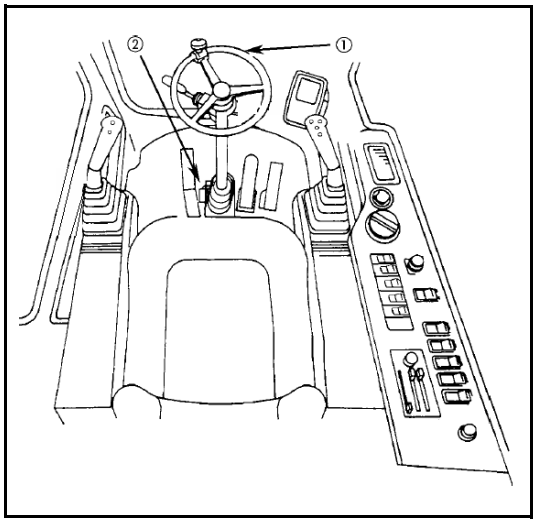

The position of the steering column can be adjusted fore and aft by depressing pedal (2), moving column to desired position and releasing pedal (2).

https://truckmanualshub.com/

⚠ WARNING

- **Before shifting between forward and reverse, stop the machine.**

If the upper structure is turned 180 degrees (the undercarriage is re-versed) the machine steers in the opposite direction of the steering wheel. Therefore, take care of the direction of the chassis.

- **Before depressing the travel pedal, check the direction of the chassis.**
- **If the travel pedal is fully depressed with the fuel control dial set to max, the machine may start abruptly.**
- **When driving the machine on a road, raise the outriggers and/or dozer blade and insert the lock pins to prevent them from falling.**
- **When auto-deceleration is selected, if the wrist control lever or travel pedal is operated inside the deceleration range, the engine speed will rise suddenly.**
- **Before moving off turn steering wheel full lock in both directions and check wheels turn fully.**
- **Do not press travel pedal until control pad safety lock is fully down (UNLOCKED).**

https://truckmanualshub.com/

STOPPING

⚠ WARNING

- **Avoid stopping suddenly. Give yourself ample room when stopping.**
- **When stopping the machine, select flat hard ground and avoid dangerous places. If it is unavoidably necessary to park the machine on a slope, insert chocks underneath the wheels. As an additional safety measure, thrust the bucket into the ground.**

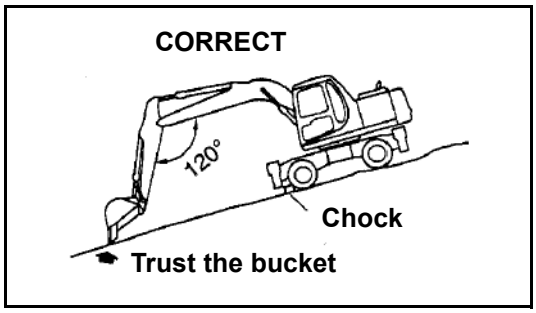

- **• If the control lever is touched by accident, the work equipment or the machine may move suddenly, and this may lead to a serious accident. Before leaving the operator's compartment, always set the control lever pad safety lock securely to the LOCK position.**

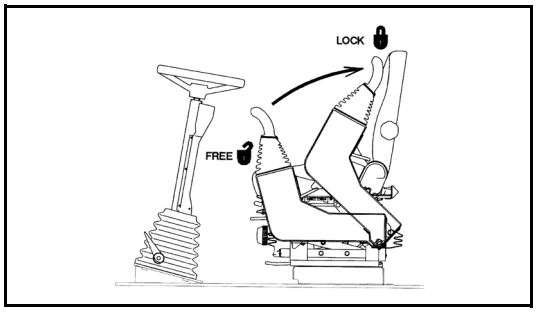

1. Release the travel pedal (1) and depress the service brake pedal (2) to stop the machine. (The service brakes may be locked by fully de-pressing the service brake pedal until it 'latches')
2. Lower the work equipment until it touches the ground
3. Raise the control lever pad safety lock to lock the work equipment controls (3)

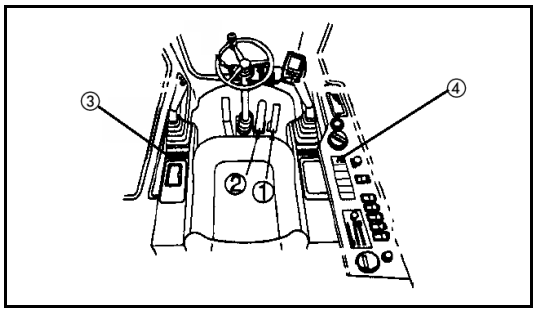

STOPPING MACHINE (EMERGENCY)

The park brake on this machine is a hydraulic-mechanical device which can be used to stop the machine if the service brakes do not work.

In the event of service brake failure;

1. Release travel pedal (1)
2. Depress service brake pedal (2) (to confirm no braking)
3. Brace yourself before engaging emergency brake (A seatbelt is fitted for your safety and comfort. Please wear this at all times.)
4. Press park break switch (4) to 'on' position, machine will very quickly come to a halt.

https://truckmanualshub.com/

NOTICE

The park brake internal components will be destroyed during this operation.
ONLY USE IT IN AN EMERGENCY.

SWINGING (Slewing the upper carriage)

When operating the swing, check that the area around the machine is safe.

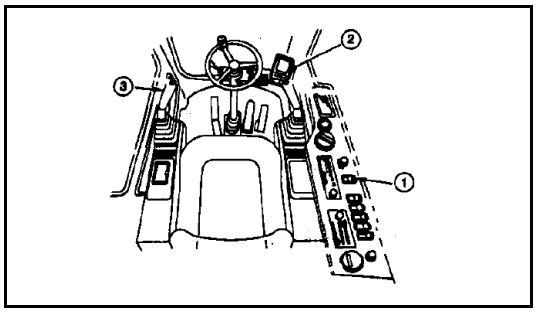

1. Before operating the swing, turn swing lock switch (1) OFF (CANCELED).

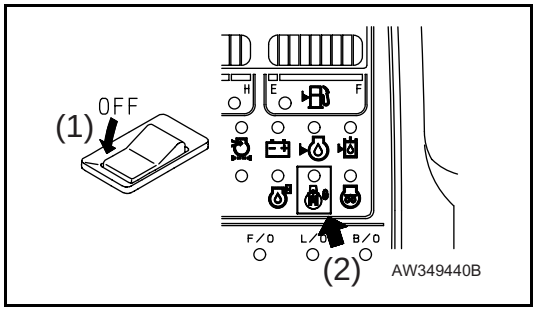

NOTICE

Check that swing lock monitor (2) goes out at the same time.

2. Operate left work equipment control lever (3) to swing the upper structure.

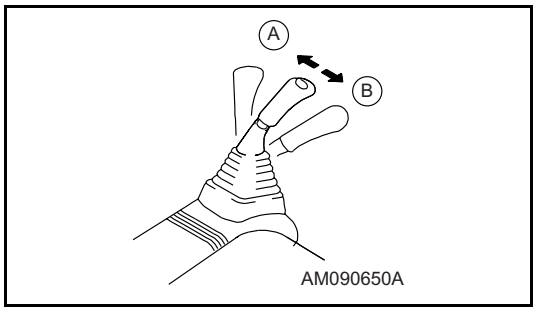

3. When not operating the swing, turn swing lock switch (1) ON (ACTUATED)

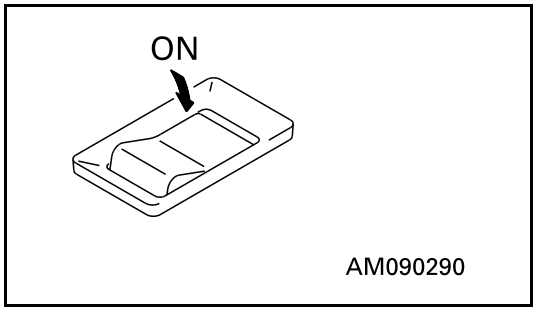

https://truckmanualshub.com/

OPERATION OF WORK EQUIPMENT

⚠ WARNING

If any lever is operated when in the deceleration range, the engine speed will suddenly increase, so be careful when operating the levers.

The work equipment is operated by the left and right work equipment control levers. The left work equipment control lever operates the arm and swing, and the right work equipment control lever operates the boom and bucket.
The movements of the lever and work equipment are as shown in the diagrams on the right. When the levers are released, they automatically return to the neutral position and the work equipment is held in place.

Arm operation

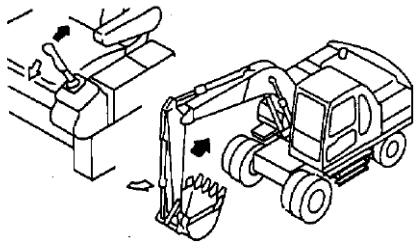

- If the work equipment control lever is returned to the neutral position when the machine is stopped, even if the fuel control dial is set to FULL, the auto-deceleration mechanism will act to reduce the engine speed to a mid-range speed.

Swing operation

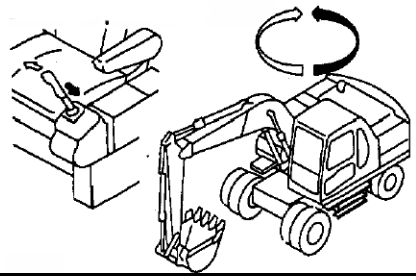

- If the levers are operated within 15 seconds after stopping the engine, it's possible to lower the work equipment to the ground. In addition, the levers can also be operated to release any remaining pressure inside the hydraulic cylinder circuit and to lower the boom after loading the machine on a trailer.

Boom operation

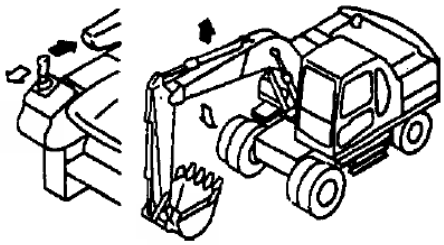

https://truckmanualshub.com/

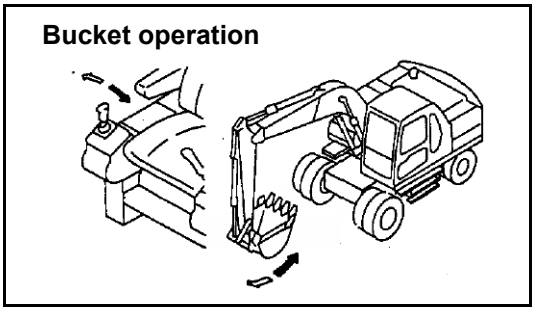

- 2 pc boom operation

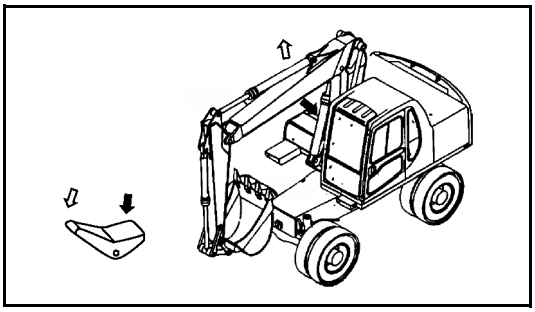

WORKING MODE SELECTION

WORKING MODE

The mode selector switches can be used to switch the mode to match the conditions and purpose of work, thereby enabling efficient operation.
Use the following procedures to make the most effective use of each mode.

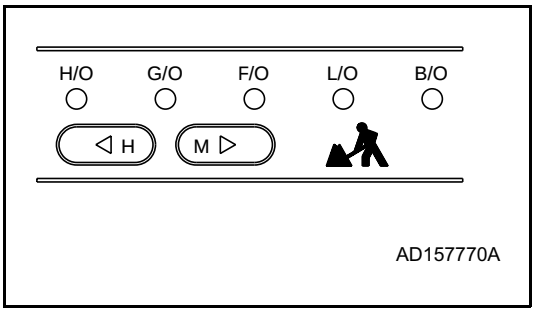

When the starting switch is turned ON, the working mode is set to general operation mode (G.O.), so normal work can be carried out without needing to set the mode.

Set the most effective mode according to the type of work using working mode selector switch.

Working mode	Applicable work	Power max.	Swift slow-down (speed down)
		Power	Speed
Heavy-duty operation mode (H.O.)	Large amount of digging and loading in a short time	8% up	Approx. 6% down
General operation mode (G.O.)	Normal digging and loading operation	35% up	Approx. 6% down
Finishing operation mode (F.O.)	Finishing, levelling and general hauling operation	-	-
Lifting operation mode (L.O.)	Positioning, etc.	-	-
Breaker operation mode(B.O.)	Breaker operation	-	-

https://truckmanualshub.com/

NOTICE

Never carry out breaker operation in heavy-duty operation mode (H.O.) as this may result in breakage of hydraulic equipment.

POWER MAX./SWIFT SLOW-DOWN

During operation, power up/speed down of work equipment can be performed by one-touch. Use this function effectively in combination with working mode.

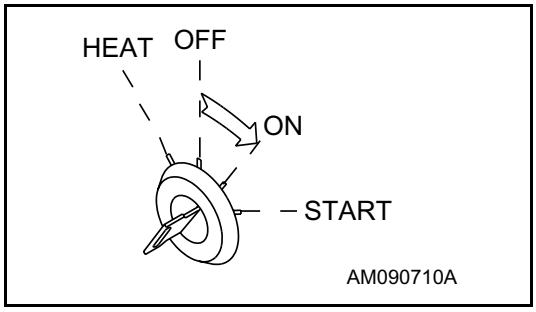

1. When starting switch is turned ON, the power up lamp turns on. When SET switch is pressed once, the speed down lamp turns on and the power up lamp goes out, and when pressed again, the opposite occurs.

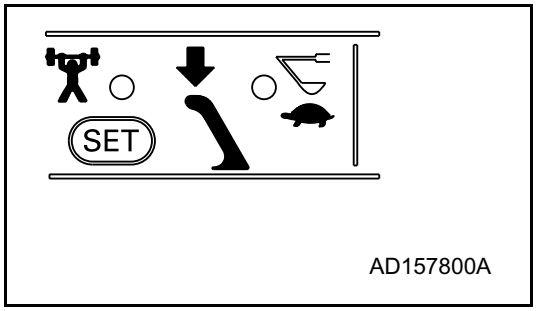

2. When the left knob button is given a single click (keep depressed after initially pressing) power keeps increasing while depressed.
However, power up automatically completes after 8.5 seconds.

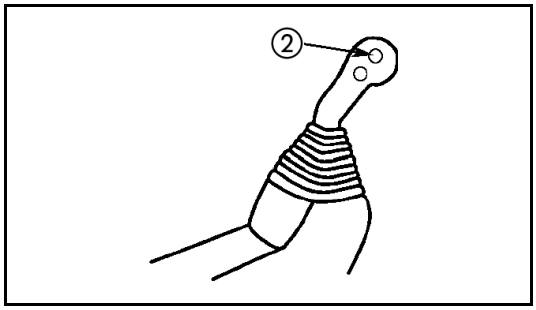

https://truckmanualshub.com/

PROHIBITIONS FOR OPERATION

⚠ WARNING

- **If it is necessary to operate the work equipment control lever when the machine is traveling, stop the machine before operating the work equipment control lever.**
- **If the lever is moved inside the deceleration range, engine speed will suddenly rise. Operate the levers carefully.**
- **Never operate the machine on a rock bed (hard or soft rock).**

Prohibited operations using swing force

Do not use the swing force to compact soil or break earth mounds or walls.
When swinging, do not dig the bucket teeth into the soil. These operations will damage the work equipment.

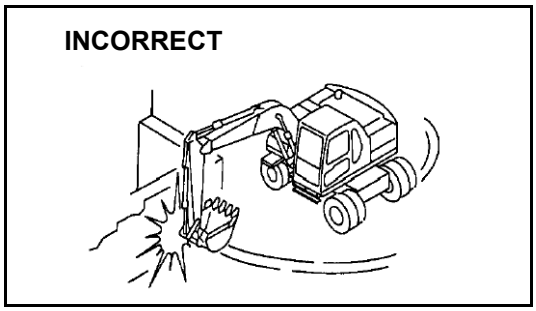

Prohibited operations using travel force

Do not leave the bucket dug into the ground and use the travel force to excavate. This will bring excessive force to bear on the rear of the machine.

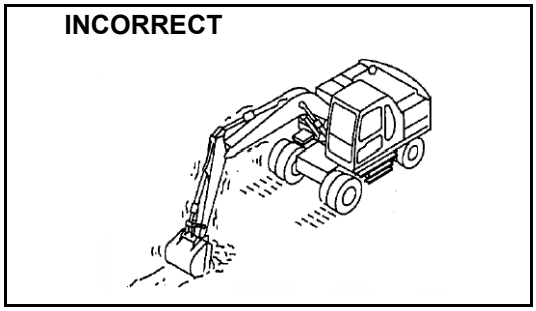

Precautions when operating hydraulic cylinders to end of stroke

If the cylinder is operated to the end of its stroke during operations, force will be brought to bear on the stopper inside the cylinder, and this will reduce the life of the machine. To prevent this, always leave a small safety margin when operating the cylinders.

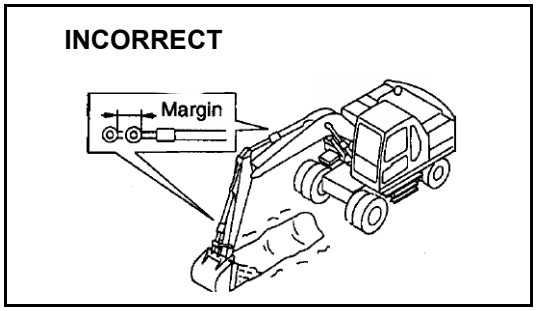

https://truckmanualshub.com/

Prohibited operations using dropping force of bucket

Do not use the dropping force of the bucket as a pickaxe, breaker, or pile driver. This will bring excessive force to bear on the rear of the machine, and will not only damage the machine, but is also dangerous.

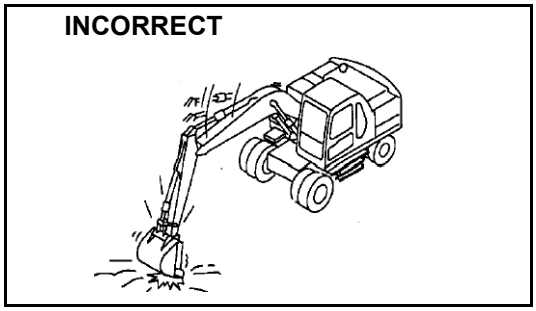

Prohibited operations using dropping force of machine

Do not use the dropping force of the machine for digging.

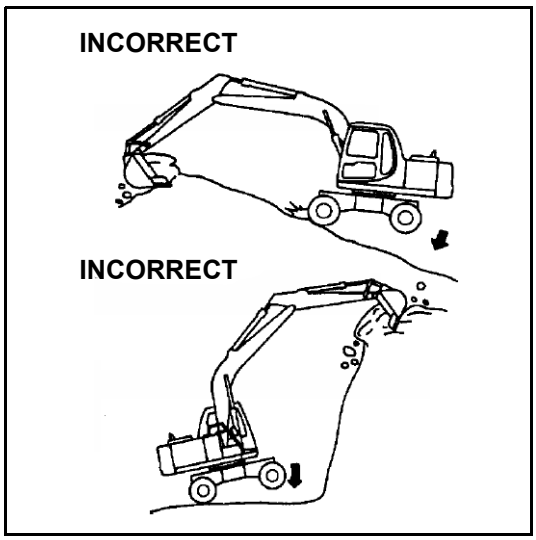

Digging rocky ground

It is better to excavate hard rocky ground after breaking it up by some other means. This will not only reduce damage to the machine but make for better economy.

PRECAUTIONS FOR OPERATION

PRECAUTIONS WHEN TRAVELING

When traveling over obstacles such as boulders or tree stumps, the machine (in particular, the undercarriage) is subjected to a large shock, so reduce the travel speed and travel over the obstacle at the center of the tracks. As far as possible, remove such obstacles or avoid traveling over them.

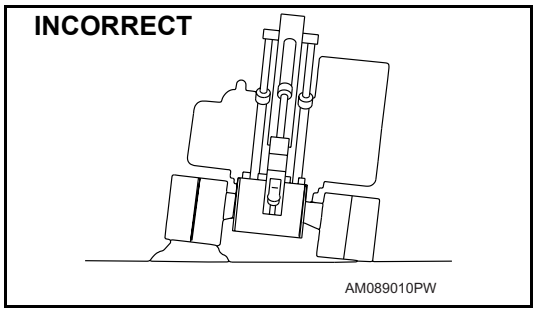

https://truckmanualshub.com/

PRECAUTIONS AT Hi-SPEED TRAVEL

On uneven roadbeds such as rock beds or uneven roads with large rocks, travel in Mi speedmode and adjust the speed of the machine to prevent loss of control.

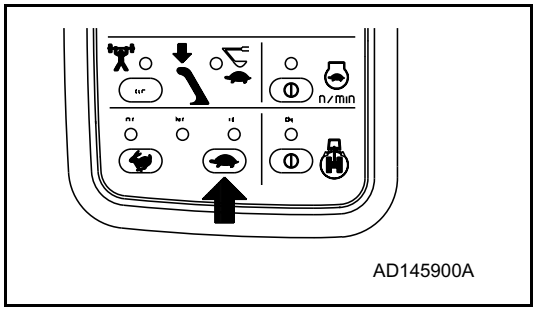

PRECAUTIONS WHEN TRAVELLING ON PUBLIC ROADS

When travelling or public roads the control lever pad safety lock should be down and the control lever lock switch, in the off position. This prevents operation of the control levers and activates the rear facing brake lamp circuit.

PERMISSIBLE WATER DEPTH

Do not immerse the machine in water by more than the permissible depth (axle centre).
In addition, for parts that have been immersed in water for a long time, pump in grease until the old grease comes out from the bearings. (Around the bucket pins).

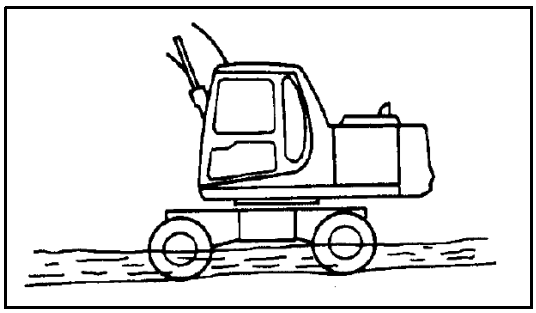

PRECAUTIONS WHEN TRAVELING UP OR DOWN HILLS

⚠ WARNING

- **When traveling, raise the bucket approx. 20 - 30 cm from the ground.**
  Do not travel downhill in reverse.
- **When traveling over ridges or other obstacles, keep the work equipment close to the ground and travel slowly.**
- **It is dangerous to turn on slopes or to travel across slopes. Always go down to a flat place to perform these operations. It may be longer, but it will ensure safety.**
- **If the machine starts to slide or loses stability, lower the bucket immediately and brake the machine.**

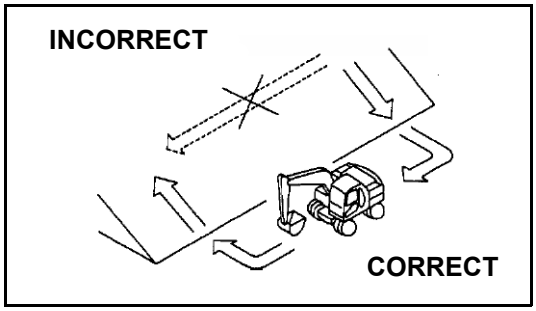

- **Turning or operating the work equipment when working on slopes may cause the machine to lose its balance and turn over, so avoid such operations. It is particularly dangerous to swing downhill when the bucket is loaded.**
  If such operations have to be carried out, pile soil to make platform on the slope so that the machine can be kept horizontal when operating.
- **Do not travel on slopes of over 30° as there is danger that the machine may overturn.**

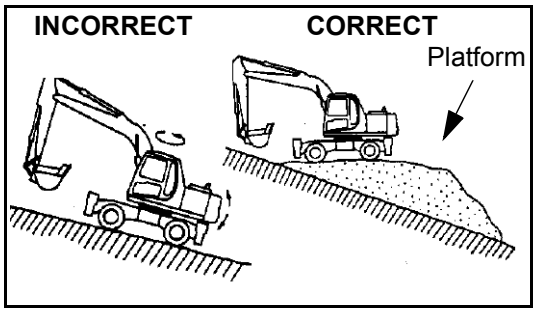

https://truckmanualshub.com/

1. When traveling down steep hills, keep the travel speed low. When traveling down slopes of more than 15°, set the work equipment in the posture shown in the figure on the right, and lower the engine speed.

2. When travelling down hills of more than 5° first stop, engage the service brake and select Mi travel mode. Release the service brake and proceed (full hydraulic braking will than be available).

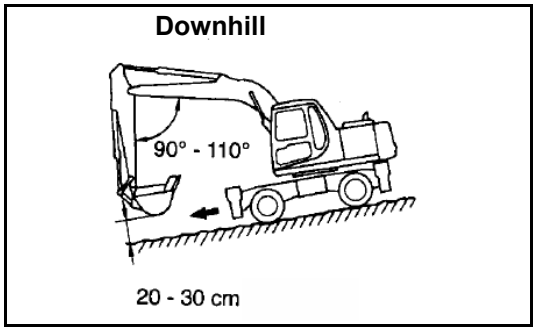

3. When traveling up a steep hill of more than 15°, set the work equipment in the posture shown in the diagram on the right.

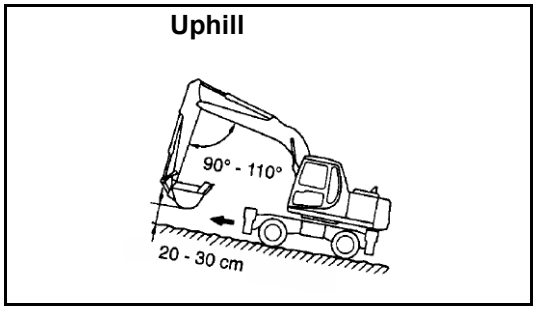

If engine stops

If the engine stops when traveling uphill, lower the bucket to the ground, stop the machine, then start the engine again.

Precautions on slopes

- If the engine stops when the machine is on a slope, never use the left work equipment control lever to carry out swing operations. The upper structure will swing under its own weight.
- Do not open or close the door on the cab if the machine is on a slope. This may cause a sudden change in the operating force. Always keep the door locked.

HOW TO ESCAPE FROM MUD

Always operate carefully to avoid getting stuck in mud. If the machine does get stuck in mud, use the following procedures to get the machine out.

WHEN ONE SIDE IS STUCK

When only one side is stuck in mud, use the bucket to raise the wheels then lay boards or logs and drive the machine out. If necessary, put a board under the bucket also.

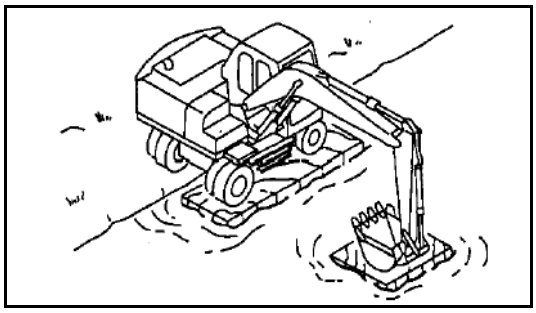

NOTICE

When using the boom or arm to raise the machine, always have the bottom of the bucket in contact with the ground. (Never push with the teeth). The angle between the boom and arm should be 90° to 110°.
The same applies when using the inverting bucket.

https://truckmanualshub.com/

WHEN BOTH SIDES ARE STUCK

When all wheels are stuck in mud and the machine will not move, lay boards as explained above, and dig the bucket into the ground in front. Then pull in the arm as in normal digging operations and put the travel levers in the FORWARD position to pull the machine out.

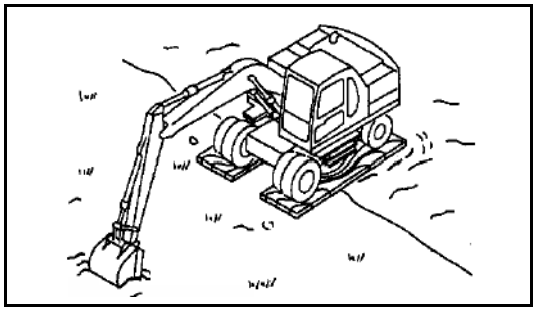

WORK POSSIBLE USING HYDRAULIC EXCAVATOR

In addition to the following, it is possible to further increase the range of applications by using various attachments.

BACKHOE WORK

When condition of the machine is as shown in the diagram at right, each cylinders maximum pushing excavation force is obtained when the bucket cylinder and link, arm cylinder and arm are at 90°.

When excavating, use this angle effectively to optimize your work efficiency.
The range for excavating with the arm is from a 45° angle away from the machine to a 30° toward the machine.

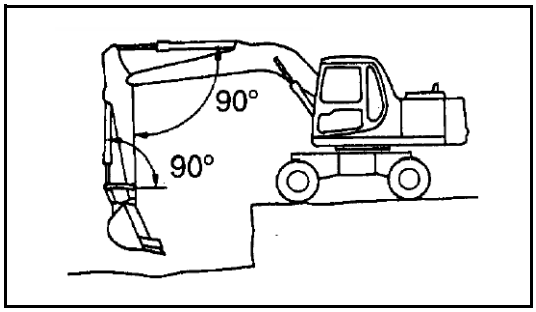

There may be some differences depending on the excavation depth, but try to use within the above range rather than going all the way to the extreme end of the cylinder stroke.

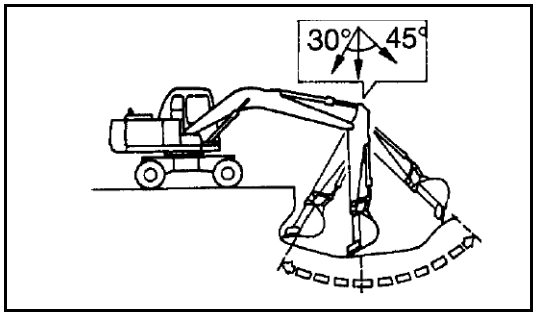

SHOVEL WORK

A shovel is suitable for excavating at a position higher than the machine. Shovel work is performed by attaching the bucket in the reverse direction.

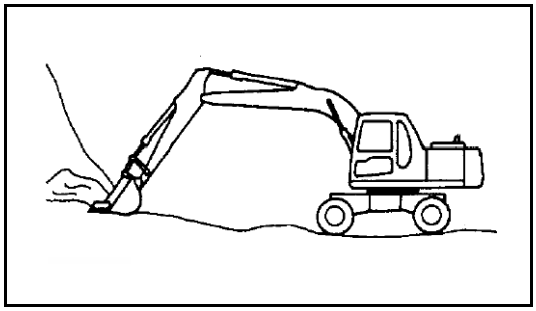

https://truckmanualshub.com/

DITCHING WORK

Ditching work can be performed efficiently by attaching a bucket to match the width of the ditch and then setting the wheels parallel to the line of the ditch to be excavated.
To excavate a wide ditch, first dig out both sides and then finally remove the center portion.

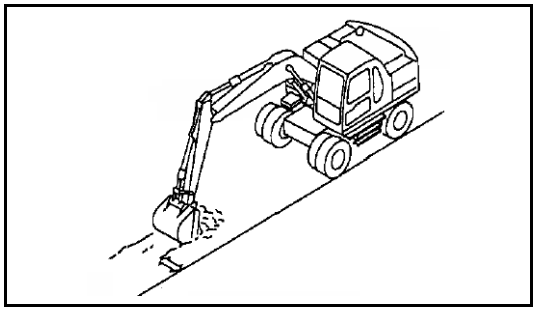

LOADING WORK

In places where the swing angle is small, work efficiency can be enhanced by locating the dump truck in a place easily visible to the operator.
Loading is easier and capacity greater if you begin from the front of the dump truck body than if loading is done from the side.

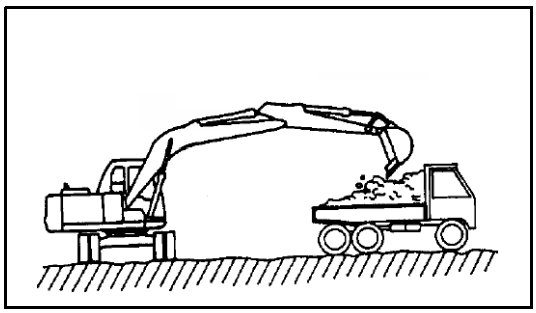

REPLACEMENT AND INVERSION OF BUCKET

⚠ WARNING

- **When knocking the pin in with a hammer, metal particles may fly and cause serious injury, particularly if they get into your eyes. When carrying out this operation, always wear goggles, helmet, gloves, and other protective equipment.**
- **When the bucket is removed, place it in a stable condition.**

Stop the machine on a firm, flat surface. When performing joint work, make clear signals to each other and work carefully for safety's sake.

REPLACEMENT

1. Place the bucket in contact with a flat surface.

REMARK
When removing the pins, place the bucket so that it is in light contact with the ground.

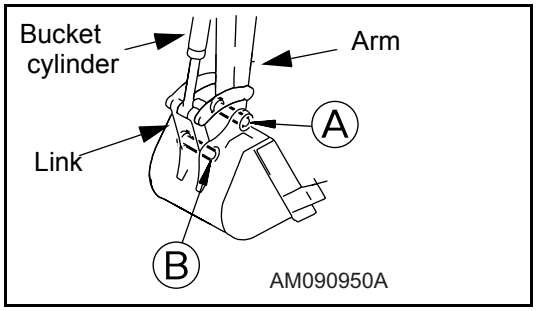

https://truckmanualshub.com/

If the bucket is lowered strongly to the ground, the resistance will be increased and it will be difficult to remove the pins.

2. Remove the stopper bolts and nuts, then remove pins (A) and (B) and remove the bucket.

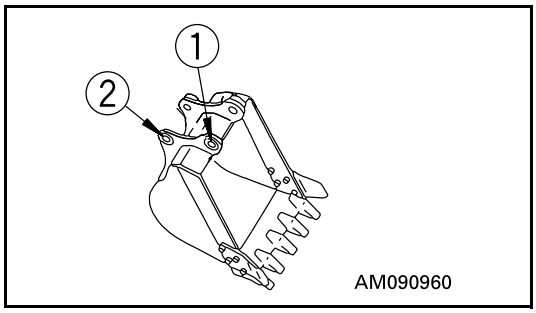

NOTICE

After removing the pins, make sure that they do not become contaminated with sand or mud and that the seals of bushing on both sides do not become damaged.

3. Align the arm with holes (1) and the link with holes (2), then coat with grease and install pins (A) and (B).

REMARK

When installing the bucket, the O-rings are easily damaged, so fit the O-rings on the boss of the arm end as shown in the diagram.
When knocking the pin, move the O-ring down to the regular groove.

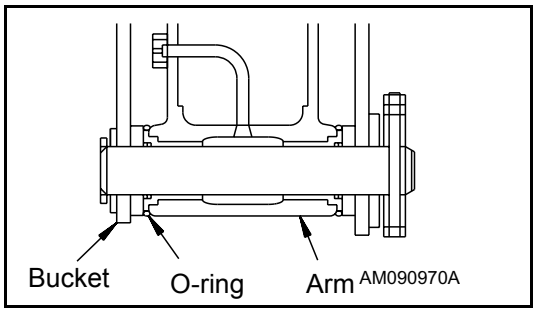

4. Install the stopper bolts and nuts for each pin, then grease the pin.

INVERSION

1. Place the bucket in contact with a flat surface.

REMARK

When removing the pins, place the bucket so that it is in light contact with the ground.
If the bucket is lowered strongly to the ground, the resistance will be increased and it will be difficult to remove the pins.

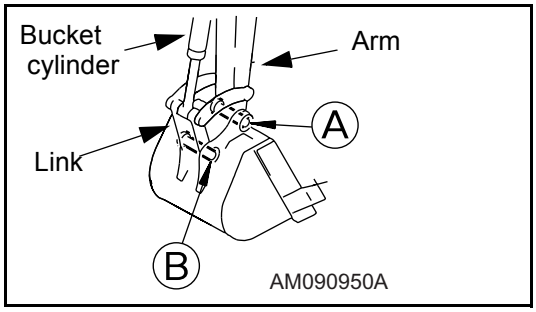

2. Remove the stopper bolts and nuts, then remove pins and, and remove the bucket.

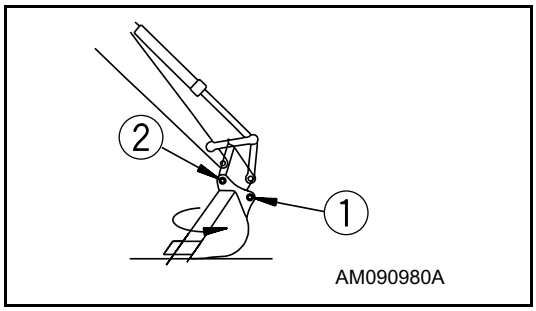

https://truckmanualshub.com/

NOTICE

After removing the pins, make sure that they do not become contaminated with sand or mud and that the seals of bushing on both sides do not become damaged.

3. Install the bucket inversely.
   After the bucket is inversed, correct the inclination and direction of the retaining pin holes (1) and (2) and stabilise the bucket securely.

4. Align the arm with holes (1) and the link with holes (2), then coat with grease and install pins (A) and (B).

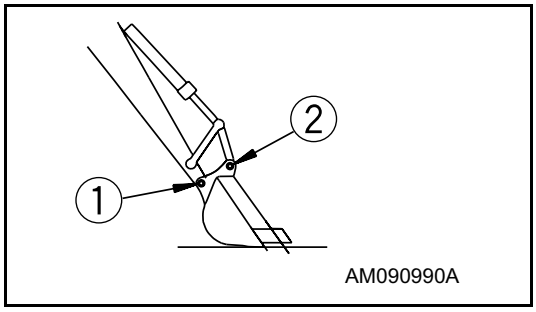

REMARK

Install the O-rings into retaining hole (1) of the arm and bucket.

When installing the bucket, the O-rings are easily damaged, so fit the O-rings on the boss of the arm end as shown in the diagram. When knocking the pin, move the O-ring down to the regular groove.

5. Install the stopper bolts and nuts for each pin, then grease the pin.

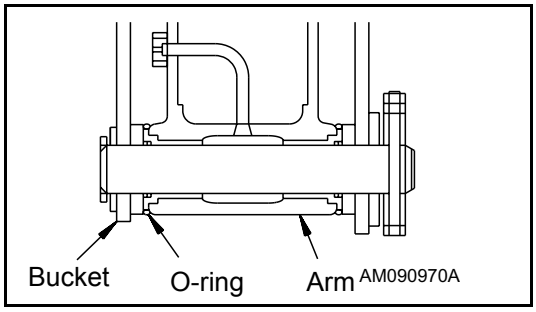

https://truckmanualshub.com/

PARKING MACHINE

⚠ WARNING

- **Avoid stopping suddenly. Give yourself ample room when stopping.**
- **When stopping the machine, select flat hard ground and avoid dangerous places. If it is unavoidably necessary to park the machine on a slope, insert chocks underneath the wheels. As an additional safety measure, thrust the bucket into the ground.**

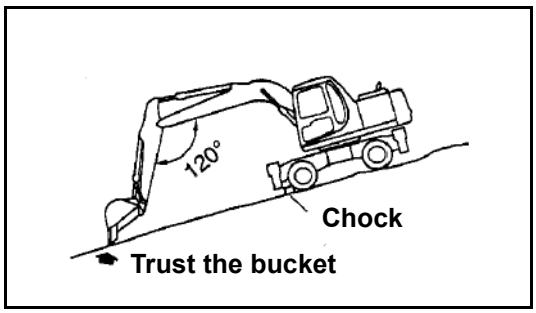

- **If the control lever is touched by accident, the work equipment or the machine may move suddenly, and this may lead to a serious accident. Before leaving the operator's compartment, always set the control lever pad safety lock lever securely to LOCK position.**

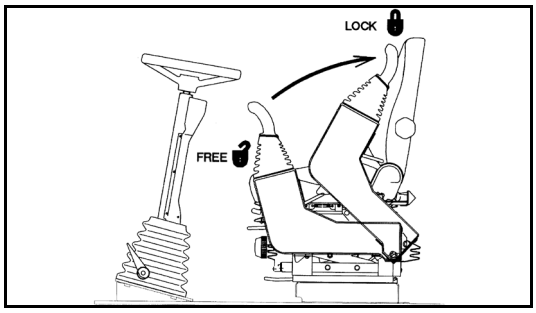

1. Depress the brake pedal (1) until machine stops.

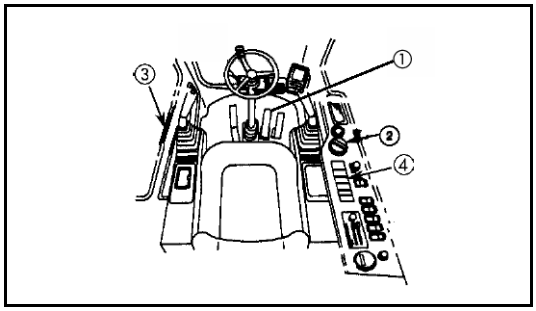

2. Turn fuel control dial (2) to lower the engine speed to low idling.

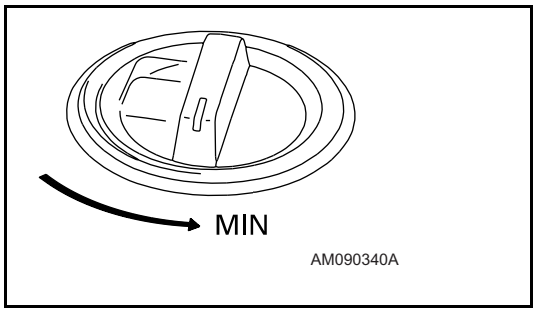

https://truckmanualshub.com/

3. Operate park brake by using switch(4).

4. Lower the bucket horizontally until the bottom touches the ground.

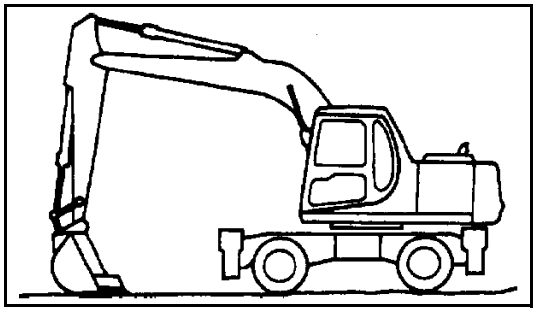

5. Set control lever pad safety lock (3) to the LOCK position.

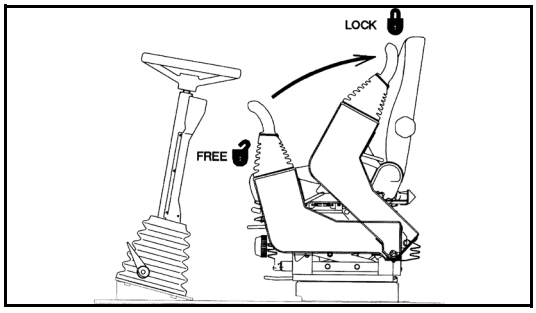

CHECK AFTER FINISHING WORK

Check the engine water temperature, engine oil pressure and fuel level on the monitor.

STOPPING ENGINE

NOTICE

If the engine is abruptly stopped before it has cooled down, engine life may be greatly shortened. Consequently, do not abruptly stop the engine apart from an emergency.
In particular, if the engine has overheated, do not abruptly stop it but run it at medium speed to allow it to cool gradually, then stop it.

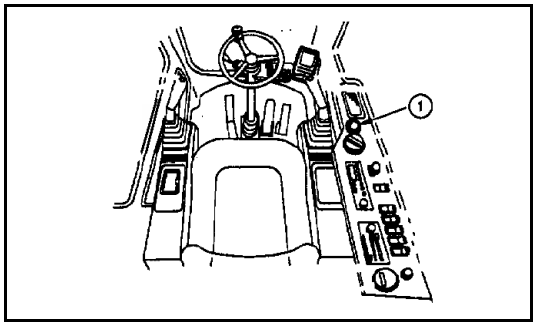

1. Run the engine at low idling speed for about 5 minutes to allow it to gradually cool down.

2. Turn the key in starting switch (1) to the OFF position and stop the engine.

3. Remove the key from starting switch (1).

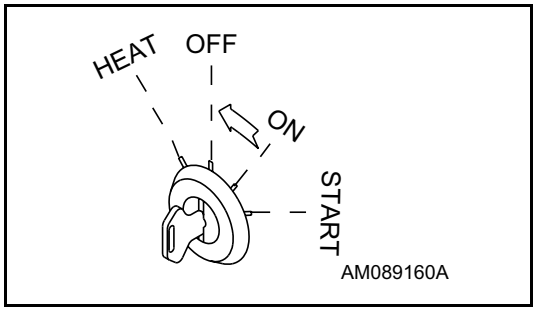

https://truckmanualshub.com/

CHECK AFTER STOPPING ENGINE

1. Walk around the machine and check the work equipment, paint work, and undercarriage, and check also for leakage of oil or water. If any abnormalities are found, repair them.
2. Fill the fuel tank.
3. Check the engine compartment for paper and debris. Clean out any paper and debris to avoid a fire hazard.
4. Remove any mud stuck to the undercarriage.

LOCKING

Always lock the following places.

(1)	Door of operator's cab. Always remember to close the window.
(2)	Fuel tank filler port
(3)	Engine hood
(4)	Tool box cover
(5)	Battery room door (left side of machine)

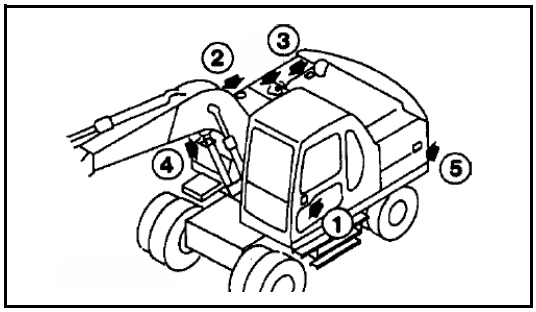

REMARK

Use the starting switch key to open and close all these places.

OVERLOAD WARNING DEVICE

Excavators are provided with this device to warn the operator about tipping over while lifting loads. A buzzer will sound when the machine is in LO mode. and the machine nears its lifting capacity

NOTE: Only conduct lifting operations in LO mode as the overload warning system is only active in this mode.

HANDLING THE WHEELS

⚠ WARNING

Incorrect handling of wheels and tyres can result in serious injury or death.
Particular care is required when working on twin wheel assemblies.

https://truckmanualshub.com/

Before any attempt is made to remove the road wheels the tyres must be fully deflated.

1. General information

- Always replace damaged parts with new parts from your Komatsu distributor.
  Never attempt to repair damaged items.
- Use the appropriate tools in a good condition to remove the various pieces of the rim. Never use metallic hammer, use a mallet with a face made from Rubber, Plastic or Copper.
- On machines fitted with twin wheel assemblies a valve extension is fitted to the inner wheel to facilitate deflation. This part should always be refitted following disassembly as it ensures that the inner wheel assembly can be deflated whilst fitted to the hub.

Tyre pressure:	10.00 - 20 14 ply tyres (Twin assy)
Front wheel:	6.75 Bar Rear wheel: 6.75 Bar
Tyre pressure:	18 R 19.5 (Single) Tyres
Front wheel:	8.0 Bar Rear wheel: 8.0 Bar

2. Before starting to remove the wheels

1. Depress the brake pedal fully until it locks.
2. Raise the chassis with the boom so that the tyres are raised above the ground. Then, place axle stands below the front and rear axles.
3. Loosen wheel nuts with a wheel wrench. Wheel nuts have R.H. threads.
4. Proceed in accordance with the following procedure, paying attention to the information specific to the type of wheel assembly fitted to the machine on which you are working.

https://truckmanualshub.com/

⚠ WARNING

Failure to observe the following procedure may result in serious injury or death.

3. Twin wheel assembly - 3 part rim

A	Rim Base
B	Loose flange
C	Lockring
D	Rim Gutter (groove)

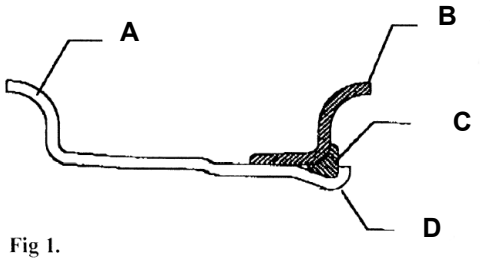

Fig 1.

Deflation and removal:

- Before loosening the wheel retaining nuts, completely deflate the tyres by removing the valve with the appropriate tool. Always stand to the side during the deflating operation.
- Release 8 of the wheel retaining nuts leaving 2 diagonally opposed nuts to hold the assembly in position. Check that there is no remaining pressure being exerted on these remaing nuts by either the internal or external wheel assembly. Once satisfied that the remaining nuts are under no pressure, remove them.
- In order to remove the tyre from the rim first remove the lock-ring by progressively levering it from the gutter (groove). Do not exert excessive force as this may deform the retaining ring.
- Remove the loose flange and then the tyre/tube.

Re - assembly & inflation

- Check thoroughly the condition of the wheel and rim for signs of wear or damage.
  Discard any defective or doubtful parts and replace with approved replacement parts.
  Clean the rims with a hard brush paying particular attention to the bottom of the rim gutter (groove).
- Fit the tyre to the rim base and fit the tube, ensuring that the valve is correctly located in its through hole.
- Place the loose flange against the tyre bead in the orientation shown in Fig. 1. Push it into place sufficient to clear the rim gutter (groove) to enable the lock-ring to be fitted.

https://truckmanualshub.com/

- Insert the lock-ring with the aid of specific tools or with levers and a suitable mallet. Check correct seating of the lock-ring by measuring the dimension of the gap shown in Fig. 2.

If it is not possible to achieve the stated gap with the lock-ring seated correctly renew the rim assembly.

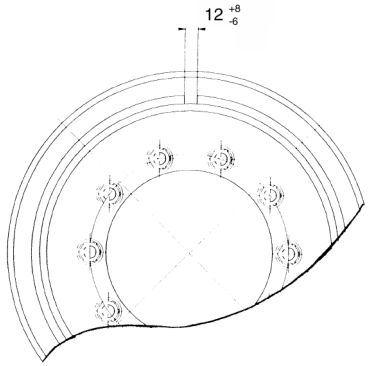

Fig 2.

⚠ WARNING

It is essential that the lock-ring is seated correctly.

- Put the wheel assembly into a safety cage and inflate the tyre to a pressure of 1 - 1.5 Bar.

- Visually check the lock-ring is still seated correctly and there is no clearance between it and the loose flange Fig. 3.

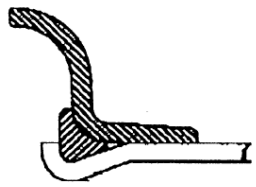

Fig 3.

YES CORRECT ASSEMBLY

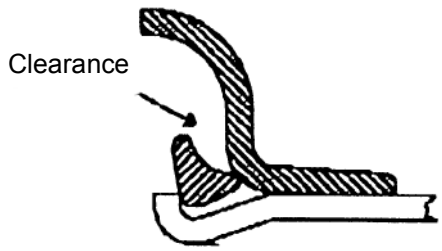

NO WRONG ASSEMBLY

- If the lock-ring is not in the correct position stop the procedure as the lock-ring may be ejected from the groove resulting in possible injury.
  Deflate the tyre and repeat the procedure.
  If the lock-ring is correctly positioned continue to inflate the tyre to the value given in the previous table.

- Before removing the wheel assembly from the safety cage repeat the visual check.

- When refitting the wheel assemblies, tighten at least 2 diagonally opposite wheel nuts and then tighten the tyres to the specified torque in the order shown in Fig. 4.
  Tightening torque: 450 Nm

- Retighten to the specified torque after 5 hours operation.

https://truckmanualshub.com/

4. Twin wheel assembly - 2 part rim

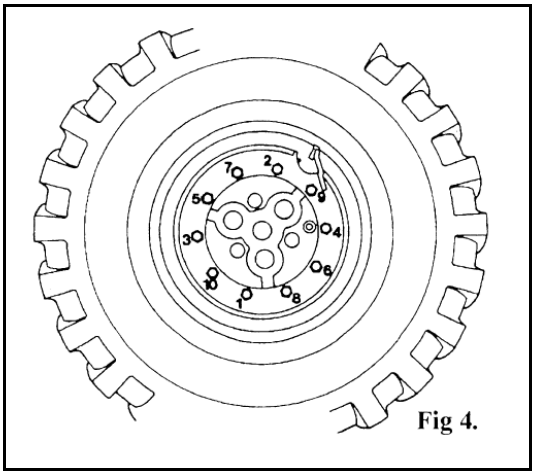

Fig 4.

Some KUK machines are fitted with a 2 piece wheel rim of the type shown in Fig. 5. In this case the loose flange and lock-ring are replaced by a single split flange.

A	Split flange
B	Rim base

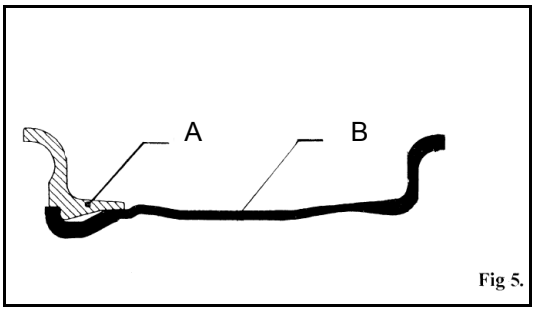

Fig 5.

Similar precautions are required to those for the 3 piece rim when removing and refitting the wheel assemblies. However when judging the condition of the split flange, the following dimension applies.

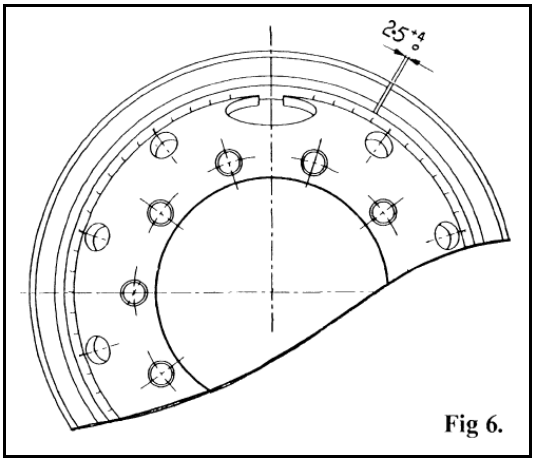

Fig 6.

5. Single wheel assemblies

If the machine is fitted with single wheel assemblies a tubeless tyre 18 R 19.5 size is used with a corresponding 1 piece wheel rim. Care should still be taken to suitably guard the tyre during inflation and as with the other rim types no attempt should be made to modify or repair damaged parts.

6. Maintenance

Periodically remove the road-wheels, following the procedure detailed previously and perform the following checks.

- Remove all dirt especially in the area of the tyre bead seat and check the condition of the rim. If there are any signs of deformation or cracks the wheel must be replaced.
- Check carefully the wheel attachment holes, if you notice signs of ovalization or the presence of cracks the wheel must be replaced.
- If the fixing nuts or hub studs show signs of wear or corrosion they must be replaced.

https://truckmanualshub.com/

7. Wheel spacer

⚠ WARNING

Wheel spacers must not be used with radial ply tyres.

8. Rotating tyres

Consult your local Komatsu distributor for advice on rotating tyres.

https://truckmanualshub.com/

TRANSPORTATION

When transporting the machine, observe all related laws and regulations, and be careful to assure safety.

LOADING, UNLOADING WORK

⚠ WARNING

- **Loading or unloading the machine can be a dangerous operation, so be particularly careful.**
  When loading or unloading the machine, run the engine at low idling and travel at low speed.
- **Make sure the ramp has sufficient width, length and thickness to enable the machine to be safely loaded and unloaded. If the ramp sags appreciably, reinforce it with blocks, etc.**
- **When loading and unloading the machine, park the trailer on a flat firm roadbed. Keep a fairly long distance between the road shoulder and the machine.**
- **Remove the mud from the undercarriage to prevent the machine from slipping to the side on slopes.**
  Be sure the ramp surface is clean and free of grease, oil, ice and loose materials.
- **Never change the direction of travel when on the ramps. If it is necessary to change direction, drive off the ramps and correct the direction, then drive on to the ramps again.**
- **When turning the machine on the trailer, the machine's footing is unstable, so carry out the operation slowly.**
- **Always check that the door on the cab is locked, regardless of whether it is open or closed.**
  Do not open or close the door on ramps or on a platform. This may cause a sudden change in the operating force.
- **When loading or unloading the machine with the automatic warming-up operation mode, if the automatic mode is released, the speed may change suddenly. Avoid loading or unloading during automatic warming-up operation.**

https://truckmanualshub.com/

When loading or unloading, always use ramps or a platform and carry out the operations as follows.

1. Properly apply the brakes on the trailer and insert blocks(2) beneath the tyres to ensure that it does not move. Then fix the ramps in line with the centers of the trailer and the machine. Be sure that the two sides are at the same level as one another.

Make the angle of the ramps (3) a maximum of 15°.

Set the distance between the ramps (A) to match the center of the wheels.

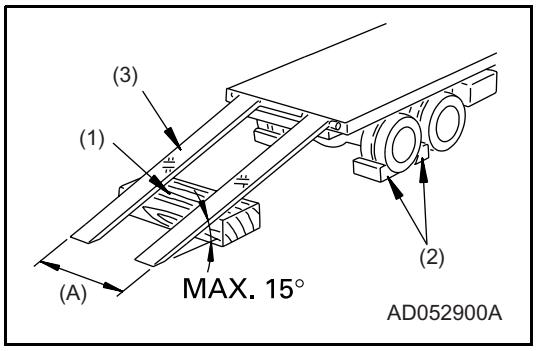

2. Set the travel speed switch to the Mi position.

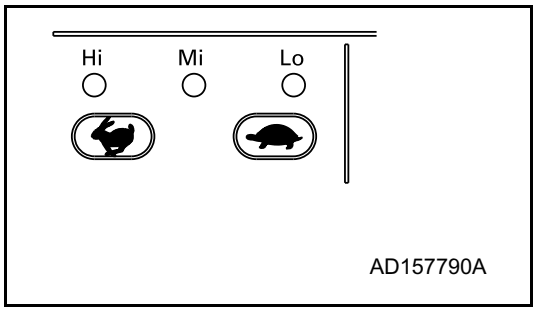

3. Turn the auto-deceleration switch OFF, and return the fuel control dial to reduce the engine speed.

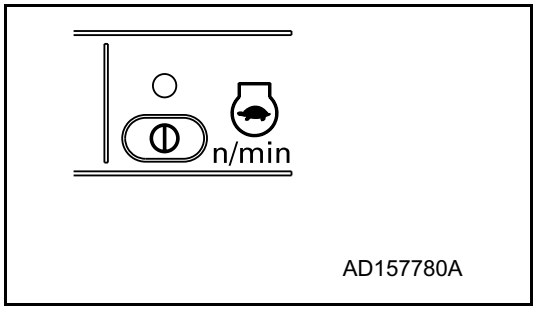

4. Turn the swing lock switch ON to apply the swing lock.

5. Set in the direction of the ramps, lower the work equipment as far as possible without letting it hit the trailer, then travel slowly to load or unload the machine.

When on the ramps, do not operate any lever other than the travel lever.

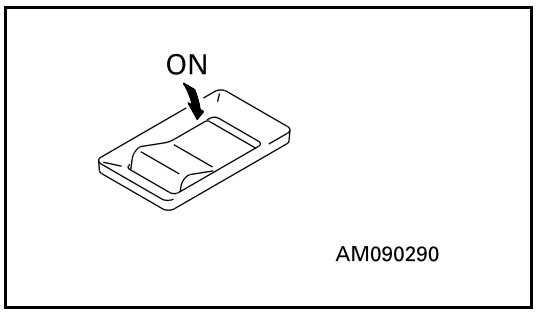

6. Load the machine correctly in the specified position on the trailer.

REMARK

When the work equipment is installed, load the machine from the front; when the work equipment is not installed, load the machine from the rear.

https://truckmanualshub.com/

PRECAUTIONS FOR LOADING

⚠ WARNING

When loading the machine, park the trailer on a flat firm roadbed. Keep a fairly long distance between the road shoulder and the machine.

After loading to the specified position, secure the machine as follows.

1. Fully extend the bucket and arm cylinders, then slowly lower the boom.
2. Stop the engine and remove the key from the starting switch.

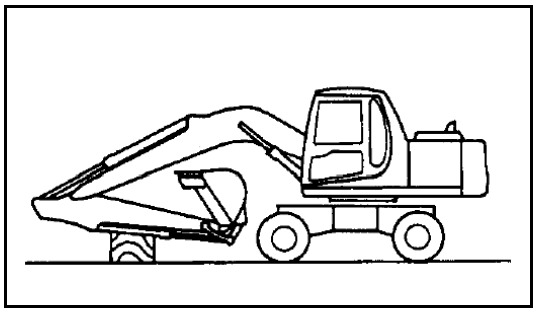

3. Lock all the control levers securely with the control lever pad safety lock.

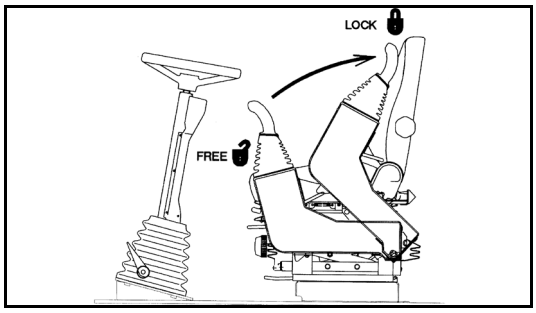

4. When transporting the machine, place rectangular timber underneath the front and rear wheels to prevent the machine from moving about. Also, hold it down with chains or rope. Be particularly careful to ensure that the machine does not slip sideways.

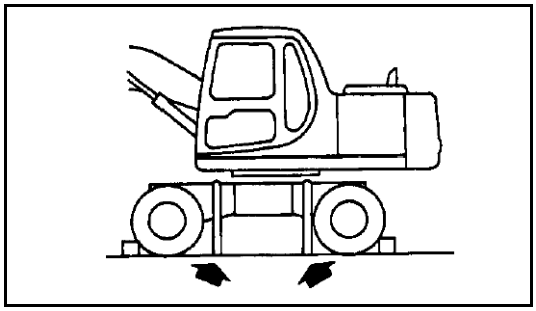

NOTICE

When transporting the machine, place rectangular timber under one end of the bucket cylinder to prevent it touching the ground, thereby saving it from possible damage.

HOW TO LIFT THE MACHINE

Personnel who perform lifting using a crane must be qualified.

https://truckmanualshub.com/

⚠ WARNING

Contact your distributor to get instructions of lifting a machine. Some parts are required and are available as optional parts.

⚠ WARNING

- **Do not lift a vehicle with personnel in it.**
- **The rope used for lifting must have sufficient strength to with stand the weight of this machine.**
- **The machine must not be in a position other than that shown in the following procedure when lifting a vehicle. Otherwise, the machine may be unbalanced.**

Lifting a machine must be performed on a flat place with the following procedure.

1. Start the engine and set the machine in the position shown in the figure at the right (boom at the top stroke end, arm bucket fully retracted). Direct the top revolving super-structure straight forward.
2. Set the control lever pad safety lock in the lock position.
3. Stop the engine. Confirm safety around the operator seat. Get off the machine.
   Be sure to close the cab door, windshield, right and left doors, engine hood, etc.
4. Mount a shackle to the lifting hook on the boom and the counter weight. Hang the wire rope.
5. The length off the wire rope and the lifting angle must be as shown in the figure on the right.
6. When lifting, make sure that there is no change in the position due to possible leakage in the hydraulic circuit on the boom cylinder head side.
7. When the machine leaves the ground, stop the machine and make sure sufficiently that the machine is balanced.
   Then, lift the machine slowly.

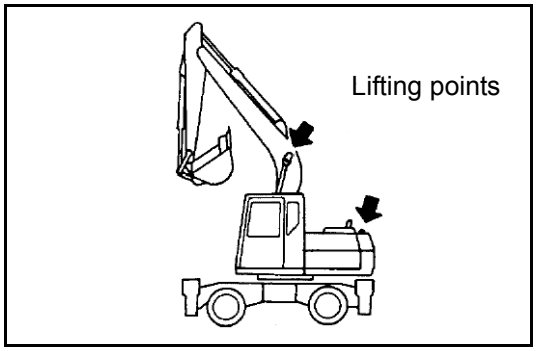

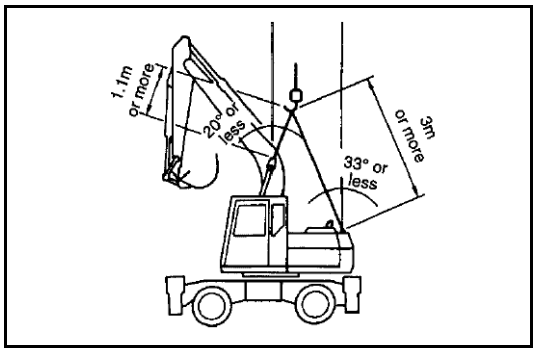

https://truckmanualshub.com/

PRECAUTIONS FOR TRANSPORTATION

WARNING

- **Determine the route for transporting the machine by taking into account the width, height and weight of the machine.**
- **Always check that the door on the cab is closed and locked before transporting the machine.**

NOTICE

Always retract the car radio antenna.

Obey all state and local laws governing the weight, width and length of a load. Observe all regulations governing wide loads.

Specifications	Overall length (A) (mm)	Overall width (B) (mm)	Overall height (mm)	* Weight Kg
1 piece boom	7600	2490	3080	12200
2 piece boom	7800	2490	3080	13100

(1) Height for transport = (2) Overall height + (3) height of trailer platform

* Weights and dimensions: will vary according to specification.

Consult your Komatsu distributor if in doubt.

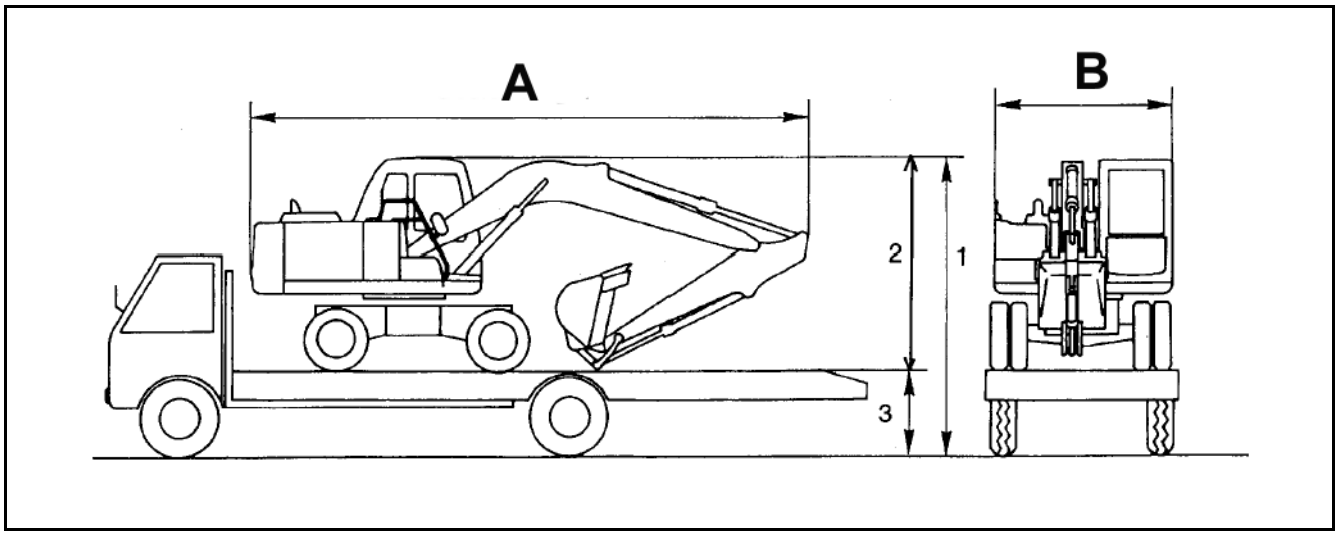

https://truckmanualshub.com/

TRAVELLING POSTURE

Before starting to travel, be sure to pull in and lock the outriggers, and/or raise the dozer blade.

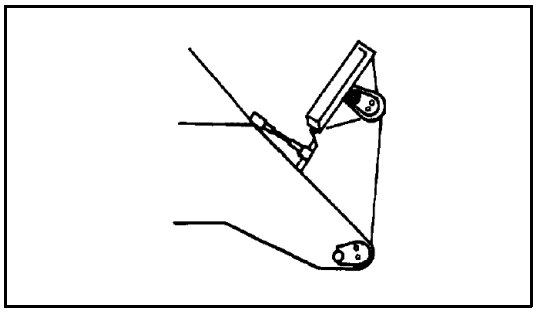

Before travelling on public roads, the work equipment should be positioned as follows.

1. Position the upper structure so that it is facing the front of the undercarriage (the oscillation lock cylinders can be seen) and insert the swing lock pin.
2. Fully extend the bucket cylinder.
3. Fully extend the first boom cylinders.
4. Fully extract the second boom cylinders.
5. Adjust the arm cylinder such that the boom and arm pointers are aligned.
6. Disable the work equipment levers by moving the control lever pad safety lock to the locked position.
7. Close manual lock valves

   1) For the bucket cylinder, located on the arm.

   2) For the arm cylinder, located on the first boom.

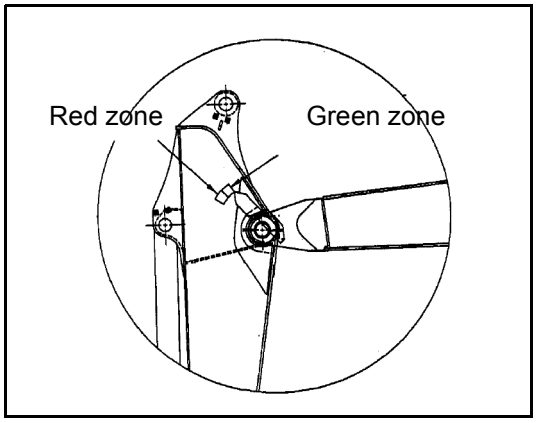

After setting the machine in the travelling posture, confirm that its overall height is below 4m and that the distance between the centre of the steering wheel and the front of the work equipment is less than 3.5 m.

Before moving off, lock all machine cover and toolbox doors to prevent accidental opening.

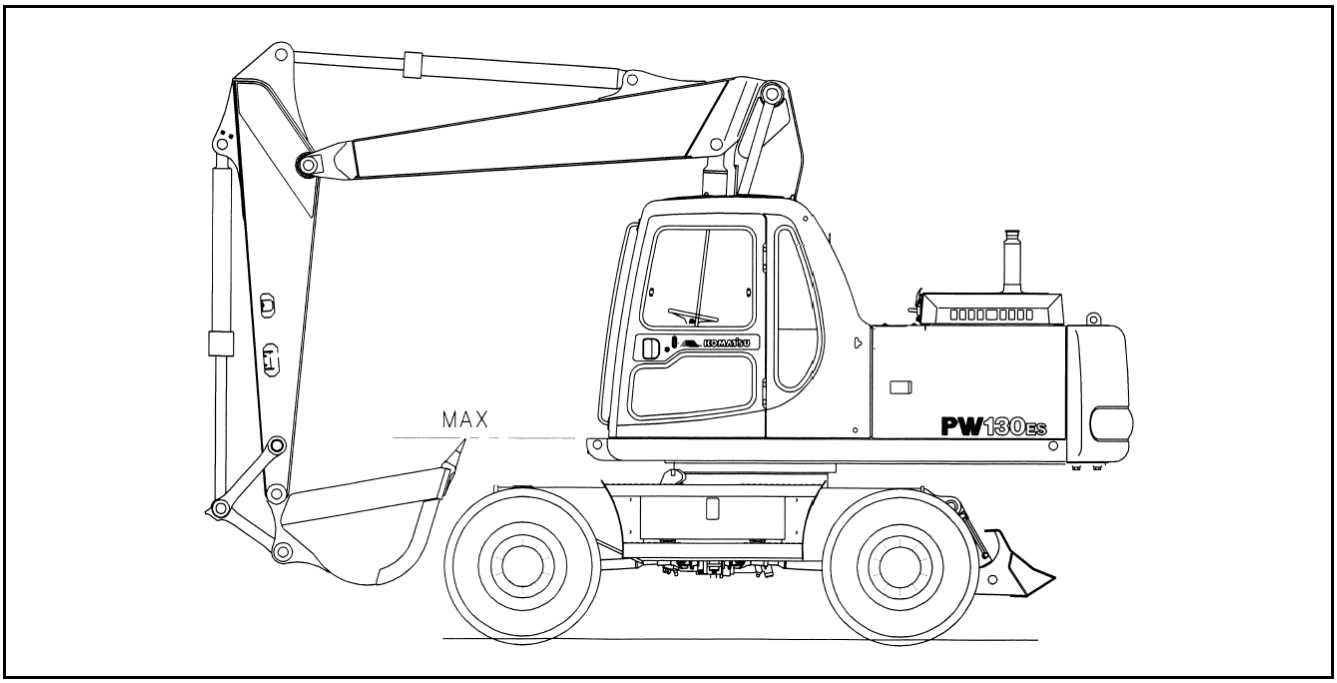

https://truckmanualshub.com/

COLD WEATHER OPERATION

PRECAUTIONS FOR LOW TEMPERATURE

If the temperature becomes low, it becomes difficult to start the engine, and the coolant may freeze, so do as follows.

FUEL AND LUBRICANTS

Change to fuel and oil with low viscosity for all components. For details of the specified viscosity, see “USE FUEL, COOLANT AND LUBRICANTS ACCORDING TO AMBIENT TEMPERATURE” on page 173.

COOLANT

Keep antifreeze fluid away from an open flame. Never smoke when using antifreeze.

NOTICE

- **• Never use methanol, ethanol or propanol based antifreeze.**
- **Absolutely avoid using any water leak preventing agent irrespective of whether it is used independently or mixed with an antifreeze.**
- **Do not mix one antifreeze with a different brand.**

  For details of the antifreeze mixture when changing the coolant, see see “WHEN REQUIRED” on page 188.

Use a Permanent Antifreeze (ethylene glycol mixed with corrosion inhibitor, antifoam agent, etc.) meeting the standard requirements as shown below. With permanent antifreeze, no change of coolant is required for a year. If it is doubtful that an available antifreeze meets the standard requirements, ask the supplier of that antifreeze for information.

Standard requirements for permanent antifreeze

- SAE..... J1034
- FEDERAL STANDARD..... O-A-548D

REMARK

Where no permanent antifreeze is available, an ethylene glycol antifreeze without corrosion inhibitor may be used only for the cold season. In this case, clean the cooling system twice a year (in spring and autumn). When refilling the cooling system, add antifreeze in autumn, but do not add any in spring.

https://truckmanualshub.com/

BATTERY

WARNING

- **To avoid gas explosions, do not bring fire or sparks near the battery.**
- **Battery electrolyte is dangerous. If it gets in your eyes or on your skin, wash it off with large amounts of water, and consult a doctor.**

When the ambient temperature drops, the capacity of the battery will also drop. If the battery charge ratio is low, the battery electrolyte may freeze.
Maintain the battery charge as close as possible to 100%, and insulate it against cold temperature so that the machine can be started easily the next morning.

REMARK
Measure the specific gravity and calculate the rate of charge from the following conversion table.

Temp. of fluid / Rate of charge	20°C	0°C	-10°	-20°
100%	1,28	1,29	1,30	1,31
90%	1,26	1,27	1,28	1,29
80%	1,24	1,25	1,26	1,27
75%	1,23	1,24	1,25	1,26

PRECAUTIONS AFTER COMPLETION OF WORK

To prevent mud, water, or the undercarriage from freezing and making it impossible for the machine to move the following morning, always observe the following precautions.

- Mud and water on the machine body should be completely removed. This is to prevent damage to the seal caused by mud or dirt getting inside the seal with frozen drops of water.
- Park the machine on hard, dry ground. If this is impossible, park the machine on wooden boards. The boards help protect the tracks from being frozen in soil and the machine can start next morning.
- Open the drain valve and drain any water collected in the fuel system to prevent it from freezing.
- After operation in water or mud, remove water from undercarriage as described below, to extend undercarriage service life.

https://truckmanualshub.com/

- As the battery capacity drops markedly in low temperatures, cover the battery or remove it from the machine, keep it in a warm place, and install it again the next morning.
- If electrolyte level is found low, add distilled water in the morning before beginning work. Do not add the water after the day's work so as to prevent fluid in the battery from freezing in the night.

AFTER COLD WEATHER

When season changes and the weather becomes warmer, do as follows.

- Replace the fuel and oil for all parts with oil of the viscosity specified.

  For details, see "USE FUEL, COOLANT AND LUBRICANTS ACCORDING TO AMBIENT TEMPERATURE" on page 173.

- If for any reason permanent antifreeze cannot be used, and an ethyl glycol base antifreeze (winter, one season type) is used instead, or if no antifreeze is used, drain the cooling system completely, then clean out the inside of the cooling system thoroughly, and fill with fresh water.

https://truckmanualshub.com/

LONG-TERM STORAGE

BEFORE STORAGE

NOTICE

To protect the cylinder rod when the machine is not being used, set the work equipment in the posture shown in the diagram. (This prevents rusting of the cylinder rod)

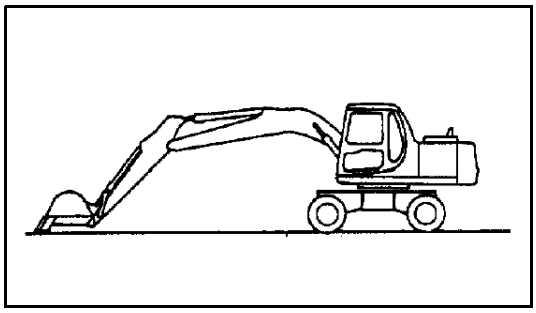

When putting the machine in storage for a long time, do as follows.

- After every part is washed and dried, the machine shall be housed in a dry building. Never leave it outdoors. In case it is indispensable to leave it outdoors, park the machine on the well-drained concrete and cover it with canvas etc.
- Completely fill the fuel tank, lubricate and change the oil before storage.
- Apply a thin coat of grease to metal surface of the hydraulic piston rods.
- Disconnect the negative terminals of the battery and cover it, or remove it from the machine and store it separately.
- If the ambient temperature is expected to drop below 0°C, always add antifreeze to the cooling water.
- Lock each control lever with the lock lever.
- Set the stop valve to the “lock” position on machines ready for attachments. Install the blind plugs to the elbows.
- Set the selector valve to the “Crusher and general attachment” position on machines ready for attachments.

DURING STORAGE

⚠ WARNING

If it is unavoidably necessary to carry out the rust preventive operation while the machine is indoors, open the doors and windows to improve ventilation and prevent gas poisoning.

Operate the engine and move the machine for a short distance once a month so that a new film of oil will be coated over movable parts and component surfaces. At the same time, also charge the battery.

Also carry out cooler operation in the case of machines equipped with an air conditioner.

https://truckmanualshub.com/

AFTER STORAGE

NOTICE

If the machine is stored without carrying out the monthly rust prevention operation, request your Komatsu distributor for service.

Carry out the following procedure when taking the machine out of long-term storage.

- Wipe off the grease from the hydraulic cylinder rods.
- Add oil and grease to all places.

STARTING MACHINE AFTER LONG-TERM STORAGE

When starting the machine after a long-term storage, first cancel the automatic warming-up function as follows.

1. Turn the starting switch key to the ON position.
2. Turn the fuel control dial from the low idling (MIN) position to the full (MAX) position, hold it there for 3 seconds, then return it to the low idling (MIN) position and start the engine.

https://truckmanualshub.com/

TROUBLESHOOTING

PHENOMENA THAT ARE NOT FAILURES

Note that the following phenomena are not failures:

1. When the arm is pulled in, the speed of movement will drop momentarily when the arm is more or less vertical.
2. The arm speed will drop momentarily when the bucket teeth are more or less horizontal.

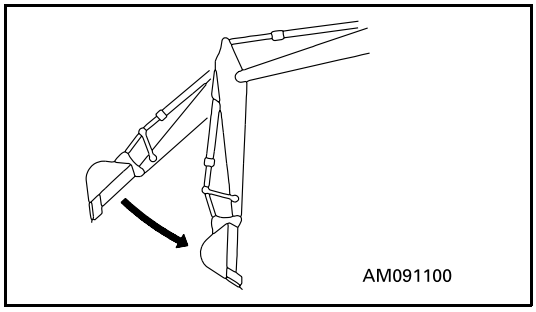

3. When starting or stopping the swing, noise will be emitted from the brake valve.
4. When going down a steep slope at low speed, a noise will be emitted from the travel motor.

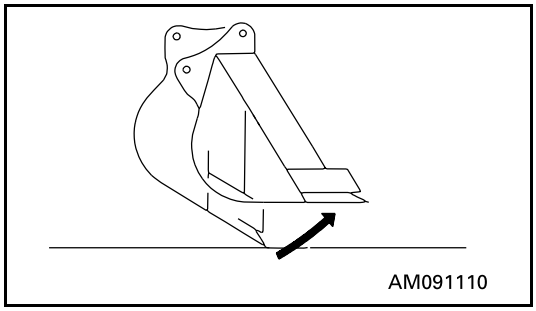

https://truckmanualshub.com/

METHOD OF TOWING MACHINE

WARNING

When towing the machine, use a wire rope that has ample strength for the weight of the machine that is being towed.

If the machine sinks in mud and cannot get out under its own power, or if the drawbar pull of the excavator is being used to tow a heavy object, use a wire rope as shown in the diagram.

WHEN USING THE FRONT OF CHASSIS

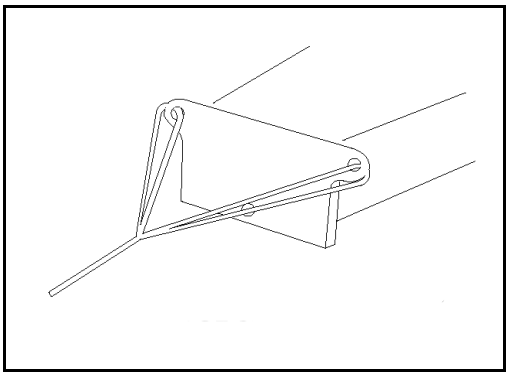

WHEN USING THE REAR OF THE CHASSIS

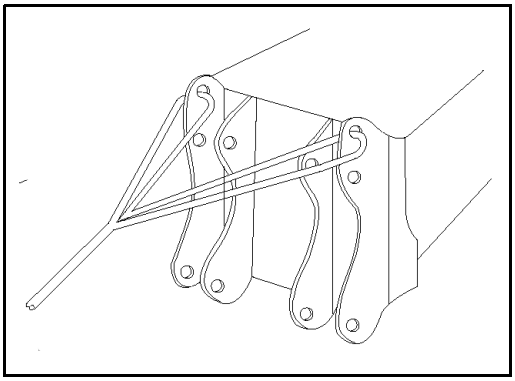

PRECAUTIONS ON PARTICULAR JOBSITES

1. When carrying out digging operations in water, if the work equipment mounting pin goes into the water, carry out greasing every time the operation is carried out.
2. For heavy-duty operations and deep digging, carry out greasing of the work equipment mounting pins every time before operation.
3. After greasing, operate the boom, arm and bucket several times, then grease again.

https://truckmanualshub.com/

IF BATTERY IS DISCHARGED

⚠ WARNING

- **When checking or handling the battery, stop the engine and turn the starting switch key to the OFF position before starting.**
- **The battery generates hydrogen gas, so there is danger of explosion. Do not bring lighted cigarettes near the battery, or do anything that will cause sparks.**
- **Battery electrolyte is dilute sulphuric acid, and it will attack your clothes and skin. If it gets on your clothes or on your skin, wash it immediately with large amounts of water. If it gets in your eyes, wash it out with fresh water, and consult a doctor.**
- **When handling battery, always wear protective goggles.**
- **When removing the battery, first disconnect the cable from the ground (normally, from the negative (-) terminal). When installing, install the positive (+) terminal first. If a tool touches the cable connecting the positive (+) terminal and the chassis, there is danger that it will cause sparks.**
- **If the terminals are loose, there is danger that the defective contact may generate sparks that will cause an explosion.**
- **When installing the terminals, install them tightly.**
- **When removing or installing, check which is the positive (+) terminal and negative (-) terminal.**

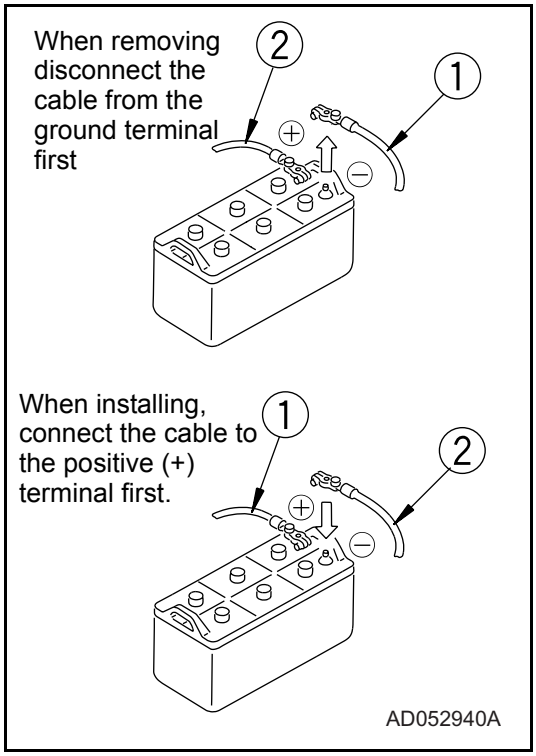

STARTING ENGINE WITH BOOSTER CABLE

When starting the engine with a booster cable, do as follows:

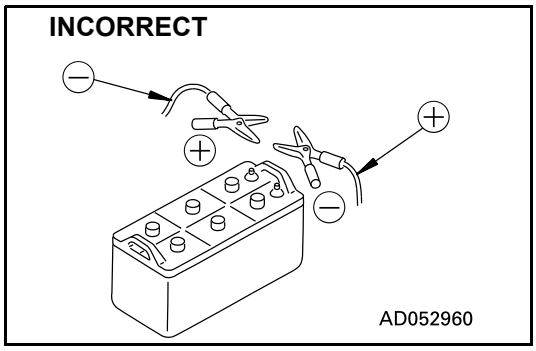

https://truckmanualshub.com/

Precautions when connecting and disconnecting booster cable

⚠ WARNING

- **When connecting the cables, never contact the positive (+) and negative (-) terminals.**
- **When starting the engine with a booster cable, always wear safety glasses.**
- **Be careful not to let the normal machine and problem machine contact each other. This prevents sparks from generating near the battery which could ignite the hydrogen gas given off by the battery. If hydrogen gas explodes, it could cause serious injury.**
- **Make sure that there is no mistake in the booster cable connections. The final connection is to the revolving frame, but sparks will be generated when this is done, so connect to a place as far as possible from the battery. (However, avoid connecting the cable to the work equipment, as conduction is poor.)**
- **Use care when removing the cables from the machine that has been started. Do not allow the cable ends to contact each other or the machine, to avoid hydrogen explosion.**

NOTICE

- **The size of the booster cable and clip should be suitable for the battery size.**
- **The battery of the normal machine must be the same capacity as that of the engine to be started.**
- **Check the cables and clips for damage or corrosion.**
- **Make sure that the cables and clips are firmly connected.**

Connecting the booster cables

Keep the starting switch at the OFF position.
Connect the booster cable as follows, in the order of the numbers marked in the diagram.

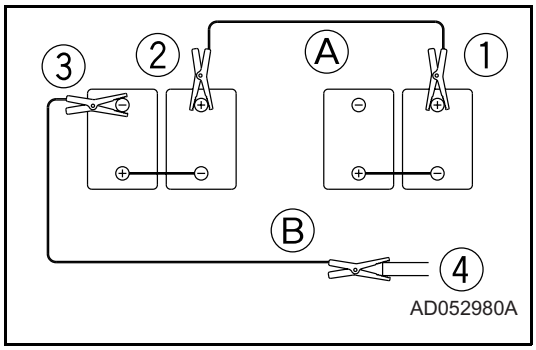

1. Make sure that the starting switches of the normal machine and problem machine are both at the OFF position.
2. Connect one clip of booster cable (A) to the positive (+) terminal of the problem machine.
3. Connect the other clip of booster cable (A) to the positive (+) terminal of the normal machine.
4. Connect one clip of booster cable (B) to the negative (-) terminal of the normal machine.

https://truckmanualshub.com/

5. Connect the other clip of booster cable (B) to the engine block of the problem machine.

Starting the engine

1. Make sure the clips are firmly connected to the battery terminals.
2. Start the engine of the normal machine and keep it to run at high idling speed.
3. Turn the starting switch of the problem machine to the START position and start the engine. If the engine doesn't start at first, try again after 2 minutes or so.

Disconnecting the booster cables

After the engine has started, disconnect the booster cables in the reverse of the order in which they were connected.

1. Remove one clip of booster cable (B) from the engine block of the problem machine.
2. Remove the other clip of booster cable (B) from the negative (-) terminal of the normal machine.
3. Remove one clip of booster cable (A) from the positive (+) terminal of the normal machine.
4. Remove the other clip of booster cable (A) from the positive (+) terminal of the problem machine.

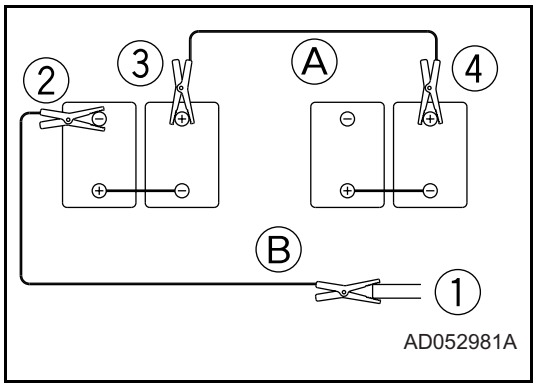

OTHER TROUBLE

ELECTRICAL SYSTEM

- ( ): Always contact your Komatsu distributor when dealing with these items.
- In cases of abnormalities or causes which are not listed below, please contact your Komatsu distributor for repairs.

Problem	Main causes	Remedy
Lamp does not glow brightly even when the engine runs at high speed	● Defective wiring ● Defective adjustment of fan belt tension	● (Check, repair loose terminals, disconnections) ● Adjust fan belt tension For details, see EVERY 250 HOURS SERVICE
Lamp flickers while engine is running		
Charge level monitor does not go out even when engine is running	● Defective alternator ● Defective wiring	● (Replace) ● (Check, repair)
Abnormal noise is generated from alternator	● Defective alternator	● (Replace)

https://truckmanualshub.com/

Problem	Main causes	Remedy
Starting motor does not turn when starting switch is turned to ON	● Defective wiring ● Insufficient battery charge	● (Check, repair) ● Charge
Pinion of starting motor keeps going in and out	● Insufficient battery charge	● Charge
Starting motor turns engine sluggishly	● Insufficient battery charge ● Defective starting motor	● Charge ● (Replace)
Starting motor disengages before engine starts	● Defective wiring ● Insufficient battery charge	● (Check, repair) ● Charge
Pre-heating monitor does not light	● Defective wiring ● Defective heater relay ● Defective monitor	● (Check, repair) ● (Replace) ● (Replace)
Oil pressure monitor does not light up when engine is stopped (starting switch at ON position)	● Defective monitor ● Defective caution lamp	● (Replace) ● (Replace)
Outside of electrical heater is not is warm when touched by hand	● Defective wiring ● Disconnection in electric heater ● Defective operation of heater relay switch	● (Check, repair) ● (Replace) ● (Replace)

CHASSIS

- ( ): Always contact your Komatsu distributor when dealing with these items.
- In cases of abnormalities or causes which are not listed below, please contact your Komatsu distributor for repairs.

Problem	Main causes	Remedy
Speed of travel, swing, boom, arm, bucket is slow	● Lack of hydraulic oil	● Add oil to specified level, see CHECK BEFORE STARTING
Pump generates abnormal noise	● Clogged element in hydraulic tank strainer	● Clean, see EVERY 2000 HOURS SERVICE
Excessive rise in hydraulic oil temperature	● Loose fan belt ● Dirty oil cooler ● Lack of hydraulic oil	● Check fan belt tension, see EVERY 1000 HOURS SERVICE ● Clean, see EVERY 500 HOURS SERVICE ● Add oil to specified level, see CHECK BEFORE STARTING
Bucket rises slowly, does not rise	● Lack of hydraulic oil	● Add oil to specified level, see CHECK BEFORE STARTING.

ENGINE

- ( ): Always contact your Komatsu distributor when dealing with these items.

https://truckmanualshub.com/

- In cases of abnormalities or causes which are not listed below, please contact your Komatsu distributor for repairs.

Problem	Main causes	Remedy
Engine oil pressure monitor lights up	● Engine oil pan oil level is low (sucking in air) ● Clogged oil filter cartridge ● Defective tightening of oil pipe joint, oil leakage from damaged part ● Defective engine oil pressure sensor	● Add oil to specified level, see CHECK BEFORE STARTING ● Replace cartridge, see EVERY 250 HOURS SERVICE ● (Check, repair) ● (Replace sensor)
Steam is emitted from top part of radiator (pressure valve)	● Cooling water level low, water leakage ● Loosen fan belt ● Dirt or scale accumulated in cooling system ● Clogged radiator fin or damaged fin ● Defective thermostat ● Loose radiator filler cap (high altitude operation) ● Defective water level sensor	● Add cooling water, repair, see CHECK BEFORE STARTING ● Adjust fan belt tension, see EVERY 250 HOURS SERVICE ● Change cooling water, clean inside of cooling system, see WHEN REQUIRED ● Clean or repair, see EVERY 500 HOURS SERVICE ● (Replace thermostat) ● Tighten cap or replace packing ● (Replace sensor)
Radiator water level monitor lights up		
Engine does not start when starting motor is turned.	● Lack of fuel ● Air in fuel system ● Defective fuel injection pump or nozzle ● Starting motor cranks engine sluggishly ● Preheating monitor does not light up ● Defective compression ● Defective valve clearance	● Add fuel, see CHECK BEFORE STARTING ● Repair place where air is sucked in, see EVERY 500 HOURS SERVICE ● (Replace pump or nozzle) ● See ELECTRICAL SYSTEM ● (Adjust valve clearance)
Exhaust gas is white or blue	● Too much oil in oil pan ● Improper fuel	● Add oil to specified level, see CHECK BEFORE STARTING ● Change to specified fuel
Exhaust gas occasionally turns black	● Clogged air cleaner element ● Defective nozzle ● Defective compression ● Defective turbocharger	● Clean or replace, see WHEN REOUIRED ● (Replace nozzle) ● (See defective compression above) ● Clean or replace turbo-charger
Combustion noise occasionally makes breathing sound	● Defective nozzle	● (Replace nozzle)
Abnormal noise generated (combustion or mechanical).	● Low grade fuel being used ● Overheating ● Damage inside muffler ● Excessive valve clearance	● Change to specified fuel ● Refer to “Radiator water level monitor lights up” as above ● (Replace muffler) ● (Adjust valve clearance)

https://truckmanualshub.com/

ELECTRONIC CONTROL SYSTEM

If an error code appears on the machine monitor display (normally displays TIME), follow the countermeasure table as shown below in the self-diagnosis.

Machine monitor trouble display

Monitor display	Error mode	Countermeasure
E02	TVC valve system error	If the pump override switch is set to the ON position, operation can be carried out. However, immediately have the TVC valve system inspected by your Komatsu distributor. (*)
E03	Swing brake system error	Set the swing override switch to the ON position to release the brake. If applying the swing brake, manually operate the swing brake using the swing holding brake switch. In this case, immediately have the swing brake system inspected by your Komatsu distributor. (*)
E05	Governor system error	Governor will not execute the control function. Manually operate the governor-lever. To fix the governor lever at the full stroke position, use the retaining bolt holes on bracket. In this case, immediately have the governor system inspected by your Komatsu distributor.
CALL	Error indicating that operation cannot be continued	Place the machine in a safe posture, then have it inspected immediately by your Komatsu distributor.
In the case where the monitor will not display error codes and work equipment operation and swing operation cannot be carried out.		Have the machine inspected immediately by your Komatsu distributor.

(*) For detail of operating the pump override switch and the swing override switch, refer to "SWITCHES"

https://truckmanualshub.com/

MAINTENANCE.

https://truckmanualshub.com/

GUIDES TO MAINTENANCE

Do not carry out any inspection and maintenance operation that is not given in this manual.

Perform maintenance work on hard, flat ground.

Check service meter:

Check the service meter reading every day to see if the time has come for any necessary maintenance to be carried out.

Komatsu genuine replacement parts:

Use Komatsu genuine parts specified in the Parts Book as replacement parts.

Komatsu genuine oils:

Use Komatsu genuine oils and grease. Choose oils and grease with proper viscosities specified for ambient temperature.
Always use clean washer fluid:
Use automobile window washer fluid and be careful not to let any dirt get into it.

Always use clean oil and grease:

Use clean oil and grease. Also, keep containers of the oil and grease clean. Keep foreign materials away from oil and grease.

Keeping the machine clean:

Always keep the machine clean. This makes is easier to find parts causing problems. Keep in particular grease fittings, breathers and oil level gauges clean and avoid foreign matters from getting in them.

Be careful of hot water and oil:

Draining hot oils and coolants and removing their filters immediately after the engine stops are hazardous. Allow the engine to cool.

If the oil has to be drained when it is cold, warm up the oil to a suitable temperature (approx. 20 - 40°C) before draining it.

Checking foreign materials in drained oil and on filter:

After oil is changed or filters are replaced, check the oil and filters for metallic particles and foreign materials. If large quantities of metallic particles or foreign materials are found, consult your Komatsu distributor.

Fuel strainer:

If your machine is equipped with a fuel strainer, do not remove it while fueling.

https://truckmanualshub.com/

Oil change:

Check or change oils in the places where dust is scarce to keep foreign materials away from oils.

Warning tag:

Attach the warning tag to the starting switch or other appropriate control lever to avoid someone who is not aware of the circumstances from starting the engine.

Obey precautions:

During the operation, always obey the precautions on the safety label attached to the machine.

Welding instructions:

- Turn off the engine starting switch.
- Do not apply more than 200 V continuously.
- Connect grounding the cable within 1 m from the area to be welded.
- Avoid seals or bearings from being between the area to be welded and the position of roundin
- Do not use the area around the work equipment pins or the hydraulic cylinders as the grounding point.

Fire prevention

Use nonflammable cleaner or light oil for cleaning parts. Keep flame or cigarette light away from light oil.

Clamp faces:

When O-rings or gaskets are removed, clean the clamp faces and replace the 0-rings and gaskets with new ones.
Be sure to fit 0-rings and gaskets when assembling.

Objects in your pockets:

Keep your pockets free of loose objects which can fall out and drop into the machinery; especially when you work on the machinery while bending over it.

Checking undercarriage:

When working in rocky areas, check for damage to the undercarriage and for looseness, flaws, wear and damage in bolts and nuts. Loosen the track tension a little when working in such areas.

Precautions when washing machine:

- Never spray steam or water directly on the connectors and mechatronics parts.

https://truckmanualshub.com/

- Do not allow water to get on the monitors and controllers inside the operator's cab.
- Never spray steam or water directly at the radiator or oil cooler portions.

Pre-and post-work checks:

Before starting work in mud, rain, snow or at seashore, check plugs and valves for tightness. Wash the machine immediately after the work to protect components from rusting. Lubricate components more frequently than usual.
Be sure to lubricate work equipment pins daily if they are submerged in water.

Dusty worksites:

When working at dusty worksites, do as follows:

- Inspect the air cleaner clogging monitor to see whether the air cleaner is blocked. Clean the air cleaner at shorter intervals than specified.
- Clean the radiator core frequently to avoid clogging.
- Clean and replace the fuel filter frequently.
- Clean electrical components, especially the starting motor and alternator, to avoid accumulation of dust.

Avoid mixing oils:

Never mix oils of different brands. If you have only oil which is a different brand from the one that is used in the machine, do not add it but replace all the oil.

https://truckmanualshub.com/

OUTLINES OF SERVICE

- Use Komatsu genuine parts for replacement.
- When changing or adding oil, do not use a different type of oil.
- Unless otherwise specified, the oil and coolant used at the time of shipment from the factory are as shown in the table below.

Item	Kind of fluid
Engine oil pan	SAE 15W-40 API classification CE
Swing machinery case PTO gear case	SAE 30 API classification CD
Hydraulic tank	SAE 10 W PI classification CD
Fuel tank	ASTM D975 No.2(However, ASTM D975 No.1 is used for the winter season (October to March)
Radiator	Komatsu Super Coolant (AF-ACL) 41% added to water
Axles, Hubs	SAE 80W-90 API GL4 (MULTI-OIL)
Transmission	SAE 20W-30 API GL4

OUTLINE OF OIL, FUEL, COOLANT

OIL

- Oil is used in the engine and work equipment under extreme severe conditions (high temperature, high pressure), and it deteriorates with use.
  Always use oil that matches the grade and temperature for use given in the Operation and Maintenance Manual. Even if the oil is not dirty, always replace the oil after the specified interval.
- Oil corresponds to blood in the human body, so always be careful when handling it to prevent any impurities (water, metal particles, dirt, etc.) from getting in.
  The majority of problems with machine are caused by the entry of such impurities. Take particular care not to let any impurities get in when storing or adding oil.
- Never mix oils of different grades or brands.
- Always add the specified amount of oil.
  Having too much oil or too little oil are both causes of problems.

https://truckmanualshub.com/

- If the oil in the work equipment is not clear, there is probably water or air getting into the circuit. In such cases, please contact your Komatsu distributor.
- When changing the oil, always replace the related filters at the same time.
- We recommend you to have an analysis made of the oil periodically to check the condition of the machine. For those who wish to use this service, please contact your Komatsu distributor.

FUEL

- The fuel pump is a precision instrument, and if fuel containing water or dirt is used, it cannot work properly.
- Be extremely careful not to let impurities get in when storing or adding fuel.
- Always use the fuel specified in the Operation and Maintenance Manual.
- Fuel may congeal depending on the temperature when it is used (Particularly in low temperature below-15°C), so it is necessary to change to a fuel that matches the temperature.
- To prevent the moisture in the air from condensing and forming water inside the fuel tank, always fill the fuel tank after completing the day's work.
- Before starting the engine, or when 10 minutes have passed after adding fuel, drain the sediment and water from the fuel tank.
- If the engine runs out of fuel, or if the filters have been replaced, it is necessary to bleed the air from the circuit.

COOLANT

- River water contains large amounts of calcium and other impurities, so if it is used, scale will stick to the engine and radiator, and this will cause defective heat exchange and overheating. Do not use water that is not suitable for drinking.
- When using anti-freeze, always observe the precautions given in the Operation and Maintenance Manual.
- Komatsu machines are supplied with Komatsu original anti-freeze in the coolant when the machine is shipped.
  This anti-freeze is effective in preventing corrosion of the cooling system.
  The anti-freeze can be used continuously for two years or 4000 hours. Therefore, it can be used as it is even in hot areas.
- Anti-freeze is inflammable, so be extremely careful not to expose it to flame or fire.

https://truckmanualshub.com/

- The proportion of anti-freeze to water differs according to the ambient temperature.

  For details of the mixing proportions, see "CLEAN INSIDE OF COOLING SYSTEM" on page 189.

- If the engine overheats, wait for the engine to cool before adding coolant.

- If the coolant level is low, it will cause overheating and will also cause problems with corrosion from the air in the coolant.

GREASE

- Grease is used to prevent twisting and noise at the joints.

- The nipples not included in the maintenance section are nipples for overhaul, so they do not need grease.
  If any part becomes stiff after being used for long time, add grease.

- Always wipe off all of the old grease that is pushed out when greasing. Be particularly careful to wipe off the old grease in places. Where sand or dirt sticking in the grease would cause wear of the rotating parts.

STORING OIL AND FUEL

- Keep indoors to prevent any water, dirt, or other impurities from getting in.

- When keeping drum cans for a long period, put the drum on its side so that the filler port of the drum can is at the side. (To prevent moisture from being sucked in)
  If drum cans have to be stored outside, cover them with a waterproof sheet or take other measures to protect them.

- To prevent any change in quality during long-term storage, be sure to use in the order of first in first out (use the oldest oil or fuel first).

FILTERS

- Filters are extremely important safety parts. They prevent impurities in the fuel and air circuits from entering important equipment and causing problems.
  Replace all filters periodically. For details, see the Operation and Maintenance Manual.
  However, when working in severe conditions, it is necessary to consider replacing the filters at shorter intervals according to the oil and fuel (sulphur content) being used.

- Never try to clean the filters (cartridge type) and use them again. Always replace with new filters.

- When replacing oil filters, check if any metal particles are stuck to the old filter. If any metal particles are found, please contact your Komatsu distributor.

https://truckmanualshub.com/

- Do not open packs of spare filters until just before they are to be used.
- Always use Komatsu genuine filters.

OUTLINE OF ELECTRIC SYSTEM

- If the wiring gets wet or the insulation is damaged, the electric system leaks and this could result in hazardous malfunction of the machine.
- Services relating to the electric system are (1) check of fan belt tension, (2) check of damage or wear in the fan belt and (3) check of battery fluid level.
- Never remove or disassemble any electric components installed in the machine.
- Never install any electric components other than these specified by Komatsu.
- Be careful to keep the electric system free of water when washing the machine or when it rains.
- Since the controller for the control system may cause malfunction due to external wave interference, before installing a radio receiver and a walkie-talkie or citizen band, consult your Komatsu distributor.
- When working on the seashore, carefully clean the electric system to prevent corrosion.
- When installing a car cooler or an other electrical equipment, connect it to an independent power source connector. The optional power source must never be connected to the fuse, starting switch, or battery relay.

OUTLINE OF HYDRAULIC SYSTEM

- During operation and immediately after operation is ended, the temperature of the hydraulic system still re-mains high.
  In addition, high hydraulic pressure is applied to the system. Take care when inspecting and maintaining the hydraulic system.
  - Stop the machine on level ground, lower the bucket to the ground, then set so that there is no pressure applied to the cylinder circuit.
  - Always stop the engine.
  - Immediately after operations, the hydraulic oil and lubricating oil are at high temperature and high pressure, so wait for the oil temperature to go down before starting maintenance. Even when the temperature goes down, the circuit may still be under internal pressure, so when loosening the plug or screw, or the hose joint, do not stand in front of the part. Loosen it slowly to release the internal pressure before removing it.

https://truckmanualshub.com/

- When carrying out inspection or maintenance of the hydraulic circuit, always bleed the air from the hydraulic tank to remove the internal pressure.

- Periodic maintenance includes the inspection of the hydraulic oil level, replacement of the filter and refilling of hydraulic oil.
- When the high pressure hose, etc. is removed, check the O-ring for damage. If necessary, replace it.
- After the hydraulic filter element and strainer are cleaned or replaced, or after the hydraulic system is repaired or replaced or the hydraulic piping is removed, bleed air from the hydraulic circuit.
- The accumulators are charged with high-pressure nitrogen gas. Incorrect handling may be dangerous.

  For the handling procedure, see “HANDLING ACCUMULATOR” on page 246.

https://truckmanualshub.com/

WEAR PARTS LIST

Wear parts such as the filter element, bucket tooth, etc. are to be replaced at the time of periodic maintenance or before their abrasion limits.

The wear parts should be changed correctly in order to use the machine economically. For part change, Komatsu genuine parts of excellent quality should be used.
When ordering parts, please check the part number in the parts book.

The parts in parentheses are to be replaced at the same time.

Item	Part No.	Part Name	Q'ty	Replacement frequency
Hydraulic oil filter	07063-51100 (07000-05155)	Element (O-ring)	1 (1)	Every 500 hours service
Air cleaner	203-01-K1130 203-01-K1290	Single element Safety element	1 1	When required
Engine oil filter	6733-51-5140	Cartridge	1	Every 500 hours service
Primary fuel filter	6732-71-6110	Cartridge	1	Every 500 hours service
Secondary filter	6732-71-6310	Cartridge	1	Every 500 hours service.

https://truckmanualshub.com/

USE FUEL, COOLANT AND LUBRICANTS ACCORDING TO AMBIENT TEMPERATURE

PROPER SELECTION OF FUEL, COOLANT AND LUBRICANTS

Reservoir		Kind of fluid	AMBIENT TEMPERATURE		Type OF OIL	CAPACITY	
			Min.	Max		Specified	Refill
Engine oil pan		Engine oil (API CE or CF-4)	0°C -20° C -15°C -30° C	30°C 10° C 50° C 30° C	SAE 30 SAE 10W SAE 15W-40 SAE 10W-30	16 liter	16 liter
Swing machinery case		Engine oil	-20° C	30° C	SAE 30	2.5 liter	2.5 liter
PTO gear case						0.75 liter	0.75 liter
Hydraulic system		Bio-oil	-20° C	30° C	SAE 10W	190 liter	135 liter
		Hydr-oil API-CD	-20° C	30° C	SAE 10W-30		
		Engine oil API-CD	-20° C	50° C	SAE 15W-40		
Fuel tank		Diesel fuel	-10° C -30° C	40° C -10° C	ASTM D975 No. 2 ASTM D975 No 1 (for winter use)	250 liter	
Cooling system		Water	Add antifreeze			20 liter	
Axles	Front	Multi oil	-30° C	40° C	SAE 20W-30	15 liter	
	Rear					20 liter	
Transmission						1.1 liter	
Transmission clutch						0.5 liter	
Hubs	Front		-20° C	40° C	SAE 80W-90	2.5 liter	
	Rear					2.7 liter	

REMARK

- We recommend Komatsu genuine oil which has been specifically formulated and approved for use in engine and hydraulic work equipment applications.
- Only use high quality oils which meet internationally recognized specifications.
- When starting the engine in an atmospheric temperature of lower than 0°C, be sure to use engine oil of SAE10W, SAE10W-30 and SAE15W-40, even though an atmospheric temperature goes up to 10° C more or less in the day time.

https://truckmanualshub.com/

- Use API classification CE or CF-4 as engine oil. If API classification CD is used reduce the engine oil change interval to half.
- There is no problem if single grade oil is mixed with multi-grade oil (SAE10W-30, 15W-40), but be sure to add single grade oil that matches the temperature in the table.
- We recommend Komatsu genuine oil which has been specifically formulated and approved for use in engine and hydraulic work equipment applications.
- When fuel sulphur content is less than 0.5%, change oil in the oil pan every periodic maintenance hours described in this manual.
  Change oil according to the following table if fuel sulphur content is above 0.5%.

Fuel sulphur content I	Change interval of oil in engine oil pan
0.5 to 1.0%	1/2 of regular interval
1.0% to 1.5%	1/4 of regular interval

Specified capacity: Total amount of oil including oil for components and oil in piping.

Refill capacity: Amount of oil needed to refill system during normal inspection and maintenance.

Abbreviations:

ASTM: American Society of Testing and Material

SAE: Society of Automotive Engineers

API: American Petroleum Institute

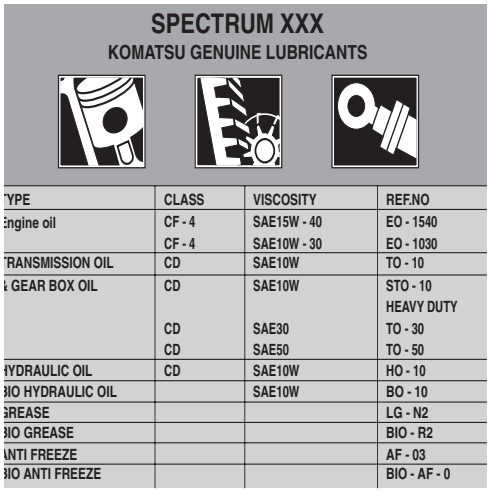

SPECTRUM XXX
KOMATSU GENUINE LUBRICANTS

TYPE	CLASS	VISCOSITY	REF.NO
Engine oil	CF - 4	SAE15W - 40	EO - 1540
	CF - 4	SAE10W - 30	EO - 1030
TRANSMISSION OIL	CD	SAE10W	TO - 10
& GEAR BOX OIL	CD	SAE10W	STO - 10
			HEAVY DUTY
	CD	SAE30	TO - 30
	CD	SAE50	TO - 50
HYDRAULIC OIL	CD	SAE10W	HO - 10
BIO HYDRAULIC OIL		SAE10W	BO - 10
GREASE			LG - N2
BIO GREASE			BIO - R2
ANTI FREEZE			AF - 03
BIO ANTI FREEZE			BIO - AF - 0

USE FUEL, COOLANT AND LUBRICANTS ACCORDING TO AMBIENT TEMPERATURE CONT.

No.	Supplier	Engine Oil [CD or CE] SAE10W, 30, 40 10W30, 15W40 (The 15W40 oil marked * is CE.)	Gear Oil [GL-4 or GL-5] SAE80, 90, 140	Grease [Lithium-Base] NLGI No. 2	Anti-freeze Coolant [Ethylene Glycol Base] Permanent Type
1	KOMATSU	EO10-CD EO30-CD EO10-30CD EO15-40CD	GO90 GO140	G2-LI G2-LI-S	AF-ACL AF-PTL AF-PT (Winter, one season type)

https://truckmanualshub.com/

No.	Supplier	**Engine Oil [CD or CE]** SAE10W, 30, 40 10W30, 15W40 (The 15W40 oil marked * is CE.)	**Gear Oil [GL-4 or GL-5]** SAE80, 90, 140	**Grease [Lithium-Base]** NLGI No. 2	**Anti-freeze Coolant [Ethylene Glycol Base] Permanent Type**
2	AGIP	Diesel sigma S Super dieselmulti-grade *Sigma turbo	Rotra MP	GR MU/EP	-
3	AMOCO	*Amoco 300	Multi-purpose gear oil	RYKON premium grease	-
4	ARCO	*Arcofleet S3 plus	Arco HD gear oil	Litholine HEP 2 Arco EP moly D	-
5	BP	Vanellus C3	Gear oil EP Hypogear EP	Energrease LS-EP2	Antifreeze
6	CALTEX	*RPM delo 400 RPM delo 450	Universal thuban Universal thuban EP	Marfak all purpose 2 Ultra-duty grease 2	AF engine coolant
7	CASTROL	*Turbomax *RX super CRD	EP EPX Hypoy Hypoy B Hypoy C	MS3 Spheerol EPL2	Anti-freeze
8	CHEVRON	*Delo 400	Universal gear	Ultra-duty grease 2	-
9	CONOCO	*Fleet motor oil	Universal gear lubricant	Super-sta grease	-
10	ELF	Multiperformance 3C Performance 3C	-	Tranself EP Tranself EP type 2	Glacelf
11	EXXON (ESSO)	Essolube D3 *Essolube XD-3 *Essolube XD-3 Extra *Esso heavy duty Exxon heavy duty	Gear oil GP Gear oil GX	Beacon EP2	All season coolant
12	GULF	Super duty motor oil *Super duty plus	Multi-purpose gear lubricant	Gulfcrown EP2 Gulfcrown EP special	Antifreeze and coolant
13	MOBIL	Delvac 1300 *Delvac super 10W-30, 15W-40	Mobilube GX Mobilube HD	Mobilux EP2 Mobilgrease 77 Mobilgrease special	-
14	PENNZOIL	*Supreme duty fleet motor oil	Multi-purpose 4092 Multi-purpose 4140	Multi-purpose white grease 705 707L White - bearing grease	Anti-freeze and summer coolant
15	PETROFINA	FINA kappa TD	FINA potonic N FINA potonic NE	FINA marson EPL2	FINA tamidor

https://truckmanualshub.com/

No.	Supplier	**Engine Oil [CD or CE]** SAE10W, 30, 40 10W30, 15W40 (The 15W40 oil marked * is CE.)	**Gear Oil [GL-4 or GL-5]** SAE80, 90, 140	**Grease [Lithium-Base]** NLGI No. 2	**Anti-freeze Coolant [Ethylene Glycol Base] Permanent Type**
16	SHELL	Rimula X	Spirax EP Spirax heavy duty	Albania EP grease	-
17	SUN	-	Sunoco GL5 gear oil	Sunoco ultra prestige 2EP Sun prestige 742	Sunoco antifreeze and summer coolant
18	TEXACO	*Ursa super plus Ursa premium	Multigear	Multifak EP2 Starplex 2	Code 2055 startex antifreeze coolant
19	TOTAL	Rubia S *Rubia X	Total EP Total transmission TM	Multis EP2	Antigel/antifreeze
20	UNION	*Guardol	MP gear lube LS	Unoba EP	-
21	VEEDOL	*Turbostar *Diesel star MDC	Multigear Multigear B Multigear C	-	Antifreeze

https://truckmanualshub.com/

STANDARD TIGHTENING TORQUES FOR BOLTS AND NUTS

INTRODUCTION OF NECESSARY TOOLS

The following tools are needed when carrying out maintenance.
(These tools are provided in tool box)

No.	Name of tool	Part No.	Remarks
1	Wrench set	09002-00810 09002-01214 09002-01317 09002-01922 09002-02427 09002-03032	Applicable width across flats (S_1-S_2) 8mm - 10mm, 12mm - 14mm 13mm - 17mm 19mm - 22mm 24mm - 27mm 30mm - 32mm
2	Screwdriver	09033-00190	Crosshead/flat head interchangeable type
3	Socket wrench set	09020-10282	Applicable width across flats set 10 mm, 13 mm, 14 mm, 17 mm, 19 mm, 22 mm, 24 mm, 27 mm, 30 mm, 32 mm. Extension, Handle, Joint, Ratchet handle bar
4	Wrench	09002-03641	Applicable width across flats 36 mm - 41 mm
5	Pliers	09036-00150	
6	Filter wrench	09019-08035	
7	Grease pump	07950-90403	For greasing work
8	Nozzle	07951-11400	
9	Grease cartridge	07950-90403	(Lithium base grease: 400 g)
10	Hammer	09039-00150	
11	Pinch bar	09055-00520	
12	Gauge	09054-0009	
13	Socket	20E-98-K1110	33 mm drive socket

If any of the above tools are broken, please order them from your Komatsu distributor.

https://truckmanualshub.com/

TORQUE LIST

Unless otherwise specified, tighten the metric bolts and nuts to the torque shown in the table.

The tightening torque is determined by the width across the flats (B) of the nut and bolt.

If it is necessary to replace any nut or bolt, always use a Komatsu genuine part of the same size as the part that was replaced.

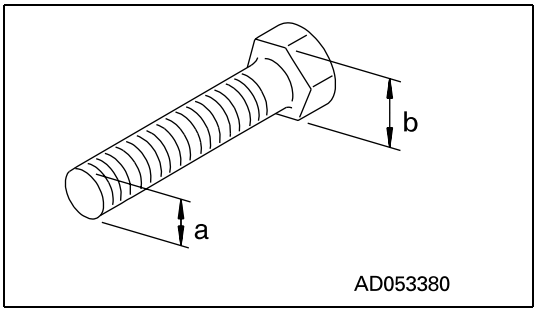

Thread diameter of bolt (mm) (a)	Width across flats (mm) (b)		AD054300
		N•m	kgf•m
6	10	13.2 ± 1.4	1.35 ± 0.15
8	13	31.4 ± 2.9	3.2 ± 0.3
10	17	65.7 ± 6.8	6.7 ± 0.7
12	19	112 ± 9.8	11.5 ± 1.0
14	22	177 ± 19	18.0 ± 2.0
16	24	279 ± 29	28.5 ± 3
18	27	383 ± 39	39 ± 3
20	30	549 ± 58	56 ± 6
22	32	745 ± 78	76 ± 8
24	36	927 ± 98	94.5 ± 10
27	41	1320 ± 140	135 ± 15
30	46	1720 ± 190	175 ± 20
33	50	2210 ± 240	225 ± 25
36	55	2750 ± 290	280 ± 30
39	60	3280 ± 340	335 ± 35

NOTICE

When tightening panels or other parts having tightening fixtures made of plastic, be careful not to use excessive tightening torque: doing so will damage the plastic parts.

https://truckmanualshub.com/

PERIODIC REPLACEMENT OF SAFETY CRITICAL PARTS

To ensure safety at all times when operating or driving the machine, the user of the machine must always carry out periodic maintenance. In addition, to further improve safety, the user should also carry out periodic replacement of the parts given in the table. These parts are particularly closely connected to safety and fire prevention.

With these parts, the material changes as time passed, or they easily wear or deteriorate. However, it is difficult to judge the condition of the parts simply by periodic maintenance, so they should always be replaced after a fixed time has passed, regardless of their condition. This is necessary to ensure that they always maintain their function completely.

However, if these parts show any abnormality before the replacement interval has passed, they should be repaired or replaced immediately.

If the hose clamps show any deterioration, such as deformation or cracking, replace the clamps at the same as the hoses.

When replacing the hoses, always replace the O-rings, gaskets, and other such parts at the same time.

Ask your Komatsu distributor to replace the safety critical parts.

https://truckmanualshub.com/

SAFETY CRITICAL PARTS

No.	Safety critical parts for periodic replacement	Q'ty	Replacement interval
1	Fuel hose (fuel tank - water separator)	1	Every 2 years or 4000 hours which ever comes sooner.
2	Fuel hose (water separator - engine lift pump	1	
3	Fuel hose (engine lift pump - fuel filter)	1	
4	Fuel hose (fuel filter - injection pump)	1	
5	Spill hose (engine - fuel tank)	1	
6	Hydraulic hose (main pump delivery)	1	

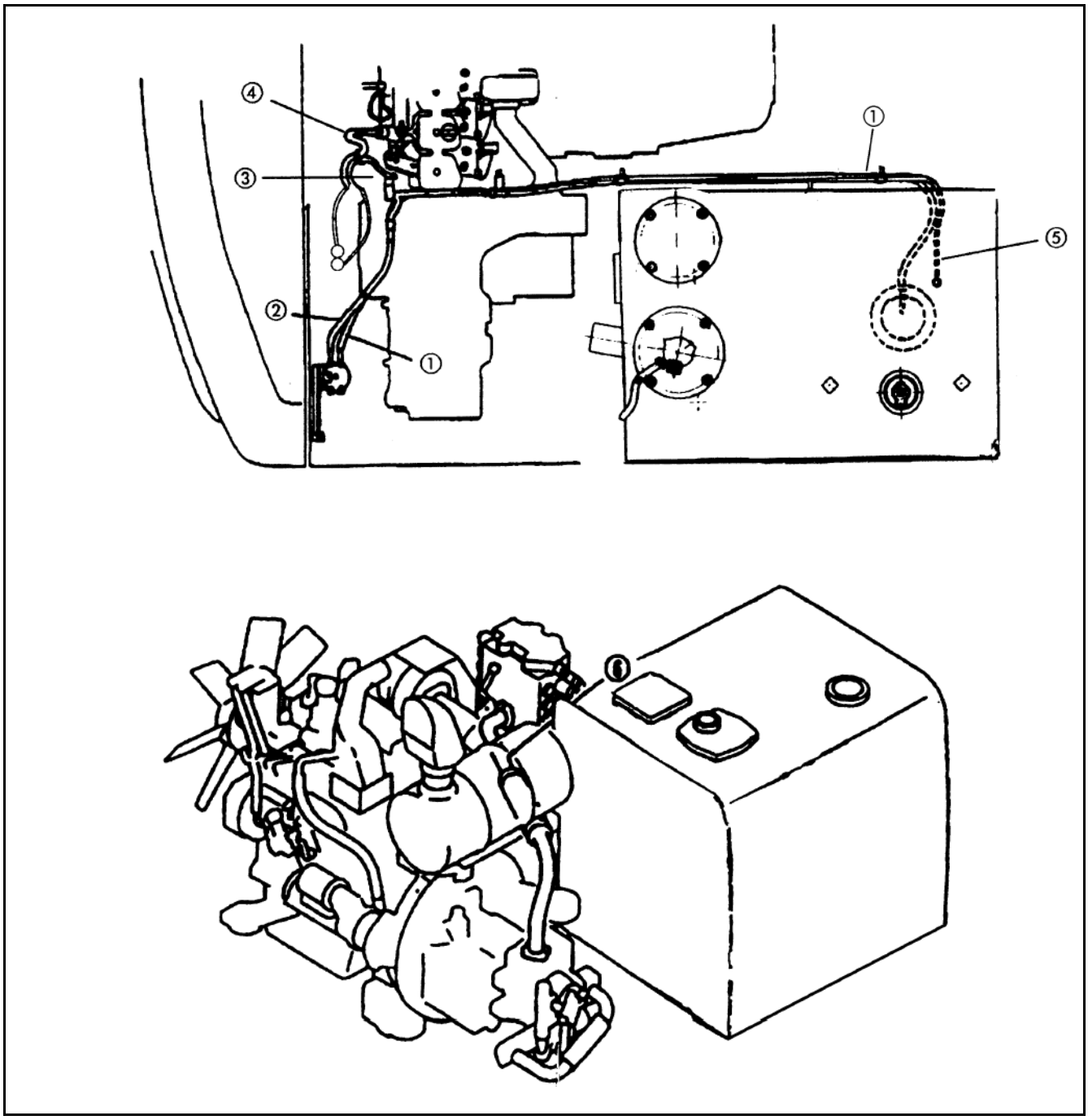

https://truckmanualshub.com/

MAINTENANCE SCHEDULE CHART

SERVICE ITEM	PAGE
INITIAL 250 HOURS SERVICE (only after the first 250 hours)	
"REPLACE FUEL FILTER CARTRIDGE"	page 187
"CHECK ENGINE VALVE CLEARANCE, ADJUST"	page 187
"CHANGE OIL IN TRANSMISSION, HUBS + AXLES."	page 187
WHEN REQUIRED	
"CHECK, CLEAN AND REPLACE THE AIR CLEANER ELEMENT"	page 188
"CLEAN INSIDE OF COOLING SYSTEM"	page 189
"CHECKING COOLANT LEVEL"	page 192
"CHECK AND TIGHTEN WHEEL NUTS"	page 195
"CHECK ELECTRICAL INTAKE AIR HEATER"	page 195
"CHECK ALTERNATOR"	page 195
"CHECK START MOTOR"	page 196
"REPLACE BUCKET SIDE CUTTERS"	page 196
"REPLACE BUCKET TEETH"	page 197
"ADJUST BUCKET CLEARANCE"	page 197
"CHECK WINDOW WASHER FLUID LEVEL, ADD FLUID"	page 198
"CHECK AND ADJUST AIR CONDITIONER"	page 198
"DRAIN ENGINE BREATHER OIL CATCHER"	page 199
CHECK BEFORE STARTING	
"CHECK COOLANT LEVEL, ADD WATER"	page 200
"CHECK OIL LEVEL IN ENGINE OIL PAN, ADD OIL"	page 200
"CHECK FUEL LEVEL, ADD FUEL"	page 201
"CHECK OIL LEVEL IN HYDRAULIC TANK, ADD OIL"	page 202
"CHECK AIR CLEANER FOR CLOGGING"	page 202
"CHECK ELECTRIC WIRING"	page 203
"CHECK FOR WATER AND SEDIMENT IN SEDIMENTOR. DRAIN WATER AND SEDIMENT"	page 203
EVERY 50 HOURS SERVICE	
"DRAIN WATER AND SEDIMENT FROM FUEL TANK"	page 204
EVERY 100 HOURS SERVICE	
"LUBRICATING"	

https://truckmanualshub.com/

SERVICE ITEM	PAGE
● "Boom cylinder foot pin (2 points)"	page 205
● "Boom foot pin (2 points)"	page 205
● "Boom cylinder rod end (2 points)"	page 205
● "Arm cylinder foot pin (1 point)."	page 205
● "Boom-Arm coupling pin (1point)"	page 205
● "Arm cylinder rod end (1 point)"	page 205
● "Bucket cylinder foot pin (1 point)"	page 206
● "Arm-Link coupling pin (1 point)"	page 206
● "Arm-Bucket coupling pin (1 point)"	page 206
● "Link coupling pin (1 point)"	page 206
● "Bucket cylinder rod end (1 point)"	page 206
● "Bucket-Link coupling pin (2 points)"	page 206
● "Outrigger cylinder foot pin (2 or 4 points)"	page 206
● "Outrigger cylinder rod end (2 or 4 points)"	page 206
● "Outrigger leg pivot (2 or 4 points)"	page 206
● "Outrigger foot pivot (2 or 4 points)"	page 206
● "Propshaft."	page 206
● "Boom adjust cylinder foot pin (1 point)"	page 207
● "Boom adjust cylinder rod end (1 point)"	page 207
● "Dozer blade cylinder rod end (2 points)"	page 207
● "Dozer blade pivot pin (2 points)"	page 207
● "Dozer blade cylinder foot pin (2 points)"	page 207
● "Axle pivot (1 point)"	page 207
● "Hub pivot (4 points)"	page 207
● "Steer links (4 points)"	page 207
● "Parallel link pivot pin (2 points)"	page 207
● "Dozer blade cylinder rod end (2 points)"	page 207
● "Single link pivot pin (2 points)"	page 207
● "Dozer blade pivot pins (6 points)."	page 207
"CHECK OIL LEVEL IN SWING MACHINERY CASE, ADD OIL"	page 208
"CLEAN FRESH AIR INTAKE FILTER"	page 208
EVERY 250 HOURS SERVICE	
"CHECK OIL LEVEL IN WHEEL HUBS, ADD OIL"	page 209
"CHECK OIL LEVEL IN AXLES, ADD OIL"	page 210

https://truckmanualshub.com/

SERVICE ITEM	PAGE
"CHECK OIL LEVEL IN TRANSMISSION, ADD OIL"	page 210
"CHECK LEVEL OF BATTERY ELECTROLYTE"	page 211
"LUBRICATE SWING CIRCLE (2 points)"	page 211
"BELTS, GENERAL"	page 211
"CHECK FAN BELT TENSION, ADJUST CHECKING TENSION"	page 212
"CHECK ALTERNATOR AND WATER PUMP BELT TENSION, ADJUST CHECKING TENSION"	page 213
"CHECK AND ADJUST TENSION OF AIR CONDITIONER COMPRESSOR BELT"	page 214
EVERY 500 HOURS SERVICE	
"REPLACE FUEL FILTER CARTRIDGES"	page 215
"CHECK SWING PINION GREASE LEVEL, ADD GREASE"	page 217
"CHANGE OIL IN ENGINE OIL PAN, REPLACE ENGINE OIL FILTER CARTRIDGE"	page 218
"CLEAN AND INSPECT RADIATOR FINS, OIL COOLER FINS AND CONDENSER FINS (ONLY FOR MACHINES EQUIPPED WITH AIR-CONDITIONER)"	page 219
"REPLACE HYDRAULIC TANK BREATHER ELEMENT"	page 220
"REPLACE HYDRAULIC FILTER ELEMENT"	page 220
EVERY 1000 HOURS SERVICE	
"CHANGE OIL IN SWING MACHINERY CASE"	page 221
"CHECK ALL TIGHTENING PARTS OF TURBOCHARGER"	page 222
"CHECK PLAY OF TURBOCHARGER ROTOR."	page 222
"CHECK & ADJUST VALVE CLEARANCE"	page 222
"CHECK FAN BELT TENSIONER BEARING BELT AND FAN HUB"	page 224
"CHECK FAN BELT TENSION"	page 224
EVERY 2000 HOURS SERVICE	
"CLEAN HYDRAULIC TANK STRAINER"	page 225
"CLEAN, CHECK TURBOCHARGER"	page 225
"CHECK ALTERNATOR, STARTING MOTOR"	page 225
"CHECK VIBRATION DAMPER"	page 226
"CHANGE OIL IN AXLES"	page 226
"CHANGE OIL IN HUBS"	page 227
"CHANGE OIL IN TRANSMISSION ASSEMBLY"	page 227
"CHANGE ANTIFREEZE"	page 227
"CHECK AND ADJUST VALVE CLEARANCE"	page 227
EVERY 4000 HOURS SERVICE	
"CHECK WATER PUMP"	page 228

https://truckmanualshub.com/

SERVICE ITEM	PAGE
EVERY 5000 HOURS SERVICE	
"CHANGE OIL IN HYDRAULIC TANK"	page 228

KEY TO LUBRICATION POINTS

1. Engine oil	check level change oil	23. Rear propshaft	grease
2. Hydraulic oil	check level change oil	24. Rear propshaft	grease
3. Boom cylinder foot pin	grease	25. Dozer blade cylinder foot pin	grease
4. Boom foot pin	grease	26. Dozer blade cylinder rod end	grease
5. Boom cylinder rod end	grease	27. Dozer blade pivot pin	grease
6. Arm cylinder foot pin	grease	28. Outrigger foot pivot	grease
7. Boom arm coupling pin	grease	29. Outrigger cylinder rod end	grease
8. Arm cylinder rod end	grease	30. Outrigger leg pivot	grease
9. Bucket cylinder foot pin	grease	31. Outrigger cylinder foot pin	grease
10. Bucket cylinder rod end	grease	32. Transmission oil	check level change oil
11. Bucket-link coupling pin	grease	33. Wheel hubs (front)	check level change oil
12. Arm-bucket coupling pin	grease	34. Wheel hubs (rear)	check level change oil
13. Arm-link coupling pin	grease	35. Front axle	check level change oil
14. Link coupling pin	grease	36. Rear axle	check level change oil
15. Swing machinery oil	check level change oil	37. Hydraulic filter element	change filter
16. Adjust cylinder rod end	grease	39. Swing pinion	grease
17. Adjust cylinder foot pin	grease	40. Swing circle	grease
18. 1st boom - 2nd boom coupling pin	grease	41. Engine oil filter	change filter
19. Hub pivot	grease	42. Fuel filters	change filter
20. Steer links	grease		
21. Axle pivot	grease		

https://truckmanualshub.com/

	Interval of service		Change filter
	Lubrication by greasing (G)	(LITRES)	Amount of oil required at change (liters)
	Check oil level/change (EO)		

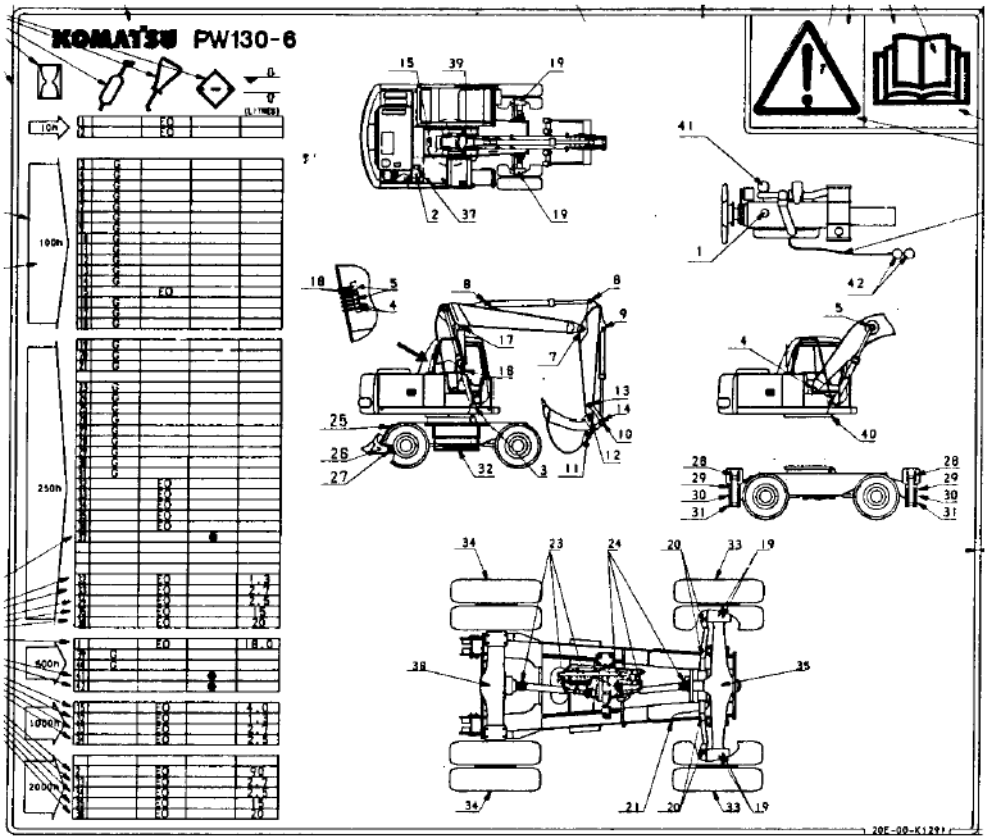

https://truckmanualshub.com/

MAINTENANCE WHEN USING HYDRAULIC BREAKER

For machines equipped with a hydraulic breaker, the hydraulic oil deteriorates faster than for normal bucket digging operations, so set the maintenance intervals as follows.

- Replacing hydraulic filter element
  On new machines, replace the element after the first 100 to 150 hours, then carry out further replacement of the element according to the table on the right.

- Changing oil in hydraulic tank
  Change the oil according to the table on the right.

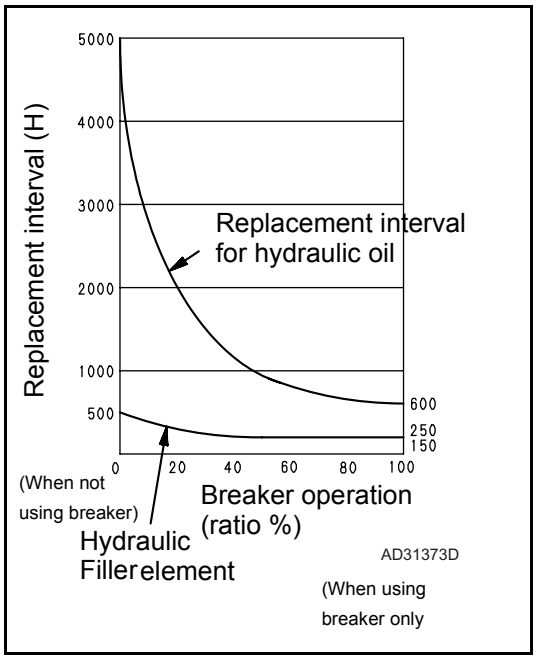

https://truckmanualshub.com/

SERVICE PROCEDURE

INITIAL 250 HOURS SERVICE

Carry out the following maintenance only after the first 250 hours.

- REPLACE FUEL FILTER CARTRIDGE

  see "REPLACE FUEL FILTER CARTRIDGES" on page 215.

- CHECK ENGINE VALVE CLEARANCE, ADJUST

  see "CHECK & ADJUST VALVE CLEARANCE" on page 222.

  For details of the method of replacing or maintaining, see the section on EVERY 500 HOURS and 2000 HOURS SERVICE.

- CHANGE OIL IN TRANSMISSION, HUBS + AXLES.

https://truckmanualshub.com/

WHEN REQUIRED

CHECK, CLEAN AND REPLACE THE AIR CLEANER ELEMENT

⚠ WARNING

- **Never clean or replace the air cleaner element with the engine running.**
- **When using pressured air to clean the element, wear safety glasses or goggles to protect the eyes.**

Checking

If air cleaner clogging monitor flashes, clean the air cleaner element.

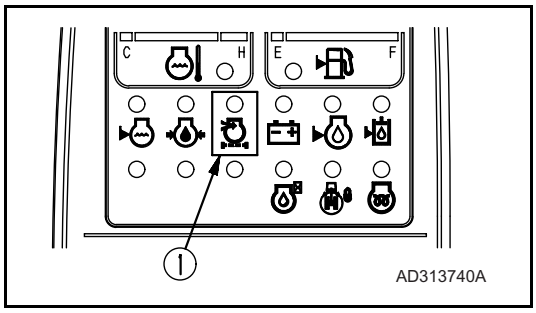

Cleaning or replacing the outer element

1. Open the machine door, loosen wing nut (2), then remove cover (6).
   Remove wing nut, then take out element (7).
2. To prevent dirt or dust from entering, use tape or a clean cloth to cover the inner element of the air cleaner body.
3. Clean the air cleaner body interior and the cover.
4. Direct dry compressed air (less than 700 kPa (7 kg/cm²)) to element (7) from inside along its folds, then direct it from outside along its folds and again from inside.
   - ❍ Remove one seal from the outer element whenever the outer element has been cleaned.
   - ❍ Replace the outer element which has been cleaned 6 times repeatedly or used throughout a year. Replace the inner element at the same time.
   - ❍ Replace both inner and outer elements when the monitor lamp (3) flashes soon after installing the cleaned outer element (even if it has not been cleaned 6 times).

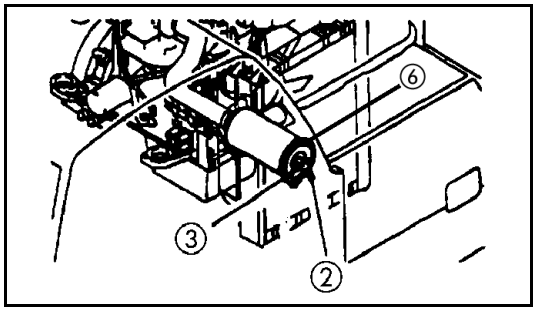

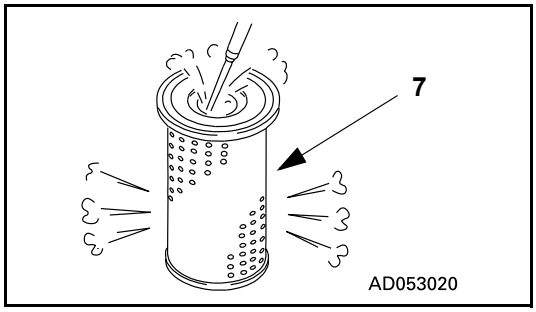

https://truckmanualshub.com/

- Check inner element mounting nuts for looseness and, if necessary, retighten.

5. If small holes or thinner parts are found on the element when it is checked by shining a light through it after cleaning, replace the element.

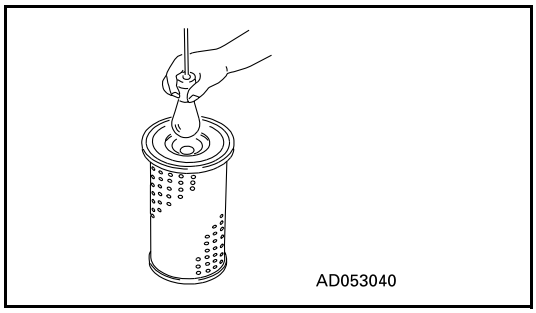

NOTICE

Do not use an element whose folds or gasket or seal are damaged. When cleaning the element, do not hit it or beat it against anything. Wrap up unused elements and store them in a dry area.

6. Remove the cloth and tape used for cover in Step 1.
7. Install the cleaned element and fix it with the wing nut.
8. If seal washer (4) is damaged or the thread of wing nut (2) is broken, replace it with a new part.
9. Remove vacuator valve (5) and clean with compressed air. After cleaning, install again.

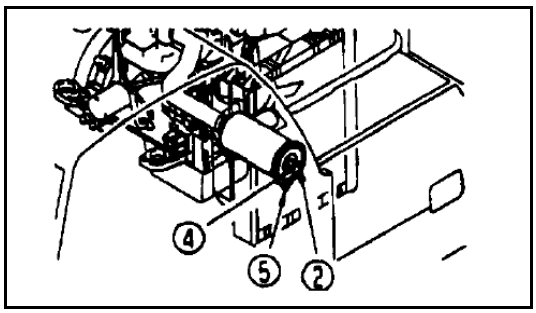

Replacing the inner element

1. Firsts remove the cover and the outer element, and then remove the inner element.
2. To prevent dust from getting in, use a clean cloth or tape to cover the air connector (outlet side).
3. Clean the air cleaner body interior, then remove the cover installed in Step 2.
4. Fit a new inner element to the connector and tighten it with the nuts. Do not clean and reinstall a inner element.
5. Install the outer element and fix it with the wing nut.

CLEAN INSIDE OF COOLING SYSTEM

⚠ WARNING

- **Soon after the engine has been stopped, the coolant is hot and can cause personal injury. Allow the engine to cool before draining water.**
- **Since cleaning is performed while the engine is running, it is very dangerous to enter the rear side of the machine as the machine may suddenly start moving. If the under cover is left removed, it may interfere with the fan. While the engine is running, never enter the rearside of the machine.**
- **Never remove the radiator cap when the engine is at operating temperature. At operating temperature, the coolant is under pressure. Steam blowing up from the radiator could cause personal injury. Allow the engine to**

https://truckmanualshub.com/

cool until the radiator filler cap is cool enough to touch with your hand. Remove the filler cap slowly to allow pressure to be relieved.

GENERAL

The cooling system operates under pressure which is controlled by the pressure relief valve in the radiator cap.

The belt-driven water pump circulates the coolant through the engine block, cylinder heads, radiator and engine oil cooler. Circulation is controlled by the thermostat which by-passes coolant flow around the radiator until the engine reaches operating temperature.

Proper cooling is possible only when the system is sealed, the radiator cap gasket is in good condition, the pressure relief valve and thermostat are operating properly. The system is free of coolant and air flow restrictions and the system is filled to the proper level.

Selection and maintenance of the engine coolant is important to long engine life. The following information provides recommendations for selecting the engine coolant, maintaining the coolant inhibitors and servicing the cooling system.

The system operates successfully with a water/antifreeze mixture or inhibited/conditioned water as the coolant. Water alone allows rust, scale deposits, and corrosion to occur within the system.

Every 2000 hours, the cooling system should be drained, flushed, and refilled as described in this section.

When deciding the ratio of antifreeze to water, check the lowest; temperature in the past, and decide from the mixing rate table given below.

It is actually better to estimate a temperature about 10°C lower when deciding the mixing rate.

Mixing rate of water and antifreeze

Min. atmospheric temperature	° C	-5	-10	-15	-20	-25	-30
Amount of antifreeze	liters	4.6	6	7.2	8.2	9.2	9.95
Amount of water	liters	15.4	14	12.8	11.8	10.8	10.05

https://truckmanualshub.com/

WARNING

Antifreeze is flammable, so keep it away from any flame.

- Use city water for the cooling water.
  If river water, well water or other such water supply must be used, contact your Komatsu distributor.
- We recommend use of an antifreeze density gauge to control the mixing proportions.

WARNING

When removing drain plug, avoid pouring coolant on yourself.

REMOVAL

WARNING

- **Hot, scalding coolant can spray out if the radiator cap is removed suddenly. Relieve system pressure by slowly turning the cap to the first notch or lifting the safety lever (if equipped). Remove the cap only after the pressure is relirved.**
- **Use extreme caution when adding coolant to the radiator to avoid being burned. Wear gloves and goggles and keep face away from the filler neck.**

To remove the cap, turn the cap to the left, or counterclockwise up to the safety stop until the cap is free to be removed.

INSTALLATION

When installing the cap, the gasket and contacting surfaces must be clean. Turn the cap to the right, or clockwise until snug.

https://truckmanualshub.com/

CHECKING COOLANT LEVEL

REMARK

Check the coolant level before starting the engine.

1. Check the coolant level in the radiator reserve tank (5). The coolant level should be between the FULL and LOW markings on the tank.
2. If coolant must be added, remove the reserve tank cap (4) and add coolant until level is between the FULL and LOW markings on the tank.

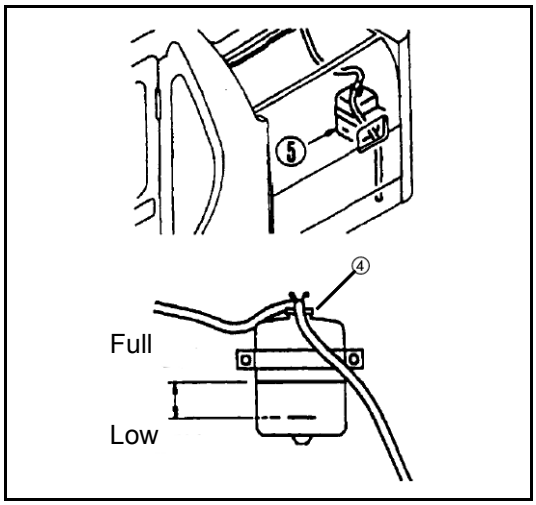

DRAINING THE SYSTEM

WARNING

- **Before working on the engine or electrical system, disconnect the negative (ground) battery cable. Tag the cable and controls to warn against starting.**
- **Wear hand and eye protection when draining hot fluids.**

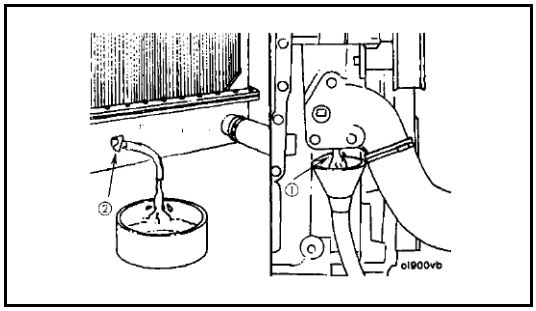

1. Run the engine until it reaches operating temperature; then stop the engine
2. Remove the radiator cap as outlined in this section.
3. Remove the crankcase coolant drain plug located on the bottom of the coolant inlet (1).
4. Open the radiator drain valve (2).
5. Allow the system to completely drain into a suitable container. Do not let drain outlets plug up during draining.
6. Close the radiator drain valve (2). Install the crankcase coolant drain plug (1).

CLEANING THE SYSTEM

At 2000 hours clean the cooling system as follows:

1. Drain the system into a suitable container. Refer to “DRAINING THE SYSTEM” on page 192.
2. Drain and clean the reserve tank.
3. Close the radiator and crankcase drains.

https://truckmanualshub.com/

4. Fill the system with clean water, refer to “FILLING THE SYSTEM” on page 193 and add a flushing compound that is compatible with aluminium. Flush the system in accordance with the instructions furnished with the compound.

5. After flushing, rinsing and completely draining the system. Refill with clean coolant. Refer to“FILLING THE SYSTEM” on page 193.

FILLING THE SYSTEM

REMARK

Be sure to fill the heater and heater supply lines with fresh coolant, even if the heater is not in use (warm weather). Leaving the heater core empty causes corrosion in the heater.

1. Be sure the radiator drain valve and crankcase drain plugs are closed and tightened.

2. Fill the cooling system to maximum capacity. Fill with anti-freeze.

3. Open the after-cooler air drain valve (4) and add coolant until it overflows from the water filler. When the coolant comes up to near the water filler port, close the air drain valve.For coolant specifications, see COOLANT SYSTEM”.

4. Start engine and run until normal operating temperature is reached. Add coolant when needed to keep proper level in reserve tank.

5. After all air is removed and level remains fixed, install the radiator cap.

6. Fill the radiator reserve tank with coolant until level is between the FULL and LOW markings on the tank.

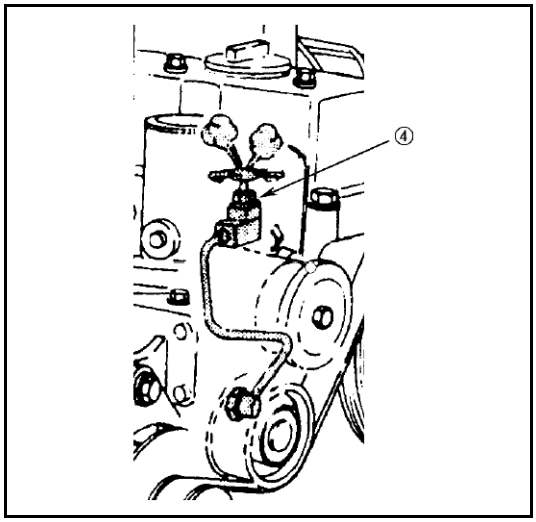

REFILLING AN OVERHEATED SYSTEM

Do not add coolant to the radiator of an overheated engine unless absolutely necessary. However, if necessary:

1. Remove the radiator cap. Refer to “RADIATOR CAP” in this section.

2. Be sure all the drains are closed.

⚠ WARNING

Use extreme caution when adding coolant to a hot radiator to avoid being burned. Wear gloves and goggles and keep away from the filler neck.

3. Add coolant to the radiator slowly until full.

4. Remove the reserve tank cap.

https://truckmanualshub.com/

5. Add coolant to the reserve tank until the level is between FULL and LOW marking on the tank.
6. When coolant level remains fixed between the FULL and LOW on the reserve tank, install the reserve tank cap.
7. Run the engine
8. Stop the engine
9. Check for leaks and coolant level in the reserve tank.

CLEANING THE RADIATOR

Minor internal sludge accumulations will be removed when flushing the cooling system.

When internal accumulations are found that cannot be removed by normal flushing methods, consult your distributor.

Remove all bugs and dirt from the radiator core, using air or water under pressure. Direct the flow through the core, opposite to the normal direction of air flow.

CLEANING THE RADIATOR PRE-SCREEN

1. Remove the bolts retaining the radiator pre-screen and remove the pre-screen.
2. Clean the pre-screen with water under pressure.
3. Reinstall the pre-screen and retaining bolts.

THERMOSTATS

REMOVAL

1. Drain the cooling system. Refer to “DRAINING THE SYSTEM” on page 192 in this section.
2. Remove the components and housing to access the thermostats.
3. Remove the thermostats and clean all gasket material from either mating surfaces.

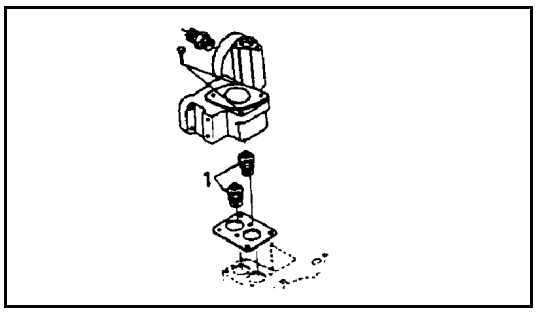

INSTALLATION

1. Install two new thermostats with new gasket.
2. Re-install thermostat housing and all component parts.
3. Fill the cooling system. Refer to “COOLING THE SYSTEM” in this section.

https://truckmanualshub.com/

FAN

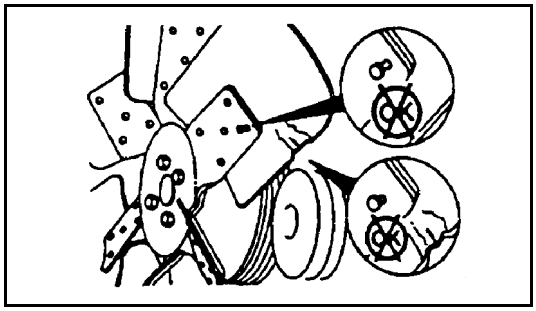

⚠ WARNING

Personal injury can result from a fan blade failure. Never pull or pry on the fan. This can damage the fan blade(s) and cause fan failure.

Check the fan for cracks, loose rivets (for metal fans) and bent or loose blades. Make sure it is securely mounted. Tighten the cap-screws if loose. Replace damaged fans.

CHECK AND TIGHTEN WHEEL NUTS

Order for tightening

Tighten the bolts in the order shown in the diagram. Torque to 450 Nm.

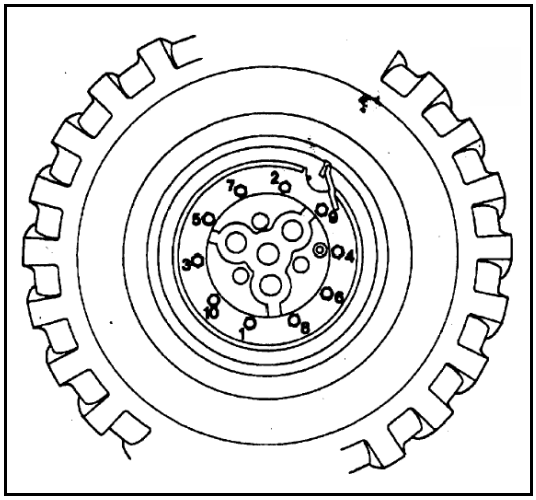

CHECK ELECTRICAL INTAKE AIR HEATER

Before the start of the cold season (once a year), contact your Komatsu distributor to have the electrical intake air heater repaired or checked for dirt or disconnections.

CHECK ALTERNATOR

GENERAL

The alternator requires no lubrication since its bearings are factory lubricated for life and require attention only at the time of major overhaul.

The alternator is equipped with an integral, transistorized voltage regulator. If the alternator fails to operate properly, consult your distributor.

PRECAUTIONS

NOTE: The unit electrical system is negative ground. Be CERTAIN the ground polarity is correct when:

https://truckmanualshub.com/

a. Installing a new battery.

b. Connecting a battery charger.

c. Using a booster.

Failure to observe proper polarity will result in damage to the alternator.

NEVER use a fast charger as a booster to start the engine.

NEVER unhook a battery terminal while the engine is running.

NEVER disconnect the alternator cable while the engine is running.

NOTE: Do not short across or ground any terminals of the alternator. Do not connect any cable to the “R” terminal on the alternator. This will result in severe damage to the harness and radiator.

CHECK START MOTOR

Under normal operating conditions, no maintenance is required between engine overhaul periods. At the time of engine overhaul, the motor should be disassembled, inspected, cleaned and tested. Contact your distributor for detailed information.

REPLACE BUCKET SIDE CUTTERS

⚠ WARNING

It is dangerous if the work equipment moves by mistake when the teeth are being replaced. Set the work equipment in a stable condition, then stop the engine and apply the control lever pad safety lock.

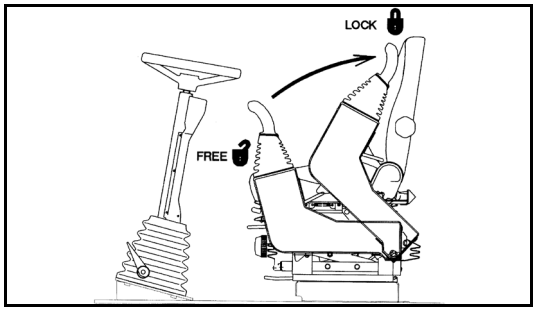

1. Untighten nuts (5) and bolts (3) and remove side cutters (1) and (2).
2. Clean cutter mounting face on bucket side plate.
3. Check nuts and bolts and replace if damaged.
4. Fit new side cutters.
5. Tighten bolts to 110 ± 10 kgm.

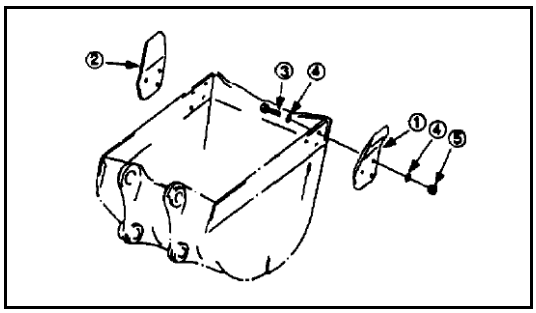

NOTE: When side cutters are not being used shrouds (6) should be fitted to prevent wear of the bucket side plate.

https://truckmanualshub.com/

REPLACE BUCKET TEETH

Replace the teeth before the wear reaches the adaptor.

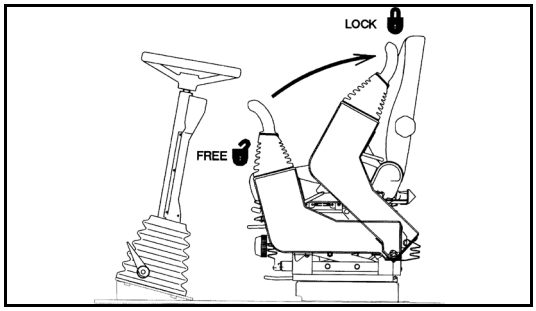

⚠ WARNING

It is dangerous if the work equipment moves by mistake when the teeth are being replaced. Set the work equipment in a stable condition, then stop the engine and apply the control lever pad safety lock.

NOTICE
Please confirm with your bucket supplier for the correct procedure to replace bucket teeth and side cutters.

ADJUST BUCKET CLEARANCE

⚠ WARNING

It is dangerous if the work equipment moves by mistake when the clearance is being adjusted.
Set the work equipment in a stable condition, then stop the engine and lock control lever pad safety lock.

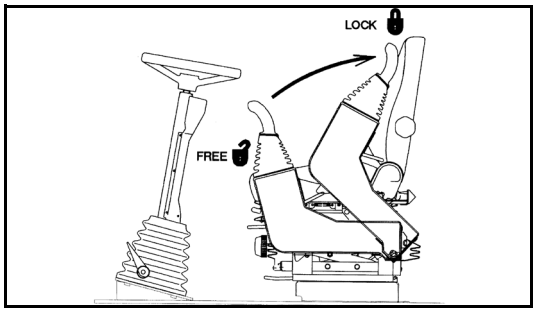

1. Set the work equipment to the position shown in the diagram at right, stop the engine and set the safety lock lever to the lock position.

2. Shift 0-ring (1) of the linkage and measure the amount of play (a). Measurement is easier if you move the bucket to one side or the other so all the play can be measured in one place.
   (In the diagram this is on the left-hand side)
   Use a gap (clearance) gauge for easy and accurate measurement.

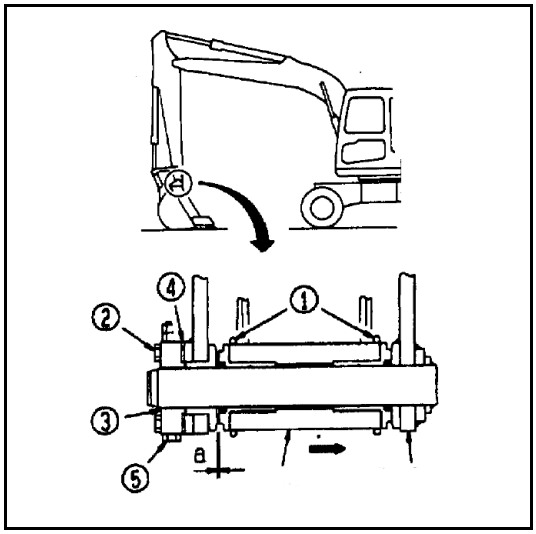

https://truckmanualshub.com/

3. Loosen the four plate fixing bolts of (2) and loosen plate (3). Because it uses split shims, you can carry out the operation without removing the bolts entirely.

4. Remove shim (4) corresponding to the amount of play (a) measured above.

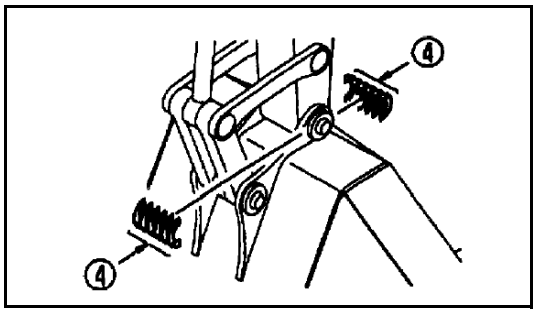

[Example]
If the play is 3 mm, remove two sets of 1.0 mm shim (4 pieces) and 0.5 mm (2 pieces) and the play will become 0.5 mm.
Four sets of 1.0 mm (8 pieces), two sets of 0.5 mm (4 pieces) are installed. Two pieces of shim makes one set.

When play (a) is smaller than one shim, do not carry out any maintenance.

5. Tighten the four bolts (2).
   If the bolts (2) are too stiff to tighten, pull out pin stopper bolt (5) for easier tightening.

CHECK WINDOW WASHER FLUID LEVEL, ADD FLUID

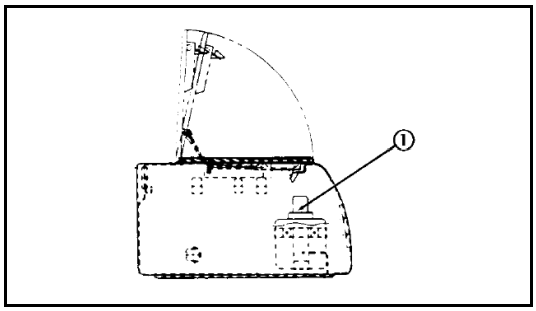

If air is ejected with the window washer fluid, check the fluid level in window washer tank (1). If showing under the level, fill with automobile window washer fluid.

When adding fluid, be careful not to let dirt or dust get in.

- Mixture ratio of pure washer fluid and water
  Since the ratio should be varied depending on atmospheric temperature, replenish washer fluid at the following mixture ratio, taking temperature into account.

Operation area and season	Mixture ratio	Freezing temperature
Normal	Pure washer 1/3: water 2/3 fluid	- 10° C
Winter in cold region	Pure washer fluid 1/2: water 1/2	- 20°C
Winter in extremely cold region	Pure washer fluid	- 30°C

Pure washer fluid comes in two types: for -10°C (for general use) and for -30°C (cold regions).
Use pure washer fluid according to operation area and season.

CHECK AND ADJUST AIR CONDITIONER

CHECK LEVEL OF REFRIGERANT (GAS)

⚠ WARNING

If the liquid get into your eyes or on your hands, it may cause loss of sight or frostbite, so never loosen any part of the refrigerant circuit.

The air conditioning system is equipped with pressure switches

https://truckmanualshub.com/

which disable the system if the pressure is too high or low, to prevent damage to the system.

If the air conditioner fails to operate it may be due to:

a) Low pressure

i) Check for leaks.
ii) Consult your distributor to recharge system.

b) High pressure

i) Check for blockages in piping.

Check in off-season

When not being used for a long period, operate the cooler for 3 to 5 minutes once a month to supply lubricant to each component of the compressor.

Inspection and maintenance items list for cooler

Inspection and maintenance items	Contents	Maintenance interval
Refrigerant (gas)	Filling quantity	Twice a year; spring and autumn
Condenser	Clogging of fin	Every 500 hours
Compressor	Function	Every 4000 hours
V belt	Damage and tension	Every 250 hours
Blower motor and fan	Function (Check for normal sound)	When required
Control mechanism	Function (Check for function)	When required
Piping for connection	Installation condition looseness of tightening connection portion gas leakage, damage	When required

DRAIN ENGINE BREATHER OIL CATCHER

Periodically drain oil from the engine breather catcher and whenever it is necessary to remove the engine undercover.

1. Remove plug (1) from engine undercover (3) and allow oil to drain out.
2. Replace plug (1).

Ensure that the breather hose (2) is positioned onto catcher reservoir whenever the undercover is removed.

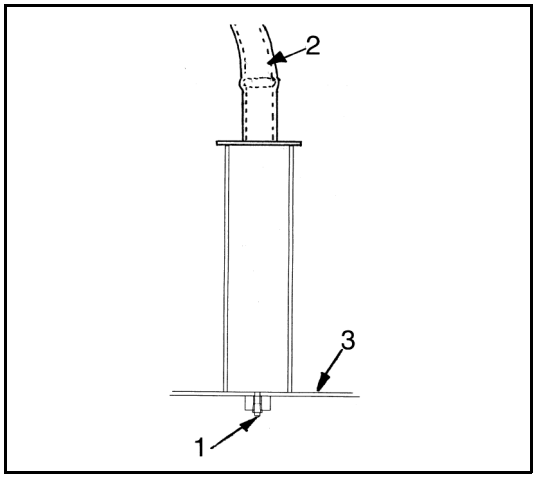

https://truckmanualshub.com/

CHECK BEFORE STARTING

CHECK COOLANT LEVEL, ADD WATER

⚠ WARNING

Do not open the radiator cap unless necessary. When checking the coolant, always check the radiator reserve tank when the engine is cold.

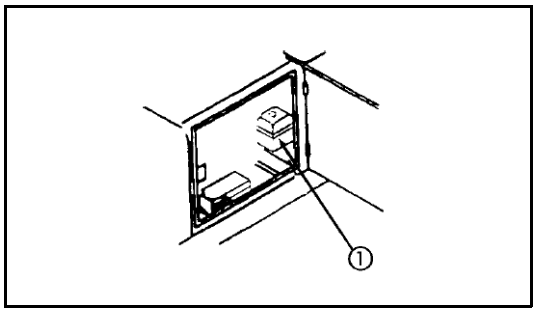

1. Open the rear door on the left side of the machine and check that the cooling water level is between the FULL and LOW marks on radiator reserve tank (1) (shown in the diagram on the right).
   If the water level is low, add water through the water filler of reserve tank (1) to the FULL level.
2. After adding water, tighten the cap securely.
3. If the reserve becomes empty, first inspect for water leaks and then fill the radiator and the reserve tank with water.

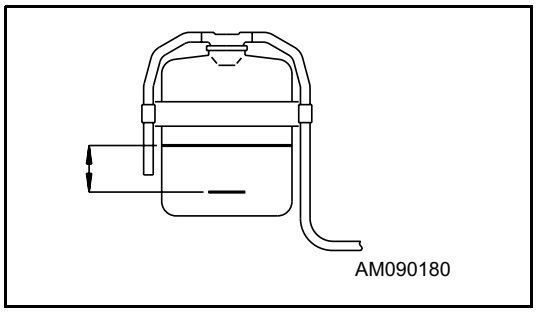

CHECK OIL LEVEL IN ENGINE OIL PAN, ADD OIL

1. Open the engine hood.
2. Remove dipstick (G) and wipe the oil off with a cloth.
3. Insert dipstick (G) fully in the oil gauge pipe, then take it out again.
4. The oil level should be between the H and L marks on dipstick (G). If the oil level is below the L mark, add engine oil through oil filler (F).

   For details of the oil to use, “USE FUEL, COOLANT AND LUBRICANTS ACCORDING TO AMBIENT TEMPERATURE” on page 173

5. If the oil is above the H mark, drain the excess engine oil from drain valve (P), and check the oil level again.
6. If the oil level is correct, tighten the oil filler cap securely and close the engine hood.

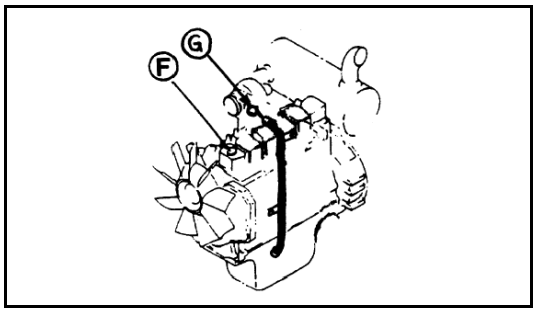

REMARK

Ensure that the machine is level when checking oil level.

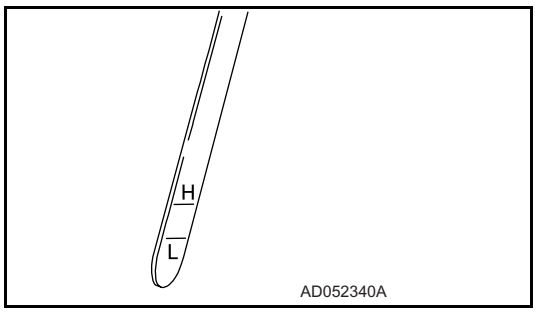

https://truckmanualshub.com/

⚠ WARNING

Allow the engine to cool before checking the oil level to avoid burns by touching hot engine parts.

CHECK FUEL LEVEL, ADD FUEL

⚠ WARNING

When adding fuel, never let the fuel overflow. This may cause a fire. If spilling fuel, thoroughly clean up any spillage.

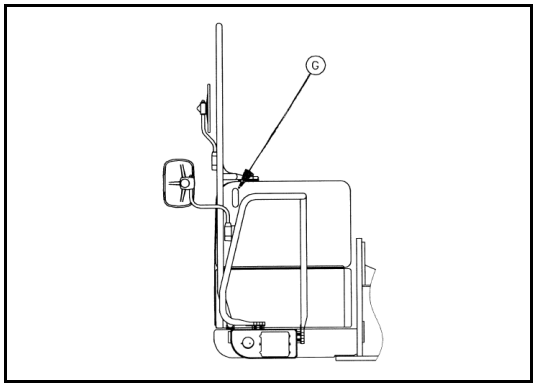

1. Use sight gauge (G) on the front face of the fuel tank to check that the tank is full.
2. If the fuel level is not within the sight gauge, add fuel through filler port (F) while watching sight gauge (G).

Fuel capacity: 240 l

For details of the fuel to use, see "USE FUEL, COOLANT AND LUBRICANTS ACCORDING TO AMBIENT TEMPERATURE" on page 173.

3. After adding fuel, tighten the cap securely.

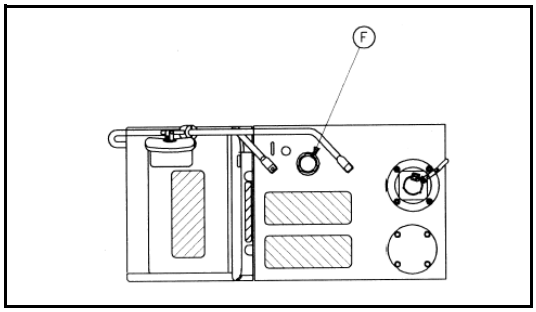

REMARK

If breather hole (1) on the cap is clogged, the pressure in the tank will drop and fuel will not flow.
Clean the hole from time to time.

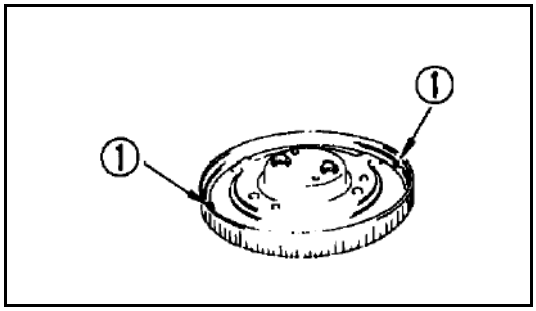

https://truckmanualshub.com/

CHECK OIL LEVEL IN HYDRAULIC TANK, ADD OIL

⚠ WARNING

- **When removing the oil filler cap, oil may spurt out, so turn the cap slowly to release the internal pressure before removing the cap.**
- **If oil has been added to above the H mark, stop the engine and wait for the hydraulic oil to cool down, then drain the excess oil from drain plug (P).**

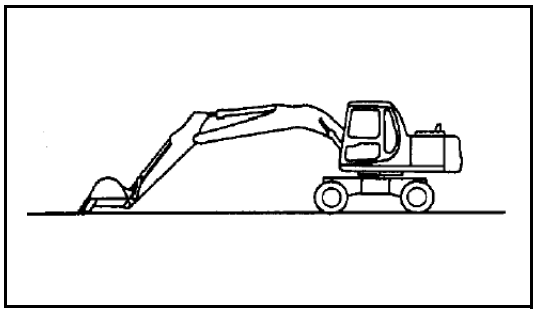

1. If the work equipment is not in the condition shown in the diagram on the right, start the engine run the engine at low speed, retract the arm and bucket cylinders, then lower the boom, set the bucket teeth in contact with the ground, and stop the engine.
2. Check sight gauge (G). The oil level is normal if between the H and L marks.

NOTE: Do not add oil if the level is above the H line. This will damage the hydraulic equipment and cause the oil to spurt out.

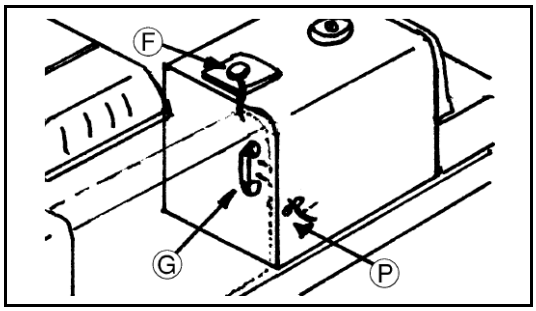

3. If the level is below the L mark, remove cap (F) from the hydraulic tank and add oil.

   For details of the oil to use, see "USE FUEL, COOLANT AND LUBRICANTS ACCORDING TO AMBIENT TEMPERATURE" on page 173.

REMARK

The oil level will vary depending upon the oil temperature. Accordingly, use the following as a guide:

- Before operation: around L level
  (Oil temperature 10 to 30°C)
- Normal operation: around H level
  (Oil temperature 50 to 80°C).

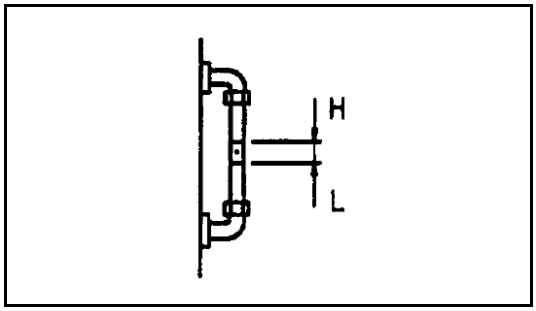

CHECK AIR CLEANER FOR CLOGGING

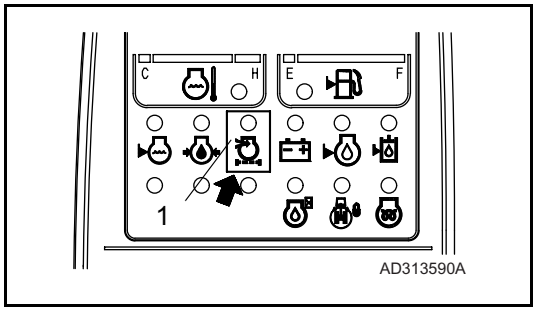

1. Confirm that the air cleaner clogging monitor does not flash (1).
2. If it flashes, immediately clean or replace the element.

   For details of the method of cleaning the element, see "CHECK, CLEAN AND REPLACE THE AIR CLEANER ELEMENT" on page 188.

https://truckmanualshub.com/

CHECK ELECTRIC WIRING

WARNING

If the fuse blows frequently, or there are traces of short-circuiting in the electric wiring, always locate and repair the cause.

Check for damage of the fuse and any sign of disconnection or short circuit in the electric wiring. Check also for loose terminals and tighten any loose parts. Check the following points carefully.

- Battery
- Starting motor
- Alternator

Please contact your Komatsu distributor for investigation and correction of the cause.

CHECK FOR WATER AND SEDIMENT IN SEDIMENTOR. DRAIN WATER AND SEDIMENT

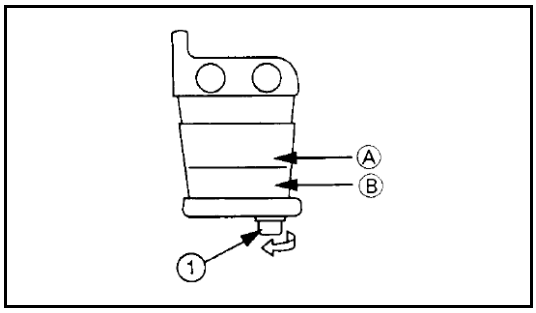

A fuel sedimentor is mount in the radiator compartment and is accessed by the door on the left hand side of the machine. Entrapped sediment and water can be seen through the glass bow.

1. Loosen drain plug (1) and drain water and sediment until none is visible in bowl.
2. Tighten drain plug.

(A):	Fuel
(B):	Water/sediment

CHECK FOR WATER IN PRIMARY FUEL FILTER, DRAIN WATER

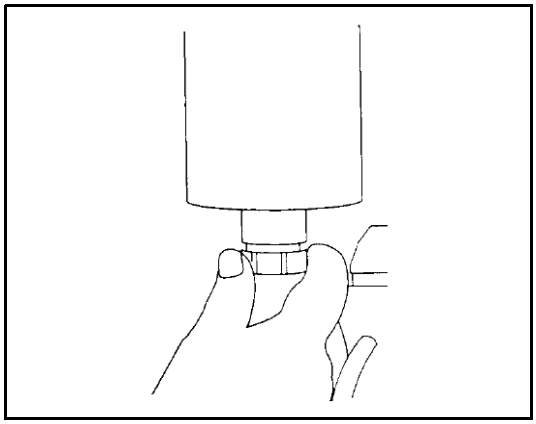

A primary fuel filter is fitted in the pump compartment. Drain the water from the primary fuel filter by turning cap at the bottom of the filter.

https://truckmanualshub.com/

EVERY 50 HOURS

DRAIN WATER AND SEDIMENT FROM FUEL TANK

1. Carry out this procedure before operating the machine.
2. Prepare a container to catch the fuel that is drained.
3. Open valve (1) at the bottom of the tank and drain the sediment and water that has accumulated at the bottom together with fuel. When doing this, be careful not to get fuel on yourself.
4. When only clean fuel comes out, close drain valve (1).

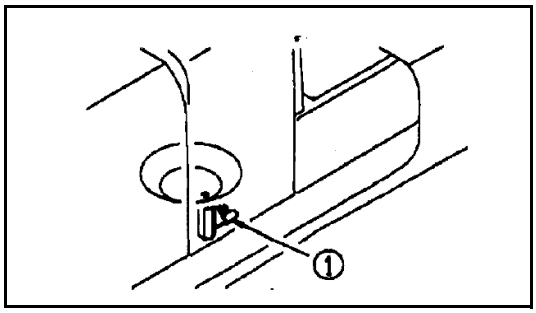

NOTE: Never use trichlene for washing the inside of the tank.

EVERY 100 HOURS SERVICE

Maintenance every 50 hours should be carried out at the same time.

LUBRICATING

The minimum greasing interval is 100 hours, however more frequent greasing will be required depending on conditions/environment.

1. Set the work equipment in the greasing posture below, then lower the work equipment to the ground and stop the engine.
2. Using a grease pump, pump in grease through the grease fittings shown by arrows.

https://truckmanualshub.com/

3. After greasing, wipe off any old grease that was pushed out.

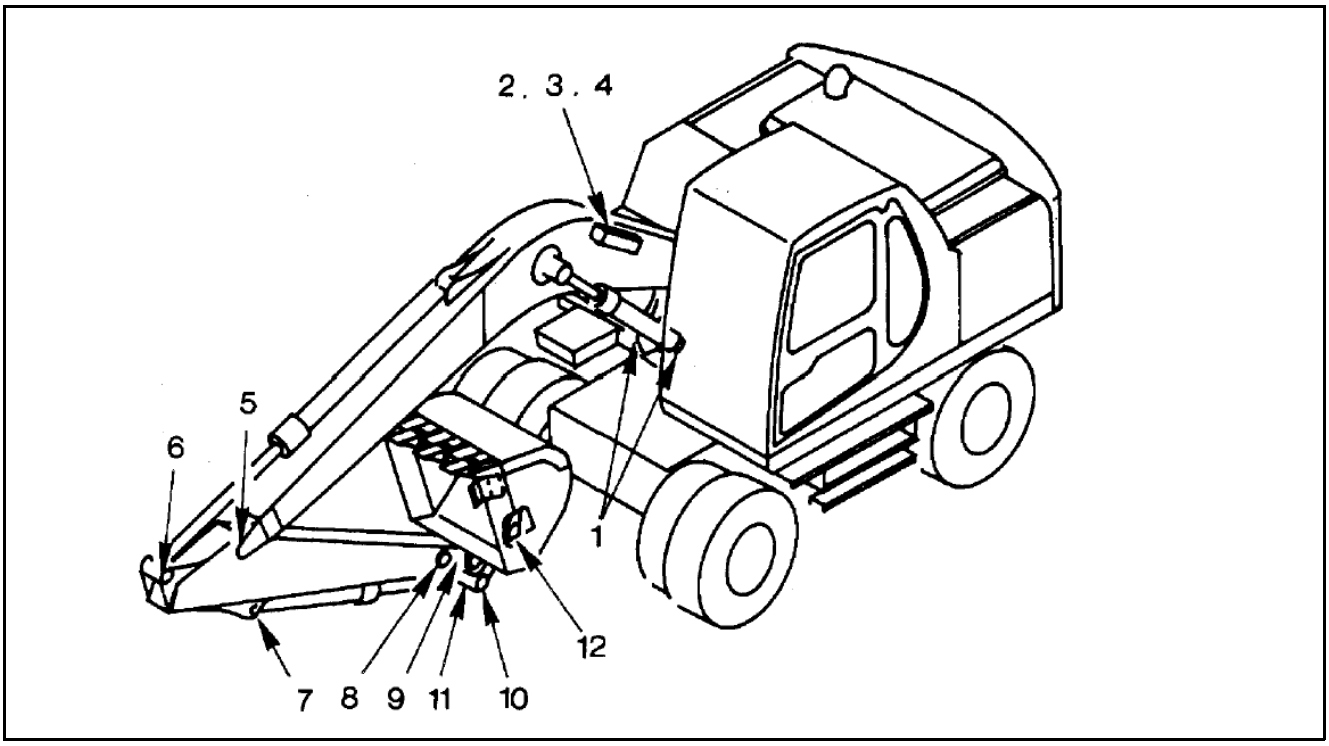

1. Boom cylinder foot pin (2 points)

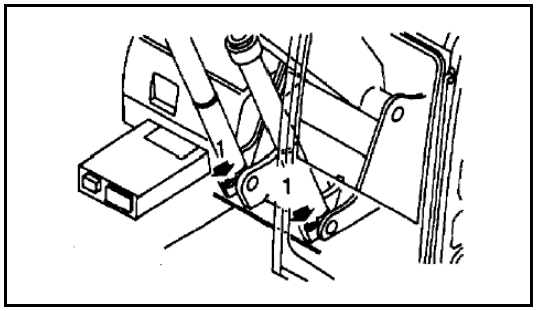

2. Boom foot pin (2 points)
3. Boom cylinder rod end (2 points)
4. Arm cylinder foot pin (1 point).

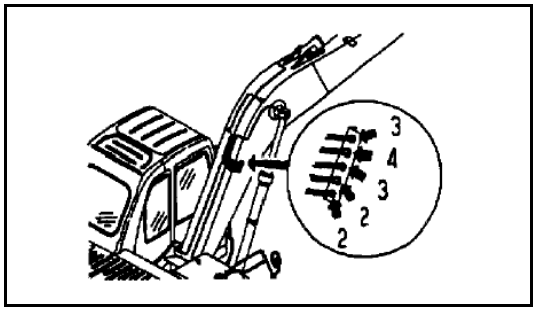

5. Boom-Arm coupling pin (1point)
6. Arm cylinder rod end (1 point)

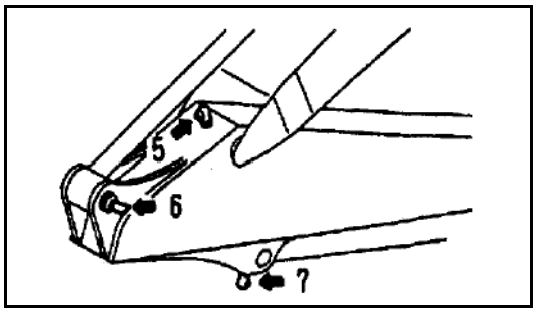

https://truckmanualshub.com/

7. Bucket cylinder foot pin (1 point)
8. Arm-Link coupling pin (1 point)
9. Arm-Bucket coupling pin (1 point)

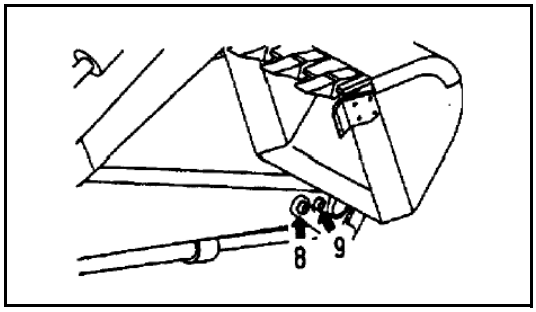

10. Link coupling pin (1 point)
11. Bucket cylinder rod end (1 point)
12. Bucket-Link coupling pin (2 points)

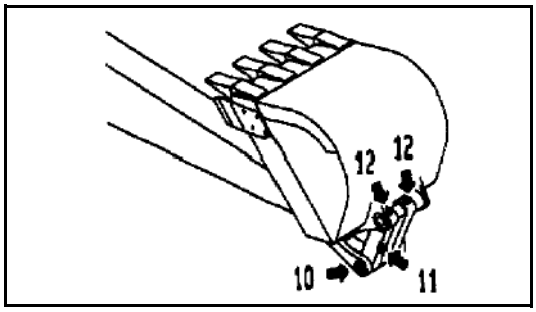

13. Outrigger cylinder foot pin (2 or 4 points)
14. Outrigger cylinder rod end (2 or 4 points)
15. Outrigger leg pivot (2 or 4 points)
16. Outrigger foot pivot (2 or 4 points)

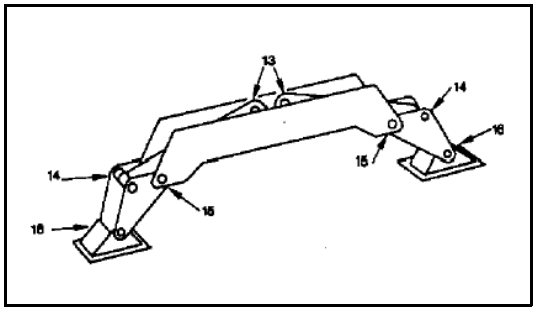

17. Propshaft.

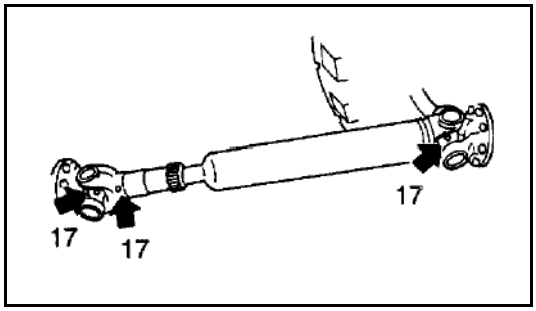

https://truckmanualshub.com/

18. Boom adjust cylinder foot pin (1 point)
19. Boom adjust cylinder rod end (1 point)

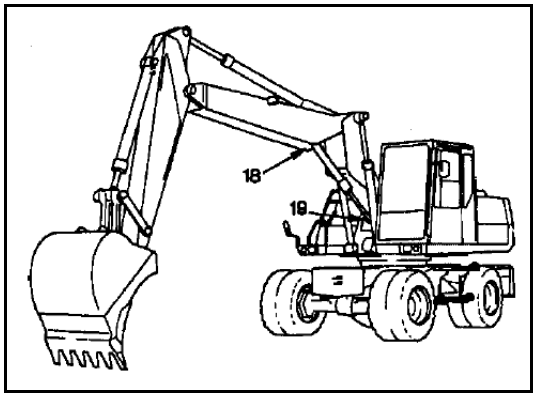

20. Dozer blade cylinder rod end (2 points)
21. Dozer blade pivot pin (2 points)
22. Dozer blade cylinder foot pin (2 points)

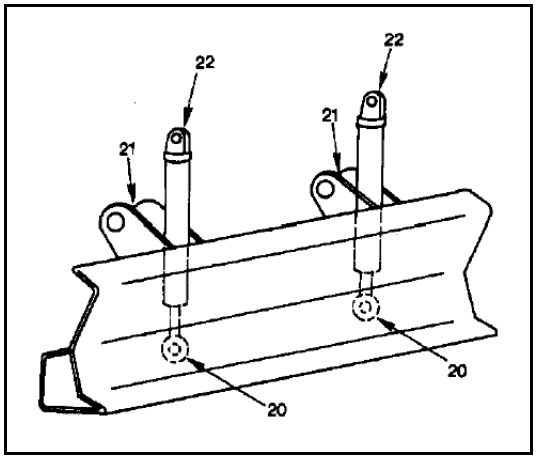

23. Axle pivot (1 point)
24. Hub pivot (4 points)
25. Steer links (4 points)

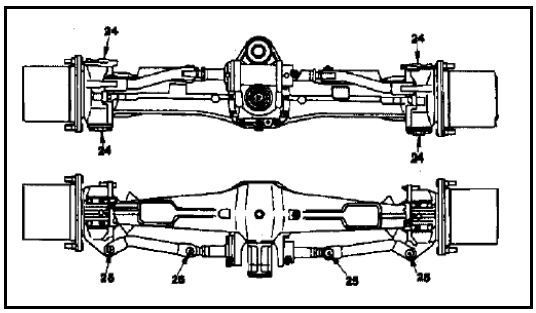

26. Parallel link pivot pin (2 points)
27. Dozer blade cylinder rod end (2 points)
28. Single link pivot pin (2 points)
29. Dozer blade pivot pins (6 points).

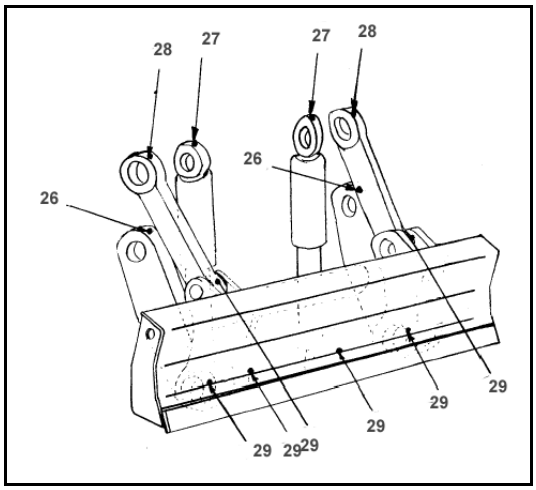

https://truckmanualshub.com/

CHECK OIL LEVEL IN SWING MACHINERY CASE, ADD OIL

The oil is at high temperature immediately after the machine has been operated. Wait for the oil to cool down before carrying out this check.

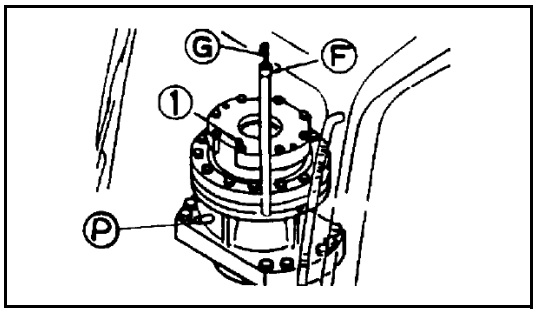

1. Remove dipstick (G) and wipe the oil from the dipstick with a cloth.
2. Insert dipstick (G) fully in the guide.
3. When dipstick (G) is pulled out, if the oil level is between the H and L marks of the gauge, oil level is proper.
4. If the oil does not reach the L mark on dipstick (G), add engine oil through dipstick insertion hole (F).
   When refilling, remove bleeding plug (1).

   For details of the oil to use, see “USE FUEL, COOLANT AND LUBRICANTS ACCORDING TO AMBIENT TEMPERATURE” on page 173.
5. If the oil level exceeds the H mark on the dipstick, loosen drain plug (P) to drain the excess oil.
6. After checking oil level or adding oil insert the dipstick into the hole and install air bleeding plug (1).

CLEAN FRESH AIR INTAKE FILTER

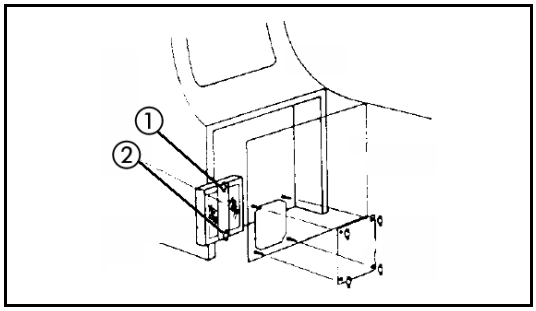

1. Remove two wings nuts holding retaining strap (2).
2. Grasp filter element (3) centrally and pull out of housing.

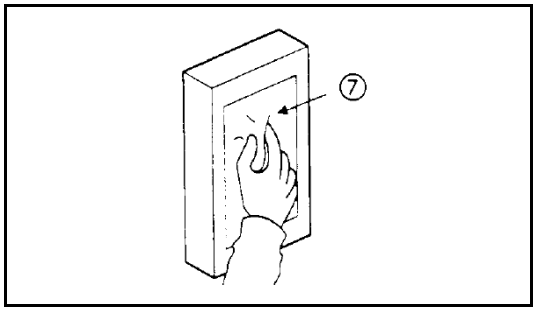

3. Note that filter element is a sandwich of a fine filter and a coarse filter.
   Clean filter by placing element in a mixture of hand hot water and neutral detergent with the coarse filter side downwards.

   Move element up and down to release dirt.
   (A) Coarse (outside)
   (B) Fine (inside)

https://truckmanualshub.com/

Rinse filter with clean water from the fine filter side.

4. Dry filter, compressed air may be used, but apply air from fine filter side.

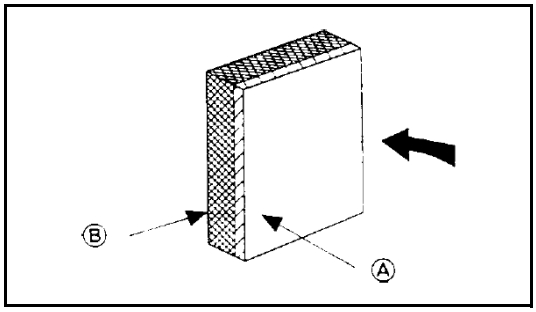

5. Refit filter element ensuring coarse filter side is facing outwards.

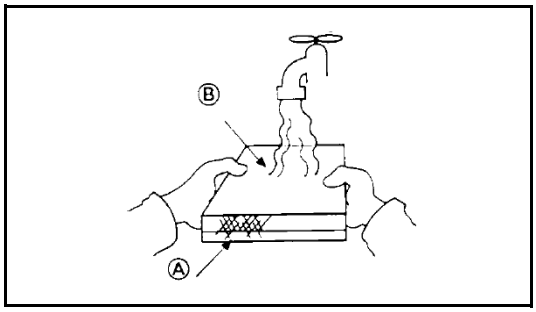

NOTICE

The normal cleaning interval is 100 hours, however if the machine is used in a dusty environment, shorten this interval.

EVERY 250 HOURS SERVICE

CHECK OIL LEVEL IN WHEEL HUBS, ADD OIL

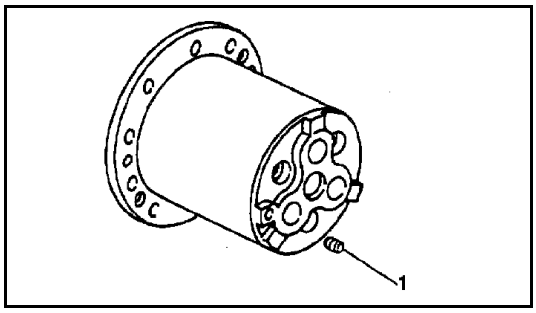

- Prepare a hexagonal wrench

1. Set so that plug (1) is at the horizontal position.
2. Remove plug.
3. If no oil emerges, turn hub so that hole is at the top and add oil.
4. Turn hub so that hole is horizontal.
5. Repeat steps 3 and 4.

   For details of the oil to use see “USE FUEL, COOLANT AND LUBRICANTS ACCORDING TO AMBIENT TEMPERATURE” on page 173.

6. After checking, install plug (1).

https://truckmanualshub.com/

CHECK OIL LEVEL IN AXLES, ADD OIL

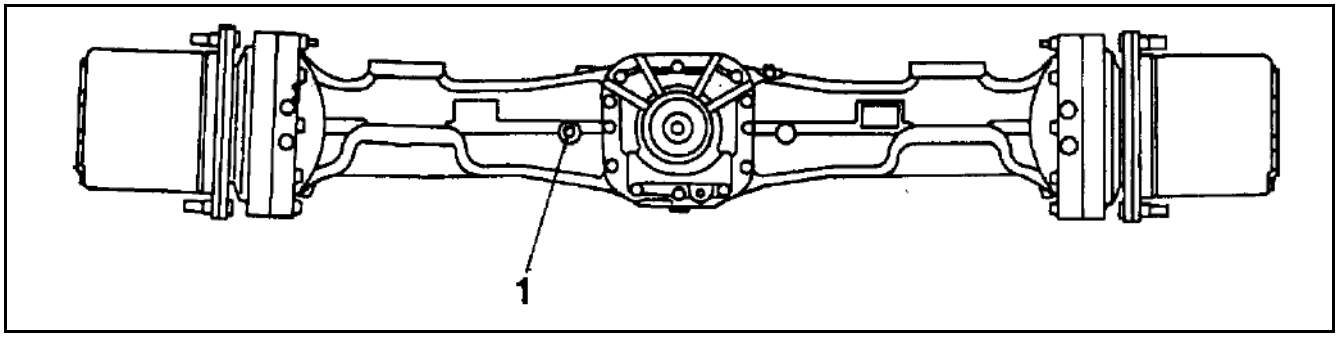

1. Ensure axle is horizontal and remove plug (1).
2. If no oil emerges attach tube and funnel and add oil until oil emerges from the hole after removing tube.
3. Replace plug (1).

   For details of the oil to use, see “USE FUEL, COOLANT AND LUBRICANTS ACCORDING TO AMBIENT TEMPERATURE” on page 173.

CHECK OIL LEVEL IN TRANSMISSION, ADD OIL

1. Remove level plug (2).
2. If oil emerges replace plug (2)
3. If no oil emerges remove plug (1) and add oil until oil emerges from plug hole (2).
4. Replace plugs.

   For details of the oil to use, see “USE FUEL, COOLANT AND LUBRICANTS ACCORDING TO AMBIENT TEMPERATURE” on page 173.

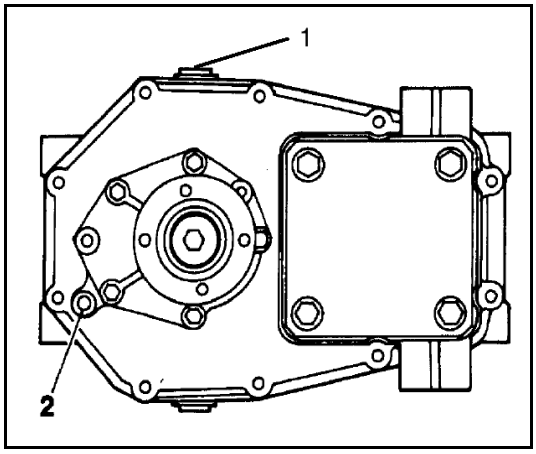

https://truckmanualshub.com/

CHECK LEVEL OF BATTERY ELECTROLYTE

⚠ WARNING

- **To avoid gas explosions, do not bring fire or sparks near the battery.**
- **Battery electrolyte is dangerous. If it gets in your eyes or on your skin, wash it off with large amounts of water, and consult a doctor.**

Carry out this check before operating the machine.

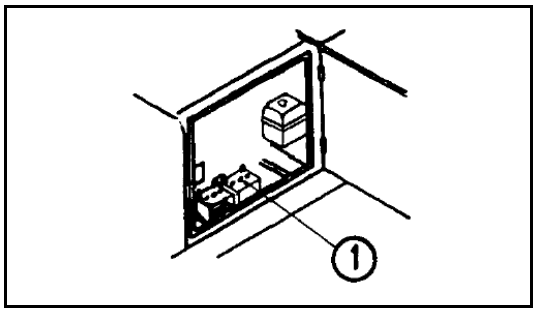

1. Open the battery door on the left side of the machine.
2. Remove cap (1), and check that the electrolyte is at the specified level (10 to 12 mm above the plate). If the electrolyte level is low, add distilled water to the specified level.

If the battery electrolyte is spilled, have dilute sulphuric acid added.

3. Clean the air hole in the battery cap, then tighten the cap securely.

When adding distilled water in cold weather, add it before starting operations in the morning to prevent the electrolyte from freezing.

LUBRICATE SWING CIRCLE (2 points)

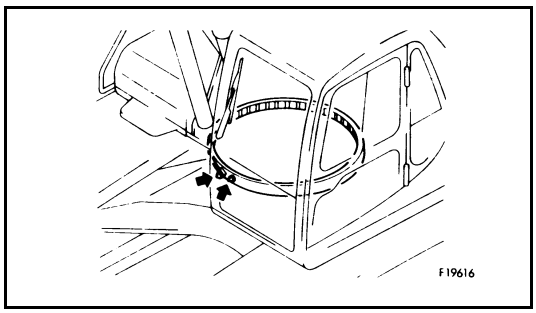

1. Lower the work equipment to the ground.
2. Using a grease pump, pump in grease through the grease fittings shown by arrows.
3. After greasing, wipe off all the old grease that was pushed out.

BELTS, GENERAL

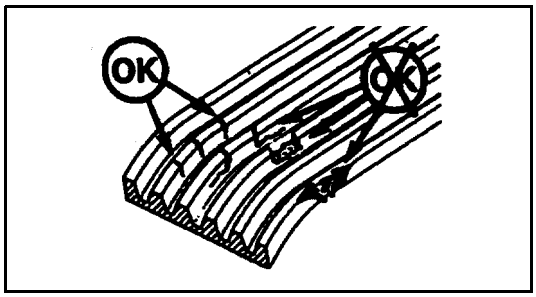

⚠ WARNING

Before working on the engine or electrical system, disonnect the negative (ground) battery cable. Tag the cable and controls to warn against starting.

Replace badly worn, greasy or severely cracked belts immediately. These conditions prevent the belt from functioning correctly.

Prior to installing new belts, make sure all pulley grooves are clean and not worn. If a pulley is damaged or if the grooves are worn, it should be replaced.

https://truckmanualshub.com/

All pulley support bearings, shafts and brackets must be in working order.

When replacing belts and pulleys, pulley alignment must be checked with belts tensioned and brackets securely clamped. A misalignment that can be detected by the naked eye is detrimental to belt performance.

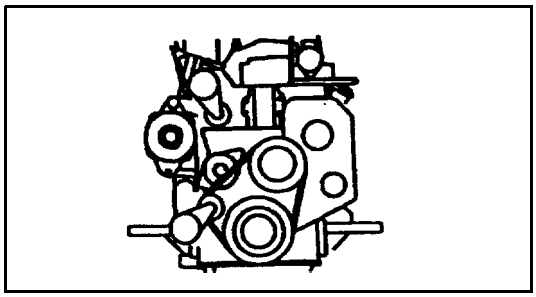

During belt installation, do not force the belts into the pulley grooves by prying with a screwdriver on pry bar. This will damage the belt side cords which will cause the belts to turn and result in complete destruction of the belts in operation.

Belts on new machines and replacement belts lose their tension as they seat into the pulley grooves. Check the tension of new belts at 20 hour intervals until tension is stabilized and thereafter, every 250 hours. If the tension falls below the required minimum, the belt slips, and damages the belts and pulley grooves.

REMARK

When operating in abrasive conditions, check tension every 100 hours.

Visually inspect the belts for intersecting cracks. Transverse (across the belt width) cracks are acceptable. Longitudinal (direction of belt length) cracks that intersect with transverse cracks are not acceptable. Replace the belt if it is frayed or has pieces of material missing.

CHECK FAN BELT TENSION, ADJUST CHECKING TENSION

The engine is equipped with an automatic belt tensioner that maintains correct tension on the drive belt. To check belt tension a Gates type gauge must be used because of the wide drive belt. Proper tension should be 355 to 455 N.m gauge value.

If a Gates type gauge is not available, tension may be checked by belt deflection. Press the belt with your finger at the longest span and measure the deflection. Maximum deflection 9.5 to 12.7 mm.

https://truckmanualshub.com/

ADJUSTING

With the automatic belt tensioner, no adjustment is required.

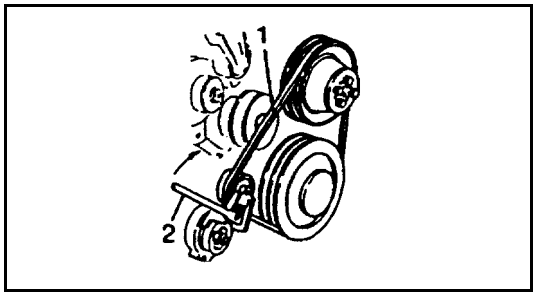

REPLACEMENT

To replace the drive belt, place a 3/8 in. drive rachet (2) in the 3/8 in. square drive hole in the belt tensioner. Push the rachet “UP” to loosen the tensioner. Remove the old belt (1). Inspect belt tensioner. The tensioner pulley should spin freely with no rough spots detected under hand pressure. Install the new belt.

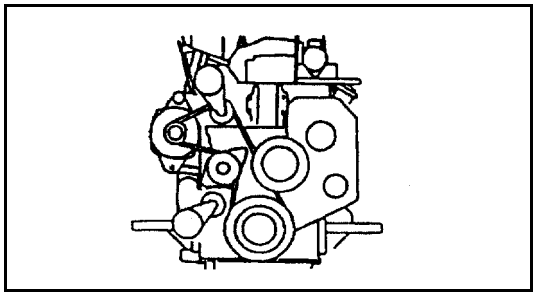

CHECK ALTERNATOR AND WATER PUMP BELT TENSION, ADJUST CHECKING TENSION

The engine is equipped with an automatic belt tensioner that maintains correct tension on the drive belt. To check belt tension a “Gates” type gauge must be used because of the wide drive belt. Proper tension should be 355 to 455 N.m gauge value.

If a “Gates” type gauge is not available, tension may be checked by belt deflection. Press the belt with your finger at the longest span and measure the deflection. Maximum deflection 9.5 to 12.7 mm.

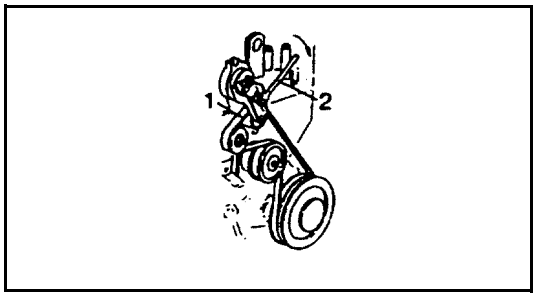

ADJUSTMENT

With the automatic belt tensioner, no adjustment is required.

REPLACEMENT

To replace the drive belt, place a 3/8 in. drive rachet in the 3/8 in. square drive hole in the belt tensioner. Push the rachet “UP” to loosen the tensioner. Remove the old belt. Inspect belt tensioner. The tensioner pulley should spin freely with no rough spots detected under hand pressure. Install the new belt.

NOTE: The belt tensioner is spring loaded and must be pivoted away from the belt. Pivoting in the wrong direction can result in damage to the belt tensioner.

https://truckmanualshub.com/

CHECK AND ADJUST TENSION OF AIR CONDITIONER COMPRESSOR BELT

Testing

The belt should deflect 14-16 mm when pressed with a finger force of approx. 6 kg at a point midway between the crankshaft pulley and the compressor pulley.

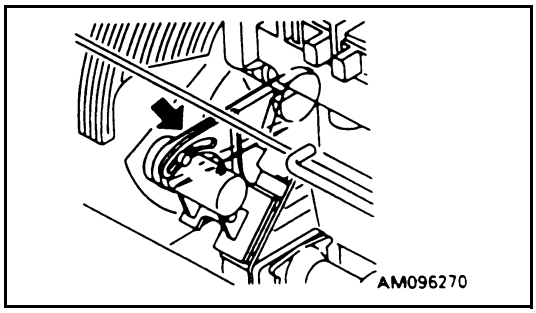

Adjusting

1. Loosen 2 bolts (1) and 2 bolts (2), and move compressor (3) to adjust.
2. When the deflection is correct, tighten bolts (1) and (2) to hold the compressor in position.
3. Check each pulley for damage, and check the V-groove and V-belt for wear. In particular, check that the V-belt is not contacting the bottom of the V-groove.
4. If the V-belt is streched and cannot be adjusted any further, or if there are any cuts or cracks, replace the V-belt.
5. After replacing the V-belt, adjust again after one hour of operation.

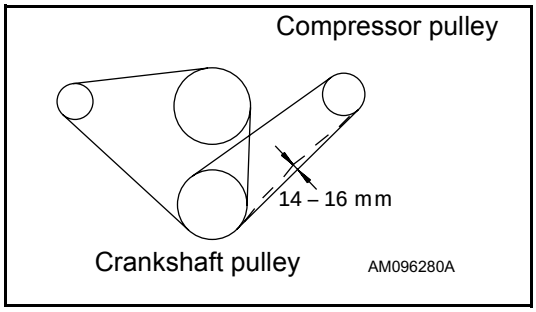

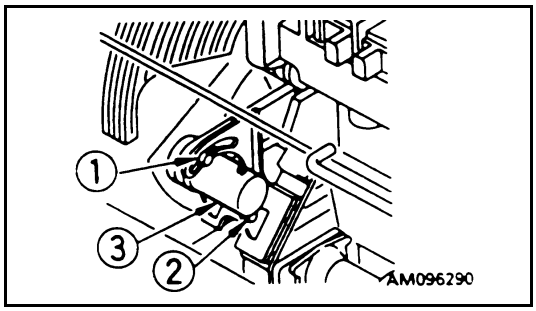

https://truckmanualshub.com/

EVERY 500 HOURS SERVICE

Maintenance for every 50, 100 and 250 hours should be carried out at the same time.

REPLACE FUEL FILTER CARTRIDGES

⚠ WARNING

- **Engine is at high temperature immediately after the machine has been operated. Wait for engine to cool down before replacing the filter.**
- **Keep naked flames - sparks away from fuel.**
- **When cranking the engine, ensure all safety procedures have been followed, as the engine may start.**

FUEL FILTERS ARE LOCATED IN THE LEFT HAND SIDE COMPARTMENT

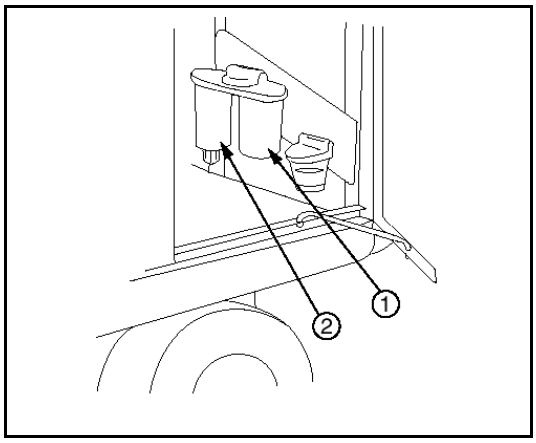

Get a filter wrench and a container to catch the fuel.

1. Set the container to catch the fuel under the filter cartridges.
2. Using a filter wrench, turn filter cartridges (1) and (2) counterclockwise to remove them.
3. Clean the filter holders, fill new filter cartridges with clean fuel, coat the packing surface with engine oil, then install them to the filter holders.
4. When installing, tighten until the packing surface contacts the seal surface of the filter holder, then tighten it up 1/2 to 3/4 of a turn.

   If the filter cartridge is tightened too far, the packing will be damaged and this will lead to leakage of fuel. If the filter cartridge is too loose, fuel will also leak from the packing, so always tighten to the correct amount.
5. After replacing the fuel filter cartridges, bleed the air from the system.

Fuel System

Bleeding

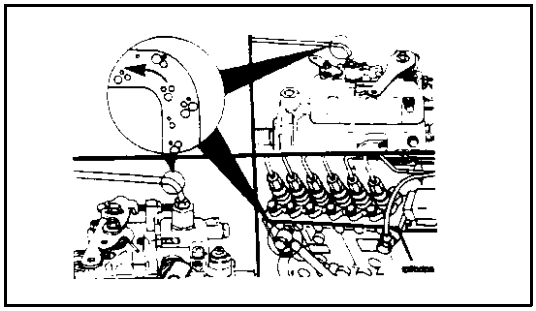

Controlled venting is provided at the injection pump through the fuel drain manifold. Small amounts of air introduced by changing the fuel filters or fuel injection pump supply line will be vented automatically, if the fuel filter is changed in accordance with the instructions. No manual bleeding of fuel lines is required.

NOTE: Manual bleeding is required if:

- ❍ The fuel filter is not filled prior to installation.

https://truckmanualshub.com/

- Fuel injection pump is replaced.
- High pressure fuel line connections are loosened or fuel lines replaced.
- Initial engine start up or start up after an extended period of no engine operation.
- Vehicle fuel tank has been run until empty.

Low Pressure Lines and Fuel Filter(s)

Venting

1. Open the bleed screw

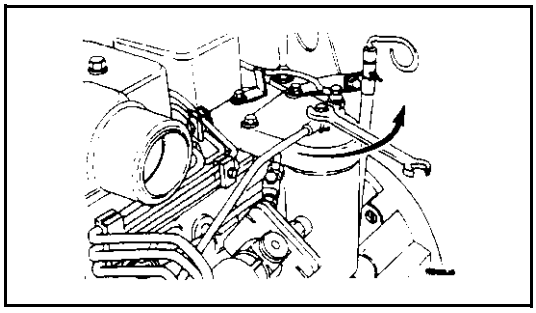

2. Operate the plunger on the lift pump until the fuel flowing from the fitting is free of air.

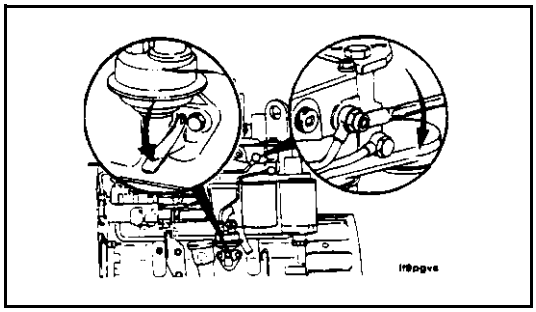

Tighten the bleed screw.
Torque Value: 9 N•m

⚠ CAUTION

When using the starting motor to vent the system, do not engage it for more than 30 seconds at a time:
Wait two (2) minutes between engagements.

⚠ WARNING

It is necessary to put the engine in the "Run" position. Because the engine may start, be sure to follow all the safety precautions. Use the normal engine starting procedure.

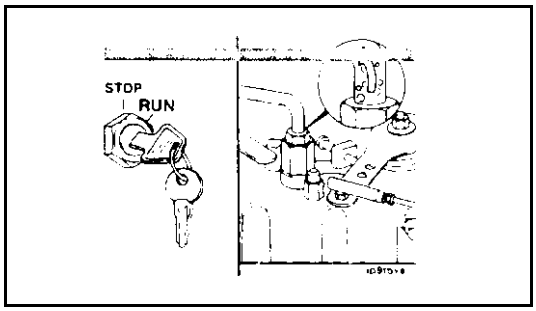

https://truckmanualshub.com/

High pressure Lines

Venting

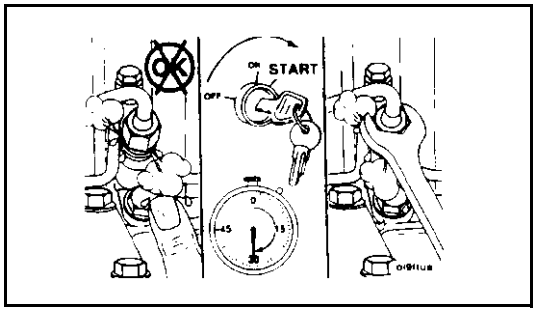

⚠ WARNING

The pressure of the fuel in the line is sufficient to penetrate the skin and cause serious bodily harm.

1. Loosen the fittings at the injectors, and crank the engine to allow entrapped air to bleed from the lines. Tighten the fittings.

Re- Tighten Line Fittings
Torque Value: 30 N•m

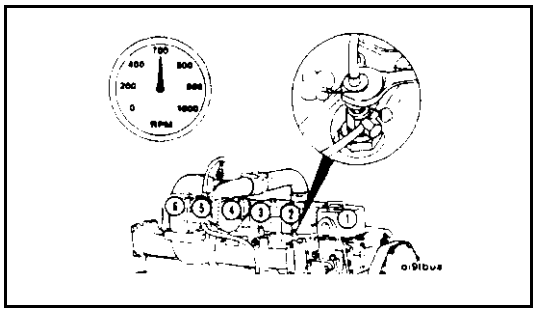

⚠ WARNING

Do not bleed a hot engine as this could cause fuel to spill onto a hot exhaust manifold creating a danger of fire.

2. Start the engine and vent one line at a time until the engine runs smoothly.

CHECK SWING PINION GREASE LEVEL, ADD GREASE

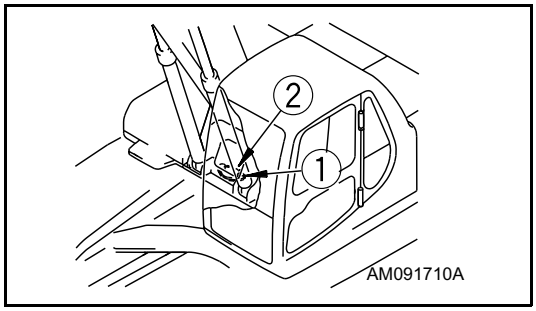

Prepare a scale.

1. Remove bolts (1) (2 bolts) on the top of the revolving frame and remove cover (A).

2. Check the colour of the grease. If it is milky white, it is necessary to change the grease. Please contact your Komatsu distributor.

The total amount of grease is 33 L (29.7 kg).

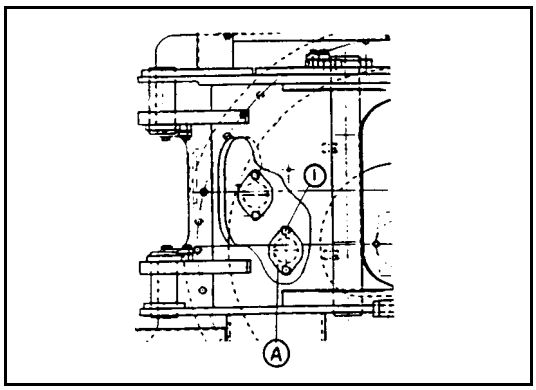

3. Insert a rule into the grease and check that the depth of the grease is at least 25 mm. Add more grease if necessary.

4. To add more grease replace cover (A) and (1) bolts (2 bolts), remove bolts (2) (2 bolts) on the top of the revolving frame and remove cover (B). Add more grease.

5. Replace cover (B) with bolts (2).

https://truckmanualshub.com/

CHANGE OIL IN ENGINE OIL PAN, REPLACE ENGINE OIL FILTER CARTRIDGE

⚠ WARNING

The oil is at high temperature after the engine has been operated, so never change the oil immediately after finishing operations. Wait for the oil to cool down before changing it.

Prepare the following

- Container to catch drained oil: Min. 17 litres
- Refill capacity: 16 litres
- Filter wrench

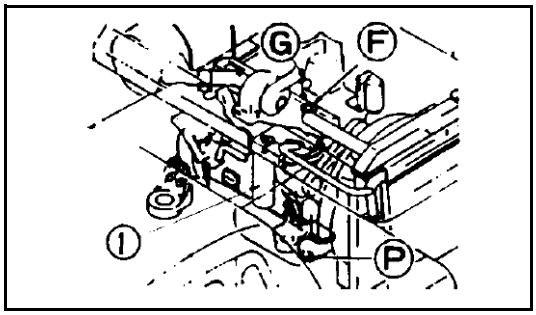

1. Remove the inspection cover of the undercover directly under drain valve (P) under the machine, then place a container to catch the oil.
2. Remove cap from drain valve (P), fit drain hose from machine toolkit and drain oil. After draining oil remove hose and refit cap.
3. Check the drained oil, and if there are excessive metal particles or foreign material, please contact your distributor.
4. Tighten drain valve (P).
5. Using the filter wrench, turn filter cartridge (1) counterclockwise to remove it.
   In particular, if this operation is carried out immediately after stopping the engine, a large amount of oil will come out, so wait for 10 minutes before starting the operation.
6. Clean the filter holder.

REMARK

Confirm that no remnants of old packing still adhere to the filter holder as this may result in oil leakage.

NOTICE

Do not tighten filter or use any tools for installation be cause this can damage the gasket and filter.

7. Fill the new filter with clean oil.
8. Install the new filter by applying a little engine oil to the seal and thread the filter on by hand by turning it clockwise until hand tight.
9. After replacing the filter cartridge, add engine oil through oil filler (F) until the oil level is between the H and L marks on dipstick (G).

   For details of the oil to use, see “USE FUEL, COOLANT AND LUBRICANTS ACCORDING TO AMBIENT TEMPERATURE” on page 173.

https://truckmanualshub.com/

NOTICE

Even if the machine has not been operated for 500 hours, the oil and filter cartridge must be replaced when the machine has been operated for 6 months.
In the same way, even if the machine has not been operated for 6 months, the oil and filter cartidge must be replaced when the machine has been operated for 500 hours.

CLEAN AND INSPECT RADIATOR FINS, OIL COOLER FINS AND CONDENSER FINS (ONLY FOR MACHINES EQUIPPED WITH AIR-CONDITIONER)

⚠ WARNING

If compressed air, steam, or water hit your body directly, there is danger of injury. Always wear protective glasses, mask, and safety shoes.

1. Remove the engine hood and open rear door on the left side of the machine. Loosen bolts (1) and remove the radiator front cover.

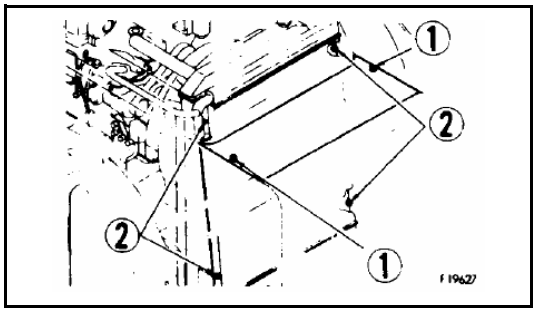

2. Blow off mud, dust or leaves clogging the radiator fins and oil cooler fins using compressed air.
   At the same time, clean the net in front of the oil cooler. Clean the condenser fins on machines equipped with the air conditioner. The condenser is located on the front of the radiator.
   Steam or water may be used instead of compressed air.

3. Check the rubber hose. Replace with a new one if the hose is found to have cracks or to be hardened by ageing.
   Further, check hose clamps for looseness.

NOTICE

To prevent damage to the fins, apply compressed air from an appropriate distance. Damaged fins may cause

https://truckmanualshub.com/

water leakage or overheating. In a dusty site, check the fins daily, irrespective of the maintenance interval.

REPLACE HYDRAULIC TANK BREATHER ELEMENT

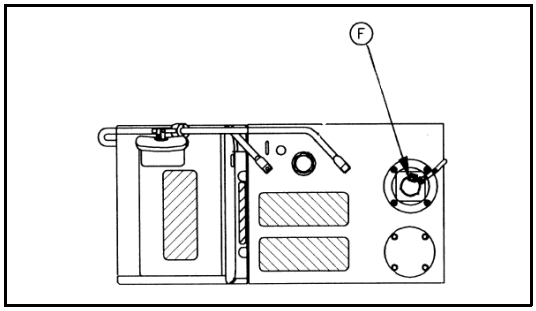

⚠ WARNING

Wait for the oil to cool down before replacing the breather element. When removing the oil filler cap, turn it slowly to release the internal pressure, then remove it carefully.

1. Remove the cap of oil filter (F).
2. Replace element (1) inside the cap with a new one.

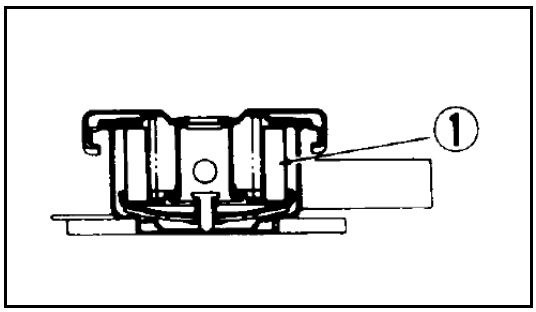

REPLACE HYDRAULIC FILTER ELEMENT

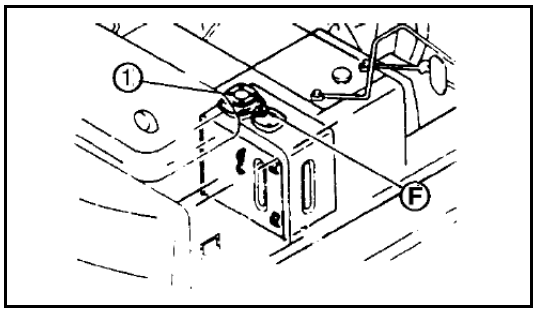

⚠ WARNING

When removing the oil filler cap, turn it slowly to release the internal pressure before removing it.

1. Remove the cap from oil filler (F), and release the internal pressure.
2. Loosen 4 bolts, then remove cover (1).
   When doing this, the cover may fly out under the force of spring, so hold the cover down when removing the bolts.
3. After removing spring (2) and valve (3) take out element (4).
4. Clean the removed parts in diesel oil.
5. Install a new element in the place where old element (4) was installed.
6. Set valve (3) and spring (2) on top of the element.
7. Set cover (1) in position, push it down by hand, and install the cover with the mounting bolts.
8. Screw in the oil filler cap and install the cover.
9. To bleed the air, start the engine according, see “STARTING ENGINE” on page 110. and run the engine at low idling for 10 minutes.

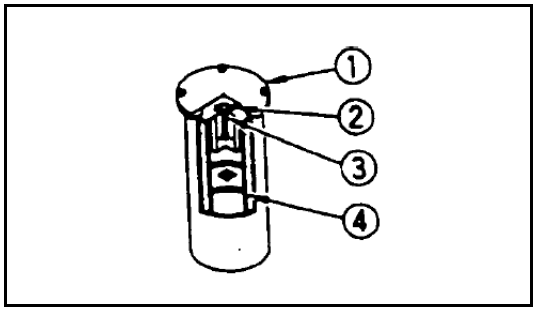

https://truckmanualshub.com/

10. Stop the engine.

REMARK

Operate the machine after halting for more than 5 minutes to eliminate bubbles in the oil inside the tank.

11. Check for oil leakage and wipe off any spilled oil.

When the hydraulic breaker is installed, the hydraulic oil deteriorates earlier than in normal bucket digging work.

The first element replacement should be at 100 to 150 hours for new machines. Thereafter, replace the element according to the table on the right.

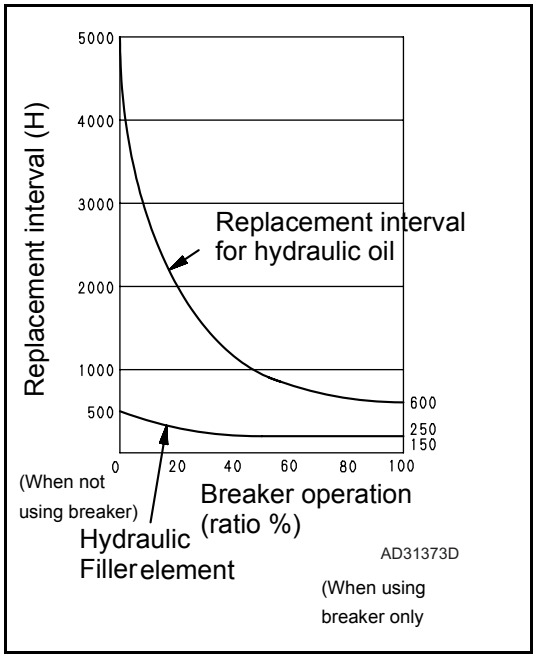

EVERY 1000 HOURS SERVICE

Maintenance for every 100, 250 and 500 hours should be carried out at the same time.

CHANGE OIL IN SWING MACHINERY CASE

WARNING

The oil is at high temperature immediately after the machine has been operated. Wait for the oil to cool down before carrying out maintenance.

- Container to catch drained oil: Min. 2.5 l capacity
- Refill capacity: 2.5 l

1. Set an oil container under drain plug (P) under the machine body.
2. Loosen drain valve (P) under the body, drain the oil, then tighten (98 - 185 Nm (10-19kgm)) the drain valve again.

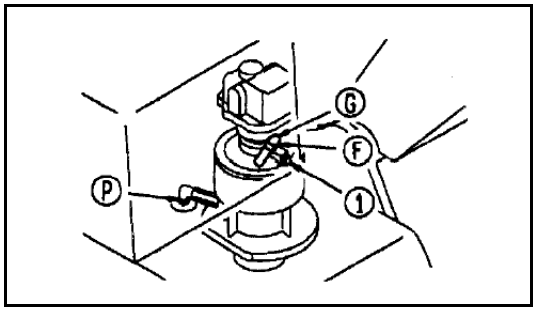

https://truckmanualshub.com/

3. Remove dipstick (G) and bleeding plug (1).
   Add the specified amount of engine oil through gauge hole (F).

   For details of the oil to use, see “USE FUEL, COOLANT AND LUBRICANTS ACCORDING TO AMBIENT TEMPERATURE” on page 173.

4. After refilling, install bleeding plug (1).
5. Wipe off oil on the dipstick with a cloth.
6. Insert dipstick (G) into the gauge pipe thoroughly and then pull out it again.
7. When the oil level is between the H and L marks, on dipstick (G), it is normal. If the oil does not reach the L mark, add more oil through oil filler (F).
8. If the oil level exceeds the H mark, drain the excess engine oil from drain plug (P), and check the oil level again.

CHECK ALL TIGHTENING PARTS OF TURBOCHARGER

Contact your Komatsu distributor to have the tightening portions checked.

CHECK PLAY OF TURBOCHARGER ROTOR.

Ask Komatsu distributor to check the play of the turbocharger rotor.

CHECK & ADJUST VALVE CLEARANCE

FIRST 1000 HOURS ONLY

1. Adjusting the valves

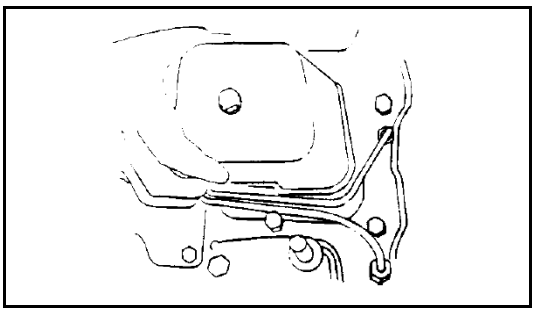

   Remove the valve covers.

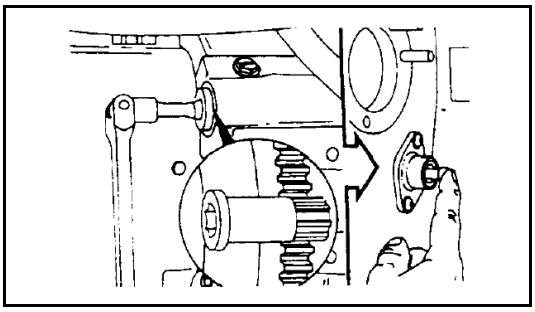

2. Locate Top Dead Centre (TDC) for Cylinder Number 1 by rotating the crankshaft slowly while pressing on the engine timing pin
3. When the pin engages the hole in the camshaft gear, Cylinder Number 1 is at TDC on the compression stroke.

https://truckmanualshub.com/

1	Camshaft gear
2	Engine timing pin
3	Gear housing

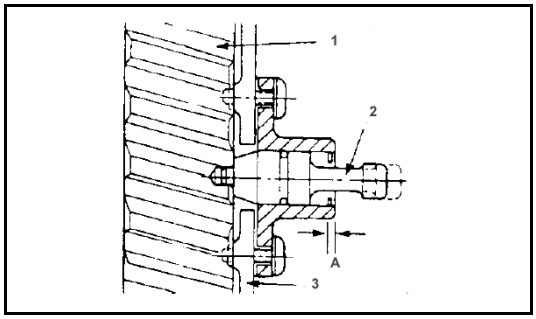

CAUTION

Be sure to disengage the pin after locating TDC.

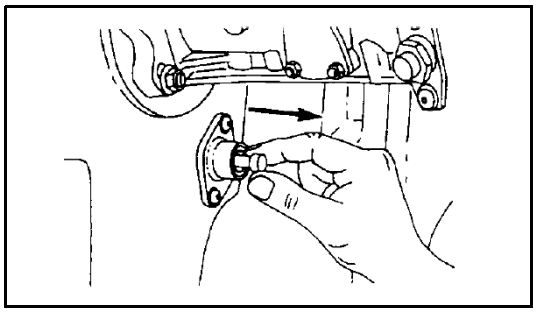

Valve clearance intake: 0-254 mm
exhaust: 0-508 mm

Check/set valves with engine cold - below 60°C

NOTE: The clearance is correct when some resitance is ‘felt’ when the feeler gauge is slipped between the valve stem and the rocker lever.

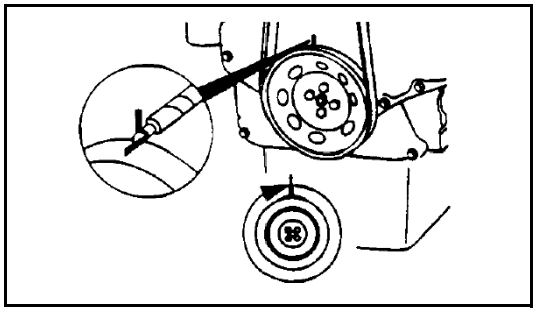

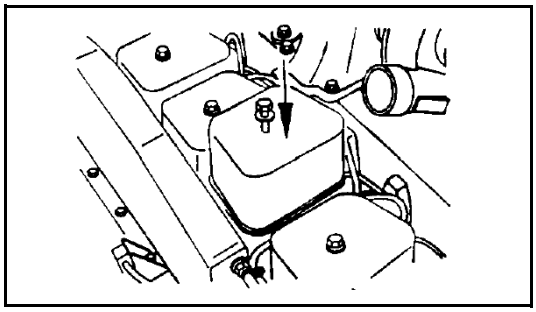

With the engine in TDC position, check and adjust the following valve clearances.

Intake (I) cylinders: 1,2
Exhaust (E) cylinders: 1,3

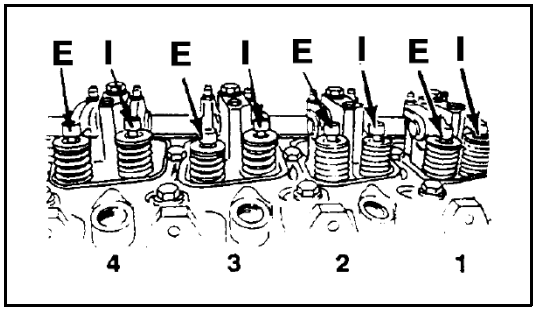

https://truckmanualshub.com/

Tighten the lock nut to 24 N.m and re-check the valve lash

Mark the pulley and rotate the crankshaft 360° degrees.
Be sure timing pin is sisengaged, before rotating.
The timing pin will not engage in this position. With the engine in this position, check and adjust the following valve clearances.

Intake (I) cylinders: 3,4
Exhaust (E) cylinders: 2,4

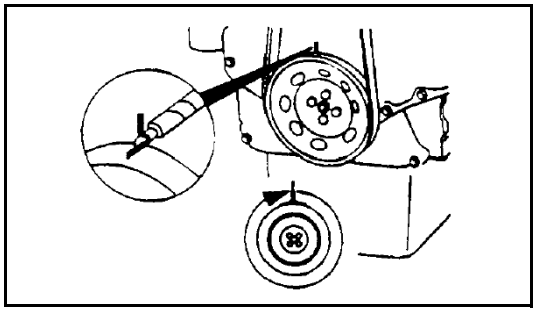

Tighten the lock nut to 24 N.m and re-check the valve lash.
Install the valve covers and tighten capscrews to 24 N.m

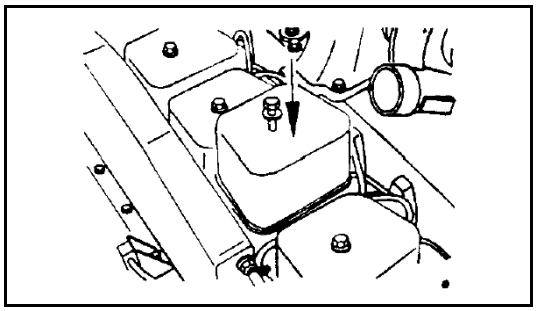

CHECK FAN BELT TENSIONER BEARING BELT AND FAN HUB

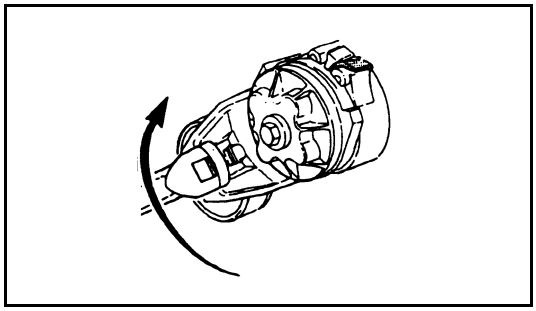

- Check the tensioner bearing
  With the fan belt removed rotate fan hub.
  The tensioner pulley should spin freely with no rough spots defected under hand pressure.
- Check the tensioner bearing.
- Replace bearing if damaged.
- Check fan hub. With the drive belt removed, rotate fan hub.

NOTE: The fan hub should spin freely without excessive end play.

- Check the fan hub bearing.
- Replace bearing if damaged.

CHECK FAN BELT TENSION

- Measure the belt deflection at the longest span of the belt.
- Maximum deflection: 9.5-12,7 mm
  If tension is low (deflection is outside range): (see “Check fan belt tensioner bearing, belt and fan hub.”)
- Check belt & replace if damaged.
- Check tensioner & replace if damaged.

https://truckmanualshub.com/

EVERY 2000 HOURS SERVICE

Maintenance for every 100, 250, 500 and 1000 hours should be carried out at the same time.

CLEAN HYDRAULIC TANK STRAINER

WARNING

The oil is at high temperature immediately after the machine has been operated. Wait for the oil to cool down before changing the oil. When removing the oil filler cap, turn it slowly to release the internal pressure, then remove it carefully.

Prepare the following

- Container to catch drained oil: min. 117 l capacity
- Refill, capacity: 117 l
- Prepare a handle for the socket wrench set.

1. Loosen 4 bolts, then remove cover (1).
   When doing this, the cover may fly out under the force of spring (2), so push the cover down when removing the bolts.
2. Pull up the top of rod (3), and remove spring and strainer (4).
3. Remove the dirt stuck to strainer (4), then wash it in clean diesel oil or flushing oil. If strainer (4) is damaged, replace it with a new one.
4. Refit strainer (4) by inserting it into tank projecting part (5).
5. Install cover (1) with bolts.

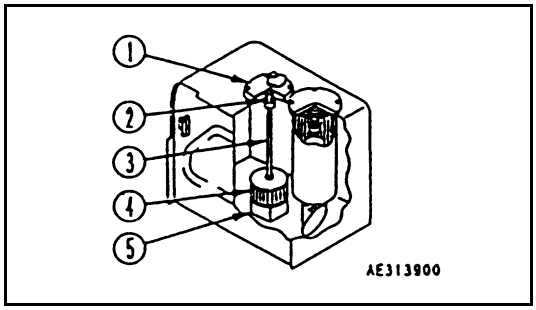

CLEAN, CHECK TURBOCHARGER

Contact your Komatsu distributor for cleaning or inspection.

CHECK ALTERNATOR, STARTING MOTOR

The brush may be worn, or the bearing may have run out of grease, so contact your Komatsu distributor for inspection or repair. If the engine is started frequently, carry out inspection every 1000 hours.

https://truckmanualshub.com/

CHECK VIBRATION DAMPER

Check the index lines (A) on the damper hub (B) and the inertia member (C). If the lines are more than 1.59 mm out of alignment, replace the damper.

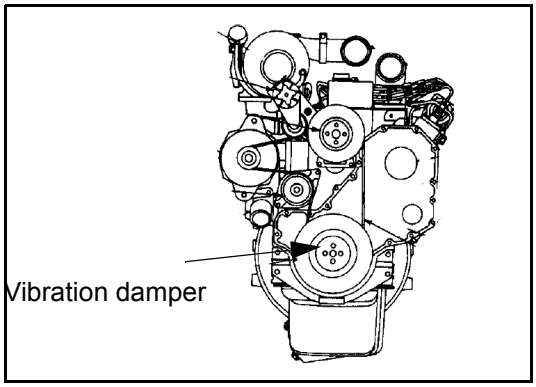

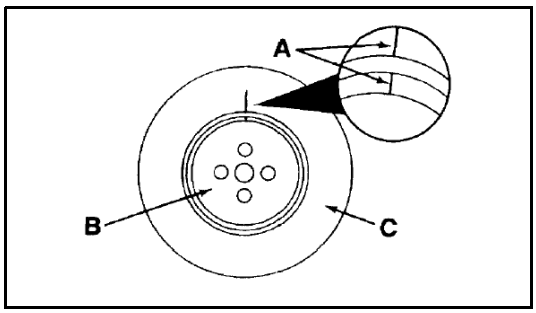

CHANGE OIL IN AXLES

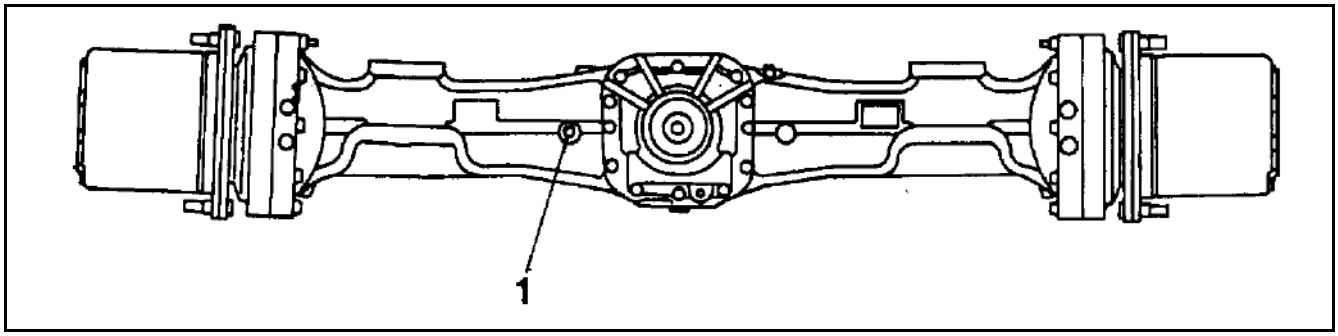

1. Remove plugs (1) and (2) to drain oil.
2. Replace plug (2).
3. Attach tube and funnel to plug (1) hole and add oil until oil emerges when tube is removed.
4. Replace plug (1).

https://truckmanualshub.com/

CHANGE OIL IN HUBS

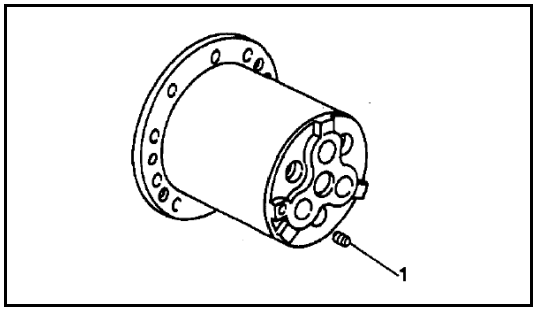

1. Position hub with plug (1) at bottom and remove plug (1).
2. When all oil has drained out, rotate hub until plug hole is at the top.
3. Add oil (2.5 l each hub, front axle, 2.7 l each hub, rear axle) and rotate hub until filling hole is horizontal.
4. If oil emerges, allow excess to drain off and replace plug.
5. If no oil emerges, rotate hub until plug hole is at the top and add oil.
6. Rotate until hole is horizontal.
7. Repeat steps 4,5 + 6.
8. Replace plug.

CHANGE OIL IN TRANSMISSION ASSEMBLY

TRANSMISSION

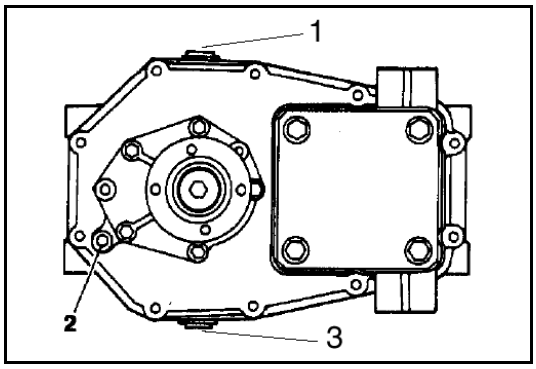

1. Remove plugs (1), (2) + (3) and allow oil to drain out.
2. Replace plug (3).
3. Add oil (approx. 1 l) until oil emerges from plug (2) hole.
4. Replace plugs (1) + (2).

CLUTCH

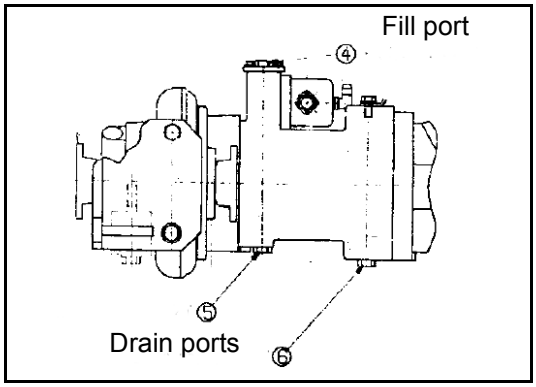

1. Remove plugs (4), (5) & (6) and allow oil to drain out.
2. Replace plugs (5) & (6).
3. Add oil (measure 0.5 l)
4. Replace plug (4).

CHANGE ANTIFREEZE

Follow the procedure of “CLEAN INSIDE OF COOLING SYSTEM” on page 189 for draining and refilling the cooling system.

CHECK AND ADJUST VALVE CLEARANCE

See section “CHECK & ADJUST VALVE CLEARANCE” on page 222 for procedure.

https://truckmanualshub.com/

EVERY 4000 HOURS SERVICE

Maintenance for every 100, 250, 500, 1000 and 2000 hours should be carried out at the same time.

CHECK WATER PUMP

Check that there is oil leakage, water leakage, or clogging of the drain hole. If any abnormality is found, contact your Komatsu distributor for disassembly and repair or replacement.

EVERY 5000 HOURS SERVICE

Maintenance for every 100, 250, 500 and 1000 hours should be carried out at the same time.

CHANGE OIL IN HYDRAULIC TANK

WARNING

The oil is at high temperature immediately after the machine has been operated. Wait for the oil to cool down before changing the oil. When removing the oil filler cap, turn it slowly to release the internal pressure, then remove it carefully.

Prepare the following

- Container to catch drained oil: min. 117 l capacity
- Refill, capacity: 117 l
- Prepare a handle for the socket wrench set.

1. Swing the upper structure so that the drain plug under the hydraulic tank overhangs the undercarriage.

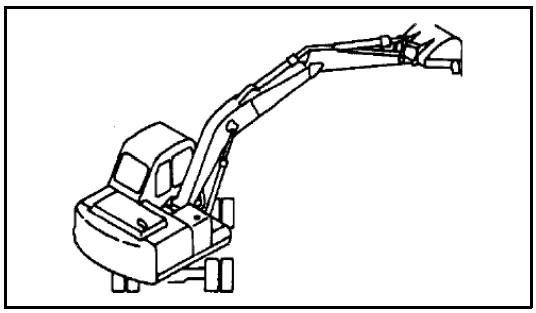

https://truckmanualshub.com/

2. Retract the arm and bucket cylinders to the stroke end, then lower the boom and put the bucket teeth in contact with the ground.

3. Lock the control lever pad safety lock lever and stop the engine.

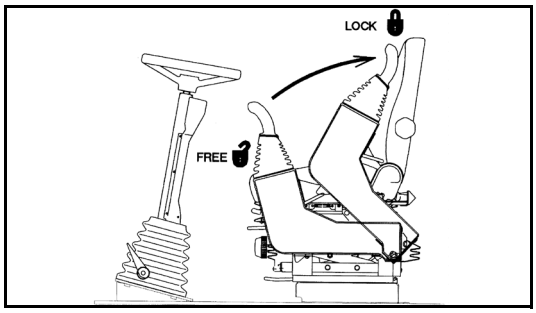

4. Remove the cover over the hydraulic tank and remove the cap of oil filler (F).

5. Set the oil container under the drain plug under the machine. Using the handle, remove drain plug (P) and drain the oil. Check the O-ring installed to plug (P), and if it is.damaged, replace the O-ring. After draining the oil, tighten drain plug (P). Tightening torque: 69 ± 10 Nm (7 ± 1 kgm).

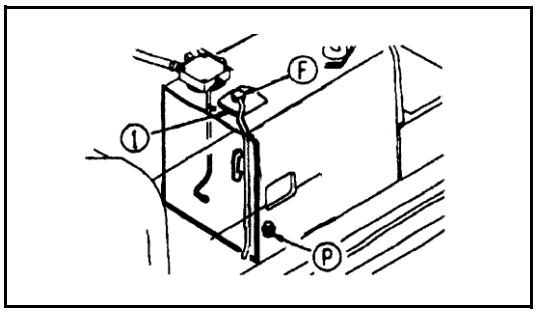

When removing drain plug (P), be careful not to get oil on yourself.

6. Add the specified amount of engine oil through oil filler port (F) Check that the oil level is between H and L on the sight gauge.

   For type of oil to be used, see “USE FUEL, COOLANT AND LUBRICANTS ACCORDING TO AMBIENT TEMPERATURE” on page 173.

NOTICE

When the hydraulic breaker is installed, the hydraulic oil deteriorates earlier than in normal bucket digging work. Therefore replace the hydraulic oil according to the table at the right.

7. After replacing hydraulic oil or replacing filter element and strainer, bleed air from the circuit according to the following procedure.

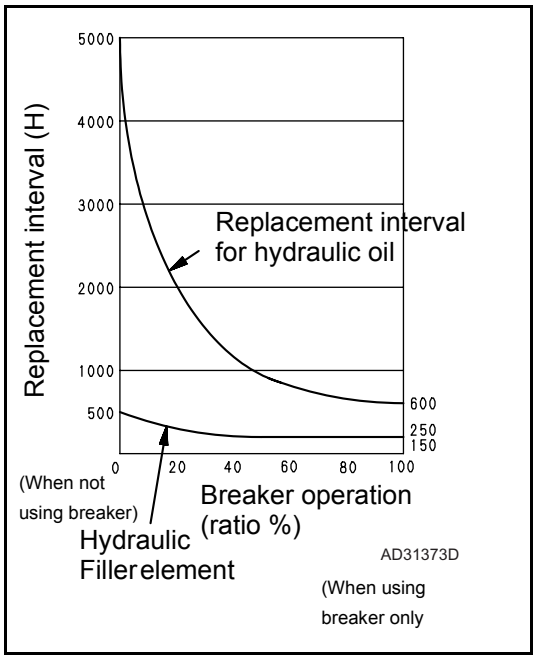

https://truckmanualshub.com/

Procedure for bleeding air

Follow steps 1 to 7 to bleed the air.

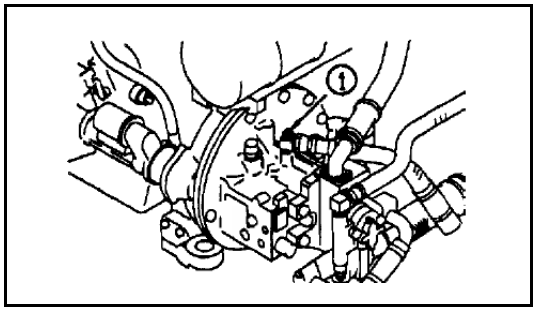

1. Bleeding air from pump

1. Loosen air bleeder (1) installed to the drain port, and check that oil oozes out. (Completion of air bleeding)
2. After completing the air bleeding operation, tighten the air bleeder.

NOTE: If the pump is operated without filling the pump case with hydraulic oil, abnormal heat will be generated and this may lead to premature damage of the pump.

2. Starting engine

Start the engine according to “STARTING ENGINE” on page 110 keep running the engine at low idling for 10 minutes, and carry out the following procedure.

3. Bleeding air from cylinders

1. Run the engine at low idling, and extend and retract each cylinder 4 - 5 times without operating it to the end of its stroke. (Stop approx. 100 mm before the end of the stroke)
2. Next, operate each cylinder to the end of its stroke 3 - 4 times.
3. After this, operate each cylinder 4 - 5 times to the end of its stroke to completely bleed the air.

NOTICE

If, at first, the engine is run at high speed or the cylinder is operated to the end of its stroke, the air inside the cylinder may cause damage to the piston packing or other parts.

4. Bleeding air from swing motor
(only after draining oil from swing motor case)

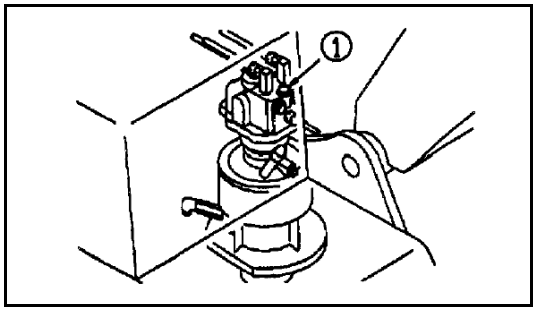

1. Run the engine at low idling, loosen air bleeding plug (1), and check that oil oozes out from air bleeding plug (1).

NOTICE

When doing this, do not operate the swing·

2. If oil does not ooze out, stop the engine, remove air bleeding plug (1), fill the motor case with hydraulic oil.
3. After completion of the air bleed operation, tighten air bleeding plug (1).
4. Run the engine at low idling, and swing 2 or more times slowly and uniformly to the left and right.

NOTICE

If the air is not bled from the swing motor, the bearings of the motor may be damaged.

https://truckmanualshub.com/

SPECIFICATIONS.

https://truckmanualshub.com/

SPECIFICATIONS

WEIGHT		
● Operation weight (without operator		* 13100 kg
PERFORMANCE		
● Bucket capacity (standard bucket) SAE/CECE		0.44 m³/0.40 m³
● With of opening	(standard bucket)	833 mm
	(with side cutter)	954 mm
● Travel speed	Low speed	3.5 km/h / 2.7 km/h**
	middle speed	10 km/h / 8 km/h**
	High speed	30 km/h / 20 km/h**
● Swing speed		12.5 rpm
ENGINE		
● Model		Komatsu SA4D102E-1 diesel engine
● Flywheel horsepower (NET)		76 kW (102 HP)/2250 rpm
● Starting motor		24 V 5.5 kW
● Alternator		24 V 45 A
● Battery		12 V 95 Ah x 2 pieces

* Weight will vary depending on specification

** 20 km/h specification version.

https://truckmanualshub.com/

1 - PIECE BOOM

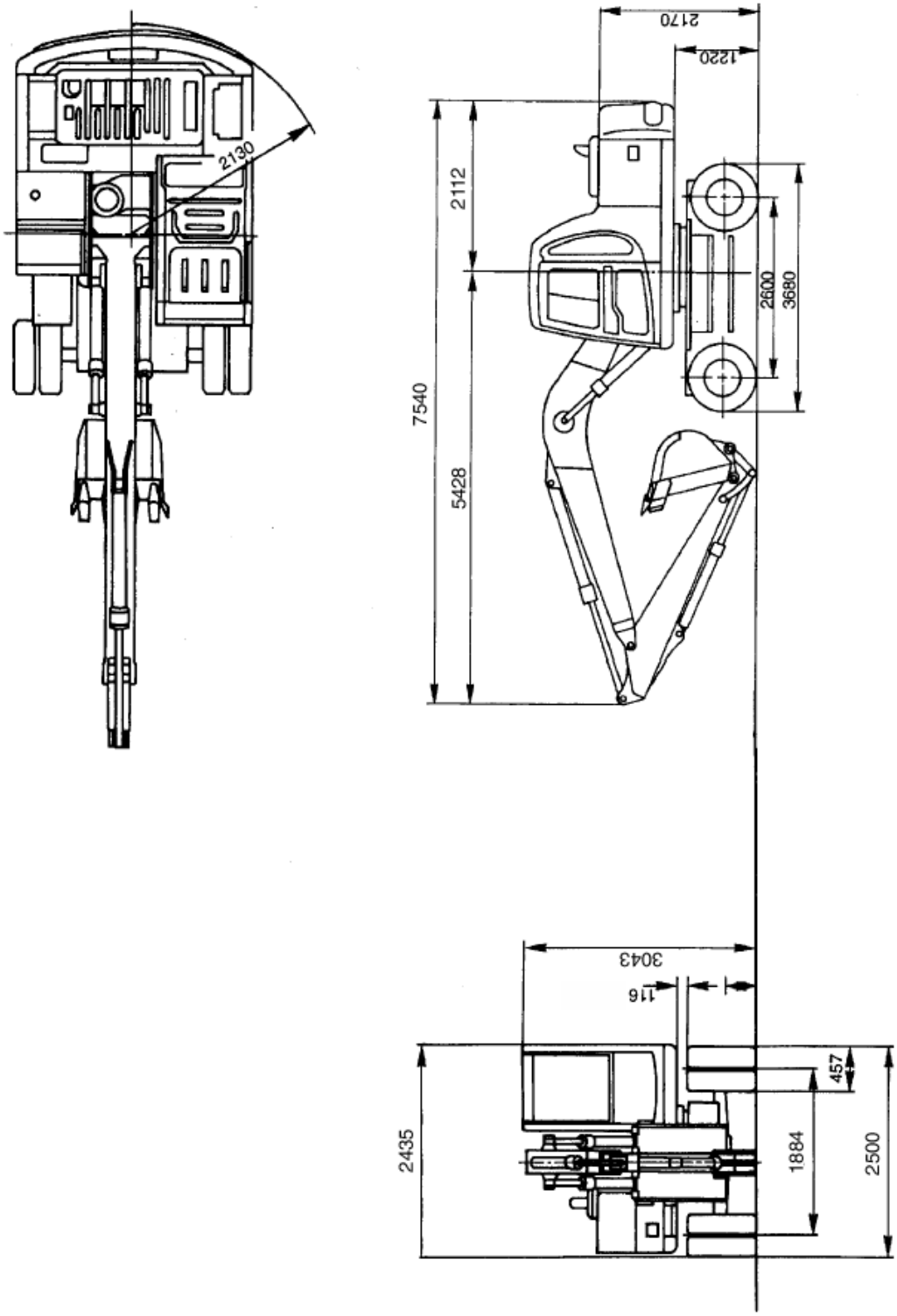

https://truckmanualshub.com/

2 - PIECE BOOM

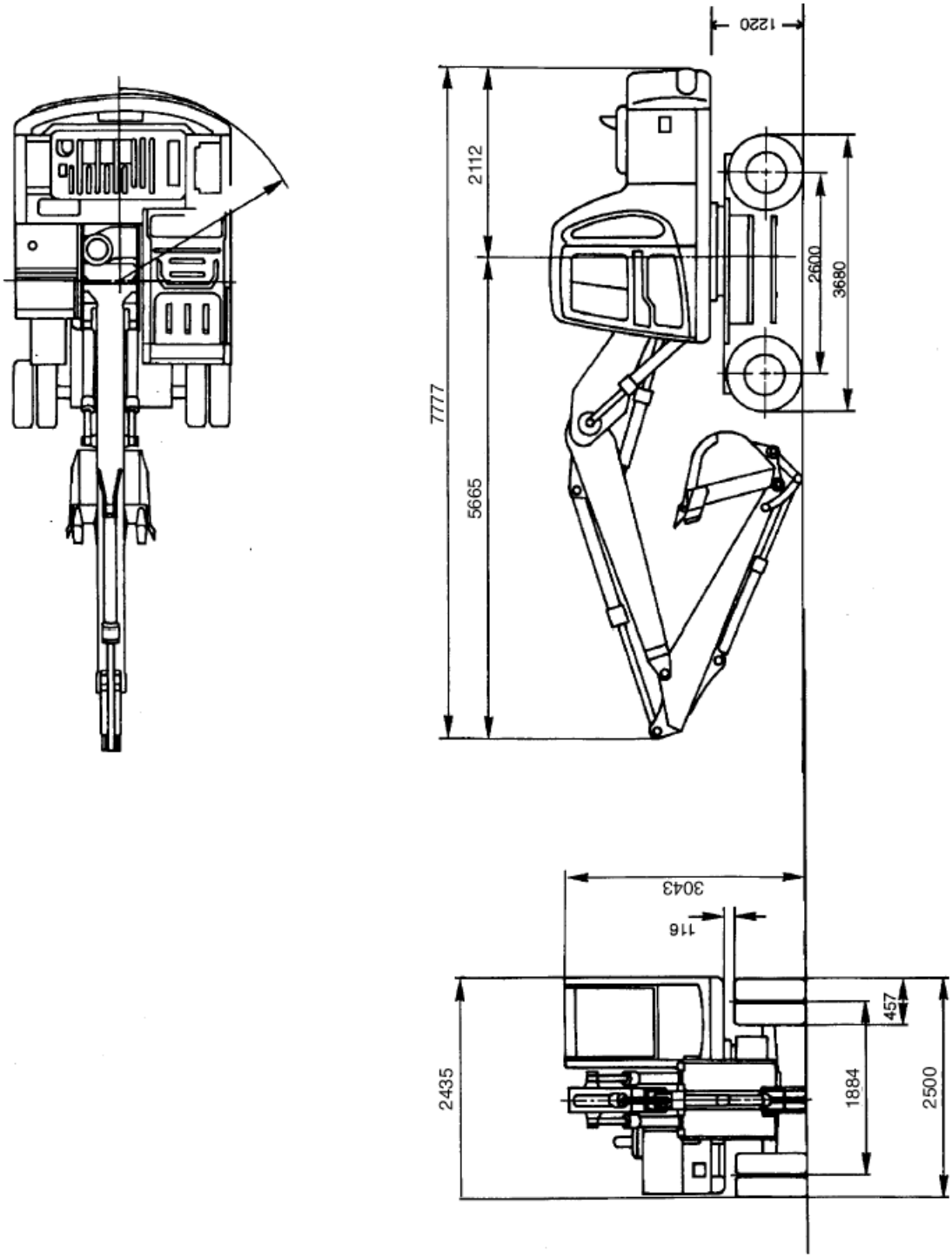

https://truckmanualshub.com/

WORKING RANGE: ONE PIECE BOOM

Arm length mm (Tt/In)		2100	2500
A	Max.digging height	8660	8900
B	Max.dumping height	6290	6530
C	Max digging depth	4730	5130
D	Max.vertical wall digging	4175	4560
E	Max. digging depth of cut for 8’ level	4495	4925
F	Max. digging reach	7895	8265
F’	Max digging reach at ground level	7690	8070
H	Min. swing radius	2320	2400.

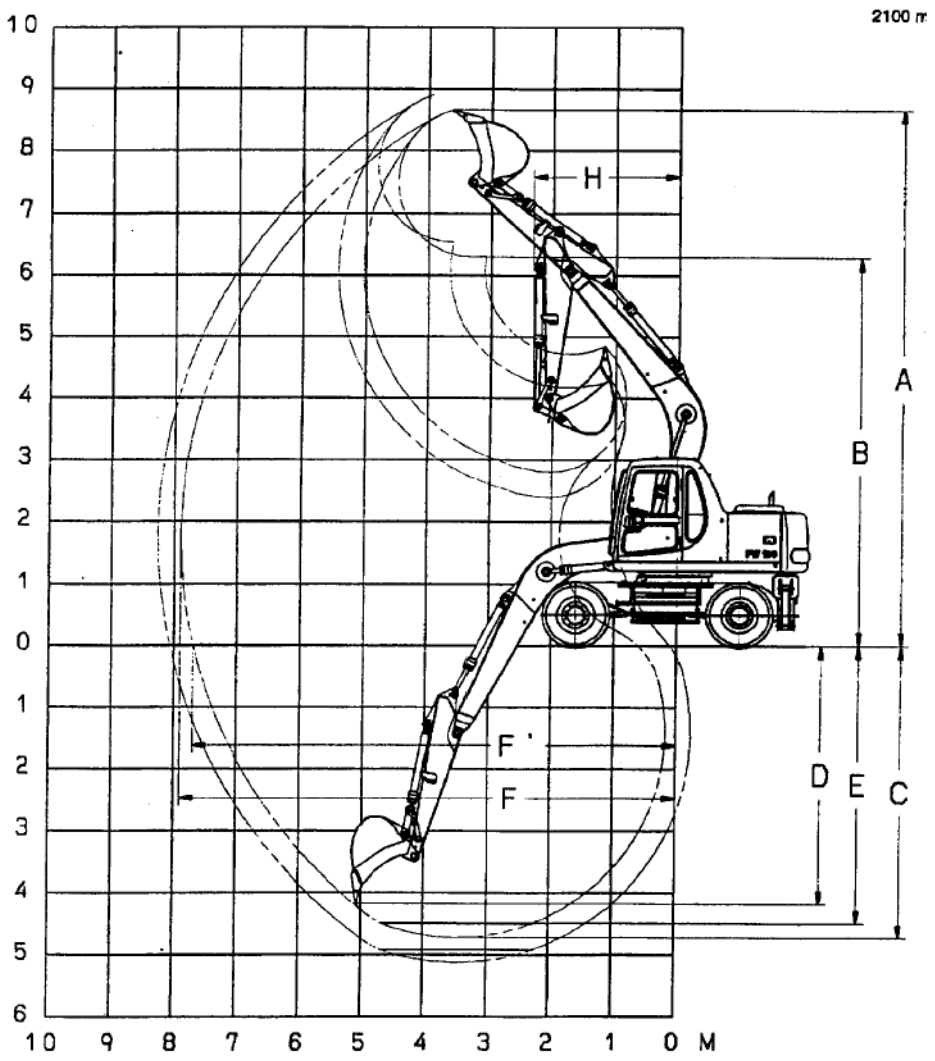

https://truckmanualshub.com/

WORKING RANGE: TWO PIECE BOOM

Arm length mm (Tt/In)		2100	2500
A	Max.digging height	8930	9190
B	Max.dumping height	6540	6905
C	Max digging depth	5010	5411
D	Max.vertlcal wall digging	3978	4365
E	Max. digging depth of cut for 8’ level	4779	5202
F	Max. digging reach	8142	8518
F’	Max digging reach at ground level	7945	8331
H	Min. swing radius	2605	2650

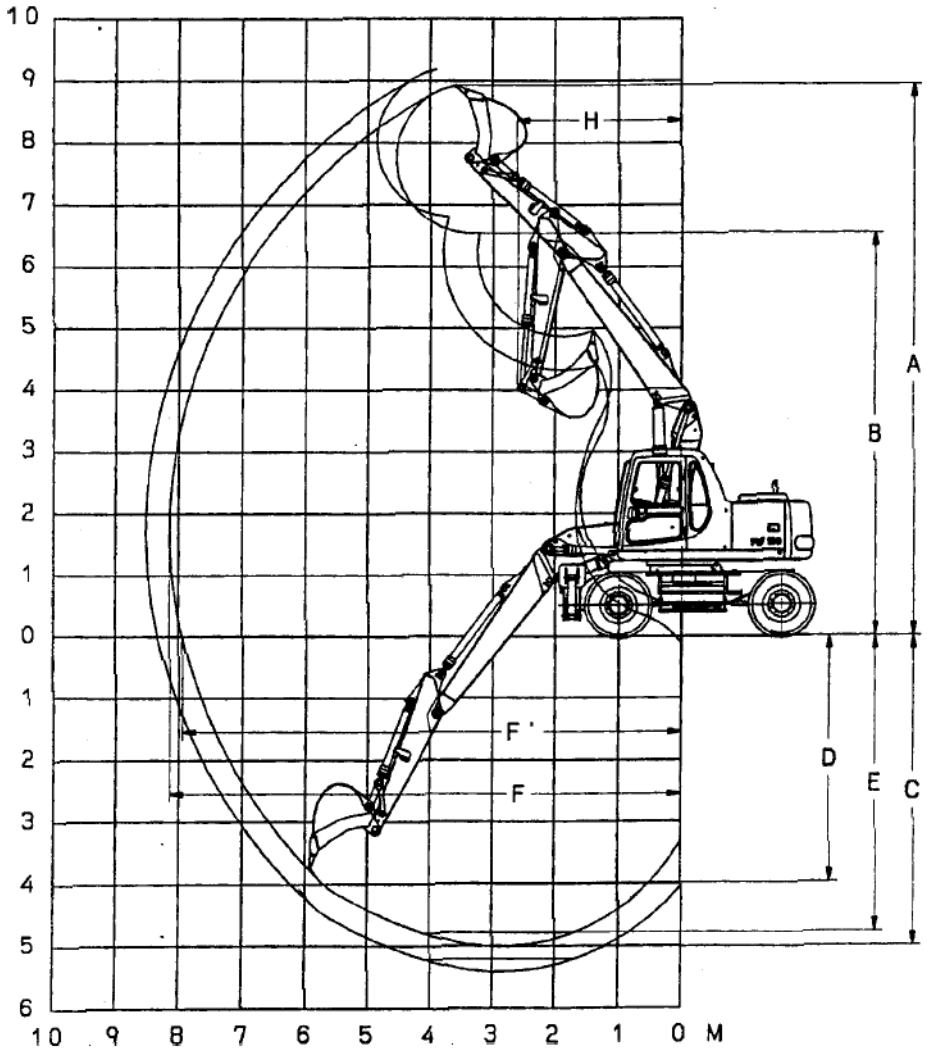

https://truckmanualshub.com/

OPTIONS, ATTACHMENTS

https://truckmanualshub.com/

GENERAL PRECAUTIONS

PRECAUTIONS RELATED TO SAFETY

If attachments or options other than those authorized by Komatsu are installed, this will not only affect the life of the machine, but will also cause problems with safety.

When installing attachments not listed in this Operation and Maintenance Manual, please contact your Komatsu distributor first.

If you do not contact Komatsu, we cannot accept any responsibility for any accident or failure.

⚠ WARNING

Precautions for removal and installation operations
When removing or installing attachments, obey the following precautions and take care to ensure safety during the operation.

- **Carry out the removal and installation operations on a flat, firm ground surface.**
- **When the operation is carried out by two or more workers, determine signals and follow these during the operation.**
- **When carrying heavy objects (more than 25 kg), use a crane.**
- **When removing heavy parts, always support the part before removing it.**
  When lifting such heavy parts with a crane, always pay careful attention to the position of the centre of gravity.
- **It is dangerous to carry out operations with the load kept suspended. Always set the load on a stand, and check that it is safe.**
- **When removing or installing attachments, make sure that they are in a stable condition and will not fall over.**
- **Never go under a load suspended from a crane.**
  Always stand in a position that is safe even if the load should fall.

NOTICE

Qualifications are required to operate a crane. Never allow the crane to be operated by unqualified person.
For details of the removal and installation operations, please contact your Komatsu distributor.

https://truckmanualshub.com/

PRECAUTIONS WHEN INSTALLING ATTACHMENTS

⚠ WARNING

- **Long work equipment reduces the stability of the chassis, so if the swing is operated on a slope, or when going down a steep hill, the machine may lose its balance and overturn. The following operations are particularly dangerous, so never operate the machine in these ways.**
- **Going downhill with the work equipment raised**

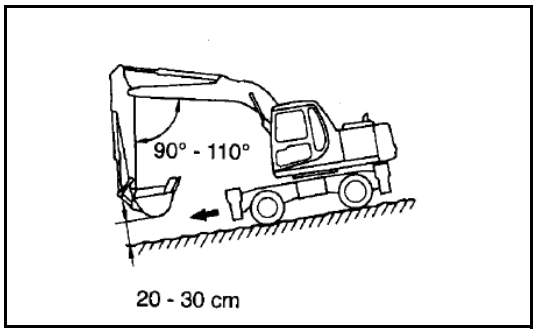

- **Traveling across slopes**

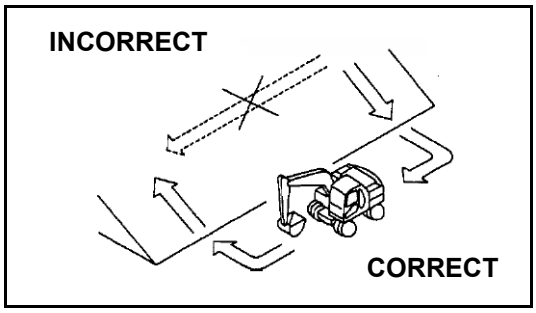

- **Swinging the upper structure on slopes**
- **If heavy work equipment is installed, the overrun of the swing becomes greater (the distance from the point where the operator operates the control levers to stop the swing to the point where the upper structure stops completely), so there is danger of mistaking the distance and hitting something.**
  Always operate so that there is an ample margin to the stopping point.
  Furthermore, the hydraulic drift also becomes larger when the work equipment is stopped in mid-air, it will gradually move down under its own weight).

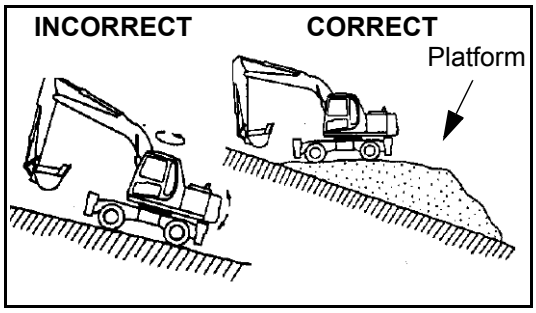

- **Always follow the correct procedure when installing the boom and arm. If the correct procedure is not followed, this may lead to serious damage or injury, so please consult your Komatsu distributor before carrying out installation.**
- **If long work equipment is installed, the working range will suddenly become larger, so there is danger of mistaking the distance and hitting something.**
  Always operate the work equipment so that there is ample space from any obstacles in the area

https://truckmanualshub.com/

HANDLING BUCKET WITH HOOK

CHECKING FOR DAMAGE TO BUCKET WITH HOOK

Check that there is no damage to the hook, stopper, or hook mount. If any abnormality is found, please contract your Komatsu distributor.

PROHIBITED OPERATIONS

The standard work equipment must not be used for lifting loads. If this machine is to be used for lifting loads, it is necessary to install the special bucket with hook.

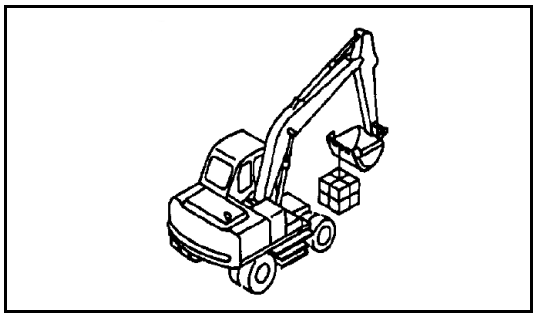

PRECAUTIONS DURING OPERATIONS

- When carrying out lifting operations, reduce the engine speed and use the lifting operation mode.
- Depending on the posture of the work equipment, there is danger that the wire or load may slip off the hook. Always be careful to maintain the correct hook angle to prevent this from happening.
- Never steer the machine while lifting a load.

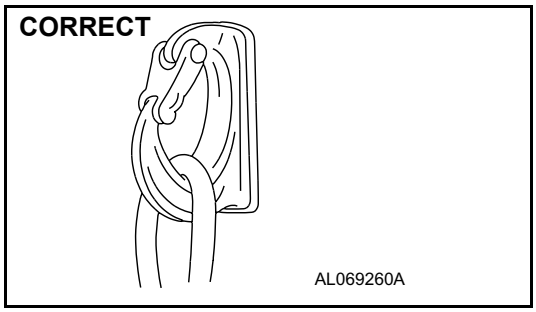

- If the bucket with hook is turned and used for operations, it will hit the arm during dumping operations, so be careful when using it.
- The loads must never exceed those specified in the lifting capacity chart when carrying out lifting operations.
- If you wish to install a hook in the future, please contact your Komatsu distributor.

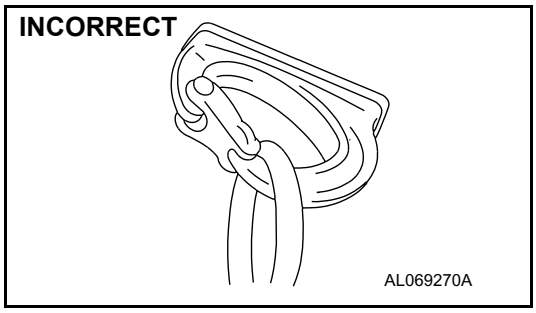

https://truckmanualshub.com/

MACHINES READY FOR ATTACHMENTS

GENERAL LOCATIONS

Important

Ensure valve (2) is closed at all times except when using attachments requiring low back pressure. (Oil flow by-passes oil cooler).

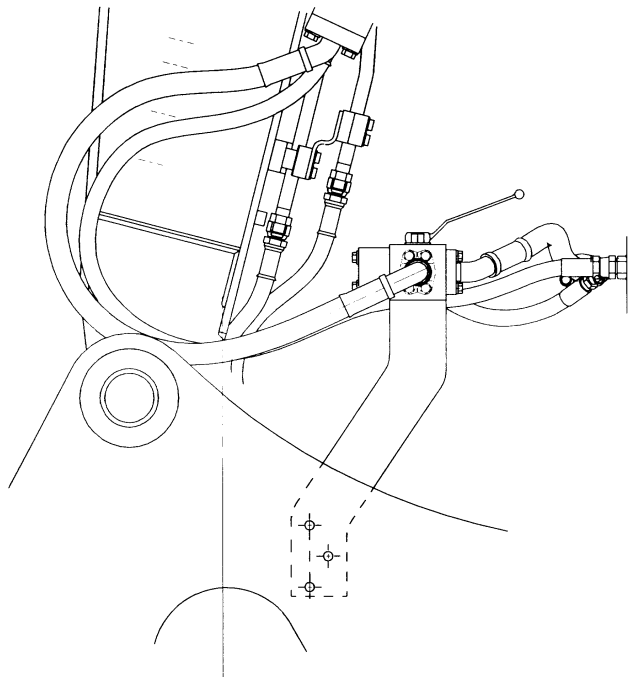

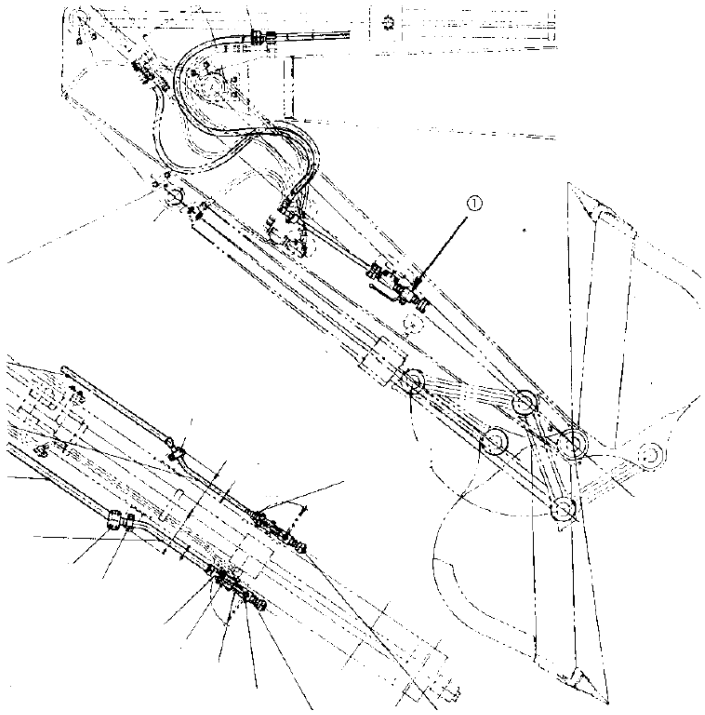

https://truckmanualshub.com/

1. STOP VALVE (1)

This valve stops the flow of the hydraulic oil.

(1) FREE: Hydraulic oil flows.

(2) LOCK: Hydraulic oil stops.

When removing or installing attachments, set this valve to the LOCK position.

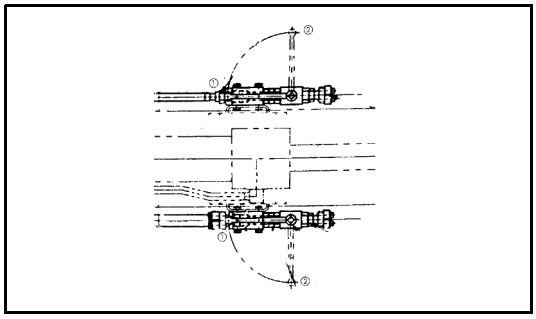

2. SELECTOR VALVE (2)

This switches the flow of the hydraulic oil.

Position (1): When breaker is used

Position (2): When general attachment is used (crusher, etc.)

A	To/from main valve
B	1 way flow to tank (breaker)
C	To tank
D	2 way flow position (normal)
E	From boom piping

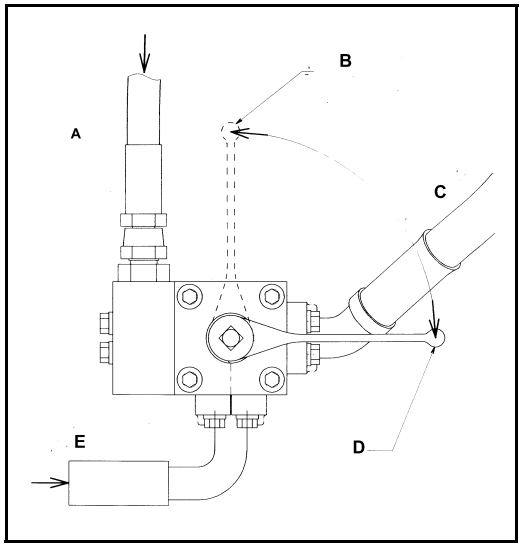

3. CONTROL PEDAL (3)

This is used to operate the attachment.

Pedal for two line attachment (with auto deceleration mechanism)

The breaker is operated with right pedal (1).

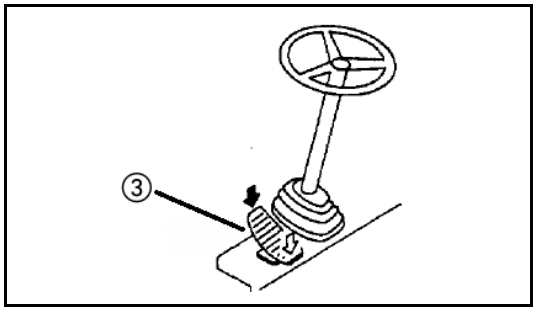

4. ACCUMULATOR (FOR CONTROL CIRCUIT) (4)

⚠ WARNING

The accumulator is charged with high-pressure nitrogen gas, and it is extremely dangerous if it is handled mistakenly.

For details of handling, see "HANDLING ACCUMULATOR" on page 246.

This is installed to release any remaining pressure in the attachment circuit after the engine is stopped. Normally, do not touch it.

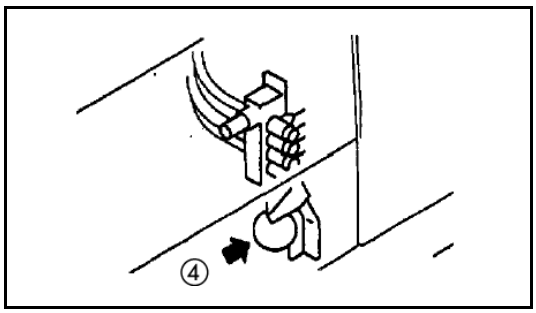

https://truckmanualshub.com/

HANDLING THE CLAMSHELL BUCKET

This bucket is used for digging and loading in side-ditches or confined spaces.

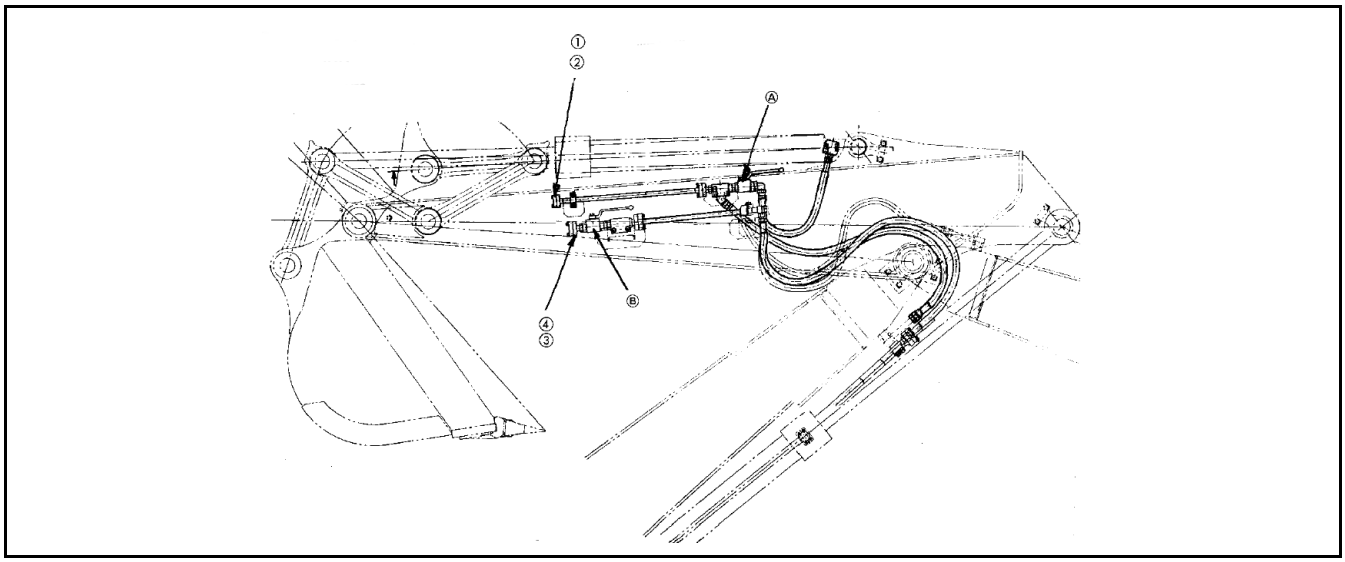

How to install clamshell bucket

1. Clamshell cylinder head

2. Clamshell cylinder bottom

3. Rotate left

4. Rotate right

Ensure valve (A) (both sides) is closed and valve (B) is open (both sides)

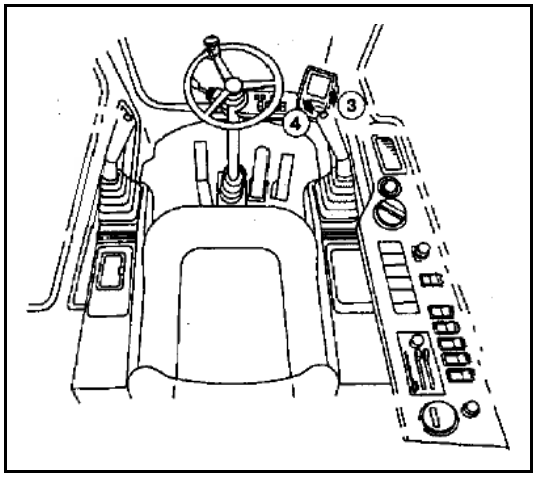

How to operate

Open and close

Move the right working equipment lever to operate clamshell

3. Open

4. Close

Rotate

https://truckmanualshub.com/

Press button on working equipment lever

3. Clockwise

4. Counter clockwise

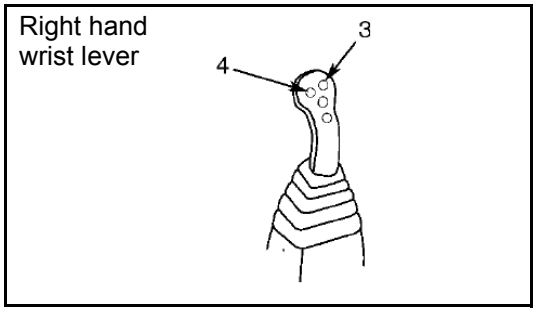

- For safety, always avoid abrupt travelling, swing and stopping.
- When mounting a clamshell bucket, the bucket cylinder must be positioned at mid-stroke to allow access to quick release couplers.
  Connect couplers and retract bucket cylinder

NOTE: Isolate cylinder using lock valve and secure bucket links.

- Do not swing the bucket to crush the rock or to cut through soil.
- Do not use the bucket for hammering or pulling out piles, etc.
- Before leaving the machine, open the bucket and lower it to the ground.

OPERATION

⚠ WARNING

- **Be careful when pressing the switch in the deceleration range. The engine speed will rise suddenly.**
- **Do not press the switch except when operating the switch. If the switch is depressed by accident, the attachment may move suddenly and cause serious damage or injury.**

Operate the attachment as follows.

WHEN USING BREAKER

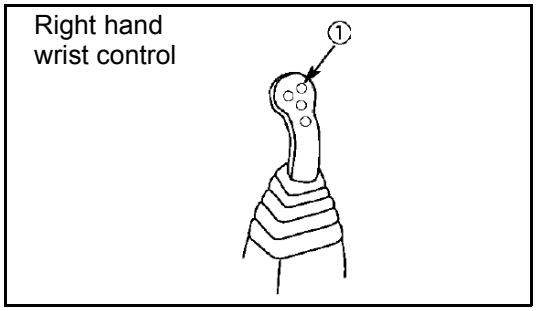

Depress the switch (1) of the wrist control lever (right hand) to operate the breaker.
Set the working mode to the B.O. (breaker operation mode) position.

NOTICE

Do not use the heavy-duty operation mode for breaker operations. If the breaker is used in the heavy-duty operation mode there is danger that the hydraulic equipment may be damaged.

Precautions when using

- Check that the stopper valve is in the OPEN position.
- Consult with the attachment maker to decide whether it is necessary to install an accumulator for the attachment circuit.

https://truckmanualshub.com/

- For details of other precautions when handling the breaker, read and use correctly the instruction manual provided by the breaker manufacturer.
- When using the breaker, the hydraulic oil deteriorates more rapidly than for normal operations, so change the hydraulic oil and replace the element at a shorter interval.

  For details, see “MAINTENANCE WHEN USING HYDRAULIC BREAKER” on page 186.

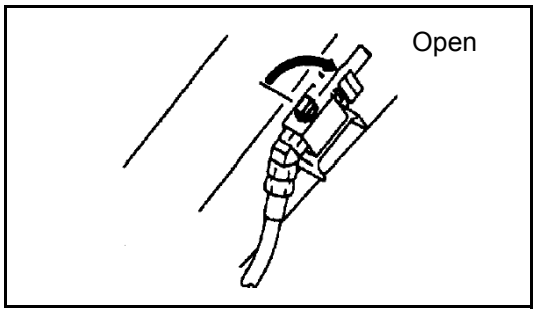

https://truckmanualshub.com/

HANDLING ACCUMULATOR

⚠ WARNING

On machines equipped with an accumulator, for a short time after the engine is stopped, if the work equipment control lever is moved to the LOWER position, the work equipment will move down under its own weight.

After stopping the engine, always place the control lever pad safety lock in the LOCK position and lock the attachment control pedal with the lock pin.

The accumulator is filled with high-pressure nitrogen gas, and it is extremely dangerous if it is handled in the wrong way. Always observe the following precautions.

- **Never make any hole in the accumulator or expose it to flame or fire.**
- **Do not weld anything to the accumulator.**
- **When disposing of the accumulator, it is necessary to release the gas from the accumulator, so please contact your Komatsu distributor.**

This machine is equipped with the accumulators in the control and brake circuit. The accumulator is a device to store the pressure in the control and brake circuit, and when installed, the brake and control circuit can be operated for a short time even after the engine is stopped. Therefore, if the control lever is moved in the direction to lower the work equipment, it is possible for the work equipment to move under its own weight. Also it is possible to stop the machine.

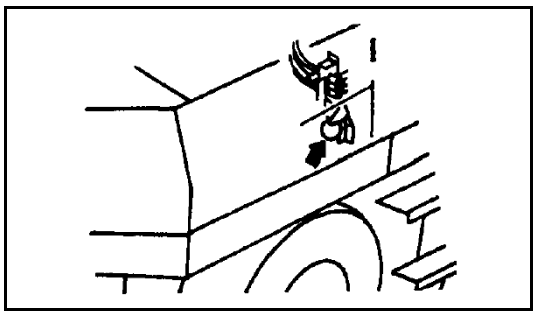

The accumulators are installed in the position shown in the diagram on the right and below.

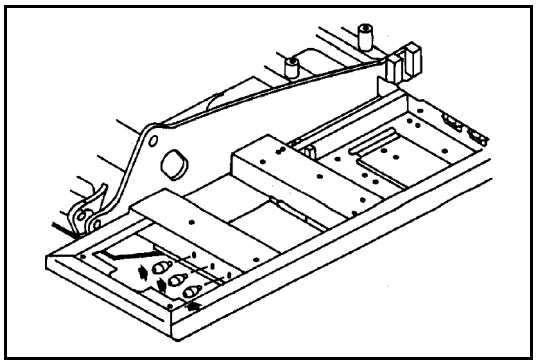

https://truckmanualshub.com/

METHOD FOR RELEASING PRESSURE IN CONTROL CIRCUIT OF MACHINES EQUIPPED WITH ACCUMULATOR

1. Lower the work equipment to the ground. Close any attachment such as the crusher.
2. Stop the engine.
3. Set the lock control lever pad safety lock completely in the FREE position, operate the work equipment control lever and attachment control pedal fully to the front, rear, left, and right, to release the pressure in the control circuit.
4. Set the lock control lever pad safety lock completely in the LOCK position, then lock the control levers and attachment control pedal. Note that this does not completely release the pressure, so when removing the accumulator in the control circuit, loosen the connections slowly and do not stand in the direction where the oil spurs out.

LONG-TERM STORAGE

If the machine is not to be used for a long time, do as follows.

- Set the stop valve in the LOCK condition.
- Install a blind plug to the valve.
- Set the selector valve to the position for general attachments such as the crusher.

If there is no breaker or general attachment installed, operating the pedal may cause overheating.

SPECIFICATIONS

Hydraulic specifications

- Oil flow

Working mode	
Clamshell rotation	Breaker
60l /min	206l /min.

- Cracking pressure of safety valve
  When using breaker: 17200 kPa (175 kg/cm²).

https://truckmanualshub.com/

INTRODUCTION OF ATTACHMENTS AND EXTENDING MACHINE SERVICE LIFE

This section describes the necessary precautions to be observed when operating a hydraulic excavator equipped with an attachment.

NOTICE

Select the attachment most suited to the machine body.

- **The machine models to which attachments can be mounted vary. For selection of attachment and machine model, consult your Komatsu distributor.**

HYDRAULIC BREAKER

MAIN FIELDS OF APPLICATION

- Crushed rock
- Demolition work
- Road construction

This attachment can be used for a wide range of work including demolition of buildings, breaking up of road surfaces, tunnel work, breaking up slag, rock crushing, and breaking operations in quarries.

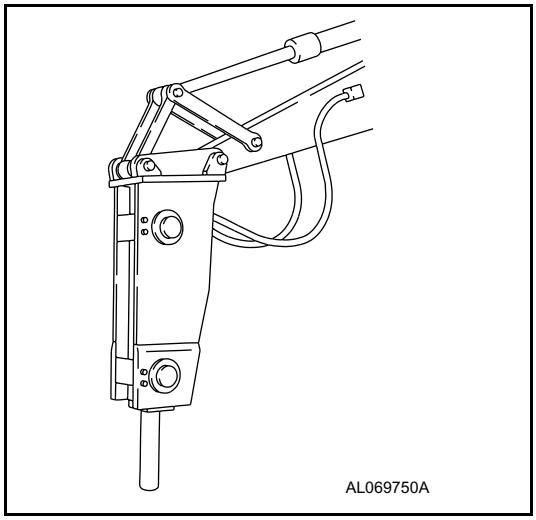

Keep the chisel pushed perpendicularly against the impact surface when carrying out breaking operations.

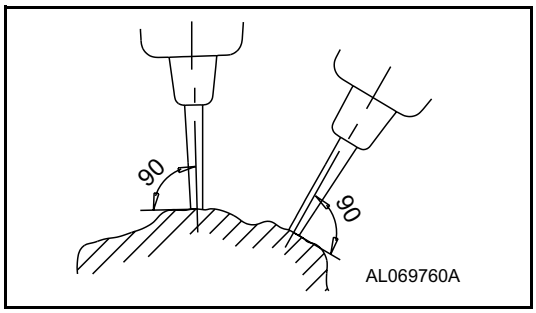

When applying impact, push the chisel against the impact surface and operate so that the chassis rises approx. 5 cm off the ground. Do not let the machine come further off the ground than necessary.

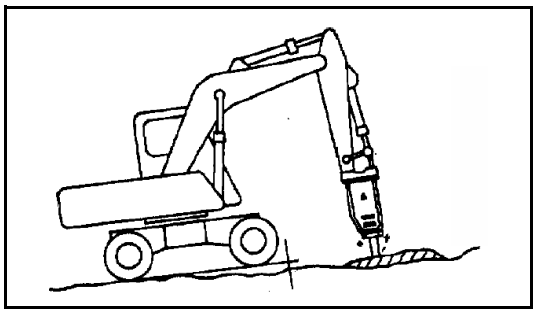

https://truckmanualshub.com/

When applying continuous impact to the same impact surface, if the chisel does not penetrate or break the surface within 1 minute, change the point of impact and carry out breaking operations closer to the edge.

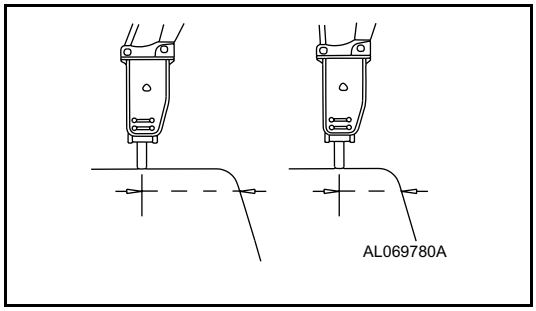

The direction of penetration of the chisel and the direction of the breaker body will gradually move out of line with each other, so always adjust the bucket cylinder to keep them aligned.

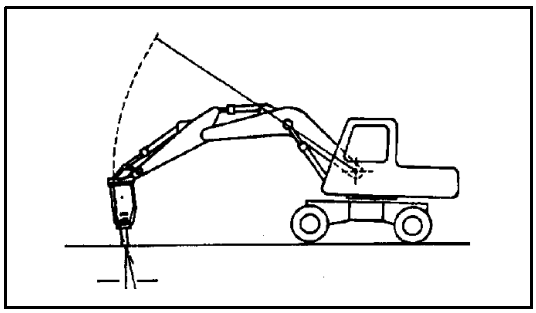

Always keep the chisel pressed against the impact surface properly to prevent using the impact force when there is no resistance.

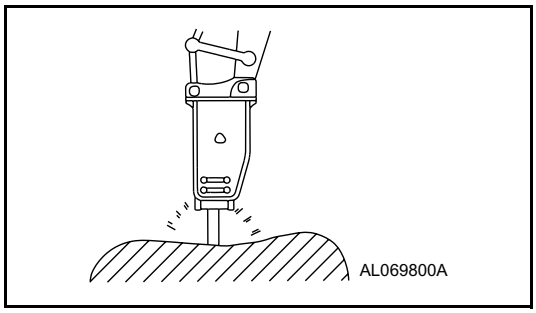

MISTAKEN METHODS OF USE

To ensure that the machine has a long life, and to ensure that operations are carried out in safety, do not operate the machine in any of the following ways.

- Do not operate the cylinder to the end of its stroke.
  Always leave approx. 5 cm to spare.

Using the mount to gather in pieces of rock

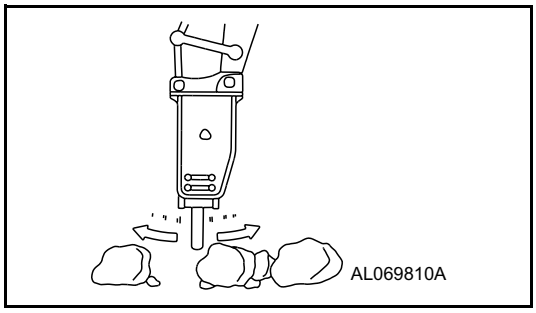

Operations using the swing force

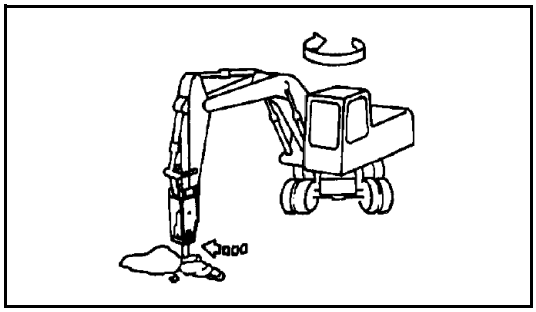

https://truckmanualshub.com/

Moving the chisel while carrying out impacting operations

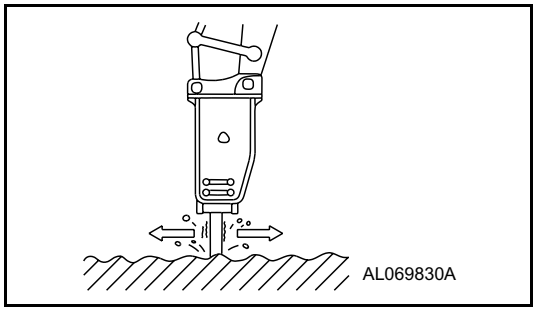

Holding the chisel horizontal or pointed up when carrying out impacting operations

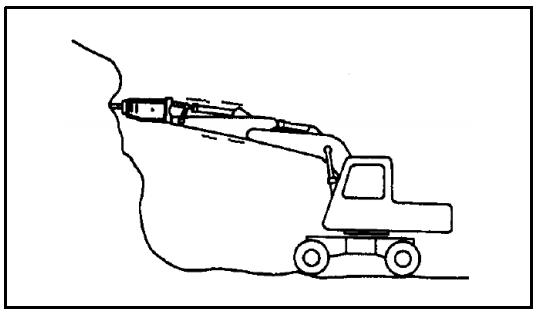

Twisting the chisel when it has penetrated the rock

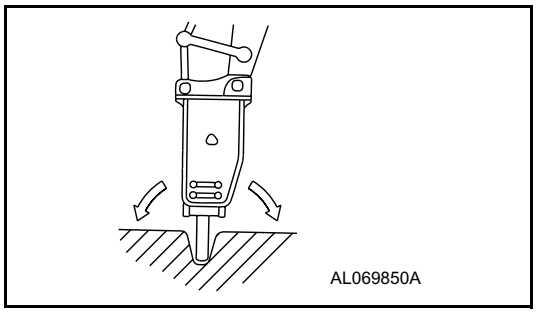

Pecking operations

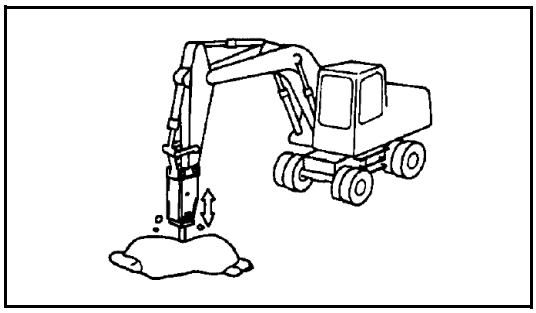

Extending the bucket cylinder fully and thrusting to raise the machine off the ground

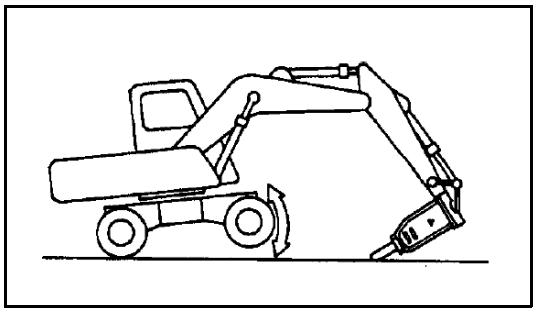

https://truckmanualshub.com/

POWER RIPPER

MAIN FIELDS OF APPLICATIONS

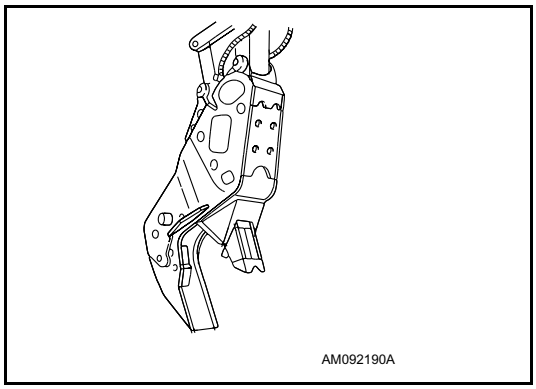

- Road repair work
- Demolition work

This attachment can be used for a wide range of work including peeling off and crushing pavement roads, demolishing wooden houses and buildings, and crushing foundation and roadbeds.

MISTAKEN METHODS OF USE

To ensure that the machine has a long life, and to ensure that operations are carried out in safety, do not operate the machine in any of the following ways.

- Do not operate the cylinder to the end of its stroke.
  Always leave approx. 5 cm to spare.

Impact operations using attachment

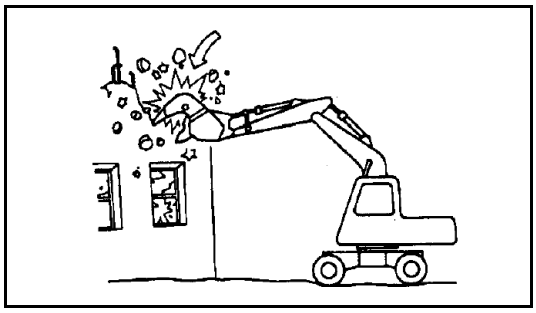

Impact operations using swing force

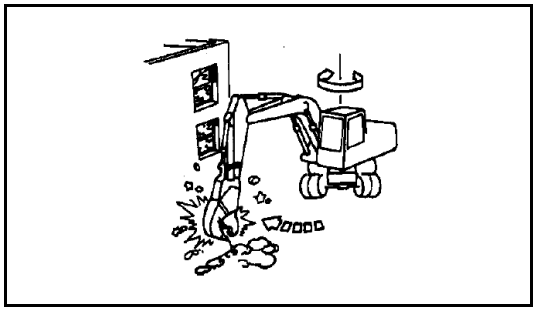

Overloading work equipment during lifting and loading operations

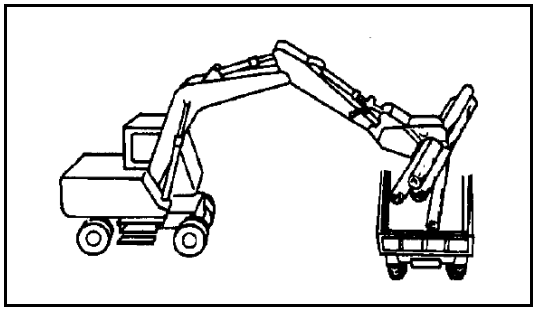

https://truckmanualshub.com/

Operations using attachment to grip at an angle.

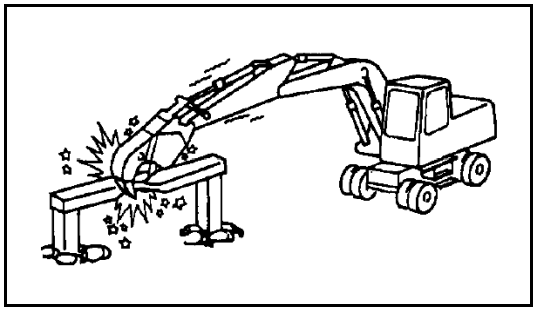

FORK GRAB

MAIN FIELDS OF APPLICATION

- Disposing of industrial waste
- Disposing of demolition waste

This can be used for a wide range of work including collecting or loading demolition waste materials and debris, timber, grass.

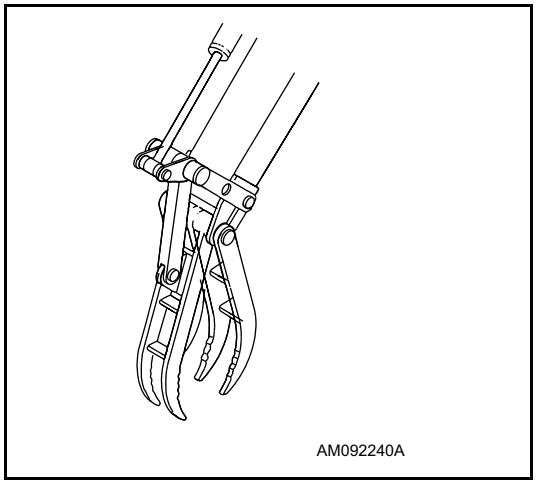

MISTAKEN METHODS OF USE

To ensure that the machine has a long life, and to ensure that operations are carried out in safety, do not operate the machine in any of the following ways.

- Do not operate the cylinder to the end of its stroke.
  Always leave approx. 5 cm to spare.

Operations using the swing force

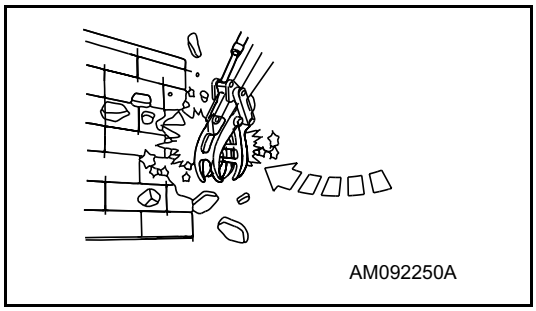

Operations using one side of work equipment

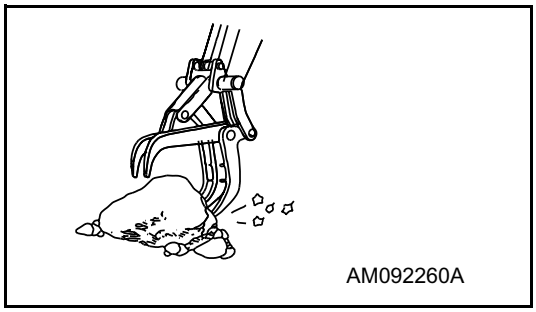

https://truckmanualshub.com/

Pushing fork into ground surface to jack up and change direction of machine

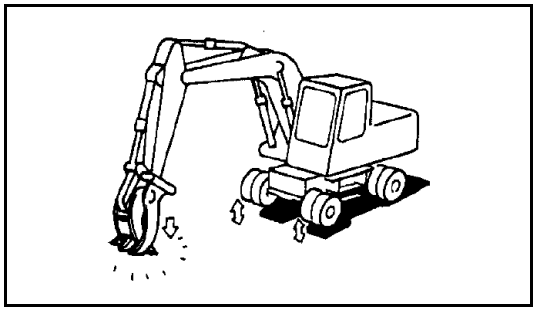

Impact operation with no load.

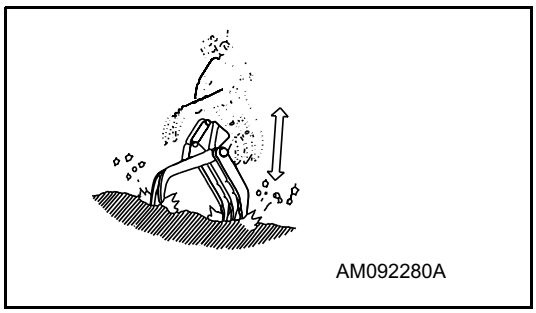

GRAPPLE BUCKET

MAIN FIELDS OF APPLICATION

- Demolition
- Disposing of industrial waste
- Forestry

This bucket is widely used for demolition including breaking-up work, grading and digging, clean-up work after natural disasters, dumping industrial waste, and forestry work, etc.

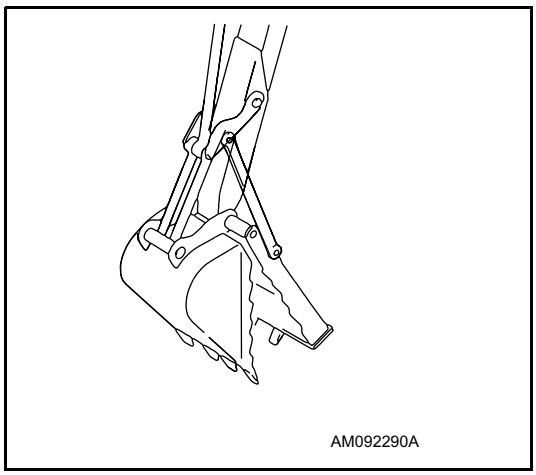

MISTAKEN METHODS OF USE

To ensure that the machine has a long life, and to ensure that operations are carried out in safety, do not operate the machine in any of the following ways.

- Do not operate the cylinder to the end of its stroke.
  Always leave approx. 5 cm to spare.

Operations using the swing force

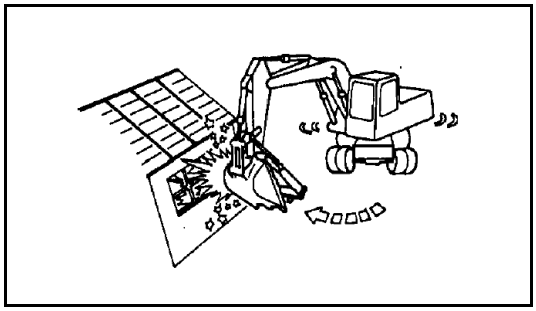

https://truckmanualshub.com/

Grabbing a object using buckets on only one side

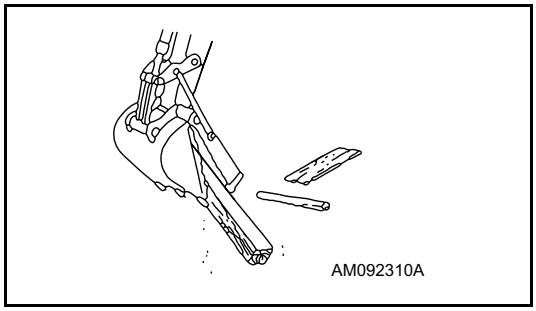

Closing the sub-bucket with the boom and arm fully extended.

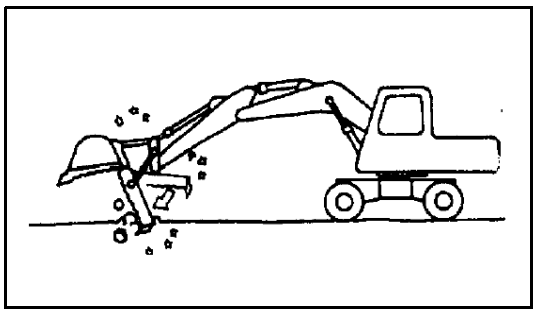

Impact operation with no load.

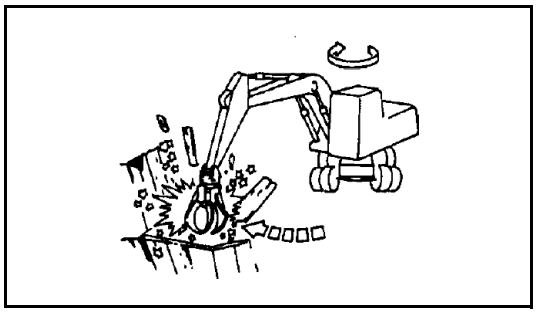

SCRAP GRAPPLE

MAIN FIELDS OF APPLICATION

- Disposal of rock or debris

This attachment is mounted to the arm end and used to grasp rock, debris etc. by opening and closing the claws (3 to 5) corresponding to the extension and retraction of the hydraulic cylinder.

MISTAKEN METHODS OF USE

To ensure that the machine has a long life, and to ensure that operations are carried out in safety, do not operate the machine in any of the following ways.

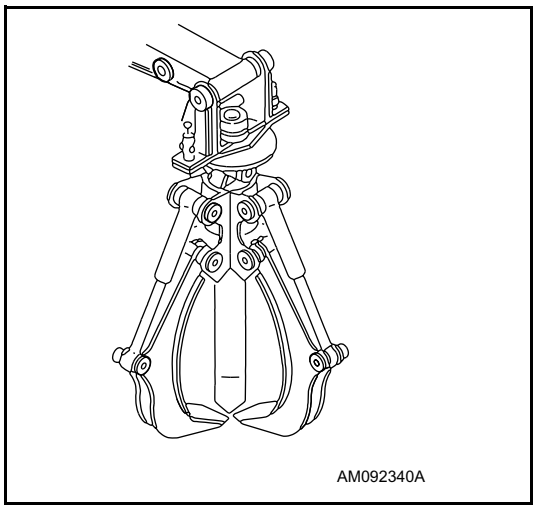

https://truckmanualshub.com/

- Do not operate the cylinder to the end of its stroke.
  Always leave approx. 5 cm to spare.

Operations using the swing force

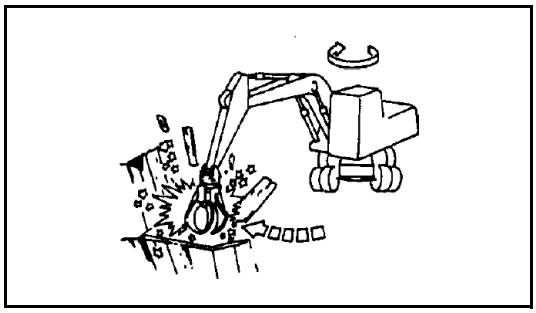

Operations using one side of work equipment

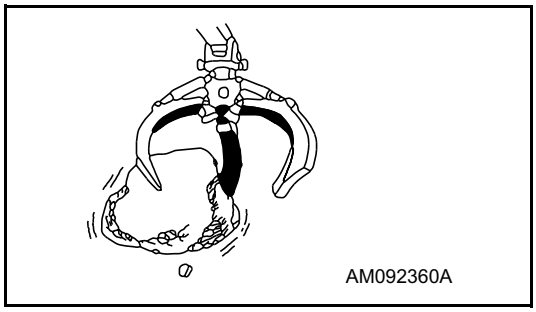

Catching and dragging with claw end

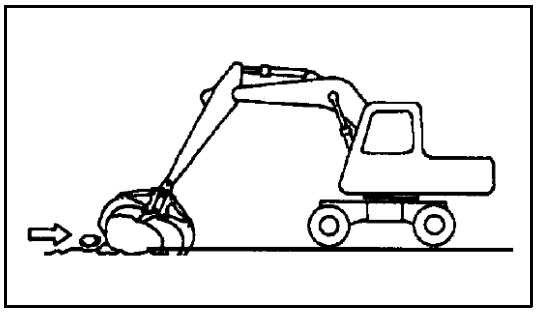

Gouging.

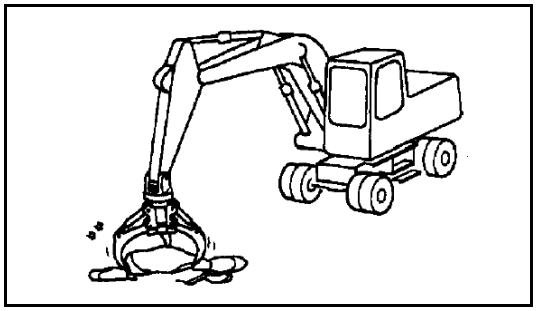

https://truckmanualshub.com/

CRUSHER & SMASHER

MAIN FIELDS OF APPLICATION

- Demolition
- Road repair work

This is the optimum attachment for demolition of steel frame reinforced structures, and for crushing of concrete blocks and rock, etc. The unique blade shape provides heavy crushing power.

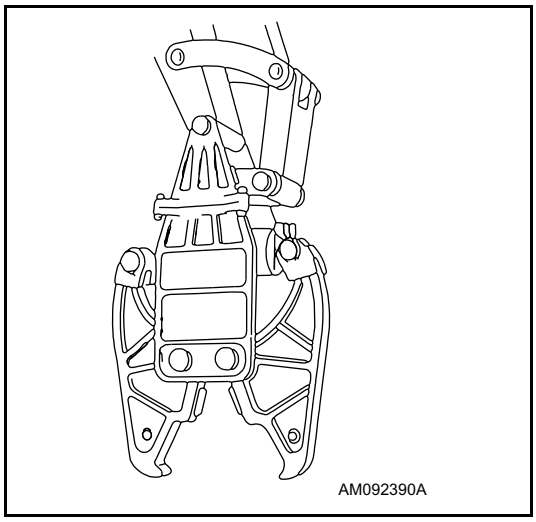

MISTAKEN METHODS OF USE

To ensure that the machine has a long life, and to ensure that operations are carried out in safety, do not operate the machine in any of the following ways.

- Do not operate the cylinder to the end of its stroke.
  Always leave approx. 5 cm to spare.

Operations using cutting tip on one side only

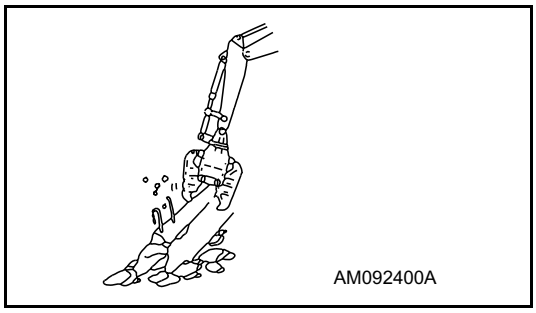

Impact operation with no load

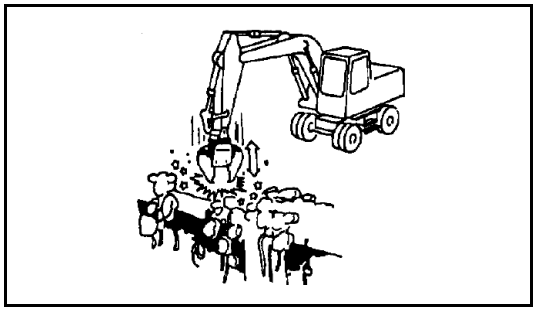

Twisting operations at end of cylinder stroke

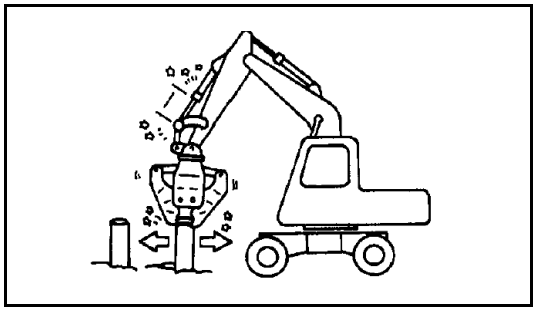

https://truckmanualshub.com/

Sudden gripping and breaking operations.

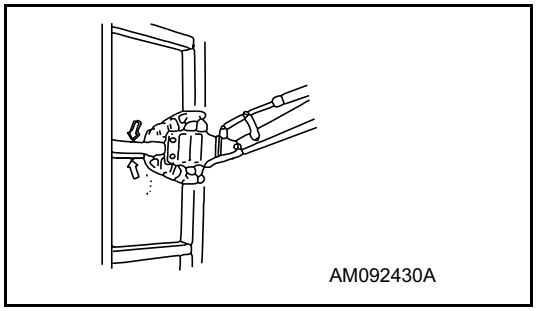

HYDRAULIC PILE DRIVER

MAIN FIELDS OF APPLICATION

- Foundation work
- River work
- Water supply and sewerage

This is a piling machine employing the hydraulic power source of the excavator. The machine features a long arm and a chuck unit This facilitates operations such as driving and movable by 360° orners, vertical driving e removing long piles, driving in piles at corners, vertical driving etc.

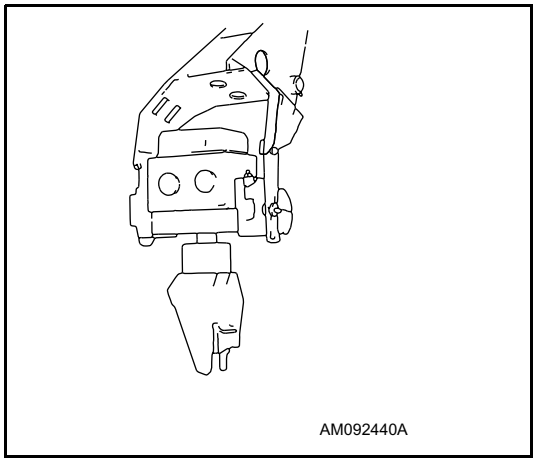

MISTAKEN METHODS OF USE

To ensure that the machine has a long life, and to ensure that operations are carried out in safety; do not operate the machine in any of the following ways.

- Do not operate the cylinder to the end of its stroke.
  Always leave approx. 5 cm to spare.

Forward or swing motion while grasping a pile

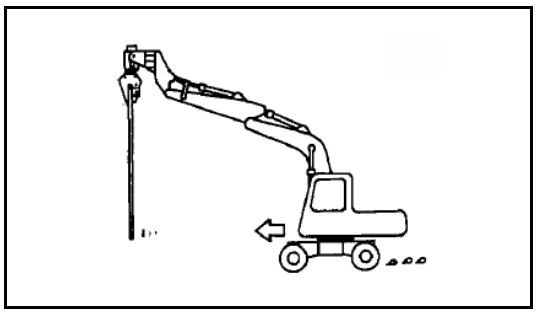

Lifting more than two piles at the same time

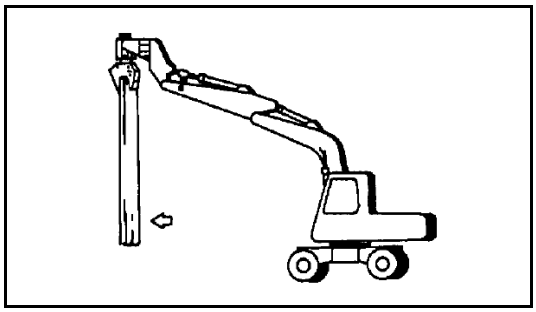

https://truckmanualshub.com/

Work other than standard works

Loading or unloading a machine equipped with hydraulic pile driver.

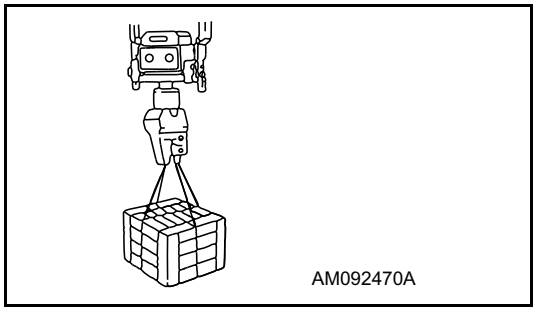

HYDRAULIC EXCAVATOR WITH MULTIPURPOSE CRANE

MAIN FIELDS OF APPLICATION

- Site preparation
- Water supply and sewerage
- River work
- Agricultural, civil engineering work

Crane operation can be carried out without removing the bucket. This machine is used for laying U section gutters and hume pipes for water supply and sewerage as well as river and canal work, agricultural, civil engineering work and site preparation.

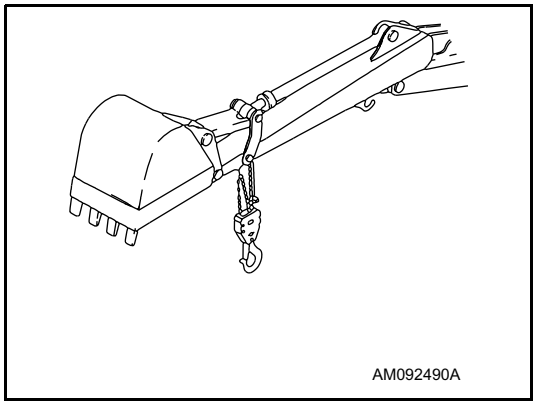

MISTAKEN METHODS OF USE

To ensure that the machine has a long life, and to ensure that operations are carried out in safety, do not operate the machine in any of the following ways.

- Do not operate the cylinder to the end of its stroke.
  Always leave approx. 5 cm to spare.

Abrupt lever operation

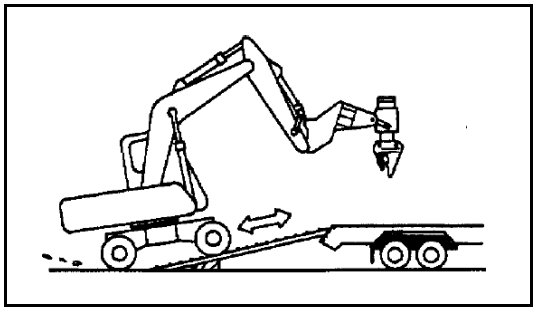

Traveling with a suspended load

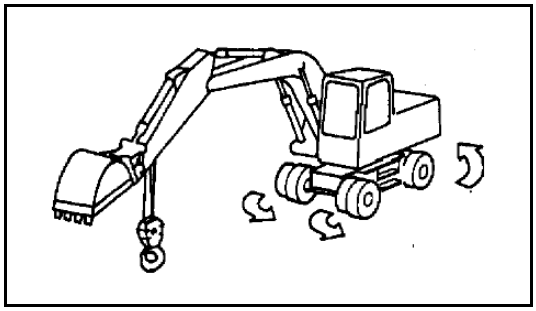

https://truckmanualshub.com/

Operating other work equipment during crane operation

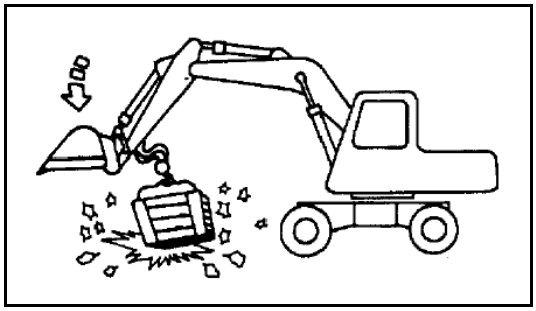

Excessive lengthening of wire rope.

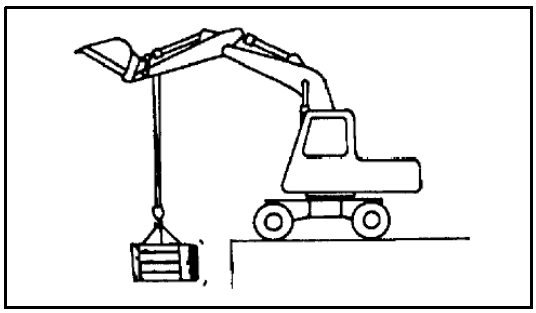

https://truckmanualshub.com/

ROTATING ARM

GENERAL LOCATION AND SPECIFICATIONS.

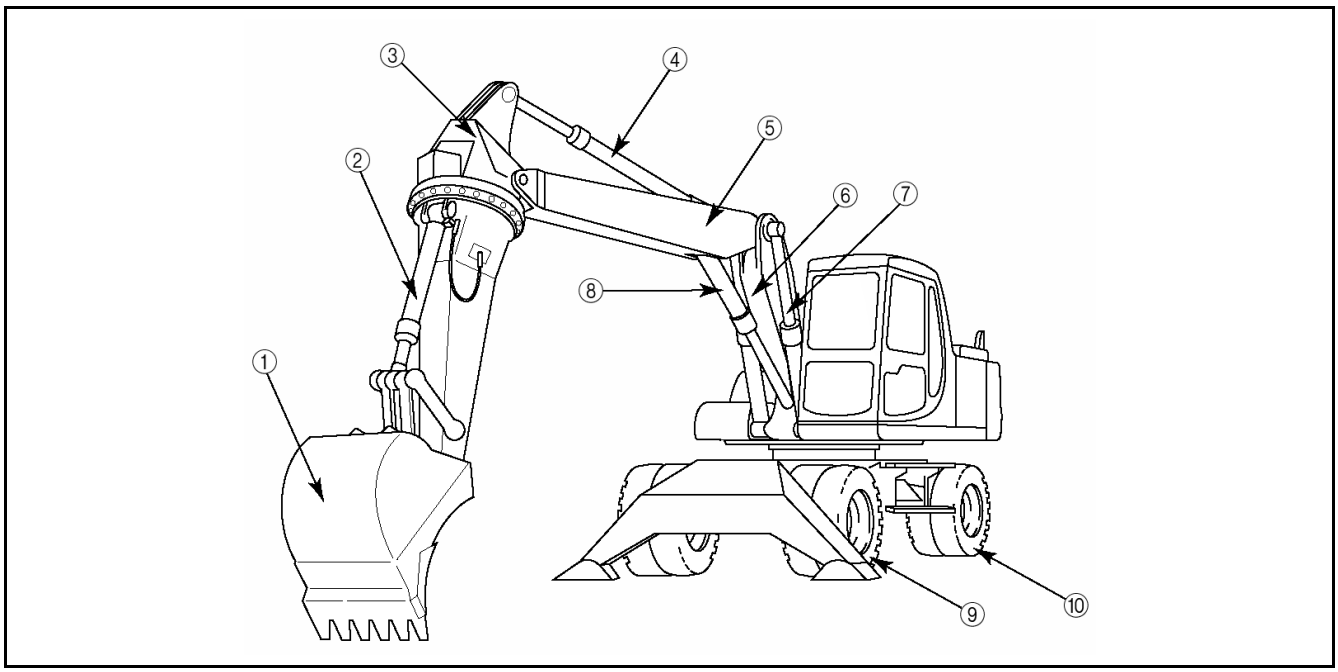

1. Bucket	6. Lower boom
2. Bucket cylinder	7. Boom lift cylinders
3. Rotating arm	8. Boom adjusting cylinder
4. Arm cylinder	9. Front wheel
5. Upper boom	10. Rear wheel

OPERATING WEIGHT		13.100 kg
PERFORMANCE		
● Bucket capacity	(SAE)	0.44 m³
	(CECE)	0.40 m³
● Travel speed	Forward:	*Max. 20.0 km/h - 30.0 km/h
	Reverse:	*Max. 20.0 km/h - 30.0 km/h
● Swing speed		12.5 RPM
● Arm rotation speed		7 ~ 8 RPM
● **ENGINE**		Komatsu SA4D102E-1 Turbocharged diesel engine
	Flywheel horsepower	76 KW (102HP)/2250 RPM

NOTE: Specifications are subject to change without notice.

* Dependent on machine specification.

https://truckmanualshub.com/

GENERAL VIEW OF CONTROLS

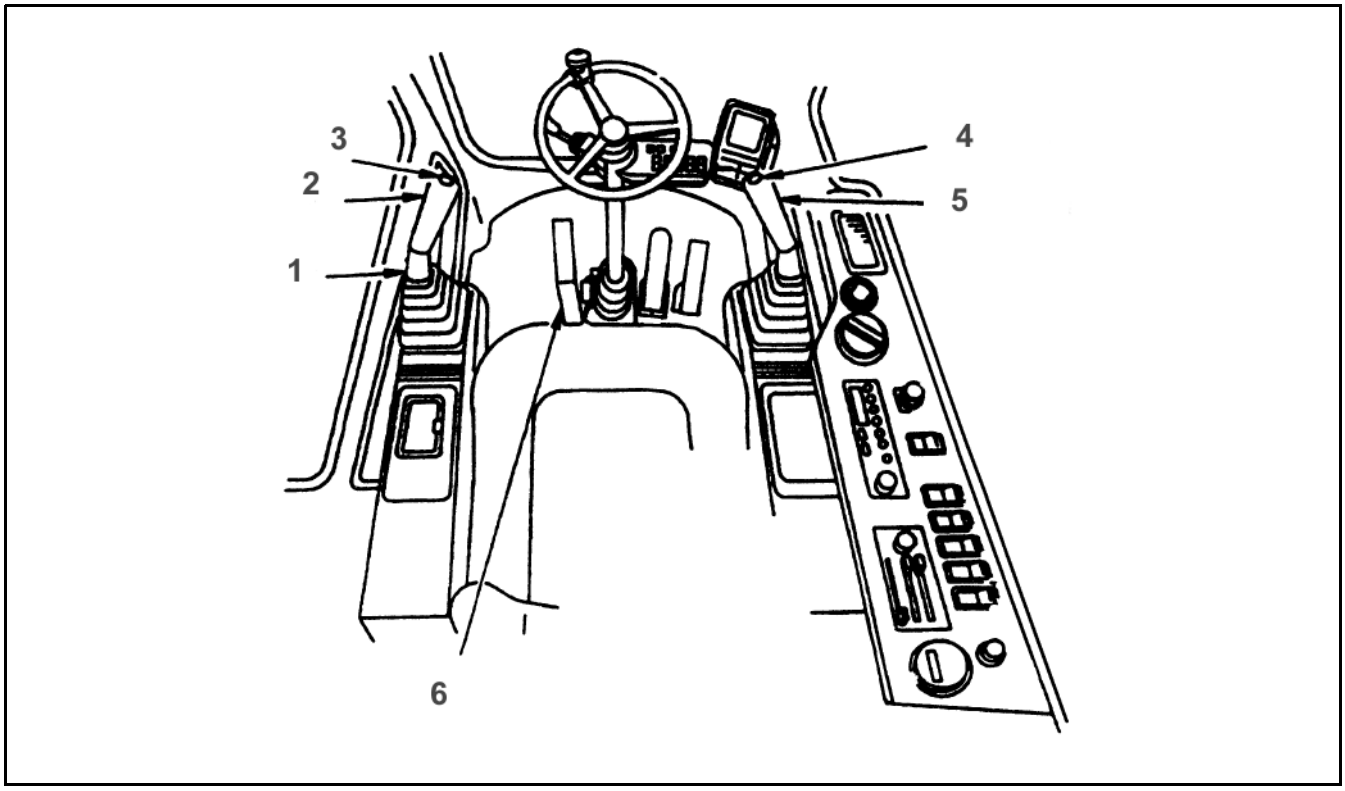

1. Control lever pad safety lock	4. Knob button
2. Left work equipment control lever.	5. Indicators
3. Right work equipment control lever	6. Two piece boom pedal

LEFT WORK EQUIPMENT CONTROL LEVER (with auto-deceleration device)

WARNING

If any lever is operated when in the deceleration range, the engine speed will suddenly increase, so be careful when operating the levers.

This lever is used to operate the arm and upper structure.

Arm operation	Swing operation
(A) Arm OUT	(C) Swing to right
(B) Arm IN	(D) Swing to left
N (Neutral)	

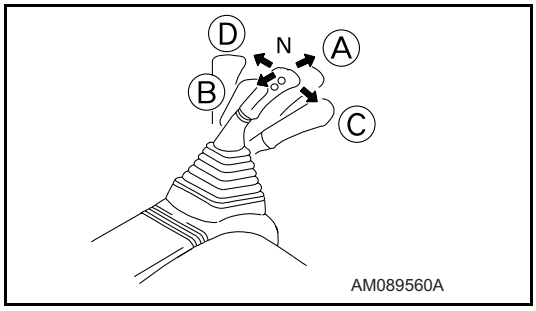

https://truckmanualshub.com/

When the lever in this position, the upper structure and the arm will be retained in the position in which they stop.

RIGHT WORK EQUIPMENT CONTROL LEVER (with auto-deceleration device)

WARNING

If an lever is operated when in the deceleration range, the engine speed will suddenly increase, so be careful when operating the levers.

This lever is used to operate the boom and bucket.

Boom operation	Bucket operation
(1) RAISE	(3) DUMP
(2) LOWER	(4) CURL
N (Neutral)	

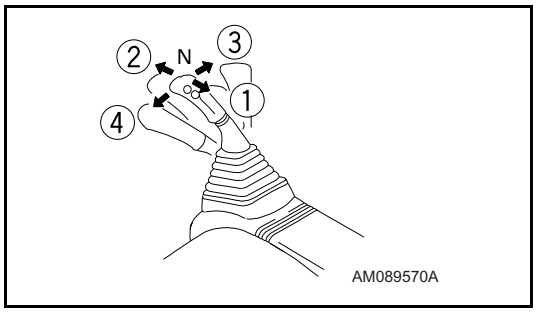

When the lever in this position, the boom and the bucket will be retained in the position in which they stop.

For levers (2), (3) and (4), the engine speed changes as follows because of the auto-deceleration mechanism.

- When the travel lever and work equipment control levers are at neutral, even if the fuel control dial is above the mid-range position, the engine speed will drop to a mid-range speed. If any of the levers are operated, the engine speed will rise to the speed set by the fuel control dial.
- If all control levers are set to neutral, the engine speed will drop by approx. 100 rpm, and after approx. 4 seconds, the engine speed will drop to the deceleration speed (approx. 1400 rpm).

ARM ROTATION CONTROL

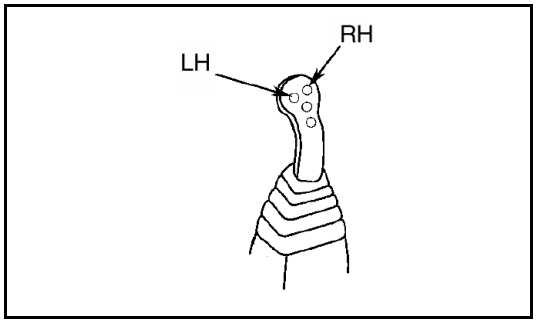

The switches on the front of the right control levers control arm rotation.

(1) Press the left button to rotate the arm anticlockwise facing the ground.

(2) Press the right button to rotate the arm clockwise facing the ground.

When neither switch is pressed the arm is stopped and held in position.

https://truckmanualshub.com/

UPPER BOOM CONTROL PEDAL

This is used to operate the upper boom.

(1)RAISE:	Pedal pushed forward
(2) LOWER:	Pedal pushed back

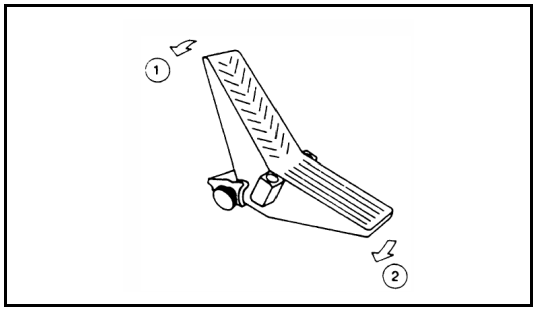

NEUTRAL: The upper boom is stopped and held in the same position.

⚠ CAUTION

Do not rest your food on the pedal unless using the pedal.

PEDAL LOCK FOR BOOM ADJUST

1. With the pedal in the neutral position screw in the pin to lock the pedal.
2. Screw out the pin to unlock the pedal.

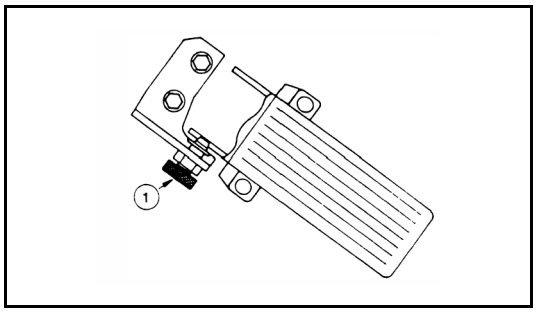

⚠ CAUTION

When the machine is stopped, when leaving the machine or when carrying out maintenance, always lock the boom adjustand arm rotation pedal.

EXCAVATOR'S WORK

In addition to the following, it is possible to further increase the range of applications by using various attachments.

BACK HOE WORK

A back hoe is suitable for excavation at a position lower the machine.It is possible to effectively move the arm through 30° in the direction towards the machine and 45° in the direction away from the machine, making for efficient work.

SHOVEL WORK

A shovel is suitable for excavating at a position higher than the machine.

LOADING WORK

About half of the time spent during excavating and loading work is taken up by swinging. Maximum work efficiency can be attained by carrying out work is such a way that the swinging angle is kept as small as possible in accordance with the terrain.

https://truckmanualshub.com/

SPECIAL OPERATIONS

The rotating arm and 2-piece boom facilitate the following special operations.

PIT EXCAVATION FOR FOUNDATIONS OF BUILDINGS

Shafts with vertical walls can be excavated in all directions and soil can be removed from around sheet piles.

SIDE DITCHING

The direction of the bucket teeth can be altered to facilitate the excavation of parallel sided ditches.

OPERATION ON SLOPES

Vertical ditches can be dug on sloping surfaces.

DITCH DIGGING

Combination of rotating arm and upper boom make possible the precise digging of offset ditch.

STATIONARY DIGGING

The excavation of trenches for main and branch water supply and drainage pipes can be done without changing the machines position.

LIFTING SPOIL

The rotating arm enables working from all directions. Even if there is a structure between the excavator and the bucket the work can be done without hitting it.

BOX DIGGING

Perfect corners can be dug without having to change position of excavators.

SCRAPING

With bucket reversed the excavator can scrape faces upward.

REPLACEMENT OF BUCKET

Stop the machine on a firm, flat surface. When performing work with another person, make clear signals to each other and work carefully for safety's sake.

1. Select a flat surface and stabilize the bucket.
2. After removing the stop bolt and nut for each pin, extract pins A and B.

- After removing the pins, make sure that they do not become contaminated with sand or mud and that the seals of bushing on both sides do not become damaged.

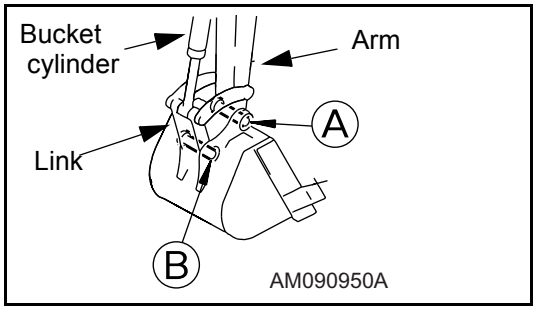

https://truckmanualshub.com/

CAUTION

Bucket size & bucket weight
Do not fit a bucket larger than those listed overleaf for combination of undercarriage attachments, material to be excavated. Fitting of lager bucket will cause machine to tip over.

3. Couple the arm to hole (1), then connect the link to hole (2)
4. After mounting the stop bolt and nut for each pin, apply grease toeach pin.c.

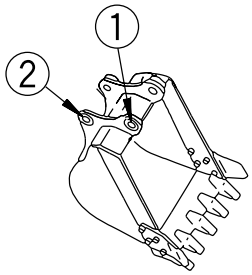

AM090960

https://truckmanualshub.com/

HANDLING THE TRAPEZOIDAL BUCKET (If equipped)

This bucket is used in sloped ditch digging work.

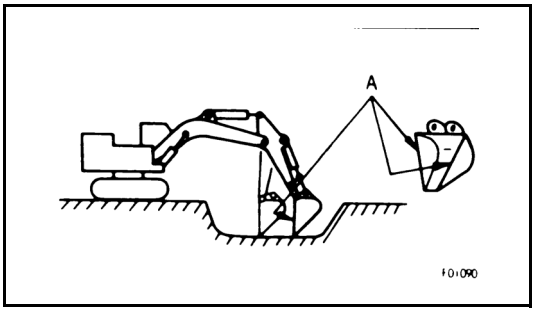

The three different ditch inclination can be obtained by changing the angle of the attached plate.

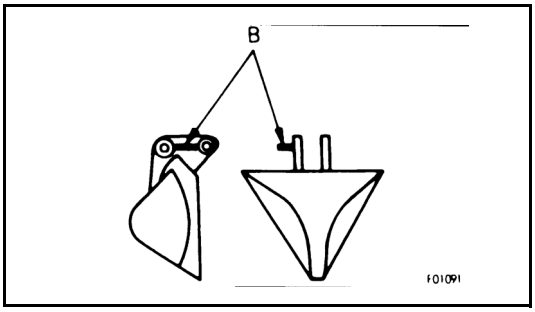

The angles available are 45°, 40° and 38°.

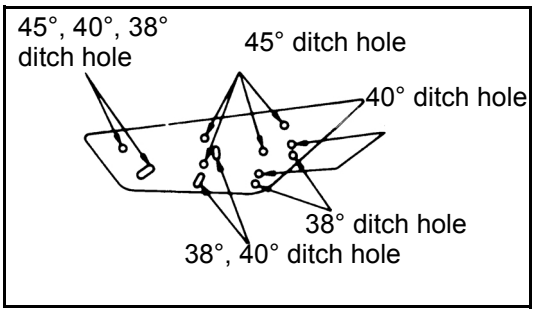

Shape of ditch by 45° bucket

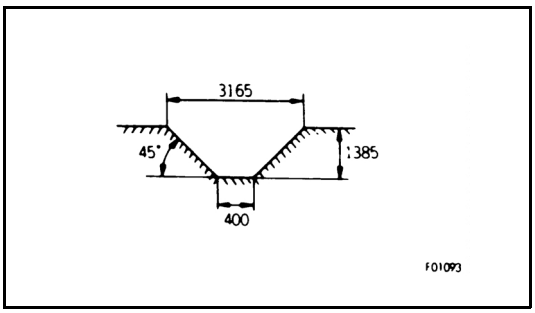

Shape of ditch 40° bucket

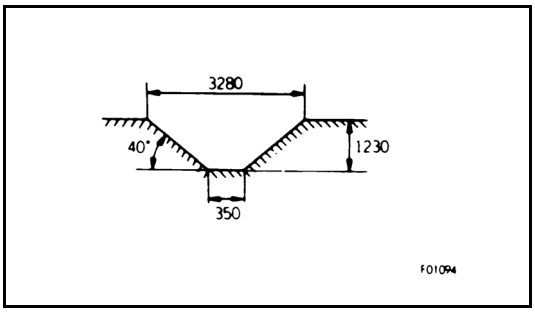

https://truckmanualshub.com/

Shape of ditch 38° bucket

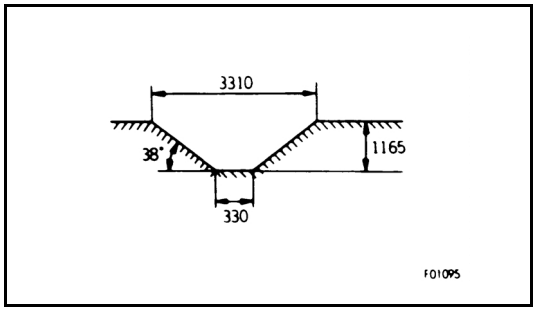

How to perform excavation

Operate the boom, the arm and the bucket to make the line A of the side-plate of the bucket vertical.

To check this position guide plate B is installed beside the bucket pins.

Hold this plate horizontal when digging.

TRAVELLING POSTURE

Before starting to travel, be sure to pull in and lock the outriggers, and or raise the dozer blade.

Before travelling on public roads, the work equipment should be positioned as follows:

1. Remove the bucket or attachment (refer to section see “REPLACEMENT OF BUCKET” on page 264.)
2. Position the upper structure so that it is facing the front of the undercarriage (the oscillation lock cylinders can be seen) and insert the swing lock pin.
3. Fit link plate and spacers (Fig. 1)

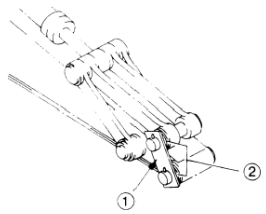

Fig. 1

https://truckmanualshub.com/

4. Fully retract the bucket cylinder.
5. Align arrows & on swing circle. (Fig. 2)
6. Retract the arm cylinder approximately half-way. (Fig. 2)
7. Fully retract first and second boom cylinders.

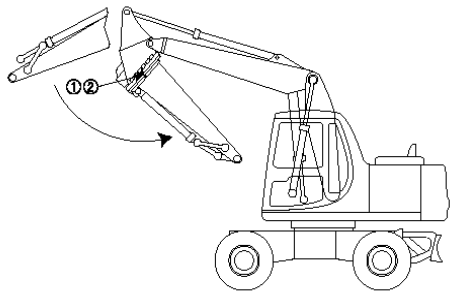

Fig. 2

8. Carefully lower the arm down onto the undercarriage. (Fig. 3)
9. Disable the work equipment levers by disengaging ppc lock switch.
10. Screw in the lock pin on the Boom Adjust and Arm Rotate pedals.
11. Close manual lock valves.

    1) For the bucket cylinder, located on the arm.

    2) For the arm cylinder, located on the first boom.

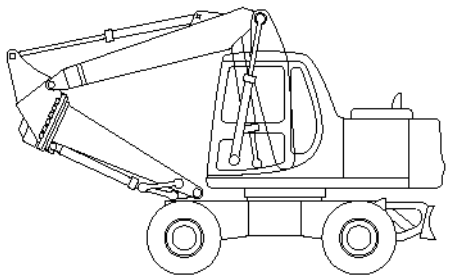

Fig. 3

After setting the machine in the travel posture, confirm that its height is below 4 m and that the distance between the centre of the steering wheel and the front of the work equipment is less than 3.5 m. Before moving off, lock all machine cover and toolbox doors to prevent accidents.

MAINTENANCE REQUIREMENT

The following maintenance should be carried out in addition to that in the PW130ES-6K Operation & Maintenance Manual.

NO	ITEM	SERVICE	PAGE
	EVERY 100 HOURS SERVICE		
1	Arm rotation machinery case	Check and supply	page 269
	EVERY 250 HOURS SERVICE		
2	Arm rotation circle	Lubricate 1 point	page 269
	EVERY 500 HOURS SERVICE		
3	Arm rotation machinery case	Check and supply	page 270
	EVERY 1000 HOURS SERVICE		
4	Arm rotation machinery case	Change oil	page 270

https://truckmanualshub.com/

EVERY 100 HOURS SERVICE

1. Arm rotation machinery case

1. Set the arm horizontal.
2. Remove plug (1)and check whether final drive case is filled with oil to lower edge of plughole. If oil level is below this point, refill with SAE 90 gear oil through plug hole.(see “EVERY 1000 HOURS SERVICE” on page 270.)

- Tightening torque: 56 kgm
- The type of lubricant used depends on the ambient temperature.

  Select according to the table see “USE FUEL, COOLANT AND LUBRICANTS ACCORDING TO AMBIENT TEMPERATURE” on page 173.

EVERY 250 HOURS SERVICE

2. Arm rotation circle

LUBRICATING

Apply grease to the grease fittings shown by the arrows (3 points).

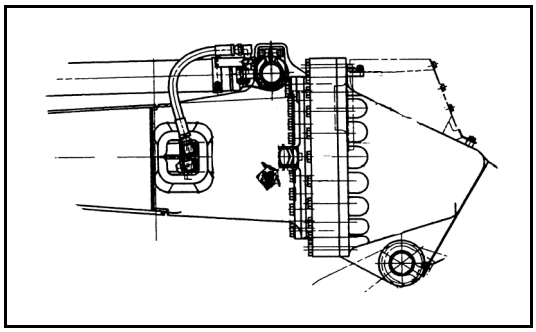

https://truckmanualshub.com/

EVERY 500 HOURS SERVICE

Maintenance for every 100 and 250 hours service should be carried out at the same time.

3. ARM ROTATION MACHINERY CASE

1. Disconnect hoses(1), (2) and (3) from the swing motor.
2. Plug the ends of the hoses and the ports in the motor.
3. Remove 12 bolts (4) from the swing motor and lift off.
4. Refill the grease bath with grease.
5. Replace the swing motor an and tighten the 12 bolts (Apply liquid gasket LG-6 to the mating faces and bolt holes).
6. Reconnect the hoses (1), (2) and (3) to the swing motor.

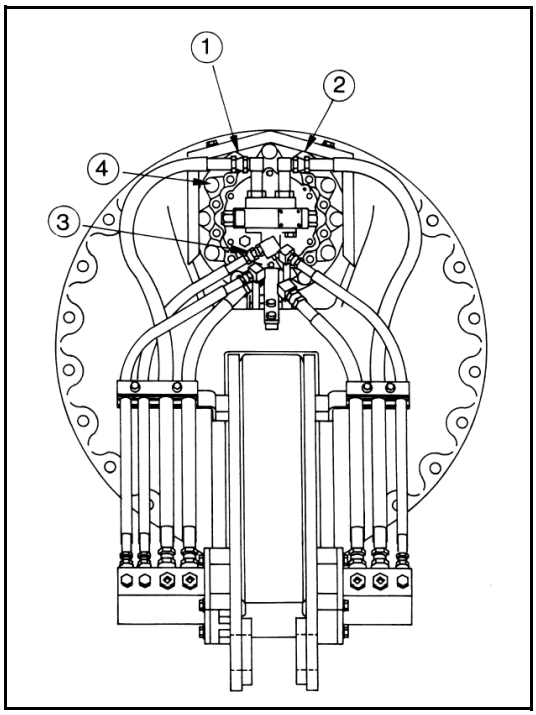

EVERY 1000 HOURS SERVICE

Maintenance for every 250 and 500 hours service should be carried out at the same time.

4. ARM ROTATION MACHINERY CASE

1. Remove plug (1), drain the oil.
2. Add 1.6 liters of SAE 90 Gear Oil through the plug hole.
3. After adding the oil, check that it is at the specified level (Refer to See "EVERY 100 HOURS SERVICE").
4. Replace the plug and retighten.
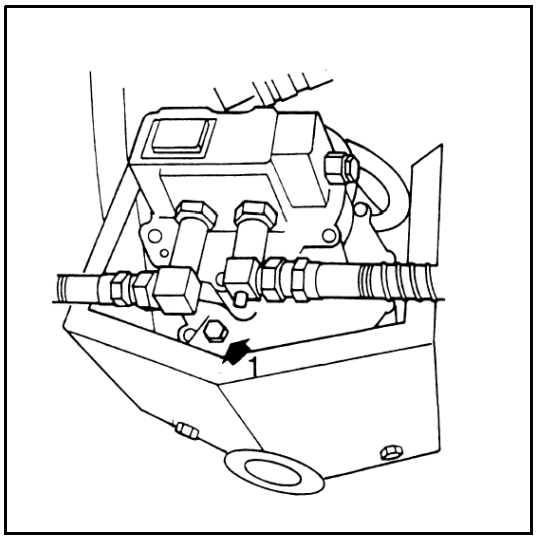
* Tightening torque: 56 kgm