https://truckmanualshub.com/

OPERATION MANUAL

IC120

IHI

SERIAL NUMBER
CB003001 ~

PUB.1

1209 ENG

https://truckmanualshub.com/

CONTENTS

FOREWORD ····· 0-1

SAFETY INFORMATION ····· 0-2

SAFETY

PRECAUTIONS BEFORE OPERATION ····· 1-1
PRECAUTIONS DURING OPERATION ····· 1-3
PRECAUTIONS AFTER OPERATION ····· 1-6
PRECAUTIONS AT TRANSPORTING ····· 1-7
PRECAUTIONS AT MAINTENANCE ····· 1-7
WARNING SIGNS AND LABELS ····· 1-11

CONTROLS

NOMENCLATURE ····· 2-1
CONTROLS AND INSTRUMENTS ····· 2-2
Instrument panel ····· 2-3
Lever box ····· 2-14
Operator seat ····· 2-16
Seat belt ····· 2-17

OPERATION

BEFORE STARTING OPERATION ····· 3-1
BEFORE STARTING THE ENGINE ····· 3-2
ENGINE STARTING ····· 3-3
AFTER STARTING THE ENGINE ····· 3-3
WARMING UP THE MACHINE ····· 3-4
STARTING WITH JUMPER CABLES ····· 3-5
“BREAK-IN” OPERATION ····· 3-6
TRAVELING THE MACHINE ····· 3-7
Start-travel-stop ····· 3-7
Steering control ····· 3-8
Caution of travel on a steep grade ····· 3-9
DUMP OPERATION ····· 3-11
Procedure of dump operation ····· 3-11
Caution of dump operation ····· 3-11
How to lower body in case of emergency ····· 3-12
STOPPING THE ENGINE ····· 3-13
PRECAUTION ON USE OF RUBBER CRAWLER SHOE ····· 3-14
TOWING ····· 3-17

https://truckmanualshub.com/

TRANSPORT ····· 3-18
Loading and unloading the machine ····· 3-18
Fixation at transport ····· 3-19
Lifting the machine ····· 3-20

MAINTENANCE

PRECAUTION ON MAINTENANCE ····· 4-1
USE THE SAFETY BAR ····· 4-2
PERIODICAL EXCHANGE OF THE IMPORTANT PARTS ····· 4-3
MAINTENANCE INTERVALS ····· 4-4
RECOMMENDED LUBRICATION TABLE ····· 4-6
LUBRICATE THE GREASE ····· 4-7
Body ····· 4-7
Oscillating link ····· 4-7
RUBBER CRAWLER ····· 4-8
Rubber crawler shoe maintenance ····· 4-8
Track adjustment ····· 4-9
CHECK THE FIXED BOLT TORQUE ····· 4-10
Special torque specifications ····· 4-10
General torque specifications ····· 4-12
TRAVEL REDUCTION GEAR ····· 4-13
Check the travel reduction oil level ····· 4-13
Change the travel reduction oil ····· 4-13
HYDRAULIC SYSTEM ····· 4-14
Check the hydraulic oil level ····· 4-14
Drain the hydraulic oil tank ····· 4-14
Change the hydraulic oil and clean the strainer ····· 4-15
Replace the return filter and line filter ····· 4-16
ENGINE OIL SYSTEM ····· 4-17
Check the engine oil level ····· 4-17
Replace the engine oil and engine oil filter ····· 4-18
COOLING SYSTEM ····· 4-20
Check the coolant level ····· 4-21
Replace the coolant filter ····· 4-22
Check concentration of coolant additive ····· 4-23
Check anti-freezing solution concentration ····· 4-23
Change the coolant ····· 4-24
Check the fan belt ····· 4-25
FUEL SYSTEM ····· 4-26
Applicable fuel ····· 4-26
Check the fuel level ····· 4-27
Drain the fuel tank ····· 4-27

https://truckmanualshub.com/

Water separator and fuel filter ····· 4-28
Draining water separator ····· 4-28
Replacing water separator and fuel filter ····· 4-29
Priming method ····· 4-29
AIR INTAKE AND EXHAUST SYSTEM ····· 4-30
Clean and replace air cleaner element ····· 4-30
ELECTRIC SYSTEM ····· 4-31
Change the fuses ····· 4-31
Change the fusible link ····· 4-31
Check the battery ····· 4-32
HANDLING IN COLD WEATHER ····· 4-33
LONG TERM STORAGE ····· 4-34
HYDRAULIC SYSTEM DIAGRAM ····· 4-35
ELECTRIC SYSTEM DIAGRAM ····· 4-36

SPECIFICATIONS

SPECIFICATIONS AND DIMENSIONS ····· 5-1

https://truckmanualshub.com/

FOREWORD

This manual contains safety, operation, maintenance, and adjustment information.
The procedures are designed to provide the best performance of the machine in an effective and economical way. In order to obtain it, remember the next basic rules.

- This manual should be stored in the operator's compartment in the literature holder or seat back literature storage area.

- Before inspection, maintenance or operating the machine, read and understand this manual completely.

- Since all of the explanations in this manual may not be thoroughly understood at first, repeat reading it until abilities as an operator are obtained and developed for proper operation.

- Further abilities as an operator outside of descriptions in this manual can be obtained from the experience during normal operations and under proper supervision.

- The illustrations in this manual are used first of all to let you pay attention. They do not show all of illustrations in this manual. Because of continuing improvement and advancement of product design, the shape of machine in the illustrations may be partly different from your machine. Please understand it. Whenever a question arises regarding your machine, or this publication, please consult your local IHI distributor for the latest available information.

https://truckmanualshub.com/

SAFETY INFORMATION

We offer you basic and important rules and precautions for safe operations.

Read, understand, and observe them before starting operation. This is the most essential way to prevent accidents.
Wrong operation, inspection, or maintenance can cause personal injury or death.

Throughout this manual and on the machine, precautions are provided with ⚠ marks and classified by the words "**DANGER**", "**WARNING**", and "**CAUTION**" according to their extent of danger.
The classification is as follows:

⚠ **DANGER**	indicates an imminently hazardous situation which, if not avoided, will result in death or serious injury.
⚠ **WARNING**	indicates a potentially hazardous situation which, if not avoided, could result in death or serious injury.
⚠ **CAUTION**	indicates a potentially hazardous situation which, if not avoided, could result in minor or moderate injury. It may also be used to alert against possible damage to the machine and its components.
NOTICE	indicates a potentially hazardous situation which, if not avoided, could result in the damage of the machine or the performance and the decrease in longevity are caused.

We have made very effort for you to prevent accidents during operation, however, we cannot be held responsible for predicting every kind of danger in all operating conditions.
It is the owner or user of the machine who is responsible for **ALWAYS** paying attention to operate the machine; as well as reading and understanding this manual enough to obtain the essential knowledge and skills fundamental to correct machine operation.

⚠ WARNING

- **BEFORE** inspection, operation, or maintenance of the machine, be sure to read and understand this manual.
- Incorrect operation or maintenance of the machine can cause the accident and serious injury or death.
- Keep this manual on hand during operation so that you can immediately consult it when necessary. If it should be missing or damaged, place an order from IHI distributor for a replacement.
- There are various kinds of federal, state, and local regulations that effect construction and industrial machinery. Since the regulations are subject to change, and differ from one locale to another, it is impossible for us to provide such information in this manual.
  It is the responsibility of the owner or user to be familiar with the regulations.
- Specifications and materials of the machine are subject to change without any obligation on the part of the manufacturer.

https://truckmanualshub.com/

SAFETY

Read the SAFETY section without fail. It describes the basic instructions about safety.

Most accidents occur during works when preventive measures against danger are neglected or basic safety instructions are not observed.
Such accidents may be avoided by paying careful attention in advance.
This manual describes the basic safety instructions to be observed in daily operation, inspection and maintenance of the machine.
Observe these instructions carefully for safety.
Check the safety with great care for any other matters not described in this manual.

https://truckmanualshub.com/

PRECAUTIONS BEFORE OPERATION

READ AND UNDERSTAND THE WARNINGS SIGNS AND LABELS

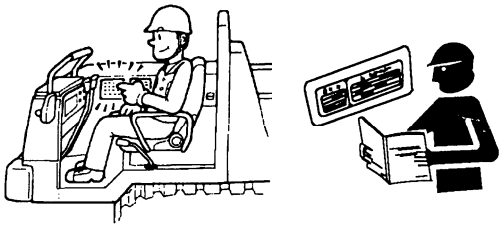

CA-C100010

- There are several specific safety signs on your machine. Please take the time to familiarize yourself with these safety signs.
  Make sure that you can read all safety signs.
- You must replace a label if it is damaged, missing or cannot be read. If a label is on a part that is replaced, make sure a new label is installed on the replaced part.

OPERATION SHOULD BE IN GOOD HEALTH

Operator should be physically and mentally alert, which is one of the best insurance against an accident.

NEVER operate the machine under the influence of alcohol, medication, or intoxication.

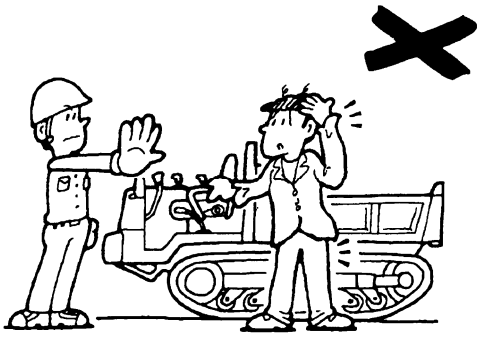

CA-C100020

WEAR PROPER WORKING CLOTHES

- For the sake of safety during driving, wear clothes that match your body. The sleeves of sloppy clothes can get caught in the machine and can cause unforeseen accidents.
- Always wear protective cap and safety boots.
  Wear a hard hat, protective glasses and other protective equipment as required by job conditions.

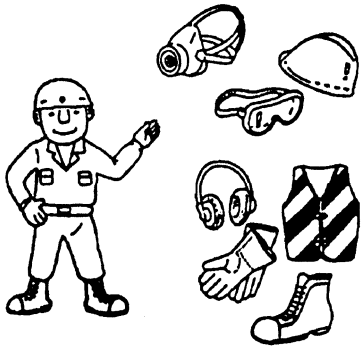

CA-C100030

PERFORM “WALK-AROUND” INSPECTION

Walk around the machine to check safety guards, plates, and other related parts are set in place. Do not attempt to operate the machine when any unsafe condition is detected.

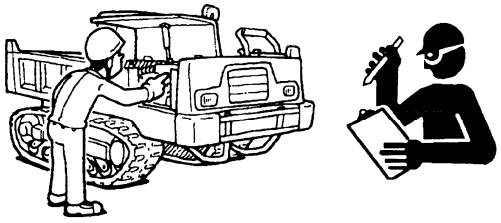

CA-C100040

MAKE A WORK PLAN

- Start the work only after discussing with the person in charge at the site the rules and precautions inside the work place as well as the work procedure.
- When working together with other persons, determine the signals and who is to give those signals.

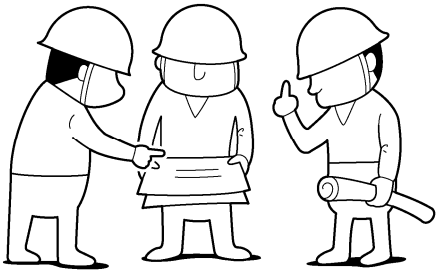

CQ0-01880

https://truckmanualshub.com/

CHECK THE JOB SITE

- Confirm in advance if there are any dangerous locations where the land collapses or where machine can fall off a cliff, etc.
- Take measures necessary for safety in dangerous locations.

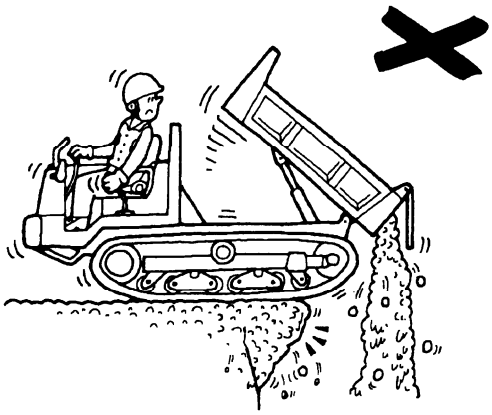

CA-C100050

CAREFULLY MOUNT AND DISMOUNT THE MACHINE

- Maintain a three point contact (Two feet and one hand or one foot and two hands contact) with the steps and handholds.
- Do not use any controls as handholds when entering or leaving the operator's station.
- When any oil or other slippery substance has got adhered to hand rails or steps, wipe them off clean.

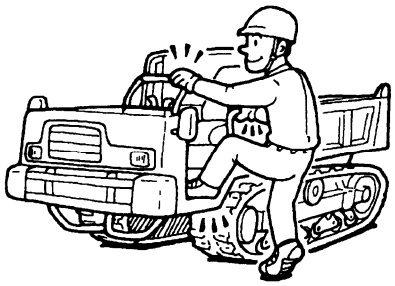

CA-C100060

START THE ENGINE WHILE SITTING IN THE OPERATOR SEAT

If the engine is started from a position other than sitting in the operator seat, there is the danger that the machine starts moving suddenly.
Start the engine only after carrying out checks while sitting in the operator seat.

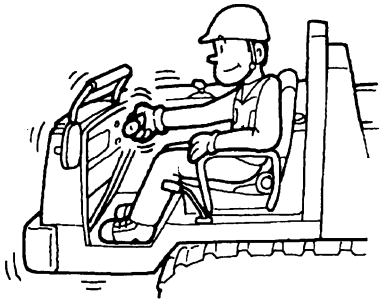

CA-C100070

CONDUCT WARM-UP BEFORE OPERATION

If the machine is operated without carrying out sufficient warming up operation, it can lead to movements not intended by the operator, and can lead to accidents.
Always carry out sufficient warming up operation.

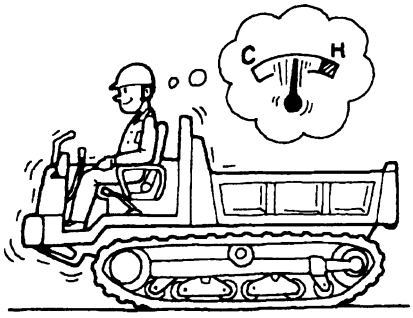

CA-C100080

https://truckmanualshub.com/

PRECAUTIONS DURING OPERATION

CLEAR ALL PERSONNEL FROM THE MACHINE AND AREA

Be sure to barricade the job site to prevent entry of the unauthorized. Confirm that there is no one around the machine before starting the engine or operating the machine.

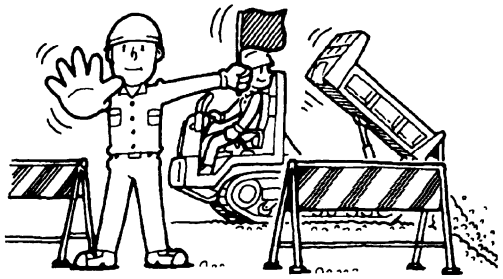

CA-C100090

MAINTAIN GOOD VENTILATION

Diesel engine exhaust contains products of combustion which may be harmful to your health. Always start and operate the engine in a well ventilated area. If in an enclosed area, vent the exhaust to the outside.

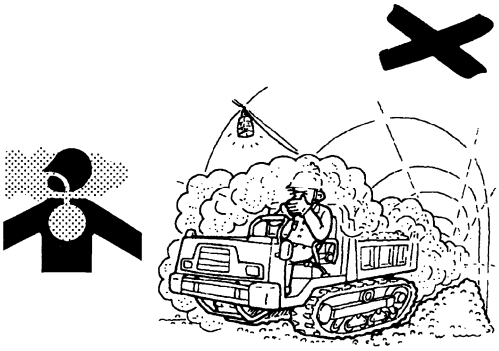

CA-C100100

STAY SEATED WHILE OPERATING

There is the danger of making wrong operations if the operating is done from a position other than the operator seat or while standing.

Operate the machine only while seated and with the seat belt fastened.

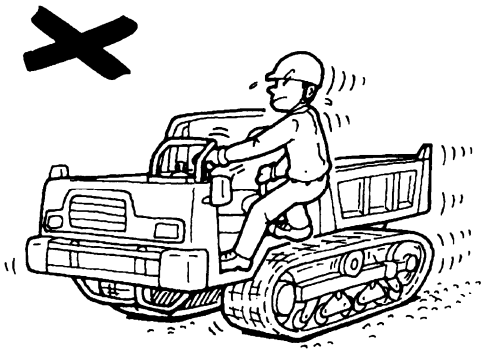

CA-C100110

PREVENT ACCIDENTS WHILE MOVING

- Always sound the horn to signal others nearby that you are moving the machine. Check that no one is within the working area of the machine before attempting to move it.
- Position a guiding person to guide and check when necessary or when the field of view is bad.

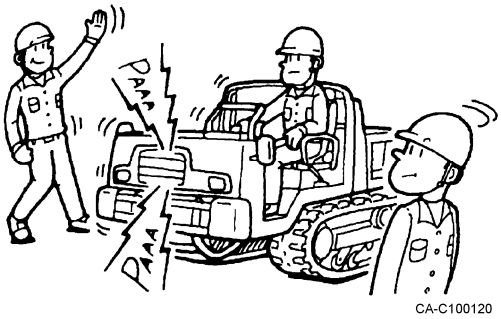

CA-C100120

https://truckmanualshub.com/

DO NOT TRAVEL WITH THE BODY IN DUMP POSITION

Traveling with the body in dump position not only makes the machine unstable but limits operator visibility causing hazardous situations.

Never attempt to travel with the body in dump position.

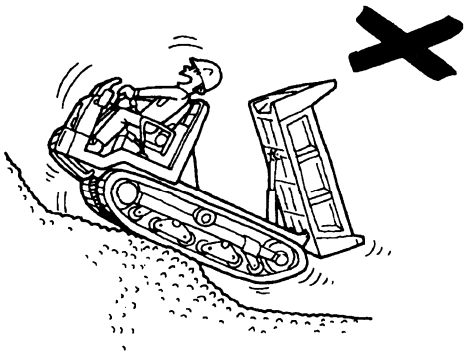

CA-C100130

DO NOT OVERLOAD

- Working with loads exceeding the performance of the machine can cause loss of safety or reduction in the functionality or life of the machine.
- Never exceed the maximum load limits.
- Never place a load onto the sideracks.

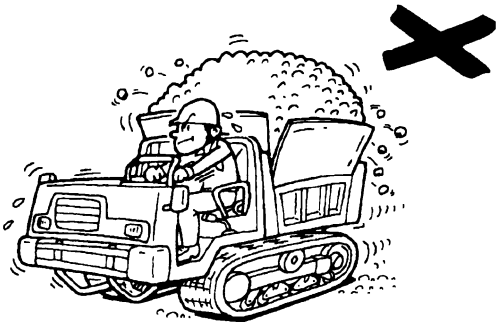

CA-C100140

DO NOT EXCEED THE WATER DEPTH LIMIT

- The acceptable water limit is up to the lower roller. Check the water depth, foundation and strength of water current and other safety factors before operating. Do not place the machine in locations exceeding the lower frame of the machine.
- If the machine goes into water in a descending posture on a steep slope, water may splash on the radiator and peripheral parts, resulting in damages of the radiator fan. Be careful.

CA-C100150E

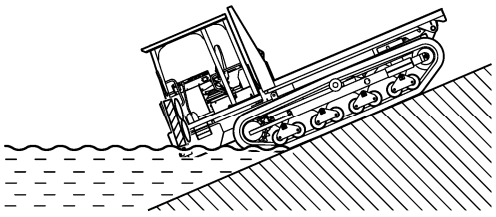

CE1-C100030

DO NOT TRY TO TRAVEL OVER OBSTRUCTIONS

Trying to travel over obstacles could cause the machine to lose its balance and topple over.

Avoid potential obstacles in your path.

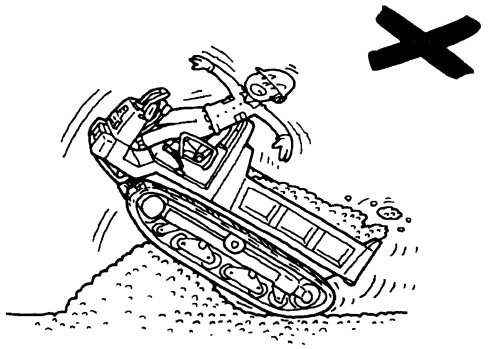

CA-C100160

https://truckmanualshub.com/

DO NOT CHANGE DIRECTIONS WHILE ON A SLOPE

Avoid changing the direction of travel on a slope, which could result in tipping or side slipping of the machine.
When it is inevitable to change the direction, carry it out in a hard ground where the slope is gradual.

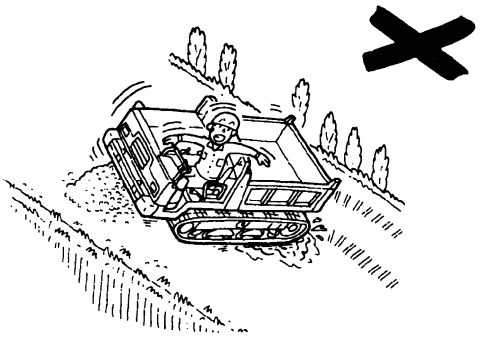

CA-C100170

MOVE UP AND DOWN SLOPES DIRECTLY NOT SIDEWAYS

Moving sideways or parallel to the slope while on it may cause the machine to slide and fall over.
To prevent such accidents, only move up and down slopes at a direct angle.

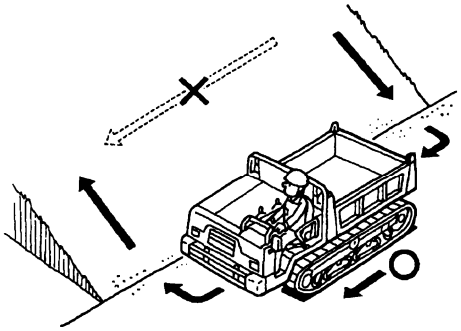

CA-C100180

WATCH THE MACHINE POSITION WHILE TRAVELING ON SLOPES

The machine center of gravity tends to quickly change while traveling on sloping surfaces.
This can create hazardous situations where the machine may tip over.
Observe the following points regarding machine position:

- Go forward up the hill and back down the hill WHEN NO CARRYING A LOAD.
- Reverse up the hill and go forward down the hill WHEN CARRYING A LOAD.

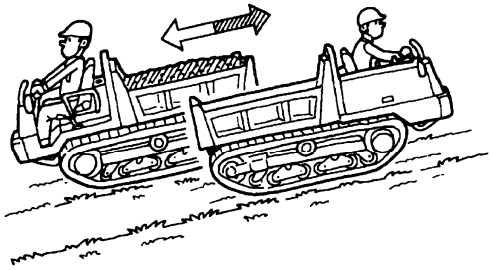

CA-C100190

NEVER ALLOW PERSONNEL RIDE ON THE MACHINE OTHER THAN OPERATOR

Any person riding as a passenger can fall off and suffer injury. In addition, such a passenger also obstructs the driving by the Operator.
Only operator is authorized to be on the machine during operation. Never let unauthorized personnel ride on the machine.

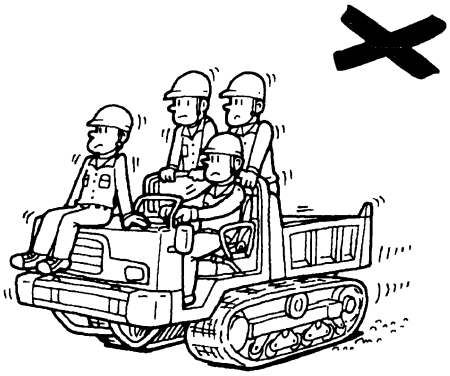

CA-C100200

https://truckmanualshub.com/

PRECAUTIONS AFTER OPERATION

PARK IN A SAFE PLACE

For parking, select a flat ground with good foothold and where there is no danger of land or mud slides, and also, near a river, select a place which is safe even if the river water level becomes high.

CA-C100210

DO NOT PARK THE MACHINE ON A GRADE

There is the danger of the machine running off wild when stopped or parked on a sloping land.
When it is unavoidable to stop or park on a slopping land, Place stopper blocks on the downhill side under both crawlers.

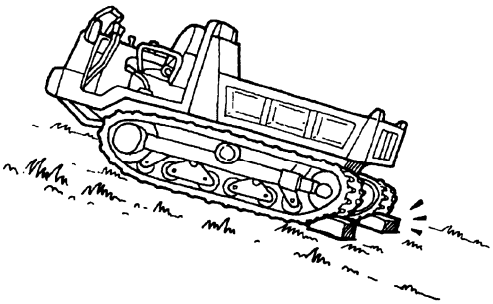

CA-C100220

OBSERVE PRECAUTIONS WHEN PARKING THE MACHINE ON THE ROAD

If you have to park the machine on the road, use appropriate flags, barriers, flares, and warning signals.

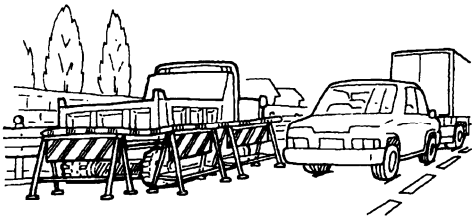

CA-C100230

OPERATOR LEAVING MACHINE

- Lower the body completely.
- Apply the parking brake.
- Put the operation lock lever in its locked position.
- Stop the engine and take out the ignition key.
- Lock the cover and all other lockable parts.

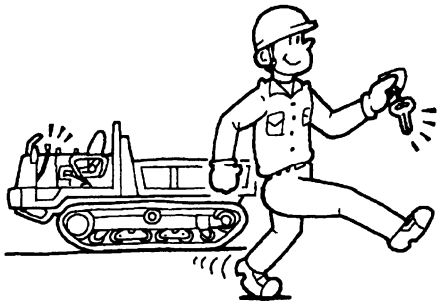

CA-C100240

Leave the operator’s seat after taking the above measures.

https://truckmanualshub.com/

PRECAUTIONS AT TRANSPORTING

CAREFULLY LOAD AND UNLOAD THE MACHINE

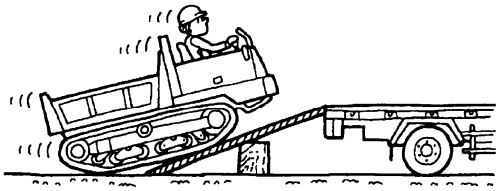
CA-C100250

- ALWAYS load and unload the machine on the level ground.
- Use a ramp that has sufficient strength, width, length, and thickness.
- Remove ice, snow, or slippery material from the ramp and truck deck before loading.
- NEVER make a turn on a ramp.

OBSERVE PRECAUTIONS ON TRANSPORTATION

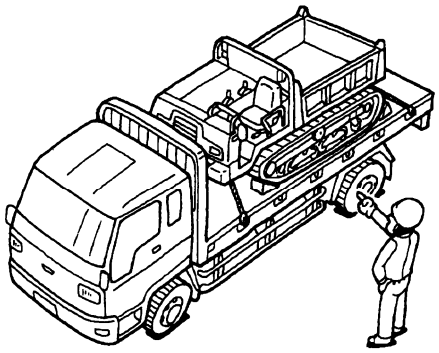
CA-C100260

- Blocks tracks and secure the machine to the truck before transporting.
- Securely fix the machine to the platform using a wire rope, etc.
- Transport safely strictly following the concerned laws.

PRECAUTIONS AT MAINTENANCE

KEEP ROUTINE MAINTENANCE

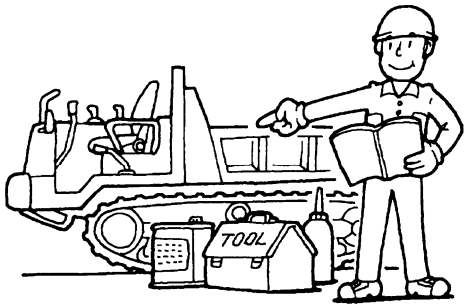

CA-C100270

- Wrong maintenance not only causes damage to the machine but also has the danger of causing accidents that involve injury to humans.
- You must read and understand the warnings and instructions contained in this manual, before performing any operation or maintenance procedures.

INDICATIONS DURING INSPECTION AND MAINTENANCE

Hang a warning board saying “Under Inspection / Maintenance” at an easy to see location of the operation lever so that nobody other than the concerned persons touches it.

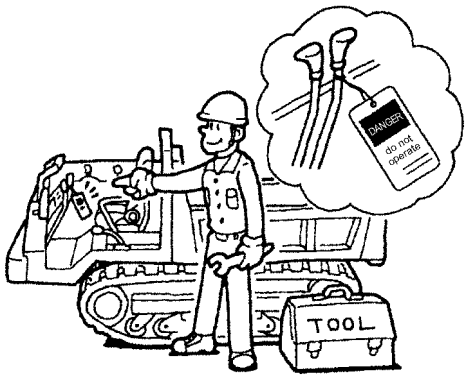

CA-C100280

https://truckmanualshub.com/

WHEN WORKING UNDER TRACKS

There is the danger of an accident of being caught under the machine if the machine comes down.
Place supporting pillars or blocks under the crawler and make sure that it is supported firmly.

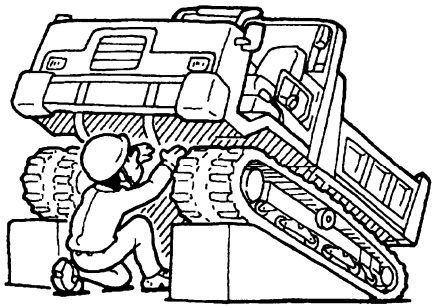

CA-C100290

ALWAYS RELEASE PRESSURE BEFORE DISCONNECTING HYDRAULIC LINES

There is the danger of high pressure oil jetting out if a piping or a hose is removed without releasing the internal pressure of the hydraulic system. Start the work only after completely releasing the internal pressure.

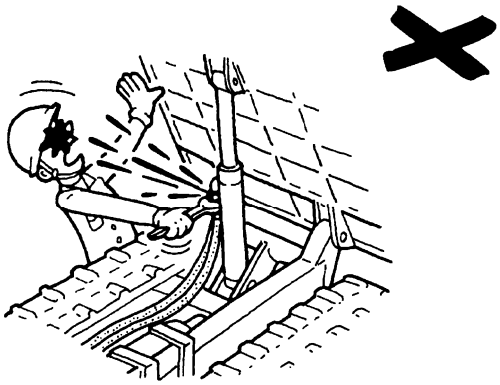

CA-C100300

SUPPORTING THE BODY

If replacement or repair of couplings or hoses is made with the body in the raised condition, there is the possibility that the body drops down.
Always support the body using the safety bar, and also lock it using the dump lever.

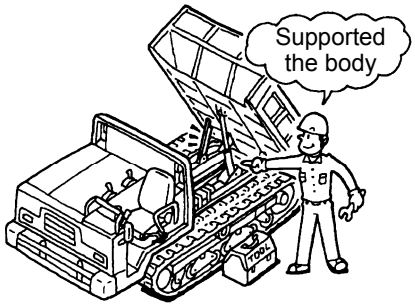

CA-C100310

DO NOT WATCH THE RELIEF VALVE WHEN ADJUSTING TRACKS

- Track adjusting grease is under high pressure. Grease coming out of the check valve under pressure can penetrate the body causing injury or death.
- Watch the track or track adjustment cylinder to see if the track is being loosened. Loosen the check valve one turn only.
- Do not put your face, hand, foot, or body in front of the check valve.

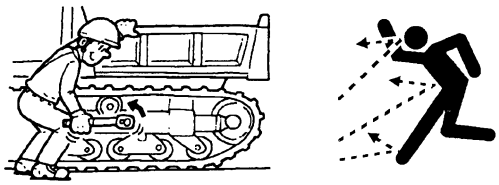

CA-C100320

https://truckmanualshub.com/

PRECAUTIONS AGAINST HIGH PRESSURE OIL

- It is very dangerous if the high pressure oil enters your skin or eyes.
- Use a thick sheet of paper or a wooden piece to test for the leakage of high pressure oil, and never test with your hands.
  Wear protective goggles for protecting your eyes.
- If oil enters your skin, immediately go to a doctor and get medical attention.

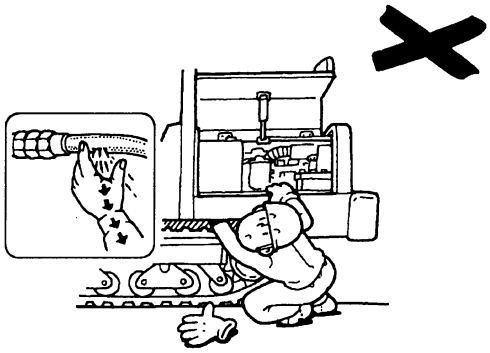

CA-C100330

NEVER CARRY OUT MAINTENANCE WITH THE ENGINE RUNNING

Touching a rotating or moving part such as the fan belt, etc., can get your hand crushed by the machine and there is the danger of your hand being cut off.
Always carry out maintenance work with the engine switched off.

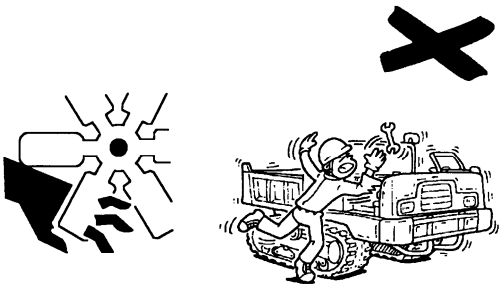

CA-C100340

BE CAREFUL TO HOT ENGINE AFTER THE MACHINE STOPS

Do not touch the engine or muffler right after the machine is stopped. It is very hot and causes burns.
Start inspection and maintenance only after the temperatures of the different parts have gone down sufficiently,

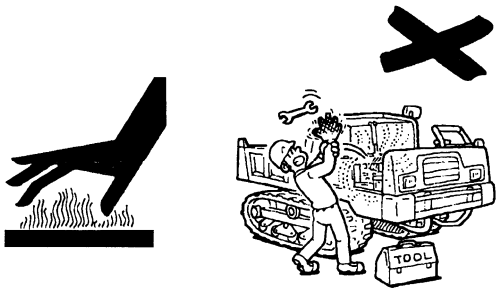

CA-C100350

NEVER OPEN A RADIATOR OR COOLANT TANK CAP WHEN IT IS HOT

Removing the radiator cap when the temperature of the coolant is still high can cause high temperature steam to jet out, and can cause scalding of your hands and body.
Never open the radiator cap when the temperature is till high.
When the water temperature lowers, loose the cap gradually to reduce the pressure and remove the cap.

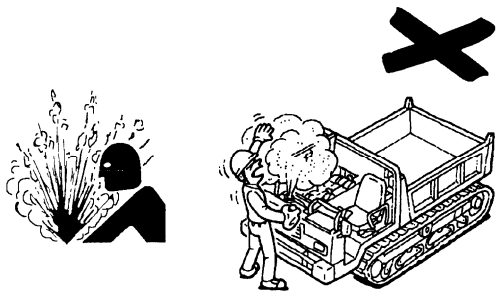

CA-C100360

https://truckmanualshub.com/

HANDLING BATTERY

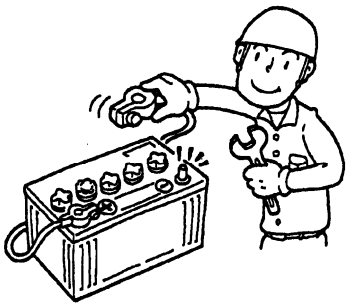

CA-C100370

- When maintaining the electrical system or when carrying out welding, remove the lead connected to the negative terminal (-) of the battery.
- A battery can generate flammable gases and there is the danger of the gases catching fire and exploding. Also, dilute sulfuric acid is being used for the battery liquid. Take sufficient care while handling.

FIRE PREVENTION

CA-C100380

- Do not leave burnable items such as oily rags, dry leaves, paper, etc., near the engine. Since these can cause fire hazards, constantly check and remove them.
- Stop the engine during refueling, and take care not to bring sparks or fire near the fuel.
- Inspect for leakage of fuel, oil, and working oil and repair if there is any defect, and wipe off all oil that has leaked.
- Make sure where a fire extinguisher is placed and know how to use it.

https://truckmanualshub.com/

WARNING SIGNS AND LABELS

There are several specific safety signs ⚠ on your machine.
Make sure that you can read all safety signs. Clean or replace these if you cannot read the words.

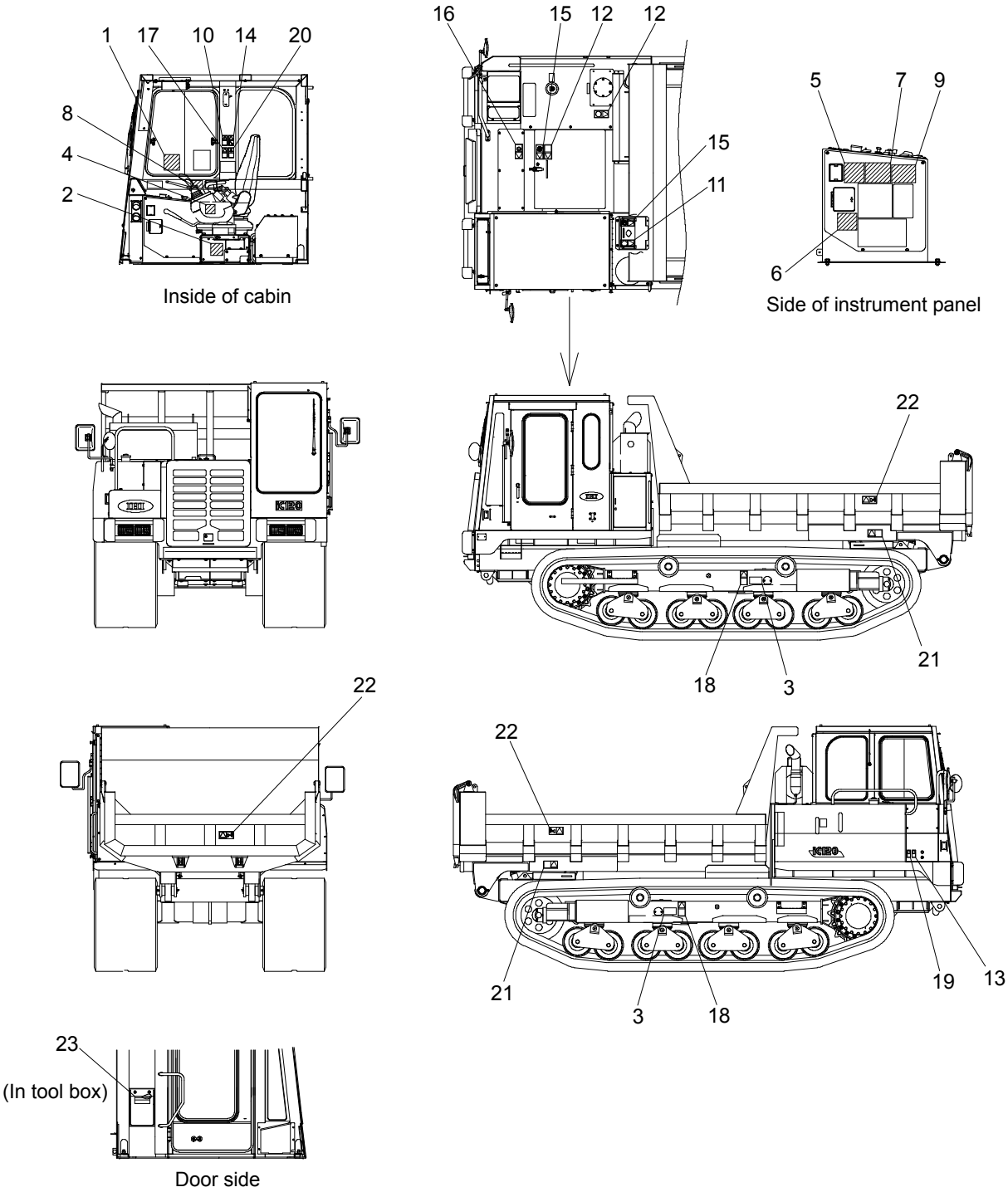

https://truckmanualshub.com/

1. Precautions on safety
   (D405 624 00)

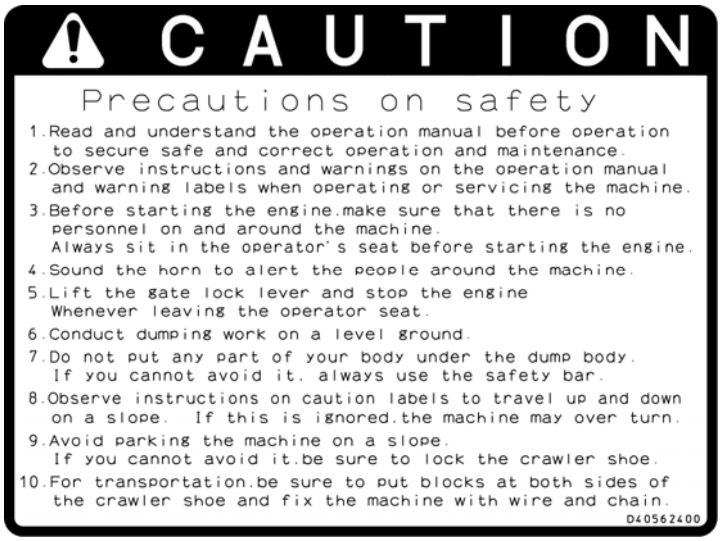

2. Precaution for working under the raised body
   (4448 816 00)

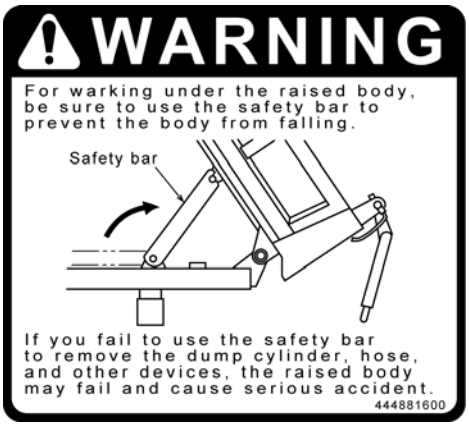

3. Crawler shoe tension adjustment
   (D405 516 00)

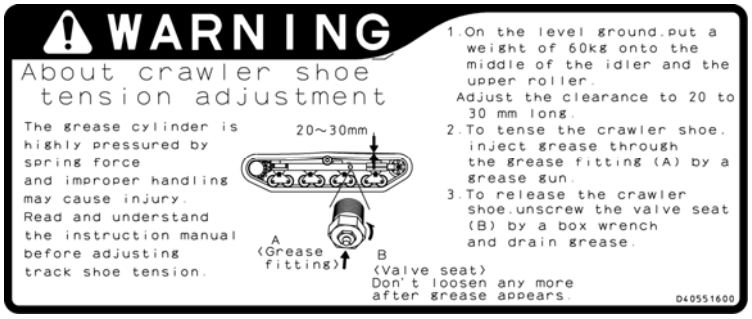

4. Operation lock lever
   (D407 957 00)

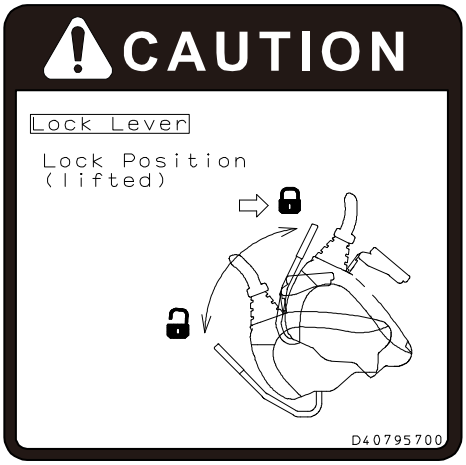

https://truckmanualshub.com/

5. Traveling on a slope
(D406 188 00)

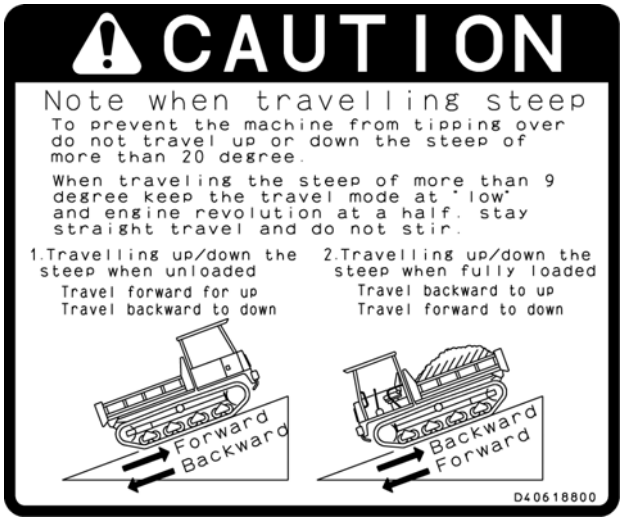

6. Loading and unloading the machine
(D405 618 00)

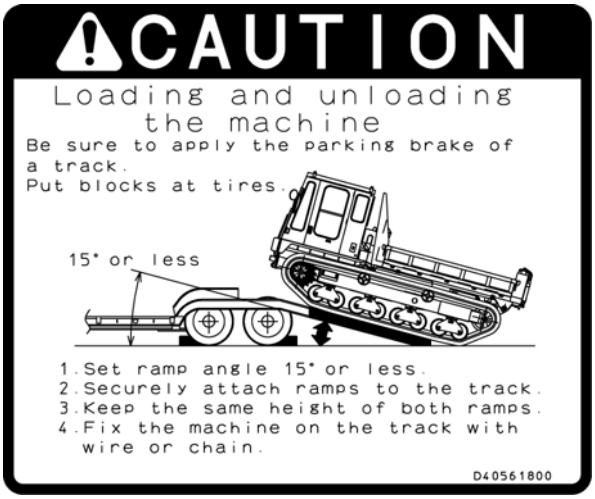

7. Under-water works
(D406 189 00)

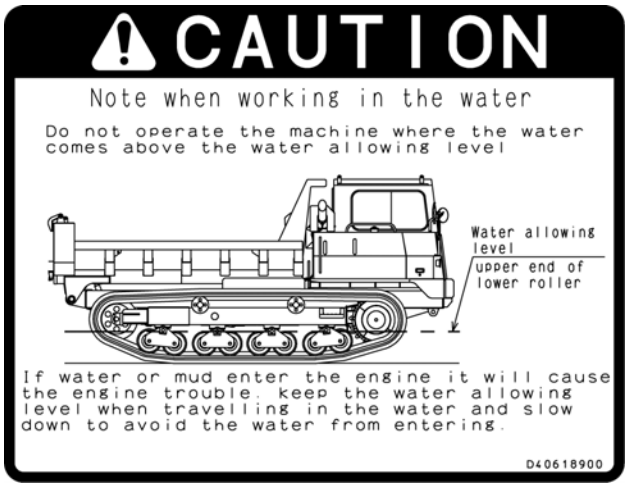

8. Safety alarm
(D408 110 00)

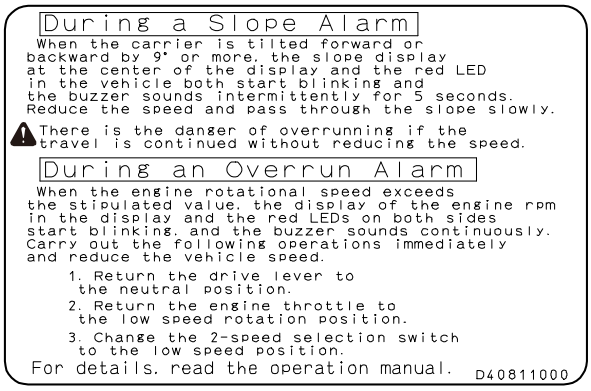

9. How to lower body in case of emergency
(D408 034 00)

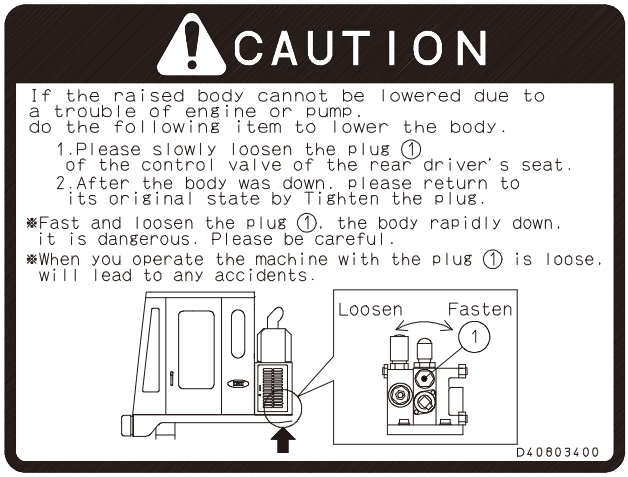

https://truckmanualshub.com/

10. Warning!
    Read manual before operation, maintenance, disassembly, assembly and transportation.
    (D405 359 00)

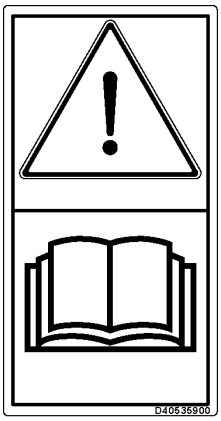

11. Sign indicates a burn hazard from spurting hot water or oil if radiator or hydraulic tank is uncapped while hot.
    Allow radiator or hydraulic tank to cool before removing cap.
    (D405 476 00)

12. Sign indicates a burn hazard from touching heated parts, such as engine, motor, or muffler during or right after operation. Never touch when hot.
    (D405 477 00)

13. Sign indicates an electrical hazard from handling the cable.
    Read manual for safe and proper handling.
    (D405 363 00)

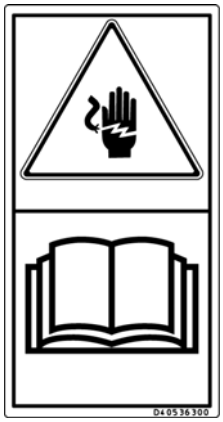

14. Sign indicates an electrocution hazard if machine is brought too near electric power lines.
    Keep a safe distance from electric power lines.
    (D405 364 00)

15. Sign indicates a hazard of falling.
    Do not stand on this place.
    (D405 481 00)

16. Sign indicates a hazard of rotating parts, such as belt.
    Turn off before inspection and maintenance.
    (D405 482 00)

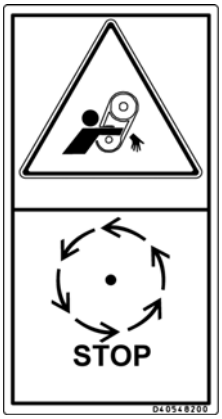

17. Sign indicates a hazard of falling out when machine goes over an obstacle.
    Read manual and follow instructions for safe and proper operation.
    (D405 368 00)

https://truckmanualshub.com/

18. Sign indicates a hazard of a flying plug from track adjuster that could cause injury.
Read manual before adjusting track for safe and proper handling.
(D405 485 00)

19. Sign indicates an explosion hazard.
Never drill, cut with gas, hit or disassemble. Also, keep open flame away.
(D405 362 00)

20. Sign indicates the necessity of fastening the seat belt.
Always keep the seat belt fastened while operating the machine to minimize danger caused by accidents such as falling down.
(D407 741 00)

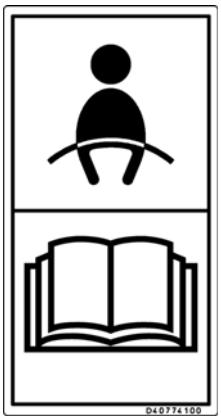

21.

Sign indicates a crush hazard from falling body.
Read manual and follow safety instructions when holding the body in a raised position.
(D405 487 00)

22.

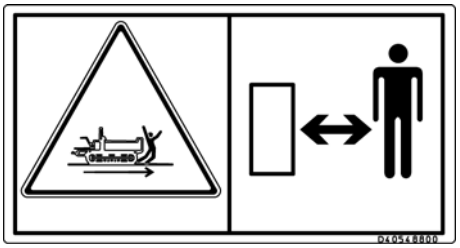

Sign indicates a hazard of being run over by moving equipment.
Keep away from equipment when it is moving.
(D405 488 00)

23.

D40532300

Attach a DO NOT OPERATE warning tag to start switch or controls before servicing or repairing the machine.
Do not start the engine or move any of the controls if there is DO NOT OPERATE or similar warning tag attached to the start switch or controls.
(D405 323 00)

https://truckmanualshub.com/

CONTROLS

This section describes the functions of the devices needed to operate this machine and the proper operation procedures. Understand them sufficiently and operate the machine in safe.

https://truckmanualshub.com/

NOMENCLATURE

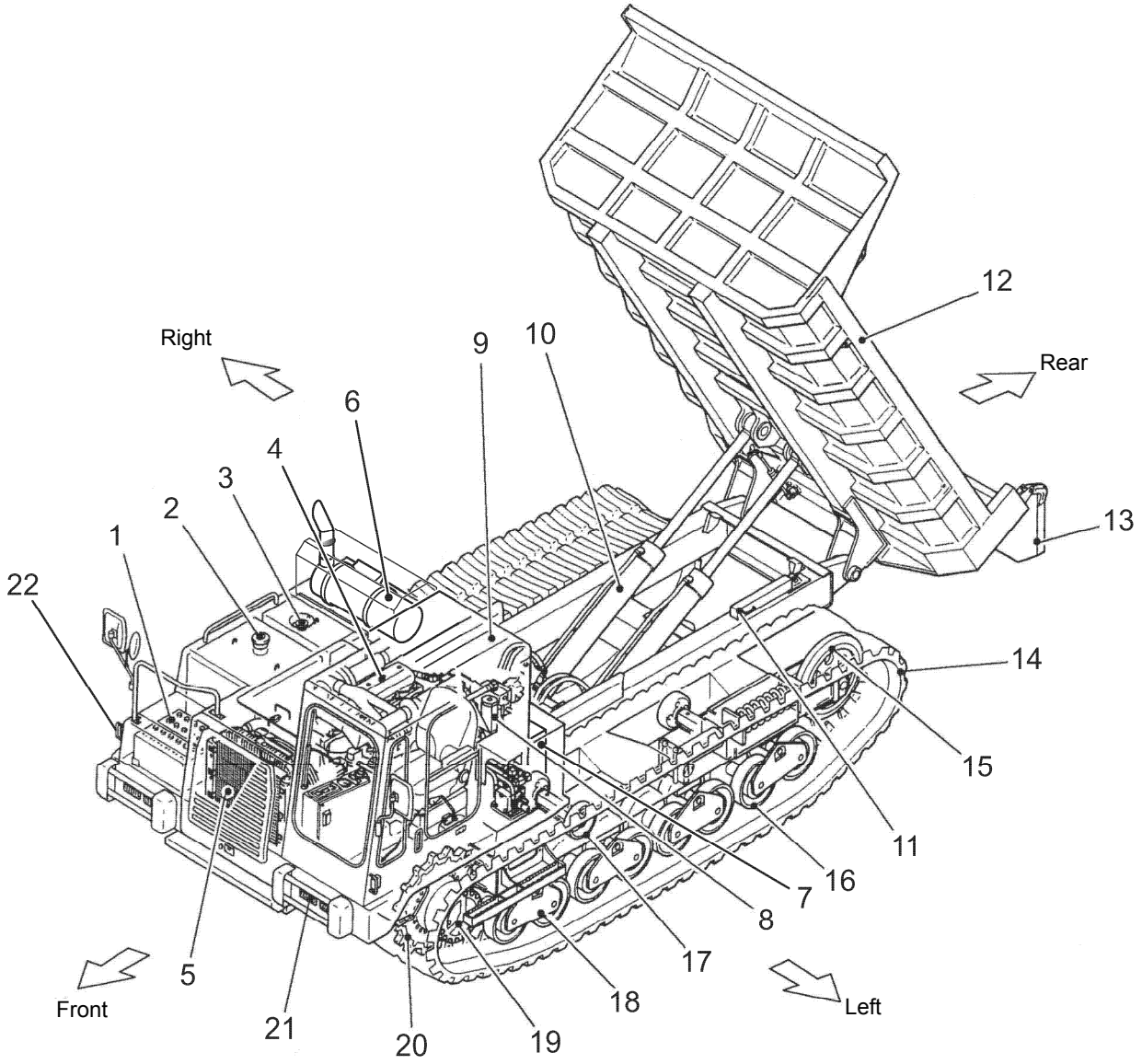

No.	Name	No.	Name	No.	Name
1	Battery	9	Cabin	17	Upper roller
2	Fuel tank	10	Dump cylinder	18	Oscillating link
3	Hydraulic tank	11	Safety bar	19	Travel device
4	Engine	12	Body	20	Drive sprocket
5	Radiator, oil cooler	13	Rear gate	21	Headlight
6	Muffler (DPF)	14	Rubber crawler	22	Turn signal lamp
7	Air cleaner	15	Idle tumbler		
8	Hydraulic pump	16	Lower roller		

https://truckmanualshub.com/

CONTROLS AND INSTRUMENTS

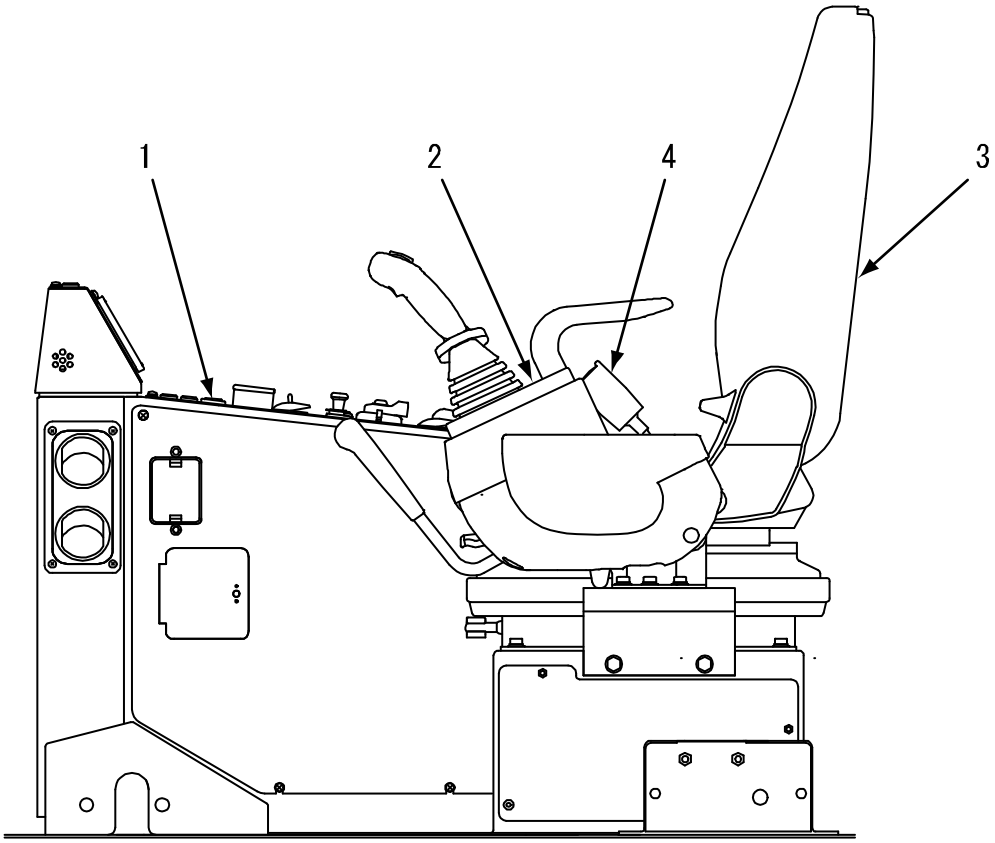

No.	Name	No.	Name
1	Instrument panel	3	Operator seat
2	Lever box	4	Seat belt

https://truckmanualshub.com/

Instrument panel

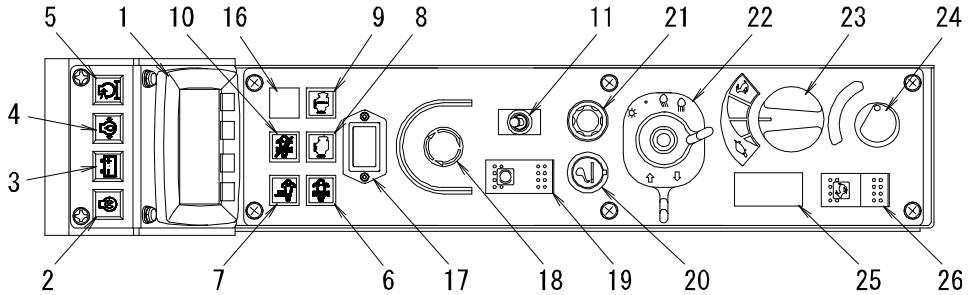

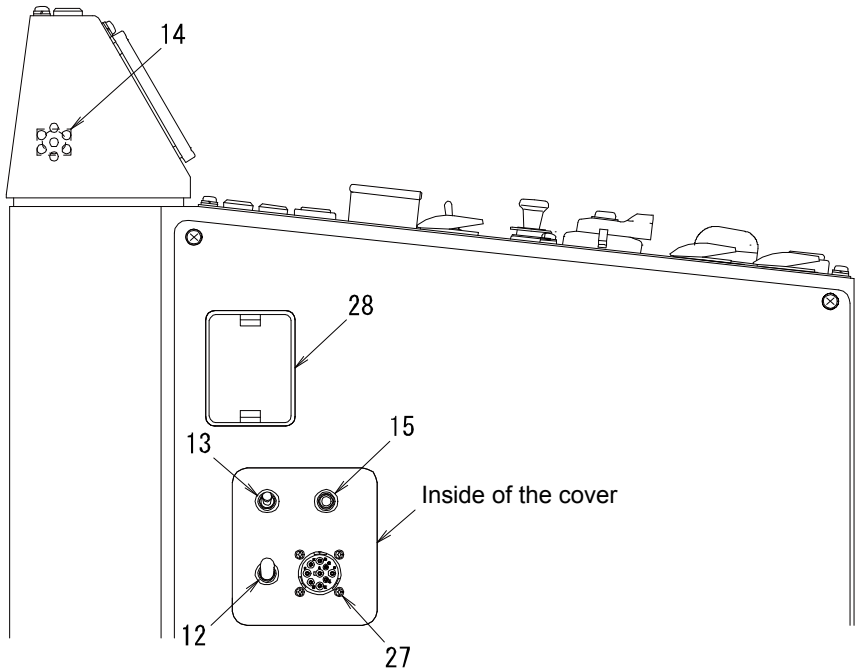

No.	Name	No.	Name
1	Display	15	Fault code next switch
2	Preheat lamp	16	Reserve
3	Battery charge lamp	17	Hour meter
4	Engine oil pressure lamp	18	Engine emergency stop switch
5	Air cleaner clogging lamp	19	Parking switch
6	DPF alarm lamp	20	Cigarette lighter
7	HEST lamp	21	Wiper switch
8	Engine alarm lamp	22	Combination switch
9	Engine stopped lamp	23	Engine throttle dial
10	DPF regeneration disabled lamp	24	Engine key switch
11	DPF manual regeneration/engine diagnostic switch	25	Reserve
12	DPF regeneration disabled switch	26	Travel speed select switch
13	Engine stop delay switch	27	Engine service connector
14	Buzzer	28	Fuse box

DPF: Diesel Particulate Filter

HEST: High Exhaust System Temperature

https://truckmanualshub.com/

Display

The fuel gauge, engine tachometer and other various data of the machine or engine are displayed.

- Screen system

The initial screen appears when the engine key switch is turned to the ON position.

Initial screen

The initial screen changes into the “Operation screen” in 3 seconds.

Operation screen

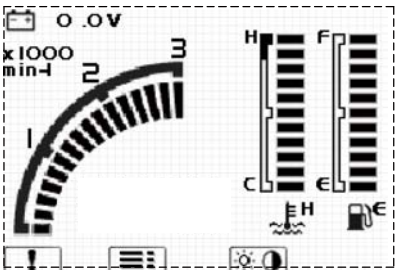

Press the key.

Fault code display screen

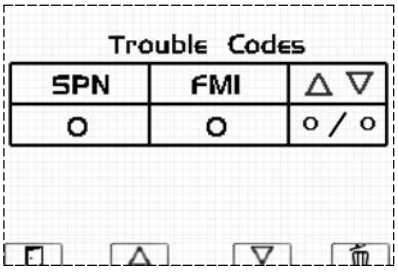

Press the key.

Engine data display screen

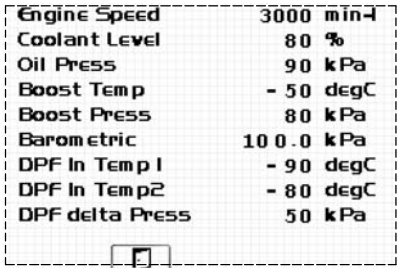

Press the key.

Brightness and contrast adjustment screen

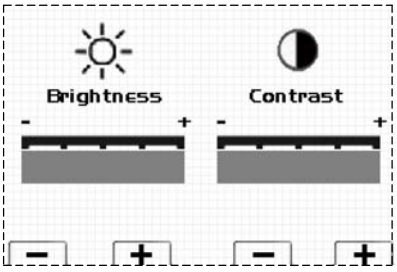

The “Fault code display screen” and “Engine data display screen” are used by our serviceman when a trouble occurs in the machine or engine.

The screen changes into the “Operation screen” when the key is pressed.

https://truckmanualshub.com/

- Operation screen

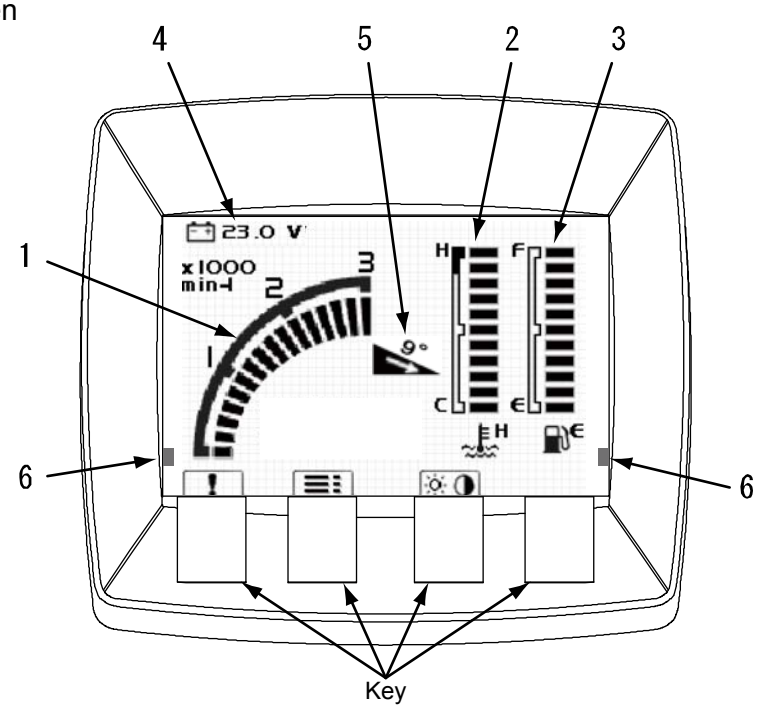

Engine tachometer (1)

Indicates the revolution of the engine on the meter.

Overrun alarm

The whole meter blinks if the engine revolution exceeds 2500 min^{-1}. At the same time, the red LED (6) blinks and the buzzer keeps sounding.

Water temperature gauge (2)

Indicates the temperature of coolant. “H” is displayed on the right of the symbol and the symbol blinks if the temperature of coolant exceeds 107°C.

(Blinks.)

Fuel gauge (3)

Indicates the residual fuel quantity. “E” is displayed on the right of the symbol and the symbol blinks if the residual fuel runs short.

(Remaining fuel quantity: Approx. 50 L)

(Blinks.)

Battery voltage (4)

Indicates the current battery voltage.

Slope alarm indicator (5)

This indicator appears on the screen and blinks if the machine inclines forward by 9° or more. At the same time, the red LED (6) blinks and the buzzer sounds for five seconds.

https://truckmanualshub.com/

- Brightness and contrast adjustment screen

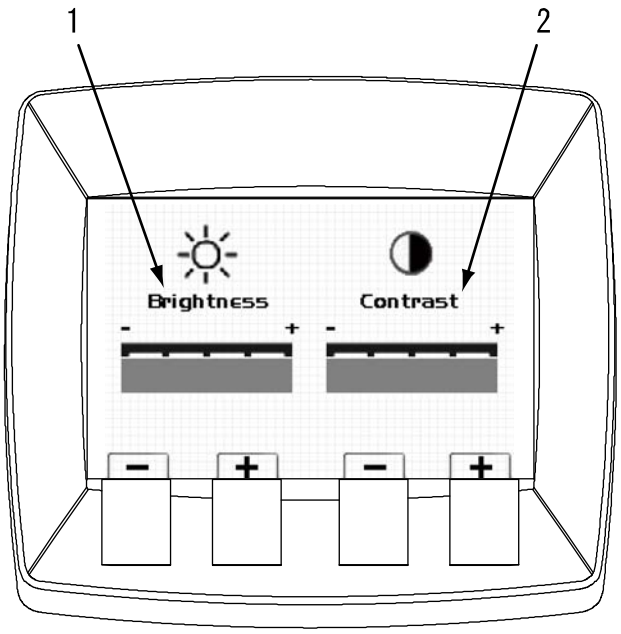

When the key is pressed on the “Operation screen”, it changes into the “Brightness and contrast adjustment screen”.

Brightness (1)

The screen becomes brighter when the key is pressed. It becomes darker when the key is pressed.

The length of the status display bar changes as the key is pressed.

Contrast (2)

The contrast becomes higher when the key is pressed. It becomes lower when the key is pressed. The length of the status display bar changes as the key is pressed.

The screen changes into the “Operation screen” automatically when either key is not pressed for four seconds.

https://truckmanualshub.com/

Preheat lamp

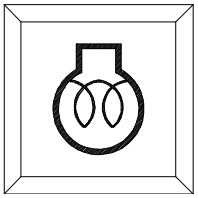

This lamp goes on when the engine key switch is set to the ON position.
The water temperature sensor detects the water temperature, and the engine is preheated automatically.
The lamp goes out when preheating is complete.
Do not start the engine while this lamp is on.

Battery charge lamp

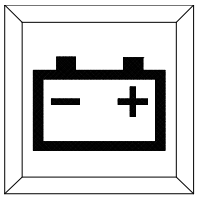

This lamp goes on if an error occurs in the charge system while the engine is running.
If it goes on while the engine is running, the fan belt may be slack.
Stop the engine and check the tension of the fan belt.

Engine oil pressure lamp

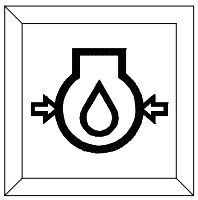

This lamp goes on if the pressure of oil for lubricating the inside of the engine drops while the engine is running.
Stop the engine and check oil leak from the lubrication system and the oil quantity if this lamp goes on while the engine is running.

Air cleaner clogging lamp

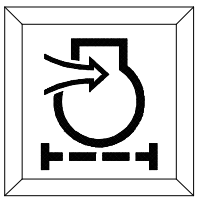

This lamp goes on if the air cleaner is clogged while the engine is running.
Stop the engine and clean or replace the air cleaner element if this lamp goes on while the engine is running.

https://truckmanualshub.com/

DPF alarm lamp

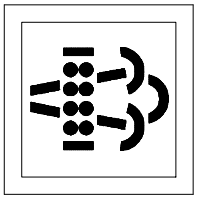

- This lamp goes on if regeneration cannot be done completely by the automatic DPF regeneration function and a certain quantity of soot is collected on the DPF. Press the DPF manual regeneration switch to carry out forced regeneration.
- If this condition is left unimproved, more soot is collected and the lamp blinks.
  Press the DPF manual regeneration switch immediately to carry out forced regeneration.

HEST lamp

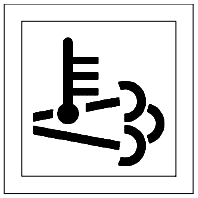

This lamp is lit when the DPF regeneration function is working or the DPF exhaust temperature is higher than the set temperature.

Engine alarm lamp

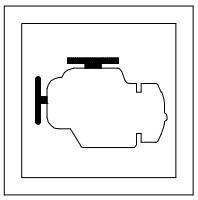

This lamp goes on if soot is collected on the DPF up to the limit while the engine is running. In this condition, the DPF alarm lamp keeps blinking.
Press the DPF manual regeneration switch immediately to carry out forced regeneration. If this condition is left unimproved, the DPF regeneration function will be lost.
The buzzer keeps sounding while the engine alarm lamp is lit.

Engine stopped lamp

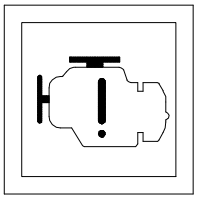

- This lamp goes on when a DPF trouble or engine trouble is detected while the engine is running.
- It blinks if an urgent trouble is detected. The engine stops 30 seconds after the urgent trouble is detected.

Move to a safe place immediately and stop the engine, if the engine stopped lamp goes on or blinks.
The buzzer keeps sounding while the engine stopped lamp is lit or blinking.
Repair work is needed after stopping the engine. Contact us or our sales service shop.

DPF regeneration disabled lamp

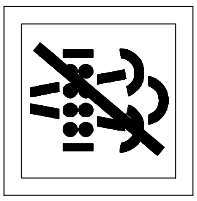

When the DPF regeneration disabled switch is set to the disabled position, this lamp goes on and indicates that the DPF regeneration function is disabled.

https://truckmanualshub.com/

DPF manual regeneration switch (and engine diagnostic switch)

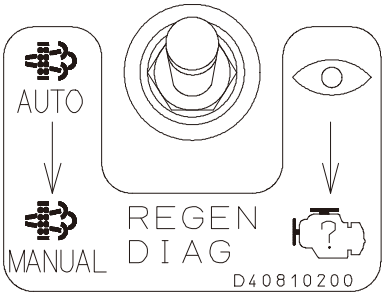

This switch is used to carry out regeneration manually.
Set the engine revolution to low idle in order not to apply loads to the engine when executing manual regeneration.

AUTO position: This is the normal position. Regeneration starts automatically when soot is collected on the DPF.

MANUAL position: Regeneration is started forcedly.

The HEST lamp is lit during automatic or manual regeneration.
See “Engine diagnostic switch” below for the functions of the engine diagnostic switch.

DPF regeneration disabled switch

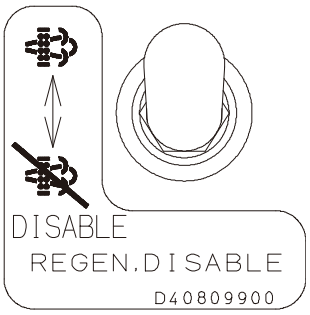

This switch disables the DPF regeneration function.
Use it if rise of the exhaust temperature of the engine or increase of the idle revolution in automatic regeneration hinders works.

position: This is the normal position.
The regeneration function is enabled.

DISABLE position: The regeneration function is disabled.
Neither automatic regeneration nor manual regeneration works.

Engine stop delay switch

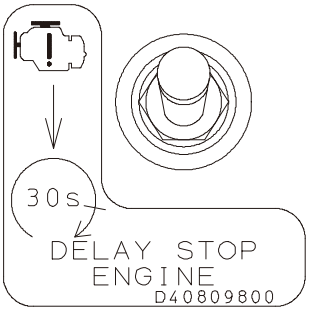

Use this switch to prolong the forced engine stopping time in the case where, for example, the machine cannot be moved to a safe place though the engine stopped lamp blinks.

position: This is the normal position.
The engine stops 30 seconds after the engine stopped lamp blinks.

30s position: The time until the engine stops is prolonged by 30 seconds when this switch is set to the 30s position while the engine stopped lamp is blinking.

https://truckmanualshub.com/

Engine diagnostic switch (and DPF manual regeneration switch)

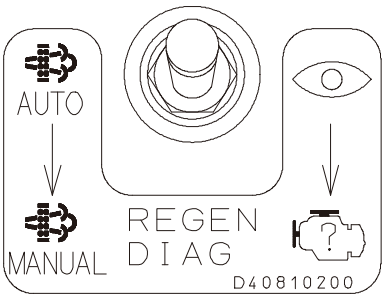

This switch selects whether to enable or disable the engine diagnostic function.

position: This is the normal position.
The engine diagnostic function is enabled. If faults occur, this function stores them in the memory. It turns on the engine alarm lamp and engine stopped lamp and displays fault codes of certain types of faults.

position: The engine diagnostic function is disabled.

Blinking indication of fault codes

To check a fault code, set the engine key switch to the “ON” position and keep the engine stopping.

When faults are recorded, the first fault is indicated (blinking) automatically.

A fault code, which is a three-figure number, is indicated by the number of times of blinking of the engine alarm lamp and the engine stopped lamp. The blinking interval is 0.5 second, and the interval between fault codes is two seconds.

A fault code is indicated three times repeatedly, and the next code is indicated.

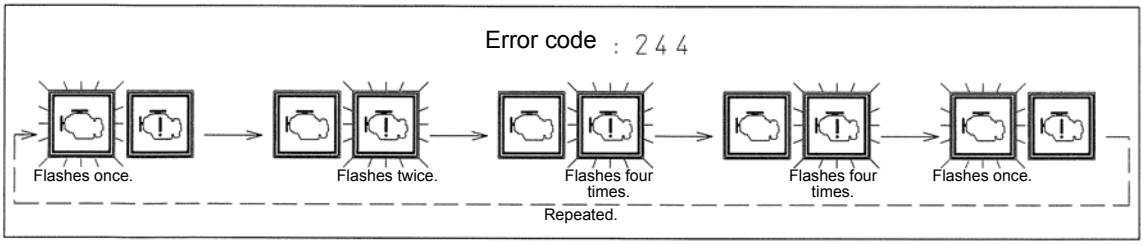

Contact our sales service dealer when an error code blinks.

Fault code next switch

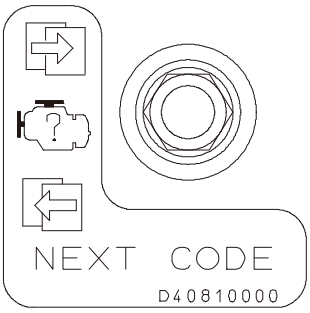

Use this switch to indicate the next or previous fault code quickly while fault codes are indicated.

Turn the switch to the position to indicate the next (blinking) fault code. Turn it to the position to indicate the previous (blinking) fault code.

When a single fault code is recorded, it is indicated repeatedly.

https://truckmanualshub.com/

Hour meter

- The accumulated working time is indicated in units of 1/10 hour (6 minutes).
- The meter advances if the engine runs, even though the machine does not work.
- The total service hours serve as the standard of inspection and maintenance.

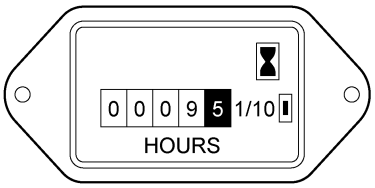

CJ-C200081

Engine emergency stop switch

Use this switch to stop the engine emergently in such a case where the brake does not work and the machine does not stop running even though the travel lever is set to the neutral position while moving down a slope.

Stop: The engine stops when the switch is pressed.

Reset: Turn the switch clockwise. It is unlocked and the engine can be started.

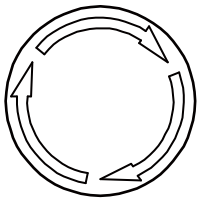

Parking switch

Push this switch to apply the parking brake.

ON: Press the position with the P mark. The parking brake is applied and the mark lamp goes on.

OFF: Press the position with no mark. The parking brake is released and the mark lamp goes out.

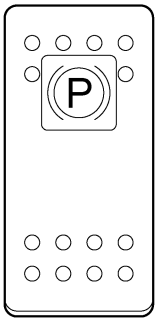

CA-C200190

Cigarette lighter

The switch is turned on automatically when the knob is pushed down. It is pushed out several seconds later. Pull it out and use it.

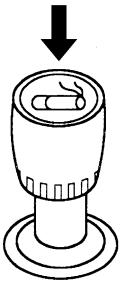

CA-C200220

https://truckmanualshub.com/

Wiper switch

This switch works when the engine key switch is set to ON.

- Wiper

  Turn the knob. OFF: The wiper stops.

  ON: The wiper works.

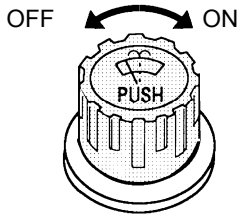

CA-C200230

- Window washer

  Push down the knob.

  Washer liquid is sprayed through the nozzle while the knob is pushed down.

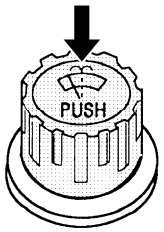

CA-C200240

Combination switch

Turn signal switch

This switch works when the engine key switch is set to ON.

Use the lever (1) to change the turn signal lamps.

⇨ : The right turn signal lamp blinks.

OFF : The lamps are off.

⇦ : The left turn signal lamp blinks.

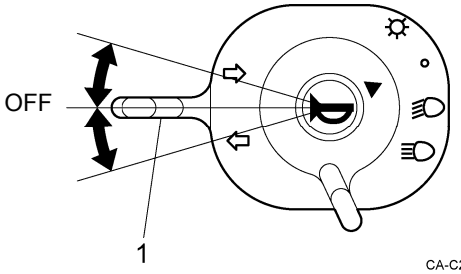

CA-C200160

Head light switch

This switch works when the engine key switch is set to ON.

Use the lever (2) to change the head lights.

Turn the lever to point the mark (►) to a symbol.

○ : (OFF)

: (ON) Two outside lights emit light downward.

: (ON) Four lights emit light upward.

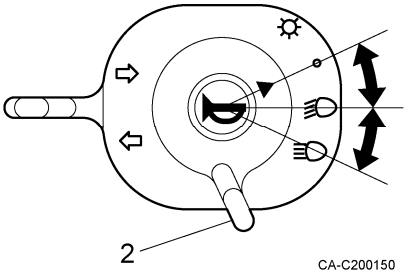

CA-C200150

Horn switch

Press the button (3) of this switch to turn on the horn.

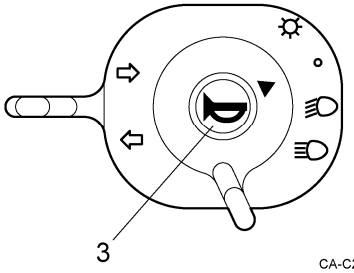

CA-C200170

https://truckmanualshub.com/

Engine throttle dial

Use this dial to adjust the engine speed and output.

High: Turn the dial to the 🐢 mark position.

Low: Turn the dial to the 🐇 mark position.

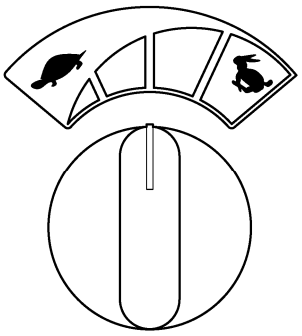

CA-C200250

Engine key switch

Use this switch to start and stop the engine.

- OFF position
  The key may be inserted and pulled out. All currents are cut off. Fuel injection stops and the engine stops when the key switch is set to the OFF position.

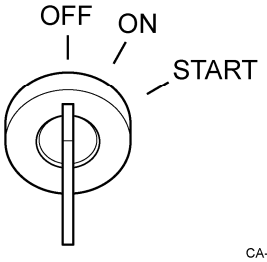

CA-C200130

- ON position
  The electrical system is turned on.
  The temperature sensor senses the temperature and the engine is preheated automatically.
  The preheat lamp is on during preheating.

- START position
  Set the key to this position to start the engine.
  Release the hand from the key immediately after the engine starts.
  The key returns to the ON position automatically.

Travel speed select switch

Use this switch to change the travel speed in two steps.

High speed: Push down on the 🐇 mark. The mark lamp goes on.

Low speed: Push down the no-mark position. The mark lamp goes out.

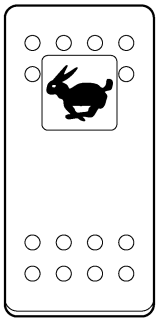

CA-C200180

Engine service connector

Connect the engine service tool to this connector when diagnosing engine troubles.

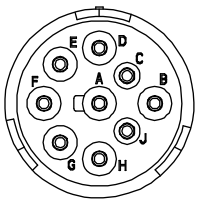

https://truckmanualshub.com/

Lever box

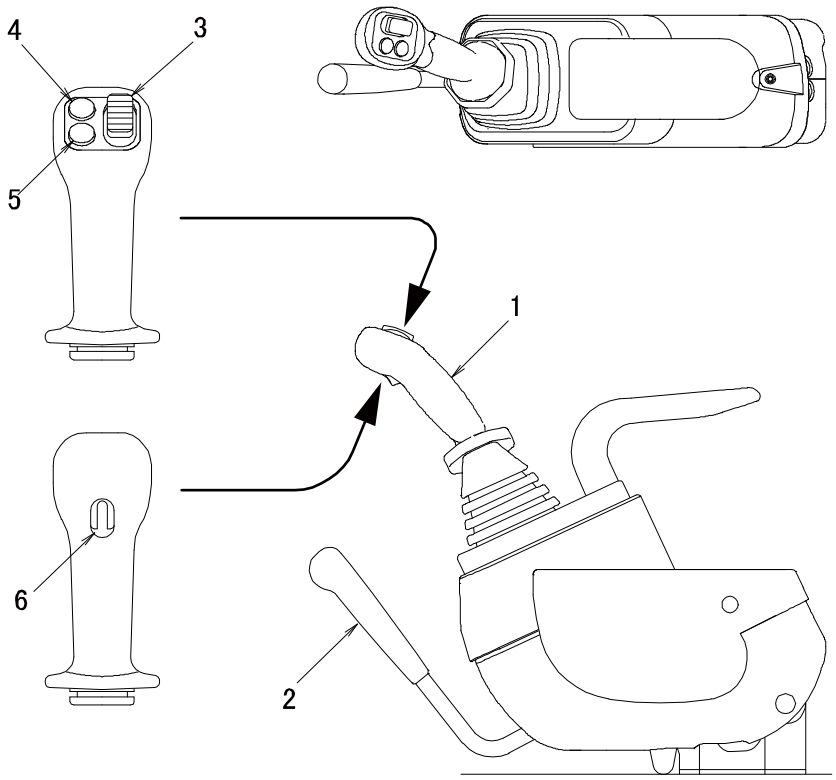

No.	Name	No.	Name
1	Travel lever	4	Unused
2	Operation lock lever	5	Unused
3	Dump switch	6	Dump lock switch

https://truckmanualshub.com/

Travel lever

Use this lever to control machine traveling.

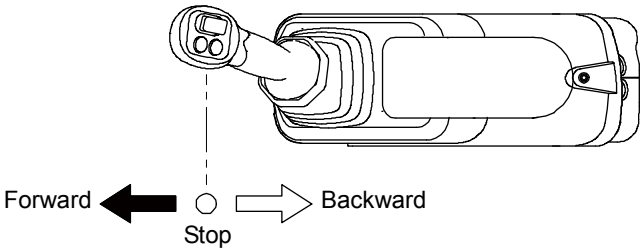

Forward: Push the travel lever forward.
Stop: This is the neutral position.
Backward: Pull the travel lever backward.

See “TRAVELING THE MACHINE” in the OPERATION section for the traveling operations.

Operation lock lever

This lever prevents the travel lever from causing malfunctioning if the operator touches the travel lever by mistake when sitting on or leaving the operator’s seat. The operation lock lever moves together with the lever box.

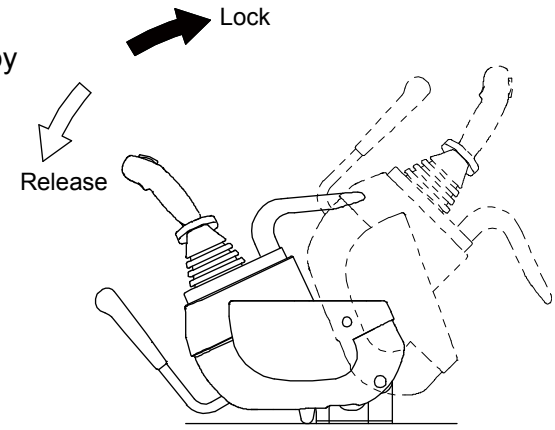

Lock: Pull up the operation lock lever.
Release: Pull down the operation lock lever.

Set the operation lock lever to the Lock position when starting the engine. The engine will not start if the operation lock lever is set to the Release position.

Dump switch

The dump switch is used together with the dump lock switch to move the body. Push the dump lock switch and use the dump switch when moving the body.

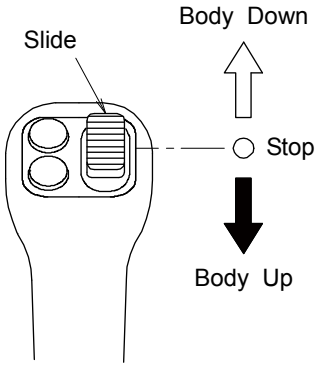

Body Up: Slide the switch backward.
Stop: Return the switch to the neutral position.
Body Down: Slide the switch forward.

See “DUMP OPERATION” in the OPERATION section for the dumping operations.

Dump lock switch

This switch prevents the body from moving if the operator touches the dump switch by mistake.
The dump switch works only when the dump lock switch is pushed.

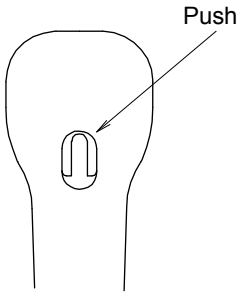

https://truckmanualshub.com/

Operator seat

Sit on the seat and adjust it to allow free lever operations.

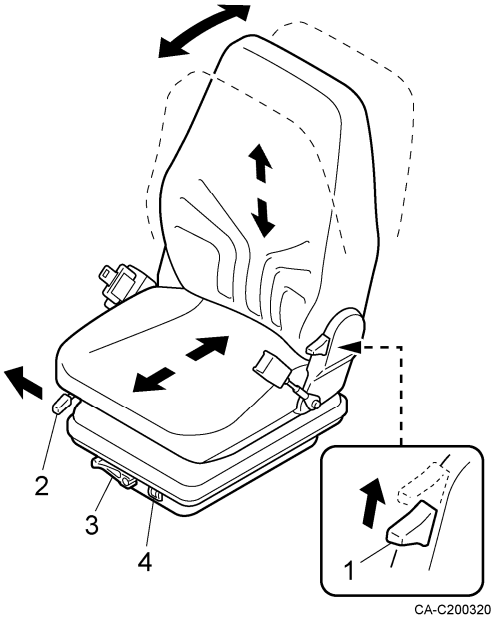

- Adjusting tilt
  Move the seat back while pulling the lever (1) to adjust the angle of the seat back.
- Adjusting the back-and-forth position
  Move the seat forward or backward while pulling the lever (2) to adjust the back-and-forth position.
- Adjusting suspension
  Raise the lever (3) and turn it to adjust suspension. The appropriate body weight is displayed on the display (4).
- Adjusting seat height
  Lift the seat from the bottom (5) of the seat and lower it then. The seat height becomes 60 mm higher.
  Lift the seat from the bottom and lower it again. The seat is reset to the previous height.

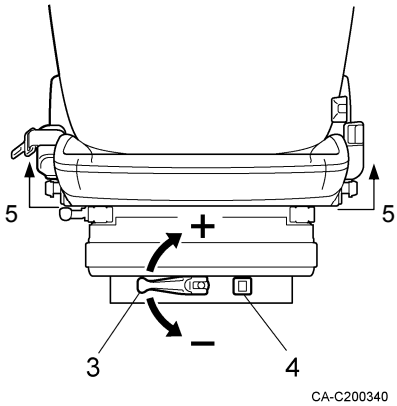

⚠ CAUTION

- Do not adjust the seat while driving. Sudden seat movement can cause operating errors or unforeseen accidents.
- Shake the seat back and forth lightly and check if the seat is fixed firmly after adjusting it. If the seat is not fixed, it may move suddenly and cause unforeseen accidents.

https://truckmanualshub.com/

Seat belt

1. Adjust the seat belt length according to your body size.
2. Confirm that the seat belt is not twisted and put the plate (1) into the buckle (2) securely.
3. Slightly pull the belt and confirm the belt is locked.
4. Press the button (3) of the buckle to unfasten seat belt.

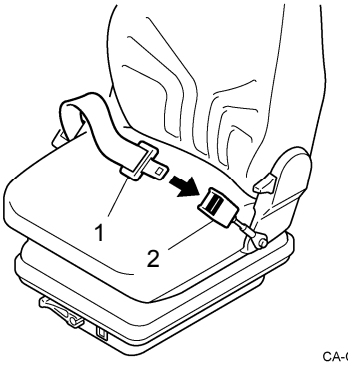

CA-C200400

⚠ WARNING

- ALWAYS fasten the seat belt while operating the machine.
- ALWAYS check the condition of the seat belt and mounting hardware before operating the machine.
  Replace the seat belt if it is damaged.

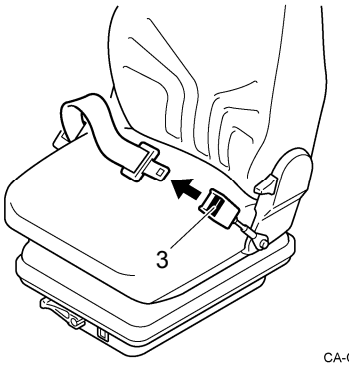

CA-C200410

https://truckmanualshub.com/

OPERATION

This section describes the proper operation procedures of this machine.
Always look to the safety and observe the given operation instructions and cautions to carry out works safely.

https://truckmanualshub.com/

BEFORE STARTING OPERATION

The operator of the machine must carry out these inspections before starting the engine at the beginning of daily works.
Be sure to carry out them to prevent accidents in advance.

Walk-around inspection

Look around and under the machine and check the items shown below.
Repair defective parts before starting operation.

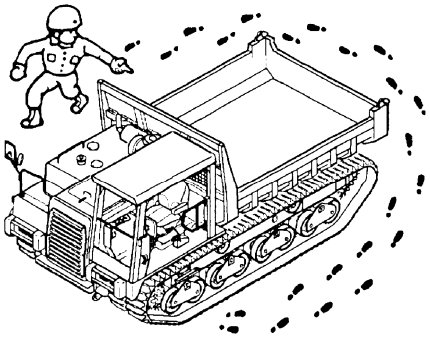
CA-C300010

- Check oil leak from the hydraulic devices, hydraulic oil tank, hose, joints, etc.
- Check damages of the fuel line and hose.
- Check damages, cracks, wear, backlash and loose bolts of the shoes, idle tumblers and sprockets.
- Check oil leak and water leak from the engine.
- Remove dust and foreign matters from the engine, radiator and peripheral parts.
- Check leak from and damages of the air intake and exhaust pipes around the air cleaner and DPF.
  If flammable objects touch the exhaust pipe or the like, a fire may break out. Make sure that there is no withered grass, paper trash or other flammable objects near the exhaust pipe.
- Check loose terminals of the electrical cables.

Start-up inspection

Refer to [MAINTENANCE] for details.

- Check the coolant quantity. Refill if necessary.
- Check the engine oil quantity. Refill if necessary.
- Check the fuel quantity. Refill if necessary.
- Check the hydraulic oil quantity. Refill if necessary.

https://truckmanualshub.com/

BEFORE STARTING THE ENGINE

1. Sit on the seat, adjust it to allow free lever operations, and fasten the seat belt.

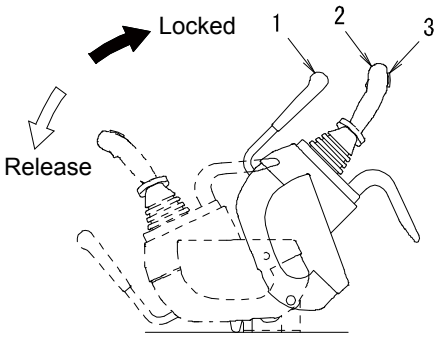

2. Make sure that the operation lock lever (1) is set at the locked position.

3. Make sure that the travel lever (2) and dump switch (3) are set at the neutral positions.

4. Insert the key into the engine key switch (4), turn it to the ON position, and check the following:

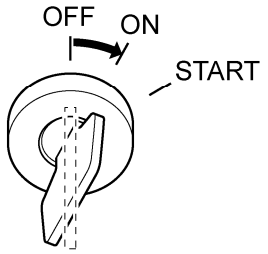

   - Engine preheating starts automatically. Make sure that the preheat lamp (5) is lit and goes out then. The lighting time of the preheat lamp varies with the water temperature.

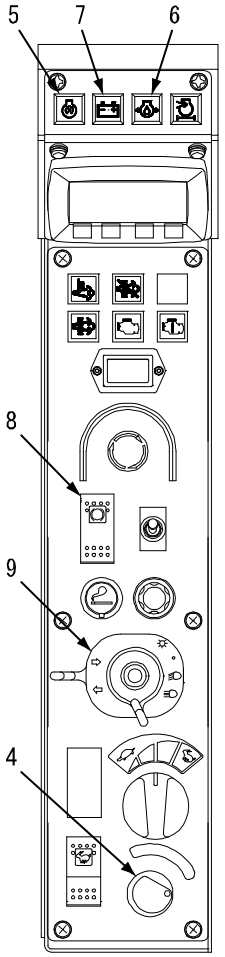

   - Make sure that the engine oil pressure lamp (6) and battery charge lamp (7) are on.

   - Make sure that the mark lamp of the parking switch (8) is on.

   - Turn the light switch of the combination switch (9) and make sure that the head lamps go on.

   - Turn the turn signal switch of the combination switch (9) and make sure that the turn signal lamps go on.

   - Push down the horn switch of the combination switch (9) and make sure that the horn sounds.

Ask IHI's sales service dealer for repair services, if some abnormality is found in the above check.

https://truckmanualshub.com/

ENGINE STARTING

⚠ CAUTION

- Make sure that there are no persons or obstacles around the machine and sound the horn before starting the engine.
- Be sure to sit on the seat when starting the engine.

NOTICE

Do not turn on the starter motor for 30 seconds or more. If the engine does not start, return the key switch to OFF, wait for at least 2 minutes and restart the engine.

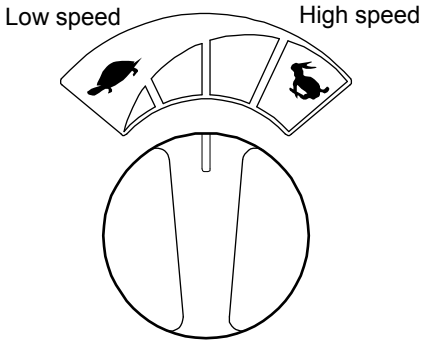

1. Set the engine throttle dial to the low position.
2. Make sure that the preheat lamp is off. Turn the key to the START position. The engine starts.
3. Release the hand from the key when the engine starts. The key returns to the ON position automatically.
4. Set the operation lock lever to the Release position when starting operation.

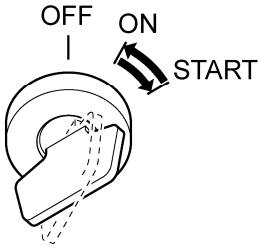

AFTER STARTING THE ENGINE

NOTICE

- Never race the engine immediately after starting it. Racing after starting may cause breakdown of the engine.
- Do not accelerate the engine quickly or apply high loads to it when the engine water temperature gauge (1) shows low temperature.
- If some abnormality is found, stop the engine immediately, find the cause and repair the defective part.

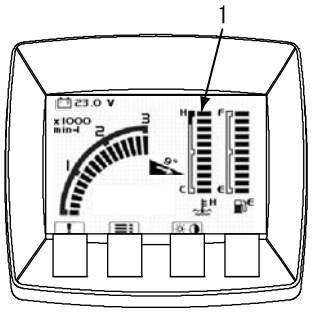

1. Make sure that all alarm lamps on the instrument panel are off.
2. Check if engine exhaust color, sound and vibrations are not abnormal.

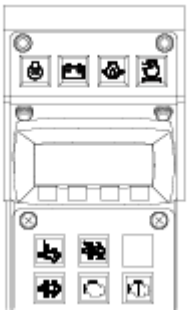

Alarm lamps

https://truckmanualshub.com/

WARMING UP THE MACHINE

NOTICE
Do not increase the engine speed quickly when hydraulic oil is cool (below 20°C). The proper hydraulic oil temperature is approximately 50°C to 80°C. If you should carry out works at low temperature, warm up the engine until the hydraulic oil temperature rises to approximately 20°C before starting works.

1. Idle the engine for approximately 5 minutes to warm it up after starting it.
2. If the hydraulic oil temperature is low, push the dump lock switch, keep the dump switch at the Body Down position, and operate the engine in this condition for approximately 3 to 5 minutes to raise the hydraulic oil temperature.
3. Move the machine forward and backward and raise and lower the body several times to warm up the mechanisms.

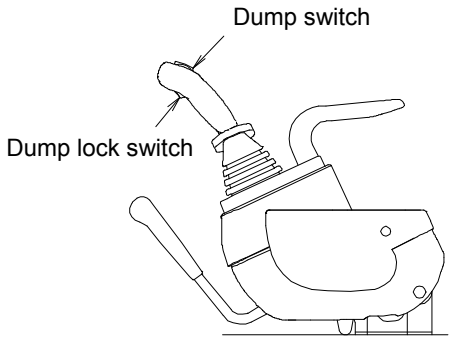

https://truckmanualshub.com/

STARTING WITH JUMPER CABLES

Follow the procedures shown below to start the engine with jumper cables, if the batteries are exhausted.

Never connect the positive and negative terminals.

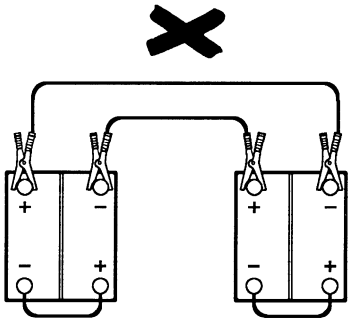

⚠ WARNING

- If the jumper cables are connected improperly, the batteries are short-circuited, resulting in a dangerous accident. Never connect the positive and negative terminals.
- The battery produces inflammable hydrogen gas. It is explosive. Never bring fire close to the battery or strike a spark near it.

NOTICE

The electrical system of this machine runs on 24 V. Use a 24 V auxiliary battery.

Connecting the jumper cables

1. Set the engine key switches of a machine with a charged battery and the machine with a dead battery.
2. Connect the clip of the (red) jumper cable to the positive terminal of the dead battery. Connect the other clip to the positive terminal of the charged battery.
3. Connect the clip of the (black) jumper cable to the negative terminal of the charged battery. Connect the other clip to the upper frame of the machine with the dead battery.

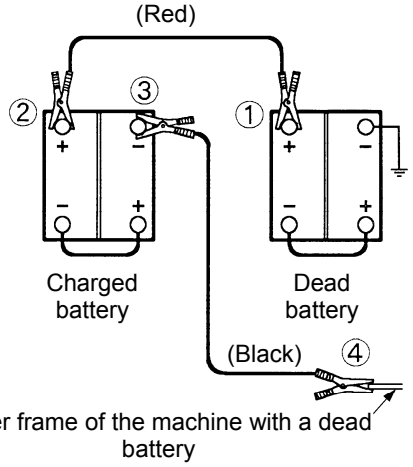

Order of connecting the jumper cables

①→②→③→④

CA-C300110E

Starting the engine

1. Make sure that the cable clips are connected with the battery terminals and upper frame properly.
2. Start the engine of the machine with the charged battery and keep it running at high speed.
3. Start the engine of the machine with the dead battery.

Disconnecting the jumper cables

1. Disconnect the clip of the black cable from the upper frame first. Disconnect the clip from the negative terminal of the charged battery then.
2. Disconnect the clip of the red cable from the positive terminal of the charged battery first. Disconnect the clip from the positive terminal of the dead battery then.

Order of disconnecting the jumper cables

④→③→②→①

CA-C300120E

https://truckmanualshub.com/

“BREAK-IN” OPERATION

NOTICE
If a new machine is used in severe conditions, its performances are deteriorated early and the service life becomes shorter. Break in a new machine for about 100 hours first.

Warm-up operation

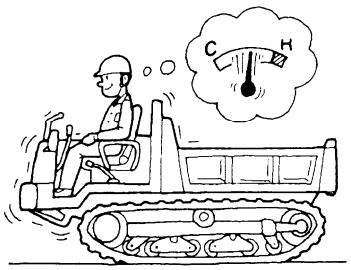

CA-C300130E

Pay attention to the following when breaking in a new machine.

- Warm up the machine sufficiently.

- Do not apply heavy loads to the machine or run it at high speed.
  Run the machine at approximately 80% of the maximum engine speed.
  Place loads of approximately 80% of the maximum loading capacity.

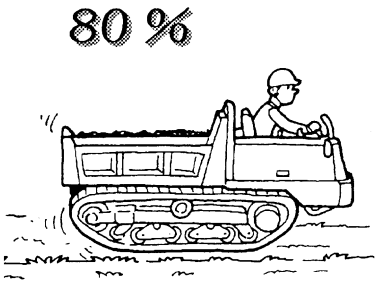

CA-C300140

- Do not start or accelerate quickly or stop unnecessarily.
  Do not change the direction quickly.

CA-C300150

https://truckmanualshub.com/

TRAVELING THE MACHINE

Start-travel-stop

⚠ WARNING

- When traveling, lower the body completely.
- Lock the rear gate and side gates firmly.
- Make sure that no persons are around the machine. Sound the horn before starting.

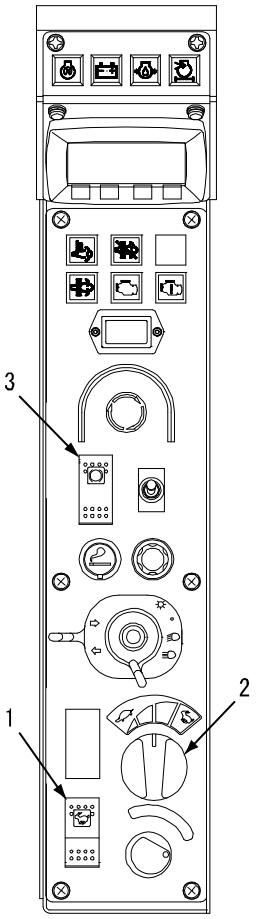

1. Adjust the traveling speed properly with the travel speed select switch (1).

2. Turn the engine throttle dial (2) to increase the engine speed to the necessary speed.

3. Push down on the no-mark position of the parking switch (3) to deactivate the brake.
   Make sure that the mark lamp is off.

4. Use the travel lever as shown below.
   Forward: Push the travel lever forward.
   Stop: Set the travel lever to the neutral position.
   Backward: Pull the travel lever backward.

Increase the travel lever stroke to raise the speed.
Decrease the stroke to reduce the speed.

https://truckmanualshub.com/

Steering control

⚠ WARNING

Never change the travel direction quickly on a slope. Quick direction change may cause turnover or slip.

If it is necessary to change the travel direction quickly, move to a solid ground with a gentle slope and change the direction.

Pivot Turn

Left pivot turn and forward:	Push the travel lever in the left forward direction.
Right pivot turn and forward:	Push the travel lever in the right forward direction.
Left pivot turn and backward:	Pull the travel lever in the right backward direction.
Right pivot turn and backward:	Pull the travel lever in the left backward direction.

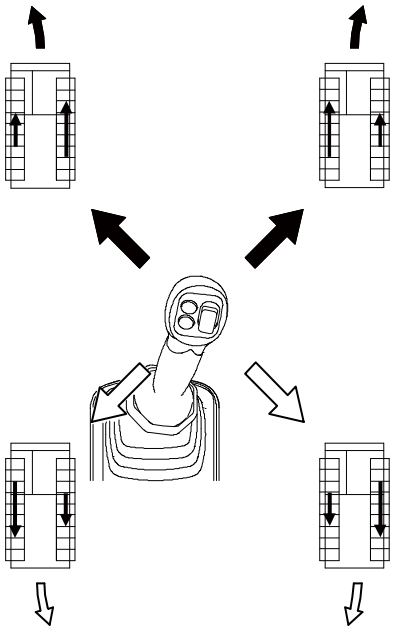

Spin Turn

Left spin turn: Turn the travel lever to the left.

Right spin turn: Turn the travel lever to the right.

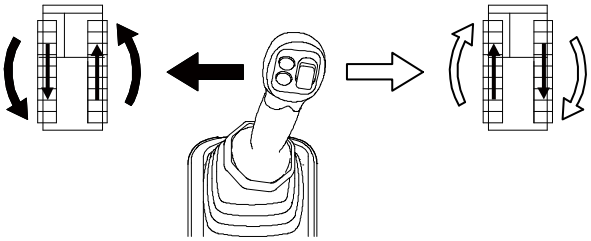

NOTICE

If the engine stall when changing directions while the engine speed is low or the travel select switch is set to high. Restart the engine, increase the engine speed and set the travel select lever is set to low. Avoid the engine stall to control the travel levers stroke while travelling.

https://truckmanualshub.com/

Caution of travel on a steep grade

⚠ DANGER

- Do not travel on grades over 20° in order to avoid turnover.
- On steep grades over 9°, travel the machine at low travel speed and middle or lower engine speed.
- If the machine is inclined in the forward direction by 9°, the slope warning is given.
- Never change the travel direction on steep grades or cross such grades. Such operation may cause turnover or slip. Move down to a flat ground once and make a detour. Be sure to drive safely.
- If an overrun warning is given during traveling, avoid overrun immediately.

Never change the travel direction on or cross a slope.

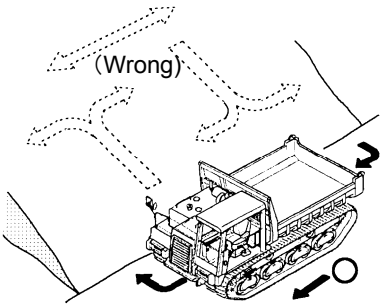

CA-C300270E

Cautions

Travel in the proper postures shown below.

- Drive the machine with the cabin upper side of a slope when the body is empty. This posture ensures stable driving, since the center of gravity is located on the cabin side.
- Drive the machine with the body upper side of a slope when the body is full. This posture ensures stable driving, since the center of gravity is located on the body side.
- When driving over an obstacle, reduce the speed and drive safely with care not to turn over.
- Do not accelerate or decelerate the speed or stop suddenly.
- The engine may stop if the travel lever is pulled fully while climbing a slope.
  When the engine speed lowers, return the travel lever slightly to reduce the engine load.

Traveling on slope with an unloaded machine

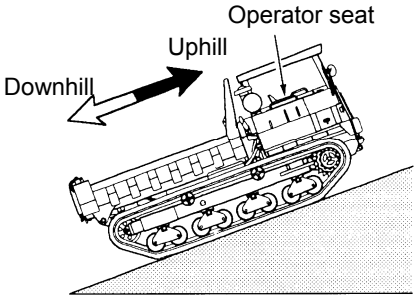

CA-C300280E

Traveling on slope with a loaded machine.

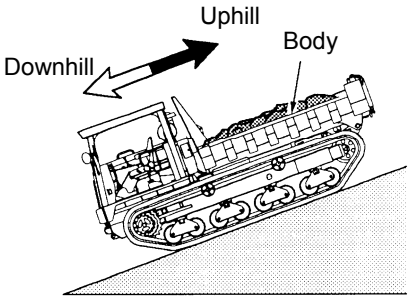

CA-C300290E

https://truckmanualshub.com/

Slope Warning

Slope alarm mark (1) is displayed and blinks on the display if the machine inclines forward by 9° or more when it is descending on a slope.

At the same time, the red LED (2) blinks and the buzzer sounds for five seconds.

On a slope of an angle over 9°, set the travel speed select switch (3) to the Low position and drive the machine straight at middle or lower engine revolution.

You are in danger of overrun if you drive the machine without reducing its speed.

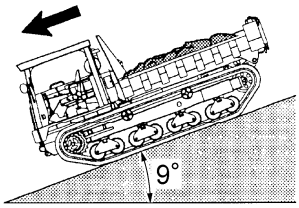

Posture that activates the safety warning devices

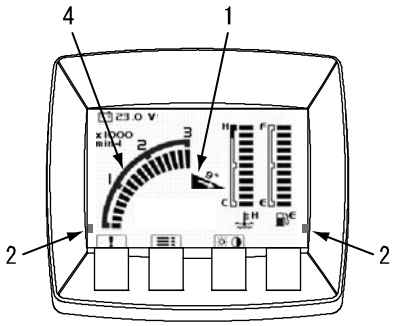

Overrun warning

The whole engine tachometer (4) on the display blinks if the engine revolution exceeds 2500 min^{-1} while descending a slope.

At the same time, the red LED (2) blinks and the buzzer keeps sounding.

Carry out the following operations immediately to reduce the speed:

1. Return the travel lever to the neutral position.
2. Reduce the engine speed down to the low idling speed.
3. If the speed is not reduced, push down the emergency stop switch (5).
   The engine stops in emergency and the machine stops traveling.

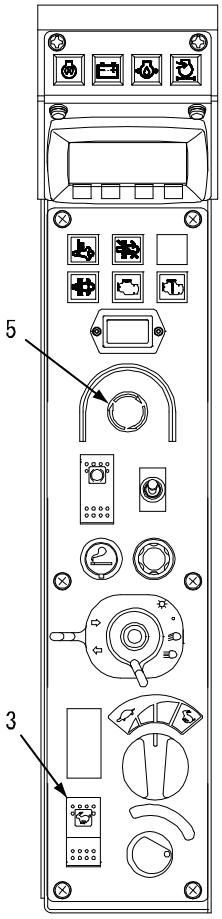

⚠ WARNING

- The cause of overrun is over-loading. Never over-load the machine.
- Do not use the engine emergency stop switch in any other cases than overrun. If the engine is stopped immediately, the machine may fall down or become defective.

https://truckmanualshub.com/

DUMP OPERATION

⚠ DANGER
Never go under the raised body. Keep the body with the safety bar.

Procedure of dump operation

1. Stop the machine and confirm safety of a dumping place.
2. Raise or lower the body with the dump switch (2) while pushing the dump lock switch (1).
   Body Up: Slide the switch backward.
   Stop: Return the switch to the neutral position.
   Body Down: Slide the switch forward.
3. Adjust the dumping speed by the engine revolution and the amount of sliding the dump switch.
4. The rear gate of the body opens or closes automatically as the body moves up or down.

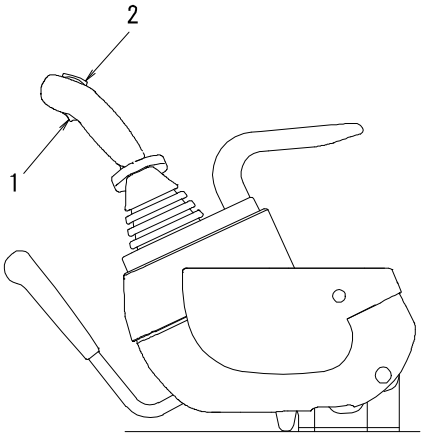

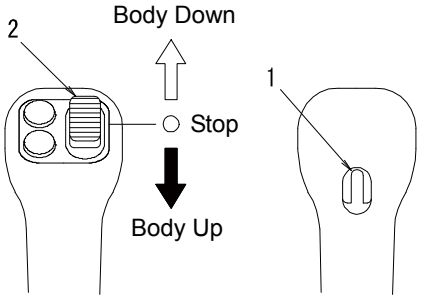

Caution of dump operation

1. If dumping is carried out on a slope, uneven ground or soft ground, the center of gravity may move and the machine may turn over.
   Carry out dumping on flat and solid grounds where the machine may be maintained as horizontally as possible.
2. Avoid dumping on cliffs or near ditches in danger of falling as far as possible.
   If it is necessary to carry out dumping in such places, use buffers or post a guide as the necessity requires. Be sure to observe instructions of the guide.
3. When dumping bigger stones, operate dumping slowly. If there is a too big object to be dumped through the rear gate, remove the gate in advance.
4. Make sure that the body has lowered completely before starting the machine.
5. Do not travel while the body is raised. ALWAYS travel keeping the body lowered.

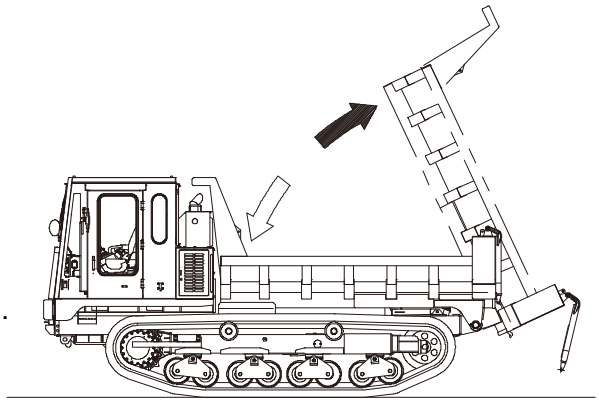

Dump at a level and stable place.

https://truckmanualshub.com/

How to lower body in case of emergency

⚠ CAUTION

- Use the method of lowering the body by loosening the control valve plug only when a trouble occurs.
- If the plug is loosened quickly, the body moves down at speed, which is very dangerous. Loosen the plug slowly.
- Tighten the plug completely after lowering the body.

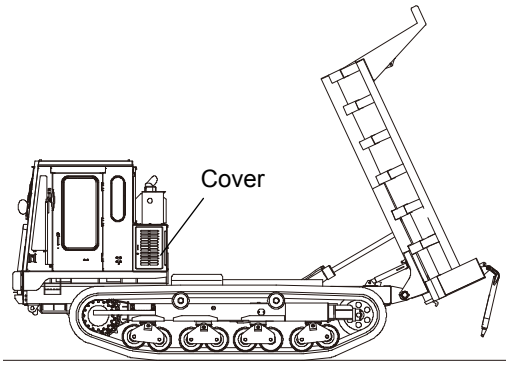

If a trouble occurs in the engine or pump in the condition where the body is raised and it cannot be lowered, it is possible to lower the body by loosening the control valve plug (1) behind the operator's cabin.

1. Make sure that there are no persons under or around the body.

2. Open the cover.

3. Loosen the plug slowly until the body begins to lower.

4. Tighten the plug firmly after body has lowered completely.

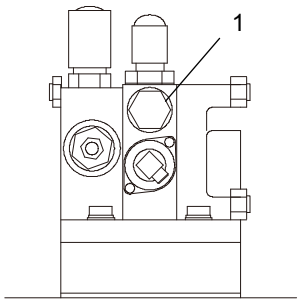

Control valve

https://truckmanualshub.com/

STOPPING THE ENGINE

⚠ WARNING

- Be sure to move down the body, stop the engine and pull out the key before leaving the operator seat.
- Do not park the machine on a slope. If it is necessary to park on a slope, use buffers on the lower side of the crawler.

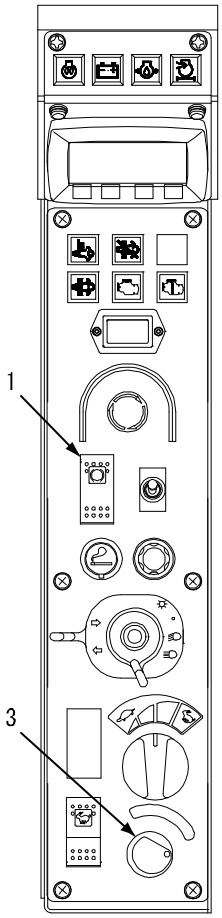

Stopping the machine

1. Stop the machine on a flat and rigid ground.
2. Set the parking switch (1) to the brake ON position.
3. Make sure that the body is lowered completely.
4. Set the operation lock lever (2) to the locked position.

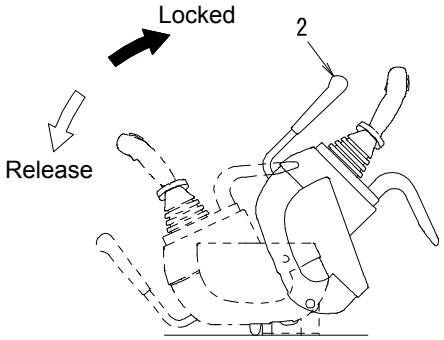

Stopping the engine

1. Keep the engine idling for approximately 5 minutes to lower the temperature of the engine.
2. Set the engine key switch (3) to the OFF position to stop the engine.
3. Pull out the key from the engine key switch.

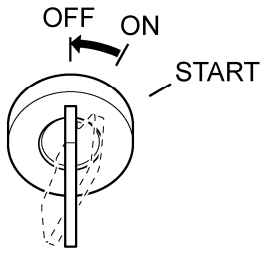

Inspection and locking after stopping the engine

1. Check necessary parts for oil leak and damages. Repair defective parts if oil leak or damages are found.
2. Fill the fuel tank with fuel.
3. Remove soil and sand from the body and traveling mechanisms, in particular.
4. Lock the fuel filling port, engine hood and all other lockable parts.

https://truckmanualshub.com/

PRECAUTION ON USE OF RUBBER CRAWLER SHOE

⚠ CAUTION

The rubber crawler shoe may be damaged or worn faster depending on working conditions. Perform working operation properly according to working site conditions and machine operation. Be sure to observe the prohibitions and instructions shown below.

Structure of Rubber Crawler Shoe

The structure of rubber crawler shoe. It consists of steel cord to sustain tension, iron core to support it, and covering rubber to them.

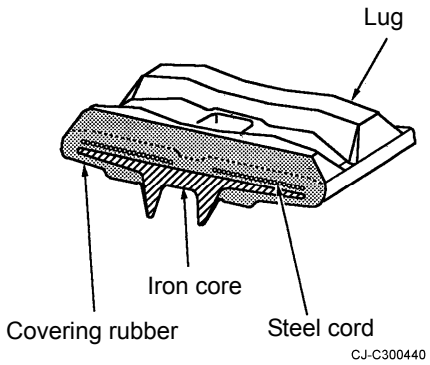

NOTICE

If a crack reaches the steel cord, it may be rusted and cut off by moisture. When any crack is detected, immediate repair is essential. Please contact your local IHI distributor.

Cautions while working and traveling

Avoid the following while traveling.

DO NOT TRAVEL OR WORK ON STONE FOUNDATIONS OR SHARP ROCKS

This wears down the lug and causes the steel cord to break.

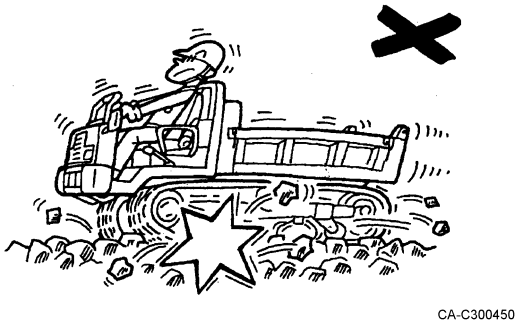

DO NOT TRAVEL OR WORK ON SURFACES WITH MANY STONES SUCH AS RIVER BEDS

This causes damage or wear on the rubber crawler and they may slip off.

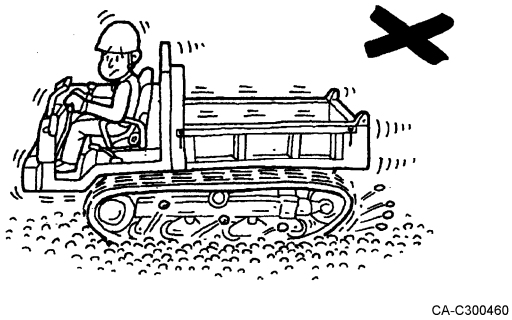

https://truckmanualshub.com/

DO NOT TRAVEL OR WORK ON STEEL OR SCRAP MATERIAL

This wears down the lug and causes the steel cord to break.

CA-C300470

DO NOT TRAVEL OR WORK ON LARGE STEPS SUCH AS STONE STAIRS

- Move slowly directly up steps.
- While moving up the steps, avoid places where the road surface changes.

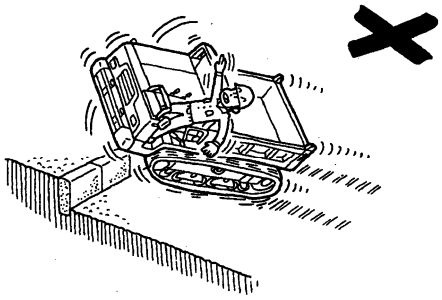

CA-C300480

DO NOT TRAVEL OR WORK WHILE SPANNING A DITCH ETC

- This wears down the lug and breaks the iron core.
- The carrier might fall or topple over.

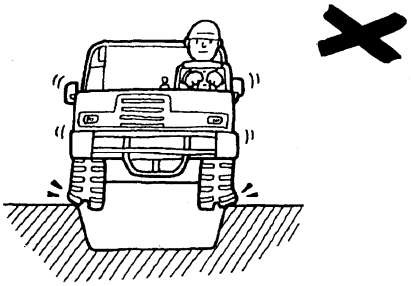

CA-C300490

AVOID LOCATIONS WHERE THE CARRIER MIGHT FALL

Do not let the carrier fall from locations like large stone steps.

This might damage or break the iron core.

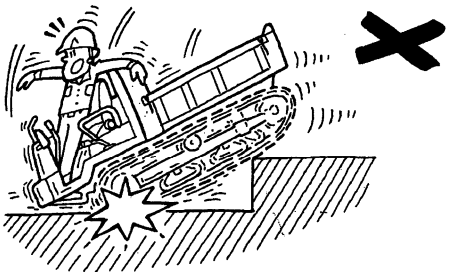

CA-C300500

AVOID TRAVELING OVER LARGE RUTS OR PROTRUSIONS ON THE ROAD

- Travel slowly and take care not to let the crawlers come off the rollers.
- Do not change directions when the crawlers may have lost tension at the high and low parts of ruts and protrusions. This may cause the crawlers to come off.

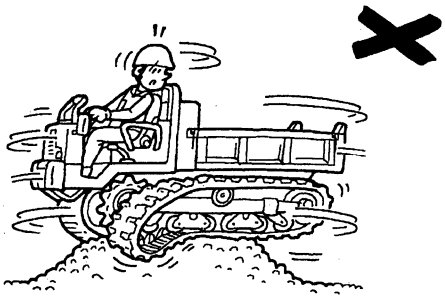

CA-C300510

https://truckmanualshub.com/

AVOID SUDDEN CHANGES IN DIRECTION WHEN STEERING

- Make direction changes in several smaller steering movements.
- Avoid sudden changes in direction.
  This causes early wear on the lug and may cause the crawlers to slip off.

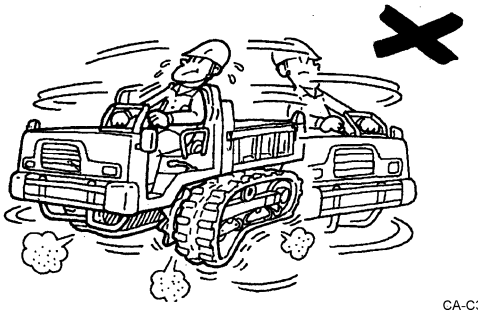

CA-C300520

DO NOT TRAVEL OVER HIGH HEAT LOCATIONS

Do not try to travel over place subjected to high heat such as steel plate that was placed in bonfires or under scorching heat, asphalt or floorboards etc.
This causes serious abrasion or damage and breakage of the lug.

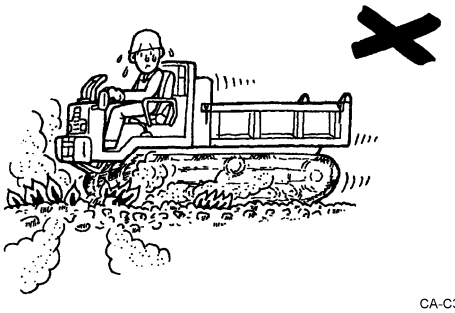

CA-C300530

OTHER ITEMS FOR CAUTION

DO NOT LET OIL – SOLVENTS OR SALT ADHERE TO THE RUBBER CRAWLERS

- If fuel, transmission fluid or paint should adhere to the rubber crawlers wipe it away quickly.
- Wash away with water after working in locations with a large salt content. Salt can cause the iron core to rust or peel.

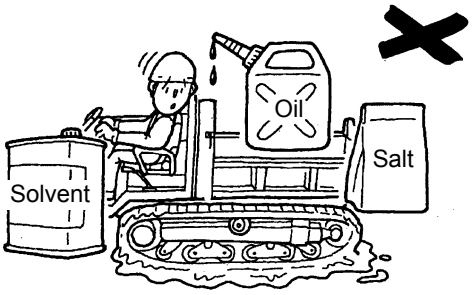

CA-C300540

ALWAYS USE CORRECT TENSION ON THE SHOE

Attempting to change directions on terrain with different levels or steps while the rubber crawler is still slack may damage the rubber crawlers or cause them to come off the rollers.

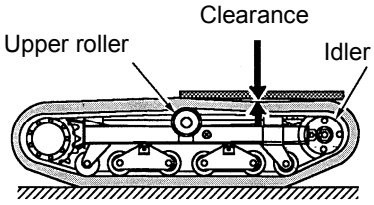

CA-C300550E

https://truckmanualshub.com/

TOWING

⚠ WARNING

- Use wire ropes and shackles for towing that are strong enough for the towing weight.
- It is very dangerous if the wire rope is disentangled during towing. Do not stand between the towing machine and the towed machine.

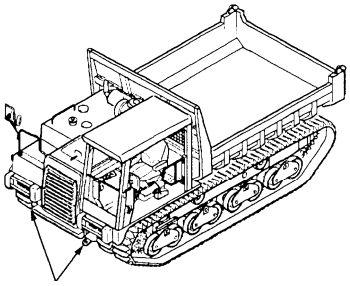

Front towing hook

CA-C300390E

Towing the carrier

When the carrier gets stuck for instance in mud and cannot escape under its own power it must be towed by another machine. In such cases attach a shackle to a wire rope and attach this to the front or rear hook. The carrier can now be towed.

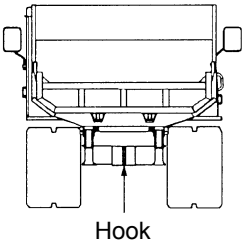

Rear towing hook

CA-C300400E

1. Start the engine.
2. Select the low speed mode with the travel speed select switch.
3. Set the parking brake to the OFF position.
4. Move the travel lever in the travel direction slowly when towing starts.

NOTICE

When the engine is broken and will not start, the parking brake will not release. The parking brake will prevent the crawler shoe from rotating so the carrier cannot be towed.

https://truckmanualshub.com/

TRANSPORT

Observe the loading and unloading methods and the anchoring method for transportation as well as the laws and regulations concerned when transporting the machine.

Loading and unloading the machine

⚠ WARNING

- Move the machine forward when loading. Move it back when unloading.
- Be sure to select the low speed mode with the travel speed select switch to reduce the engine speed before loading or unloading.
- Be sure to use loading ramps or loading tables for loading or unloading.
- Use loading ramps of adequate width, length and thickness that allow safe loading and unloading.
- Carry out loading or unloading on a flat and solid ground.
- Remove dirt and soil from the crawlers to prevent slippage. Remove grease, oil, water and other adherent matters from the lading ramps.
- Never make a turn on the loading ramps to avoid turnover. To make a turn, return to the load carrying platform or road.
- Warm up the machine sufficiently before load or unload it in cold weather.

1. Apply the trailer brake firmly. Fix the trailer wheels with blocks to prevent them from moving.
2. Adjust the center line of the machine to the center line of the trailer. Adjust the loading ramp interval to the crawler width.
3. Maintain the slope of loading ramps within 15 degrees.
4. Drive the machine slowly at low speed.
5. Maintain the machine balance point while traveling over the loading ramp joint areas.
6. Load the machine properly at the specified position on the trailer.

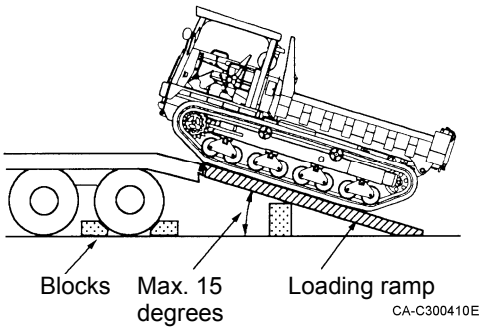

https://truckmanualshub.com/

Fixation at transport

⚠ CAUTION

It is very dangerous if the machine moves during transportation.

Fix it firmly on the load carrying platform of the trailer with wheel blocks and wire ropes.

Apply wheel blocks in front of and behind the rubber crawlers to fix the machine.

Finally, make sure that the machine is loaded properly and fixed completely.

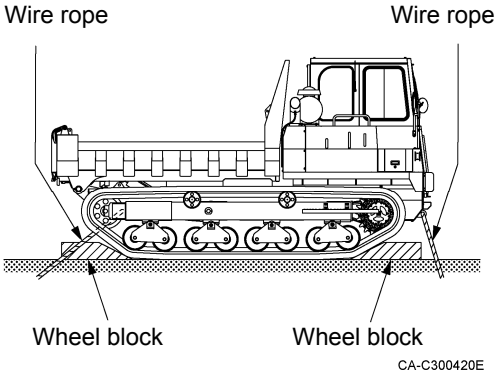

https://truckmanualshub.com/

Lifting the machine

⚠ WARNING

- ALWAYS lift the machine on the level ground.
- NEVER lift the machine loaded with any personnel.
- Make sure the lifting cables and other lifting devices are strong enough to support the machine.
- Do not perform crane operation including slinging work unless you are not qualified.

Weight on lifting the machine: 14100 kg

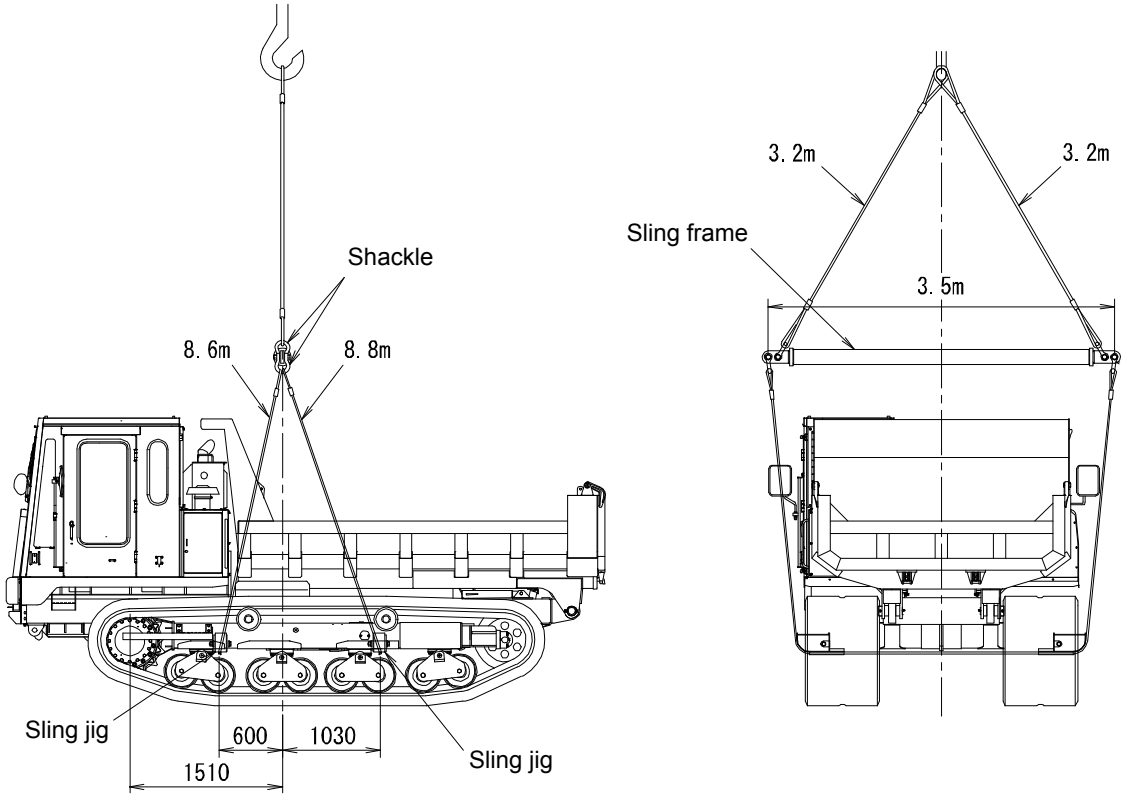

1. Prepare strong enough wire ropes, shackles, sling frame and sling jigs.
2. Fix the sling jigs at the positions of the crawler frame shown above and pass the wire rope through them.
3. Install the wire rope to the sling frame with the shackle.
4. Install the wire rope to the crane hooks and lift upward so the crawler is a little bit above the ground, then stop lifting.
5. If the balance is good continue slowing lifting the machine.

https://truckmanualshub.com/

MAINTENANCE

Proper maintenance is needed to maintain the machine performances for long and prevent damages and troubles in advance.
This section describes the proper maintenance procedures of this machine. Carry out maintenance safely and properly in accordance with the maintenance procedures described below.

https://truckmanualshub.com/

PRECAUTION ON MAINTENANCE

Maintenance intervals

Determine the maintenance intervals in accordance with the time of the hour meter and certain period of time.

This section shows the maintenance intervals on the assumption that the machine is used in normal running conditions. Carry out maintenance earlier if the work environments are bad or severe.

Preparation for maintenance

- Place the machine in a flat and rigid ground.
- For normal maintenance, lower the body completely.
  To carry out maintenance with the body raised, raise the body fully and apply the safety lever.
- Set the parking switch to the brake ON position and the operation lock lever to the locked positions. Stop the engine and pull out the key from the engine key switch.
- Put a tag, which indicates that maintenance is being carried out, on the engine key switch or control lever at an easy-to-see position.

Cautions for repair works requiring welding

- Turn off power. (Disconnect the cable from the negative terminal of the battery.)
- Do not put any seals, bearings or the like between the weld zone and GND.
- Do not connect the GND wire to the pin of the body or hydraulic cylinder. It is the best way to connect the GND wire at or near the object to be welded.

Use genuine parts.

Be sure to use the genuine parts.

Use oil and grease of viscosity appropriate to the temperature.

Ask IHI's sales service dealer for important maintenance.

Ask IHI's sales service dealer for important maintenance works such as replacement of electronic parts, adjustment of the hydraulic pressure and so forth that require professional knowledge and technique.

https://truckmanualshub.com/

USE THE SAFETY BAR

⚠ DANGER

ALWAYS use the safety bar to prevent personal injury or death, when maintenance under the raised body. Use the safety bar when underneath the body which has been raised.

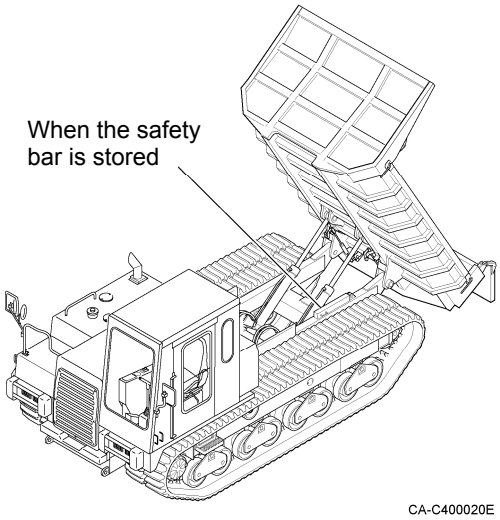

Setting the safety bar

1. Raise the body completely.
2. Raise the safety bar and set it to the bracket under the body.

⚠ CAUTION

Do not start the engine or lower the body while the safety bars are used.
Such an action may cause breakage of the safety bar or body.

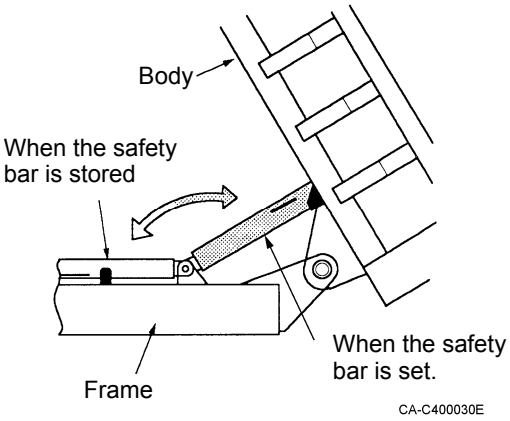

Removing the safety bar

1. Raise the body completely.
2. Remove the safety bar from the bracket and store the bar onto the frame.

https://truckmanualshub.com/

PERIODICAL EXCHANGE OF THE IMPORTANT PARTS

Carry out periodical maintenance of the parts shown below having great concern with safety and fire, in particular.
These parts are subject to changes of materials, wear and deterioration as they are used long. It is difficult to judge the service life by checking the appearance of these parts. Replace them periodically, even though they do not have apparent defects.

Fuel relation

Parts to be replaced periodically	Q'ty	Replace interval
Fuel hose (between fuel tank and engine)	1	Every 2 years
Fuel hose (between engine and fuel cooler)	1	
Fuel hose (between fuel cooler and fuel tank)	1	

Hydraulic relation

Parts to be replaced periodically	Q'ty	Replace interval
Hydraulic hose (between pump and right travel motor, main line)	2	Every 2 years
Hydraulic hose (between pump and left travel motor, main line)	2	
Hydraulic hose (between pump, CV and dump cylinder)	7	

Repair or replace these parts immediately if some abnormalities or defects are found in them even before the replacement periods.
Also check the fuel hoses and hydraulic hoses in daily check, monthly check and yearly check.

https://truckmanualshub.com/

MAINTENANCE INTERVALS

Maintenance point		Maintenance work	Maintenance interval								
			Daily	50h	150h	250h	500h	1000h	2000h	5000h	Irregular
Pins around body		Grease		○							
Oscillating link pins of lower rollers		Grease		○							
Rubber crawler		Check wear & deterioration	○								
		Check shoe tension	○								
Tightening bolts		Retightening				○					
Travel reduction gear		Check oil q'ty & refill					○				
		Replace oil			○ First time			○			
Hydraulic system	Hydraulic oil tank	Check oil q'ty & refill	○								
		Drain water				○					
		Replace oil						○			
	Suction strainer	Clean						○			
	Return filter	Replace cartridge		○ First time			○				
	Line filter	Replace element		○ First time			○				
	Hydraulic hose & pipe	Check leak & damages	○								
Engine oil system	Engine oil	Check oil q'ty & refill	○								
		Replace oil					○				
	Engine oil filter	Replace cartridge					○				
Cooling system	Coolant tank	Check coolant q'ty & refill	○								
	Coolant	Check coolant additive concentration					○				
		Check antifreeze concentration					○				
		Replace coolant							○		
	Coolant filter	Replace cartridge					○				
	Fan belt	Check tension & cracks						○			
	Fan	Check cracks	○								
	Radiator hose	Check leak & damages	○								

https://truckmanualshub.com/

Maintenance point		Maintenance work	Maintenance interval								
			Daily	50h	150h	250h	500h	1000h	2000h	5000h	Irregular
Fuel system	Fuel tank	Check fuel q'ty & refill	○								
		Drain water		○							
	Water separator	Drain water	○								
		Replace cartridge					○				
	Fuel filter	Replace cartridge					○				
	Fuel hose	Check leak & damages	○								
Air intake & exhaust system	Air cleaner	Check air cleaner clogging lamp	○								
		Clean & replace air cleaner element				○					
	Air intake & exhaust (dpf) pipe	Check leak & damages	○								
Electric system	Battery	Check battery liquid q'ty & refill		○							
		Clean terminals					○				
	Fuse	Replace									○
	Fusible link	Replace									○
Engine others	Breather element	Replace							●		
	Vibration damper	Check							●		
	Overhead valve	Check								●	
	DPF	Clean & replace								●	

- Also refer to the “Operation Manual of Engine” for details of the engine.
- Contact our sales service dealer for the maintenance items with the ● marks.

https://truckmanualshub.com/

RECOMMENDED LUBRICATION TABLE

Lubrication points	Oil type	Grade	Temp. & application (°C) -30 -20 -10 0 10 20 30 40	Q'ty required
Engine oil pan	Engine oil	API-CJ4 or JASO DH-2	SAE10W-30 * SAE15W-40	H: 22.7 L L: 19.0 L
Hydraulic oil tank	Hydraulic oil	Abrasion-resistant	* ISO-VG46 ISO-VG32	Whole system: 205 L Tank level: 148 L
Travel reduction gear	Gear oil	API GL-4	* SAE90	6.0 L
Fuel tank	Diesel fuel	-		366 L
Cooling system	Coolant	LLC	Mix 50% long life coolant (LLC).	Total q'ty: 38.8 L
	Coolant additive	DCA4	Part No. DCA65L	When replacing coolant: 1.9 L

• The oil with the * mark is used for the machine before shipment.

https://truckmanualshub.com/

LUBRICATE THE GREASE

Refill the grease nipples with grease using a grease gun.

Remove oozed old grease after refilling.

Body

⚠ WARNING

Be sure to set the safety bars under the body when lubricating with the body raised.

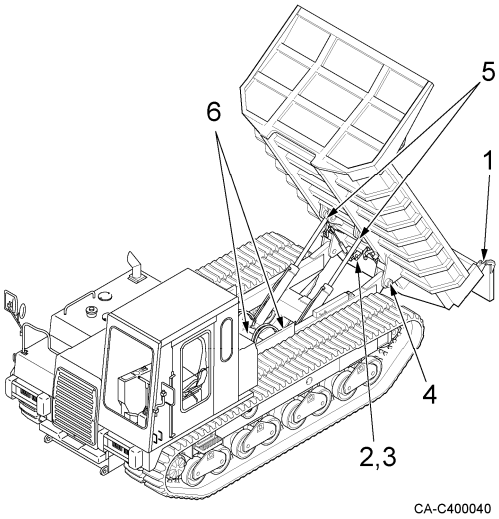

- Hinge pins of the body rear gate (1) 2 positions
- Lock pins of the body rear gate (2) 2 positions
- Control springs of the body rear gate (3) 2 positions
- Body joint pins (4) 2 positions
- Dump cylinder rod pins (5) 2 positions
- Dump cylinder foot pins (6) 2 positions

Oscillating link

- Oscillating link pins (7) 8 positions

NOTICE

Grease the link pins everyday before starting works if the machine is used on damp grounds or in mud.

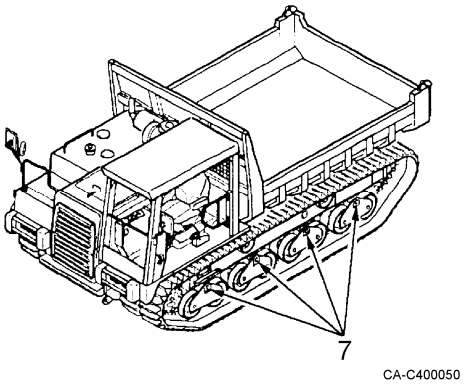

https://truckmanualshub.com/

RUBBER CRAWLER

Rubber crawler shoe maintenance

Rubber crawler shoe should be repaired or exchanged under the next conditions.
If it is necessary to repair or replace it, contact your IHI dealer.

- **Height of Lugs**

The rubber crawler can be used even if it is worn, however, if it is excessively worn, the crawler shoe is likely to be slippery and more travel force is required. If the remaining lug is less than 5 mm (approx. 0.2 in.) high, exchange it with brand-new one.

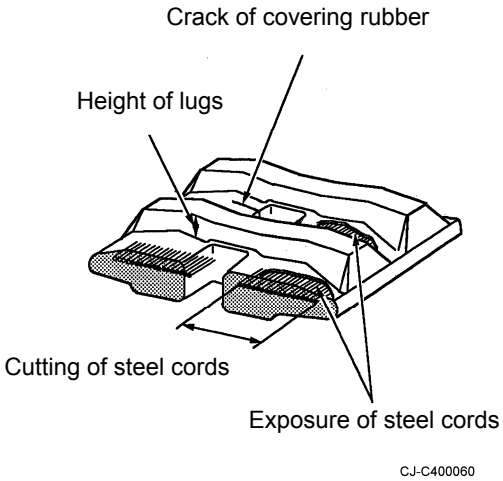

- **Exposure of Steel Cords**

If steel cord is exposed because of weary rubber or damage, exchange it with brand-new one.

- **Cutting of Steel Cords of Rubber Crawler Shoes**

When cutting of steel cord is detected, exchange it immediately. If you leave it as it is, the rubber crawler shoes can be cut off without expectation, which causes a serious accident.

- **Crack of Covering Rubber**

If a crack is 30 mm (1.2 in.) or more long and 8 mm (0.32 in.) or more deep, repair the cover immediately. If steel cord appears even if a crack is small, repair it immediately. Otherwise, water may come into a crack, which rusts steel cords and cuts off the rubber crawler shoe.

- **Dislocation of the rubber crawler cores**

Exchange the rubber crawler with a new crawler if one or more cores are dislocated from it.

https://truckmanualshub.com/

Track adjustment

Checking tension of the rubber crawlers

1. Place the carrier on a flat and rigid ground.
2. Put a timber of approximately 1.5 meters long on the rubber crawler shoe above the idle tumbler (1) and upper roller (2) and check clearance when a person (of 60 kg in weight) gets on the timer at its center.
   The proper clearance is 20 to 30 mm.

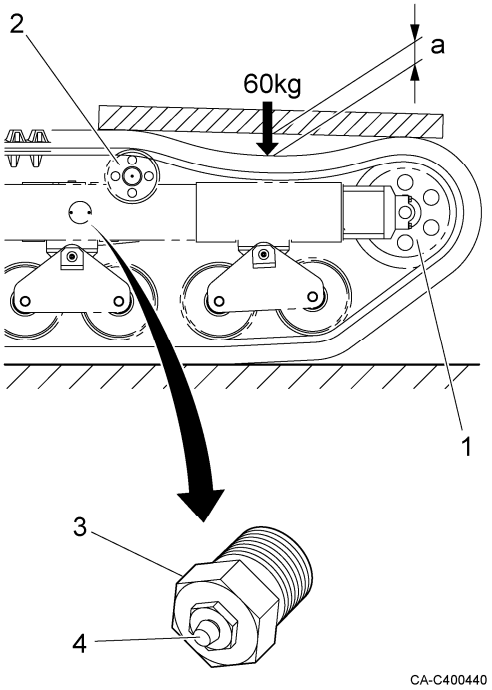

Tensioning the rubber crawlers

1. Fill grease through the grease nipple (4) of the check valve (3) until the rubber crawler shoes are tensioned properly.
2. Rotate the rubber crawlers forward and backward and check tension. Re-adjust it if necessary.

NOTICE
• Adjust the right and left rubber crawlers evenly. • If the rubber crawlers are not tensioned properly, the cylinders may be defective. Ask IHI's sales service dealer for repair services.

Loosening the rubber crawlers

1. Remove dirt and soil from around the idle tumblers.
2. Loosen the check valve until grease is discharged (by a maximum of one turn) little by little. Do not loosen it when grease is discharged.
3. Rotate the rubber crawlers forward and backward slightly if grease is hardly discharged.
4. Tighten the check valve when the rubber crawlers are tensioned properly.
   Tightening torque: 59 to 69 N·m (6 to 7 kgf·m)

NOTICE
Be careful not to over-tighten the check valve.

5. Rotate the rubber crawlers forward and backward and check tension. Re-adjust it if necessary.

⚠ WARNING
• When the rubber crawlers are tensioned intensely, the internal pressure in the grease cylinder is very high. Do not remove any parts before the pressure is zeroed. • To relief the pressure, loosen the check valve gradually. Do not loosen it when grease is discharged. (It should be loosened by a maximum of one turn.) • Grease may spout out at high pressure. Never loosen the grease nipple. • Do not bring your face or hand close to the check valve during adjustment.

https://truckmanualshub.com/

CHECK THE FIXED BOLT TORQUE

Tighten the bolts and nuts as shown in the table below.
If loose bolts and nuts are found in daily check, tighten them. If lacking bolts and/or nuts are found, be sure to replace new parts with lacking parts.
When a new machine is used, check the bolts and nuts when first 50 hours have past. Tighten loose bolts and nuts.

Special torque specifications

The bolts and nuts shown in the table below bear large forces. Tighten them at the torques shown in the table. When these bolts and nuts are replaced, apply the locktite to the threads and tighten them at the specified torques.

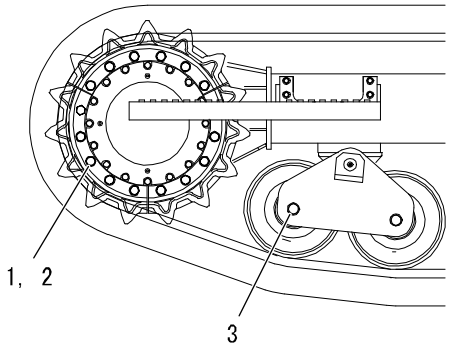

Traveling-rated

No.	Tightening position	Thread size	Wrench size (mm)	Tightening torque	
				N·m	kgf-m
1	Travel reduction gear	M20	30	476	48.5
2	Drive sprocket	M20	30	476	48.5
3	Lower roller	M24	36	850	86.7

- Observe the following procedures when attaching the drive sprocket.
  (1) Bring the inner surface of the sprocket into close contact with the motor spigot when attaching the sprocket.
  (2) Tighten the bolts with the locktite applied at a torque of 245 to 295 N·m first.
  (3) Then, tighten the bolts in the order shown on the right at the specified torque of 476 N·m.
  Tighten the bolts quickly since screw locking agent is applied to them.

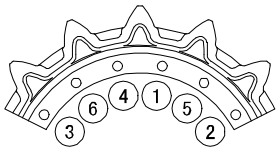

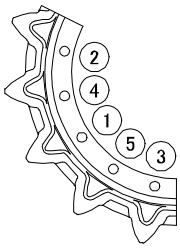

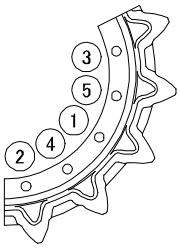

https://truckmanualshub.com/

Engine

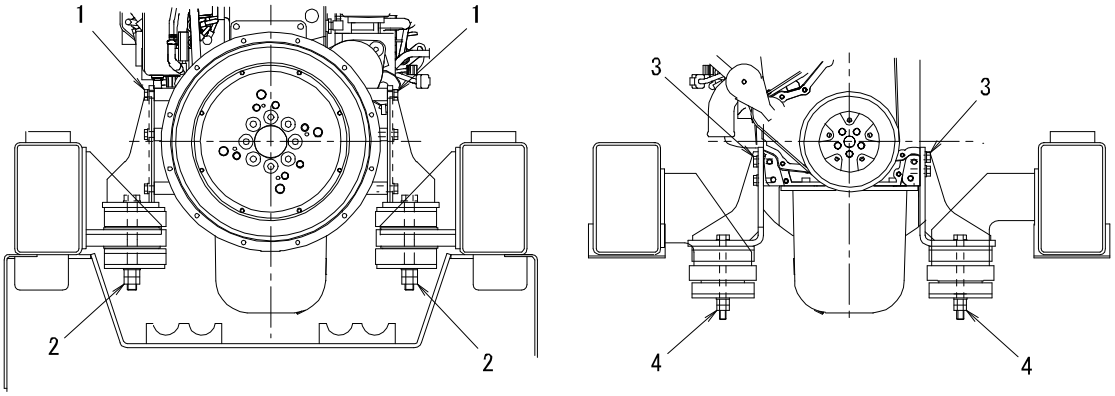

No.	Tightening position	Thread size	Wrench size (mm)	Tightening torque	
				N·m	kgf·m
1	Engine and bracket (rear)	M12	19	97	9.9
2	Bracket and frame (rear)	M20	30	476	48.5
3	Engine and bracket (front)	M12	19	97	9.9
4	Bracket and frame (front)	M16	24	241	24.6

Hydraulic pump

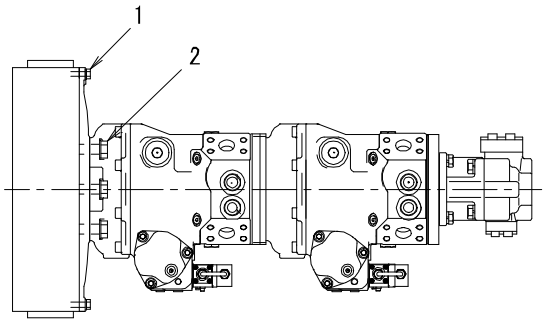

No.	Tightening position	Bolt size	Wrench required (mm)	Tightening torque	
				(N·m)	(kgf·m)
1	Engine and pump housing	M10	17	55	5.6
2	Pump housing and hydraulic pump	M20	30	476	48.5

https://truckmanualshub.com/

General torque specifications

Tighten the bolts and nuts other than the especially-tightened bolts and nuts at the torques shown below.

Bolt size	Wrench size (mm)	10T bolt tightening torque			
		Metric coarse thread heat-treated bolt		Metric fine thread heat-treated bolt	
		(N·m)	(kgf·m)	(N·m)	(kgf·m)
M8	13	23	2.3	25	2.5
M10	17	47	4.8	50	5.1
M12	19	83	8.5	91	9.3
M14	22	134	13.7	135	13.8
M16	24	208	21.2	221	22.5
M20	30	411	41.9	452	46.1
M24	36	715	72.9	811	82.7

High-pressure hose union nut		
Hose size (inch)	Tightening torque	
	(N·m)	(kgf·m)
1/4"	25	2.5
3/8"	49	5.0
1/2"	59	6.0
3/4"	118	12.0
1"	137	14.0
1-1/4"	167	17.0

https://truckmanualshub.com/

TRAVEL REDUCTION GEAR

Check the travel reduction oil level

⚠ WARNING

- Immediately after traveling, the gear case, oil, etc. are hot. Start work after they have cooled down.
- If pressure remains in the case, oil or plug may jump out. Loosen the plug slowly to reduce the pressure.

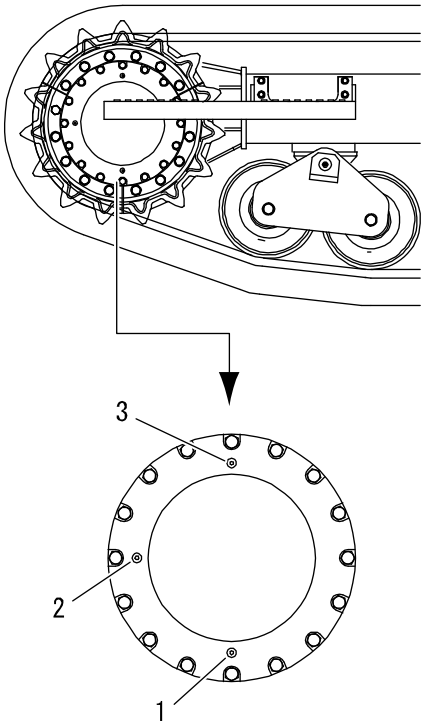

1. The drain port (1) must be located at the lowest position. The level port (2) must be located on the lateral side.
2. Remove the level plug. It is OK if the oil level is near the bottom of the plug hole.
3. Refill oil through the filler port (3) if oil is insufficient.
4. After check and refilling, clean the plugs and attach them.

Change the travel reduction oil

1. The drain port must be located at the lowest position. The level port must be located on the lateral side.
2. Put the container under the drain port.
3. Remove the 3 plugs to discharge oil.
4. Attach the drain plug.
5. Fill the specified quantity of gear oil through the filler port.
6. Attach the level plug when oil is discharged through the level port.

https://truckmanualshub.com/

HYDRAULIC SYSTEM

Check the hydraulic oil level

1. Place the machine on a flat and rigid ground and bring it into the posture for checking the hydraulic oil level. Stop the engine.

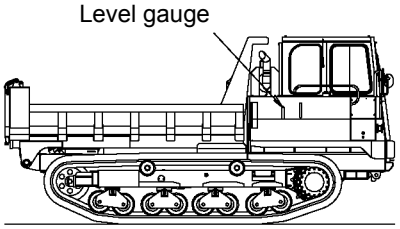

Posture for checking the hydraulic oil level

2. Check the oil level gauge (1). If the oil level is between H and L, it is proper.
   The oil level differs with the oil temperature. The following shows the standard.

   - Near the L level before starting operation
     (Oil temperature: 10 to 30°C)
   - Near the H level during operation
     (Oil temperature: 50 to 80°C)

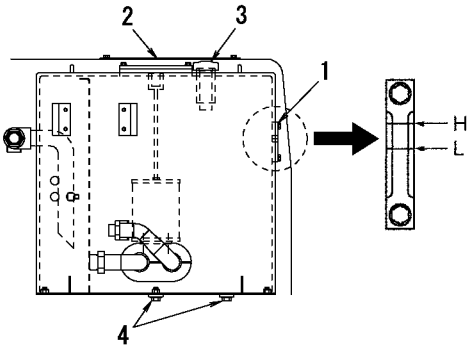

3. If the oil level is below the L level, open the cover (2) and refill hydraulic oil through the filler port (3).

Drain the hydraulic oil tank

⚠ WARNING
Oil is hot immediately after operation. You may get burnt if you touch oil. Start work after oil has cooled down.

1. Loosen the drain plug (4) under the hydraulic oil tank to discharge water and sediment into the container.
2. Close the drain plug when clean hydraulic oil is only discharged.
3. Check the hydraulic oil level. Refill oil if insufficient.

https://truckmanualshub.com/

Change the hydraulic oil and clean the strainer

⚠ WARNING

- Be sure to set the safety bars under the body before starting works with the body raised.
- Oil is hot immediately after operation. You may get burnt if you touch oil. Start work after oil has cooled down.

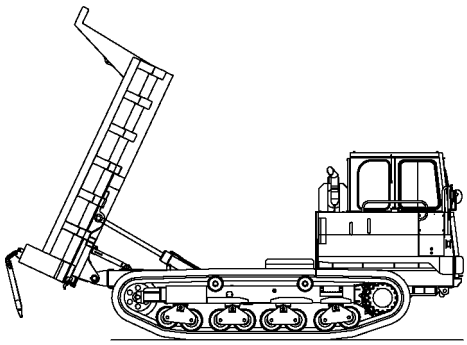

Posture for changing the hydraulic oil

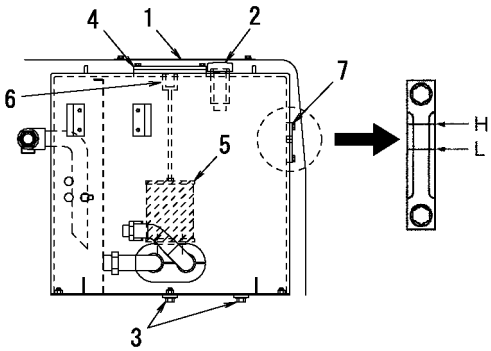

1. Place the machine on a flat and rigid ground and bring it into the posture for changing hydraulic oil. Stop the engine.
2. Open the cover (1). Discharge hydraulic oil through the filler port (2) into an empty drum with an oil pump.
3. Put the container under the drain plug (3) at the bottom of the hydraulic oil tank, and remove the drain plug to discharge residual oil.
   Tighten the drain plug after discharging oil.
4. Remove the flange (4) and take out the strainer (5).
5. Remove adhered dust and foreign matters from the strainer and clean the strainer. Do not clean the O-ring with volatile solvent.
6. Insert the cleaned strainer into the suction port pipe with an attention to the O-ring.
7. Fit the guide pin of the flange to the guide holder (6) of the strainer and attach the flange.
8. Fill the tank with hydraulic oil through the filler port up to the L level of the level gauge (7). Tighten the filler port plug.
9. Store the safety bars and start the engine. Keep the engine running with no load for approximately 5 minutes. Travel the machine and move the dump cylinder slowly several times. Bring the machine into the posture for checking the hydraulic oil level. Stop the engine.
10. Make sure that the hydraulic oil level is within the proper range. Refill hydraulic oil if insufficient.

https://truckmanualshub.com/

Replace the return filter and line filter

⚠ WARNING

- Be sure to set the safety bars under the body when starting work with the body raised.
- Oil is hot immediately after operation. You may get burnt if you touch oil.
  Start work after oil has cooled down.

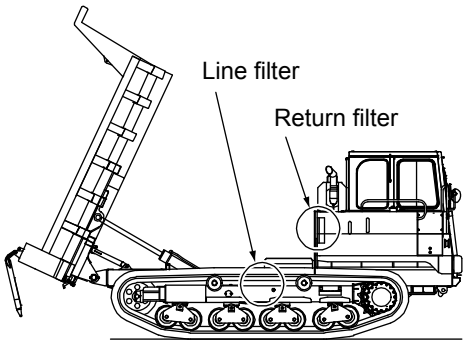

Posture for replacing the filter

Place the machine on a flat and rigid place. Bring it into the filter replacing posture and stop the engine.

Replace the return filter

1. Loosen the air plug (1). Remove the drain plug (2) to discharge hydraulic oil from the filter cartridge (3).
2. Remove the filter cartridge with a wrench (size: 24).
3. Apply hydraulic oil to the O-ring (4) of a new filter cartridge and attach it to the filter head.
4. Tighten the filter head with the wrench.
   Tighten it until the O-ring is crushed and the top of the cartridge is brought into contact with the head.
5. Tighten the air plug.

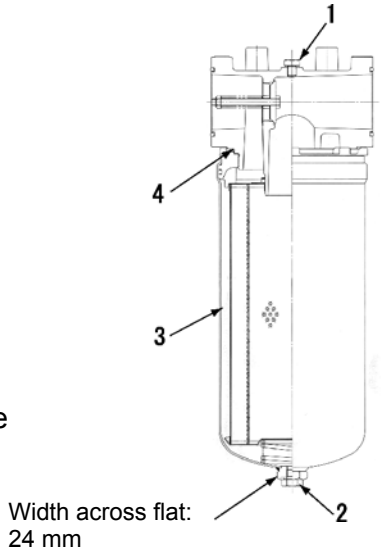

Replace the line filter

1. Detach the case (1) with a wrench (size 32).
2. Clean the inside of the case.
3. Replace the element (2), O-ring (3) and backup ring (4)
4. Attach the case and tighten it with the wrench.

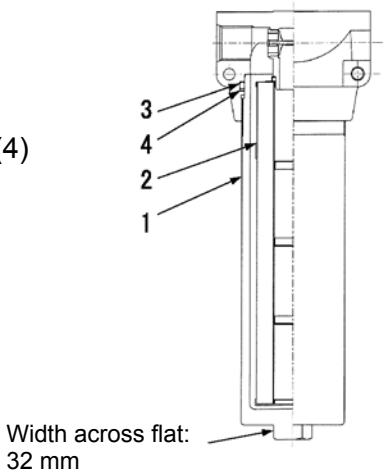

Check after replacement

1. Start the engine and make sure that no oil leaks from the filter mounting position.
2. Put in the safety bar, lower the body, and check the level of the hydraulic oil tank.
   If the oil surface is between H and L of the level gauge, the oil quantity is proper. Refill the tank with hydraulic oil if the oil level is low.

https://truckmanualshub.com/

ENGINE OIL SYSTEM

Check the engine oil level

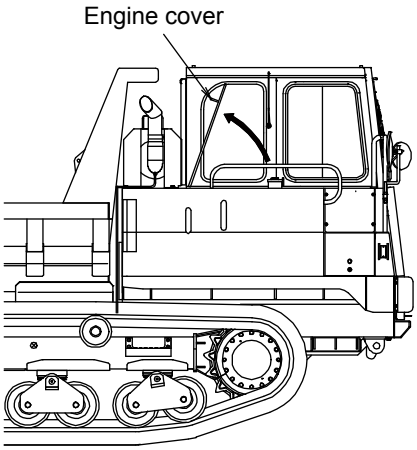

1. Open the engine cover, pull out the dipstick (1), and remove oil with waste cloth.

2. Insert the dipstick fully into the oil level pipe and pull it out.

3. The oil level is proper if oil on the oil level gauge reaches between the H and L positions.

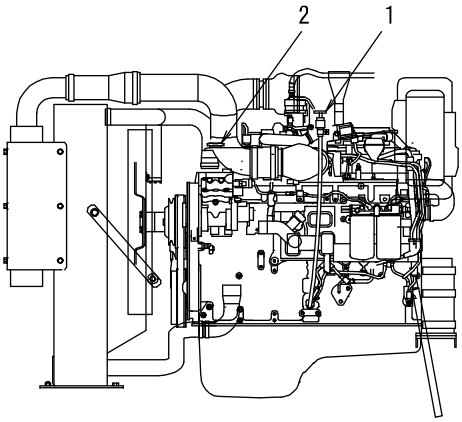

4. Refill engine oil through the filler port (2) if the oil level is below the L level. Wait for approximately 15 minutes after refilling, and check the oil level.

5. If the oil level is proper, close the lubrication port firmly and close the engine cover.

6. Too much engine oil may cause engine troubles. Be careful.

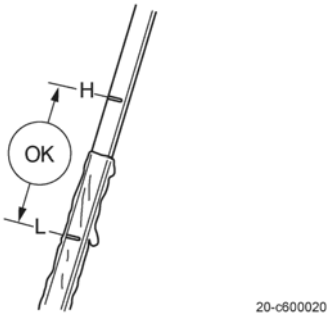

⚠ CAUTION
Using improper engine oil promotes sticking of the piston ring, seizure of the piston and cylinder, and wear of sliding parts. Furthermore, it may cause increase of oil consumption, reduction of the engine output, and damage to the engine. Troubles and accidents caused by using improper engine oil are exempted from the warranty.

https://truckmanualshub.com/

Replace the engine oil and engine oil filter

⚠ WARNING

- Be sure to set the safety bars under the body before starting works with the body raised.
- Oil is hot immediately after operation. You may get burnt if you touch oil. Start work after oil has cooled down.

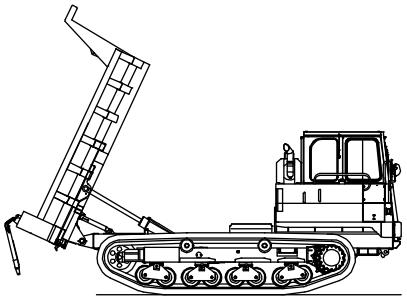

Posture for replacing the engine oil filter

Place the machine on a flat and rigid ground and bring it into the posture for replacing the engine oil filter. Stop the engine.

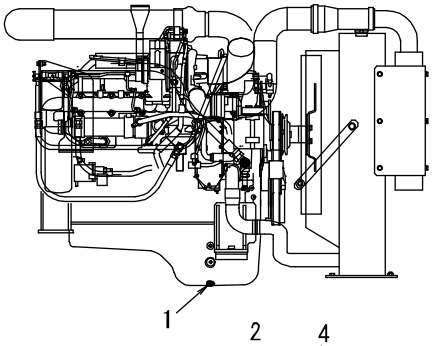

Discharge the engine oil

1. Put the container just under the drain plug (1) of the engine.
2. Clean the periphery of the filler port (2) to prevent foreign matters from entering. Remove the filler port cap.
3. Remove the drain plug slowly so that oil will not splash on you. Discharge oil then.
4. Check drain oil. Contact IHI's sales service dealer if it contains much metallic powder, foreign matters, etc.
5. Tighten the drain plug.

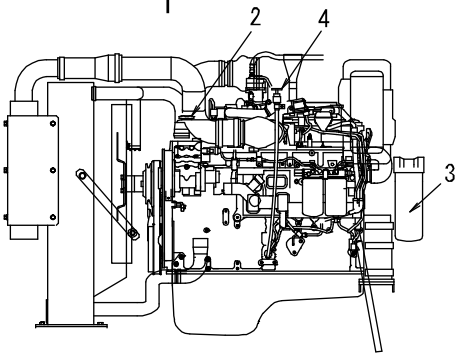

Replace the oil filter

1. Remove the filter cartridge (3) with the filter wrench.
2. Clean the seal surface of the filter head, and apply engine oil thinly to the gasket surface of a new filter cartridge (3).
3. Pour fresh engine oil into the new filter cartridge.
4. Screw the filter cartridge by hand until the gasket is brought into contact with the seal surface of the filter head.
5. Tighten the filter cartridge by one turn from this condition with the filter wrench.

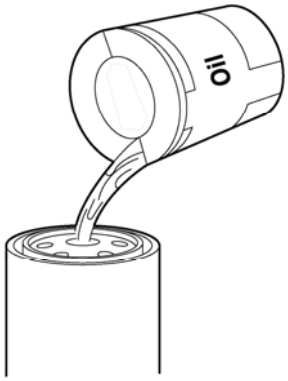

HD-c300160

https://truckmanualshub.com/

Fill the engine oil

1. Fill engine oil through the filler port (2) up to a point between the H and L levels of the level gauge (4).
2. Run the engine idle for a mean while and check if no oil leaks.
3. Check the oil level again after 15 minutes or more have passed since the engine stops. Refill the engine with engine oil if it is insufficient.

https://truckmanualshub.com/

COOLING SYSTEM

Coolant

Proper control of coolant is very important for the Cummins engine, which cannot deliver its performances fully unless coolant is controlled properly.

Be sure to mix anti-freezing solution, coolant additive and water in the proper ratio, when refilling the engine with coolant, in order to avoid damages to the engine.

No.	Name
1	Radiator
2	Radiator cap
3	Coolant tank
4	Pressure cap
5	Sight glass
6	Level sensor
7	Coolant filter
8	Supply line
9	Coolant inlet
10	Coolant outlet
11	Radiator vent line
12	Engine vent line
13	Turbo
14	Outside discharge line

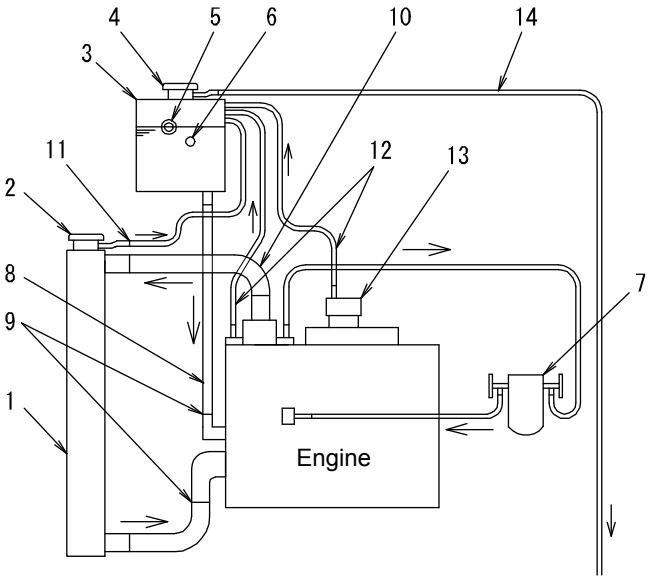

Coolant system diagram

Anti-freezing solution

- A new machine is filled with coolant containing 50% ethylene glycol long life coolant (LLC).
  This coolant has anti-freezing effect and corrosion resistant effect.
  It has long-term effects and may be used in all seasons.
- Replace coolant every 2000 hours or 2 years.
- Be sure to use long life coolant when replacing coolant.

⚠ WARNING

- The Long-Life-Coolant is toxic.
- If someone should shallow it by mistake, make him/her vomit it immediately and consult a doctor.
- If it is put into eyes, wash the eyes with water sufficiently immediately and consult a doctor.
- If it is necessary to store it, use a container with an antifreeze mark, cap it and store it in a place inaccessible by children.

https://truckmanualshub.com/

Check the coolant level

> **⚠ WARNING**
>
> Do not open the radiator cap normally. Check coolant in the coolant tank when the engine is cool.

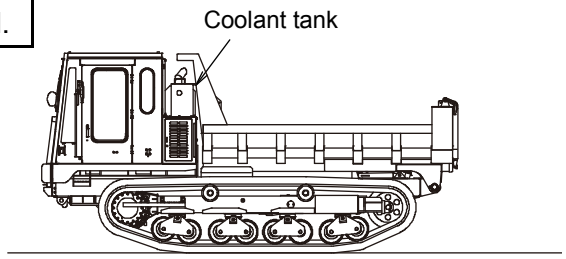

1. Check the coolant level everyday through the sight glass (2) of the coolant tank (1).
   Refill the tank with coolant if it is insufficient.

2. Coolant is filled up into the coolant tank. Do not remove the radiator cap.

3. Open the cover, remove the pressure cap (3) of the coolant tank, and refill the tank with coolant up to the center of the sight glass.

4. After refilling the tank, attach the pressure cap, close the cover, and lock it.

5. If the coolant tank is empty, water may leak from it. Check if water leaks from the tank. Remove the radiator cap and check the water level of the radiator. If it is insufficient, pour coolant into the radiator and refill the coolant tank then.

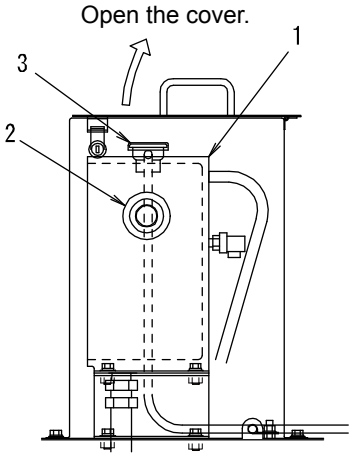

https://truckmanualshub.com/

Replace the coolant filter

Replace the coolant filter every 500 hours or twice a year. The coolant filter prevents corrosion of the parts in the coolant system.

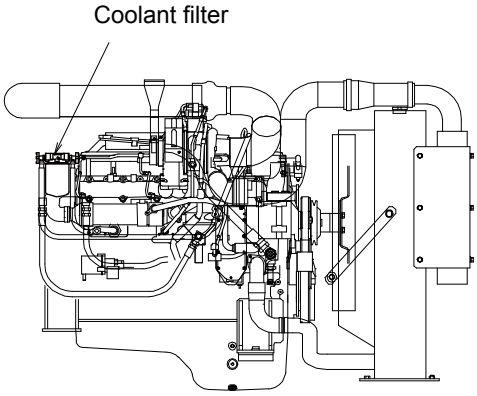

Detaching

1. Remove the radiator cap.
2. Turn the shut-off valve (1) fully clockwise to close it.
3. Remove the filter cartridge (2) with the filter wrench.

Attaching

1. Apply lubricant thinly to the gasket surface of a new filter cartridge.
2. Screw the filter cartridge until the gasket is brought into contact with the seal surface of the filter head (3). Turn the filter cartridge further by 1/2 to 3/4 turn from this condition.
3. Turn the shut-off valve counterclockwise until it stops to open it.
4. Attach the radiator cap.
5. Start the engine and check if no coolant leaks. Check the coolant level again when air is discharged from the coolant system completely.

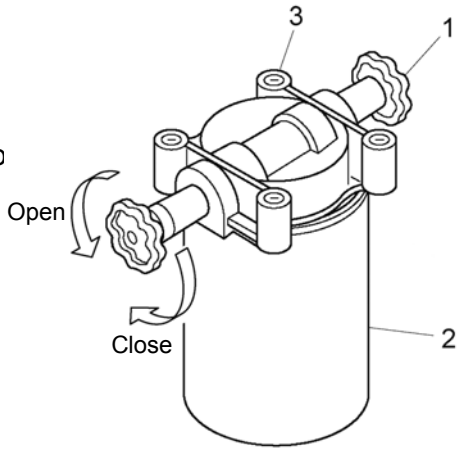

⚠ WARNING

- Do not remove the radiator cap when the radiator water temperature is high. Otherwise, hot steam may spout out and you are in danger of getting burnt. Wait until the radiator water temperature lowers. Loosen the radiator cap gradually to remove it.

⚠ CAUTION

- Do not pour oil into the coolant filter. Oil may deteriorate the coolant additive.
- If the coolant filter is tightened excessively with a tool, its threads may be deformed or the filter head may be damaged.
- Set the shut-off valve to the “Open” position to avoid damages to the engine.

https://truckmanualshub.com/

Check concentration of coolant additive

Dry chemical additive (DCA) is mixed in coolant to protect the parts of the coolant system against corrosion. Check the DCA concentration every 500 hours or twice a year.

Controlling DCA concentration

The proper DCA concentration is 0.39 to 0.79 unit/L. (The unit means the content unit of the DCA.)

- DCA concentration of new machine
  Total coolant capacity: 38.8 L

Material containing DCA	Part No.	Number of units
Coolant filter	WF9142	12
DCA solution	DCA60L x 2	10
	Total	22

DCA concentration of new machine: 0.57 unit/L

- When replacing coolant filter every 500 hours or twice a year
  Replace the coolant filter and measure the DCA concentration then.

Material containing DCA	Part No.	Number of units
New coolant filter	WF2071	4

Make sure that the DCA concentration is 0.39 to 0.79 unit per liter.

* Use the FleetGuard coolant test kit (part No. CC2602) to check the DCA concentration. This test kit is supplied with a manual of the usage.

- When replacing coolant every 2000 hours or 2 years
  Add 1.9 liters of DCA solution to coolant when replacing coolant.

Material containing DCA	Part No.	Number of units	Capacity
New coolant filter	WF2071	4	-
DCA solution	DCA65L	20	1.9 L
	Total	24	

DCA concentration when replacing whole coolant: 0.62 unit/L

Check anti-freezing solution concentration

Check the concentration of anti-freezing solution in coolant every 500 hours or twice a year.
Be sure to mix 50% water and 50% anti-freezing solution to protect the engine against the temperature of -32°C throughout the year.
The anti-freezing solution has effects of lowering the freezing point of coolant, increasing the boiling point and accordingly widening the operation temperature range. It is needed in all seasons throughout the year.

* Use the FleetGuard Refractometer (part No. C2800) to check the freezing point of coolant and the concentration of anti-freezing solution.

https://truckmanualshub.com/

Change the coolant

Replace coolant every 2000 years or once every two years.

Use solution of 50% water and 50% ethylene glycol long life coolant (LLC) and DCA solution as coolant. Never use water only as coolant.

Pouring quantity when replacing coolant

Total coolant quantity	38.8 L	Engine body: 12.8 L Radiator, etc.: 14.8 L Coolant tank: 11.2 L
DCA solution quantity	1.9 L	Solution part No. DCA65L
Mixture of LLC and water	36.9 L	LLC = 18.45 L Water = 18.45 L

⚠ WARNING

- Immediately after the engine stops, coolant is hot. If coolant is discharged immediately, you may get burnt. Change coolant after the engine cools down.
- Do not remove the cap when the radiator coolant is hot. Hot water may spout out. Rotate the cap slowly to relief the pressure after the coolant temperature lowers.

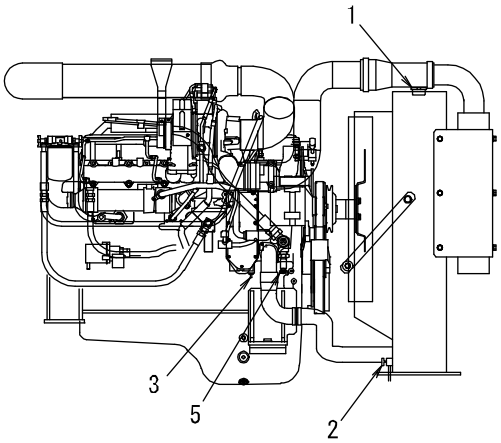

Open the cover.

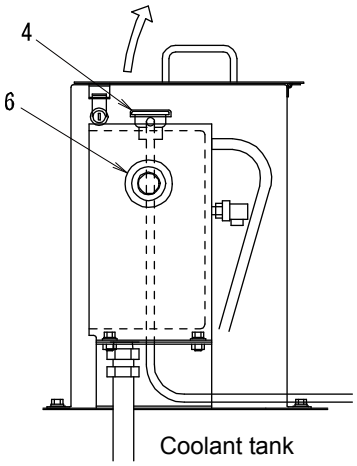

1. Turn the radiator cap (1) slowly to remove it.
2. Loosen the drain cock (2) in the lower part of the radiator and discharge water into a vessel.
3. Loosen the drain cock (3) of the cylinder block of the engine and discharge water into the vessel.
4. Open the cover of the coolant tank. Turn the pressure cap (4) of the coolant tank to remove it
5. Loosen the drain cock (5) of the coolant tank and discharge water into the vessel.
6. Clean the coolant tank.
7. Close the drain cocks (2), (3) and (5) after discharging water.
8. Pour fresh LLC mixture and DCA solution through the radiator cap. Keep the pressure cap of the coolant tank removed at this time. Make sure that the tank becomes full, and close the radiator cap.
9. Pour fresh LLC mixture into the coolant tank. Check the level through the sight glass (6) of the coolant tank and close the pressure cap then.
10. Run the engine five minutes and stop it then. Wait until the temperature of coolant lowers, and check the coolant level. Refill the tank with coolant if coolant is insufficient.

https://truckmanualshub.com/

Check the fan belt

⚠ WARNING

- Never touch a rotating part such as the fan belt, etc. with the engine running. There is the danger of your finger being cut off.
- To help avoid being injury, check and adjust the fan belt tension with engine stopped.
- Parts are hot immediately after the engine stops. You may get burnt. Wait until each part cools down.

1. Check tension of the belt.
   Apply a force of 110 N (11 kgf) to the center between the pulleys and measure the degree of slackness. If the belt slackness exceeds the belt thickness, belt tension should be adjusted.

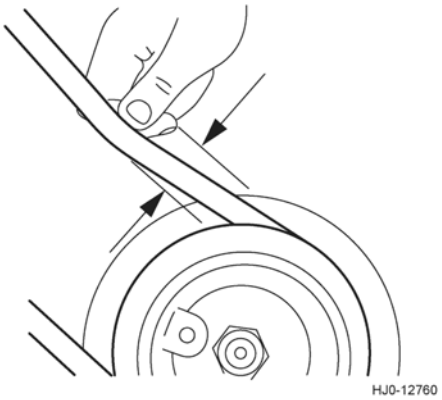

2. Replace the belt if it has flaws or cracks.

The spring type belt tensioner pulley adjusts tension of the fan belt automatically. Contact our sales service dealer if it is necessary to adjust belt tension or replace the belt.

https://truckmanualshub.com/

FUEL SYSTEM

Applicable fuel

The following advantages are required for diesel fuel:

1) Must be free from minute dust particles.
2) Must have adequate viscosity.
3) Must have a high cetane number.
4) Must have high fluidity at low temperature.
5) Must have low sulfur content.
6) Must have little residual carbon.

Use light oil for normal diesel cars that meets the above requirements.

⚠ CAUTION

The functions or performance of parts of the fuel injection system or the engine may be lost or the engine may break down if any other fuel than light oil is used. Never use any other fuel than light oil.

Damages or troubles caused by using fuel other than light oil are not covered by the warranty.

No.	Name
1	Fuel tank
2	Water separator
3	Fuel filter
4	Fuel cooler

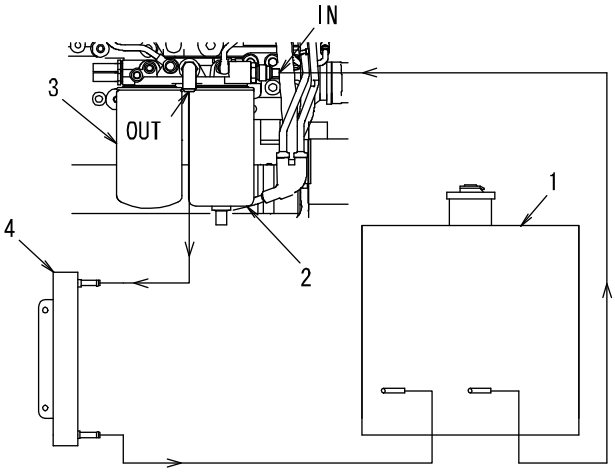

Fuel piping system diagram

https://truckmanualshub.com/

Check the fuel level

1. Turn the engine key switch to the ON position and check the quantity of remaining fuel with the fuel gauge on the display. Refill the tank with fuel through the filler port (1) if fuel is insufficient.

2. Close the cap of the filler port firmly after refilling.

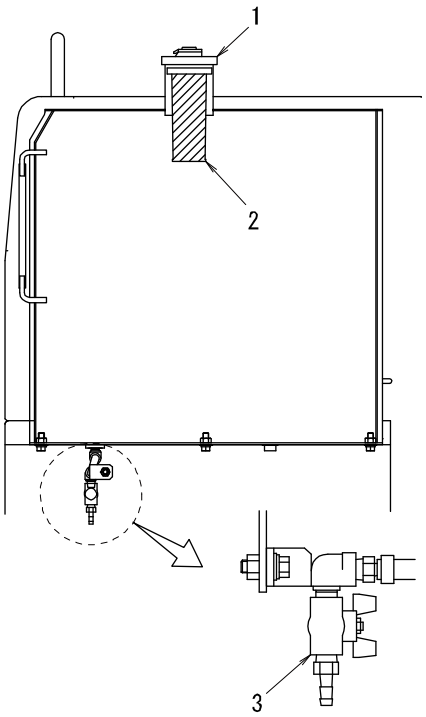

⚠ WARNING

- Overflowed or split fuel may cause a fire. Wipe off spilt fuel completely.
- Do not attempt to refill fluid from a drum or plastic container.
  Refill it from a tank lorry to prevent water or impurities from mixing.
- If fuel is filled up by removing the strainer (2), the engine may break down. Do not remove the strainer.
- Do not fill fuel up to the top of the tank.

Drain the fuel tank

1. Loosen the drain cock (3) at the bottom of the fuel tank to discharge water and sediment into the container.

2. Close the drain plug when clean fuel is only discharged.

https://truckmanualshub.com/

Water separator and fuel filter

⚠ WARNING

- Be sure to set the safety bars under the body when carrying work with the body raised.
- Spilt fuel may cause a fire. Wipe it off completely if it spills.

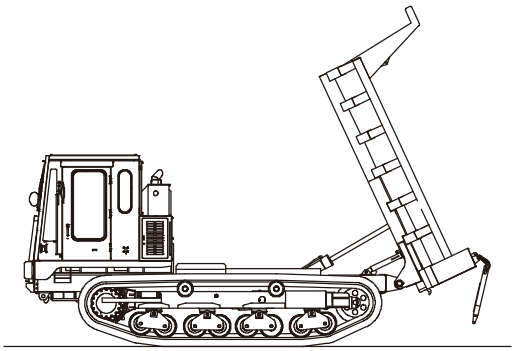

Posture for checking the fuel filter

Draining water separator

Discharge water and sediment contained in fuel from the water separator (1) everyday.

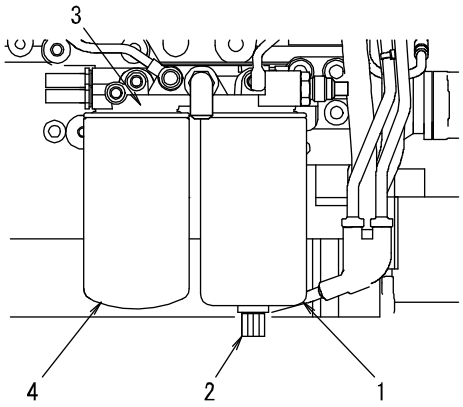

1. Place the machine on a flat and rigid ground. Bring the machine into the posture for checking the fuel filter, and stop the engine.

2. Open the drain valve (2) of the water separator by hand. Turn the valve by approximately 3.5 turns until it lowers by 25.4 mm and the water separator begins to be drained.

3. Discharge water and sediment until clean fuel is discharged.

4. Close the valve when clean fuel is discharged.

5. To close the valve, lift and turn it clockwise as far as you can close it by hand.

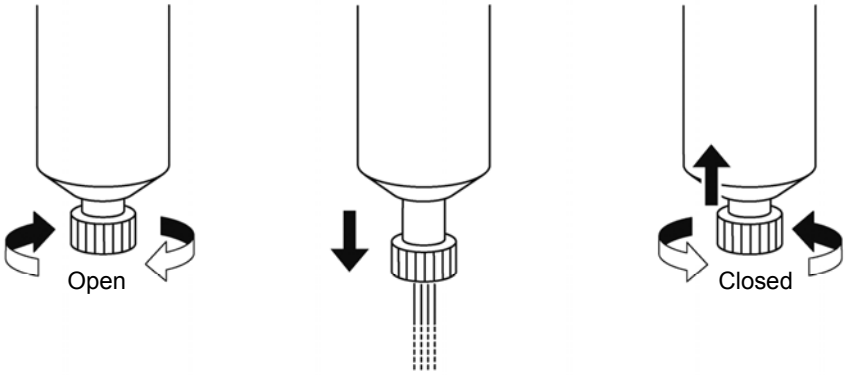

https://truckmanualshub.com/

Replacing water separator and fuel filter

Replace the water separator and fuel filter simultaneously.

1. Clean the periphery of the filter head (3).
2. Disconnect the wire harness from the water separator (1).
3. Loosen the water separator (1) and the filter cartridge of the fuel filter (4) with the filter wrench and detach them.
4. Pour fuel into the new water separator cartridge.
   Do not pour fuel into the fuel filter cartridge.
   Instead, prime the fuel system using a priming pump.
5. Apply fuel thinly to the gasket surfaces of both filter cartridges.

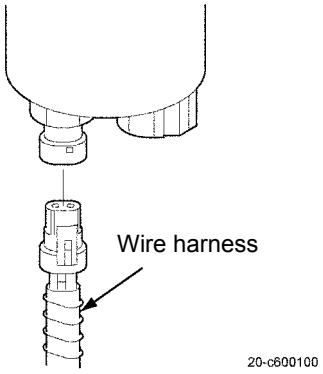

6. Screw the filter cartridge until the gasket is brought into contact with the seal surface of the filter head. Tighten it with the filter wrench.
7. Connect the wire harness of the water separator.

The Cummins fuel system checks if a proper in-fuel water sensor is used or not. If the in-fuel water sensor in use is not appropriate or disconnected, the engine alarm lamp goes on.

Priming method

1. Turn the engine key switch to the ON position to activate the priming pump for 30 seconds.
2. Turn off the engine key switch once. Then, turn it on again to activate the priming pump again.
3. Repeat this operation and activate the priming pump by three or four cycles for 30 seconds each before starting the engine.
4. Start the engine at low revolution.
5. Increase the engine revolution slowly.

⚠ WARNING
Do not open the high-pressure engine fuel system while the engine is running. Otherwise, high-pressure fuel spouts out, resulting in serious injury or death.

https://truckmanualshub.com/

AIR INTAKE AND EXHAUST SYSTEM

Clean and replace air cleaner element

If the air cleaner clogging lamp on the instrument panel is lit, the element is clogged.
Clean or replace the element.

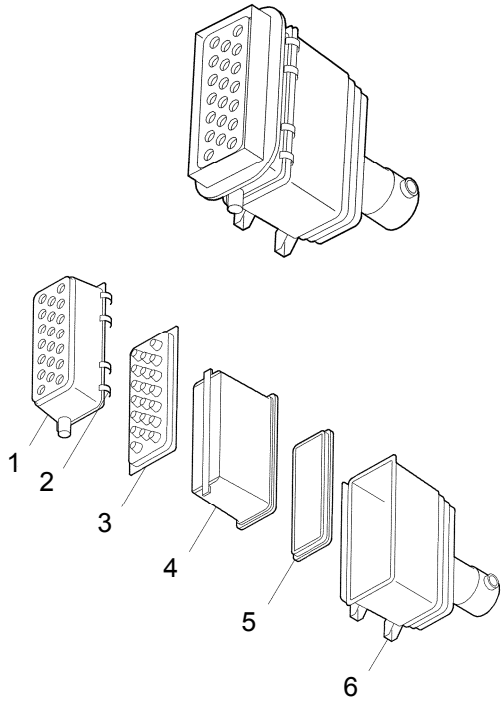

1. Disconnect the housing clip (2) of the pre-cleaner (1). Detach the pre-cleaner from the housing (6).

2. Take out the pre-cleaner sub-assembly (3), primary element (4) and secondary element (5).

3. Remove dirt and foreign matters from the primary element and secondary element.
   Do not clean the elements with strong air blow. Otherwise, the filter performance may be deteriorated.

4. Replace the elements with new ones, if they are contaminated excessively or damaged.

5. Clean the inside of the pre-cleaner and pre-cleaner sub-assembly.

6. Clean the inside of the housing. Re-assemble the parts in the reverse order to disassembly.

⚠ CAUTION

- Be sure to stop the engine before cleaning or changing the air cleaner. If it is cleaned or changed while the engine is running, dust is sucked in, causing engine damages.
- Remove the secondary element with great care not to allow dust or foreign matters from entering the air cleaner pipe.

https://truckmanualshub.com/

ELECTRIC SYSTEM

Change the fuses

NOTICE

- Be sure to set the engine key switch to the OFF position before replacing the fuses.
- Do not use wires, silver foils, etc. instead of fuses.
  If such materials are used, the wires may overheat and burn, resulting in a fire.

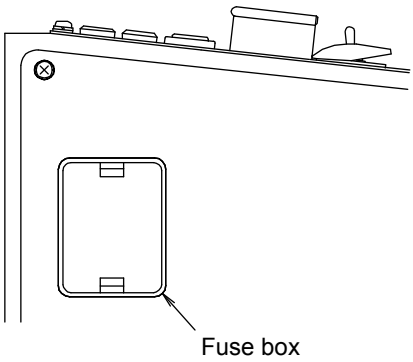

1. Set the engine key switch to the OFF position.
2. Take off the fuse cover.
3. Replace the blown fuse with a new fuse of the same capacity using the fuse pull-out holder set in the fuse box.

Code	Capacity (A)	Circuit name
F1	5A	Radio
F2	5A	Monitor
F3	10A	Back buzzer, lock lever, parking & travel speed selector switch
F4	10A	Dump
F5	20A	Head light & blinkers
F6	20A	Horn, cabin & air conditioner
F7	20A	Reserve
F8	5A	Engine 1
F9	5A	Engine 2 (lamp & buzzer)
F10	30A	Engine 3
F11	10A	Engine 4 (service connector)

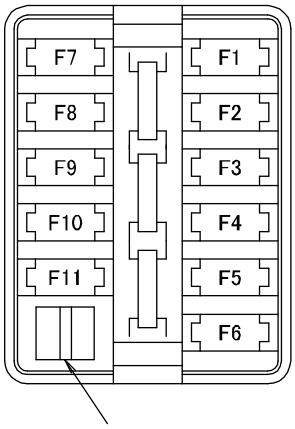

Change the fusible link

If power is not turned on even though the engine key switch is set to the ON position, the fusible link between the battery and the engine key switch circuit may have blown out. Detach and check the fusible link. Replace it with a new fusible link, if it has blown out.
The fusible link is mounted in the battery cover.

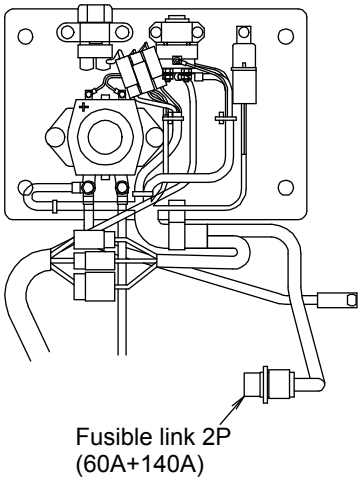

https://truckmanualshub.com/

Check the battery

Refilling battery liquid

> **⚠ WARNING**
>
> - The battery produces inflammable hydrogen gas. It ignites or explodes if fire is nearby. Never bring fire close to the battery or strike a spark near it.
> - Never place any tool, metallic object or inflammable matter on or near the battery. The battery may possibly ignite and explode if it short-circuits.
> - The battery liquid (diluted sulfuric acid) may cause loss of eyesight or burning. If it is put into the eyes or on the skin or clothes, wash with much water immediately and consult a doctor.
> - Be sure to put on protective goggles when handing the battery.

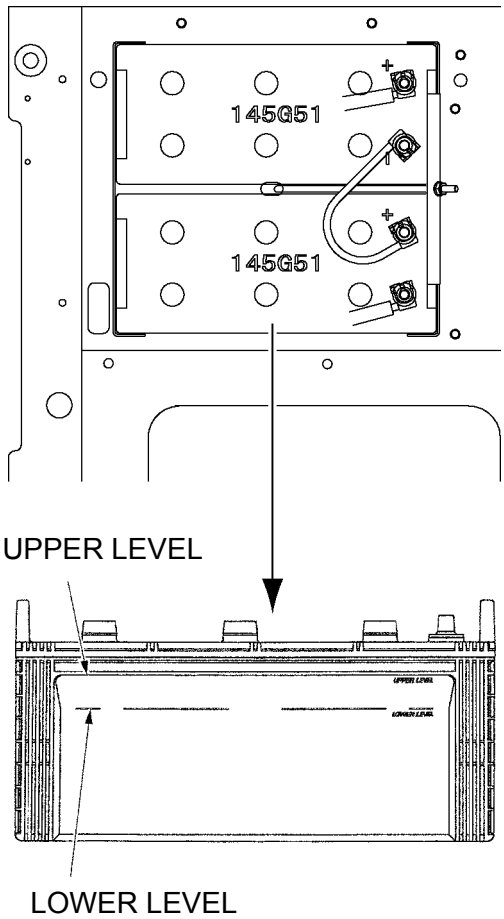

Check the liquid level. Refill the battery with refill liquid up to UPPER LEVEL, if it has lowered down to LOWER LEVEL.

Cleaning the battery terminals

> **⚠ CAUTION**
>
> - Be sure to keep the engine stopping during work.
> - Be careful during work not to short-circuit the positive and negative terminals of the battery with a tool, etc.
> - Disconnect the battery cable from the negative terminal first. Connect it to the negative terminal last.
> - Tighten the terminals firmly.

1. Clean the terminals if they are dirty or corroded. (Pour warm water onto the terminals and wipe them if they are corroded and white powder sticks on them.)
2. Detach the terminals and polish them with a wire brush or sandpaper if they are corroded remarkably.
3. Apply grease, etc. thinly to the terminals after cleaning and tightening.

https://truckmanualshub.com/

HANDLING IN COLD WEATHER

At low temperature, the engine hardly starts and coolant is subject to freezing. Make preparation for cold weather as shown below.

Fuel

In winter in cold regions, fuel may be frozen and it may be difficult tot start the engine.
Use fuel (light oil) appropriate for the temperature.

Coolant

Long-Life-Coolant (LLC) has been mixed in coolant of this machine before shipment.
The ratio of mixing anti-freezing solution is 50% in all regions.
Replace the long life coolant every 2000 hours or two years.

- Coolant : LLC 50%
- SCA : DCA4
  Density0.39~0.79 UNIT/L

D40812600

Lubricant and grease

Exchange engine oil and hydraulic oil with proper oil having viscosity appropriate for the outer temperature. Refer to RECOMMENDED LUBRICATION TABLE for the specified viscosity.

Battery

In cold seasons, larger discharge current flows when starting the engine and the battery performance is also reduced. If the battery is almost discharged, battery liquid may be frozen. Recharge the battery almost fully and keep it warm to start the engine free from troubles next morning.

Precautions when finishing work

- Remove mud and water and water from the cylinder rod to prevent the cylinder rod seals from being damaged.
- Put plates on dry and solid ground and park the machine on them in order to prevent the crawlers and around them from freezing.
- Discharge water from the fuel tank to prevent fuel from freezing.

https://truckmanualshub.com/

LONG TERM STORAGE

Before Storage

NOTICE
Move the body down to the lowest position while storing in order to protect the cylinder rod from rust.

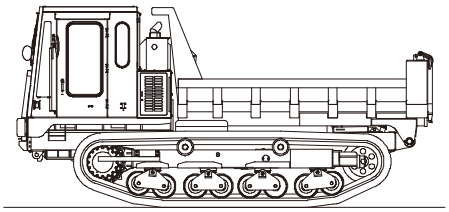

Posture for long term storage

To store the machine from long term, follow the next procedures.

1. Clean parts of the machine.
2. Be sure to perform fill the fuel, lubrication, and oil change.
3. Select a well-drained, dry and well-ventilated flat place. Put plates on the ground.
4. Store the battery after remove the negative terminal and covering it or dismounting the battery from the machine.

During Storage

⚠ CAUTION
If you have to operate the machine indoors to prevent rust, keep good ventilation and gas poisoning by window or entrance.

1. During storage, operate the machine once a month to maintain films of oil at the lubrication section and charge the battery at the same time.
2. Before starting the engine, be sure to crank the engine with the starter and make sure that the engine oil pressure warning lamp goes out.
3. Warm up the engine at low speed. Increase the engine speed after the water temperature reaches the proper temperature.

After Storage

Lubricate or grease every necessary part, check the coolant level and refill coolant if necessary, before using the machine after long-term storage.

https://truckmanualshub.com/

HYDRAULIC SYSTEM DIAGRAM

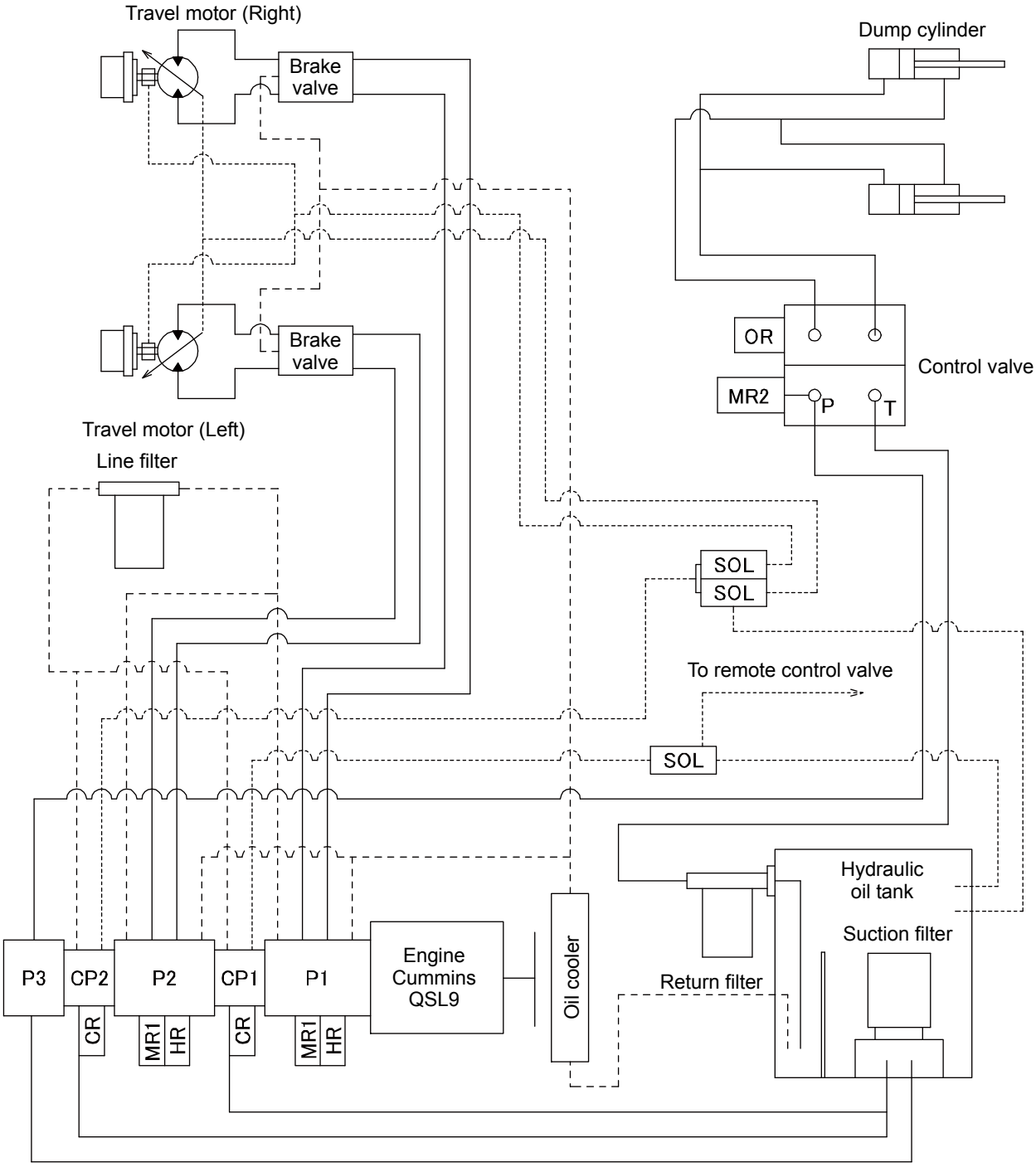

Relief valve set pressure

Code	Item	Mpa
MR1	P1, P2 Pump cut off relief	34.3
HR	P1, P2 Pump high pressure relief	37.3
CR	CP1, CP2 Charge pump relief	2.7
MR2	P3 Pump main relief	17.7
OR	Over load relief for dump (lowering)	5.9

https://truckmanualshub.com/

ELECTRIC SYSTEM DIAGRAM

Engine key switch contact

Position \ Terminal	B	R1	R2	ACC	BR	C
Preheat	○	○		○	○	
OFF	○					
ON	○			○	○	
Start	○		○	○	○	○
	28A	28A	15A	1A		26A

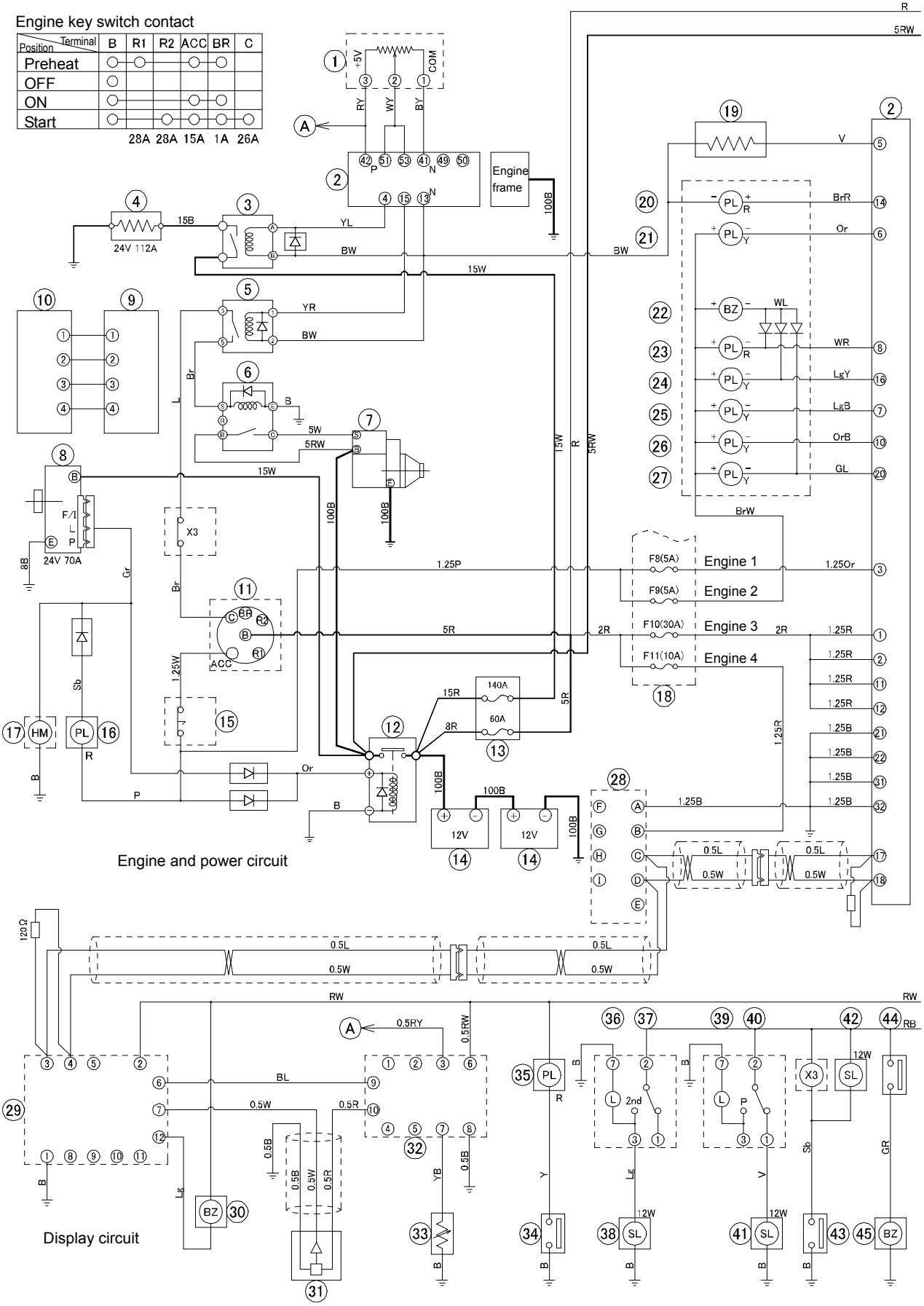

https://truckmanualshub.com/

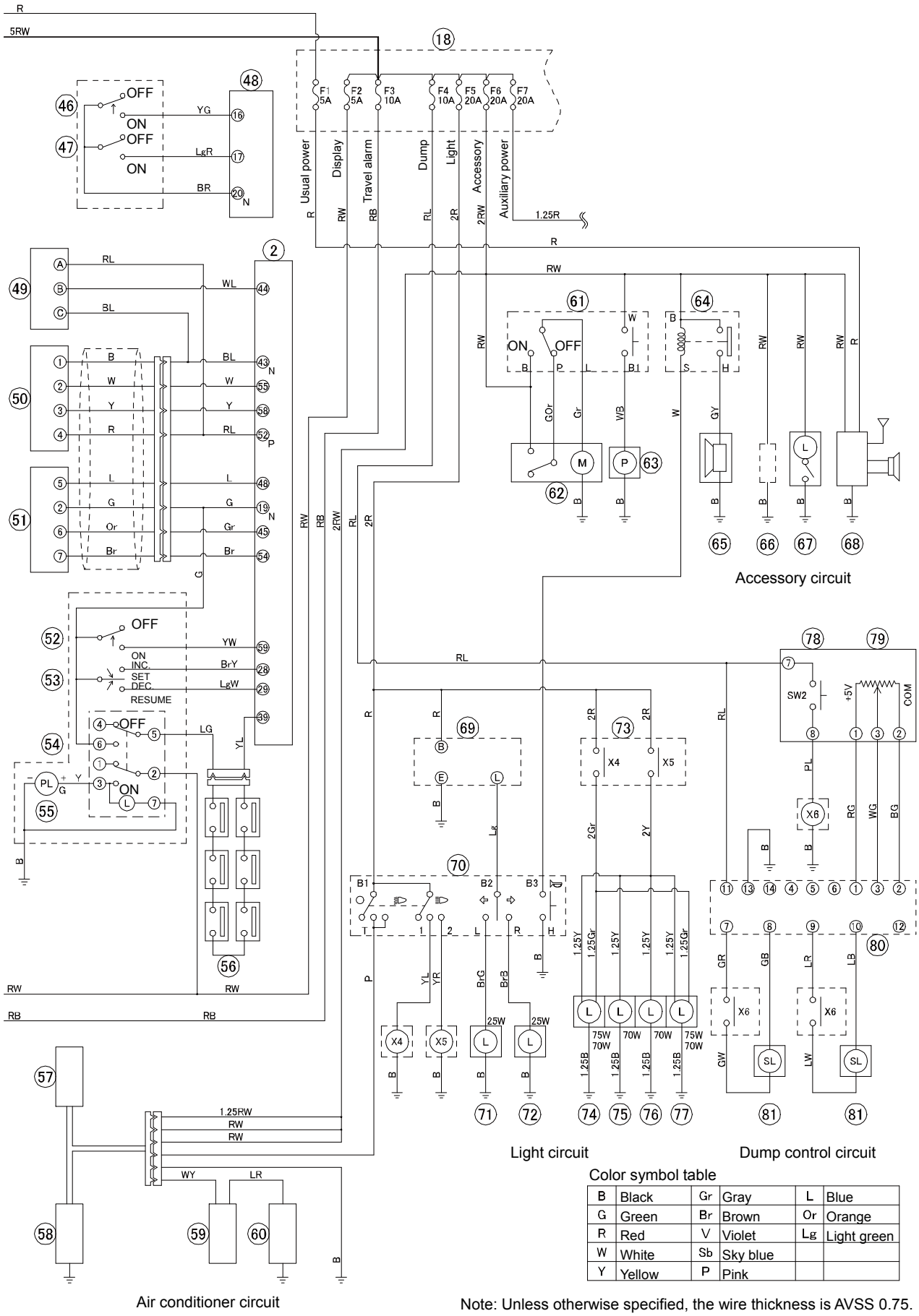

Color symbol table

B	Black	Gr	Gray	L	Blue
G	Green	Br	Brown	Or	Orange
R	Red	V	Violet	Lg	Light green
W	White	Sb	Sky blue		
Y	Yellow	P	Pink		

Note: Unless otherwise specified, the wire thickness is AVSS 0.75.

https://truckmanualshub.com/

No.	Name	No.	Name
①	Engine throttle	㊷	Operation lock solenoid
②	60P OEM J3 Connector	㊸	Operation lock limit switch
③	Heater relay	㊹	Pressure switch
④	Intake air heater	㊺	Back buzzer
⑤	Safety relay	㊻	Engine stop delay switch
⑥	Starting motor relay	㊼	DPF regeneration disabled switch
⑦	Starting motor	㊽	24P OEM J4 Connector
⑧	Alternator	㊾	3P J11 Coolant level connector
⑨	4P Cummins connector	㊿	4P J14 DPF Pressure sensor connector
⑩	4P Air cleaner thermo/pressure sensor	51	10P J25 DPF Thermo sensor connector
⑪	Engine key switch	52	DPF manual regeneration/engine diagnostic switch
⑫	Battery relay		
⑬	Fusible link (140A+60A)	53	Fault next code switch
⑭	Battery	54	Decel switch (Option)
⑮	Engine emergency stop switch	55	Decel lamp (Option)
⑯	Battery charge lamp	56	Pressure switch (Option)
⑰	Hour meter	57	Air conditioner control panel
⑱	Fuse box	58	Air conditioner unit
⑲	Dummy resistance	59	Air conditioner pressure switch
⑳	Engine oil pressure lamp	60	Air conditioner compressor
㉑	Preheat lamp	61	Wiper switch
㉒	Alarm buzzer	62	Wiper motor
㉓	Engine stopped lamp	63	Washer pump
㉔	Engine alarm lamp	64	Horn relay
㉕	DPF alarm lamp	65	Horn
㉖	HEST lamp	66	Cigarette lighter
㉗	DPF regeneration disabled lamp	67	Room lamp
㉘	Engine service connector	68	Radio (Option)
㉙	Display	69	Flasher relay
㉚	Overrun/slope alarm buzzer	70	Combination switch
㉛	Slope sensor	71	Turn signal (left)
㉜	Signal converter base board	72	Turn signal (Right)
㉝	Fuel level sensor	73	Head light relay
㉞	Air cleaner clogging sensor	74	Head light (Left outside)
㉟	Air cleaner clogging lamp	75	Head light (Left inside)
㊱	Travel speed lamp	76	Head light (Right inside)
㊲	Travel speed select switch	77	Head light (Right outside)
㊳	Travel speed select solenoid	78	Dump lock switch
㊴	Parking lamp	79	Dump switch
㊵	Parking switch	80	Proportional controller
㊶	Parking solenoid	81	Dump solenoid

https://truckmanualshub.com/

SPECIFICATIONS

https://truckmanualshub.com/

SPECIFICATIONS AND DIMENSIONS

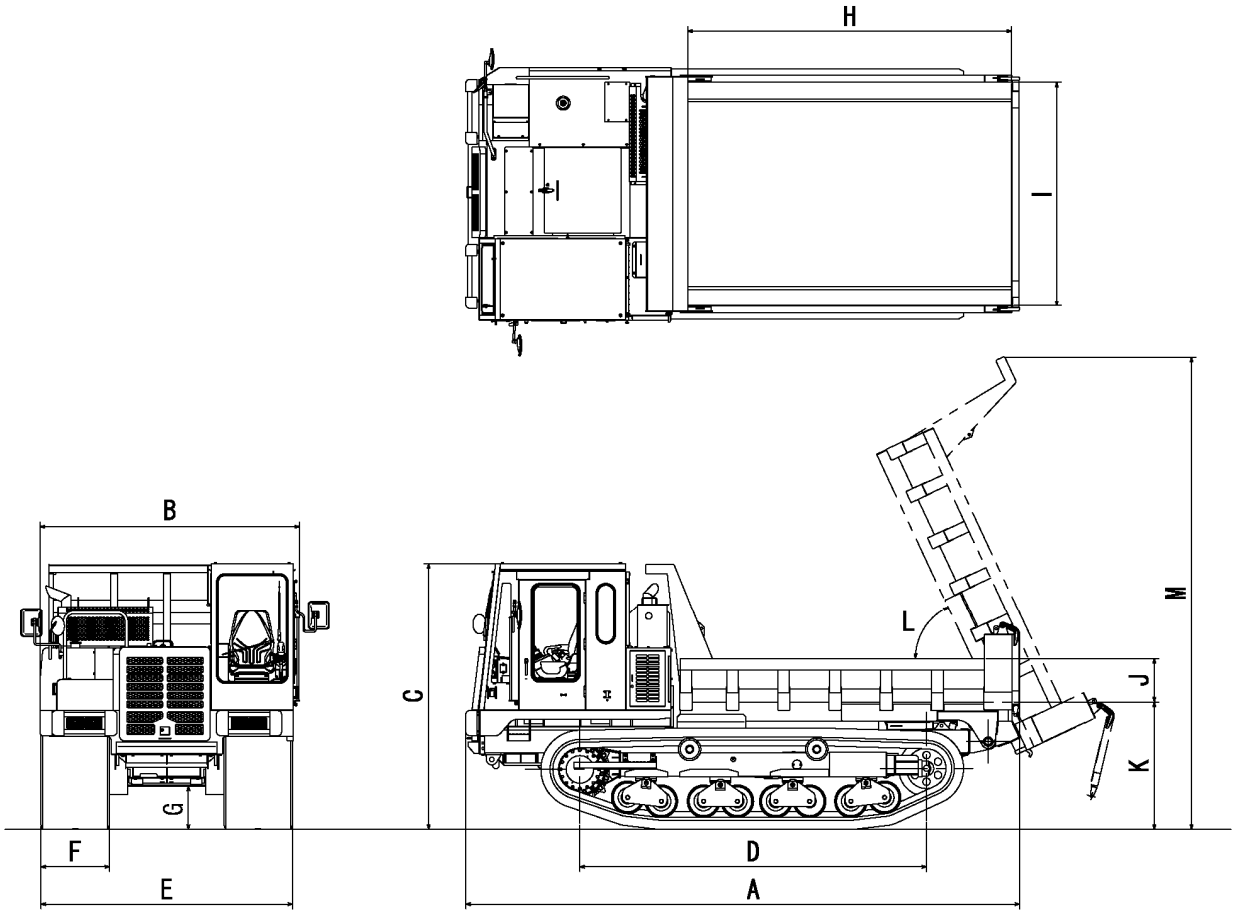

			Cabin spec.
Loading capacity		kg	11000
Machine weight		kg	14100
Travel speed Low/High		km/h	8/11
Engine	Model	-	Cummins QSL9
	Cylinder-total displacement	L	6-8.9
	Rated output	kW /min^{-1}	216/2200
Ground pressure	Empty	kPa	34
	Loaded	kPa	59
Body capacity	Fully loaded	m^3	6.3
	Flat loaded	m^3	3.9
A	Overall length	mm	6050
B	Overall width	mm	2840
C	Overall height	mm	2910
D	Tumbler center distance	mm	3790
E	Overall crawler width	mm	2750
F	Crawler width	mm	750
G	Minimum height from ground	mm	475
H	Body length	mm	3545
I	Inner body width	mm	2450
J	Body height	mm	475
K	Body floor height from ground	mm	1390
L	Maximum dumping angle	ºC	65
M	Maximum height in dumping	mm	5170

https://truckmanualshub.com/

2012 年 9 月　　初版発行
First Edition, September 2012

不許複製
All rights reserved.

IC120

取　扱　説　明　書
OPERATION MANUAL

編集及び発行所
IHI建機株式会社 プロダクトサポート部
Editing & Publishing Office.
IHI Construction Machinery Limited
Product Support Department
〒236-8611 神奈川県横浜市金沢区昭和町 3174
3174 Showa-machi, Kanazawa-ku, Yokohama, Kanagawa 236-8611 Japan