https://truckmanualshub.com/

Table of Contens

B

Main Body Section

Changes from Model 3

Overall Specifications

1. Specifications Comparison Table 1
2. Performance Improvements 4

Hydraulic-related Changes

1. Use of High-performance Return Filter (nephron filter and breaker filter eliminated) 5
2. Use of Add-on Valve 7
3. Multi Purpose Circuit Switched to One-touch Operation (breaker ⇔ crusher) 8

Hydraulic Pump

1. Hydraulic Pump Changes 9
2. Appearance Changes 9
3. Circuit Changes 9
4. Reduced Flow Force 10
5. Straight Travel Valve 11
6. Heat Circuit 12

Lower-section Related Changes

1. Center Joint Installation Section Notch Dimensions 14
2. Grease Bath Seal 14
3. Center Joint Rotation Stopper Installation Surface 14
4. Track Roller 15
5. Carrier Roller 16
6. Track Guard 16

Cab-related Changes

1. Cab Shape 17
2. Irregularly Shaped Steel Pipe Structure 17
3. Beefed Up Equipment 18
4. Interior Equipment 19
5. Front Window Lock Mechanism 22
6. Remote Support 22

Upper Swing Body Changes

1. High-rigidity Platform 23

https://truckmanualshub.com/

Table of Contens

Attachment Changes

1. Boom 24
2. Arm 25
3. Bucket 26
4. Coupler Pin Fastening 27
5. Pipe Clamp 27
6. Bucket Edge Bushing 27
7. Use of Plastic Shims 27
8. Reduced Boom Foot Section Play 27

Attchment Plate Thickness Comparison Table

Boom 28

Arm 28

https://truckmanualshub.com/

Table of Contens

Specifications

Overall

1. Main Data 29
2. Performance 29
3. Main Body Dimensions 29
4. Engine 30
5. Cooling System 30
6. Upper Side Work System 31
7. Operating Device 31
8. Swing Units 32
9. Travel Lower Body 33

Hydraulic Equipment

1. Hydraulic Device 33
2. Control Valve, Cylinder 34

Capacities, Filters

1. Water and Oil Capacities 34
2. Hydraulic Oil Filters 34
3. Fuel Filter 34

Lifting Capacity

Precautions for lifting loads with the hydraulic excavator 35

Lifting Capacities 36

Overall View

Overall View (SH210-5/SH210LC-5)

1. Standard Arm (2.94 m) 43
2. Short Arm (2.40 m) 43

Overall View (SH240-5)

1. Standard Arm (3.00 m) 44
2. Short Arm (2.50 m) 44
3. Long Arm (3.52 m) 45

Work Range Diagram

Work Range Diagram (SH210-5/SH210LC-5)

1. Standard Arm (2.94 m) 46
2. Short Arm (2.40 m) 47

Work Range Diagram (SH240-5)

1. Standard Arm (3.00 m) 48
2. Short Arm (2.50 m) 49
3. Long Arm (3.52 m) 50

https://truckmanualshub.com/

Table of Contens

Summary Section

Main Equipment Table

Lower Mechanism

1. Travel Unit 1
2. Take-up Roller 1
3. Upper-roller 1
4. Lower-roller 1
5. Recoil Spring 2
6. Shoes 2

Upper Mechanism

1. Swing Unit 3

Engine-related

1. Engine 4
2. Muffler 5
3. Air Cleaner (double element) 5
4. Radiator 5

Hydraulic Device

1. Hydraulic Pump 6
2. Pump P - Q Diagram 7

Control-related

1. Control Valve 9
2. Solenoid Valve (5-stack) 9
3. Remote Control Valve (left / right, travel operations) 10
4. Remote Control Valve Characteristic Diagram 11
5. Cushion Valve (heat circuit, with shuttle valve) 12
6. Selector Valve (option) 12
7. Center Joint 13

Backhow Attchment

1. Cylinder 14
2. Attachment 15

Equipment Layout Diagram

Main Equipment Layout 16

Consumable Part Layout 17

Standard Machine Option List

List of Optional Components 18

C

https://truckmanualshub.com/

Table of Contens

Hydraulics Section

Hydraulic Equipment Layout

Overall View 1
Pump Chamber Hydraulic Equipment Layout 2
Swing Body Center Section Hydraulic Equipment Layout 3
Housing Left Side Hydraulic Equipment Layout 4
Layout of Hydraulic Equipment in Cab 5

Port Diagram

Pump

1. Hydraulic Pump (standard model) 6

Valves

1. Control Valve 7
2. 5-stack Solenoid Valve 10
3. 2-stack Solenoid Valve 11
4. Remote Control Valves (upper side, travel) 12
5. Cushion Valve 13
6. 4-way Multi-valve 14
7. 2-way Multi-valve 15
8. Direction Valve / Shut-off Valve 16
9. HBCV 17

Manifolds

1. Manifold Under Cab 18
2. Manifold (accumulator section) 18
3. Manifold (hydraulic oil tank section) 19

Motors

1. Swing Motor 20
2. Travel Motor 22
3. Center Joint 23

Pilot Hose Connection Diagram

Pilot P and T Lines 24
Pilot Control Line 26
Pilot Control Line (2-way selector valve) 28
Pilot Control Line (4-way selector valve) 30

D

https://truckmanualshub.com/

Table of Contens

Function List

Function Table 32

Explanation of New Functions

1. Swing Relief Cut Control 34
2. Swing Speed Limit Control 36
3. Negative Control Power Save Control 37
4. Option Line Flow Adjustment Control 38
5. Multi Purpose Circuit (breaker ⇔ crusher) One-touch Switching Control 39
6. Bucket-close Regenerative Circuit 40

Explanation of Hydraulic Circuit and Operations (standard model)

Travel Circuits

1. Travel Low-speed Travel Circuit 41
2. Travel High-speed Travel Circuit 43
3. Straight Travel Circuit 45

Swing Circuits

1. Swing Speed Limit Control Circuit 47
2. Swing Relief Cut-off Control Circuit 49
3. Swing Priority Circuit 51
4. Swing Brake Circuit 53
5. Swing Parking Circuit (lever in neutral) 55
6. Swing Parking Circuit (brake release) 57
7. Swing Parking Circuit (machine stop) 59

Boom Circuits

1. Boom-up Circuit (single operation) 61
2. Boom-up Circuit (compound boom-up + arm-in) 63
3. Boom-down Regenerative Circuit 65
4. Boom-down Tilting Prevention Circuit 67
5. Boom-down Load Hold Valve Circuit 69

Arm Circuits

1. Arm-out Circuit 71
2. Arm-in Forced Regenerative Circuit 73
3. Arm-in Load Hold Valve Circuit 75

Bucket Circuit

1. Bucket-open Circuit 77
2. Bucket-close Regenerative Circuit 79

Negative Control Circuit

1. Negative Control Circuit (power save solenoid OFF) 81
2. Negative Control Power Save Circuit (power save solenoid ON) 83
3. Negative Control Circuit (bucket close, power save solenoid OFF) 85

https://truckmanualshub.com/

Increased Horsepower Circuits
1. Arm-in Increased Horsepower Circuit 87
2. Travel Increased Horsepower Circuit 89
Other Circuits
1. Cushion Circuit
(1) Arm-out Operation 91
(2) When arm-out Operation Stopped 93
(3) Arm-out → Arm-in Operation 95
2. Heat Circuit (lever in neutral) 97
3. Auto Power Boost Circuit (bucket close) 99
Explanation of Hydraulic Circuit and Operations (option)
Option Circuit
1. Breaker Circuit (single operation) 101
2. Shuttle Circuit (hydraulic fork) 103
3. Compatible Circuit
(1) Breaker Q Control 105
(2) 2nd Confluerece Crusher 107
4. Second Option Circuit (hydraulic rotation fork) 109
Main Equipment Structure and Operation Explanation
Pump
1. Hydraulic Pump 111
2. Regulator 113
3. Gear Pump 119
Motor
1. Travel Motor 120
2. Swing Motor 139
Valve
1. Control Valve 149
2. 5-stack Solenoid Valve Operation Explanation 182
3. Upper Side Pilot Valve (remote control valve) 184
4. Travel Pilot Valve (remote control valve) 189
5. Cushion Valve 193
6. Selector Valve (4-way) 197
7. Selector Valve (3-way) 201

D

https://truckmanualshub.com/

Table of Contens

Electrics Section

Explanation of New Functions

Work Mode Select Switch 1
Computer Connection Method 4
Monitor Changes 5
Pilot Pressure Switch Changed to Pressure Sensor 8
Pump Electromagnetization Proportion Valve 10
1. Horsepower Control Proportional Valve 10
2. P1 Flow Control Proportional Valve 10
System Control for Energy Saving 11
1. Reduced Fuel Consumption Through Transient Load Reduction Control 11
2. Reduced Fuel Consumption Through Swing Relief Cut Control 13
3. Reduced Fuel Consumption Through Power Save Control 15
Swing Speed Limit Control 17

Electrical Equipment Layout Diagram

Overall View 19
1. Main Unit Left Side Layout Diagram (radiator compartment) 20
2. Engine Section Layout Diagram 21
3. Main Unit Right Side Layout Diagram (pump compartment) 22
4. Main Unit Center Section Layout Diagram 23
5. Cab Layout Diagram 1 24
6. Layout Around Operator Seat 26
Stand-alone Parts Diagram 27

Main Equipment Structural Diagrams

Connection Connector Pin Layout
1. Computer A 44
2. Monitor 45

E

https://truckmanualshub.com/

Table of Contens

Electrical Circuit Diagram

Overall View

1. Sequence Circuit Diagram (A3) 46

Block Diagram

1. Computer A 47
2. Computer S 48
3. ECM 49
4. Monitor Display 50
5. Air Conditioner 51
6. Lever Lock 52
7. Horn 52
8. Working Light 53
9. Option 53
10. Others 54
11. Electrical Symbol List 55

Electrical Connector Wiring Diagram

Main Frame

1. Main Frame 56

Cab

1. Cab Main Harness 57
2. Cab Sub Harness 58
3. In Cab 59

Console

1. Console Right Harness 60
2. Console Left Harness 60

Electrical Parts and Wiring Assembly Diagram

Main Frame 61

Cab 62

Explanation of Functions and Operations

Explanation of Electrical Functions 63

Engine Speed Control

1. Throttle Control 65
2. Idling Control (auto / one-touch) 69
3. Idling Start 70
4. Idle Up 71
5. Auto Warm Up 71

https://truckmanualshub.com/

Engine Start / Stop Control
1. Engine Start / Stop Judgment 73
2. Power-cut Delay 74
3. Engine Emergency Stop 75
4. Neutral Start 77

Pump Control
1. Work Mode Control 78
2. Pump Added Horsepower Control 79
3. Pump Horsepower Cut Control 80
4. Power Save Control 81

Swing
1. Swing Brake 83
2. Swing Lock (for maintenance) 84
3. Swing Relief Cut 86
4. Swing Speed Limit 87

Travel
1. Travel Speed Switchover 89
2. Travel Alarm 90

Valve Control
1. Lever Lock 92
2. Solenoid Sticking Prevention 93
3. Pressure Boost Control 94

Monitor Control
1. Bar Graph
(coolant temperature gauge, oil temperature gauge, fuel gauge) 96

Accessories
1. Horn 103
2. Working Light 104
3. Wiper & Washer 105
4. Room Lamp 107
5. Radio Mute 109

Others
1. Anti-theft Protection 110
2. Battery Save Function 111
3. Alternator Power Generation Detection 112
4. Overload Alarm 113

E

https://truckmanualshub.com/

Table of Contens

Options

1. Option Line Control 114
2. Option Line Control 117
3. Feed Pump Automatic Stop 119
4. Return Filter Clogging Detected 122

Service Support

Screen Operations

1. Screen Shift 124

Screen Display List

1. CHK (status display) Screen List 126
2. DIAG (trouble diagnosis) Screen 138
3. HR (usage log) Screen List 140
4. CFG (setting change) Screen 145
5. CAL (troubleshooting support) Screen 149
6. Check the Monitor Switch (self-diagnosis function) 151
7. Option Flow Setting 153
8. Anti-theft Setting 155
9. Model Setting 157
10. Engine Screen Information 159

Screen Display Details

1. Message Display List 161

Trouble Display

1. Diagnostic Trouble Code Display 163
2. Main Unit Diagnostic Trouble Code List 164
3. Diagnostic Trouble Code (monitor display) 168
4. Sensor Trouble Operation Table 173
5. EPF (engine protection feature) 175

https://truckmanualshub.com/

Table of Contens

Engine Section

Engine Summary

Main Data Table (changes from model 3) 1
Overall Appearance Diagram 2
Sensor and Auxiliary Equipment Layout (left) 3
Sensor and Auxiliary Equipment Layout (rear) 4
Engine System Diagram 4
Fuel System Diagram 5
Detailed Parts Diagrams
1. ECM (engine control module) 6
2. Supply Pump / SCV (suction control valve) 7
3. Common Rail / Flow Damper 7
4. Common Rail Pressure Sensor / Pressure Limiter 8
5. Injector 8
6. Engine Coolant Temperature Sensor 9
7. Engine Oil Pressure Sensor 9
8. Cam Position Sensor (CMP sensor) 10
9. Crank Position Sensor (CKP sensor) 10
10. Atmospheric Pressure Sensor 11
11. Suction Air Temperature Sensor 11
12. Boost Pressure Sensor 12
13. Boost Temperature Sensor 12
14. Charge Fuel Pump 13
15. EGR Cooler 13
16. Lead Valve (check valve) 14
17. EGR Valve 14
Engine Control Summary 15

Explanation of Engine Terms

Function Explanation Table 16

Explanation of Engine Structure

Technology for Exhaust Gases
1. Common Rail System 18
2. Multi-Stage Fuel Injection (multiple injection) 19
3. Inter Cooler 21
4. EGR (exhaust gas recirculation) 22

F

https://truckmanualshub.com/

Table of Contens

Explanation of Engine Operation

Engine Overall

1. Comparison of 6BG1 and 4HK1 24

Fuel Unit

1. Common Rail System Summary 25
2. Change Points for Injection Method (governor, common rail) 26
3. Explanation of Injector Operation 27
4. Explanation of Supply Pump Operation 30
5. Supply Pump Disassembly Diagram 31
6. Explanation of Flow Damper Operation 32
7. Pressure Limiter 33
8. Cautions for Maintenance 34

Explanation of Engine Control

1. Fuel Injection Quantity Correction 37
2. Starting Q Correction 37
3. Pre-heat Control (QOS quick on start) 37
4. Atmospheric Pressure Correction (high altitude correction) 37
5. Control for Overheating 38
6. Control for Boost Temperature Rise 39
7. Control for Engine Oil Pressure Drop 39
8. Start Control (coolant temperature monitoring) 39
9. Long Cranking Control 40
10. Starting Control for Reduced Number of Cylinders 40
11. Normal Stop (key switch OFF operation) 40
12. Engine Start / Stop Judgment 41

Engine Maintenance Standards

Engine Information Screen 42

Monitor Operation Method 43

Engine Information (Q resistance, QR code, engine serial number) Copying Method 44

Rewriting Injector QR Codes 45

When Replacing Computer A at the Same Time 47

Engine Information Acquisition Timing 47

Redoing Engine Information Acquisition 47

Trouble Display 47

Engine Equipment Table

Exhaust Gas Third Regulation Accessory Electrical Parts Compatibility (ISUZU part number) 48

https://truckmanualshub.com/

Exhaust Gas Regulations
Features of Materials Subject to Exhaust Gas Regulation 49
Exhaust Gas Regulation Values 49
Cautions for Fuel Used
Engine Fuel and Maintenance of Fuel Filters 51
1. Fuel to be applied 51
2. Maintenance of fuel filters 53

F

https://truckmanualshub.com/

Table of Contens

Air Conditioner Section

Changes from Model 3

Change List 1

Layout Diagram

Air Conditioner Overall Diagram

1. Frame 2
2. Cab 4

Equipment Layout Diagram 5

Circuit Diagram

Air Conditioner Circuit Diagram 6

Explanation of Functions

Explanation of Control 7

1. Air Mix Motor Actuator Control 8
2. Blow Mode Motor Actuator Control 8
3. Refresh / Recirculate Switch Motor Actuator Control 9
4. Blower Amp Control 10
5. Compressor Clutch Control 13
6. COOLMAX Control and HOTMAX Control 14
7. Trouble Detection and Control after Trouble Detected 15
8. Monitor Mode 17
9. Door Switch Control 18
10. Inside Air Filter Clogging Detection Control 19

Actuator Inspection

Air Mix Motor Actuator Inspection 22

Refresh / Recirculate Motor Actuator Inspection 24

Mode Motor Actuator Inspection 26

Self-diagnosis Function With Panel Display

Trouble Display and Self-check Procedure

1. Trouble Display Position 28
2. Explanation of Trouble Display 28
3. Explanation of Monitor Mode 30

Part Function and OK / NG Judgment

Control Panel and Control Unit 39

Blower Amp 39

Relay 40

Air Mix Actuator 40

Refresh / Recirculate Actuator 41

Blow Mode Actuator 41

G

https://truckmanualshub.com/

Table of Contens

Evaporator Sensor 42
Dual Pressure Switch 42
Solar Radiation Sensor 42

https://truckmanualshub.com/

Table of Contens

New Machine Performance Section

New Machine Performance

Performance Evaluation Check Sheet 1

Performance Evaluation Recording Sheet 2

Reference Values

SP Mode 3

H

https://truckmanualshub.com/

Table of Contens

Maintenance Section

Pressure Measurement and Adjustment Procedures

Procedures for Pressure Measurement from the Monotor Display 1

Monitor and Switch Panel

1. Pressure Measurement Method 1
2. Operating Method 1

Procedures for Measuring Hydraulic Oil Temperature from the Monitor Display

1. Hydraulic Oil Temperature Measurement Method 2
2. Operating Method 2

Procedures for Pressure Measurement by Installing Pressure Gauge

1. Preparations 3
2. Items to Prepare 3

Pressure Measuring ports 4

Control valve 5

Pressure Measurement Preparations 6

Pressure Measurement and Adjustment Procedures

1. Main Pressure Measurement 9
2. Pilot Pressure Measurement 13
3. Negative Control Pressure Measurement 14

Pressure Adjustment

1. Main Pressure Adjustment 15
2. Pilot Pressure Adjustment 18

Hydraulic Pump Flow Measurement Procedure

Preparations 19

1. Items to Prepare 19

Work Preparations 20

Flow Measurement 23

Drain Volume Measurement Procedure

Preparations 24

Travel Motor Drain Volume Measurement 24

Swing Motor Drain Volume Measurement 27

Air Bleed Procedure

Hydraulic Pump 28

Travel Motor 29

Swing Motor 30

I

https://truckmanualshub.com/

Table of Contens

Procedures for Replacing Consumable Parts

Air Conditioner Belt, Fan Belt Replacement

1. Air Conditioner Belt Replacement 31
2. Fan Belt Replacement 33

Fuel Filter Replacement

1. Filter Replacement 36
2. Air Bleeding 38

Engine Oil Filter and Engine Oil Replacement

1. Engine Oil Replacement 39
2. Engine Oil Filter Replacement 41

Radiator Coolant Replacement 42

Air Cleaner Cleaning and Replacement 43

Hydraulic Oil Filter Replacement 45

1. Return Filter Replacement 45
2. Suction Filter Replacement 46
3. Air Breather Element Replacement 47
4. Pilot Oil Filter Replacement 47
5. Hydraulic Oil Replacement 48

Others

1. Coolant Filling 51
2. Washer Fluid Filling 51

Lever Pattern Change Procedure

Items to Prepare

ISO Type 52

ISO Type ⇒ SUMITOMO Type 53

ISO Type ⇒ MITSUBISHI Type 53

ISO Type ⇒ SHINKO Type 54

Periodic Maintenance Procedures

Maintenance Every 250 Hours 55

1. Battery Inspection and Replacement 55

Maintenance After First 250 Hours for New Machine / Every 1000 Hours from then ON

1. Swing Reduction Gear Oil Replacement 56
2. Gear Oil Filling 57
3. Replace the Flange Packing at the Bottom of the Fuel Tank. 58

Bolt Size and Torque Table

Bolt and Nut Tightening 59

Retightening Torque Table 60

https://truckmanualshub.com/

Table of Contens

Data Section

Main Unit Weight

Major Component Weight (standard specifications) 1

Individual Part Weight 2

Dry weight for each part is shown in the table below 2

Shoe Weight (one side) 2

Arm Weight 2

Bucket Weight 3

Compatibility

Compatibility 4

1. Main Part Compatibility Table (SH210-5) 4
2. Main Part Compatibility Table (SH210LC-5) 5
3. Main Part Compatibility Table (SH240-5) 6
4. Main Part Compatibility Table (SH200/240-5) 7

Attachment Installation Methods

Attachment Dimensions 8

Paint Colors

Paint Colors 9

Unit Conversion Ratio

Unit Conversion Ratio 10

J

https://truckmanualshub.com/

B

Overall Specifications

1. Specifications Comparison Table

		SH210-5			SH200-3		Improvements
Operating weight	kg	19900		+ 800 kg	19100		Increased stability
Engine model	-	ISUZU AI-4HK1X			ISUZU BB-6BG1T		
Number of cylinders - Displacement	cc	4-5193			6-6494		
Engine output (SAE J1349 NET)	kW / min^{-1}	117 / 1800		114 %	103 / 1950		Increased output thanks to increased pump horse-power
Fuel tank capacity	L	410		121 %	340		
Operating pressure / when boosted	MPa	34.3 / 36.8		=	34.3 / 37.3		
Travel pressure	MPa	34.3		=	34.3		
Swing pressure	MPa	29.4		105 %	27.9		
Maximum flow (no load)	Model	2 pistons + 1 gear			2 pistons + 1 gear		
	L / min	211 X 2 + 18		104 %	201 X 2 + 20		Flow increased by amount of cylinder bore increase
Hydraulic oil tank capacity (Standard / full capacity)	L	147 / 240		117 %	120 / 206		
Arm	-	Short	Standard	Standard	Short	Standard	
Arm length	mm	2400	2940	98 %	2400	3000	
Maximum digging radius	mm	9420	9900	99 %	9410	9960	
Maximum digging depth	mm	6110	6650	99 %	6110	6710	
Maximum vertical straight wall digging depth	mm	5500	5960	98 %	5480	6080	
Maximum digging height	mm	9410	9610	100 %	9380	9650	
Maximum dump height	mm	6590	6810	100 %	6570	6840	
Minimum swing radius at front	mm	3600	3600	99 %	3670	3620	
Bucket digging force / with power up	kN	142 / 152		108 %	130 / 141		Increased by increased cyl-inder bore and review of attachment dimensions
Arm digging force / with power up	kN	123 / 132	103 / 110	106 %	115 / 126	95.3 / 104	
Swing speed	min^{-1}	11.5		97 %	11.9		
Travel speed	km / h	5.6 / 3.4		102 %	5.5 / 3.3		Travel motor capacity and pulling power increased, speed reviewed
Ambient noise SPL (7 m) / PWL (ISO)	dB (A)	/ 98.4		- 3 db	/ 101.4		Reduced noise
Noise inside cab	dB (A)	69.3		- 4 db	73.3		
Boom cylinder	mm	120-85-1255		=	120-85-1255		Cylinder bore increased in order to prevent speed drop under high load
Arm cylinder	mm	140-100-1460		104 %	135-95-1474		
Bucket cylinder	mm	120-85-1010		104 %	115-80-1012		

https://truckmanualshub.com/

Changes from Model 3

		SH210LC-5			SH200LC-3		Improvements
Operating weight	kg	20400		+ 100 kg	20300		Increased stability
Engine model	-	ISUZU AI-4HK1X			ISUZU BB-6BG1T		
Number of cylinders - Displacement	cc	4-5193			6-6494		
Engine output (SAE J1349 NET)	kW / min^{-1}	117 / 1800		114 %	103 / 1950		Increased output thanks to increased pump horse-power
Fuel tank capacity	L	410		121 %	340		
Operating pressure / when boosted	MPa	34.3 / 36.8		=	34.3 / 37.3		
Travel pressure	MPa	34.3		=	34.3		
Swing pressure	MPa	29.4		105 %	27.9		
Maximum flow (no load)	Model	2 pistons + 1 gear			2 pistons + 1 gear		
	L / min	211 X 2 + 18		104 %	201 X 2 + 20		Flow increased by amount of cylinder bore increase
Hydraulic oil tank capacity (Standard / full capacity)	L	147 / 240		117 %	120 / 206		
Arm	-	Short	Standard	Standard	Short	Standard	
Arm length	mm	2400	2940	98 %	2400	3000	
Maximum digging radius	mm	9420	9900	99 %	9410	9960	
Maximum digging depth	mm	6110	6650	99 %	6110	6710	
Maximum vertical straight wall digging depth	mm	5500	5960	98 %	5480	6080	
Maximum digging height	mm	9410	9610	100 %	9380	9650	
Maximum dump height	mm	6590	6810	100 %	6570	6840	
Minimum swing radius at front	mm	3600	3600	99 %	3670	3620	
Bucket digging force / with power up	kN	142 / 152		108 %	130 / 141		Increased by increased cyl-inder bore and review of attachment dimensions
Arm digging force / with power up	kN	123 / 132	103 / 110	106 %	115 / 126	95.3 / 104	
Swing speed	min^{-1}	11.5		97 %	11.9		
Travel speed	km / h	5.6 / 3.4		102 %	5.5 / 3.3		Travel motor capacity and pulling power increased, speed reviewed
Ambient noise SPL (7 m) / PWL (ISO)	dB (A)	/ 98.4		- 3 db	/ 101.4		Reduced noise
Noise inside cab	dB (A)	69.3		- 4 db	73.3		
Boom cylinder	mm	120-85-1255		=	120-85-1225		Cylinder bore increased in order to prevent speed drop under high load
Arm cylinder	mm	140-100-1460		104 %	135-95-1474		
Bucket cylinder	mm	120-85-1010		104 %	115-80-1012		

https://truckmanualshub.com/

		SH240-5				SH240-3			Improvements
Operating weight	kg	24300			+ 1000 kg	23300			Increased stability
Engine model	-	ISUZU AH-4HK1X				ISUZU BB-6BG1T			
Number of cylinders - Displacement	cc	4-5193				6-6494			
Engine output (SAE J1349 NET)	kW / min^{-1}	132 / 2000			109 %	121 / 2150			Increased output thanks to increased pump horse-power
Fuel tank capacity	L	410			121 %	340			
Operating pressure / when boosted	MPa	34.3 / 36.8			=	34.3 / 37.3			
Travel pressure	MPa	34.3			=	34.3			
Swing pressure	MPa	28.9			=	28.9			
Maximum flow (no load)	Model	2 pistons + 1 gear				2 pistons + 1 gear			
	L / min	234 X 2 + 20			109 %	212 X 2 + 22			Flow increased by amount of cylinder bore increase
Hydraulic oil tank capacity (Standard / full capacity)	L	147 / 250			111 %	120 / 225			
Arm	-	Short	Standard	Long	Standard	Short	Standard	Long	
Arm length	mm	2500	3000	3520	97 %	2500	3100	3500	
Maximum digging radius	mm	9820	10280	10790	99 %	9900	10420	10840	
Maximum digging depth	mm	6400	6900	7420	99 %	6370	6970	7390	
Maximum vertical straight wall digging depth	mm	5700	6140	6680	98 %	5650	6210	6660	
Maximum digging height	mm	9560	9760	10070	99 %	9610	9810	10070	
Maximum dump height	mm	6550	6760	7060	100 %	6550	6760	7000	
Minimum swing radius at front	mm	3980	3950	3950	99 %	4010	3870	3900	
Bucket digging force / with power up	kN	162 / 174			101 %	160 / 173			Increased by review of attachment dimensions
Arm digging force / with power up	kN	141 / 151	120 / 129	107 / 115	103 %		115 / 125		
Swing speed	min^{-1}	10.7			102 %	10.4			
Travel speed	km / h	5.5 / 3.5			100 %	5.5 / 3.4			
Ambient noise SPL (7 m) / PWL (ISO)	dB (A)	/ 100			- 3 db	/ 103			Reduced noise
Noise inside cab	dB (A)	68.1			- 4 db	72.1			
Boom cylinder	mm	130-90-1335			104 %	125-90-1284			For increased hanging performance boom cylinder bore increased. No. 1 arm-in its class used.
Arm cylinder	mm	145-105-1660			100 %	145-105-1627			
Bucket cylinder	mm	130-90-1070			100 %	130-90-1073			

https://truckmanualshub.com/

Changes from Model 3

2. Performance Improvements

(1) Improved strength

- Increased pump horsepower
- Increased arm and bucket cylinder bores
- Increased travel motor capacity
- Increased swing power (increased swing relief pressure)
- Increased hanging performance

(2) Improved speed

- Increased pump horsepower
- Increased bed digging speed
- Bucket-close regeneration circuit used

(3) Improved operability

- Spool open characteristic reviewed
- Reduced shock for travel + upper side operation (change in straight travel circuit)
- Improved compound operability for crusher + upper side operation (change in option merge circuit)
- Increased heat characteristic (change in cushion valve)
- Improved response (improved remote control valve)

(4) Easier operation

- SP, H, A mode select switch eliminated (difficulty of button switch eliminated)
- Automatic selection (SP, H, A mode) according to degree of opening of throttle volume
- Compatible circuit switched to one-touch operation (breaker ⇔ crusher) (can only be switched within cab)

(5) Improved universality

- Use of Add-on Valve
- Increased capacity for No. 2 option pump (27.5 → 65 L / min.)
- Function added for switching flow when option line used (to support special attachment specifications)

(6) Energy saving (improved fuel economy)

- Foot relief (negative control) made variable (standby pressure reduced)
- Swing relief cut (when swing starts)(pump excess flow reduced)
- Pump torque variable control
- A mode control method reviewed
- Increased pump efficiency

(7) Improved work environment

- Reduced pump noise

(8) Improved maintainability

- Filter layouts reviewed
- High-performance return filter used (nephron filter eliminated, breaker filter eliminated)
- Electric filter indicator used (for breaker specifications) Monitor display in cab

https://truckmanualshub.com/

Hydraulic-related Changes

1. Use of High-performance Return Filter (nephron filter and breaker filter eliminated)

   Return filter is made more precise to make nephron filter centralized.

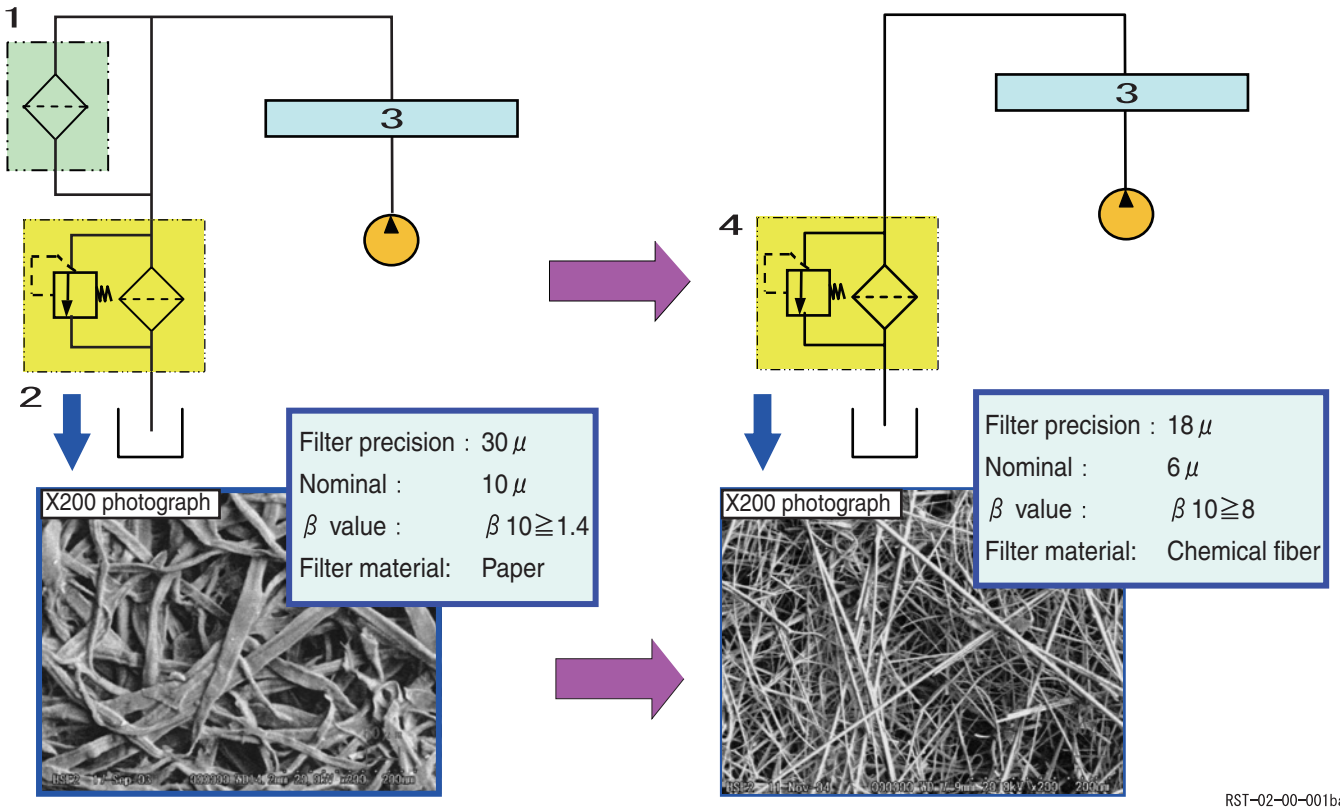

RST-02-00-001ba

1	Nephron filter	3	Control valve
2	Return filter	4	High-precision return filter

(1) Explanation of β value

Recently, filter capacity has come to be expressed with β values instead of filter precision.

10 μ dirt is reduced to 1 / 1.4 (71.4 %) by one pass through the filter.
28.6 % of 10 μ dirt is captured.
Even if nephron captured 100 % of 10 μ dirt, this is because the filter is the bypass type.
Overall, the dirt is reduced to 71.1 % and 28.9 % is captured.

10 μ dirt is reduced to 1 / 8 (12.5 %) by one pass through the filter.
87.5 % of 10 μ dirt is captured.

(2) Results of comparison with actual machines

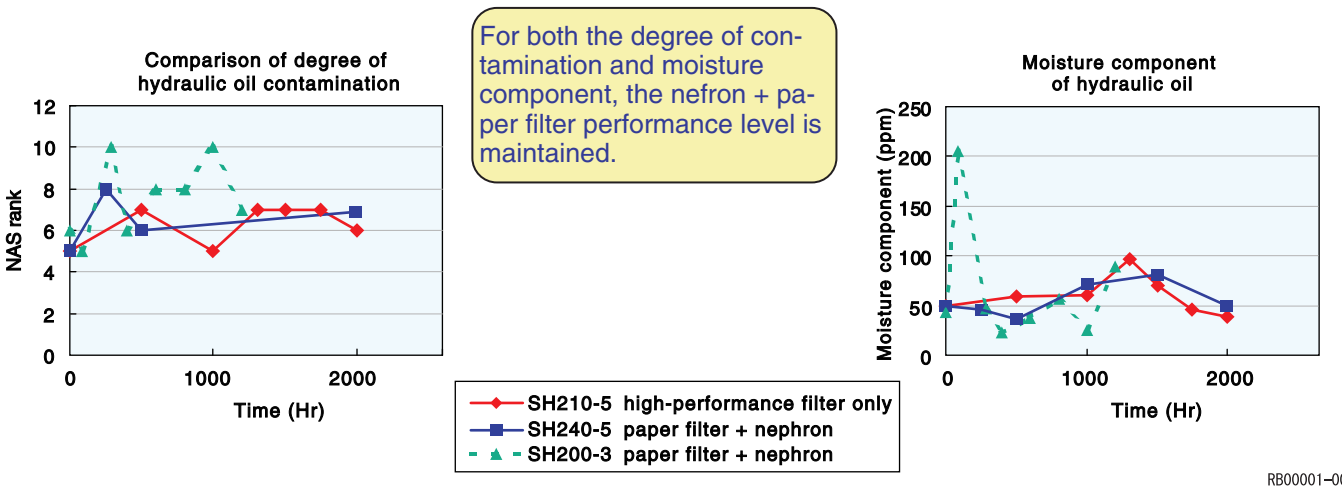

RB00001-001

https://truckmanualshub.com/

Changes from Model 3

Return filter have been given higher performance and the separate breaker filter function centralized.

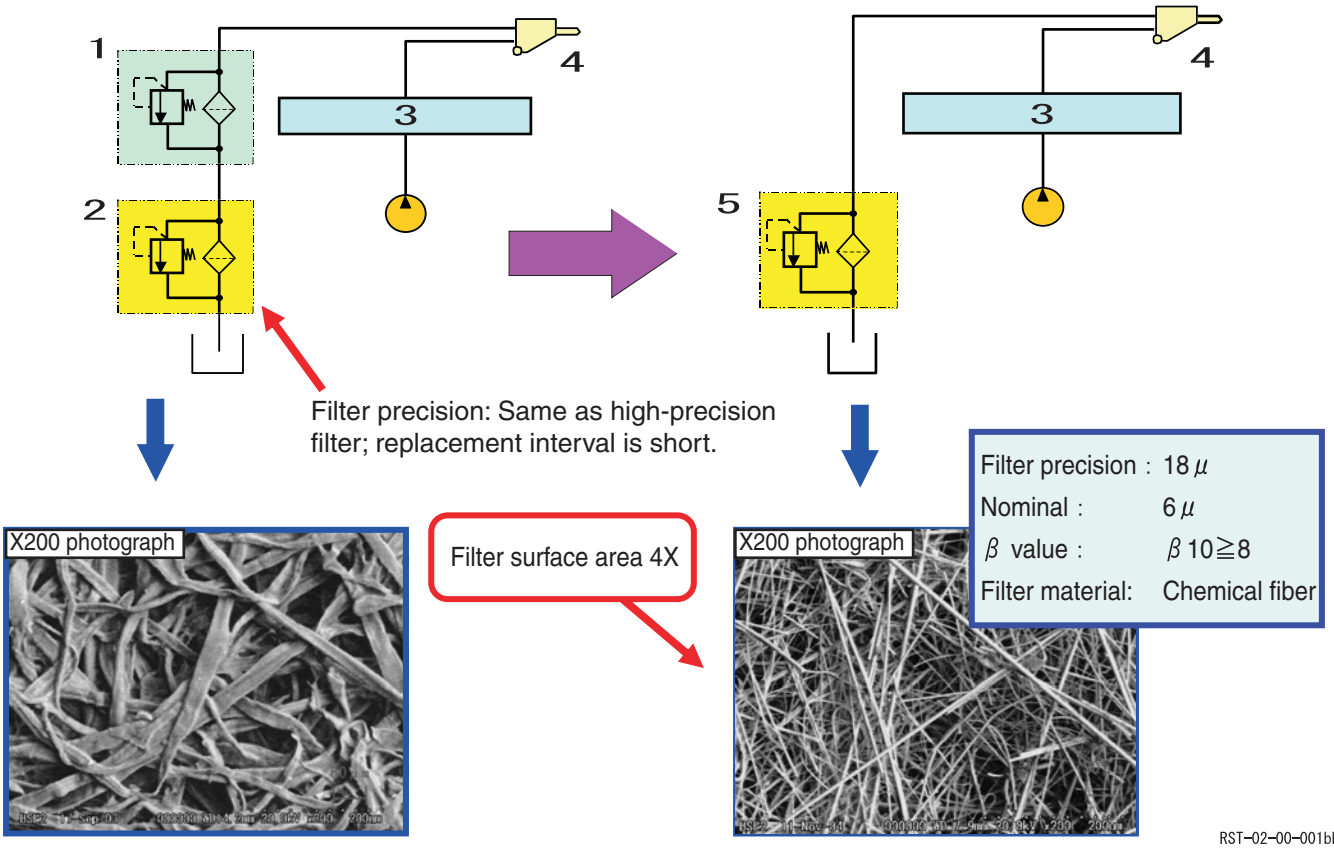

1	Breaker filter	4	Breaker
2	Return filter	5	High-precision return filter
3	Control valve		

https://truckmanualshub.com/

B

2. Use of Add-on Valve

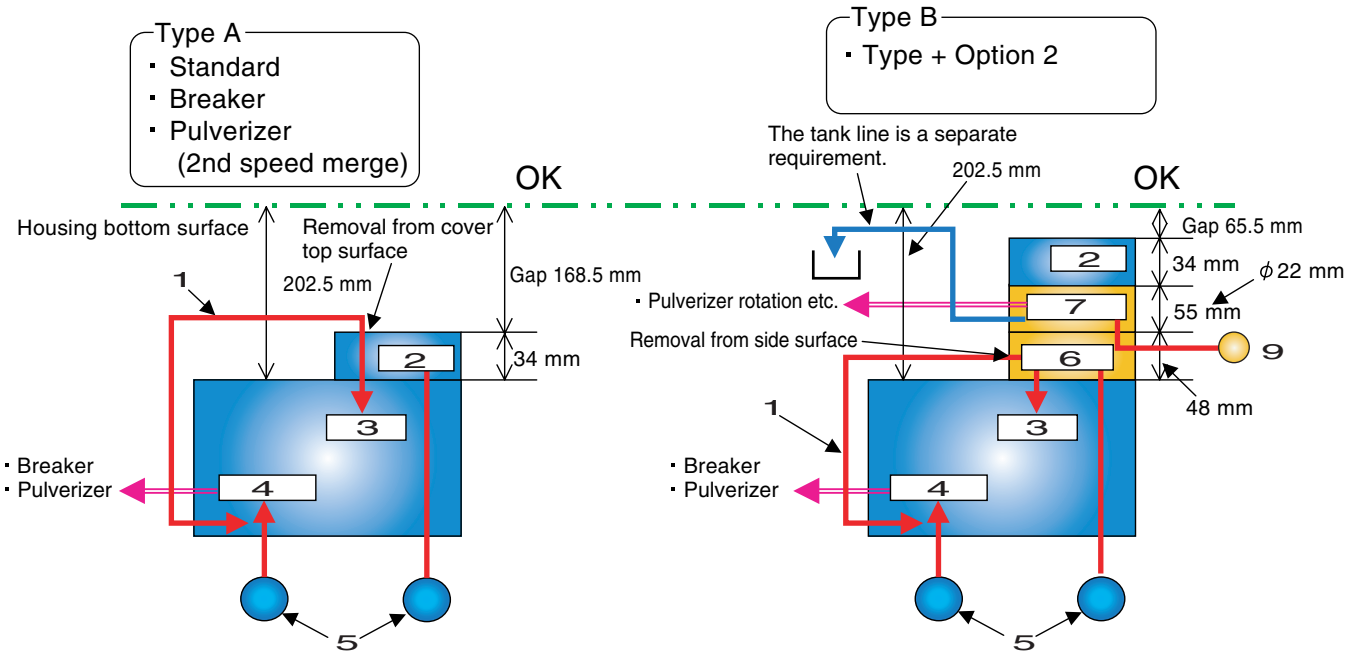

Type C
- Type A + second option X 2 (elevator cab)
- Lifting magnet (uses replacement pulverizer)
- Second option used with elevator cab

Due to vibration with thin seal cushion and the like
OK if interference prevention measures taken

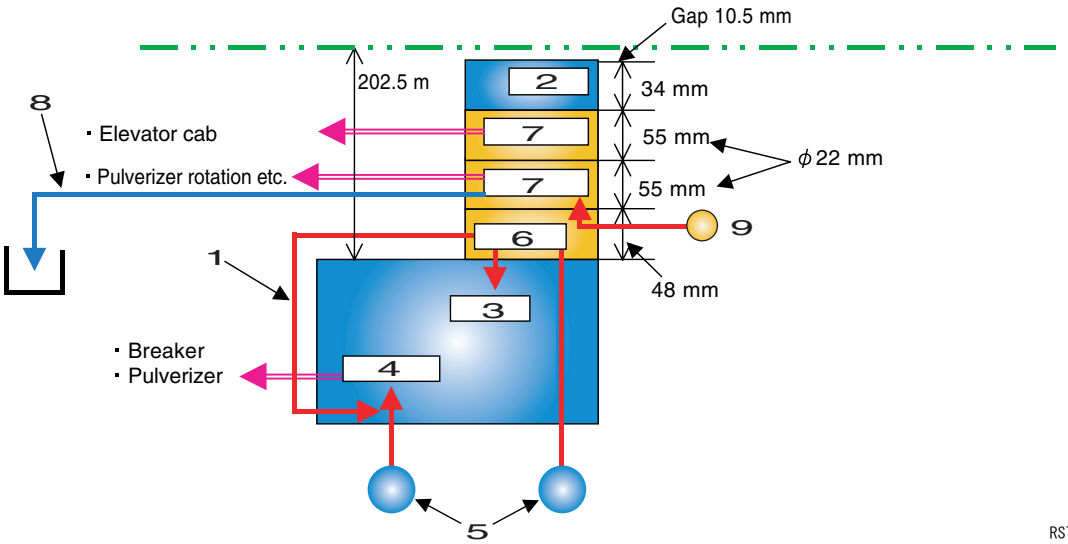

RST-02-00-001bd

1	Merge pipe	6	Inlet
2	Cover	7	Option 2
3	Bypass cut valve	8	Tank line
4	Option	9	Option 2 pump
5	Main pump		

https://truckmanualshub.com/

Changes from Model 3

3. Multi Purpose Circuit Switched to One-touch Operation (breaker ⇔ crusher)

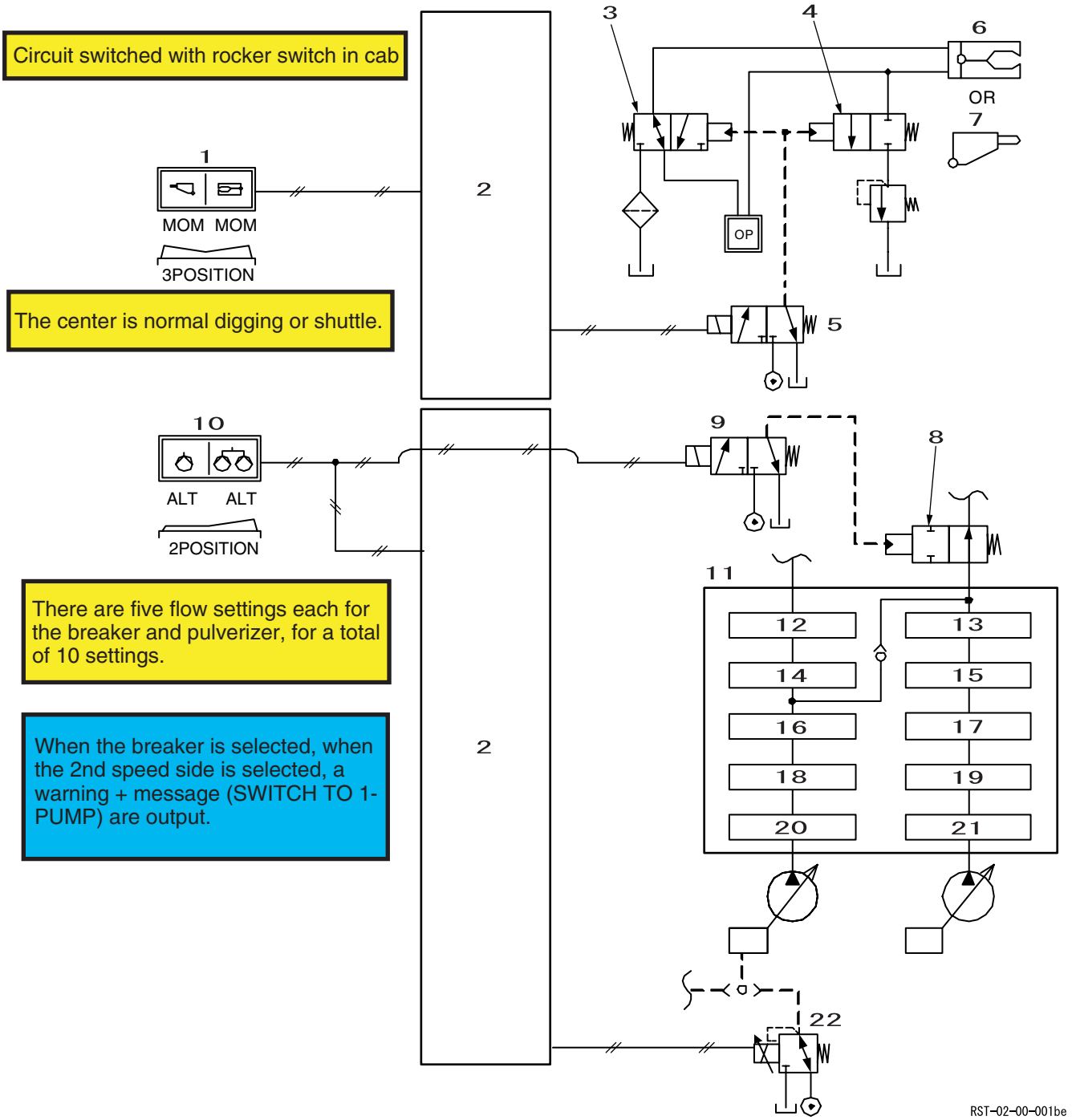

1	Option line select switch	9	2nd speed merge solenoid valve	17	Boom (1)
2	Computer A	10	2nd speed merge switch	18	Swing
3	Three-way valve	11	Control valve	19	Travel (left)
4	Pilot switchover valve	12	Arm (1)	20	Travel (right)
5	Option line switchover solenoid	13	Arm (2)	21	Straight travel
6	Crusher	14	Option	22	Flow shift proportional valve
7	Breaker	15	Bucket		
8	Bypass cut valve	16	Boom (2)		

https://truckmanualshub.com/

Hydraulic Pump

1. Hydraulic Pump Changes

   The basic structure is unchanged from that used in Model 3.
   The specifications changes and improvements are as follows.

- Increased discharge capacity (higher slope) 103 cc / rev → 117 cc / rev
- Horsepower setting reviewed (each mode) horsepower increased, engine reserve ratio increased
- Proportional valve and shuttle valve added to front pump negative control section
  Swing speed limit, swing relief cut, option flow setting, reduced flow for non-operation (energy saving)
- Shuttle valve added to rear pump negative control sectionReduced flow for non-operation (energy saving)
- Valve plate notch shape changed and through-bolt section covered to reduce noise
- O-ring added to regulator piston sectionReduced leakage amount (increased efficiency)

2. Appearance Changes

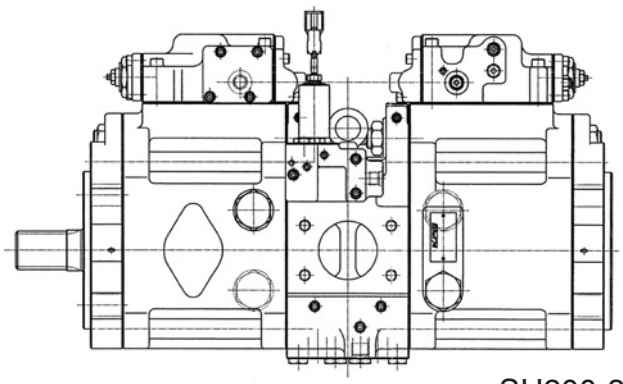

SH200-3

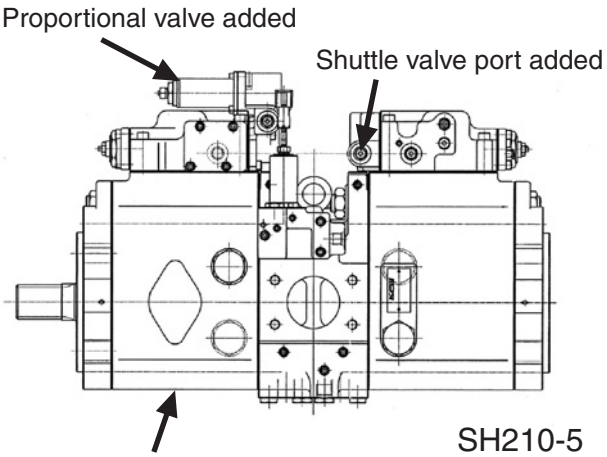

SH210-5

RB00001-002

3. Circuit Changes

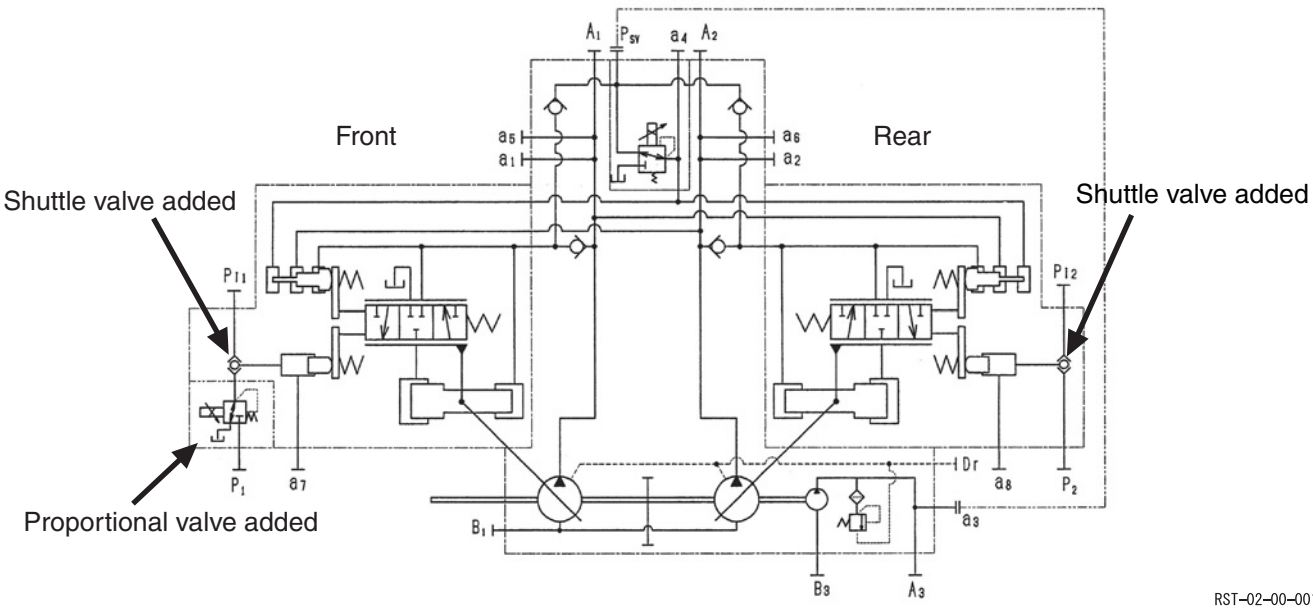

RST-02-00-001ab

https://truckmanualshub.com/

4. Reduced Flow Force

By changing the structure in the control valve, the hydraulic oil flow has been reviewed and the resistance (flow force) was reduced to greatly improve fine operability and provide a linear response that better approximates human sensation.

Lever stroke and ATT correlation diagram (image diagram)

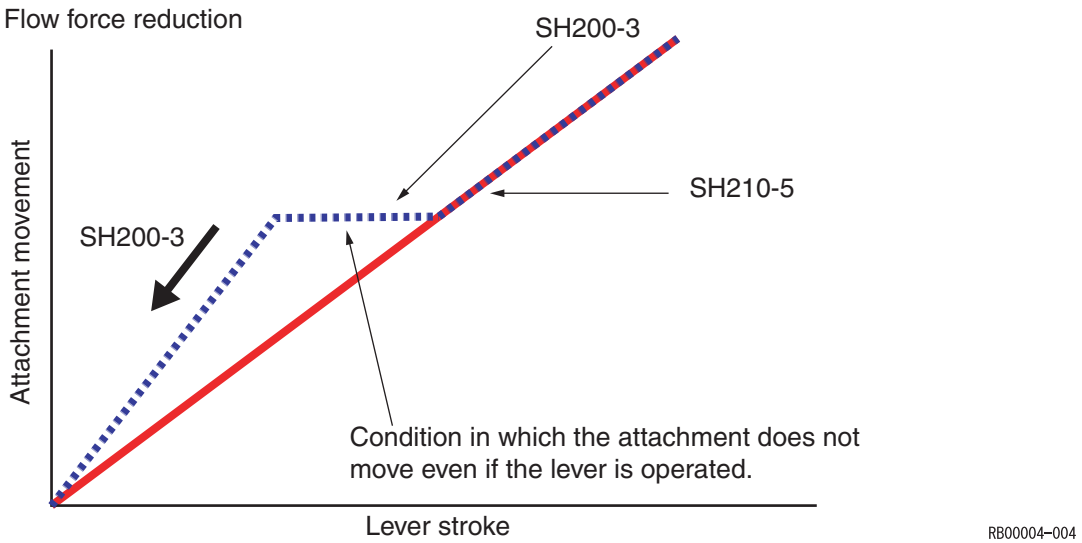

This is when it unleashes its power!

- For hanging work, precision work (positioning), etc., the cylinder movement is linked linearly to the operation lever movement.
- For fine operation, such as pin hole position alignment when replacing the bucket
- For fine work such as leveling and grading
- Even for work that requires speed, such as continuous piling, even for compound operations, the operation feel is smooth and stress-free.

This is one example of a swing line.
The hydraulic oil flow has been changed to have the same direction as the spool.
The resistance (flow force) has been reduced and smooth movement attained.
The same type of improvements have been made at many locations to improve the operability.

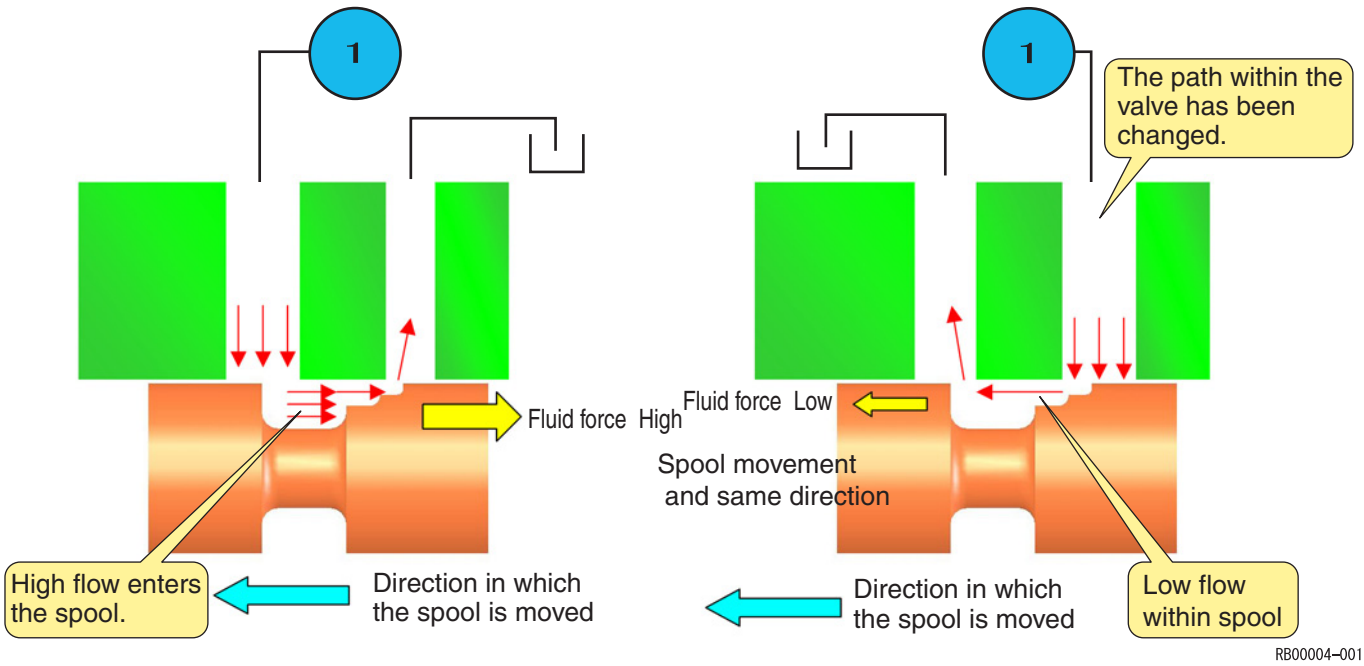

1	Motor

https://truckmanualshub.com/

5. Straight Travel Valve

Improved operability of upper side operation and simultaneous travel operation

Even when levers are operated while you are travelling, the travel speed is reduced smoothly according to the distance the lever is moved.

This is when it unleashes its power!

Travel on steep slopes for construction in mountainous areas (afforestation-related civil works, construction of new forest roads, etc.) is simultaneous with arm operations.

When you move the arm, the ratio of hydraulic oil flowing to the travel motor is reduced.The straight travel valve is adjusted according to the upper side lever operation to attain shock-free speed reduction and straight travel.

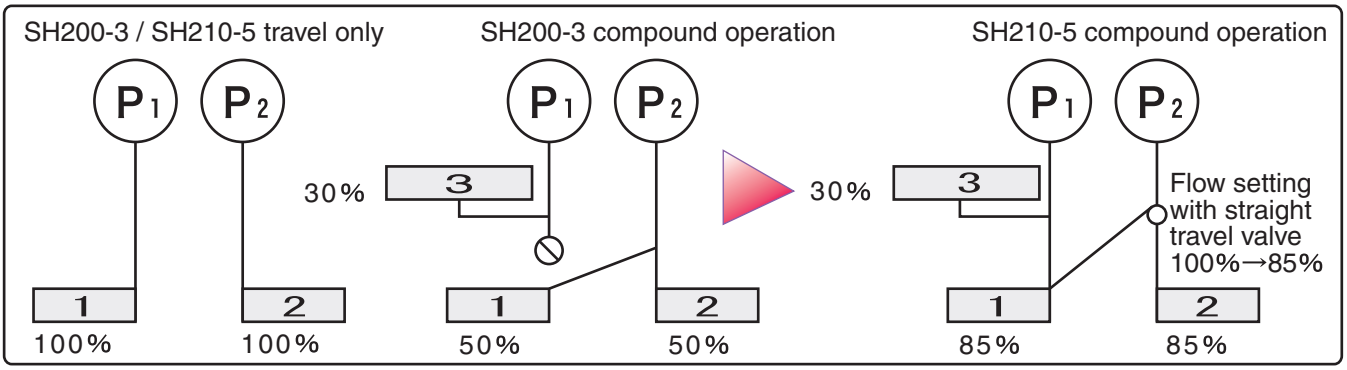

1	Right travel	2	Left travel	3	Boom operation

Model 5 circuits

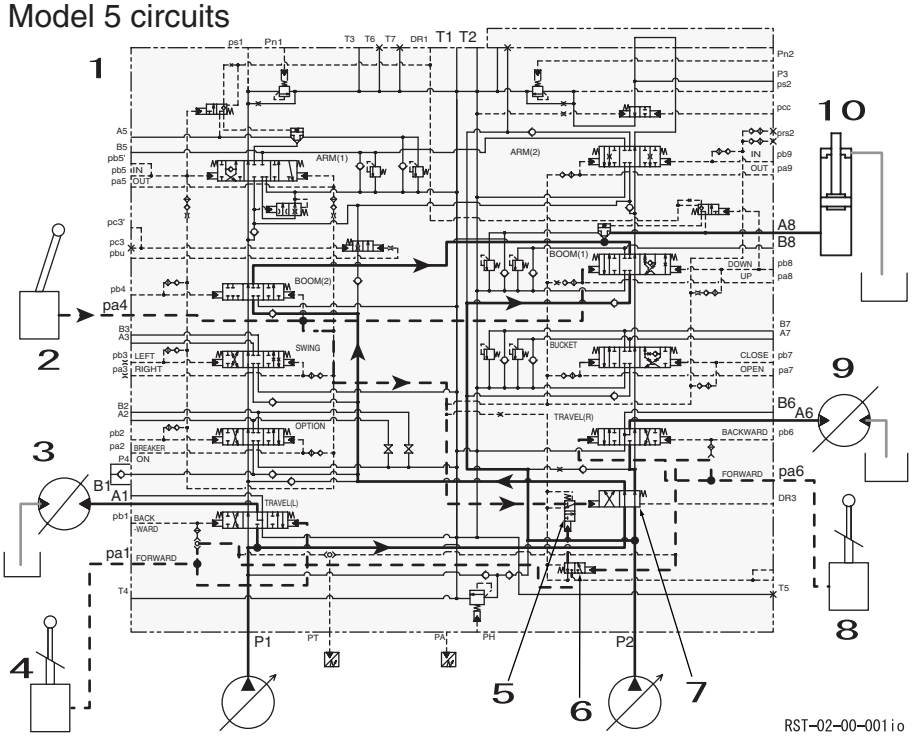

1	Control valve
2	(Upper side) Remote control valve
3	Left travel motor
4	Left travel remote control valve
5	Straight travel signal (left)
6	Straight travel signal (right)
7	Straight travel valve
8	Right travel remote control valve
9	Right travel motor
10	Boom cylinder

This is an example of simultaneous boom-up operation and travel.

Through upper side (boom-up) lever operation, the pilot pressure oil from the remote control valve flows in the control valve Pa4 port and the boom spool is switched. At the same time, the pilot pressure oil split internally is fed to the straight travel valve via the straight travel signal (left) and the straight travel spool is switched.

The amount of switching of the straight travel spool varies with the upper side (boom-up) pilot pressure.

This prevents any sudden drop in travel speed.

https://truckmanualshub.com/

6. Heat Circuit

Heater speed increased

Since the oil flow has been changed so that the heated return oil passes through the remote control valve, the pilot line heater is sped up.

When heat circuit is operated (for arm and boom single-side operation), warm-up speed increase (cushion valve).

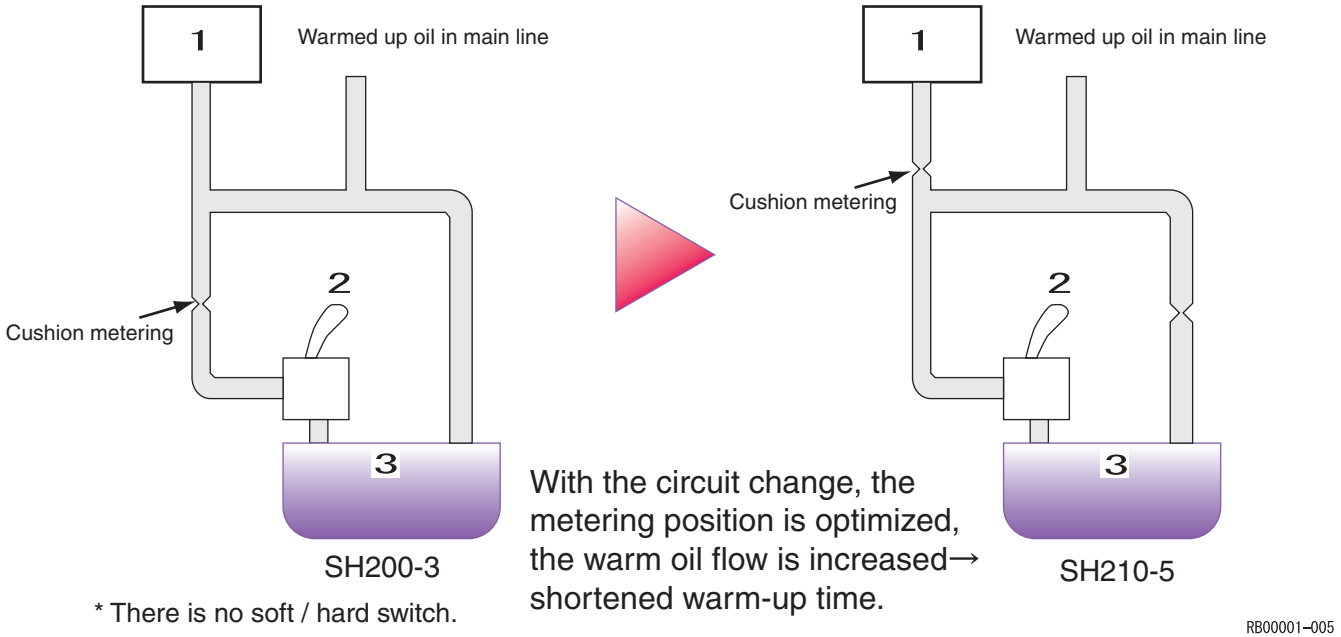

* There is no soft / hard switch.

RB00001–005

1	Control valve
2	Remote control valve
3	Tank

https://truckmanualshub.com/

Model 3 circuits

Almost all the heated oil was dropped into the tank and it was difficult to heat the pilot line.

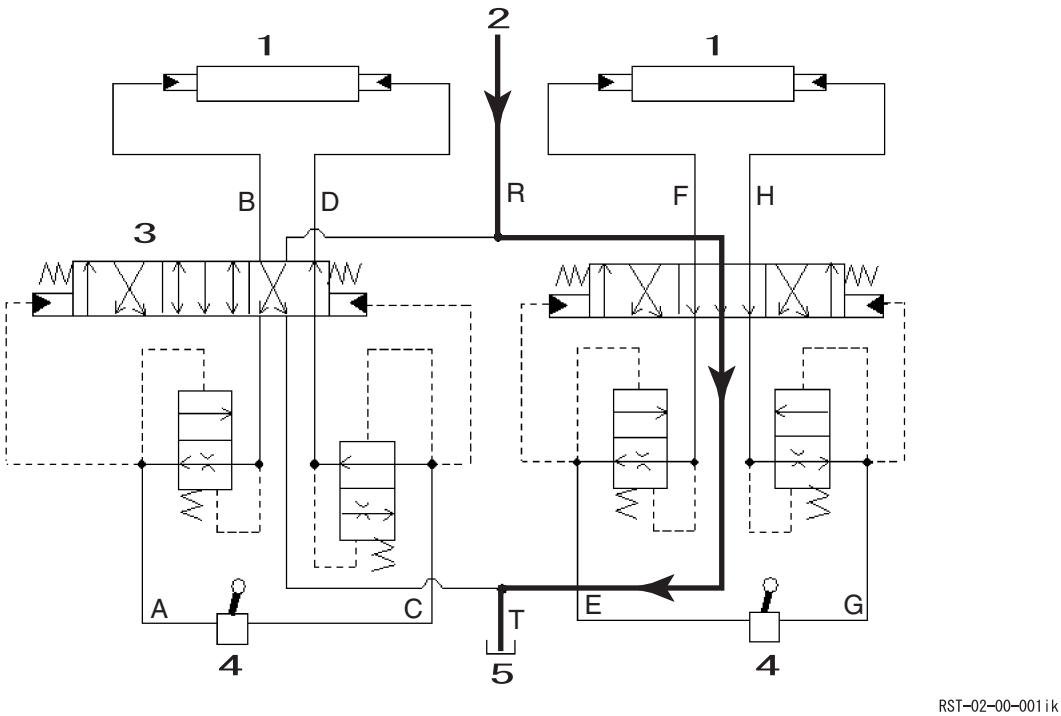

1	Control valve spool	4	Remote control valve
2	Return line	5	Tank line
3	Cushion valve		

Model 5 circuits

In neutral, since a throttle has been put at the reverse notch spool, almost all the heated oil is sent to the pilot line.

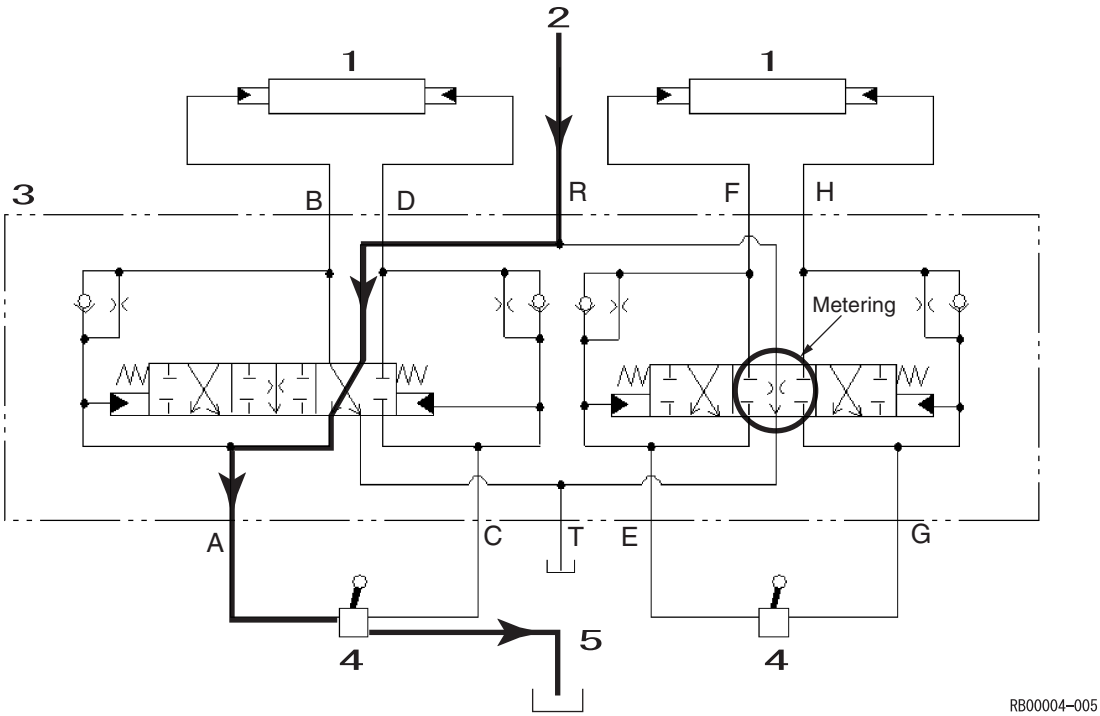

1	Control valve spool	4	Remote control valve
2	Return line	5	Tank line
3	Cushion valve		

https://truckmanualshub.com/

Changes from Model 3

Lower-section Related Changes

1. Center Joint Installation Section Notch Dimensions

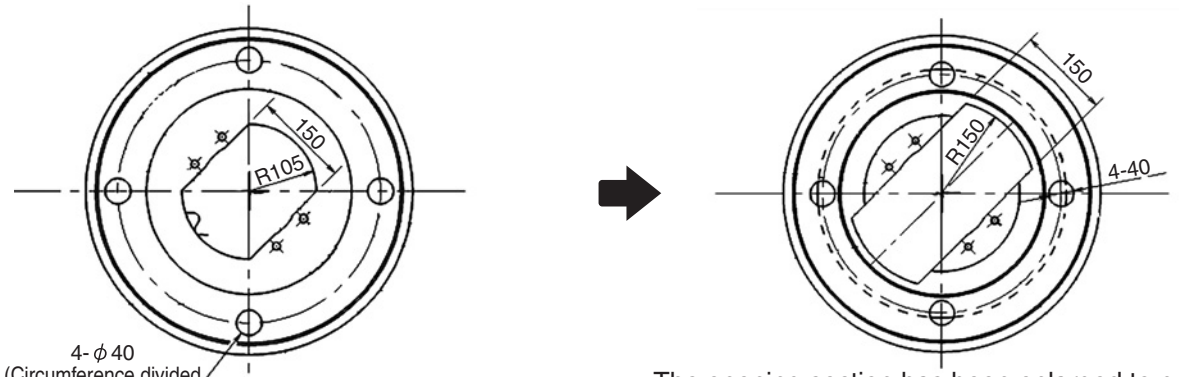

The opening section has been enlarged to protect against the deposition of dirt, sand, rainwater, etc.

RST-02-00-001cg

2. Grease Bath Seal

SH200-3

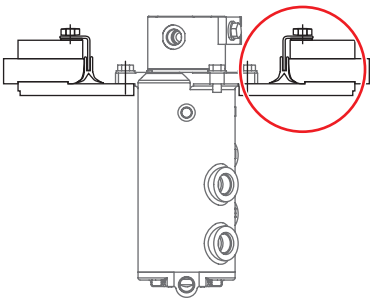

There is a high possibility of water penetration due to foreign matter pinching.

SH210-5

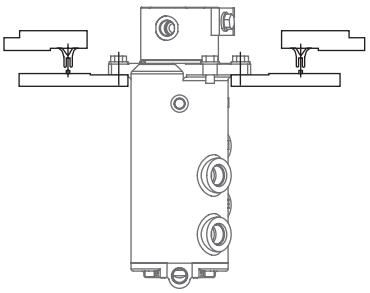

The upper side seal structure minimizes foreign matter pinching. (Track record with SH75X-3)

RB00001-006

3. Center Joint Rotation Stopper Installation Surface

The rotation stopper bracket installation surface has been chamfered and the seating surface area increased to prevent looseness.

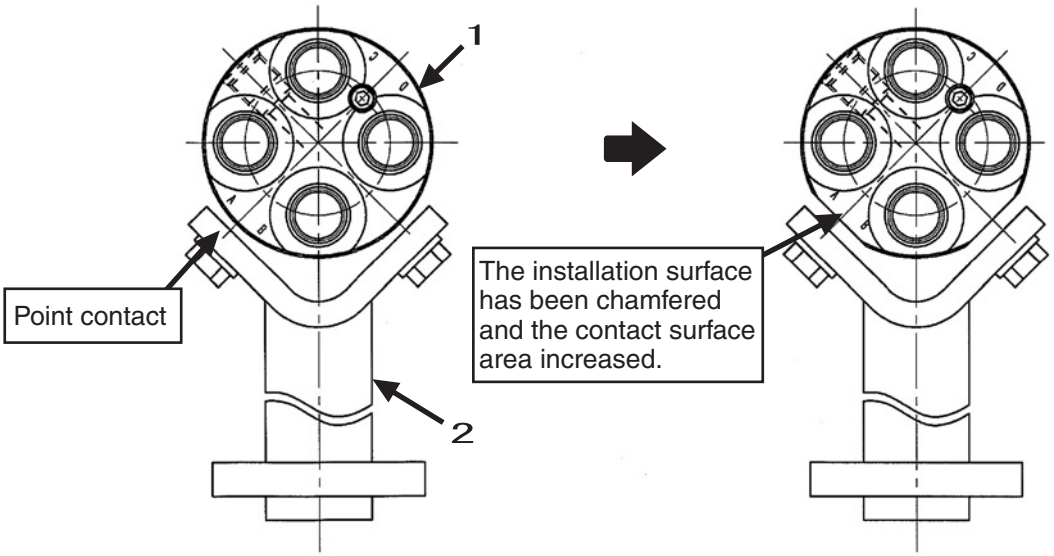

RST-02-00-001cb

1	Axle
2	Rotation stopper bracket

https://truckmanualshub.com/

4. Track Roller

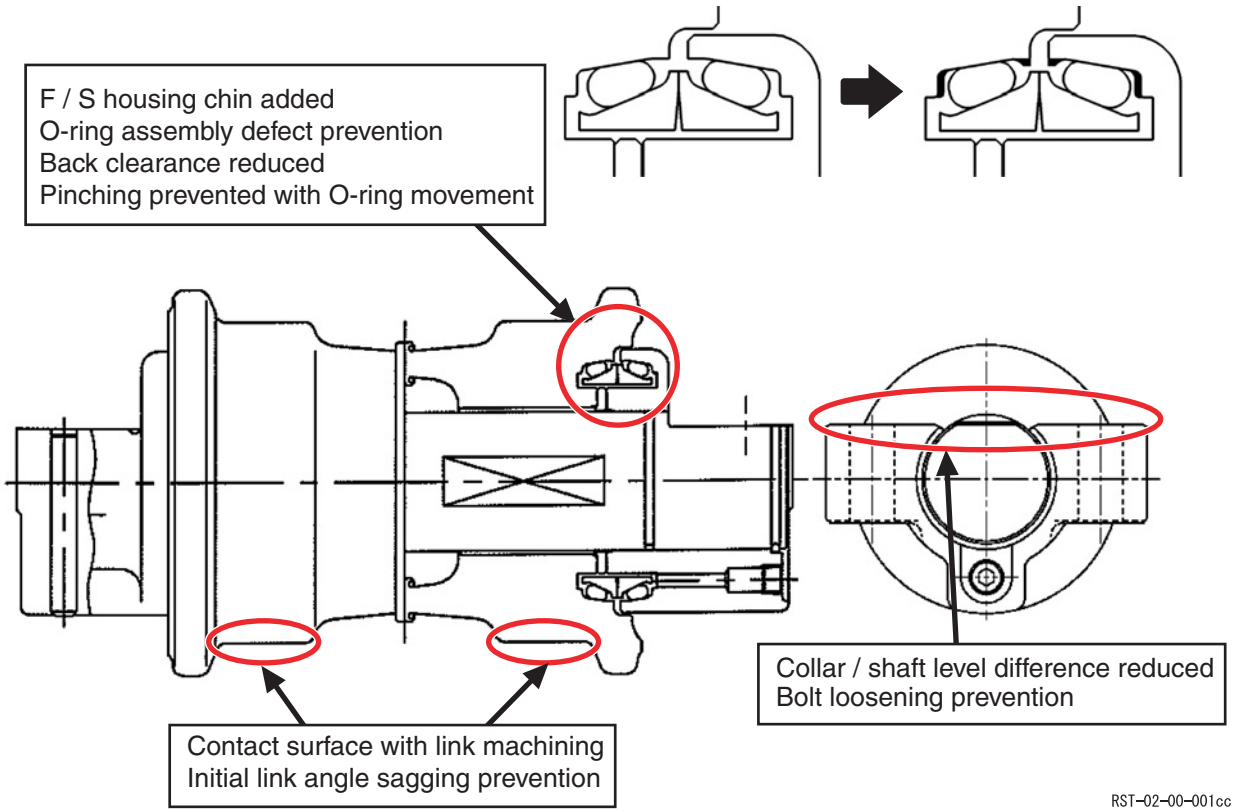

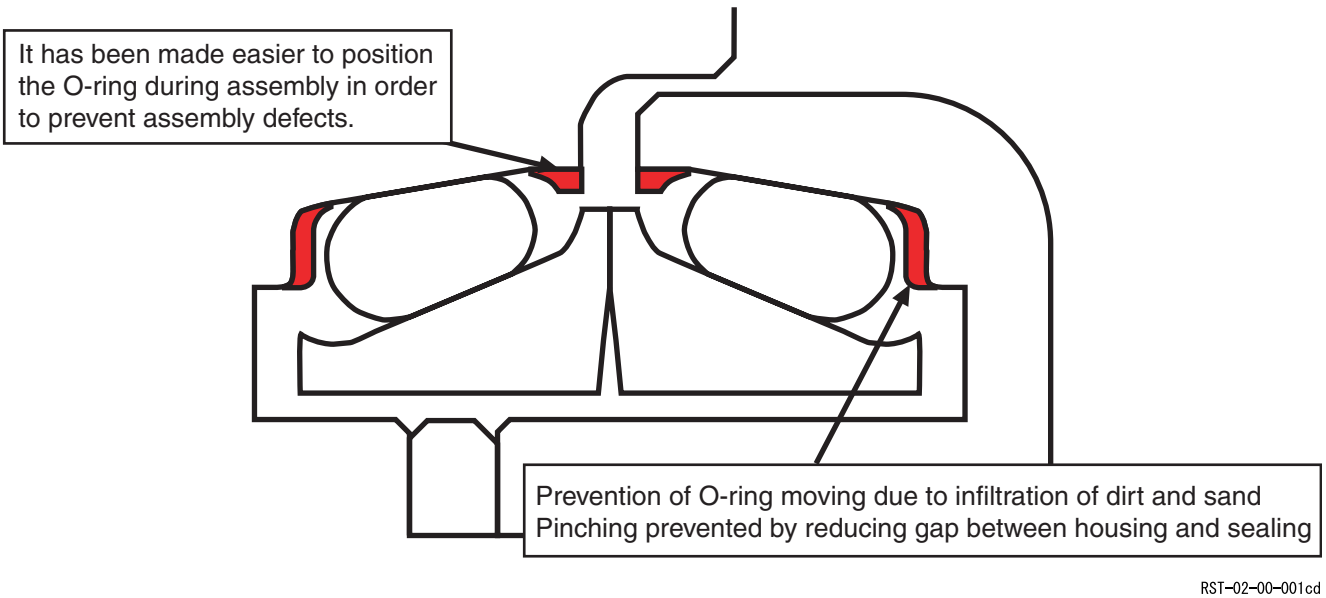

https://truckmanualshub.com/

Changes from Model 3

5. Carrier Roller

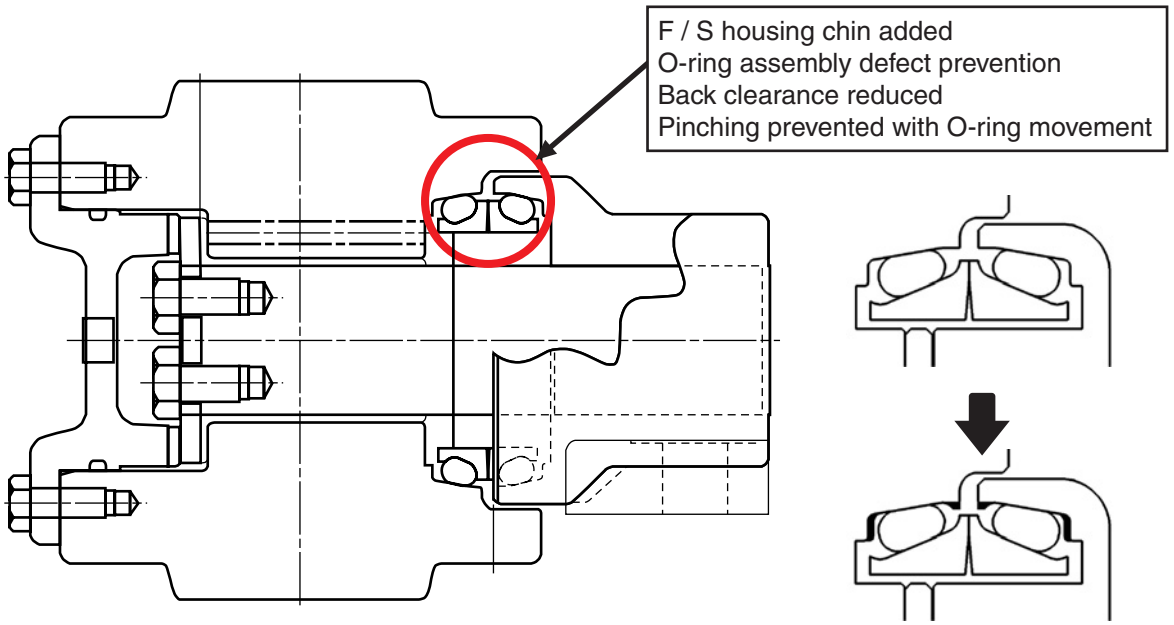

6. Track Guard

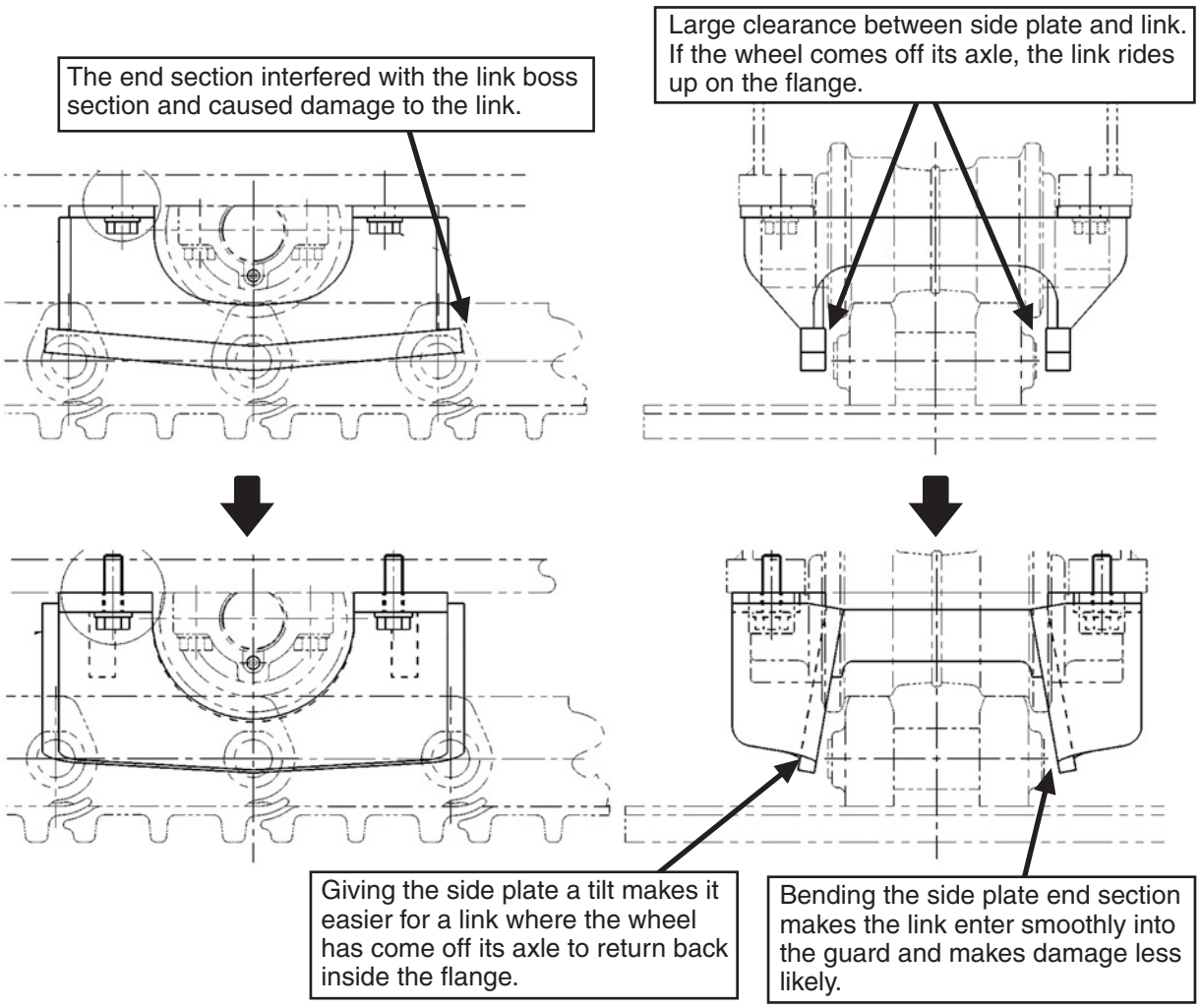

https://truckmanualshub.com/

Cab-related Changes

1. Cab Shape
   - Increased strength (irregularly shaped steel pipe structure used)
   - Improved field of vision (single sheet of glass used for right window)
   - Sense of luxury added (size of operation section, optimization of operation force)

Right window glass surface area : 1.6 x

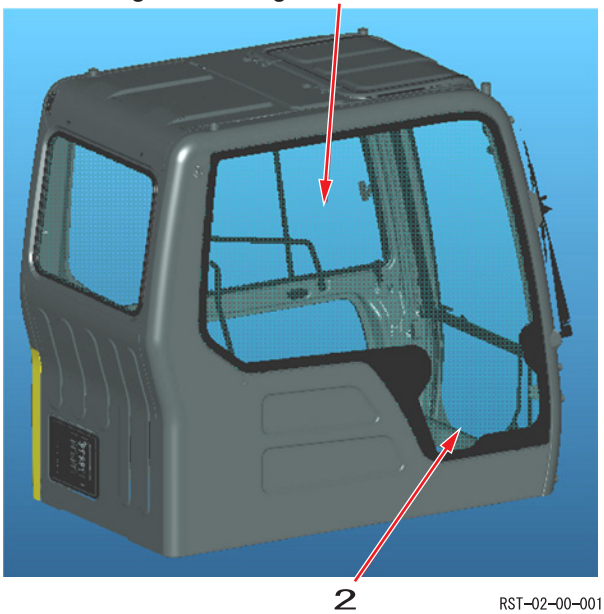

RST-02-00-001fa

1	Enlargement of bottom left field of vision
2	Enlargement of front right field of vision

2. Irregularly Shaped Steel Pipe Structure

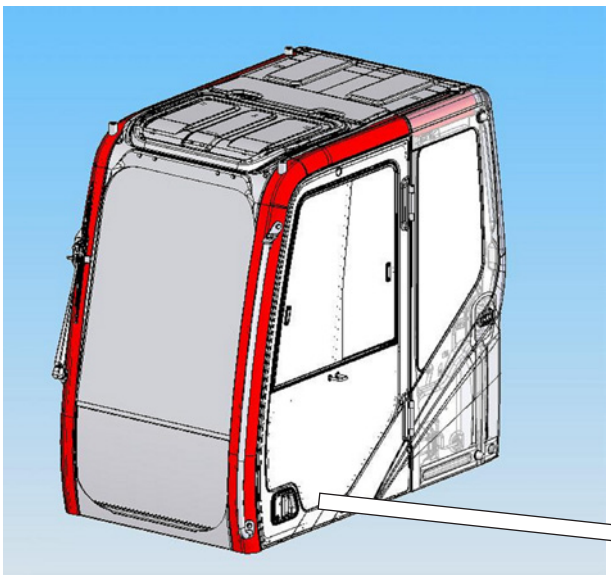

Cab section

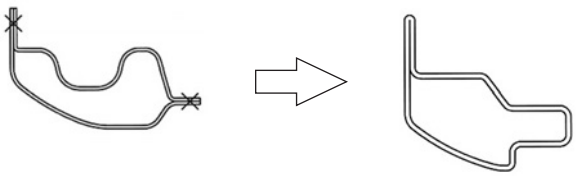

Plate thickness : t = 2 mm

Plate thickness : t = 3.2 mm

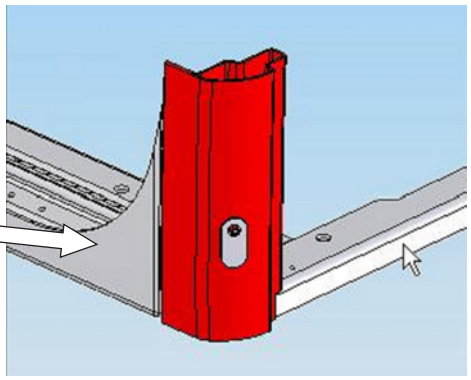

RST-02-00-001fb

https://truckmanualshub.com/

3. Beefed Up Equipment

As standard, head guard fastening possible

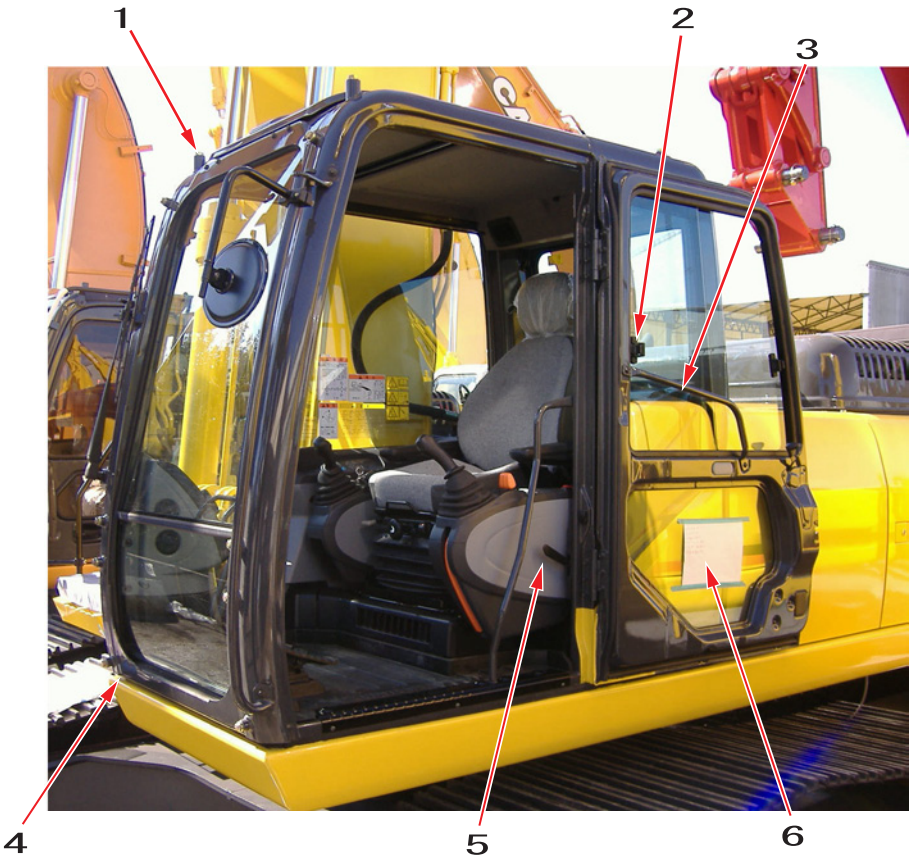

<Option support>

RST-02-00-001fc

1	Ceiling seat shifted to boss
2	Sash and slide lock made larger
3	Door inside handrail made larger
4	Front seating converted to boss Seating strengthened
5	Door open lock release lever made larger
6	Glass under door made larger
7	Standard standby of cab front light harness
8	Clear sunroof
9	Cab front light, sun visor installation bolt

https://truckmanualshub.com/

B

4. Interior Equipment

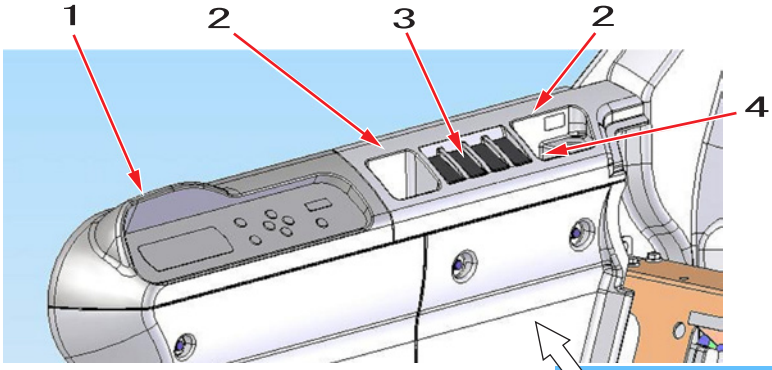

Right side

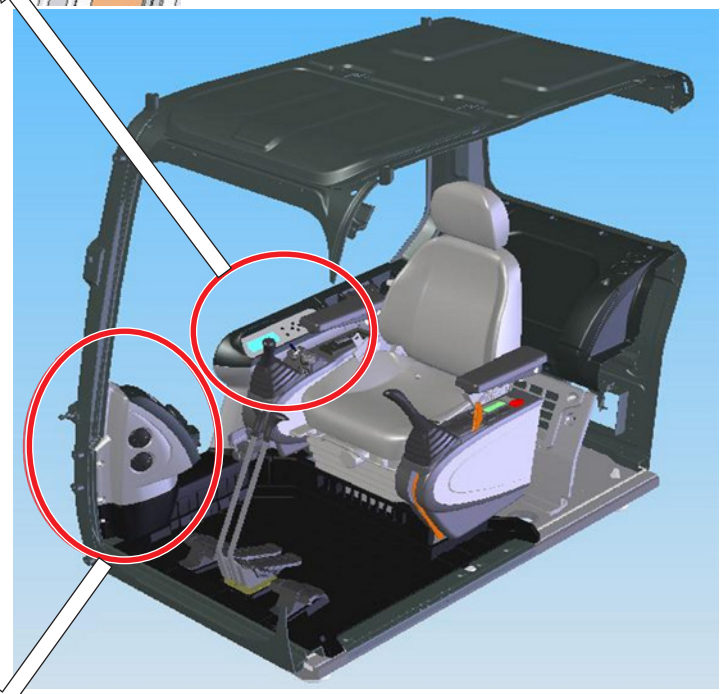

RST-02-00-001fd

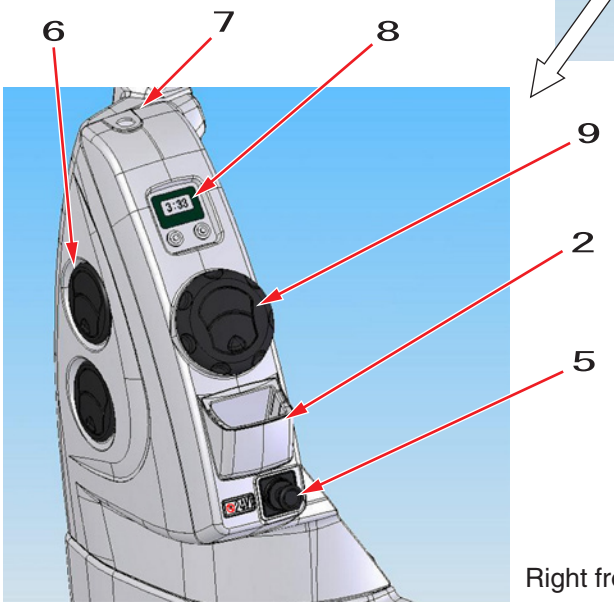

Right front side

1	Monitor panel
2	Glove box
3	Rocker switch space
4	DC accessory socket
5	Cigar lighter
6	AC defroster grille
7	Solar radiation sensor
8	Clock
9	AC face grille

https://truckmanualshub.com/

Changes from Model 3

Right console

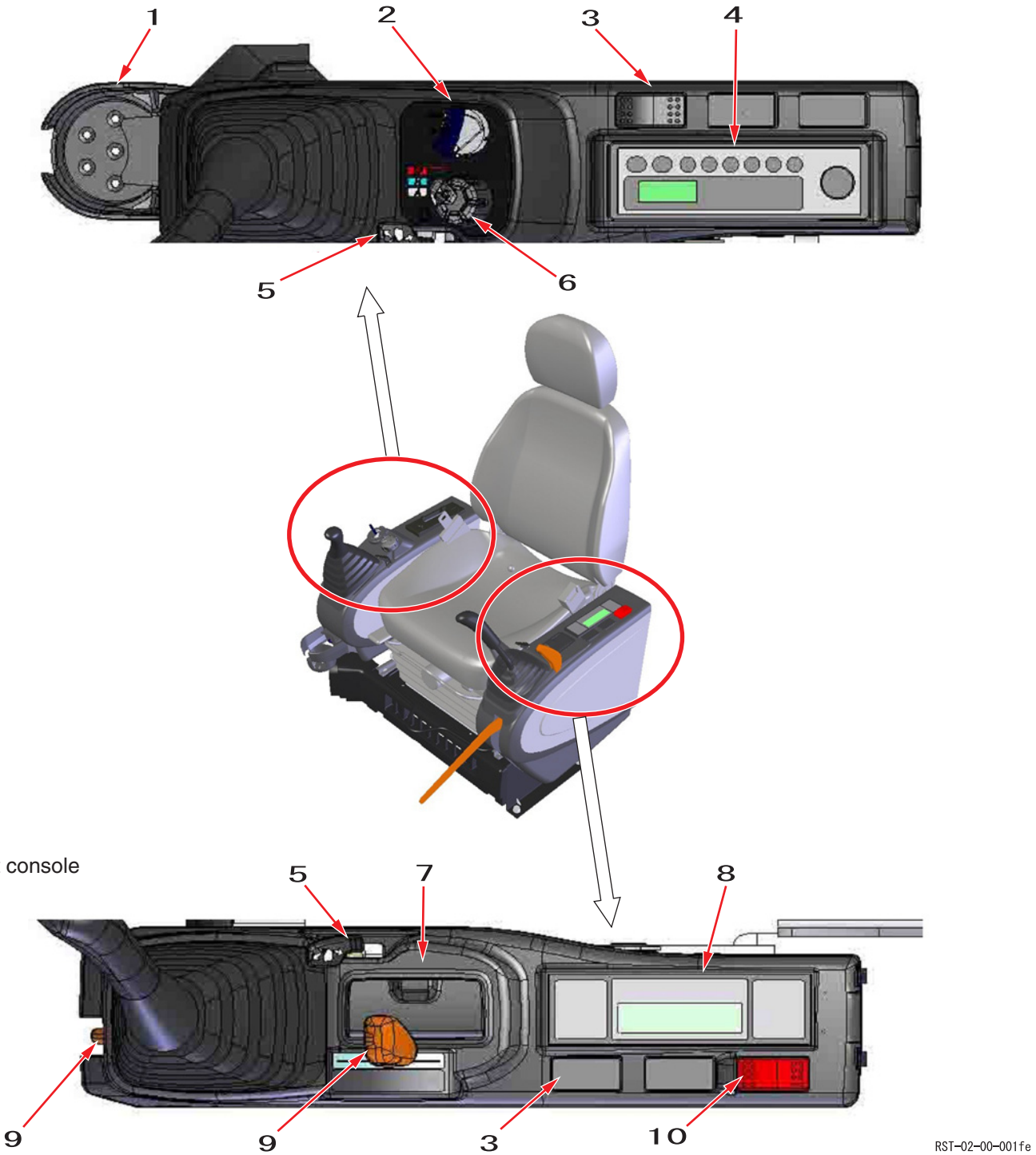

1	Cup holder
2	Key switch
3	Rocker switch space
4	AM / FM radio
5	Tilt lever
6	Throttle volume
7	Ashtray
8	AC control panel
9	Gate lever
10	Emergency stop switch

https://truckmanualshub.com/

Rear section

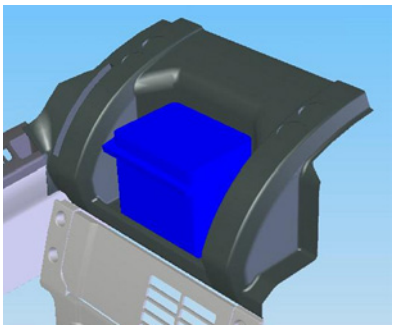

Can hold large lunch box

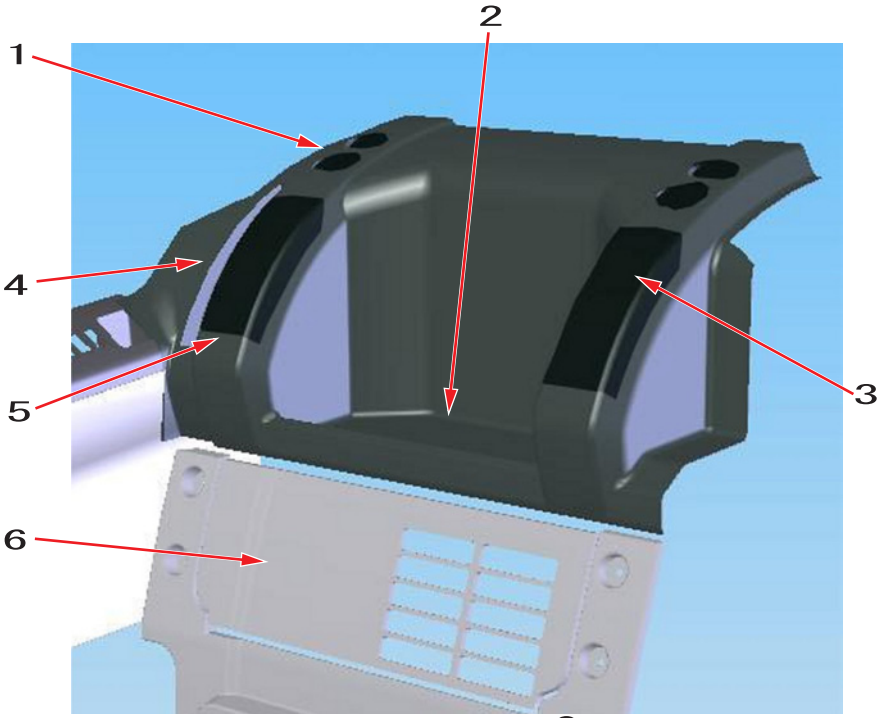

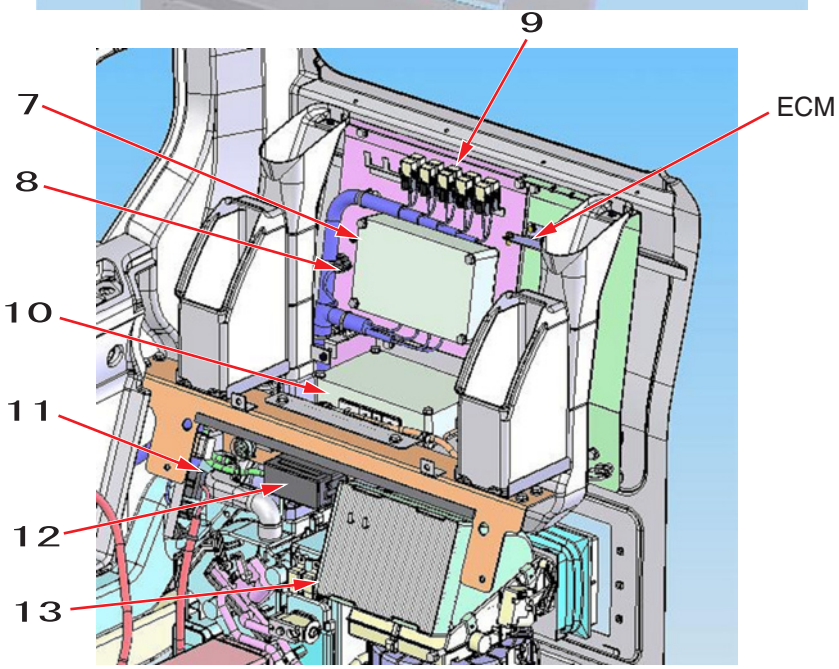

RST-02-00-001ff

1	AC rear vent grille
2	Large tray
3	Utility box
4	Magazine rack
5	HOT & COOL box
6	Maintenance space
7	Computer A
8	Atmospheric pressure sensor
9	Relay
10	Computer B
11	Controller rewrite connector
12	Fuse box
13	Air conditioner inside air filter

https://truckmanualshub.com/

Changes from Model 3

5. Front Window Lock Mechanism

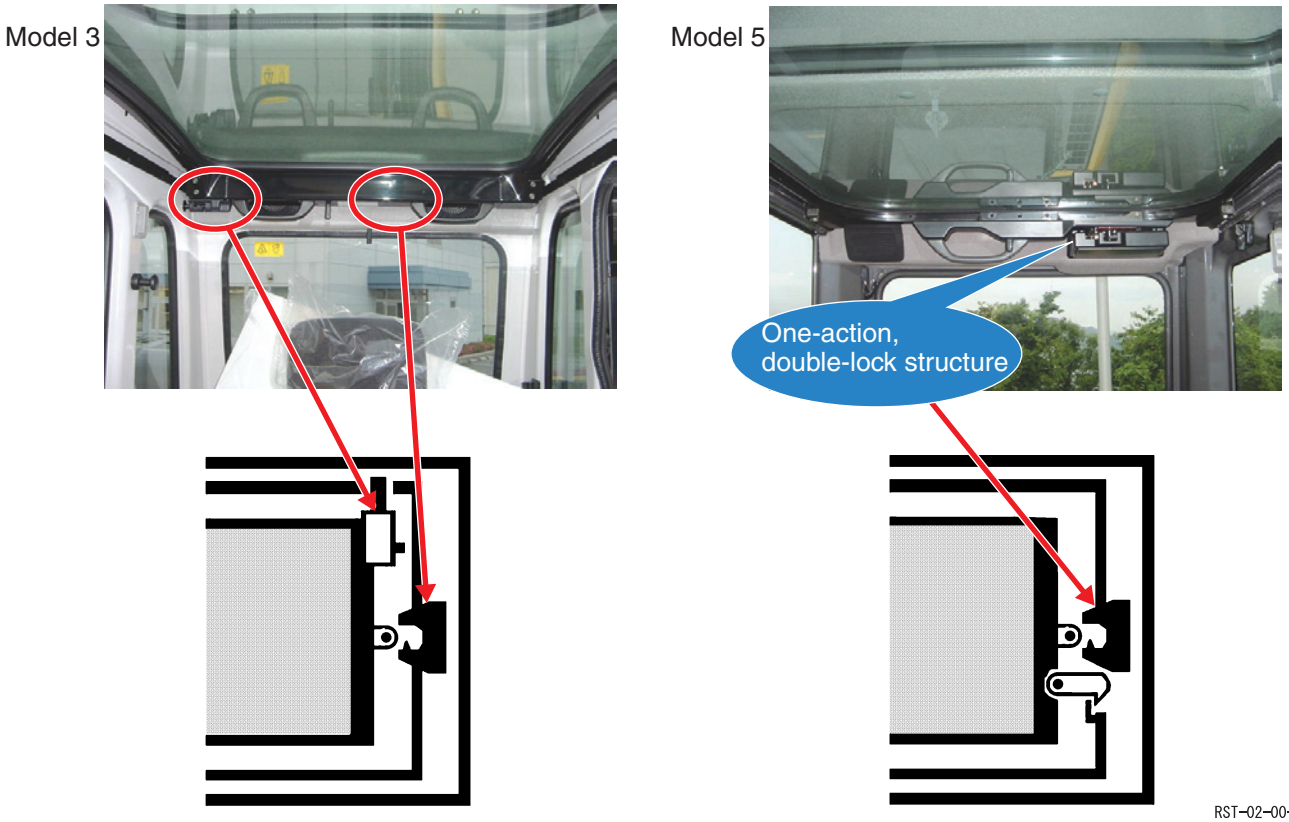

The front window open lock mechanism uses two lock mechanisms to secure the minimum required safety (fail safe).
(1) Auto lock section
(2) Safety lock (secondary lock) section

6. Remote Support

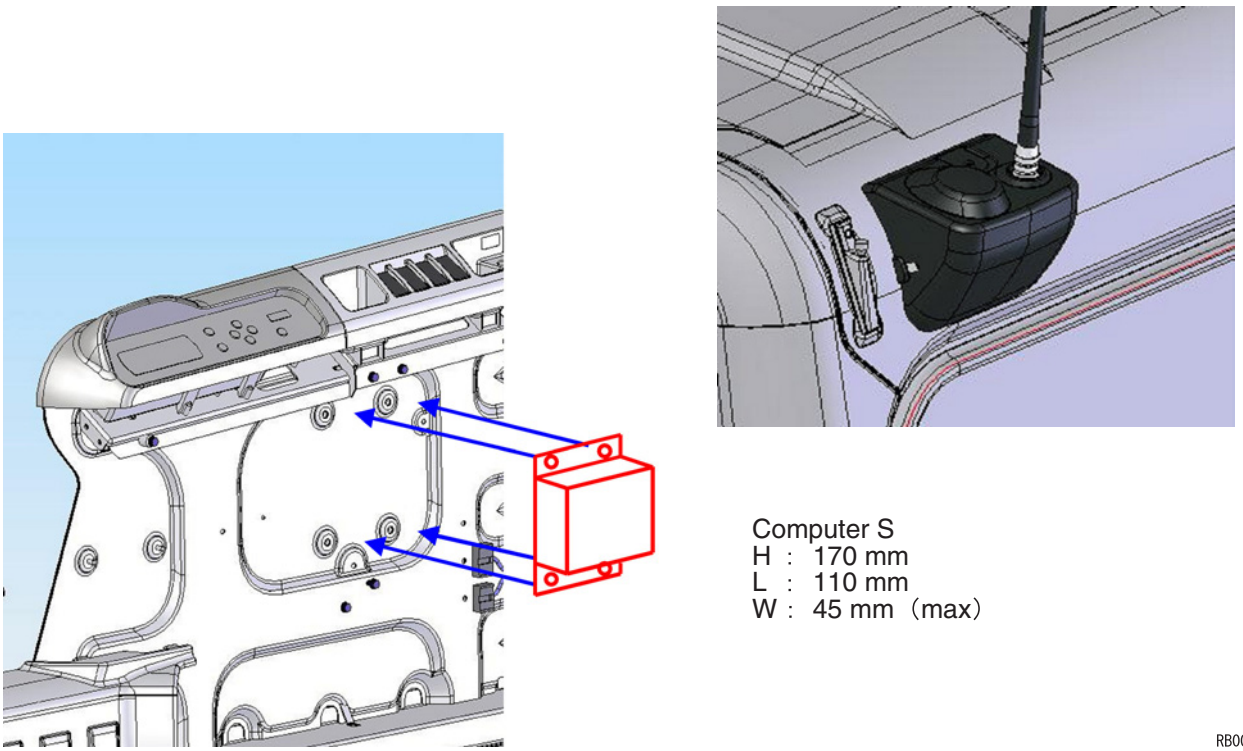

https://truckmanualshub.com/

B

Upper Swing Body Changes

1. High-rigidity Platform

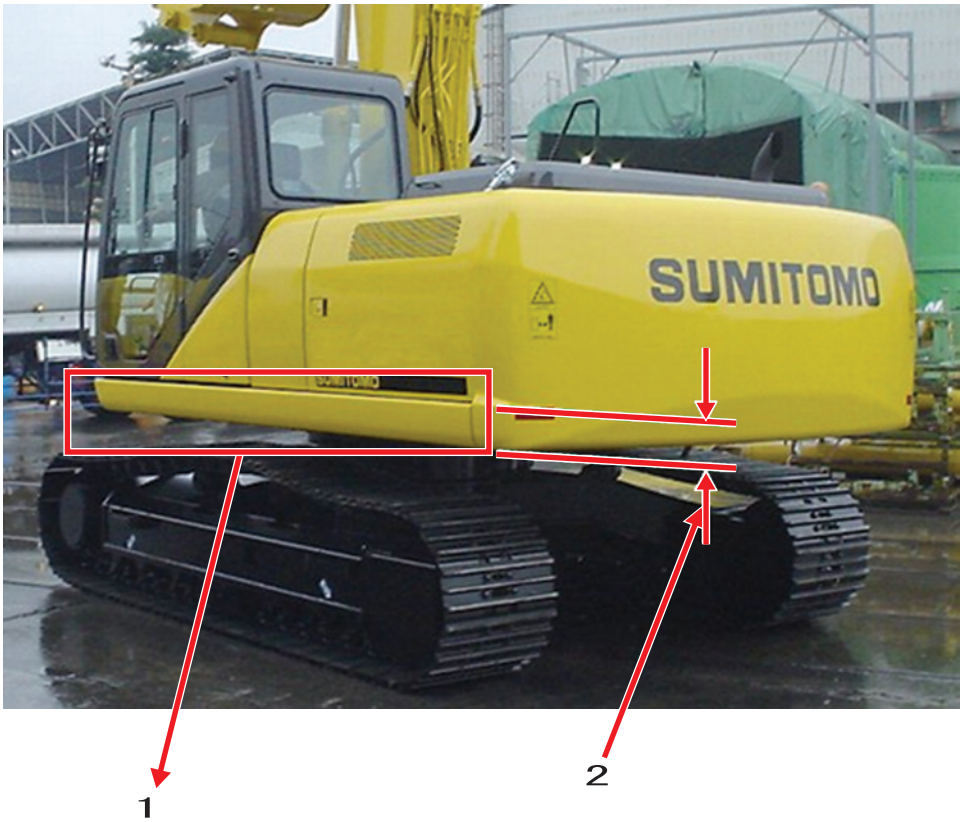

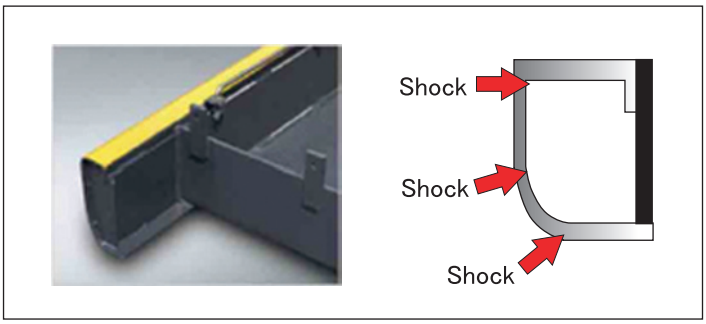

RB00001-007

1	Structure changed from C frame → Closed section frame
2	Platform height changed 140 mm → 180 mm

https://truckmanualshub.com/

Changes from Model 3

Attachment Changes

1. Boom

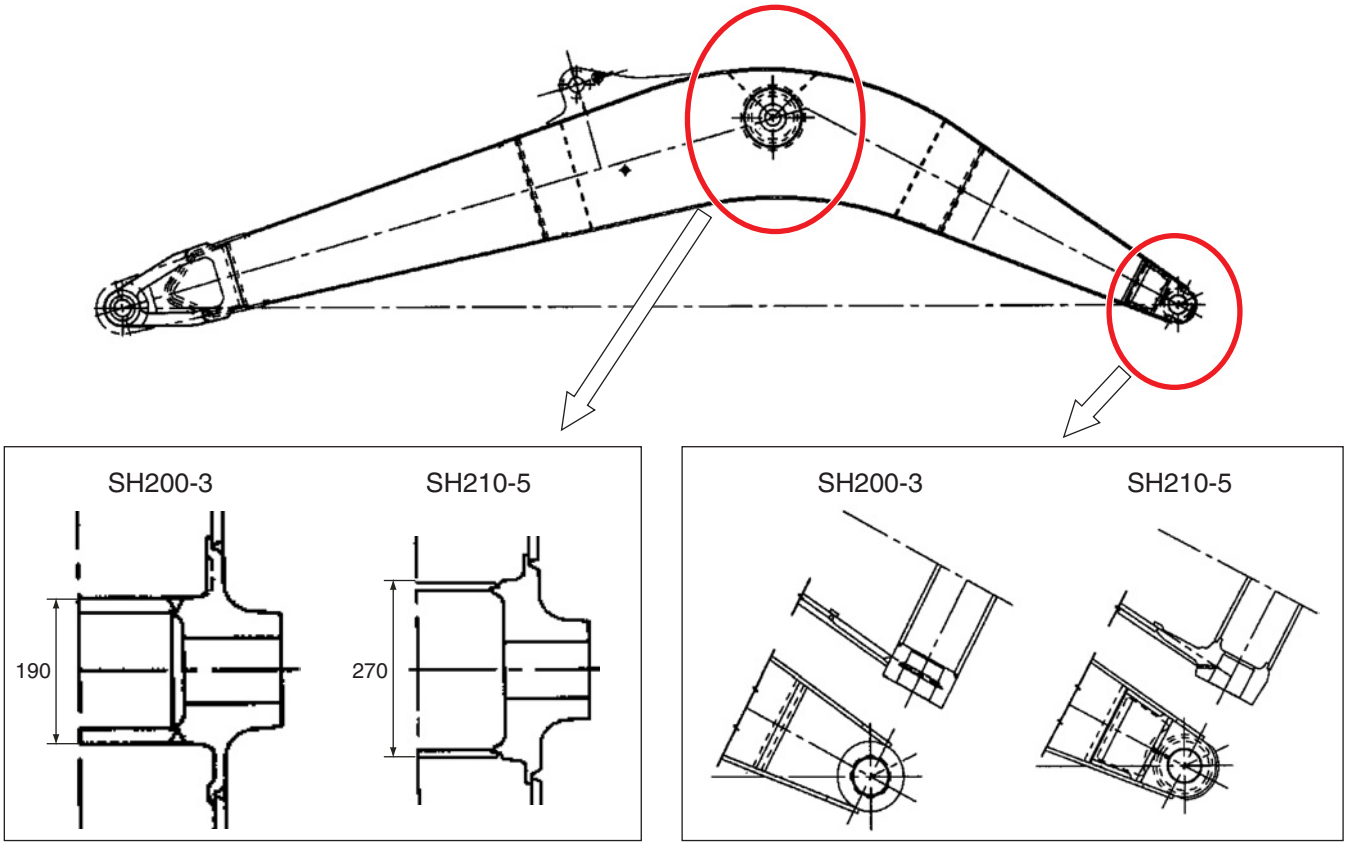

Boss rigidity increased by enlarging the bore of the boom cylinder boss pipe

Boom foot boss changed to forging

RB00001–008

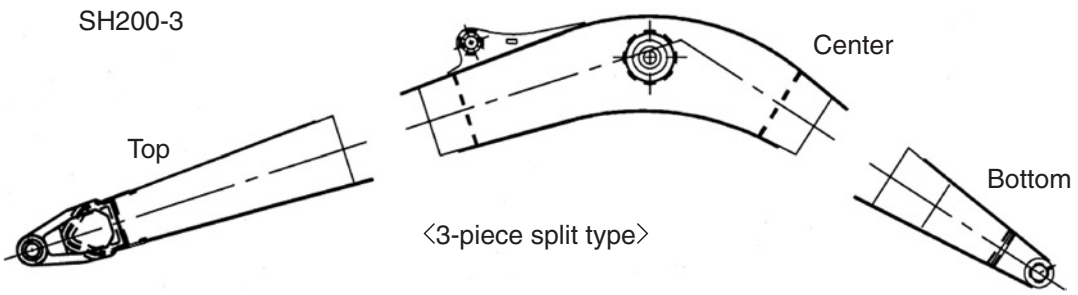

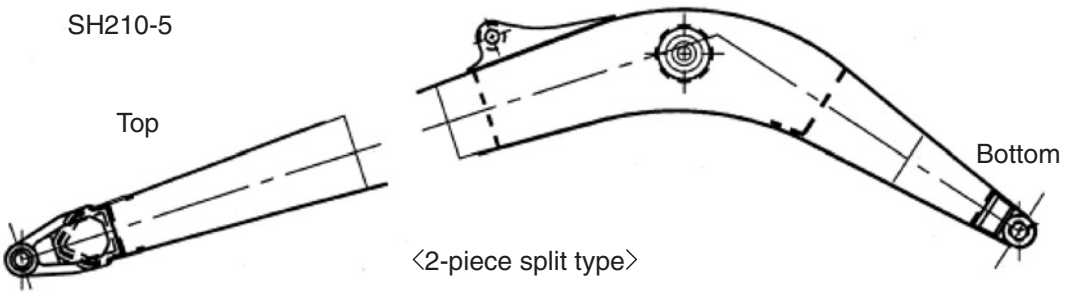

[Structure] Prevention of welding defects through split into two pieces

RB00001–009

https://truckmanualshub.com/

2. Arm

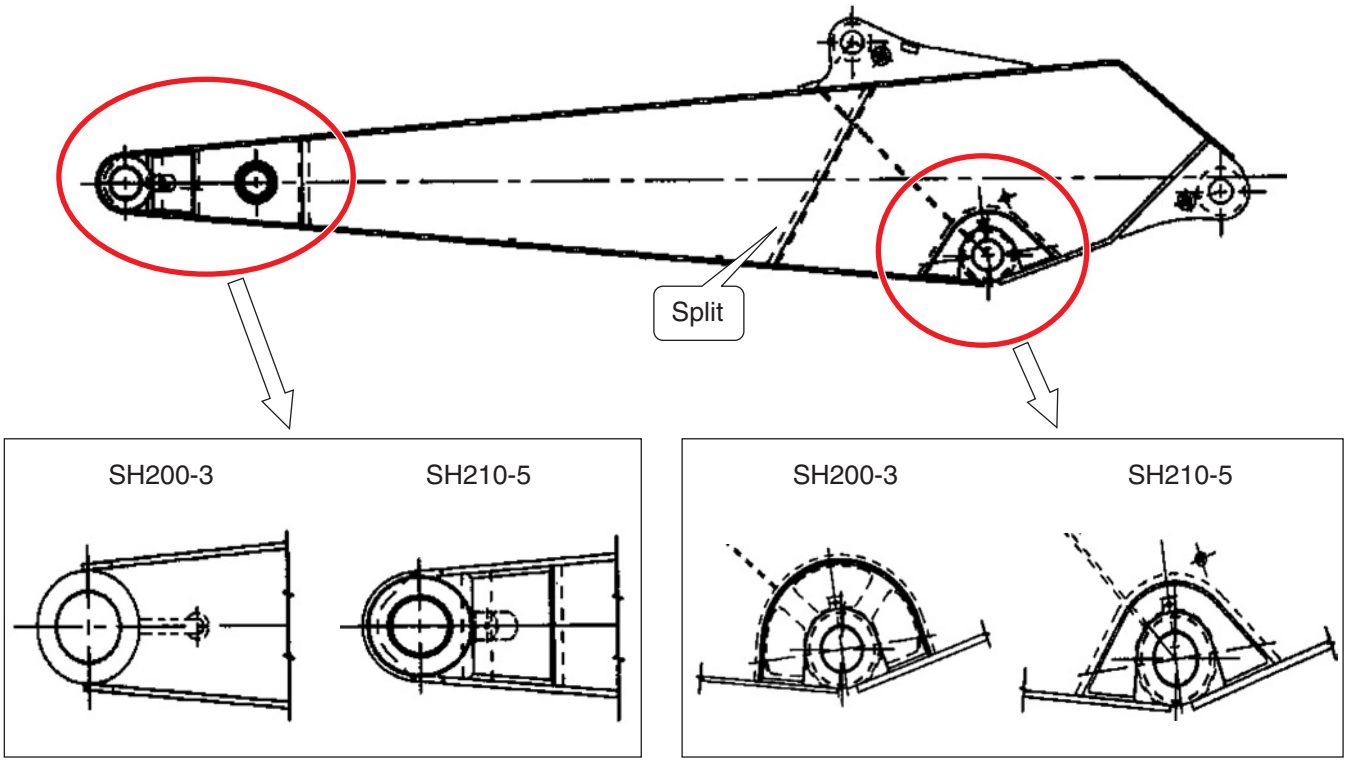

Conversion from production using can-making process → cast steel boss to prevent welding concentration

Forged boss shape change to prevent stress concentration

RB00001–010

https://truckmanualshub.com/

3. Bucket

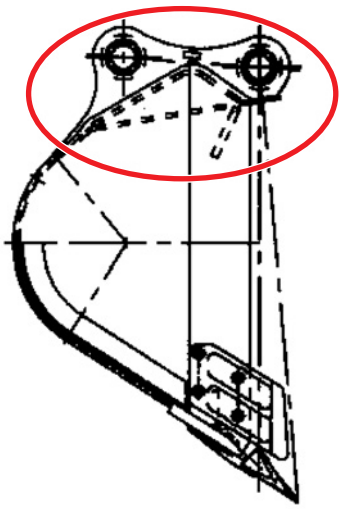

SH200-3

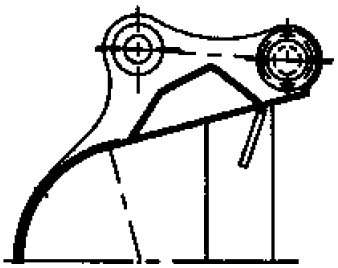

SH210-5

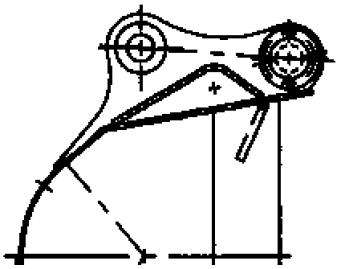

Box shape changed to prevent falling over

RB00001–011

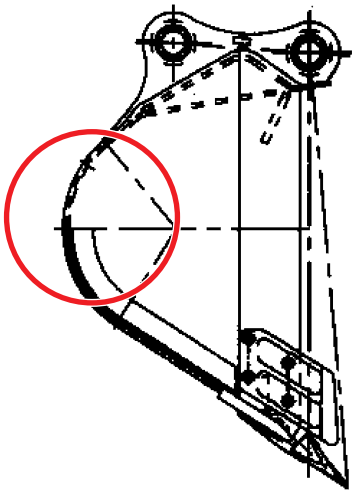

SH200-3

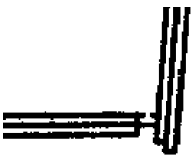

SH210-5

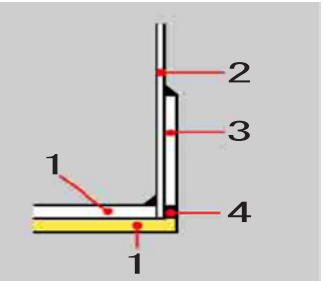

Bottom plate thickness 8 mm→12 mm
Bottom plate welding structure changed to protect bottom plate welding and make bottom surface flat

RSB00001–012

1	Bucket bottom plate
2	Side plate
3	Side reinforcement plate
4	Welding section

https://truckmanualshub.com/

4. Coupler Pin Fastening

SH200-3 SH210-5

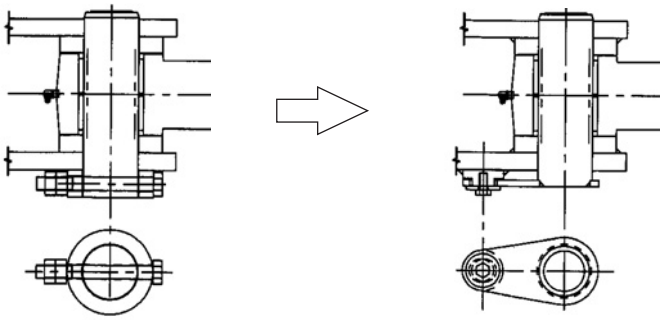

Collar & bolt fastening

Assembly simplified with flanged pin & fastening bolt (except some)

RB00001-013

5. Pipe Clamp

SH200-3 SH210-5

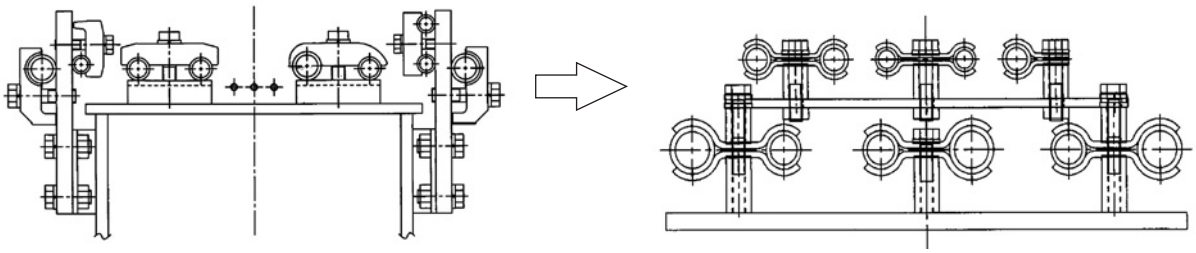

Option pipe added through added seating processing on boom side surface

Boom seating converted to shared 2-layer structure clamp shape changed (for shared seating)

RB00001-014

6. Bucket Edge Bushing

EMS → Changed to steel bushing
Surface processing, then polymer coating
Grease-up interval : 250 Hr

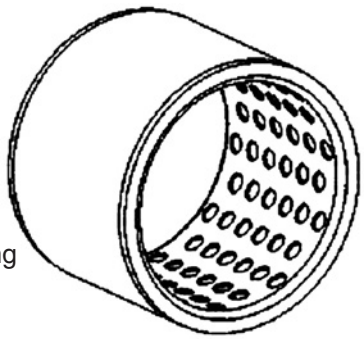

RST-02-00-001ig

7. Use of Plastic Shims

Installed at two locations in boom foot section and boom and arm coupling section

[1] Prevents sticking and abnormal noise

[2] Shock-resistance, noise insulation, and vibration resistance effects

8. Reduced Boom Foot Section Play

Swing frame side machine processed

https://truckmanualshub.com/

Changes from Model 3

Attachment Plate Thickness Comparison Table

Boom

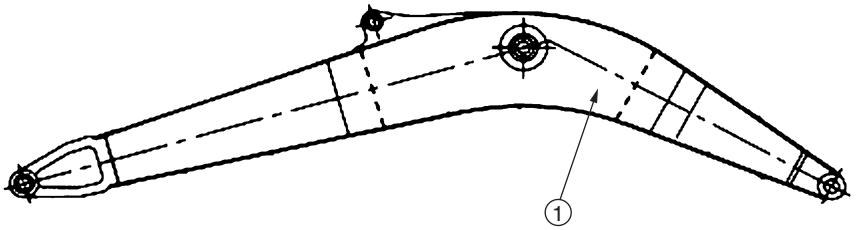

RST-02-00-001ip

Member No.	SH200-3		SH210-5	
	At start of mass production	Strengthened	Standard	*Strengthened
1	12	16	14	16

↑
From June 25, 2004

Arm

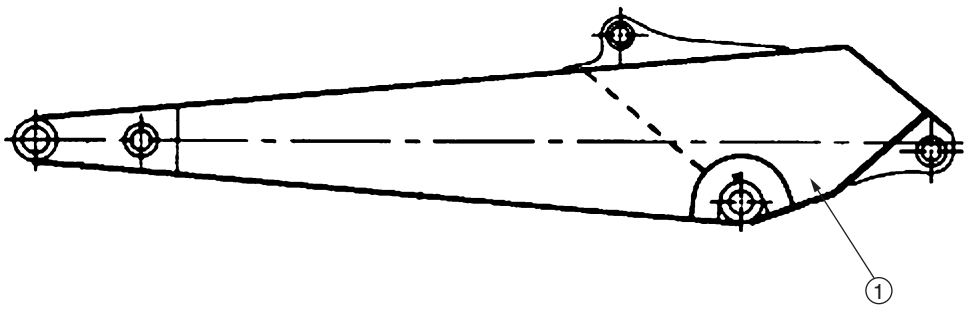

RST-02-00-001iq

Member No.	SH200-3		SH210-5	
	At start of mass production	Strengthened	Standard	*Strengthened
1	9	14	14	19

↑
From June 18, 2004

*mark

[1] SH210-5 strengthening means that when a factory option compatible pipe is installed, the boom and arm part numbers are different.Also, when a breaker or shuttle pipe is installed, one or the other is selected.

[2] When installing a destination option, a reinforcement plate is added.

https://truckmanualshub.com/

Overall

1. Main Data

Model name	SH210-5	SH210LC-5	SH240-5
Operating weight	19900 kg	20400 kg	24300 kg
Engine output	117.3 kW / 1800 min^{-1}		132.1 kW / 2000 min^{-1}
Bucket capacity	Heaped 0.80 m^3	Heaped 0.90 m^3	Heaped 1.10 m^3
	Leveled 0.57 m^3	Leveled 0.65 m^3	Leveled 0.76 m^3

2. Performance

	SH210-5	SH210LC-5	SH240-5
Standard weight	10.1 kN	11.4 kN	13.4 kN
Swing speed	11.5 min^{-1}		10.7 min^{-1}
Travel speed	Low speed 3.4 km / h High speed 5.6 km / h		Low speed 3.5 km / h High speed 5.5 km / h
Maximum pulling force	201 kN		216 kN
Grade ability	70 % (35°)		
Ground pressure	43 kPa (600 mm grouser shoe)	42 kPa (600 mm grouser shoe)	48 kPa (600 mm grouser shoe)
	39 kPa (700 mm grouser shoe)	37 kPa (700 mm grouser shoe)	42 kPa (700 mm grouser shoe)
	34 kPa (800 mm grouser shoe)	34 kPa (800 mm grouser shoe)	37 kPa (800 mm grouser shoe)

3. Main Body Dimensions

	SH210-5	SH210LC-5	SH240-5
Main body length	4810 mm	4955 mm	5270 mm
Main body width	2800 mm	2990 mm	3190 mm
Upper side swing body width	2770 mm		
Cab width	1000 mm		
Main body height	2960 mm		3020 mm
Engine desplacement	2750 mm		2950 mm
Swing body tail distance	2720 mm		2940 mm
Swing body rear section bottom height	1040 mm		1100 mm
Distance between tumblers	3370 mm	3660 mm	3840 mm
Overall track length	4180 mm	4470 mm	4650 mm
Overall track width	2800 mm	2990 mm	3190 mm
Distance between tracks	2200 mm	2390 mm	2590 mm
Track shoe width	600 mm (options 700 mm, 800 mm)		
Minimum ground clearance	460 mm (to bottom of lower frame)		

https://truckmanualshub.com/

4. Engine

	SH210-5 / SH210LC-5	SH240-5
Name	ISUZU 4HK1X diesel engine	
Model	4-cycle, water cooled, overhead camshaft, vertical in-line, direct injection type (electronic control), with turbocharger	
Number of cylinders - bore X stroke	4 - ϕ115 mm X 125 mm	
Engine displacement	5.193 L	
Maximum torque	628 N•m / 1500 min^{-1}	636 N•m / 1500 min^{-1}
Fuel consumption rate	229.3 g / kW•h max.	229 g / kW•h max.
Starter	24 V 5.0 kW Reduction type	
Charging generator	24 V 50 A AC type	
Battery	12 V 92 Ah / 5 Hr X 2	

5. Cooling System

	SH210-5 / SH210LC-5 / SH240-5
Fan type	ϕ650 mm X 7 Intake
Radiator	
Fin type	Wavy
Fin pitch	2.0 mm
Oil cooler	
Fin type	Wavy
Fin pitch	1.75 mm
Inter cooler	
Fin type	Triangular straight
Fin pitch	1.75 mm
Fuel cooler	
Fin type	Wavy
Fin pitch	2.0 mm

https://truckmanualshub.com/

6. Upper Side Work System

	SH210-5 / SH210LC-5				SH240-5		
Model	Backhoe attachment						
Components, dimensions, working dimensions							
Bucket capacity	Heaped 0.80 m^3 (Leveled 0.57 m^3)		Heaped 0.90 m^3 (Leveled 0.65 m^3)		Heaped 1.10 m^3 (Leveled 0.76 m^3)		
Bucket width	1030 mm		1150 mm		1260 mm		
Bucket width with side cutter	1130 mm		1250 mm		1360 mm		
Bucket weight with side cutter	650 kg		670 kg		872 kg		
Boom length	5700 mm				5850 mm		
Arm type	Standard (2.94 m)	Short (2.40 m)	Standard (2.94 m)	Short (2.40 m)	Standard (3.00 m)	Short (2.50 m)	Long (3.52 m)
Arm length	2940 mm	2400 mm	2940 mm	2400 mm	3000 mm	2500 mm	3520 mm
Bucket radius	1450 mm				1570 mm		
Bucket wrist angle	177°				175°		
Maximum digging radius	9900 mm	9420 mm	9900 mm	9420 mm	10280 mm	9820 mm	10790 mm
Maximum digging radius at ground line	9730 mm	9240 mm	9730 mm	9240 mm	10100 mm	9630 mm	10620 mm
Maximum digging depth	6650 mm	6110 mm	6650 mm	6110 mm	6900 mm	6400 mm	7420 mm
Maximum vertical straight wall digging depth	5960 mm	5500 mm	5960 mm	5500 mm	6140 mm	5700 mm	6680 mm
Maximum digging height	9610 mm	9410 mm	9610 mm	9410 mm	9760 mm	9560 mm	10070 mm
Maximum dump height	6810 mm	6590 mm	6810 mm	6590 mm	6760 mm	6550 mm	7060 mm
Minimum swing radius at front	3600 mm		3600 mm		3950 mm	3980 mm	3950 mm
Height for minimum swing radius at front	7640 mm	7690 mm	7640 mm	7690 mm	7750 mm	7820 mm	7740 mm

7. Operating Device

	SH210-5 / SH210LC-5 / SH240-5
Operator's seat	
Position	Left side
Structure	Adjustable forward and back and up and down, reclining mechanism, with seat suspension
Cab	Sealed steel type, all reinforced glass
Levers and pedals	
For travel use	Lever and pedal type (hydraulic pilot type) X 2
For operating machine use	Lever type (hydraulic pilot type) X 2
Instruments and switches	
Work mode select switch	3 modes (SP / super power, H / dig mode, A / auto mode)
Travel mode select switch	Low-speed / high-speed switch type
One-touch idle	Knob switch type
Engine emergency stop	Switch type

https://truckmanualshub.com/

	SH210-5 / SH210LC-5 / SH240-5
Monitor device	
Machine status display (full dot liquid crystal)	
Work mode select status	SP / H / A
Instrument (full dot liquid crystal except for hour meter)	
Fuel gauge	Bar graph indicator
Engine coolant temperature gauge	Bar graph indicator
Hydraulic oil temperature gauge	Bar graph indicator
Hour meter	Digital type
Machine status and warning alarms (full dot liquid crystal and warning alarm)	*has warning alarm
Overheat * / Battery charge * / Faulty electrical system *	
Refill fuel * / Engine oil pressure * / Refill coolant *	
Engine preheat / Auto warm up / Air cleaner clogged	
Anti-theft device triggered / Faulty engine system / Engine emergency stop	
Illumination equipment	
Working light	Tank face: 24 V 70 W X 1
	Boom-up: 24 V 70 W X 1
Interior light	24 V 10 W X 1
Horn	Electric horn X 2
Others	Wiper with intermittent function, window washer, air conditioner, clock, rear view mirrors (left and right) 1 each

8. Swing Units

	SH210-5 / SH210LC-5 / SH240-5
Swing circle	Swing bearing type (with inner gear)
Swing hydraulic motor	Fixed displacement piston motor X 1
Reduction gear	Planetary gear two-stage reduction gear
Swing parking brake	Mechanical lock (operational lever linkage type)

https://truckmanualshub.com/

9. Travel Lower Body

	SH210-5	SH210LC-5	SH240-5
Travel hydraulic motor	Variable displacement piston motor X 2		
Reduction gear	Planetary gear two-stage reduction gear		
Travel brake	Hydraulic lock		
Parking brake	Mechanical lock (travel lever linkage type)		
Track shoe			
Model	Assembly type triple grouser shoe		
Number of shoes (per side)	46	49	51
Shoe width	600 mm (options 700 mm, 800 mm)		
Grouser height	26 mm		
Link pitch	190 mm		
Roller			
Number of upper-rollers (per side)	2		
Number of lower-rollers (per side)	7	8	9
Track belt tension adjuster	Grease cylinder type (with cushion spring)		

Hydraulic Equipment

1. Hydraulic Device

	SH210-5 / SH210LC-5	SH240-5
Hydraulic pump drive type	Direct engine link (no transmission)	
Hydraulic pump		
Model	Double variable displacement piston pump X 1	
	Gear pump X 1	
Discharge	Piston pump 2 X 211 L / min	Piston pump 2 X 234 L / min
	Gear pump 18 L / min	Gear pump 20 L / min
Pump control method	Simultaneous output full-horsepower control	
Set pressure of main relief valve	34.3 MPa (36.8 MPa for boost)	
Set pressure of overload relief valve	29.4 MPa (boom-down)	
	38.7 MPa (other)	

https://truckmanualshub.com/

2. Control Valve, Cylinder

	SH210-5 / SH210LC-5	SH240-5
Control valve		
Model	Quadruple spool Quintuple spool	One-piece type X 1
Operating type	Hydraulic pilot type: travel, swing, and operating machine	
Cylinder	Number of cylinders × Tube bore - Rod diameter - Stroke	
Boom cylinder	2 × ϕ120 mm - ϕ85 mm - 1255 mm	2 × ϕ130 mm - ϕ90 mm - 1335 mm
Arm cylinder	1 × ϕ140 mm - ϕ100 mm - 1460 mm	1 × ϕ145 mm - ϕ105 mm - 1660 mm
Bucket cylinder	1 × ϕ120 mm - ϕ85 mm - 1010 mm	1 × ϕ130 mm - ϕ90 mm - 1070 mm

Capacities, Filters

1. Water and Oil Capacities

	SH210-5 / SH210LC-5	SH240-5
Coolant	25.6 L	25.2 L
Fuel	410 L	410 L
Engine lubricating oil	23.1 L	23.1 L
Travel reduction gear lubricating oil (one side)	4.5 L	4.5 L
Swing reduction gear lubricating oil	5 L	9.7 L
Hydraulic oil	240 L	250 L
Hydraulic oil tank regulation amount	147 L	147 L

2. Hydraulic Oil Filters

	SH210-5 / SH210LC-5 / SH240-5
Suction filter (in tank)	155 μm
Return filter (in tank)	6 μm
Pilot line filter (inside housing)	8 μm

3. Fuel Filter

	SH210-5 / SH210LC-5 / SH240-5
Main filter	4 μm
Pre-filter	10 μm

https://truckmanualshub.com/

B

Precautions for lifting loads with the hydraulic excavator

Discuss the procedures in advance

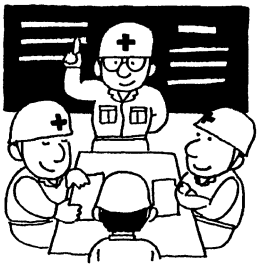

RB02001–001

[1] Operators and those who handle rigging must be trained for those specific purposes.

[2] Use a sling that is sturdy enough. Also, use a device designed to prevent loads from falling.

Take measures to ensure safe operation

[1] Specify signals to be used for lifting loads and designate a signal person for the entire course of operation.

RB02001–002

[2] Work on a level surface. (Working on a slope can cause the machine to overturn and fall.)

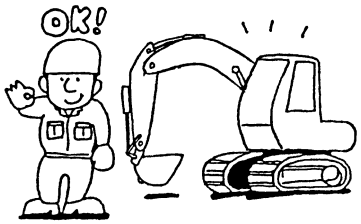

RB02001–003

[3] If you are on a slope, level out the footing before starting to work.

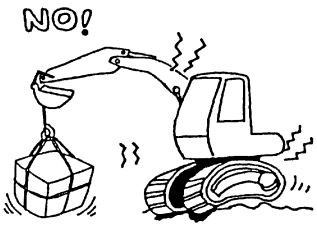

RB02001–004

[4] Do not allow anyone to be under the suspended load or at other dangerous areas.

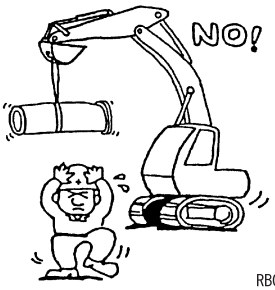

RB02001–005

[5] Do not lift a load exceeding the rated capacity. (The machine can overturn and jeopardize the safety of workers.)

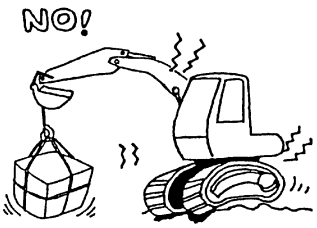

RB02001–006

[6] The wire ropes and the chains for rigging must be sturdy enough and be free of disfigurement and corrosion.

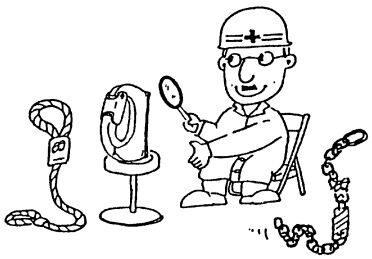

RB02001–007

Use wire ropes with safety factor 6 or greater.

Use lifting chains with safety factor 5 or greater.

⚠ Caution

[1] The operators must be trained specifically.

[2] The weight of the loads and the rigging equipment combined must not exceed the maximum load value.

[3] During the crane operations, lower the engine speed (mode A) and keep working at low engine speed.

[4] Be extra careful while carrying out the swing operations. Move the machine slowly.

[5] Do not leave the cab while you are suspending a load.

[6] Do not travel any distance while you are suspending a load.

[7] Sling the load in such a manner that the wire rope and the ring do not get detached from the hook.

[8] If the bucket hook, or the rigging equipment gets damaged during operation, stop the procedure and make necessary repairs.

[9] Please contact our authorized service shops when you wish to have hooks attached to your bucket.

https://truckmanualshub.com/

Lifting Capacity

Lifting Capacities (Standard Arm)

Type of machine:	SH210-5	L:	2.94 m Arm length
Arm:	Standard arm	R:	Reach from swing center
Shoe:	600 Grouser shoe	H:	Bucket hook height
Bucket:	0.8 m^3	W:	Lifting capacity

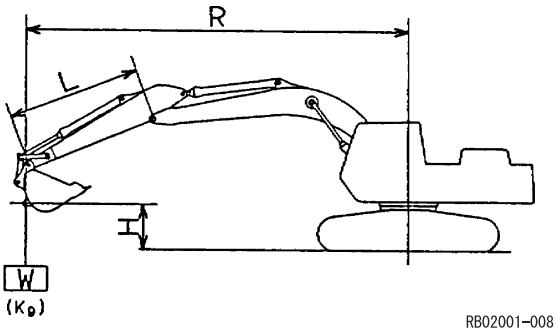

We: Frontal rating load

Ws: Lateral rating load

MAX: Rating load at height point H and at maximum working reach

(Maximum working reach: 8.56 m) (Units; kg)

H \ R		Max.		8 m	7 m	6 m	5 m	4 m	3 m	2 m	Min.	
		W	R (m)								W	R (m)
7 m	We	2744 *	6.79								3964 *	6.25
	Ws	2744 *	6.79								3928	6.25
6 m	We	2675 *	7.46		3889 *						4060 *	6.15
	Ws	2675 *	7.46		3125						3988	6.15
5 m	We	2674 *	7.94		4276 *	4362 *					4397 *	5.73
	Ws	2376	7.94		3056	4051					4394	5.73
4 m	We	2730 *	8.27	3642	4561 *	4843 *	5293 *				5435 *	4.76
	Ws	2131	8.27	2284	2950	3876	5277				5435 *	4.76
3 m	We	2842 *	8.48	3560	4486	5433 *	6243 *	7660 *	10612 *		6688 *	2.21
	Ws	1970	8.48	2209	2823	3673	4943	7054	10612 *		6688 *	2.21
2 m	We	3017 *	8.56	3472	4342	5591	7221 *	9297 *	10692 *		4374 *	2.51
	Ws	1873	8.56	2127	2691	3468	4612	6473	10068		4374 *	2.51
1 m	We	3054	8.52	3389	4210	5388	7229	10554	8236 *		3784 *	2.37
	Ws	1833	8.52	2050	2571	3286	4335	6042	8236 *		3784 *	2.37
0 m	We	3100	8.36	3324	4105	5232	7003	10245	9054 *	4906 *	5648 *	2
	Ws	1848	8.36	1990	2474	3146	4139	5788	9054 *	4906 *	5648 *	2
-1 m	We	3241	8.08	3287	4035	5130	6870	10098	10929 *	7346 *	6791 *	1.69
	Ws	1927	8.08	1956	2411	3055	4023	5667	9174	7346 *	7224 *	1.47
-2 m	We	3513	7.65		4009	5084	6817	10064	13437 *	9760 *	9128 *	1.69
	Ws	2092	7.65		2386	3014	3977	5640	9213	9760 *	8496 *	1.19
-3 m	We	3996	7.05		4039	5098	6836	10119	14511 *	12404 *	11629 *	1.69
	Ws	2389	7.05		2414	3026	3994	5685	9327	12404 *	10757 *	1.19
-4 m	We	4894	6.24			5187	6932	10186 *	13129 *	15479 *	14469 *	1.69
	Ws	2939	6.24			3106	4077	5802	9526	15479 *	13274 *	1.19
-5 m	We	6582 *	5.1				6761 *	8605 *	10983 *		14290 *	2.09
	Ws	4132	5.1				4257	6014	9841		14290 *	2.09

*Hydraulic pressure factor: 87.0%. Without asterisk: Stability factor: 75.0%

https://truckmanualshub.com/

Lifting Capacities (Short Arm)

Type of machine:	SH210-5	L:	2.40 m Arm length
Arm:	Short arm	R:	Reach from swing center
Shoe:	600 Grouser shoe	H:	Bucket hook height
Bucket:	0.9 m^3	W:	Lifting capacity

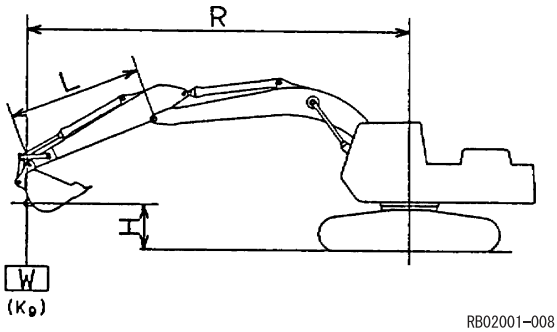

RB02001–008

We: Frontal rating load

Ws: Lateral rating load

MAX: Rating load at height point H and at maximum working reach

(Maximum working reach: 8.14 m) (Units; kg)

H \ R		Max.		8 m	7 m	6 m	5 m	4 m	3 m	2 m	Min.	
		W	R (m)								W	R (m)
7 m	We	4016 *	6.25			4466 *					4427 *	5.78
	Ws	3800	6.25			4117					4421	5.78
6 m	We	3925 *	6.97			4497 *					4503 *	5.67
	Ws	3057	6.97			4078					4503 *	5.67
5 m	We	3939 *	7.49		4636 *	4781 *					5005 *	5.16
	Ws	2609	7.49		2982	3960					5005 *	5.16
4 m	We	3718	7.84		4557	5238 *	5831 *	6847 *			7342 *	3.67
	Ws	2321	7.84		2887	3789	5141	6847 *			7342 *	3.67
3 m	We	3473	8.05	3514	4427	5731	6750 *	8472 *	12366 *		11260 *	2.9
	Ws	2138	8.05	2166	2769	3593	4810	6798	10597		11160	2.9
2 m	We	3341	8.14	3440	4295	5515	7414	9992 *			7488 *	3.13
	Ws	2031	8.14	2097	2647	3399	4494	6248			7488 *	3.13
1 m	We	3306	8.1	3372	4177	5331	7128	10365			6110 *	3.02
	Ws	1991	8.1	2033	2540	3234	4246	5885			6110 *	3.02
0 m	We	3369	7.93		4089	5197	6941	10142	8256 *		5726 *	2.53
	Ws	2017	7.93		2459	3114	4083	5702	8256 *		5726 *	2.53
-1 m	We	3550	7.63		4040	5120	6845	10065	11208 *	7576 *	8082 *	1.79
	Ws	2121	7.63		2414	3045	4001	5638	9187	7576 *	8082 *	1.79
-2 m	We	3899	7.17		4041	5103	6829	10084	14733 *	10815 *	10188 *	1.69
	Ws	2333	7.17		2415	3029	3986	5654	9274	10815 *	9639 *	1.19
-3 m	We	4537	6.53			5152	6887	10187	13709 *	14321 *	13468 *	1.69
	Ws	2723	6.53			3073	4036	5739	9432	14321 *	12646 *	1.26
-4 m	We	5806	5.64				7033	9530 *	12065 *	16013 *	17516 *	1.74
	Ws	3489	5.64				4164	5902	9683	16013 *	17516 *	1.74
-5 m	We	6815 *	4.35					7471 *			9292 *	3.08
	Ws	5427	4.35					6190			9292 *	3.08

*Hydraulic pressure factor: 87.0%. Without asterisk: Stability factor: 75.0%

https://truckmanualshub.com/

Lifting Capacity

Lifting Capacities (Standard Arm)

Type of machine:	SH210LC-5	L:	2.94 m Arm length
Arm:	Standard arm	R:	Reach from swing center
Shoe:	600 Grouser shoe	H:	Bucket hook height
Bucket:	0.9 m^3	W:	Lifting capacity

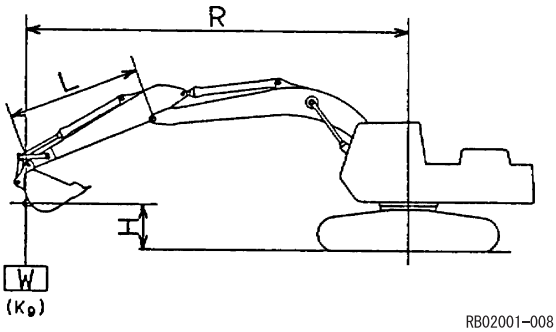

RB02001–008

We: Frontal rating load

Ws: Lateral rating load

MAX: Rating load at height point H and at maximum working reach

(Maximum working reach: 8.56 m) (Units; kg)

H \ R		Max. W	Max. R (m)	8 m	7 m	6 m	5 m	4 m	3 m	2 m	Min. W	Min. R (m)
7 m	We	2715 *	6.79								3936 *	6.25
	Ws	2715 *	6.79								3936 *	6.25
6 m	We	2647 *	7.46		3861 *						4029 *	6.15
	Ws	2647 *	7.46		3473						4029 *	6.15
5 m	We	2646 *	7.94		4244 *	4331 *					4366 *	5.73
	Ws	2646 *	7.94		3403	4331 *					4366 *	5.73
4 m	We	2702 *	8.27	3717 *	4529 *	4811 *	5262 *				5403 *	4.76
	Ws	2396	8.27	2564	3295	4319	5262 *				5403 *	4.76
3 m	We	2814 *	8.48	4066	4899 *	5401 *	6211 *	7627 *	10577 *		6659 *	2.21
	Ws	2225	8.48	2488	3165	4111	5537	7627 *	10577 *		6659 *	2.21
2 m	We	2989 *	8.56	3976	4973	6022 *	7188 *	9262 *	10663 *		4346 *	2.51
	Ws	2124	8.56	2404	3031	3901	5197	7348	10663 *		4346 *	2.51
1 m	We	3244 *	8.52	3891	4837	6213	8037 *	10533 *	8207 *		3756 *	2.37
	Ws	2084	8.52	2326	2908	3715	4913	6901	8207 *		3756 *	2.37
0 m	We	3566	8.36	3824	4729	6050	8169	11292 *	9025 *	4877 *	5620 *	2
	Ws	2106	8.36	2265	2810	3571	4711	6636	9025 *	4877 *	5620 *	2
-1 m	We	3733	8.08	3786	4657	5944	8029	11591 *	10900 *	7317 *	6989 *	1.83
	Ws	2198	8.08	2230	2745	3478	4591	6511	10717	7317 *	7196 *	1.47
-2 m	We	4050	7.65		4630	5897	7973	11507 *	13408 *	9731 *	9367 *	1.83
	Ws	2385	7.65		2720	3436	4544	6483	10759	9731 *	8556 *	1.28
-3 m	We	4611	7.05		4660	5912	7994	11052 *	14472 *	12375 *	11934 *	1.83
	Ws	2720	7.05		2748	3449	4562	6530	10881	12375 *	10865 *	1.28
-4 m	We	5656	6.24			6004	8094	10151 *	13091 *	15450 *	14878 *	1.83
	Ws	3340	6.24			3531	4647	6652	11092	15450 *	13440 *	1.28
-5 m	We	6548 *	5.1				6728 *	8570 *	10947 *		14250 *	2.09
	Ws	4689	5.1				4833	6872	10947 *		14250 *	2.09

*Hydraulic pressure factor: 87.0%. Without asterisk: Stability factor: 75.0%

https://truckmanualshub.com/

Lifting Capacities (Short Arm)

Type of machine:	SH210LC-5	L:	2.40 m Arm length
Arm:	Short arm	R:	Reach from swing center
Shoe:	600 Grouser shoe	H:	Bucket hook height
Bucket:	0.9 m^3	W:	Lifting capacity

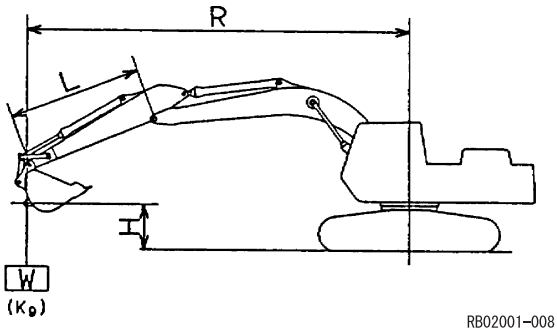

RB02001–008

We: Frontal rating load

Ws: Lateral rating load

MAX: Rating load at height point H and at maximum working reach

(Maximum working reach: 8.14 m) (Units; kg)

H \ R		Max. W	Max. R (m)	8 m	7 m	6 m	5 m	4 m	3 m	2 m	Min. W	Min. R (m)
7 m	We	3980 *	6.25			4425 *					4386 *	5.78
	Ws	3980 *	6.25			4425 *					4386 *	5.78
6 m	We	3889 *	6.97			4456 *					4463 *	5.67
	Ws	3397	6.97			4456 *					4463 *	5.67
5 m	We	3903 *	7.49		4594 *	4740 *					4965 *	5.16
	Ws	2911	7.49		3319	4396					4965 *	5.16
4 m	We	4002 *	7.84		4841 *	5196 *	5790 *	6805 *			7301 *	3.67
	Ws	2601	7.84		3222	4222	5734	6805 *			7301 *	3.67
3 m	We	3964	8.05	4011	5053	5754 *	6707 *	8428 *	12318 *		11220 *	2.9
	Ws	2405	8.05	2435	3102	4021	5393	7677	12214		11220 *	2.9
2 m	We	3822	8.14	3935	4916	6327 *	7616 *	9945 *			7450 *	3.13
	Ws	2293	8.14	2365	2978	3822	5068	7105			7450 *	3.13
1 m	We	3789	8.1	3865	4795	6145	8290	10990 *			6073 *	3.02
	Ws	2254	8.1	2301	2868	3653	4812	6728			6073 *	3.02
0 m	We	3868	7.93		4704	6006	8094	11494 *	8218 *		5690 *	2.53
	Ws	2287	7.93		2786	3530	4644	6537	8218 *		5690 *	2.53
-1 m	We	4082	7.63		4653	5926	7994	11570 *	11171 *	7540 *	7239 *	1.83
	Ws	2407	7.63		2740	3460	4559	6471	10719	7540 *	8045 *	1.79
-2 m	We	4488	7.17		4655	5908	7977	11291 *	14695 *	10779 *	10412 *	1.83
	Ws	2647	7.17		2741	3444	4545	6488	10812	10779 *	9668 *	1.28
-3 m	We	5231	6.53			5959	8038	10639 *	13658 *	14284 *	13795 *	1.83
	Ws	3087	6.53			3489	4597	6577	10980	14284 *	12647 *	1.28
-4 m	We	6532 *	5.64				7596 *	9484 *	12015 *	15959 *	16913 *	1.83
	Ws	3951	5.64				4728	6747	11248	15959 *	17478 *	1.74
-5 m	We	6771 *	4.35					7427 *			9246 *	3.08
	Ws	6158	4.35					7048			9246 *	3.08

*Hydraulic pressure factor: 87.0%. Without asterisk: Stability factor: 75.0%

https://truckmanualshub.com/

Lifting Capacity

Lifting Capacities (Standard Arm)

Type of machine:	SH240-5	L:	3.00 m Arm length
Arm:	Standard arm	R:	Reach from swing center
Shoe:	600 Grouser shoe	H:	Bucket hook height
Bucket:	1.1 m^3	W:	Lifting capacity

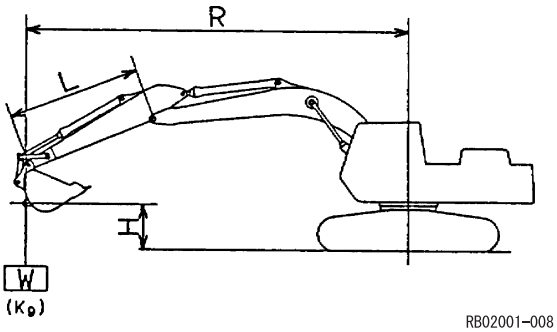

We: Frontal rating load

Ws: Lateral rating load

MAX: Rating load at height point H and at maximum working reach

(Maximum working reach: 8.77 m) (Units; kg)

H \ R		Max.		7.5 m	6 m	4.5 m	3 m	1.5 m	Min.	
		W	R (m)						W	R (m)
7.5 m	We	3207 *	6.72						3678 *	6.57
	Ws	3207 *	6.72						3678 *	6.57
6 m	We	3067 *	7.74	3935 *					5356 *	6.53
	Ws	3067 *	7.74	3935 *					5356 *	6.53
4.5 m	We	3093 *	8.37	4364	6103 *				6230 *	5.7
	Ws	3093 *	8.37	4168	6103 *				6230 *	5.7
3 m	We	3218	8.7	4172	6019	9226 *	14708 *		7043 *	2.37
	Ws	3062	8.7	3977	5740	9095	14708 *		7043 *	2.37
1.5 m	We	3074	8.76	3972	5636	8775	8712 *		4539 *	2.6
	Ws	2921	8.76	3779	5361	8315	8712 *		4539 *	2.6
0 m	We	3108	8.56	3815	5355	8306	10003 *		6515 *	2.04
	Ws	2950	8.56	3623	5083	7853	10003 *		6515 *	2.04
-1.5 m	We	3356	8.08	3737	5212	8131	13784 *	9004 *	8930 *	1.44
	Ws	3185	8.08	3547	4943	7681	13784 *	9004 *	8875 *	1.38
-3 m	We	3961	7.25		5214	8162	16997	13189 *	13063 *	1.44
	Ws	3761	7.25		4944	7712	15839	13189 *	12963 *	1.38
-4.5 m	We	5470	5.95			8388	15250 *	18175 *	18154 *	1.49
	Ws	5194	5.95			7934	15250 *	18175 *	18154 *	1.49

*Hydraulic pressure factor: 87.0%. Without asterisk: Stability factor: 75.0%

https://truckmanualshub.com/

Lifting Capacities (Short Arm)

Type of machine:	SH240-5	L:	2.50 m Arm length
Arm:	Short arm	R:	Reach from swing center
Shoe:	600 Grouser shoe	H:	Bucket hook height
Bucket:	1.3 m^3	W:	Lifting capacity

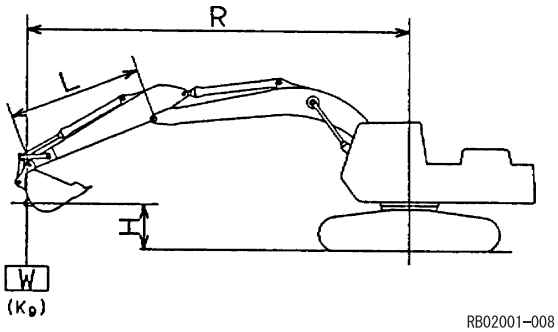

We: Frontal rating load

Ws: Lateral rating load

MAX: Rating load at height point H and at maximum working reach

(Maximum working reach: 8.30 m) (Units; kg)

H \ R		Max.		7.5 m	6 m	4.5 m	3 m	1.5 m	Min.	
		W	R (m)						W	R (m)
6 m	We	4468 *	7.2						5938 *	6.02
	Ws	4468 *	7.2						5938 *	6.02
4.5 m	We	3937	7.88	4307	6313				7347 *	4.97
	Ws	3756	7.88	4112	6031				7347 *	4.97
3 m	We	3531	8.23	4139	5944	9365			11109 *	3.02
	Ws	3362	8.23	3945	5666	8895			11109 *	3.02
1.5 m	We	3373	8.29	3964	5595	8653			7300 *	3.19
	Ws	3207	8.29	3772	5322	8195			7300 *	3.19
0 m	We	3429	8.08	3836	5358	8289	9277 *		6656 *	2.57
	Ws	3258	8.08	3645	5088	7838	9277 *		6656 *	2.57
-1.5 m	We	3753	7.56	3798	5262	8196	14880 *		11064 *	1.5
	Ws	3564	7.56	3607	4992	7746	14880 *		11064 *	1.5
-3 m	We	4561	6.68		5315	8290	17254 *	15467 *	15335 *	1.44
	Ws	4333	6.68		5044	7839	16113	15467 *	15232 *	1.38
-4.5 m	We	6815	5.23			8597	13656 *		16794 *	2.16
	Ws	6469	5.23			8140	13656 *		16794 *	2.16

*Hydraulic pressure factor: 87.0%. Without asterisk: Stability factor: 75.0%

https://truckmanualshub.com/

Lifting Capacity

Lifting Capacities (Long Arm)

Type of machine:	SH240-5	L:	3.52 m Arm length
Arm:	Long arm	R:	Reach from swing center
Shoe:	600 Grouser shoe	H:	Bucket hook height
Bucket:	1.0 m^3	W:	Lifting capacity

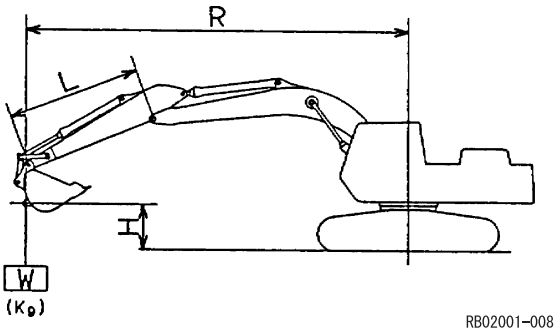

We: Frontal rating load

Ws: Lateral rating load

MAX: Rating load at height point H and at maximum working reach

(Maximum working reach: 9.30 m) (Units; kg)

H \ R		Max. W	Max. R (m)	9 m	7.5 m	6 m	4.5 m	3 m	1.5 m	Min. W	Min. R (m)
7.5 m	We	2541 *	7.4							3358 *	7.08
	Ws	2541 *	7.4							3358 *	7.08
6 m	We	2416 *	8.33		4325 *					4816 *	7.04
	Ws	2416 *	8.33		4325 *					4816 *	7.04
4.5 m	We	2414 *	8.92		4405					5410 *	6.35
	Ws	2414 *	8.92		4208					5410 *	6.35
3 m	We	2514 *	9.23	3024	4195	6098	8277 *			15668 *	2.48
	Ws	2514 *	9.23	2875	4000	5818	8277 *			15668 *	2.48
1.5 m	We	2724 *	9.29	2913	3973	5682	8927	11592 *		3825 *	2.18
	Ws	2612	9.29	2765	3780	5406	8463	11592 *		3825 *	2.18
0 m	We	2773	9.1	2823	3788	5356	8348	10201 *		5290 *	1.55
	Ws	2628	9.1	2676	3597	5084	7894	10201 *		5290 *	1.55
-1.5 m	We	2962	8.65		3677	5166	8083	12739 *	7820 *	7727 *	1.44
	Ws	2806	8.65		3486	4896	7633	12739 *	7820 *	7655 *	1.38
-3 m	We	3416	7.88		3668	5118	8046	16751	11367 *	11242 *	1.44
	Ws	3239	7.88		3477	4849	7597	15598	11367 *	11143 *	1.38
-4.5 m	We	4452	6.71			5229	8200	16606 *	15601 *	15418 *	1.44
	Ws	4226	6.71			4958	7749	15962	15601 *	15271 *	1.38
-6 m	We	7494 *	4.81				8171 *	11856 *		12642 *	2.75
	Ws	7364	4.81				8169	11856 *		12642 *	2.75

*Hydraulic pressure factor: 87.0%. Without asterisk: Stability factor: 75.0%

https://truckmanualshub.com/

Overall View (SH210-5 / SH210LC-5)

1. Standard Arm (2.94 m)

   Note: 1. Numbers are subject to change without notice due to design change or other reason.
   Note: 2. The figures give values that include the shoe lug height (26 mm).
   Note: 3. The dimensions in ( ) are for the SH210LC-5.

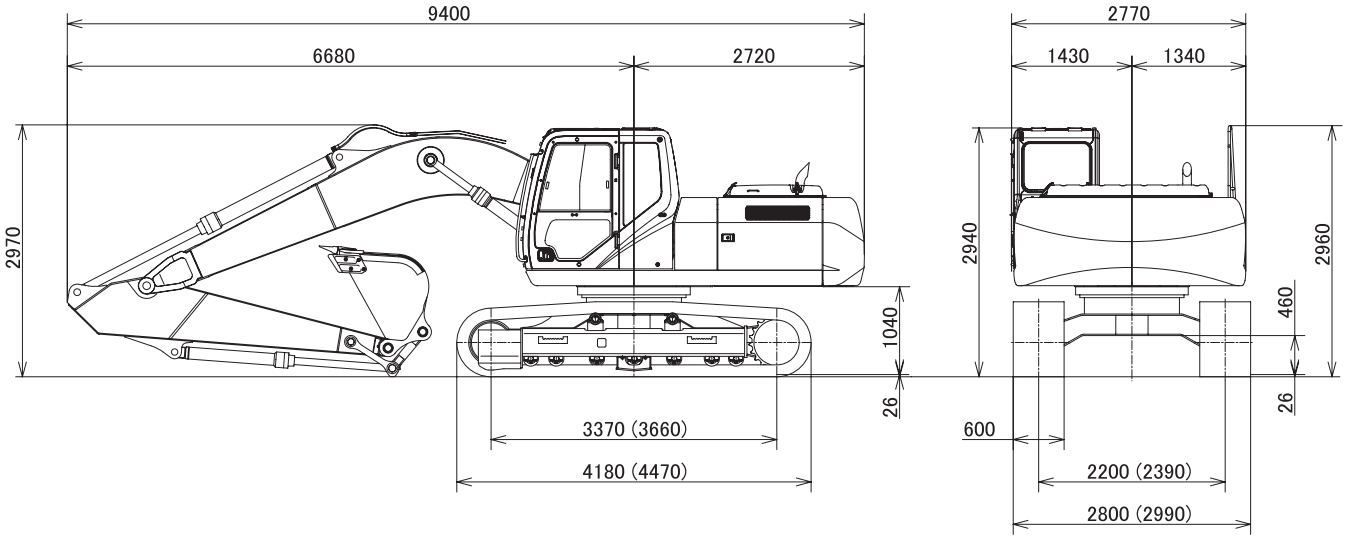

RST-02-03-001a

2. Short Arm (2.40 m)

   Note: 1. Numbers are subject to change without notice due to design change or other reason.
   Note: 2. The figures give values that include the shoe lug height (26 mm).
   Note: 3. The dimensions in ( ) are for the SH210LC-5.

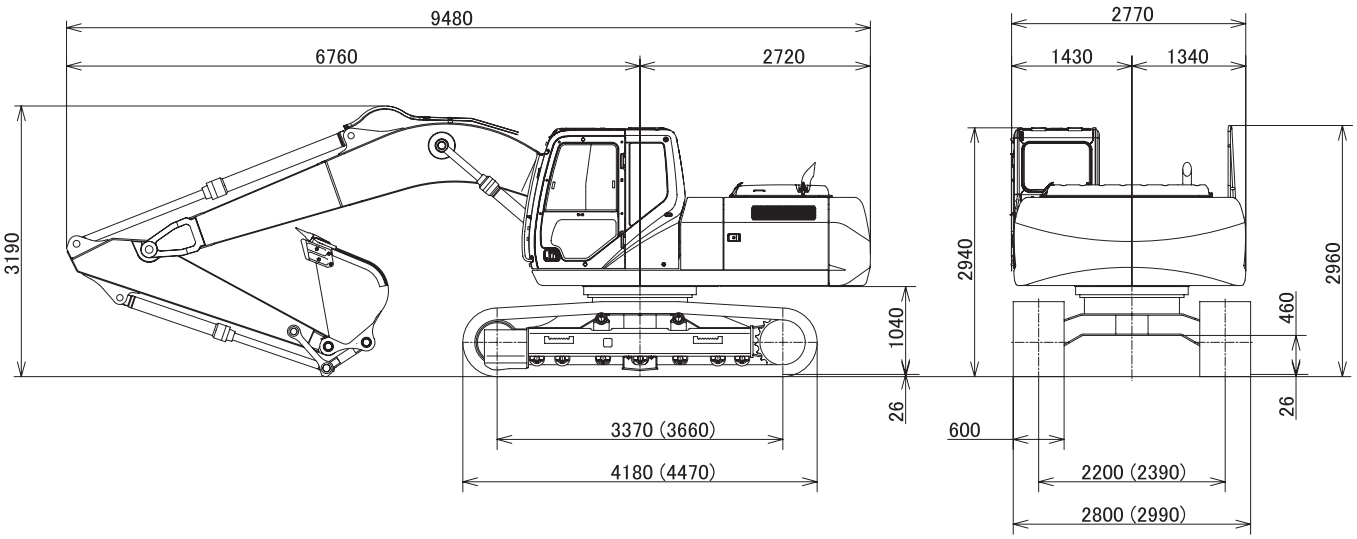

RST-02-03-001b

https://truckmanualshub.com/

Overall View

Overall View (SH240-5)

1. Standard Arm (3.00 m)

   Note: 1. Numbers are subject to change without notice due to design change or other reason.
   Note: 2. The figures give values that include the shoe lug height (26 mm).

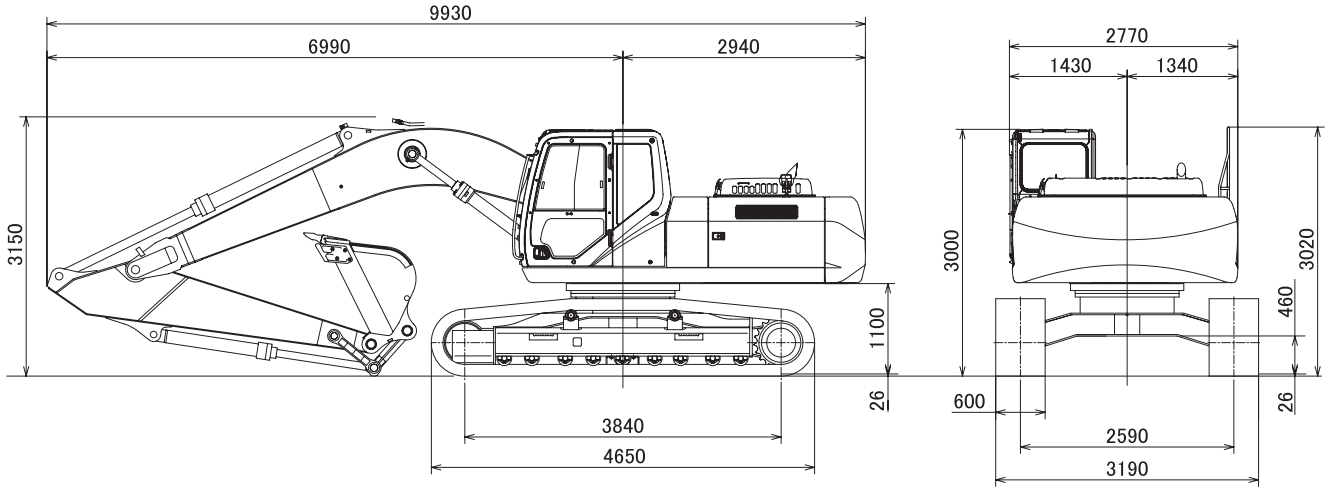

RST-02-03-001c

2. Short Arm (2.50 m)

   Note: 1. Numbers are subject to change without notice due to design change or other reason.
   Note: 2. The figures give values that include the shoe lug height (26 mm).

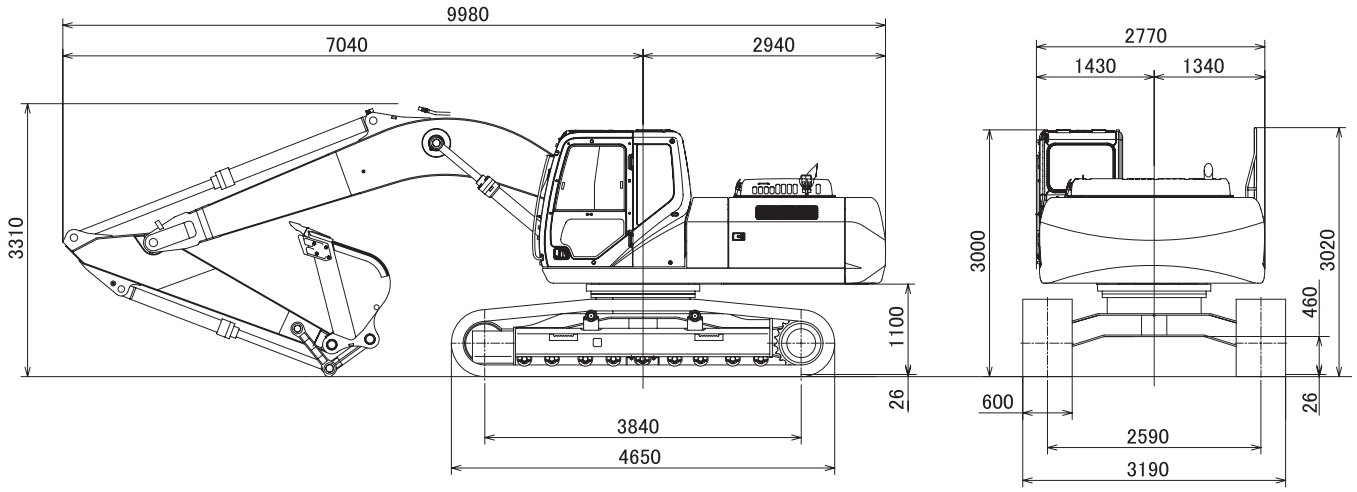

RST-02-03-001d

https://truckmanualshub.com/

3. Long Arm (3.52 m)

Note: 1. Numbers are subject to change without notice due to design change or other reason.
Note: 2. The figures give values that include the shoe lug height (26 mm).

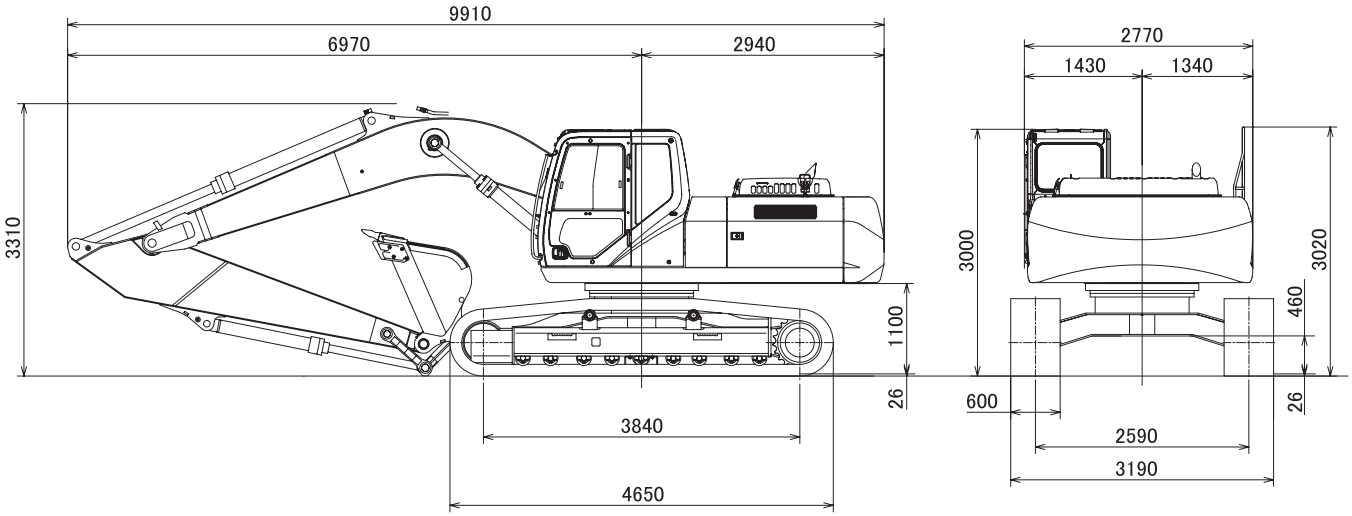

RST-02-03-001e

https://truckmanualshub.com/

Work Range Diagram (SH210-5 / SH210LC-5)

1. Standard Arm (2.94 m)

Note: 1. Numbers are subject to change without notice due to design change or other reason.
Note: 2. The figures give values that exclude the shoe lug height (26 mm).

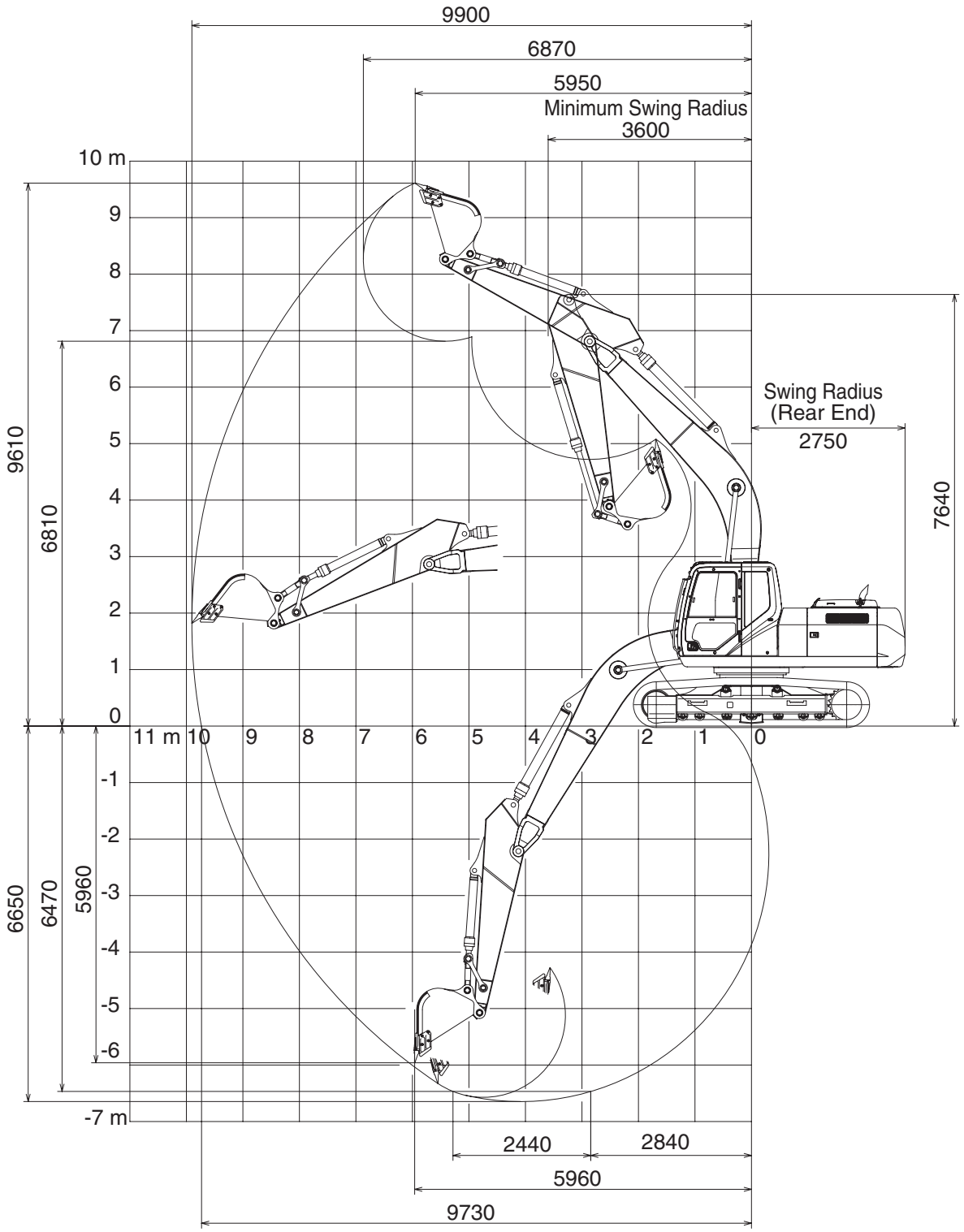

RST-02-04-001a

https://truckmanualshub.com/

Work Range Diagram

2. Short Arm (2.40 m)

Note: 1. Numbers are subject to change without notice due to design change or other reason.
Note: 2. The figures give values that exclude the shoe lug height (26 mm).

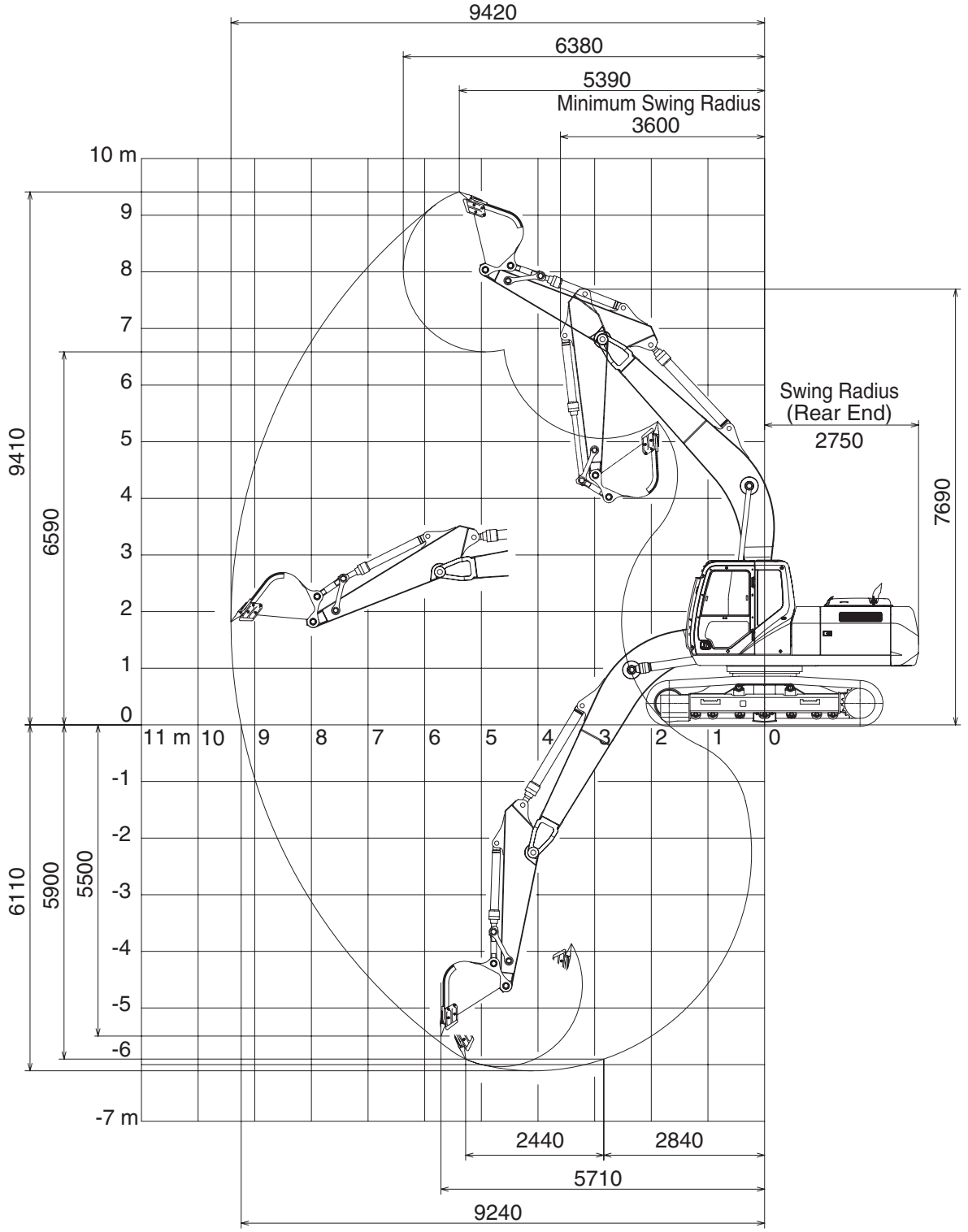

RST-02-04-001b

https://truckmanualshub.com/

B

Work Range Diagram (SH240-5)

1. Standard Arm (3.00 m)

Note: 1. Numbers are subject to change without notice due to design change or other reason.
Note: 2. The figures give values that exclude the shoe lug height (26 mm).

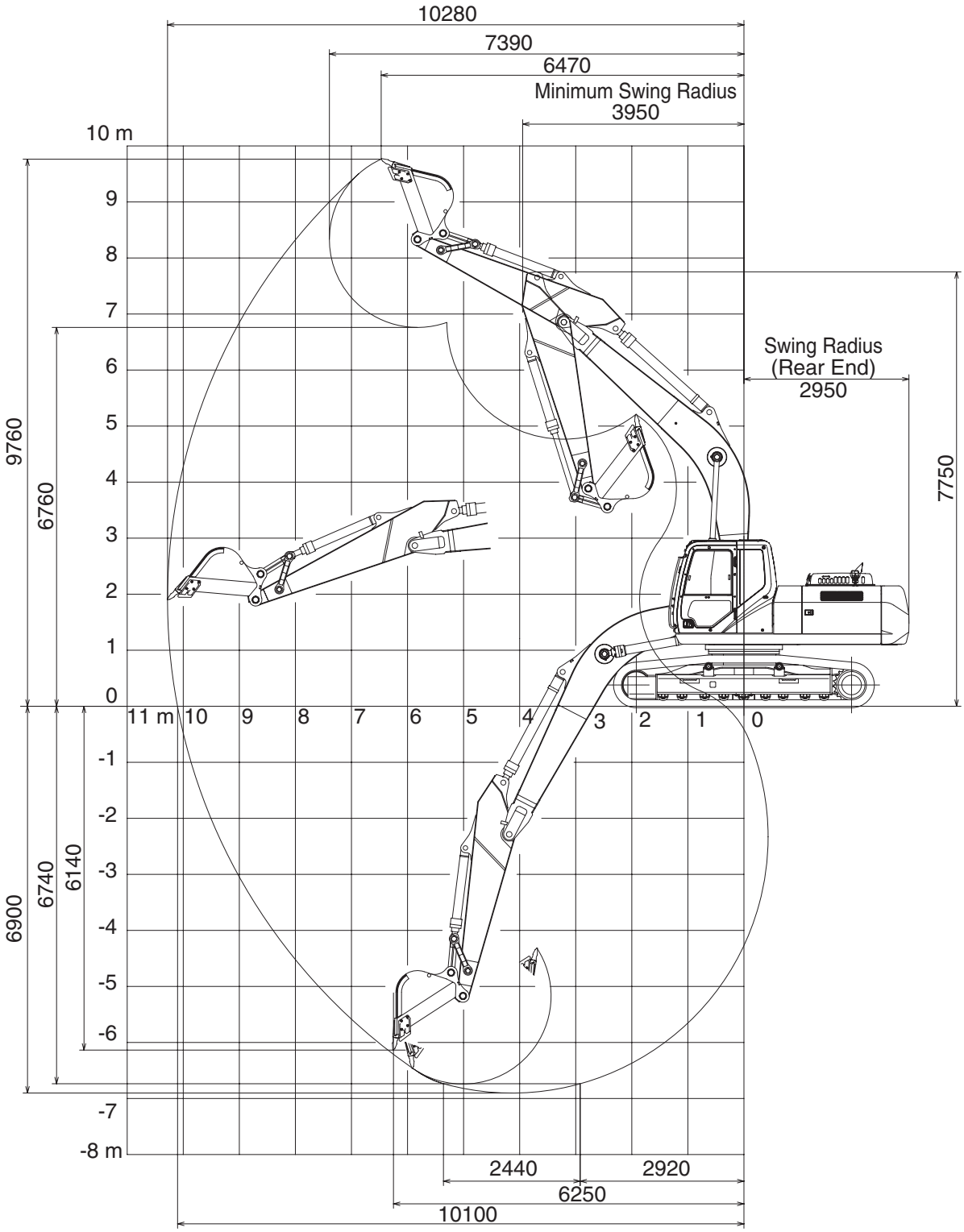

RST-02-04-001c

https://truckmanualshub.com/

Work Range Diagram

2. Short Arm (2.50 m)

Note: 1. Numbers are subject to change without notice due to design change or other reason.
Note: 2. The figures give values that exclude the shoe lug height (26 mm).

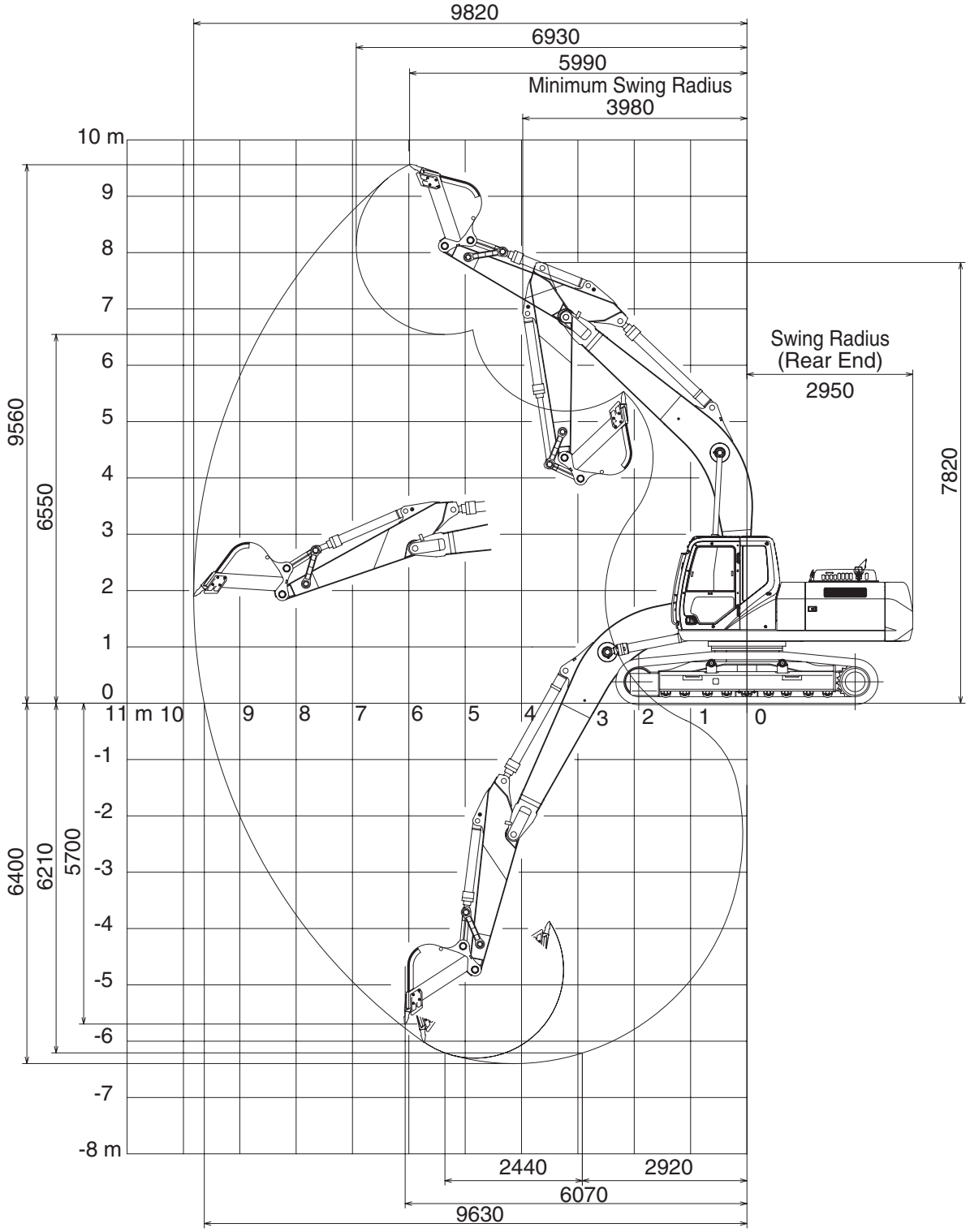

RST-02-04-001d

https://truckmanualshub.com/

3. Long Arm (3.52 m)

Note: 1. Numbers are subject to change without notice due to design change or other reason.
Note: 2. The figures give values that exclude the shoe lug height (26 mm).

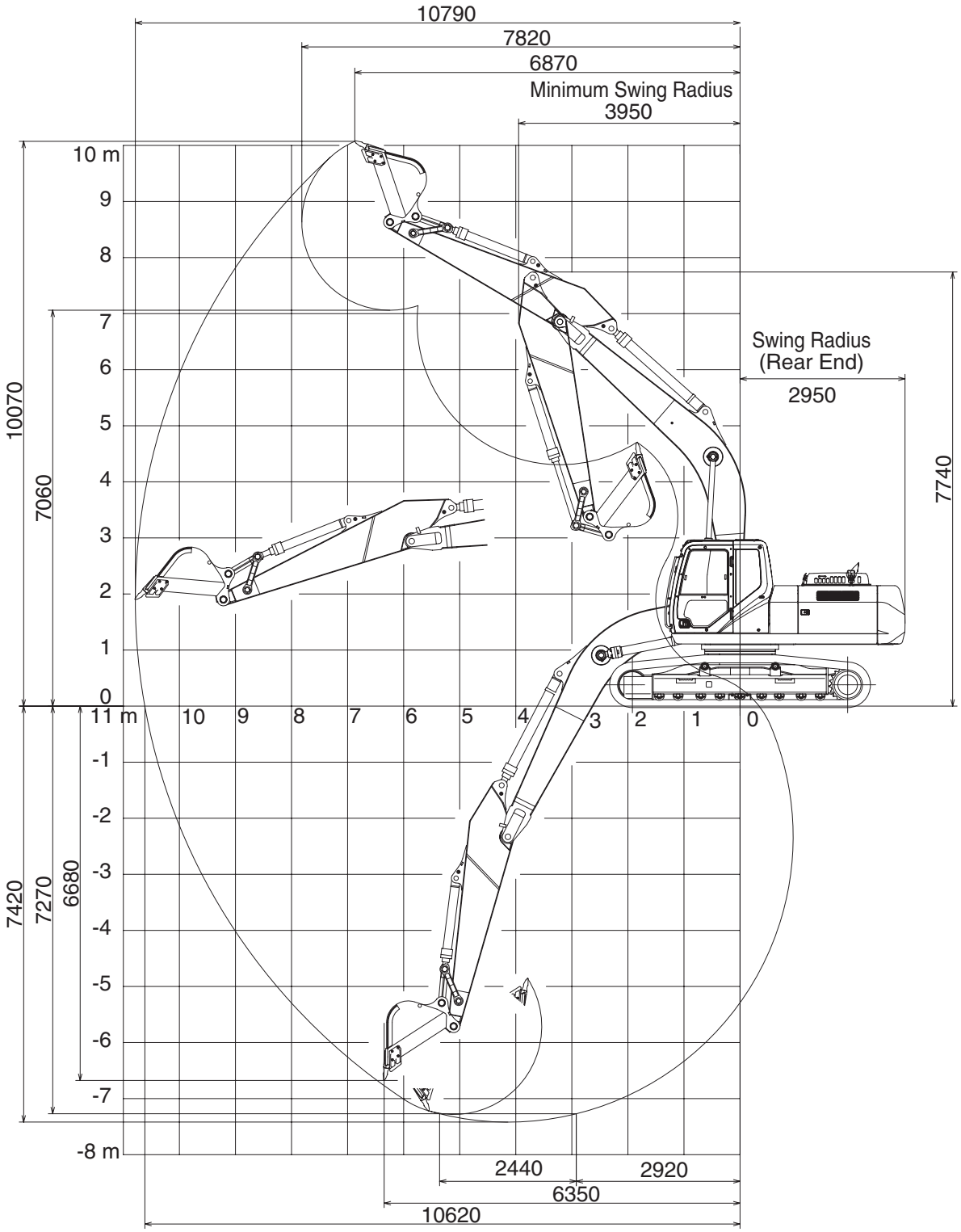

RST-02-04-001e

https://truckmanualshub.com/

Lower Mechanism

1. Travel Unit

	SH210-5 / SH210LC-5	SH240-5
Sumitomo Part No.	KRA10150	KBA10290
Manufacturer	Kayaba Industry Co., Ltd.	Kayaba Industry Co., Ltd.
Motor type	Variable displacement piston motor Automatic 2-speed switchover with parking brake	Variable displacement piston motor Automatic 2-speed switchover with parking brake
Intake amount	168.9 / 100.3 cm^3 / rev	181.3 / 112.6 cm^3 / rev
Operating pressure	34.3 MPa	34.3 MPa
Operating flow	210.6 L / min	234.0 L / min
Brake torque	20.9 kN•m min. (including reduction gear)	20.9 kN•m min. (including reduction gear)
Relief valve set pressure	35.3 MPa	35.3 MPa
Automatic 2-speed switchover pressure	25.5 MPa	25.5 MPa
Reduction gear		
Reduction gear type	Planetary gear two-stage reduction gear	Planetary gear two-stage reduction gear
Reduction ratio	43.246	43.246
Dry weight	262 kg	262 kg

2. Take-up Roller

	SH210-5 / SH210LC-5 / SH240-5
Sumitomo Part No.	KRA1767
Weight	86.8 kg

3. Upper-roller

	SH210-5 / SH210LC-5 / SH240-5
Sumitomo Part No.	KRA1717
Weight	17.2 kg

4. Lower-roller

	SH210-5 / SH210LC-5	SH240-5
Sumitomo Part No.	KRA10360	KBA10310
Weight	34.4 kg	35.8 kg

https://truckmanualshub.com/

Main Equipment Table

5. Recoil Spring

	SH210-5 / SH210LC-5		SH240-5	
Item	Sumitomo Part No.	Weight (kg)	Sumitomo Part No.	Weight (kg)
Yoke	KRA10230	25.6	KRA10230	25.6
Sems B M16 X 50	105R016Y050R	0.5	105R016Y050R	0.5
Threaded rod	KRA10240	29.7	KRA10240	29.7
Groove height N M56	165R056HSN	1.0	165R056HSN	1.0
SP pin 8 X 80	338W080Z080B	0.1	338W080Z080B	0.1
Recoil spring	KRA10170	67.6	KRA10170	67.6
Grease cylinder assembly	KBA1118	30.4	KBA10400	35.4
Sems B M16 X 55 / 60	105R016Y055R	0.2	105R016Y060R	0.3
Assembly	Total	155	Total	160
	Mounting length of spring	556 mm	Mounting length of spring	556 mm

6. Shoes

	SH210-5		SH210LC-5		SH240-5	
Item	Sumitomo Part No.	Weight or quantity	Sumitomo Part No.	Weight or quantity	Sumitomo Part No.	Weight or quantity
600 grouser	KRA11270	1257 kg	KRA11370	1339 kg	KBA11230	1476kg
Link	KRA11450	1 set	KRA11500	1 set	KBA11280	1 set
Shoes	KRA1005	46	KRA1005	49	KBA0839	51
Bolt	KRA1006	184	KRA1006	196	KRA1006	204
Nut	KRA1007	184	KRA1007	196	KRA1007	204
700 grouser	KRA11310	1469 kg	KRA11380	1564 kg	KBA11240	1618kg
Link	KRA11450	1 set	KRA11500	1 set	KBA11280	1 set
Shoes	KBA0883	46	KBA0883	49	KBA0883	51
Bolt	KRA1006	184	KRA1006	196	KRA1006	204
Nut	KRA1007	184	KRA1007	196	KRA1007	204
800 grouser	KRA11320	1593kg	KRA11390	1697kg	KBA11250	1766 kg
Link	KRA11450	1 set	KRA11500	1 set	KBA11280	1 set
Shoes	KBA0776	46	KBA0776	49	KBA0776	51
Bolt	KRA1006	184	KRA1006	196	KRA1006	204
Nut	KRA1007	184	KRA1007	196	KRA1007	204
900 triangular shoes	KRA11340	1558kg	KRA11420	1658 kg		
Link	KRA11450	1 set	KRA11500	1 set		
Shoes	KRA1212	46	KRA1212	49		
Bolt	KRA1006	184	KRA1006	196		
Nut	KRA1007	184	KRA1007	196		

https://truckmanualshub.com/

Upper Mechanism

1. Swing Unit

	SH210-5 / SH210LC-5	SH240-5
Swing motor assembly		
Sumitomo Part No.	KRC10010	KBC10010
Swing motor		
Sumitomo Part No.	-	KBC10020
Manufacturer	TOSHIBA MACHINE CO., LTD	Kawasaki Precision Machinery Ltd.
Motor type	Fixed displacement piston motor With parking brake	Fixed displacement piston motor With parking brake
Intake amount	151 cm^3 / rev	148.5 cm^3 / rev
Operating pressure	29.4 MPa	28.9 MPa
Operating flow	210.6 L / min	214 L / min
Mechanical brake torque	821.5 N•m min.	846.0 N•m min.
Brake off pressure	3.2 MPa max.	2.9 MPa max.
Relief valve set pressure	29.4 MPa	28.9 MPa
Swing reduction gear		
Sumitomo Part No.	-	KBC10030
Manufacturer	TOSHIBA MACHINE CO., LTD	Hitachi Construction Machinery Co., Ltd.
Reduction gear type	Planetary gear two-stage reduction gear	Planetary gear two-stage reduction gear
Reduction ratio	16.757	21.75
Dry weight	235 kg	293 kg
Turntable bearing		
Sumitomo Part No.	KRB11710	KBB11350
Number of teeth	92	92
Weight	244 kg	373 kg
Counterweight		
Sumitomo Part No.	KRB12620	KBB11610
Weight	3800 kg	5250 kg

https://truckmanualshub.com/

Main Equipment Table

Engine-related

1. Engine

	SH210-5 / SH210LC-5	SH240-5
Sumitomo Part No.	KRH10850	KBH10750
Engine model name	ISUZU 4HK1X diesel engine	ISUZU 4HK1X diesel engine
Engine type	4-cycle, water cooled, overhead camshaft type straight cylinder, direct fuel injection type (electronically controlled)	4-cycle, water cooled, overhead camshaft type straight cylinder, direct fuel injection type (electronically controlled)
Number of cylinders - bore - stroke	4 - ϕ115 mm - 125 mm	4 - ϕ115 mm - 125 mm
Total exhaust amount	5.193 L	5.193 L
Compression ratio	17.5	17.5
Rated output	117.3 kW / 1800 min^{-1}	132.1 kW / 2000 min^{-1}
Maximum torque	628 N•m / approx. 1500 min^{-1}	636 N•m / approx.
Fuel consumption ratio	229.3 g / kW•h max.	228.6 g / kW•h max.
Engine dry weight	About 480 kg	About 480 kg
Engine dimensions	L 1020.4 - W 829 - H 1011.8 mm	L 1020.4 - W 829 - H 1011.8 mm
Oil pan	All direction 35°, inclinable	All direction 35°, inclinable
Cooling fan	ϕ650 mm - suction type - 7 vanes, plastic With bell mouth type fan guide	ϕ650 mm - suction type - 7 vanes, plastic With bell mouth type fan guide
Pulley ratio	0.85 (reduction)	0.85 (reduction)
Charging generator	24 V 50 A AC type	24 V 50 A AC type
Starter motor	24 V 5 kW reduction type	24 V 5 kW reduction type
Coolant capacity	14.0 L	14.0 L
Oil pan capacity	Max : 20.5 L Min : 13 L (not including oil filter)	Max : 20.5 L Min : 13 L (not including oil filter)
Direction of rotation	Clockwise (as seen from fan)	Clockwise (as seen from fan)

https://truckmanualshub.com/

2. Muffler

	SH210-5 / SH210LC-5 / SH240-5
Sumitomo Part No.	KRH10880
Manufacturer	SANKEI GIKEN KOGYO CO., LTD
Model	ϕ280 X 700 L
Weight	15.9 kg

3. Air Cleaner (double element)

	SH210-5 / SH210LC-5 / SH240-5
Sumitomo Part No.	KRH10050
Manufacturer	Nippon Donaldson , Ltd.
Element (outer)	KBH0921
Element (inner)	KBH0922
Weight	7.6 kg

4. Radiator

		SH210-5 / SH210LC-5	SH240-5
Sumitomo Part No.		KRH10810	KBH10800
Manufacturer		T.RAD Co., Ltd	T.RAD Co., Ltd
Oil cooler	Weight	27.5 kg	30.0 kg
	Oil capacity	11.4 L	12.9 L
Radiator	Weight	15.6 kg	15.2 kg
	Water capacity	7.5 L	7.0 L
Air cooler	Weight	7.0 kg	8.0 kg
	Capacity	-	-
Fuel cooler	Weight	1.2 kg	1.2 kg
	Capacity	0.44 L	0.44 L
Total weight		117 kg	114 kg

https://truckmanualshub.com/

Main Equipment Table

Hydraulic Device

1. Hydraulic Pump

		SH210-5 / SH210LC-5	SH240-5
Sumitomo Part No.		KRJ10290	KBJ10510
Manufacturer		Kawasaki Precision Machinery Ltd.	Kawasaki Precision Machinery Ltd.
Main pump			
Pump type		Double variable displacement piston pump	Double variable displacement piston pump
Displacement		118.5 X 2 cm^3 / rev	118.5 X 2 cm^3 / rev
Operating pressure	Rated	34.3 MPa	34.3 MPa
	Maximum	36.8 MPa	36.8 MPa
Input revolution speed		1800 min^{-1}	2000 min^{-1}
Maximum discharge flow		213 X 2 L / min (at 2000 min^{-1})	236 X 2 L / min (at 2000 min^{-1})
Pilot pump			
Pump type		Gear pump	Gear pump
Displacement		10 cm^3 / rev	10 cm^3 / rev
Operating pressure		3.92 MPa	3.92 MPa
Maximum discharge flow		18 L / min (at 1800 min^{-1})	20 L / min (at 2000 min^{-1})
Control method		Hydraulic simultaneous constant output control	Hydraulic simultaneous constant output control
		Maximum flow adjustment control through external commands (negative control)	Maximum flow adjustment control through external commands (negative control)
		Setting through external command curreHorsepower adjustment control	Setting through external command curreHorsepower adjustment control
Dry weight		127 kg	127 kg

https://truckmanualshub.com/

2. Pump P - Q Diagram
(SH210-5 / SH210LC-5)

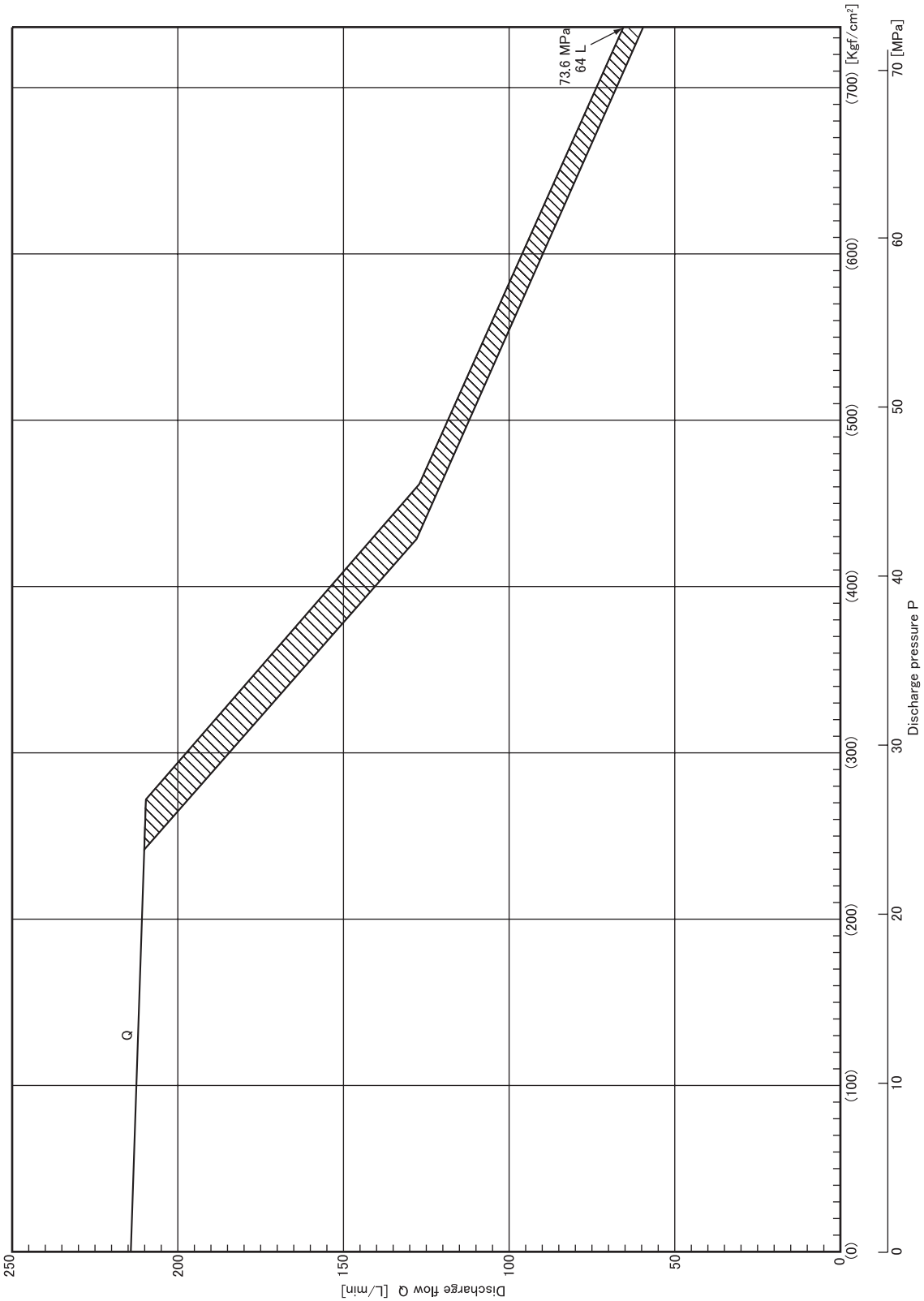

RC01001-001

https://truckmanualshub.com/

Main Equipment Table

(SH240-5)

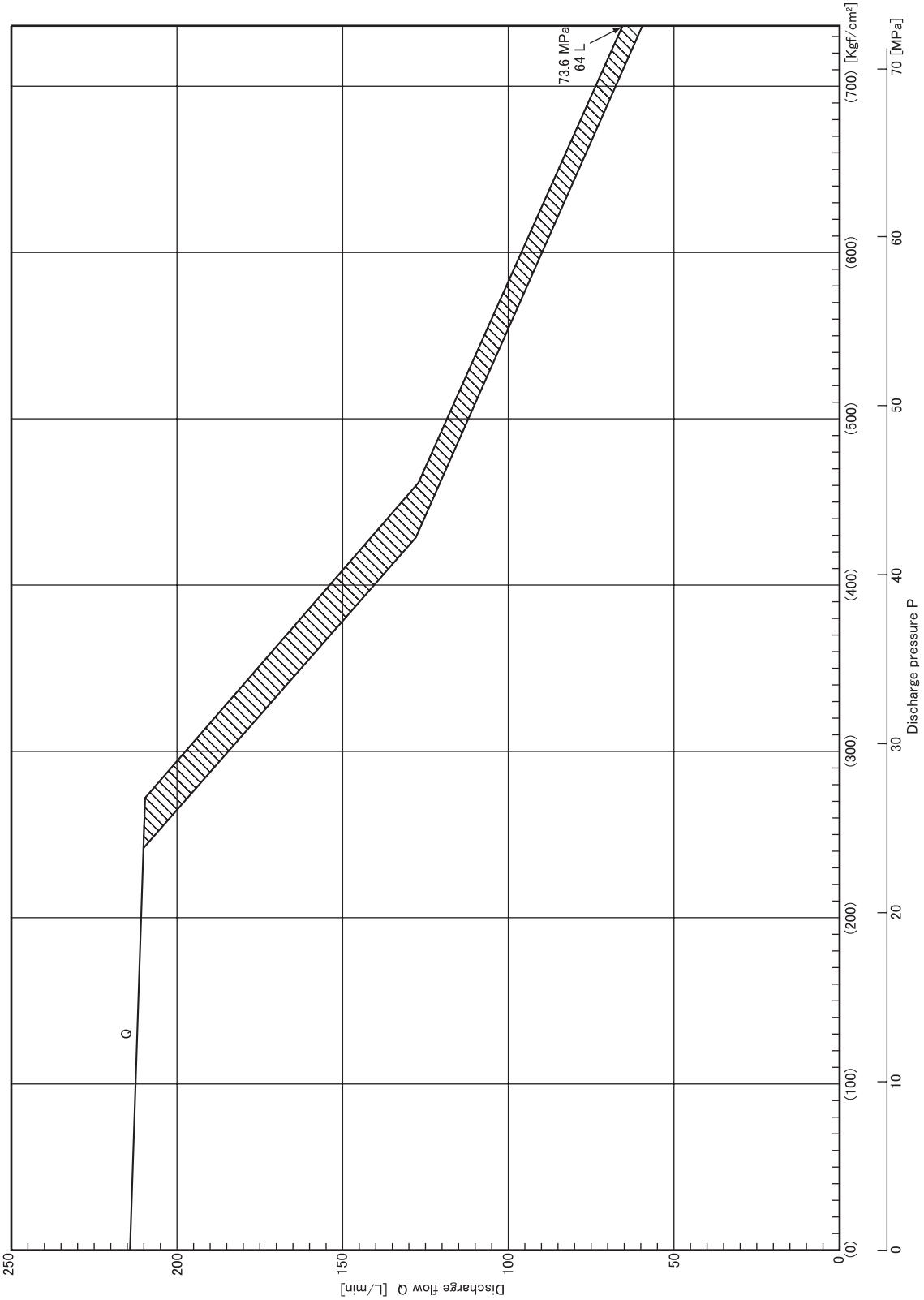

RC01001-001

https://truckmanualshub.com/

Control-related

1. Control Valve

	SH210-5 / SH210LC-5	SH240-5
Sumitomo Pboom-upart No.	KRJ10310	KBJ10390
Manufacturer	KYB Coporation	KYB Coporation
Maximum flow	213 L / min(at 1800 min^{-1})	237 L / min (at 2000 min^{-1})
Overload set pressure	29.4 MPa boom-down	29.4 MPa boom-down
	38.7 MPa other	38.7 MPa other
Main relief set pressure	34.3 MPa	34.3 MPa
(at boosting)	36.8 MPa	36.8 MPa
Foot relief set pressure	2.55 MPa	2.55 MPa
Function	Straight travel circuit	Straight travel circuit
	Boom-up / arm 2nd speed internal merge	Boom-up / arm 2nd speed internal merge
	Boom / arm load holding circuit	Boom / arm load holding circuit
	Boom-down regenerative circuit	Boom-down regenerative circuit
	Bucket-close regenerative circuit	Bucket-close regenerative circuit
	Arm-in forced regenerative circuit	Arm-in forced regenerative circuit
	Swing priority variable metering valve (for arm operation)	Swing priority variable metering valve (for arm operation)
	Option 2nd speed merge	Option 2nd speed merge
	Variable foot relief	Variable foot relief
Weight	192 kg	192 kg

2. Solenoid Valve (5-stack)

	SH210-5 / SH210LC-5 / SH240-5	
Sumitomo Part No.	KHJ14520	
Manufacturer	YUKEN KOGYO CO., LTD.	
Valve specifications		
Maximum flow	P → B 25 L / min other 5 L / min	
Rated pressure	4.5 MPa	
Port size	P.T.B. port	G 3 / 8
	C1, C2, C3, C4, C5 ports	G 1 / 4
Solenoid specifications		
Operating voltage	20 to 32 V DC	
Power consumption	17 W max.	
Weight	6.7 kg	

https://truckmanualshub.com/

Main Equipment Table

3. Remote Control Valve (left / right, travel operations)

(1) Valve for left / right operations

		SH210-5 / SH210LC-5 / SH240-5
Sumitomo Part No.		KHJ13270
Manufacturer		Kawasaki Precision Machinery Ltd.
Operating pressure		3.92 MPa
Secondary pressure		0.64 to 2.45 MPa primary short type
Operating angle	1, 3 ports	19 °
	2, 4 ports	25 °
Weight		1.9 kg

(2) Valve for travel operation

	SH210-5 / SH210LC-5 / SH240-5
Sumitomo Part No.	KRJ5803
Manufacturer	Kawasaki Precision Machinery Ltd.
Operating pressure	3.92 MPa
Secondary pressure	0.64 to 2.45 MPa primary short type
Operating angle	12.4 °
Weight	7.8 kg

https://truckmanualshub.com/

4. Remote Control Valve Characteristic Diagram

(1) Operation remote control valve control diagram

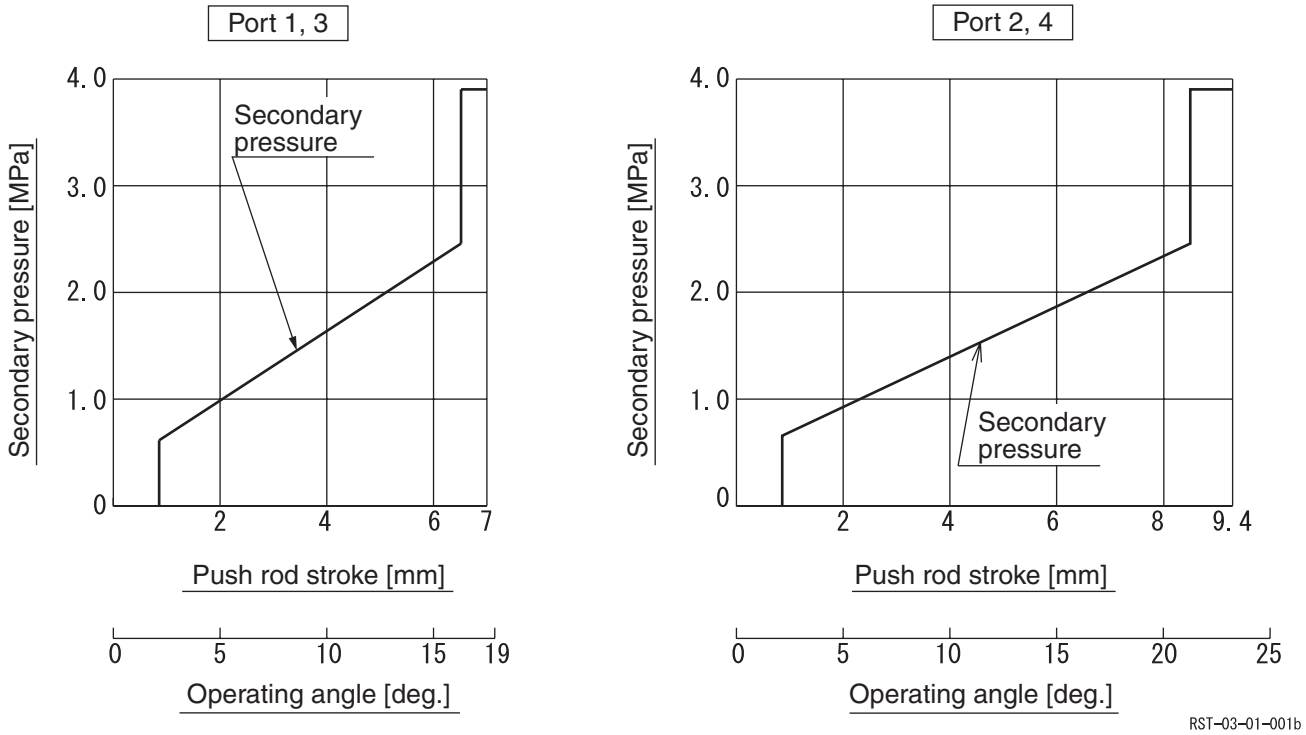

(2) Travel remote control valve control diagram

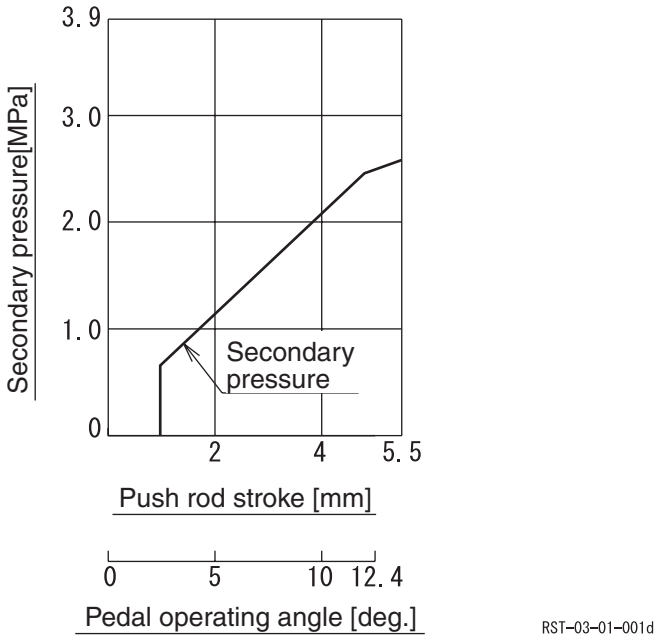

https://truckmanualshub.com/

Main Equipment Table

5. Cushion Valve (heat circuit, with shuttle valve)

	SH210-5 / SH210LC-5 / SH240-5
Sumitomo Part No.	KBJ12430
Manufacturer	Yanagisawa Seiki Mfg. Co.,Ltd.
Port size	G 3 / 8 (A to P ports)
	G 1 / 4 (Q to V ports)
Weight	12.5 kg

6. Selector Valve (option)

	SH210-5 / SH210LC-5 / SH240-5
2WAY	
Sumitomo Part No.	KHJ12050
Manufacturer	Nishina Industrial Co., Ltd.
Rated flow	25 L / min
Operating type	I : ISO
	S : Sumitomo (old)
Port size	G3 / 8
Weight	4 kg
4WAY	
Sumitomo Part No.	KHJ10470
Manufacturer	Nishina Industrial Co., Ltd.
Rated flow	25 L / min
Operating type	ISO, Mitsubishi (old), Sumitomo (old), Kobelco (old)
Port size	G1 / 4
Weight	11.3 kg

https://truckmanualshub.com/

7. Center Joint

	SH210-5 / SH210LC-5 / SH240-5	
Sumitomo Part No.	KRA11190	
Operating pressure	High pressure passage (ABCD)	34.3 MPa
	Drain port (E)	0.5 MPa
	Pilot port (F)	3.9 MPa
Flow	High pressure passage (ABCD)	234 L / min
	Drain port (E)	10 L / min
	Pilot port (F)	21 L / min
Port A	Forward right	G 3 / 4
Port B	Forward left	G 3 / 4
Port C	Backward right	G 3 / 4
Port D	Backward left	G 3 / 4
Port E	Drain port	G 1 / 2
Port F	Pilot port	G 1 / 4
Weight	29.5 kg	

https://truckmanualshub.com/

Main Equipment Table

Backhow Attachment

1. Cylinder

Boom cylinder	SH210-5 / SH210LC-5	SH240-5
Sumitomo Part No.	KRV19520 (right)	KBV11060 (right)
	KRV19540(left)	KBV11080 (left)
Manufacturer	KYB Coporation	KYB Coporation
Cylinder bore	ϕ120 mm	ϕ130 mm
Rod diameter	ϕ85 mm	ϕ90 mm
Maximum retracted length	1753 mm	1855 mm
Stroke	1255 mm	1335 mm
Weight	164 kg	204 kg

Arm cylinder	SH210-5 / SH210LC-5	SH240-5
Sumitomo Part No.	KRV19600	KBV11100
Manufacturer	KYB Coporation	KYB Coporation
Cylinder bore	ϕ140 mm	ϕ145 mm
Rod diameter	ϕ100 mm	ϕ105 mm
Maximum retracted length	2020 mm	2240 mm
Stroke	1460 mm	1660 mm
Weight	263 kg	319 kg

Bucket cylinder	SH210-5 / SH210LC-5	SH240-5
Sumitomo Part No.	KRV19640	KBV11040
Manufacturer	KYB Coporation	KYB Coporation
Cylinder bore	ϕ120 mm	ϕ130 mm
Rod diameter	ϕ85 mm	ϕ90 mm
Maximum retracted length	1565 mm	1635 mm
Stroke	1010 mm	1070 mm
Weight	150 kg	190 kg

https://truckmanualshub.com/

2. Attachment

(1) SH210-5 / SH210LC-5 bucket type

- ● Standard bucket
- ◎ General digging (specific gravity 2.0 ton / m^3 max.)
- ○ Light digging (specific gravity 1.6 ton / m^3 max.)
- r For loading only (specific gravity 1.2 ton / m^3 max.)
- × Do not use

Bucket capacity (m^3)		0.5	0.8	0.9	1.0	1.1
Number of claws		3	5	5	6	6
Width (mm)		820 (720)	1130 (1036)	1250 (1150)	1340 (1240)	1733 (1350)
SH210-5	Standard arm (2.94 m)	◎	●	○	r	r
	Short arm (2.40 m)	◎	◎	●	○	r
SH210LC-5	Standard arm (2.94 m)	◎	◎	●	○	r
	Short arm (2.40 m)	◎	◎	◎	●	r

The figures in ( ) are dimensions excluding the side cutter.

(2) SH240-5 bucket type

- ● Standard bucket
- ◎ General digging (specific gravity 2.0 ton / m^3 max.)
- ○ Light digging (specific gravity 1.6 ton / m^3 max.)
- r For loading only (specific gravity 1.2 ton / m^3 max.)
- × Do not use

Bucket capacity (m^3)		0.8	1.0	1.1	1.3
Number of claws		4	5	5	5
Width (mm)		1085 (985)	1276 (1175)	1360 (1210)	1556 (1410)
SH240-5	Standard arm (3.00 m)	◎	◎	●	○
	Short arm (2.50 m)	◎	◎	◎	●
	Long arm (3.52 m)	◎	●	○	○

The figures in ( ) are dimensions excluding the side cutter.

https://truckmanualshub.com/

Main Equipment Layout

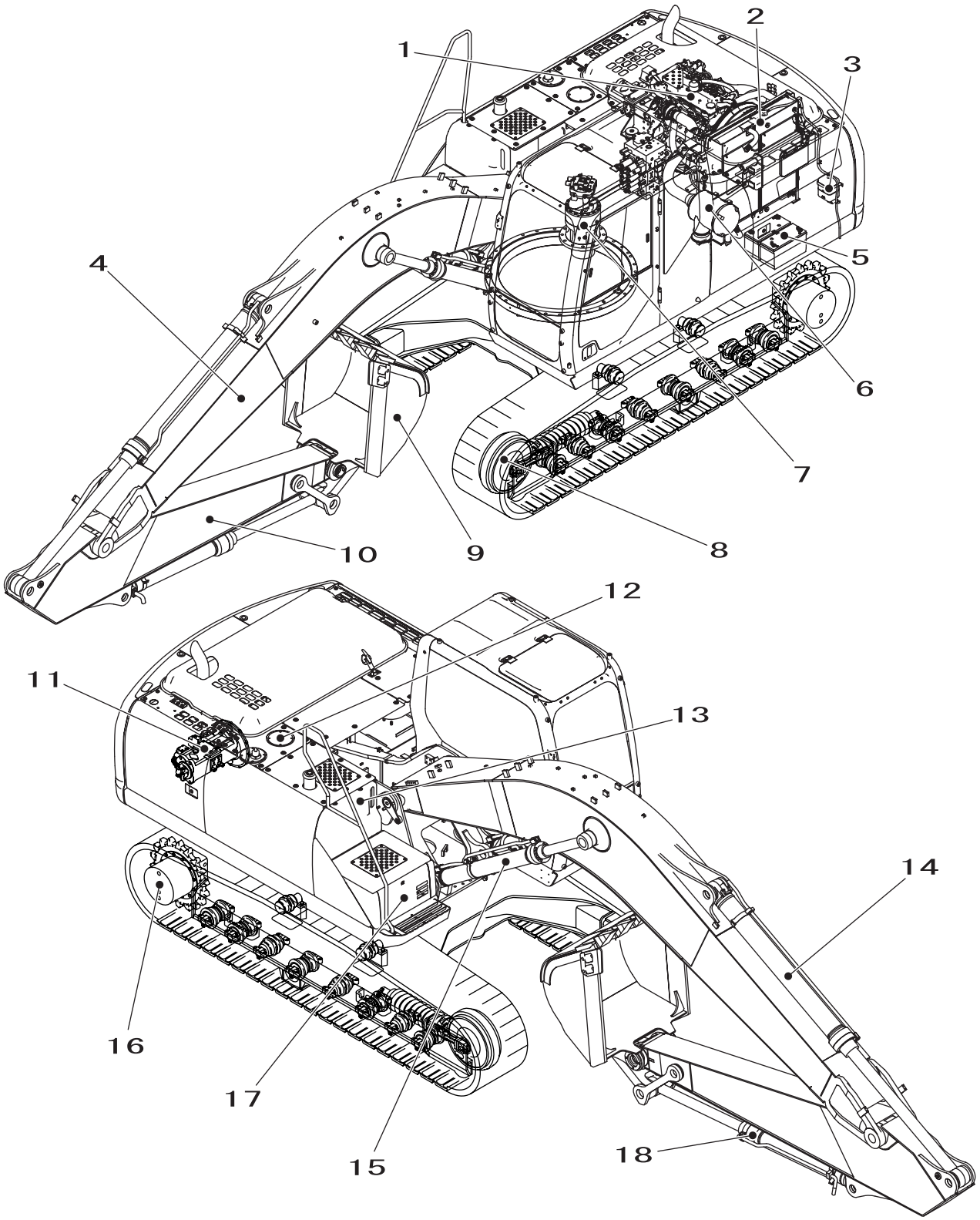

RST-03-02-001a

1	Engine	7	Swing motor	13	Fuel tank
2	Radiator	8	Front idler	14	Arm cylinder
3	Reserve tank	9	Bucket	15	Boom cylinder
4	Boom	10	Arm	16	Travel motor
5	Battery	11	Hydraulic pump	17	Tool box
6	Air cleaner	12	Hydraulic oil tank	18	Bucket cylinder

https://truckmanualshub.com/

Equipment Layout Diagram

Consumable Part Layout

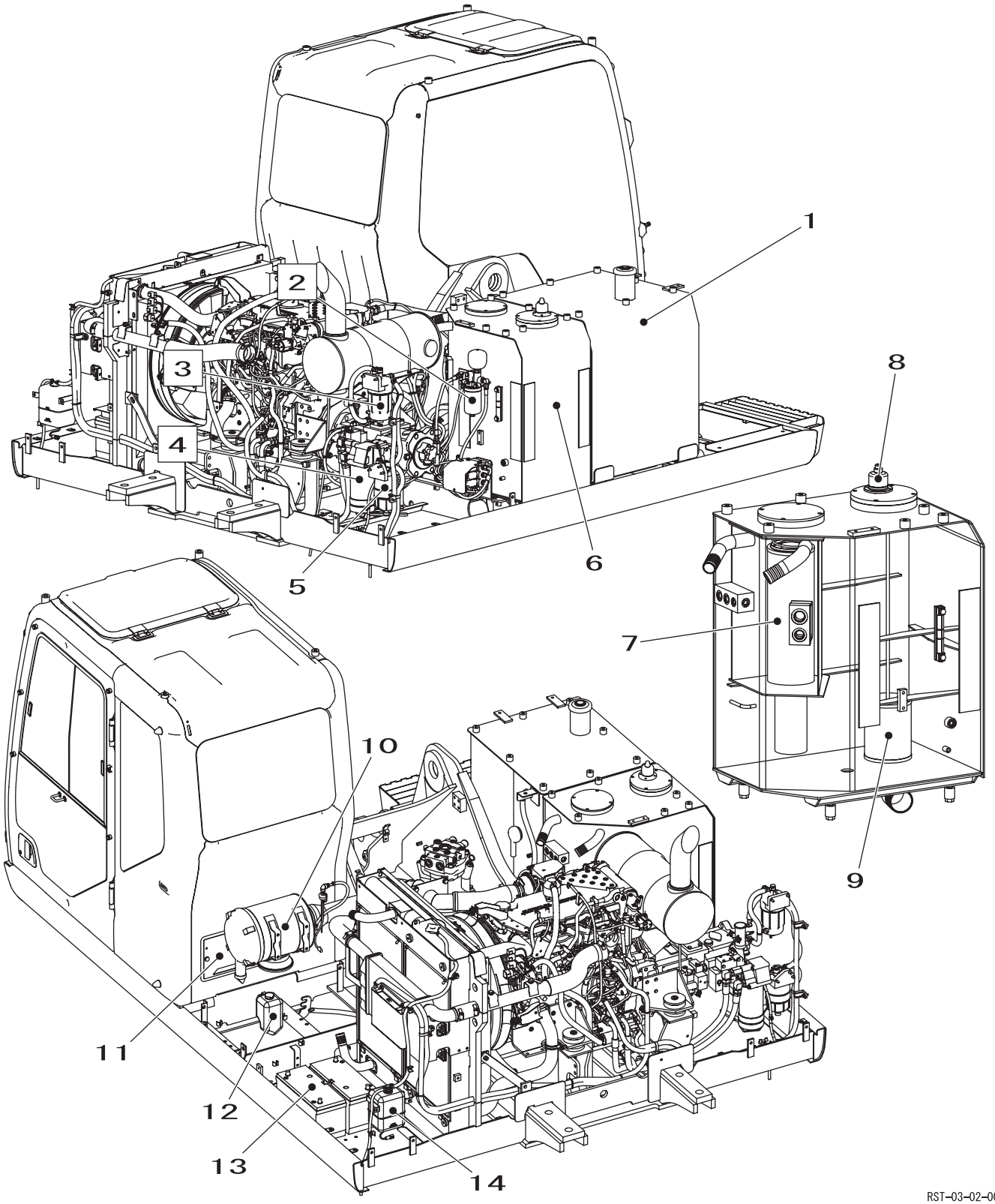

1	Fuel tank	6	Hydraulic oil tank	11	Air conditioner outside air filter
2	Pilot filter	7	Return filter	12	Washer tank
3	Fuel prefilter	8	Tank air breather	13	Battery
4	Engine oil filter	9	Suction filter	14	Reserve tank
5	Fuel filter	10	Air cleaner		

https://truckmanualshub.com/

List of Optional Components

◎ : Standard ● : Option

Spec. / Models	SH210-5	SH210LC-5	SH240-5	Remarks
600G shoe	◎	◎	◎	With seal
600G shoe	●	-	-	With seal, with hole
700G shoe	●	●	●	With seal
800G shoe	●	●	●	With seal
Lower under cover	◎	◎	◎	
Center guard (single)	◎	◎	◎	
Center guard (triple)	●	●	●	
12 V power supply (DC-DC converter)	●	●	●	
Feed pump	●	●	●	
Pre-cleaner	●	●	●	
Rear view mirror (forward right)	◎	◎	◎	
Rear view mirror (cab)	◎	◎	◎	
Front guard, mesh (lower)(with cab seating)	●	●	●	
Front guard, mesh (full)(with cab seating)	●	●	●	
OPG Level 1 (with cab seating)	●	●	●	
OPG Level 2 (with cab seating)	●	●	●	
Head guard, FOPS Level 2	●	●	●	
Rain deflector	●	●	●	
Sunroof polycarbonate	●	●	●	
Cab top light	●	●	●	
KAB seat	●	●	●	
KAB seat (air suspension)	●	●	●	
Tropical specifications housing	●	●	●	For Middle East (large cover opening)
Breaker circuit	●	●	●	+ Strengthened bucket linkage
Multi purpose circuit	●	●	●	+ Strengthened bucket linkage, strengthened boom, arm
Multi-purpose + 2nd option circuit	●	●	●	+ Strengthened bucket linkage, strengthened boom, arm
HBCV specifications	●	●	●	The specifications for Turkey have an overload alarm
Attachment reinforcement plate	●	●	●	
Standard arm	◎	◎	◎	
Short arm	●	●	●	Strengthened type only
Long arm	-	-	●	

C

https://truckmanualshub.com/

Standard Machine Option List

◎ : Standard ● : Option

Spec. \ Models	SH210-5	SH210LC-5	SH240-5	Remarks
0.50 bucket	●	●	-	
0.80 bucket	◎	●	●	
0.80 bucket strengthened type	●	●	-	
0.90 bucket	●	◎	●	
1.00 bucket	●	●	◎	
1.10 bucket	●	●	●	
Back monitor (monitor and camera)	●	●	●	

https://truckmanualshub.com/

Overall View

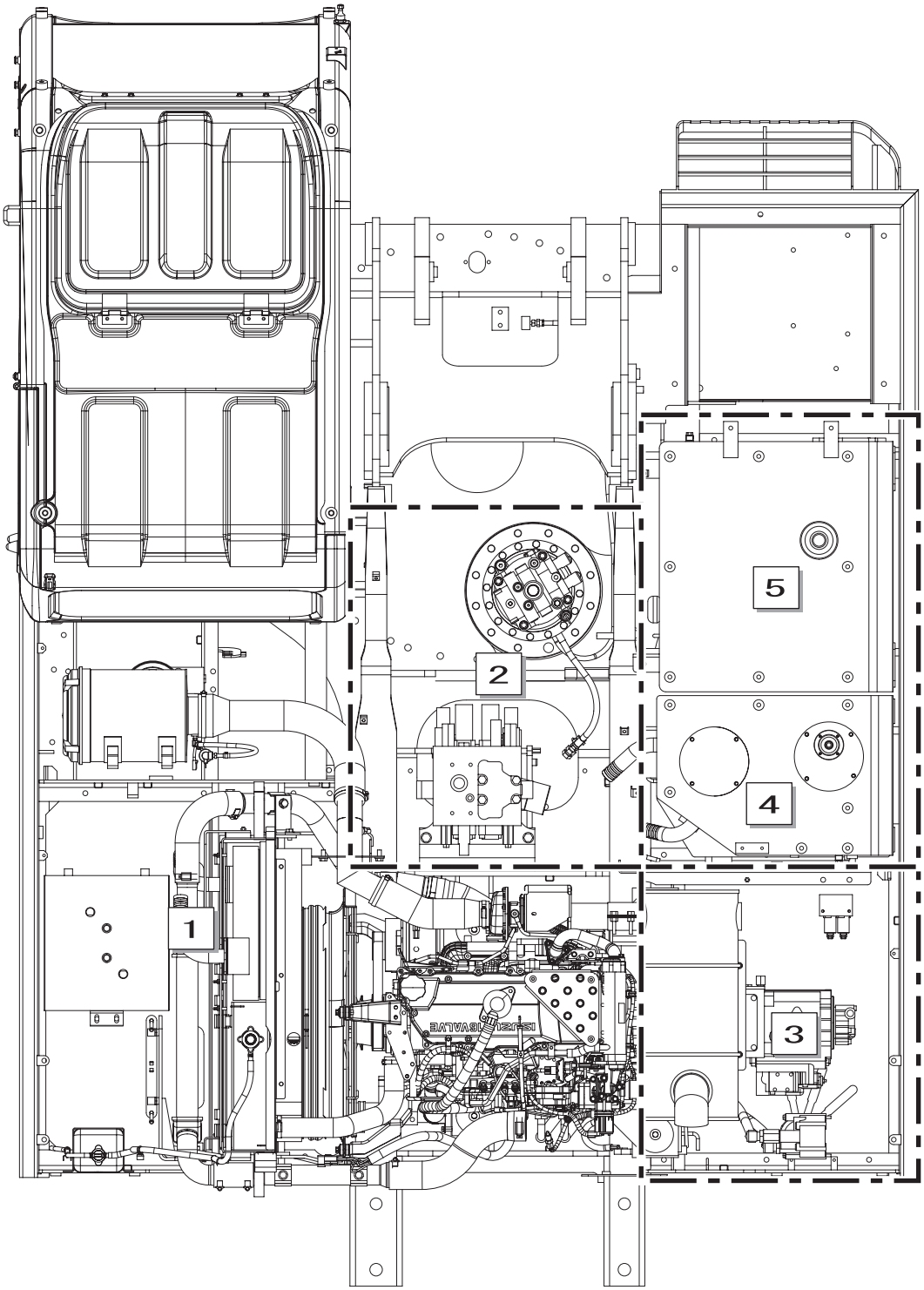

1	Left side housing
2	Swing body center section
3	Pump compartment
4	Hydraulic oil tank
5	Fuel tank

https://truckmanualshub.com/

Hydraulic Equipment Layout

Pump Chamber Hydraulic Equipment Layout

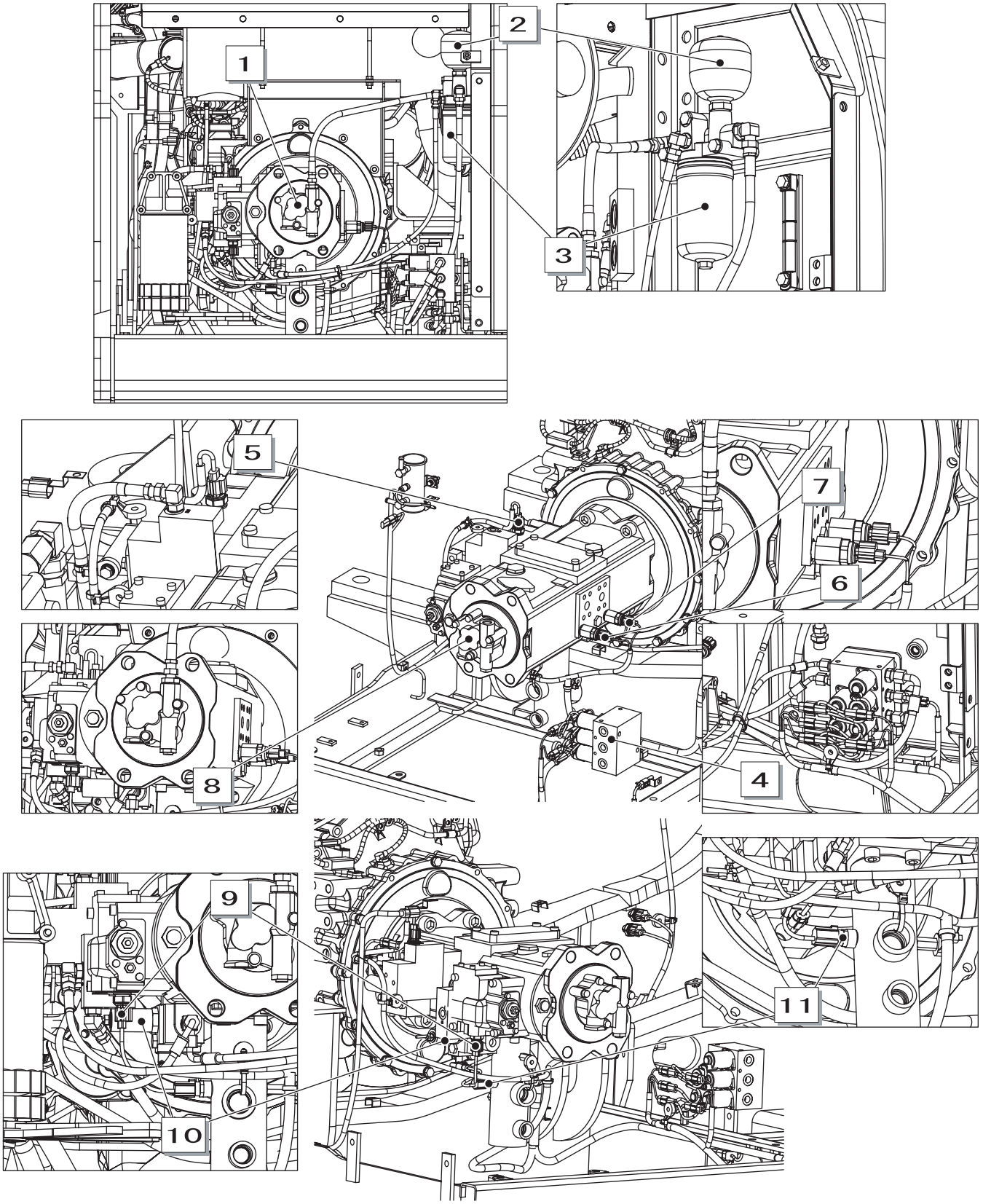

1	Hydraulic pump	7	P1 pressure sensor
2	Accumulator	8	Pilot pump
3	Pilot filter	9	N2 sensor
4	5 stack solenoid valve	10	Horsepower control electromagnetic proportional valve
5	N1 sensor	11	Hydraulic oil temperature sensor
6	P2 pressure sensor		

https://truckmanualshub.com/

Swing Body Center Section Hydraulic Equipment Layout

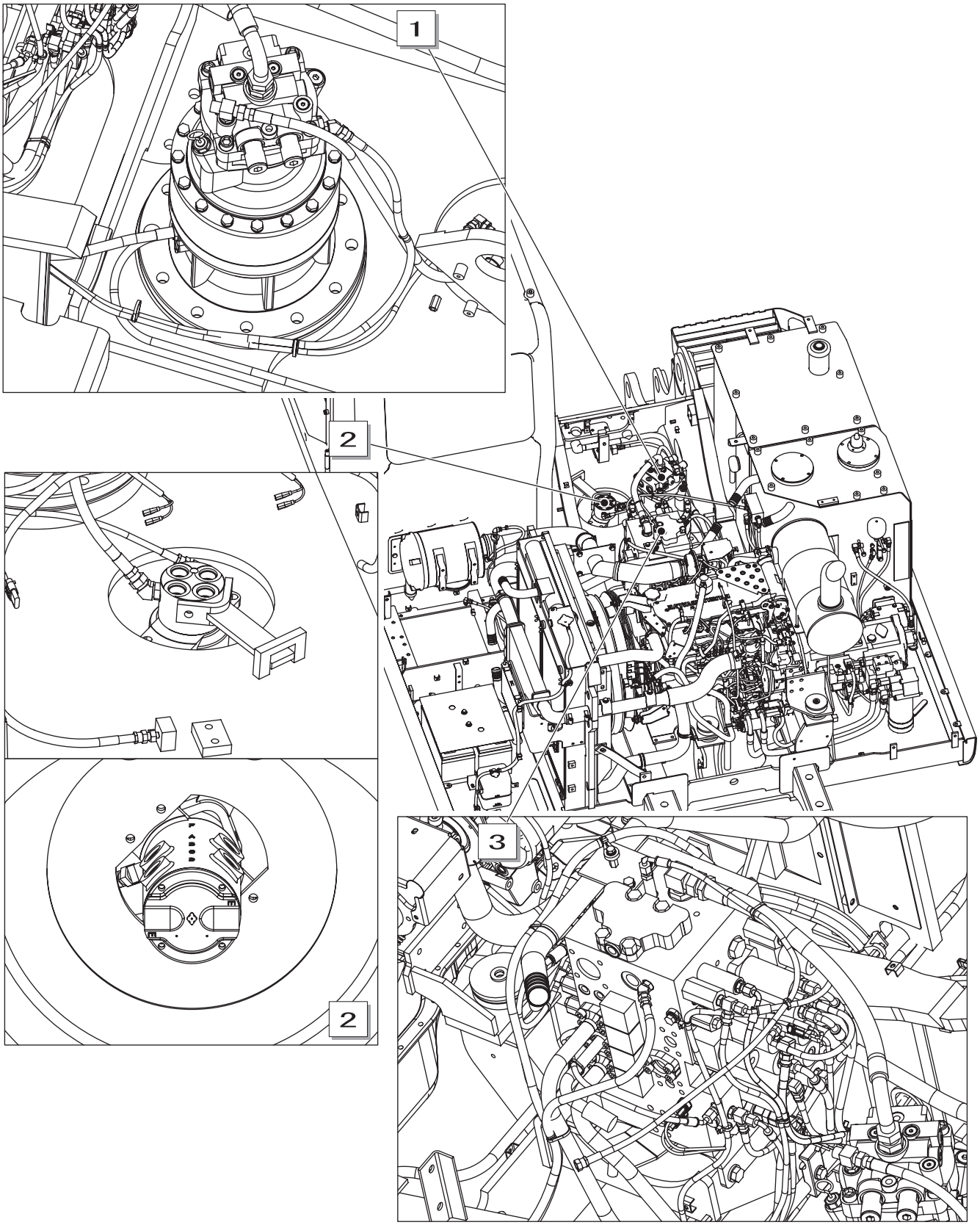

1	Swing motor
2	Center joint
3	Control valve

https://truckmanualshub.com/

Hydraulic Equipment Layout

Housing Left Side Hydraulic Equipment Layout

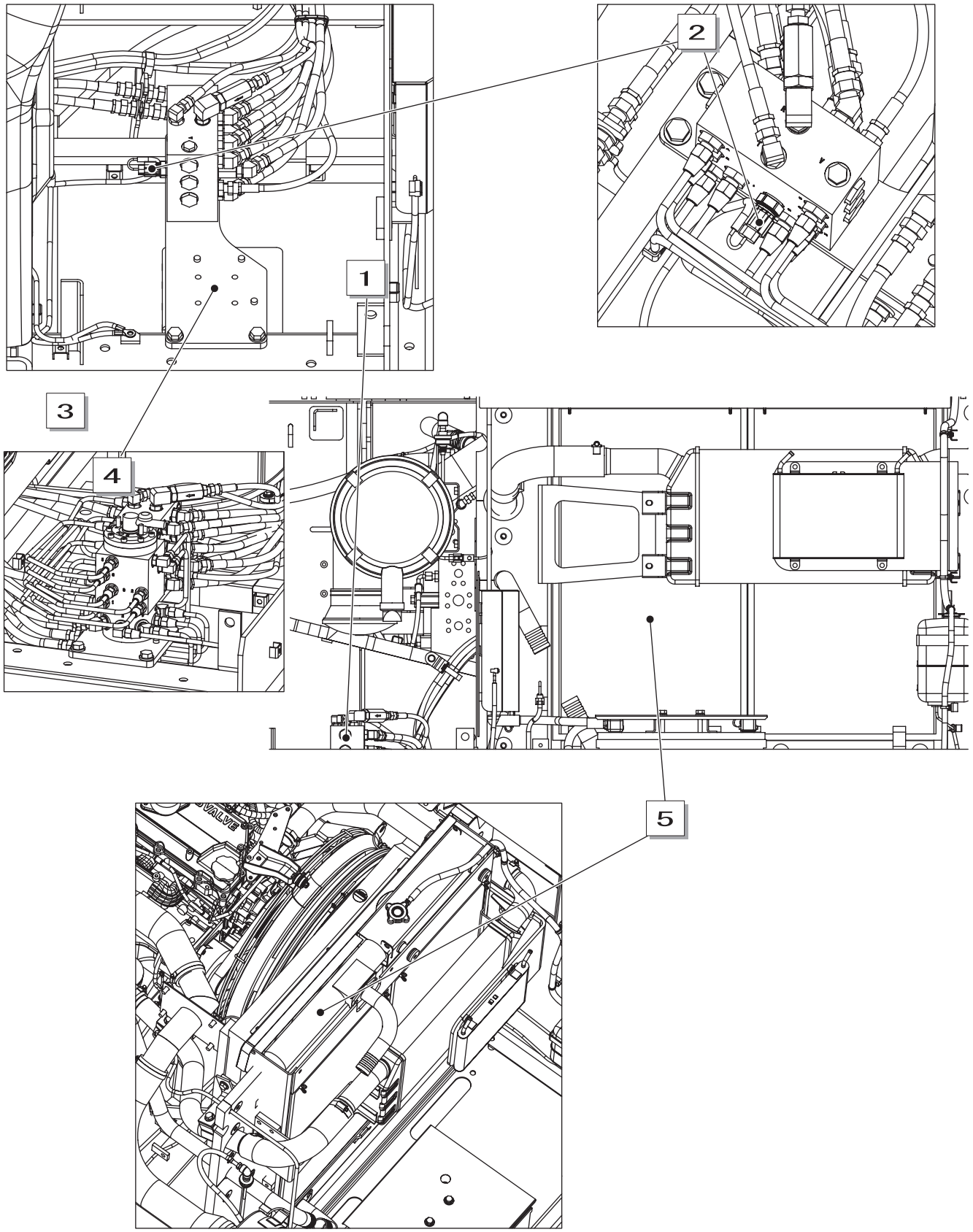

1	Cushion valve (with heat circuit)
2	Swing pilot pressure sensor
3	4-way selector valve installation seating
4	4-way selector valve
5	Oil cooler

https://truckmanualshub.com/

Layout of Hydraulic Equipment in Cab

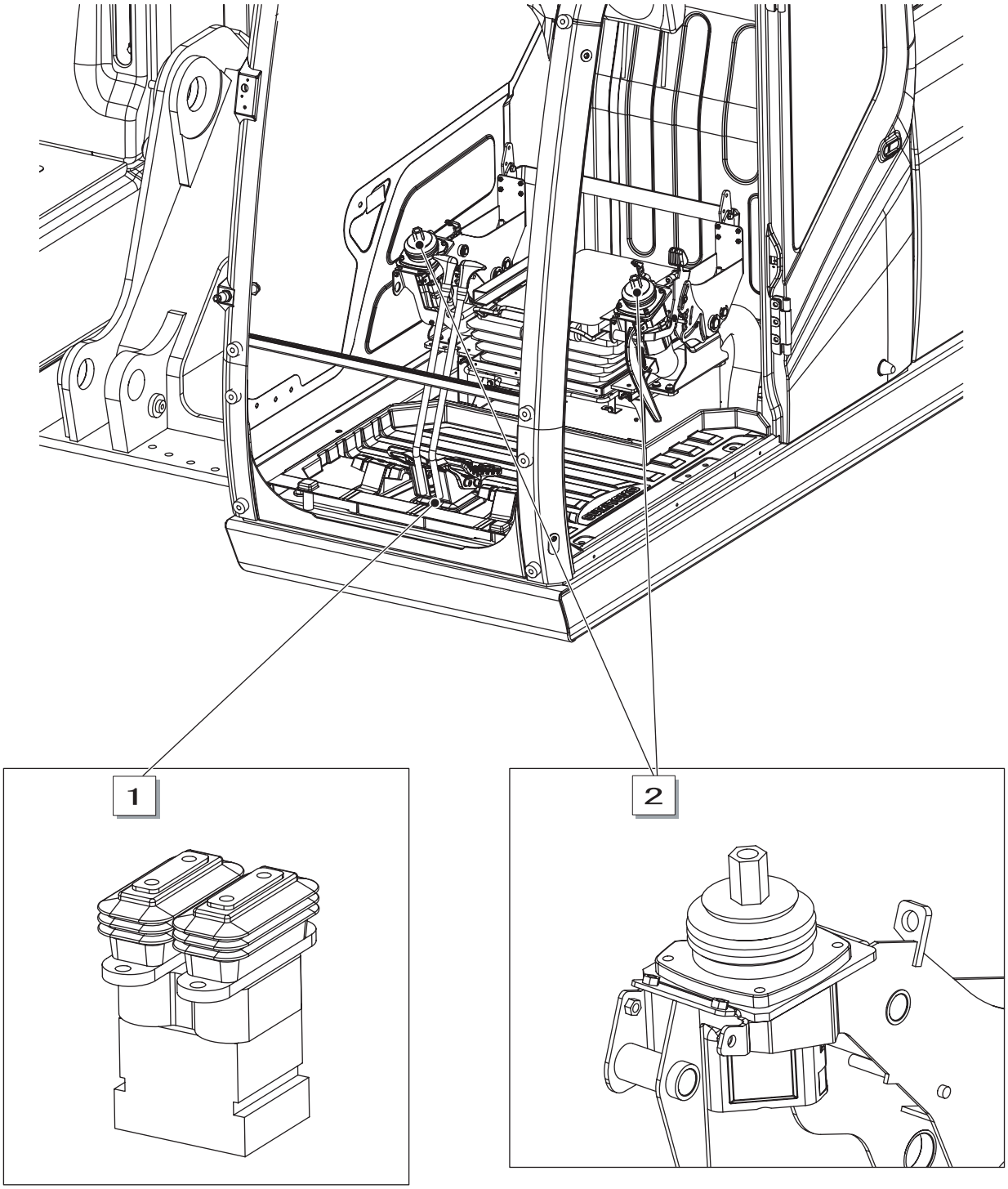

1	Travel remote control valve
2	Upper operation remote control valve

https://truckmanualshub.com/

Pump

1. Hydraulic Pump (standard model)

Port	Port name	Port size
A1, A2	Discharge port	SAE6000psi 3/4
B1	Suction port	SAE2500psi 2-1/2
Dr	Drain port	G 3/4-20
P1	Proportional valve primary pressure port	G 1/4-13
P2	P2 port	G 1/4-13
Psv	Servo assist port	G 1/4-15
Pi1, Pi2	Negative control port	G 1/4-15
a1, a2, a4	Gauge port	G 1/4-15
a5, a6	Gauge port	G 3/8-17
a7, a8	Gauge port	G 1/4-15
A3	Gear pump discharge port	G 1/2-19
B3	Gear pump suction port	G 3/4-20

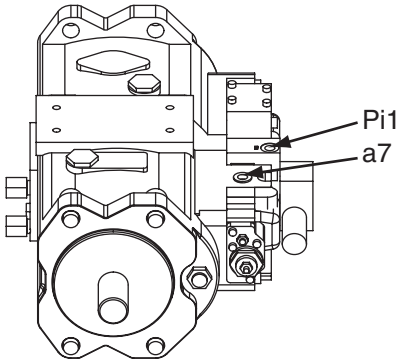

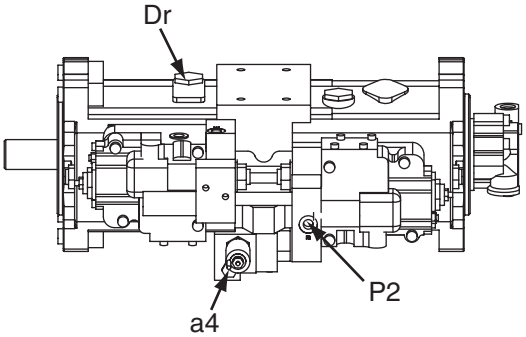

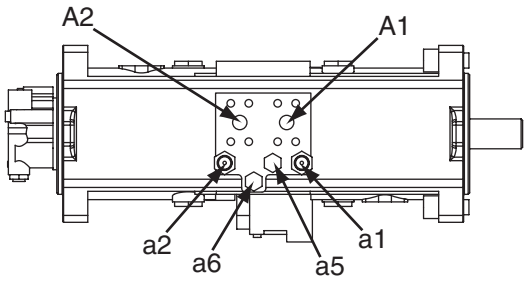

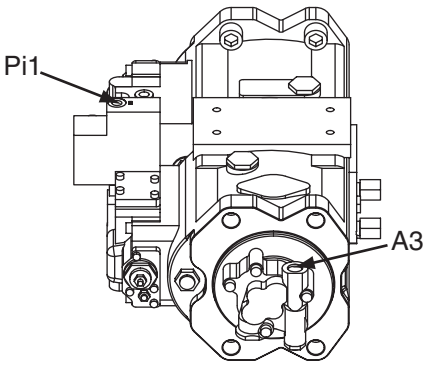

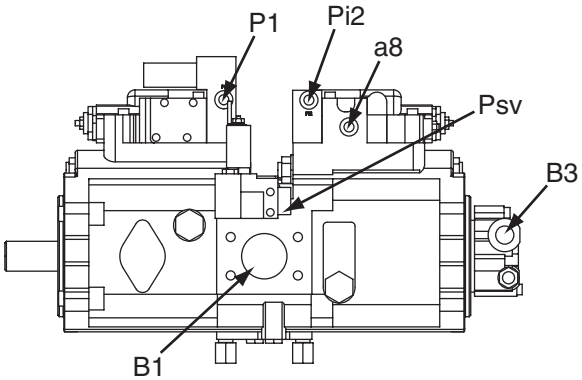

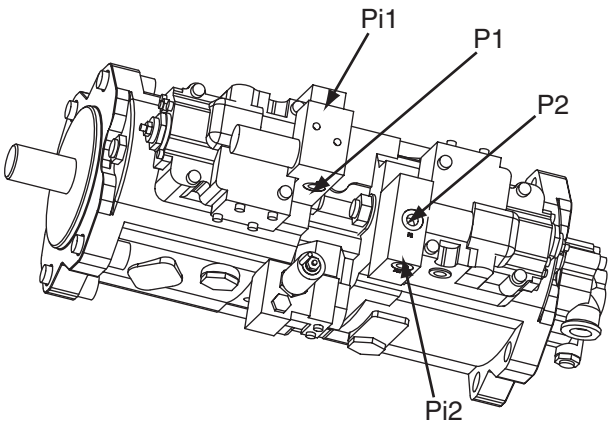

https://truckmanualshub.com/

Port Diagram

Valves

1. Control Valve

(1) Relief valve

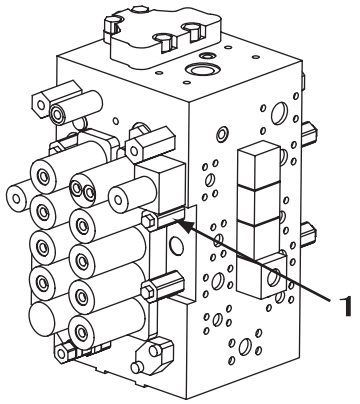

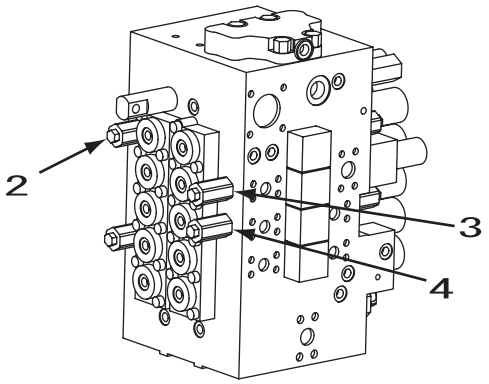

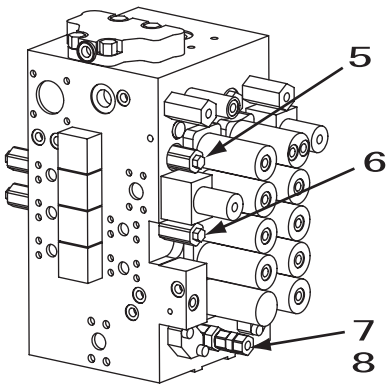

Main relief valve adjustment location details

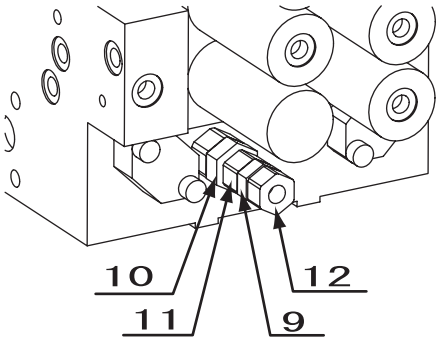

1	Arm-out
2	Arm-in
3	Boom-up
4	Bucket-open
5	Boom-down
6	Bucket-close
7	Main a (normal use)
8	Main b (boosted pressure)
9	Standard pressure lock nut
10	Boosted pressure lock nut
11	Boosted pressure adjusting screw
12	Standard pressure adjusting screw

https://truckmanualshub.com/

Port Diagram

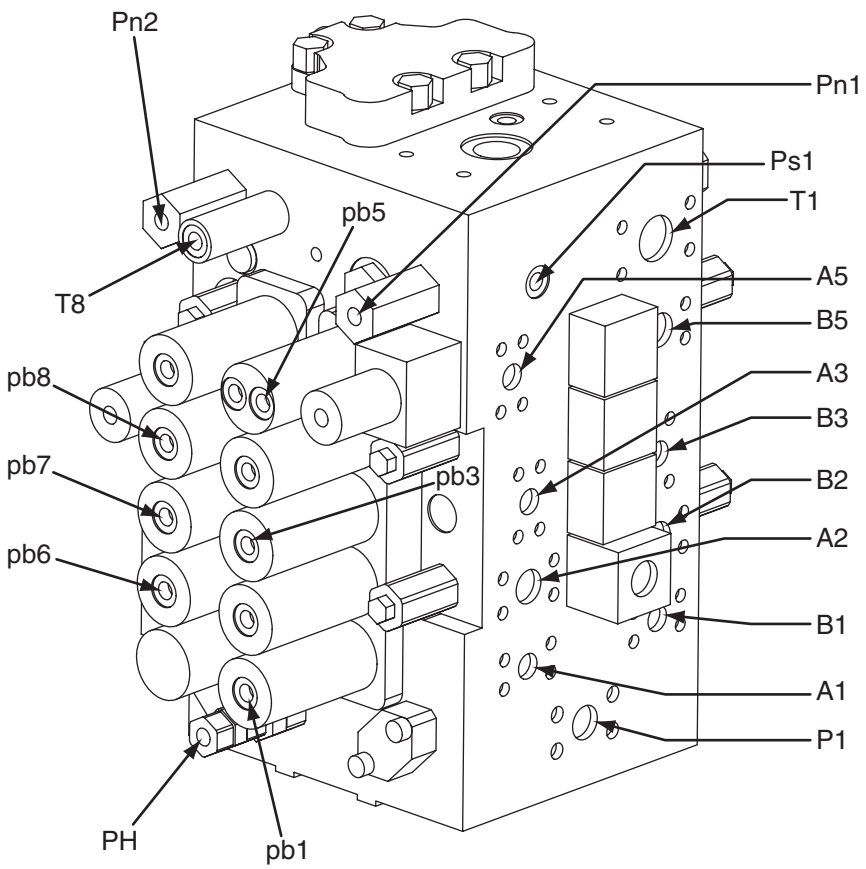

Port	Port size	Port name	Port	Port size	Port name
P1	SAE 6000psi 1	Pressure line	pb1	G1/4	Left travel backward pilot line
A1	SAE 5000psi 3/4	Left travel (forward) line	pb6	G1/4	Right travel backward pilot line
B1	SAE 5000psi 3/4	Left travel (backward) line	pb3	G1/4	Left swing pilot line
A2	SAE 5000psi 1	Option line	pb5	G1/4	Arm-in pilot line
B2	SAE 5000psi 1	Option line	pb7	G1/4	Bucket-close pilot line
A3	SAE 5000psi 3/4	Swing right line	pb8	G1/4	Boom-down pilot line
B3	SAE 5000psi 3/4	Swing left line	Pn1	G1/4	Negative control power save signal
A5	SAE 5000psi 3/4	Arm-out line	Pn2	G1/4	Negative control power save signal
B5	SAE 5000psi 3/4	Arm-in line	PH	G1/4	Boosted pressure signal port
T1		Return line	Ps1	G1/4	Negative control line
			T8	G1/4	Heat circuit line

D

https://truckmanualshub.com/

Port Diagram

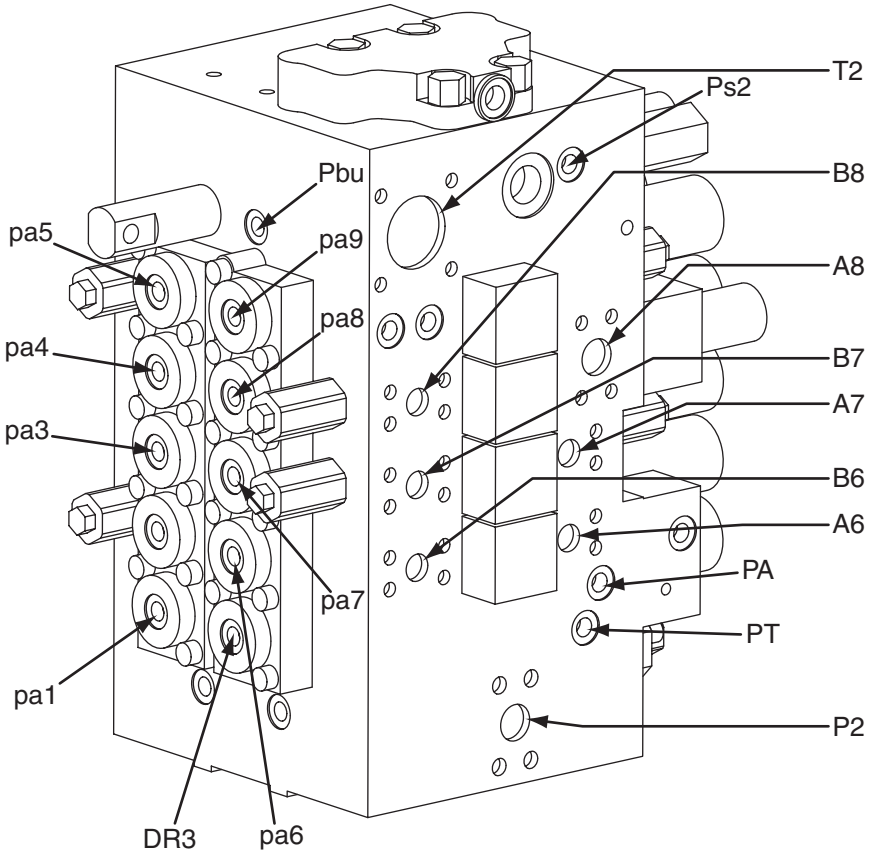

Port	Port size	Port name	Port	Port size	Port name
P2	SAE 6000psi 1	Pressure line	pa7	G1/4	Bucket-open pilot line
A6	SAE 5000psi 3/4	Right travel (forward) line	pa3	G1/4	Right swing pilot line
B6	SAE 5000psi 3/4	Right travel (backward) line	pa8	G1/4	Boom 1-up pilot line
A7	SAE 5000psi 3/4	Bucket-open line	pa4	G1/4	Boom 2-up pilot line
B7	SAE 5000psi 3/4	Bucket-close line	pa9	G1/4	Arm 2-out pilot line
A8	SAE 5000psi 1	Boom-up line	pa5	G1/4	Arm 1-out pilot line
B8	SAE 5000psi 3/4	Boom-down line	PA	G1/4	Upper side signal
T2		Return line	PT	G1/4	Travel signal
pa1	G1/4	Left travel forward pilot line	Ps2	G1/4	Negative control line
pa6	G1/4	Right travel forward pilot line	Pbu	G1/4	Swing priority variable metering valve switch signal
DR3	G1/4	Straight travel forward drain line			

https://truckmanualshub.com/

2. 5-stack Solenoid Valve

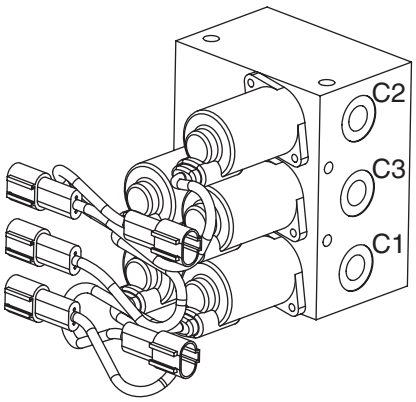

Port	Port size
C2	G1/4
C3	G1/4
C1	G1/4

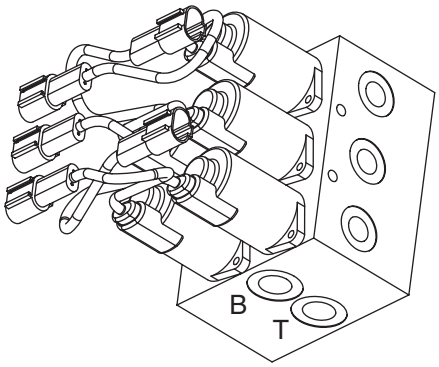

View from bottom

Port	Port size
B	G3/8
T	G3/8

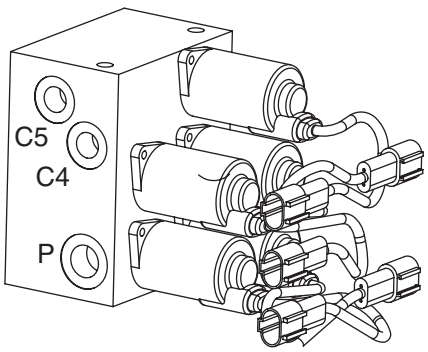

Port	Port size
C5	G1/4
C4	G1/4
P	G3/8

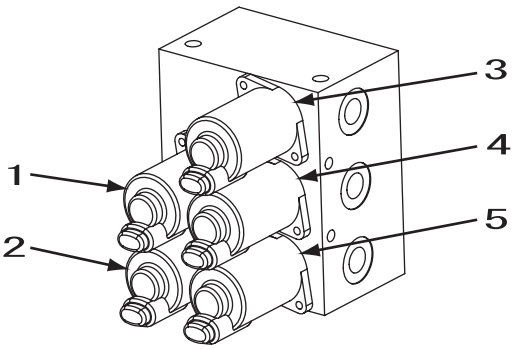

1	Power save
2	Lever lock
3	Swing lock
4	Boosted pressure
5	Travel speed

https://truckmanualshub.com/

Port Diagram

3. 2-stack Solenoid Valve

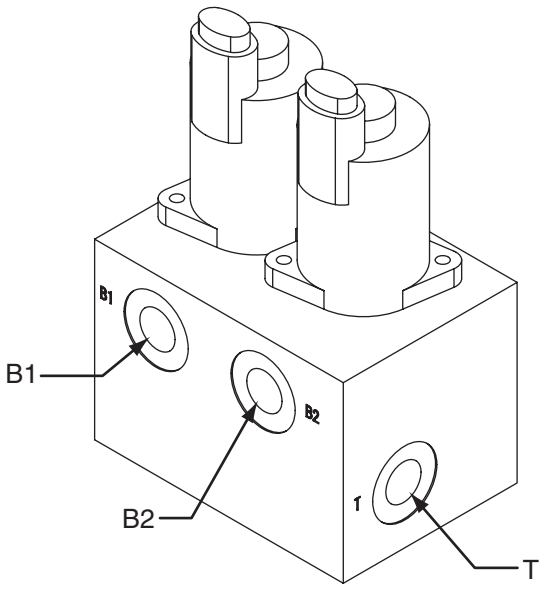

B port side

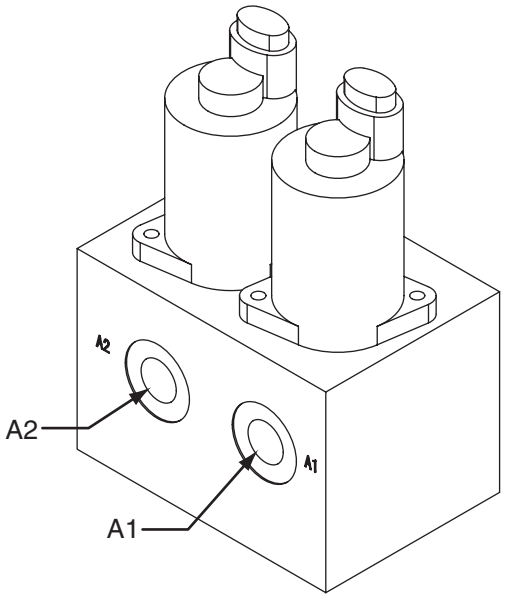

A port side

Port	Port size
A1	G1/4
B1	G1/4
A2	G1/4
B2	G1/4
T	G1/4

https://truckmanualshub.com/

4. Remote Control Valves (upper side, travel)

(1) Remote control valve (left-right)

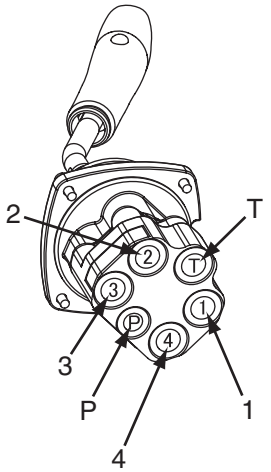

Right side

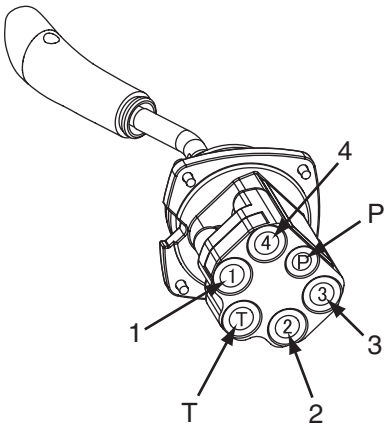

Left side

Right side	Port name	Left side	Port name	Port name
1	Bucket-close	1	Swing right	G3/8
2	Boom-down	2	Arm-in	G3/8
3	Bucket-open	3	Swing left	G3/8
4	Boom-up	4	Arm-out	G3/8
P	Pressure	P	Pressure	G1/4
T	Return	T	Return	G3/8

(2) Remote control valve (travel)

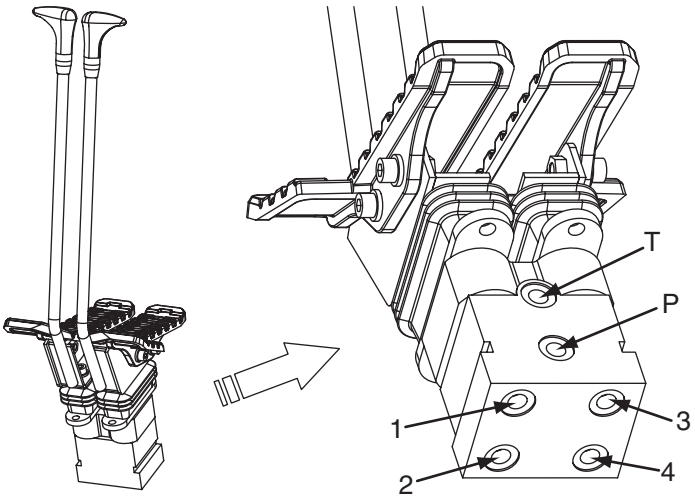

Port	Port name	Port size
1	Backward left	G1/4
2	Forward left	G1/4
3	Backward right	G1/4
4	Forward right	G1/4
P	Pressure	G1/4
T	Return	G1/4

https://truckmanualshub.com/

Port Diagram

5. Cushion Valve

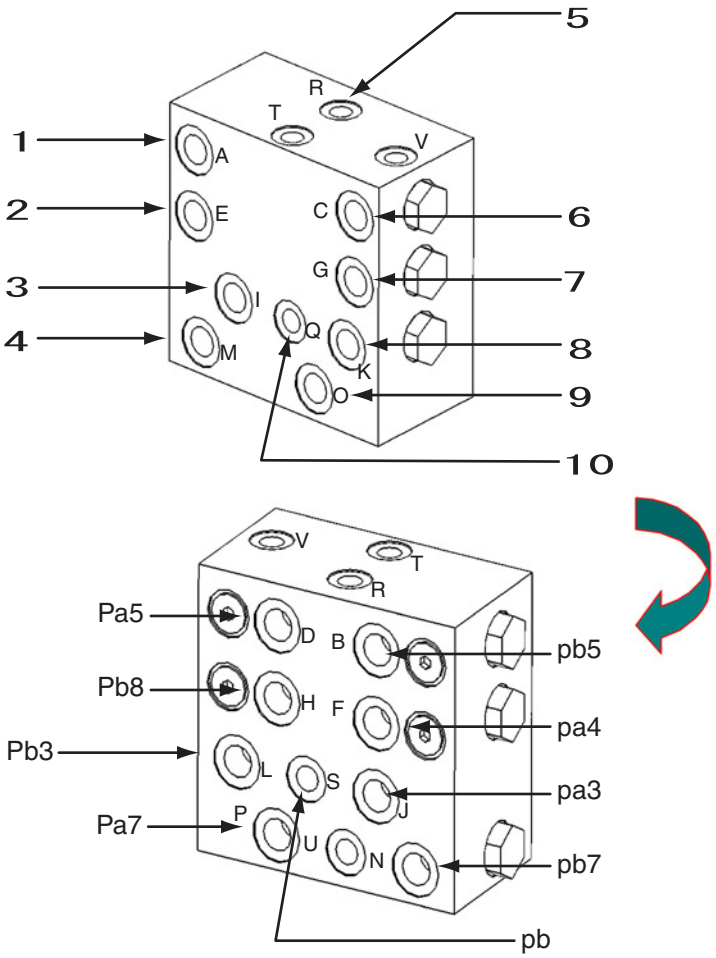

1	2 port (arm-in)
2	4 port (boom-up)
3	1 port (swing right)
4	1 port (bucket-close)
5	D4 port (filter line)
6	4 port (arm-out)
7	2 port (boom-down)
8	3 port (swing left)
9	3 port (bucket-open)
10	Pressure sensor

Port	Port name	Port size
E, F	Boom-up	G3/8
G, H	Boom-down	G3/8
O, P	Bucket-open	G3/8
M, N	Bucket-close	G3/8
C, D	Arm-out	G3/8
A, B	Arm-in	G3/8
K, L	Swing left	G3/8
I, J	Swing right	G3/8
Q	Swing pressure sensor signal	G1/4
U	-	G1/4
S	Swing priority metering valve switch	G1/4
V	-	G1/4
T	Return	G1/4
R	Heat circuit	G1/4

https://truckmanualshub.com/

6. 4-way Multi-valve

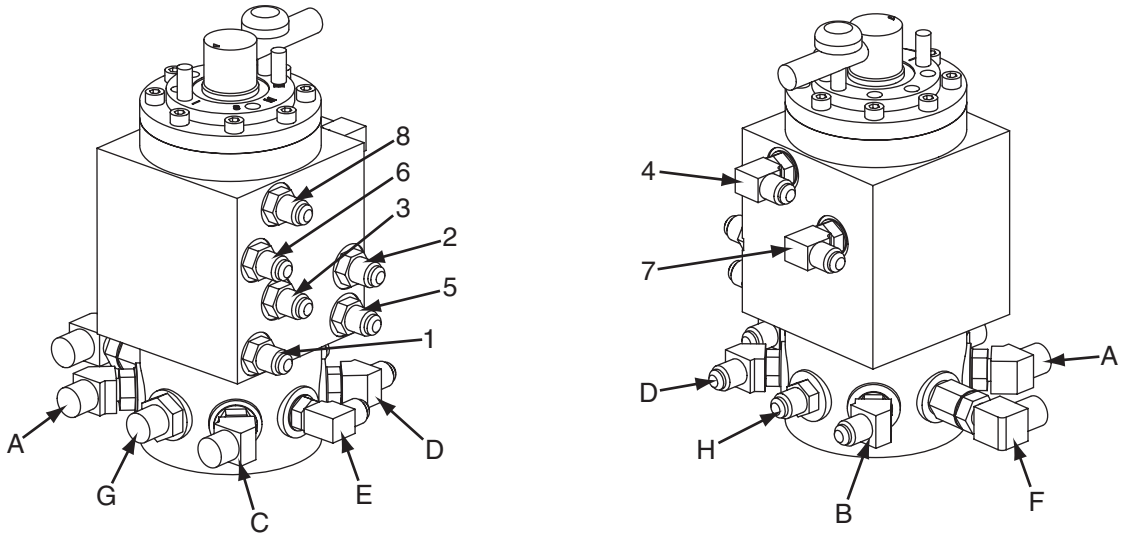

Port	Port name * ISO format	Port size
A	Right remote control valve side port / boom-up	G1/4
C	Right remote control valve side port / boom-down	G1/4
D	Right remote control valve side port / bucket-open	G1/4
B	Right remote control valve side port / bucket-close	G1/4
E	Left remote control valve side port / arm-out	G1/4
G	Left remote control valve side port / arm-in	G1/4
H	Left remote control valve side port / swing left	G1/4
F	Left remote control valve side port / swing right	G1/4
1	Cushion valve side port	G1/4
3	Cushion valve side port	G1/4
4	Cushion valve side port	G1/4
2	Cushion valve side port	G1/4
8	Cushion valve side port	G1/4
6	Cushion valve side port	G1/4
7	Cushion valve side port	G1/4
5	Cushion valve side port	G1/4

https://truckmanualshub.com/

Port Diagram

7. 2-way Multi-valve

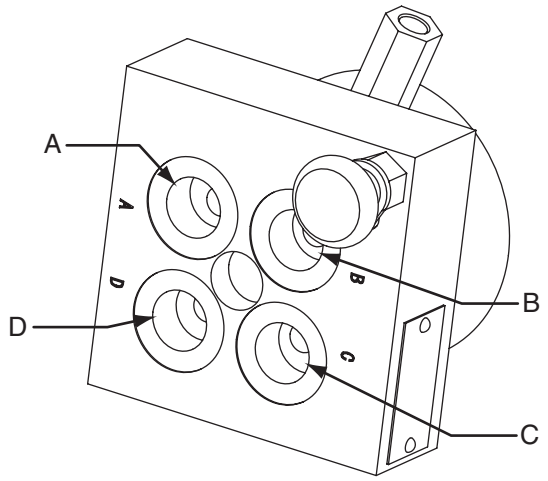

Remote control valve side

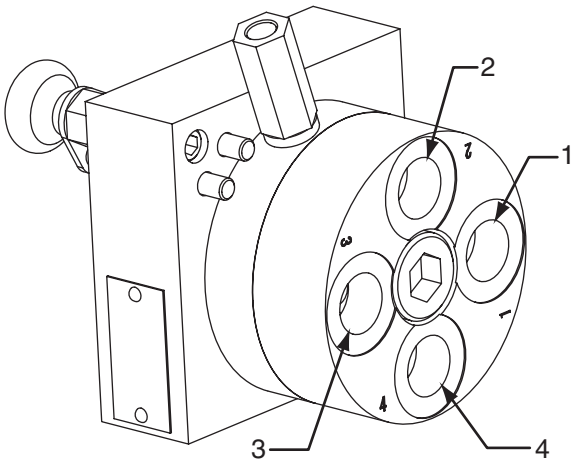

Cushion valve side

Port	Port name *ISO format	Port size
A	Remote control valve side / swing left port	G3/8
B	Remote control valve side / arm-in port	G3/8
C	Remote control valve side / swing right port	G3/8
D	Remote control valve side / arm-out port	G3/8
1	Cushion valve side port	G3/8
2	Cushion valve side port	G3/8
3	Cushion valve side port	G3/8
4	Cushion valve side port	G3/8

https://truckmanualshub.com/

8. Direction Valve / Shut-off Valve

(1) Direction valve

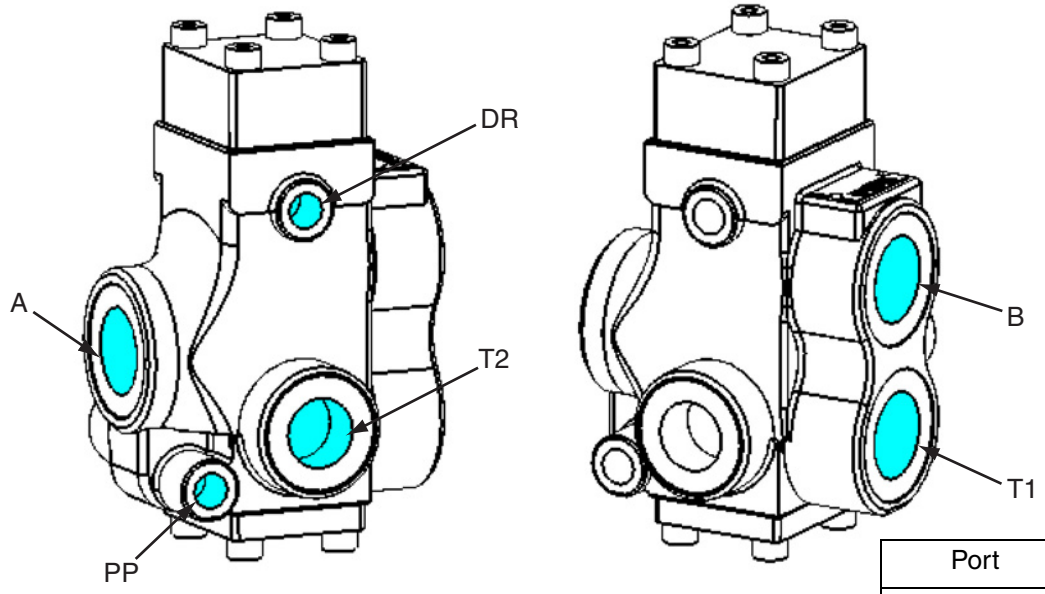

Port	Port size
A	G1
B	G1
T1	G1
T2	G3/4
PP	G1/4
DR	G1/4

(2) Shut-off valve

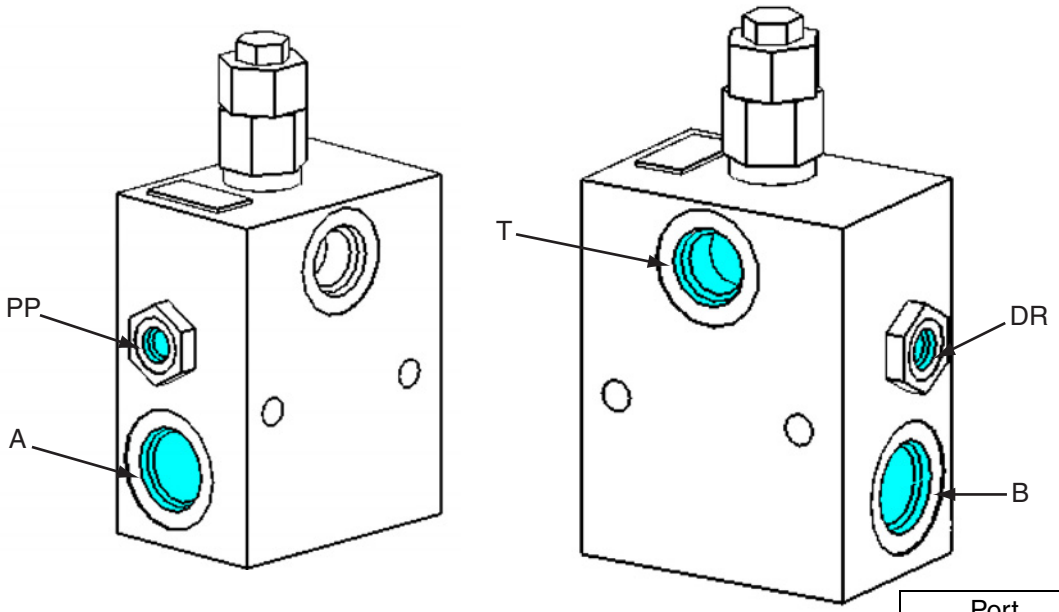

Port	Port size
A	G1
B	G1
T	G3/4
PP	G1/4
DR	G1/4

https://truckmanualshub.com/

Port Diagram

9. HBCV

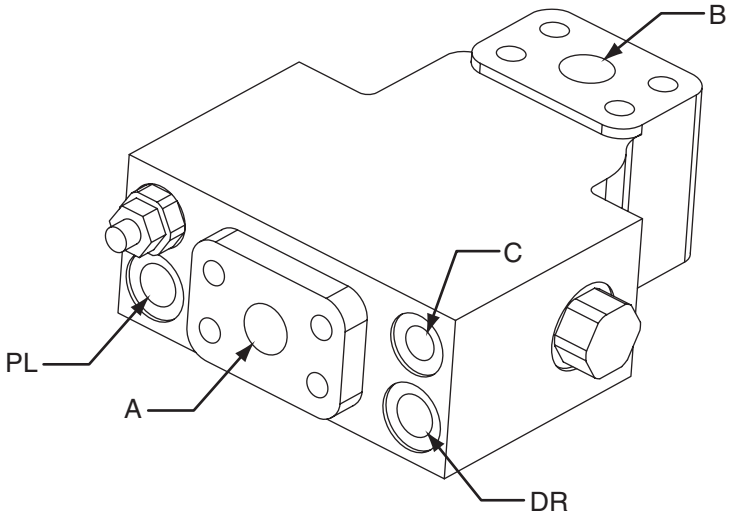

B port opening side

Port	Port size	Remarks
A	SAE 6000psi 1	Arm HBCV
	SAE J6000psi 3/4	Boom HBCV
B	SAE 6000psi 1	Arm HBCV
	SAE J6000psi 3/4	Boom HBCV
C	G1/4	
DR	G3/8	
PL	G1/4	

https://truckmanualshub.com/

Manifolds

1. Manifold Under Cab

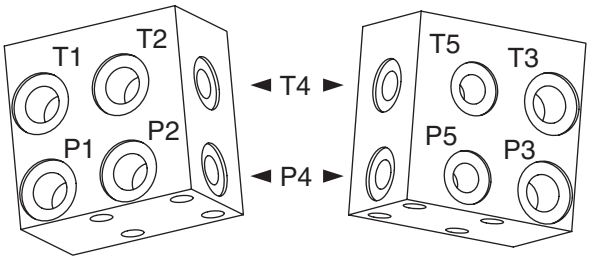

Port	Port size
P1	G3/8
P2	G3/8
P3	G3/8
P4	G1/4
P5	G1/4
T1	G3/8
T2	G3/8
T3	G3/8
T4	G1/4
T5	G1/4

2. Manifold (accumulator section)

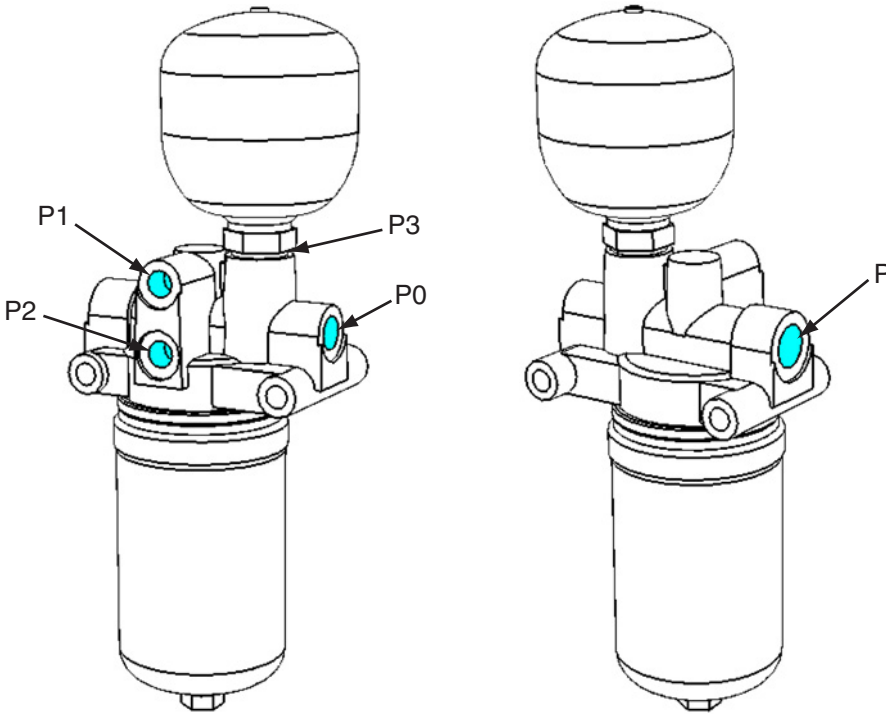

Port	Port size
P	G1/2
P1	G1/4
P2	G1/4
P3	G1/2
P0	G3/8

D

https://truckmanualshub.com/

Port Diagram

3. Manifold (hydraulic oil tank section)

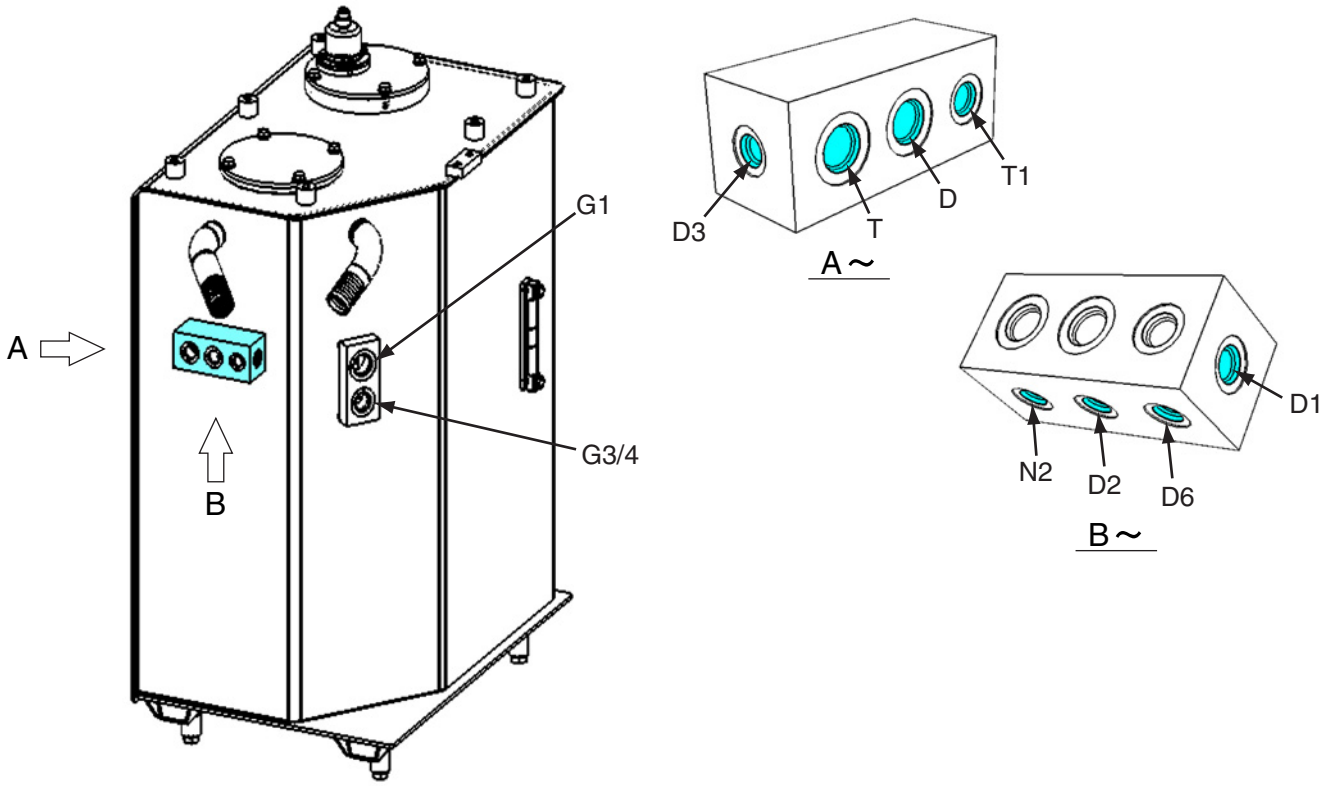

Port	Port size
D	G1/2
D1	G3/8
D2	G1/4
D3	G1/4
D6	G1/4
T	G1/2
T1	G3/8
N2	G1/4

https://truckmanualshub.com/

Motors

1. Swing Motor

SH210-5

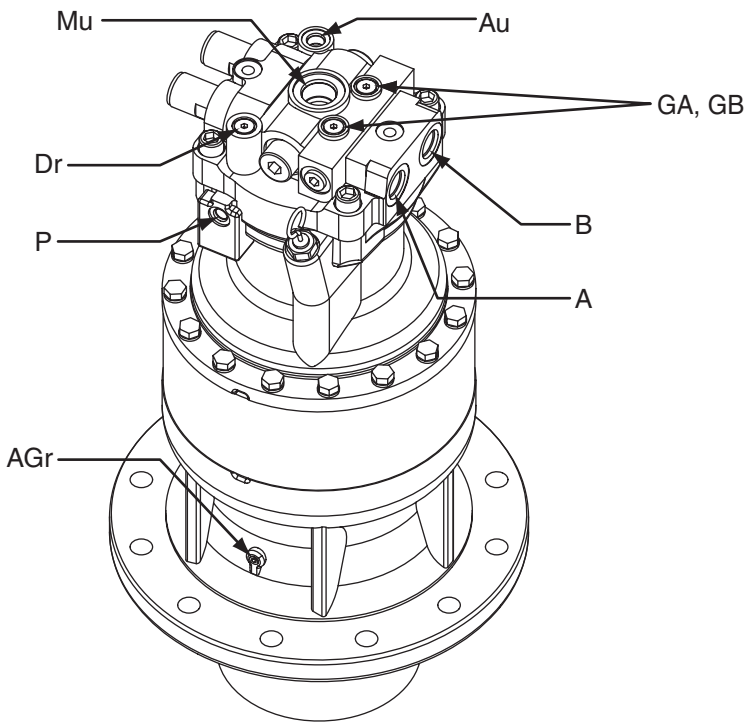

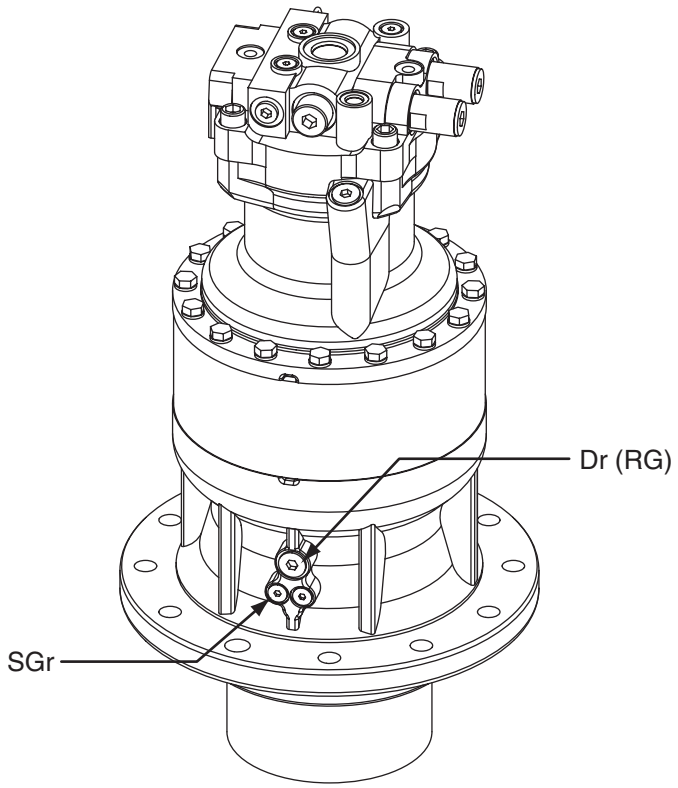

Port	Port name	Port size
Mu	Make-up	G1
Dr	Drain	G3/8
P	Brake release	G1/4
A	Left swing	G3/4
B	Right swing	G3/4
GA, GB	Pressure measurement	G1/4
Au	Air bleed port	G1/4
AGr	Air bleed port for grease-up	Rc1 / 8
Dr (RG)	Reduction gear oil drain port	G1/2
SGr	Reduction gear grease-up port	G1/4

https://truckmanualshub.com/

Port Diagram

SH240-5

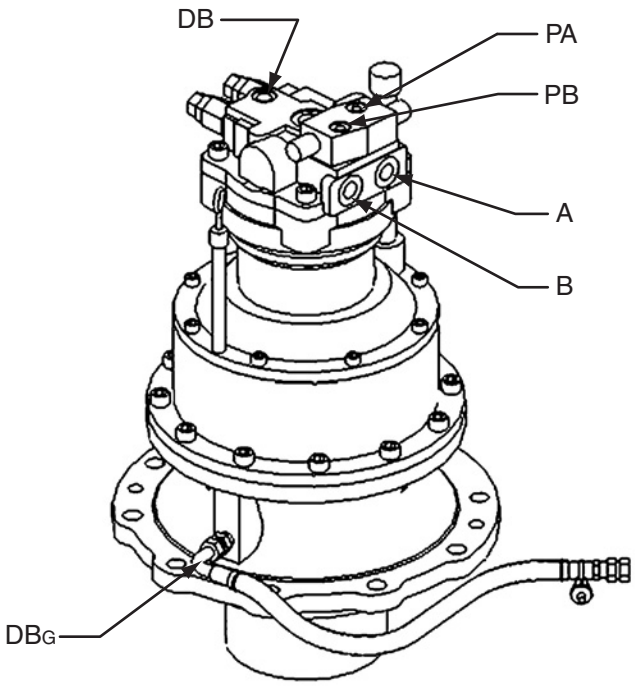

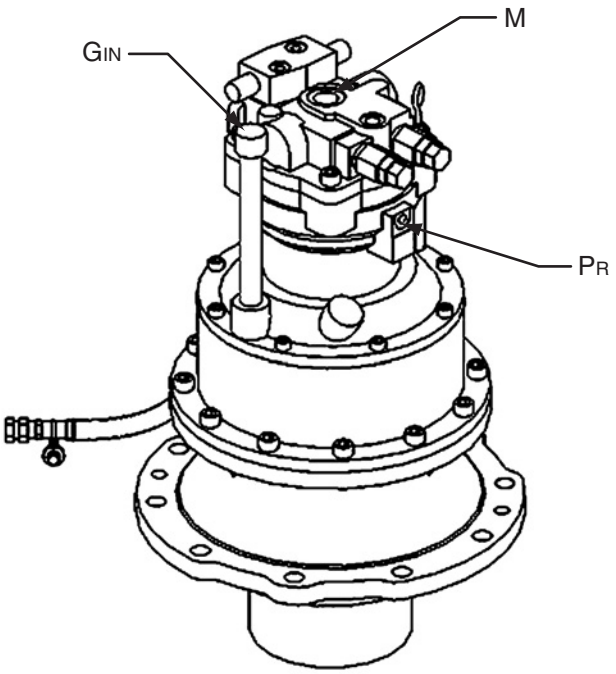

Port	Port name	Port size
A	Main port A	G 3/4
B	Main port B	G 3/4
DB	Drain port	G1/2
PA, PB	Pressure measuring ports	G1/4
DBG	Gear oil drain port	G1/2
M	Make-up port	G1
PR	Brake release port	G1/4
GIN	Gear oil fill port	RC3 / 4

https://truckmanualshub.com/

2. Travel Motor

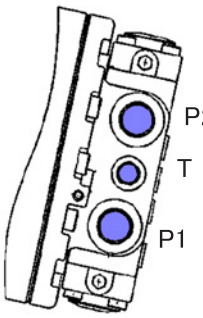

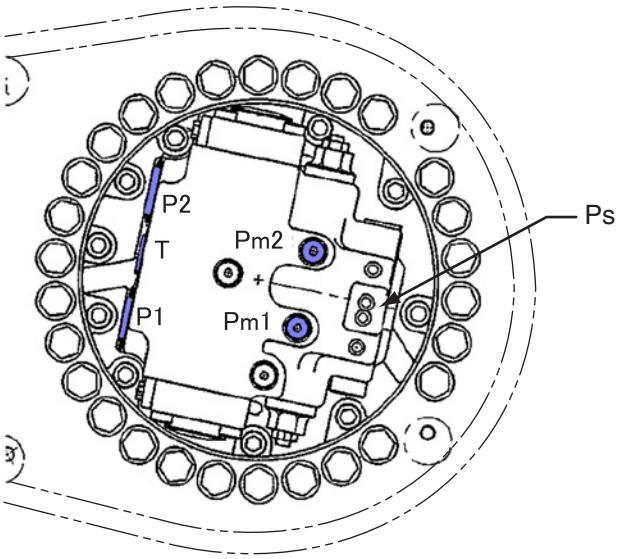

Port	Port name	Port size
P1 , P2	Main pump	G1
T	Drain port	G1/2
Ps	Pilot port	G1/4
Pm1, Pm2	Pressure detection port	G1/4

D

https://truckmanualshub.com/

Port Diagram

3. Center Joint

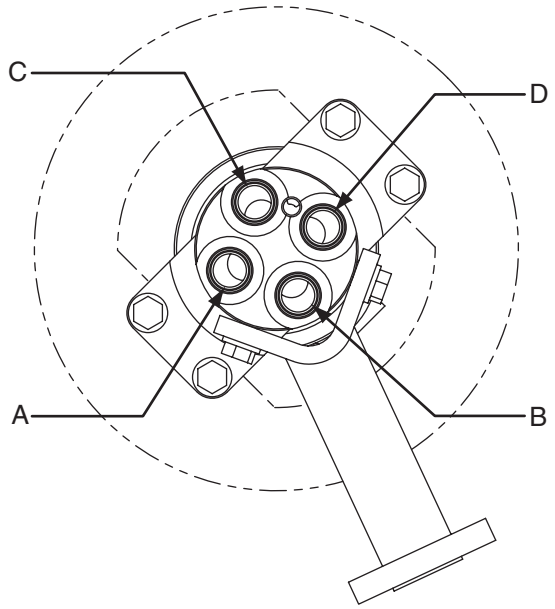

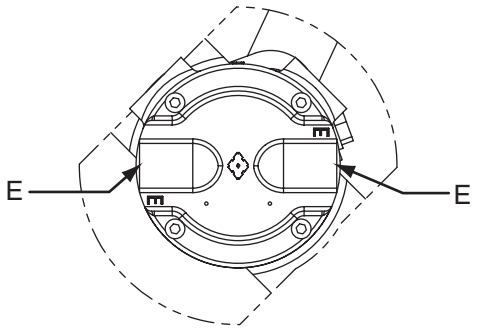

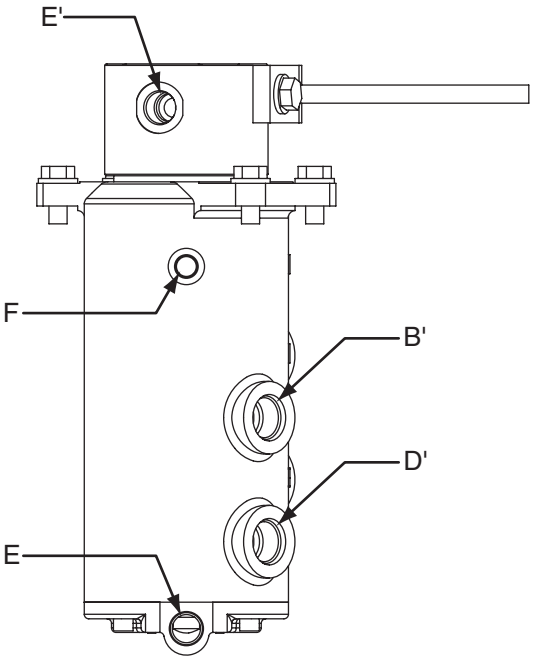

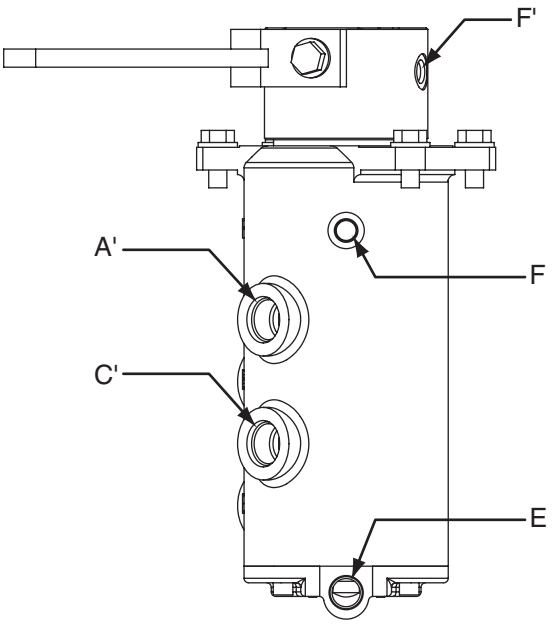

Port	Port name	Port size
A , A'	Main port (forward right)	G3/4
B , B'	Main port (forward left)	G3/4
C , C'	Main port (forward right)	G3/4
D , D'	Main port (forward left)	G3/4
E , E'	Drain port	G1/2
F , F'	Pilot port	G1/4

https://truckmanualshub.com/

Pilot Hose Connection Diagram

Pilot P and T Lines

PARTS NAME	SYM	QTY
HOSE;ASSY	1	1
HOSE;HYD	2	1
HOSE;NYLON	3	1
HOSE;NYLON	4	1
HOSE;ASSY	5	1
HOSE;ASSY	6	1
HOSE;NYLON	7	1
HOSE;ASSY	8	1
HOSE;ASSY	9	1

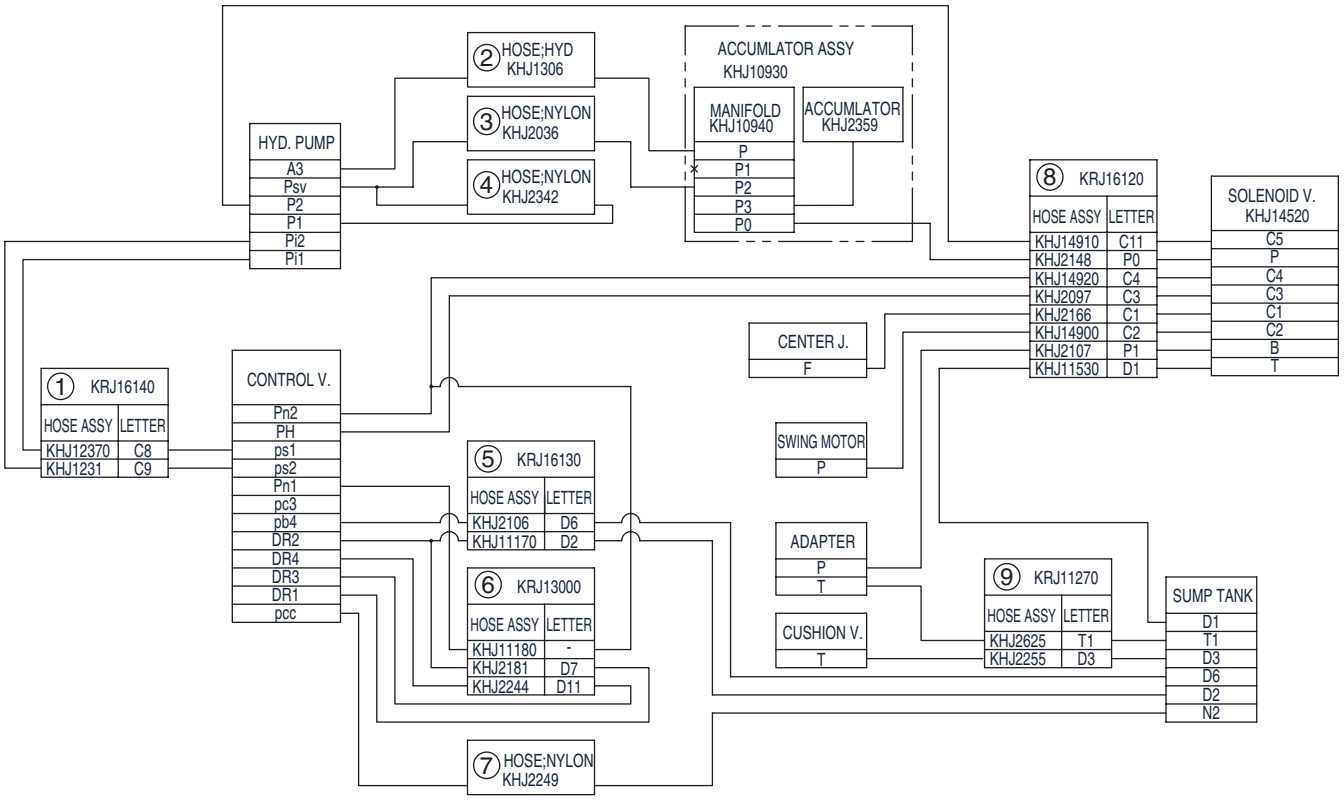

KRJ16160-E02

1	Hydraulic pump	8	Swing frame
2	Hydraulic tank	9	Platform (left)
3	Platform (right)	10	Cushion valve
4	Boom line	11	Control valve
5	Drain line	12	Oil cooler line
6	Swing motor	13	Bucket line
7	Center joint	14	House frame

https://truckmanualshub.com/

Pilot Hose Connection Diagram

Pilot P and T Lines

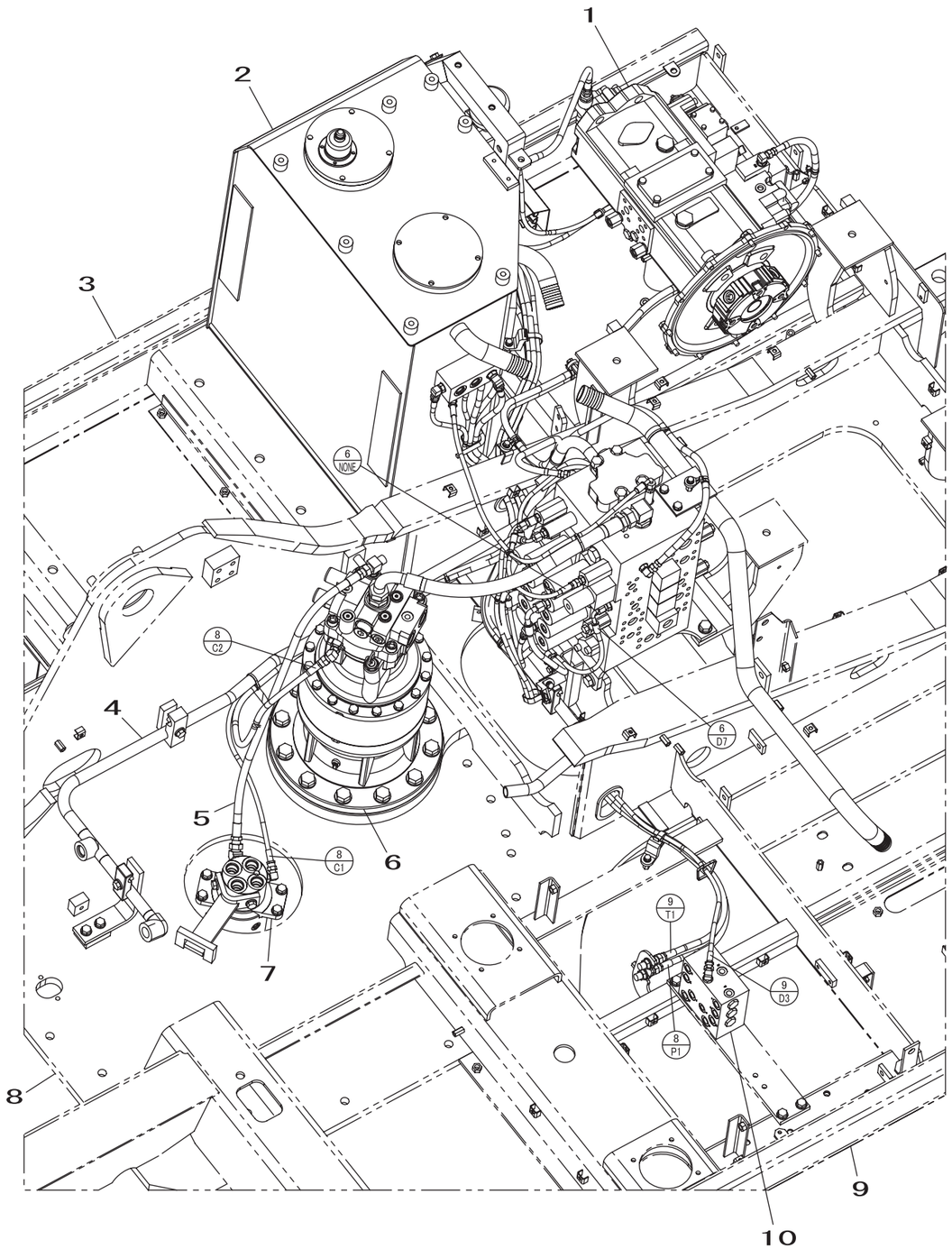

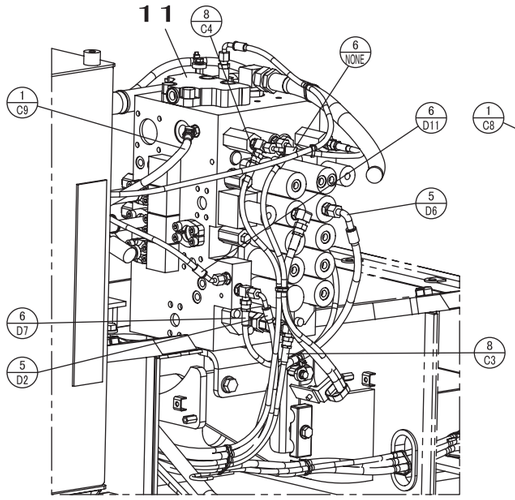

Control valve (forward) details

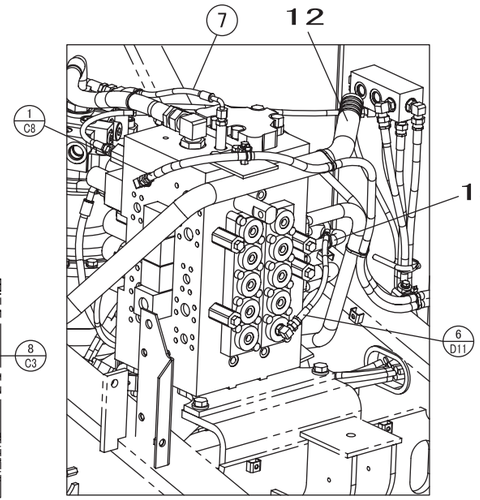

Control valve (backward) details

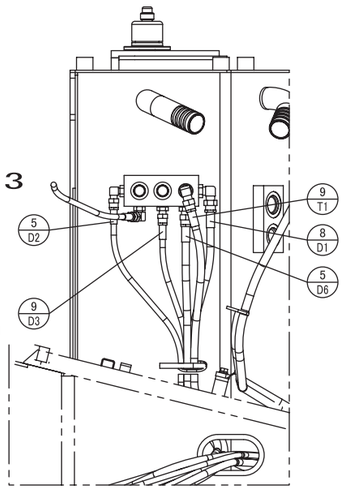

Sump tank details

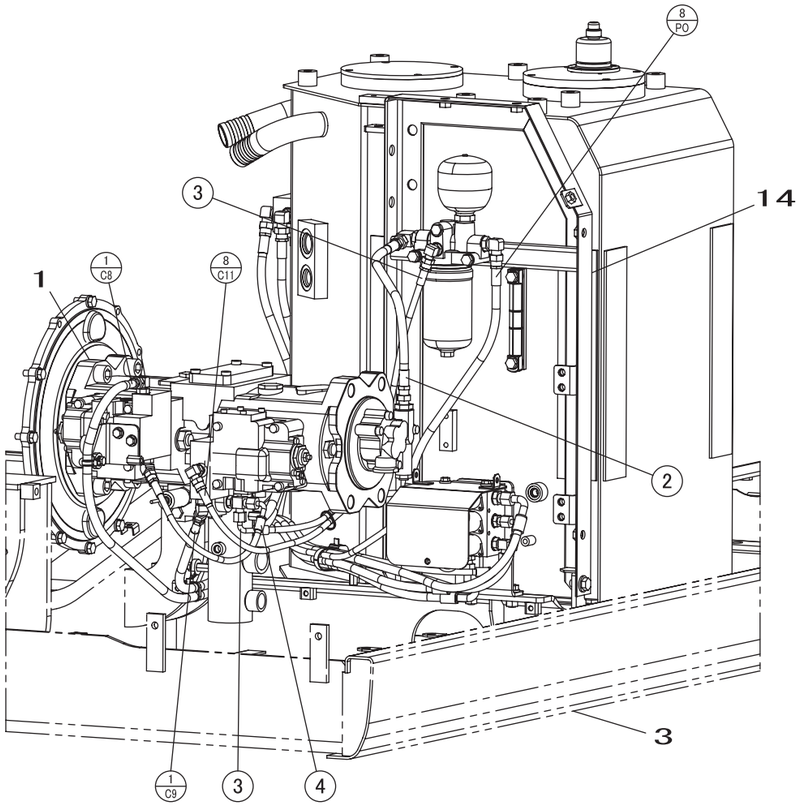

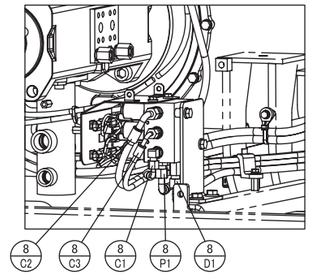

Solenoid valve (right side) details

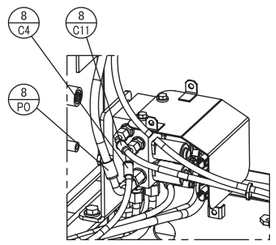

Solenoid valve (left side) details

KRJ16160-E02

https://truckmanualshub.com/

Pilot Hose Connection Diagram

Pilot Control Line

SH210-5

PARTS NAME	SYM	QTY
HOSE;ASSY	1	1
HOSE;ASSY	2	1
HOSE;ASSY	3	1
HOSE;ASSY	4	1
HOSE;ASSY	5	1
HOSE;HYD	6	1
HOSE;NYLON	7	1
HOSE;NYLON	8	1

SH240-5

PARTS NAME	SYM	QTY
HOSE;ASSY	1	1
HOSE;ASSY	2	1
HOSE;ASSY	3	1
HOSE;ASSY	4	1
HOSE;ASSY	5	1
HOSE;HYD	6	1
HOSE;NYLON	7	1
HOSE;NYLON	8	1
VALVE;CUSHION	9	1

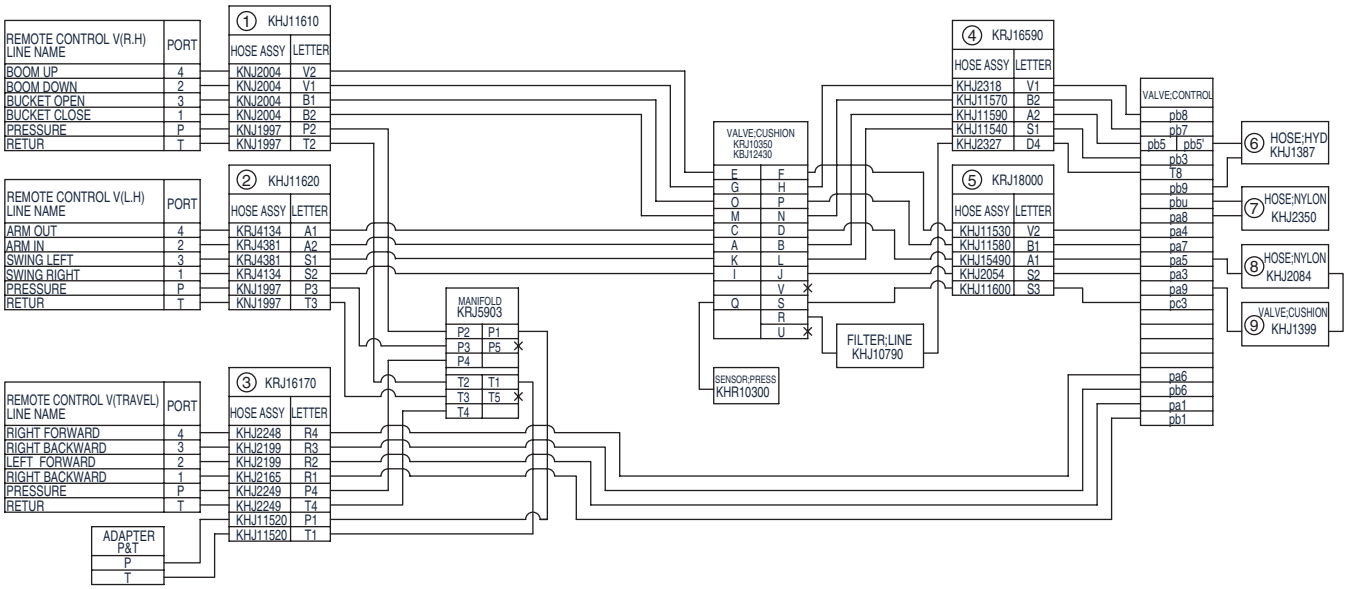

KRJ16200-E02

2 A2	2 port (arm-in)	1 V2	4 port (boom-up)
2 S1	3 port (swing left)	1 B2	1 port (bucket-close)
2 P3	P port	1 T2	T port
2 T3	T port	1 P2	P port
2 S2	1 port (swing right)	1 B1	3 port (bucket-open)
2 A1	4 port (arm-out)	1 V1	2 port (boom-down)

1	Control valve
2	Platform (left)
3	Adapter; hose (bulkhead) (pilot P and T)
4	Sensor; pressure

https://truckmanualshub.com/

Pilot Hose Connection Diagram

Pilot Control Line

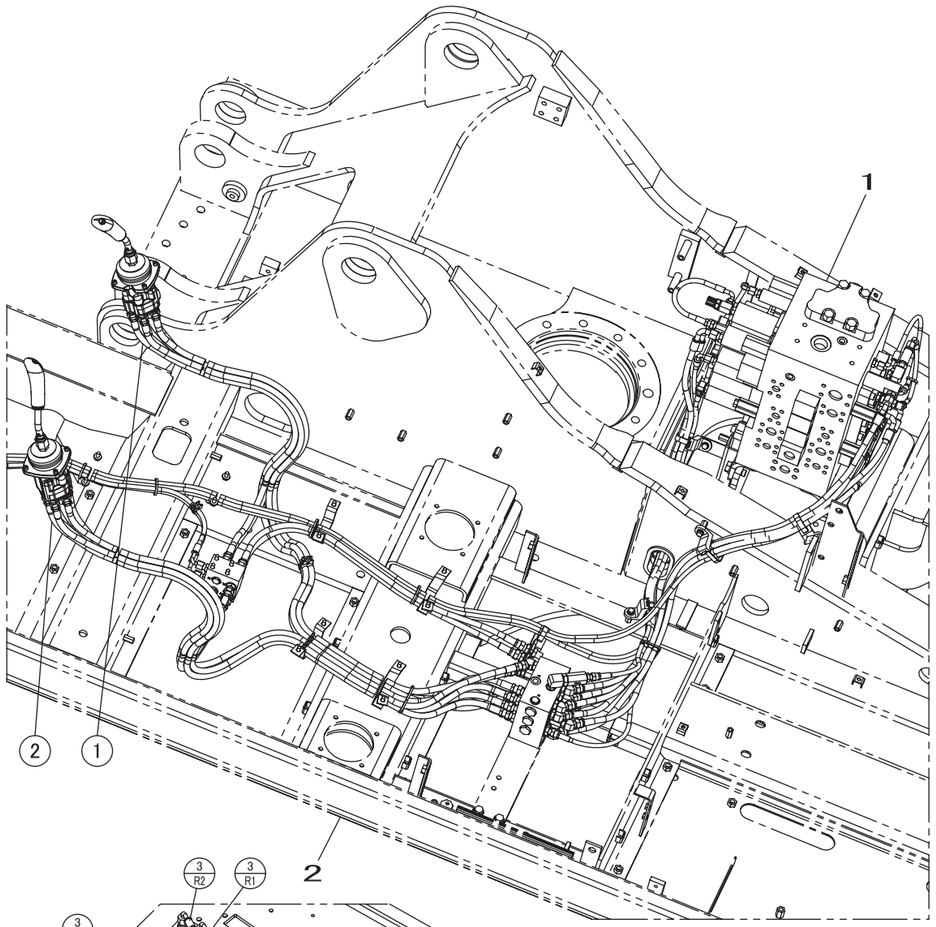

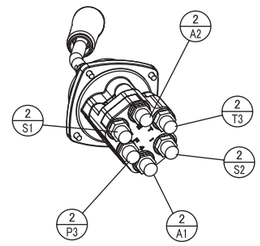

Remote control valve (left side) details

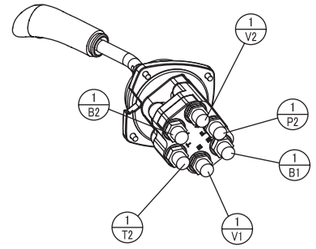

Remote control valve (right side) details

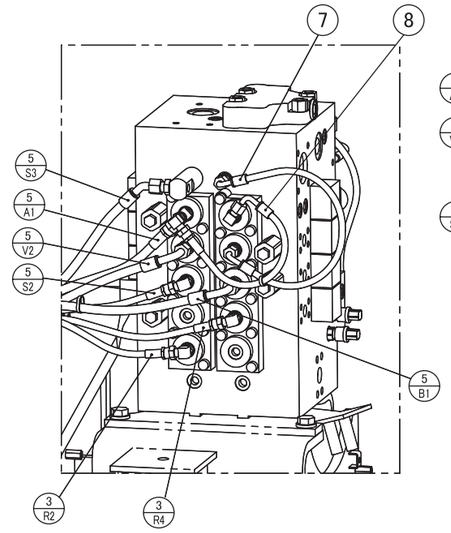

Control valve (backward) details
SH210-5

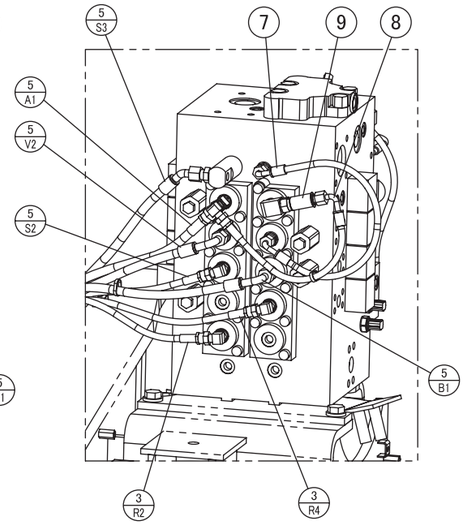

Control valve (backward) details
SH240-5

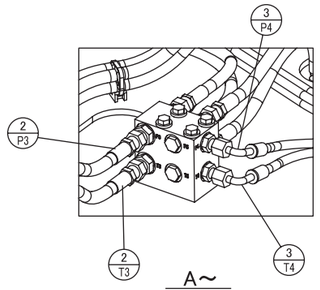

A~

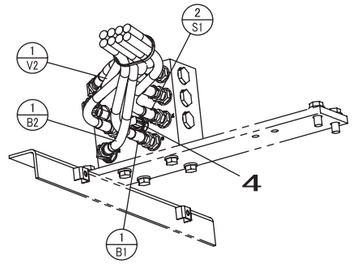

Cushion valve (down side) details

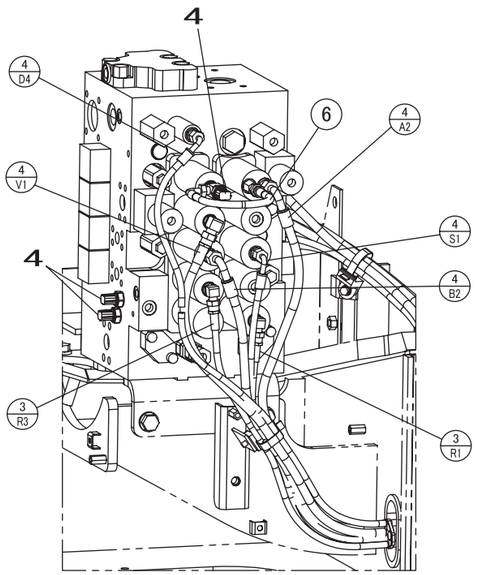

Control valve (forward) details

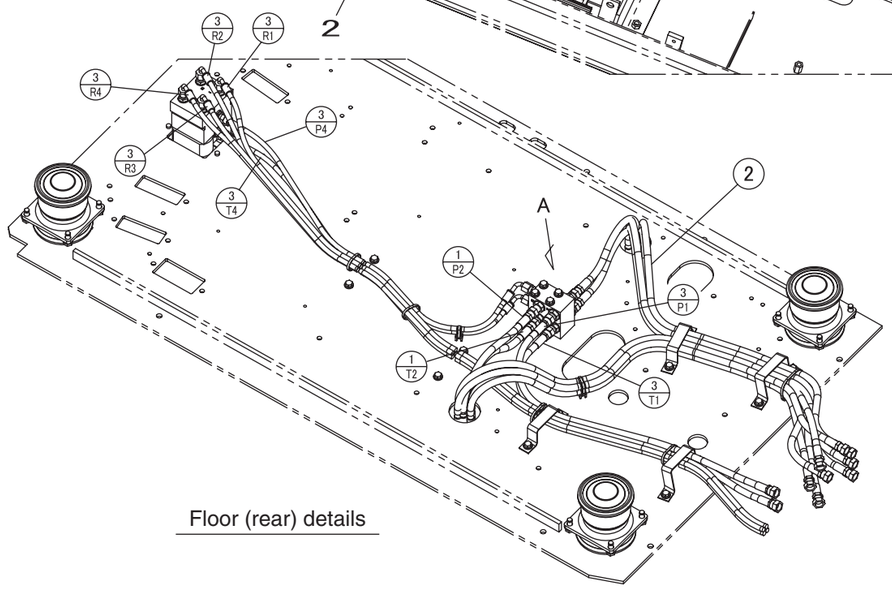

Floor (rear) details

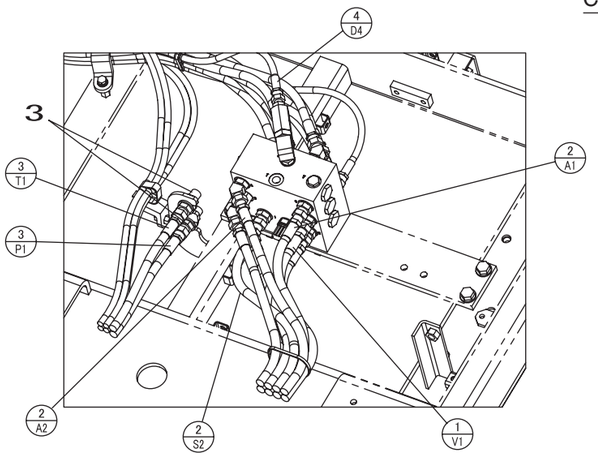

Cushion valve (forward) details

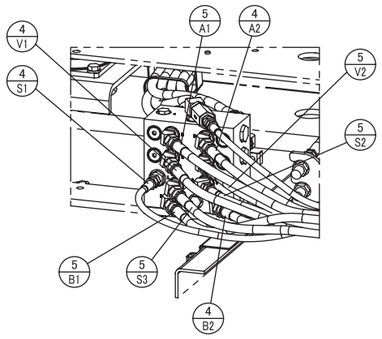

Cushion valve (backward) details

KRJ16200-E02

https://truckmanualshub.com/

Pilot Hose Connection Diagram

Pilot Control Line (2-way selector valve)

SH210-5

PARTS NAME	SYM	QTY
HOSE;ASSY	1	1
HOSE;ASSY	2	1
HOSE;ASSY	3	1
HOSE;ASSY	4	1
HOSE;ASSY	5	1
HOSE;HYD	6	1
HOSE;NYLON	7	1
HOSE;NYLON	8	1
TUBE;ASSY	10	1
TUBE;ASSY	11	1
TUBE;ASSY	12	1
TUBE;ASSY	13	1

SH240-5

PARTS NAME	SYM	QTY
HOSE;ASSY	1	1
HOSE;ASSY	2	1
HOSE;ASSY	3	1
HOSE;ASSY	4	1
HOSE;ASSY	5	1
HOSE;HYD	6	1
HOSE;NYLON	7	1
HOSE;NYLON	8	1
VALVE;CUSHION	9	1
TUBE;ASSY	10	1
TUBE;ASSY	11	1
TUBE;ASSY	12	1
TUBE;ASSY	13	1

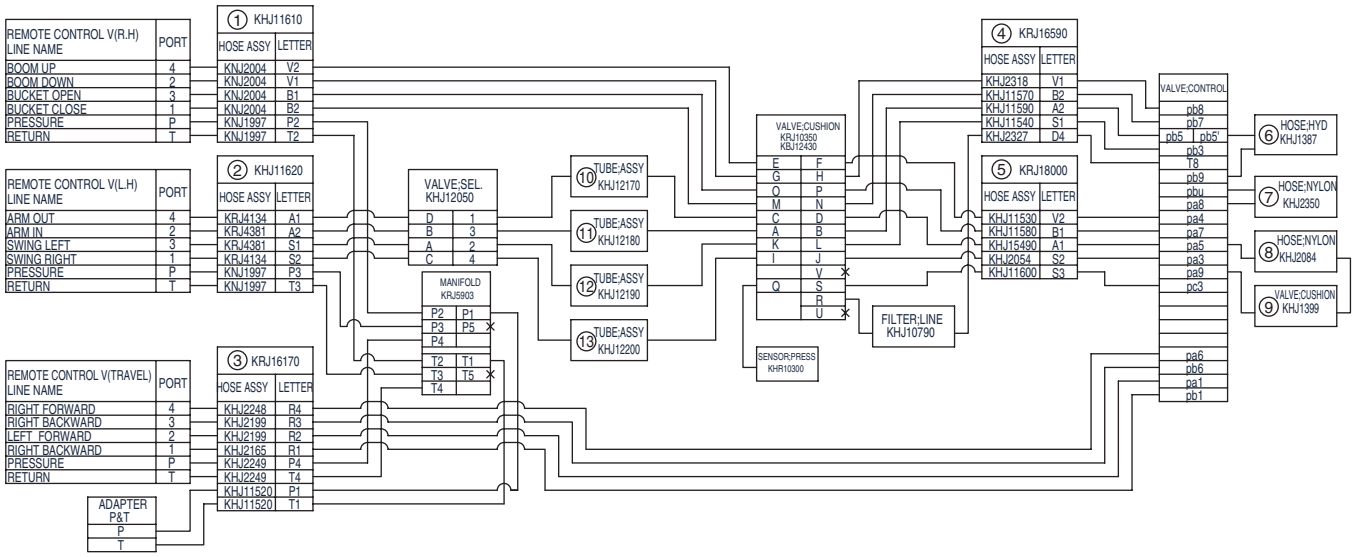

KRJ16210-E02

2 A2	2 port (arm-in)	1 V2	4 port (boom-up)
2 S1	3 port (swing left)	1 B2	1 port (bucket-close)
2 P3	P port	1 T2	T port
2 T3	T port	1 P2	P port
2 S2	1 port (swing right)	1 B1	3 port (bucket-open)
2 A1	4 port (arm-out)	1 V1	2 port (boom-down)

1	Control valve
2	Platform (left)
3	Adapter; hose (bulkhead) (pilot P and T)
4	Sensor; pressure

https://truckmanualshub.com/

Pilot Hose Connection Diagram

Pilot Control Line (2-way selector valve)

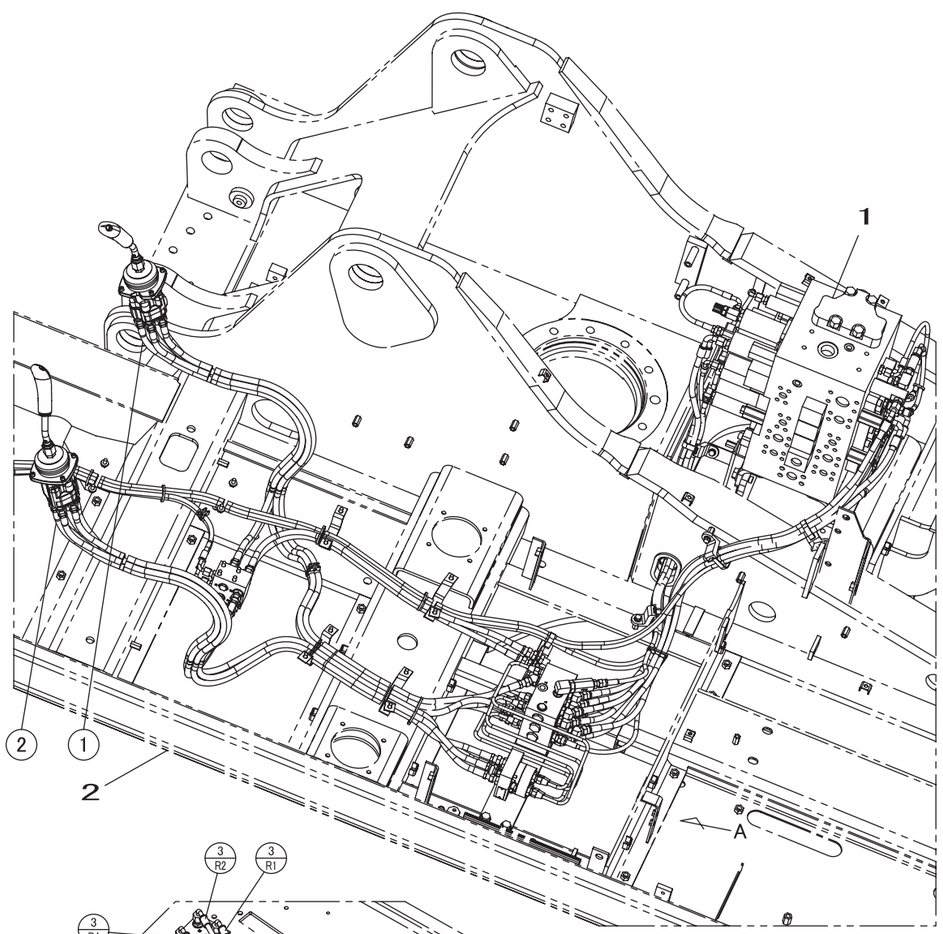

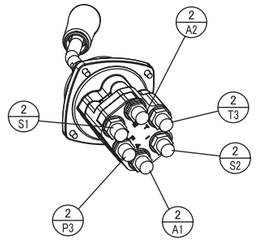

Remote control valve (left side) details

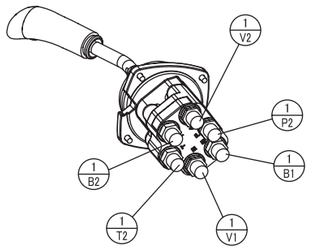

Remote control valve (right side) details

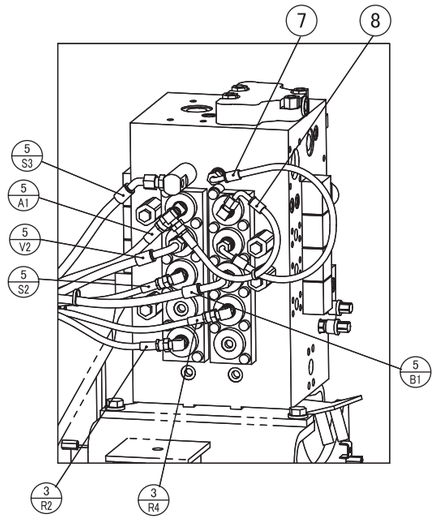

Control valve (backward) details

SH210-5

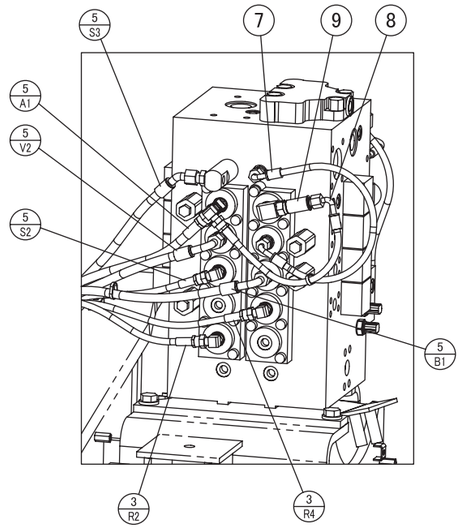

Control valve (backward) details

SH240-5

Floor (rear) details

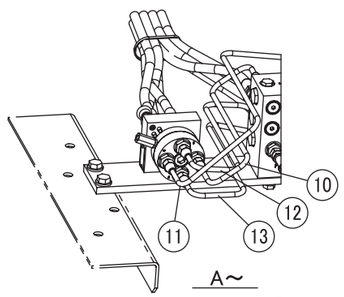

A~

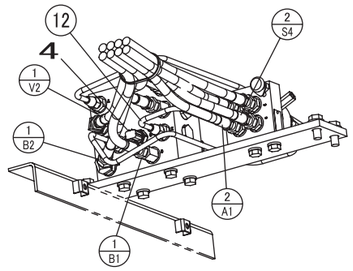

Cushion valve (down side) details

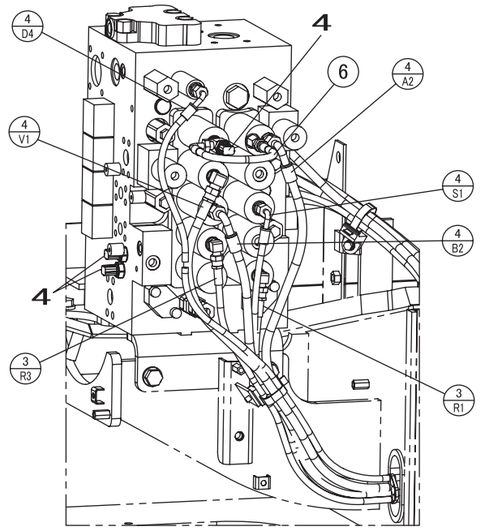

Control valve (forward) details

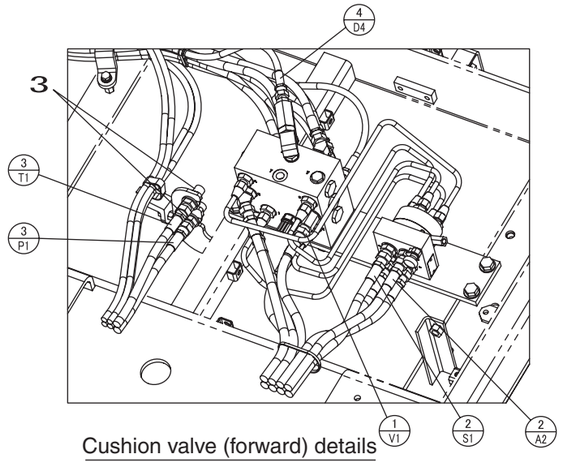

Cushion valve (forward) details

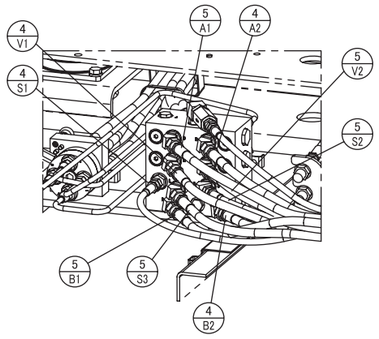

Cushion valve (backward) details

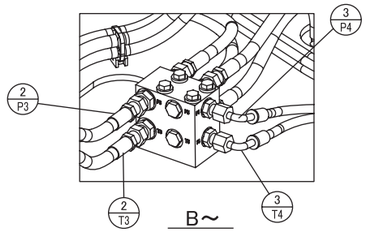

B~

KRJ16210-E02

https://truckmanualshub.com/

Pilot Hose Connection Diagram

Pilot Control Line (4-way selector valve)

SH210-5

PARTS NAME	SYM	QTY
HOSE;ASSY	1	1
HOSE;ASSY	2	1
HOSE;ASSY	3	1
HOSE;ASSY	4	1
HOSE;ASSY	5	1
HOSE;HYD	6	1
HOSE;NYLON	7	1
HOSE;NYLON	8	1
TUBE;ASSY	10	3
TUBE;ASSY	11	1
TUBE;ASSY	12	1
TUBE;ASSY	13	1
TUBE;ASSY	14	1
TUBE;ASSY	15	1
TUBE;ASSY	16	1
TUBE;ASSY	17	1
TUBE;ASSY	18	1
TUBE;ASSY	19	1

SH240-5

PARTS NAME	SYM	QTY
HOSE;ASSY	1	1
HOSE;ASSY	2	1
HOSE;ASSY	3	1
HOSE;ASSY	4	1
HOSE;ASSY	5	1
HOSE;HYD	6	1
HOSE;NYLON	7	1
HOSE;NYLON	8	1
VALVE;CUSHION	9	1
TUBE;ASSY	10	3
TUBE;ASSY	11	1
TUBE;ASSY	12	1
TUBE;ASSY	13	1
TUBE;ASSY	14	1
TUBE;ASSY	15	1
TUBE;ASSY	16	1
TUBE;ASSY	17	1
TUBE;ASSY	18	1
TUBE;ASSY	19	1

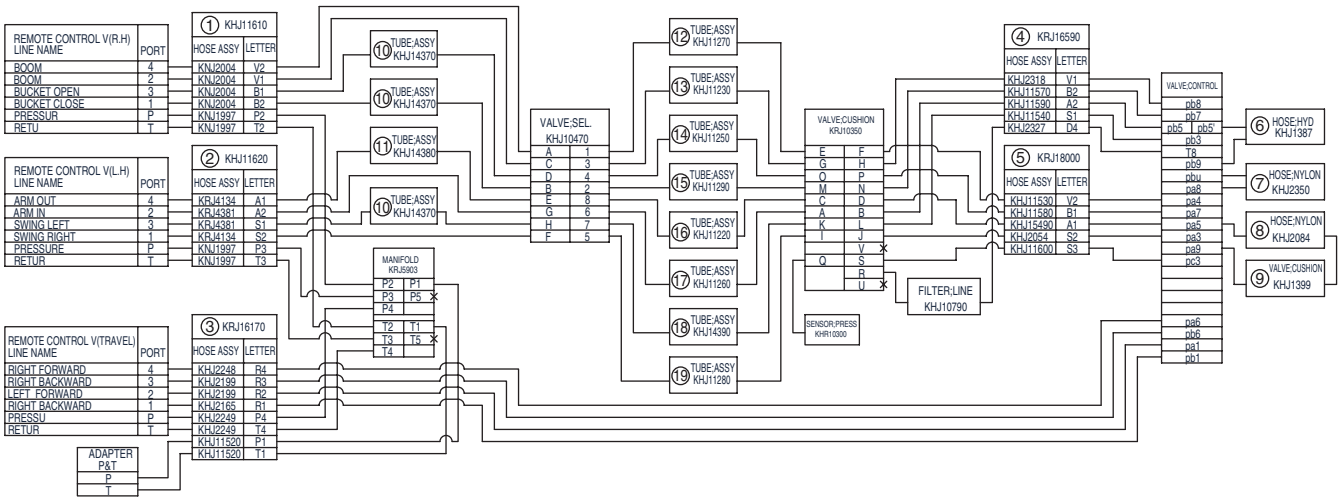

KRJ16220-E02

2 A2	2 port (arm-in)	1 V2	4 port (boom-up)
2 S1	3 port (swing left)	1 B2	1 port (bucket-close)
2 P3	P port	1 T2	T port
2 T3	T port	1 P2	P port
2 S2	1 port (swing right)	1 B1	3 port (bucket-open)
2 A1	4 port (arm-out)	1 V1	2 port (boom-down)

1	Control valve
2	Platform (left)
3	Adapter; hose (bulkhead) (pilot P and T)
4	Sensor; pressure

https://truckmanualshub.com/

Pilot Hose Connection Diagram

Pilot Control Line (4-way selector valve)

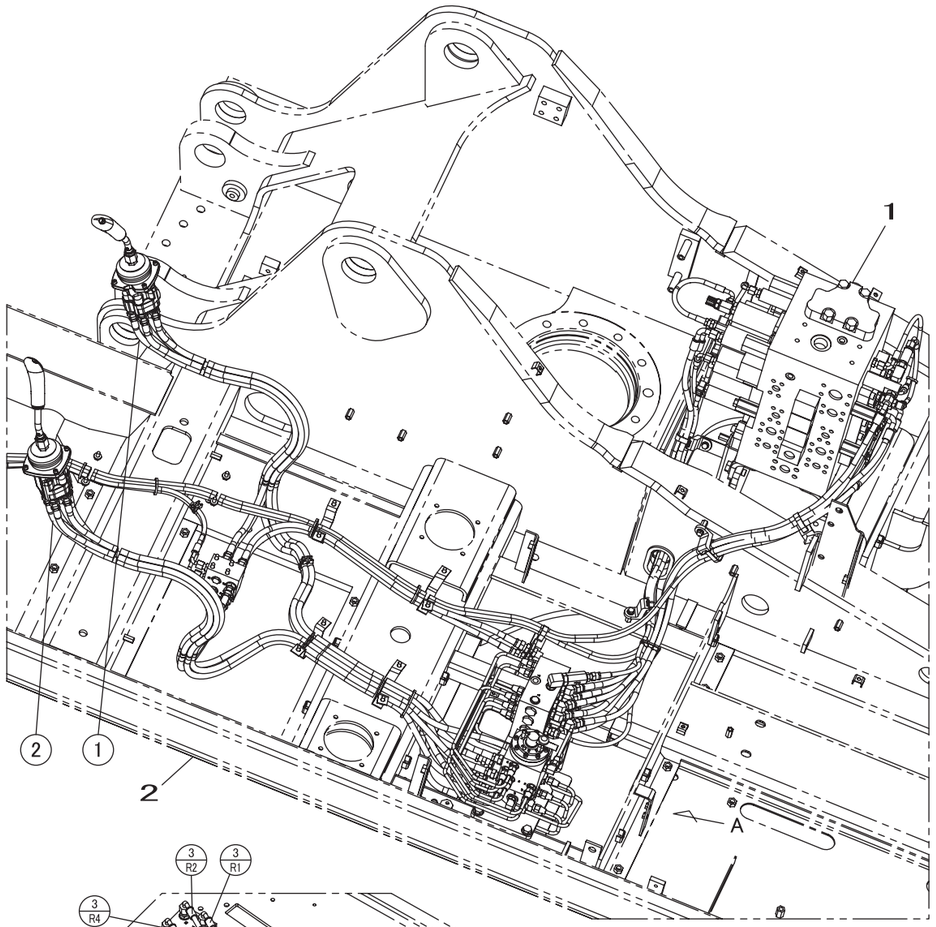

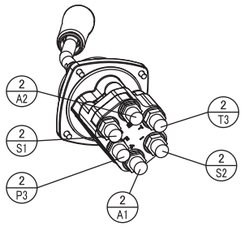

Remote control valve (left side) details

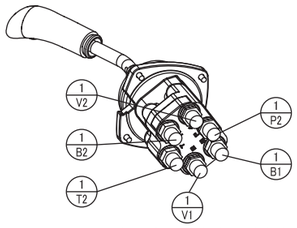

Remote control valve (right side) details

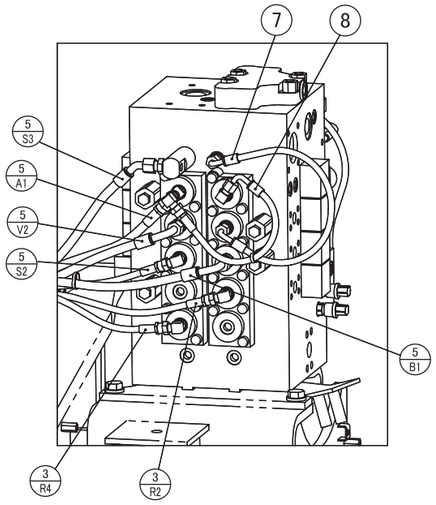

Control valve (backward) details

SH210-5

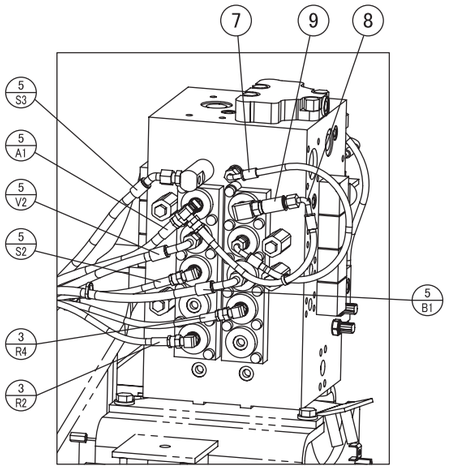

Control valve (backward) details

SH240-5

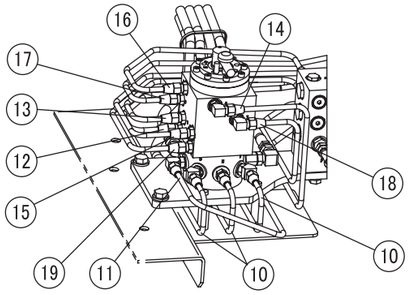

A~

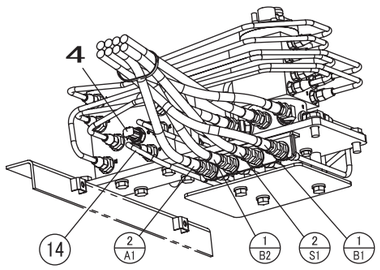

Cushion valve (down side) details

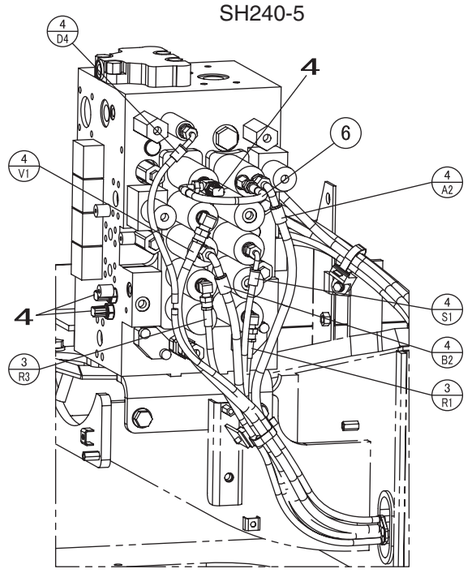

Control valve (forward) details

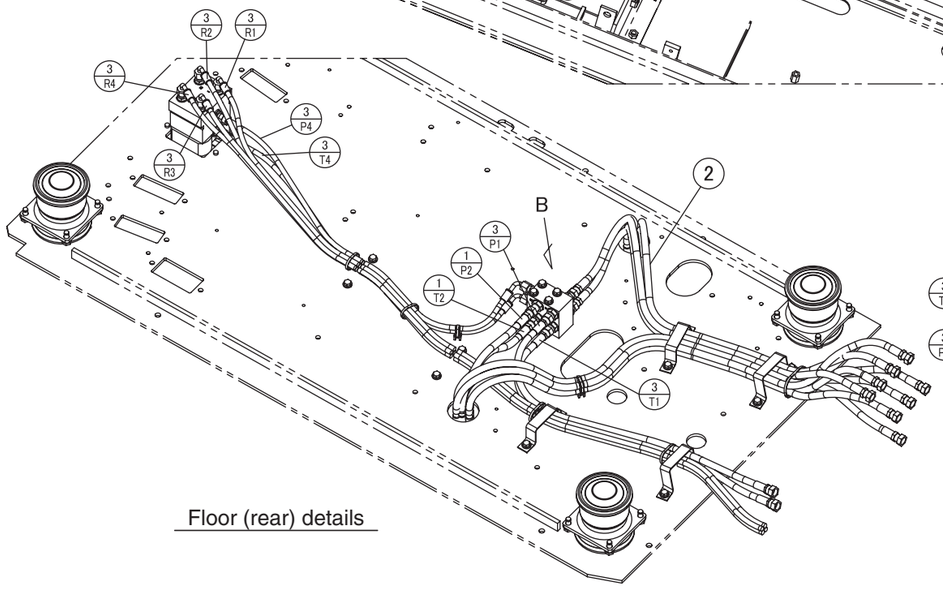

Floor (rear) details

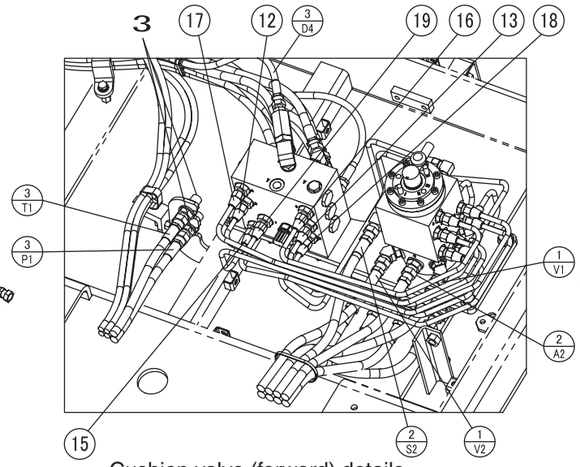

Cushion valve (forward) details

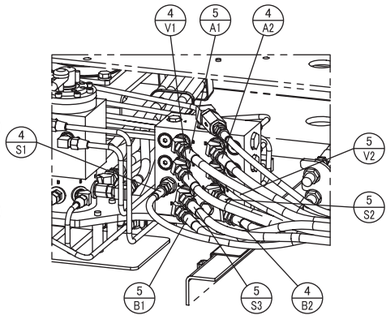

Cushion valve (backward) details

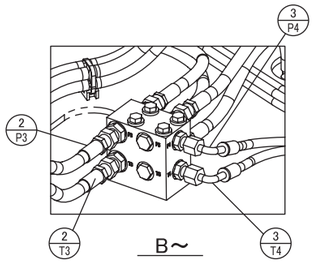

B~

KRJ16220-E02

D

https://truckmanualshub.com/

Function Table

◎: New function r: Changed function

Operation	Explanation of functions	Operation explanation
	Travel circuits	
Travel Low-speed circuit	Sets the travel motor two-stage tilt revolution angle to a large angle to set low speed.	Page 41
Travel High-speed circuit	Sets the travel motor two-stage tilt revolution angle to a small angle to set high speed. The speed is automatically switched to low speed according to the load pressure on the travel motor. In order to prevent drift at high speed, if the travel pressure becomes 25.8 MPa or higher, the speed is set to low speed.	Page 43
Straight travel circuit (r)	Traveling with other equipment opration, travel is held straight without curving.	Page 45
	Swing circuits	
Swing speed limit control circuit (◎)	In order to increase the cylinder bore and attachment speed, the pump maximum flow was increased, but in order to not increase the swing speed, when swing is operated alone, the pump flow is restricted with the proportional valve installed on the swing pump (front side).	Page 47
Swing relief cut-off control circuit (◎)	When swing is operated alone, if swing is started with a sudden lever operation, the pump flow is reduced with the proportional valve installed on the swing pump (front side). Normally, this control eliminates the excess oil discharged from the swing relief valve and reduces the horsepower consumption. When the swing speed rises, the pump discharge pressure falls, so the pump flow is increased gradually while it is detected with the sensor.	Page 49
Swing priority circuit	[1] Swing pushing is obtained by the swing priority variable orifice built into the control valve. [2] The swing priority variable orifice also works to secure the arm flow for bed metering.	Page 51
Swing brake circuit	Suctions in the oil from the make-up line in order to prevent cavitation when swing stops.	Page 53
Swing parking circuit (r)	[1] When the swing lever is in neutral, swing parking works and is held at 100%. [2] When there is a swing lever or attachment operation, swing parking is released. [3] Swing parking works about five seconds after the swing lever is put into neutral. [4] When an attachment operation is stopped, if there is no swing operation, the swing parking circuit works about one second later. [5] When the engine is stopped, swing parking works.	Page 55
	Boom circuits	
Boom-up circuit	[1] Boom only The flow is merged internally by switching the boom (2) spool to raise the speed. [2] Compound The swing priority variable metering spool is switched to make movement in arm-in compound operation smooth.	Page 61
Boom-down regenerative circuit	Regeneration within the boom spool is used to increase speed and prevent cavitation.	Page 65
Boom-down tilting prevention circuit	High pressure is suppressed with the bleed-off circuit and tilting is mitigated.	Page 67
Boom-down load hold valve circuit	The load hold valve built into the control valve is speed up.	Page 69

D

https://truckmanualshub.com/

Function List

◎: New function r: Changed function

Operation	Explanation of functions	Operation explanation
Arm circuits		
Arm-out circuit	The flow is merged internally by switching the arm (2) spool to raise the speed.	Page 71
Arm-in forced regenerative circuit	The speed for compound operation is raised by the forced regeneration release valve in the control valve.	Page 73
Arm-in load hold valve circuit	The load hold valve built into the control valve is released to make the arm-in operation possible.	Page 75
Bucket circuit		
Bucket-close regenerative circuit (◎)	Regeneration within the bucket spool is used to increase speed and prevent vacuum.	Page 79
Negative control circuits		
Negative control circuit	For no load operation, this circuit sets the hydraulic pump discharge quantity to minimum to reduce horsepower consumption.	Page 81
Negative control power save circuit (◎)	In the no operation state, this circuit switches the negative control valve set pressure to reduce the pump discharge force and further reduce horsepower consumption.	Page 83
Increased horsepower circuits		
Arm-in increased horsepower circuit	Increases the hydraulic pump discharge volume for arm-in operations.	Page 87
Travel added horsepower circuit	Increases the hydraulic pump discharge volume for travel-only operations.	Page 89
Others		
Cushion circuit	Softens the shock through the work of the cushion valve with heat circuit. This circuit is attached to the boom and arm pilot lines. There is no soft / hard switch.	Page 91
Auto power boost circuit	Boost the main relief pressure from 34.3 MPa to 36.8 MPa according to the engine load ratio and circuit pressure.	Page 99
Option circuits		
Breaker circuit	The main control valve has an option section as standard so that it can support a breaker, crusher or other special attachment.	Page 101
Option flow adjustment (◎)	It is possible to set the flow for the breaker, crusher, or other special attachment application by just operating a switch in the cab. Maximum of 5 applications	-
Compatible circuit switch (◎)	It is possible to switch the circuit between the breaker and the crusher by just operating the switch in the cab.	-
Second option circuit (◎)	Option valve can be added to the top section of the control valve and a second option line can be installed easily.	Page 109

https://truckmanualshub.com/

Explanation of New Functions

1. Swing Relief Cut Control

[1] Model 3 circuits

- When a swing starts, almost all the oil is discharged from the swing relief valve.

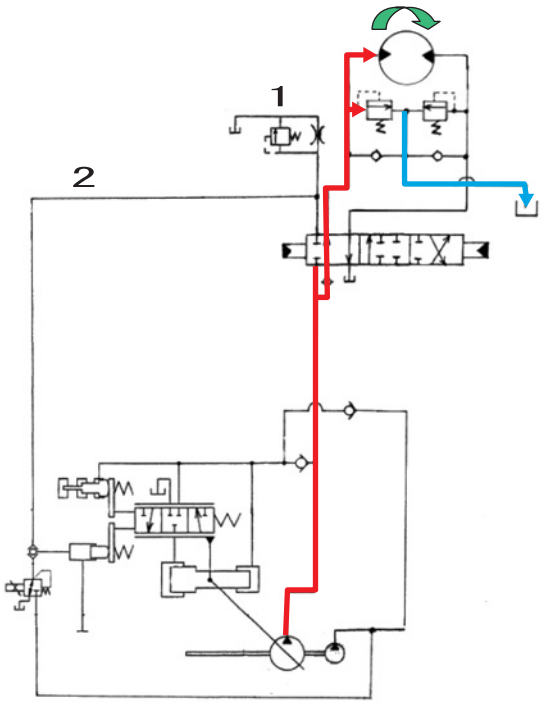

When the swing starts, high pressure is required, but not flow.
For Model 3, swing relief pressure 29.4 MPa
Pump delivery volume at this time 167 L/min.
When the pump is beginning to start up, almost all the oil flows from the relief valve to the tank.

1	Foot relief valve
2	Negative control signal

D

https://truckmanualshub.com/

[2] Model 5 circuits

- When a swing starts, the flow is reduced with the front side proportional valve and the excess oil is eliminated.

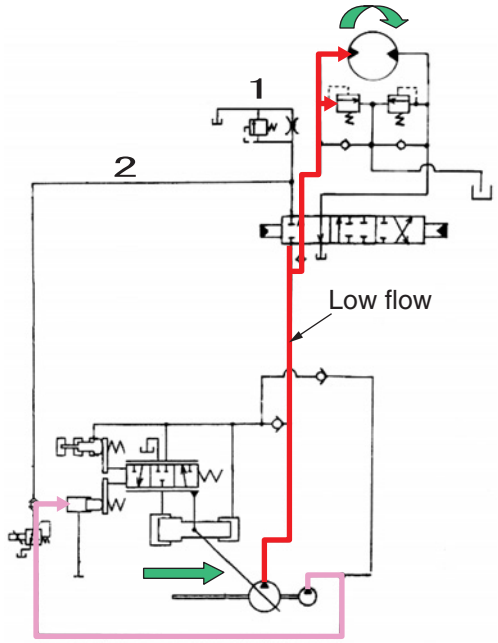

Current is input to the front side proportional valve, pilot pressure oil is led to the negative control port, and the flow decreases on the front side only. While the pump discharge pressure is sensed, the flow is gradually increased.

1. Operation conditions for swing relief cut control when all the conditions below are satisfied.
   - Travel non-operation
   - No attachments other than boom down are operating
   - Sudden swing operation

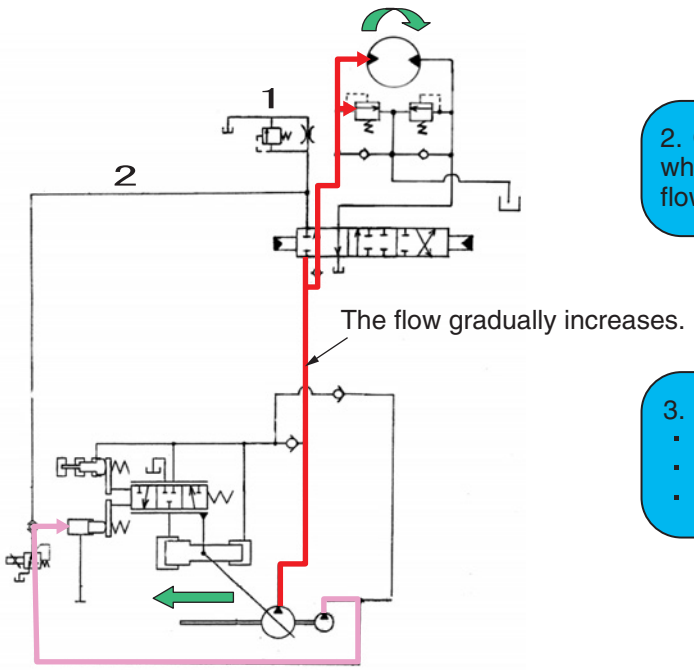

2. Control after swing relief cut control operation while the pump discharge pressure is sensed, the flow is gradually increased.

3. Swing relief cut control end conditions
   - When swing operation is stopped
   - Travel operation
   - Boom-up, arm-out / in, bucket open / close

1	Foot relief valve
2	Negative control signal

https://truckmanualshub.com/

2. Swing Speed Limit Control

- The maximum pump flow has been increased, but because it is desired to maintain the current state of the swing speed, the front side proportional valve is used to hold down the flow for swing-only operation.

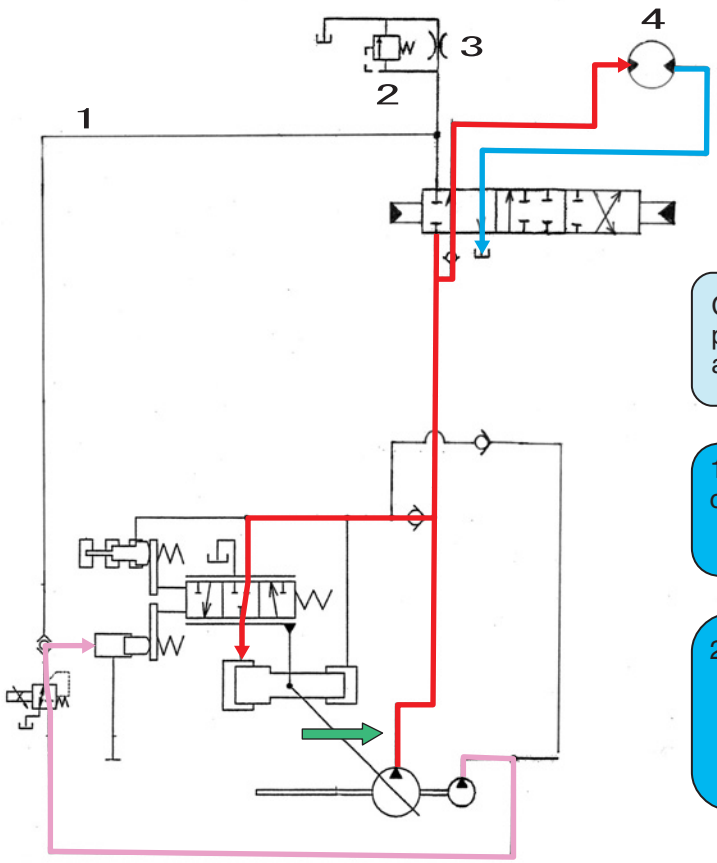

SH210-5 : 211 L/min → 200 L/min
SH240-5 : 234 L/min → 214 L/min

Current flows to the front side proportional valve, pilot pressure goes into the negative control port, and the flow decreases on the front side only.

1) Operation conditions for swing speed limit control
- Other attachment non-operation
- Travel non-operation

2) Swing speed limit control end conditionsin
- Other attachment operation
  →Gradual end (to reduce shock)
- Travel operation
  →Immediate end (to prevent meandering)

1	Negative control signal
2	Foot relief valve
3	Negative control orifice
4	Swing motor

D

https://truckmanualshub.com/

3. Negative Control Power Save Control

[1] Model 3 negative control circuit

- Control such that the discharge flow decreases as the negative control pressure increases

This reduces the flow for non-operation, so there is an energy-saving effect.

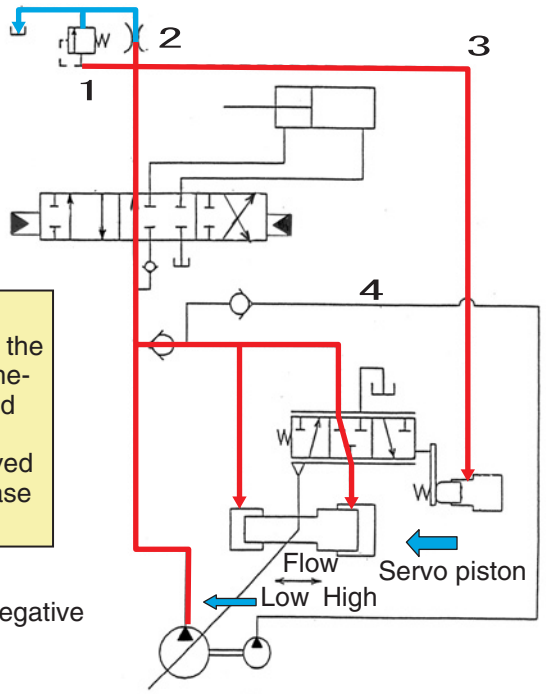

For non-operation
1) The oil discharged from the pump is boosted to the foot relief set pressure at the negative control metering valve downstream of the control valve and the negative control pressure rises.
2) The pump regulator section servo piston is moved in the direction that is left in the figure to decrease the flow.

However, the pump discharge pressure is the negative control pressure and pressure loss.

1	Foot relief valve	3	Negative control pressure
2	Negative control orifice	4	Servo assist pressure

[2] Model 5 negative control circuit

This circuit uses the power save function.

- The negative control relief was made variable to lower the negative control pressure.

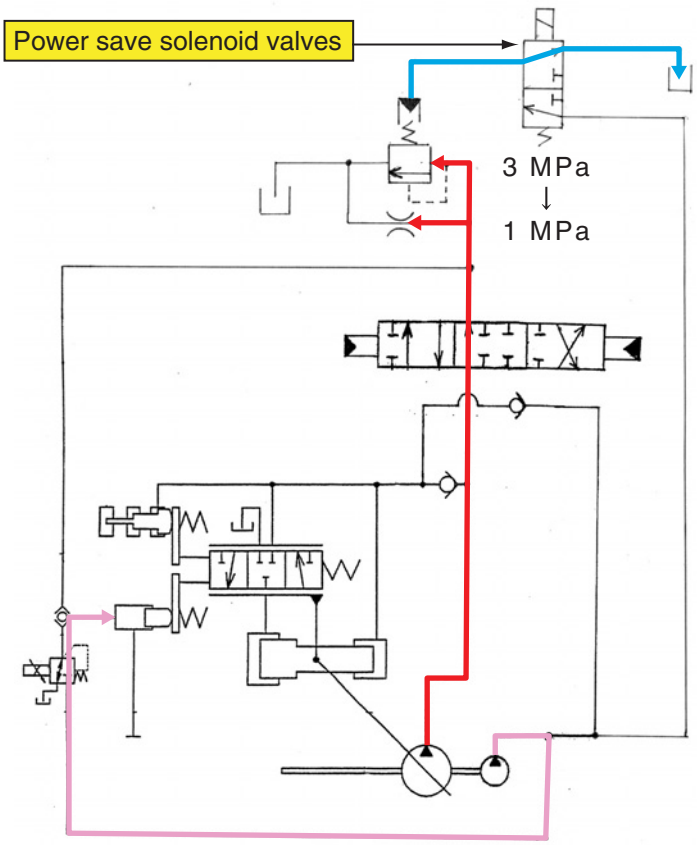

This gives low pressure and low flow for non-operation, so there is an energy-saving effect.

For non-operation
1) When one second passes from the end of operation, the solenoid valve comes ON and the negative control relief spring is released.
2) When the pump discharge pressure drops, the negative control pressure drops at the same time, so the proportional valve is operated to establish the negative control pressure.
3) The rear side pump leads the pilot pressure to the negative control port via the shuttle.
4) When any operation is carried out, this detects the pilot pressure and recovers in about 0.1 second.

https://truckmanualshub.com/

4. Option Line Flow Adjustment Control

- This control adjusts the set flow to match the breaker, crusher, or other application.

There are various types of front attachments installed on the shovel and the flows they require vary.
Even just for the 20-ton class breakers recognized by this company, the required flow ranges from 120 to 200 L / min.

Model 3 breaker control
Breaker mode switch ON
Option pedal ON
When these occur, the engine speed drops to the preset speed.
Example
If the required flow is 150 L / min, it drops to 1500 min^{-1}.

Problems
- The change in engine speed creates a sense of discomfort.
- The flow can only be set when the breaker is used. (With the crusher specifications, the flow cannot be adjusted.)
- Only one flow can be set.

Model 5 uses a front pump proportional valve to adjust the flow.

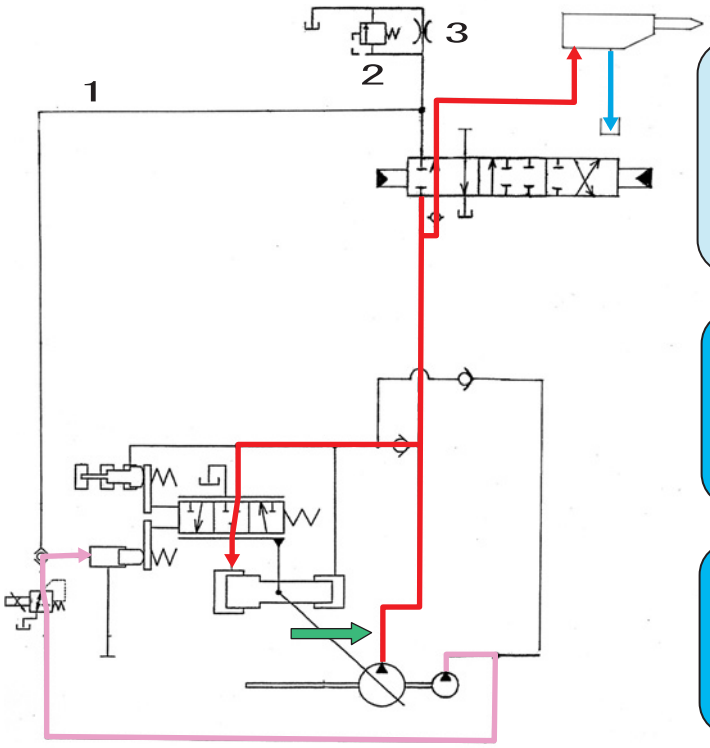

Improved points
- The breaker can be operated without engine speed change.
- The flow can be set even with the crusher specifications.
- Three settings each can be stored for the breaker and the crusher.

1. Operation conditions for option flow adjustment control
- Option operation
- Attachment non-operation
- Travel non-operation
- Swing non-operation

2. Option flow adjustment control end conditions
- Attachment operation
- Travel operation
- Option non-operation
- Swing operation

Control contents
Accompanying the 10 flow settings (front side proportional valve settings), when one setting is selected, the set current is input to the front proportional valve, pilot pressure oil is led to the negative control port, and the flow decreases on the front side only.

1	Negative control signal	2	Foot relief valve	3	Negative control orifice

https://truckmanualshub.com/

Function List

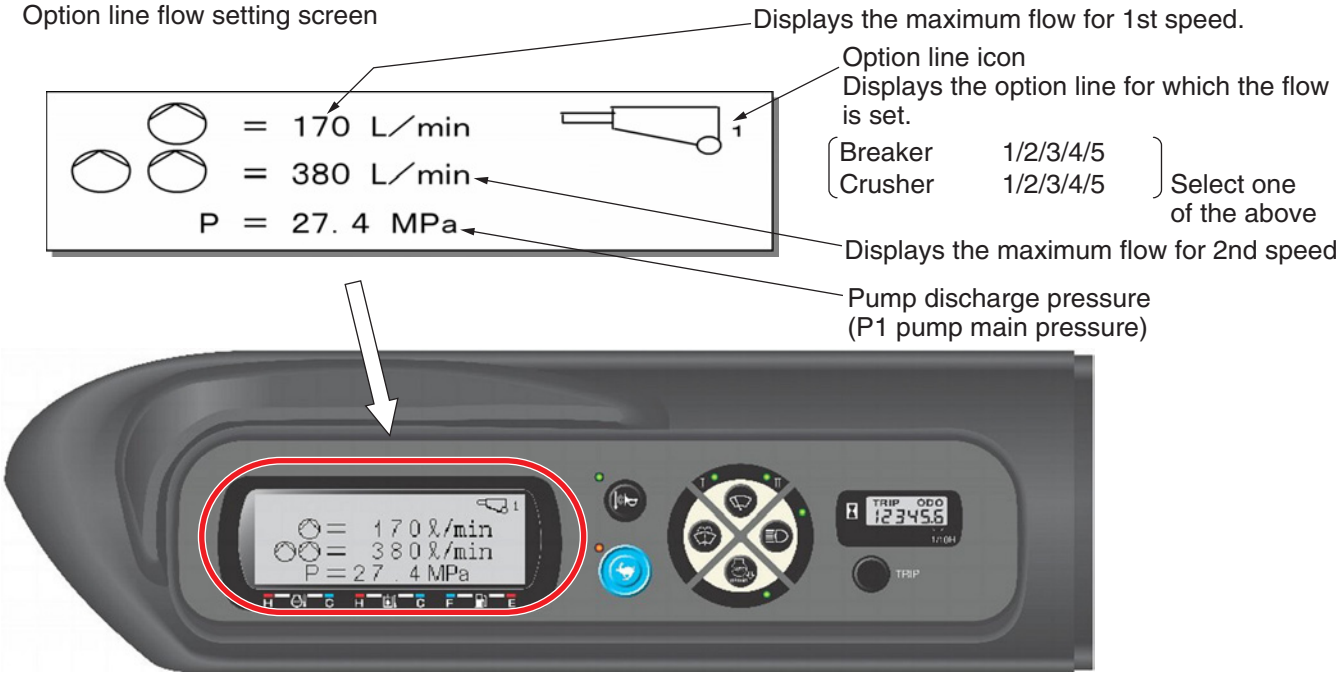

5. Multi Purpose Circuit (breaker ⇔ crusher) One-touch Switching Control
   - This control makes it easy to switch the circuit with a rocker switch in the cab.

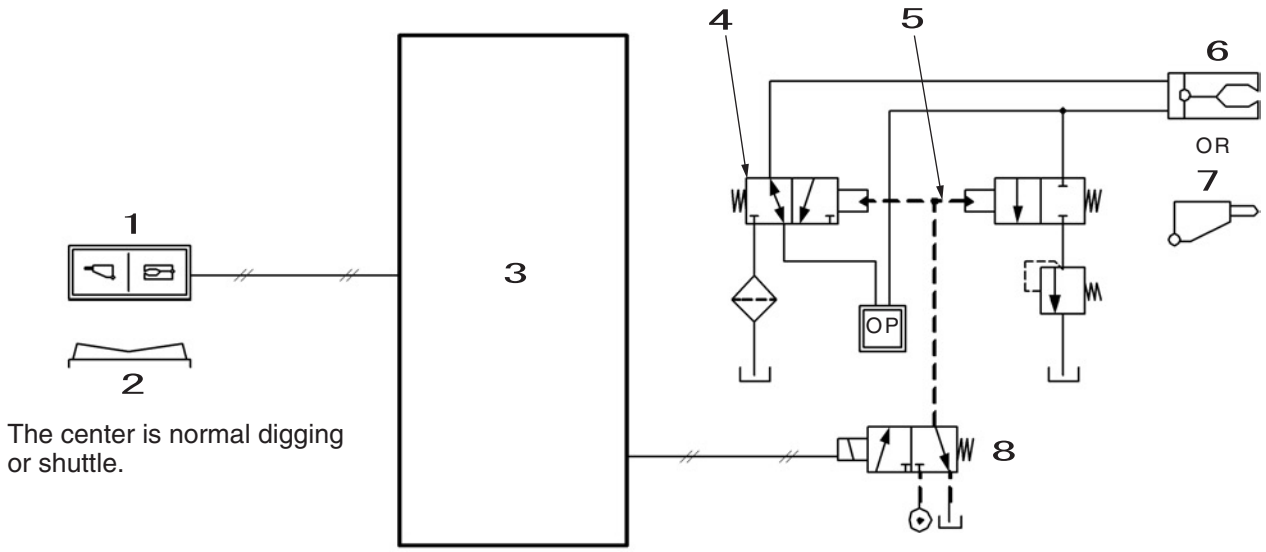

1	Option line select switch
2	3 positions
3	Computer A
4	Three-way valve
5	Pilot switchover
6	crusher
7	Breaker
8	Option line switchover solenoid

https://truckmanualshub.com/

6. Bucket-close Regenerative Circuit

This circuit speeds up bucket closing.
Bucket-close regenerative circuit used

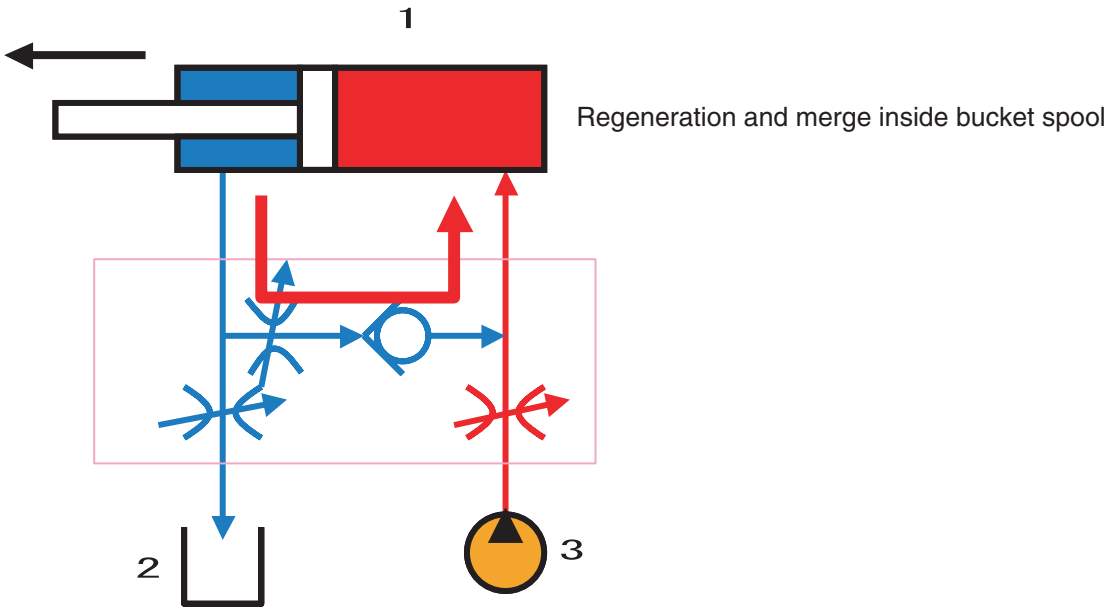

Regeneration conditions: Pressure T > P

Cylinder port merge regeneration

1	Bucket cylinder
2	Hydraulic oil tank
3	Hydraulic pump

D

https://truckmanualshub.com/

Travel Circuits

1. Travel Low-speed Circuit

As an example, this section explains the forward travel operation.
The travel motor two-stage tilt revolution angle is a large angle side. Even if the travel switch is set to the high-speed side, switching the key switch OFF, then ON again always returns the system to this state.
By operating the travel remote control valve to the forward side, the pilot pressure oil is fed to the control valve Pa1 port and switches the left travel spool to the forward side.
At the same time, the oil is also fed to the Pa6 port to switch the right travel spool to the forward side.
The discharged oil from hydraulic pump A1 enters the control valve P1 port and the discharged oil from hydraulic pump A2 enters the control valve P2 port. Each flows to the respective travel motor and causes forward travel through the left and right spools being switched.
The return oil from the travel motor goes through the left and right travel spools and returns to the hydraulic oil tank.
The travel high-speed solenoid valve goes OFF, the travel motor Ps port oil connects with the tank line and the travel motor revolution tilt angle goes to the large revolution tilt side.

1	Travel motor	10	Console lever lock switch
2	High speed travel select switch	11	Hydraulic pump
3	Computer A	12	Travel remote control valve
4	Control valve	13	Check
5	Travel (left)	14	Oil cooler
6	Travel (right)	15	Backward left
7	Travel speed	16	Forward left
8	Lever lock	17	Forward right
9	5-stack solenoid valve	18	Backward right

https://truckmanualshub.com/

Explanation of Hydraulic Circuit and Operations (standard model)

Travel Circuits

Travel Low-speed Circuit

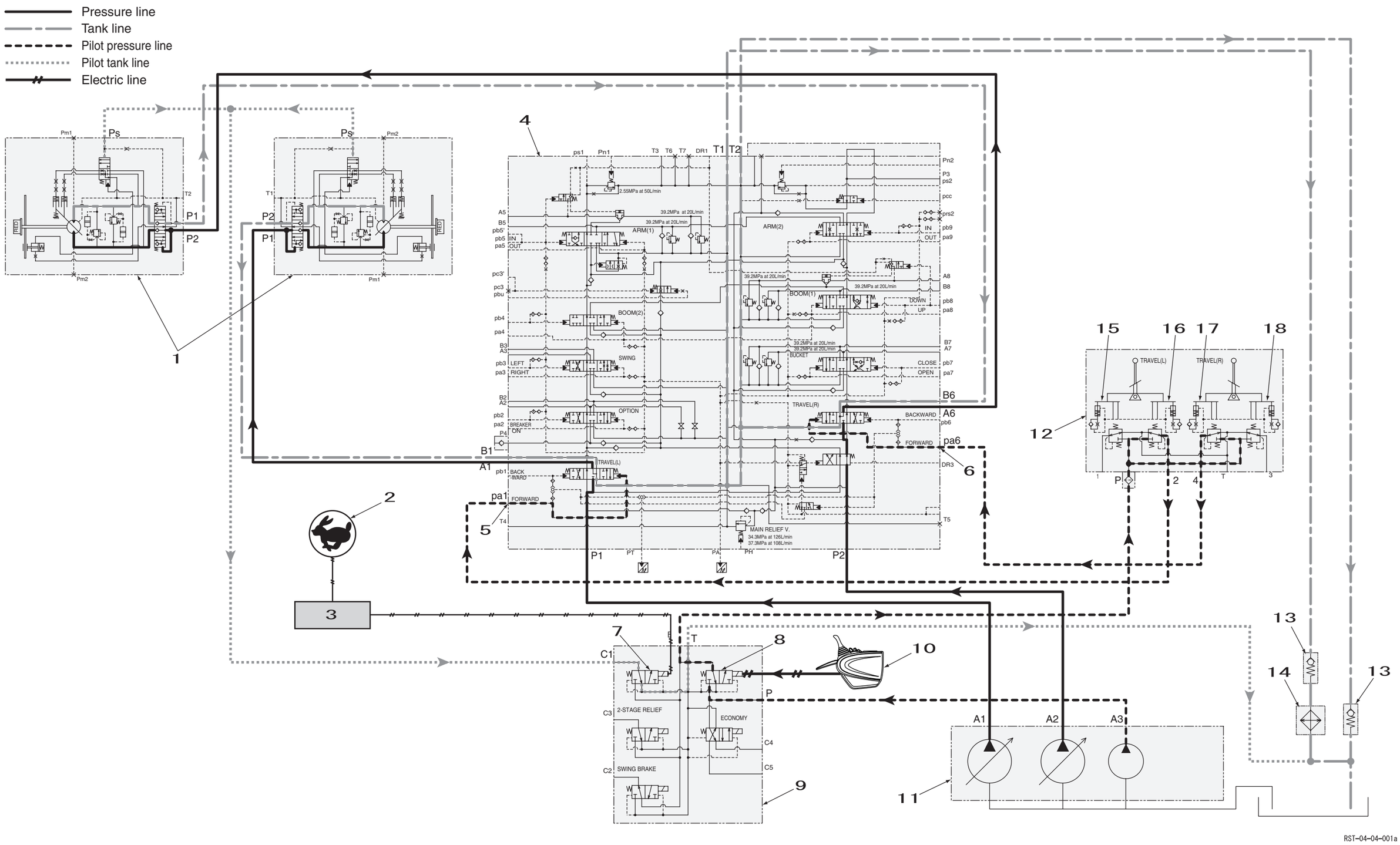

RST-04-04-001a

https://truckmanualshub.com/

Travel Circuits

2. Travel High-speed Circuit

As an example, this section explains the forward travel operation.
Sets the travel motor two-stage tilt revolution angle to a small angle to set high speed. The travel motor has an auto switch function that switches the speed from high speed to low speed according to the load pressure on the travel motor.
By operating the travel remote control valve to the forward side, the pilot pressure oil is fed to the control valve Pa1 port and switches the left travel spool to the forward side.
At the same time, the oil is also fed to the Pa6 port to switch the right travel spool to the forward side.
The discharged oil from hydraulic pump A1 enters the control valve P1 port and the discharged oil from hydraulic pump A2 enters the control valve P2 port. Each flows to the respective travel motor and causes forward travel through the left and right spools being switched.
The return oil from the travel motor goes through the left and right travel spools and returns to the hydraulic oil tank.
Electrical signals are sent to the computer A by operation of the high-speed travel select switch and the computer A sends electrical signals to the high-speed travel solenoid valve. Due to the switching of the high-speed travel solenoid valve, the pilot pressure (3.9 MPa) from the C1 port enters the left and right travel motor Ps ports through the center joint and sets the travel motor revolution tilt angle to a small angle to raise the speed.

1	Travel motor	10	Console lever lock switch
2	High speed travel select switch	11	Hydraulic pump
3	Computer A	12	Travel remote control valve
4	Control valve	13	Check
5	Travel (left)	14	Oil cooler
6	Travel (right)	15	Backward left
7	Travel speed	16	Forward left
8	Lever lock	17	Forward right
9	5-stack solenoid valve	18	Backward right

https://truckmanualshub.com/

Travel Circuits

Travel High-speed Circuit

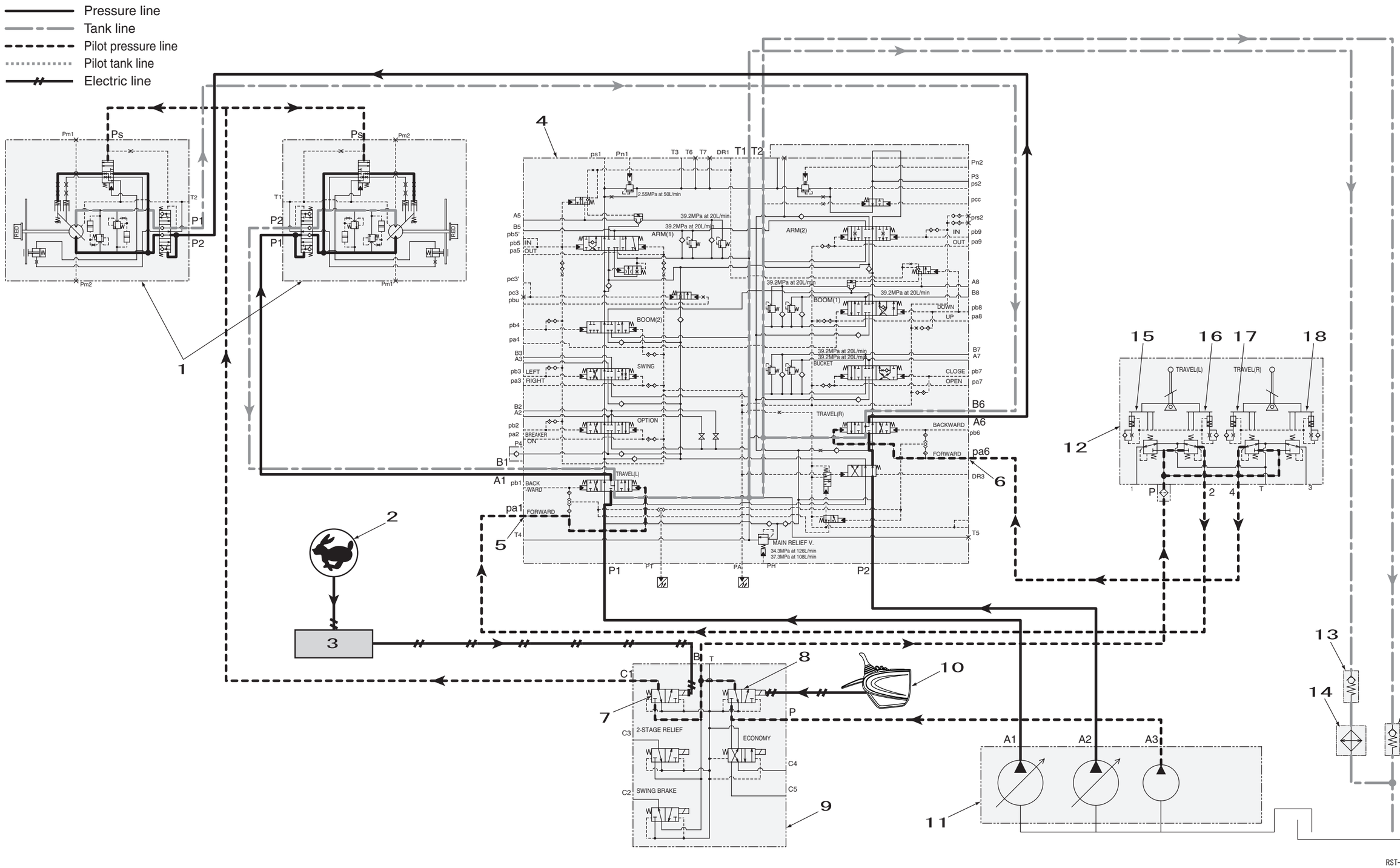

https://truckmanualshub.com/

Travel Circuits

3. Straight Travel Circuit

As an example, this section explains simultaneous forward travel and boom-up operations.
By operating the travel remote control valve to the forward side, the pilot pressure oil is fed to the control valve Pa1 port and switches the left travel spool to the forward side.
In the same way, oil is also fed to the Pa6 port to switch the right travel spool to the forward side.
Furthermore, the right forward travel pilot pressure oil separated internally from the control valve Pa6 port switches the straight travel signal (right). On the other hand, the travel pilot pressure oil separated internally from the Pa1 port switches the straight travel signal (left) via the straight travel signal (right).
The discharged oil from hydraulic pump A1 enters the control valve P1 port and the discharged oil from hydraulic pump A2 enters the control valve P2 port. Each flows to the respective travel motor and causes forward travel through the left and right spools being switched.
If a boom-up operation is carried out during travel, the pilot pressure oil is fed via the cushion valve to the control valve Pa4 port and switches the boom (1) and (2) spools to the up side.
The upper side (boom, arm, bucket, swing, option) pilot pressure oil separated internally from the control valve Pa4 port is fed to the straight travel valve via the straight travel signal (left) and the straight travel spool is switched.
The amount of switching of the straight travel spool varies with the upper side pilot pressure.
(Because the pilot pressure is low for slight upper side operation, the amount of switching of the straight travel spool is slight to prevent sudden reduction in the travel speed.)
Because the straight travel valve is switched, it is possible for the control valve P1 pressurized oil to drive the left and right travel motors and for the control valve P2 pressurized oil to drive the boom.
Because the left and right motors are driven by one pump, the left and right motors have the same pressure and straight travel is possible. Furthermore, the P2 excess pressurized oil is fed to the travel side via the check valve with travel merge orifice to minimize the drop in speed.
The same operations are carried out when travel and an upper side actuator other than for the boom are operated simultaneously.

1	Travel motor	14	Travel speed
2	Boom (up)	15	Lever lock
3	Boom (down)	16	5-stack solenoid valve
4	Cushion valve	17	Console lever lock switch
5	Remote control valve (boom, bucket)	18	Hydraulic pump
6	Control valve	19	Boom cylinder
7	Travel (left)	20	Travel remote control valve
8	Travel (right)	21	Check
9	Straight travel valve	22	Oil cooler
10	Straight travel signal (left)	23	Backward left
11	Straight travel signal (right)	24	Forward left
12	High speed travel select switch	25	Forward right
13	Computer A	26	Backward right

https://truckmanualshub.com/

Travel Circuits

Straight Travel Circuit

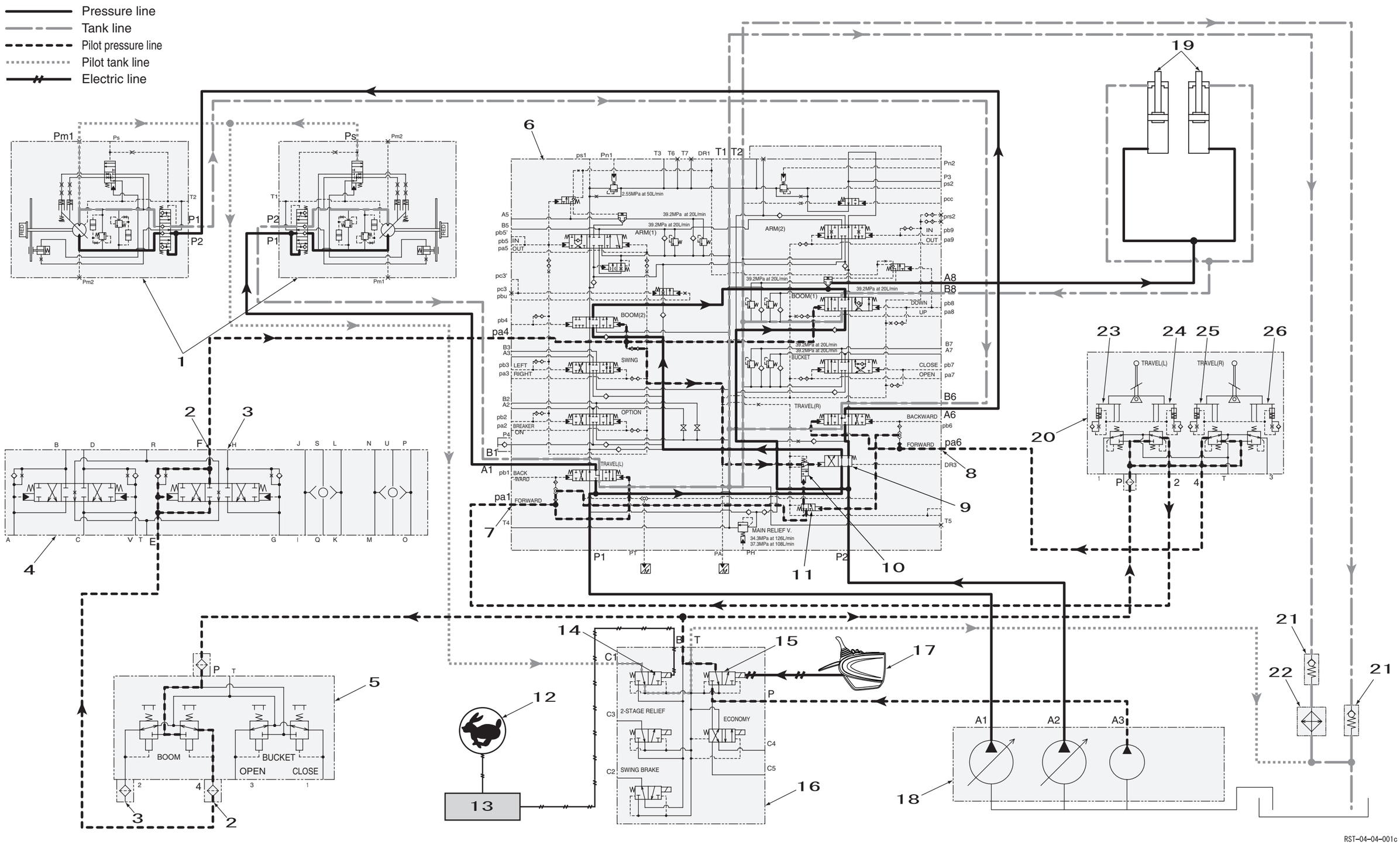

https://truckmanualshub.com/

Swing Circuits

1. Swing Speed Limit Control Circuit

This control is for suppressing increases in the swing speed accompanying increased pump flow.(Only in SP mode)
For swing-only operation, due to the swing pilot pressure sensor and P1 pressure sensor input electric signal, the computer A outputs a signal to the P1 hydraulic pump flow control proportional valve. The discharged oil from the A3 hydraulic pump is fed to the P1 flow control proportional valve.
The hydraulic pump A1 side discharge flow is reduced to 200 L / min by the signal output from the computer A to the P1 flow control proportional valve.

[1] Conditions under which the swing speed limit control is entered
- Swing only full lever operation
- No travel operation
- Work mode SP

[2] Conditions under which the swing speed limit control is ended
- Upper side operation other than boom-down
  → Gradual end (to reduce shock)
- Travel operation
  → Immediate end (to avoid back lash)
- Option operation

1	Swing motor	13	Swing brake
2	Swing	14	5-stack solenoid valve
3	Cushion valve	15	Console lever lock switch
4	Right swing	16	N1 negative control pressure sensor
5	Left swing	17	P1 pressure sensor
6	Swing pilot pressure sensor	18	P1 flow control proportional valve
7	Remote control valve (arm, swing)	19	Hydraulic pump
8	Control valve	20	Horsepower control proportional valve
9	Travel pilot pressure sensor	21	P2 pressure sensor
10	Upper side pilot pressure sensor	22	Check
11	Computer A	23	Oil cooler
12	Lever lock		

https://truckmanualshub.com/

Swing Circuits

Swing Speed Limit Control Circuit

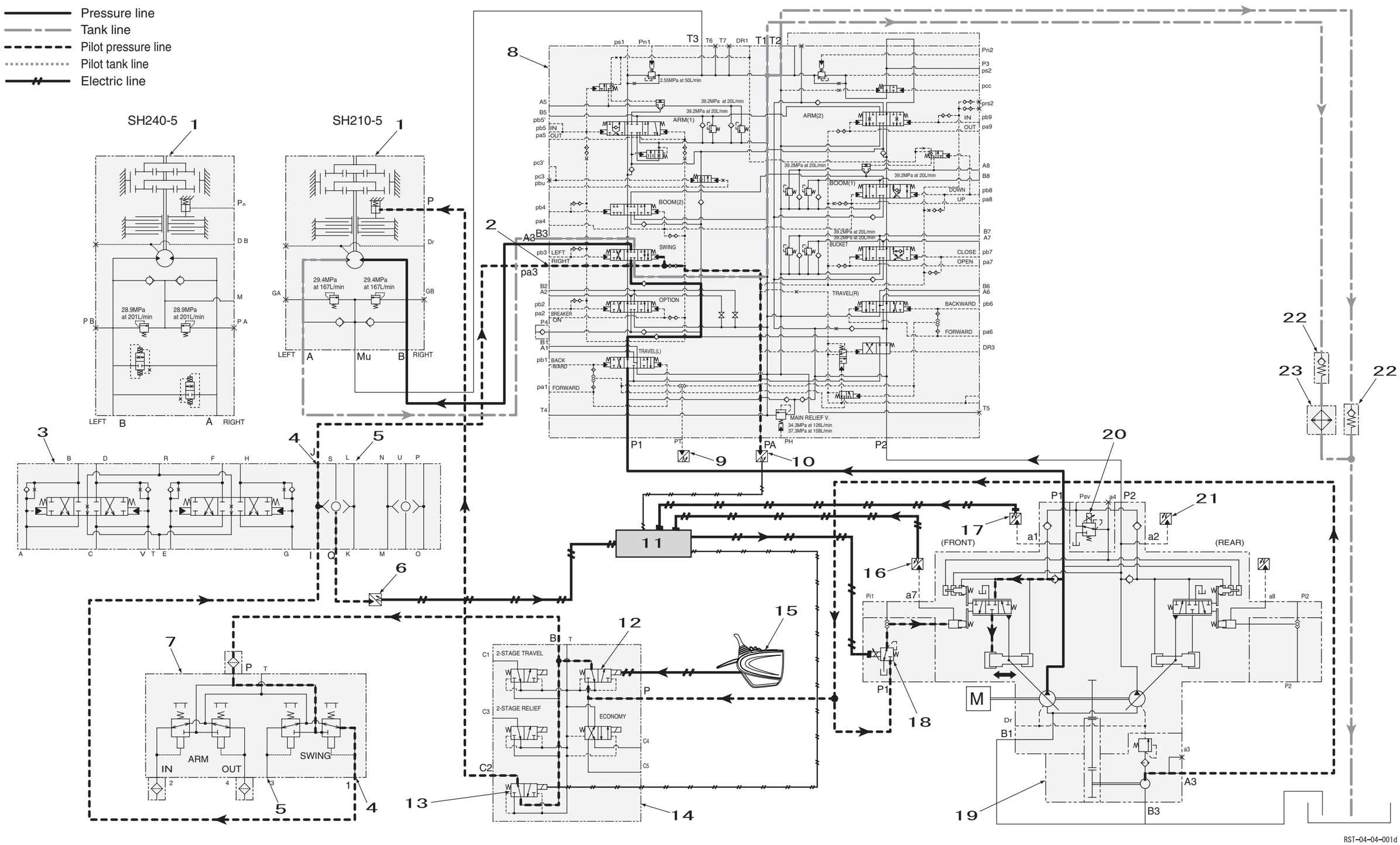

https://truckmanualshub.com/

Swing Circuits

2. Swing Relief Cut-off Control Circuit

This control aims for an energy saving effect by controlling the pump in such a way as to minimize the excess oil drained from the swing motor relief valve for the starting pressure boost for a sudden swing-only operation.

When a swing operation starts, due to the swing pilot pressure sensor and P1 pressure sensor input electrical signals, the computer A outputs a signal to the hydraulic pump P1 flow control proportional valve.

The discharged oil from the A3 hydraulic pump is fed to the P1 flow control proportional valve.

The output signal from the computer A to the P1 flow control proportional valve controls the pilot pressure to reduce the hydraulic pump A1 side discharge flow. Also, the input signal from hydraulic pump P1 pressure sensor controls the pilot pressure to gradually increase the discharge flow.

[1] Swing relief cut-off control is executed when all the conditions below are satisfied.
- No travel operation
- Swing-only sudden operation or swing + boom-down operation

[2] Swing relief cut-off control ends when a condition below is satisfied.
- When swing operation is stopped
- Travel, boom-up, arm-out / in, or bucket-open / closed operation

1	Swing motor	13	Swing brake
2	Swing	14	5-stack solenoid valve
3	Cushion valve	15	Console lever lock switch
4	Right swing	16	N1 negative control pressure sensor
5	Left swing	17	P1 pressure sensor
6	Swing pilot pressure sensor	18	P1 flow control proportional valve
7	Remote control valve (arm, swing)	19	Hydraulic pump
8	Control valve	20	Horsepower control proportional valve
9	Travel pilot pressure sensor	21	P2 pressure sensor
10	Upper side pilot pressure sensor	22	Check
11	Computer A	23	Oil cooler
12	Lever lock		

https://truckmanualshub.com/

Swing Circuits

Swing Relief Cut-off Control Circuit

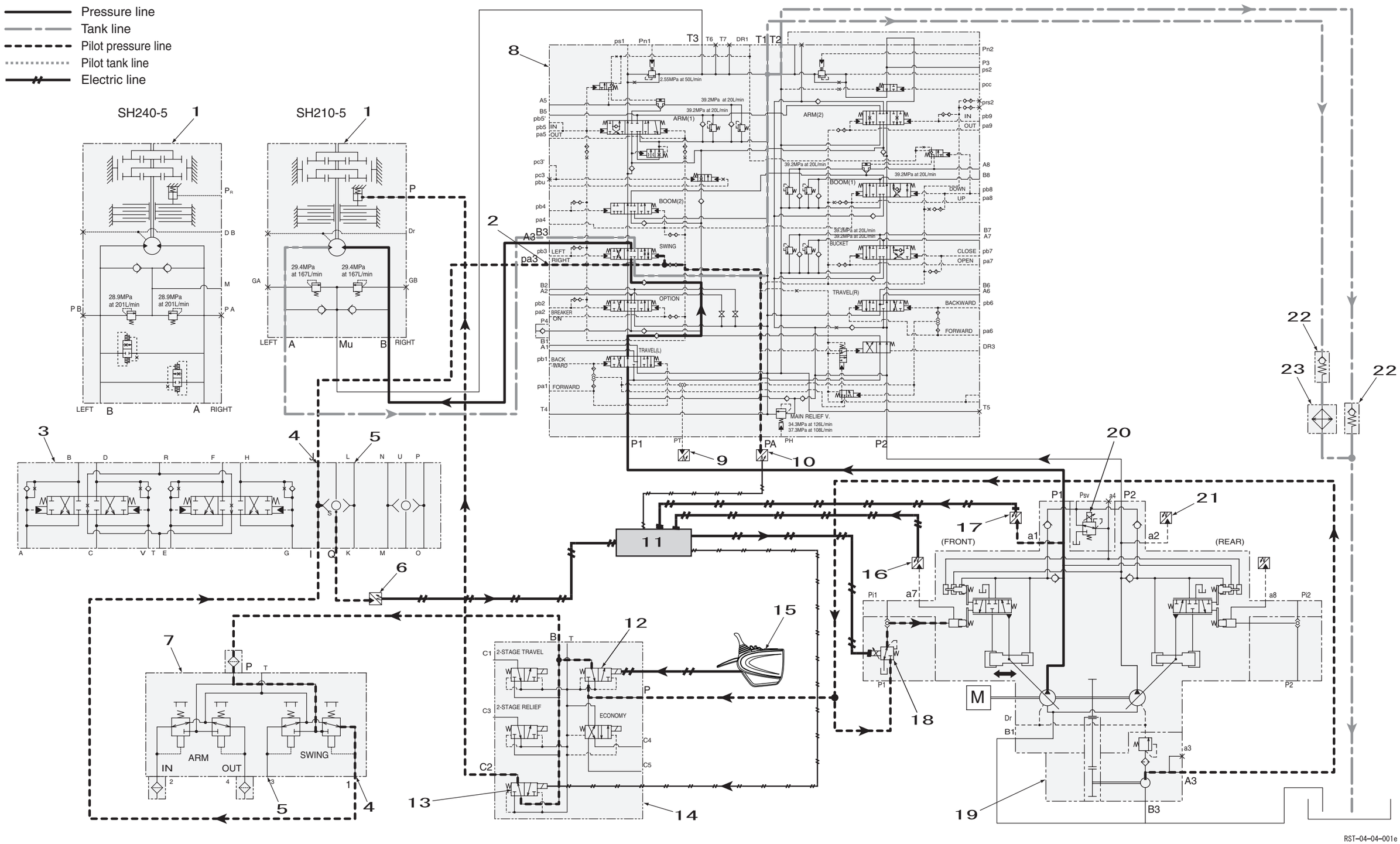

https://truckmanualshub.com/

Swing Circuits

3. Swing Priority Circuit

The swing pilot pressure is fed to the Pc3 port via the shuttle valve and holds the swing priority variable orifice to the right side.By orifice the parallel circuit, for arm and swing simultaneous operation, the swing pressure is boosted to secure the swing force for pressing digging.

As an example, this section explains the right swing and arm-in operation.

By moving the remote control valve to the right swing side, the pilot pressure oil is fed via the shuttle valve to the control valve Pa3 port and switches to the right swing side.

At this time, by moving the remote control valve to the arm-in side, the pilot pressure oil is fed via the cushion valve to the control valve Pb5 port and switches the spool to the arm-in side.

At the same time, the pilot pressure oil from the shuttle valve S port is fed to the control valve Pc3 port to move the swing priority variable orifice to the right side and hold it.

The discharged oil from hydraulic pump A1 enters the control valve P1 port and is fed from the parallel passage to the swing spool.Switching the spool lets the oil flow into the swing motor B port and carries out the swing operation.

The discharged oil from hydraulic pump A2 enters the control valve P2 port, is fed from the parallel passage to the arm (2) spool and merges upstream of the arm (1) spool.Switching the spool lets the oil flow into the arm cylinder bottom and carries out the arm-in operation.

When the right swing and arm-in operations are carried out at the same time, the swing priority variable orifice on the control valve P1 port parallel passage moves and narrows, so the pressure is boosted to secure the swing force for pressing digging.

1	Swing motor	10	Remote control valve (arm, swing)	19	Arm load hold valve check
2	Arm (in)	11	Lever lock	20	Regeneration release valve
3	Arm (out)	12	Swing brake	21	Control valve
4	Right swing	13	5-stack solenoid valve	22	Swing priority variable orifice
5	Left swing	14	Console lever lock switch	23	Arm (2)
6	Cushion valve	15	Arm cylinder	24	Upper side pilot pressure sensor
7	Swing pilot pressure sensor	16	Arm (1)	25	Hydraulic pump
8	Shuttle valve	17	Swing	26	Check
9	Computer A	18	Arm load hold valve spool	27	Oil cooler

https://truckmanualshub.com/

Swing Circuits

Swing Priority Circuit

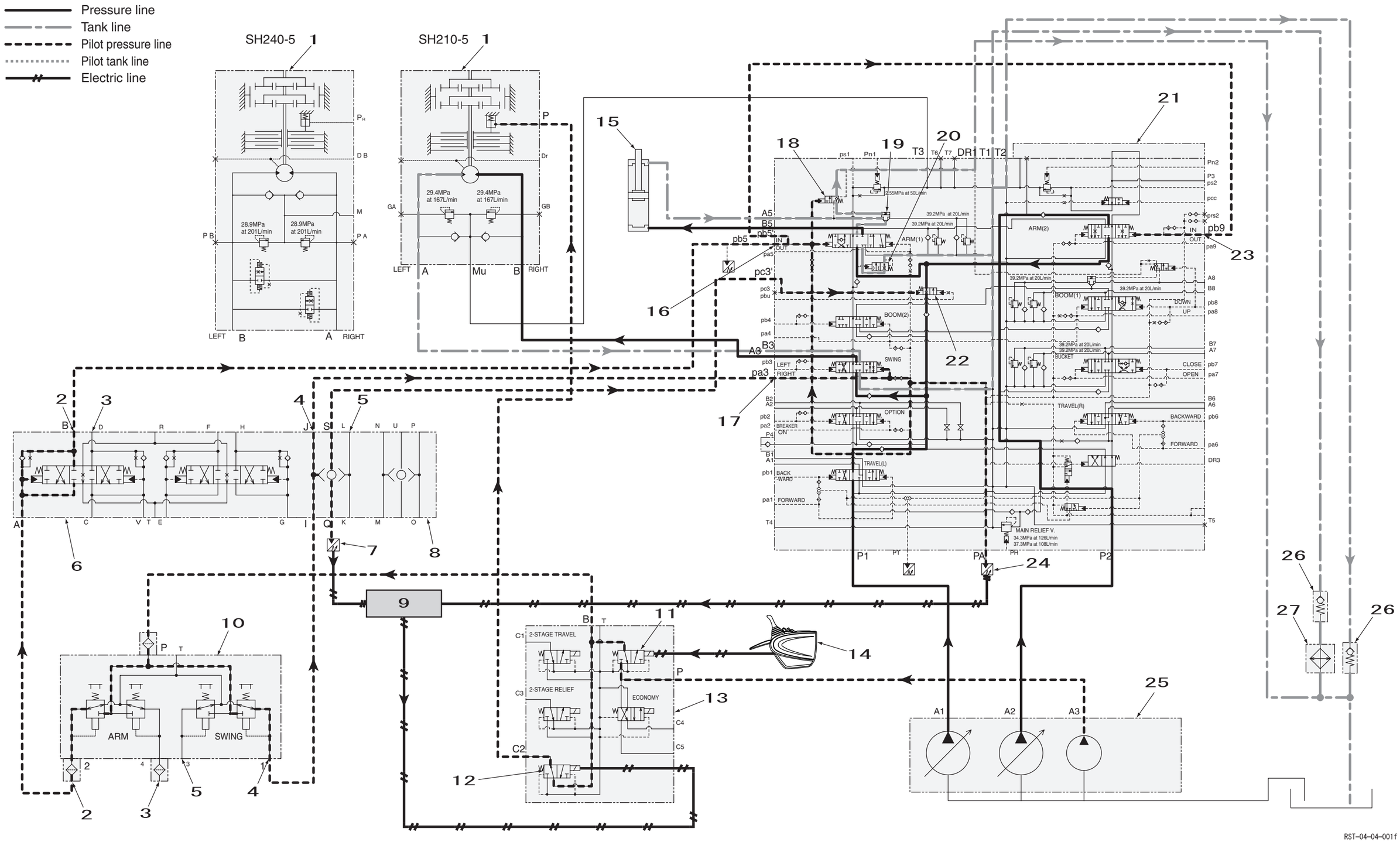

https://truckmanualshub.com/

Swing Circuits

4. Swing Brake Circuit

As an example, this section explains the brake circuit operation after the end of a right swing operation.

When the remote control valve is returned to neutral from a right swing operation, the pilot pressure oil is cut off and the control valve swing spool returns to neutral.

The pressurized oil fed to the swing motor B port from the control valve A3 port is cut. At the same time, the destination location is eliminated for the pressurized oil flowing from the swing motor A port to the control valve A3 port, so the pressure rises to the swing motor relief valve set pressure. The pressure generated here becomes a brake force and stops the motor.

When the swing is stopped, the swing motor continues to rotate for a while due to inertial force. In order to make up the shortfall in the oil quantity, oil is supplied from the make-up line connected to the swing motor Mu port from the control valve T3 port to open the make-up check valve and oil is suctioned in to prevent cavitation.

1	Swing motor	9	Lever lock
2	Cushion valve	10	Swing brake
3	Right swing	11	5-stack solenoid valve
4	Left swing	12	Console lever lock switch
5	Swing pilot pressure sensor	13	Computer A
6	Remote control valve (arm, swing)	14	Control valve
7	Hydraulic pump	15	Oil cooler
8	Check	16	Upper side pilot pressure sensor

https://truckmanualshub.com/

Explanation of Hydraulic Circuit and Operations (standard model)

Swing Circuits

Swing Brake Circuit

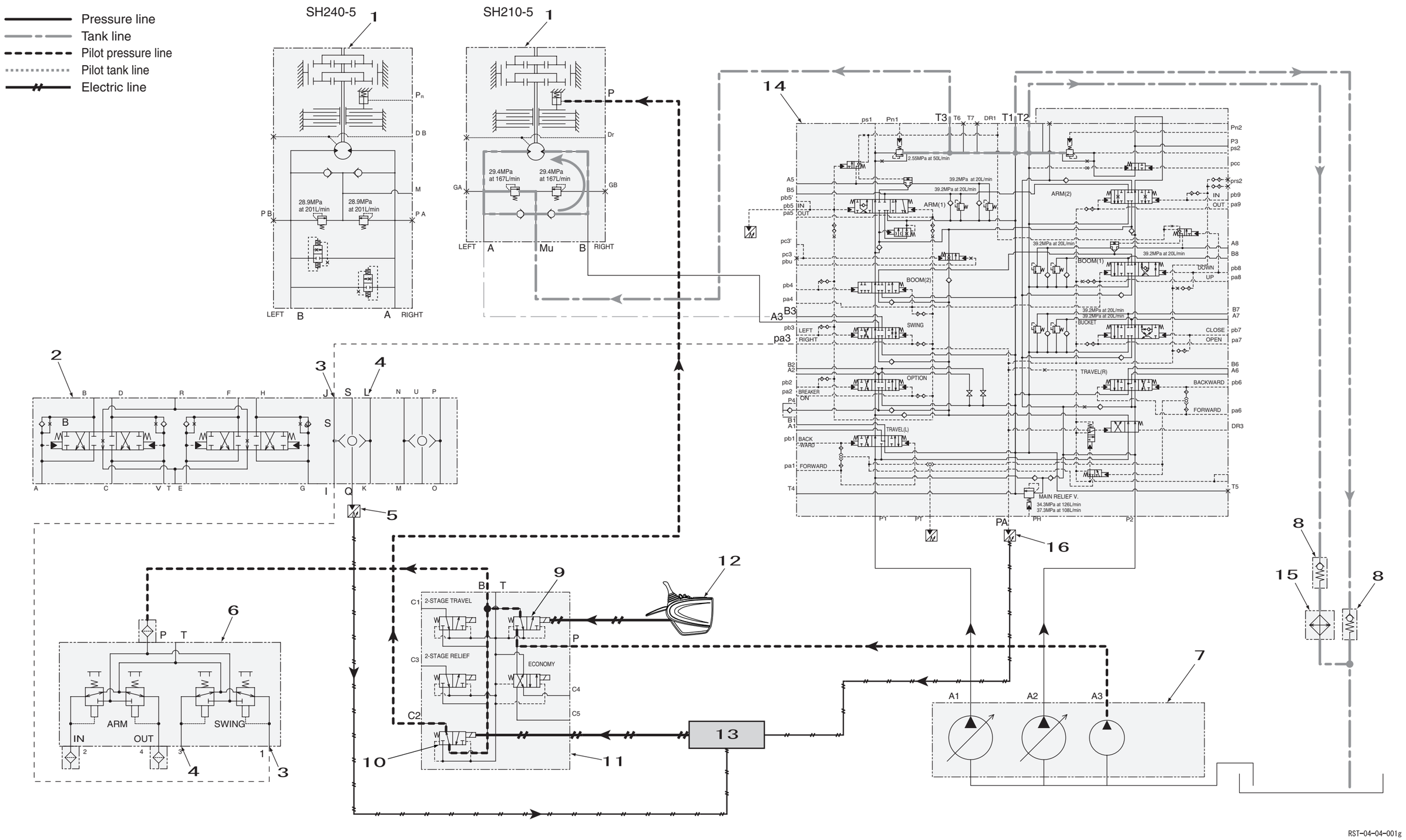

https://truckmanualshub.com/

Swing Circuits

5. Swing Parking Circuit (lever in neutral)

   When the key is switched ON, the swing brake solenoid valve is switched by the electrical signal from the computer A.

   The swing motor P port oil goes from the 5-stack solenoid valve C2 port through the swing brake solenoid, and returns to the hydraulic oil tank to hold the swing parking brake.

1	Swing motor	9	Lever lock
2	Cushion valve	10	Swing brake
3	Right swing	11	5-stack solenoid valve
4	Left swing	12	Console lever lock switch
5	Swing pilot pressure sensor	13	Computer A
6	Remote control valve (arm, swing)	14	Control valve
7	Check	15	Upper side pilot pressure sensor
8	Oil cooler	16	Hydraulic pump

https://truckmanualshub.com/

Explanation of Hydraulic Circuit and Operations (standard model)

Swing Circuits

Swing Parking Circuit (lever in neutral)

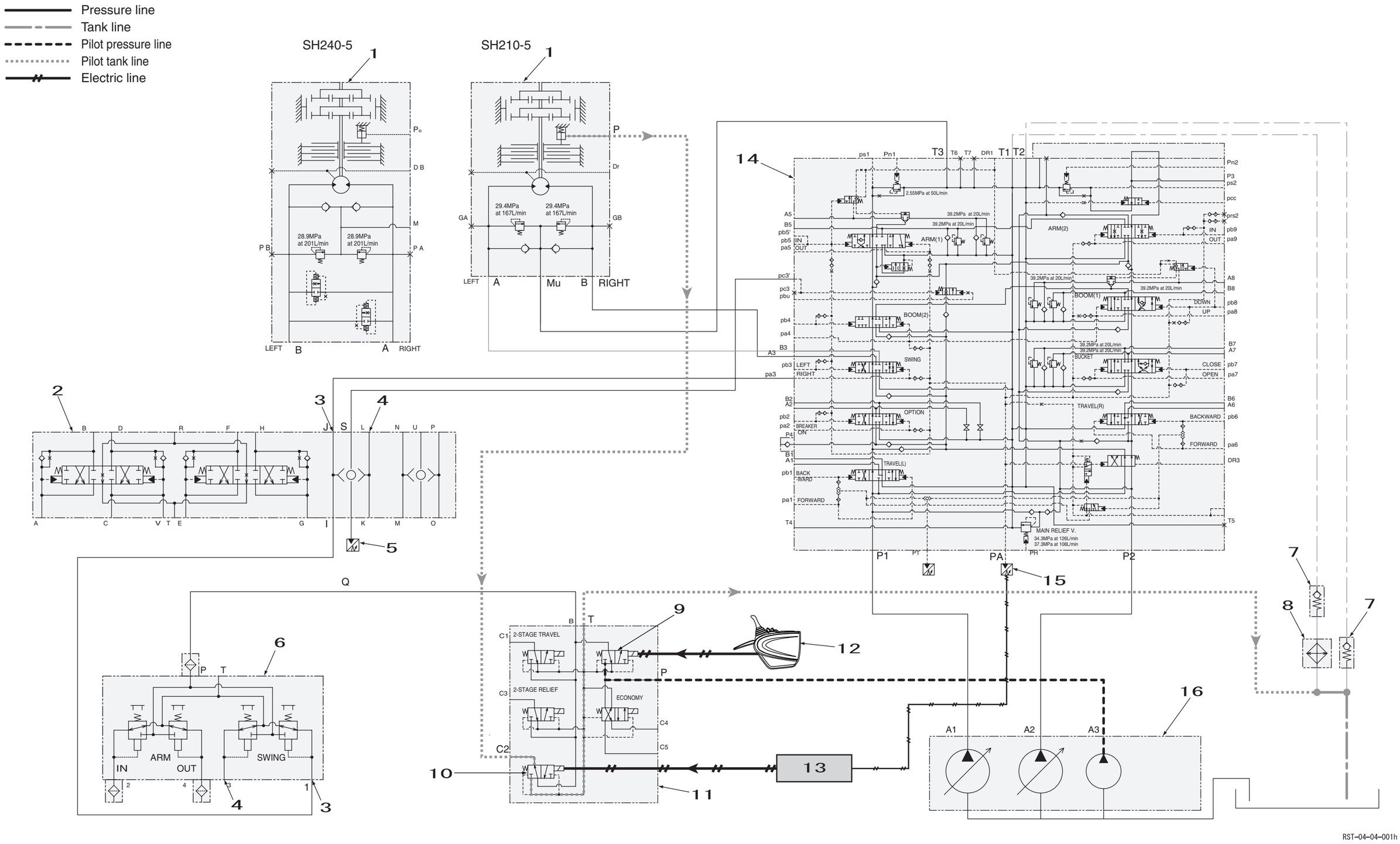

RST-04-04-001h

https://truckmanualshub.com/

Swing Circuits

6. Swing Parking Circuit (brake release)

When the engine is started and the swing lever is in neutral, the swing brake solenoid comes ON (24 V input), the pressure to the swing motor P port is cut, and the swing parking brake works.

When the lever operation raises the reading to 0.5 MPa or higher at the pressure sensor in the swing pilot line, the output from the computer A to the swing brake solenoid valve goes OFF, the swing motor P port pressure rises, the swing parking brake is released, and swing becomes possible.

As an example, this section explains the right swing operation.

By carrying out the right swing operation on the remote control valve, the pilot pressure oil is fed to the control valve Pa3 port via the shuttle valve and switches the swing spool to the right swing side.

At the same time, the computer A detects the swing pilot pressure sensor signal, judges that there is a swing operation, the electrical signal output from the computer A goes OFF, and the swing brake solenoid valve is switched. The pilot pressure oil is fed to the swing motor P port from the swing brake solenoid valve C2 port to release the swing parking brake.

The discharged oil from hydraulic pump A1 enters the control valve P1 port and is fed from the parallel passage to the swing spool. Switching the spool lets the oil flow into the swing motor B port and carries out the swing operation.

The pressurized oil from the swing motor A port goes through the swing spool and returns to the hydraulic oil tank.

When this is followed by an attachment operation, the pilot pressure is detected by the control valve PA port pressure sensor and the swing parking brake continues to be released.

After the swing operation ends, if about 5 seconds pass with no upper side operation, the swing brake solenoid valve output from the computer A comes ON and the swing parking brake works again.

After the swing ends, if this is followed by an upper side operation or there is an upper side operation within about 5 seconds, when about 1 second passes after the end of the upper side operation, the swing parking brake works again.

The swing parking brake is also released for upper side only operations and when about 1 second passes after the end of the upper side operation, the swing parking brake works again.

Key switch	Swing pilot pressure sensor	Upper side pilot pressure sensor	Swing brake solenoid valve	Swing motor mechanical brake
OFF	0 MPa	0 MPa	OFF	ON
ON	0 MPa	0 MPa	ON	ON
ON	0.5 MPa min.	0 MPa	OFF	OFF
ON	0 MPa	0.5 MPa min.	OFF	OFF
ON	0.5 MPa min.	0.5 MPa min.	OFF	OFF

Pilot pressure sensor judgement standard

When the pressure goes above 0.5 MPa, the system judges that an operation is underway.

When the pressure goes below 0.3 MPa, the system judges that the operation has ended.

1	Swing motor	10	5-stack solenoid valve
2	Cushion valve	11	Console lever lock switch
3	Right swing	12	Computer A
4	Left swing	13	Control valve
5	Swing pilot pressure sensor	14	Upper side pilot pressure sensor
6	Remote control valve (arm, swing)	15	Hydraulic pump
7	Swing	16	Check
8	Lever lock	17	Oil cooler
9	Swing brake		

https://truckmanualshub.com/

Explanation of Hydraulic Circuit and Operations (standard model)

Swing Circuits

Swing Parking Circuit (brake release)

- Pressure line
- Tank line
- Pilot pressure line
- Pilot tank line
- Electric line

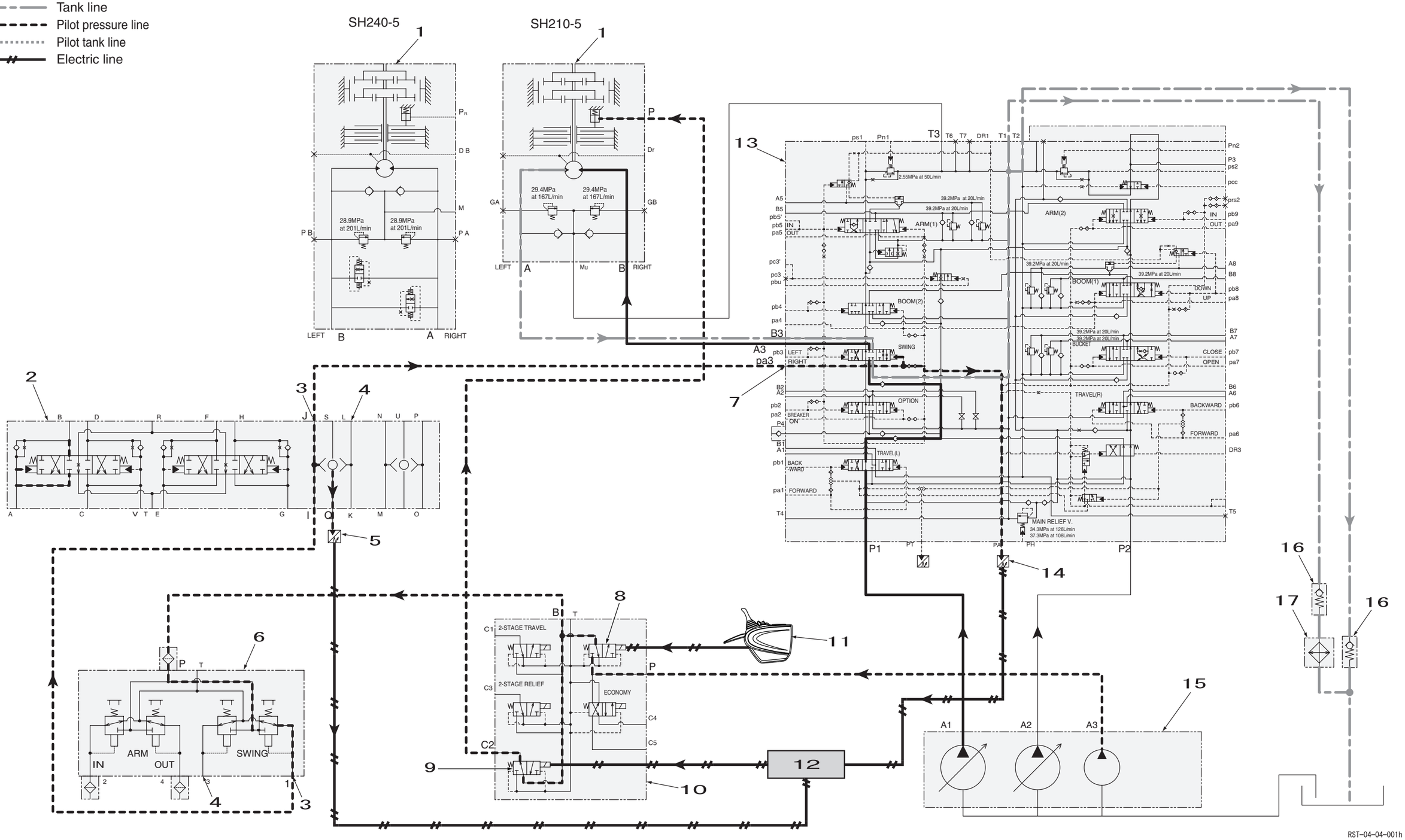

https://truckmanualshub.com/

Swing Circuits

7. Swing Parking Circuit (machine stop)

   When the machine is stopped (the key is switched OFF), the swing motor P port oil goes from the swing brake solenoid C2 port through the lever lock solenoid and returns to the hydraulic oil tank, holding the swing parking brake hold status.

1	Swing motor	9	Lever lock
2	Cushion valve	10	Swing brake
3	Right swing	11	5-stack solenoid valve
4	Left swing	12	Console lever lock switch
5	Swing pilot pressure sensor	13	Computer A
6	Remote control valve (arm, swing)	14	Control valve
7	Check	15	Upper side pilot pressure sensor
8	Oil cooler	16	Hydraulic pump

https://truckmanualshub.com/

Swing Circuits

Swing Parking Circuit (machine stop)

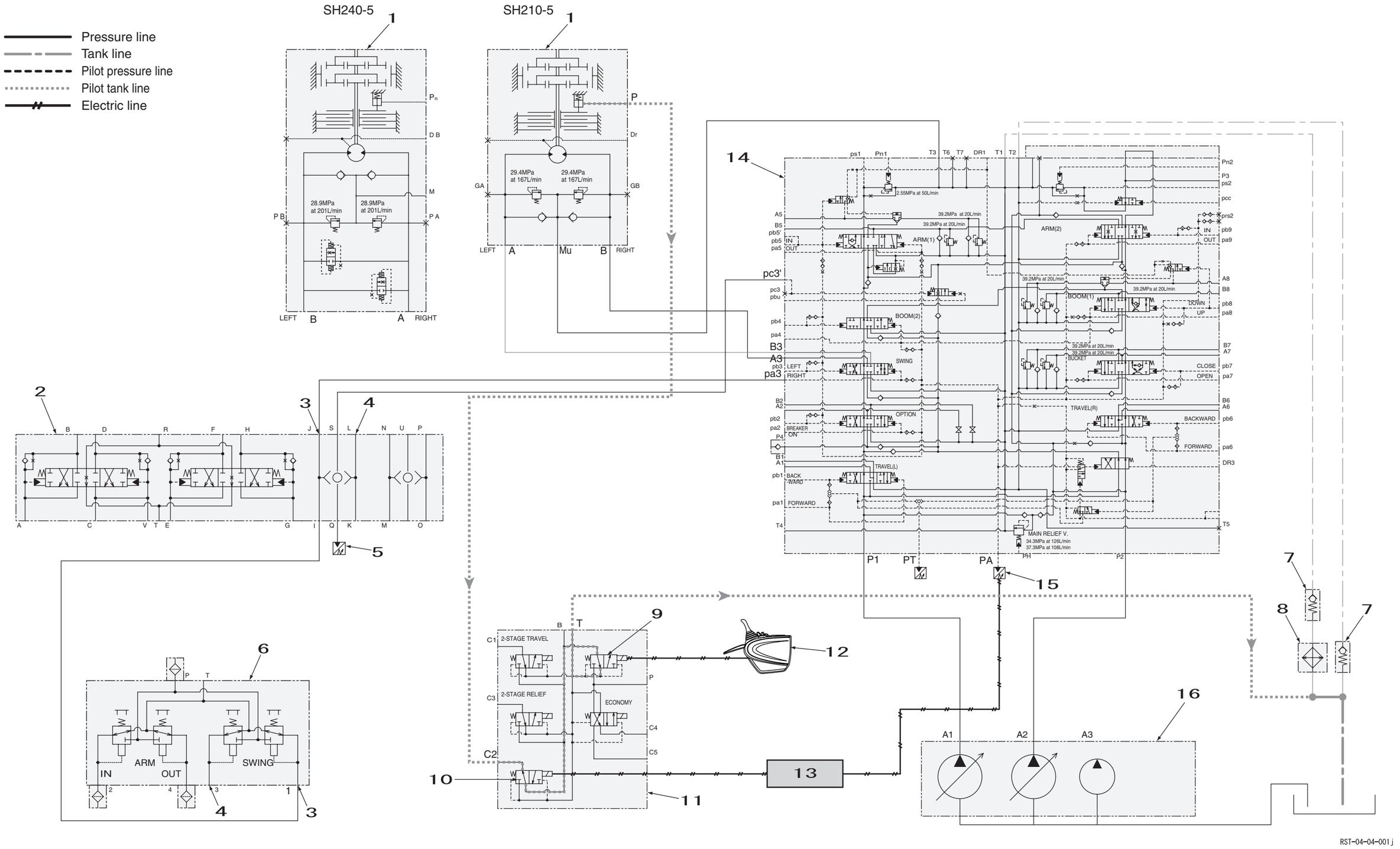

https://truckmanualshub.com/

Boom Circuits

1. Boom-up Circuit (single opreation)

   By operating the remote control valve to the boom-up side, the pilot pressure oil is fed via the cushion valve to the control valve Pa4 port and the boom (2) spool is switched. At the same time, the pilot pressure oil from the Pa4 port separated in the internal path is fed to the boom (1) pilot port and switches the boom (1) spool to the up side.
   The discharged oil from hydraulic pump A1 enters the control valve P1 port, is fed from the parallel passage to the boom (2) spool and merges downstream of the boom (1) spool. The discharged oil from hydraulic pump A2 is fed to the boom (1) spool via the parallel passage, merges with the discharged oil from boom (2), flows through the boom load hold valve check valve and into the boom cylinder bottom side and carries out the boom-up operation.
   The boom cylinder rod side return oil goes through the boom (1) spool and returns to the hydraulic oil tank.

1	Cushion valve	13	Travel pilot pressure sensor
2	Boom (up)	14	Upper side pilot pressure sensor
3	Boom (down)	15	Console lever lock switch
4	Boom (2)	16	Monitor display
5	Remote control valve (boom, bucket)	17	Power up
6	Lever lock	18	Computer A
7	Boost relief	19	P1 pressure sensor
8	5-stack solenoid valve	20	P2 pressure sensor
9	Control valve	21	Hydraulic pump
10	Boom load hold valve check	22	Check
11	Boom (1)	23	Oil cooler
12	Boom cylinder		

https://truckmanualshub.com/

Explanation of Hydraulic Circuit and Operations (standard model)

Boom Circuits

Boom-up Circuit (single operation)

- Pressure line
- Tank line
- Pilot pressure line
- Pilot tank line
- Electric line

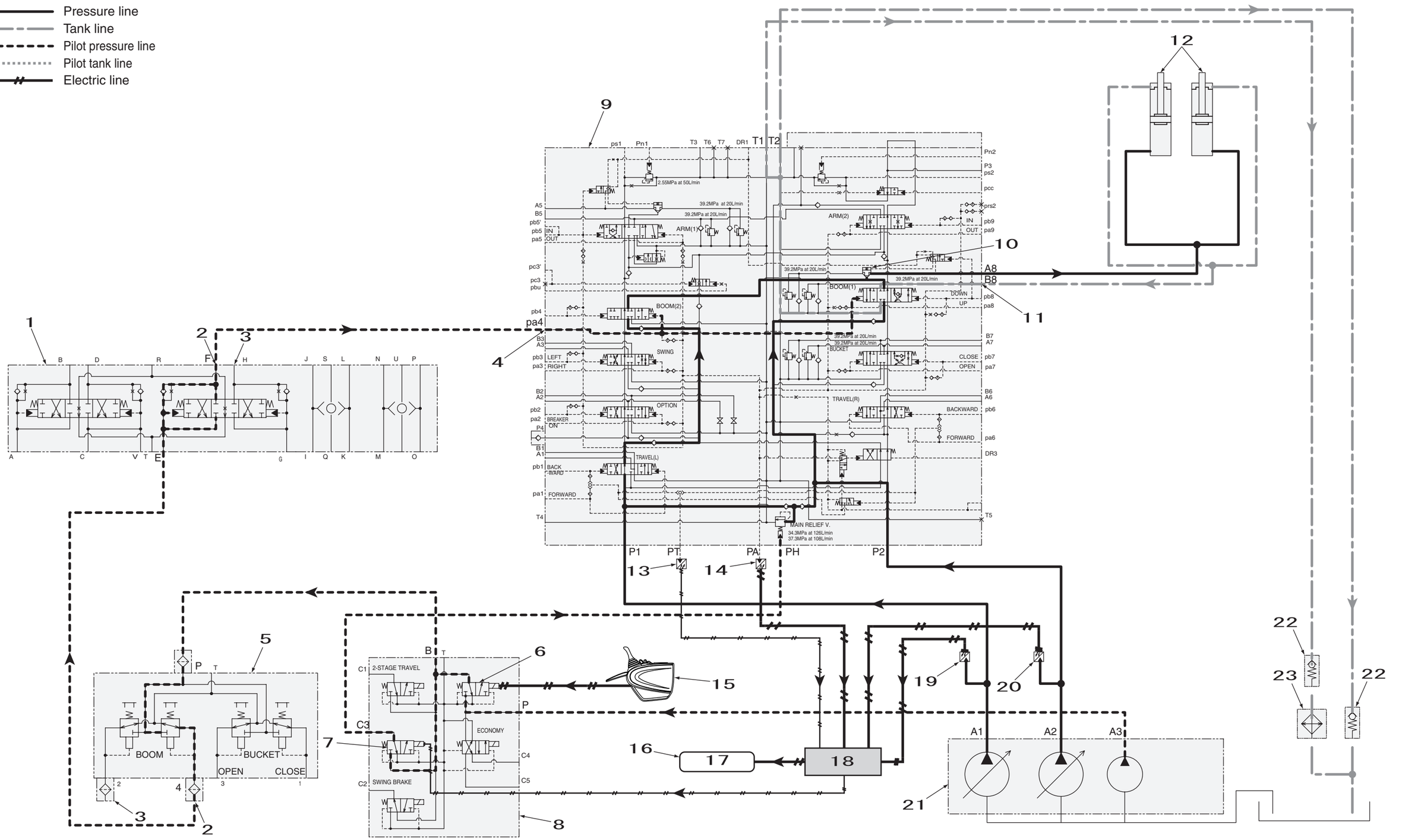

https://truckmanualshub.com/

Boom Circuits

2. Boom-up Circuit (compound boom-up + arm-in)

As an example, this section explains the boom-up + arm-in compound operation (leveling work).
For bed digging work, the boom-up pilot pressure oil is fed to the Pbu port, the swing priority variable orifice is moved to the left side and the restriction on the flow to the arm is ended to smooth the arm movement.
By operating the remote control valve to the boom-up side and arm-in side, the pilot pressure oil is fed via the cushion valve to the control valve Pa4 port and Pb5 port and switches the boom (1) and arm (1) spools. At the same time, pressurized oil separated from the boom (1) side pilot internal path is fed from the Pa8 port to the Pbu port and the swing priority variable orifice spool is switched to the left side.
The discharged oil from hydraulic pump A1 enters the control valve P1 port and is fed from the parallel passage to the boom (2) and arm (1) spools. Because the swing priority variable orifice spool in the parallel passage is moved, the restriction on flow to the arm is released and the oil flows through the arm (1) spool and into the arm cylinder bottom side. This makes arm-in operation movement smooth.
The arm cylinder rod side return oil goes through the load hold valve check valve and the arm (1) spool and returns to the hydraulic oil tank.
The discharged oil from hydraulic pump A2 enters the control valve P2 port and is fed from the parallel passage to the boom (1) spool. Switching the spool lets the oil flow through the load hold valve check valve and into the boom cylinder bottom side and carries out the boom-up operation.
The boom cylinder rod side return oil goes through the boom (1) spool and returns to the hydraulic oil tank.

1	Arm cylinder	12	Arm (1)	23	Travel pilot pressure sensor
2	Arm (in)	13	Boom (2)	24	Upper side pilot pressure sensor
3	Arm (out)	14	Arm load hold valve spool	25	Console lever lock switch
4	Boom (up)	15	Load hold valve check	26	Monitor display
5	Boom (down)	16	Regeneration release valve	27	Power up
6	Cushion valve	17	Control valve	28	Computer A
7	Remote control valve (boom, bucket)	18	Swing priority variable orifice	29	P1 pressure sensor
8	Remote control valve (arm, swing)	19	Arm (2)	30	P2 pressure sensor
9	Lever lock	20	Boom load hold valve check	31	Hydraulic pump
10	Boost relief	21	Boom (1)	32	Check
11	5-stack solenoid valve	22	Boom cylinder	33	Oil cooler

https://truckmanualshub.com/

Boom Circuits

Boom-up Circuit (compound boom-up + arm-in)

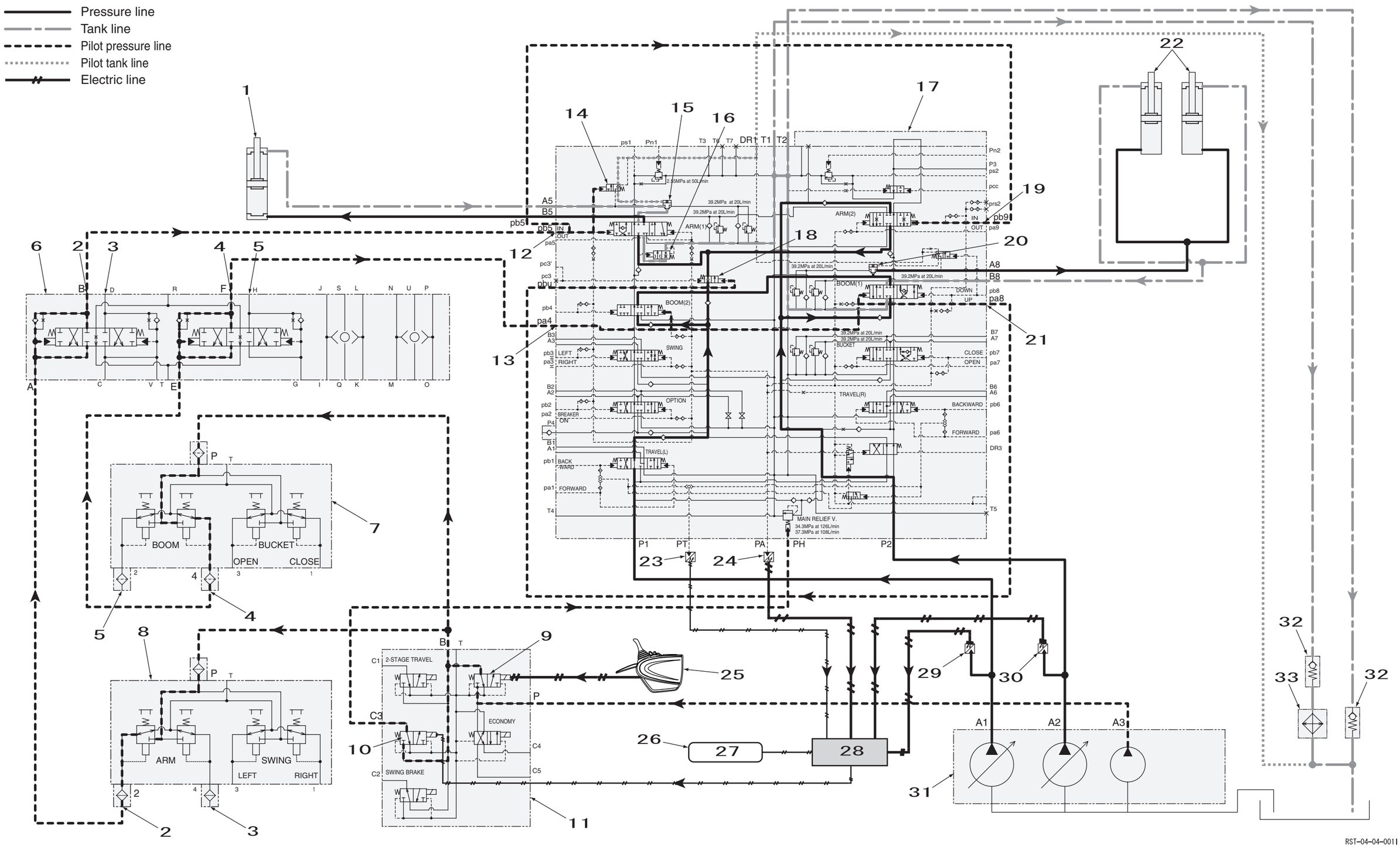

https://truckmanualshub.com/

Boom Circuit

3. Boom-down Regenerative Circuit

By moving the remote control valve to the boom-down side, the pilot pressure oil is fed via the cushion valve to the control valve Pb8 port and switches the boom (1) spool to the down side.
The discharged oil from hydraulic pump A2 enters the control valve P2 port and is fed from the parallel passage to the boom (1) spool. Switching the spool lets the oil flow into the boom cylinder rod side and carries out the boom-down operation.
The pilot pressure oil from the Pb8 port separated in the internal path is fed to the load hold valve spool and moves the spool to the left. In this way, the load hold valve check valve spring chamber oil is connected to the tank line through the load hold valve spool, the spring chamber pressure drops, and the load hold valve check valve is opened.
The boom cylinder bottom side pressurized oil goes through the load hold valve check valve and is metered by the boom (1) spool regeneration orifice. Through this, the return oil pushes open the check valve in the spool and is regenerated on the cylinder rod side. The lower the cylinder rod side load pressure, the greater the quantity of regeneration. When the cylinder rod side load pressure becomes high, the check valve is closed and the cylinder bottom return oil goes through the boom spool (1) without regeneration and returns to the hydraulic oil tank.
Because the circuit is configured in such a way that even if the boom (1) spool is at full stroke, negative control pressure is generated by the center bypass bleed-off passage and the pump does not discharge full flow and because the short fall is made up for with regeneration, engine output can be used effectively.

1	Load hold valve check	13	5-stack solenoid valve
2	Check	14	Control valve
3	Oil cooler	15	P2 pressure sensor
4	P1 pressure sensor	16	Hydraulic pump
5	Orifice	17	Boom cylinder
6	Bleed-off	18	Boom (1)
7	Cushion valve	19	Travel pilot pressure sensor
8	Boom (up)	20	Upper side pilot pressure sensor
9	Boom (down)	21	Console lever lock switch
10	Remote control valve (boom, bucket)	22	Monitor display
11	Lever lock	23	Computer A
12	Boost relief		

https://truckmanualshub.com/

Explanation of Hydraulic Circuit and Operations (standard model)

Boom Circuits

Boom-down Regenerative Circuit

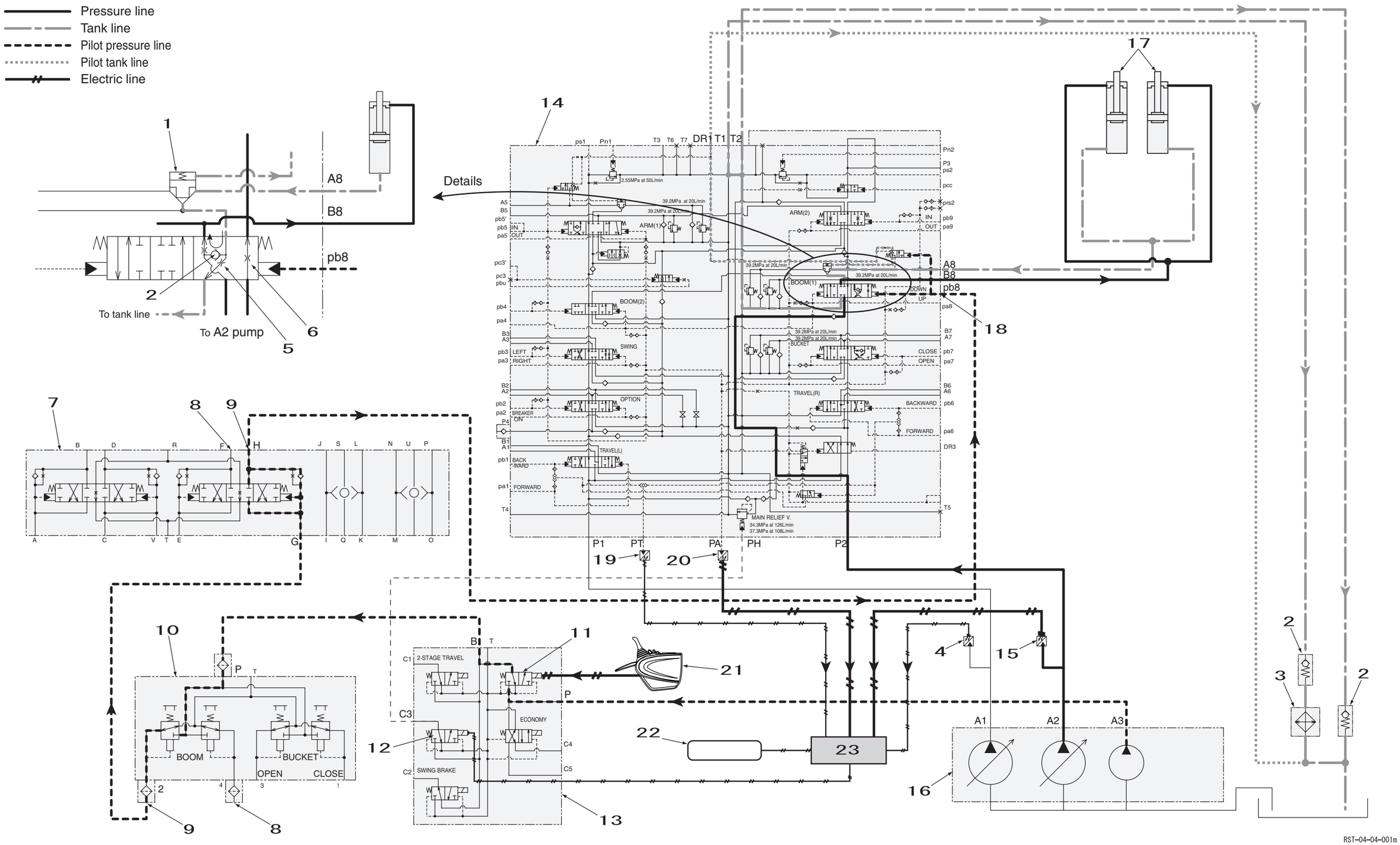

https://truckmanualshub.com/

Boom Circuit

4. Boom-down Tilting Prevention Circuit

   By operating the remote control valve all the way to the boom-down side at once, even if the boom spool goes its full stroke, negative control pressure is generated by the center bypass bleed-off passage and the circuit is such that the hydraulic pump does not discharge full flow, so the generation of high pressure is restrained and main unit tilt is reduced. Since the shortfall in the oil quantity is compensated by the regeneration circuit, the engine output can be used effectively.

1	Load hold valve check	12	Control valve
2	Check	13	P2 pressure sensor
3	Oil cooler	14	Hydraulic pump
4	Bleed-off	15	Boom cylinder
5	Cushion valve	16	Boom (1)
6	Boom (up)	17	Travel pilot pressure sensor
7	Boom (down)	18	Upper side pilot pressure sensor
8	Remote control valve (boom, bucket)	19	Console lever lock switch
9	Lever lock	20	Monitor display
10	Boost relief	21	Computer A
11	5-stack solenoid valve	22	P1 pressure sensor

https://truckmanualshub.com/

Explanation of Hydraulic Circuit and Operations (standard model)

Boom Circuit

Boom-down Tilting Prevention Circuit

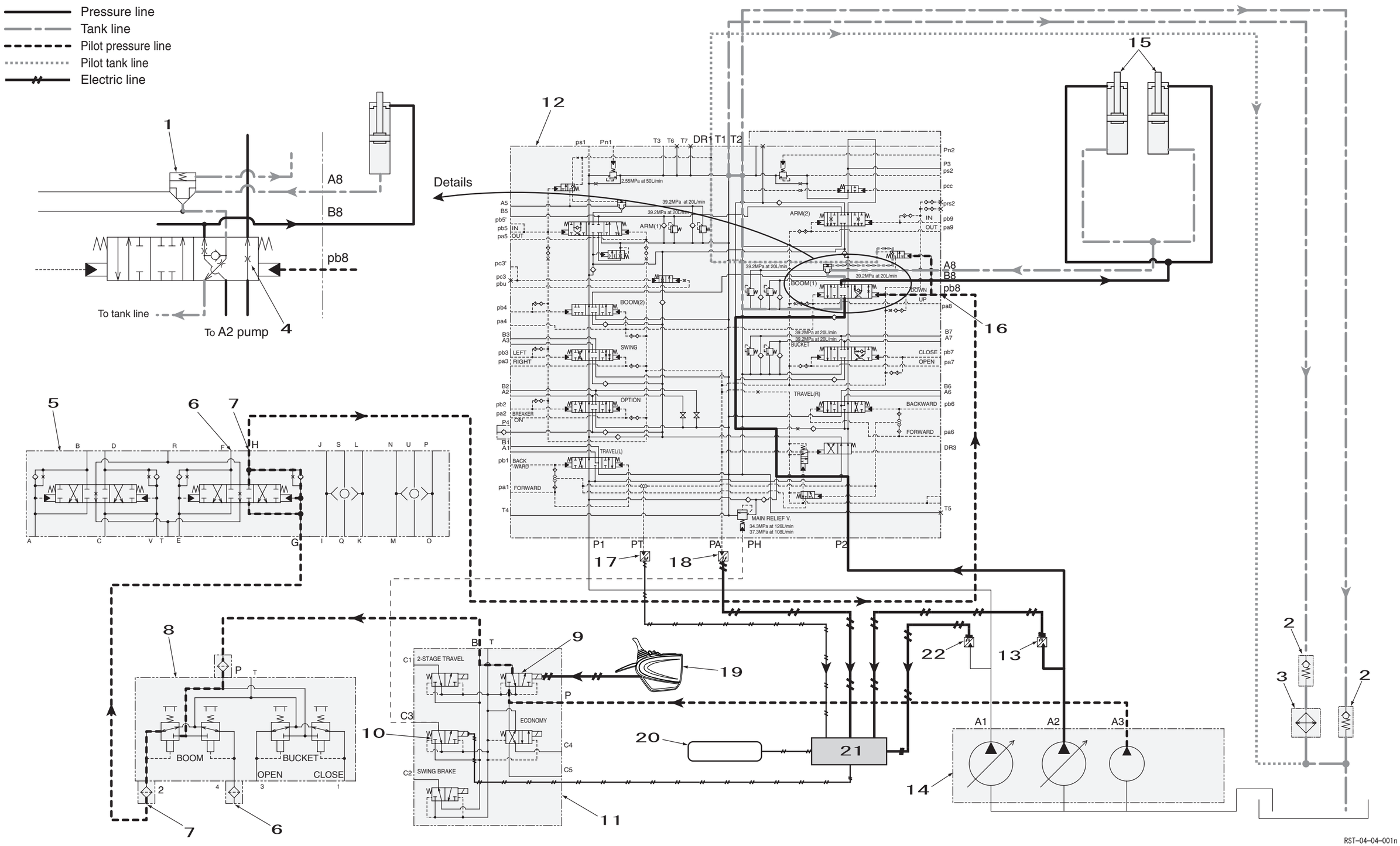

https://truckmanualshub.com/

Boom Circuits

5. Boom-down Load Hold Valve Circuit

When the remote control valve boom operation lever is in neutral, the oil at the boom cylinder bottom side is sealed by the load hold valve check valve, reducing internal leakage from the main spool and reducing the natural drop of the boom.

By moving the remote control valve to the boom-down side, the pilot pressure oil is fed via the cushion valve to the control valve Pb8 port and switches the boom spool to the down side.

The discharged oil from hydraulic pump A2 enters the control valve P2 port and is fed from the parallel passage to the boom (1). Switching the spool lets the oil flow into the boom cylinder bottom side and carries out the boom-down operation.

The pilot pressure oil from the Pb8 port separated in the internal path is fed to the load hold valve spool and moves the spool to the left. In this way, the load hold valve check valve spring chamber oil is connected to the tank line through the load hold valve spool, the spring chamber pressure drops, and the load hold valve check valve is opened.

The boom cylinder bottom side pressurized oil goes through the load hold valve check valve and the boom (1) spool and returns to the hydraulic oil tank.

1	Boom load hold valve check	12	Oil cooler
2	Load hold valve spool	13	Boom cylinder
3	Cushion valve	14	Boom (1)
4	Boom (up)	15	Travel pilot pressure sensor
5	Boom (down)	16	Upper side pilot pressure sensor
6	Remote control valve (boom, bucket)	17	Console lever lock switch
7	Lever lock	18	Monitor display
8	Boost relief	19	Computer A
9	5-stack solenoid valve	20	P1 pressure sensor
10	Control valve	21	P2 pressure sensor
11	Check	22	Hydraulic pump

https://truckmanualshub.com/

Boom Circuits

Boom-down Load Hold Valve Circuit

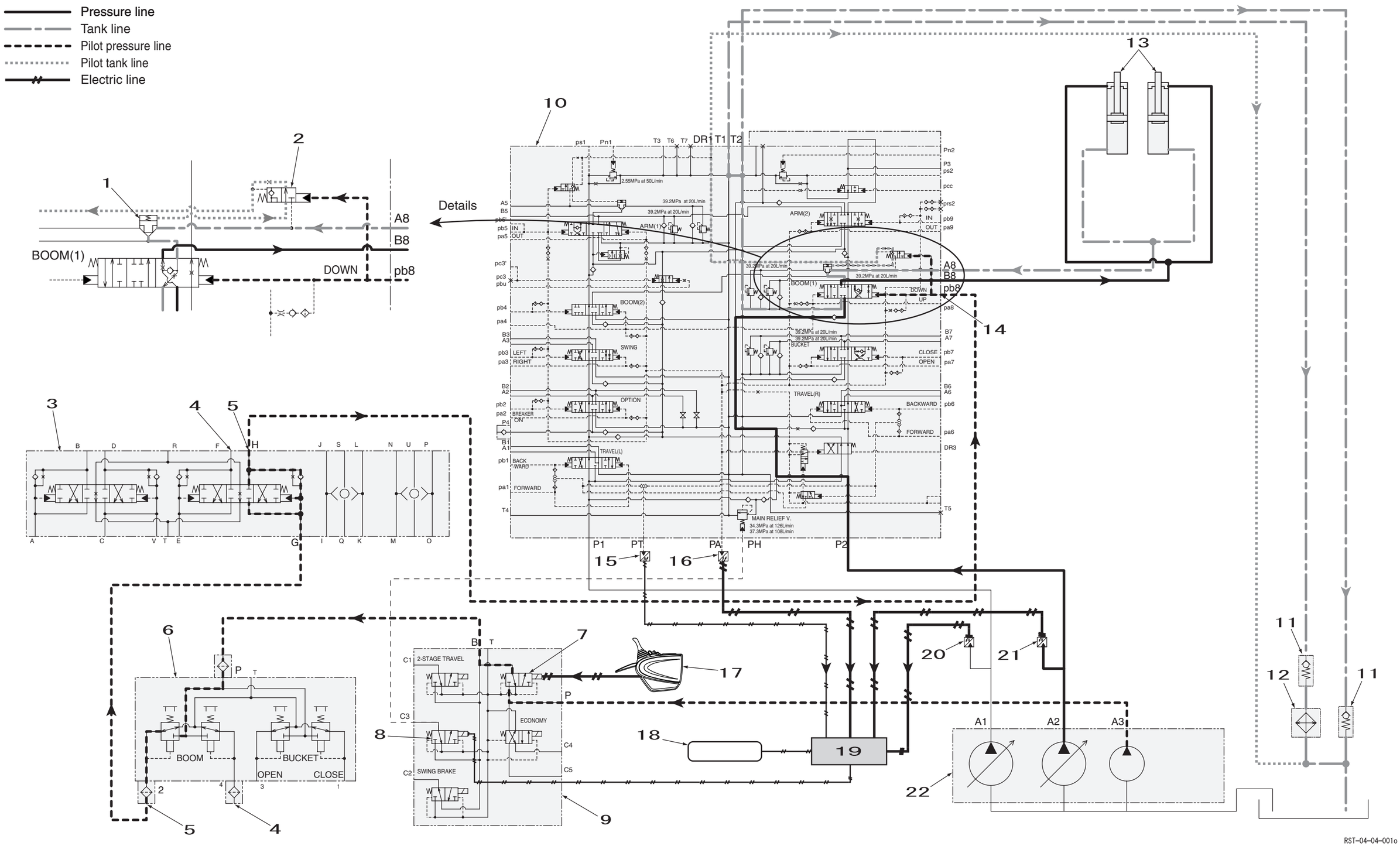

https://truckmanualshub.com/

Arm Circuits

1. Arm-out Circuit

   By moving the remote control valve to the arm-out side, the pilot pressure oil is fed via the cushion valve to the control valve Pa5 port and Pa9 port and switches the arm (1) and (2) spools to the open side.
   The discharged oil from hydraulic pump A1 enters the control valve P1 port and is fed from the center bypass passage to the arm (1) spool. The discharged oil from hydraulic pump A2 enters the control valve P2 port, flows from the center bypass passage and through the arm (2) spool front arm merge passage and merges upstream of the arm (1) spool.
   Switching the arm spool lets the oil flow through the load hold valve check valve and into the arm cylinder rod side, carrying out the arm-out operation.
   The arm cylinder bottom side return oil goes through the arm (1) and (2) spools and returns to the hydraulic oil tank.

1	Arm cylinder	13	Travel pilot pressure sensor
2	Arm (out)	14	Upper side pilot pressure sensor
3	Arm (in)	15	Console lever lock switch
4	Cushion valve	16	Monitor display
5	Remote control valve (arm, swing)	17	Power up
6	Lever lock	18	Computer A
7	Boost relief	19	P1 pressure sensor
8	5-stack solenoid valve	20	P2 pressure sensor
9	Control valve	21	Hydraulic pump
10	Load hold valve check	22	Check
11	Arm (1)	23	Oil cooler
12	Arm (2)	24	Cushion valve

https://truckmanualshub.com/

Explanation of Hydraulic Circuit and Operations (standard model)

Arm Circuits

Arm-out Circuit

- Pressure line
- Tank line
- Pilot pressure line
- Pilot tank line
- Electric line

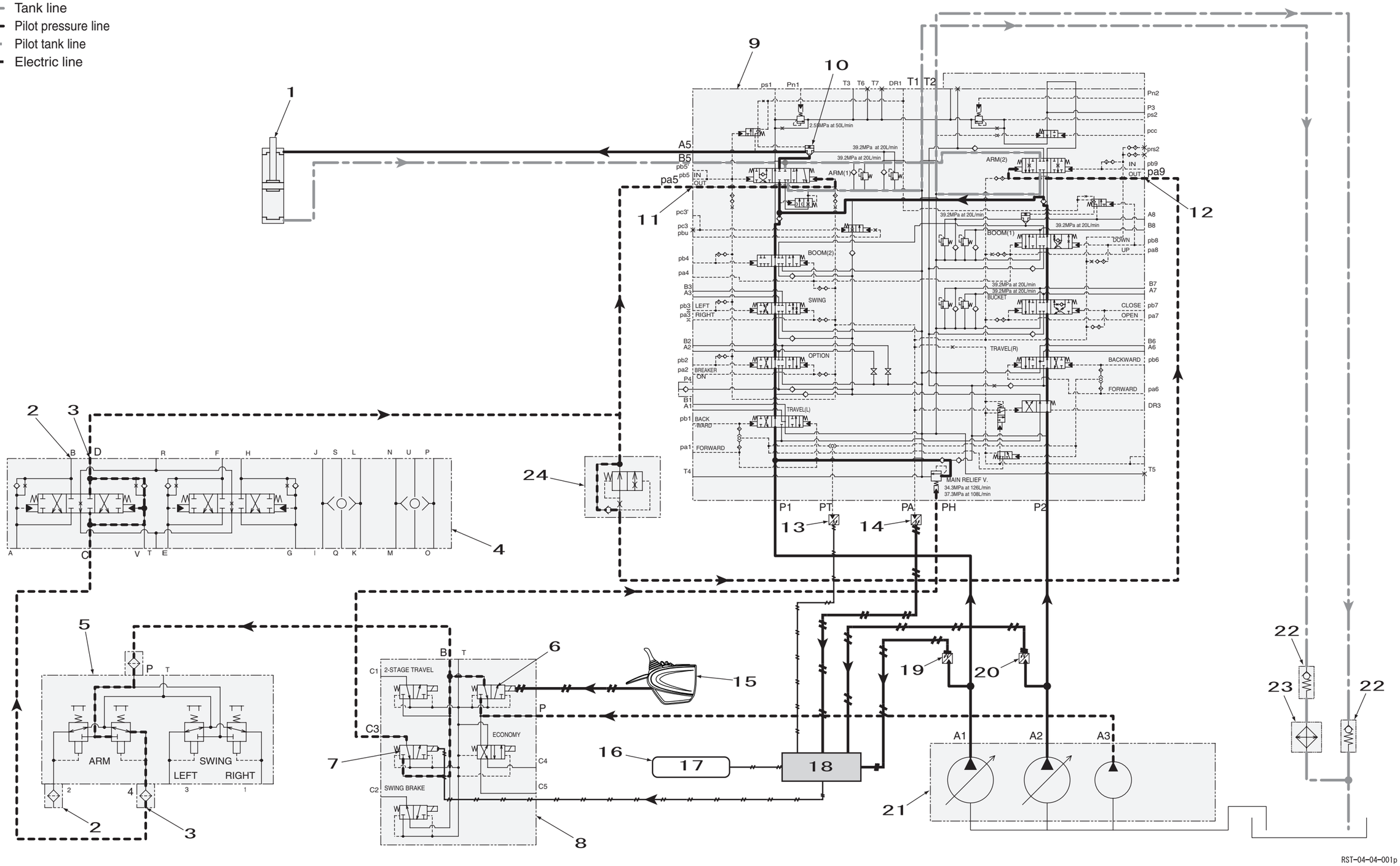

https://truckmanualshub.com/

Arm Circuits

2. Arm-in Forced Regenerative Circuit

By moving the remote control valve to the arm-in side, the pilot pressure oil is fed via the cushion valve to the control valve Pb5 port and Pb9 port and switches the arm (1) and (2) spools to the in side.

The discharged oil from hydraulic pump A1 enters the control valve P1 port and is fed from the center bypass passage to the arm (1) spool. The discharged oil from hydraulic pump A2 enters the control valve P2 port, flows from the center bypass passage and through the arm (2) spool front arm merge passage and merges upstream of the arm (1) spool.

Switching the arm spool lets the oil flow into the arm cylinder bottom side and carries out the arm-in operation.

The pilot pressure oil from the Pb5 port separated in the internal path is fed to the load hold valve spool and moves the spool to the right. In this way, the load hold valve check valve spring chamber oil is connected to the tank line through the load hold valve spool, the spring chamber pressure drops, and the load hold valve check valve is opened.

The arm cylinder rod side pressurized oil goes through the load hold valve check valve and the arm (1) spool and is metered by the forced regeneration release valve. Through this, the return oil pushes open the check valve in the arm (1) spool and is forcibly regenerated on the cylinder bottom side, securing the arm speed for bed excavation work etc. When the cylinder bottom load pressure becomes high, the forced regeneration release valve is switched to the large orifice side and the opening becomes larger. Through this, the check valve in the spool is closed and the cylinder rod side return oil returns to the hydraulic oil tank via the arm spool (1) and forced regeneration release valve without being regenerated.

1	Load hold valve spool	11	Remote control valve (arm, swing)	21	Console lever lock switch
2	Load hold valve check	12	Lever lock	22	Monitor display
3	Oil cooler	13	Boost relief	23	Power up
4	Regeneration check	14	5-stack solenoid valve	24	Computer A
5	Orifice large	15	Control valve	25	P1 pressure sensor
6	Orifice small	16	Arm cylinder	26	P2 pressure sensor
7	Forced regeneration release valve	17	Arm (1)	27	Hydraulic pump
8	Arm (in)	18	Arm (2)	28	Check
9	Arm (out)	19	Travel pilot pressure sensor		
10	Cushion valve	20	Upper side pilot pressure sensor		

https://truckmanualshub.com/

Explanation of Hydraulic Circuit and Operations (standard model)

Arm Circuits

Arm-in Forced Regenerative Circuit

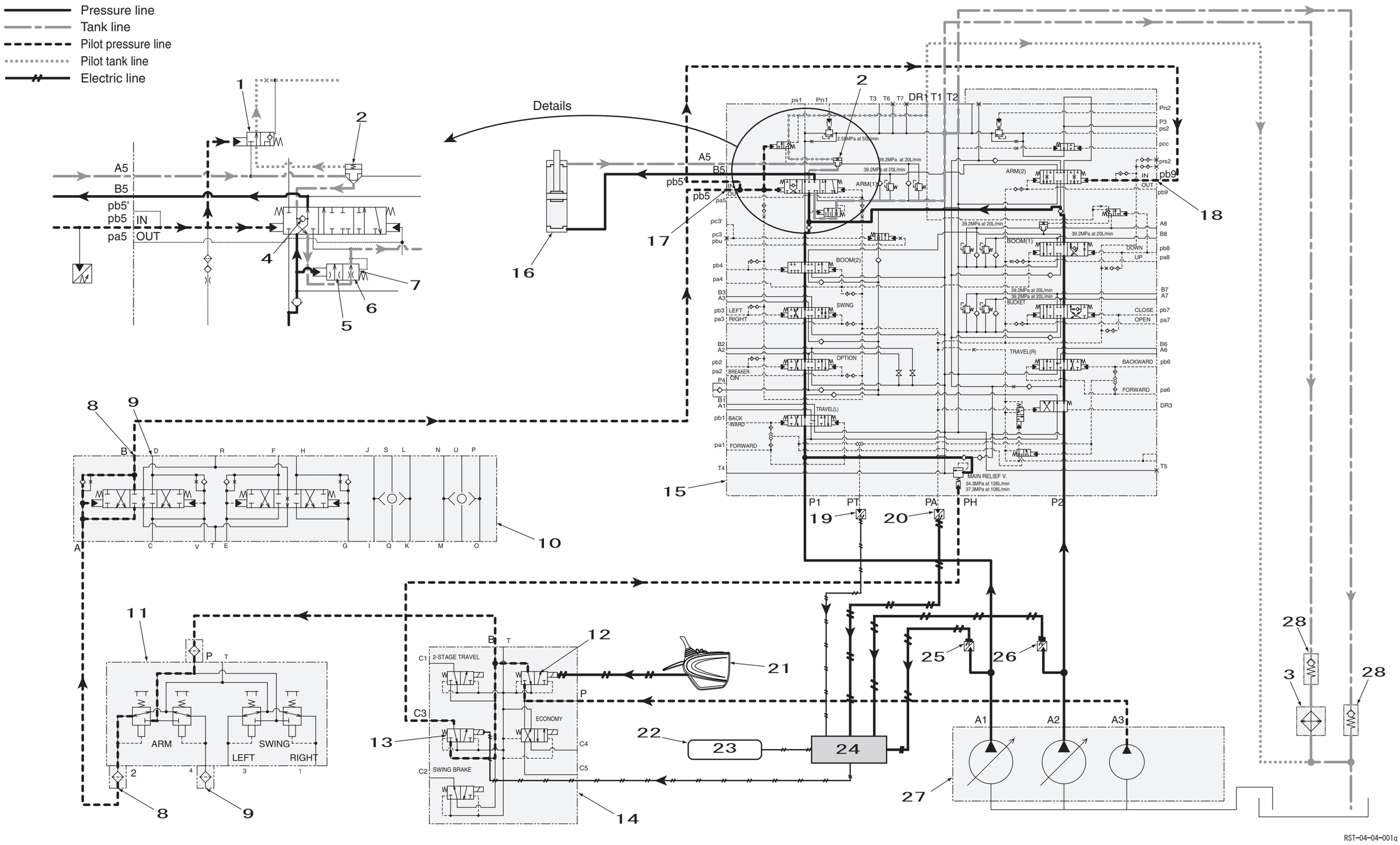

https://truckmanualshub.com/

Arm Circuits

3. Arm-in Load Hold Valve Circuit

When the remote control valve arm operation lever is in neutral, the oil at the arm cylinder rod side is sealed by the load hold valve check valve, reducing internal leakage from the main spool and reducing the natural drop of the arm.

By moving the remote control valve to the arm-in side, the pilot pressure oil is fed via the cushion valve to the control valve Pb5 port and Pb9 port and switches the arm (1) and (2) spools to the in side.

The discharged oil from hydraulic pump A1 enters the control valve P1 port and is fed from the center bypass passage to the arm (1) spool. The discharged oil from hydraulic pump A2 enters the control valve P2 port, flows from the center bypass passage and through the arm (2) spool front arm merge passage and merges upstream of the arm (1) spool.

Switching the arm spool lets the oil flow into the arm cylinder bottom side and carries out the arm-in operation.

The pilot pressure oil from the Pb5 port separated in the internal path is fed to the load hold valve spool and moves the spool to the right. In this way, the load hold valve check valve spring chamber oil is connected to the tank line through the load hold valve spool, the spring chamber pressure drops, and the load hold valve check valve is opened.

The arm cylinder rod side pressurized oil goes through the load hold valve check valve and the arm (1) spool and returns to the hydraulic oil tank.

1	Load hold valve spool	14	Arm (2)
2	Load hold valve check	15	Travel pilot pressure sensor
3	Oil cooler	16	Upper side pilot pressure sensor
4	Arm (in)	17	Console lever lock switch
5	Arm (out)	18	Monitor display
6	Cushion valve	19	Power up
7	Remote control valve (arm, swing)	20	Computer A
8	Lever lock	21	P1 pressure sensor
9	Boost relief	22	P2 pressure sensor
10	5-stack solenoid valve	23	Hydraulic pump
11	Control valve	24	Check
12	Arm cylinder		
13	Arm (1)		

https://truckmanualshub.com/

Explanation of Hydraulic Circuit and Operations (standard model)

Arm Circuits

Arm-in Load Hold Valve Circuit

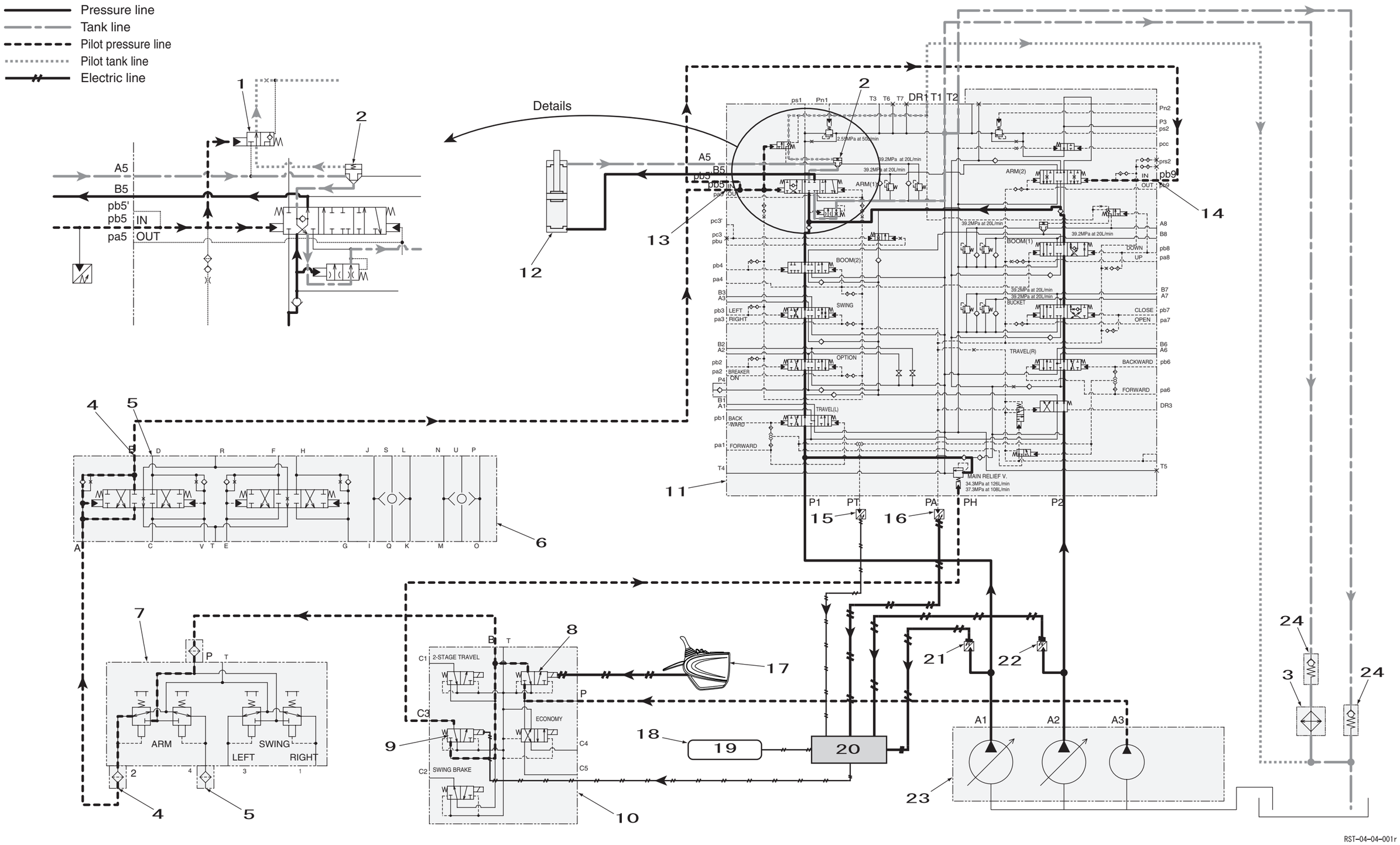

https://truckmanualshub.com/

Bucket Circuit

1. Bucket-open Circuit

   By moving the remote control valve to the bucket-open side, the pilot pressure oil is fed via the cushion valve to the control valve Pa7 port and switches the bucket spool to the open side.
   The discharged oil from hydraulic pump A2 enters the control valve P2 port and is fed from the parallel passage to the bucket spool. Switching the spool lets the oil flow into the bucket cylinder rod side and carries out the bucket-open operation.
   The bucket cylinder bottom side pressurized oil goes through the spool and returns to the hydraulic oil tank.

1	Cushion valve	12	Upper side pilot pressure sensor
2	Bucket (close)	13	Console lever lock switch
3	Bucket (open)	14	Monitor display
4	Remote control valve (boom, bucket)	15	Power up
5	Lever lock	16	Computer A
6	Boost relief	17	P1 pressure sensor
7	5-stack solenoid valve	18	P2 pressure sensor
8	Control valve	19	Hydraulic pump
9	Bucket	20	Check
10	Bucket cylinder	21	Oil cooler
11	Travel pilot pressure sensor		

https://truckmanualshub.com/

Bucket Circuit

Bucket-open Circuit

- Pressure line
- Tank line
- Pilot pressure line
- Pilot tank line
- Electric line

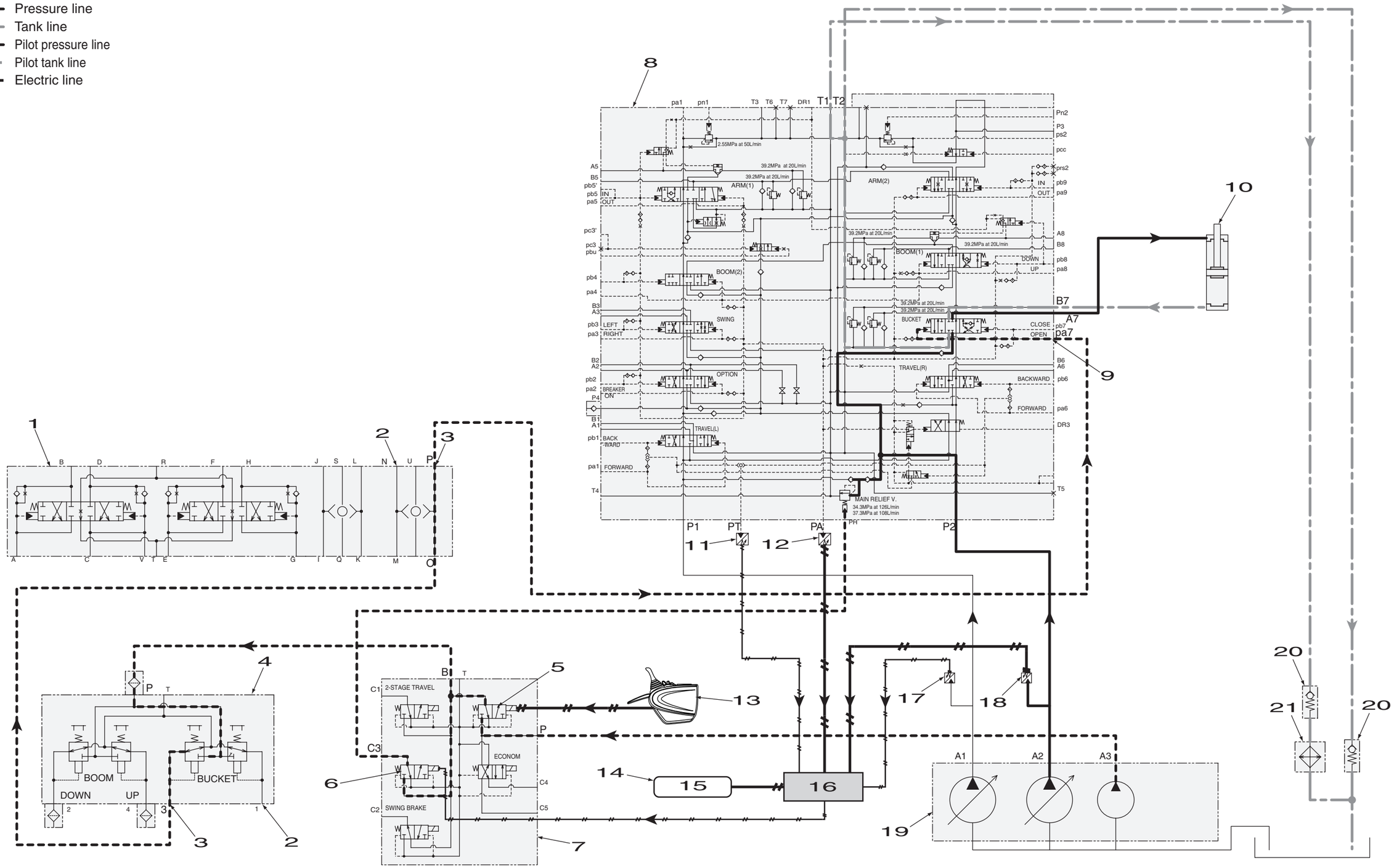

https://truckmanualshub.com/

Bucket Circuit

2. Bucket-close Regenerative Circuit

By moving the remote control valve to the bucket-close side, the pilot pressure oil is fed via the cushion valve to the control valve Pb7 port and switches the bucket spool to the close side.
The discharged oil from hydraulic pump A2 enters the control valve P2 port and is fed from the parallel passage to the bucket spool. Switching the spool lets the oil flow into the bucket cylinder bottom and carries out the bucket-close operation.
The bucket cylinder rod side oil goes through the bucket spool regeneration orifice. Through this, the return oil pushes open the check valve in the spool and is regenerated on the cylinder bottom side. The lower the cylinder rod side load pressure, the greater the quantity of regeneration. When the cylinder rod side load pressure becomes high, the check valve is closed and the cylinder bottom side return oil goes through the bucket spool without regeneration and returns to the hydraulic oil tank.

1	Regeneration check	13	Bucket cylinder
2	Oil cooler	14	Travel pilot pressure sensor
3	Orifice	15	Upper side pilot pressure sensor
4	Cushion valve	16	Console lever lock switch
5	Bucket (close)	17	Monitor display
6	Bucket (open)	18	Power up
7	Remote control valve (boom, bucket)	19	Computer A
8	Lever lock	20	P1 pressure sensor
9	Boost relief	21	P2 pressure sensor
10	5-stack solenoid valve	22	Hydraulic pump
11	Control valve	23	Check
12	Bucket		

https://truckmanualshub.com/

Bucket Circuit

Bucket-close Regenerative Circuit

- Pressure line
- Tank line
- Pilot pressure line
- Pilot tank line
- Electric line

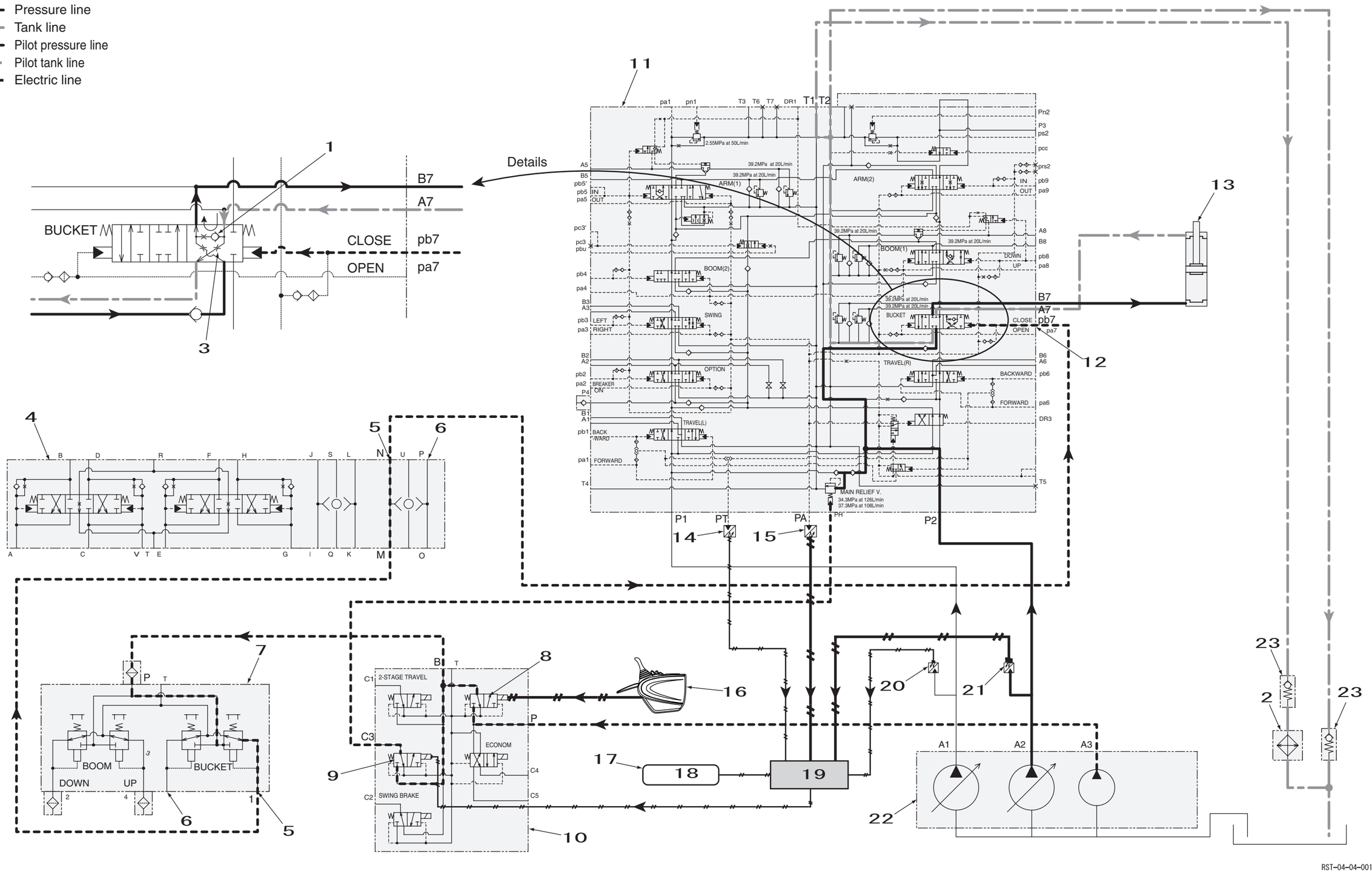

https://truckmanualshub.com/

Negative Control Circuit

1. Negative Control Circuit (power save solenoid OFF)

   When the remote control valve operation lever is set to neutral, the discharged oil from hydraulic pumps A1 and A2 goes from the control valve P1 and P2 ports through the center bypass passage, and through the most downstream negative control variable relief valve, and returns to the hydraulic oil tank.

   The discharged oil from hydraulic pump A3 enters the 5-stack solenoid valve P port, flows through the power save solenoid valve, is fed to the control valve Pn1 and Pn2 ports, and holds the P1 and P2 negative control relief valves at the set pressure of 2.55 MPa.

   The negative control pressure oil separated from the center bypass passage is fed from the Ps1 and Ps2 ports to the hydraulic pump Pi1 and Pi2 ports, moves the pump tilt revolution to the low flow side, and reduces the discharge flow.

1	P1 negative control relief	11	N1 negative control pressure sensor
2	P2 negative control relief	12	P1 pressure sensor
3	Control valve	13	P2 pressure sensor
4	Travel pilot pressure sensor	14	N2 negative control pressure sensor
5	Upper side pilot pressure sensor	15	Horsepower control proportional valve
6	Computer A	16	P1 flow control proportional valve
7	Console lever lock switch	17	Hydraulic pump
8	Lever lock	18	Check
9	Power save	19	Oil cooler
10	5-stack solenoid valve		

https://truckmanualshub.com/

Explanation of Hydraulic Circuit and Operations (standard model)

Negative Control Circuit

Negative Control Circuit (power save solenoid OFF)

- Pressure line
- Tank line
- Negative control line
- Pilot pressure line
- Pilot tank line
- Electric line

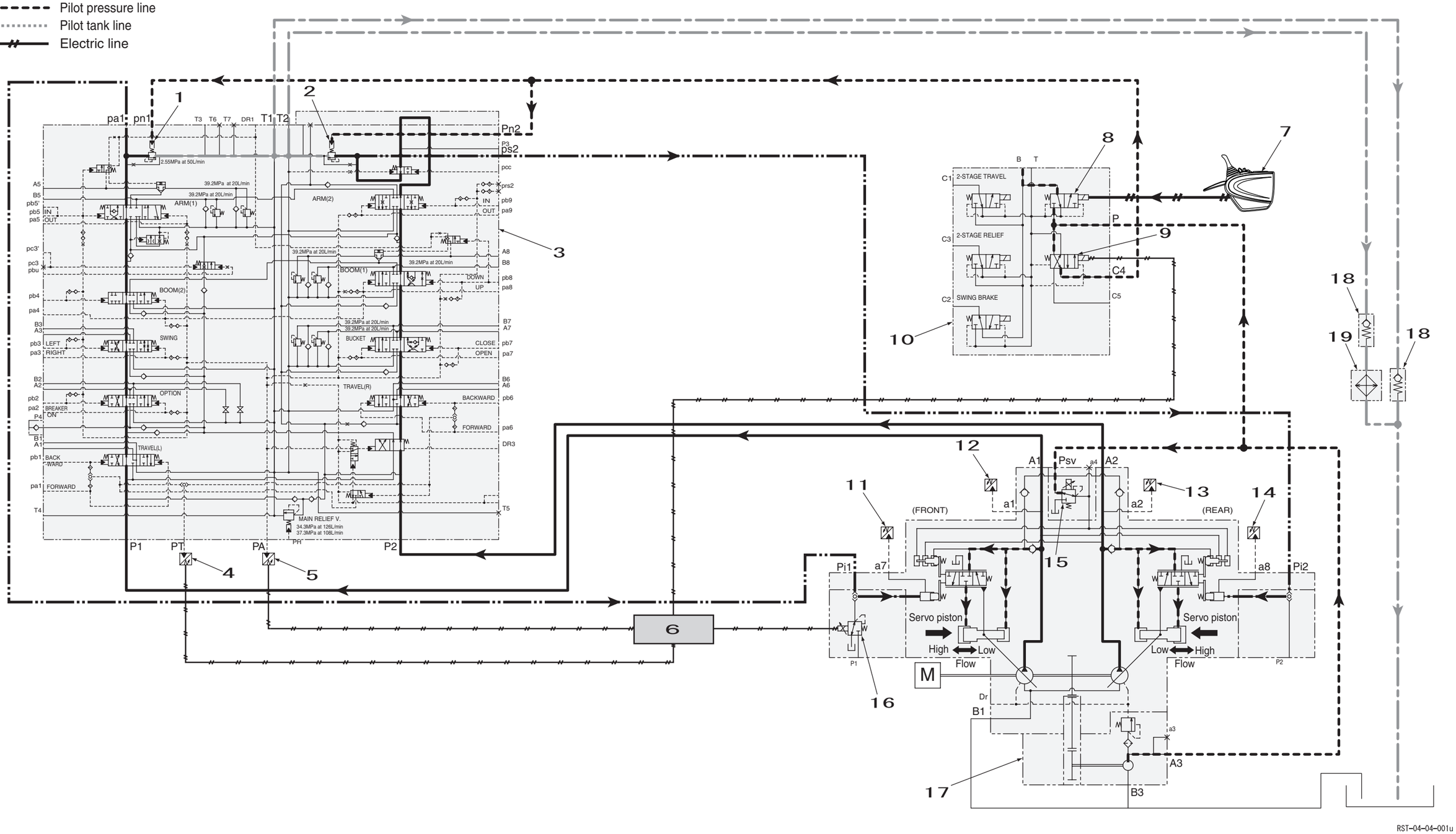

https://truckmanualshub.com/

Negative Control Circuit

2. Negative Control Power Save Circuit (power save solenoid ON)

The purpose of this control is to reduce fuel consumption during standby by reducing the back pressure for the negative control signal.
When the remote control valve is set to neutral, the non-operation state signal enters the computer A from the upper side pilot pressure sensor and the travel pilot pressure sensor installed on the control valve PT port and PA port. After about one second, the power save solenoid valve is switched ON by the signal output from the computer A.
The pressurized oil from the control valve negative control relief valve Pn1 and Pn2 ports goes through the power save solenoid valve and returns to the hydraulic oil tank.
Therefore, the negative control relief valve set pressure is switched to low pressure to further reduce the A1 and S2 pump discharge pressure.
With the system running this way, the negative control signal is cut off and the P1 and P2 pump discharged volume quantity increases.
The discharged oil from pilot pump A3 enters the 5-stack solenoid valve P port, flows through the power save solenoid valve, is fed to the hydraulic pump P2 port from the C5 port, moves the pump tilt revolution to the minimum flow side, and reduces the discharge flow.
At the same time, the discharged oil from the A3 pilot pump is fed to the hydraulic pump P1 port by the signal from the computer A to the hydraulic pump P1 flow restriction proportional valve, moves the A1 side pump tilt revolution to the minimum flow side, and reduces the discharge flow.

1	Control valve	10	P1 pressure sensor
2	Travel pilot pressure sensor	11	P2 pressure sensor
3	Upper side pilot pressure sensor	12	N2 negative control pressure sensor
4	Computer A	13	Horsepower control proportional valve
5	Console lever lock switch	14	P1 flow control proportional valve
6	Lever lock	15	Hydraulic pump
7	Power save	16	Check
8	5-stack solenoid valve	17	Oil cooler
9	N1 negative control pressure sensor		

https://truckmanualshub.com/

Explanation of Hydraulic Circuit and Operations (standard model)

Negative Control Circuit

Negative Control Power Save Circuit (power save solenoid ON)

- Pressure line
- Tank line
- Negative control line
- Pilot pressure line
- Pilot tank line
- Electric line

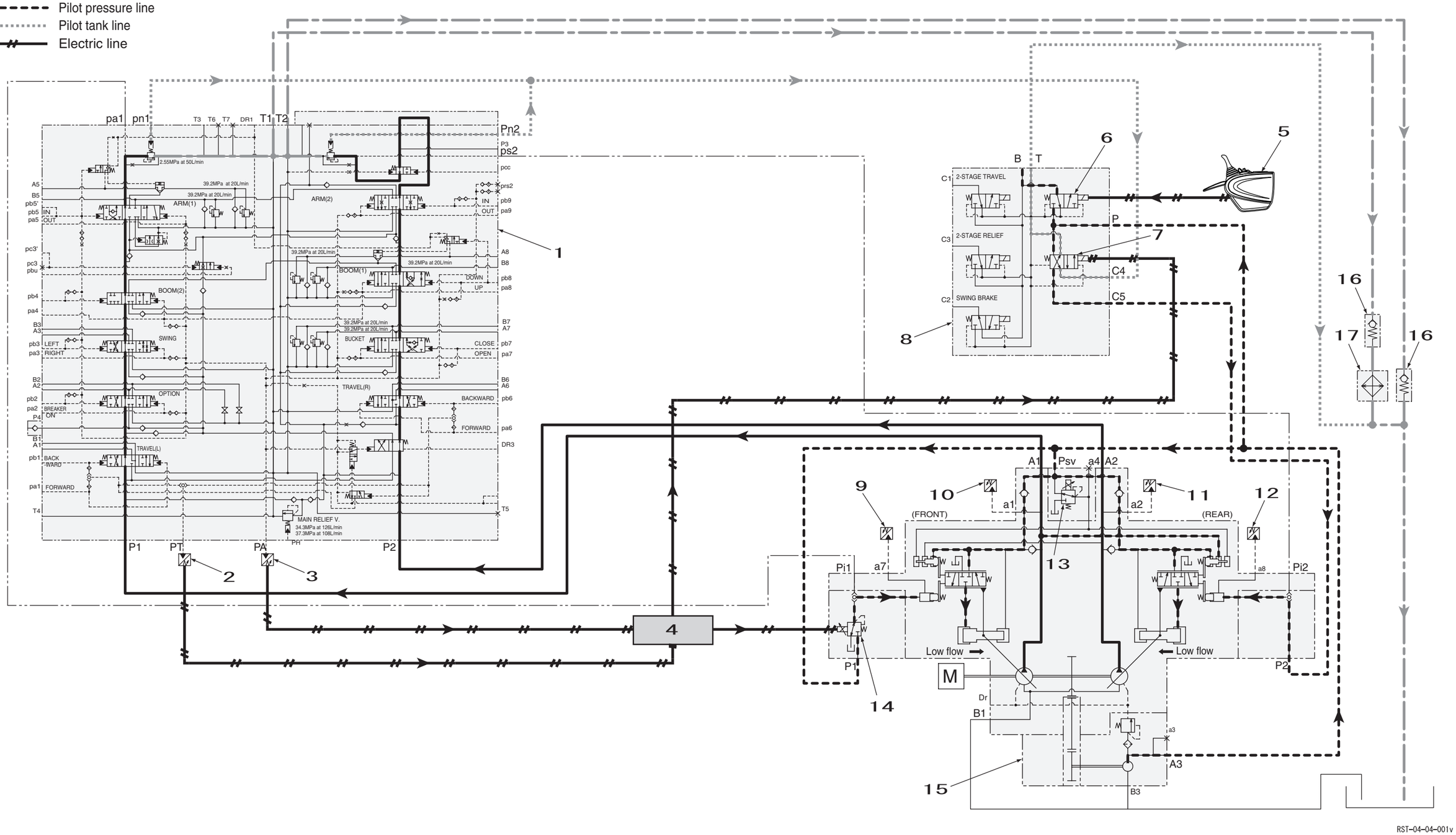

https://truckmanualshub.com/

Negative Control Circuit

3. Negative Control Circuit (bucket-close, power save solenoid OFF)

As an example, this section explains the bucket-close operations.
By moving the remote control valve to the bucket-close side, the pilot pressure oil is fed via the cushion valve to the control valve Pb7 port and switches the bucket spool to the close side.
The discharged oil from the hydraulic pump A2 enters the control valve P2 port, is fed to the bucket spool, flows into the bucket cylinder bottom side because of the spool switching and carries out the bucket-close operation.
At the same time, the upper side pilot pressure sensor signal is detected and through the signal output from the computer A to switch OFF the power save solenoid valve, pilot pressure enters the negative control relief valve, and the pressure becomes the set 2.55 MPa pressure.
Because the bucket spool switches and the pressurized oil on the center bypass is cut off, the Pi2 pump negative control pressure oil from the Ps2 port is eliminated, the pump revolution tilt moves to the increase side, and the flow is increased.
Also, the command current to the pump P1 flow control proportional valve is lowered and the pressurized oil from the A3 hydraulic pump is cut off, but the negative control pressure is fed from the control valve Ps1 port to the Pi1 port to reduce the A1 hydraulic pump discharged volume quantity.

1	Control valve	12	Power save
2	Travel pilot pressure sensor	13	5-stack solenoid valve
3	Upper side pilot pressure sensor	14	P1 pressure sensor
4	Cushion valve	15	P2 pressure sensor
5	Bucket (close)	16	N1 negative control pressure sensor
6	Bucket (open)	17	N2 negative control pressure sensor
7	Bucket cylinder	18	P1 flow control proportional valve
8	Computer A	19	Hydraulic pump
9	Remote control valve (boom, bucket)	20	Check
10	Console lever lock switch	21	Oil cooler
11	Lever lock		

https://truckmanualshub.com/

Explanation of Hydraulic Circuit and Operations (standard model)

Negative Control Circuit

Negative Control Circuit (bucket-close, power save solenoid OFF)

- Pressure line
- Tank line
- Negative control line
- Pilot pressure line
- Pilot tank line
- Electric line

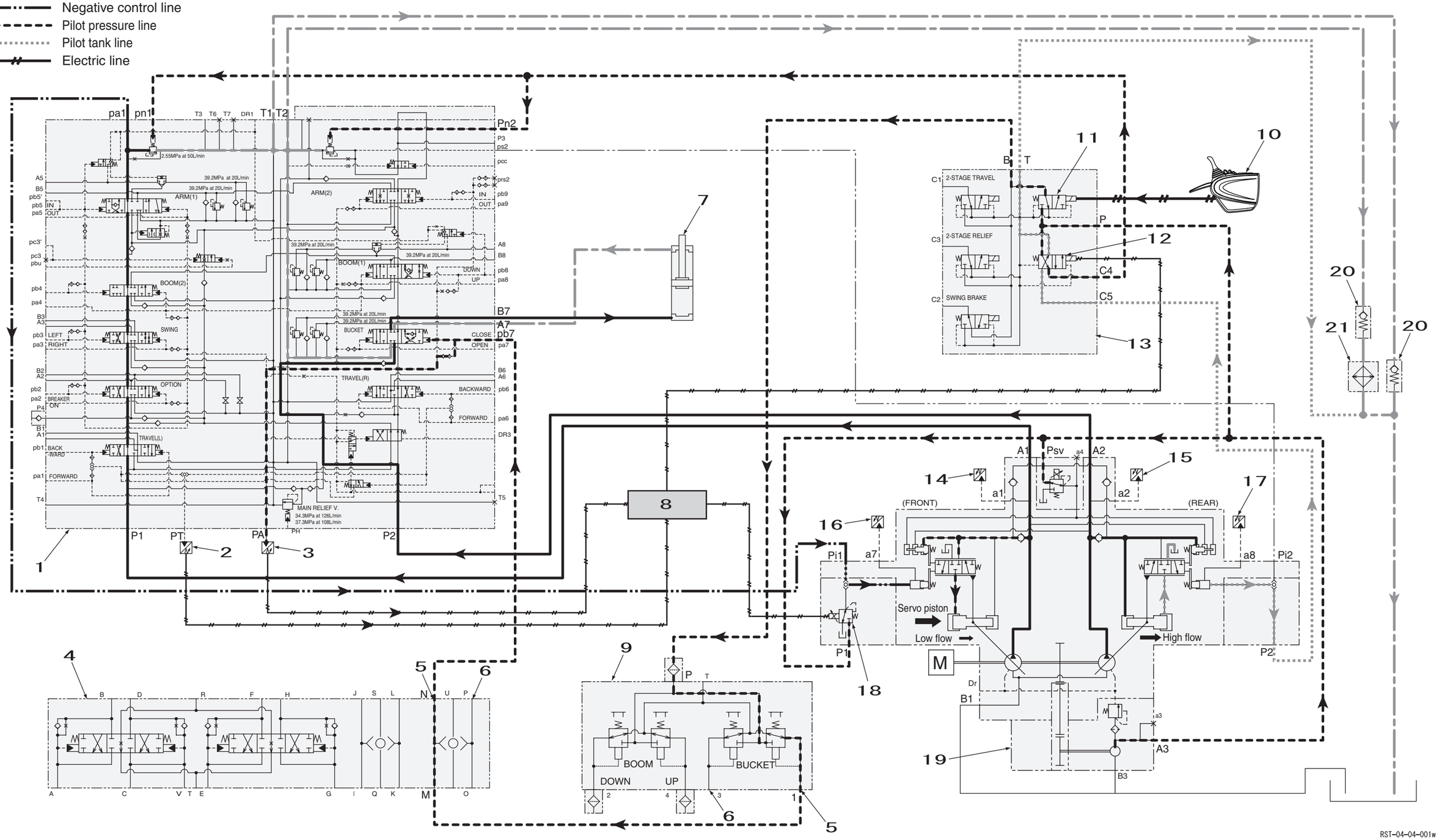

https://truckmanualshub.com/

Increased Horsepower Circuits

1. Arm-in Increased Horsepower Circuit

For the arm-in operation, the increased horsepower signal is output to the hydraulic pump horsepower control proportional valve from the computer A by the arm pilot pressure sensor input signal and P1 pressure sensor and P2 pressure sensor input signals.
The hydraulic pump discharged vloume quantity is increased by the increased horsepower signal to the horsepower control proportional valve from the computer A.

[1] Condition under which the arm-in increased horsepower control is entered
- Arm-in pilot pressure 0.5 MPa or higher (arm-in operation)
- P1 + P2 ≥ 45 MPa

[2] Conditions under which the arm-in increased horsepower control is ended
- Arm-in pilot pressure 0.3 MPa or lower (arm-in operation end)
- P1 + P2 ≤ 45 MPa
  When either occurs

1	Arm (in)	13	Travel pilot pressure sensor
2	Arm (out)	14	Upper side pilot pressure sensor
3	Cushion valve	15	Console lever lock switch
4	Remote control valve (arm, swing)	16	Monitor display
5	Lever lock	17	Computer A
6	Boost relief	18	N1 negative control pressure sensor
7	5-stack solenoid valve	19	P1 pressure sensor
8	Arm cylinder	20	P2 pressure sensor
9	Arm pilot pressure sensor	21	N2 negative control pressure sensor
10	Control valve	22	Hydraulic pump
11	Arm (1)	23	Check
12	Arm (2)	24	Oil cooler

https://truckmanualshub.com/

Explanation of Hydraulic Circuit and Operations (standard model)

Increased Horsepower Circuits

Arm-in Increased Horsepower Circuit

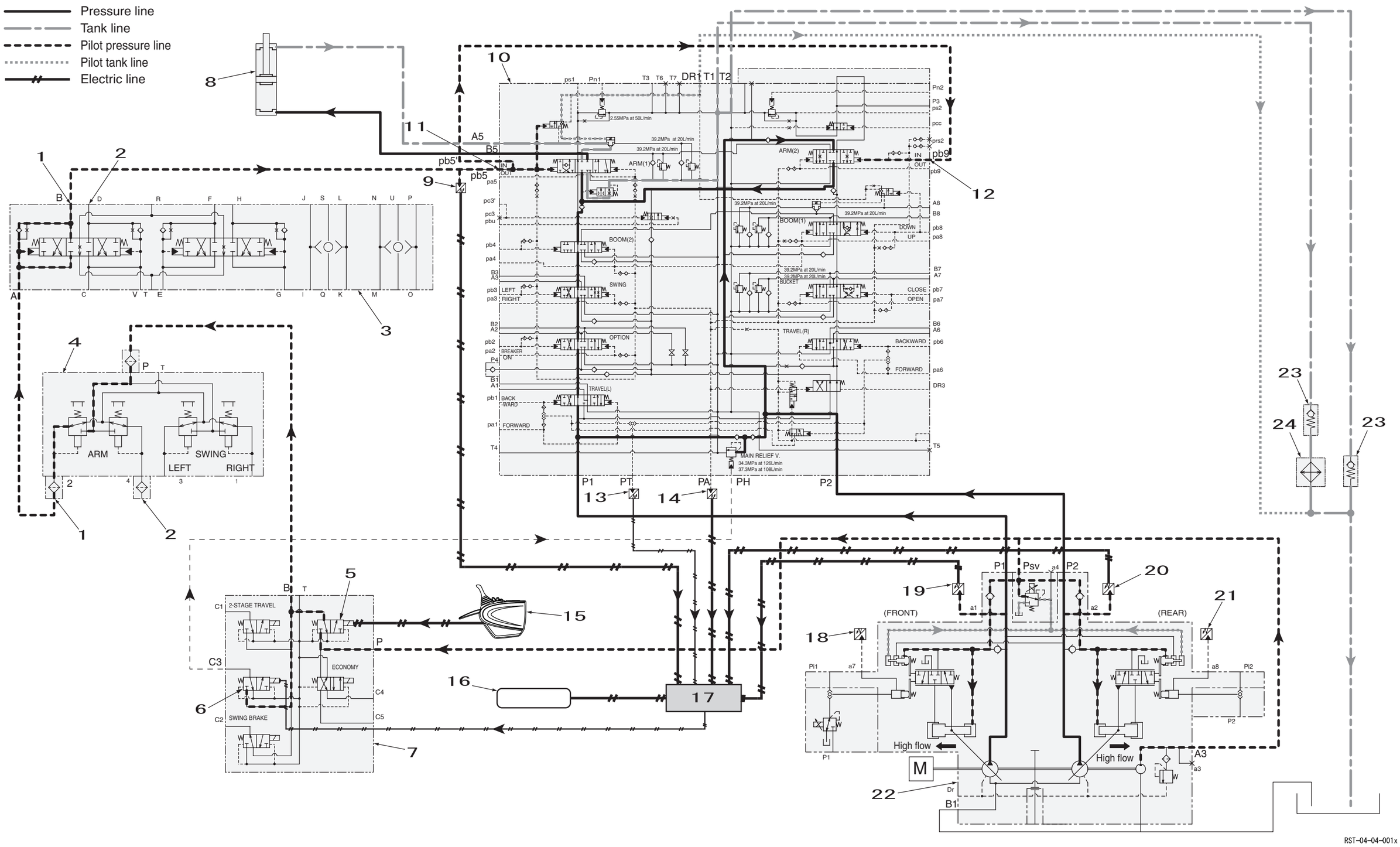

https://truckmanualshub.com/

Increased Horsepower Circuits

2. Travel Increased Horsepower Circuit

For travel single operation, the increased horsepower signal is output to the hydraulic pump horsepower control proportional valve from the computer A by the travel pilot pressure sensor input signal.

The hydraulic pump discharged volume quantity is increased by the increased horsepower signal to the horsepower control proportional valve from the computer A.

[1] Conditions under which the travel increased horsepower control is entered

- Travel pilot pressure 0.5 MPa or higher.
- SP mode

[2] Conditions under which the travel increased horsepower control is ended

- Travel pilot pressure 0.3 MPa or lower.
- AUTO mode, H mode

1	Travel motor	13	P1 pressure sensor
2	Travel remote control valve	14	P2 pressure sensor
3	Travel speed	15	N1 negative control pressure sensor
4	Lever lock	16	N2 negative control pressure sensor
5	5-stack solenoid valve	17	Hydraulic pump
6	Console lever lock switch	18	Check
7	High speed travel select switch	19	Oil cooler
8	Computer A	20	Backward left
9	Control valve	21	Forward left
10	Travel (right)	22	Forward right
11	Travel (left)	23	Backward right
12	Travel pilot pressure sensor		

https://truckmanualshub.com/

Explanation of Hydraulic Circuit and Operations (standard model)

Increased Horsepower Circuits

Travel Increased Horsepower Circuit

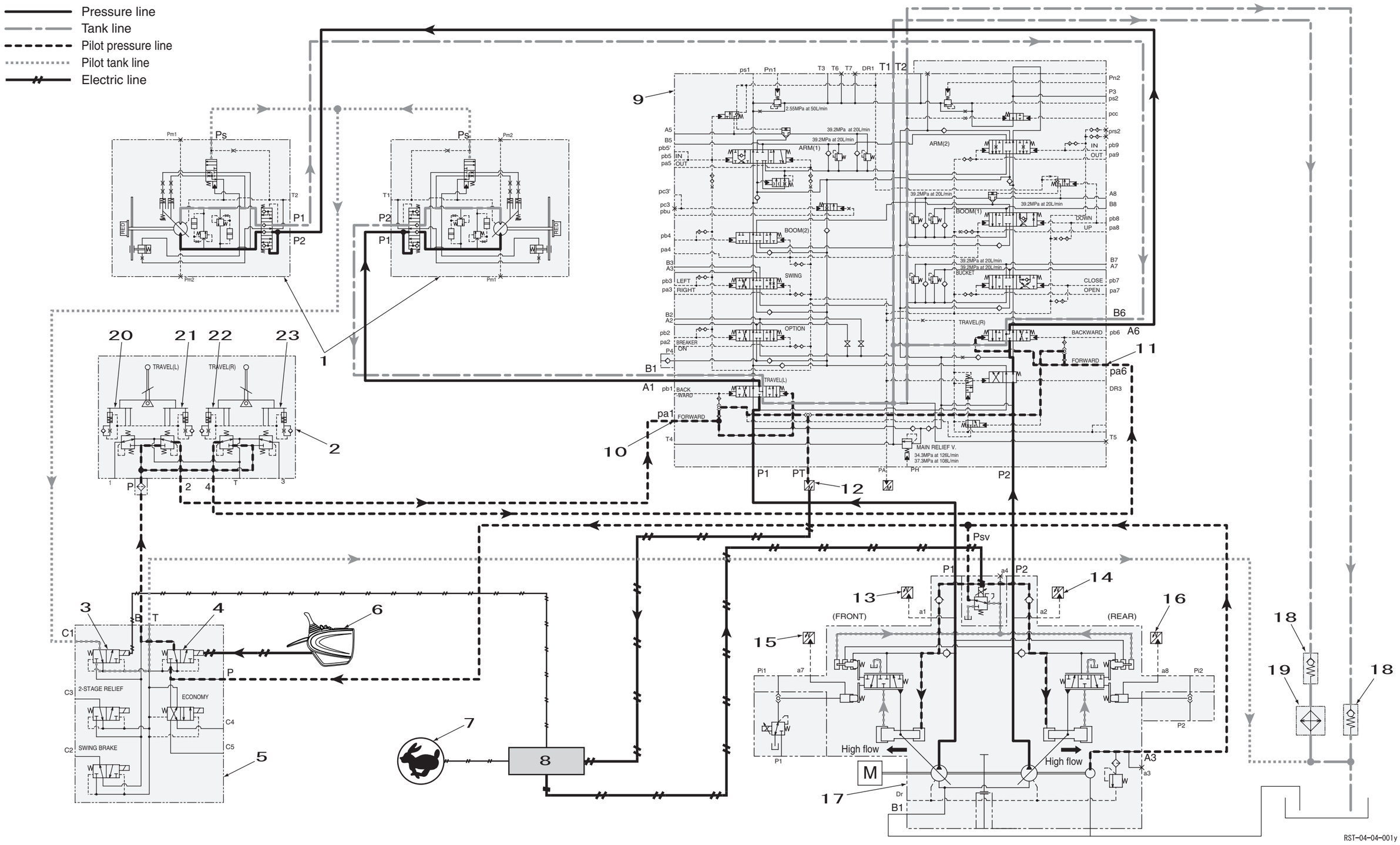

https://truckmanualshub.com/

Other Circuits

1. Cushion Circuit

As examples, this section explains the cases when an arm-out operation is carried out, when an arm-out operation is stopped, and when an arm-out operation is followed by an arm-in operation.

(1) Arm-out Operation

When a remote control valve arm-out operation is carried out, the pilot pressure oil enters from the remote control valve 2 port into the cushion valve, pushes up the internal check valve, and is fed to the control valve Pa5 port and Pa9 port.
At the same time, the cushion valve cushion spool is switched to the left.
The arm-in side oil pushed out from the control valve Pa9 and Pb 5 ports passes from the cushion valve B port through the cushion spool switched to the left and returns to the hydraulic oil tank.
At this time, the warmed oil from the return line enters the remote control valve through the cushion spool from the cushion valve R port and returns to the hydraulic oil tank, so heat performance is improved.

1	Arm (in)	10	Control valve
2	Arm (out)	11	Arm (1)
3	Cushion spool	12	Arm (2)
4	Orifice	13	Console lever lock switch
5	Check valve	14	Hydraulic pump
6	Cushion valve	15	Check
7	Remote control valve (arm, swing)	16	Oil cooler
8	Lever lock	17	Shut off valve
9	5-stack solenoid valve		

https://truckmanualshub.com/

Other Circuits

Cushion Circuit (arm-out operation)

- Pressure line
- Tank line
- Pilot pressure line
- Pilot tank line
- Electric line
- Cushion line

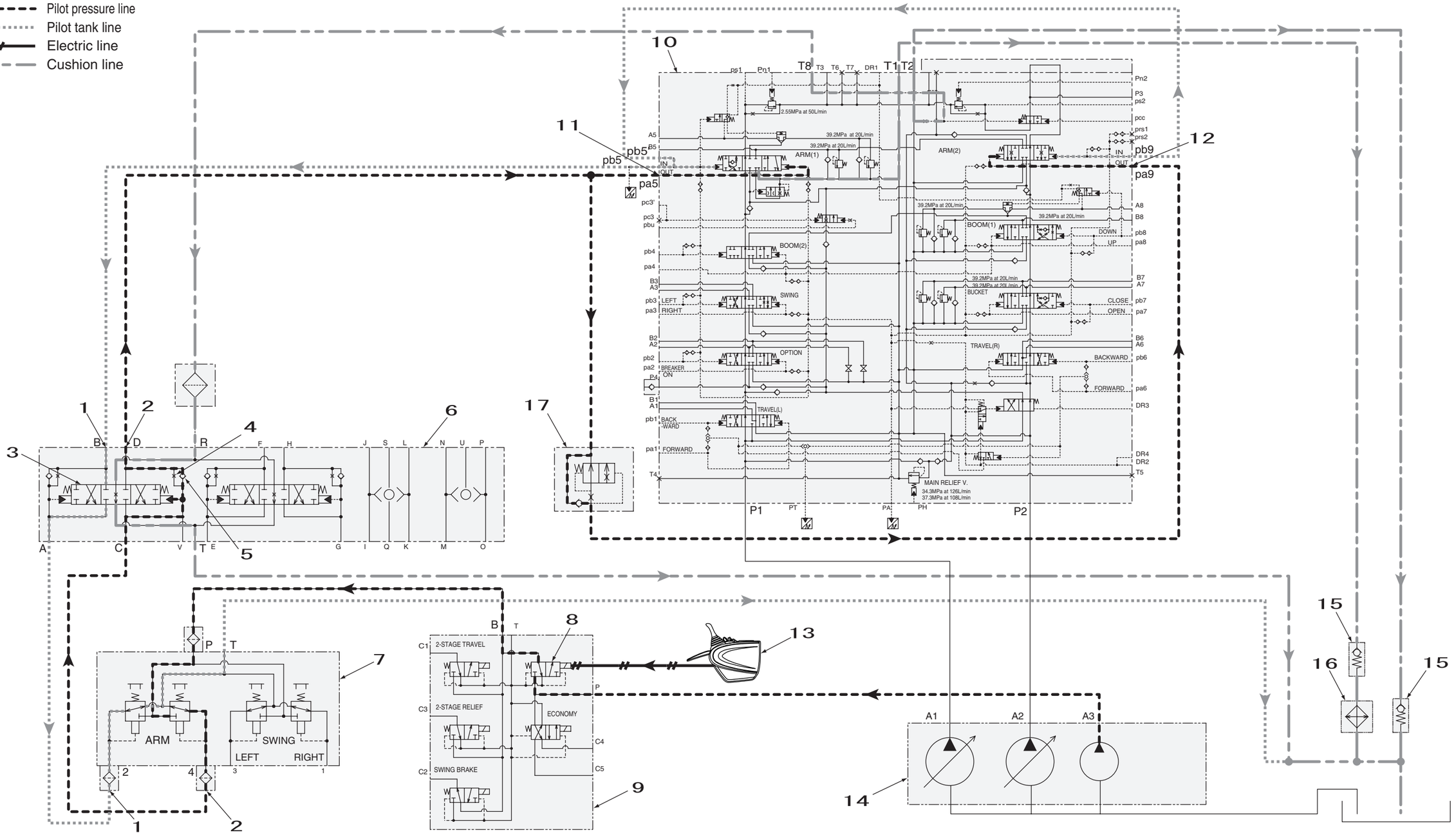

RST-04-04-001z

https://truckmanualshub.com/

Other Circuits

(2) When Arm-Out Operation Stopped

When the remote control valve arm-out operation lever is returned to neutral, the oil pushed out from the control valve Pa5 and Pa9 ports flows to the cushion valve D port through the cushion orifice and returns from the remote control valve to the hydraulic oil tank.
Through this orifice, the arm spool moves to the neutral position without returning suddenly, so the cushioning is improved.

1	Arm (in)	9	Control valve
2	Arm (out)	10	Arm (1)
3	Cushion spool	11	Arm (2)
4	Orifice	12	Console lever lock switch
5	Cushion valve	13	Hydraulic pump
6	Remote control valve (arm, swing)	14	Check
7	Lever lock	15	Oil cooler
8	5-stack solenoid valve	16	Cushion spool

https://truckmanualshub.com/

Other Circuits

Cushion Circuit (arm-out operation stopped)

- Pressure line
- Tank line
- Pilot pressure line
- Pilot tank line
- Electric line
- Cushion line

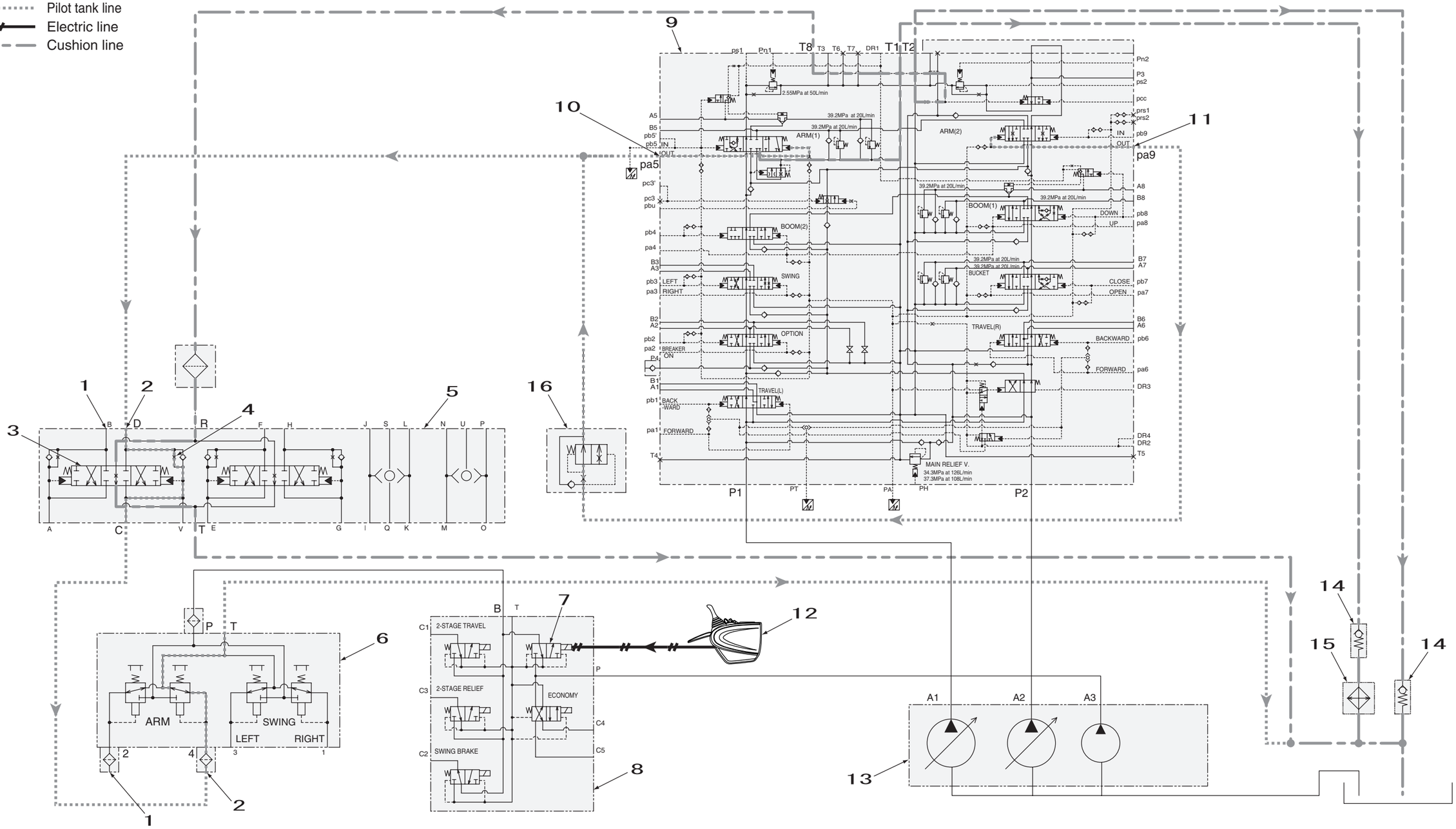

https://truckmanualshub.com/

Other Circuits

(1) Arm-out → Arm-in Operation

When the lever is operating all at once from an arm-out operation to an arm-in operation (arm drift operation), the pilot pressure oil is fed from the remote control valve 4 port into the cushion valve A port, pushes up the internal check valve, and reaches the control valve Pb5 port and Pb9 port.

At the same time, the cushion valve cushion spool is switched to the right.

At this time, the oil pushed out from the Pa5 port and Pa9 port does not pass through the cushion orifice, but passes through the cushion spool that has been switched to the right and returns to the hydraulic oil tank, so response is improved.

1	Arm (in)	9	Control valve
2	Arm (out)	10	Arm (1)
3	Cushion spool	11	Arm (2)
4	Orifice	12	Console lever lock switch
5	Cushion valve	13	Hydraulic pump
6	Remote control valve (arm, swing)	14	Check
7	Lever lock	15	Oil cooler
8	5-stack solenoid valve		

https://truckmanualshub.com/

Other Circuits

Cushion Circuit (arm-out → arm-in operation)

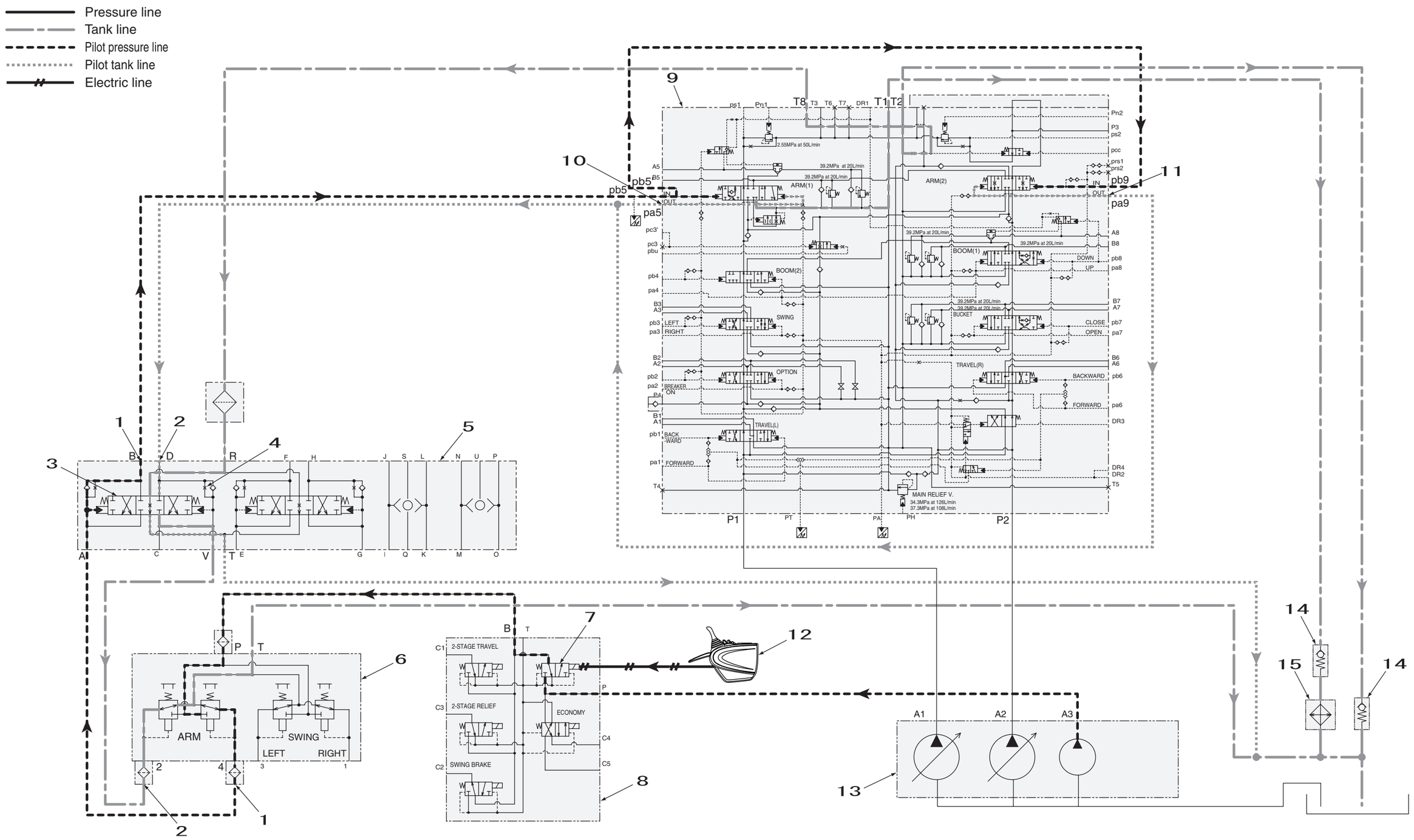

https://truckmanualshub.com/

Other Circuits

2. Heat Circuit (lever in neutral)

The pilot line is equipped with a heat circuit to prevent response delay at low temperatures.
When the remote control valve operation lever is set to neutral, the discharged oil from hydraulic pumps A1 and A2 goes from the control valve P1 and P2 ports through the center bypass passage, and returns to the hydraulic oil tank.
The pressurized oil from the control valve T8 port is fed to the cushion valve R port and returns through the cushion spool to the hydraulic oil tank.
By circulating the oil inside the cushion spool, the temperature of the oil in the cushion valve is raised to improve heat performance.

1	Arm (in)	7	Control valve
2	Arm (out)	8	Console lever lock switch
3	Cushion valve	9	Hydraulic pump
4	Remote control valve (arm, swing)	10	Check
5	Lever lock	11	Oil cooler
6	5-stack solenoid valve		

https://truckmanualshub.com/

Other Circuits

Heat Circuit (lever in neutral)

Pressure line
Tank line
Cushion line

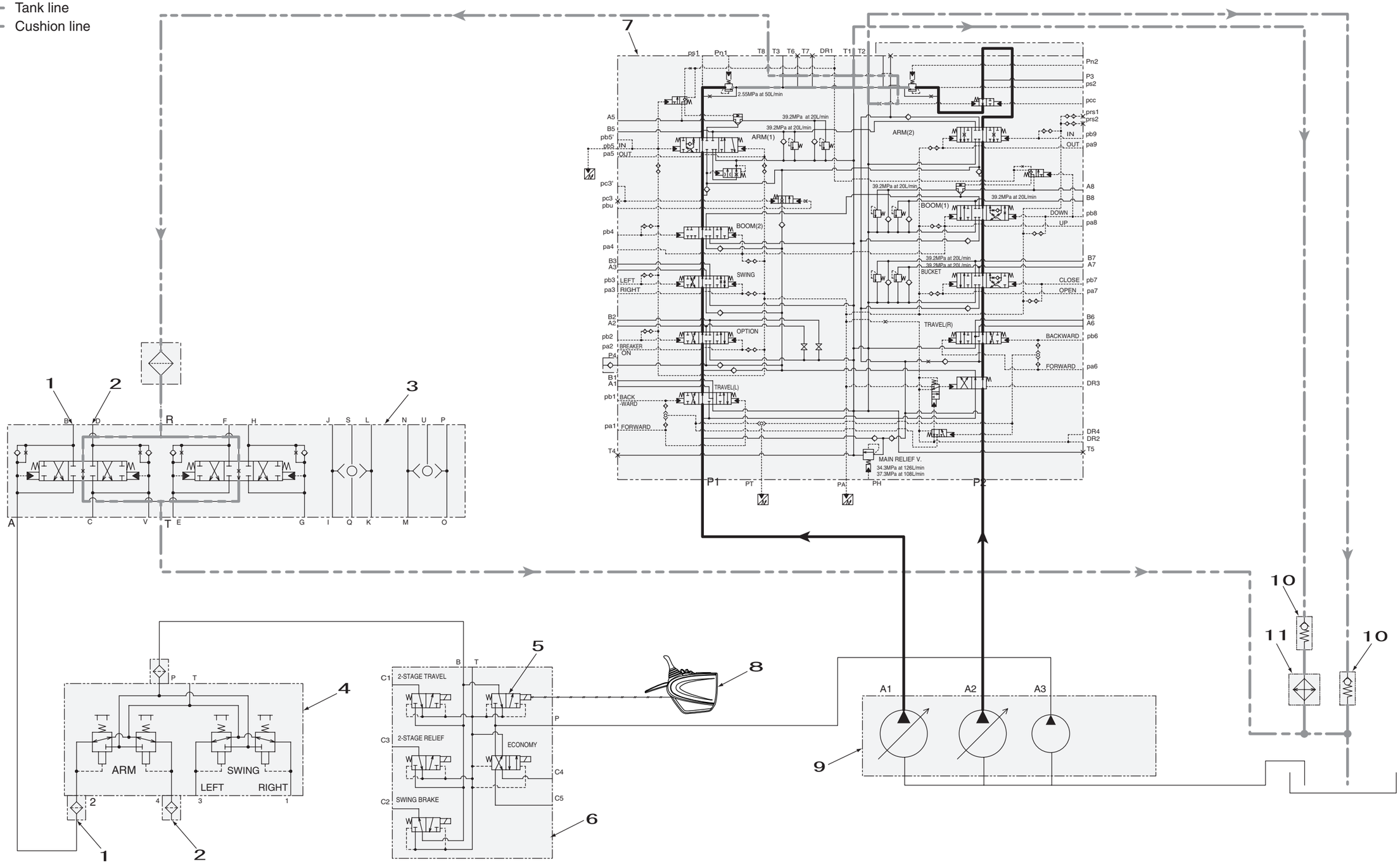

RST-04-04-001ac

https://truckmanualshub.com/

Other Circuits

3. Auto Power Boost Circuit (bucket-close)

When an attachment is operated, this circuit boosts the control valve main relief pressure from 34.3 MPa to 36.8 MPa according to the engine load ratio and hydraulic load pressure, then ends the pressure boost after 8 seconds.

As an example, this section explains bucket-close operations.

By moving the remote control valve to the bucket-close side, the pilot pressure oil is fed via the cushion valve to the control valve Pb7 port and switches the bucket spool to the close side.

At the same time, the pressurized oil separated from the pilot internal passage is detected and the upper side pilot pressure sensor output signal is input to the computer A, which judges that there is upper side operation. Furthermore, the computer A judges that there is a boost in the main pump P1 and P2 pressure, outputs the ON (24 V) signal to the boost relief solenoid, and switches the valve, and the pilot pressure oil is fed to the control valve main relief valve PH port to hold the boost relief set pressure for 8 seconds.

The option circuit is not boosted during a travel operation.

1	Cushion valve	11	Upper side pilot pressure sensor
2	Bucket (close)	12	Console lever lock switch
3	Bucket (open)	13	Power up
4	Remote control valve (boom, bucket)	14	Monitor display
5	Lever lock	15	Computer A
6	Boost relief	16	P1 pressure sensor
7	5-stack solenoid valve	17	P2 pressure sensor
8	Control valve	18	Hydraulic pump
9	Bucket	19	Check
10	Bucket cylinder	20	Oil cooler

https://truckmanualshub.com/

Other Circuits

Auto Power Boost Circuit (bucket-close)

- Pressure line
- Tank line
- Pilot pressure line
- Pilot tank line
- Electric line

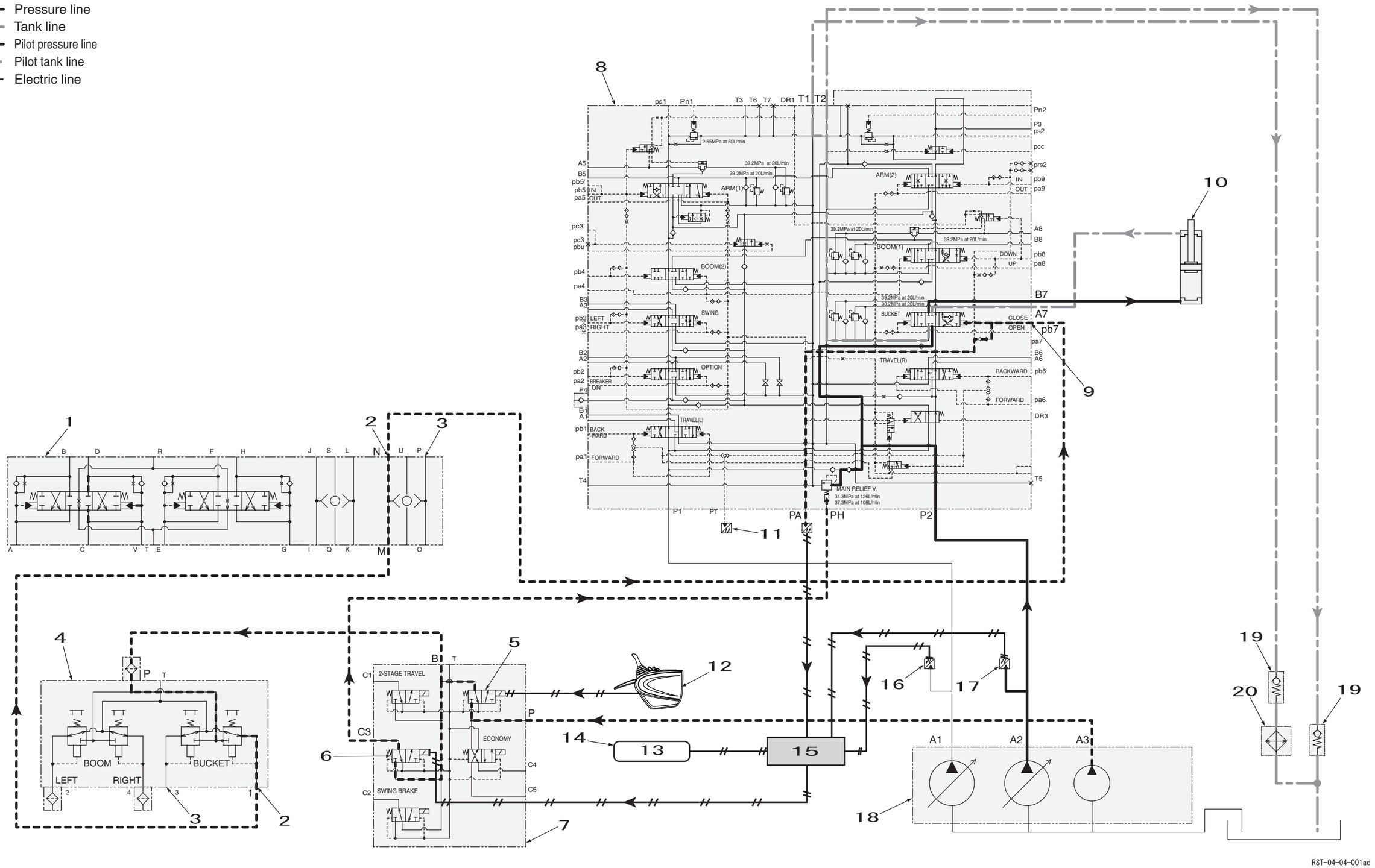

https://truckmanualshub.com/

Explanation of Hydraulic Circuit and Operations (option)

Option Circuit

1. Breaker Circuit (single operation)

   By operating the option remote control valve to the breaker side, the pilot pressure oil is fed to the control valve Pa2 port and switches the option spool.
   The discharged oil from hydraulic pump A1 is fed from the control valve P1 port through the parallel passage and fed to the option spool. Switching the spool lets the oil flow from the relief valve A port through the B port and into the breaker.
   The breaker set pressure is set by this relief valve.
   At this time, the option pilot pressure sensor signal is detected, the pump P1 flow control proportional valve is controlled by the output signals from the computer A to adjust the discharge flow.
   The return oil from the breaker goes through the manifold and returns to the hydraulic oil tank.
   Because the breaker usage flow can be set to five levels on the service support screen of the monitor display with the ON signal from the breaker switch in the cab, the optimum usage flow can be selected.

1	Control valve	12	Console lever lock switch
2	Manifold	13	Lever lock
3	Relief valve	14	5 stack solenoid valve
4	Breaker	15	P1 pressure sensor
5	Travel pilot pressure sensor	16	P2 pressure sensor
6	Upper side pilot pressure sensor	17	N1 negative control pressure sensor
7	Computer A	18	N2 negative control pressure sensor
8	Monitor display	19	P1 flow control proportional valve
9	Breaker switch	20	Hydraulic pump
10	Option remote control valve	21	Check
11	Option pilot pressure switch	22	Oil cooler

https://truckmanualshub.com/

Explanation of Hydraulic Circuit and Operations (option)

Option Circuit

Breaker Circuit (single opration)

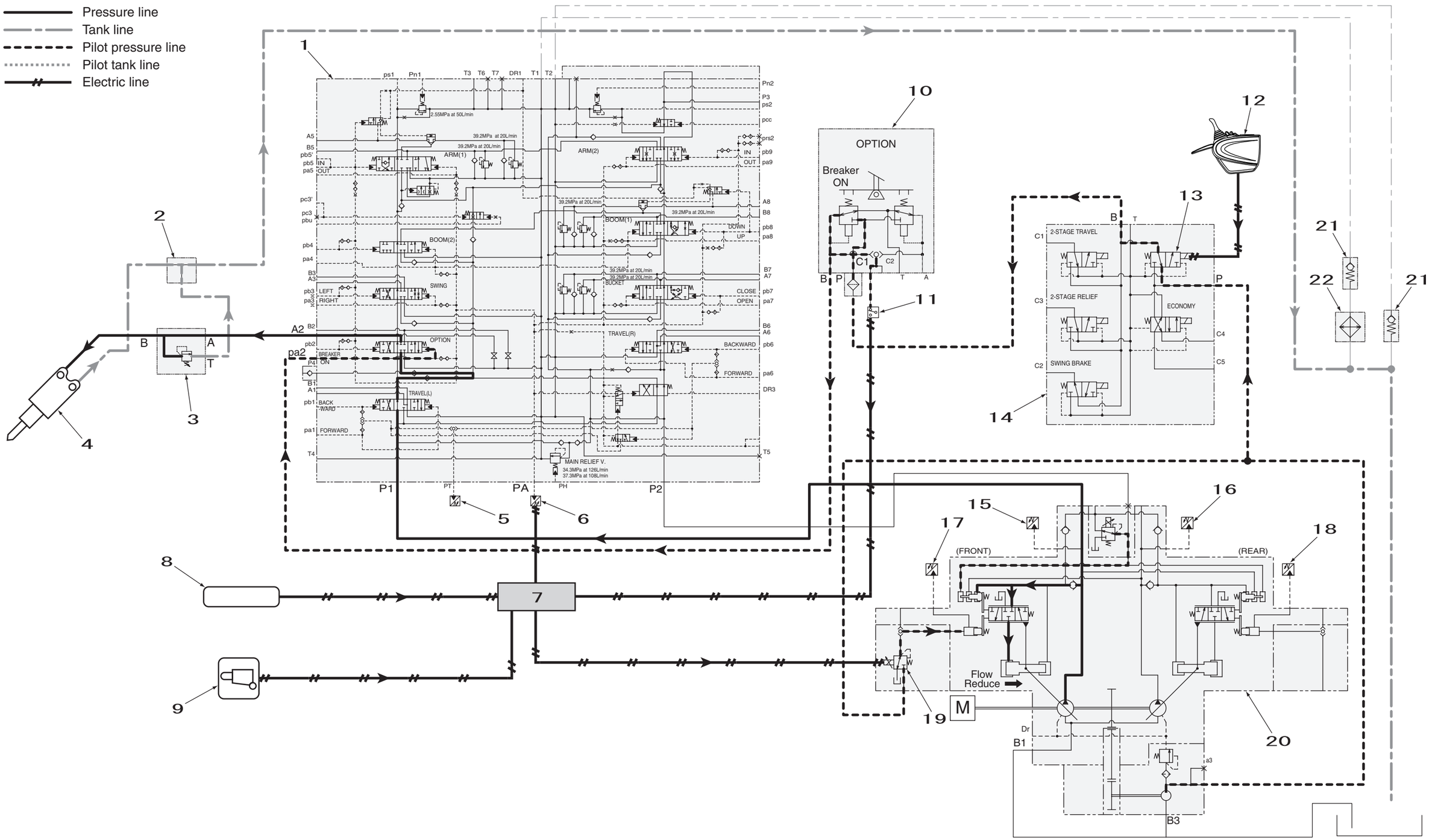

https://truckmanualshub.com/

Option Circuit

2. Shuttle Circuit (hydraulic fork)

As an example, this section explains the case in which the hydraulic fork attachment is used.
By operating the option remote control valve to the fork close side, the pilot pressure oil is fed to the control valve Pa2 port and switches the option spool to the close side.
The discharged oil from hydraulic pump A1 enters the control valve P1 port, is fed from the parallel passage to the option spool, flows into the hydraulic fork because of the option spool switching and operates to the close side.
The return oil from the hydraulic fork goes through the option spool and returns to the hydraulic oil tank.

1	Control valve	8	5-stack solenoid valve
2	Hydraulic fork	9	Console lever lock switch
3	Travel pilot pressure sensor	10	Hydraulic pump
4	Upper side pilot pressure sensor	11	Option remote control valve
5	Monitor display	12	Option pilot pressure switch
6	Computer A	13	Check
7	Lever lock	14	Oil cooler

https://truckmanualshub.com/

Explanation of Hydraulic Circuit and Operations (option)

Option Circuit

Shuttle Circuit (hydraulic fork)

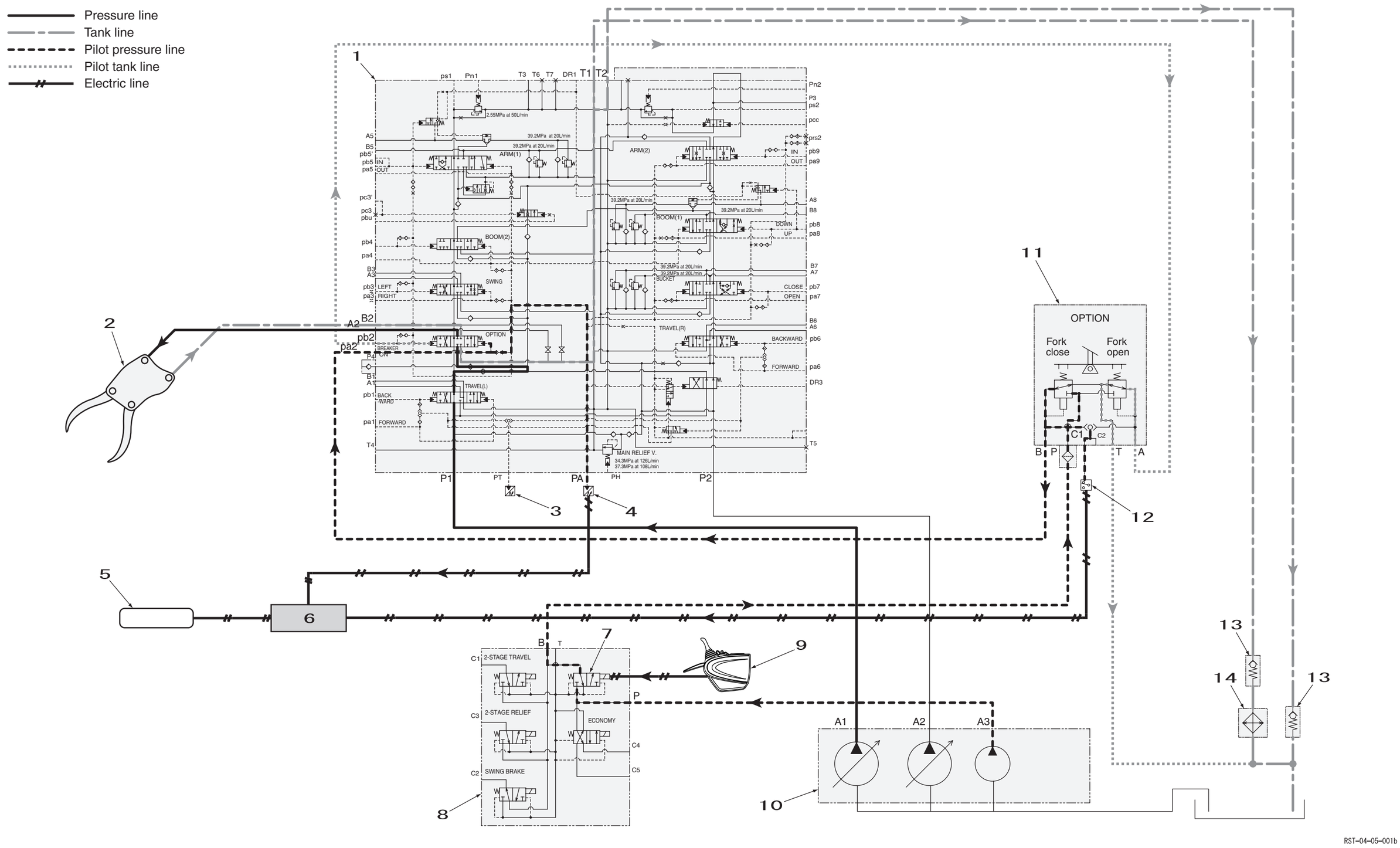

https://truckmanualshub.com/

Option Circuit

3. Combired Circuit

(1) Breaker Q Control

When the switch in the cab is flipped to the breaker side, the ON signal (24 V) is output from the computer A to the option switch solenoid valve to switch the valve.
The pilot pressure oil flows from the option switch solenoid valve B1 port to the A1 port and is fed to the 3-direction valve PP port and shut-off valve PP port and each valve is switched.
Always switch the 2-speed select switch to the 1-speed side.
By operating the option remote control valve to the breaker side, the pilot pressure oil is fed to the control valve Pa2 port and switches the option spool.
The discharged oil from hydraulic pump A1 is fed from the control valve P1 port through the parallel passage and fed to the option spool. Switching the spool lets the oil flow from the shut-off valve A port through the B port and into the breaker.
The breaker set pressure is set by the relief valve built into the shut-off valve.
At this time, the option pilot pressure sensor signal is detected, the pump P1 flow control proportional valve is controlled by the output signals from the computer A to adjust the discharge flow.
The return oil from the breaker returns from the 3-direction valve A1 port through the T1 port and to the hydraulic oil tank.
Because the breaker usage flow can be set to five levels on the service support screen of the monitor display, the optimum usage flow can be selected.

1	Control valve	12	Lever lock
2	3-direction valve	13	5-stack solenoid valve
3	Shut-off valve	14	Horsepower control proportional valve
4	Breaker	15	P1 pressure sensor
5	Option remote control valve	16	P2 pressure sensor
6	Option pilot pressure switch	17	N1 negative control pressure sensor
7	Compatible circuit switch	18	N2 negative control pressure sensor
8	Computer A	19	P1 flow control proportional valve
9	Monitor display	20	Hydraulic pump
10	Option switchover solenoid valve	21	Check
11	Console lever lock switch	22	Oil cooler

https://truckmanualshub.com/

Option Circuit

Combired Circuit (breaker Q control)

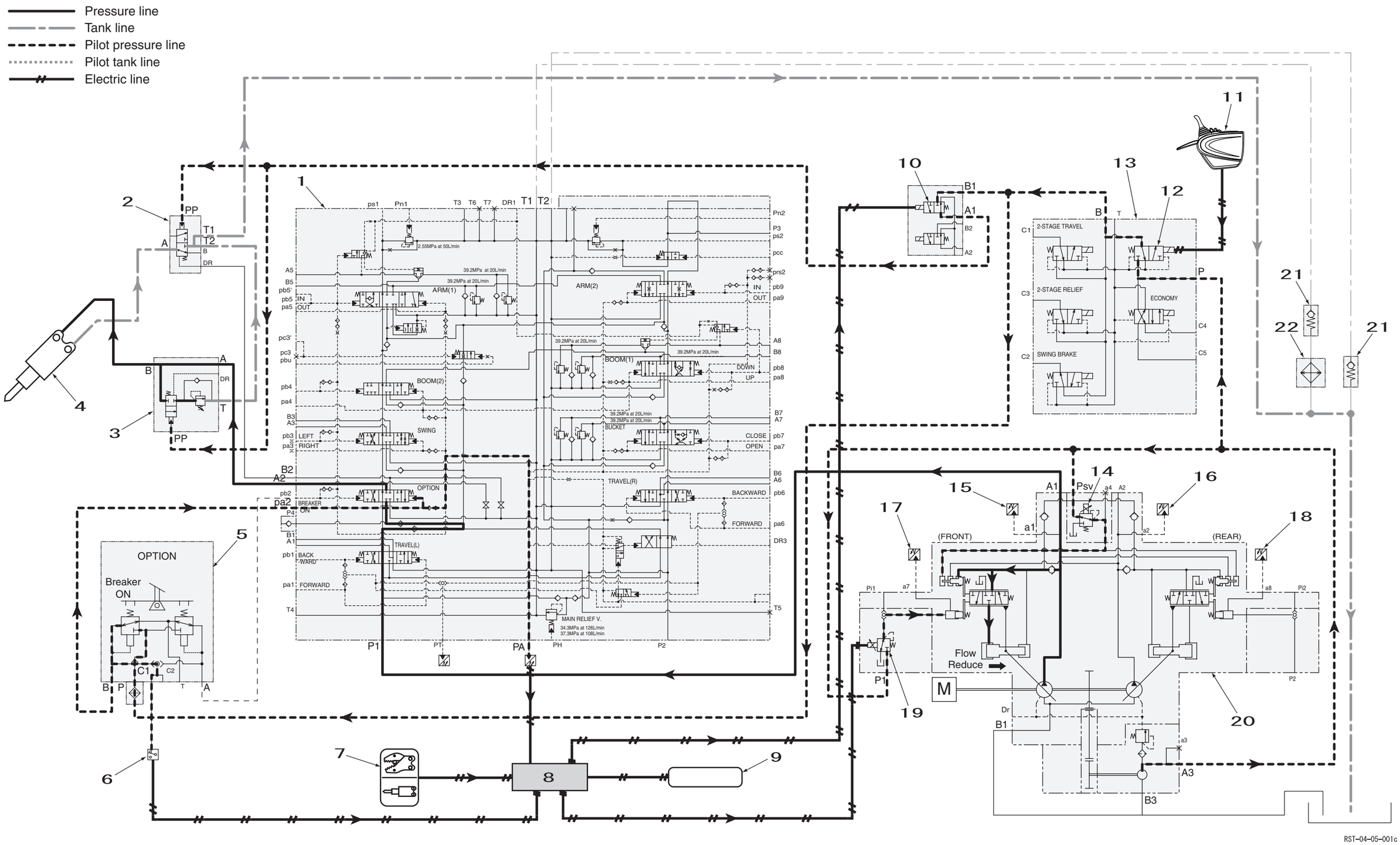

https://truckmanualshub.com/

Option Circuit

(2) 2nd Confluerce Crusher

When the 2nd speed marge select switch in the cab is flipped to the 2nd speed merge side, the ON signal (24 V) is output from the computer A to the 2nd speed merge solenoid valve to switch the valve.

When the compatible circuit switch is flipped to the pulverizer side, the pulverizer circuit is formed without outputting a signal from the computer A to the option switch solenoid valve and without switching the valve.

At this time, the pilot signal does not go to the 3-direction valve or to the shut-off valve and the 3-derection valve forms the A ⇔ B circuit.

By operating the option remote control valve to the pulverizer side, the pilot pressure oil is fed to the control valve Pa2 port and switches the option spool.

At the same time, the pilot pressure oil flows from the 2nd speed merge solenoid valve B2 port to the A2 port and is fed to the control valve Pcc port and the control valve neutral cut valve is switched.

The discharged oil from hydraulic pump A2 enters the control valve P2 port and goes through the center bypass passage and since the neutral cut valve has cut the port to the tank, the oil goes from the P3 port via the P4 port and merges on the upstream side of the option spool.

The discharged oil from hydraulic pump A1 is fed from the control valve P1 port through the parallel passage and fed to the option spool. Switching the spool lets the oil flow from the shut-off valve A port through the B port and into the pulverizer.

At this time, the option pilot pressure sensor signal is detected, the pump P1 flow control proportional valve is controlled by the output signals from the computer A to adjust the discharge flow.

The return oil from the pulverizer returns from the 3-derection valve A port through the B port and the option spool and returns to the hydraulic oil tank.

Because the pulverizer usage flow can be set to five levels on the service support screen of the monitor display, the optimum usage flow can be selected.

1	3-direction valve	10	Monitor display	19	5-stack solenoid valve
2	Shut-off valve	11	computer A	20	Console lever lock switch
3	Pulverizer	12	Compatible circuit switch	21	Horsepower control proportional valve
4	Option switchover solenoid valve	13	2nd speed merge select switch	22	P1 pressure sensor
5	2-stack merge solenoid valve	14	Control valve	23	P2 pressure sensor
6	Option remote control valve	15	Neutral cut valve	24	N1 negative control pressure sensor
7	Check	16	Travel pilot pressure sensor	25	N2 negative control pressure sensor
8	Oil cooler	17	Upper side pilot pressure sensor	26	P1 flow control proportional valve
9	Option pilot pressure switch	18	Lever lock	27	Hydraulic pump

https://truckmanualshub.com/

Explanation of Hydraulic Circuit and Operations (option)

Option Circuit

Combined Circuit (2nd confluerce crusher)

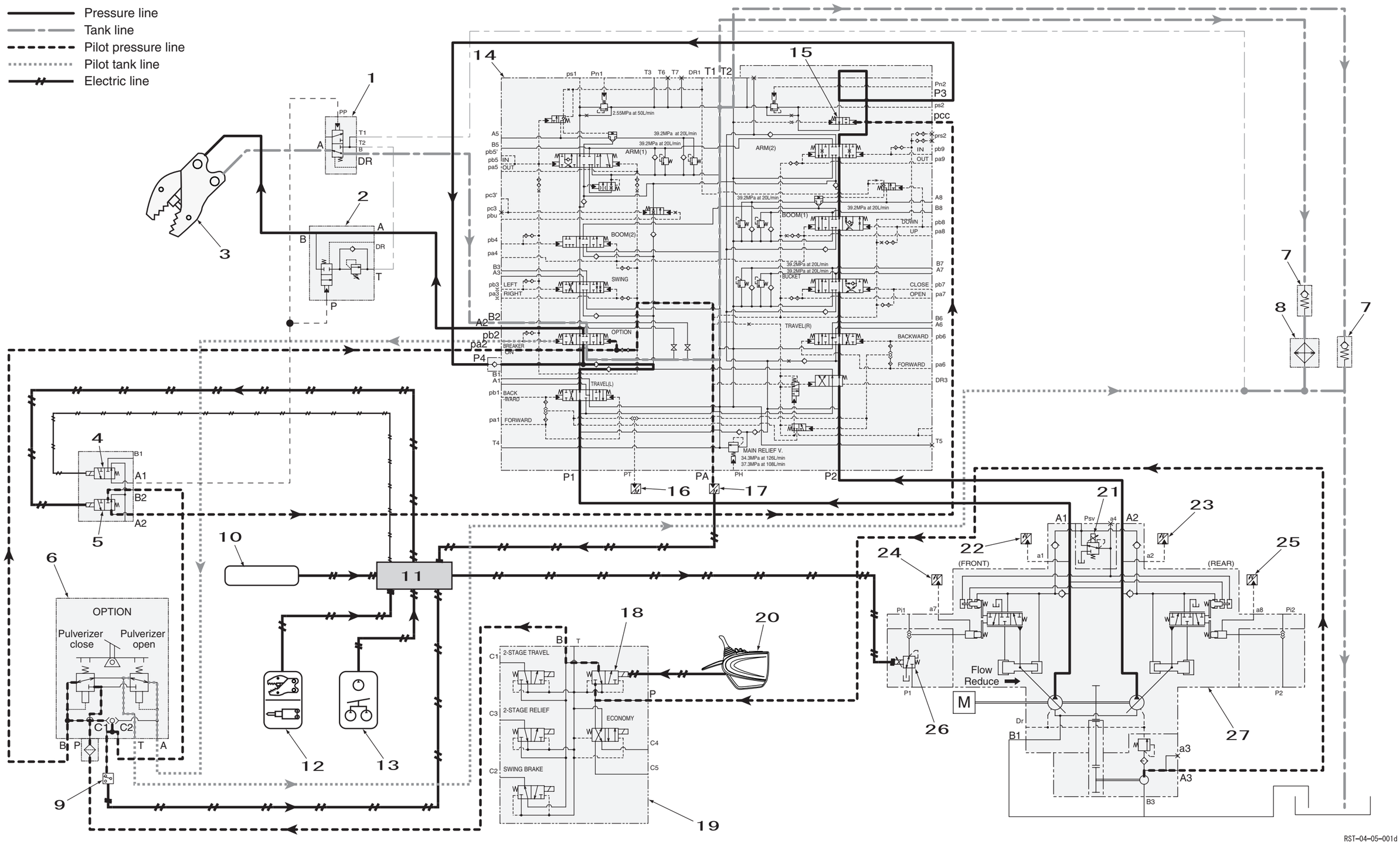

https://truckmanualshub.com/

Option Circuit

4. Second Option Circuit (hydraulic rotation fork)

As an example, this section explains the case in which the hydraulic rotation fork attachment is used.
By operating the 2nd option remote control valve to the right swing side, the pilot pressure oil is fed to the control valve Par2 port.
The 4th hydraulic pump OUT discharged oil is fed to the control valve Pr port, goes through the 2nd option spool and flows to the hydraulic rotation fork to operate to the right swing side.
The return oil from the hydraulic rotation fork goes through the 2nd option spool and returns to the hydraulic oil tank.
The oil in the 2nd option drain line returns to the hydraulic oil tank without going through the control valve.

1	Control valve	9	Oil cooler
2	Travel pilot pressure sensor	10	Hydraulic rotation fork
3	Upper side pilot pressure sensor	11	2nd option pilot pressure switch
4	Lever lock	12	Monitor display
5	5-stack solenoid valve	13	Computer A
6	Console lever lock switch	14	4th pump
7	2nd option remote control valve	15	Hydraulic pump
8	Check		

https://truckmanualshub.com/

Option Circuit

Second Option Circuit (hydraulic rotation fork)

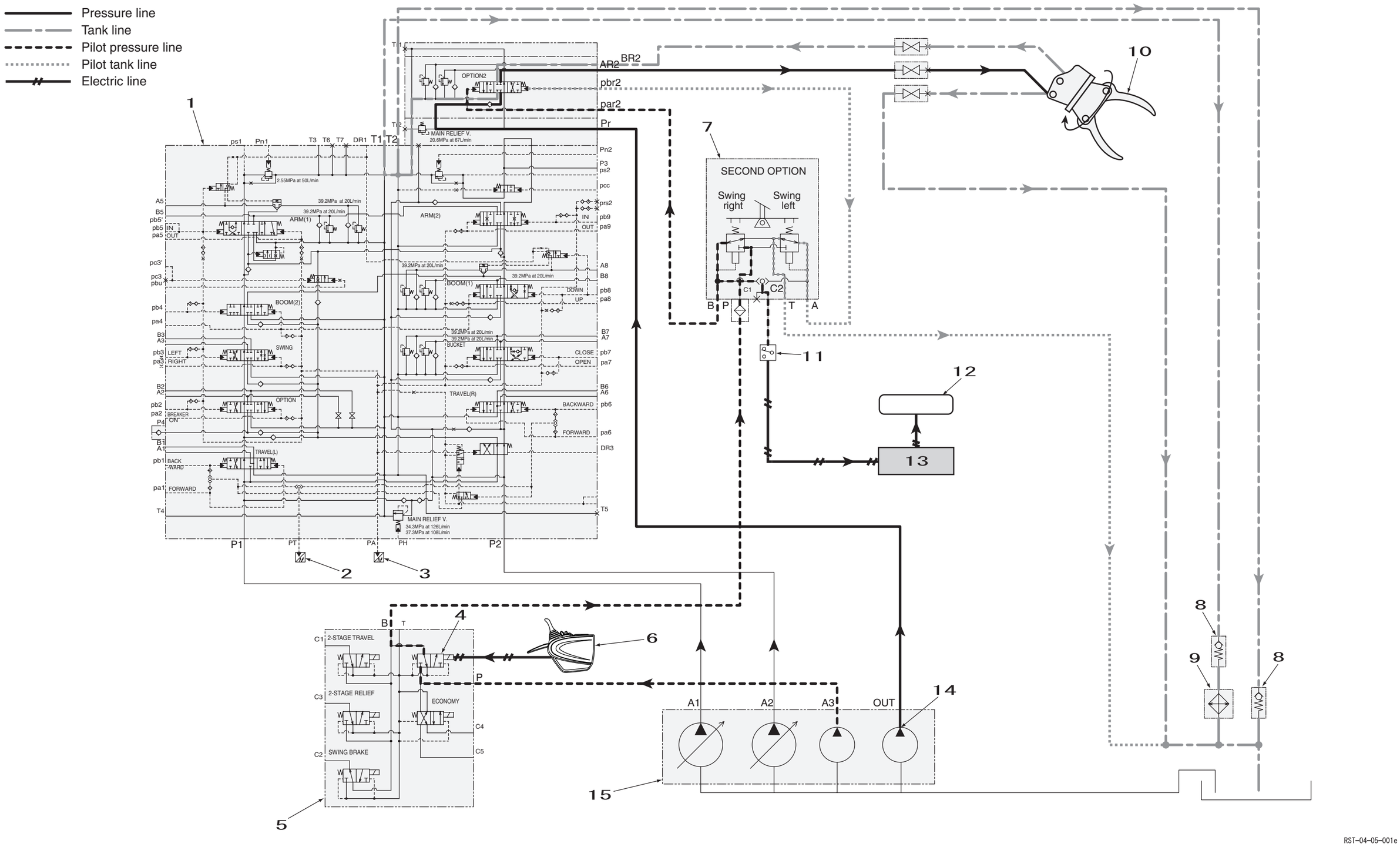

https://truckmanualshub.com/

Pump

1. Hydraulic Pump

(1) Explanation of structures and operations

This pump has a structure with two pumps positioned on the same shaft coupled with the 1st gear (116) and rotation force is distributed to different shafts by the gear structure. The two pumps are driven by transmitting the rotation of the power source to the front side drive shaft (111). Auxiliary pumps installed on different shafts can also be driven at the same time.

The pump can be roughly divided into the rotary group, which is the main part of the pump rotating, the swash plate group, which changes the discharge flow, the valve block group, which switches between oil suction and discharge, and the PTO group that transmits the gear pump drive shaft.

The rotary group is made up of drive shaft F (111), cylinder block (141), piston shoes (151, 152), retainer plate (153), sphere bushing (156), and cylinder spring (157). The drive shaft is is supported at both ends with bearings (123, 124). The shoe is caulked to the piston and forms the spherical joint, reduces the thrust force generated by the load pressure, and has a pocket section for balancing the hydraulic pressure for sliding lightly on the shoe plate (211). The piston shoe sub-group is pressed against the shoe plate by the cylinder spring via the retainer plate and spherical bushing so that it can slide smoothly on the shoe plate. Also, in the same way the cylinder block is pressed against the valve plate (313) by the cylinder spring.

The swash plate group comprises the swash plate (212), shoe plate (211), swash plate support base (251), tilt revolution bushing (214), tilt revolution pin (531), and servo piston (532). The swash plate is supported by the swash plate support base at the cylindrically shaped section formed by the opposite side of the shoe slide plate. By leading the hydraulic pressure force controlled by the regulator into the hydraulic pressure chambers on both sides of the servo position, the servo piston moves left and right. This moves the swash plate back and forth on the swash plate support base via the tilt revolution pin spherical section and changes the tilt revolution angle (α).

The valve block group comprises the valve block (312), valve plate (313), and valve plate pin (885). The valve plate, which has two hook-shaped ports, is installed on the valve block. Its function is to feed oil to the cylinder block and recover it from the cylinder block. The oil switched by the valve plate is connected through the valve block to the outside pipes.

Now when the drive shaft is driven by the power source (motor, engine, etc.), the cylinder block is also rotated at the same time via the spline coupling. When the swash plate tilts, the piston located at the center of the cylinder block moves reciprocally relative to the cylinder while turning with the cylinder block. Therefore, looking at one piston, while the cylinder block turns one rotation, the piston moves away from the valve plate (oil intake stroke) for 180 °C of the cylinder block rotation, then moves toward the valve plate (oil discharge stroke) for the remaining 180 °C When the swash plate tilt revolution angle is 0, the piston does not move through a stroke and oil is not discharged.

D

https://truckmanualshub.com/

Main Equipment Structure and Operation Explanation

(1) Hydraulic pump internal structure diagram

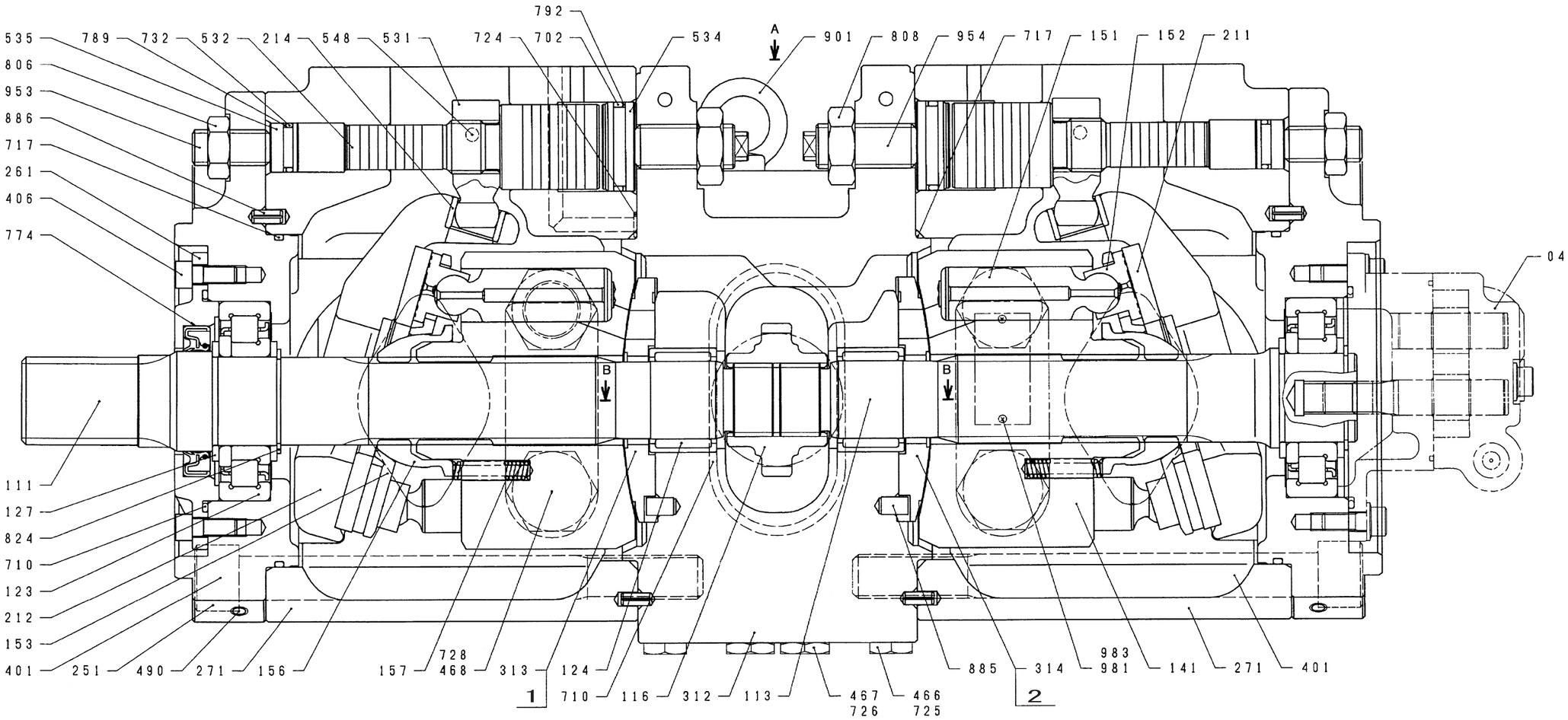

1	Right rotation valve plate
2	Left rotation valve plate

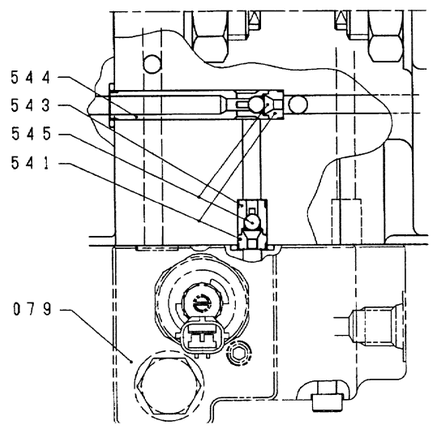

A view

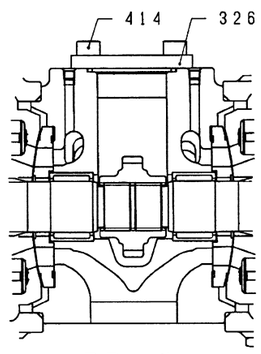

B-B section

Code	Part name	Q'ty	Component part number (quantities) or model
04	Gear pump	1 set	ZX10LBRZ1-07A-V
011	Piston, sub	2 set	151 (9PC), 152 (9PC)
013	Cylinder, sub (R)	1 set	141 (1PC), 313 (1PC)
014	Cylinder, sub (L)	1 set	141 (1PC), 314 (1PC)
030	Swash plate, sub	2 set	212 (1PC), 214 (1PC)
041	Check valve 1, sub	2 set	541 (1PC), 543 (1PC), 545 (1PC)
042	Check valve 2, sub	2 set	541 (1PC), 544 (1PC), 545 (1PC)
079	Electromagnetic proportional pressure reduction valve, gauging, sub	1 set	KDRDE5KR-V3-V
530	Tilt revolution pin, sub	2 set	531 (1PC), 548 (1PC)

Code	Part name	Q'ty
111	Drive shaft (F)	1
113	Drive shaft (R)	1
116	1st gear	1
123	Cylinder roller bearing	2
124	Needle roller bearing	2
127	Bearing spacer	4
141	Cylinder block	2
151	Piston	18
152	Shoe	18
153	Retainer plate	2
156	Spherical bushing	2
157	Cylinder spring	18
211	Shoe plate	2
212	Swash plate	2
214	Tilt revolution bushing	2
251	Swash plate support base	2
261	Seal cover (F)	1
271	Pump casing	2
312	Valve block	1
313	Valve plate (R)	1
314	Valve plate (L)	1
326	Cover	1
401	Hexagon socket head	8
406	Hexagon socket head	4
414	Hexagon socket head	4
466	VP plug	2
467	VP plug	2
468	VP plug	4
490	Insert plug	27
531	Tilt revolution pin	2
532	Servo piston	2
534	Stopper (L)	2
535	Stopper (S)	2
541	Seat	4
543	Stopper 1	2
544	Stopper 2	2
545	Steel ball	4
548	Feedback pin	2
702	O-ring	2
710	O-ring	2
717	O-ring	4
724	O-ring	16
725	O-ring	6
726	O-ring	2
728	O-ring	4
732	O-ring	2
774	Oil seal	1
789	Backup ring	2
792	Backup ring	2
806	Hexagon nut	2
808	Hexagon nut	2
824	Stop ring	2
885	Valve plate pin	2
886	Spring pin	4
901	Eye bolt	2
953	Hexagon socket head stop screw	2
954	Stop screw	2
981	Nameplate	1
983	Strike rivet	2

https://truckmanualshub.com/

2. Regulator

(1) Regulator operation explanation

[1] Flow control

- Operation explanation (See the Regulator operation explanation diagram.)

1) Flow control

The pump discharge flow is controlled as desired with the pilot pressure Pi as in the figure below.

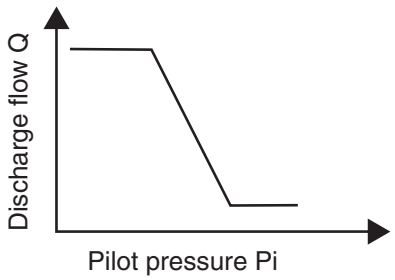

1. Reduced flow operation

When the pilot pressure Pi increases, the pilot piston (643) moves to the right and stops at the location where the pilot spring (646) force and hydraulic pressure force balance each other. The pin (875) fixed to lever 2 (613) fits into the crimped groove section of the pilot piston (643), so lever 2 rotates with the B section (fastened by the support plug (614) and pin (876)) as the support point. The pin (897) fixed to the feedback lever (611) projects into the large hole section (C section) of lever 2 (613), so as lever 2 (613) rotates, the pin (897) moves to the right. The pin (548) fixed to the tilt revolution pin (531) that moves the swash plate (212) fits with the feedback lever (611) two-surface width section (D section), so the feedback lever (611) is rotated by the movement of the pin (897) with the D section as the support point. Since the spool (652) is linked to the feedback lever (611) via the pin (874), the spool moves to the right (652).

When the spool (652) moves, the discharge pressure Pd1 is led to the servo piston large-bore chamber via the spool and CI port. The discharge pressure Pd1 is always led to the servo piston small-bore chamber. As a result, the servo piston is moved to the right due to the surface area difference and reduces the flow.

When the servo piston (532) moves to the right, the D section also moves to the right. The return spring (654) is mounted on the spool (652). Since force pulling the spool to the left is always operating, the pin (897) is pressed into the large hole section (C section) of lever 2 (613). Because of this, accompanying the D section movement, the feedback lever (611) rotates around the C section as the support point and the spool (652) moves to the left. Through this movement, the opening between the sleeve (651) and spool (652) gradually starts to open. At the location where it is completely closed, the servo piston (532) stops.

2. Increased flow operation

When the pilot pressure Pi decreases, the pilot piston (643) is moved to the left by the pilot spring (646) force and lever 2 (613) rotates with the B section as the support point. The pin (897) is pressed in the large hole section (C section) of lever 2 (613) by the return spring (654) via the spool (652), pin (874), and feedback lever (611), so accompanying rotation of lever 2 (613), the feedback lever (611) rotates with the D section as the support point and the spool (652) moves to the left.

When the spool (652) moves, the CI port opens to the tank port, so the pressure in the large-bore chamber of the servo piston drains out, the servo piston (532) is moved to the left by the discharge pressure Pd1 of the small-bore section and the flow increases.

Accompanying the movement of the servo piston (532), the D section moves to the left, the feedback lever (611) rotates with the C section as the support point and the spool (652) moves to the right. This operation continues until the opening between the spool (652) and sleeve (651) and closes and stops at the location where the opening is completely closed.

D

https://truckmanualshub.com/

3. High-pressure selection function
   For the pilot pressure Pi, which is a flow control signal, high pressure is selected from among the multiple command pressures via the shuttle valve sub (050) and the pressure is led.
   KR3G-9Y04-HV selects the higher pressure from Pi1 or the proportional valve 2nd pressure and KR3G-9X04-HV selects the higher pressure from Pi2 or the external command pressure P2.

[2] Horsepower control

1) Horsepower control
   As in the figure below, when the load pressure is increased, the pump tilt revolution angle is reduced to prevent power source over load. Since this regulator is the simultaneous all-horsepower control type, the tilt revolution angles (displacement volumes) of the two pumps are controlled to be the same value as in the following equation.
   $Tin = Pd1 \times q/2\pi + Pd2 \times q/2\pi = (Pd1 + Pd2) \times q/2\pi$
   (q: Displacement volume)
   Horsepower control operation is the same as for flow control. Below is a simple explanation.
   (For detailed operation of each part, see the Flow control item.)

1. Overload prevention operation
   When the self pump discharge pressure Pd1 or the partner pump discharge pressure Pd2 rises, since Pd1 and Pd2 operate on the stepped section of the compensation piston (621), the compensation rod is pressed to the right (623) and moves to the location where the force of the outer spring (625) and inner spring (626) balance out the hydraulic pressure. The movement of the compensation rod (623) is transmitted to lever 1 (612) through the pin (875) and lever 1 (612) rotates around the pin (876) (E section) fastened to the casing. The pin (897) fixed to the feedback lever (611) projects into the large hole section (F section) of lever 1 (612), so as lever 1 (612) rotates, the feedback lever (611) rotates with the D section as the support point and the spool (652) moves to the right.

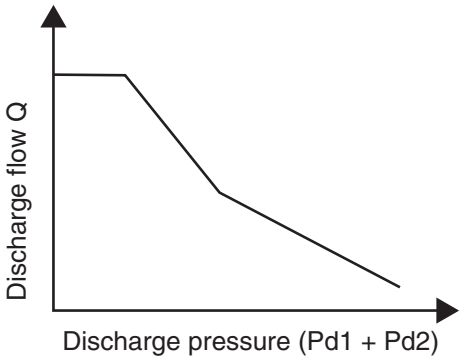

   When the spool (652) moves, the discharge pressure Pd1 is led to the large-bore chamber of the servo piston via the CI port, the servo piston (532) is moved to the right, and the pump discharge flow is decreased to prevent over load of the power source.
   The servo piston (532) movement is transmitted to the feedback lever (611) via the D section. The feedback lever (611) rotates with the F section as the support point and the spool (652) moves to the left. It moves until the opening between the spool (652) and sleeve (651) closes and stops at the location where the opening is completely closed.

2. Flow return operation
   If the self pump discharge pressure Pd1 or the partner pressure pump discharge pressure Pd2 decreases, the compensation rod (623) is pressed back by the outer spring (625) and the inner spring (626) and lever 1 (612) rotates about the E section. Accompanying the lever 1 (612) rotation, the feedback lever (611) rotates around the D section as the support point and the spool (652) moves to the left. Because of this, the CI port opens to the tank port, the servo piston large-bore section pressure drains off, the servo piston (532) moves to the left and the pump discharge flow increases.
   The servo piston (532) movement is transmitted to the spool (652) by the feedback structure and the operation continues until the opening between the spool (652) and sleeve (651) is closed.

https://truckmanualshub.com/

[3] Low tilt revolution (low flow) command priority structure
As above, the flow control and the pressure control tilt revolution command is transmitted to the feedback lever (611) and spool (652) via the large hole sections (C and F sections) of lever 1 (612) and lever 2 (613) , but since the C and F sections have a structure in which a pin (ϕ5) projects into a large hole ϕ9), the pin (897) only contacts the lever that makes the tilt revolution smaller and the ϕ9 hole for the lever on the side that has the larger tilt revolution command state does not contact the pin (897), but is free. With this type of mechanical selection method, the flow control and horsepower control low tilt revolution side command has priority.

[4] Power shift control (horsepower reduction control)
The pump set horsepower is controlled as desired with the power shift pressure Pf as in the figure below.
When the power shift pressure Pf increases, the compensation rod (623) is moved to the right via the pin (898) and the compensation piston (621), so the minimum horsepower setting for the pump tilt revolution angle is reduced the same as was explained for the operation to prevent overload. On the other hand, if the power shift pressure Pf is reduced, the horsepower setting rises.

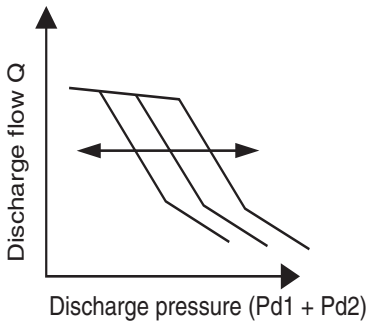

https://truckmanualshub.com/

(2) Regulator operation explanation diagram

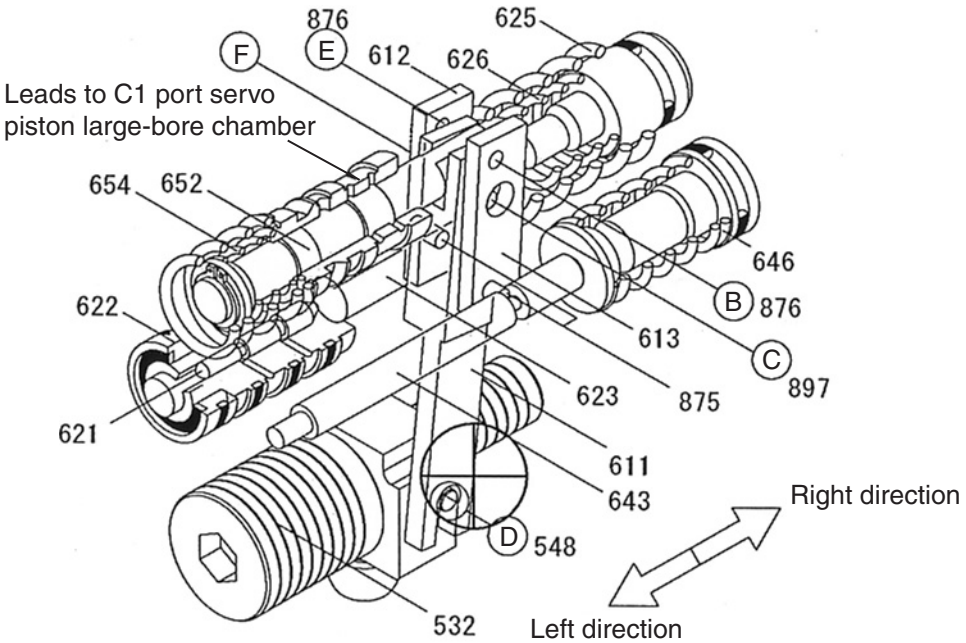

KR3G-9Y04-HV

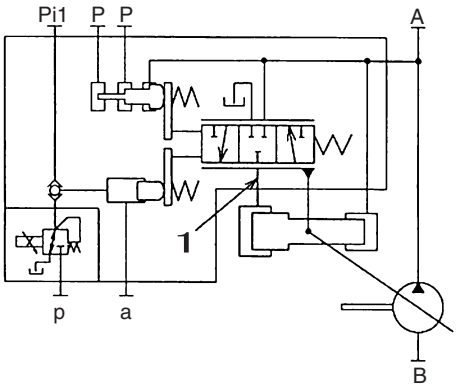

Hydraulic circuit diagram
Front side

KR3G-9X04-HV

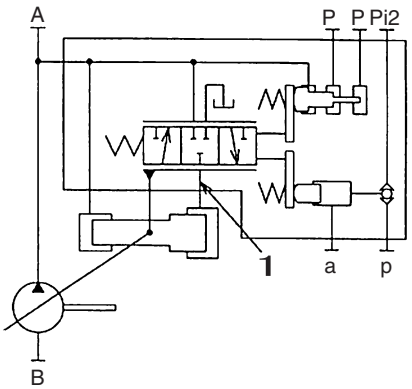

Hydraulic circuit diagram
Rear side

1	C1 port

https://truckmanualshub.com/

(3) Front side regulator internal structure diagram

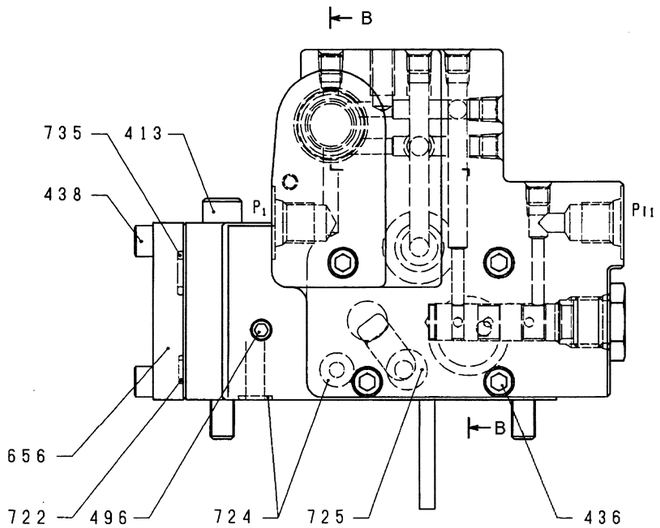

C view

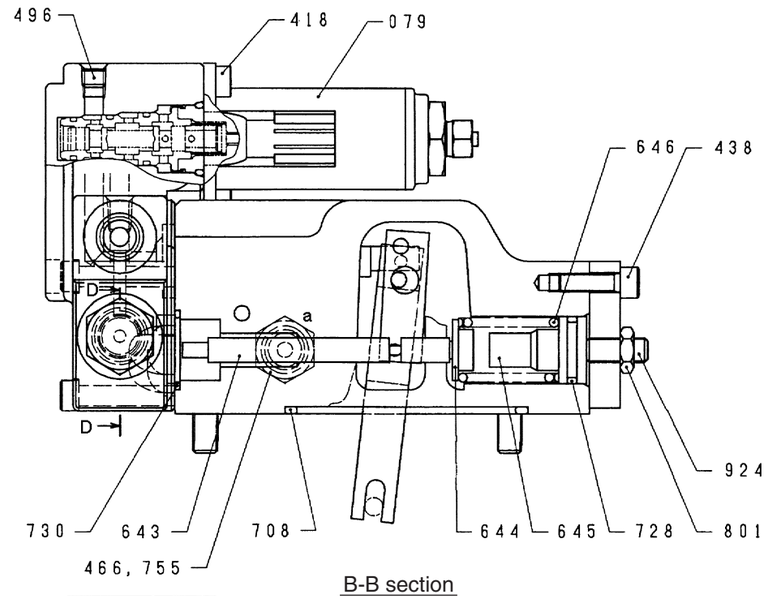

B-B section

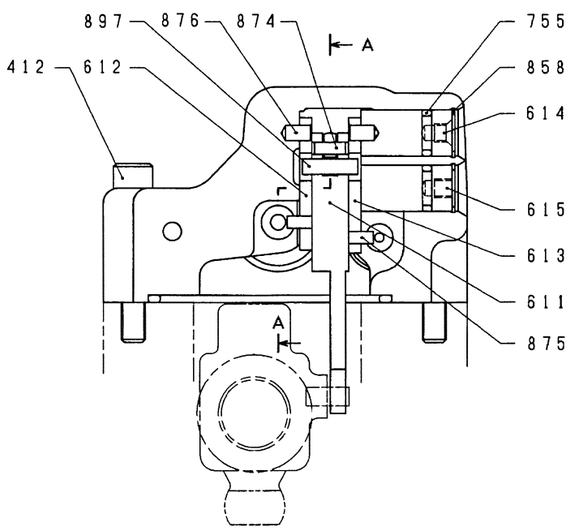

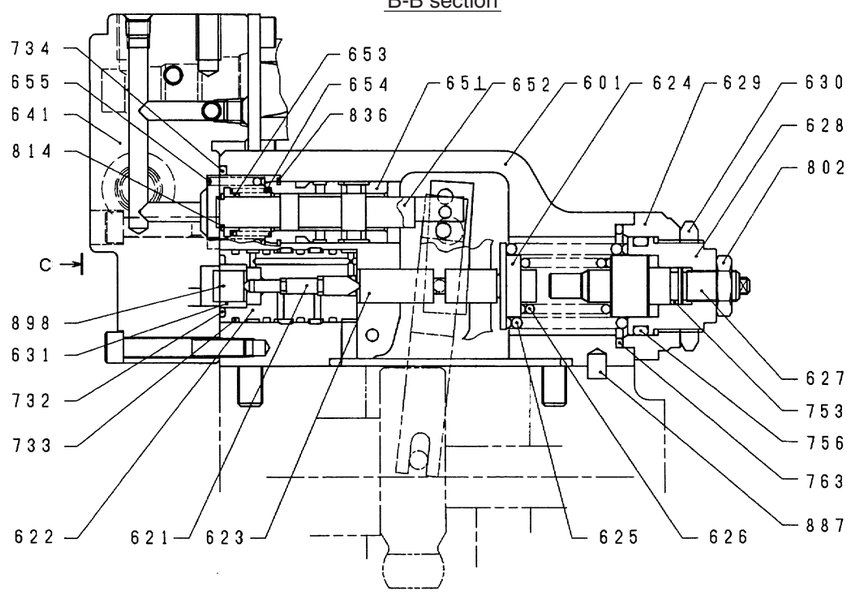

A-A section

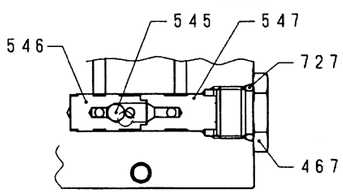

D-D section

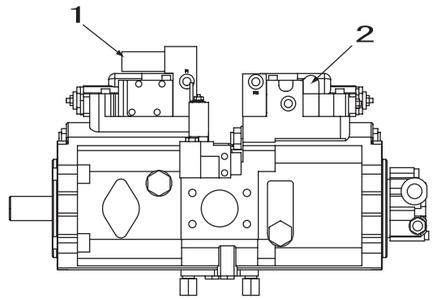

1	Front side regulator
2	Rear side regulator

Code	Part name	Q'ty	Component part number (quantities) or model
050	Shuttle valve, sub	1st	545 (1PC9), 546 (1PC), 547 (1PC)
079	Electromagnetic proportional pressure reduction valve	1st	KDRDE5K-31 / 30C50-1-2

Code	Part name	Q'ty
-	Regulator, sub	1
412	Hexagon socket head bolt	2
413	Hexagon socket head bolt	2
418	Hexagon socket head bolt	2
436	Hexagon socket head bolt	4
438	Hexagon socket head bolt	8
466	VP plug	1
467	VP plug	1
496	Insert plug	12
545	Steel ball	1
546	Seat 1	1
547	Seat 2	1
601	Casing	1
611	Feedback lever	1
612	Lever 1	1
613	Lever 2	1
614	Support point plug	1
615	Adjusting plug	1
621	Compensation piston	1
622	Piston case	1
623	Compensation rod	1
624	Spring seating (C)	1
625	Outer spring	1
626	Inner spring	1
627	Adjusting ring (C)	1
628	Adjusting screw (C)	1
629	Cover (C)	1
630	Lock nut	1
631	Pf sleeve	1
641	Pilot cover	1
643	Pilot piston	1
644	Spring seating (Q)	1
645	Adjusting ring (Q)	1
646	Pilot spring	1
651	Sleeve	1
652	Spool	1

Code	Part name	Q'ty
653	Spring seating	1
654	Return spring	1
655	Set spring	1
656	Blind cover	1
708	O-ring	1
722	O-ring	3
724	O-ring	9
725	O-ring	1
727	O-ring	1
728	O-ring	1
730	O-ring	1
732	O-ring	1
733	O-ring	4
734	O-ring	1
735	O-ring	1
753	O-ring	1
755	O-ring	3
756	O-ring	1
763	O-ring	1
801	Hexagon nut	1
802	Hexagon nut	1
814	Stop ring	1
836	Stop ring	1
858	Locking ring	2
874	Pin	1
875	Pin	2
876	Pin	2
887	Pin	1
897	Pin	1
898	Pin	1
924	Hexagon socket head stop screw	1

https://truckmanualshub.com/

Main Equipment Structure and Operation Explanation

(4) Rear side regulator internal structure diagram

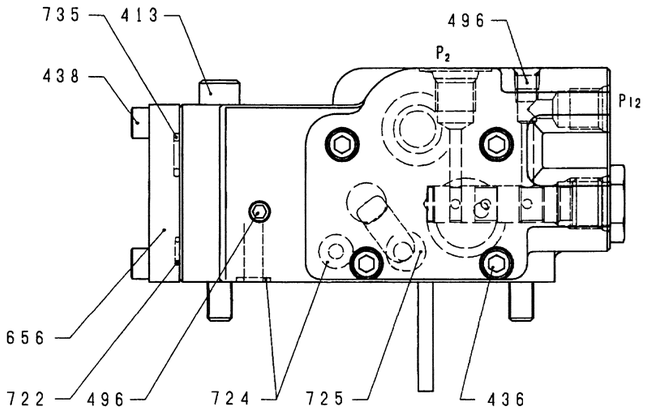

C view

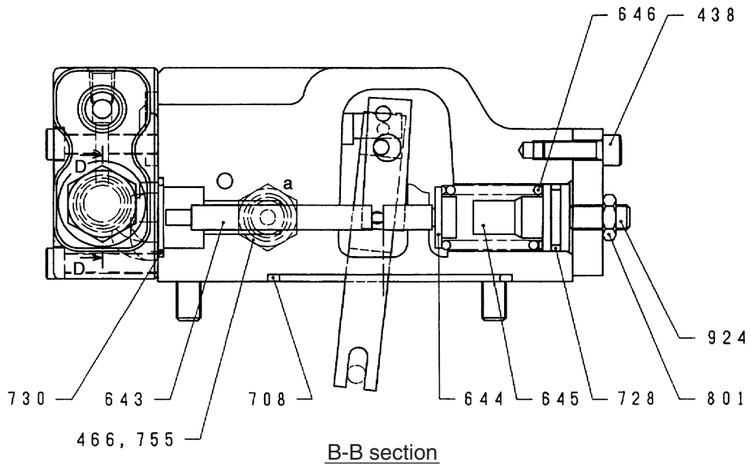

B-B section

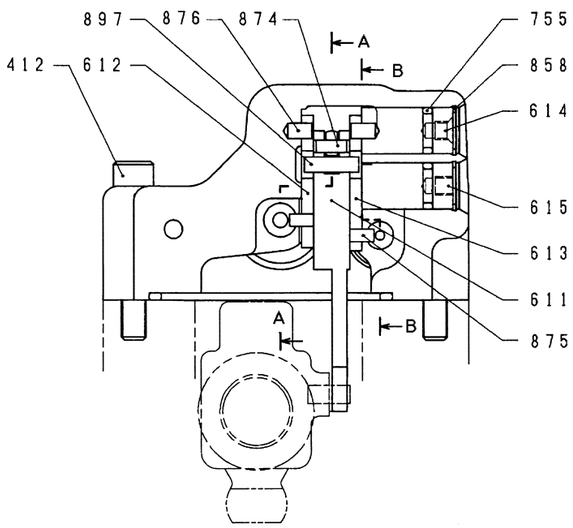

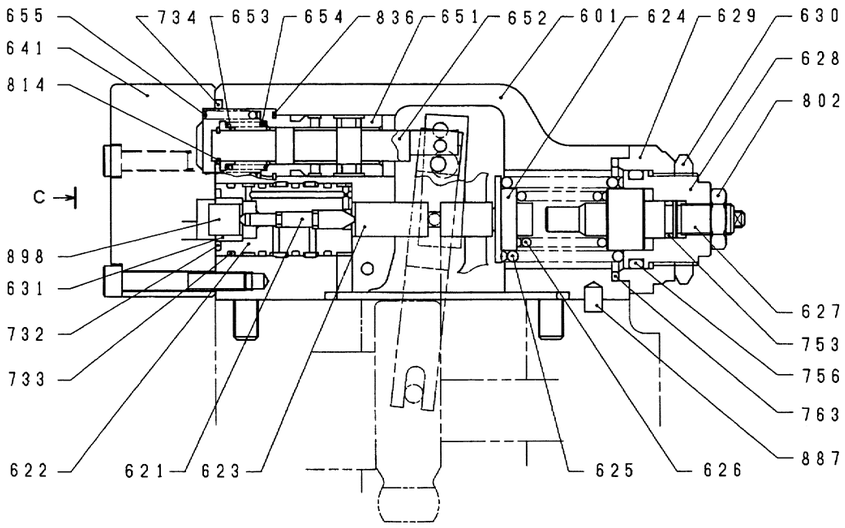

A-A section

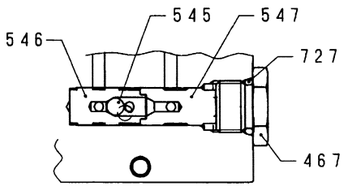

D-D section

Code	Part name	Q'ty	Component part number (quantities) or model
050	Shuttle valve, sub	1st	545 (1PC), 546 (1PC), 547 (1PC)

Code	Part name	Q'ty
-	Regulator, sub	1
412	Hexagon socket head bolt	2
413	Hexagon socket head bolt	2
436	Hexagon socket head bolt	4
438	Hexagon socket head bolt	8
466	VP plug	1
467	VP plug	1
496	Insert plug	6
545	Steel ball	1
546	Seat 1	1
547	Seat 2	1
601	Casing	1
611	Feedback lever	1
612	Lever 1	1
613	Lever 2	1
614	Support point plug	1
615	Adjusting plug	1
621	Compensation piston	1
622	Piston case	1
623	Compensation rod	1
624	Spring seating (C)	1
625	Outer spring	1
626	Inner spring	1
627	Adjusting ring (C)	1
628	Adjusting screw (C)	1
629	Cover (C)	1
630	Lock nut	1
631	Pf sleeve	1
641	Pilot cover	1
643	Pilot piston	1
644	Spring seating (Q)	1
645	Adjusting ring (Q)	1
646	Pilot spring	1
651	Sleeve	1
652	Spool	1
653	Spring seating	1

Code	Part name	Q'ty
654	Return spring	1
655	Set spring	1
656	Blind cover	1
708	O-ring	1
722	O-ring	3
724	O-ring	9
725	O-ring	1
727	O-ring	1
728	O-ring	1
730	O-ring	1
732	O-ring	1
733	O-ring	4
734	O-ring	1
735	O-ring	1
753	O-ring	1
755	O-ring	3
756	O-ring	1
763	O-ring	1
801	Hexagon nut	1
802	Hexagon nut	1
814	Stop ring	1
836	Stop ring	1
858	Locking ring	2
874	Pin	1
875	Pin	2
876	Pin	2
887	Pin	1
897	Pin	1
898	Pin	1
924	Hexagon socket head stop screw	1

https://truckmanualshub.com/

3. Gear Pump

(1) Gear pump internal structure diagram

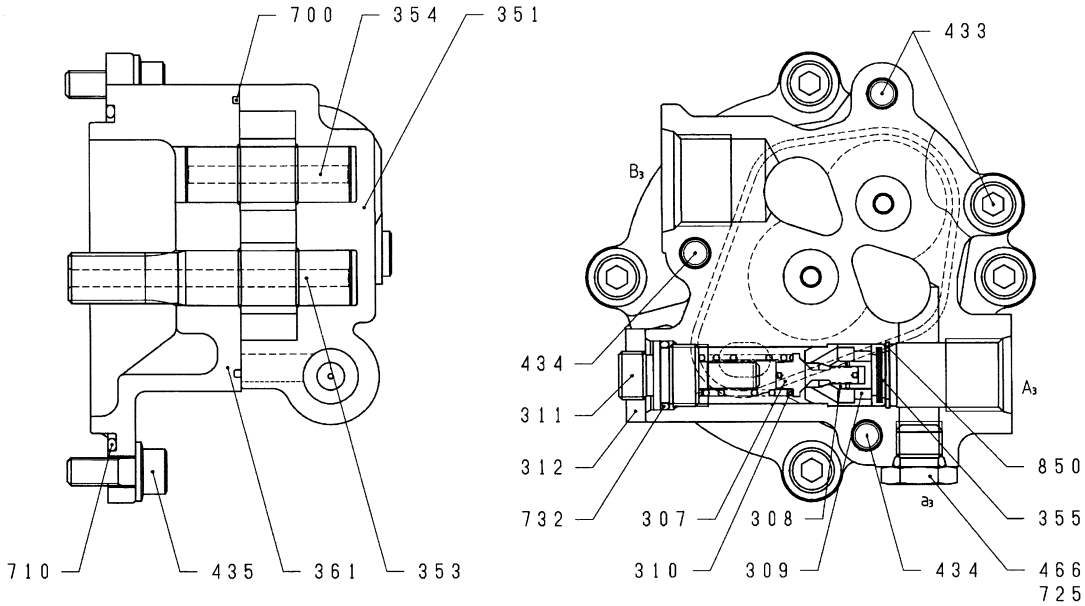

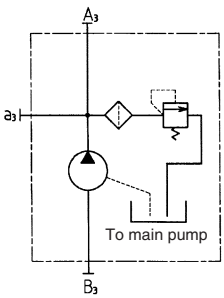

Hydraulic circuit diagram

Code	Part name	Q'ty	Component part number (quantities) and model
350	Gear case, sub	1st	307 (1PC) , 308 (1PC) , 351 (1PC) 353 (1PC) , 354 (1PC) , 361 (1PC)

Code	Part name	Q'ty
307	Poppet	1
308	Seat	1
309	Ring	1
310	Spring	1
311	Adjusting screw	1
312	Lock nut	1
351	Gear case	1
353	Drive gear	1
354	Driven gear	1
355	Filter	1

Code	Part name	Q'ty
361	Front case	1
433	Flange socket	2
434	Flange socket	2
435	Flange socket	4
466	VP plug	1
700	Angle ring	1
710	O-ring	1
725	O-ring	1
732	O-ring	1
850	Locking ring	1

(2) Explanation of structures and operations

Structure

The casing comprises the front case (361) and gear case (351). Inside the casing are installed the drive gear (353) and driven gear (354) pair and the relief valve for setting the discharge pressure.

The relief valve comprises the filter (355), poppet (307), seat (308), spring (310), ring (309), adjusting screw (311), and lock nut (312).

In order to prevent oil leaking to the outside, an angle ring (700) and O-ring (710) are mounted on the front case (361).

Operation

Suctioned in from suction port B_3 is discharged from discharge port A_3 by the drive and driven gears.

The discharged oil is held at the set pressure of 3.9 MPa by the relief valve.

Unnecessary discharge oil is drained from the drain port via the relief valve.

https://truckmanualshub.com/

Motor

1. Travel Motor

(1) Travel motor operation explanation

1) Structural diagram

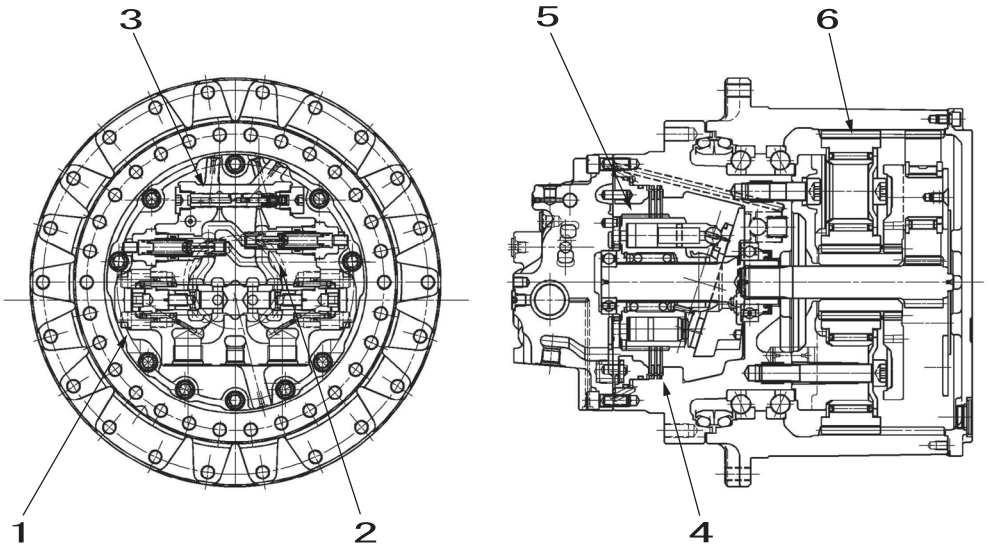

Figure 1 Motor structural diagram

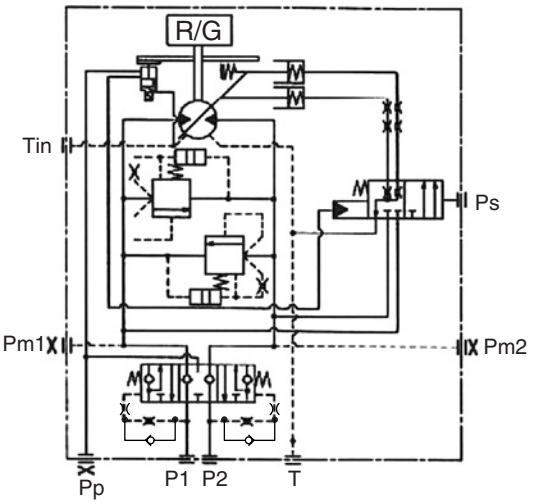

Automatic 2-speed type
Figure 2 Hydraulic circuit diagram

1	Double counter balance valve	4	Parking brake
2	Crossover relief valve	5	Piston motor
3	2-speed switching mechanism	6	Reduction gear

https://truckmanualshub.com/

2) Structure

The swash plate type piston motor with case rotation type reduction gear for the open circuit comprises

[1] the double counter balance valve for controlling the speed of the motor according to the feed flow

[2] the crossover relief valve for determining the motor drive force and braking force

[3] the 2-speed switching mechanism for switching the motor speed between two speeds, low speed and high speed

[4] the parking brake function that locks the motor shaft with a mechanical brake when the motor is stopped,

[5] the piston motor that converts the fluid energy of the pressurized oil sent from the hydraulic pump into mechanical energy and outputs high-speed, low-torque power

[6] the reduction gear that converts the high-speed, low-torque power output from the piston motor into low-speed, high-torque power and outputs it

The fluid energy of the pressurized oil sent from the hydraulic pump is converted into mechanical energy by the piston motor and the high-speed, low-torque rotation power is transmitted to the reduction gear.

At the reduction gear, the rotation power transmitted from the piston motor is converted into low-speed, high-torque rotation power and this power is transmitted to the devices that use the MAG-170VP-3800G series for this open circuit.

Structure functions

[1] Double counter balance valve

The purpose of this valve is to control the speed of the motor according to the feed flow. Therefore, motor rotation getting away due to external load is prevented.

[2] Crossover relief valve

The purpose of this valve is to determine the motor drive force and braking force. Therefore, this valve has a shockless function to soften the shock of motor starting and stopping and provide good operability. Also, this valve is formed into one compact unit with the double counter balance valve to make up the brake circuit.

[3] 2-speed switching mechanism

This motor has a 2-speed switching mechanism that can switch the motor speed between two speeds, low speed and high speed.

Automatic 2-speed function

The low-speed mode fixed position and automatic 2-speed position can be selected. When the automatic 2-speed position is selected, the motor capacity is selected according to the motor load pressure and the motor is switched automatically between low speed and high speed.

[4] Parking brake

The parking brake function is built into the piston motor. When the motor is stopped, the mechanical brake operates to prevent the motor from being rotated by external load.

[5] Piston motor

A swash plate type piston motor is used as the piston motor. This piston motor converts the fluid energy of the pressurized oil sent from the hydraulic pump into mechanical energy and outputs high-speed, low-torque power.

[6] Reduction gear

As the reduction gear structure, a simple planetary two-stage reduction gear structure of the casing rotation type is used. This reduction gear converts the high-speed, low-torque power output from the piston motor into low-speed, high-torque power and outputs it from the reduction gear casing.

Also, a floating seal is used to prevent mud, sand, water, etc. from infiltrating from the outside.

The component devices above are formed into one compact unit that provides high reliability and superior performance.

https://truckmanualshub.com/

3) Explanation of operation of functions

a) Double counter balance valve

As the roles of the double counter balance valve, there are

[1] the overrun prevention function that controls the piston motor speed to match feed quantity in the state of rotation at or higher than the speed determined by the flow feed from the piston motor for the external load (below, pumping action),

[2] the brake function used together with the crossover relief valve to make up the brake circuit that gradually stops the rotation of the piston motor by applying braking force to the piston motor rotation,

[3] high-pressure selection shuttle valve function for releasing the parking brake through its own pressure

Figure 3 shows a structural diagram of the standard double counter balance valve.

This section explains the operations of each function using this standard double counter balance valve.

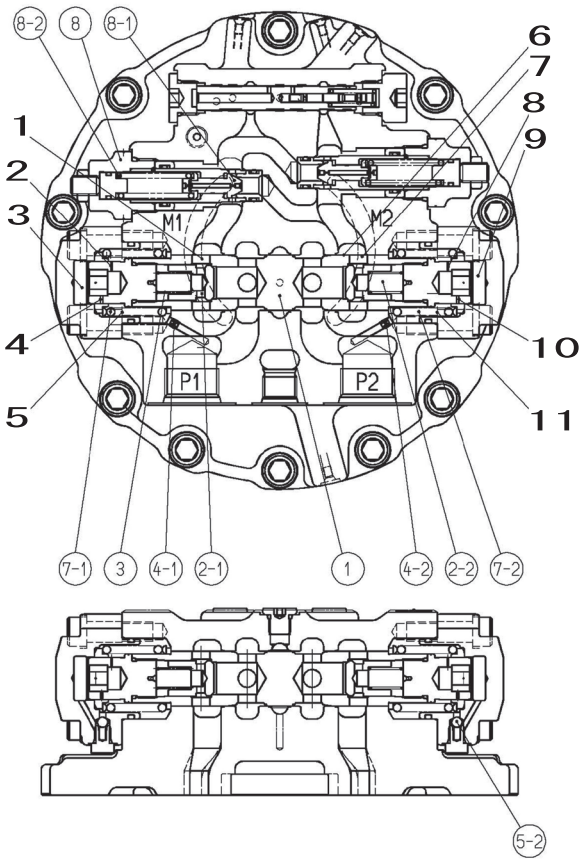

Figure 3 Double counter balance valve structural diagram (stopped state)

1	Oil path C1	5	Spring chamber 1	9	Damper chamber A2
2	Orifice D1	6	Oil path B	10	Orifice D2
3	Damper chamber A1	7	Oil path C2	11	Spring chamber 2
4	Orifice D2	8	Orifice D3		

A.Stopped state (Figure 3)

When the control valve is in neutral (the motor stopped), since pressure is generated at neither the P1 port nor the P2 port, the M1 and M2 ports are locked (hydraulically) with the spool (1) and the check valve (2) and the piston motor does not rotate.

https://truckmanualshub.com/

B. Motor starting (Figure 4)

When the pressurized oil discharged from the hydraulic pump is led to the double counter balance valve P1 port, the check valve (2-1) moves to the left against the spring (3), the oil path C1 is opened, pressurized oil flows from the M1 port into the piston motor and attempts to rotate the piston motor.

On the other hand, the return oil from the piston motor, flows from the M2 port into the double counter balance valve, but the flow is prevented by the check valve (2-2) and the hydraulic pump discharge pressure rises.

Therefore, the P1 port side goes to high pressure, the pressurized oil operates through the orifice (4-1) and the ball check (5-1) on the spring chamber 1 and the damper chamber A1, and that oil pressure moves the plunger (1) to the right against the opposite side spring (7-2) with force proportional to the pressure.

At this time, the M2 port return oil flows through the oil path B in the circumferential notch section of the plunger (1) and into the P2 port while generating back pressure at the M2 port and this return oil returns to the tank through the control valve and the piston motor starts rotating.

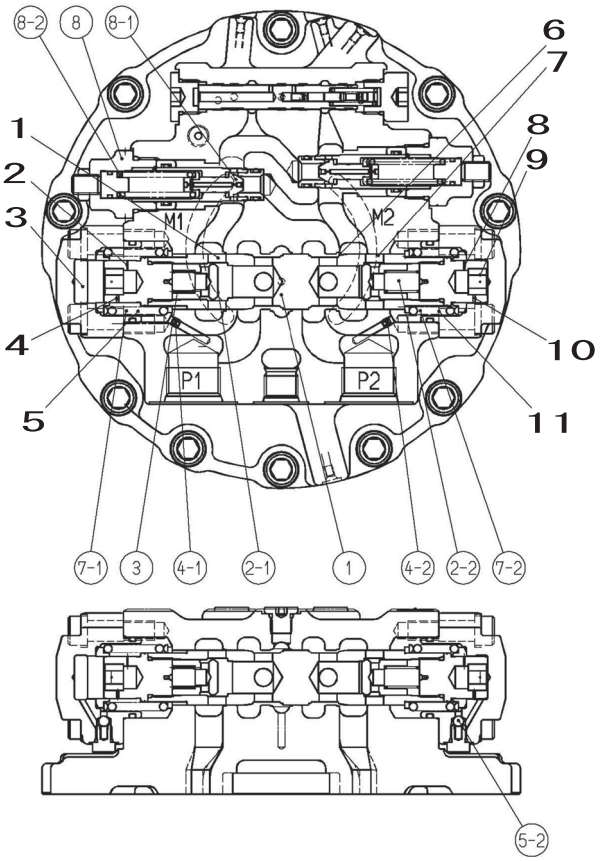

Figure 4 Double counter balance valve when motor rotating

1	Oil path C1	5	Spring chamber 1	9	Damper chamber A2
2	Orifice D1	6	Oil path B	10	Orifice D2
3	Damper chamber A1	7	Oil path C2	11	Spring chamber 2
4	Orifice D4	8	Orifice D3		

https://truckmanualshub.com/

C. Counter balance function (Figure 4)

During piston motor rotation, if the piston motor is forced to rotate by the external load, pumping action occurs in the piston motor, and it runs wild. In this case, since the P1 port section becomes the suction side of the pump action, that pressure drops. At the same time, the pressure also drops in the spring chamber 1 and the damper chamber A1. Therefore, the plunger (1) is moved to the left by the spring (7-2), oil path B is closed, and when the return oil flow stops, the suction side flow stops at the same time.

When the flow of oil through oil path B is stopped, in an instant, the P1 port side pressure rises again due to the hydraulic pump discharge oil and this moves the plunger (1) to the right.

In this way, the plunger (1) moves in small steps when there is pumping action due to the external load to hold the opening surface area of oil path B in an appropriate state. Therefore, rotation of the piston motor at a speed appropriate to the feed flow from the hydraulic pump is maintained and vacuum in the hydraulic circuit is prevented. This prevents the piston motor from running wild.

D. Piston motor braking (Figure 5)

The double counter balance valve makes up the brake circuit together with the crossover relief valve.

When the control valve is returned to neutral, the pressurized oil from the hydraulic pump is cut off and the P1 and P2 ports go to the same pressure. Therefore, the plunger (1) moves to the neutral position, and the oil path B opening surface area becomes small.

On the other hand, because the piston still attempts to rotate due to the inertial energy of the external load (piston motor pumping action), the M2 port pressure rises and acts as a braking force on the rotation of the piston motor.

At this time, when the M2 port side pressure reaches the set pressure for the relief valve (8), the M1 port side poppet (8-1) moves to the left against the spring (8-2) and the pressurized oil escapes to the M1 port side. In this way, the shock pressure due to the M2 port side inertial energy is controlled and at the same time the occurrence of a vacuum on the M1 port side is prevented.

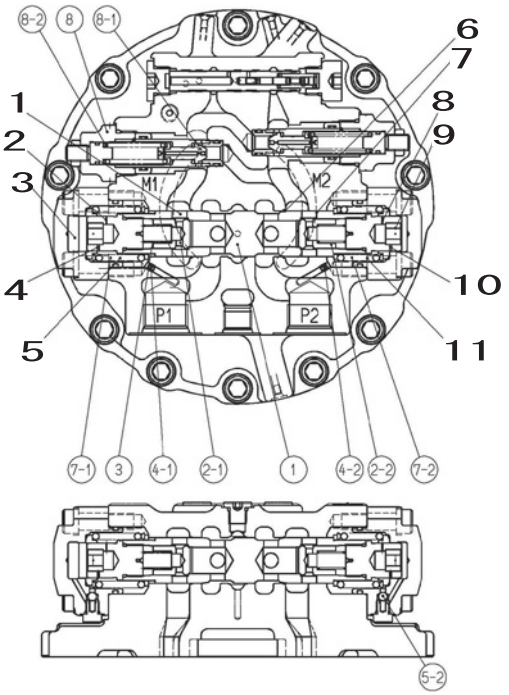

Figure 5 Double counter balance valve and relief valve during piston motor control

1	Oil path C1	5	Spring chamber 1	9	Damper chamber A2
2	Orifice D1	6	Oil path B	10	Orifice D4
3	Damper chamber A1	7	Oil path C2	11	Spring chamber 2
4	Orifice D2	8	Orifice D3		

https://truckmanualshub.com/

E. High-pressure selection shuttle valve function (Figure 6 and Figure 7)

The double counter balance valve has a high-pressure selection shuttle valve function added for releasing the parking brake through its own pressure.

When pressurized oil is fed from the P1 port, the plunger (1) moves to the right side creating the state in Figure 6. Therefore, the motor case drain oil path F is closed, the oil path D to the parking brake cylinder chamber E is opened, the pressurized oil is led into oil path G via the orifice and flows into the parking brake cylinder chamber E, releasing the parking brake.

Also, when the piston motor stops, the plunger (1) returns to the neutral state of Figure 7, the oil path D closes, and the motor case oil path F opens, so the oil in the parking brake cylinder chamber E is led to the motor case drain and the parking brake operates.

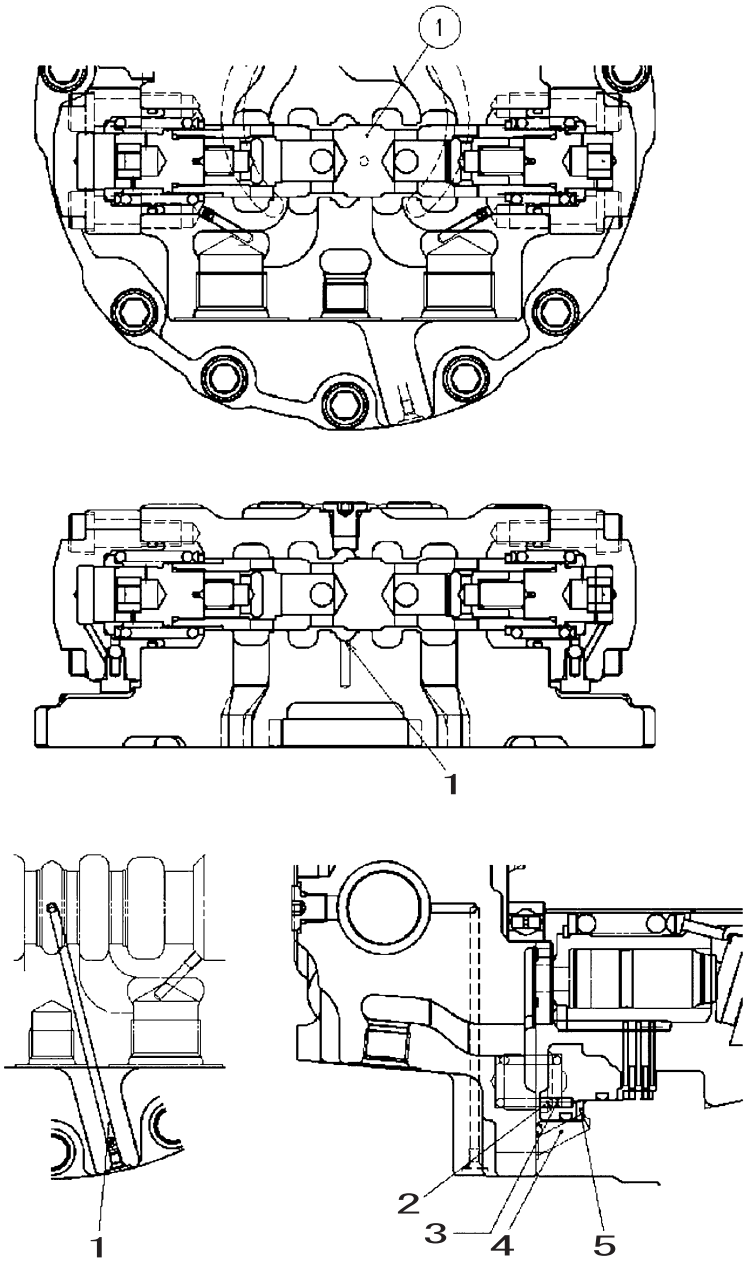

Figure 6 High-pressure selection function High-pressure selection

1	Oil path D	4	Oil path G
2	Oil path F	5	Cylinder chamber E
3	Orifice		

https://truckmanualshub.com/

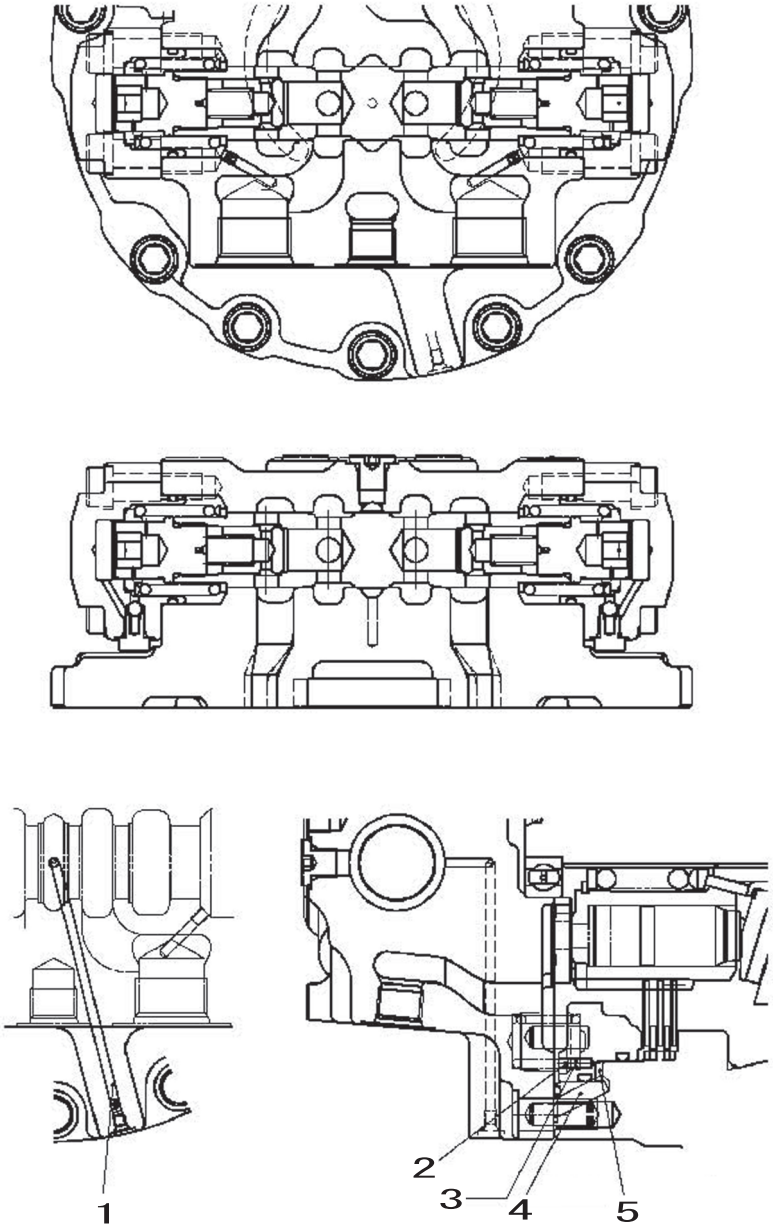

Figure 7 High-pressure selection function Release to motor case drain

1	Oil path D	4	Oil path G
2	Oil path F	5	Cylinder chamber E
3	Orifice		

https://truckmanualshub.com/

b) Crossover relief valve

Figure 8 shows the structure of the relief valve. This relief valve has a shockless function for reducing the shock that occurs at the start of startup and braking of the differential surface area type direct action relief valve.

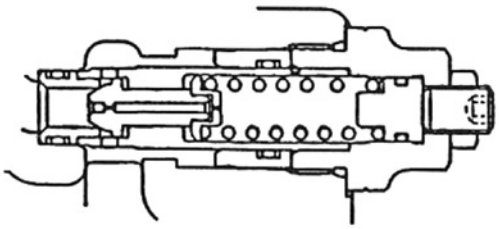

Figure 8 Structure of relief valves

A. Relief valve operation and functions (Figure 9)

When the control valve moves and the piston motor is started up or braked, when the poppet (2-9-2) front surface pressure rises above the set pressure, this pressure wins out over the spring (2-9-5), the poppet (2-9-2) moves to the right and separates from the poppet (2-9-3), and the high-pressure oil at the poppet (2-9-2) front surface bypasses to the low-pressure oil path. In this way, by allowing the high-pressure oil to bypass to the low-pressure oil path, the shock pressure due to the inertial energy of the high-pressure oil path is controlled and at the same time the occurrence of a vacuum in the low-pressure oil path is prevented.

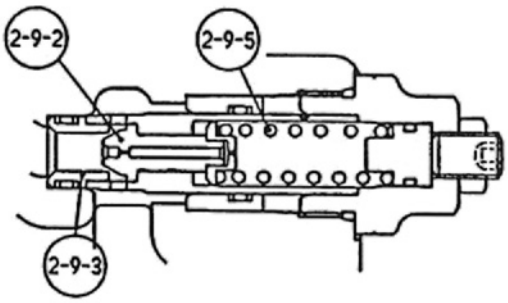

Figure 9 Operation of relief valves

B. Shockless function (Figure 10)

When the relief valve starts to operate, the shockless piston (2-9-2) moves to the left. Therefore, inside the spring chamber D, the pressure is held low. Therefore, the surface of the poppet (2-9-2) pressurized area becomes S1, a quite large pressurized area compared to the pressurized area S1-S2 for the normal relief valve setting.

Therefore, while the shockless piston (2-9-9) movement is completing, the relief valve operating pressure is held to about 1/3 of the normal set pressure, absorbing the shock pressure due to the inertial energy of the high-pressure oil path.

When the shockless piston movement is complete, the pressure inside the spring chamber D rises, the pressure in front and behind the poppet (2-9-2) become equal, and the relief valve operates with its normal set pressure.

Operating the relief valve in two stages in this way reduces the shock that occurs when the piston motor is started or braked and provides good operability. Figure 10 compares the pressure waveforms of the conventional type and the shockless type.

https://truckmanualshub.com/

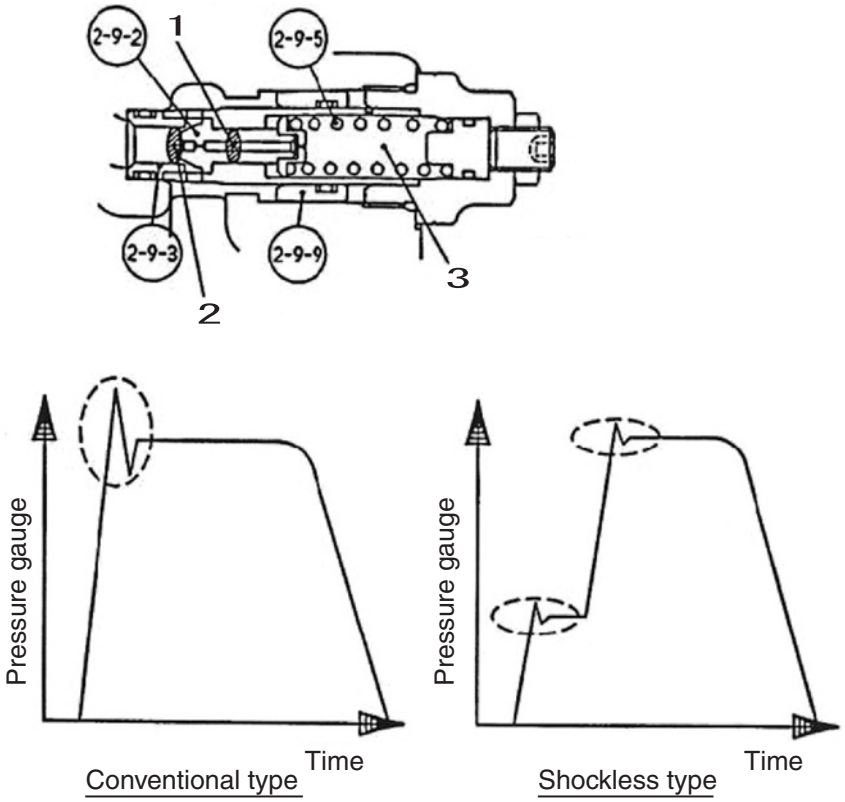

Figure 10 Shockless function and pressure wave comparison

1	Area S2
2	Area S1
3	Spring chamber D

https://truckmanualshub.com/

c) Automatic 2-speed function

A. Motor low-speed (high-capacity) position

Figure 11 shows the state with the motor capacity fixed to the low-speed (high-capacity) position. When the speed control switch is set to low speed and the pilot pressure acting on the Ps port is released to the tank, the motor capacity control valve built into the motor is fixed to the low-speed (high-capacity) position.

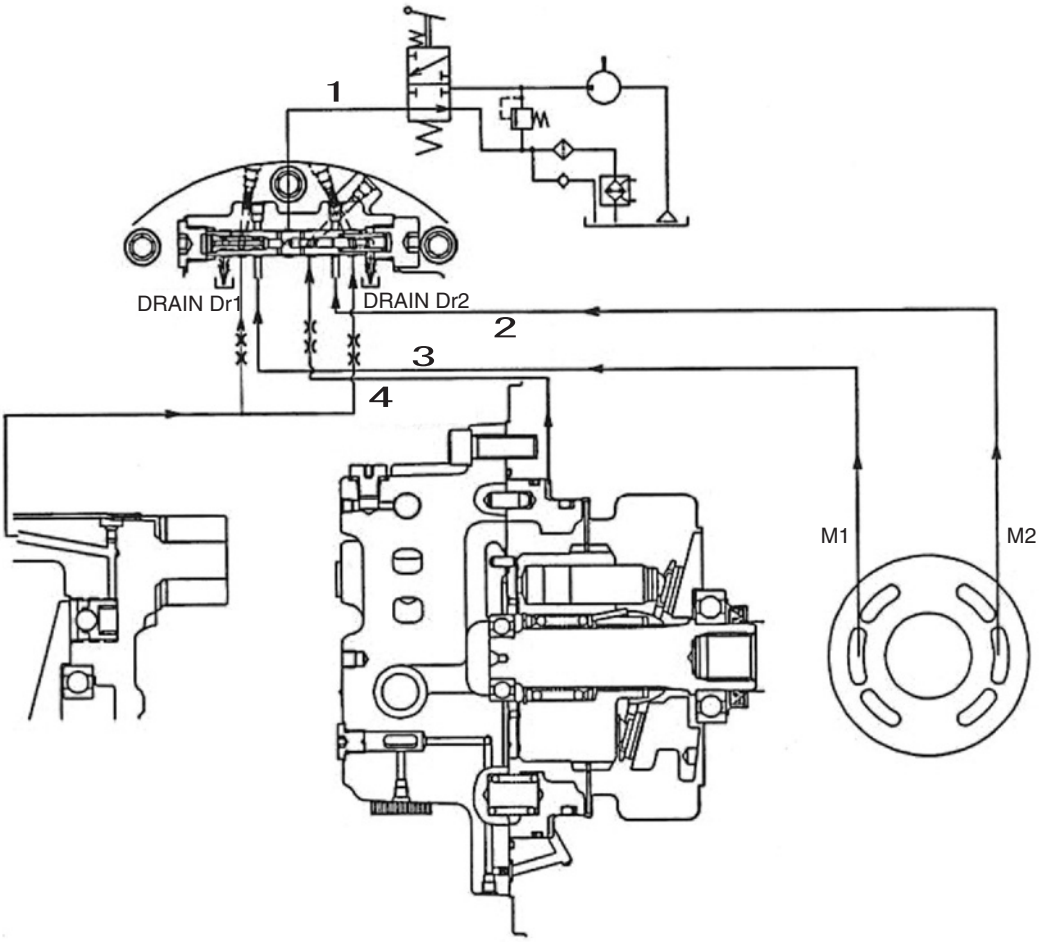

Figure 11 Motor low-speed (high-capacity) fixed mode

1	Pilot pressure
2	Pm2 pressure in motor
3	Pm1 pressure in motor
4	Pin motor load pressure

https://truckmanualshub.com/

B. Automatic 2-speed position that selects the motor capacity according to the load pressure

Figure 12 shows the state of the automatic 2-speed position that selects the motor capacity according to the load pressure.

When the speed control switch is set to high speed and the regulation pressure is allowed to operate on the Ps port, the pressurized oil operating on the Ps port operates on the front surface of the motor capacity control valve built into the motor and the position becomes the automatic 2-speed position that switches the motor capacity according to the load pressure on the motor.

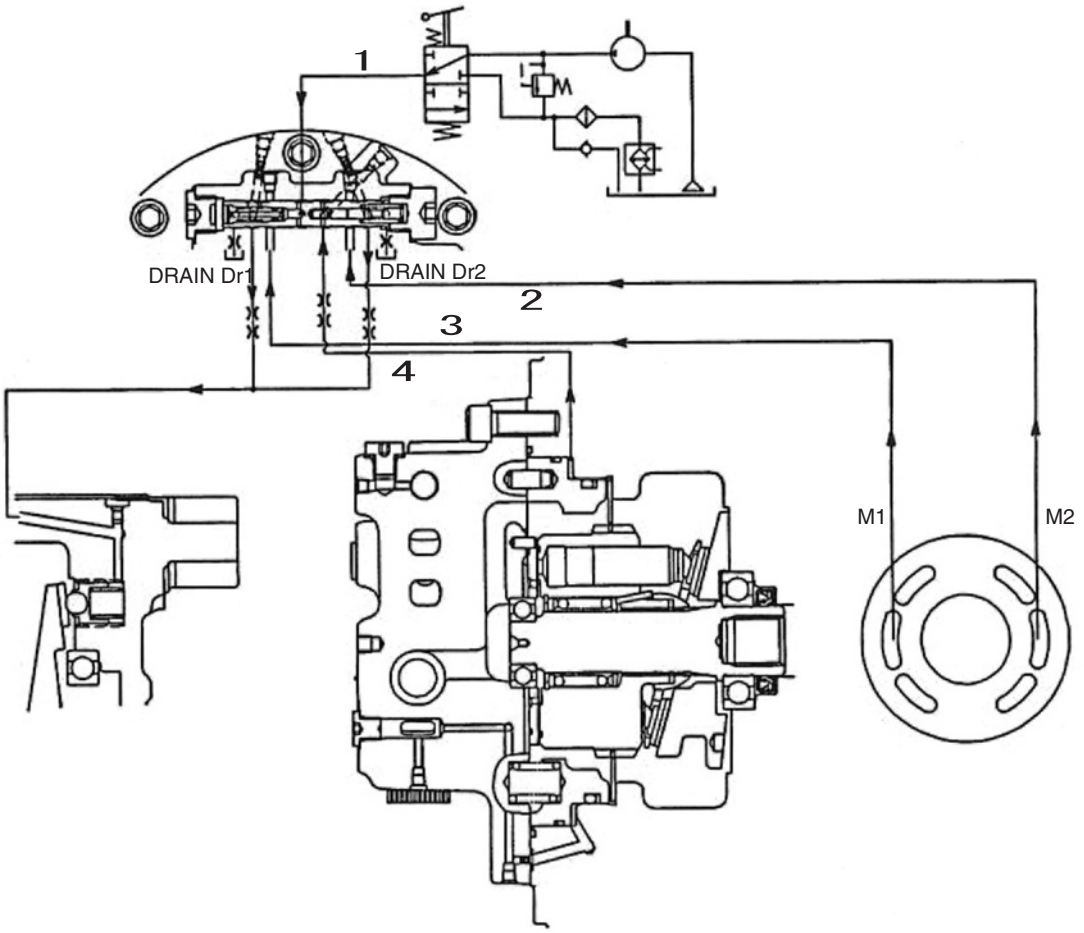

Figure 12 Automatic 2-speed control mode using load pressure

1	Pilot pressure
2	Pm2 pressure in motor
3	Pm1 pressure in motor
4	Pin motor load pressure

https://truckmanualshub.com/

C. High-speed motor state for automatic 2-speed position

Figure 13 shows the high-speed motor state for the automatic 2-speed position.

When the regulation pilot pressure is allowed to operate on the Ps port, the pilot pressurized oil operates on the pilot hydraulic chamber on the motor capacity control valve front surface via oil path A and this pushes the motor capacity control valve to the right. Also, the load pressure Pin on the motor operates on the motor load pressure chamber via oil path B and pushes the motor capacity control valve to the left. When Pin is lower than the motor capacity control pressure P determined by the ratio of the pilot pressure pressurized area and the motor load pressure pressurized area, the motor capacity control valve is held in the state in Figure 13 and the motor operates in high-speed (low-capacity) mode.

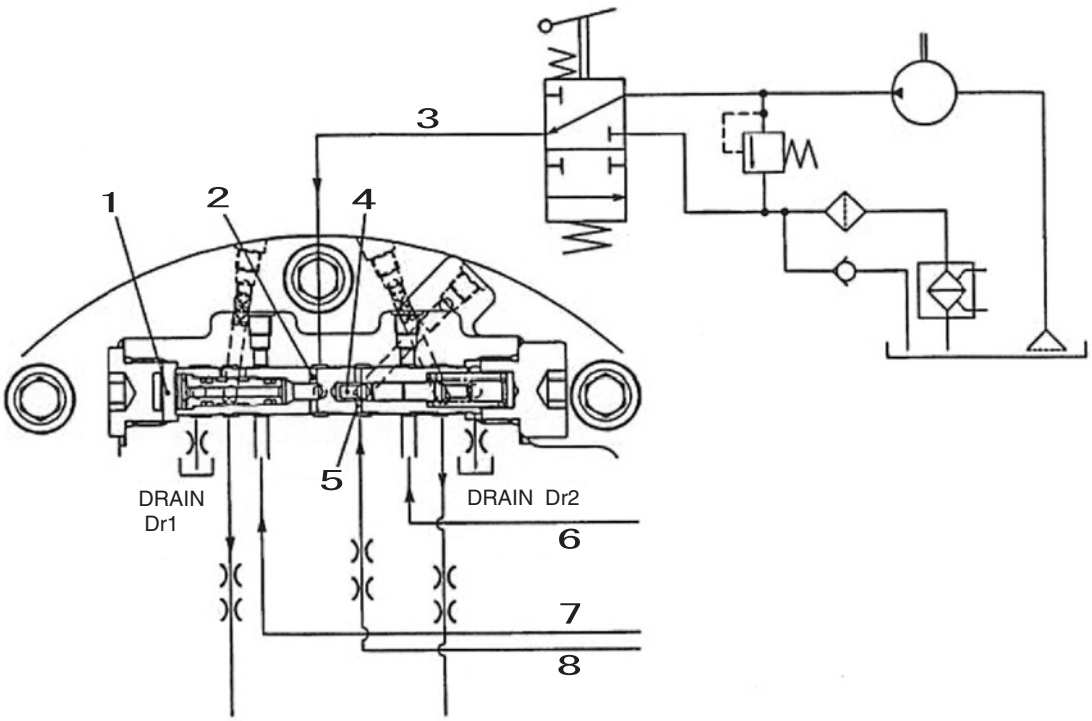

Figure 13 Motor high-speed (low-capacity) position for automatic 2-speed mode

1	Pilot oil pressure chamber	5	Oil path B
2	Oil path A	6	Pm2 pressure in motor
3	Pilot pressure	7	Pm1 pressure in motor
4	Motor load pressure chamber	8	Pin motor load pressure

https://truckmanualshub.com/

D. Low-speed motor state for automatic 2-speed position

Figure 14 shows the low-speed motor state for the automatic 2-speed position.

When the load pressure Pin on the motor rises and becomes higher than the motor capacity control pressure P discussed above, the motor capacity control valve moves to the left, switching the motor to low-speed (high-capacity) mode, so the motor operates at low speed.

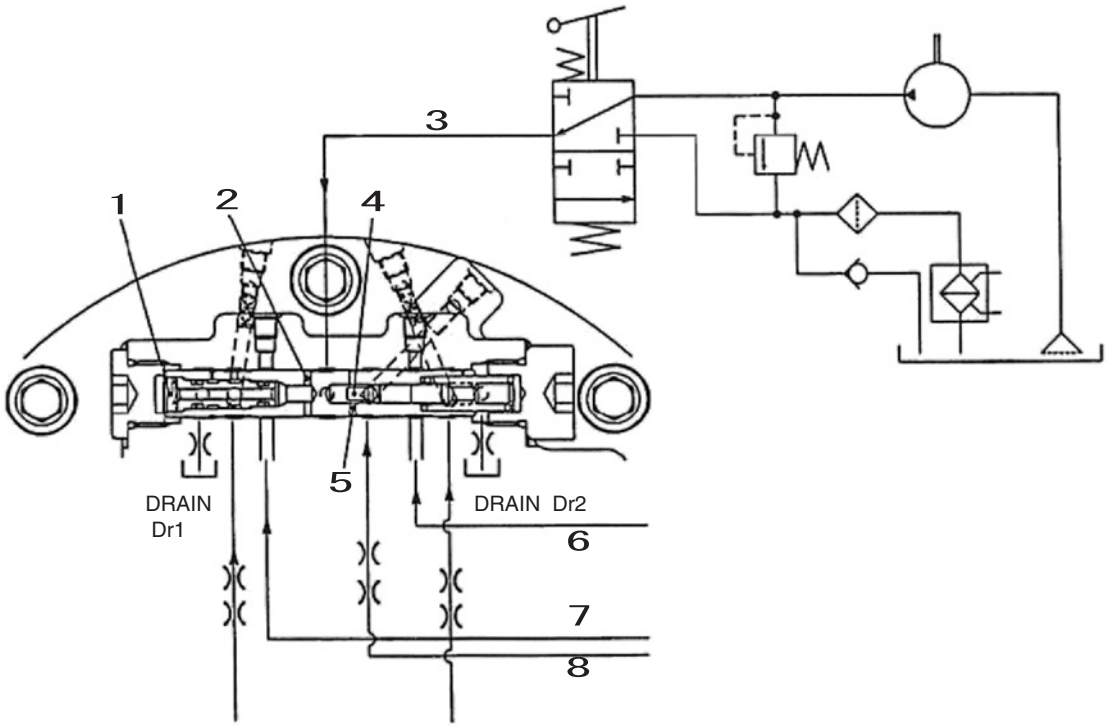

Figure 14 Motor low-speed (high-capacity) position for automatic 2-speed mode

1	Pilot oil pressure chamber	5	Oil path B
2	Oil path A	6	Pm2 pressure in motor
3	Pilot pressure	7	Pm1 pressure in motor
4	Motor load pressure chamber	8	Pin motor load pressure

https://truckmanualshub.com/

d) Parking brake function

Figure 15 shows a structural diagram of the parking brake section.
The parking brake is made up of the disks (1) coupled with the cylinder block, the friction plate (2) mounted between the disks, the brake piston (3), and the spring (4) that applies force to the brake piston.

A. Releasing the parking brake (Figure 15)

When pressurized oil is fed from the P1 port and attempts to start driving the piston motor, when the "high-pressure selection shuttle valve function" explained in Item E of (3) 1) "Double counter balance valve" leads pressurizes oil to the parking brake cylinder chamber E via oil path D, the hydraulic force operates on the brake piston (3) and moves it to the left against the spring (4). As a result, the force pressing the disks (1) disappears, the disks (1) enter the free state, and the parking brake is released.

B. Operating the parking brake (Figure 16)

When the control valve is returned to the neutral position, the feed of pressurized oil to the P1 port is cut off, and an attempt is made to stop the piston motor, because the "high-pressure selection shuttle valve function" explained in Item E of (3) 1) "Double counter balance valve" connects oil path D to motor case drain oil path F, the pressurized oil in the parking brake cylinder chamber E is led to the motor case drain and the pressure drops. Therefore, the brake piston (3) is moved to the right side by the spring (4), the disks (1) are tightened with the force of the spring (4) by the brake piston (3) and motor case, so the piston motor shaft is locked and the parking brake operates.

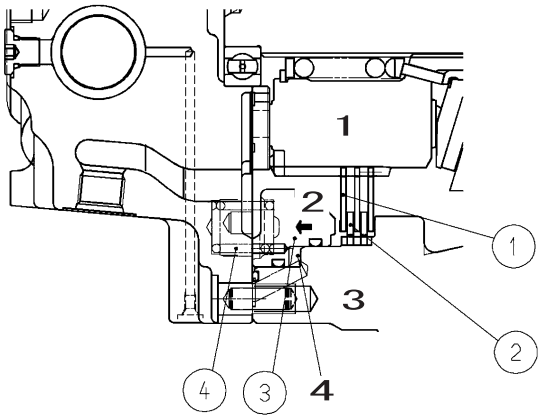

Figure 15 Parking brake released state

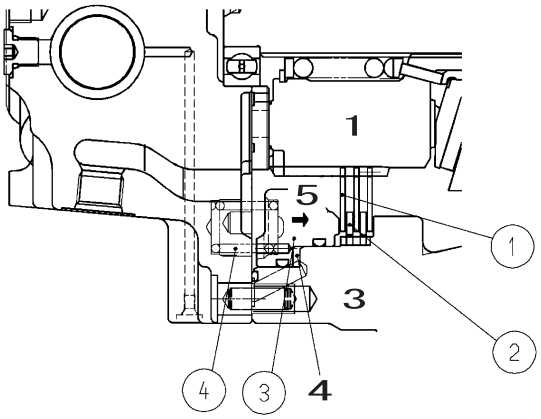

Figure 16 Parking brake engaged state

1	Cylinder block	4	Cylinder chamber E
2	Hydraulic pressure force	5	Spring force
3	Motor case		

https://truckmanualshub.com/

e) Piston motor

A swash plate type piston motor is used as the piston motor.
Figure 17 shows a structural diagram of the piston motor.
Nine pistons (4-2) are incorporated in the cylinder block (4-1) and the end of the cylinder block (4-1) touches a valve plate (22) that has two sausage-shaped ports, B and C. The pressurized oil discharged from the hydraulic pump flow in from the P1 port or the P2 port and while the piston motor rotates, flows out from the P2 port or P1 port.
Also, the drain oil in the case that has leaked from the sliding sections and the gap returns to the hydraulic tank from the base plate (2-1) T1 or T2 port.

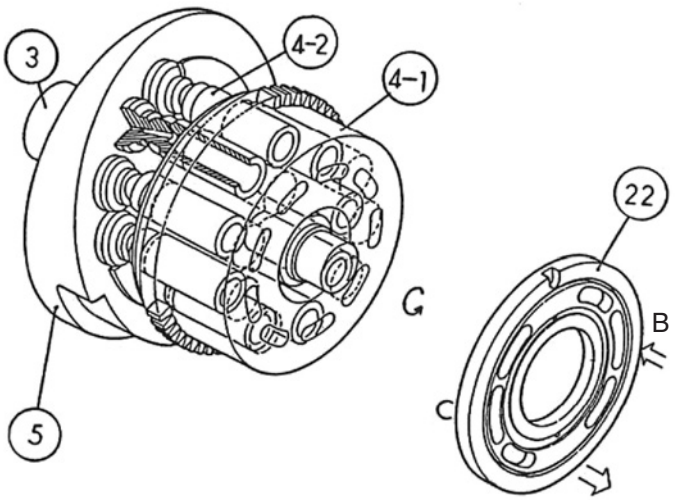

Figure 17 Piston motor structural diagram

[1] The high-pressurized oil from the P1 port enters the valve plate (22) sausage-shaped B port, the piston (4-2) is pressurized, and the top of the swash plate (5) rotates and moves from top dead center to bottom dead center.

[2] The P2 port becomes the low pressure side and while the piston (4-2) rotates and moves from bottom dead center to top dead center, the oil is discharged to the P2 port via the valve plate (22) sausage-shaped C port.

[3] Accompanying the reciprocal movement of the piston (4-2), the cylinder block (4-1) and the shaft (3) spline coupled to it rotate in the counter-clockwise direction of the arrow in the figure.

[4] When the piston motor rotates clockwise, the P1 port side becomes the low-pressure side and the P2 port side becomes the high-pressure side.
In this way, the piston motor converts the fluid energy of the pressurized oil sent from the hydraulic pump into mechanical energy and outputs high-speed, low-torque rotation power. Also, the piston motor torque and speed are determined by the pressure and flow. Therefore, the larger the pressure and flow, the higher the piston motor torque and speed.

https://truckmanualshub.com/

f) Reduction gear

Figure 18 shows a structural diagram of the reduction gear.
The reduction gear structure combines in two stages the simply planetary reduction gear unit made up of the drive gear, sun gear, holder, planetary gear, and ring gear (with teeth cut in the inner diameter of the housing).

When pressurized oil flows into the piston motor, the piston motor shaft rotates at high speed and power is input to the reduction gear section. In the reduction gear section, this high-speed rotation has its speed reduced in two stages by the simple planetary 2-stage reduction system. Low-speed, high-torque output is obtained from the rotation of the housing with ring gears (1-3) and (2-3).

A. 1st stage reduction section operation

The 1st stage reduction section comprises the drive gear (1-1), planetary gear A (1-2), ring gear (1-3), holder (1-4), needle bearing (1-5), and inner race (1-6).
The planetary gear A (1-2) meshes with the drive gear (1-1). When the drive gear (1-1) rotates clockwise, the planetary gear A (1-2) rotates counter-clockwise. On the other hand, since it meshes with the ring gear, it kicks the ring gear and tries to revolve clockwise around the circumference of the drive gear (1-1).
Because the planetary gear (1-2) is fixed in a state in which it rotates freely on the holder (1-4) via the needle bearing (1-5), this clockwise revolution movement is transmitted to the holder (1-4) and the holder (1-4) starts to rotate in the clockwise direction.
Also, since the holder (1-4) is spline coupled with the 2nd stage sun gear (2-1), this holder (1-4) rotation is transmitted to the 2nd stage sun gear (2-1).

B. 2nd stage reduction section operation

The 2nd stage reduction section comprises the sun gear (2-1), planetary gear B (2-2), ring gear (2-3), holder (2-4), needle bearing (2-5), and inner race (2-5).
The planetary gear B (2-2) meshes with the sun gear (2-1). When the sun gear (2-1) rotates clockwise, the planetary gear B (2-2) rotates counter-clockwise.
The planetary gear B (2-2) is fixed in a state in which it rotates freely on the holder (2-4) via the needle bearing (2-5). Furthermore, the holder (2-4) is coupled to the flange (5) by the bolts (3) and (4) and the flange (5) is fastened to the frame of the machine main unit, so it cannot rotate.
Therefore, the planetary gear B (2-2) cannot revolve as in the 1st stage reduction section and rotates counter-clockwise at the position at which it was incorporated. Also, because the planetary gear B (2-2) is meshed with the ring gear, the counterclockwise revolution of the planetary gear B (2-2) is transmitted to the ring gear and the ring gear is rotated counter-clockwise.
Through the above action, the housings (1-3) and (2-3) with the ring gear cut into their inner diameters receive the force of the planetary gears (2-2) and (1-2) and rotate. This transmits power to the driven section of the machine main unit which is coupled with the housings (1-3) and (2-3).

https://truckmanualshub.com/

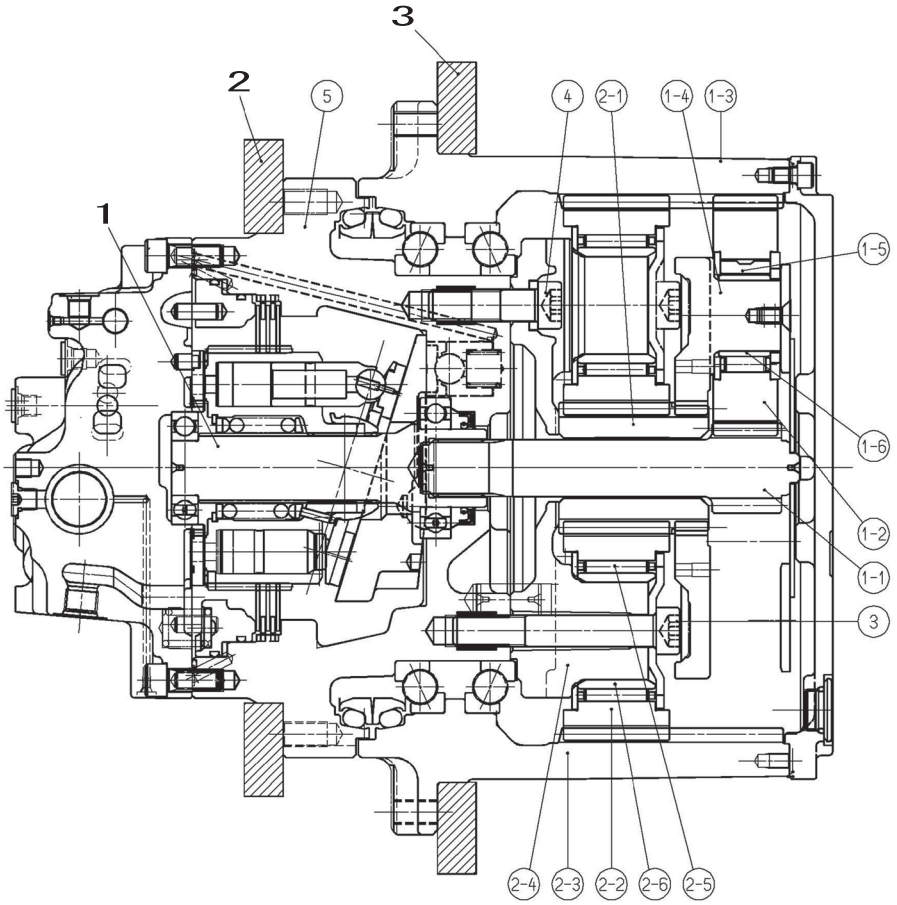

Figure 18 Reduction gear structural diagram

1	Piston motor shaft
2	Connection to driven section of machine
3	Fastened to machine main unit frame

https://truckmanualshub.com/

(2) Travel motor internal structure diagram

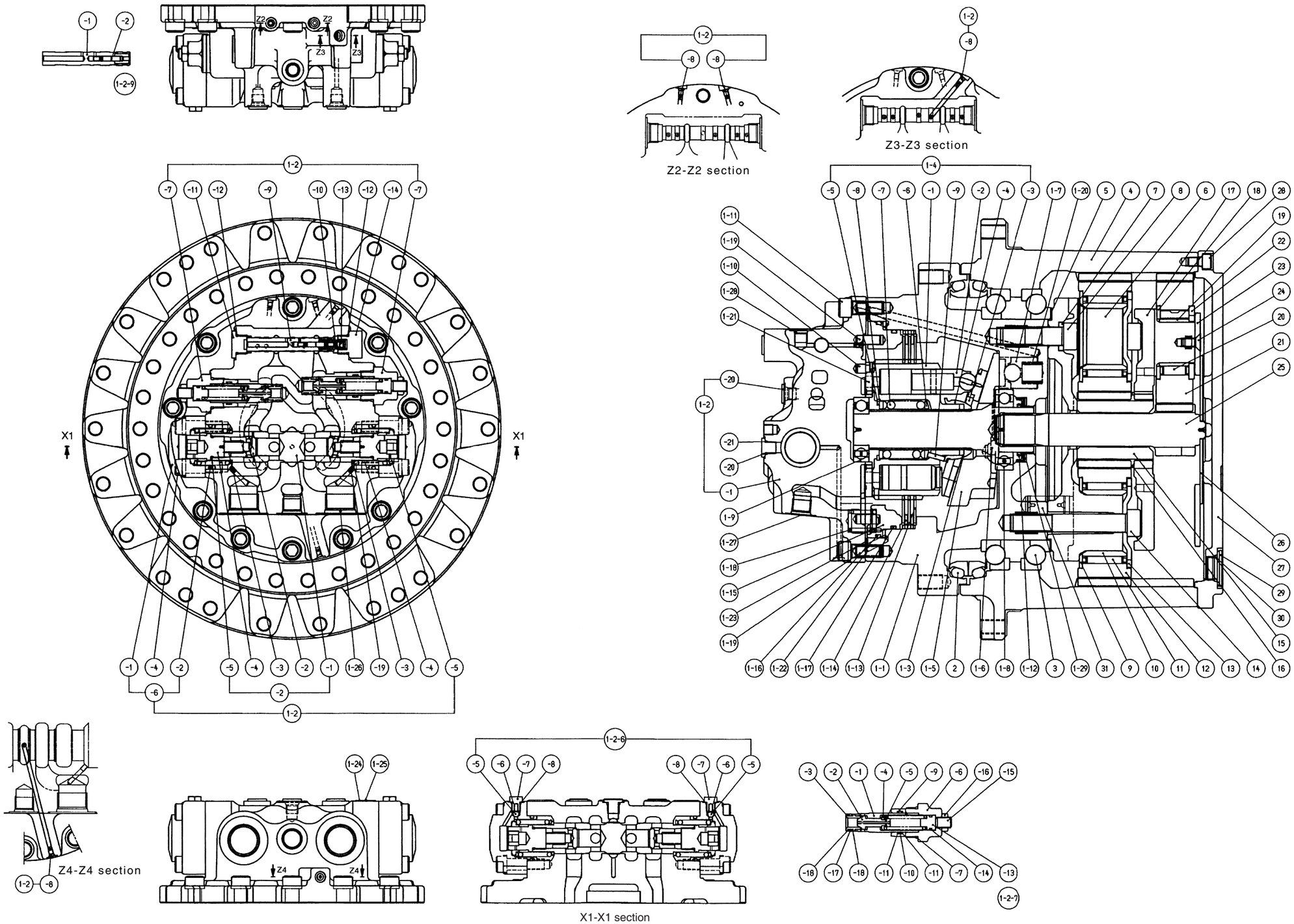

https://truckmanualshub.com/

(3) Travel motor part table

Code	Part name	Q'ty
1	Piston motor	1
1-1	Flange	1
1-2	Base plate assembly	1
1-2-1	Base plate	1
1-2-2	Spool assembly	1
-1	Spool	1
-2	Check valve	2
-3	Spring	2
-4	Plug	2
-5	O-ring	2
1-2-3	Spring seat	2
1-2-4	Spring	2
1-2-5	Spring seat	2
1-2-6	Cap assembly	2
-1	Cap	1
-2	O-ring	1
-4	Hexagon socket head bolt	4
-5	Steel ball	1
-6	Spring	1
-7	Plug	1
-8	O-ring	1
1-2-7	Relief valve assembly	2
-1	Relief housing	1
-2	Poppet	1
-3	Poppet seat	1
-4	Spring seat	1
-5	Spring	1
-6	Plug	1
-7	O-ring	1
-9	Free piston	1
-10	O-ring	1
-11	Backup ring	2
-13	Spring guide	1
-14	O-ring	1
-15	Stop screw	1
-16	Nut	1
-17	O-ring	1
-18	Backup ring	2
1-2-8	Plug	8
1-2-9	Spool assembly	1
-1	Spool A	1
-2	Spool C	1
1-2-10	Spring	1
1-2-11	Plug	1
1-2-12	O-ring	2
1-2-13	Spring guide	1
1-2-14	Plug	1
1-2-19	Orifice	2
1-2-20	Plug	5
1-2-21	O-ring	5
1-3	Seat	1
1-4	Cylinder block assembly	1
-1	Cylinder block	1
-2	Piston assembly	9
-3	Retainer plate	1
-4	Retainer holder	1
-5	Snap ring	1

Code	Part name	Q'ty
-6	Spring seat	1
-7	Spring	1
-8	Collar	1
-9	Pin	3
1-5	Swash plate	1
1-6	Steel ball	2
1-7	Piston assembly	2
1-8	Ball bearing	1
1-9	Ball bearing	1
1-10	Pin	1
1-11	Hexagon socket head bolt	10
1-12	Oil seal	1
1-13	Disk plate	3
1-14	Friction plate	2
1-15	Brake piston	1
1-16	O-ring	1
1-17	O-ring	1
1-18	Spring	8
1-19	Pin	4
1-20	Spring	2
1-21	Valve plate	1
1-22	O-ring	4
1-23	O-ring	1
1-24	Nameplate	1
1-25	Rivet	2
1-26	Plug	2
1-27	Plug	1
1-28	Plug	1
1-29	Spacer	1
2	Floating seal	2
3	Angular bearing	2
4	Housing	1
5 *	Shimt = 3.6	1
5 *	Shimt = 2.3	1
5 *	Shimt = 2.8	1
5 *	Shimt = 3.0	1
5 *	Shimt = 3.2	1
6	Holder C	1
7	Washer	8
8	Bolt	8
9	Thrust plate	4
10	Inner race	4
11	Needle bearing	4
12	Planetary gear C	4
13	Thrust plate	4
14	Bolt	4
15	Sun gear C	1
16	Snap ring	1
17	Holder B	1
18	Thrust plate	3
19	Inner race	3
20	Needle bearing	3
21	Planetary gear B	3
22	Thrust plate	3
23	Thrust plate	1
24	Screw	3
25	Drive gear	1

Code	Part name	Q'ty
26 *	Thrust platet = 3.6	1
26 *	Thrust platet = 2.3	1
26 *	Thrust platet = 2.8	1
26 *	Thrust platet = 3.0	1
26 *	Thrust platet = 3.2	1
27	Cover	1
28	Hexagon socket head bolt	16
29	Plug	3
30	O-ring	3
31	Pin	4

* One is selected and used.

D

https://truckmanualshub.com/

2. Swing Motor

SH210-5

(1) Equipment configuration

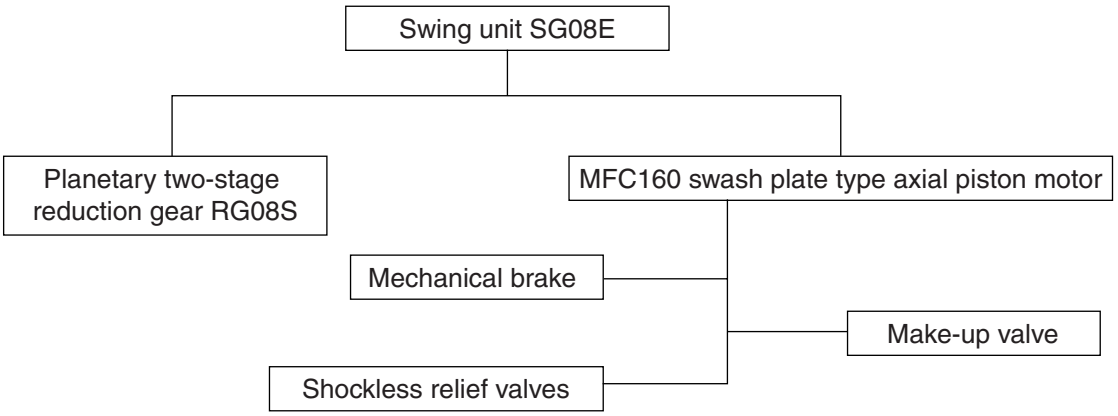

Structure and operating principles (The numbers in parentheses correspond to the section structural diagram.)

1) Hydraulic motor

The rotary group is made up of the one-piece drive shaft and cylinder (24) and the nine pistons AS (7) positioned in the cylinder (24). Also, the cylinder (24) is supported at both ends with bearings (3, 22). The piston AS (7) is guided by the return plate (6) and receiving spring (4) so that it slides smoothly on the cam plate (5).
Also, the balance plate (21) is pressed against the end of the cylinder (24) by the hydraulic pressure operating on the bushing (20) and the force of the Scrowave spring (18).
As parking brakes, it is equipped with mechanical brakes (8), (9), (11), and (13)
between the cylinder (24) outer circumference and the housing (25).
Also, a relief valve (35) for the cushion function and the make-up valves (38), (39), and (40) for preventing cavitation are built into the cover (32) section.

https://truckmanualshub.com/

2) Hydraulic motor operation explanation

The pressurized oil fed by the pump through the control valve or the like enters from the A port (or B port) on the cover (32) and is discharged from the B port (or A port).
Also, the oil that has leaked from the sliding sections and the gap returns to the hydraulic tank from the drain port "a" on the cover (32).
The pressurized oil fed to the A port is fed to the cylinder (24) piston hole "f" through path "b" in the cover (32), path "c" the bushing (20) section in the cover (32), balance plate (21) path "d" that has a crescent shaped port that switches between feed and discharge every 180 of rotation of the motor, and the cylinder (24) path "e".
The pressurized oil operates on the piston AS (7) and the piston AS (7) is pressed against the cam plate (5). The cam plate (5) shoe sliding surface has a constant angle slope, so the piston AS (7) pressing force created by the action of the pressurized oil is converted into force making the shoe slide on the plate. The piston AS (7) shoe spherical section is coupled as a free joint, so the force of the shoe sliding on the plate is transmitted to the motor output shaft section as rotation force via the cylinder (24).
In this way, each piston AS (7) receives pressurized oil in the stroke from the slope surface top dead center to bottom dead center, converts this hydraulic force to rotation force, rotates the cylinder (24), and discharges oil in the stroke from the bottom dead center to the top dead center. The discharge path is the reverse of the above pressurized oil feed path and the oil is discharged from the B port.
In this way, the hydraulic motor operates. The hydraulic motor output torque is determined by the hydraulic pressure force and speed is determined by the feed oil quantity.

3) Reduction gear structure and operation explanation

The power transmitted from the hydraulic motor output shaft is transmitted to the 2nd stage sun gear (72) via the 1st stage sun gear (76), planetary gear (79), and holder 1 (81). At the same time, the power is transmitted to the output shaft (61) via 2nd stage sun gear (72), planetary gear (84), and holder 2 (87). The output shaft (61) is supported in the gear case (66) by two bearings (65, 71). Also, in order to protect the output side bearing (65), which faces severe load conditions, from gear wear powder, there is an oil seal (70) in the center section in the gear case (66), the A chamber side is lubricated with gear oil, and the B chamber side is lubricated with grease.

4) Mechanical brake operation explanation

The friction plate (8) is spline coupled with the exterior circumference section of the cylinder (24).
Also, the partner plate (9) is coupled with the housing (25). When the mechanical brake release chamber pressure is zero, the brake piston (11) presses the friction plate (8) and partner plate (9) with the force of the spring (13) to load rotation of the cylinder (output shaft).
On the other hand, when the oil pressurized to 3.2 - 4.9 MPa operates on the brake release chamber, the brake piston (11) wins out over the spring force, the piston stroke proceeds until the cover (32) end, a gap is generated between the friction plate (8) and partner plate (9) and the mechanical brake is released.

https://truckmanualshub.com/

5) Make-up valve operation explanation

[1] Half brake state (state in which the shockless relief valve (35) is not operating)
After the swing body is accelerated, when it is decelerated by the control valve with the half lever, the oil feed quantity from the pump to the A port drops, but if the swing body was rotating at relatively high speed, the pressure comes close to negative at the "c" section due to the motor pump operation, so oil supply becomes necessary. However, if the B port pressure is lower than the operating pressure of the shockless relief valve (35), all the oil flowing into the "c" section from the A port is drained to the control valve via the B port, so with just the quantity of oil from the control valve, the quantity of oil is insufficient for what is absolutely required at the "c" section. (Because the valve is at the half lever position, the quantity of oil from the pump is restricted.) In order to prevent this, the make-up check valve (38) is set up to make up the quantity of the oil shortfall to the "c" section from the make-up port.

[2] When the brake operates (state in which the shockless relief valve (35) is operating)
In the state in (1), if the lever is suddenly operated to neutral, the quantity of oil fed from the pump to the A port becomes zero, but the swing body rotates due to inertial force. In this case, the B port side shockless relief valve (35) operates, the oil blown out in relief passes through oil paths "i" and "h", pushes open the A port side make-up check valve (38), and is fed to oil paths "b" and "c", but the quantity of this oil falls short by the quantity of oil that leaked to the motor case drain. In order to prevent that, the make-up check valve (38) is opened from the make-up port, oil is supplied to oil paths "b" and "c" to prevent cavitation.

6) Relief valve operation explanation (relief valve internal structure diagram)

[1] Starting
For the pressurized oil fed to the A port by the operation of the control valve, constant rotation is not reached because the swing body inertial force is large and part of the oil passes through the shockless relief valve (35) which operates as a safety valve, passes through oil paths "g" and "h", pushes open the B port side check valve (38), and flows out to the B port.
The A port oil resists the force of the spring (47), pushes open the poppet (46), passes through the path "g" from between the seat (45) and the poppet (46), and flows out to the path "h".

[2] Braking (cushion)
When the control valve is returned to neutral, the motor discharge oil return path is closed. Immediately after this operation, the motor rotates with a large inertial force and pump operation is caused, which tries to suction in the oil from the A port and discharge it from the B port, but because the control valve return path is closed, the B port pressure rises.
The B port pressure that rises pushes open the poppet (46) resisting the force of the spring (47), so it pushes up the make-up check valve (38) via the oil paths "i" and "h", the oil flows into the path "c", and through this process, the swing body inertial force is absorbed and the swing body comes to a stop.
Also, in the above pressure rise process, the pressurized oil at the B port passes through the poppet (46) outer circumference orifice "i", passes through the small hole path at the center of the piston (51), and enters the piston chamber, moving the piston (51) to the position where it contacts the end of the liner (50). During this time, because the poppet (46) is already pushed open, the cushion action operates at first with somewhat low pressure and after a slight time, rises to the regulation pressure. This two-stage operation provides a function that reduces the shock of motor starting and stopping.

https://truckmanualshub.com/

(2) Internal structure diagram

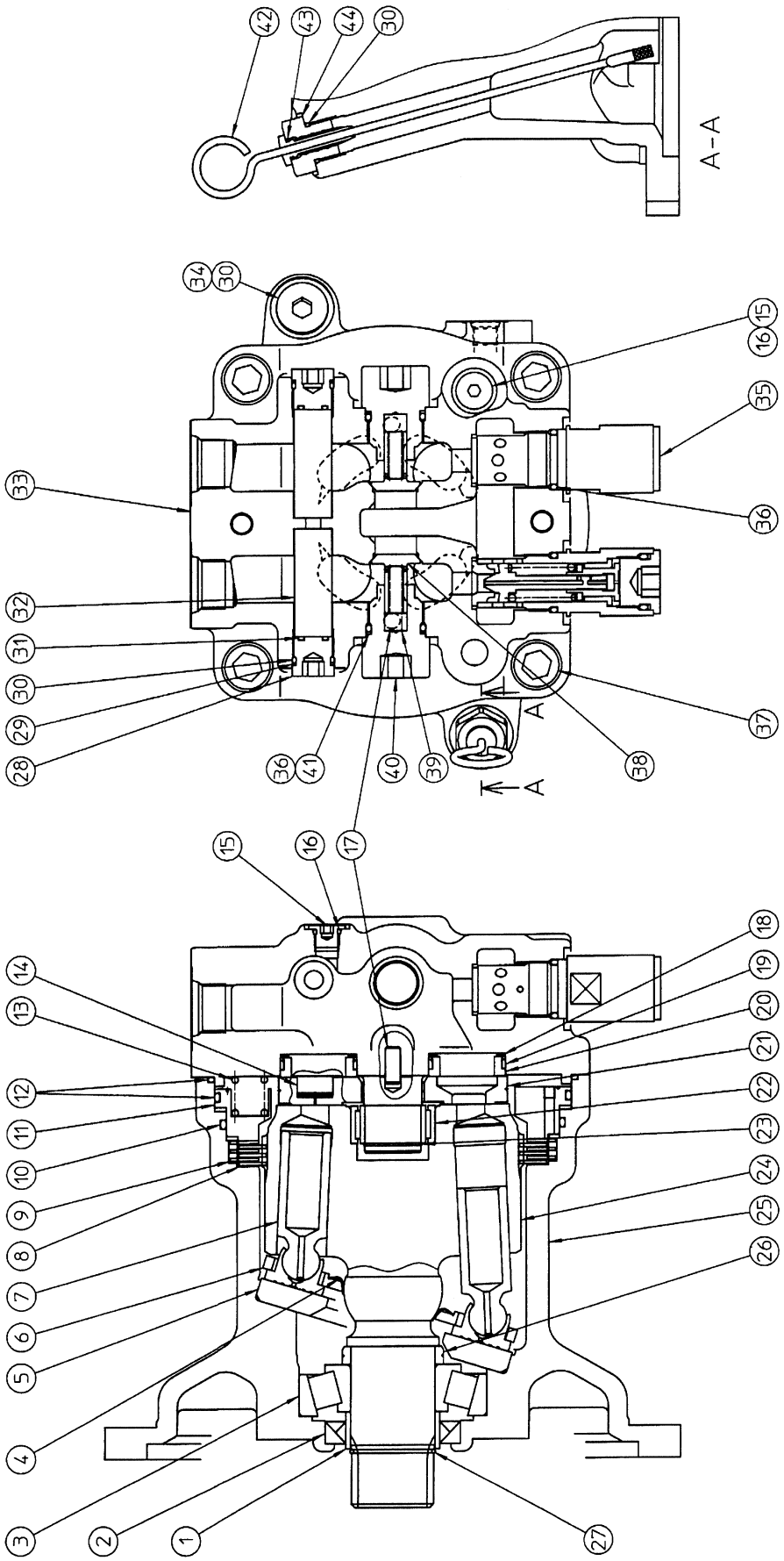

https://truckmanualshub.com/

(3) Swing reduction gear internal structure diagram (SH200-5)

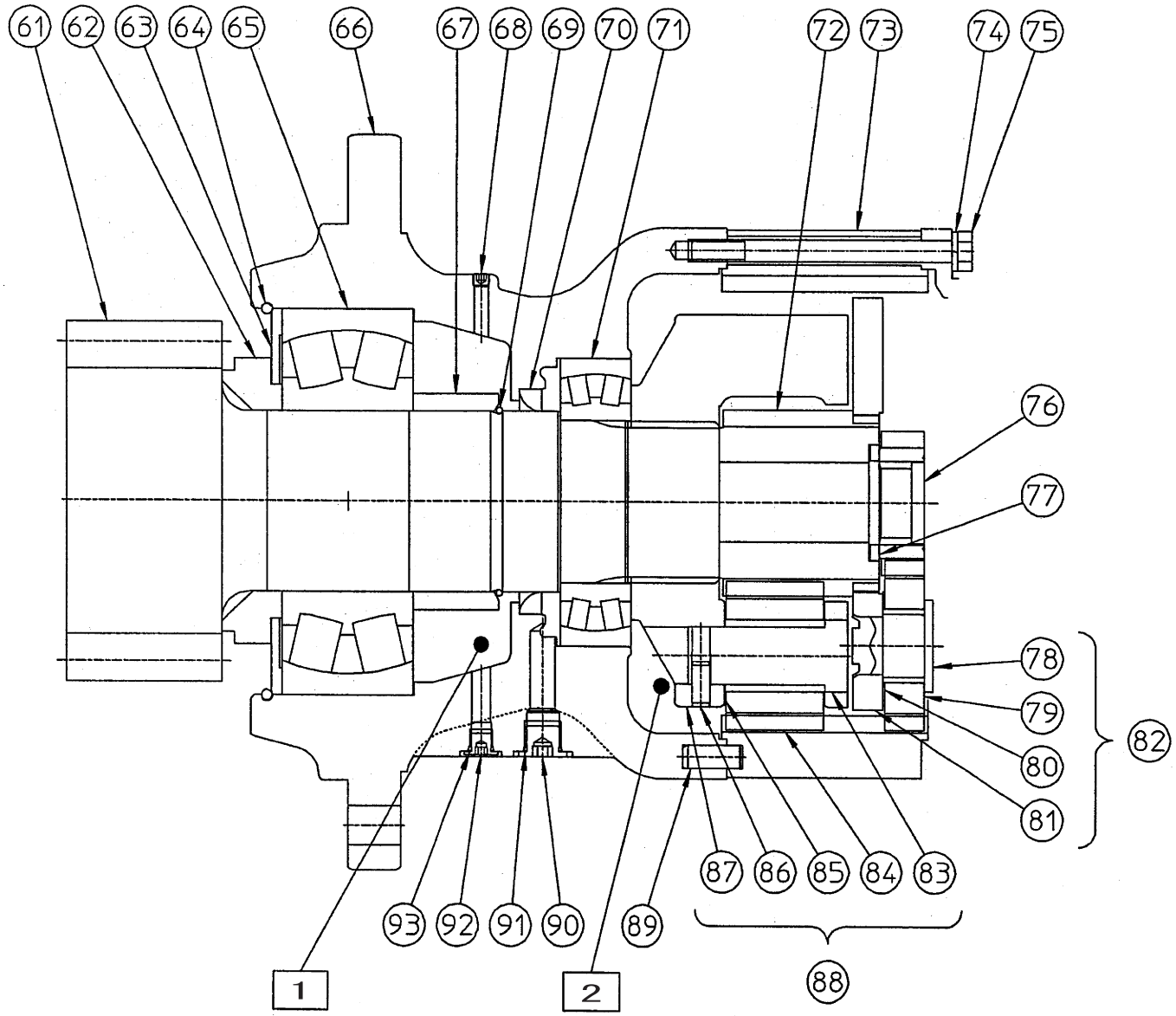

1	Chamber A
2	Chamber B

(4) Relief valve internal structure diagram

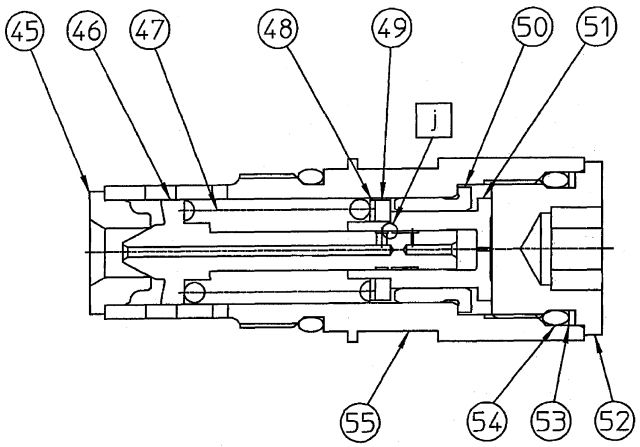

https://truckmanualshub.com/

SH240-5

(1) Swing motor operation explanation

1) Hydraulic motor section (SH240-5)

As the figure below shows, when the high-pressure oil passes through the valve plate (1) intake side port (a) and flows into the cylinder, the hydraulic pressure operates on the piston and a force F is generated in the axial direction. This force F is divided into two vectors, a force F1 perpendicular to the swage plate (3) via the shoe (2) and a force perpendicular to the shaft. This force F2 is transmitted to the cylinder block (4) via the piston, generating a rotational couple around the output shaft.

Nine pistons are arrayed in the cylinder block. Rotation torque is transmitted to the output shaft by multiple pistons sequentially linked with the high-pressure oil intake side port.

When the oil in and out directions are reversed, the rotation of the output shaft also reverses.

The theoretical output torque [Nm] is given by the following equation.

$$T = \frac{p \times q}{2\pi}$$

p:Effective pressure difference [MPa]

q:Compartments per rotation [cm^3]

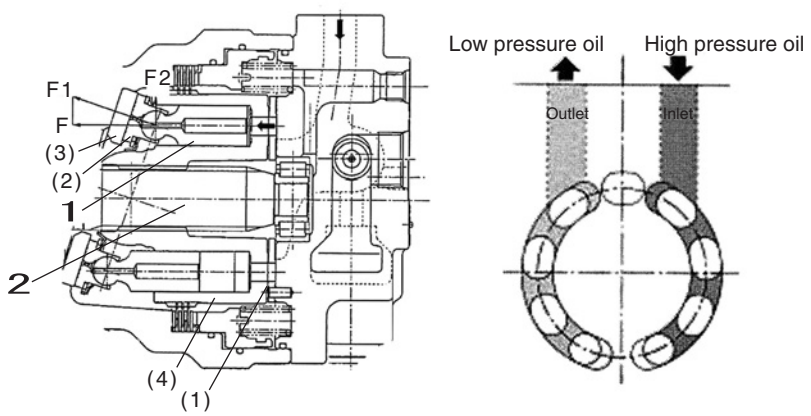

1	Piston
2	Drive shaft

Figure 1 Motor section operation explanation diagram

2) Valve casing section

[1] Anti-cavitation check valve section

Because the system using this type of motor does not have a valve with a counter-balance function, the motor sometimes rotates more than the quantity of oil fed.

In order to prevent cavitation due to insufficient oil, there is a check valve to take in the oil shortfall.

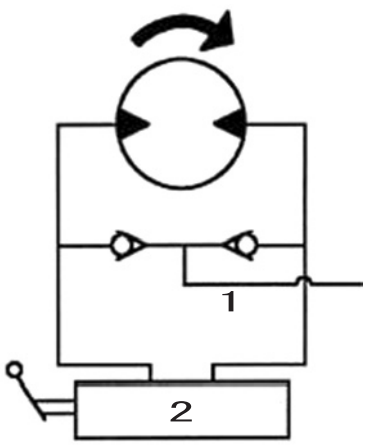

1	M port
2	Control valve

Figure 2 Hydraulic circuit diagram

https://truckmanualshub.com/

3) Brake section

The cylinder (111) is coupled with the drive shaft (101) by the gear. Also, the separator plate (743) is constrained for circumferential rotation by the arc groove cut into the casing (301).
When the friction plate (742) that is gear coupled to the cylinder outer circumference section is pressed to the casing (301) by the brake spring (712) via the separator (743) and the brake piston (702), friction force is generated between the friction plate and casing and between the separator plate and the brake piston. The drive shaft is constrained and braked by this friction force.
On the other hand, when brake release pressure is applied to the oil chamber formed between the brake piston and the casing and the hydraulic pressure wins out over the spring force, the brake piston moves, the force pressing the friction plate against the casing disappears, and the brake is released.

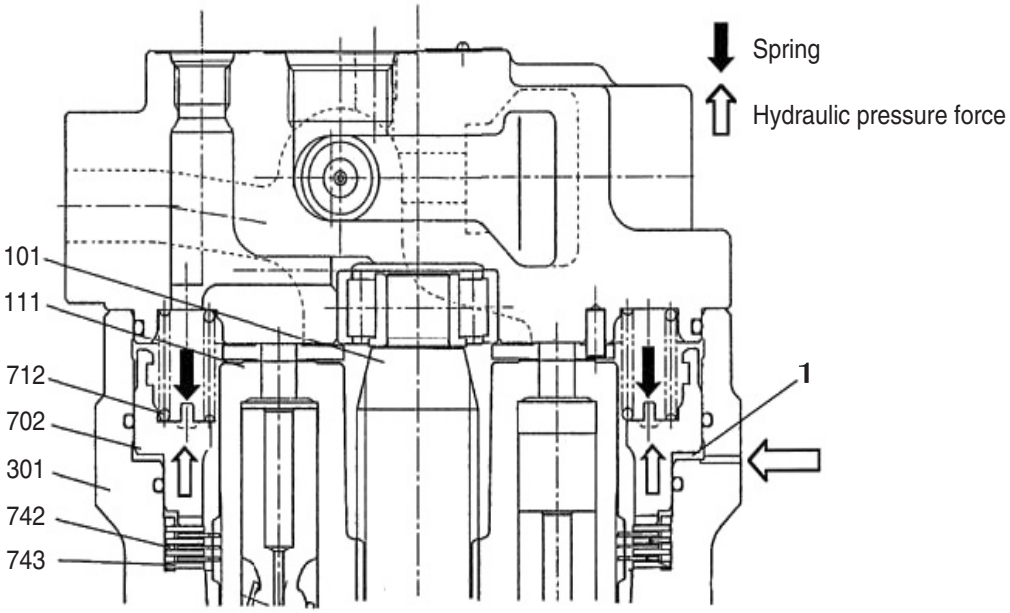

Figure 3 Brake operation diagram

1	Oil chamber

https://truckmanualshub.com/

4) Relief valve operation explanation (Relief valve model: KRD22EK10)

[1] Operation explanation when the relief valve is pressurized
Think of the case in which the P port is pressurized with the tank pressure.
The P and R ports are at the tank pressure at first and go into the states in Figure 4 - (1).
At the pressure where there is balance between the hydraulic pressure determined by the product of the pressure P and the pressurized area A1 of the plunger (301) on the one hand and the hydraulic pressure determined by the spring (321) load FSP and plunger (301) pressurized area A2 and the g chamber pressure Pg on the other hand, the relief valve starts to operate.
After that, the g chamber pressure rises and the piston (302) starts its stroke. Accompanying this movement, the load on the spring (321) increases.
Through the operation above, the relief pressure P is controlled to rise from P1 to Ps in the pressure rise time t1.
This process is explained below in terms of the relationship between the movement state of the parts in Figures 4 - (2) through (4) and the relief pressure.

1) State shown in Figure 4 - (2)
When the relief valve P port is pressurized, pressure is generated in the g chamber via the metering valve m in the plunger (301).
When the hydraulic pressure operating on the plunger (301) increases and reaches the pressure at which it balances the spring (321) load FSP, the relief valve carries out the relief operation at pressure P1.
The relationship at this time is expressed by the following equation.
P1 X A1 = FSP1 + Pg1 X A2FSP1: Initial set load for the spring (321)

2) State shown in Figure 4 - (3)
The g chamber pressure operates on pressurized areas A3 and A4 of the piston (302). When this hydraulic pressure force becomes larger than the load on the spring (321), the piston starts to move to the left.
At this time, the oil in the h chamber formed between the piston and the adjusting plug (401) is discharged into the g chamber via the metering valve n set up on the piston (302) while the piston moves to the left, so the h chamber functions as a damping chamber.
Through this, the spring load gradually increases until the piston reaches the adjusting plug end section and the relief pressure P rises smoothly.

3) State shown in Figure 4 - (4)
When the piston (302) reaches the adjusting plug (401) end section, it does not move farther to the left, so the constant relief state is reached and the relief pressure is held at P2.
Through the processes (1) through (4) above, the relief pressure varies as in Figure 5.

[2] Operation explanation when the relief valve is depressurized
Think of the case in which the P port pressure falls.
When the pressurization of the P port ends, the P port pressure and the g chamber pressure fall together to the tank pressure. Through this, the plunger (301) which was open, moves to the left and seats in the seat (401). At the same time, the piston (302) also is moved to the right by the spring (321) and returns to the state in Figure 4 - (1).

D

https://truckmanualshub.com/

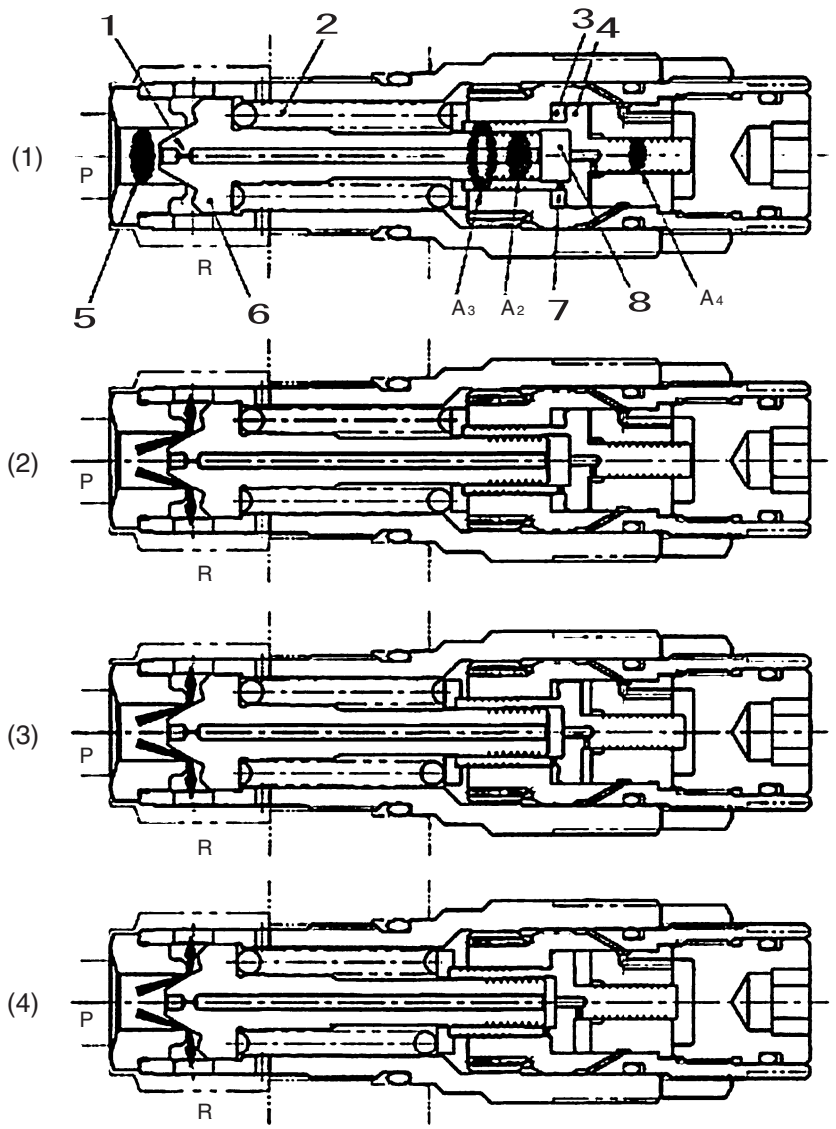

Figure 4 Relief valve operation explanation diagram

1	Metering m	5	A1 pressurized area
2	Spring (321)	6	Plunger (301)
3	Chamber h	7	Metering n
4	Piston (302)	8	Chamber g

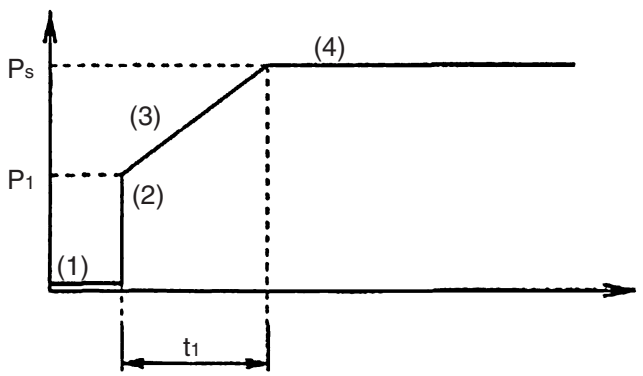

Figure 5 Boosted pressure characteristic

https://truckmanualshub.com/

(2) Swing motor internal structure diagram (SH240-5)

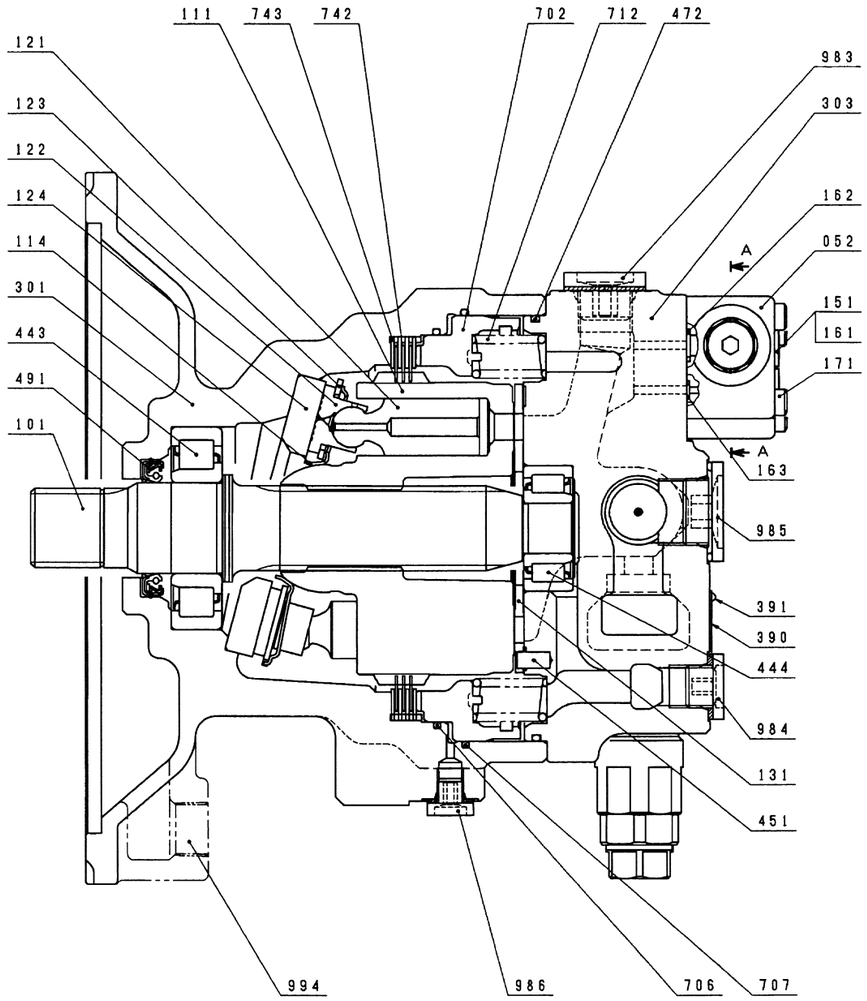

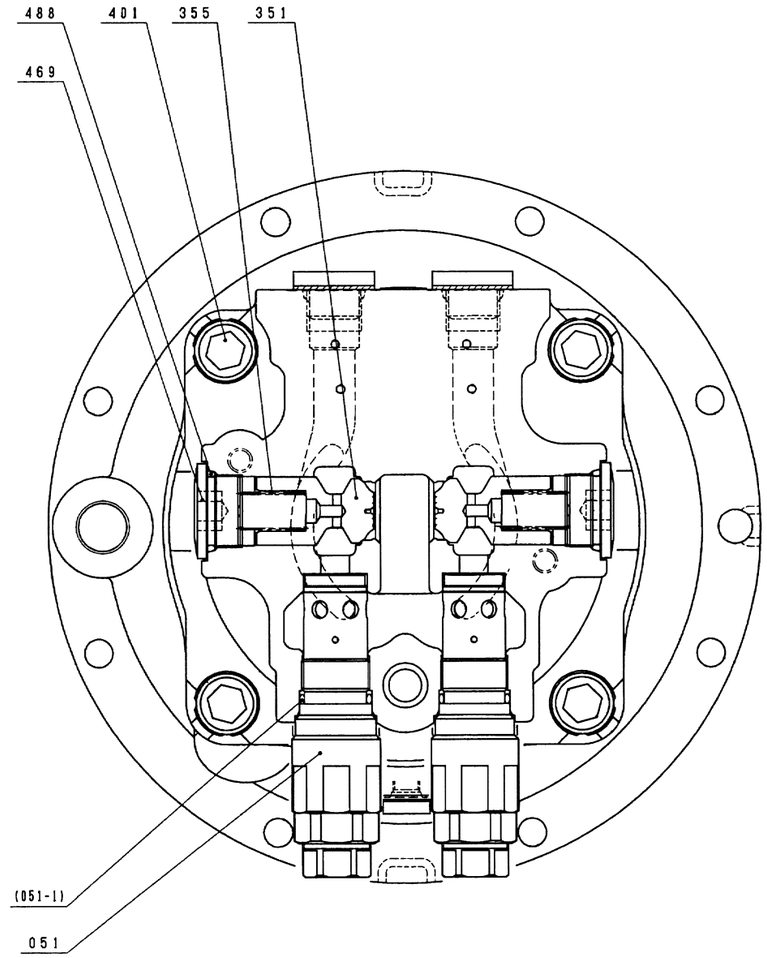

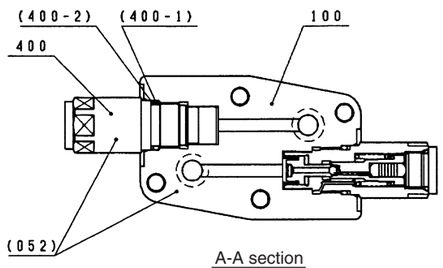

A-A section

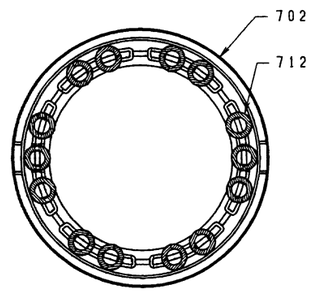

Brake spring location of components

Code	Part name	Q'ty
052	Reverse prevention valve, sub	1 set
100	Casing	1
151	ROH plug	2
161	O-ring	2
162	O-ring	2
163	O-ring	2
171	Hexagon socket head bolt	4
400	Reverse prevention valve	2 set
400-1	O-ring	2
400-2	Backup ring	2

Code	Part name	Q'ty
051	Relief valve	2 set
051-1	O-ring	2
10	Piston, sub	1 set
101	Drive shaft 12	1
111	Cylinder	1
114	Plate spring	1
121	Piston	9
122	Shoe	9
123	Retainer plate	1
124	Shoe plate	1
131	Valve plate B	1
20	Valve casing H2, sub	1 set
301	Casing K1	1
303	Valve casing H2	1
351	Plunger H2	2
355	Spring H2	2
390	Nameplate	1
391	Driving tack	2
401	Hexagon socket head bolt	4
443	Cylinder roller bearing	1
444	Cylinder roller bearing	1
451	Pin	2
469	ROMH plug	2
472	O-ring	1
488	O-ring	2
491	Oil seal	1
702	Brake piston	1
706	O-ring	1
707	O-ring	1
712	Brake spring	14
742	Friction plate	3
743	Separator plate	4
983	Masking plug	2 set
984	Masking plug	1 set
985	Masking plug	1 set
986	Masking plug	1 set

D

RST-04-02-001cv

https://truckmanualshub.com/

Valve

1. Control Valve

Basic configuration

This valve is based on the main unit housing which combines the P1 side housing and P2 side housing with the rear surfaces against each other and has a configuration that makes it possible to mount the inlet, add-on section, and outlet on the P2 side housing top.

(1) Operation

[1] When all spools in neutral

1) Neutral path [Fig. 1, Fig. 2]

1. When Pn1 and Pn2 ports pressurized
   The oil fed from the P1 port enters the tank path (Ta) from the neutral path (L1) through the low-pressure relief metering valve (Lc1) and returns to ports T1 through T8.
   The oil fed from the P2 port enters the tank path (Ta) from the neutral path (R1) through the low-pressure relief metering valve (Rc1) and returns to the T1 through T8 ports.
   The pressure in the pressure chambers (L2) and (R2) upstream from the low-pressure relief valve is led into the pump from the ps1 and ps2 ports and controls the P1 and P2 pump discharge quantity.
   Also, if excess oil flows into the neutral path (L1), the poppet opens to provide low-pressure relief. This prevents the ps1 and ps2 port pressures from becoming abnormally high.
2. When Pn1 and Pn2 ports not pressurized
   In this case, the low-pressure relief poppets open at lower pressure than in (a).
   Therefore, the oil fed from the P1 port enters the tank path (Ta) from the neutral path (L1) primarily through the low-pressure relief valve discharge port (L3) and returns to the T1 through T8 ports.
   Also, the oil fed from the P2 port enters the tank path (Ta) from the neutral path (R1) primarily through the low-pressure relief valve discharge port (R3) and returns to the T1 through T8 ports.

https://truckmanualshub.com/

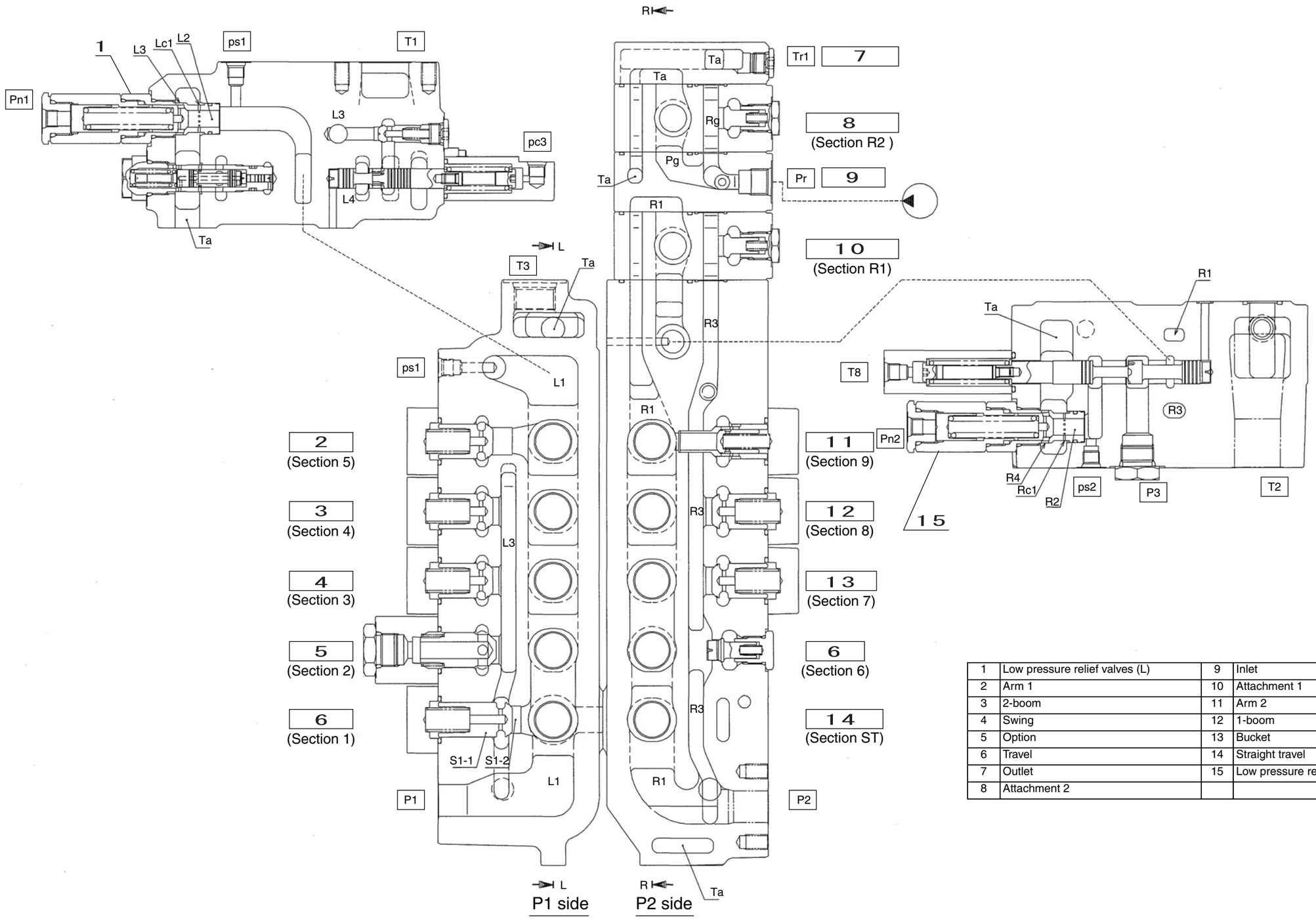

1	Low pressure relief valves (L)	9	Inlet
2	Arm 1	10	Attachment 1
3	2-boom	11	Arm 2
4	Swing	12	1-boom
5	Option	13	Bucket
6	Travel	14	Straight travel
7	Outlet	15	Low pressure relief valves (R)
8	Attachment 2		

[Fig.1]

https://truckmanualshub.com/

Main Equipment Structure and Operation Explanation

1	Variable arm regeneration metering valve	8	Attachment 1
2	Arm 1	9	Neutral cut
3	2-boom	10	Arm 2
4	Swing	11	1-boom
5	Option	12	Bucket
6	Travel	13	Travel
7	Attachment 2	14	Straight travel

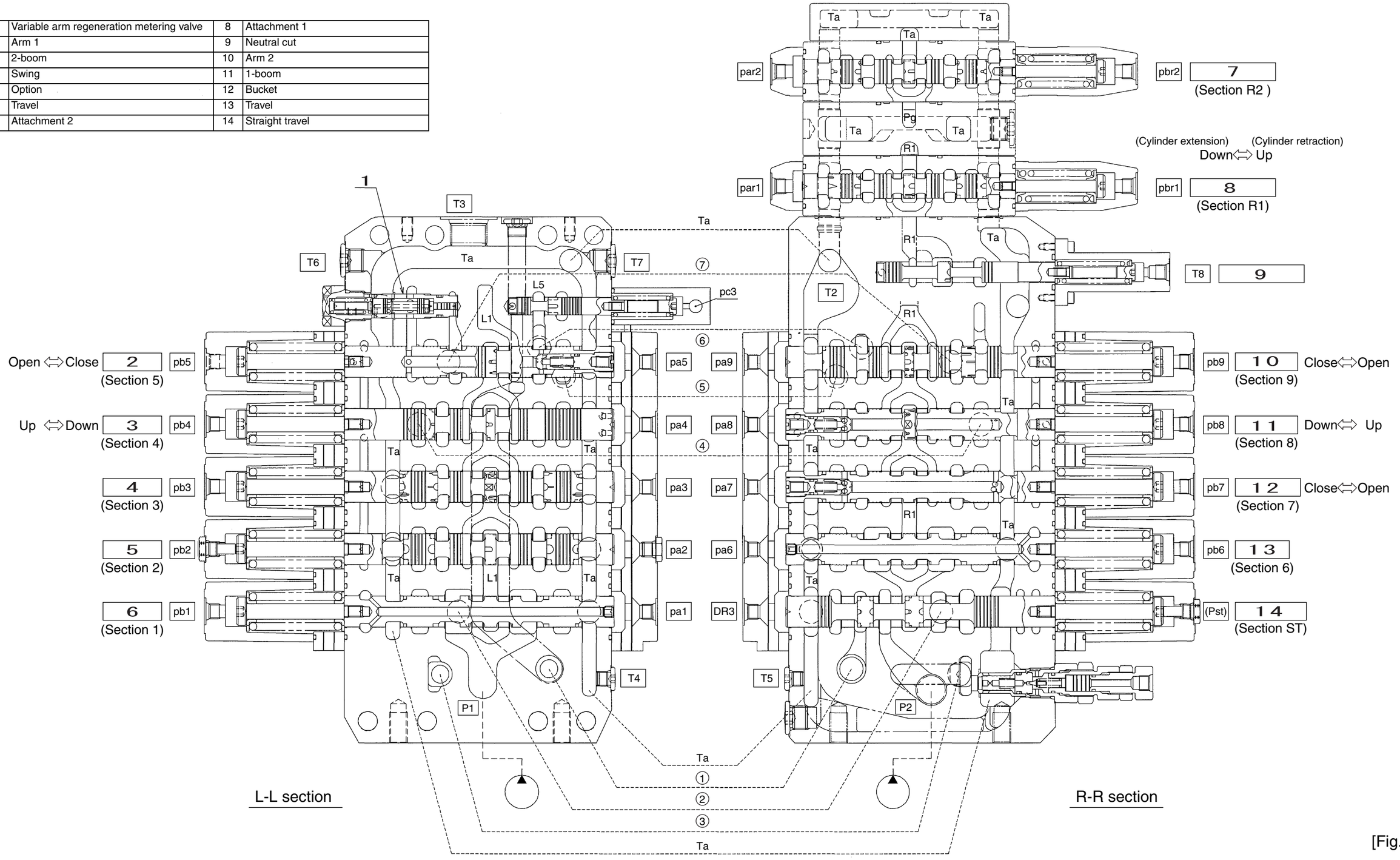

[Fig.2]

https://truckmanualshub.com/

2) Signal, straight travel signal control valve, plate ASSY [Fig. 3]
There are two signals, (a) and (b) below. The pilot signal for each spool for which a lever is operated is used to generate the pressure that is output.
The straight travel signal control valve integrates the signal pressures and controls straight travel spool switchover. Also, the plate ASSY has a function for picking up the pilot pressures with the built-in shuttle.
   1. Travel signal (PT)
   The highest of the pilot pressures applied to the travel section 1 (pa1, pb1) and travel section 6 (pa6, pb6) is selected and output to the PT port.
   Therefore, when the travel spool is in the neutral position (no-load pilot pressure), no pressure is generated at the PT port.

https://truckmanualshub.com/

2. Front signal (PA)
   The highest of the pilot pressures (pa2 to 9 and pb2 to 9) applied to sections 2 to 9 that use the pressurized oil from the P1 and P2 pumps, except for the travel sections, is selected and output to the PA port.(Note 1)
   Therefore, when all the spools are in the neutral position (no-load pilot pressure), no pressure is generated at the PA port.

Note 1
When an add-on (main pump add-on) is used through the feed from P2, the branches for the add-on pilot signals par1 and pbr1 are connected to the respective main unit valves, prs1 and prs2, and thus incorporated in the front signal PA selection area.
Be careful. If the above pipes are not used, the PA pressure does not rise due to add-on selection.
Also, when using two main pump add-ons, set the circuit so that maximum of the add-on pilot pressures (par1&2, pbr1&2) can be taken out as desired and connect to either prs1 or prs2.

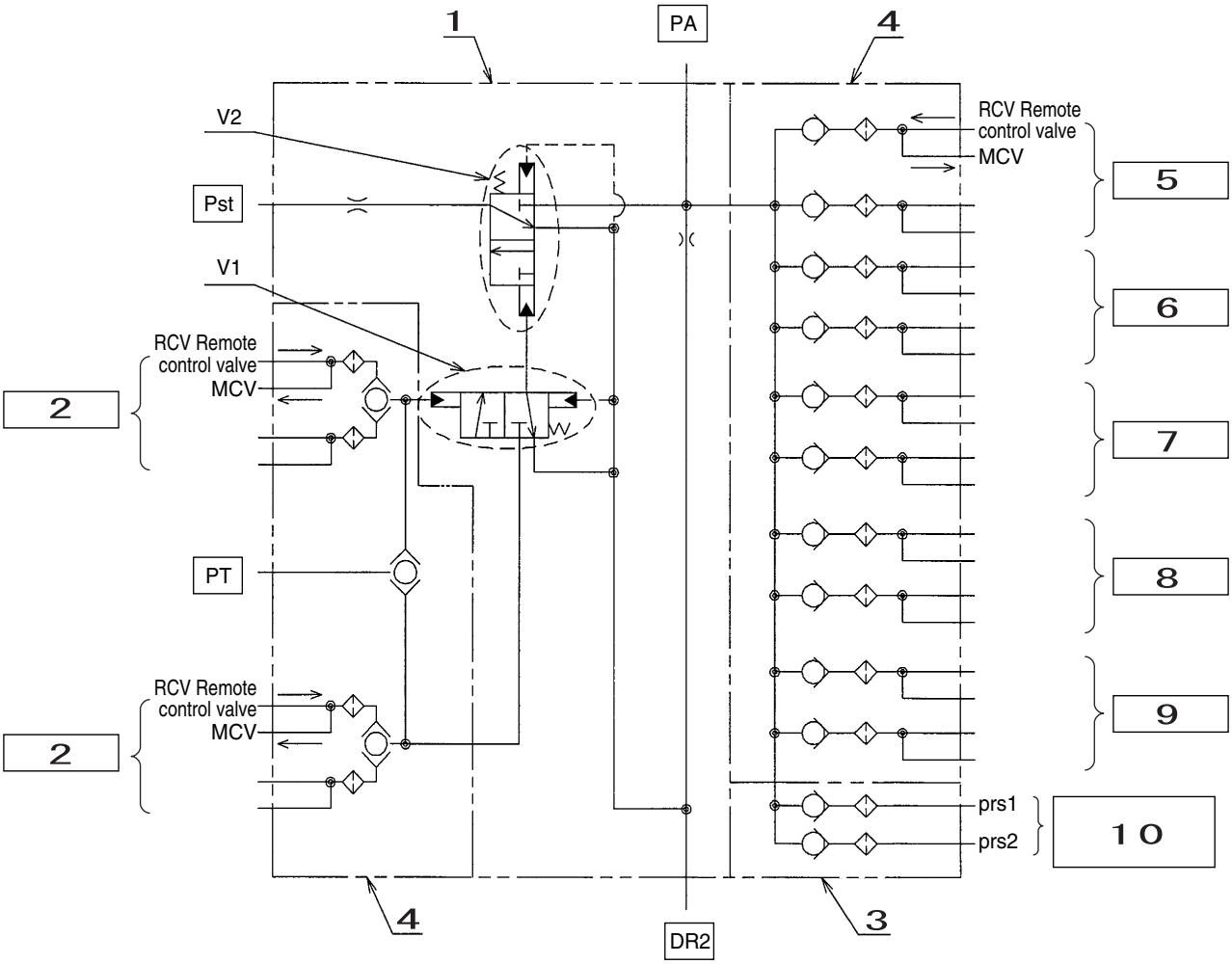

[Fig.3]

1	Straight travel signal control valve	6	Arm
2	Travel	7	Bucket
3	Main unit housing section (option)	8	Swing
4	Plate ASSY	9	Option
5	Boom	10	Add-on (main pump)

https://truckmanualshub.com/

[2] Stand-alone operation

1) Travel spool switchover [Fig. 4 and Fig. 5]
When a travel spool is switched by pressurizing from the travel (section 1) pilot port Pb1 [Pa1], the oil fed from the P1 port flows from the neutral path (L1) through the spool neck section and into the B1 [A1] port.The return oil returns to the tank path (Ta) from the A1 [B1] port through the spool neck section.
When a travel spool is switched by pressurizing from the travel (section 6) pilot port Pb6 [Pa6], the oil fed from the P2 port flows from the neutral path (R1) through the spool neck section or path (S6-1) and into the B6 (A6) port.
When only travel is operated, the parallel path (R3) and the path (S6-1) have the same pressure, so the poppet (S6-2) does not open.The return oil returns to the tank path (Ta) from the A6 [B6] port through the spool neck section.

https://truckmanualshub.com/

1	Trouble state
2	Neutral state
3	Option
4	Travel

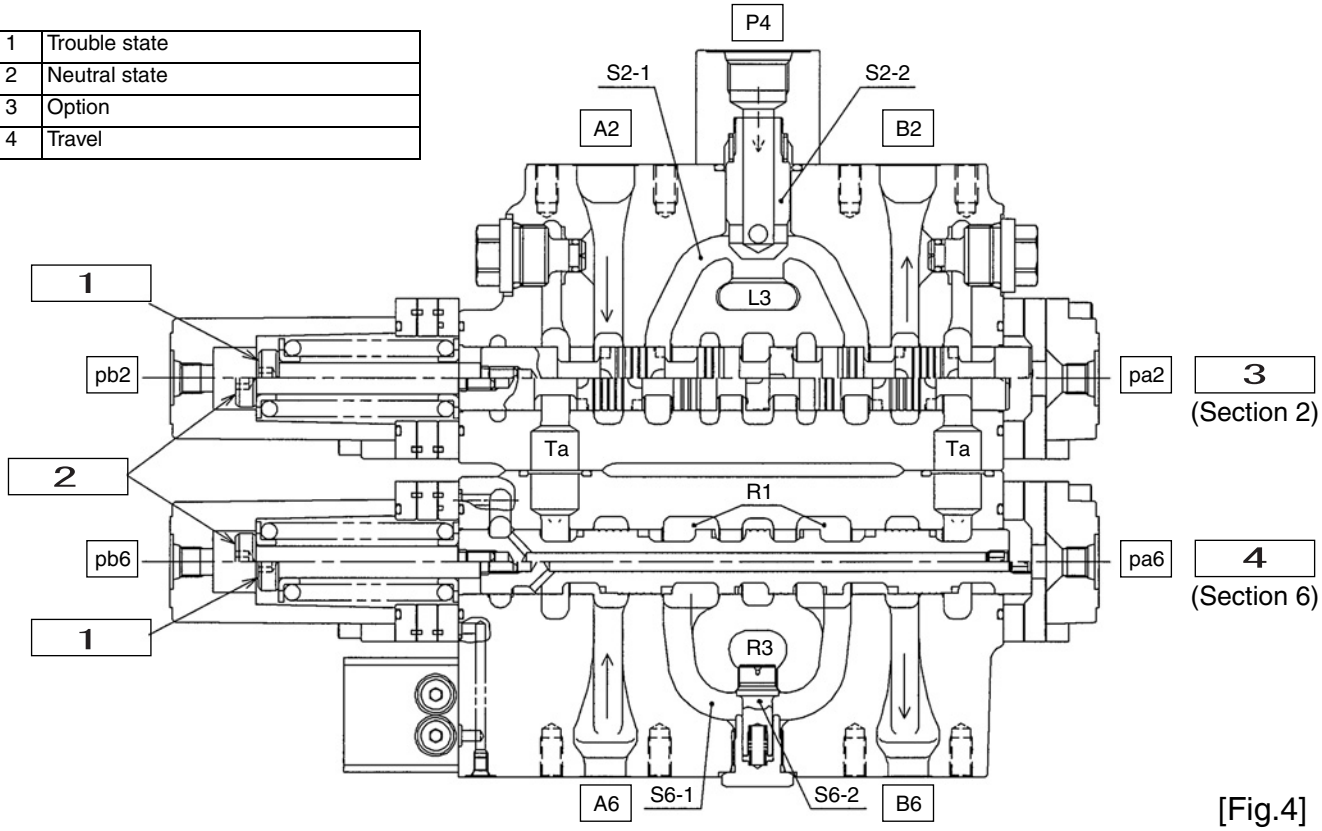

[Fig.4]

1	Trouble state
2	Neutral state
3	Option
4	Straight travel

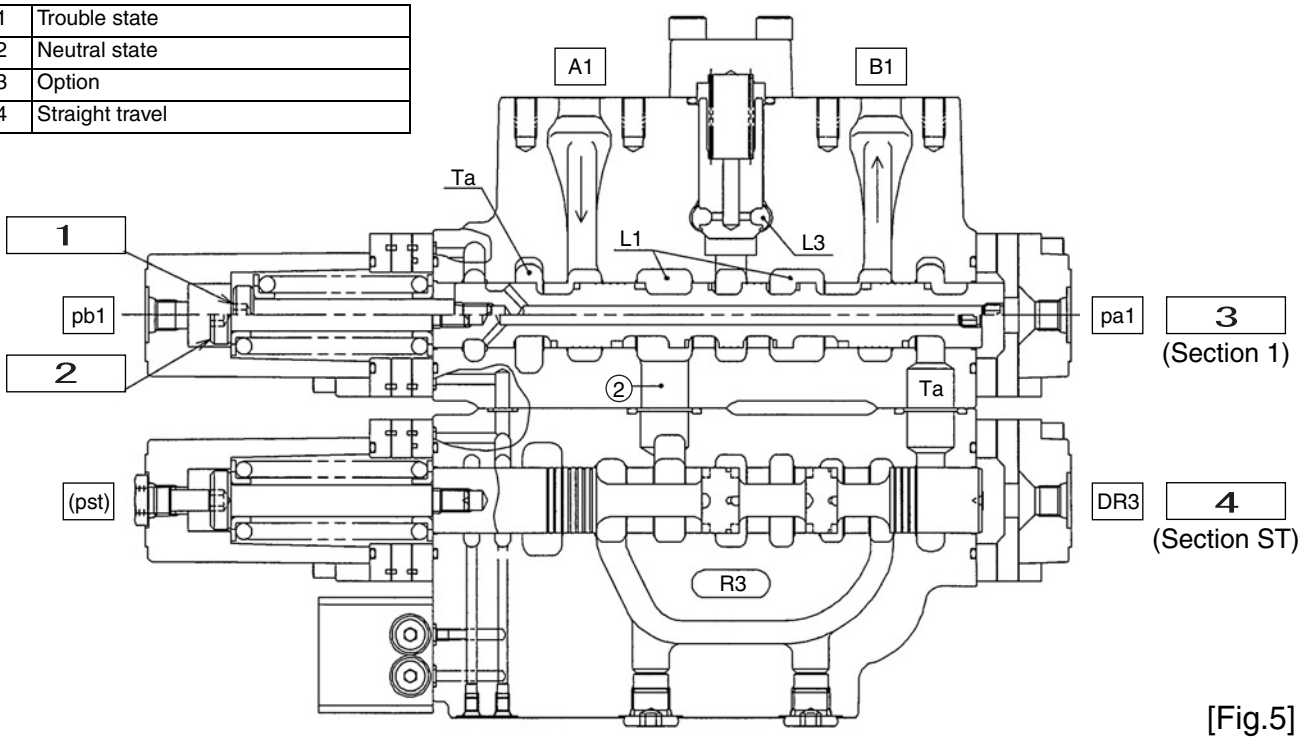

[Fig.5]

https://truckmanualshub.com/

2) Option spool switchover [Fig. 4]
When the option spool is switched by pressurizing from the option (section 2) pilot port Pb2 [Pa2], the neutral path (L1) is closed.The oil fed from the P1 port flows from the parallel path (L3) through the load check valve (S2-2), path (S2-1), and the spool neck, and into the B2 [A2] port.
The return oil returns to the tank path (Ta) from the A2 [B2] port through the spool neck section.
Also, when oil is fed from the P4 port, it passes through the inside of the load check valve (S2-2) and
merges with path (S2-1).

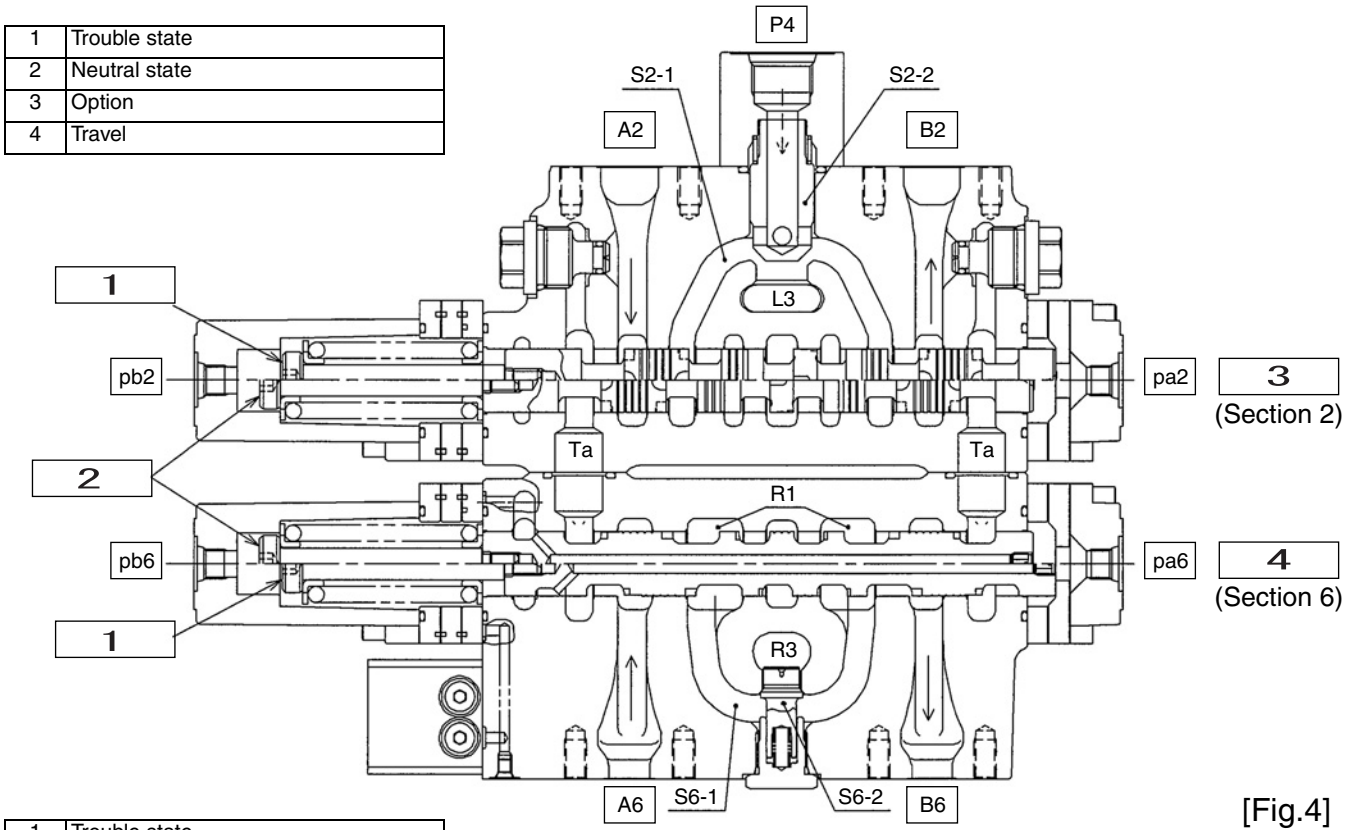

[Fig.4]

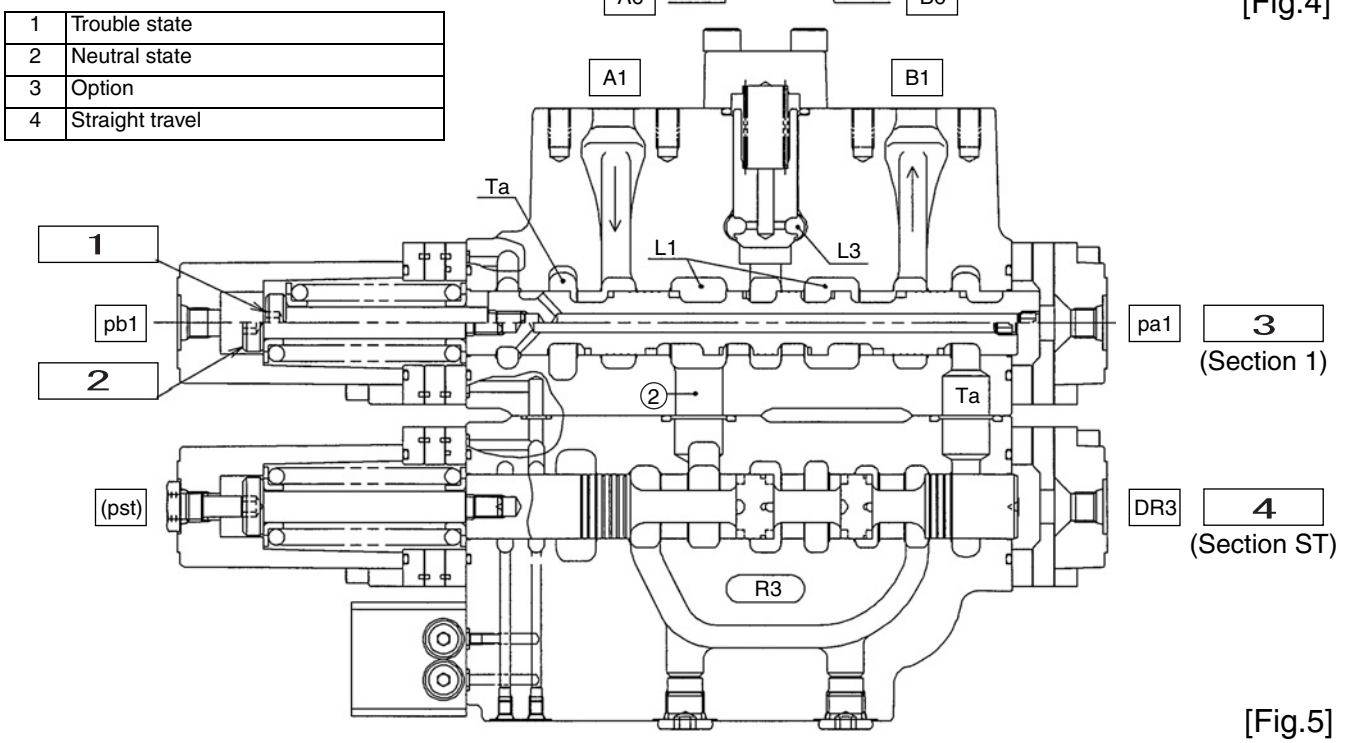

[Fig.5]

https://truckmanualshub.com/

3) Swing spool switchover [Fig. 6]
When the swing spool is switched by pressurizing from the swing (section 3) pilot port Pb3 [Pa3], the neutral path (L1) is closed.The oil fed from the P1 port flows from the parallel path (L3) through the load check valve (S3-2), path (S3-1), and the spool neck, and into the B3 [A3] port.
The return oil returns to the tank path (Ta) from the A3 [B3] port through the spool neck section.

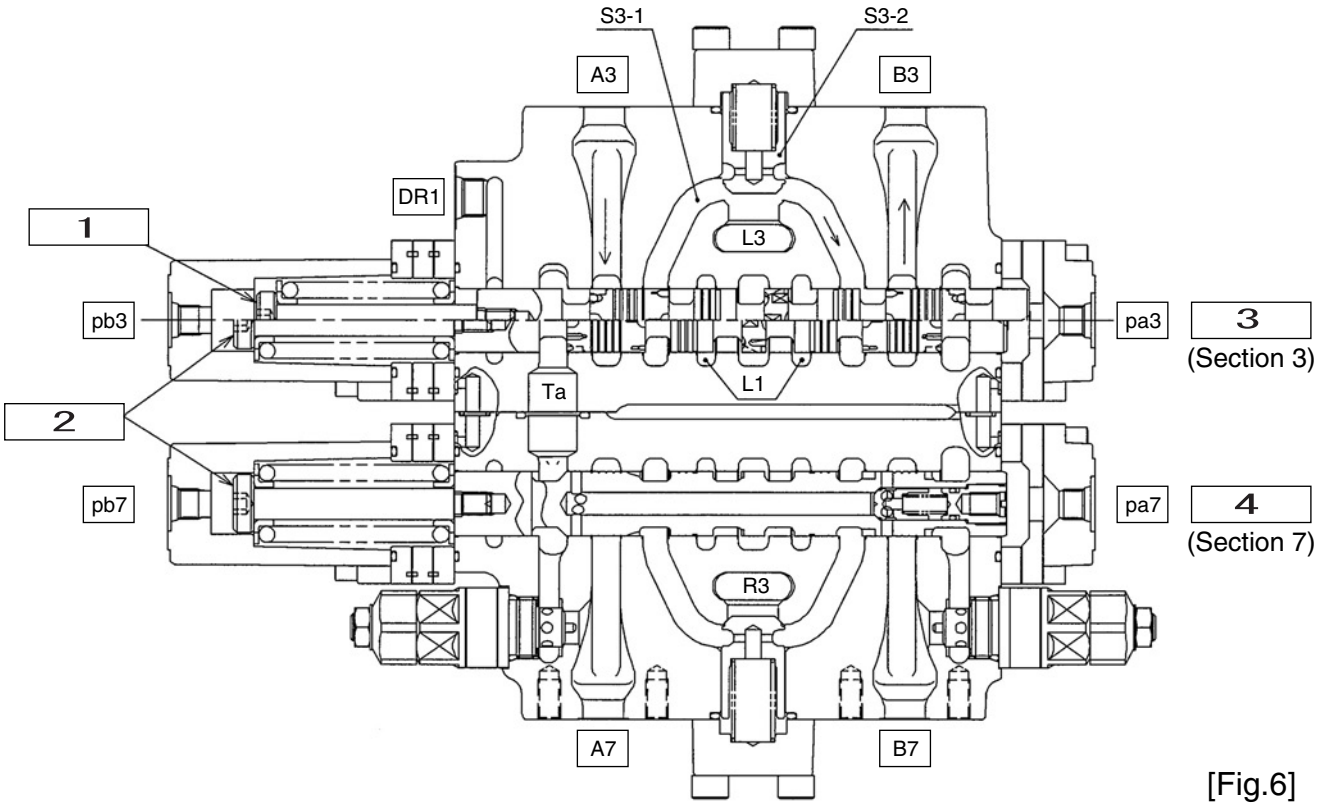

[Fig.6]

1	Trouble state	3	Swing
2	Neutral state	4	Bucket

https://truckmanualshub.com/

4) Bucket spool switchover [Fig. 7 and Fig. 8]

1. Close (regeneration) [Fig. 7]

When the bucket spool is switched by pressurizing from the bucket (section 7) pilot port Pb7, the neutral path (R1) is closed.The oil fed from the P2 port flows through the parallel path (R3), the load check valve (S7-2), path (S7-1), and the spool neck, and into the B7 port.

At the same time, the return oil from the A7 port returns to the tank path (Ta).

After part of the return oil pushes open the poppet (S7-3) inside the bucket spool, it merges into the B7 port to prevent cylinder head cavitation.

Cylinder speed increase and P2 port pressure reduction effects also accompany depending on the port pressure conditions.

Bucket-close (regeneration)

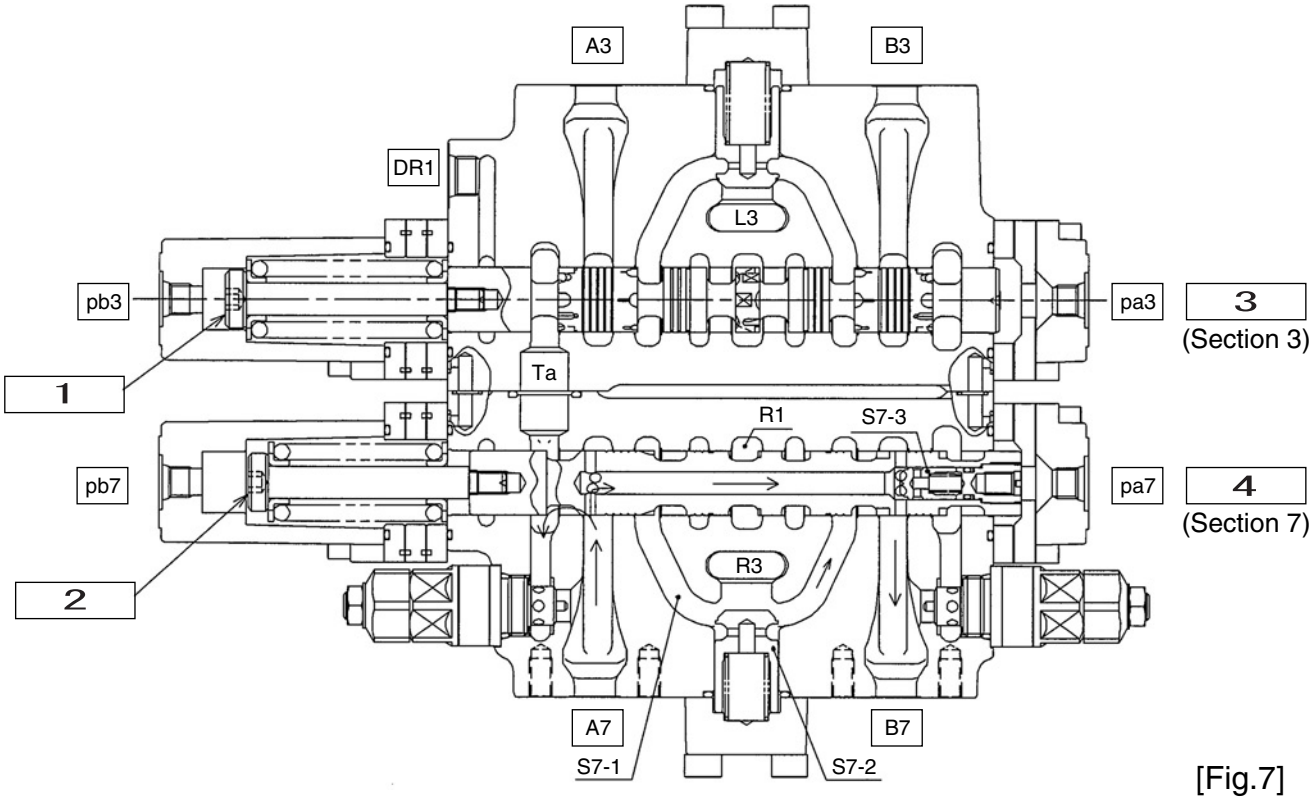

[Fig.7]

1	Neutral state	3	Swing
2	Trouble state	4	Bucket

https://truckmanualshub.com/

2. Open [Fig. 8]
   When the bucket spool is switched by pressurizing from the bucket (section 7) pilot port Pa7, the neutral path (R1) is closed.The oil fed from the P2 port flows through the parallel path (R3),
   the load check valve (S7-2), path (S7-1), and the spool neck, and into the A7 port.
   The return oil returns to the tank path (Ta) from the B7 port through the spool neck section.

Bucket-open

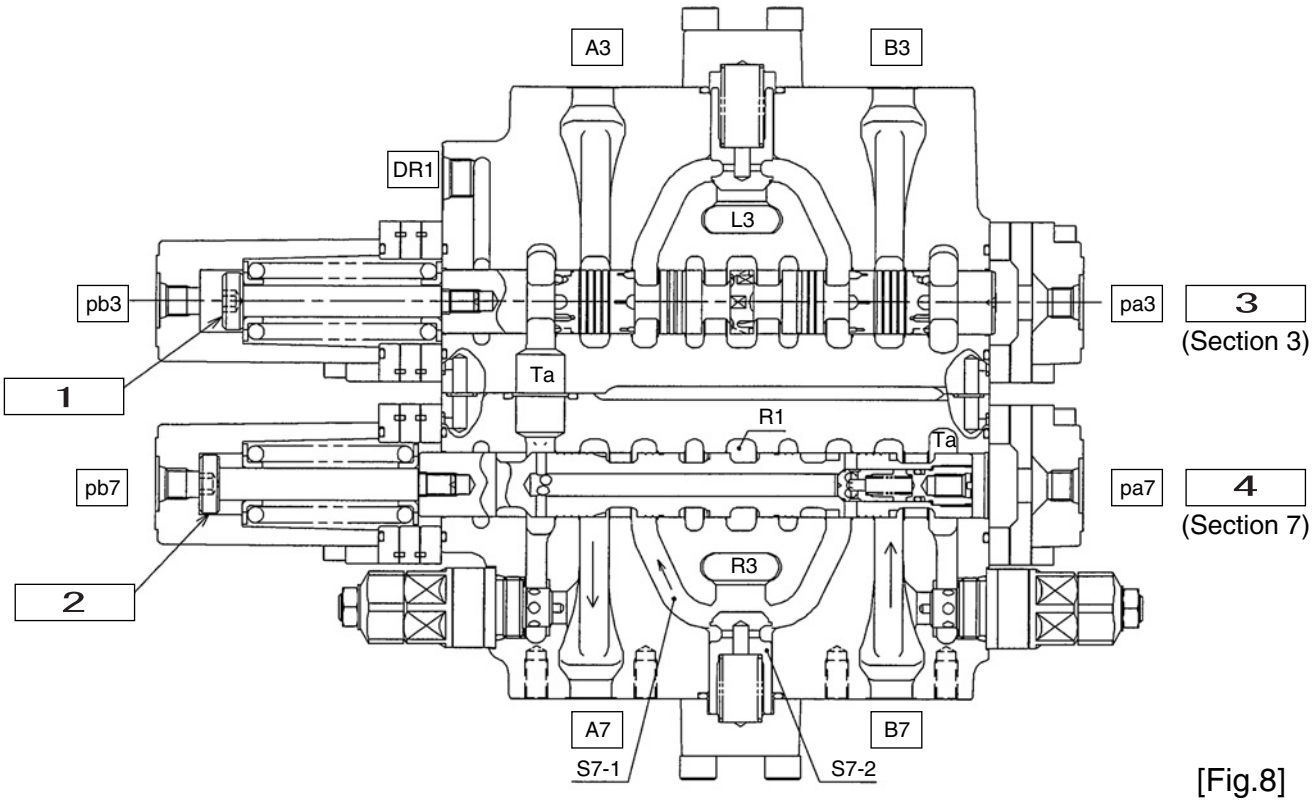

[Fig.8]

1	Neutral state	3	Swing
2	Trouble state	4	Bucket

https://truckmanualshub.com/

5) Boom spool switchover [Fig. 9, Fig. 10, and Fig. 11]

1. Neutral [Fig. 9]

This valve mounts an anti-drift valve on the boom 1 cylinder head (A8) side.
In neutral, the poppet (AD1) is reliably seated by the pressure of the A8 port itself led through path (AD2) and the spool (AD3) into the spring chamber (AD4) to cut off the return oil from the A8 port.

Neutral

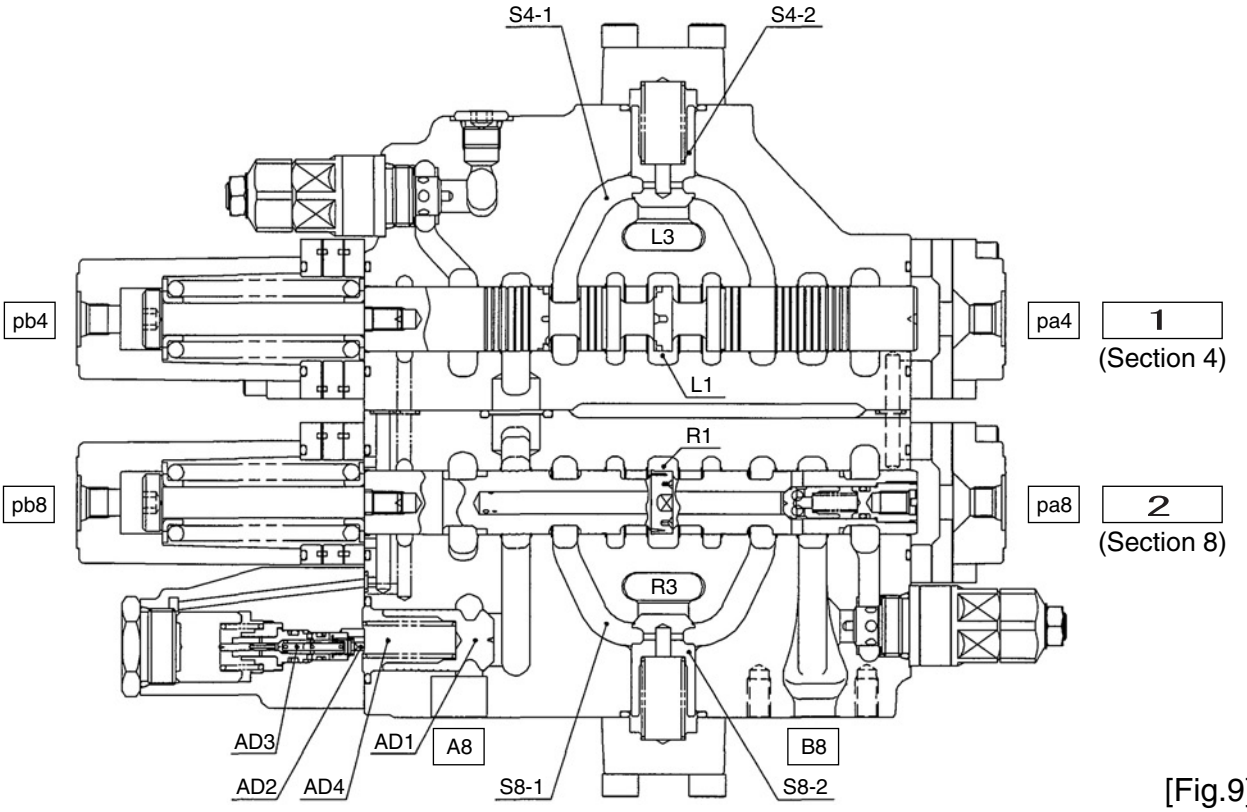

[Fig.9]

1	2-boom
2	1-boom

https://truckmanualshub.com/

2. Boom-up (2nd speed merge) [Fig. 10]
   When the boom 1 spool is switched by pressurizing from the boom 1 (section 8) pilot port Pa8, the neutral path (R1) is closed.The oil fed from the P2 port flows through the parallel path (R3), the load check valve (S8-2), and the spool neck and into the A8 port.
   When the boom 2 spool is switched by pressurizing from the boom 2 (section 4) pilot port Pa4, the neutral path (L1) is closed.The oil fed from the P1 port flows through the parallel path (L3), the load check valve (S4-2), the spool neck, and path (4) and merges into the A8 port.The return oil returns to the tank path (Ta) from the B8 port through the spool neck section.

Up (2nd speed merge)

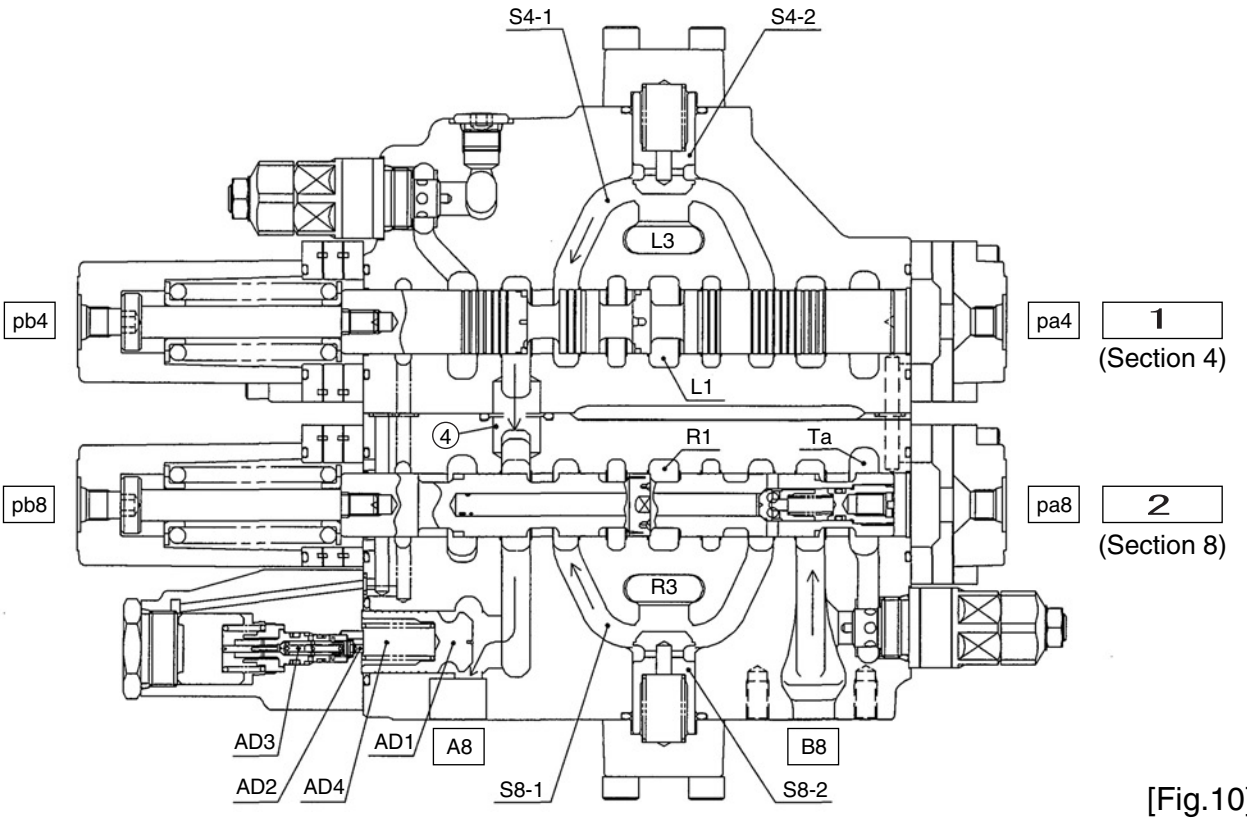

[Fig.10]

1	2-boom
2	1-boom

https://truckmanualshub.com/

3. Boom-down (regeneration) [Fig. 11]
   When the boom 1 spool is switched by pressurizing from the boom 1 (section 8) pilot port pb8, the neutral path (R1) is closed.The oil fed from the P2 port flows through the parallel path (R3), the load check valve (S8-2), and the spool neck and into the B8 port.
   The pilot pressure applied to pb8 at this time moves the anti-drift valve spool (AD3) through the path built into the housing at the same time that the spool is switched and reduces the pressure of the spring chamber (AD4) to open the poppet (AD1).
   Through this movement, the cutoff of the A8 port is released before the spool is switched.
   After that, the return oil from the A8 port returns to the tank path (Ta).
   Part of the return oil pushes open the poppet (S8-3) inside the boom 1 spool, passes through path (S8-1), and merges into the B8 port to prevent cylinder rod cavitation.
   Cylinder speed increase and P2 port pressure reduction effects also accompany depending on the port pressure conditions.

Down (regeneration)

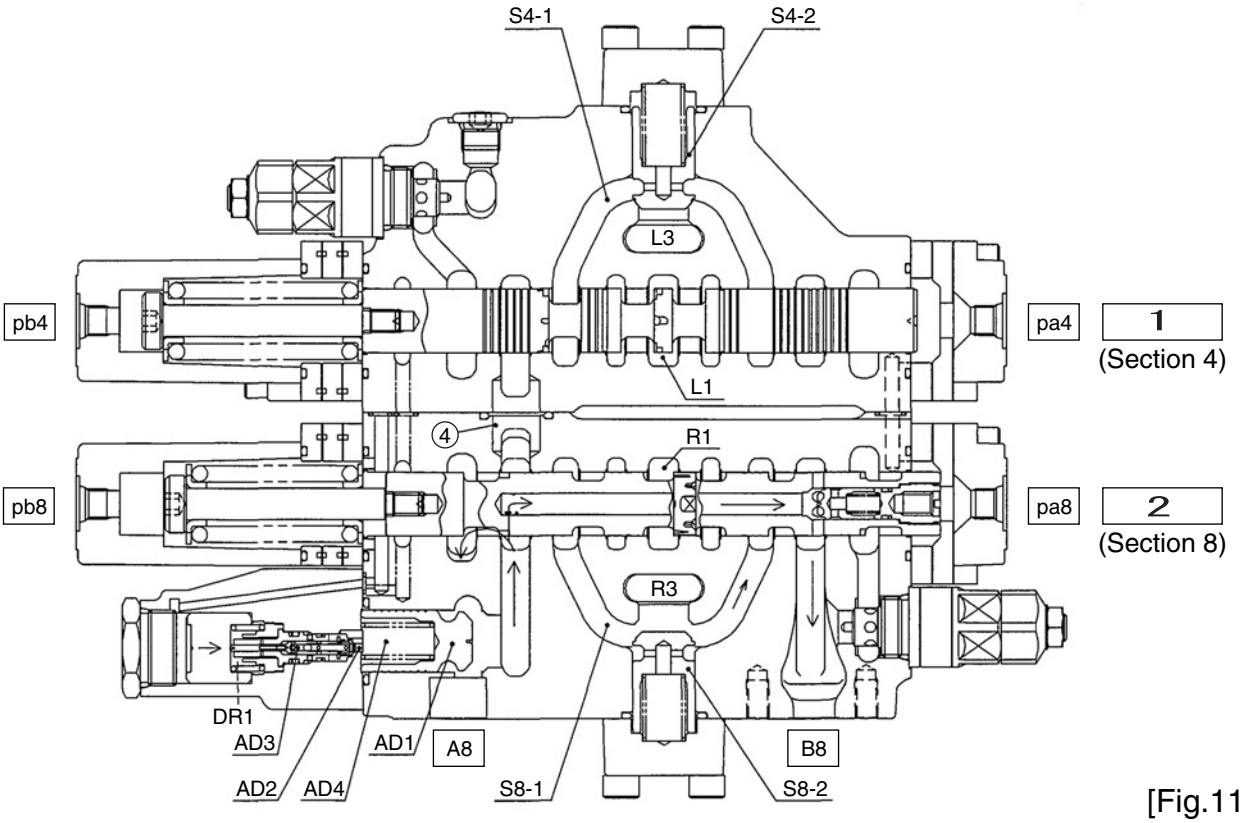

[Fig.11]

1	2-boom
2	1-boom

https://truckmanualshub.com/

6) Arm spool switchover [Fig. 12 through 15]

1. Neutral [Fig. 12]
   This valve mounts an anti-drift valve on the arm 1 cylinder rod side.
   In neutral, the poppet (AD1) is reliably seated by the pressure of the A5 port itself led through path (AD2) and the spool (AD3) into the spring chamber (AD4) to cut off the return oil from the A5 port.

Neutral

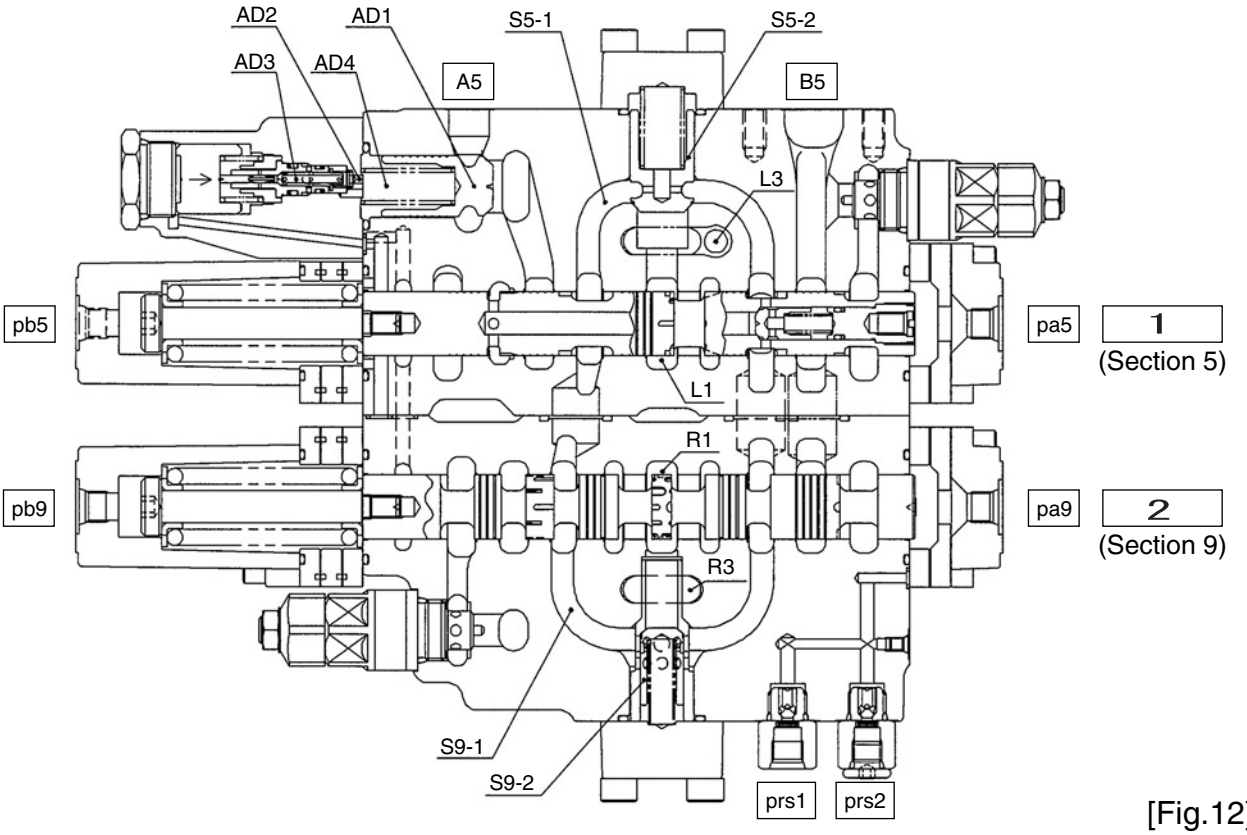

[Fig.12]

1	Arm 1
2	Arm 2

https://truckmanualshub.com/

2. Arm-in (2nd speed merge) [Fig. 13]
   When the arm 1 spool is switched by pressurizing from the arm 1 (section 5) pilot port Pb5, the oil fed from the P1 port flows from the neutral path (L1) through the load check valve (S5-2), path (S5-1), and the spool neck section and into the B5 port.When the arm 2 spool is switched by pressurizing from the arm 2 (section 9) pilot port Pb9, the oil fed from the P2 port flows from the neutral path (R1) through the load check valve (S9-2), path (S9-1), the spool neck section, and path (6) and merges into the B5 port.
   The pilot pressure applied to pb5 at this time moves the anti-drift valve spool (AD3) through the path built into the housing at the same time that the spool is switched and reduces the pressure of the spring chamber (AD4) to open the poppet (AD1).Through this movement, the cutoff of the A5 port is released before the spool is switched.
   After that, the return oil from the A5 port splits into the flow through the regeneration check valve in the spool that is regenerated at the B5 port and the flow returning to the tank path (Ta) through the regeneration control valve.
   (For details on the regeneration function, see the Regeneration valve operation explanation in next item 3) below.)

Arm-in (2nd speed merge)

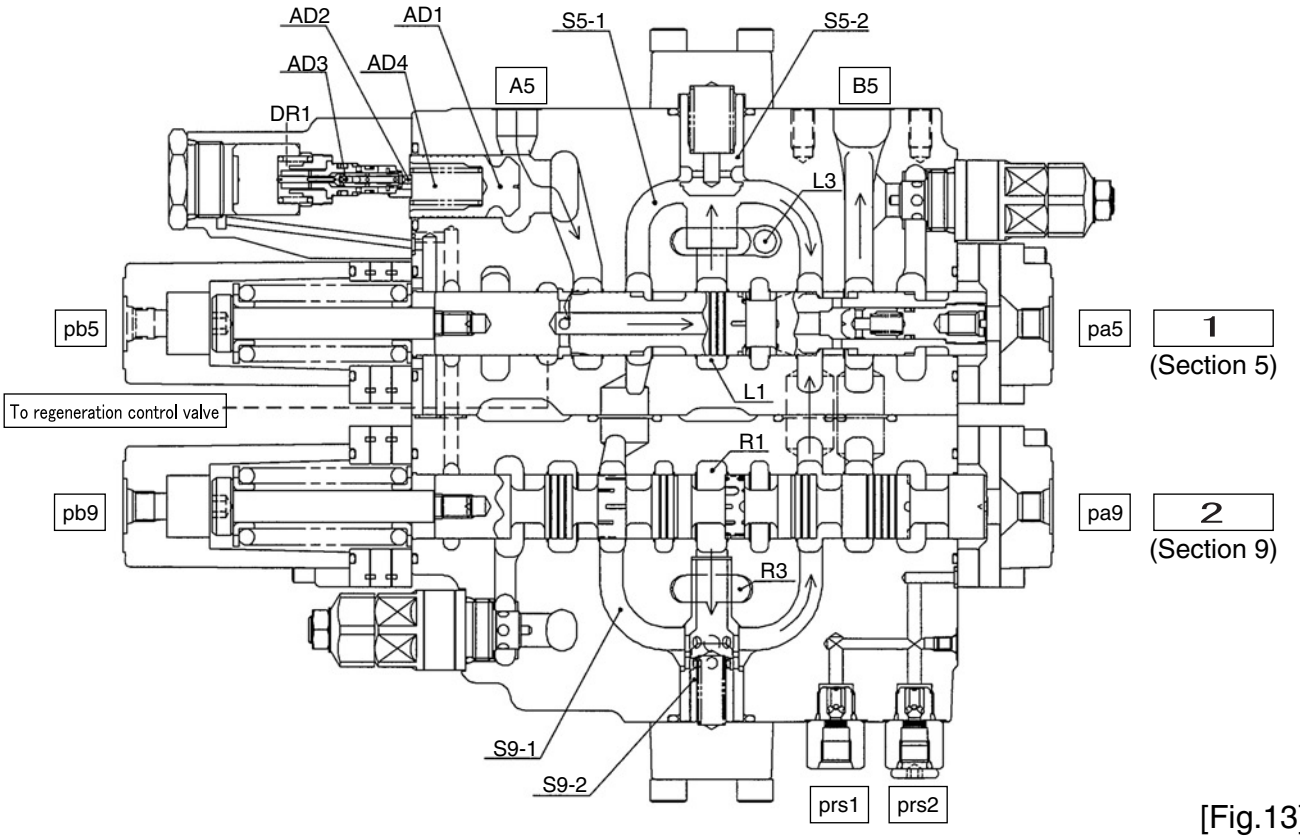

[Fig.13]

1	Arm 1
2	Arm 2

https://truckmanualshub.com/

3. Arm-in (variable regeneration) [Fig. 14]
   For an arm-in operation, after the return oil from the A5 port passes through the notch (a), it divides into two paths:
   1. The return oil returns to the tank path (Ta) through the fixed metering valve (d) in the regeneration control valve, path (e), and the variable metering valve (f).
   2. The return oil passes through the fixed metering valve (b) in the arm 1 spool, the regeneration check valve (c), and the fixed metering valve (i), then merges into the bridge path (S5-1).
   Here, when the bridge path (S5-1) pressure goes higher due to the port B5 load pressure, the regeneration control valve spool (h) is pressed through the regeneration control valve piston (g), and the variable metering valve (f) section opening surface area increases, so the quantity of oil returning to the tank path (Ta) increases.
   On the other hand, the quantity of oil regenerated in the B5 port decreases.
   Though this variable mechanism, both the regeneration ratio for low loads is secured and reduction in the return back pressure for high loads is established.

Arm-in (variable regeneration)

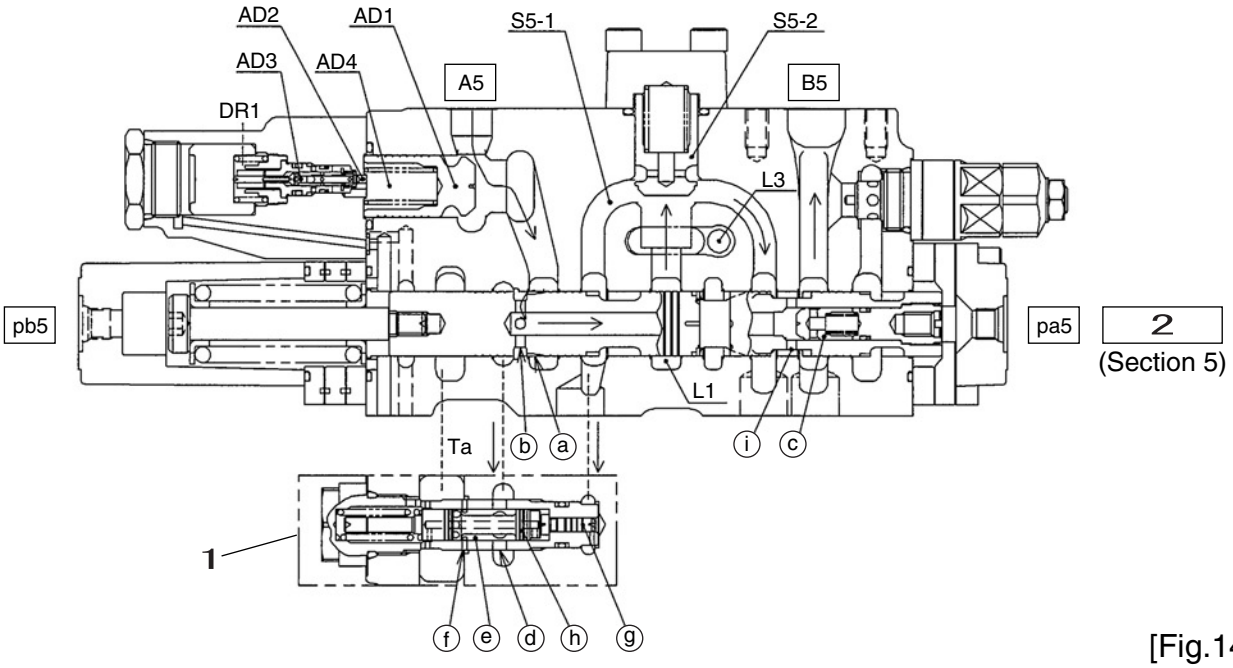

[Fig.14]

1	Regeneration control valve (variable)
2	Arm 1

https://truckmanualshub.com/

4. Arm-out (2nd speed merge) [Fig. 15]
   When the arm 1 spool is switched by pressurizing from the arm 1 (section 5) pilot port Pa5, the oil fed from the P1 port flows from the neutral path (L1) through the load check valve (S5-2), path (S5-1), and the spool neck section and into the A5 port.
   When the arm 2 spool is switched by pressurizing from the arm 2 (section 9) pilot port Pa9, the oil fed from the P2 port flows from the neutral path (R1) through the load check valve (S9-2) and path (S9-1), merges into the arm 1 section path (S5-1) and heads toward the A5 port through the arm 1 spool neck section.The return oil from the B5 port returns to the tank path (Ta) from the B5 port through the spool neck section.

Arm-out (2nd speed merge)

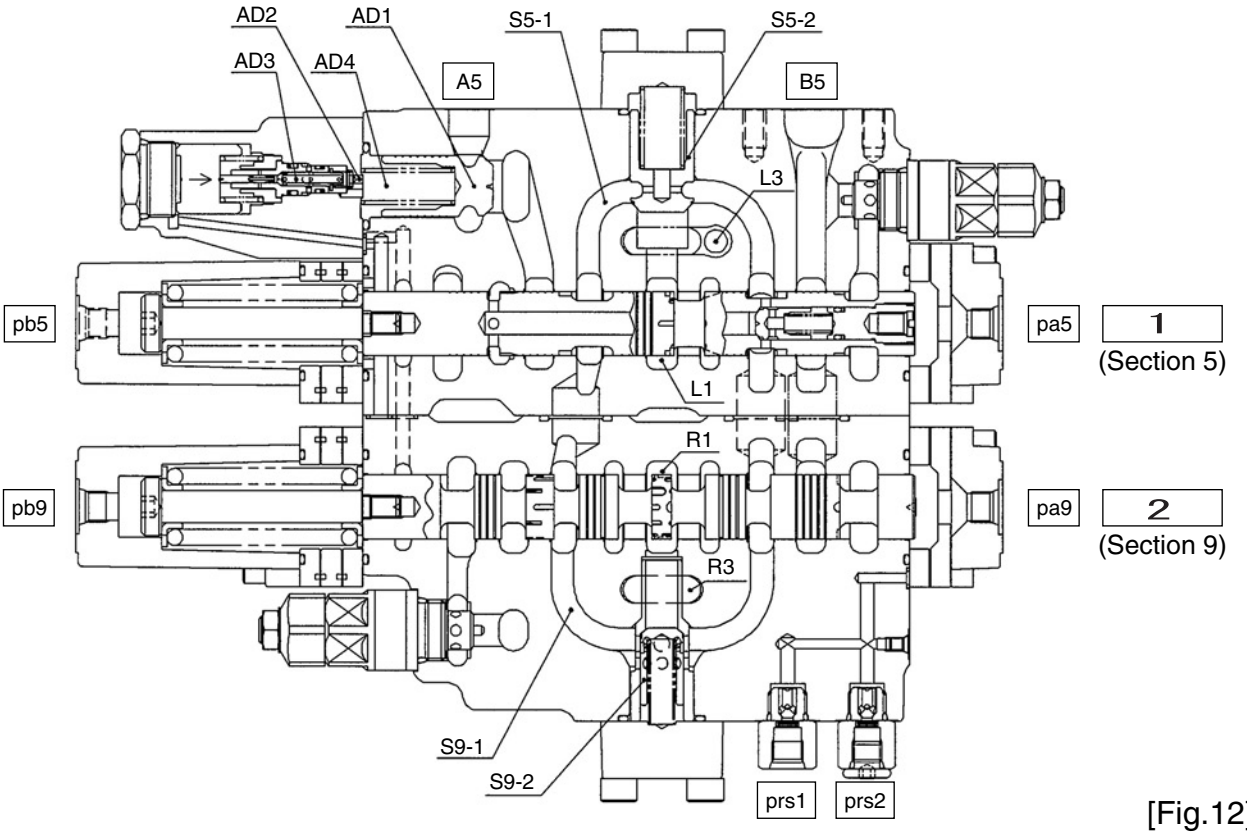

[Fig.12]

1	Arm 1
2	Arm 2

https://truckmanualshub.com/

7) Arm parallel metering valve [Fig. 16]
Metering by the spool is installed in the arm 1 parallel path of this valve to control the quantity of oil fed to arm 1 for compound operations.
The oil fed from the arm 1 (Section 5) parallel path (L3) pushes open the poppet (S5-3) and passes through the variable metering spool metering valve (Lc8), then is connected to path (L5).
Here, the quantity metered by the metering valve (Lc8) is adjusted by pressurizing the pilot port (Pbu).

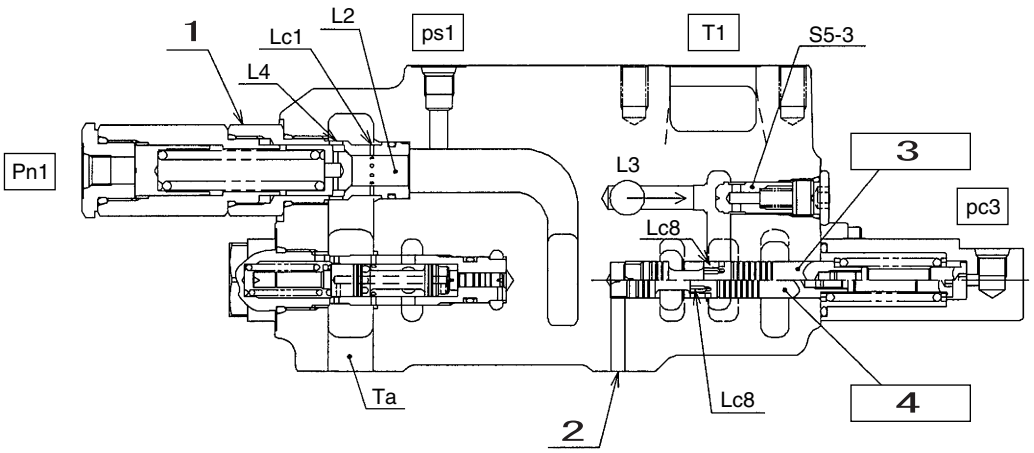

[Fig.16]

1	Low pressure relief valves (L)	3	For boom-up (for Pbu pressurization)
2	Pbu signal path	4	For neutral

https://truckmanualshub.com/

8) Relief valve

1. Main relief valve [Fig. 17]
   The oil fed from the P1 port passes through the poppet (LP) and the oil fed from the P2 port passes through the poppet (RP) and path (3) and is led to the main relief valve.The maximum pressure of the P1 and P2 pumps is controlled by the operation of the main relief valve.

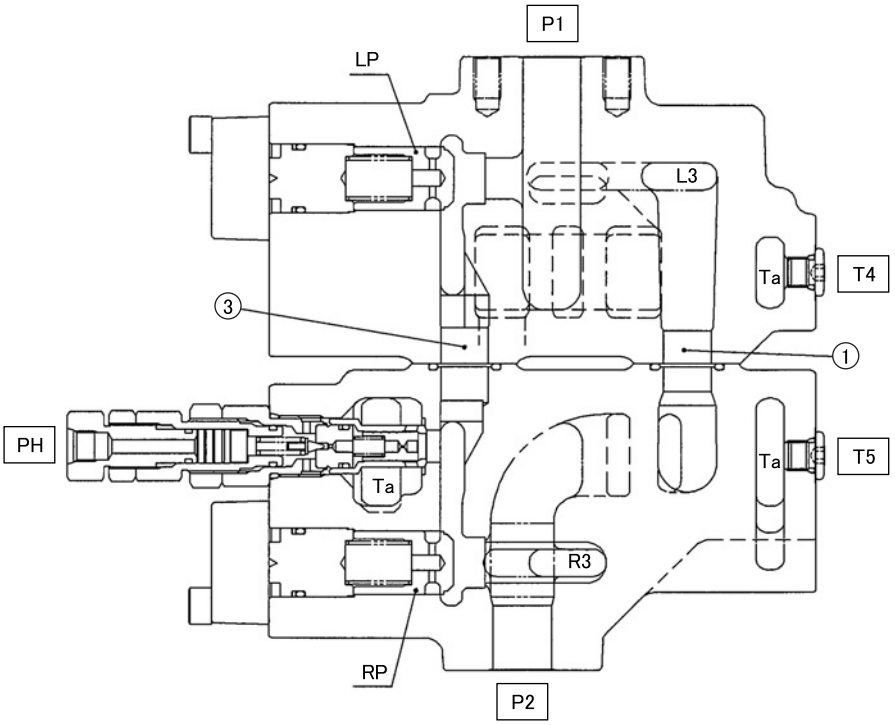

[Fig.17]

2. Overload relief valve [Fig. 18]
   There is an overload relief valve at the boom 1, arm 1, bucket, and add-on cylinder ports to prevent any abnormal rise in actuator pressure, for example due to an external force.
   This relief valve is also equipped with a function for preventing cavitation (suction function) by taking in oil from the tank when there is a load on the cylinder port pressure.

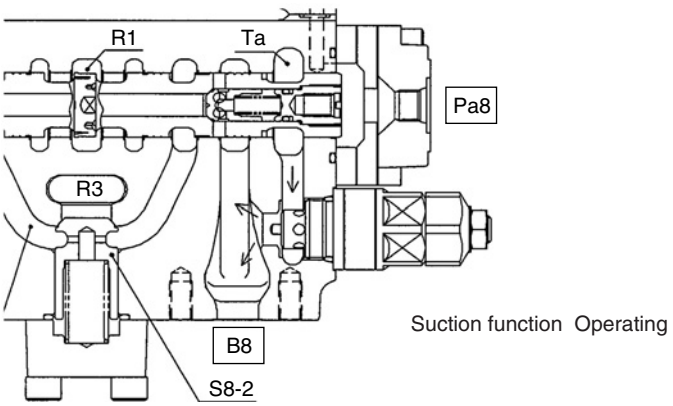

[Fig.18]

https://truckmanualshub.com/

[3] Compound operation

1) Travel compound operation [Fig. 19, Fig. 20]

Under the conditions below when the travel left / right and the front system are operated at the same time, the straight travel spool is switched, and the straight travel characteristic is maintained.

1 When the front is operated during travel left / right simultaneous operation (advance, retreat, or pivot turn)

2 When the left / right are operated simultaneously during front system operation

Front system operation is not affected by the quantity of switches and switchover sections.

1. Signal circuit [Fig. 19]

(A)When the [Travel 1] side level is operated, the pressure branched off from the valve main unit pilot port passes through the filter and the shuttle, then switches the switch valve [V1].

(B)When the [Travel 2] side level is operated, the pressure branched off from the valve main unit pilot port passes through the filter and the shuttle, then if the switch valve [V1] is switched, it switches the switch valve [V2] through the path.On the other hand, if the switch valve [V1] is in the neutral state, the path is cut off by the switch valve [V1]. Therefore, if both (A) and (B) are established at the same time, the straight travel spool internal path (Pst) is conducted to PA. Also, if either (A) or (B) are established, the travel signal (PT) pressure rises.

(C)If at least one of the front systems is switched, the highest pressure of all the pilot pressures in the front system is selected and is connected to the front signal port (PA). Therefore, if (A), (B), and (C) are established at the same time, the straight travel spool switchover quantity is determined proportional to the front signal (PA) pressure through the internal straight travel signal path (Pst). [Fig. 19] shows the example of a case of travel left / right advance + boom-up.

D

https://truckmanualshub.com/

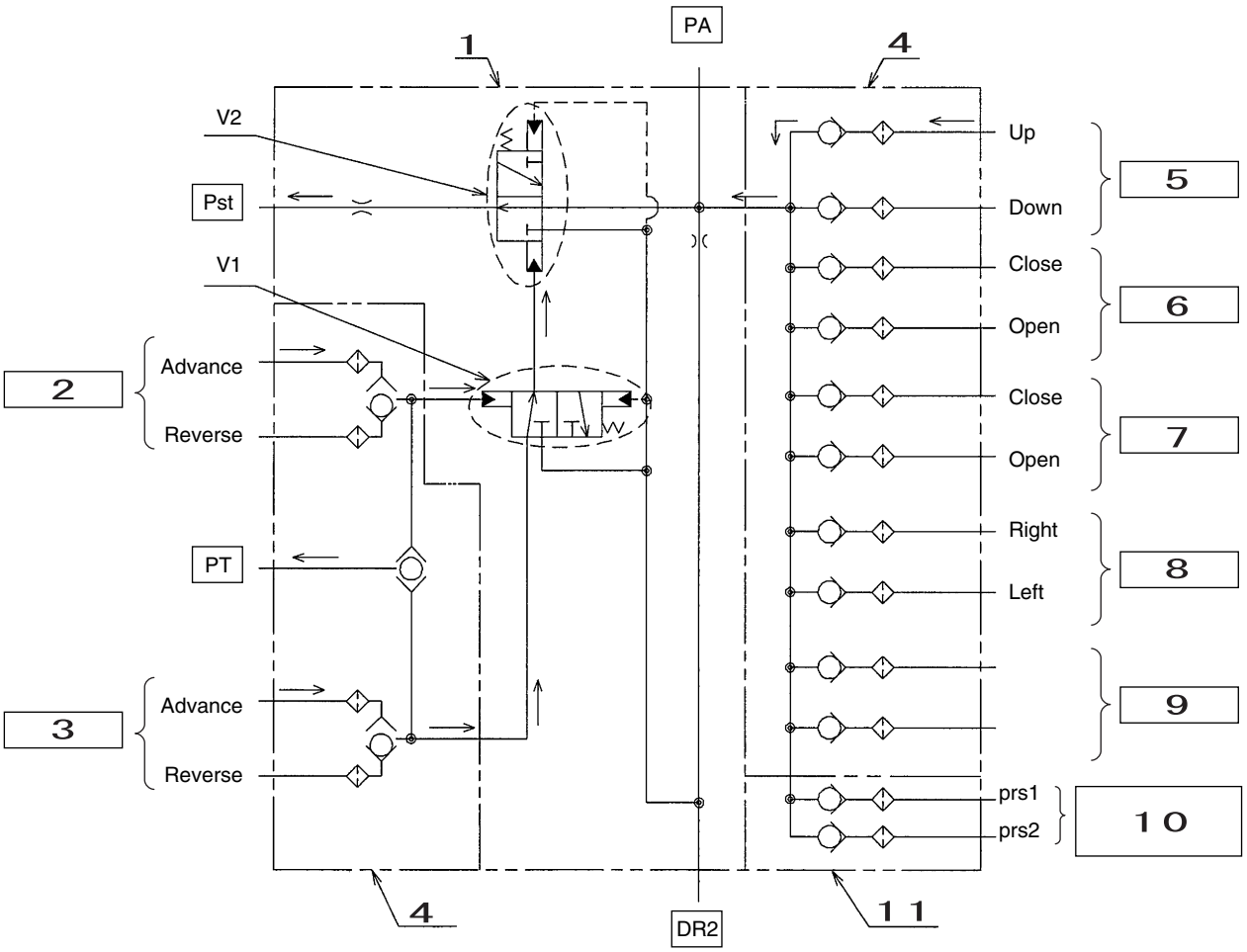

[Fig.19]

1	Straight travel signal control valve	5	Boom	9	Option
2	Travel 1	6	Arm	10	Add-on (main pump)
3	Travel 2	7	Bucket	11	Main unit housing section (option)
4	Plate ASSY	8	Swing		

https://truckmanualshub.com/

2. Main unit circuit [Fig. 20]
When the straight travel spool is switched, the oil fed from the P1 port flows from the neutral path (L1) to travel (section 1) and at the same time passes through path (2), the straight travel spool neck section, and the neutral path (R1) and into travel (section 6) and feed to travel left and right becomes possible.
On the other hand, when the oil fed from the P2 port flows to the parallel path (R3), at the same time it passes through the straight travel spool neck section and path (1) and into the parallel path (L3), so it becomes possible to feed oil to the entire front system.
When the front system is switched during travel and that pressure becomes higher than the load pressure on travel (section 6), part of the oil fed from the P2 port pushes up the poppet (S6-2) from the parallel path (R3) and the oil flows through the metering valve at the poppet tip and merges into path (S6-1).
This softens the shock on the machine body of the sudden drop in speed caused by the switchover to 1 pump travel.
Because as described above, travel (sections 1 and 6) operates with the oil fed from the P1 port and operating machines other than travel are operated with oil fed from the P2 port, travel curving is prevented and the straight travel characteristic maintained during compound operations.

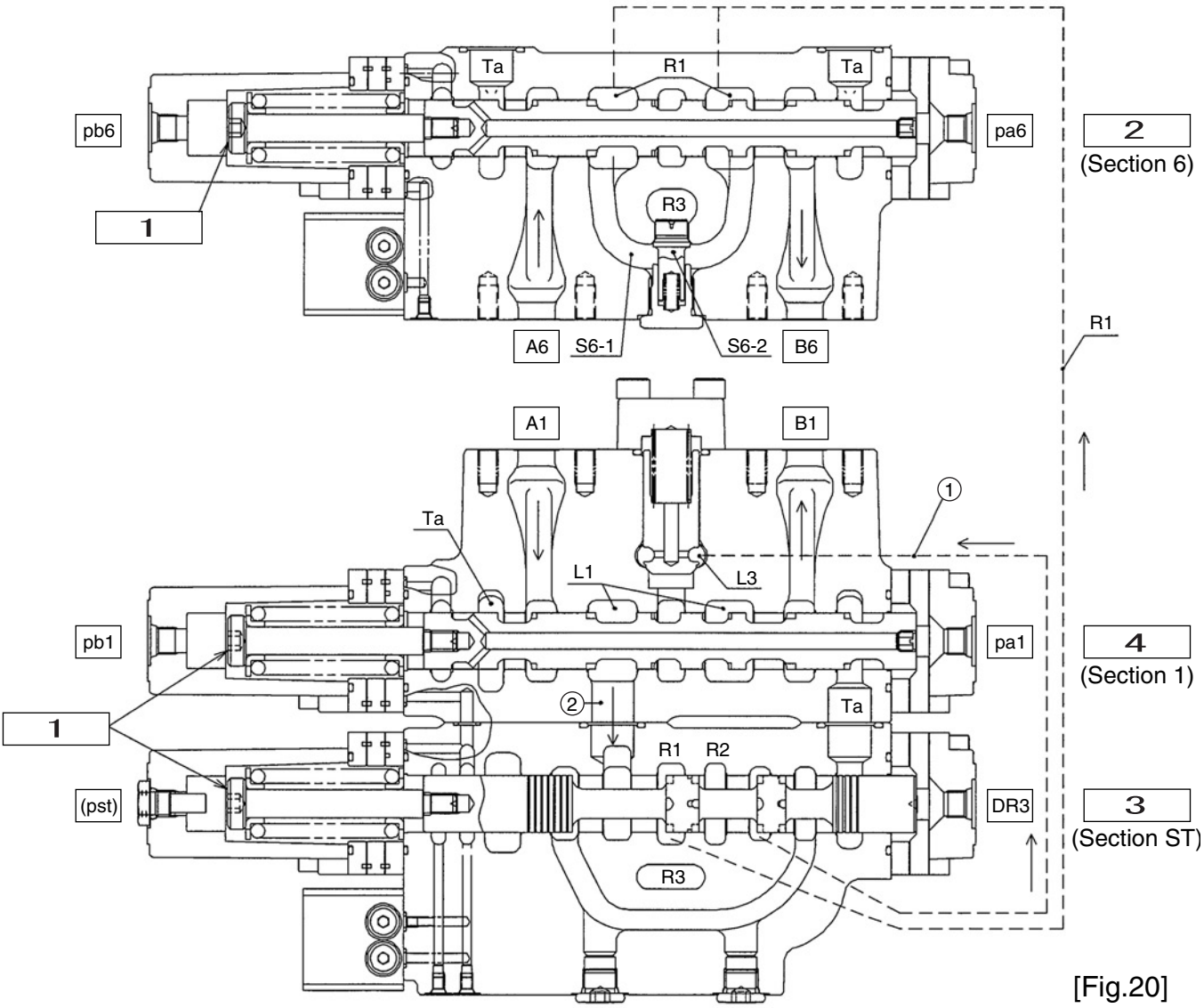

[Fig.20]

1	Trouble state	3	Straight travel
2	Travel	4	Travel

https://truckmanualshub.com/

[4] Anti-drift valve

The anti-drift valve is mounted on the arm rod [boom head] side cylinder port to prevent the arm [boom] cylinder from dropping naturally.
Also, the release signal operates led by the internal path from the pilot signal.
(The arm side (A5) is shown as a typical example.)

1) Neutral (A5 port hold)
   1. The A5 port hold pressure passes from path (a) through path (b), through path (c), and is conducted to the poppet (1) spring chamber (d).
   2. Therefore, the A5 port pressurized oil is cut off by the seat section (S1) and the seat section (S2).

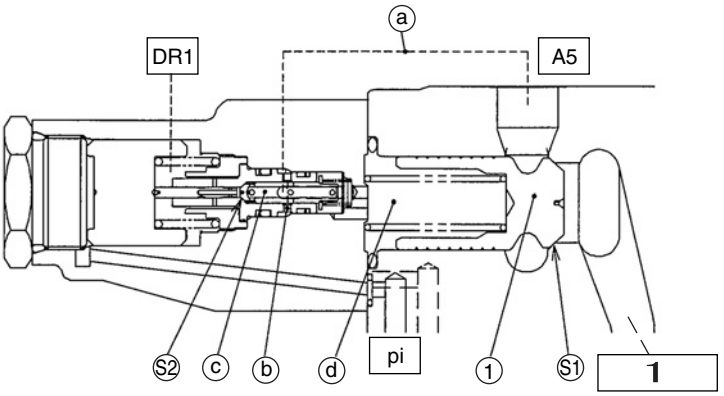

1	Main spool

2) Release signal application
   1. When the pi port is pressurized, the piston (2) moves and the spool (3) operates.
   2. Furthermore, the spool (3) operates the poppet (4).
   3. Then, the operation of the poppet (4) cuts off the connection between the A5 port and the spring chamber (d).

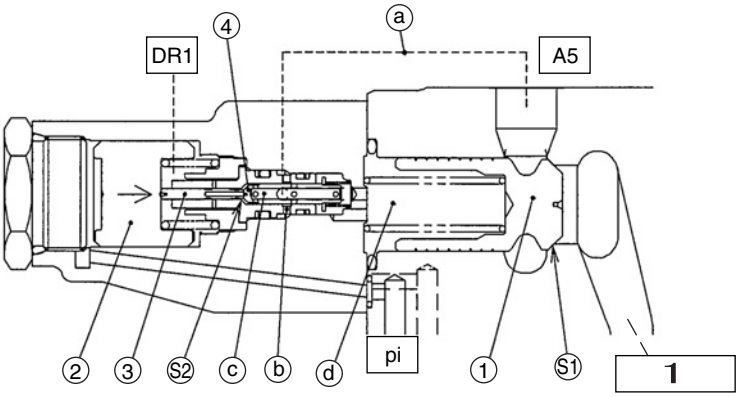

1	Main spool

https://truckmanualshub.com/

3) Ending hold status
   1. When the piston (2) operates further, the spring chamber (d) is connected by the (T2) section from path (c) through path (e) to the drain chamber [DR].
   2. The spring chamber (d) pressure becomes the drain pressure and the main poppet (1) operates.

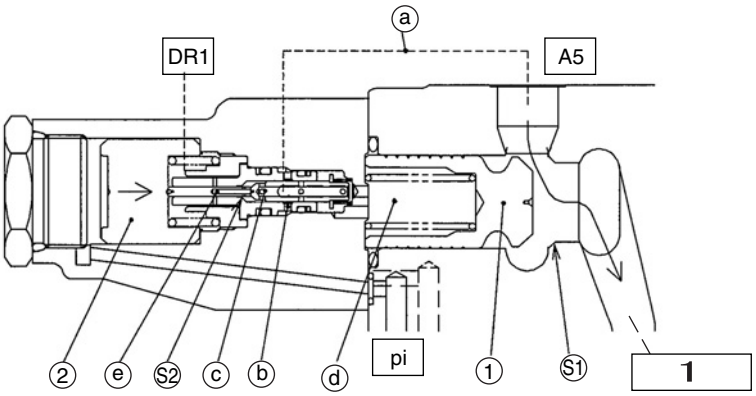

1	Main spool

https://truckmanualshub.com/

[5] Relief valve

1) Main relief valve operation

1. This relief valve is incorporated between the neutral path "HP" and the low-pressure path "LP. The oil passes through the metering hole of the main poppet [C] and charges the interior space [D].Also, the sleeve [E] and the main poppet [C] seat securely operating on the different surface areas [A] and [B].

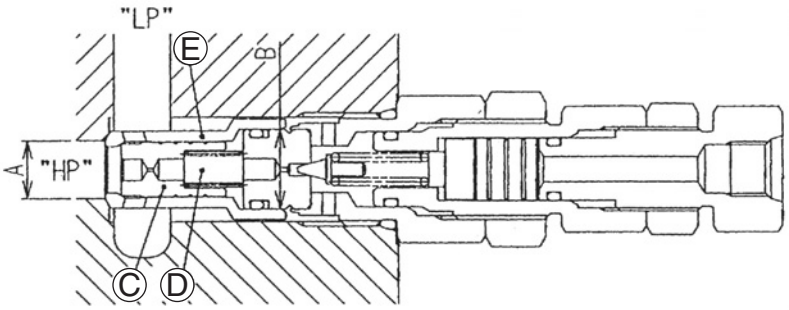

2. When the neutral path "HP" pressure reaches the set pilot poppet spring force, the pilot poppet [F] opens.The oil flows around the poppet, passes through the notch hole [G], and is led to the low-pressure path "LP".

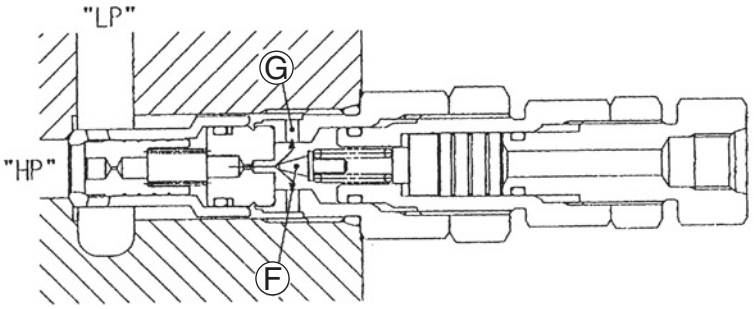

3. Because the pilot poppet has opened, the [D] pressure drops and the main poppet [C] opens, so the oil flows directly into the path "LP".

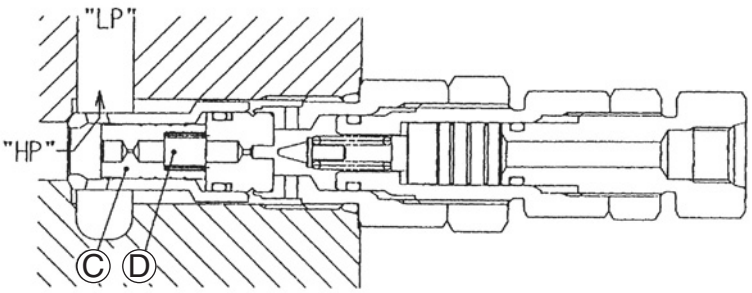

https://truckmanualshub.com/

"Boosted pressure operation"
When pressure is applied to the pilot port "PH", the piston [H] is moved to the set position by the plug [I].Because of this, the pilot spring force rises and the "HP" pressure rises.

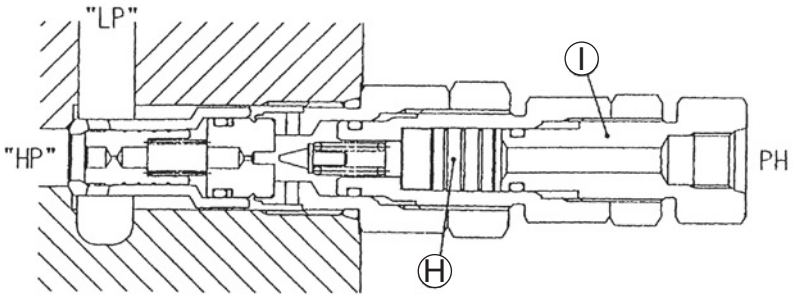

2) Overload relief valve operation
   1. This relief valve is incorporated between the cylinder port "HP" and the low-pressure path "LP". The oil passes through the metering hole of the piston [C] and charges the interior space [G].The sleeve [K] and the main poppet [D] seat securely operating on the different surface areas [A] and [B].

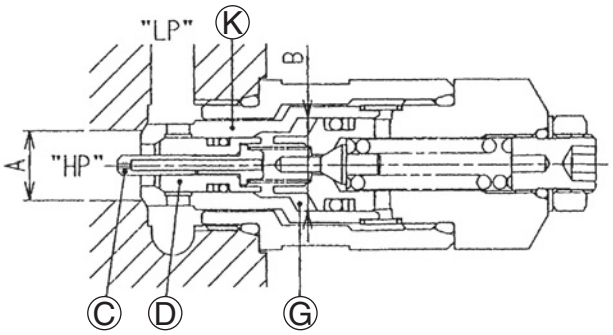

   2. When the cylinder port "HP" pressure reaches the set pilot poppet spring force, the pilot poppet [E] opens.The oil flows around the poppet, passes through the notch hole [H], and is led to the low-pressure path "LP".

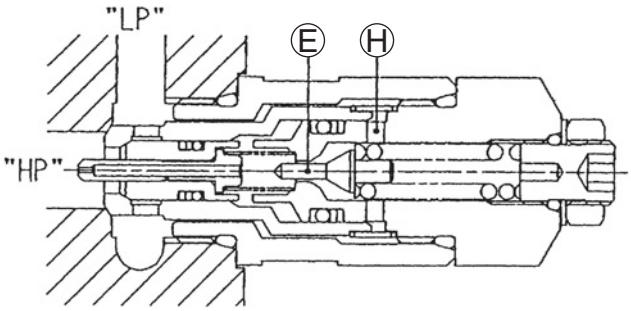

https://truckmanualshub.com/

3. Because the pilot poppet [E] has opened, oil flow is generated through the metering valve [I] of the piston [C], a pressure difference is generated between the path "HP" and the rear side of the piston [C], and the piston [C] moves and seats with the poppet [E].

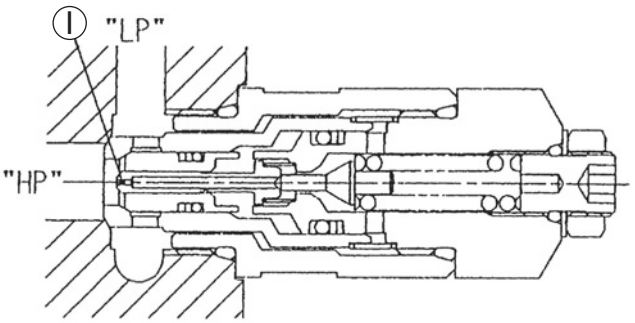

4. The flow of oil from the path "HP" to the rear side of the poppet [D] is only through the ring-shaped gap between the poppet [D] and the piston [C] and through the metering valve [F], so the pressure difference increases.
   Because of this, the poppet [D] opens and the oil flows directly into the path "LP".

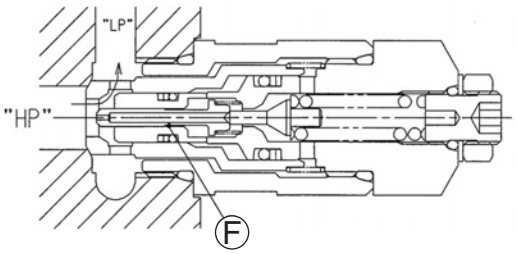

3) Overload relief valve intake operation
   1. This relief valve has a built-in anti-void unit that supplies oil if cavitation occurs at the cylinder port "HP"
      When the cylinder port "HP" pressure is lower than the low-pressure side "LP", the sleeve [K] is opened by the surface area difference between [A] and [B]. Oil enters the cylinder port "HP" from the low-pressure side "LP" to prevent cavitation.

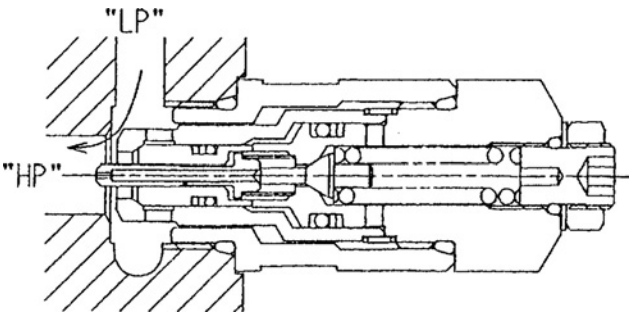

https://truckmanualshub.com/

[6] Neutral cut spool [Fig. 21]

This valve is equipped as standard with a neutral cut spool in the P2 side housing neutral path (R1) minimum flow (low-pressure relief valve upstream).

When the pcc port is pressurized and the neutral cut spool is switched, the path through the metering valve [Lc7] to low-pressure relief valve is cut off and output to the outside from the P3 port becomes possible.

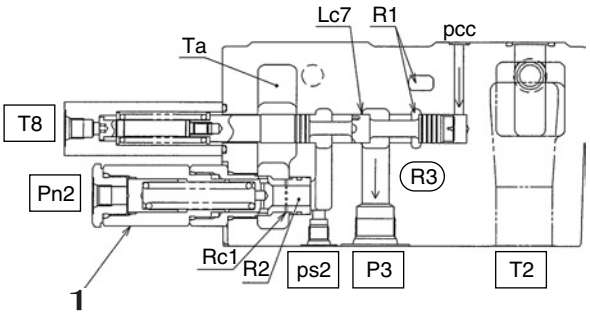

[Fig.21]

1	Low pressure relief valves (R)

[7] Plate ASSY [Fig. 22]

This valve is equipped with a plate ASSY hermetically sealed with a gasket piling a plate on the housing side surface.

The shuttle is built into the inside and this valve has a function for selecting and controlling the spool pilot pressure.

Also, in order to protect the shuttle section from contamination from the outside, a filter is mounted between the plates.

When removing, do not loosen the indicated screw and be careful that internal parts are not dispersed.

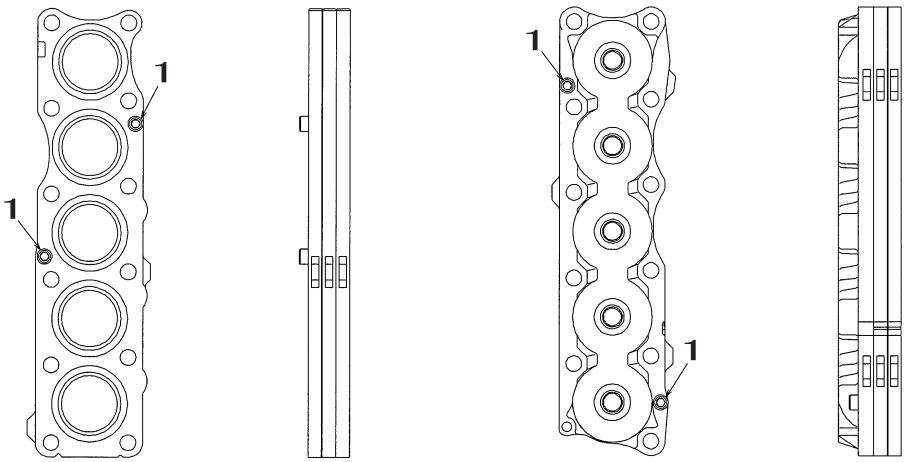

[Fig.22]

[Long cap side]]

[Short cap side]

1	Sub-assembly screw

https://truckmanualshub.com/

[8] Straight travel signal control valve [Fig. 19, Fig. 23]
This valve integrates the pilot pressure for the spool of the front system and travel selected with the plate ASSY and is used to switch the straight travel spool.
When the Travel 1 pilot pressure is pressurized, the spool [V1] is switched.
When the Travel 2 pilot pressure is pressurized at the same time, the spool [V2] is switched.
Here, when the front system pilot pressure [PA] is pressurized, the PA pressure flows into Pst and is led to the straight travel spool pilot chamber and the spool is switched.

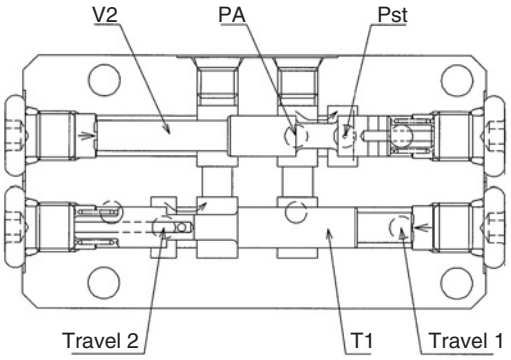

[Fig.23]

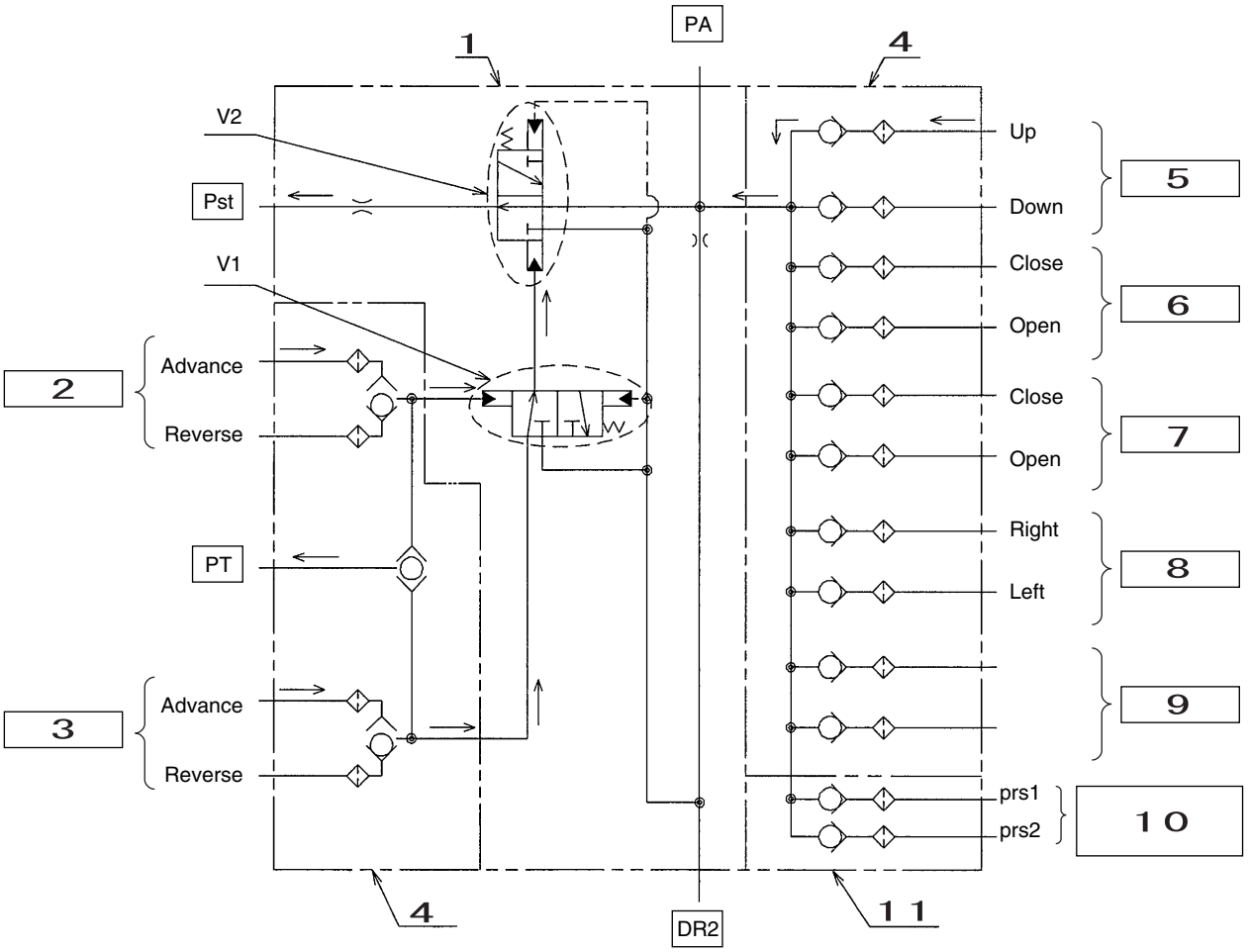

[Fig.19]

1	Straight travel signal control valve	5	Boom	9	Option
2	Travel 1	6	Arm	10	Add-on (main pump)
3	Travel 2	7	Bucket	11	Main unit housing section (option)
4	Plate ASSY	8	Swing		

https://truckmanualshub.com/

[9] Add-on [Fig. 24, Fig. 25]

1) Add-on main relief valve
The oil fed from the Pr port is led to the main relief valve. The Pr pump maximum pressure is regulated by the operation of the main relief valve.

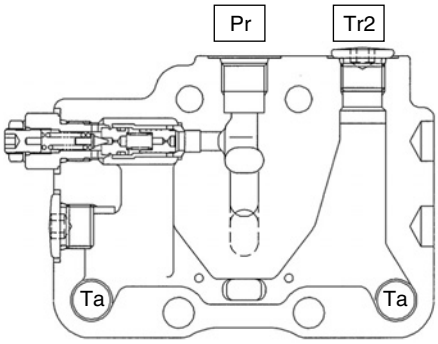

[Fig.24]

2) Spool section
When the spool is pressurized from the add-on (Section 10) pilot port par1 [pbr1] and switched, the neutral path [Pg] is closed.The oil fed from the Pg port flows from the parallel path [Rg] through the load check valve [S10-1], the path [S10-2], and the spool neck, and into the AR1 [BR1] port.
The return oil returns to the tank path [Ta] from the BR1 [AR1] port through the spool neck section.

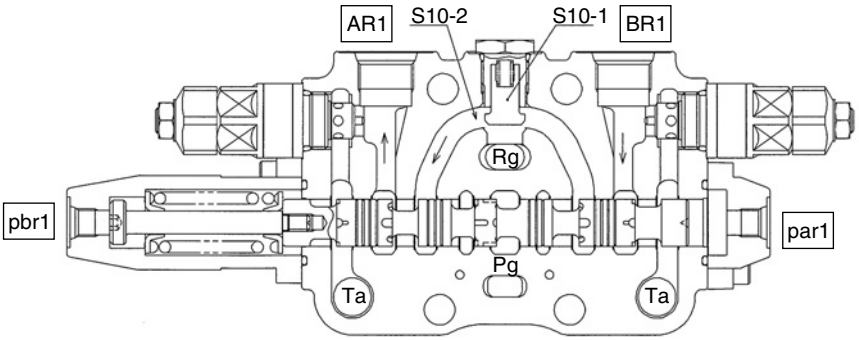

[Fig.25]

https://truckmanualshub.com/

3) Low-pressure relief valve operation [Fig. 26, Fig. 27]

1. Signal pressure generation (when pin1 [pin2] port pressurized)
   The oil fed from the pump port (P1 [P2]) flows through the neutral path (L1 [R1]), then flows from the low-pressure relief path (L2 [R2]) through the metering valve (Lc1 [Rc1]) and out into the tank path (Ta).
   At this time, the pressure generated in path (L2 [R2]) by the metering valve (Lc1 [Rc1]) is led to the low-pressure relief signal port (Ps1 [Ps2]).
   When the (L2 [R2]) upstream main spool operates, the oil flowing through (L2 [R2]) is reduced, so the (Ps1 [Ps2]) signal pressure becomes lower.

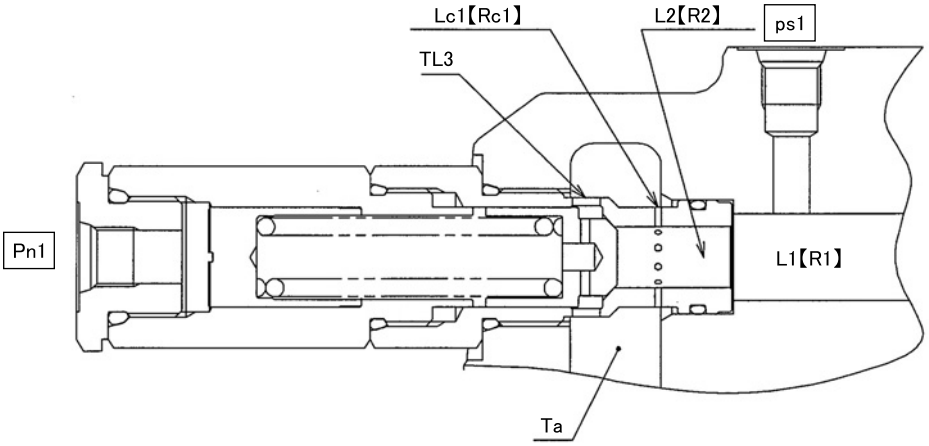

[Fig.26]

2. Relief operation
   When excess oil flows in path (L2 [R2]), the poppet is operated by the pressure generated in path (L2 [R2]) by the metering valve (Lc1 [Rc1]).
   Through this poppet operation, the oil flows from the path, through the notch hole path, and out to the tank path [Ta]. This prevents the generation of excess pressure at the low-pressure relief signal port.

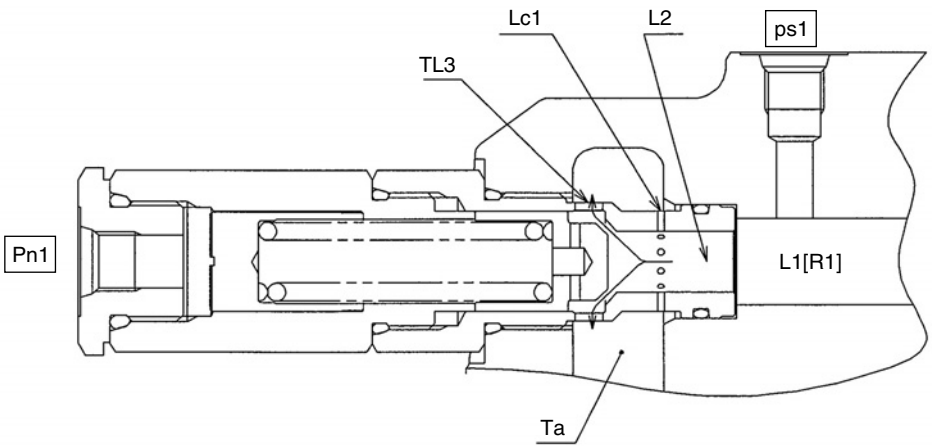

[Fig.27]

https://truckmanualshub.com/

4) Add-on main relief valve

1. Add-on main relief valve operation
   This relief valve is incorporated between the neutral path "HP" and the tank path "LP". The oil passes through the metering hole of the main poppet [1] and charges the interior space [C].
   Also, the sleeve [2] and the main poppet [1] seat securely operating on the different surface areas "A" and "B".

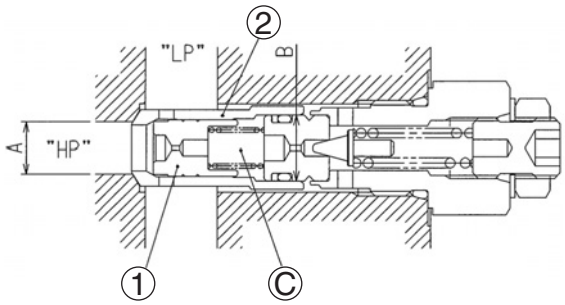

2. When the neutral path "HP" pressure reaches the set pilot spring force, the pilot poppet [3] opens.
   The oil flows around the pilot poppet [3], passes from the notch hole [E] and through the ring-shaped gap [D] and is led to the tank path "LP".

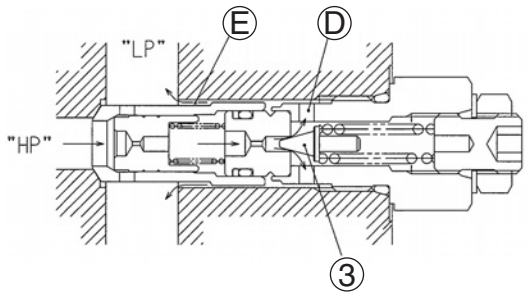

3. Because the pilot poppet [3] has opened, the interior space [C] pressure drops and the main poppet [1] opens, so the "HP" oil flows directly into the path "LP".

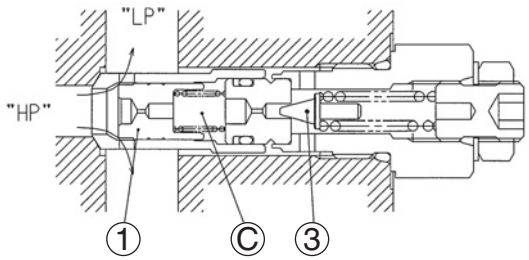

https://truckmanualshub.com/

2. 5-stack Solenoid Valve Operation Explanation

(1) External shape diagram (Figure 1) and configuration diagram (Figure 2)

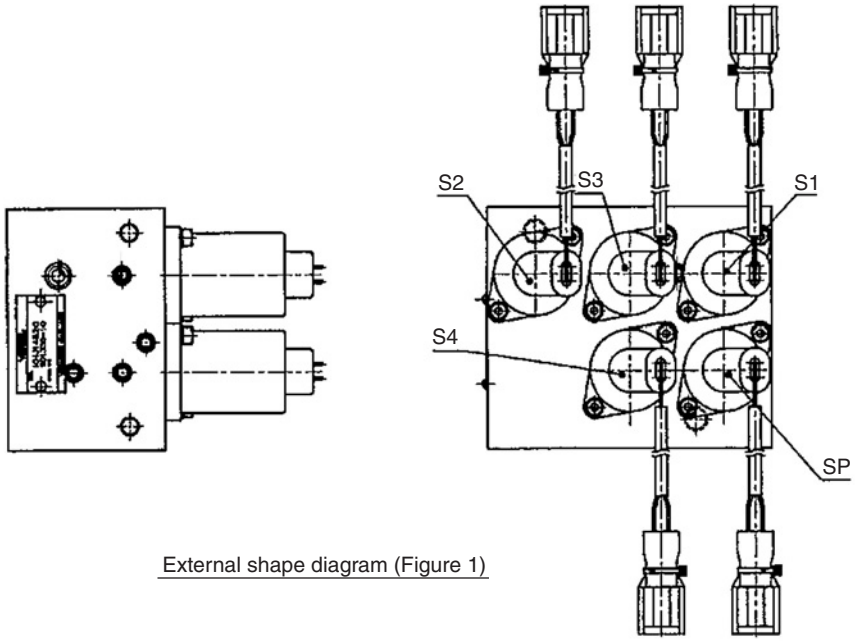

External shape diagram (Figure 1)

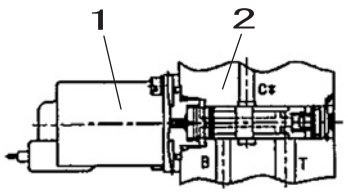

lormal closed type Solenoid; SP, S1, S3

Structural diagram (Figure 2)

1	Electromagnetic switch valve
2	Body

(2) Main component parts

This valve is made up of the body and the electromagnetic switch valve.

https://truckmanualshub.com/

(3) Operation explanation

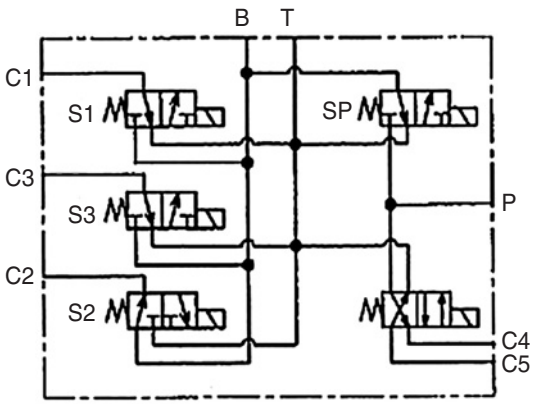

The pressurized oil fed from the P port feeds pressurized oil to the C1 through C5 ports according to the excitation or non-excitation of electromagnetic switch valves S1 through S4 resulting from exciting electromagnetic switch valve SP.

Electromagnetic switch valves S1 and S3	→	Oil passing through when valve excited
Electromagnetic switch valve S2	→	Oil passing through when valve not excited
Electromagnetic switch valve S4	→	Oil passing to C5 when valve excited Oil passing to C4 when valve not excited

(4) Structural diagram

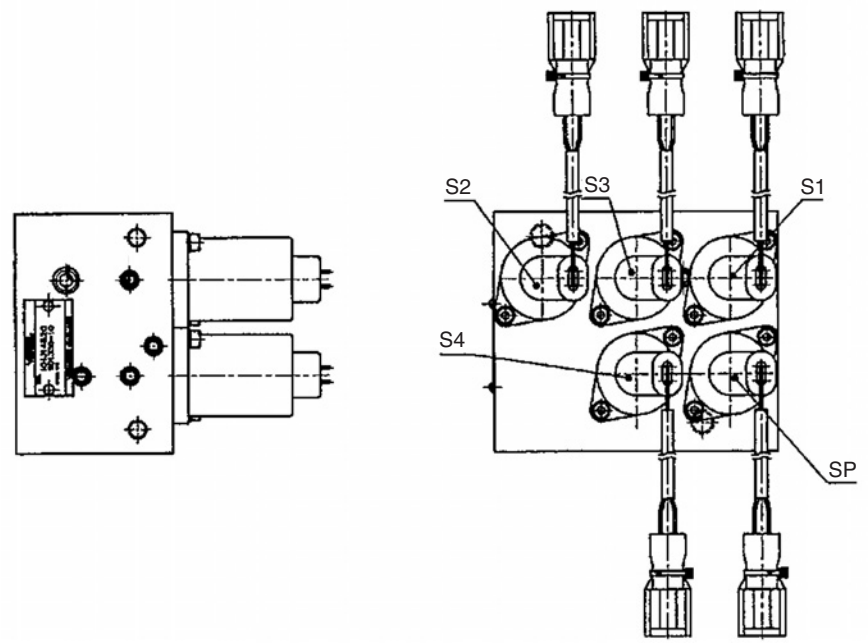

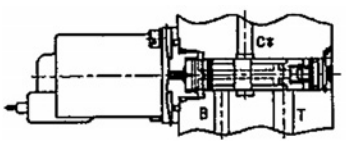

Normal closed type Solenoid; SP, S1, S3

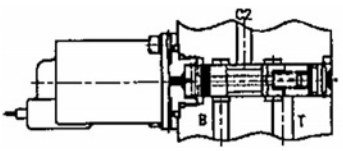

Normal open type Solenoid; S2

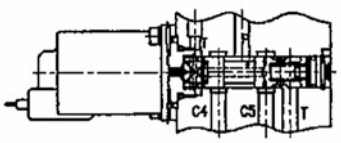

4 port type Solenoid; S4

https://truckmanualshub.com/

3. Upper Side Pilot Valve (remote control valve)

(1) Structure

The remote control valve structure is as shown in the assembly section diagram (Page 185).There is a longitudinal axial hole in the casing and the pressure reduction valve is installed in it.

The pressure reduction valve comprises the spool (201), secondary pressure setting spring (241), return spring (221), spring seating (216), and washer 2 (217). The secondary pressure setting spring (241) is set so that the secondary pressure calculation is 0.5 to 1 MPa (depending on the model). The spool (201) is pressed against the push rod (212) by the return spring (221).

When the push rod (212) is pushed down by tilting the handle or other operation section, the spring seating goes down at the same time and the secondary pressure setting spring (241) setting is changed.

The casing (101) has the oil inlet (primary pressure) port P and the outlet (tank) port T and furthermore the secondary pressure is taken out from the 1, 2, 3, and 4 ports.

(2) Function

[1] Basic functions

The remote control valve is for controlling the control valve spool stroke quantity, direction, etc. This is done by operating the pilot valve output pressure on the control valve spool end section.

In order to satisfy this function, the remote control valve is made up of the following elements.

1) Inlet port (P) to which the oil is fed from the hydraulic pump
2) Multiple output ports (1, 2, 3, 4) for operating the feed pressure from the inlet port on the control valve spool end
3) Tank port (T) required for controlling the above output pressure
4) Spool connecting the output port to the inlet port or tank port
5) Mechanical means including a spring operating on the above spool in order to control the output pressure

[2] Main part functions

The function of the spool (201) is to switch the oil path either to receive the hydraulic pressure fed from the hydraulic pump with the P port and lead the P port pressurized oil to the output ports (1, 2, 3, and 4) or to lead the output port pressurized oil to the T port. The output pressure operating on this spool (201) is determined by the secondary pressure setting spring (241).

In order to change the deflection quantity of the secondary pressure setting spring (241), the push rod (212) is inserted into the plug (211) in such a way that it can slide.

The return spring (221) operates on the casing (101) and spring seating (216) and operates to return the push rod (212) in the displacement zero direction regardless of the output pressure and makes the spool (201) neutral return reliable.It also has the effect of a counterforce spring for giving an operator an appropriate operation feel.

https://truckmanualshub.com/

(3) Operation

Operation of the remote control valve is explained based on the hydraulic circuit diagram (Figure 1) and operation explanation diagrams (Figure 2 through Figure 4). Figure 1 is a typical usage example for the remote control valve.

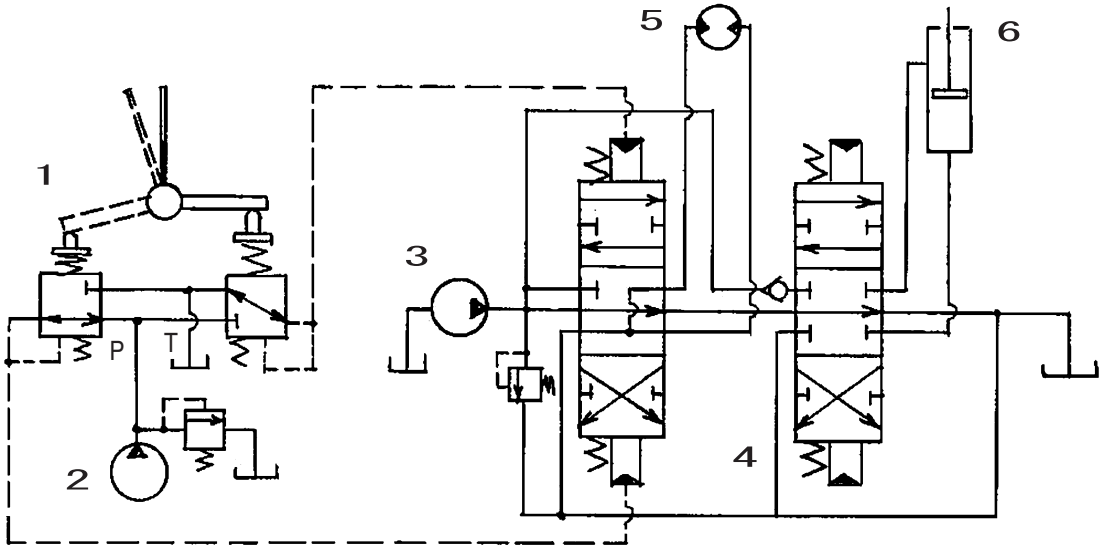

Figure 1 Remote control valve usage example

1	Pilot valve	4	Control valve
2	Pilot pump	5	Hydraulic motor
3	Main pump	6	Hydraulic cylinder

https://truckmanualshub.com/

[1] When handle in neutral (See Figure 2.)
The force of the secondary pressure setting spring (241) that determines the remote control valve output pressure does not operate on the spool (201). Therefore, the spool (201) is pushed up by the return spring (221) (spring seating (216)) and the output ports (2 and 4) are connected with the T port.Therefore, the output pressure is the same as the tank pressure.

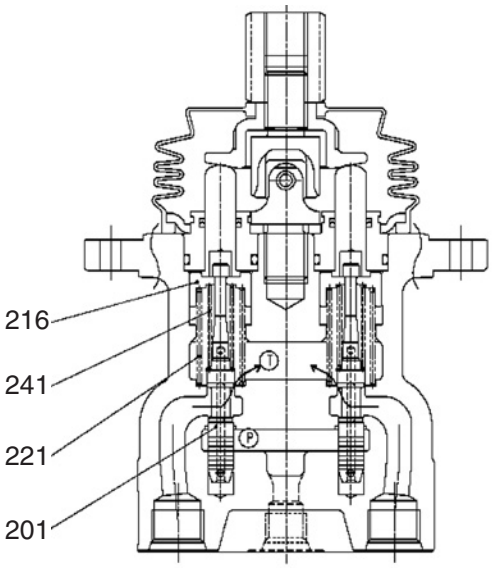

Figure 2 When handle in neutral

[2] When the handle is tilted (See Figure 3.)
When the handle is tiled and the push rod (212) is moved through a stroke, the (spring seating (216)) spool (201) moves down and the oil fed from the pilot pump flows out to the (2 and 4) ports through the P port and the (2 and 4) ports and pressure is generated.

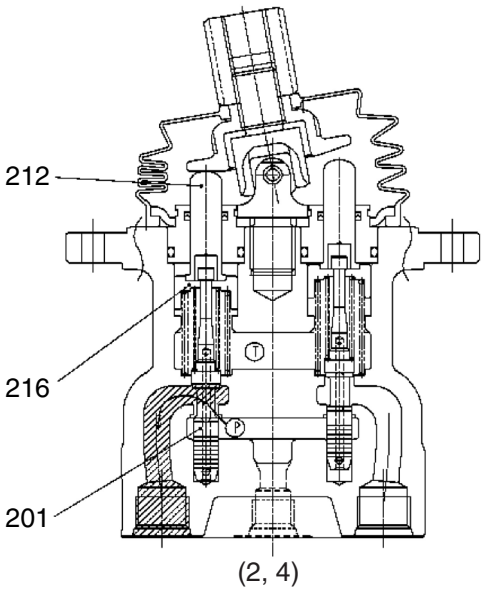

Figure 3 When handle tilted

https://truckmanualshub.com/

[3] When handle held (See Figure 4.)
When the handle is tilted and the port (2 and 4) pressure rises to the pressure equivalent to the set spring force (241), the hydraulic force and the spring force are in balance.When the (2 and 4) ports pressure becomes higher than the set pressure, the (2 and 4) ports and the P port close and the (2 and 4) ports and the T port open. When the (2 and 4) ports pressure becomes lower than the set pressure, the (2 and 4) ports and the P port open and the (2 and 4) ports and the T port close, so the secondary pressure is held constant.

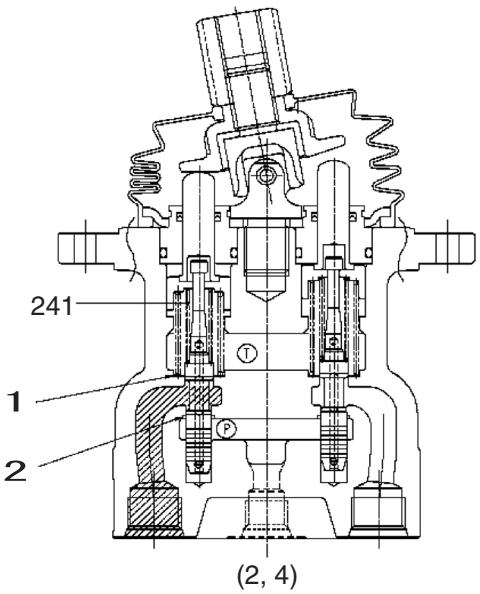

Figure 4 When handle held
(secondary pressure at or above set pressure)

1	T port
2	P port

[4] Operation in area in which the handle tilt is large (depends on the model)
For certain models, when the handle is flipped down beyond a certain angle, the spool top end section touches the push rod bore bottom section and the output pressure goes into the state of still being connected with the P port pressure.
Furthermore, with the structure in which the spring seating and spring are installed inside the push rod, when the handle is flipped down beyond a certain angle, the push rod bore bottom section and the spring touch, that spring force changes the second pressure gradient and after that the push rod bore bottom section and the spring seating top end section touch and the output pressure goes into the state of remaining connected with the P pressure.

https://truckmanualshub.com/

Main Equipment Structure and Operation Explanation

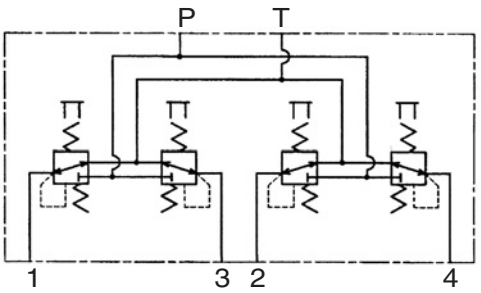

Hydraulic symbol

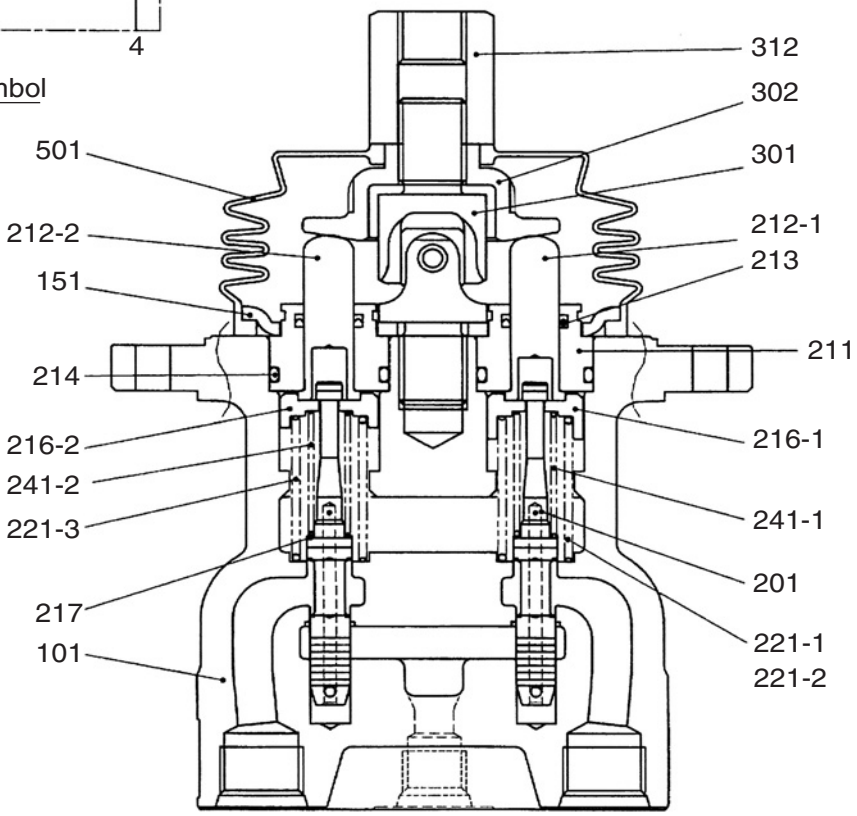

Code	Part name	Q'ty	Code	Part name	Q'ty
101	Casing	1	217	Washer 2	4
151	Plate	1	221-1	Spring	1
201	Spool	4	221-2	Spring	1
211	Plug	4	221-3	Spring	2
212-1	Push rod	2	241-1	Spring	2
212-2	Push rod	2	241-2	Spring	2
213	Seal	4	301	Joint	1
214	O-ring	4	302	Disk	1
216-1	Spring seating 1	2	312	Adjusting nut	1
216-2	Spring seating 1	2	501	Bellows	1

https://truckmanualshub.com/

4. Travel Pilot Valve (remote control valve)

(1) Operation

The remote control valve with built-in damper (below, remote control valve with damper) is a remote control valve that incorporates into the remote control valve main unit a damping function for preventing the man-machine system hunting (lever hunting) phenomenon.

Operation of the remote control valve with damper is divided into 4.-(1)-1) Pressure reduction valve section and 4.-(1)-2) Operation section damping mechanism section. The explanations in these two sections are based on the hydraulic pressure circuit diagram, assembly section diagram, and damping operation explanation diagram below.The figure below is a typical usage example for the remote control valve.

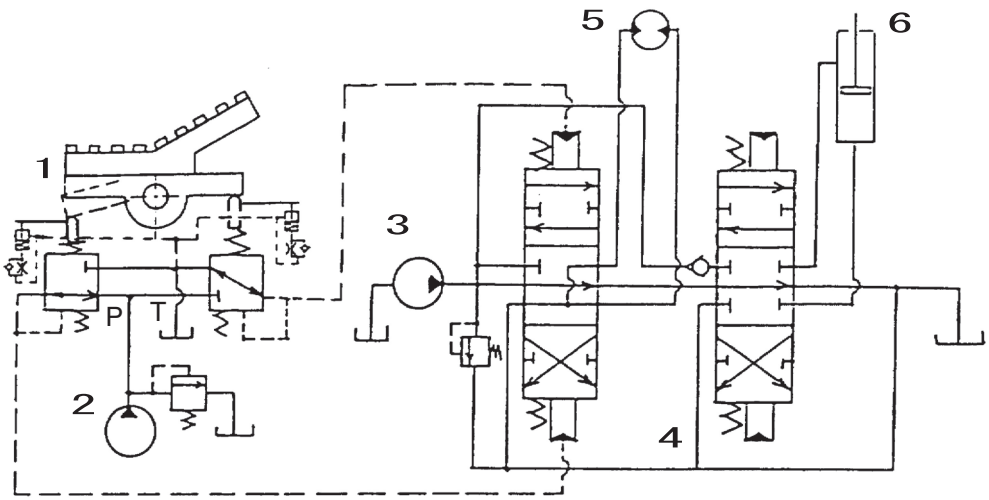

Hydraulic circuit diagram

1	Remote control valve	4	Control valve
2	Pilot pump	5	Hydraulic motor
3	Main pump	6	Hydraulic cylinder

1) Pressure reduction valve section

[1] For neutral state

The spool (301) is pushed up by the return spring (335) via the spring seating (311) and washer 1 (215) and is in the neutral position shown in the assembly section diagram.

Therefore, since the output port is connected only to the port T by the spool switching function, the pressure at output ports 1 and 2 is the same as the pressure at the port T.

[2] When the remote control valve operation section is tilted from the neutral state

In the assembly section diagram, when the cam (420) is rotated clockwise, the port 1 side push rod (214) is pushed down, the spool moves down via washer 1, the spring seating, the secondary pressure setting spring (324), washer 2 (217), and washer 3 (313), the port P and port 1 are connected, and the oil fed from the pilot pump flows to port 1 and generates pressure.

When the port 1 pressure rises to the pressure equivalent to the secondary pressure setting spring force that has been set by tilting the operation section, the hydraulic pressure on the spool and the spring force come into balance and the port 1 output pressure is held constant.The port 2 spool holds the neutral state and the oil from the control valve is discharged via the port T.

Some specifications are of the type that near the maximum angle of the operation section, a push rod directly touches the spool top section and forcibly pushes in the spool to connect the port P and the output port so that they have the same pressure.

https://truckmanualshub.com/

2) Operating section damping mechanism section

[1] For neutral state
The push rod is pushed up by the damping springs (333 and 337) via the piston (224) and is in the position shown in the assembly section diagram.

[2] When the operation section is tilted from the neutral state (See Damping operation explanation diagram (1).)
In the assembly section diagram, when the cam is rotated clockwise, the port 1 side push rod is pushed down and the piston moves down.
At this time, the oil in the damping piston chamber is discharged from the piston metering hole and the pressure generated at this time generates damping force.
On the other hand, the port 2 side push rod is moved up by the damping spring via the piston.
At this time, the tank chamber oil is suctioned in through the three ball check sections made up of bushings (223) and steel balls (225) and into the damping piston chamber.The oil outside the piston chamber drains out from the path that leads from the casing top end section to the port T.

[3] When the operation section is tilted back from a full tilt (See Damping operation explanation diagram (2).)
In the assembly section diagram, after the cam is fully tilted clockwise, then rotated counterclockwise, the port 2 push rod is pushed down and the piston moves down.
At this time, as described above, the oil in the damping piston chamber is discharged from the piston metering hole and the pressure generated at this time generates damping force.
On the other hand, the port 1 push rod is moved up by the return spring (335) and the damping spring.
At this time, the tank chamber oil is suctioned in through the three ball check sections made up of bushings and steel balls and into the damping piston chamber.Also, the oil outside the piston chamber drains out from the path that leads from the casing top end section to the tank port.
In other words, the structure is such that damping force works for either tilt operation, from the neutral position to the full tilt position or from the full tilt position to the neutral position.

https://truckmanualshub.com/

[1] Operation when lever moved through its stroke from the neutral position

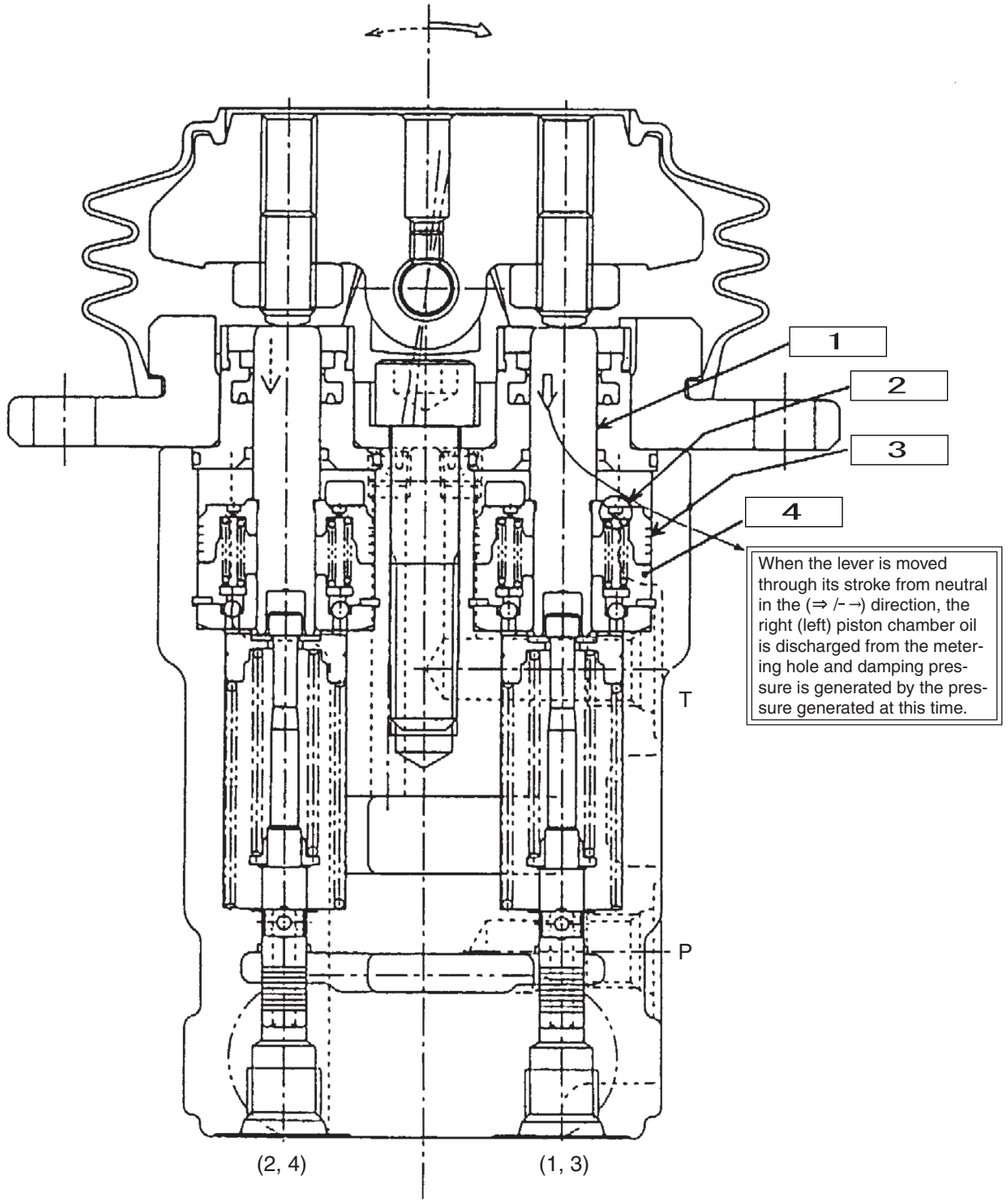

[2] Lever stroke state and operation when lever moved back

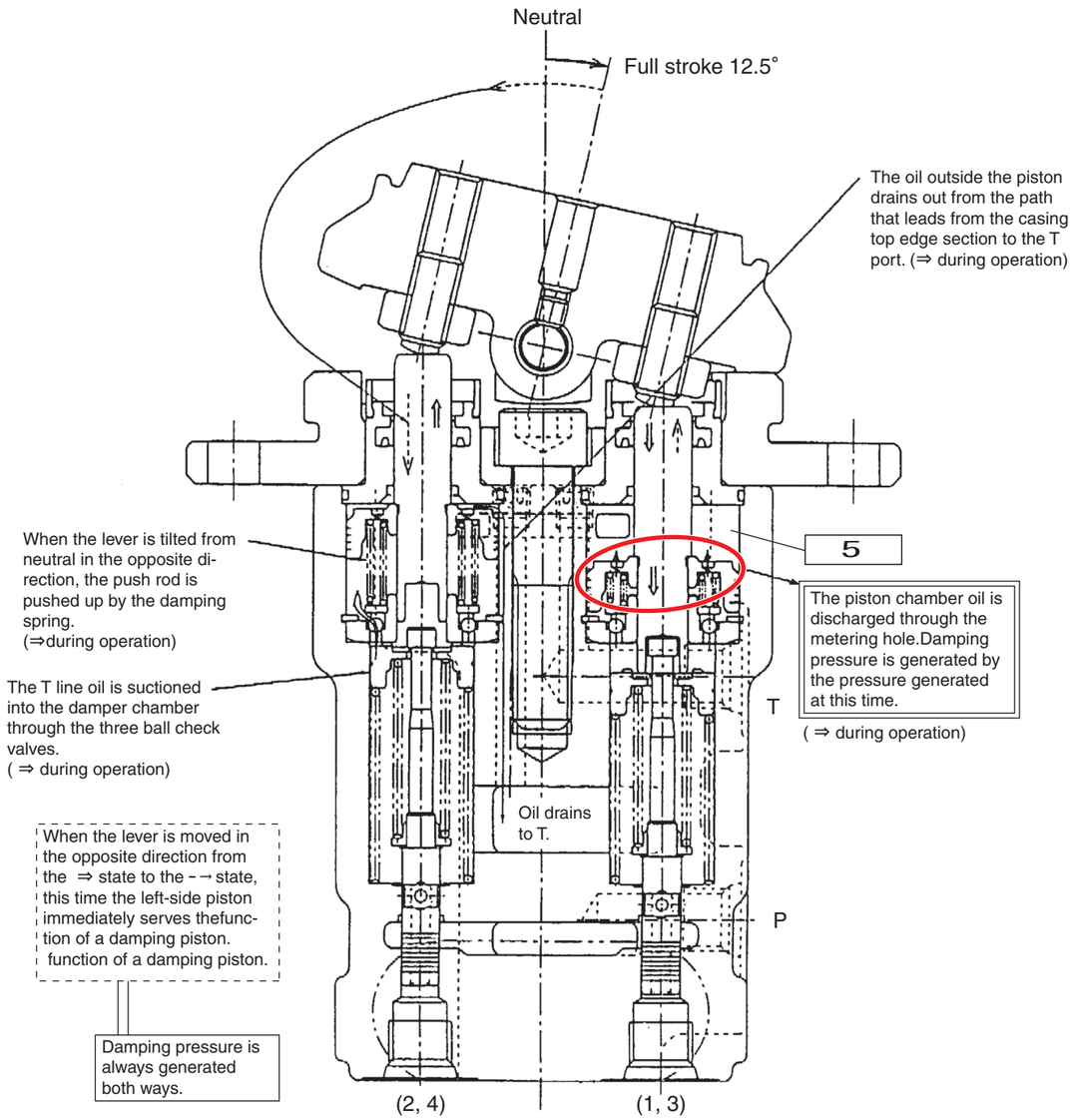

Damping operation explanation diagram

1	Push rod	4	Piston chamber
2	Metering	5	Oil
3	Piston		

https://truckmanualshub.com/

(2) Assembly and section diagram

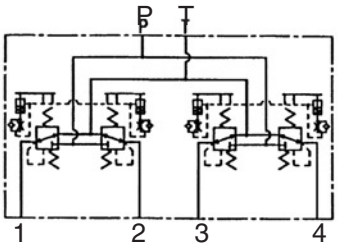

Hydraulic symbol

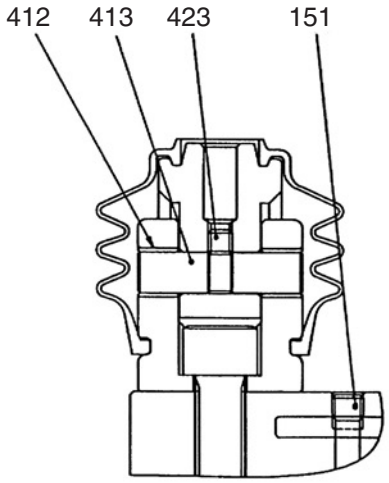

B-B section

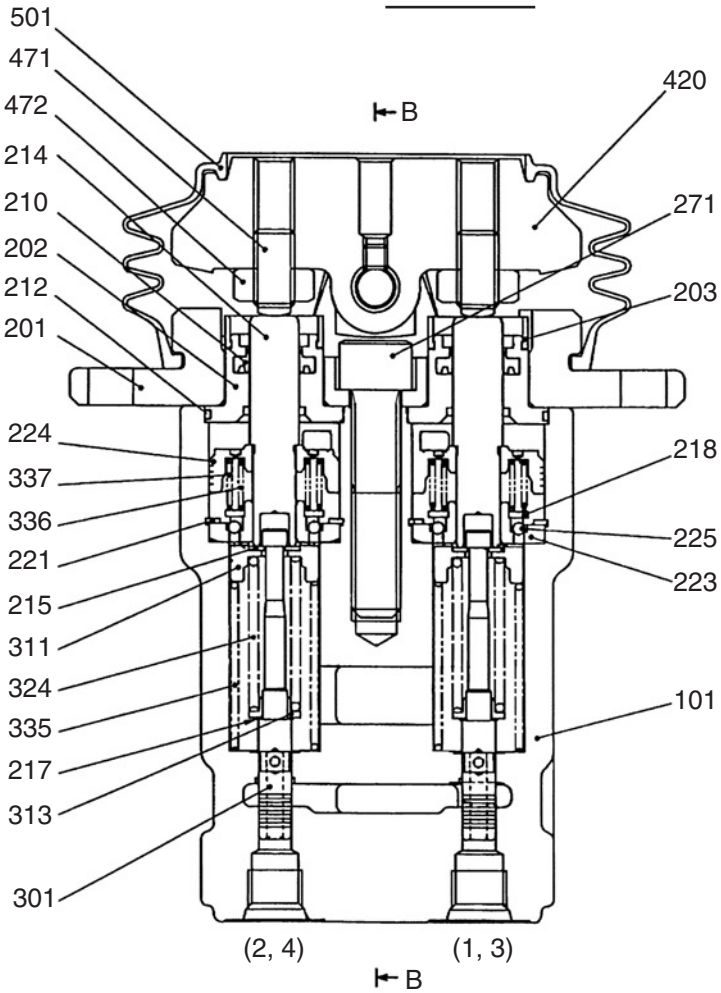

Code	Part name	Q'ty
101	Casing	1
151	Plug	2
201	Cover	2
202	Plug	4
203	Grease cup	4
210	NHU packing	4
212	O-ring	4
214	Push rod	4
215	Washer 1	8
217	Washer 2	4
218	Spring seating	4
221	Locking ring	4
223	Bushing	4
224	Piston 2D085	4
225	Steel ball	12
271	Hexagon socket head bolt	2
301	Spool	4
311	Spring seating	4
313	Washer 3	4
324	Spring	4
335	Spring	4
336	Spring	4
337	Spring	4
412	Bushing	4
413	Camshaft	2
420	Cam	2
423	Hexagon socket head stop screw	2
471	Stop screw	4
472	Lock nut	4
501	Bellows	2

https://truckmanualshub.com/

5. Cushion Valve

[1] Valve summary

This valve is made up of a shuttle valve section and cushion valve section with heat circuit.
The cushion valve with heat circuit is connected between the hydraulic shovel control valve and the pilot operation valve to reduce body shaking (cushion function) caused by emergency stop operations by the operator.
This valve is equipped with a circuit with which the operator can deliberately disable the cushion function for reverse operations.
The shuttle valve selects the high-pressure signal pressure from two signal pressure systems.
This valve has two circuits.

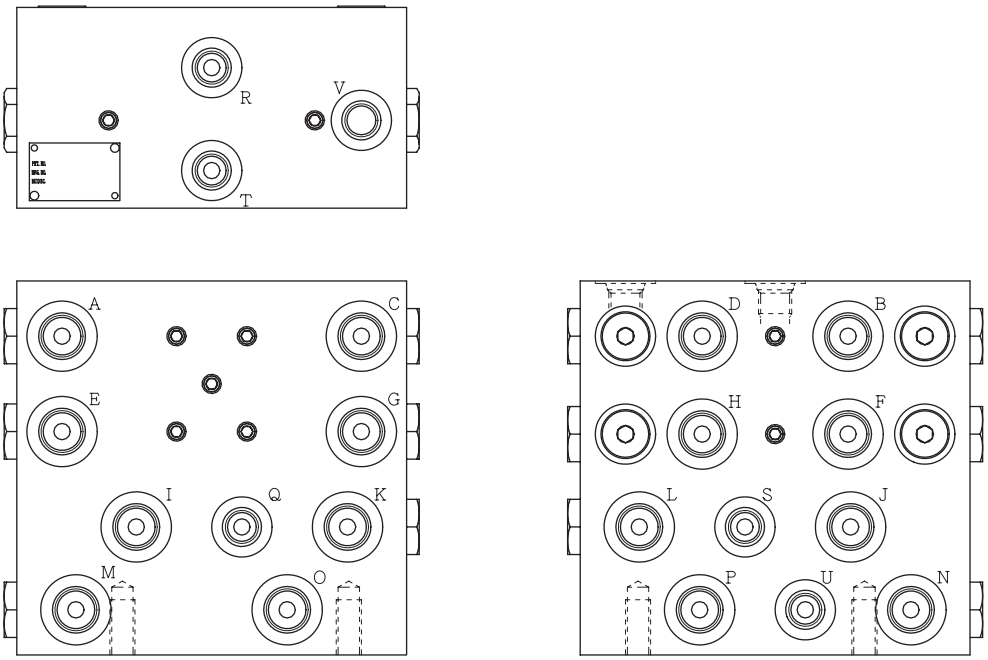

Figure 1

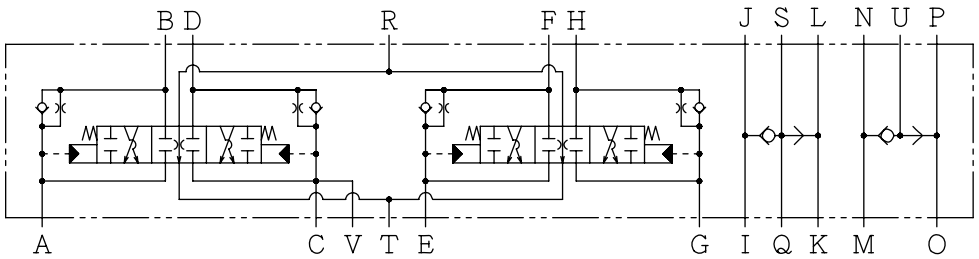

Figure 2

https://truckmanualshub.com/

[2] Operation explanation

1) Normal operation

The pressurized oil fed from the A port (or C, E, or G port) pushes up the check plunger and is sent to the B port (or D, F, or H port). The pressurized oil that has passed through the B port operates on the control valve spool and operates the actuator. The oil pushed out from the control valve spool passes through the D port (or B, F, or H port) and flows out to the T port.

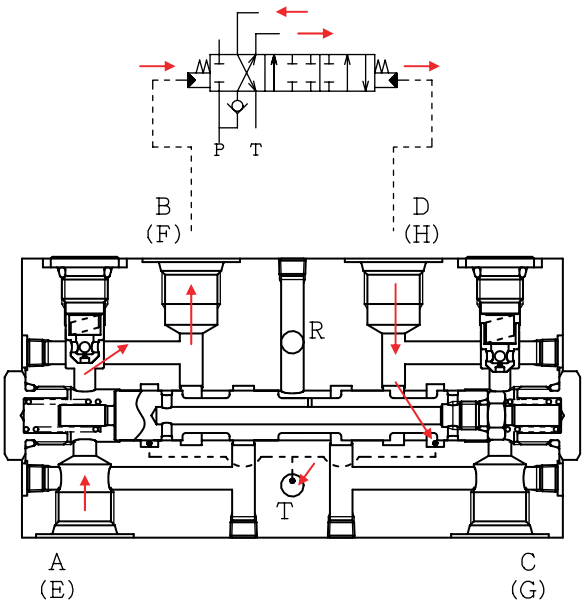

Figure 3

2) Cushion operation

When the pressurized oil fed from the pilot operation valve to the A port (or C, E, or G port) is closed by the pilot operation valve, the pressurized oil that has operated on the control valve spool is pushed back to the B port (or the D, F, or H port). The returned oil passes through the check plunger metering orifice, is sent to the A port (or the C, E, or G port), and is drained from the pilot operation valve. At this time, by passing through the metering orifice, the pressurized oil holds down the control valve spool speed and reduces shaking of the body. (Cushion function)

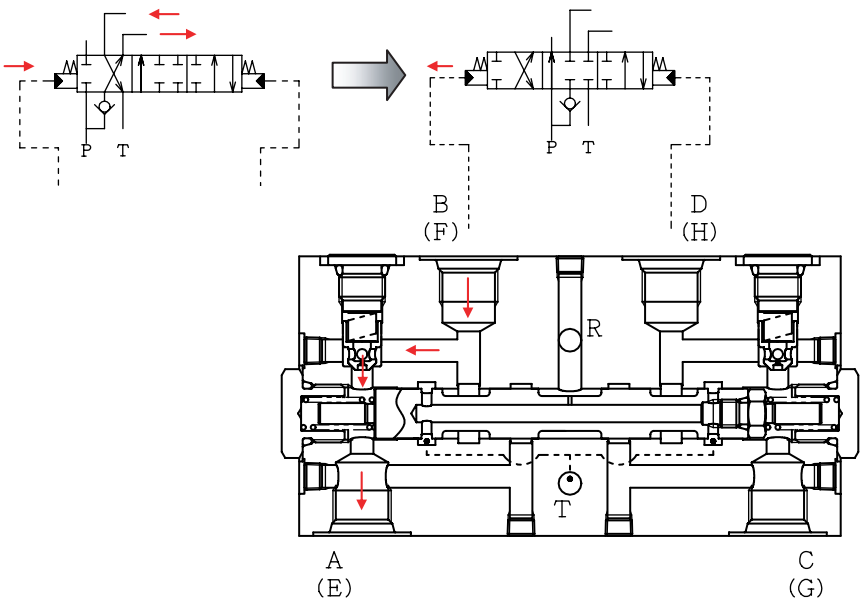

Figure 4

https://truckmanualshub.com/

3) Reverse operation
When the pressurized oil fed from the pilot operation valve to the A port (or C, E, or G port) is switched to the C port (or A, E, or G port), the pressurized oil that has operated on the control valve spool is pushed back to the B port. Because the pushed back oil flows out to the T port without passing through the check plunger metering orifice, it does not hold down the control valve spool speed, so the cushion function does not work.

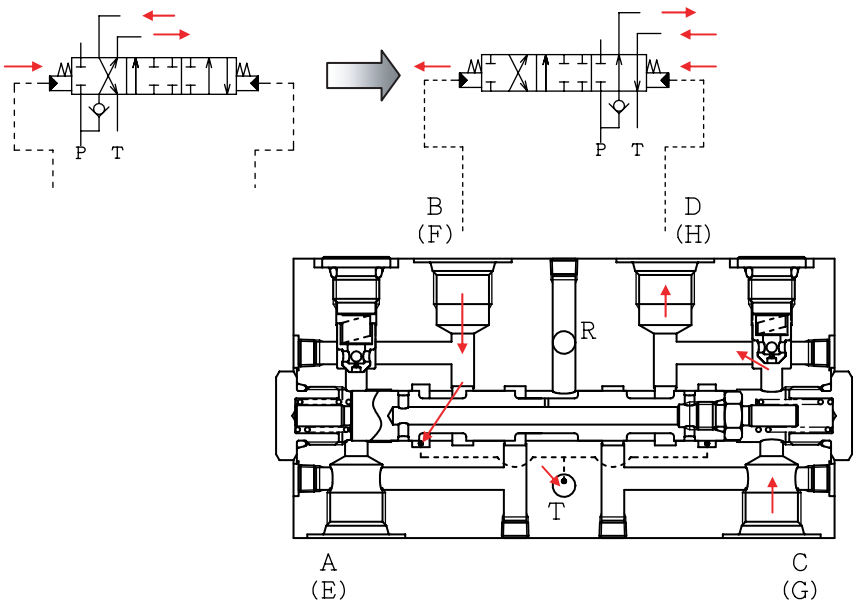

Figure 5

4) Heat circuit
When the pilot operation valve is in the neutral position, the oil fed to the R port passes through the inside of the reverse operation spool, flows out to the T port, and heats up the inside of the valve.
When pressurized oil is being fed from the pilot operation valve to the A port (or C, E, or G port), the oil fed to the R port flows out to the C port (or A, E, or G port) and heats up the circuit to the pilot operation valve and inside the valve.

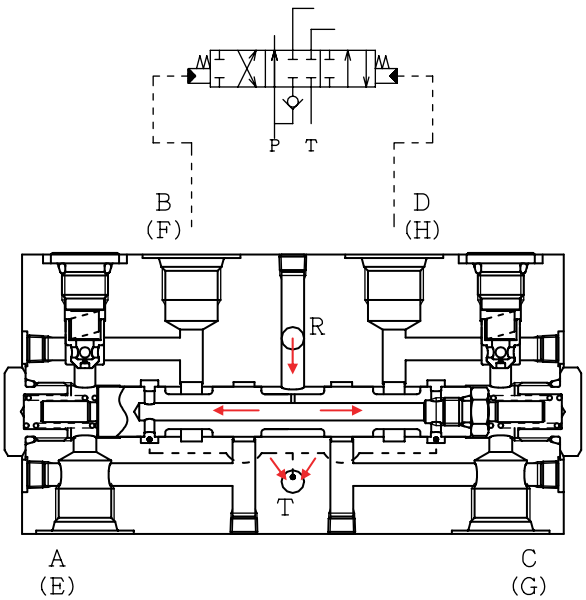

Figure 6

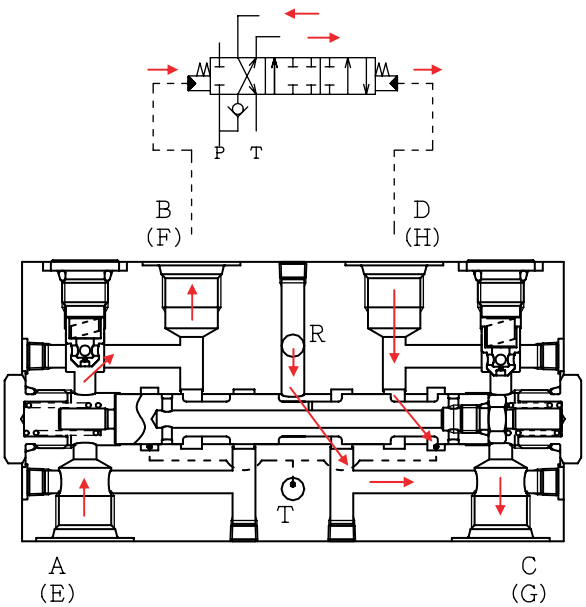

Figure 7

https://truckmanualshub.com/

5) Shuttle valve
The steel ball is pressed from the high pressure to the low pressure, of the pressure between the I and J ports and the pressure between the K and L ports. Through this, the high-pressure oil is fed to the S port or the Q port. In the same way, oil is fed to the U port at the higher of the pressures between the M and N ports and between the O and P ports.

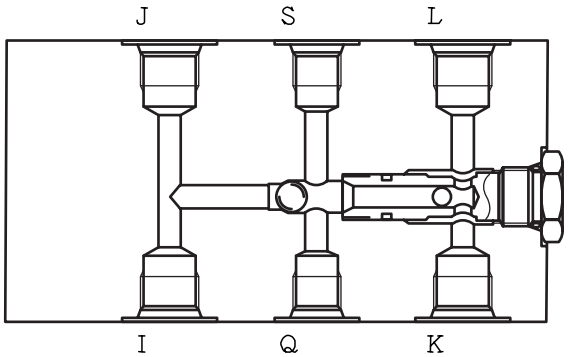

Figure 8

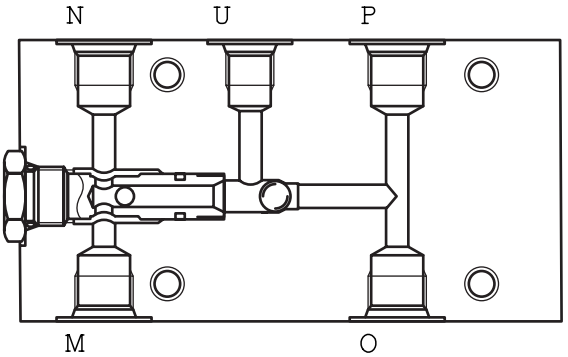

Figure 9

https://truckmanualshub.com/

6. Selector Valve (4-way)

(1) Structure

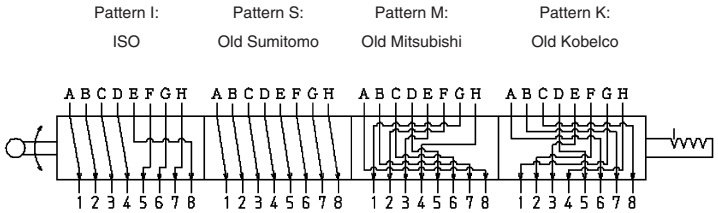

Circuit diagram

Operation, work			
A	Right valve Pull in	1	Bucket in
B	Right valve Left side	2	Boom-down
C	Right valve Push out	3	Bucket dirt removal
D	Right valve Right side	4	Swing right
E	Left valve Push out	5	Arm-in
F	Left valve Right side	6	Swing left
G	Left valve Pull in	7	Arm dirt removal
H	Left valve Left side	8	Bucket in

Circuit combination table			
I type ISO	S type Old Sumitomo	M type Old Mitsubishi	K type Old Kobelco
A-1	A-1	A-8	A-6
B-2	B-2	B-7	B-7
C-3	C-3	C-6	C-8
D-4	D-4	D-5	D-5
E-8	E-5	E-3	E-3
F-5	F-6	F-2	F-2
G-6	G-7	G-1	G-1
H-7	H-8	H-4	H-4

D

https://truckmanualshub.com/

Main Equipment Structure and Operation Explanation

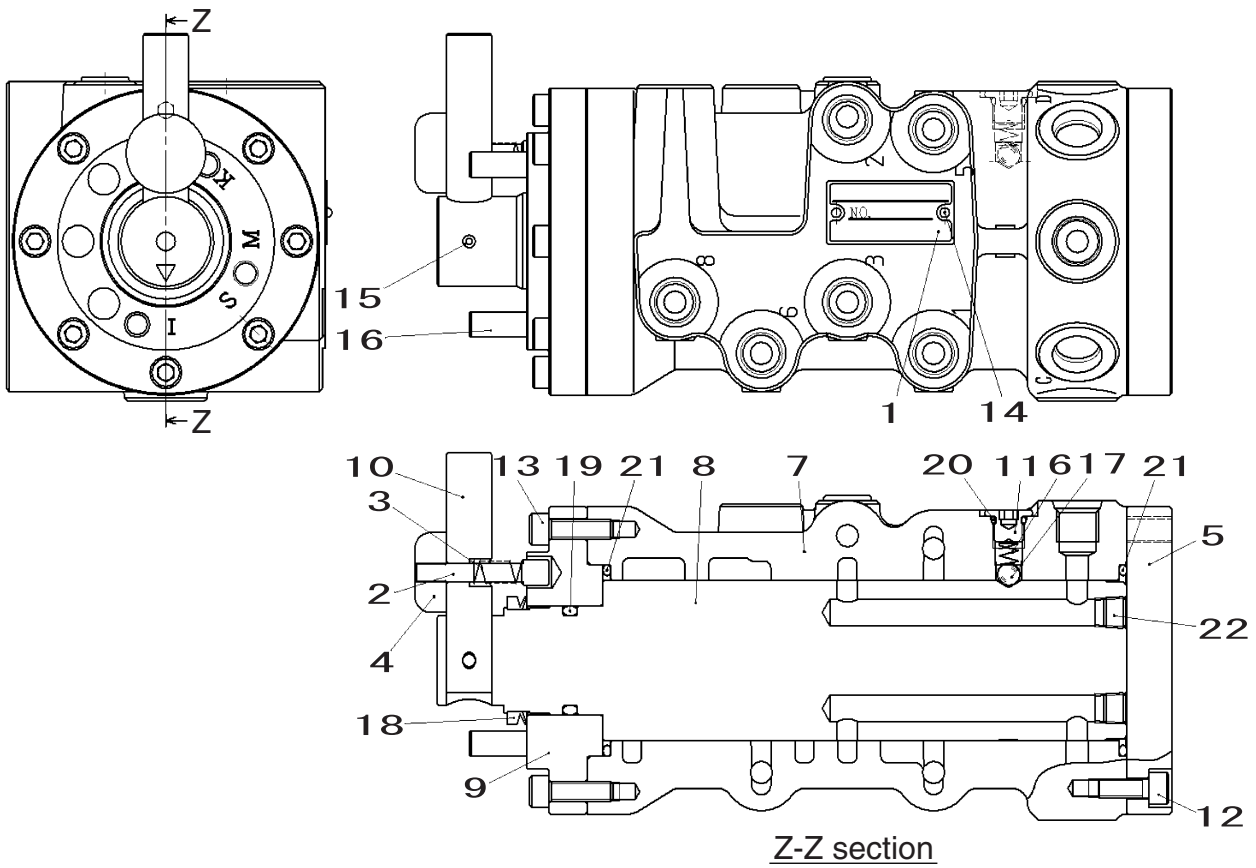

Figure 1 Valve structural diagram and circuit diagram

1	Name plate	9	Cover	17	Steel ball
2	Pin	10	Lever	18	Oil seal
3	Spring	11	Plug with flange	19	O-ring
4	Knob	12	Hexagon socket head bolt	20	O-ring
5	Cover	13	Hexagon socket head bolt	21	O-ring
6	Spring	14	Rivet screw	22	Hexagon socket head plug
7	Casing	15	Spring pin		
8	Shaft	16	Spring pin		

https://truckmanualshub.com/

(2) Operation explanation

This valve is a rotation type switch valve.
By connecting a pipe between the hydraulic shovel work remote control valve and the main control valve and changing the lever ⑩ to the position for each pattern (rotating the shaft ⑧), the valve circuit has been changed and the operation pattern changed to that in Figure 2.
For details on the valve structure (circuit diagram), see Figure 1.

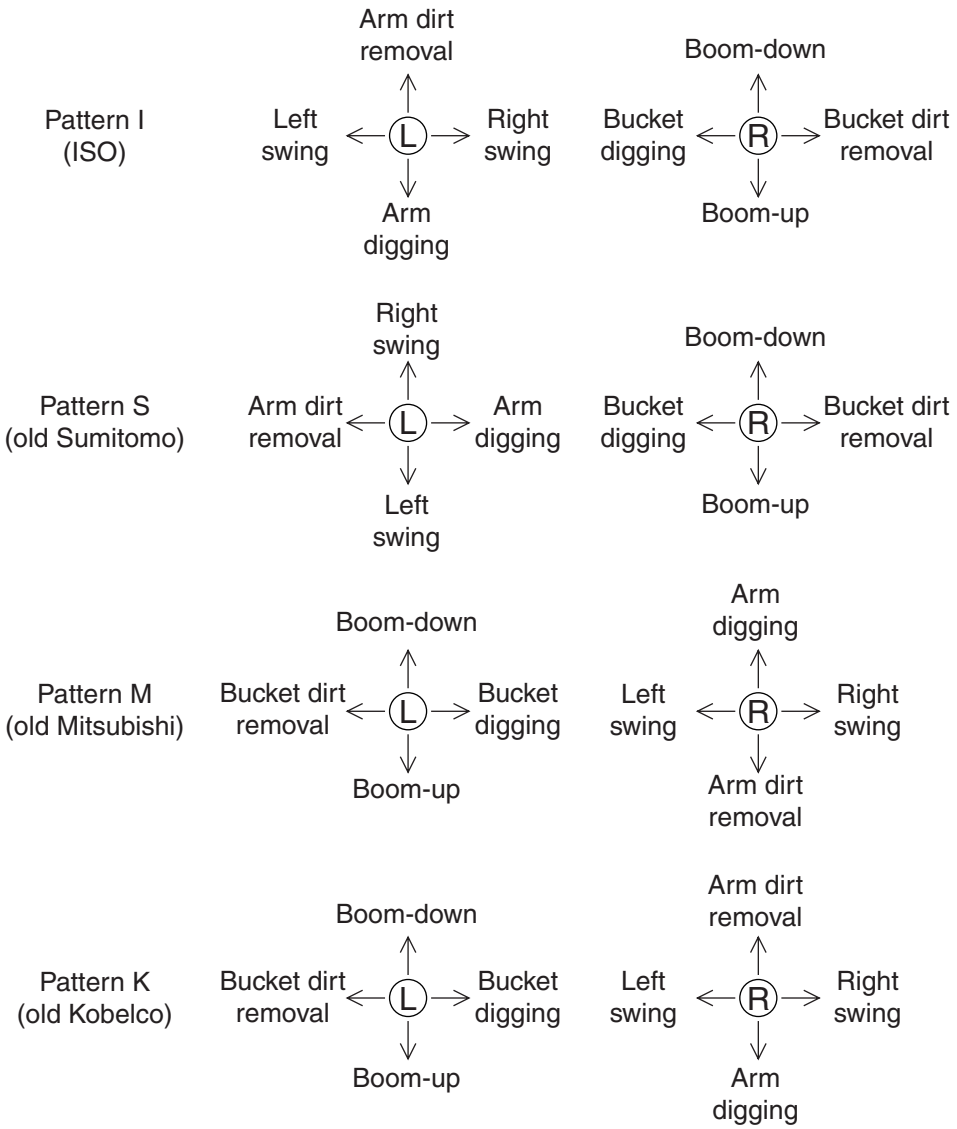

Figure 2 Operation method by pattern

D

https://truckmanualshub.com/

(3) Development diagram

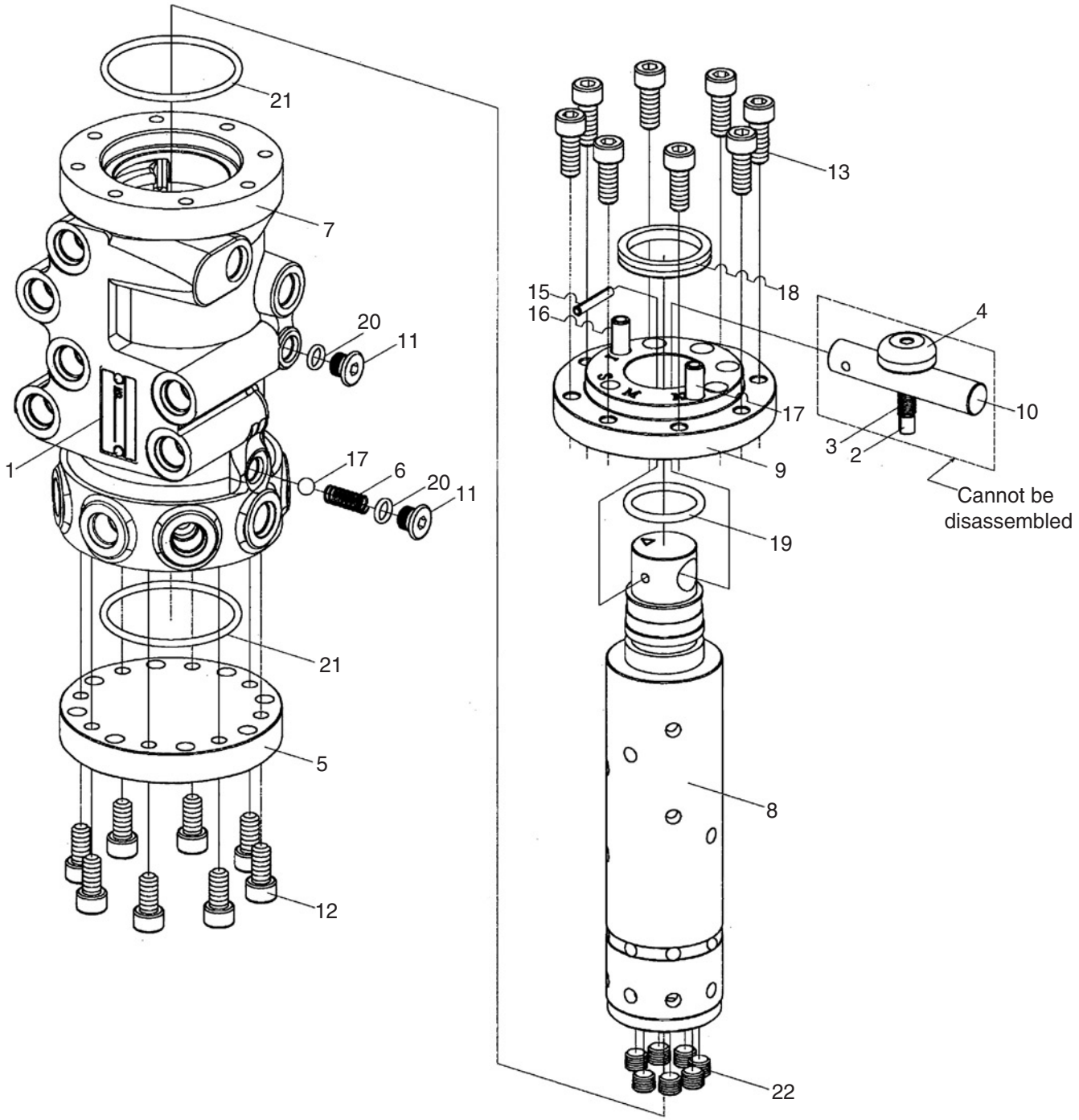

https://truckmanualshub.com/

7. Selector Valve (3-way)

(1) Structure

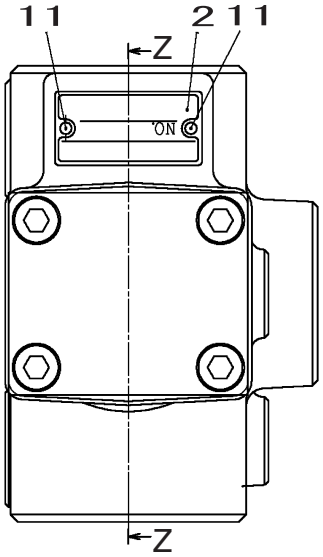

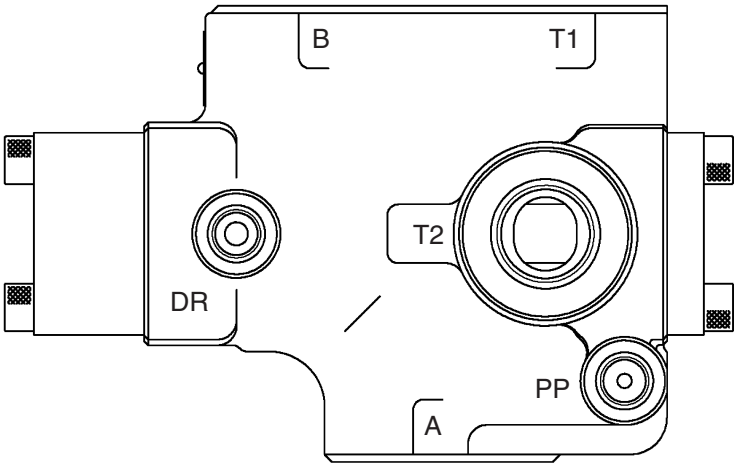

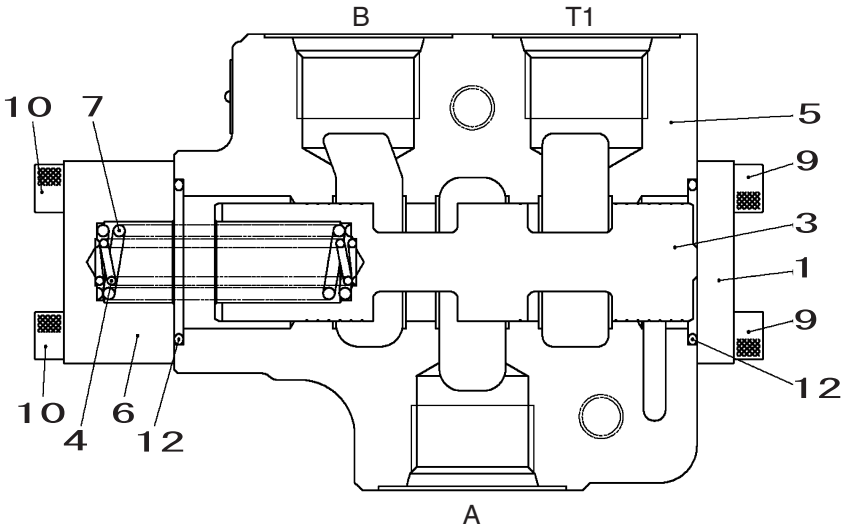

Z-Z section

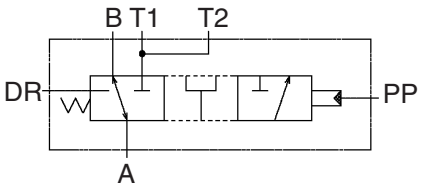

Circuit diagram

Figure 1

1	Cover	5	Body	10	Rivet screw
2	Name plate	6	Cover	11	O-ring
3	Spool	7	Spring	12	Cover
4	Spring	9	Hexagon socket head bolt		

https://truckmanualshub.com/

(2) Operation explanation

This valve switches the direction with the pilot pressure.

[1] When the spool is neutral (PP port no load) Shuttle circuit, 2-speed merge circuit selected
When the pilot pressure is not fed to the PP port, the spool ③ is held in the neutral position by the spring ④, ⑦. The A port and the B port are connected and the T1 and T2 port pressurized oil are cut off by the spool ③. (See Figure 2.)

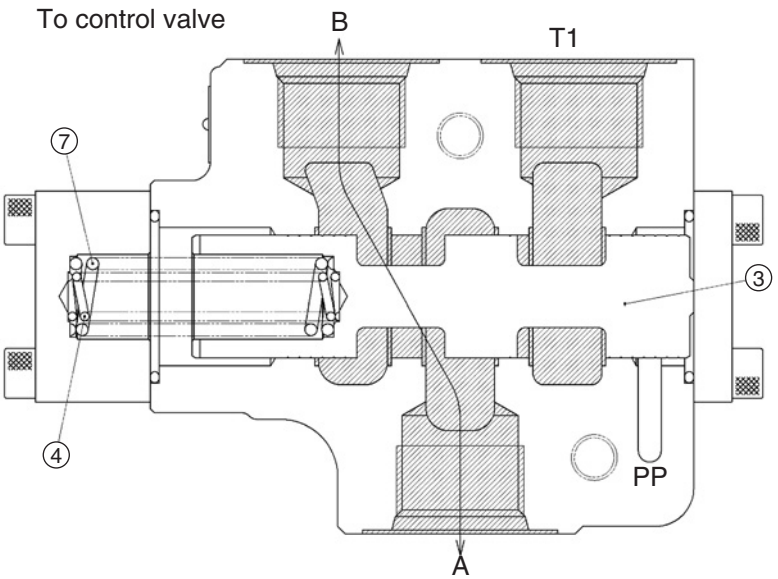

Figure 2

[2] When the spool operates (PP port pressurized) Breaker circuit selected
When pressure is fed to the PP port, force [F] (PP port pressure X spool cross-sectional area) works on the spool③ to the left direction. When F becomes larger than the spring ④, ⑦ set load, the spool ③ moves to the left and the A port is connected with the T1 and T2 ports.
Also, at this time, the pressurized oil at the B port is cut off by the spool ③. (See Figure 3.)

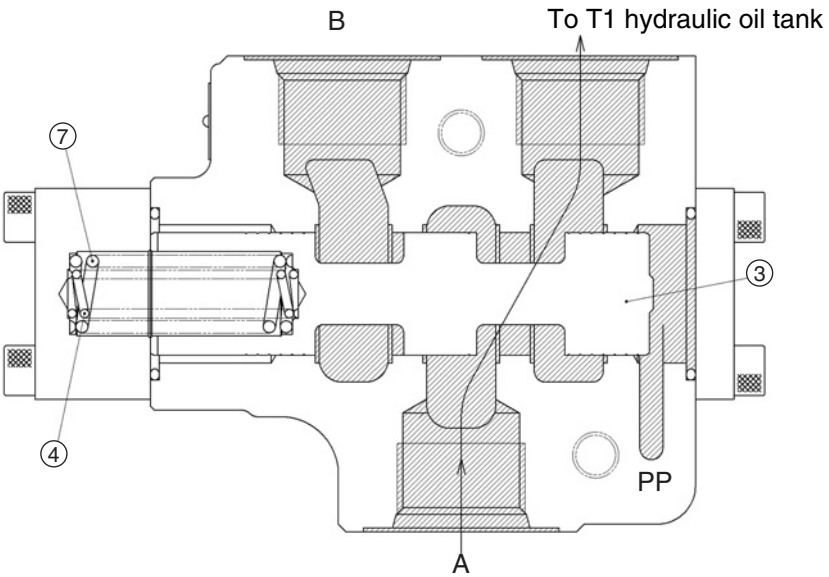

Figure 3

https://truckmanualshub.com/

Work Mode Select Switch

The Throttle Volume and Work Mode Select Switch are Linked!!

Model 3 mode switching

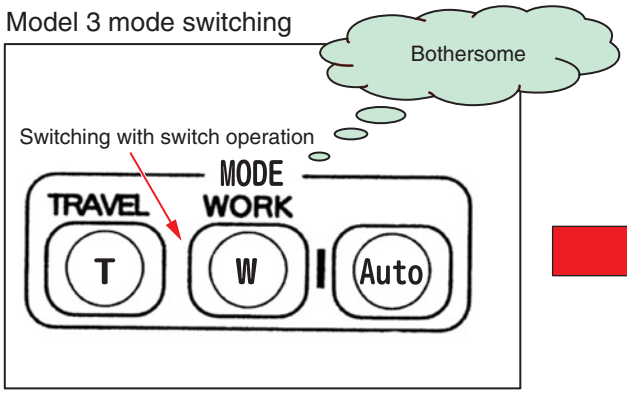

Model 5 mode switching

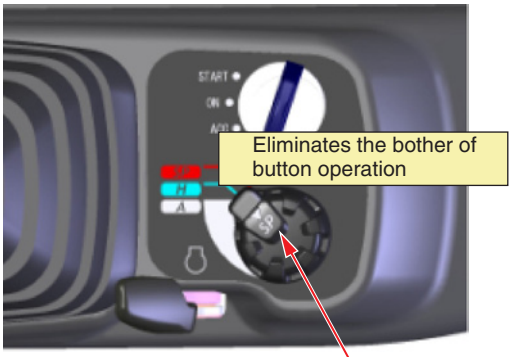

When switching to SP mode, while pressing the SP switch, turn the volume. (In order to reduce fuel consumption, 1 action has been added to the operation for going into SP mode.)

Model 3 work mode			Model 5 work mode	
		Fuel economy ⊿15%	SP	SUPER POWER (Speed priority)
H	HEAVY (Speed priority)	⊿20%	H	HEAVY (Balances speed and fuel economy)
A	AUTO (Balances speed and fuel economy)		A	AUTO (Normal work / fine operation / hanging work)
S	STANDARD (Fuel economy priority)	⊿5～10%		
L	LIGHT/LEFT (Fine operation / hanging work)			

Work speed

RST-05-00-001a

E

https://truckmanualshub.com/

Explanation of New Functions

[1] With Model 3, the throttle volume signal is connected directly to the ECU and only the work mode signal instruction is sent from the main unit computer. With Model 5, the throttle volume signal first goes to computer A, then the target engine speed instruction is sent from computer A to the ECM.

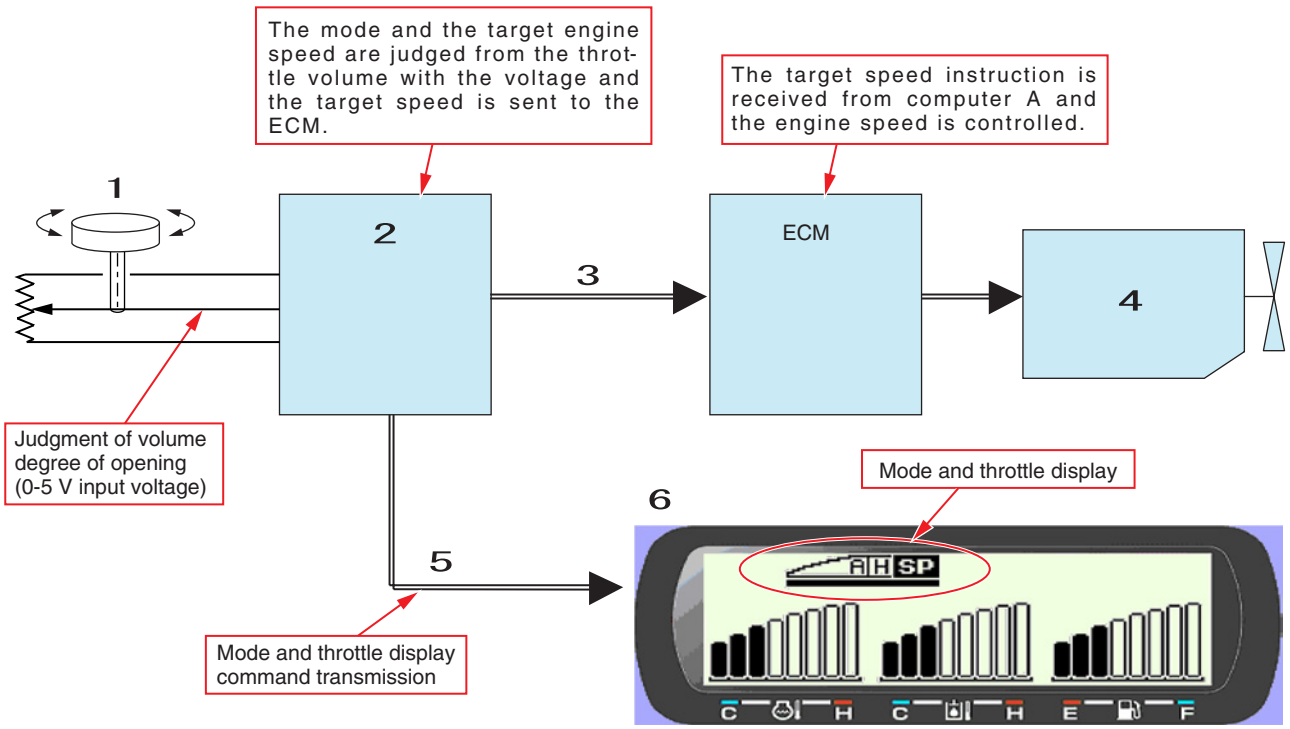

RST-05-00-001b

1	Throttle volume
2	computer A
3	CAN communication
4	Engine
5	UART communications
6	Monitor

[2] Pump horsepower control for each mode
If a throttle volume signal is input to computer A, computer A judges the work mode according to the degree of opening of the throttle and controls the pump horsepower control current value to match the work mode.

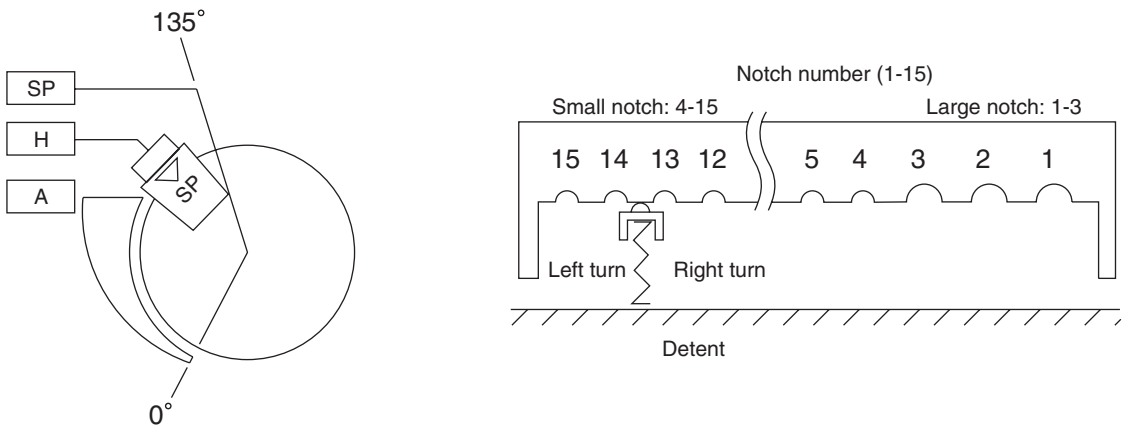

RST-05-00-001c

https://truckmanualshub.com/

Control current value

* = When the target engine speed is 1300 min-1 or less, the pump horsepower current value is 50 mA.

	Volume position (detent position)		1	2	3	4 to 8	9 to 15
	Work mode		SP	H	A		
SH210-5	Engine speed (min^{-1})		1800	1700	1600	1599 to 1300	1299 to1000
	Pump type horse-power current value (mA)	Max High	600	600	600	314	50
		Max Low	586	570	570	314	50
		Min	314	314	314	314	50
SH240-5	Engine speed (min^{-1})		2000	1900	1800	1799 to 1300	1299 to 1000
	Pump type horse-power current value (mA)	Max High	600	600	600	290	50
		Max Low	580	560	560	290	50
		Min	290	290	290	290	50
	Boosted pressure		Automatic	Automatic	Normal		

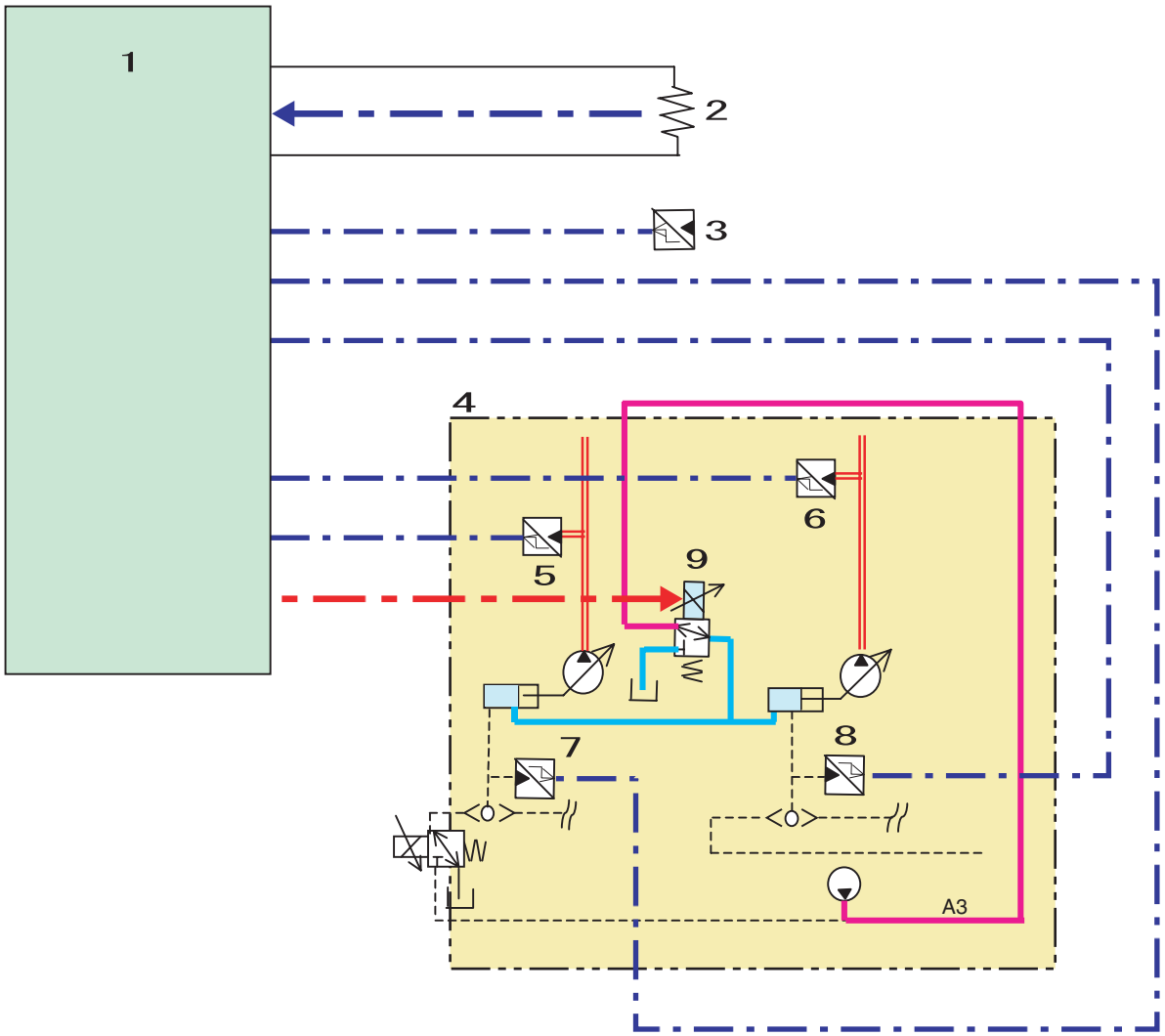

RST-05-00-001d

1	computer A	6	P2 pressure sensor
2	Throttle volume	7	N1 pressure sensor
3	Arm-in pressure sensor	8	N2 pressure sensor
4	Hydraulic pump	9	Pump horsepower proportional valve
5	P1 pressure sensor		

https://truckmanualshub.com/

Explanation of New Functions

Computer Connection Method

[1] computers and ECM connected with CAN communications
[2] The monitor and computers are connected with serial communications (UART).

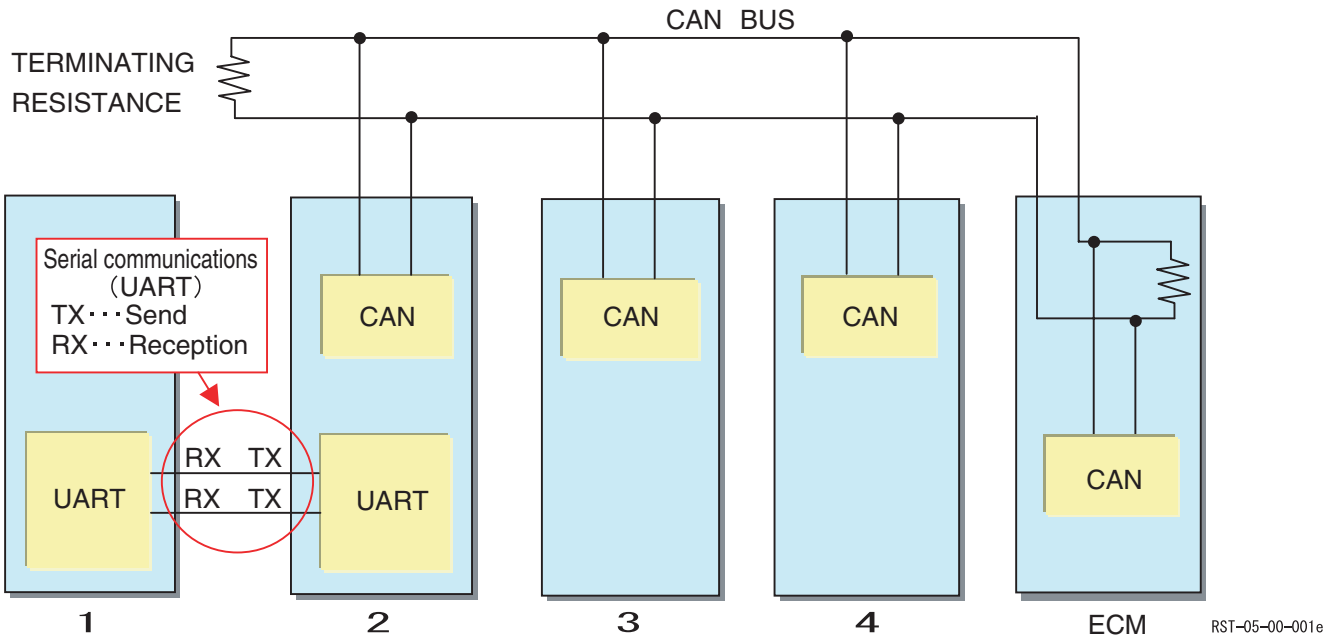

1	Monitor
2	computer A
3	computer B
4	computer S

1) computer A.....Main unit side computer (standard)
2) computer B.....Up to the wiring for connecting the liftcrane computer (option) is attached as standard.
3) computer S.....Remote support computer (standard)
4) ECM .....Engine computer

https://truckmanualshub.com/

Monitor Changes

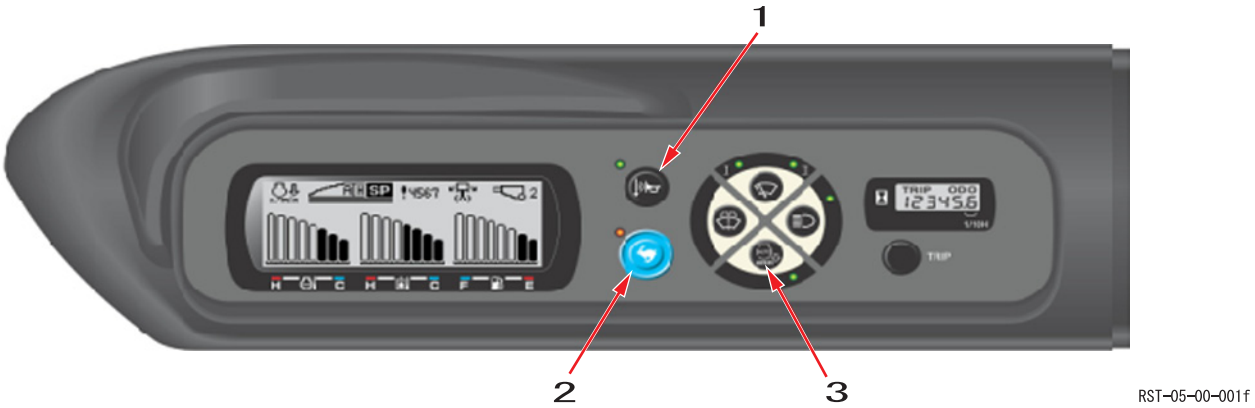

1	Horn volume select switch
2	Travel speed selector switch
3	Auto idle switch

E

☆Changes from Model 3

[1] LCD backlight color change (green → white); no change in number or size of LCD dots

[2] Mounted switch changes

Switch name	Model 3	Model 5	Details
Work mode	Yes	Eliminated	Throttle volume link mode select switch
Auto mode	Yes	Eliminated	Throttle volume link mode select switch
Travel mode	Yes	Yes	
Wiper	Yes	Yes	
Washer	Yes	Yes	
Working light	Yes	Yes	
Swing lock	Yes	Eliminated	
Emergency stop	Yes	Eliminated	Change to rocker switch
Buzzer stop	Yes	Eliminated	Buzzer changed to auto off
Auto idle	None	Yes	Dedicated switch added
Horn volume	None	Yes	New

[3] Major increase in LCD brightness (Model 3: 6 cd min. → Model 5: 220 cd Typ.) (The increased brightness creates glare at night, so a light reduction function linked to working light output was added.)

https://truckmanualshub.com/

Explanation of New Functions

[4] External switch input ports added (5 ports)

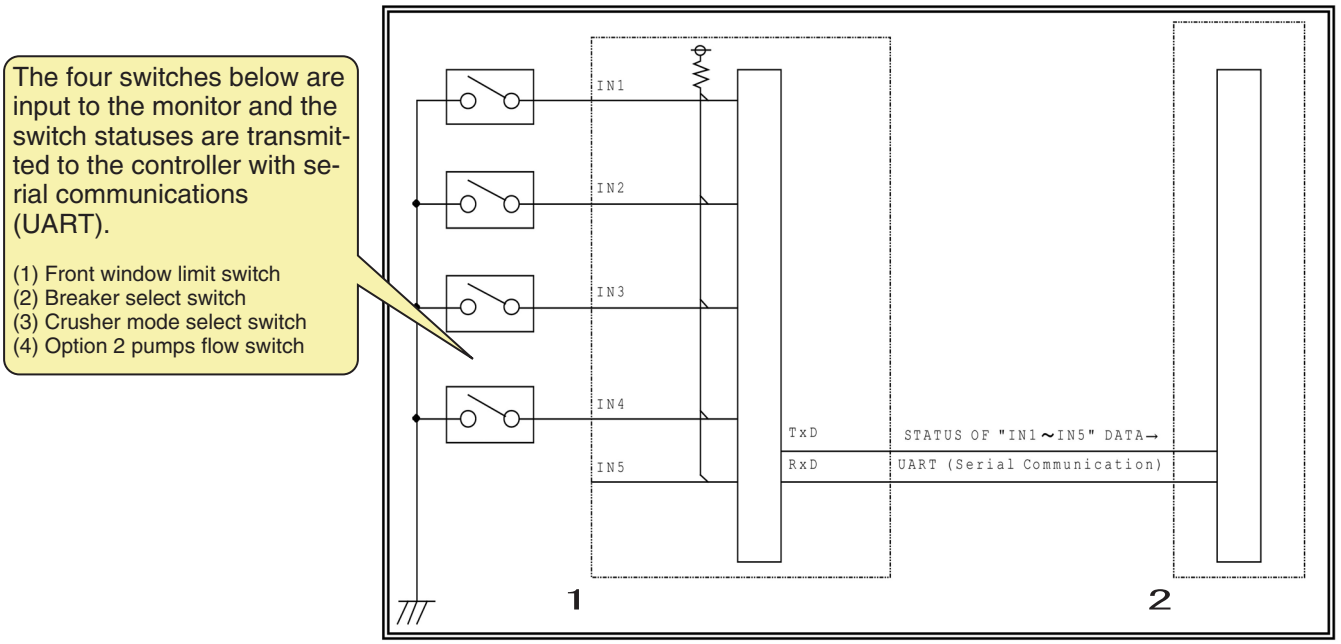

RST-05-00-001g

1	Monitor
2	computer A

Purpose

Sending the above switch states to the computer makes it possible to check the operation of each switch on the service support check screen. Also, since the cumulative operation time for each switch is stored in the computer, the time that the front window was open or closed and the usage history of each option line can be checked on the service support HR screen.

https://truckmanualshub.com/

[5] Output port (wiper, washer, working light, horn volume select switch) control method change

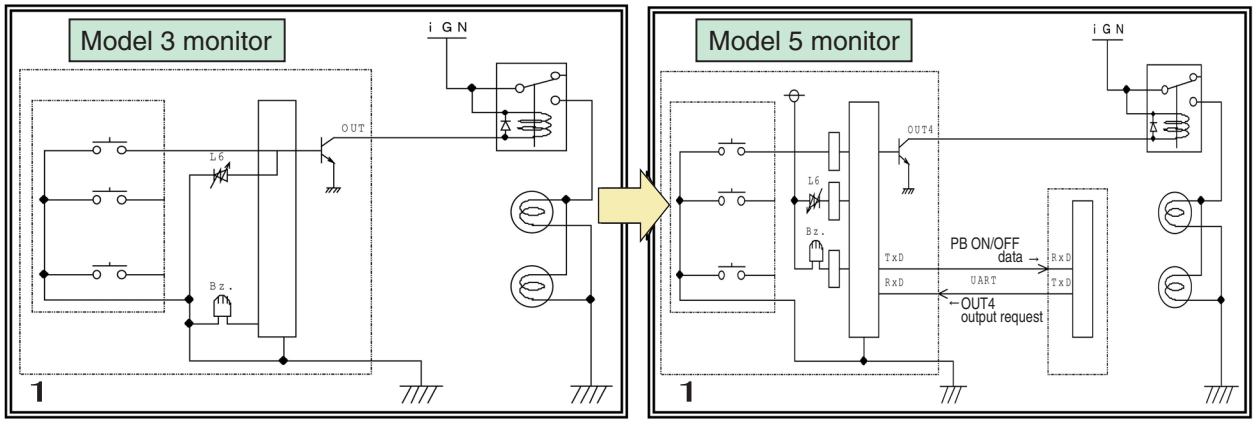

For the SH200-3, when a switch on the monitor is switched ON / OFF, output is controlled by the monitor alone.

For Model 5, switch signals on the monitor are sent to the computer via the UART communication circuit, output ON / OFF is determined by the controller side, and the output request is sent to the monitor via UART.
However, if normal UART communications are not possible (for example, due to a disconnection), the system switches automatically to monitor control. (Same control as for Model 3)
However, travel mode switching and auto idle switching cannot be operated.

RST-05-00-001h

1	Monitor display

Purpose

Passing the switch states through the computer makes the following possible.

1) Checking operation of each switch on the service support check screen
2) Checking the usage history for each operation on the service support HR screen

Judging communications errors

If there is an error in UART communications between the monitor and the computer, the travel mode select switch and auto idle select switch LEDs light up to indicate the error.

https://truckmanualshub.com/

Explanation of New Functions

Pilot Pressure Switch Changed to Pressure Sensor

No.	Model 3	Model 5	Change details
1	Upper side pressure switch	Upper side pressure sensor	Switch to sensor
2	Travel pressure switch	Travel pressure sensor	Switch to sensor
3	Swing pressure switch	Swing pressure sensor	Switch to sensor
4	None	Arm-in pressure sensor	New
5	P1 pressure sensor	P1 pressure sensor	Parts change (not compatible with Model 3)
6	P2 pressure sensor	P2 pressure sensor	Parts change (not compatible with Model 3)
7	N1 pressure sensor	N1 pressure sensor	Parts change (not compatible with Model 3)
8	None	N2 pressure sensor	New
9	Option pressure switch	Option pressure switch	No change

[1] Configuration
Pilot pressure sensor and switch sensing point

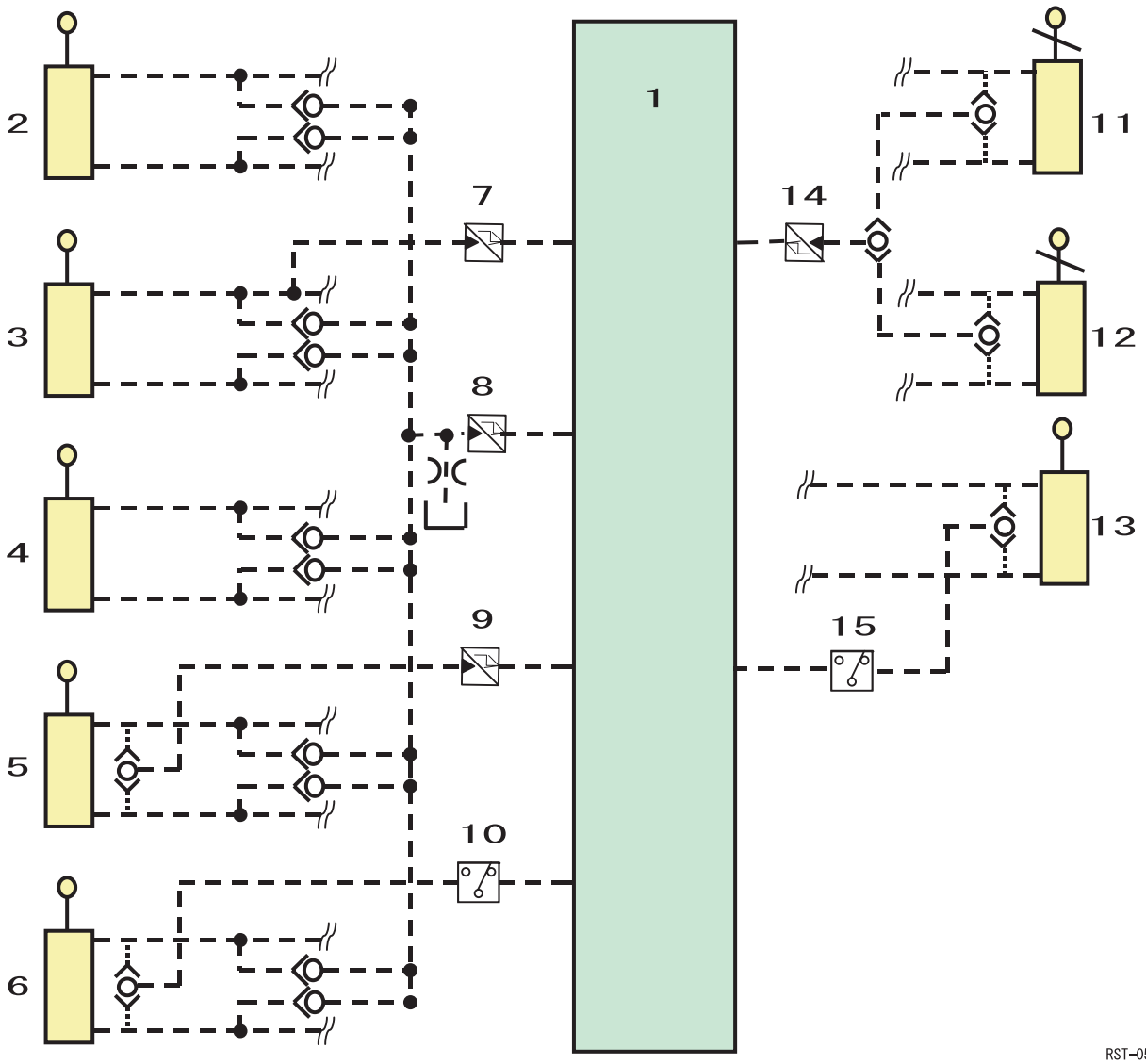

1	computer A	6	1st option lever	11	Travel (left) lever
2	Bucket lever	7	Arm-in pressure sensor	12	Travel (right) lever
3	Arm lever	8	Upper side pressure sensor	13	2st option lever
4	Boom lever	9	Swing pressure sensor	14	Travel pressure sensor
5	Swing lever	10	1st option pressure switch	15	2st option pressure switch

https://truckmanualshub.com/

[2] Pilot pressure sensor characteristic
Relationship between pilot pressure and voltage (rated 5 MPa)

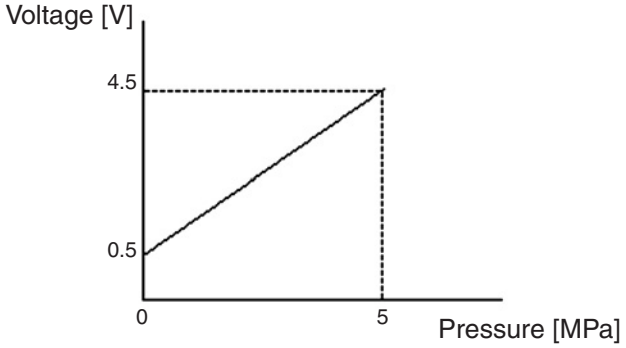

RST-05-00-001k

[3] Sensor ON / OFF criterion

	Upper side sensor	Arm-in sensor	Swing sensor	Travel sensor	Option pressure switch
ON	0.5 MPa	0.5 MPa	0.5 MPa	0.5 MPa	0.5 MPa
OFF	0.3 MPa	0.3 MPa	0.3 MPa	0.3 MPa	0.3 MPa

[4] Sensor trouble criterion
When 0.25 V < Voltage < 4.75 V, normal; otherwise abnormal

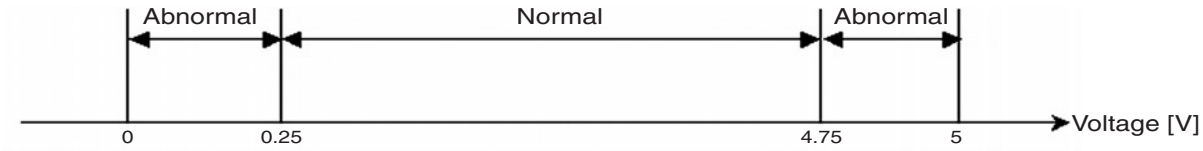

RST-05-00-001l

[5] New functions through switch to sensor
Changing the pilot pressure switch to a sensor makes it possible to judge sharp operation of the operation lever.

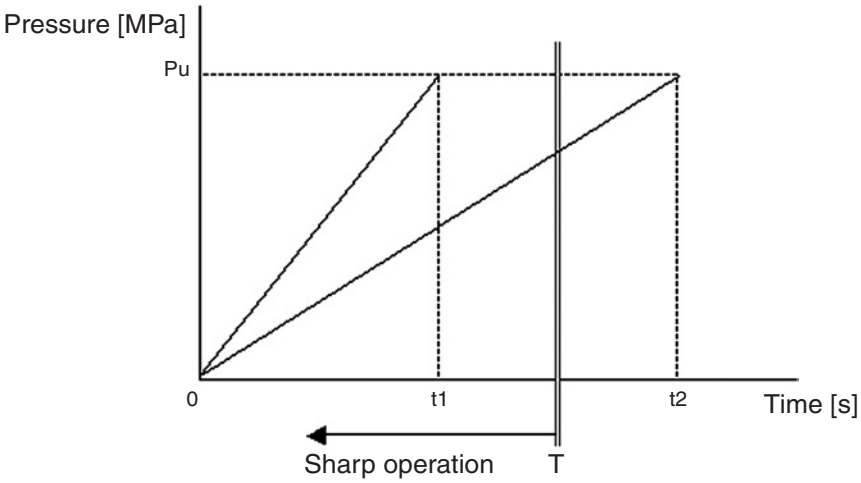

RST-05-00-001m

Judgment method
When the time to reach the Pu [MPa] pressure is t1 [s] or t2 [s], the shorter time until Pu [MPa] is reached, the more sharp the operation.
Therefore, t1 [s] is more sharp operation than t2 [s].
With Model 5 machines, the sharp operation judgment standards ΔPu [MPa] and ΔT [s] are set and if ΔPu [MPa] pressure rise occurs within ΔT [s], this is judged to be sharp operation.
Also, sharp load is judged in the same way using the main pressure sensor.

https://truckmanualshub.com/

Explanation of New Functions

Pump Electromagnetization Proportion Valve

Two electromagnetic proportional valves are mounted on the main pump.

[1] Horsepower control proportional valve

[2] P1 flow control proportional valve (new)

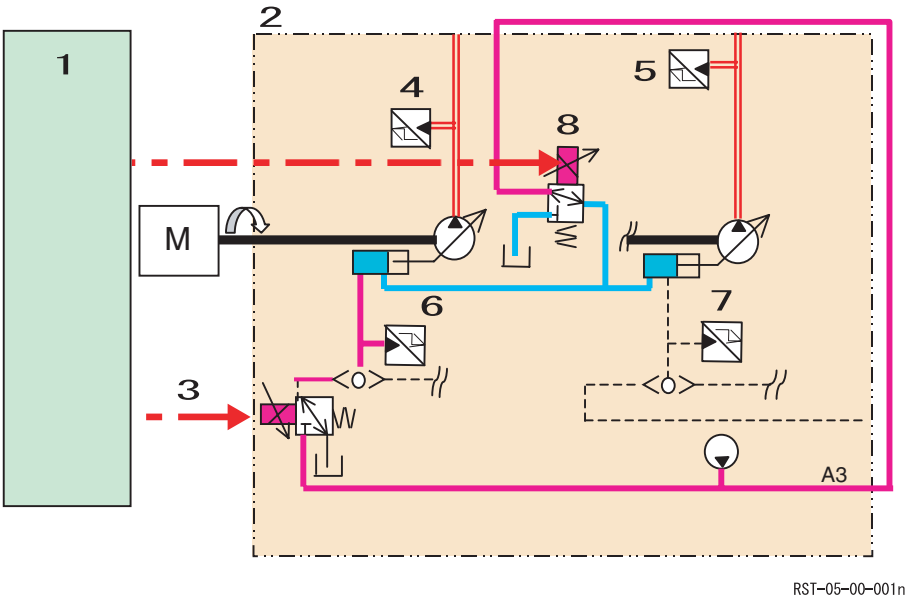

1	computer A
2	Hydraulic pump
3	P1 flow control proportional valve
4	P1 pressure sensor
5	P2 pressure sensor
6	N1 pressure sensor
7	N2 pressure sensor
8	Horsepower control proportional valve

1. Horsepower Control Proportional Valve

   Controls overall flow for the P1 and P2 pumps

   <Applications>

   [1] Pump added horsepower control

   [2] Pump horsepower cut control

   <Control>

   Control current: 50 mA min. 600 mA max.

   Current increase → pump flow increase

   Current decrease → pump flow decrease

2. P1 Flow Control Proportional Valve

   Control of the flow for the P1 pump

   <Applications>

   [1] Swing relief cut control

   [2] Swing speed limit control

   [3] Power save control

   [4] Option flow control

   <Control>

   Control current: 50 mA min. 740 mA max.

   Current increase → pump flow decrease

   Current decrease → pump flow increase

   * In order to detect disconnections, the minimum value for the control current is set to 50 mA. At 0 mA, computer A judges that the line is disconnected.

https://truckmanualshub.com/

System Control for Energy Saving

Fuel consumption is reduced 8% through the use of three new fuel pressure control systems.

[1] Transient load reduction control (5% reduction)

[2] Swing relief cut control (2% reduction)

[3] Power save control (1% reduction)

1. Reduced Fuel Consumption Through Transient Load Reduction Control

When the lever is operated suddenly or there is a sharp high load, the pump control delay reduces the engine speed.

At this time, the engine side control increases the fuel injection quantity to restore the speed to the target engine speed, so fuel consumption increases.By using transient load reduction control, when these conditions occur, the pump torque is reduced to minimize the drop in engine speed and reduce fuel consumption.

(1) Transient load reduction control

When the conditions below occur, the current to the pump horsepower control proportional valve is first lowered to the minimum current to reduce the pump torque, then the horsepower is controlled by gradually raising the current while watching the difference between the actual engine speed and the target speed and thus reducing the increase in fuel injection quantity.

<Conditions>

[1] Sharp lever operation
Judged from sharp rise in the pressure at the upper side pressure sensor

[2] Operation for high loads and sharp loads
Judged from sharp rise in the pressure at the P1 or P2 pump pressure sensor

E

https://truckmanualshub.com/

(2) Pump added horsepower control

When recovering from transient load reduction control, if the pump horsepower control current is recovered to the rated current, the startup speed is delayed, so there is an impact on operability.In order to compensate for this, when there is sharp lever operation or high load, the current to the pump horsepower control proportional valve is set to the maximum current for the mode to protect against any drop in the recovery speed.

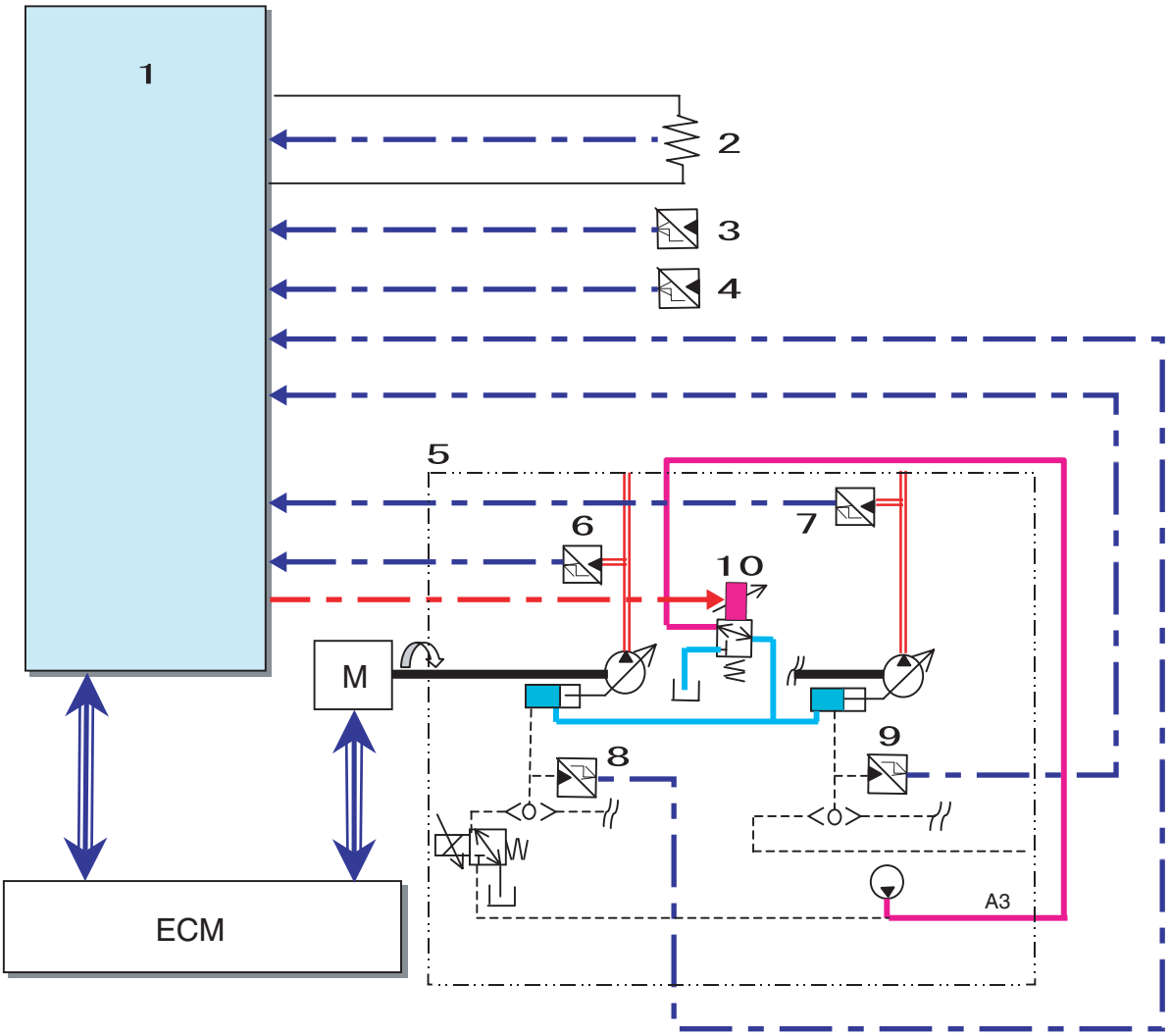

RST-05-00-001o

1	computer A	6	P1 pressure sensor
2	Throttle volume	7	P2 pressure sensor
3	Upper side pressure sensor	8	N1 pressure sensor
4	Arm-in pressure sensor	9	N2 pressure sensor
5	Hydraulic pump	10	Horsepower control proportional valve

https://truckmanualshub.com/

2. Reduced Fuel Consumption Through Swing Relief Cut Control

Model 3 swing line

- When the swing starts, high pressure is required, but not flow.On Model 3, the swing starts and at first almost all the oil flows from the swing relief to the tank, so energy is consumed needlessly.

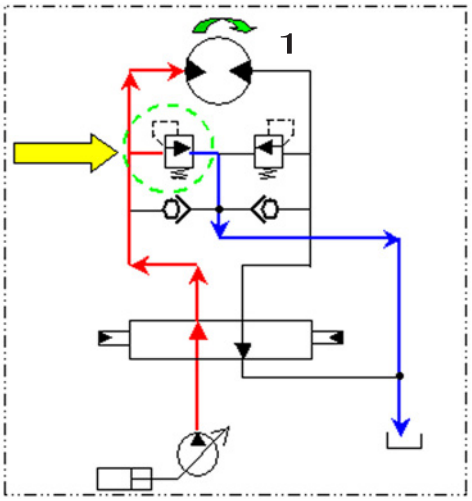

RST-05-00-001p

1	Swing motor

Model 5 swing line

[1] Swing relief cut used

<Purpose>

The swing relief cut control provides relief when the pressure is boosted for the start of the swing due to sharp swing operation and the drained off excess oil is held to the lowest amount possible. This provides an energy saving effect.

<Operation>

For sharp swing operation, when the swing starts, the P1 pump discharge amount is reduced and only the necessary amount of oil is flowed.When the constant swing is reached, flow is necessary, so the P1 pump discharge amount is increased.

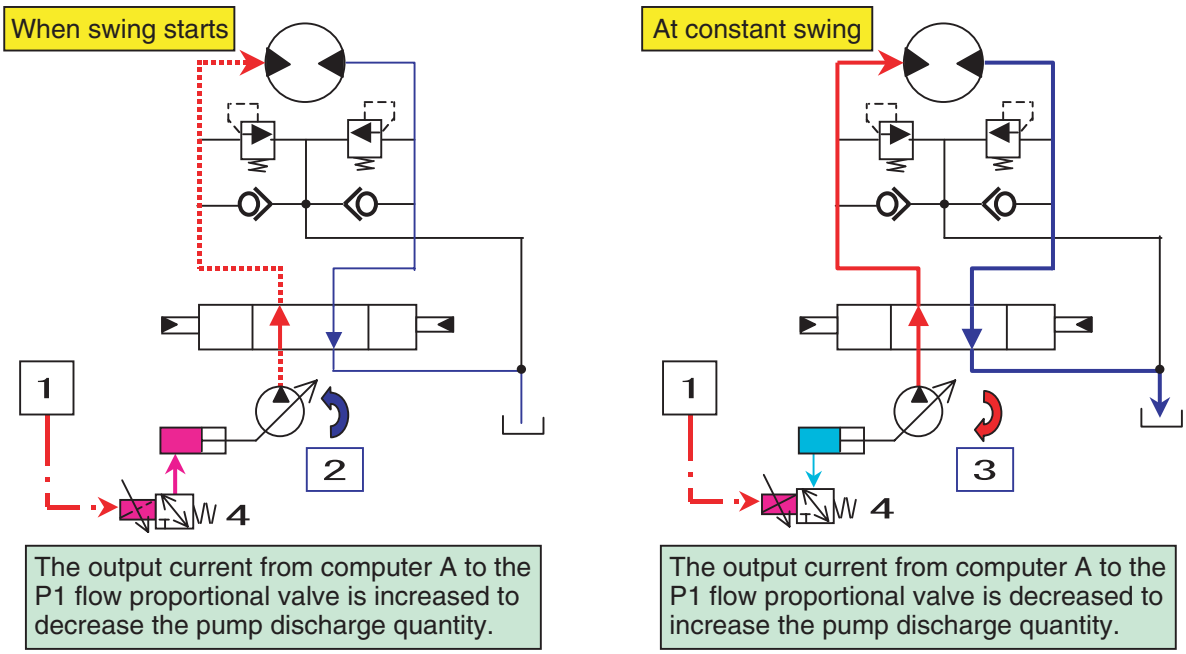

RST-05-00-001q

1	computer A	3	Discharge increased
2	Discharge decreased	4	P1 flow control proportional valve

Caution

P1 flow control proportional valve	Current (high)	⇒	P1 pump flow (low)
	Current (low)	⇒	P1 pump flow (high)

https://truckmanualshub.com/

Explanation of New Functions

<Control contents>

When the conditions below are all met, computer A judges that this is swing relief cut control, increases the current to the P1 flow control proportional valve, and reduces the P1 flow.

After that, while checking the P1 pump discharge pressure, it gradually reduces the output current to the P1 flow control valve and raises the P1 flow to the constant swing speed.

<Conditions>

1. Sharp swing operation .....Judged from the swing pilot pressure sensor pressure rise state
2. Within 1 second after start of swing
3. Attachment non-operation ...Attachment non-operation is judged from the N2 negative control pressure & P1 pressure sensor
4. Travel non-operation .....Travel pressure sensor OFF
5. Option line non-operation ....Option pressure sensor OFF

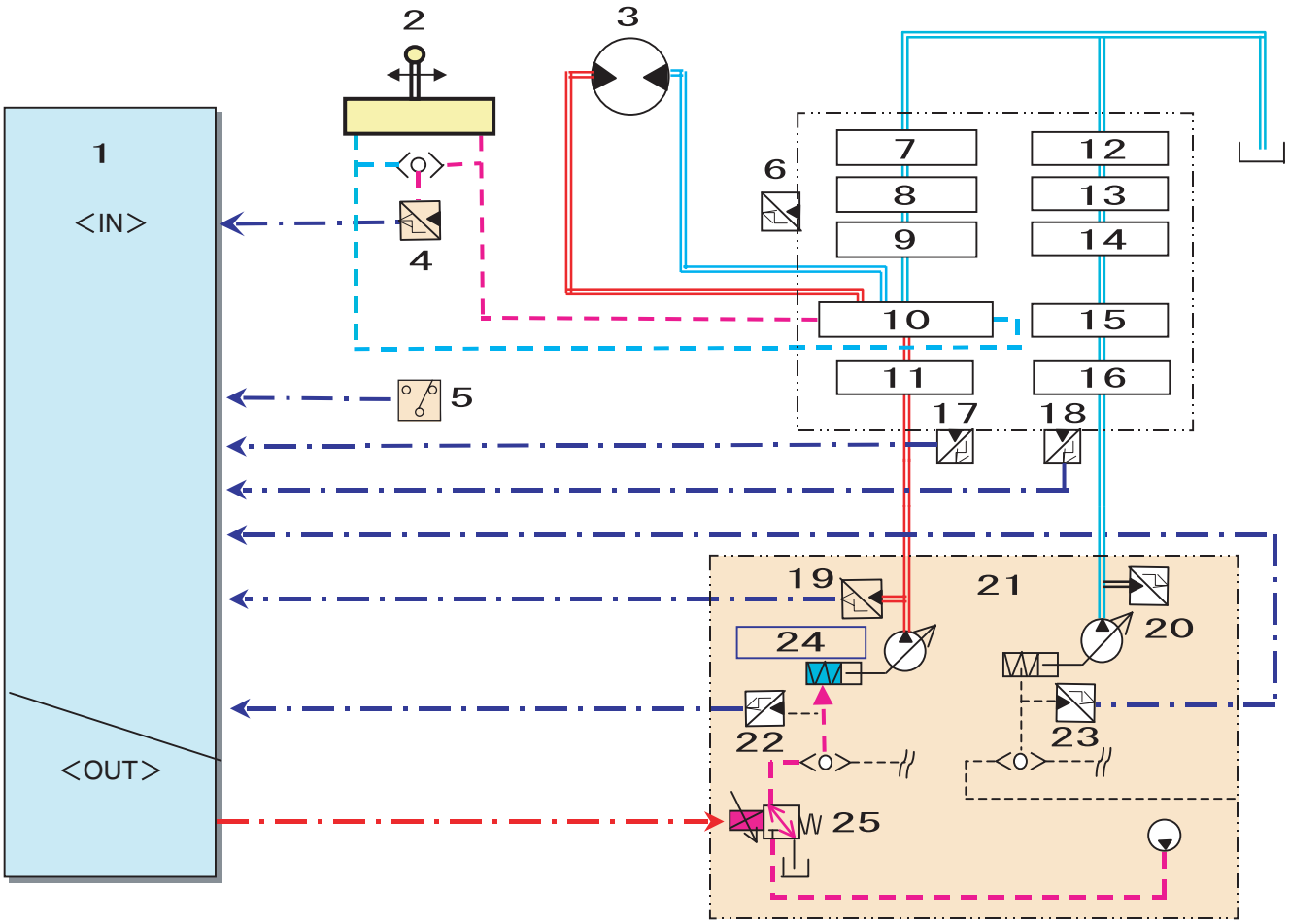

RST-05-00-001r

1	computer A	10	Swing	19	P1 pressure sensor
2	Swing remote control valve	11	Travel (right)	20	P2 pressure sensor
3	Swing motor	12	Arm (2)	21	Hydraulic pump
4	Swing pressure sensor	13	Bucket	22	N1 pressure sensor
5	Option pressure switch	14	Boom (1)	23	N2 pressure sensor
6	Arm-in pressure sensor	15	Travel (left)	24	Discharge increased / decreased
7	Arm (1)	16	Straight travel	25	P1 flow control proportional valve
8	Option	17	Travel pressure sensor		
9	Boom (2)	18	Upper side pressure sensor		

https://truckmanualshub.com/

3. Reduced Fuel Consumption Through Power Save Control

Negative control circuit change

[1] Model 3 negative control circuit

Control such that the discharge flow decreases as the negative control pressure increases

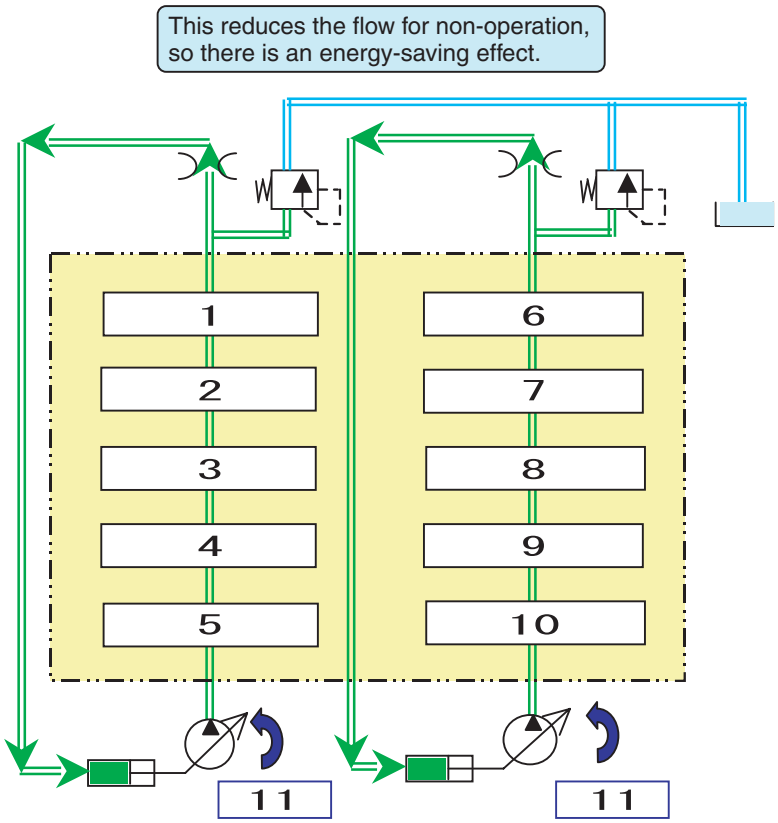

<Operation>

(1) The oil discharged from the pump is drained from the control valve center bypass and boosted to the foot relief set pressure at the negative control metering valve downstream.

(2) The oil drained from the negative control metering valve leads to the negative control ports for the P1 and P2 pumps, so accompanying the negative control pressure boost, the pump tilt revolution angle is tilted to the minimum side to set the pump discharge to minimum.

RST–05–00–001s

1	Arm (1)	7	Bucket
2	Option	8	Boom (1)
3	Boom (2)	9	Travel (left)
4	Swing	10	Straight travel
5	Travel (right)	11	Discharge decreased
6	Arm (2)		

https://truckmanualshub.com/

Explanation of New Functions

[2] Model 5 negative control circuit

Power save control used

<Purpose>

By making the negative control relief variable and lowering the negative control pressure, a further energy saving effect is obtained.

For non-operation, this gives low pressure + low flow, which provides a further energy saving effect.

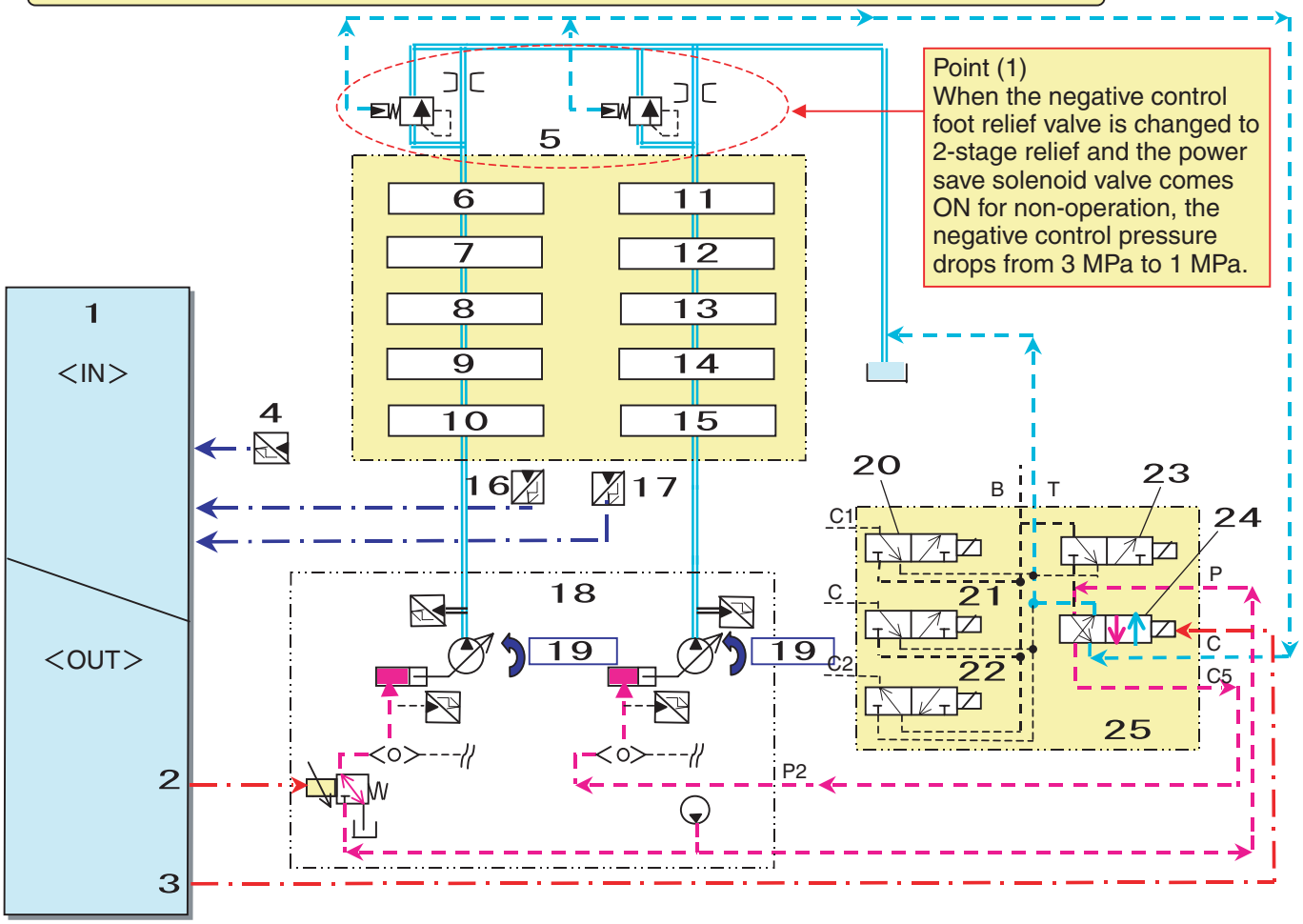

<Operation>

1) One second after the end of operation, the power save solenoid valve comes ON, the negative control relief spring pressure is led from the 5 stack solenoid block C5 port through the power save solenoid valve, and to the tank, the negative control relief valve is switched, and the pump discharge pressure drops.
2) When the pump discharge pressure drops, the negative control pressure drops too, so the P1 and P2 pump negative control valves are controlled as below.
   P1 pump ... The P1 flow proportional valve is operated, the negative control pressure is established, and the pump discharge is lowered by the negative control flow.
   P2 pump ... The switching of the power save solenoid leads the pilot pressure from the solenoid block C5 port through the shuttle valve and to the negative control port to lower the negative control flow.
3) If any of the pilot pressure sensors - upper side, travel, or swing ? comes ON, the normal control is restored after about 0.1 second.

RST-05-00-001t

1	computer A	10	Travel (right)	19	Discharge decreased
2	P1 flow control proportional valve	11	Arm (2)	20	Travel 2nd speed
3	Power save solenoid valves	12	Bucket	21	Boosted pressure
4	Swing pressure sensor	13	Boom (1)	22	Swing brake
5	Negative control relief	14	Travel (left)	23	Lever lock
6	Arm (1)	15	Straight travel	24	Power save
7	Option	16	Travel pressure sensor	25	5-stack solenoid valve
8	Boom (2)	17	Upper side pressure sensor		
9	Swing	18	Hydraulic pump		

https://truckmanualshub.com/

Swing Speed Limit Control

<Purpose>

Since the maximum pump flow has been increased compared to Model 3, the swing speed at maximum pump flow is too fast.

For the improved swing operability and energy-saving effects, the maximum swing speed is held down to the same speed as for Model 3.

(SH210-5 P1 maximum discharge amount held down from 211 L / min ⇒ 200 L / min; control only for SP mode)

<Operation>

When the conditions below are all met, the output current to the P1 flow control valve is set to the maximum of 350 mA and the P1 pump flow is held down.

<Conditions>

[1] Swing alone full lever operation ..... Judged from the N1 and N2 negative control pressure sensors and P1 and P2 pressure sensors

[2] Travel non-operation ..... Travel pressure sensor OFF

[3] The work mode is SP mode.

<End conditions>

[1] Travel operation ⇒ Immediate end (to prevent meandering)

[2] Other attachment operation ⇒ Gradual end (to reduce shock)

[3] Option circuit operation

E

https://truckmanualshub.com/

Explanation of New Functions

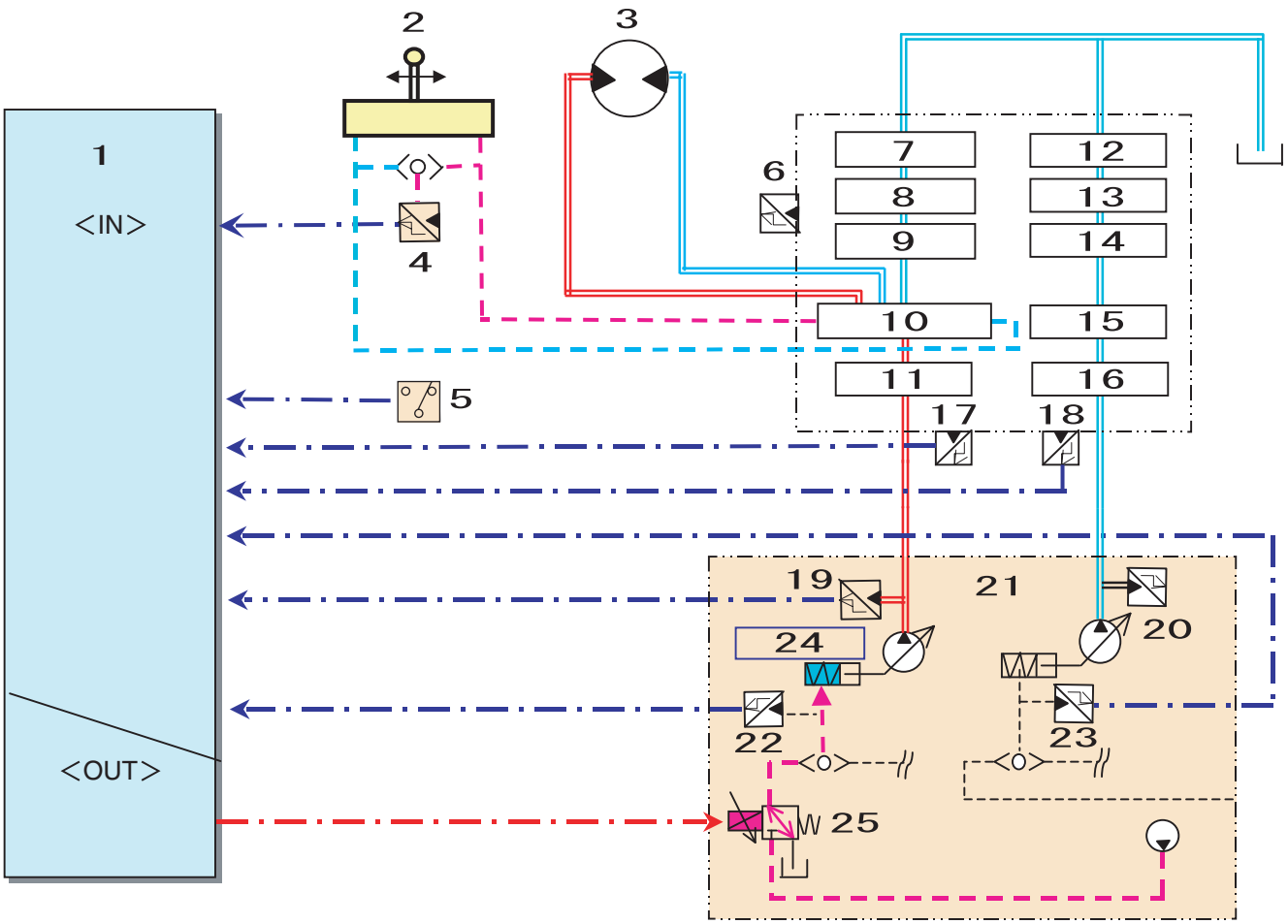

RST-05-00-001r

1	computer A	10	Swing	19	P1 pressure sensor
2	Swing remote control valve	11	Travel (right)	20	P2 pressure sensor
3	Swing motor	12	Arm (2)	21	Hydraulic pump
4	Swing pressure sensor	13	Bucket	22	N1 pressure sensor
5	Option pressure switch	14	Boom (1)	23	N2 pressure sensor
6	Arm-in pressure sensor	15	Travel (left)	24	Discharge increased / decreased
7	Arm (1)	16	Straight travel	25	P1 flow control proportional valve
8	Option	17	Travel pressure sensor		
9	Boom (2)	18	Upper side pressure sensor		

<Flow from swing start to constant-speed swing (SP mode)>
Swing lever operation
⇒ Judged to be swing relief cut condition
⇒ Increased current to P1 flow control proportional valve
⇒ P1 pump flow reduced
⇒ Current gradually decreased while watching swing pressure fall status
⇒ P1 pump flow increased
⇒ Judged to be speed limit condition
⇒ P1 pump current fixed to 350 mA

https://truckmanualshub.com/

Electrical Equipment Layout Diagram

Overall View

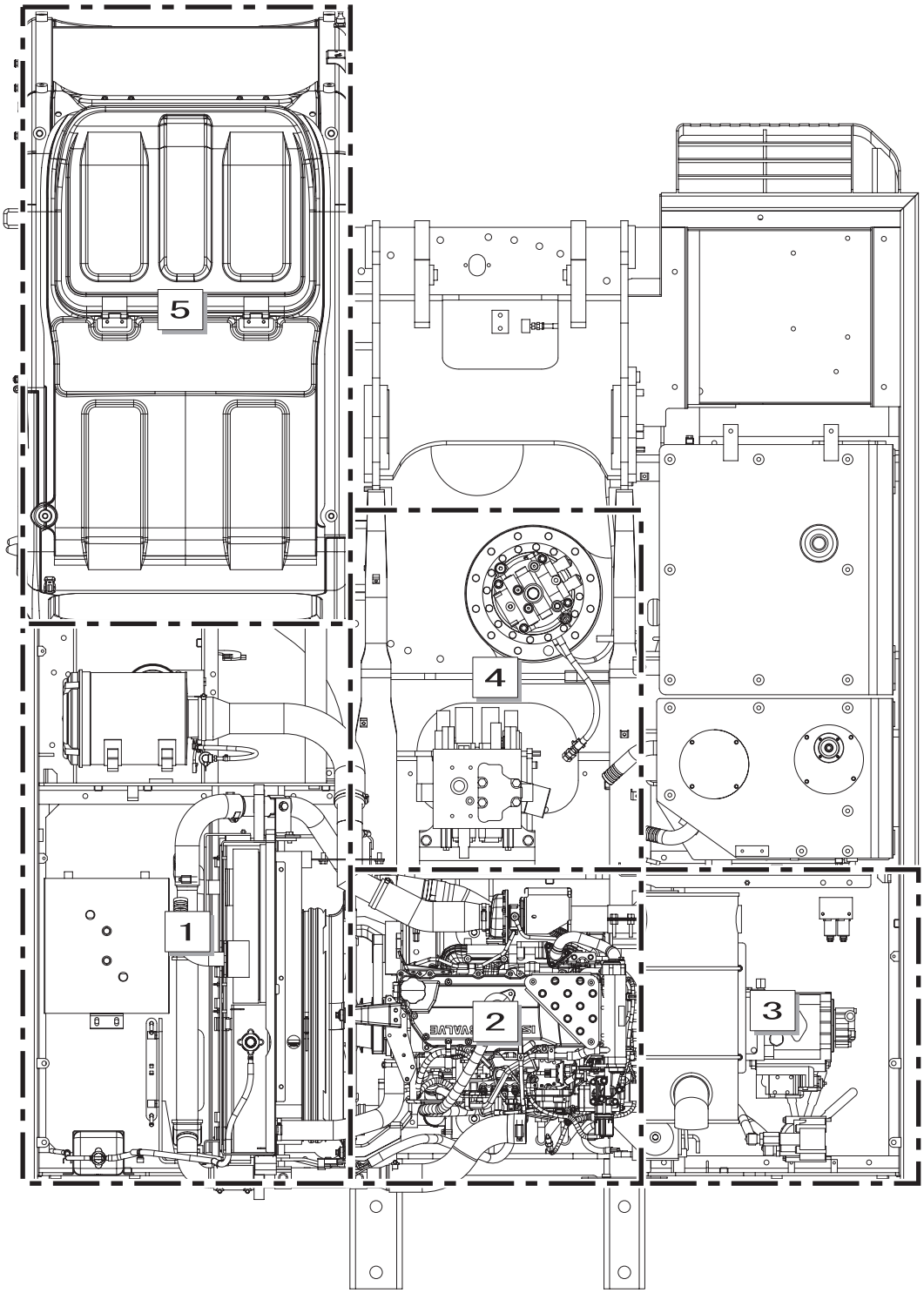

1	Main unit left side (radiator compartment)
2	Engine
3	Main unit right side (pump compartment)
4	Main unit center section
5	In cab

E

https://truckmanualshub.com/

Electrical Equipment Layout Diagram

1. Main Unit Left Side Layout Diagram (radiator compartment)

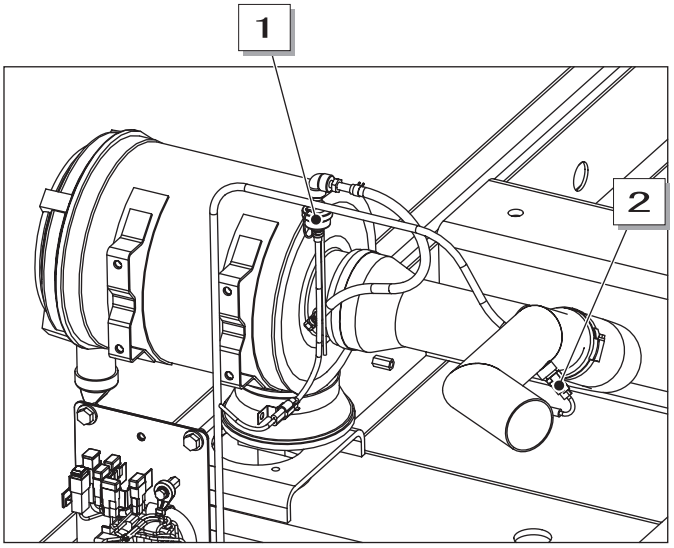

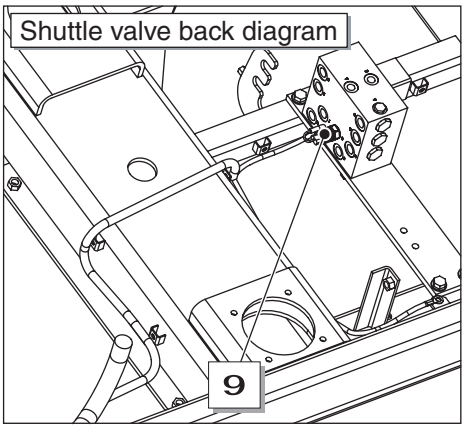

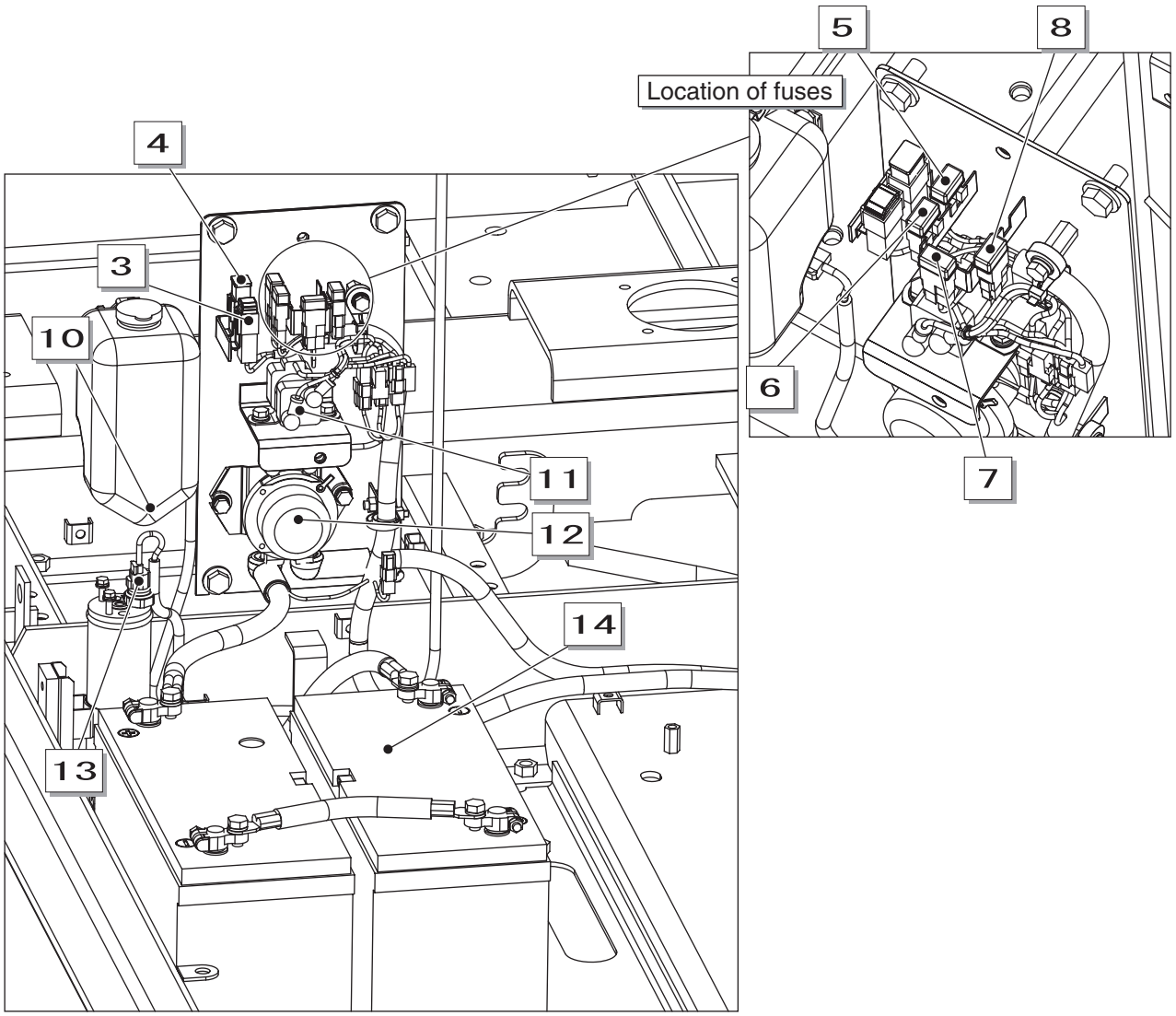

1	Air cleaner sensor	6	Fuse: ECM 20A (F4)	11	Safety relay
2	Suction air temperature sensor	7	Fuse: controller 20A (F5)	12	Battery relay
3	Fusible link 65A (F1)	8	Fuse: GPS 15A (F6)	13	Receiver dryer sensor
4	Fusible link 50A (F2)	9	Swing pilot pressure sensor	14	Battery
5	Fuse: key 15A (F3)	10	Washer motor		

https://truckmanualshub.com/

2. Engine Section Layout Diagram

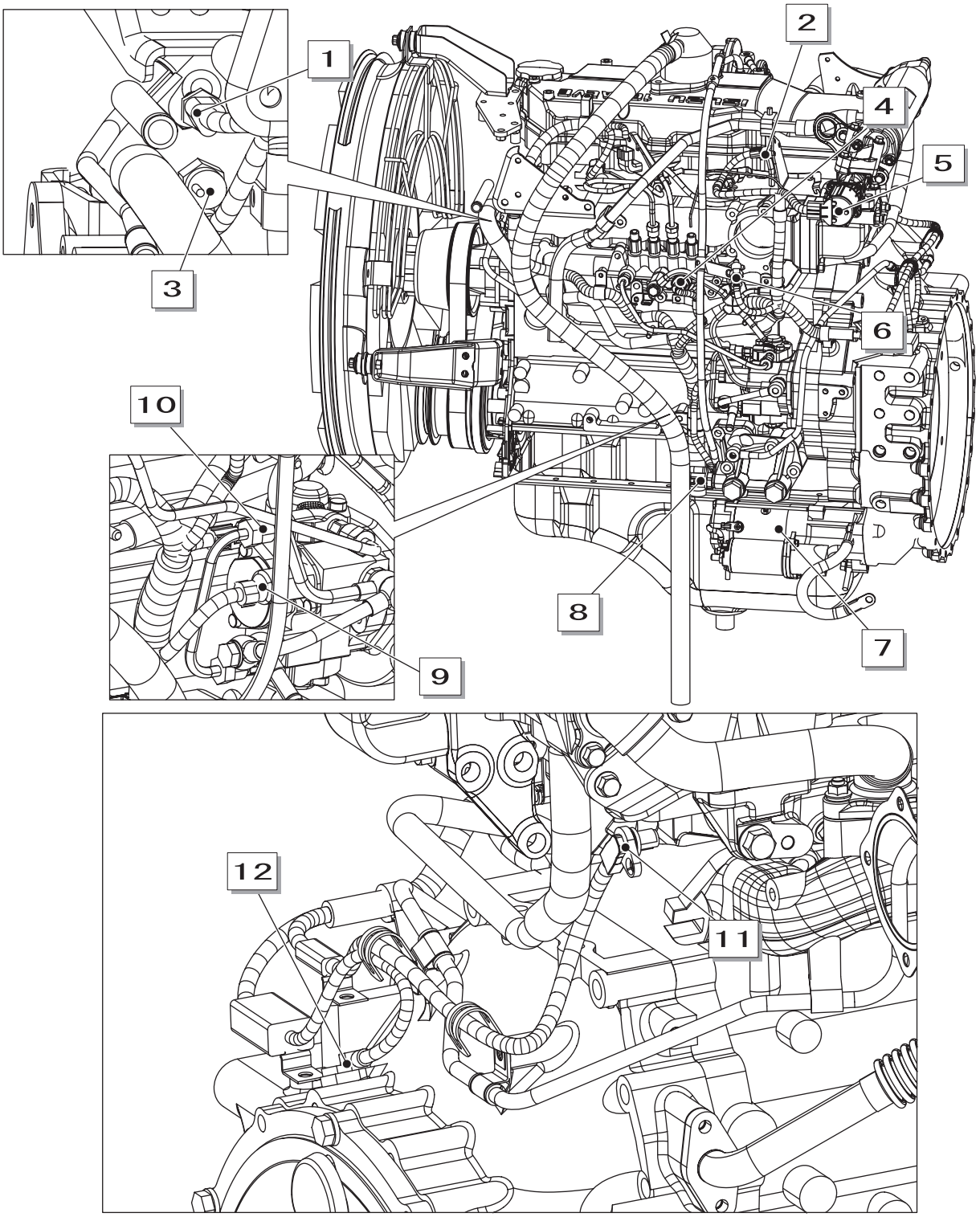

1	Engine coolant temperature sensor	7	Starter motor
2	Boost pressure sensor	8	Engine coolant temperature sensor
3	Overheat switch	9	Suction control valve
4	Common rail pressure sensor	10	Fuel temperature sensor
5	EGR valve	11	Cam position sensor
6	Boost temperature sensor	12	Crank position sensor

https://truckmanualshub.com/

Electrical Equipment Layout Diagram

3. Main Unit Right Side Layout Diagram (pump compartment)

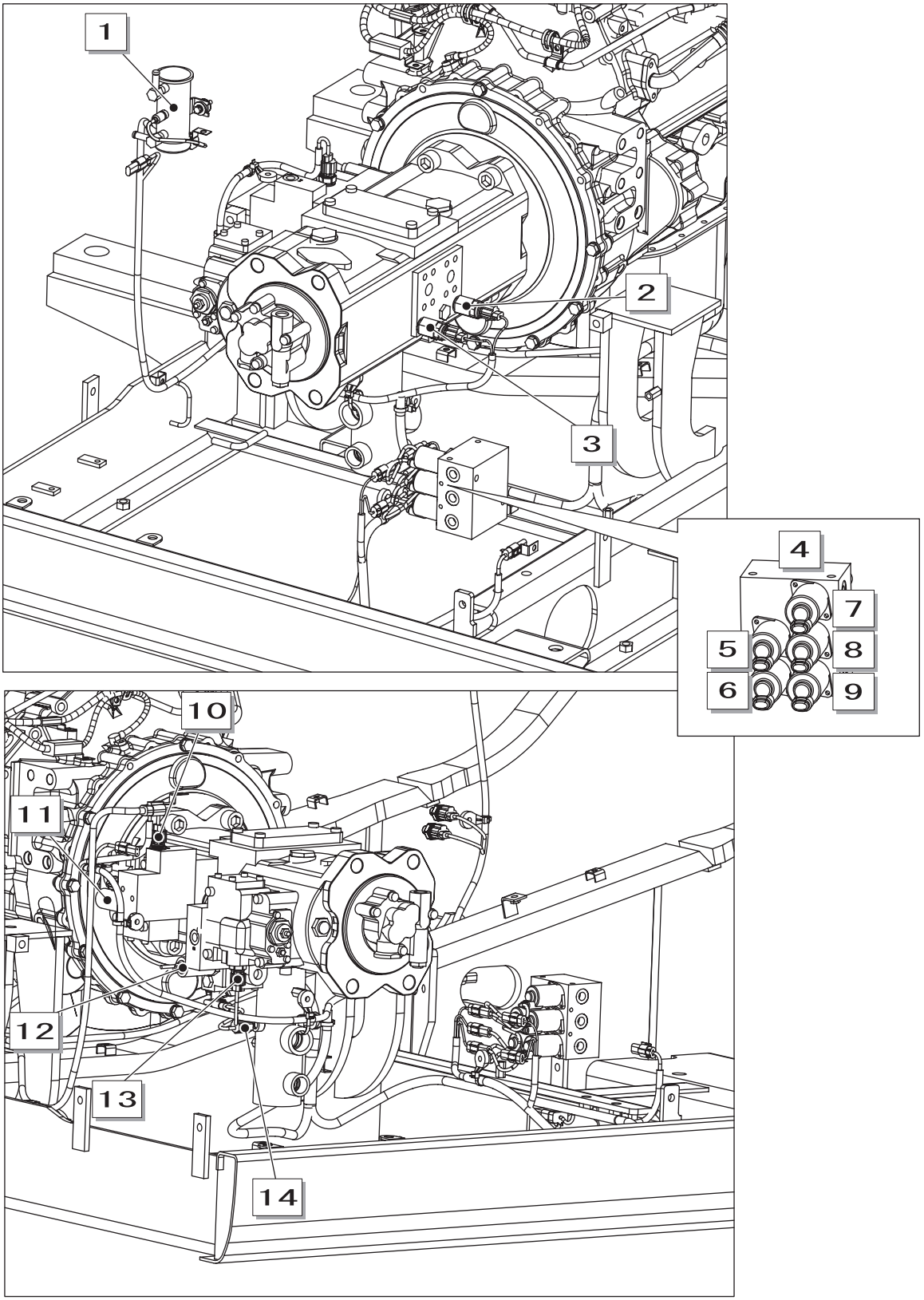

1	Electromagnetic fuel pump	8	Boosted pressure
2	P1 pressure sensor	9	Travel speed
3	P2 pressure sensor	10	N1 pressure sensor
4	5-stack solenoid valve	11	P1 flow control proportional valve
5	Power save	12	Horsepower control proportional valve
6	Lever lock	13	N2 pressure sensor
7	Swing lock	14	Oil temperature sensor

https://truckmanualshub.com/

4. Main Unit Center Section Layout Diagram

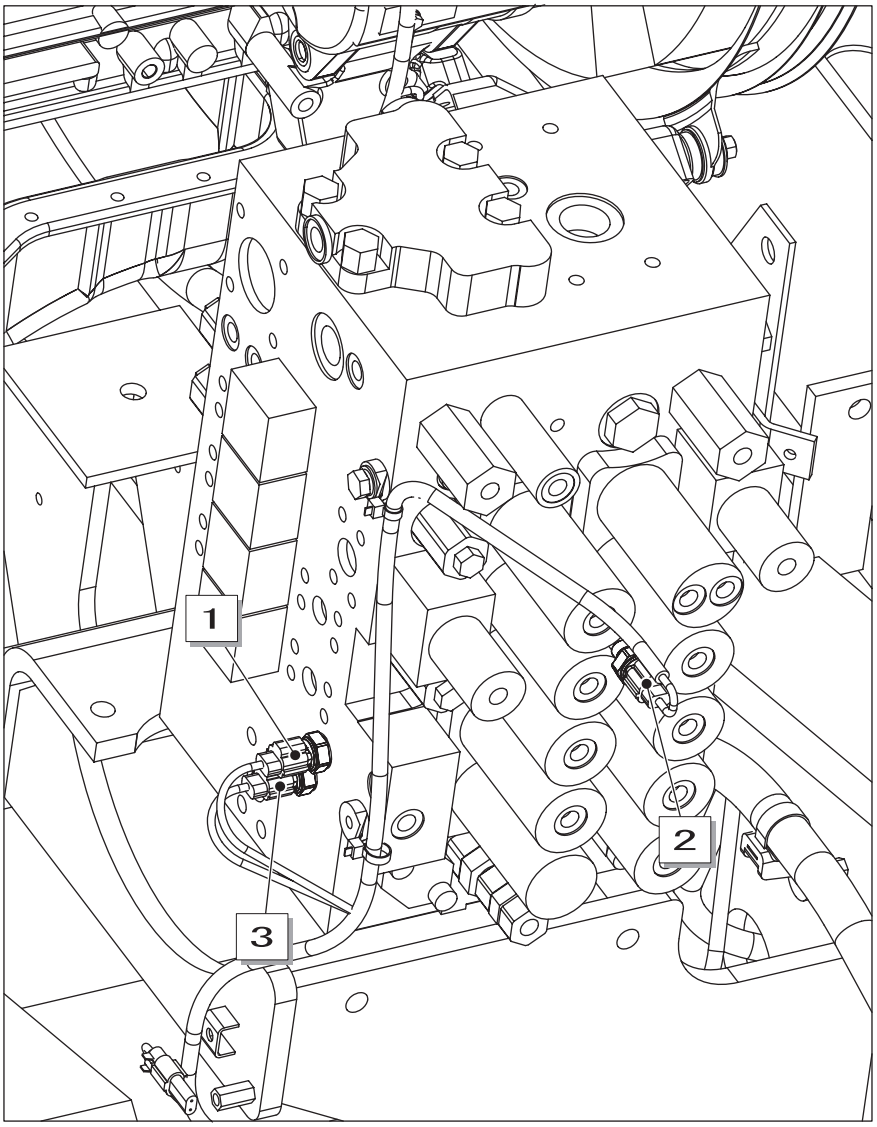

1	Upper side pressure sensor
2	Arm-in pressure sensor
3	Travel pressure sensor

Electrical Equipment Layout Diagram

5. Cab Layout Diagram 1

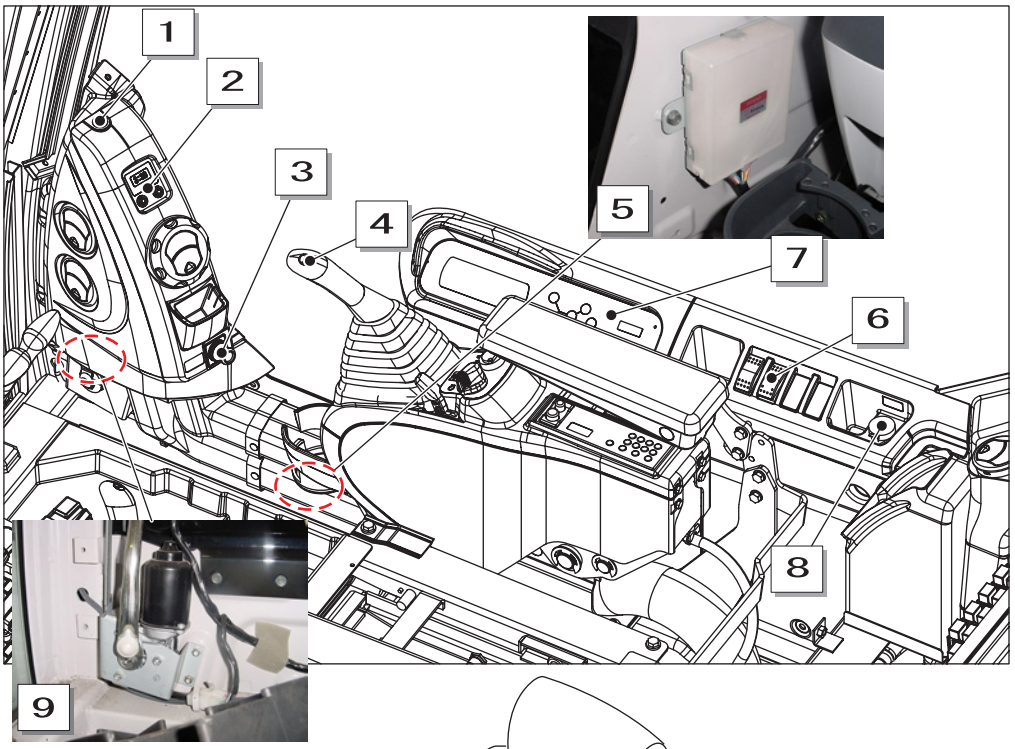

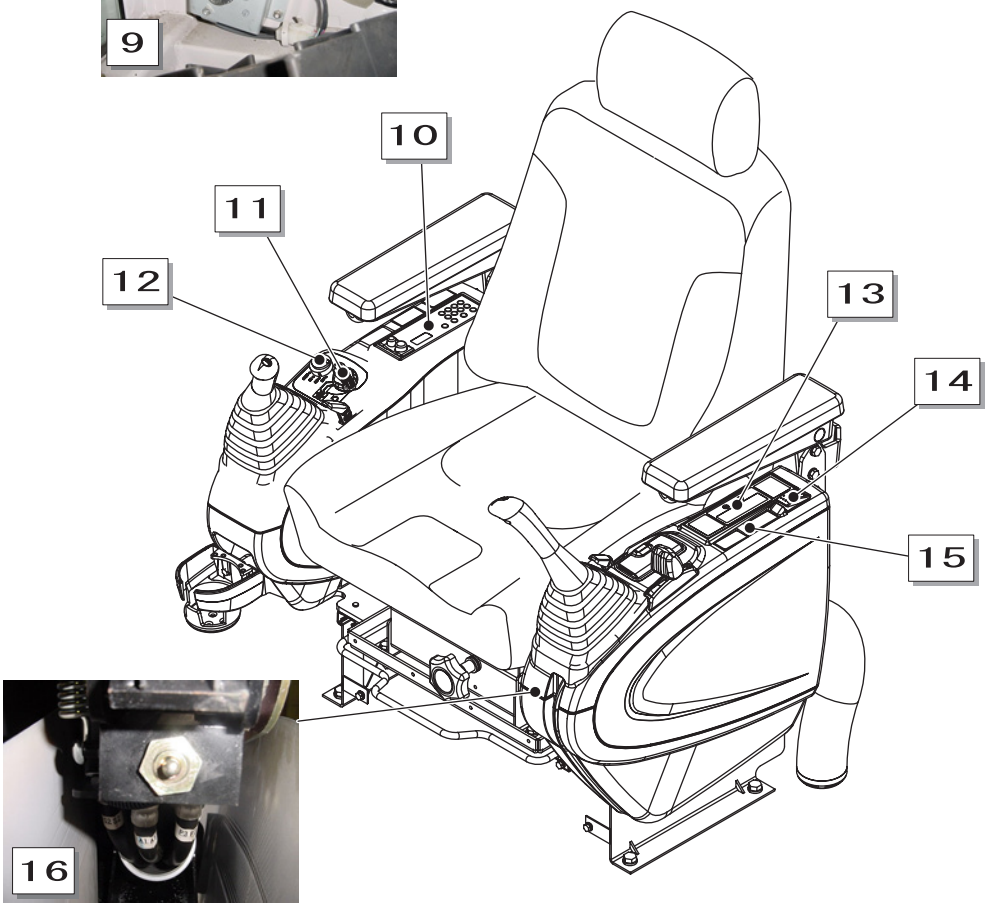

1	Air conditioner solar radiation sensor	7	Monitor display	13	Air conditioner control panel
2	Clock	8	12 V socket	14	Emergency stop switch
3	Cigar lighter	9	Wiper motor	15	Rocker switch
4	Knob	10	Radio	16	Gate lock limit switch
5	Wiper controller	11	Throttle volume		
6	Rocker switches (4)	12	Key cylinder		

https://truckmanualshub.com/

Electrical Equipment Layout Diagram

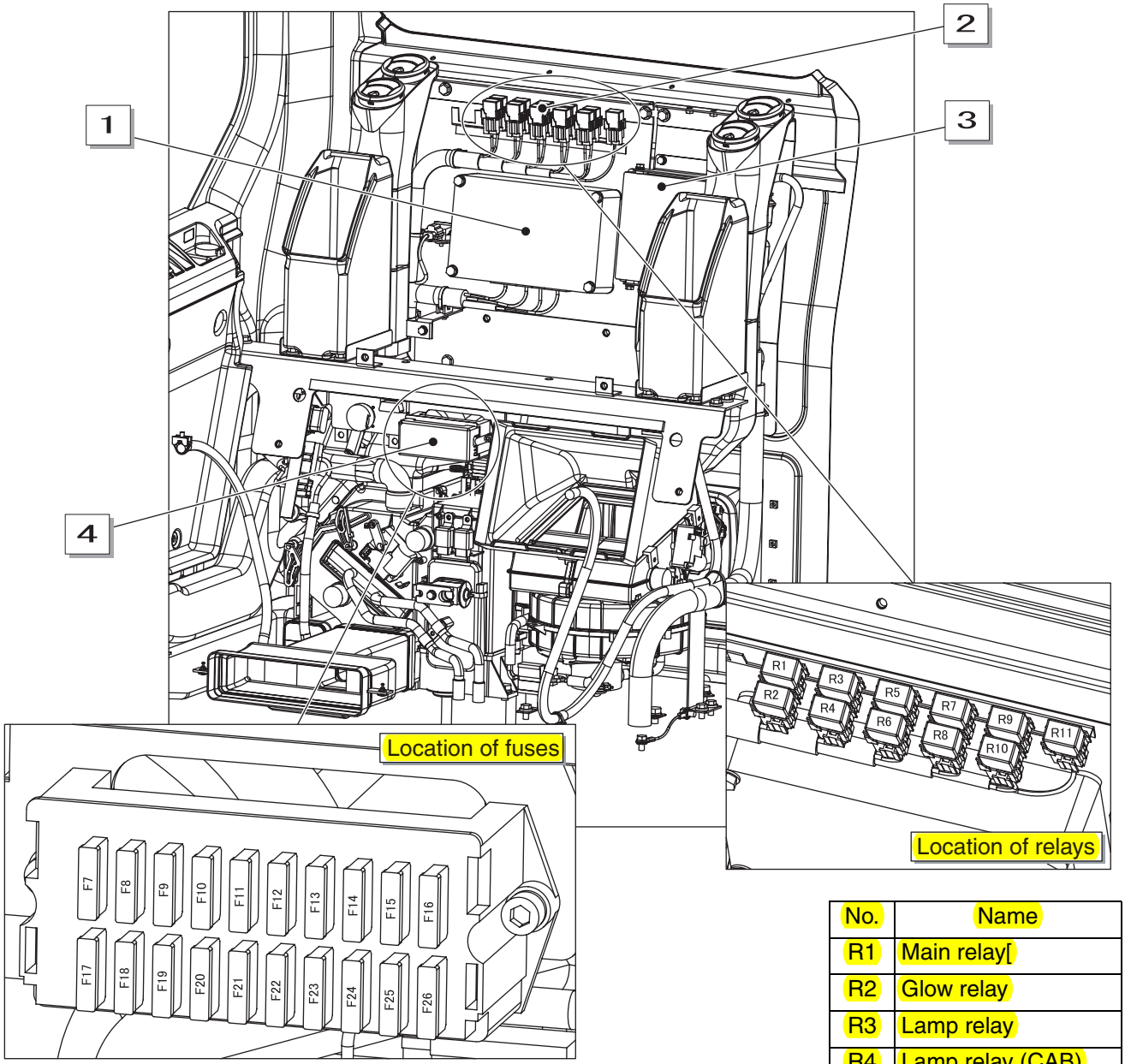

No.	PART NAME	
F7	BACK UP RADIO, ROOM LAMP	10A
F8	ENGINE PRE-HEAT	30A
F9	OPTION LINE	10A
F10	AIR-CONDITIONER UNIT	5A
F11	AIR-CONDITIONER BLOWER	15A
F12	AIR-CONDITIONER COMPRESSOR	5A
F13	SOLENOID	10A
F14	WIPER WASHER	15A
F15	HORN	10A
F16	LAMP (BOOM, HOUSE)	15A

No.	PART NAME	
F17	FUEL FEED PUMP	20A
F18	CLOCK BACK MONITOR	10A
F19	CIGAR LIGHTER KAB SEAT	15A
F20	DC CONVERTER	10A
F21	TRAVEL ALARM BEACON	10A
F22	SPARE (CRANE)	15A
F23	ELEC. FUEL PUMP	10A
F24	LAMP (SPARE)	15A
F25	LOCK LEVER (GATE)	10A
F26	LAMP (CAB)	15A

No.	Name
R1	Main relay[
R2	Glow relay
R3	Lamp relay
R4	Lamp relay (CAB)
R5	Horn relay L
R6	Horn relay R
R7	Speaker relay R
R8	Speaker relay L
R9	Room lamp relay
R10	Beacon relay
R11	Starter cut relay

1	Controller A
2	Relay
3	ECM (engine control module)
4	Fuse box

Electrical Equipment Layout Diagram

6. Layout Around Operator Seat

Right console

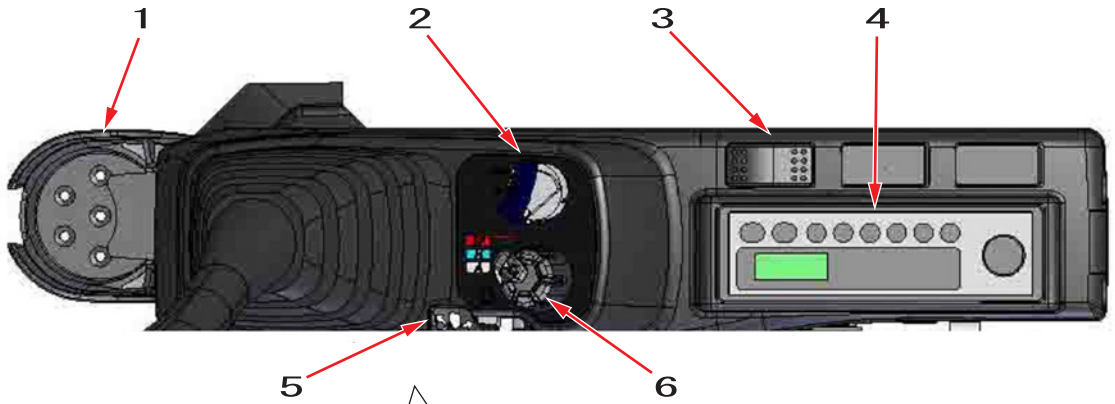

Left console

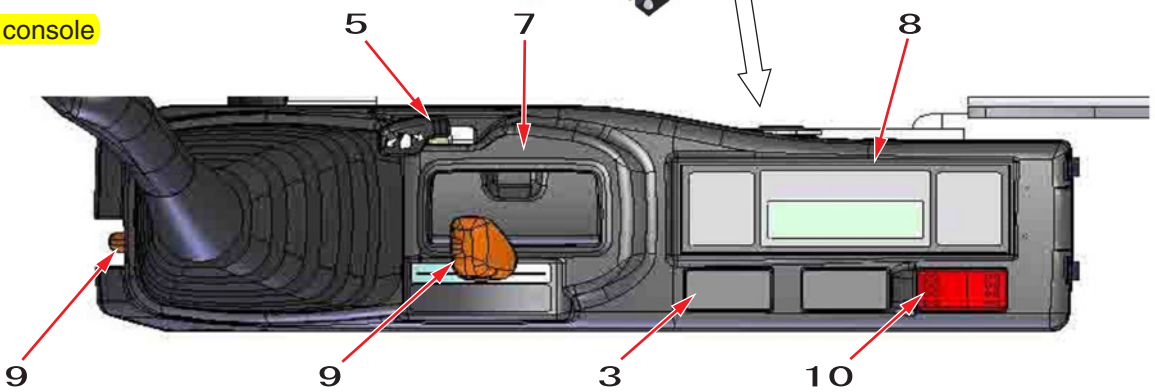

1	Cup holder
2	Key switch
3	Rocker switch base
4	AM / FM radio
5	Tilt lever
6	Throttle volume
7	Ashtray
8	Air conditioner control panel
9	Gate lever
10	Emergency stop switch

https://truckmanualshub.com/

Stand-alone Parts Diagram

Name	Shape	Circuit	Remarks
Safety relay	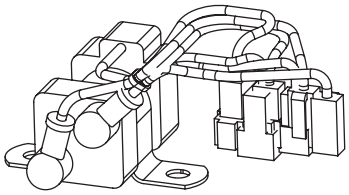	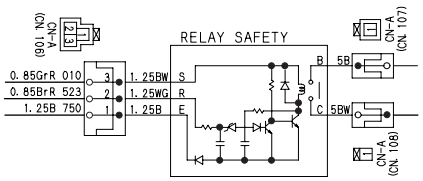	Model: 24 V DC specifications Isuzu Part No.: 182553-0391 Sumitomo Part No.: AEH0017
Battery relay	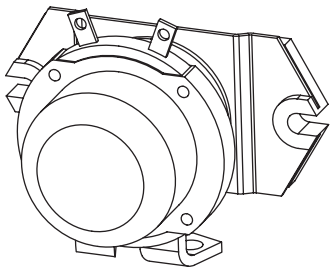	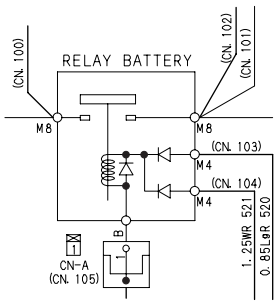	Model: For +24 V DC Sumitomo Part No.: KHR1241
Starter motor	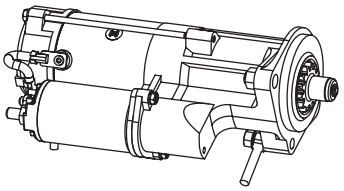	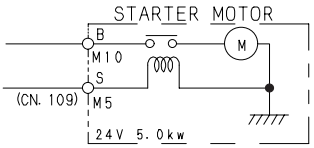	Model: 5.0 kW-24 V Isuzu Part No.: 898001-9150
Alternator	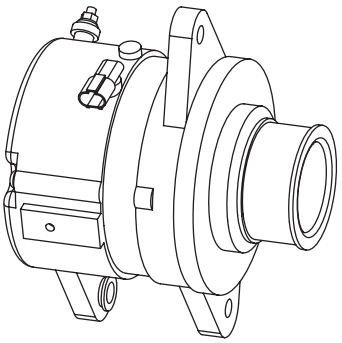	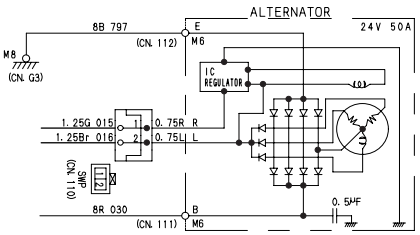	Model: 50 A-24 V Isuzu Part No.: 897375-0171
Battery	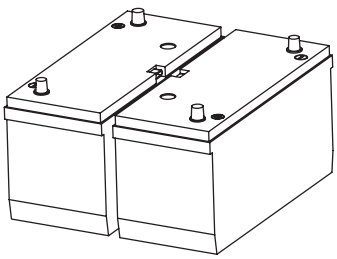	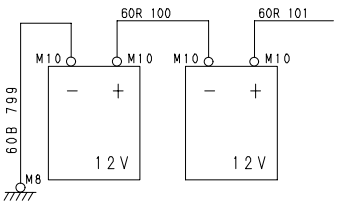	Model: 130E41R Sumitomo Part No.: KHR3944
Washer motor	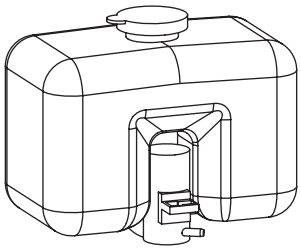	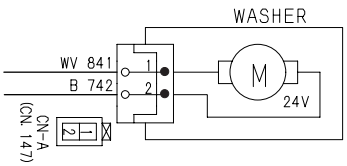	Sumitomo Part No.: KHR2261 (tank + motor)

https://truckmanualshub.com/

Electrical Equipment Layout Diagram

Name	Shape	Circuit	Remarks
Fusible link (F1)	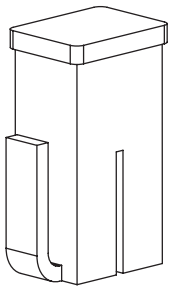	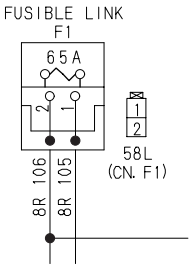	Model: 65 A Sumitomo Part No.: KHR1592
Fusible link (F2)	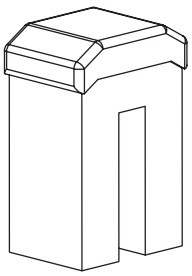	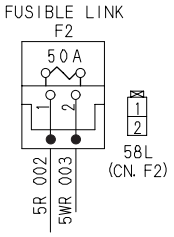	Model: 50 A Sumitomo Part No.: KHR3850
Fuse box (F3, F4, F5, F6)	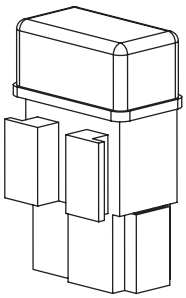	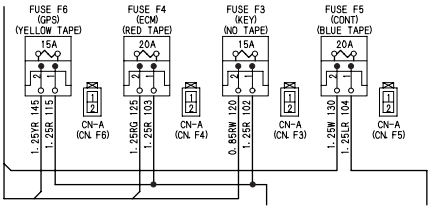	Model: 7224-8511 (20 A) 7224-8512 (15 A)
Throttle volume	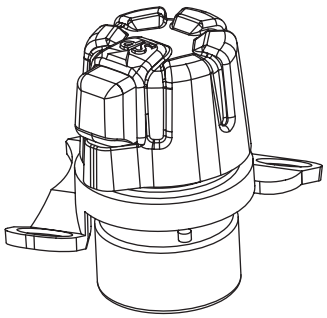	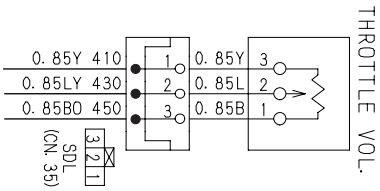	Model: RA30Y2 30SKB1KΩK Sumitomo Part. No.: KHR2751
Starter switch	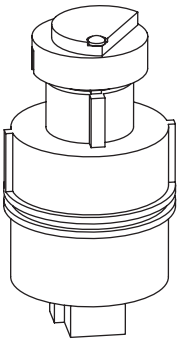	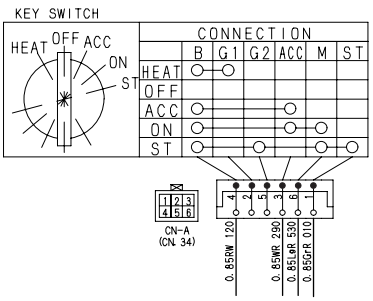	Model: 24 V DC Sumitomo Part No.: KHR15560 (EXP)

https://truckmanualshub.com/

Name	Shape	Circuit	Remarks
Fuel level sensor	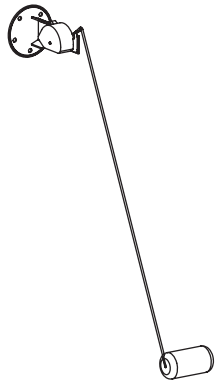	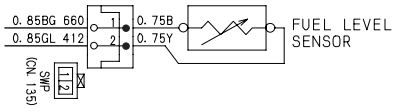	Sumitomo Part No.: KHR10670
Charge fuel pump	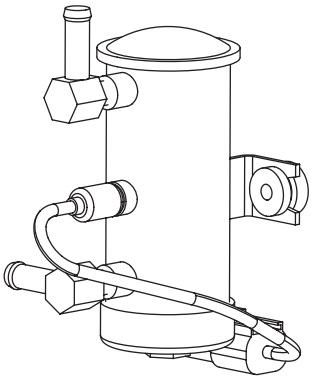	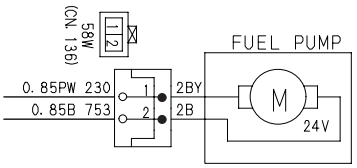	Model: 24 V DC Sumitomo Part No.: KHH10460
Reserve tank limit switch	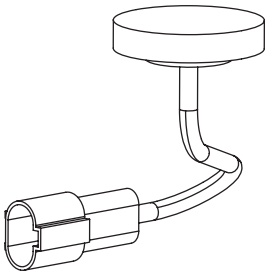	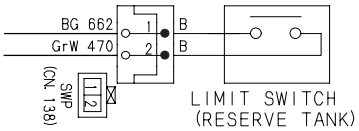	Sumitomo Part No.: KHH0221
Vacuum sensor	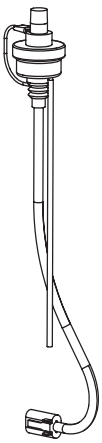	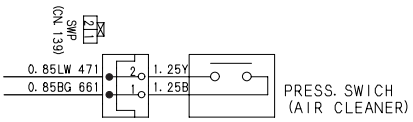	Sumitomo Part No.: KHH10330

https://truckmanualshub.com/

Electrical Equipment Layout Diagram

Name	Shape	Circuit	Remarks
Glow plug	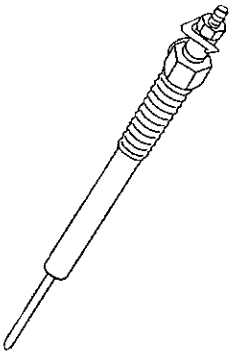	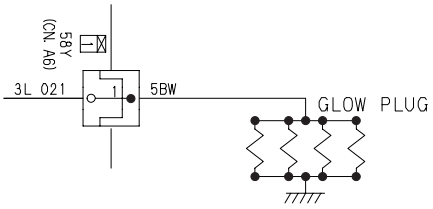	Isuzu Part No.: 894390-7775
EGR motor EGR position sensor	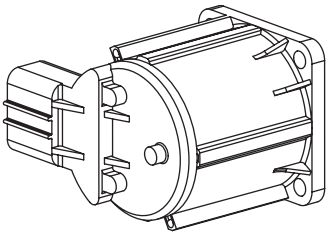	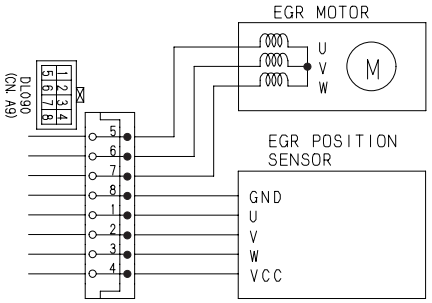	EGR valve accessory EGR valve Isuzu Part No.: 898001-1910
Common rail pressure sensor	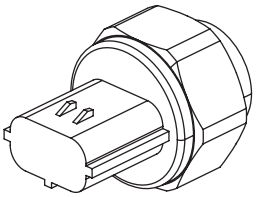	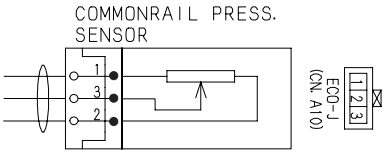	Common rail accessory Common rail Isuzu Part No.: 897306-0632
Cam angle sensor	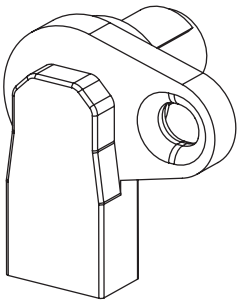	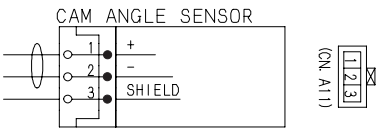	Isuzu Part No.: 898014-8310
Crank angle sensor	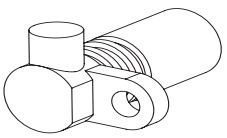	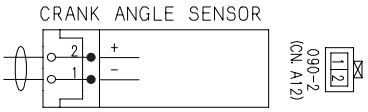	Isuzu Part No.: 897306-1131
Oil pressure sensor	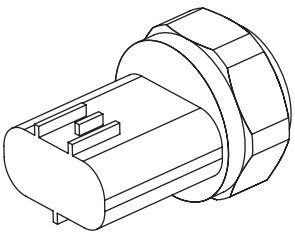	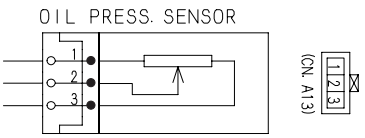	Isuzu Part No.: 897600-4340

https://truckmanualshub.com/

Name	Shape	Circuit	Remarks
Boost pressure sensor	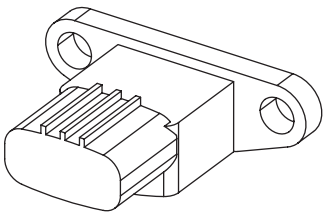	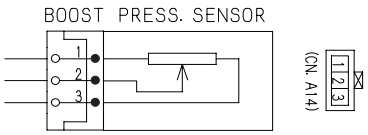	Isuzu Part No.: 180220-0140
Boost temperature sensor	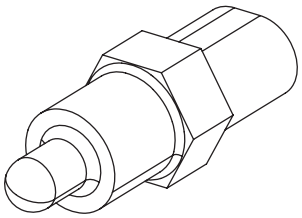	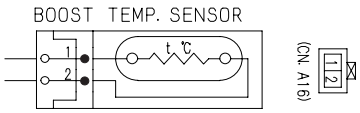	Isuzu Part No.: 81246-8300
Fuel temperature sensor	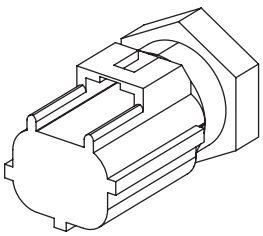	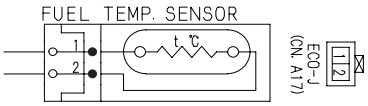	Supply pump accessory part Supply pump Isuzu Part No.: 897306-0448
Suction control valve	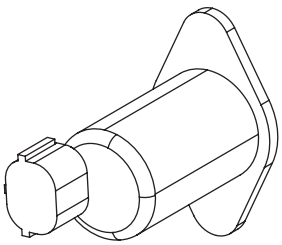	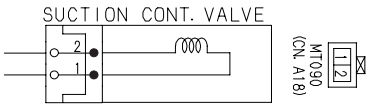	Supply pump accessory part Supply pump Isuzu Part No.: 897306-0448
Injector	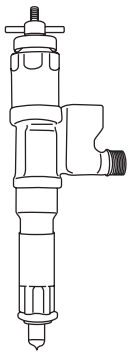	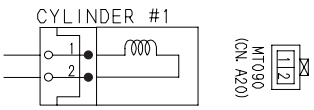	Isuzu Part No.: 897329-7032
Suction air temperature sensor	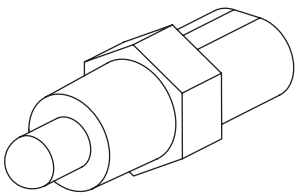	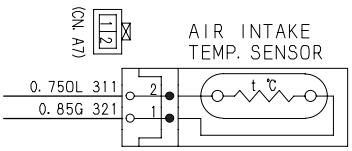	Isuzu Part No.: 812146-8300 Sumitomo Part No.: KHH0535

E

https://truckmanualshub.com/

Electrical Equipment Layout Diagram

Name	Shape	Circuit	Remarks
Engine coolant temperature sensor	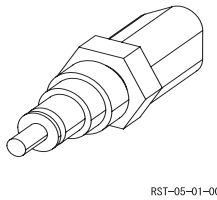	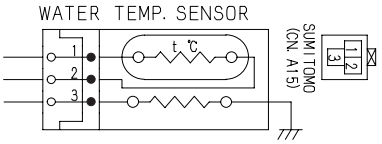	Isuzu Part No.: 897170-3270
Atmospheric pressure sensor	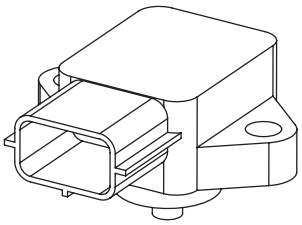	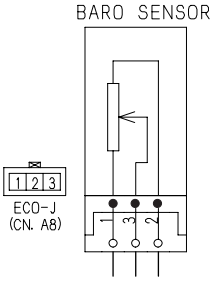	Isuzu Part No.: 897217-7780 Sumitomo Part No.: KHH0536
Computer A	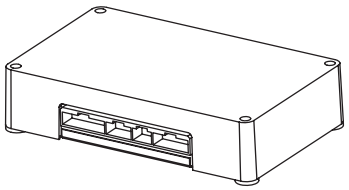	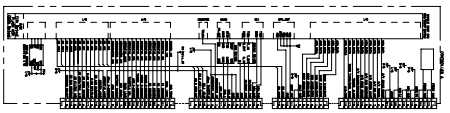	Sumitomo Part No.: KHR10023
Relay	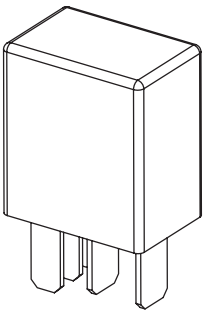	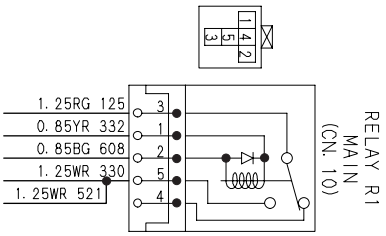	Model: 24 V DC Sumitomo Part No.: KHR3802
DC-DC converter	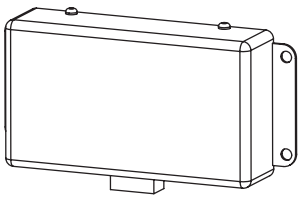	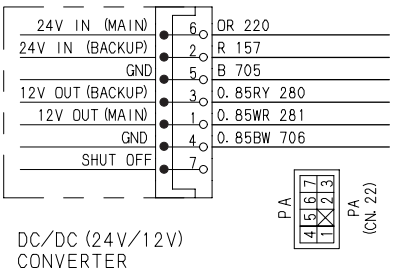	Sumitomo Part No.: KHR2447
Alarm (feed pump)	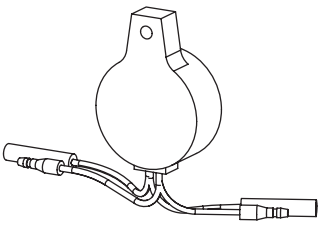	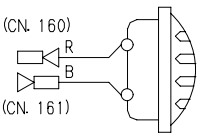	Sumitomo Part No.: KHR4024

https://truckmanualshub.com/

Electrical Equipment Layout Diagram

Name	Shape	Circuit	Remarks
Feed pump	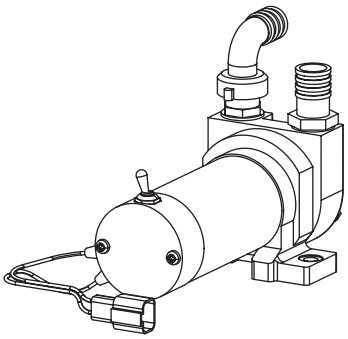	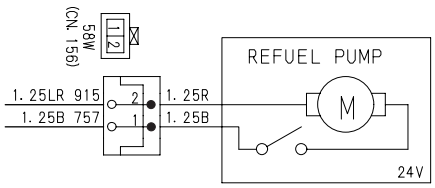	Sumitomo Part No.: KHR12840
Feed pump switch	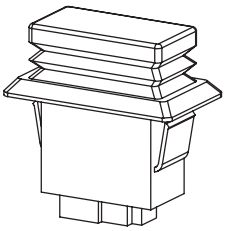	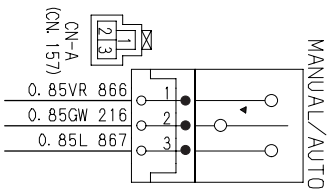	Sumitomo Part No.: KHR11520
Lamp (right side housing)	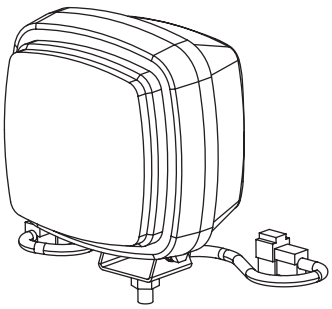	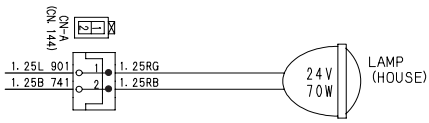	Model: 24 V 70 W Sumitomo Part No.: KHR2475
Lamp (boom)	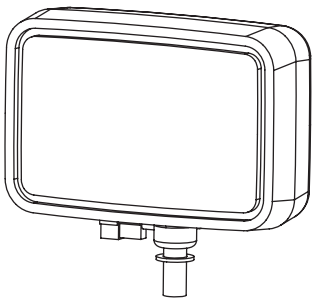	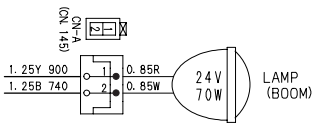	Model: 24 V 70 W Sumitomo Part No.: KHR0957
Lamp (cab top)	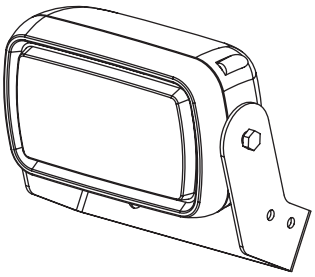	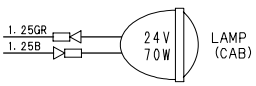	Model: 24 V 70 W Sumitomo Part No.: KHR16240

E

https://truckmanualshub.com/

Electrical Equipment Layout Diagram

Name	Shape	Circuit	Remarks
Speaker (R)	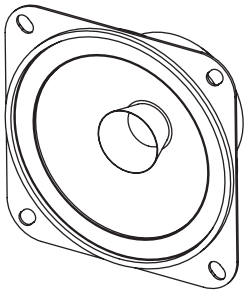	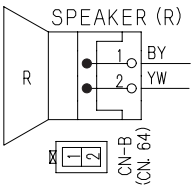	Sumitomo Part No.: CAP2284
Monitor display	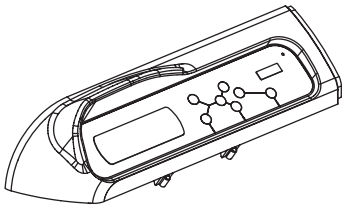	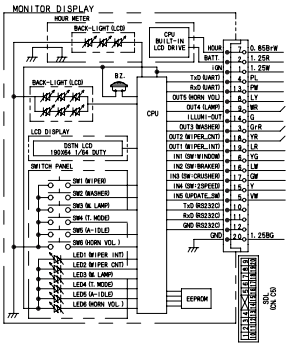	Model: SK-0023-001-N0-KK Sumitomo Part No.: KHR10051 (EXP)
Pressure sensors (P1) (P2)	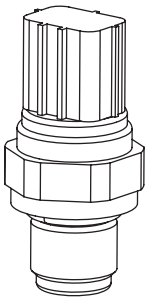	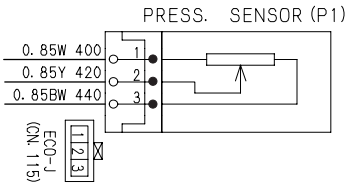	Model: 50.0 MPa Sumitomo Part No.: KHR10290
Pressure sensors (N1) (N2) (swing) (upper side) (travel) (arm-in)	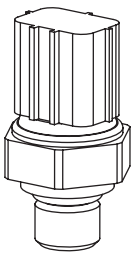	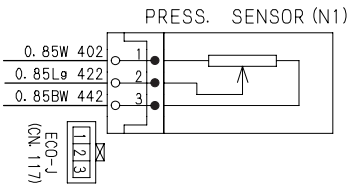	Model: 5.0 MPa Sumitomo Part No.: KHR10300
Pressure switch (option) (second option)	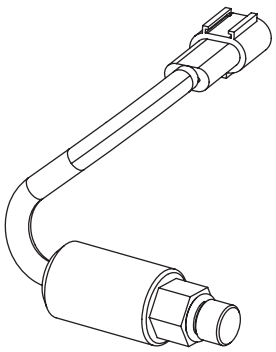	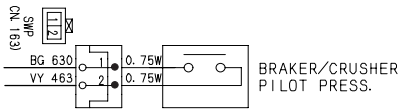	Model: 0.49 MPa Sumitomo Part No.: KHR10820

https://truckmanualshub.com/

Name	Shape	Circuit	Remarks
Pressure switch (filter)	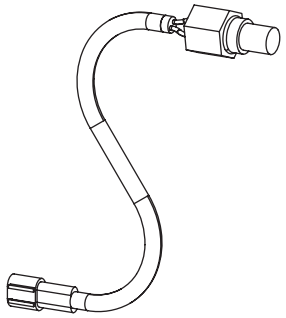	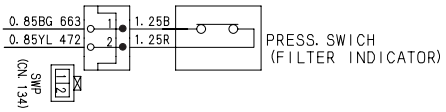	Sumitomo Part No.: KHR14470
5-stack solenoid valve	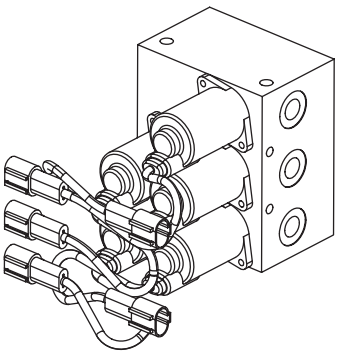	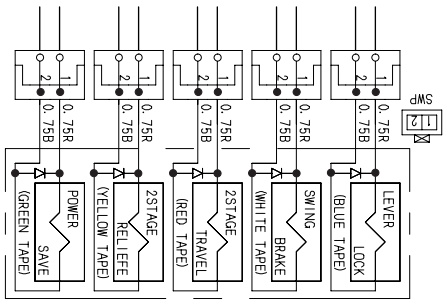	Sumitomo Part No.: KHJ14520
2-stack solenoid valve (knob switch type)	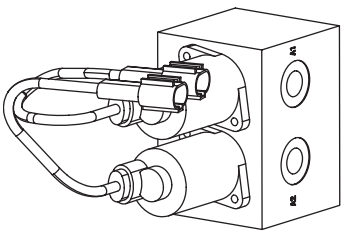	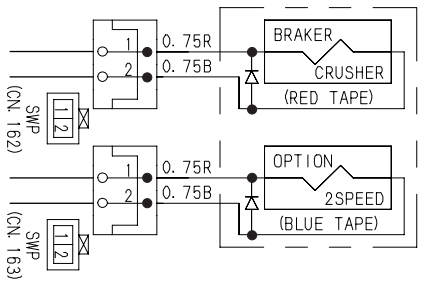	Sumitomo Part No.: KHJ14780
2-stack solenoid valve (pedal type)	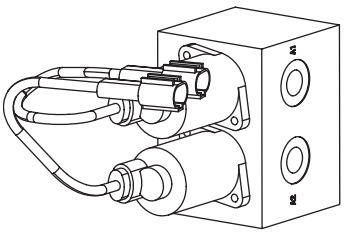	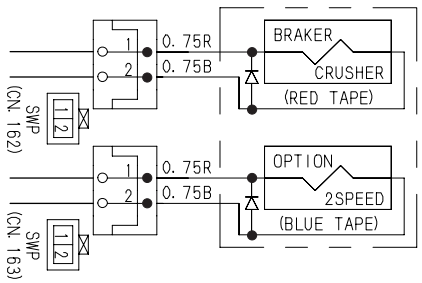	Sumitomo Part No.: KHJ14000
P1 flow control proportional valve	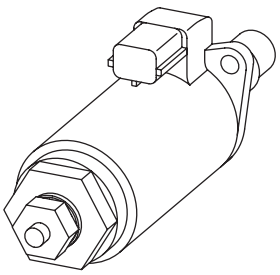	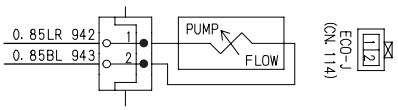	Sumitomo Part No.: TIP0002128

E

https://truckmanualshub.com/

Electrical Equipment Layout Diagram

Name	Shape	Circuit	Remarks
Horsepower control proportional valve	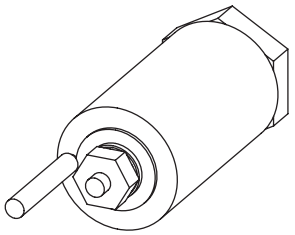	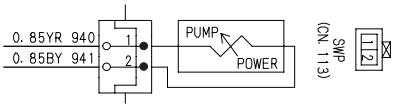	Sumitomo Part No.: LJ014460
KAB seat	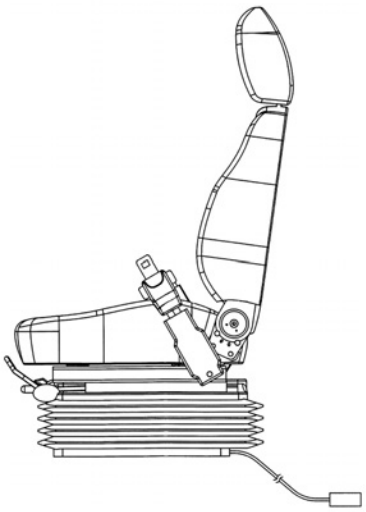	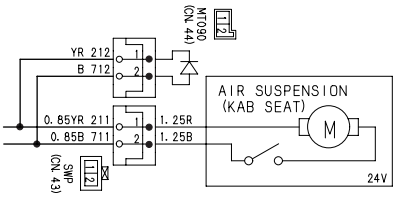	Model: KAB 555 Sumitomo Part No.: KHN12810
Hydraulic oil temperature sensor	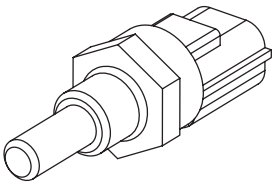	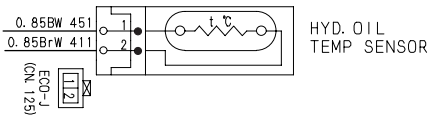	Sumitomo Part No.: KHR2433
Clock	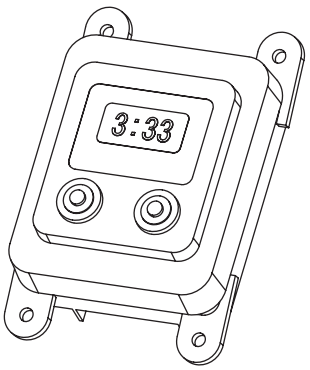	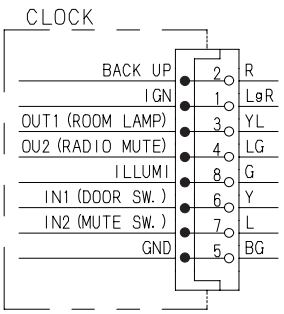	Sumitomo Part No.: KHR10060
Knob right (with one-touch switch)	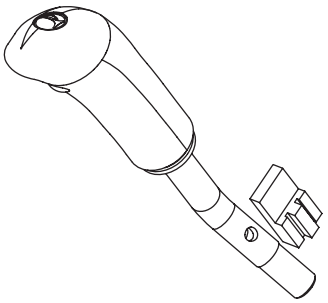	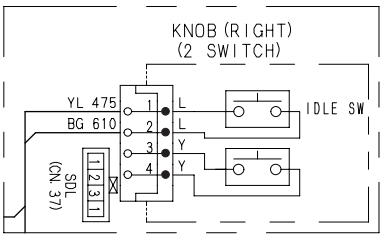	Model: with two switches Sumitomo Part No.: KHJ14460

https://truckmanualshub.com/

Electrical Equipment Layout Diagram

Name	Shape	Circuit	Remarks
Knob right (with one-touch switch) (short type)	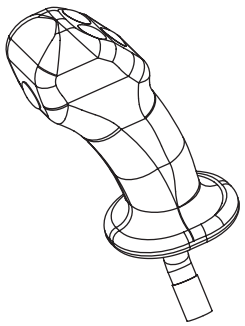	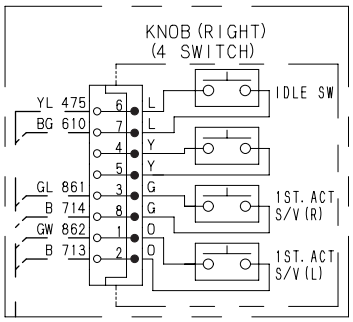	Model: with four switches Sumitomo Part No.: KHJ16140
Knob left (with horn switch and radio mute)	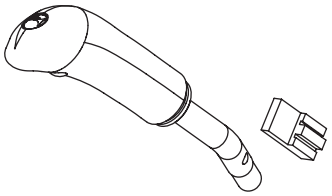	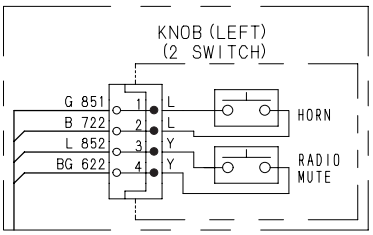	Model: with two switches Sumitomo Part No.: KHJ14450
Knob left (with horn switch and radio mute) (short type)	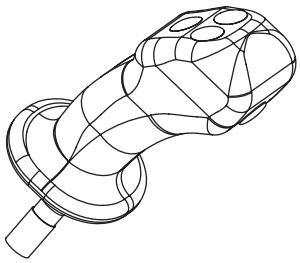	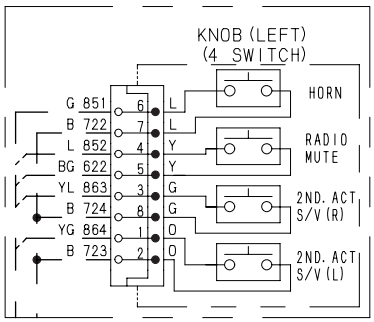	Model: with four switches Sumitomo Part No.: KHJ16150
Travel alarm	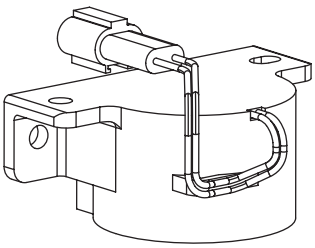	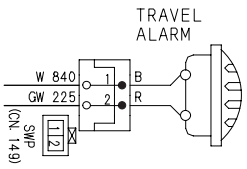	Sumitomo Part No.: KHR3852 Basic frequency: 2560 Hz
Horn (low)	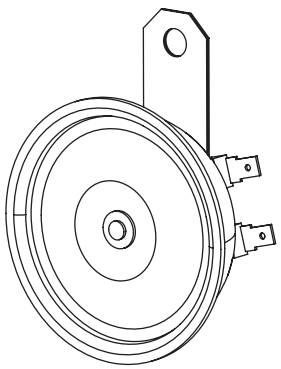	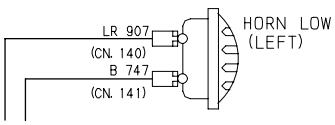	Sumitomo Part No.: KHR2427 Basic frequency: 370 Hz

E

https://truckmanualshub.com/

Electrical Equipment Layout Diagram

Name	Shape	Circuit	Remarks
Horn (high)	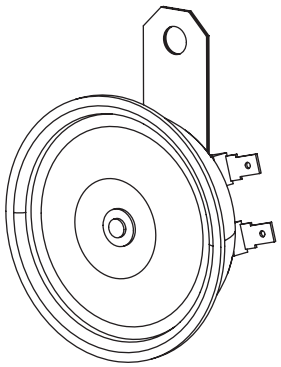	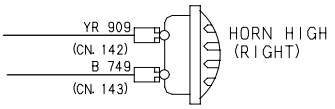	Sumitomo Part No.: KHR2428 Basic frequency: 415 Hz
Diode	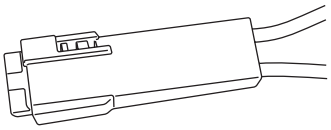	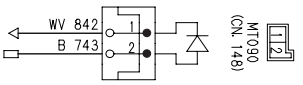	Sumitomo Wiring Systems Part No.: 6098-0017 6098-0061 Sumitomo Part No.: KHP1796
Lever lock limit switch	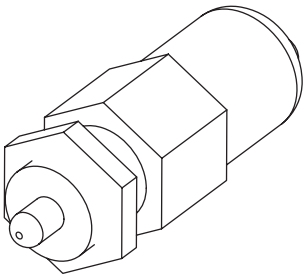	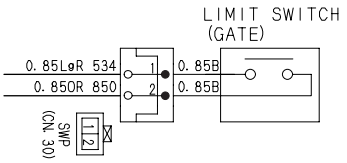	Sumitomo Part No.: KHR14930
Radio	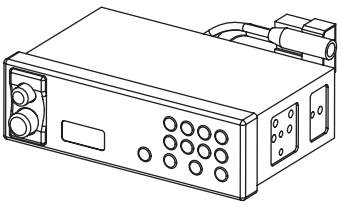	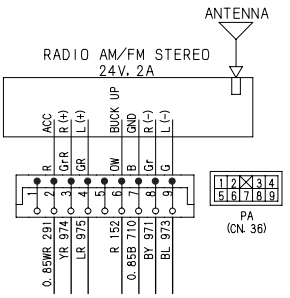	Model: AM / FM ST (12 / 24 V) Sumitomo Part No.: KHR15560 (EXP)
Lamp (room lamp)	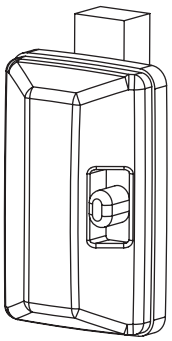	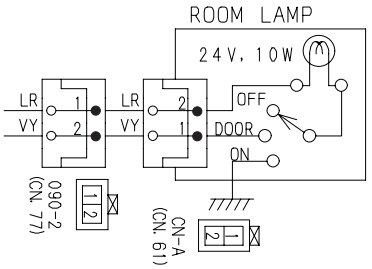	Model: 24 V, 10 W Sumitomo Part No.: KHN2714

https://truckmanualshub.com/

Electrical Equipment Layout Diagram

Name	Shape	Circuit	Remarks
Accessory socket	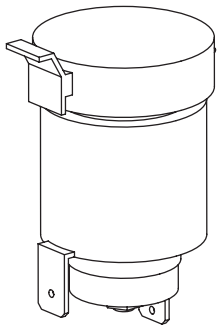	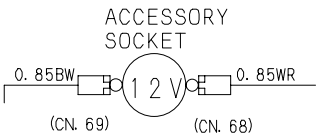	Model: 12 V DC Sumitomo Part No.: KHR2501
Cigar lighter 24 V	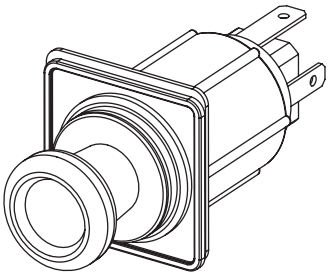	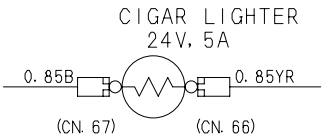	Model: 24 V DC Sumitomo Part No.: KHR11210
Air conditioner unit	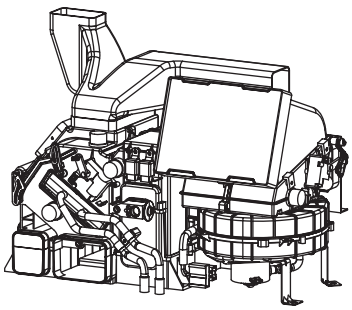	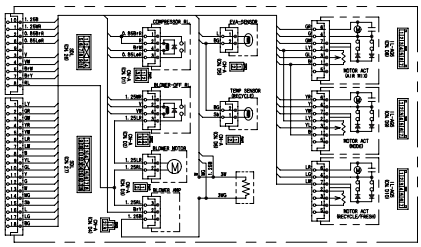	Sumitomo Part No.: KHR13320
Limit switch (front window) (door)	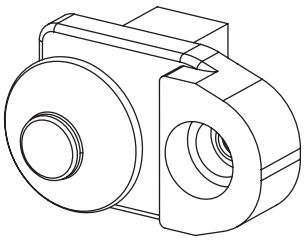	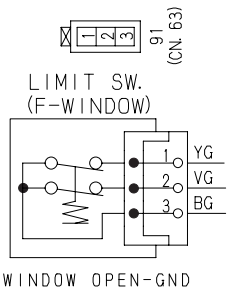	Sumitomo Part No.: KHR2950
Wiper controller	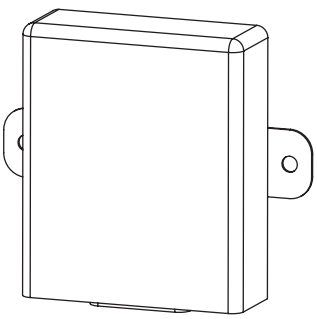	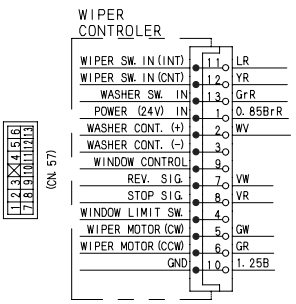	Sumitomo Part No.: KHN3392

E

https://truckmanualshub.com/

Electrical Equipment Layout Diagram

Name	Shape	Circuit	Remarks
Wiper motor	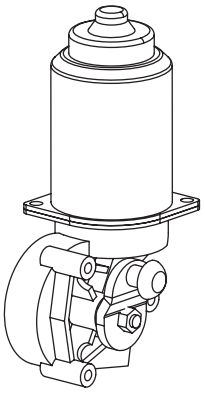	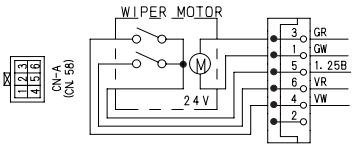	Sumitomo Part No.: KHN16020
Solar radiation sensor	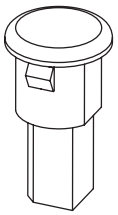	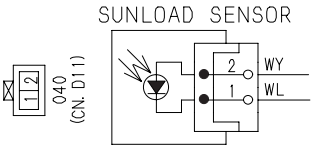	Sumitomo Part No.: KHR10540
Receiver drier (switch)	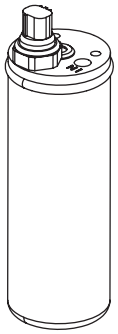	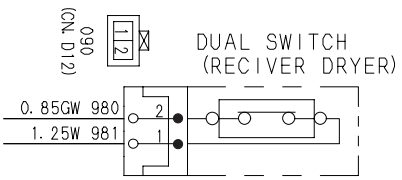	Sumitomo Part No.: KHR13590
Air conditioner compressor (magnetic clutch)	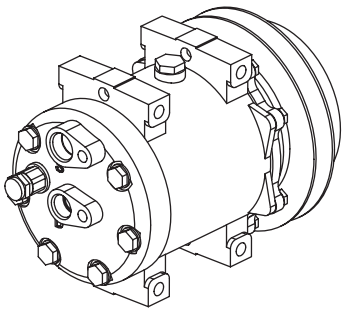	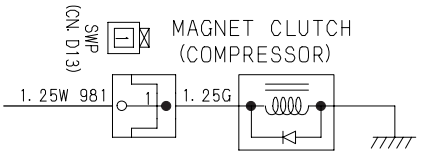	Sumitomo Part No.: KHR3197
Motor actuator (air mix) (mode) (recycle / refresh)	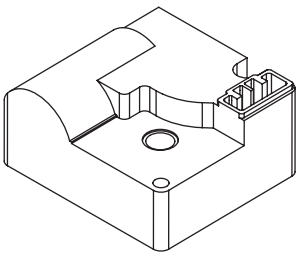	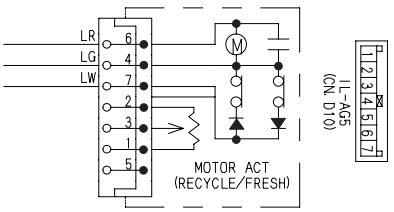	Sumitomo Part No.: KHR13610

https://truckmanualshub.com/

Name	Shape	Circuit	Remarks
EVA sensor	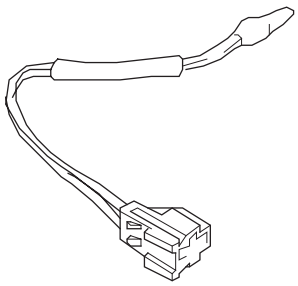	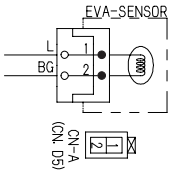	Sumitomo Part No.: KHR13670
Interior temperature sensor	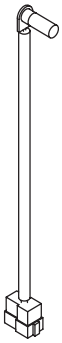	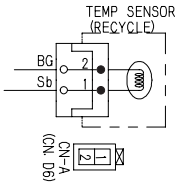	Sumitomo Part No.: KHR13790
Relay (compressor) (blower OFF)	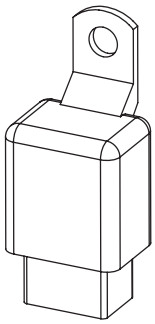	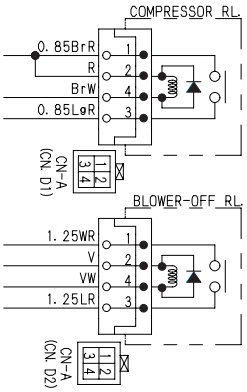	Sumitomo Part No.: KHR2836
Blower motor	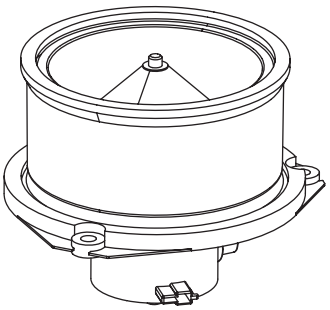	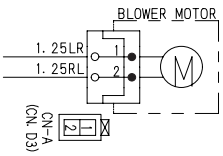	Sumitomo Part No.: KHR2845
Blower amp	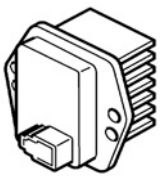	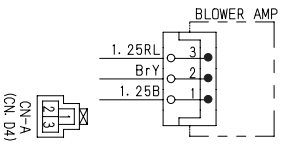	Sumitomo Part No.: KHR13730

https://truckmanualshub.com/

Electrical Equipment Layout Diagram

Name	Shape	Circuit	Remarks
Air conditioner switch panel	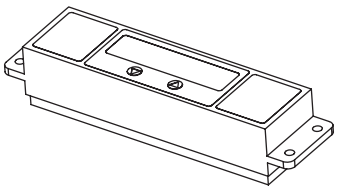	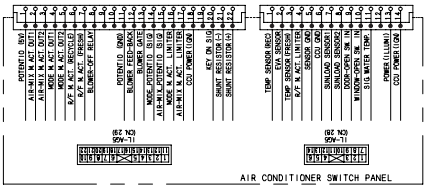	Sumitomo Part No.: KHR12510
Option select switch (breaker / crusher)	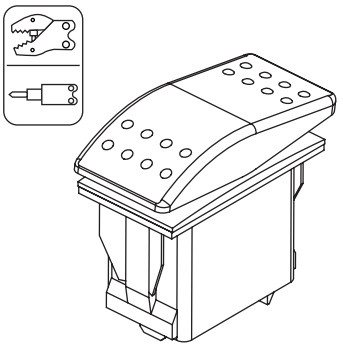	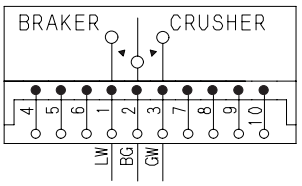	Sumitomo Part No.: KHR14450
Option select switch (breaker)	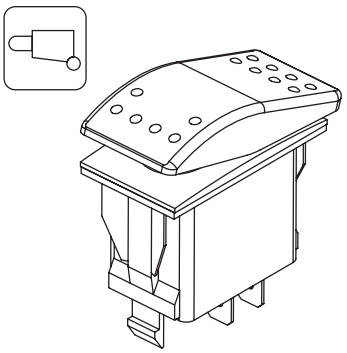	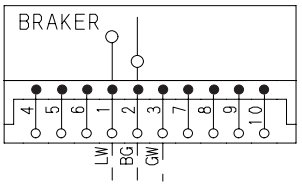	Sumitomo Part No.: KHR14060
Option select switch (crusher)	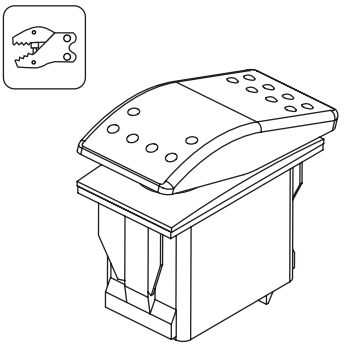	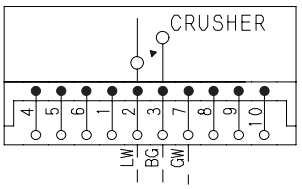	Sumitomo Part No.: KHR15020
2nd speed merge select switch	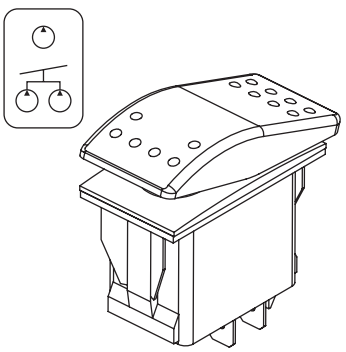	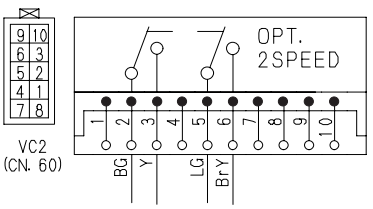	Sumitomo Part No.: KHR14460

https://truckmanualshub.com/

Name	Shape	Circuit	Remarks
Emergency stop switch	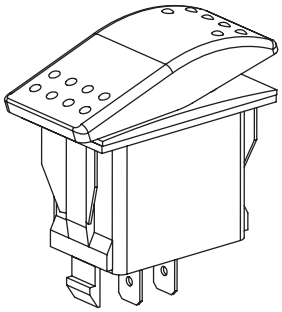	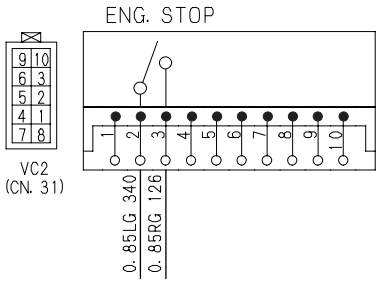	Sumitomo Part No.: KHR14050
Over load warning switch	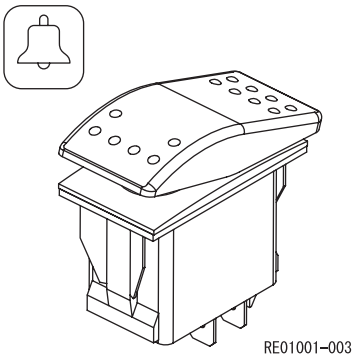	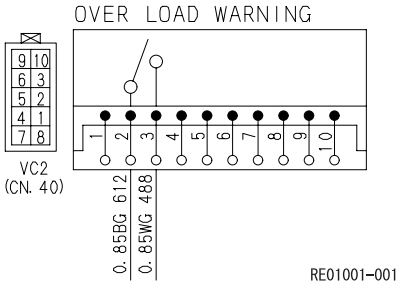	Sumitomo Part No.: KHR15490 (CASE)
Travel alarm switch	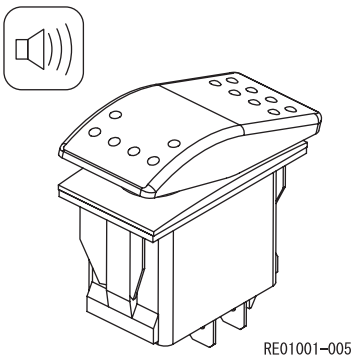	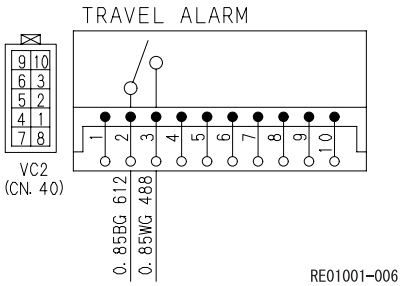	Sumitomo Part No.: KHR15850 (EXP)

E

Connection Connector Pin Layout

1. Computer A

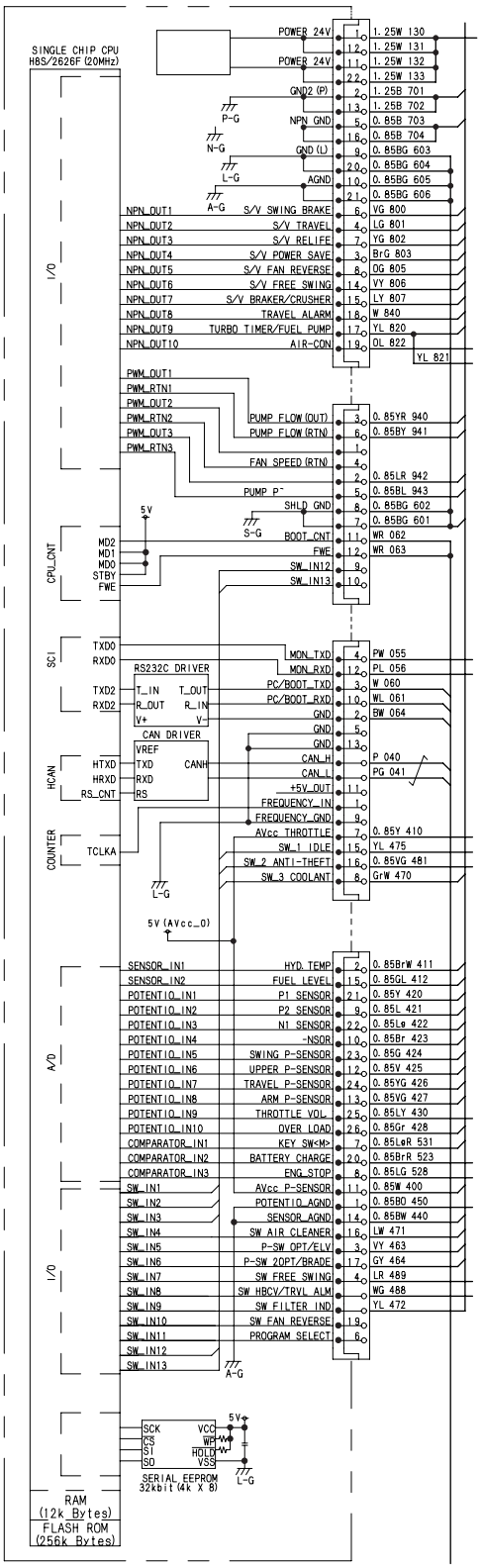

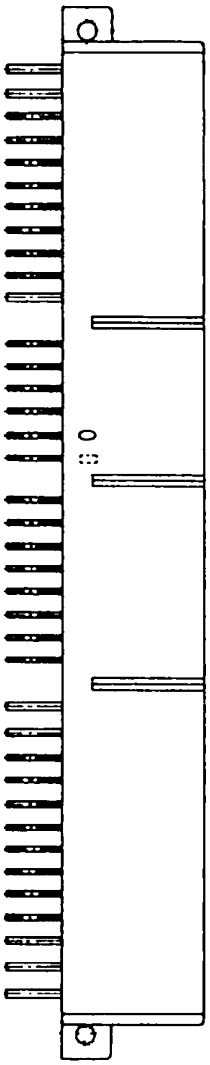

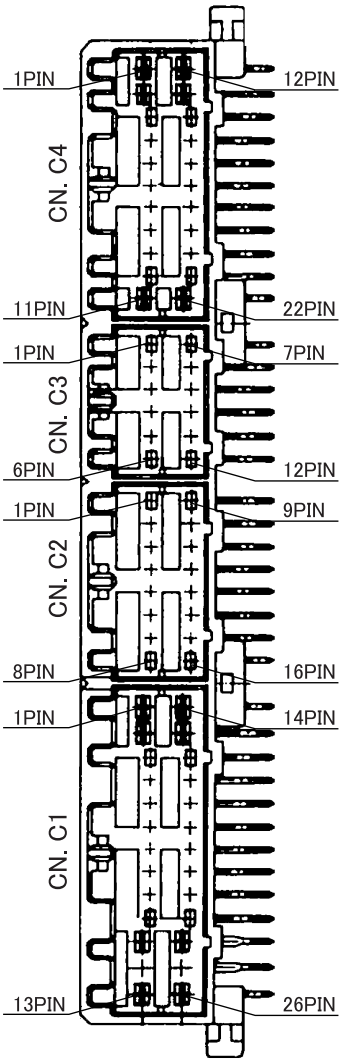

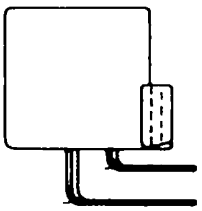

Main Equipment Structural Diagrams

2. Monitor

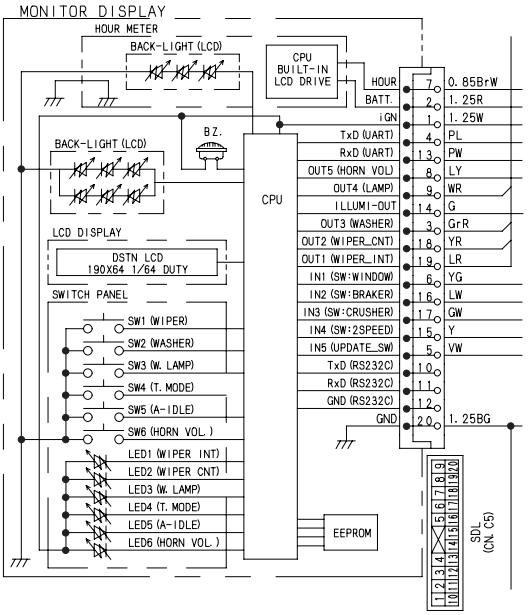

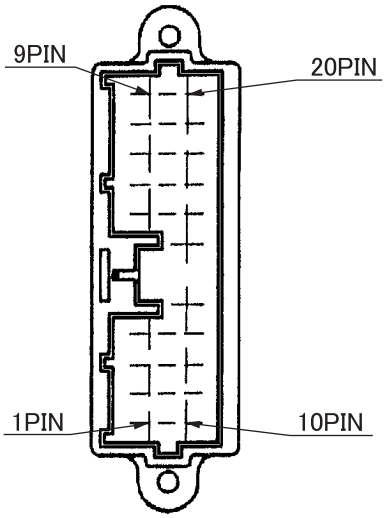

https://truckmanualshub.com/

Electrical Circuit Diagram

Overall View

1. Sequence Circuit Diagram (A3)

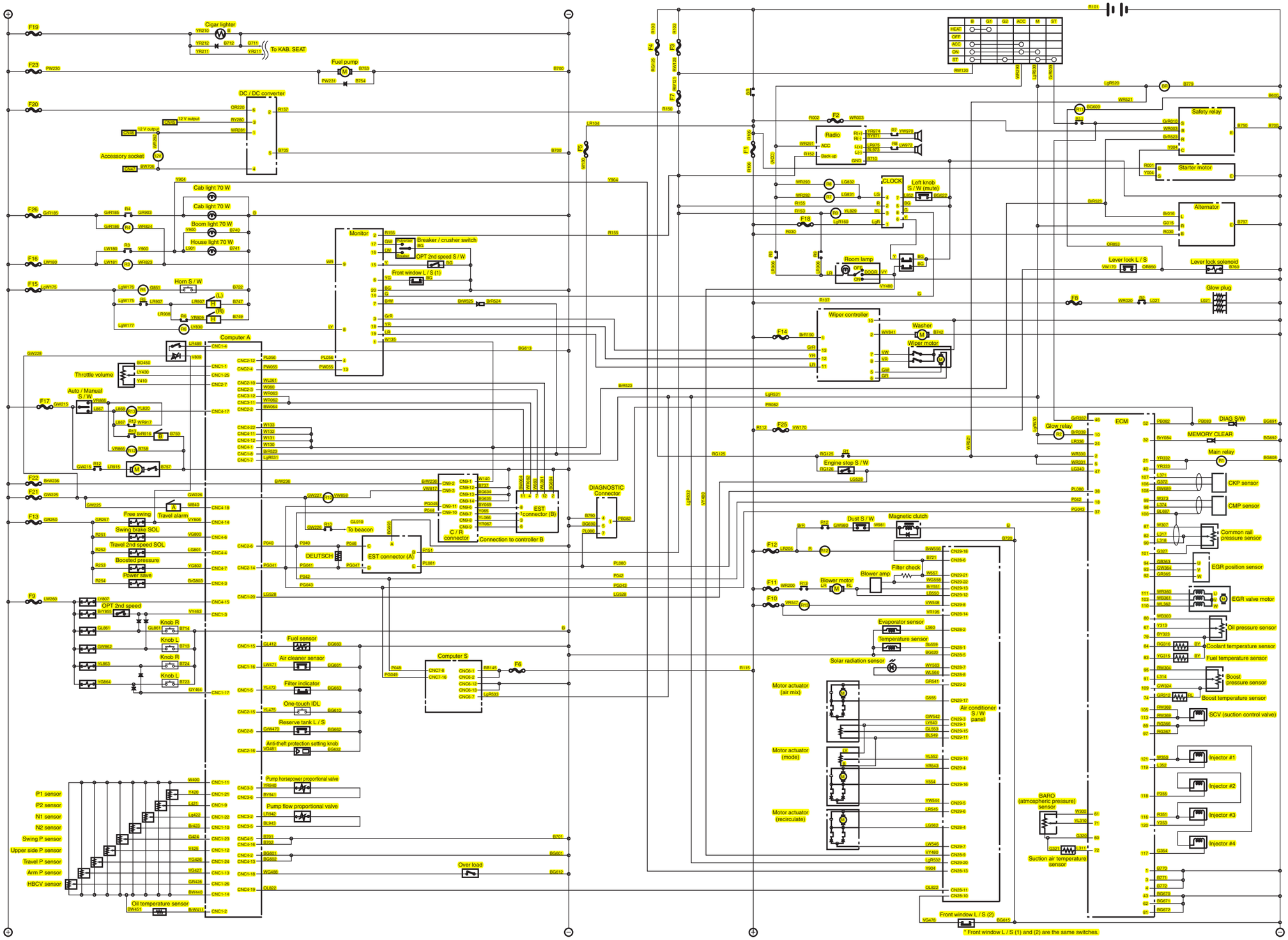

RE03003-001

Electrical Circuit Diagram

Block Diagram

1. Computer A

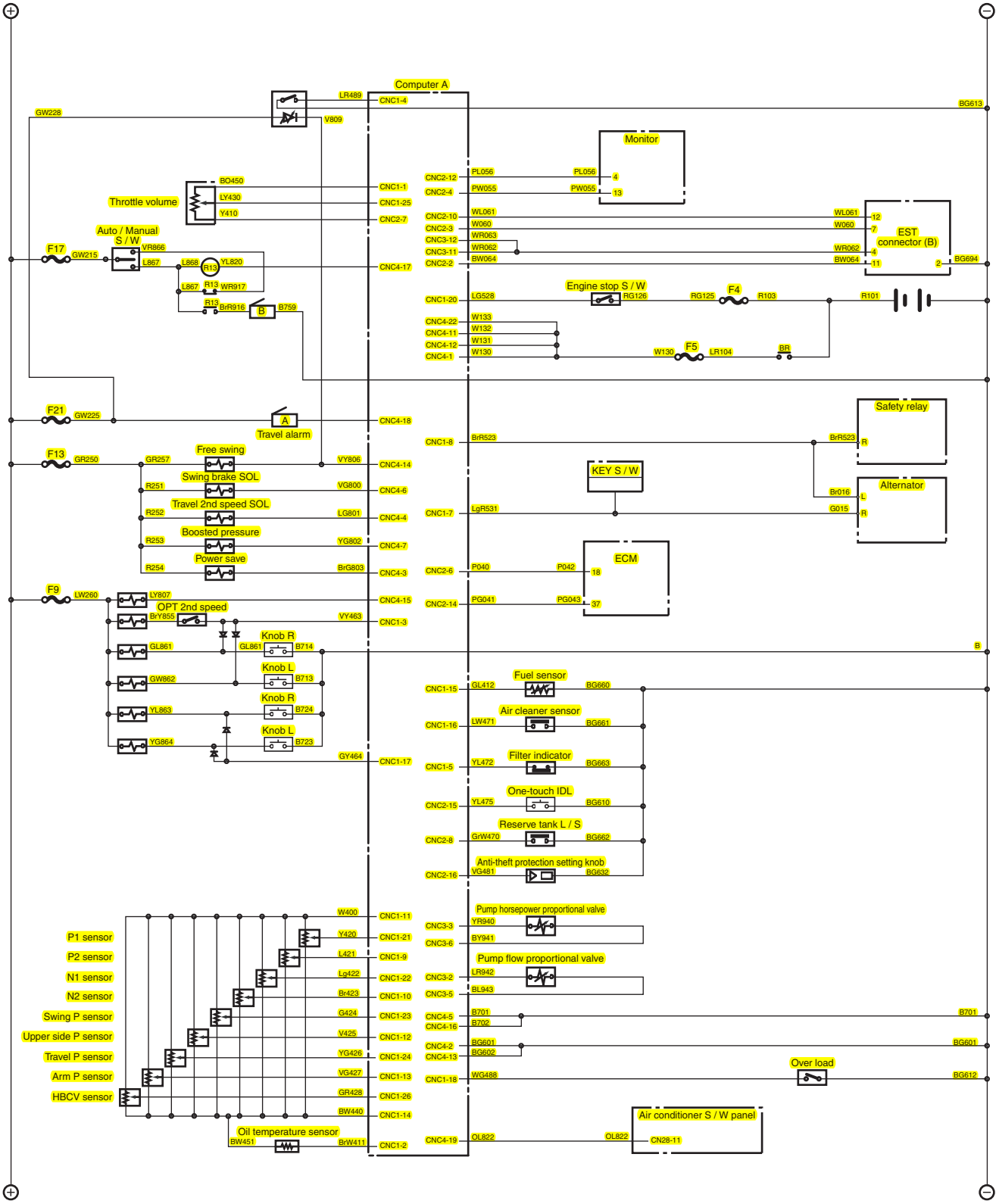

https://truckmanualshub.com/

2. Computer S

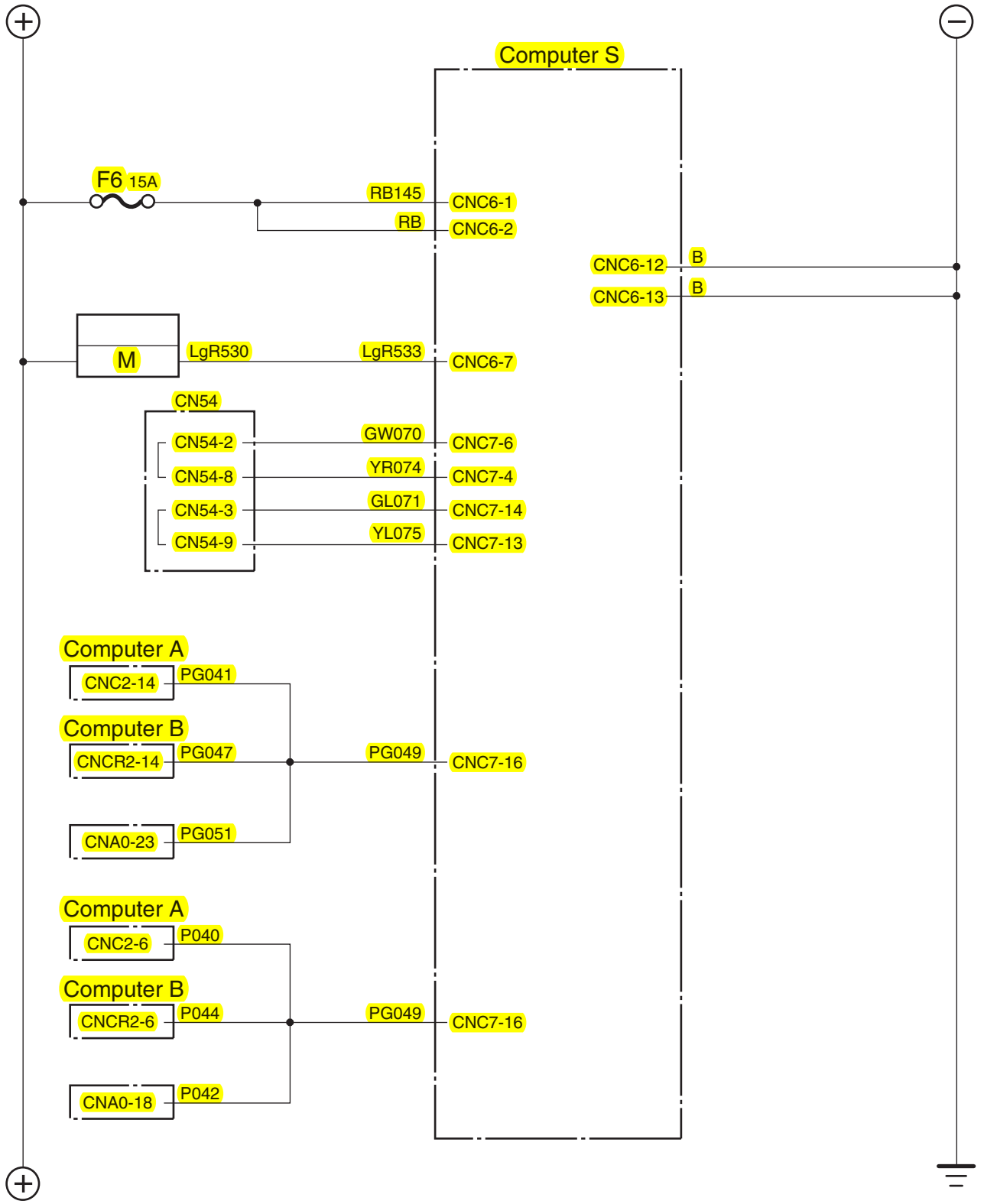

RE03003–003

E

https://truckmanualshub.com/

Electrical Circuit Diagram

3. ECM

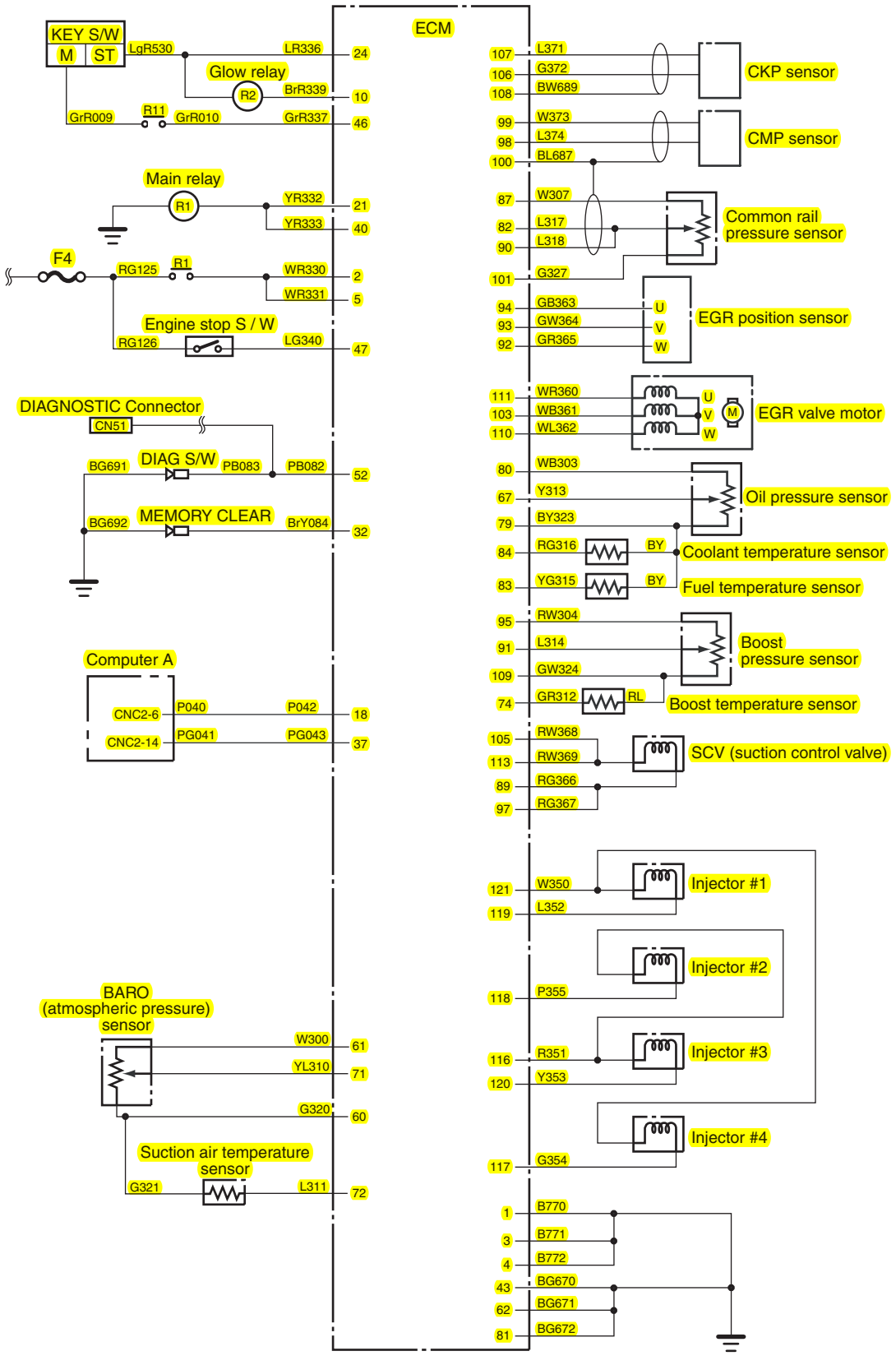

https://truckmanualshub.com/

4. Monitor Display

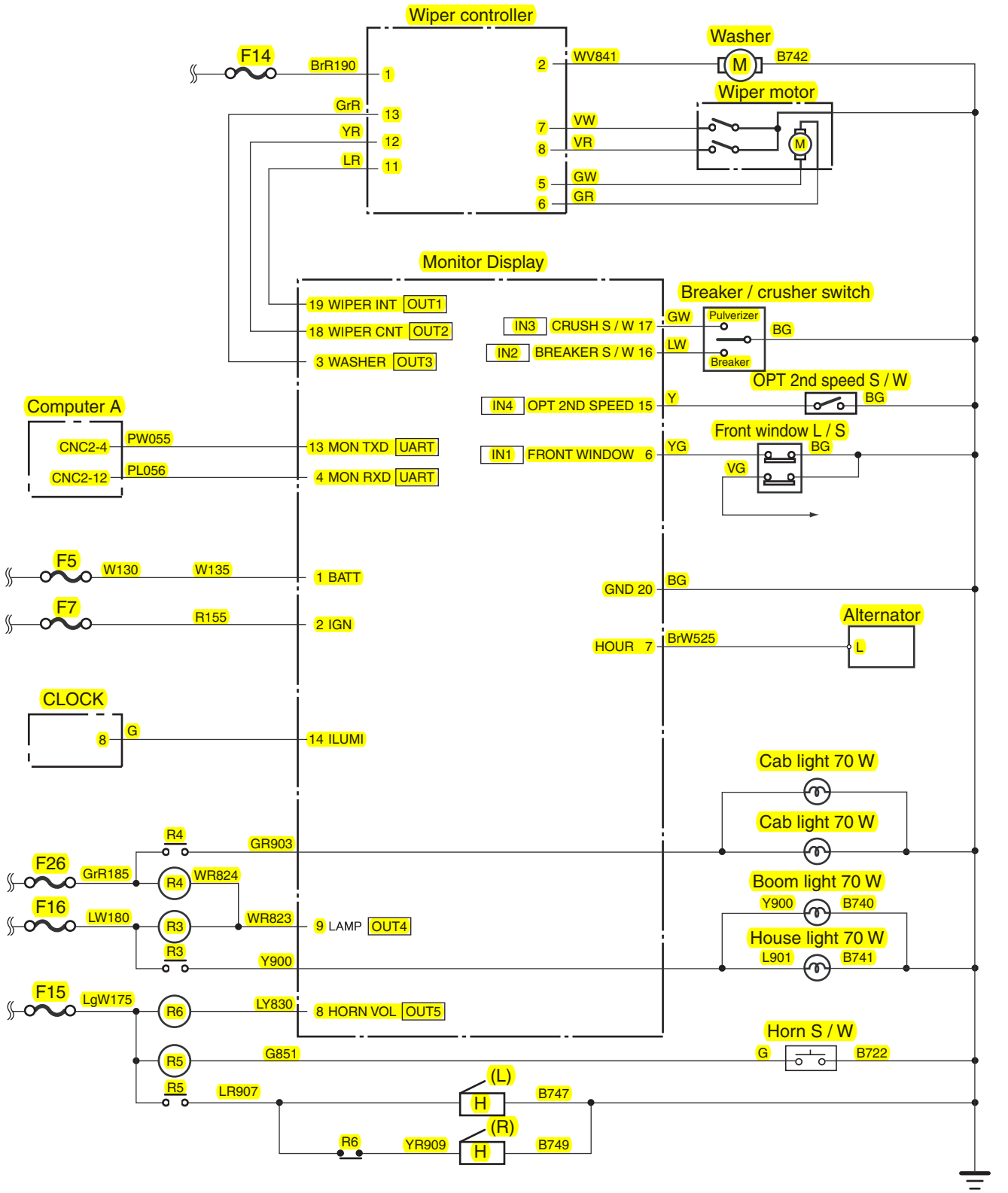

https://truckmanualshub.com/

Electrical Circuit Diagram

5. Air Conditioner

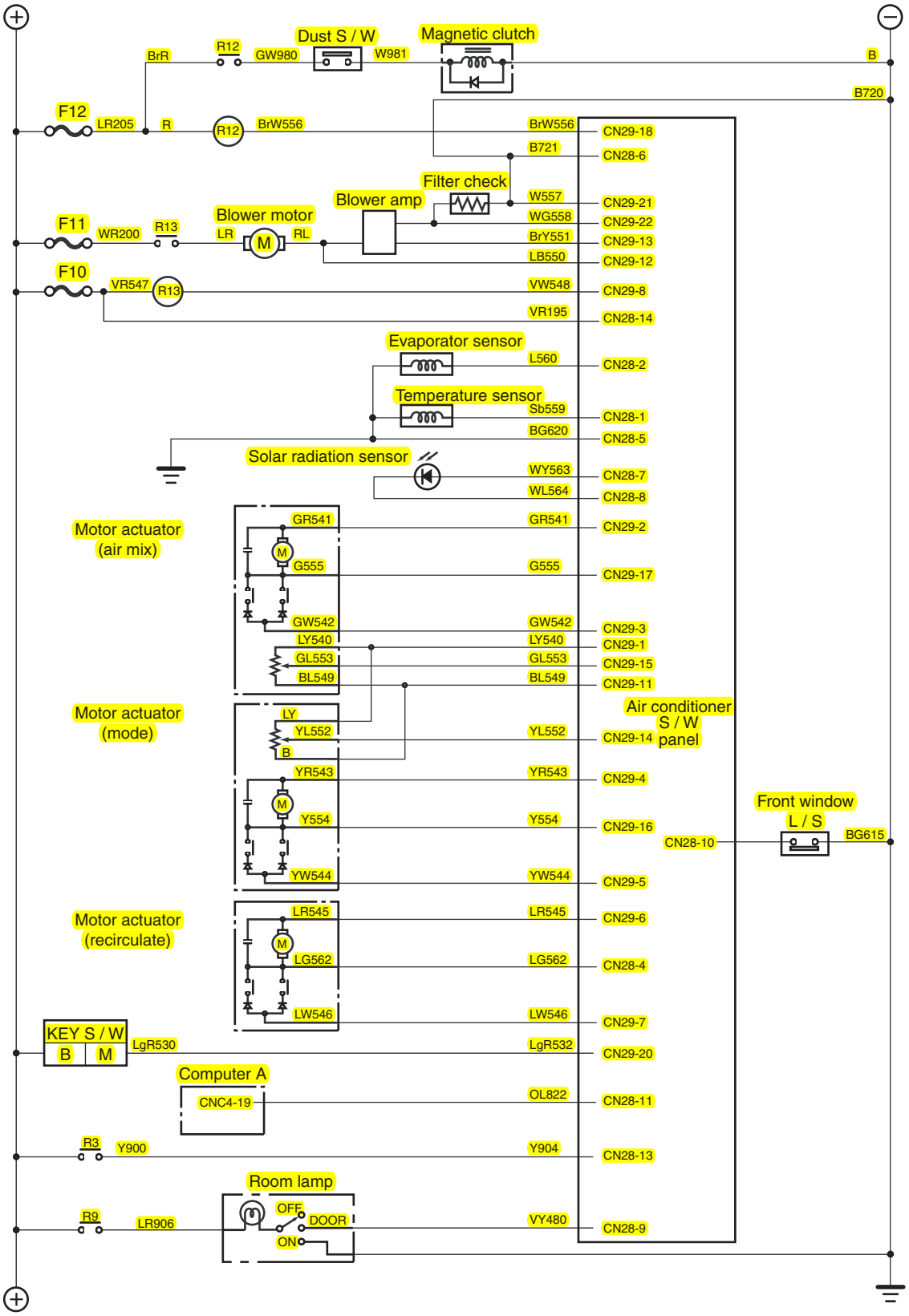

https://truckmanualshub.com/

6. Lever Lock

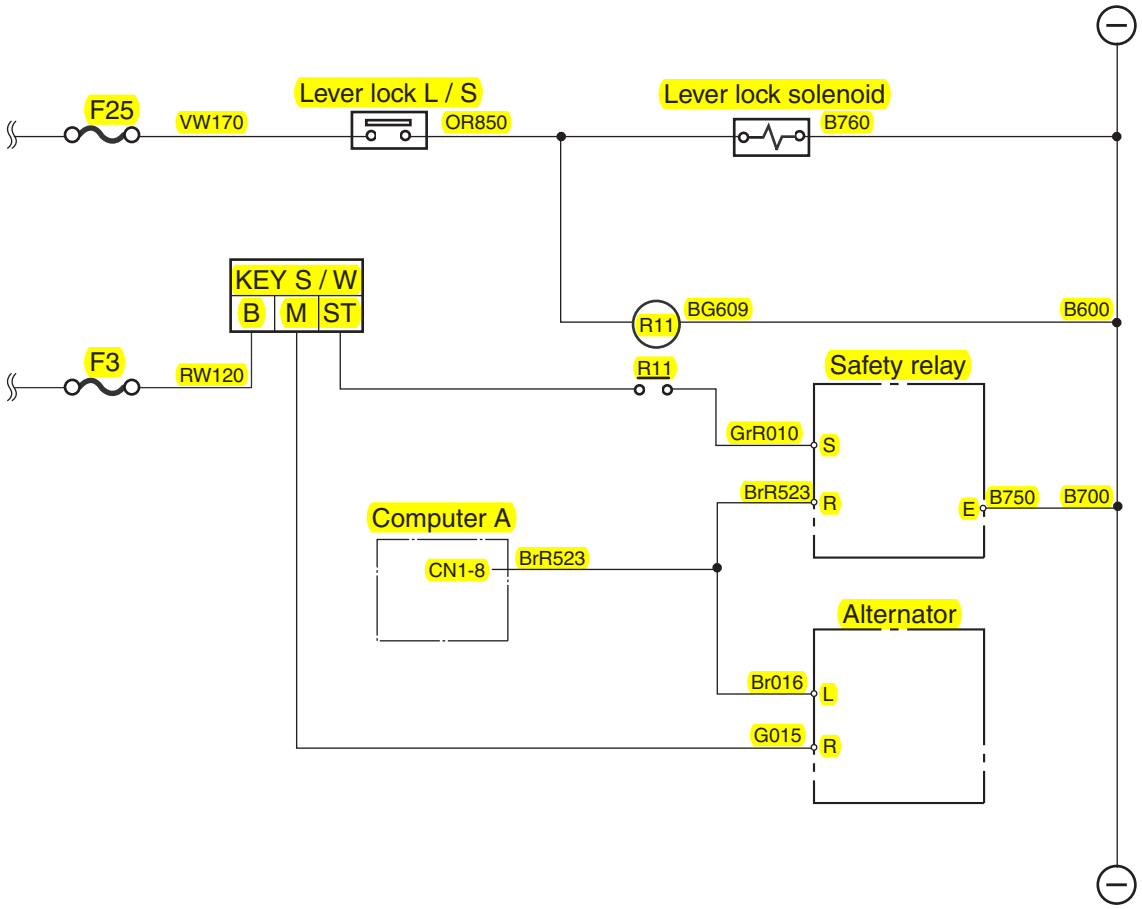

RE03003–0

7. Horn

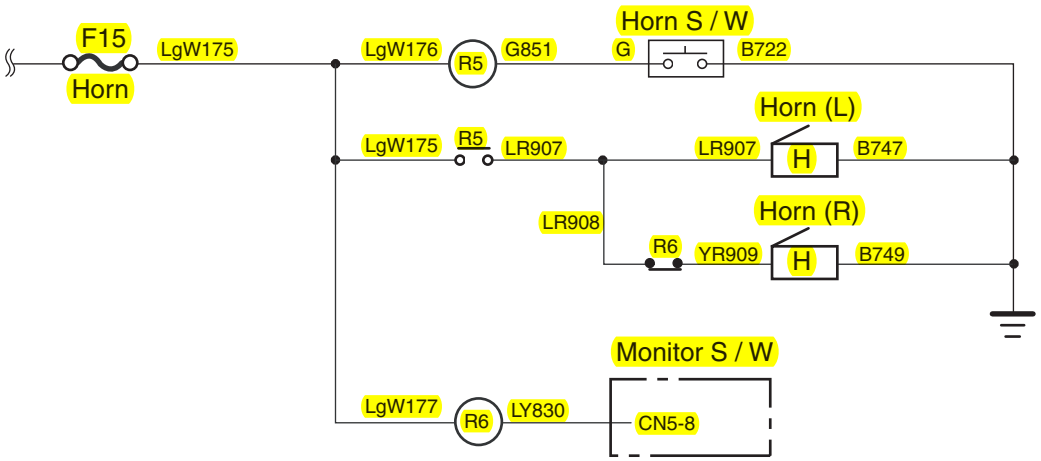

RE03003–008

https://truckmanualshub.com/

Electrical Circuit Diagram

8. Working Light

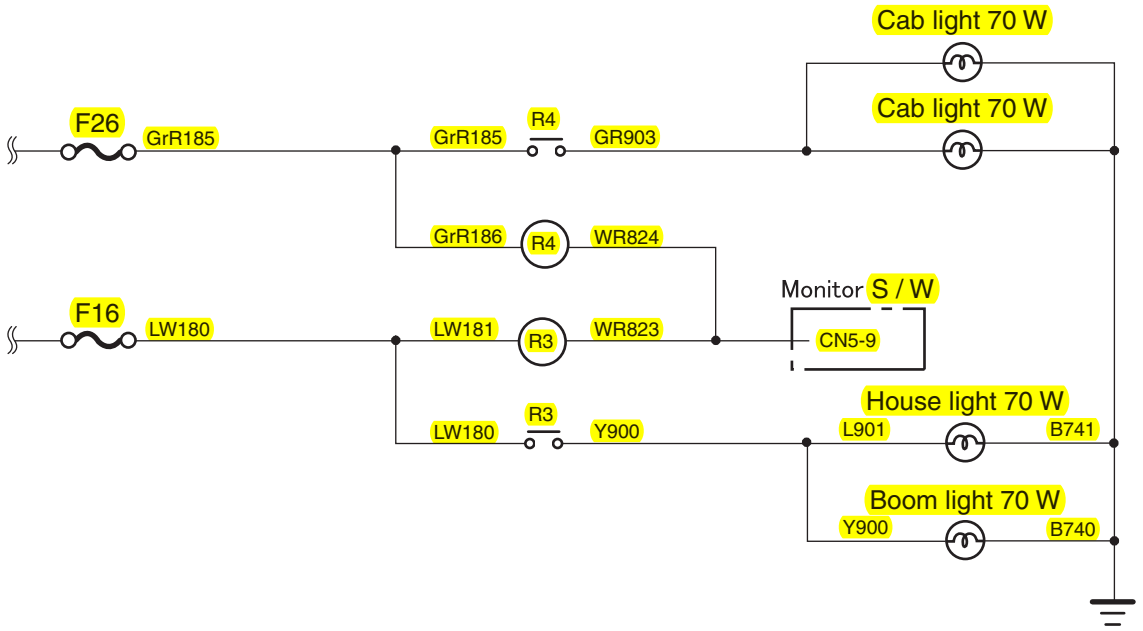

RE03003–009

9. Option

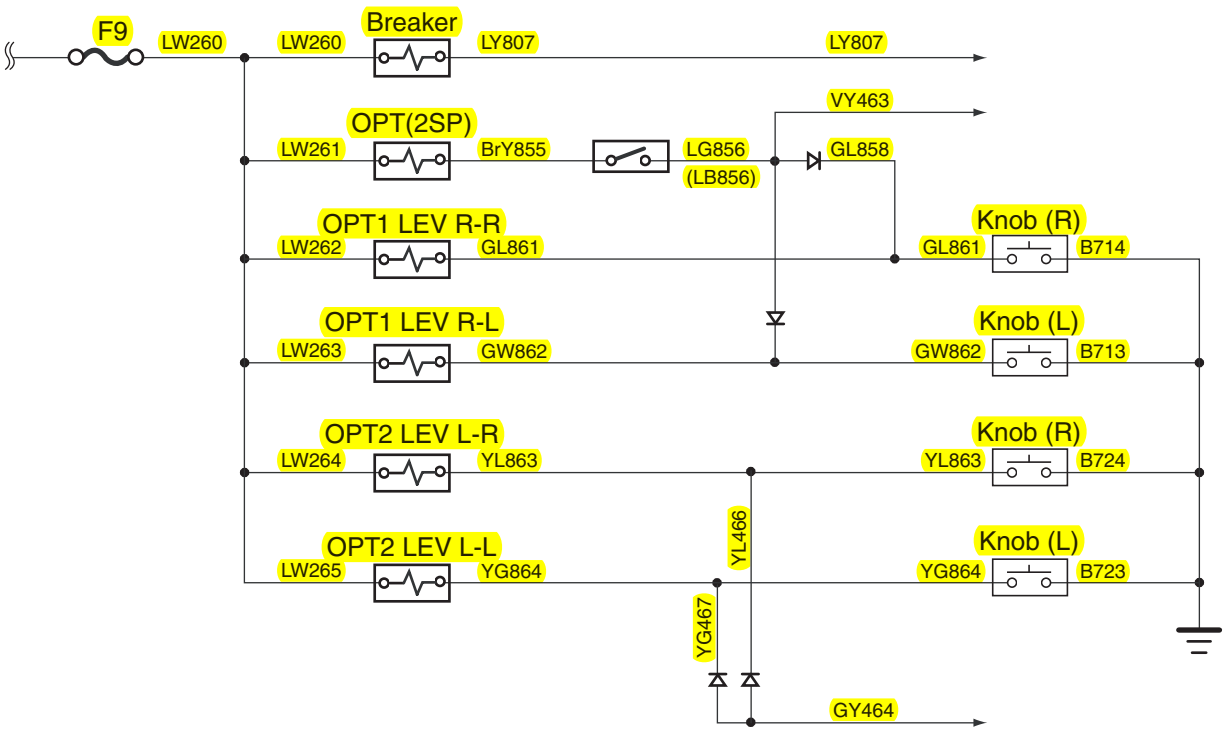

RE03003–010

https://truckmanualshub.com/

10.Others

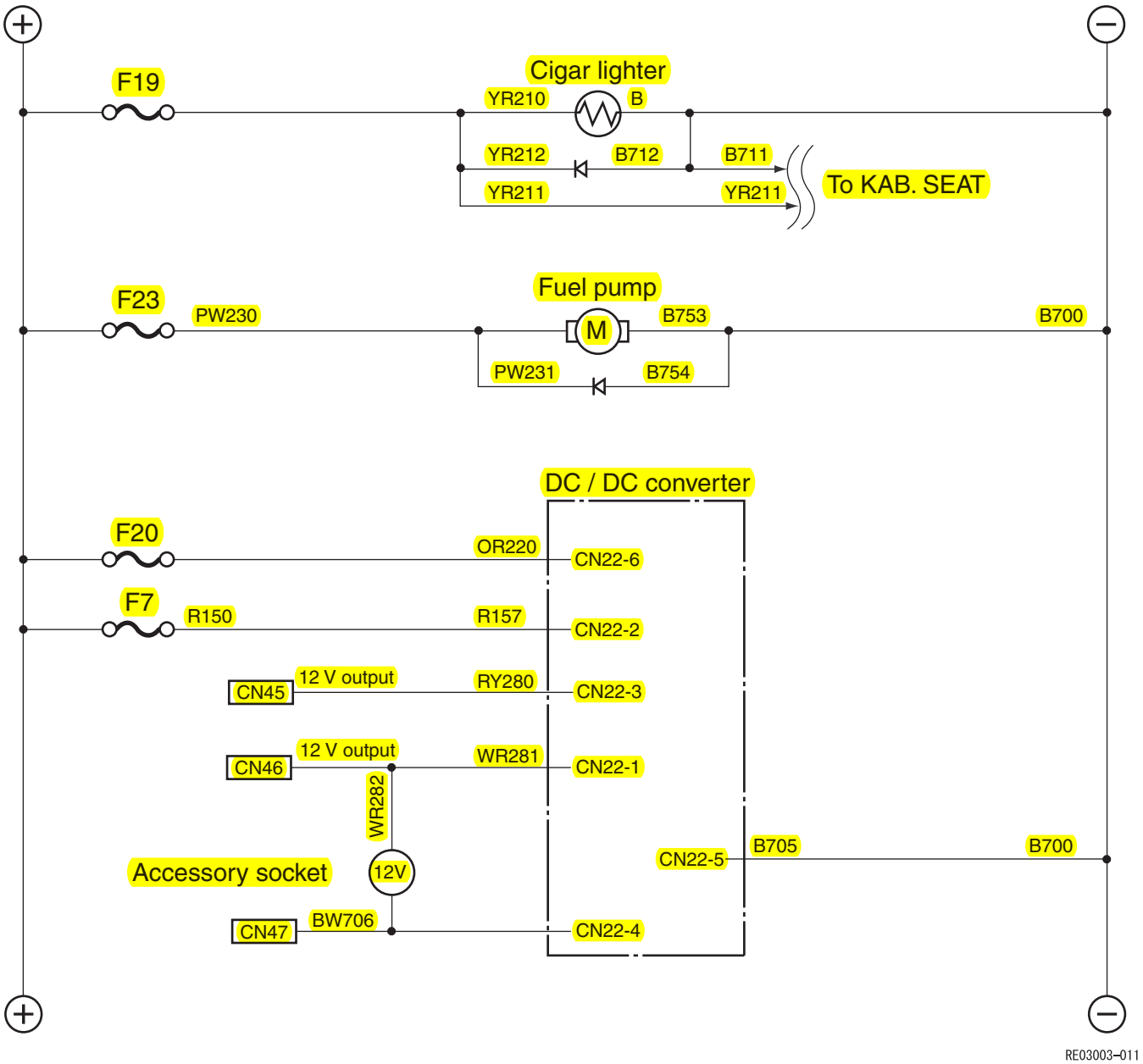

E

Electrical Circuit Diagram

11.Electrical Symbol List

Symbol	Name	Symbol	Name
	Fuse		Variable solenoid valve
	Diode		Resistor
	LED		Variable resistor
	Toggle switch "a" contact		Variable resistor
	Push switch "a" contact	A	Alarm
	Limit switch "a" contact	B	Buzzer
	Limit switch "b" contact	H	Horn
R	Relay coil	M	Motor
R	Relay contact "a" contact		Solar radiation sensor
R	Relay contact "b" contact		Speaker
	Solenoid valve		Lamp

https://truckmanualshub.com/

Electrical Connector Wiring Diagram

Main Frame

1. Main Frame

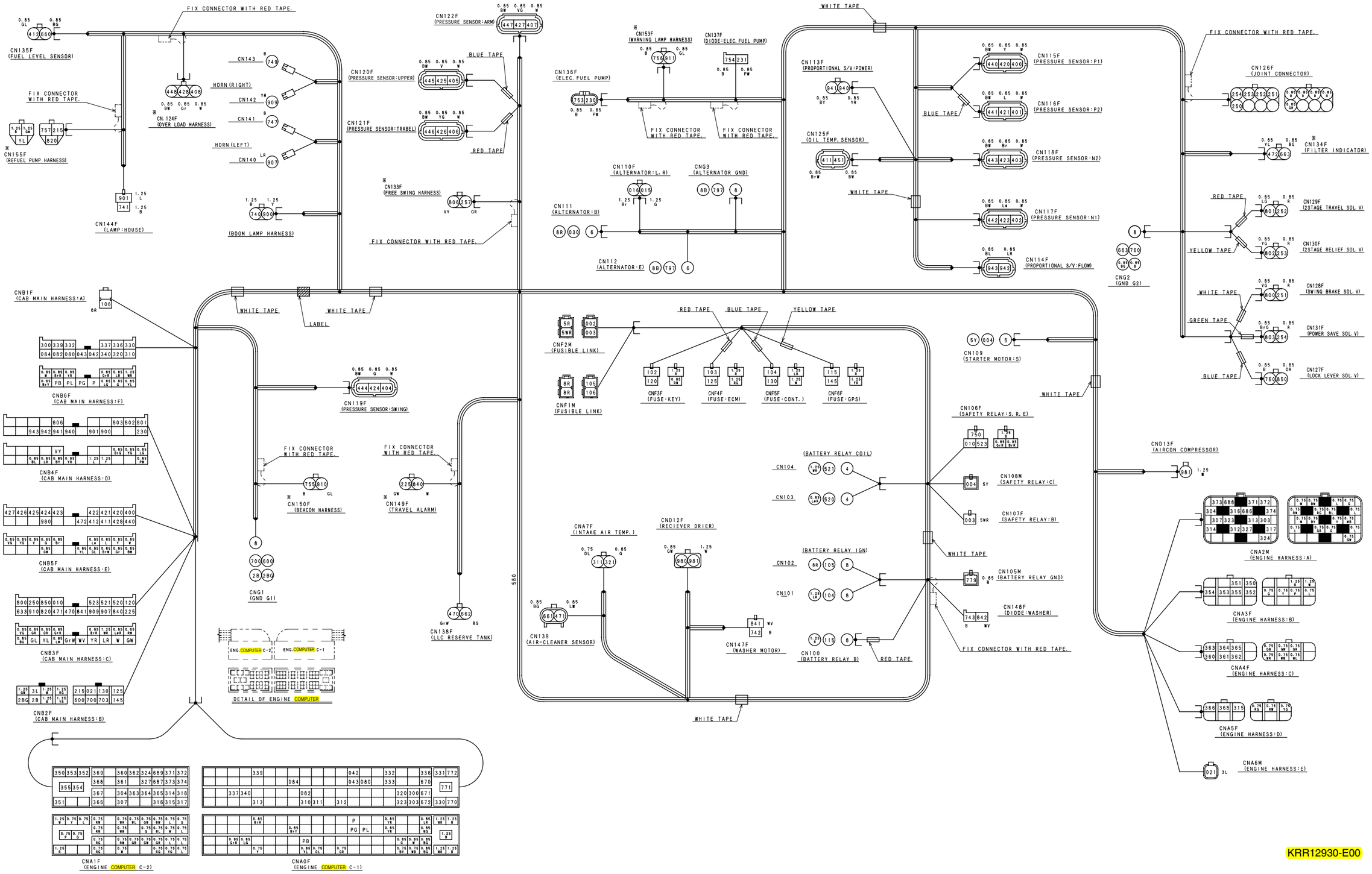

KRR12930-E00

https://truckmanualshub.com/

Electrical Connector Wiring Diagram

Cab

1. Cab Main Harness

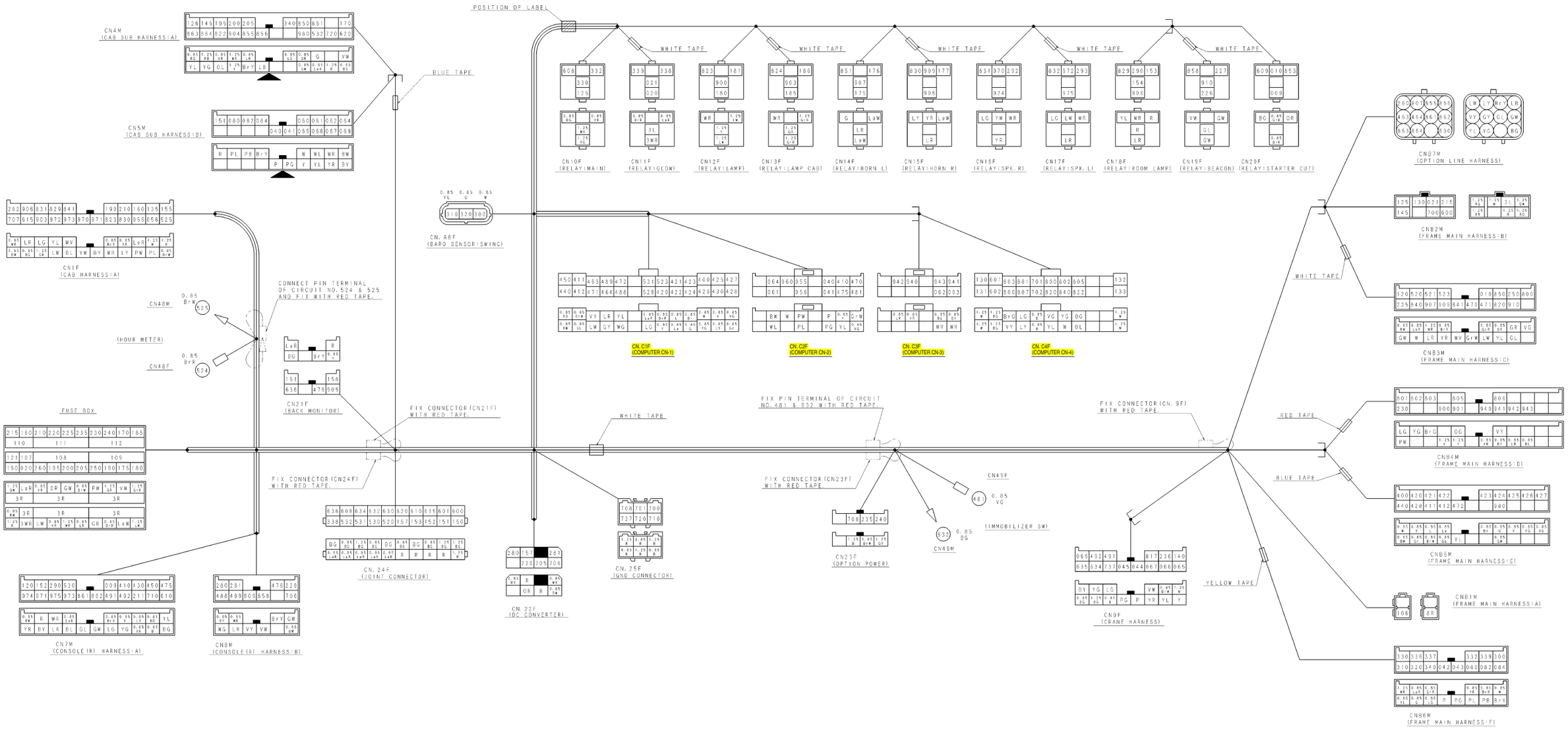

KHR16001-E00

https://truckmanualshub.com/

Electrical Connector Wiring Diagram

2. Cab Sub Harness

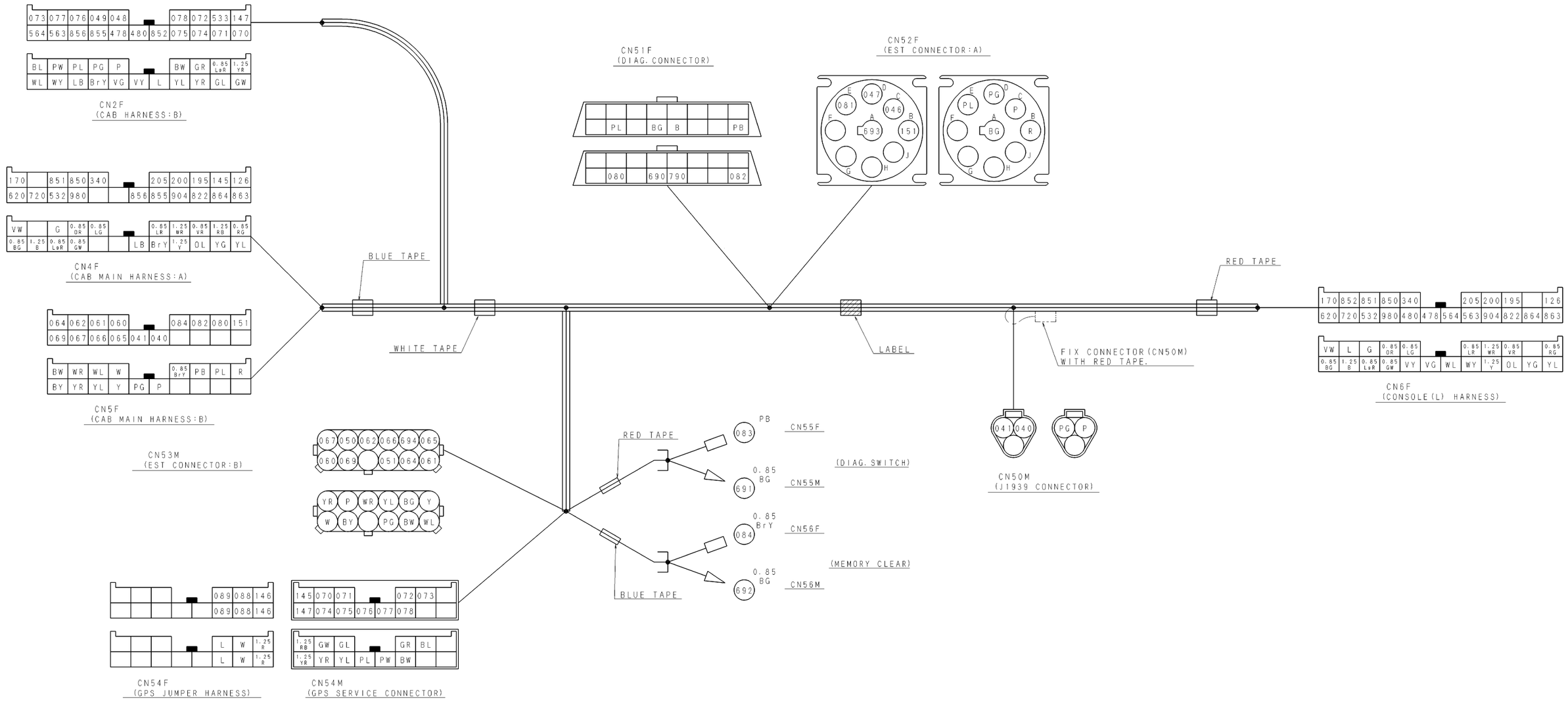

KHR15991-D00

https://truckmanualshub.com/

Electrical Connector Wiring Diagram

3. In Cab

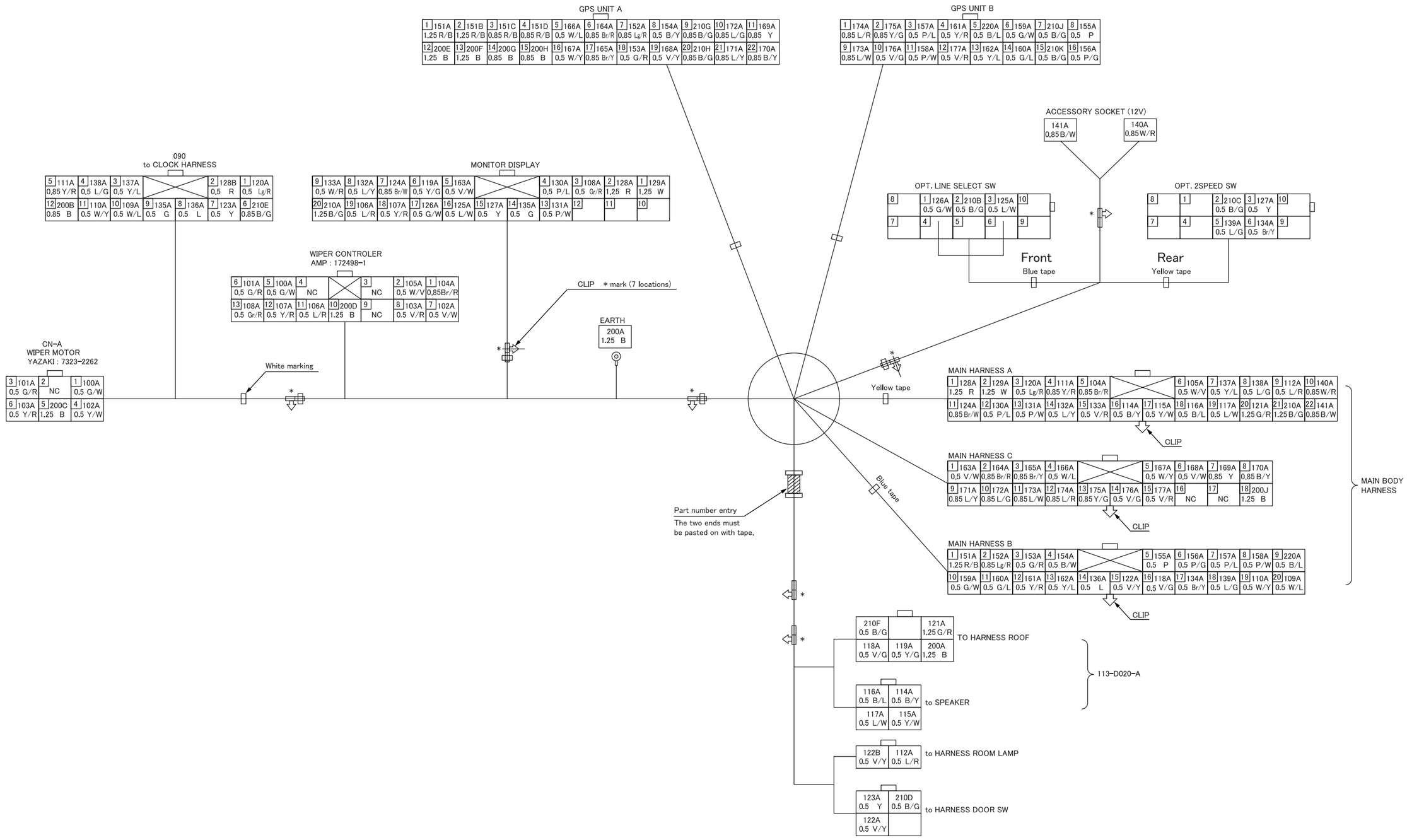

Electrical Connector Wiring Diagram

Console

1. Console Right Harness

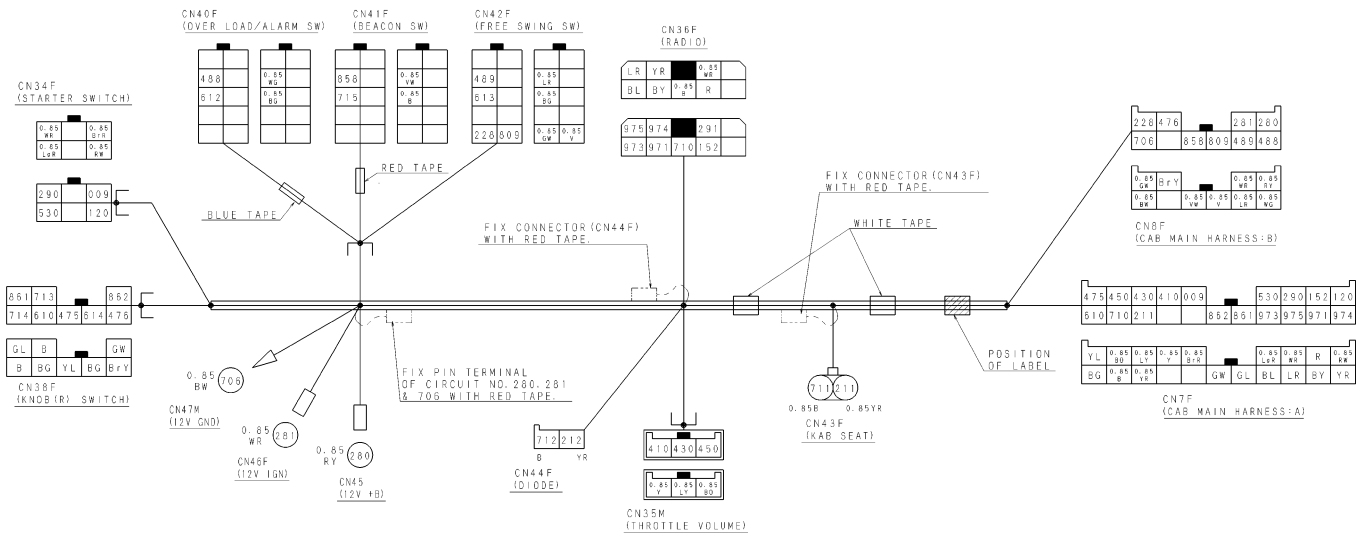

KHR16111-C00

2. Console Left Harness

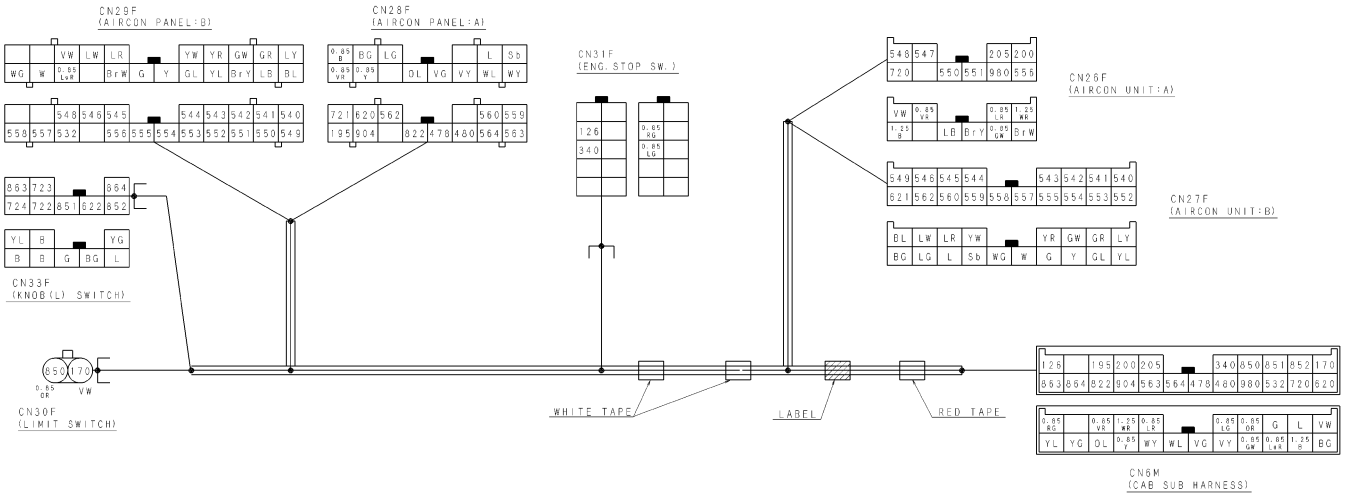

KHR16121-C00

https://truckmanualshub.com/

Electrical Parts and Wiring Assembly Diagram

Main Frame

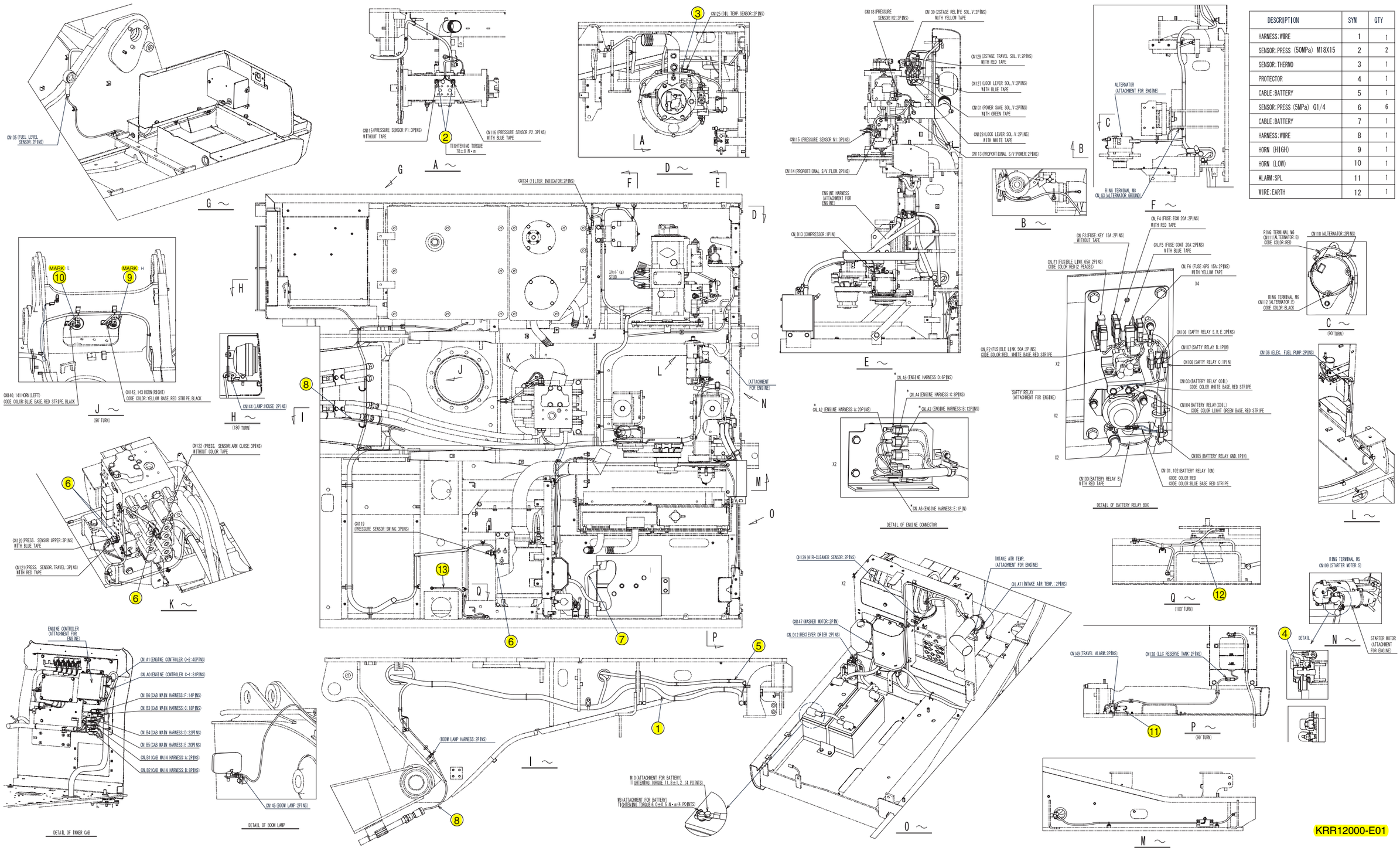

DESCRIPTION	SYM	QTY
HARNESS:WIRE	1	1
SENSOR:PRESS (50MPa) M18X15	2	2
SENSOR:THERMO	3	1
PROTECTOR	4	1
CABLE:BATTERY	5	1
SENSOR:PRESS (5MPa) G1/4	6	6
CABLE:BATTERY	7	1
HARNESS:WIRE	8	1
HORN (HIGH)	9	1
HORN (LOW)	10	1
ALARM:SPL	11	1
WIRE:EARTH	12	1

KRR12000-E01

Electrical Parts and Wiring Assembly Diagram

Cab

DESCRIPTION	SYM	QTY
CAP	1	1
HARNESS; WIRE	2	1
HARNESS; WIRE	3	11
RELAY; SPL 24V	4	1
CODE; ANTENNA	5	1
HARNESS; WIRE	6	1
HARNESS; WIRE	7	1
RADIO SET	8	1
SWICH; SPL	9	1
WIRE; EARTH	10	1
SWICH; SPL	11	1

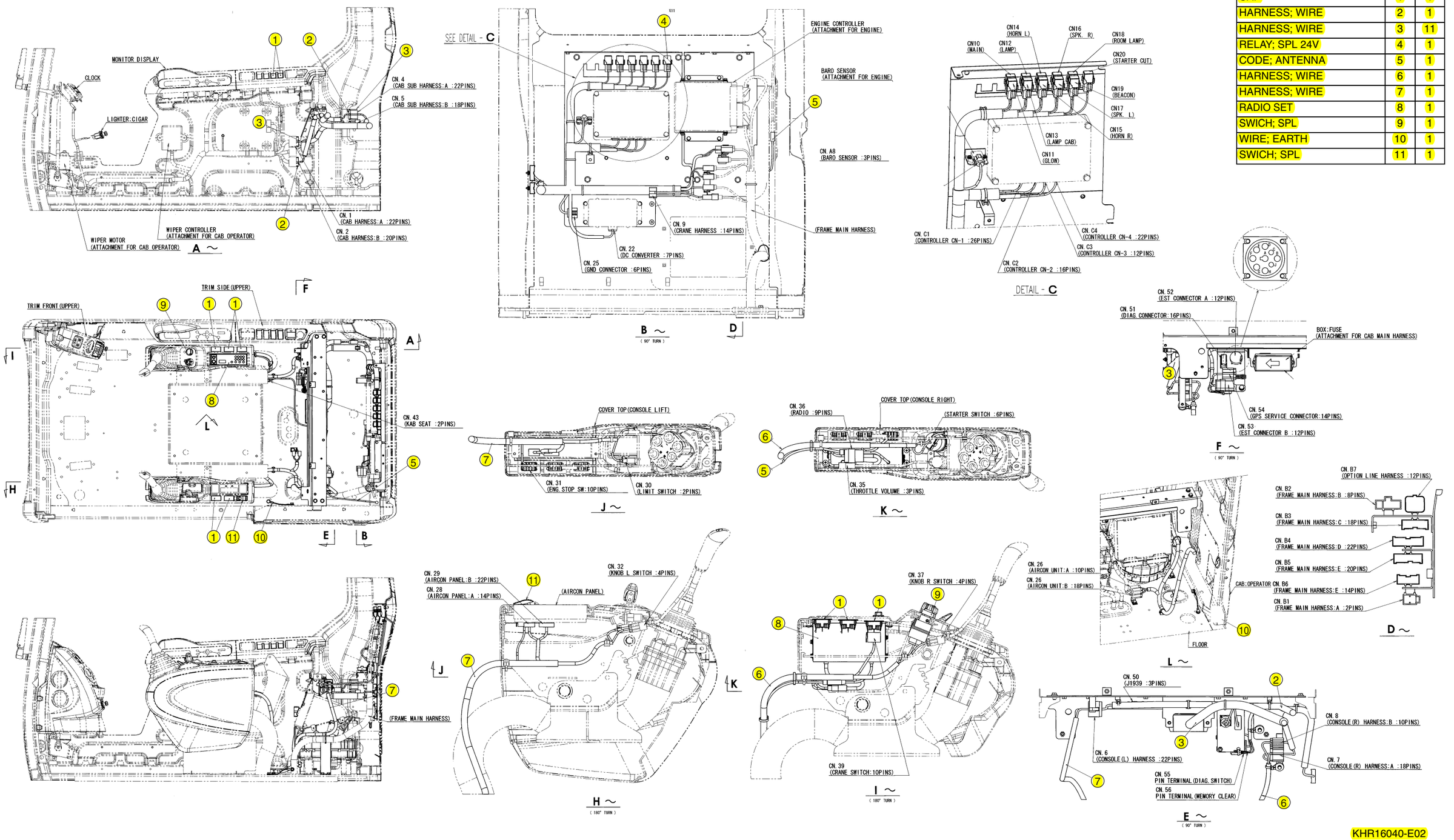

KHR16040-E02

https://truckmanualshub.com/

Explanation of Electrical Functions

No.	Item		Control	Contents
1	Engine Speed Control	1	Throttle Control	The engine speed, work mode, and boosted pressure state are switched by the throttle volume.
		2	Idling Control	With auto / one-touch switchover function
		3	Idling Start	Runs the engine at low idle speed when it starts up.
		4	Idle Up	In order to prevent the engine from stalling, during operation, raises the low idle speed to the auto idle speed.
		5	Auto Warm Up	If the coolant temperature is low, warm-up operation is executed automatically when the engine starts
2	Engine Start / Stop Control	1	Engine Start / Stop Judgment	Judgment based on engine speed from ECM
		2	Power-cut Delay	When key ON → OFF, 4-second delay; when engine running → OFF, 7-second delay
		3	Engine Emergency Stop	When the emergency stop switch is pressed, the ECM recognizes this and stops the engine.
		4	Neutral Start Control	Engine start load (cell not turning) when lever locked
3	Pump Control	1	Work Mode Control	Linked with the throttle, the SP / H / A mode is switched over and the pump horsepower is controlled.
		2	Pump Added Horsepower Control	The pump horsepower current is raised when there is a high load or sudden load.
		3	Pump Horsepower Cut Control	The pump horsepower current is reduced by the transient load control, engine stall prevention control, and PID control conditions.
		4	Power Save Control	The negative control relief pressure for non-operation is varied and the negative control pressure is lowered to reduce the pump load.
4	Swing	1	Swing Brake	When the upper side and swing are not operated, the swing brake is operated automatically and during travelling too
		2	Swing Free Swing (option)	Swing option for North America
		3	Swing Lock	There is a swing lock function (for servicing) with monitor operations.
		4	Swing Relief Cut	When a swing starts, the flow is reduced with the front side proportional valve and the excess oil is eliminated.
		5	Swing Speed Limit	The front side flow is controlled to suppress the speed rise due to increased pump flow.
5	Travel	1	Travel Speed Switchover	Travel speed low-speed / high-speed switchover
		2	Travel Alarm	Buzzer sounded (for 10 seconds) during travel
6	Valve Control	1	Lever Lock	Operation is not possible unless the gate lever is raised. Engine starts only on new tral position.
		2	Solenoid Sticking Prevention	When key ON, solenoid switched ON / OFF for 0.25 second.
		3	Pressure Boost Control	The computer automatically raises the pressure from 34.3 MPa ⇒ 36.8 MPa when necessary.
7	Monitor Control	1	Monitor Function	Output port control method change, liftcrane and option screen added to display screens, etc.
		2	Monitor Bar Graph	Bar graph display of coolant temperature, oil temperature, and fuel level on monitor

E

https://truckmanualshub.com/

No.	Item		Control	Contents
8	Accessories	1	Horn	Switching between one or two horns with horn volume select switch
		2	Working Light	Right housing and boom light illumination (option setting for two lights at top of cab)
		3	Wiper & Washer	Wiper with rise-up used (intermittent, continuous, washer) Same one used as for Model 3
		4	Room Lamp	The room lamp lights up when the door is opened and lights up for exactly 30 seconds from when the door is opened with the key OFF.
		5	Radio Mute	Mute switch setting on the knob
9	Others	1	Anti-theft Protection	Anti-theft protection set with password input to monitor
		2	Battery Save Function	When the key is ON, no output to travel switchover, boost, power save, bucket lock, option switchover and free swing solenoid valve.
		3	Alternator Power Generation Detection	Alternator L terminal voltage judged with 10 V comparator
		4	Overload Alarm	Only mounted on machines for Europe
10	Options	1	Option Line Control	Switchover crusher ⇔ breaker with just rocker switch in cab
		2	Option Line Control	There are five flow settings each for the breaker and crusher, for a total of 10 settings.
		3	DC-DC Converter	Trans form 24 V ⇒ 12 V
		4	Feed Pump Automatic Stop	Feed pump automatic stop Full tank detected by fuel level sensor and the pump stopped automatically
		5	Return Filter Clogging Detected	Alarm issued when return filter clogged (only for breaker specifications)
		6	Beacon Control (rotating light)	Standard for Europe, Japan crane specifications

https://truckmanualshub.com/

Engine Speed Control

1. Throttle Control

(1) Throttle display

[1] Configuration

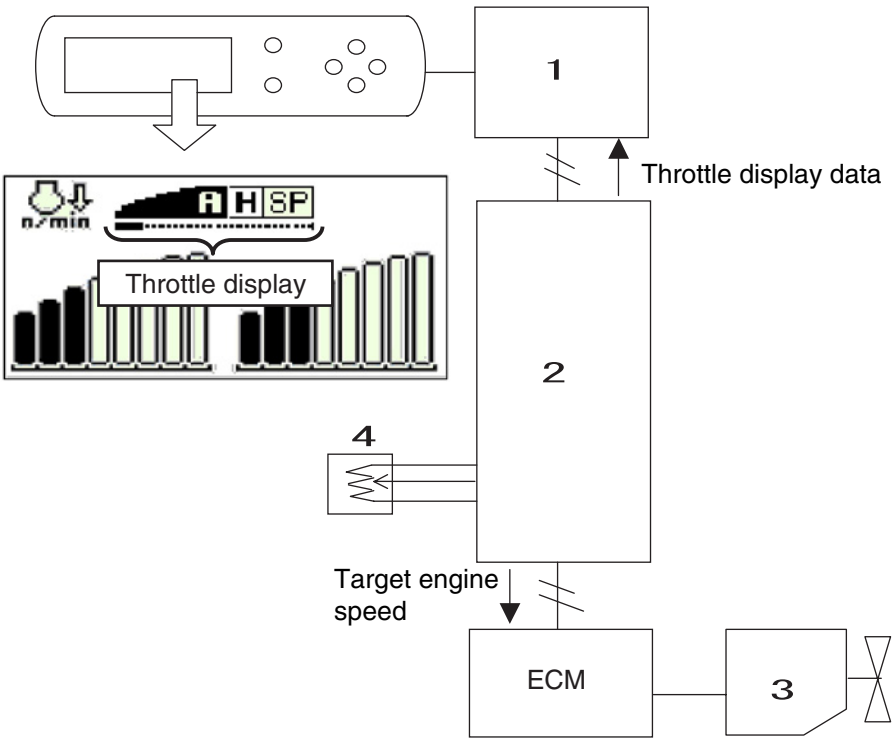

1	Monitor	3	Engine
2	Computer A	4	Throttle volume

[2] Summary

The throttle volume voltage signal is first input to Computer A. Computer A converts the voltage signal to a target speed and sends it to the ECM with CAN communication.
At the same time, Computer A sends the throttle display data to the monitor.

(2) Throttle volume position detection

[1] Configuration

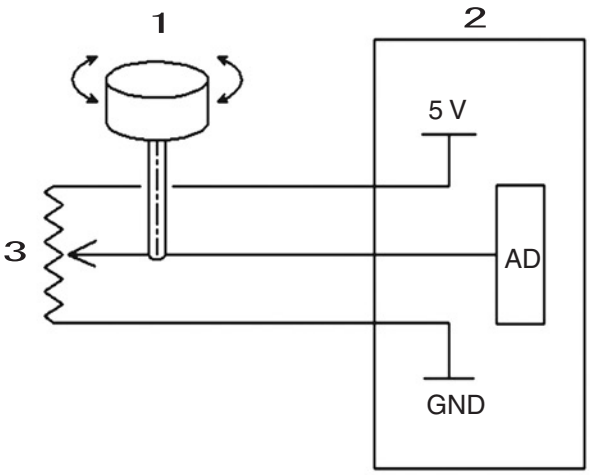

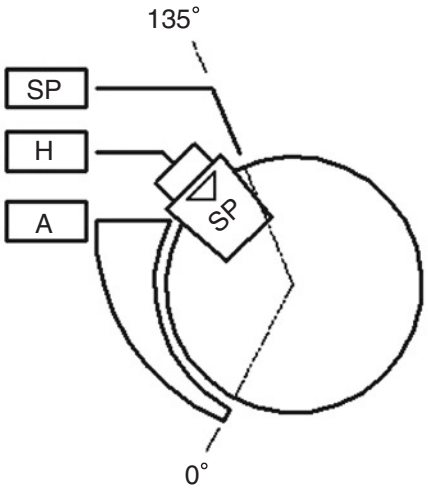

1	Throttle volume
2	Computer A
3	Potentio-meter

https://truckmanualshub.com/

[2] Structure

The detent and notches provide a click feel. (15 notches; Notch 1 is the "SP mode" position.)

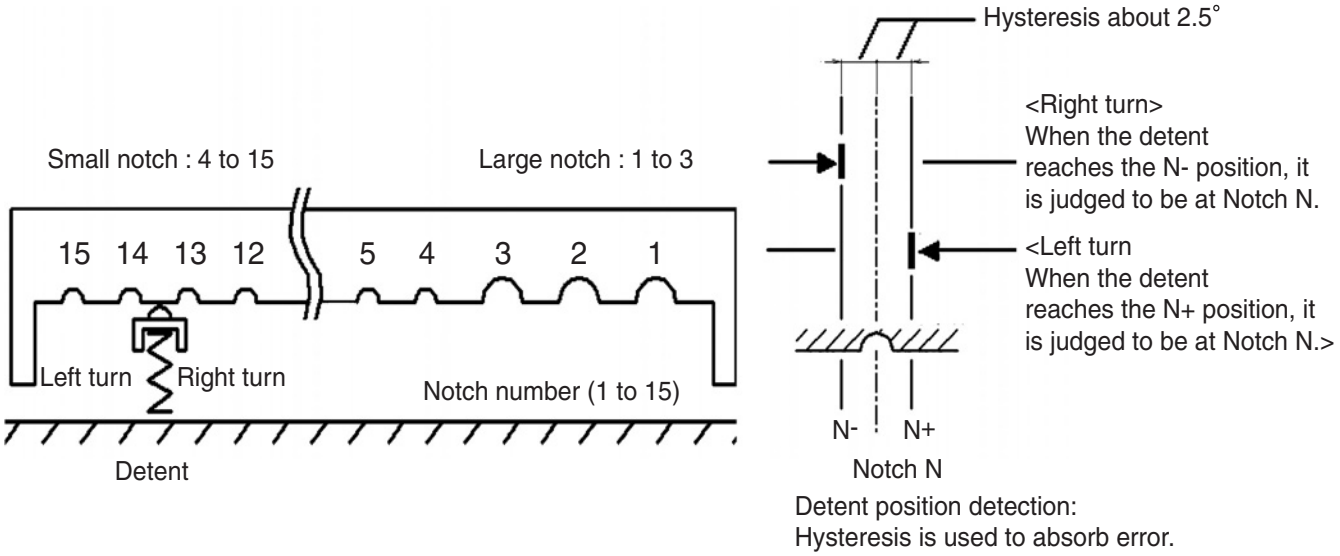

[3] Characteristic

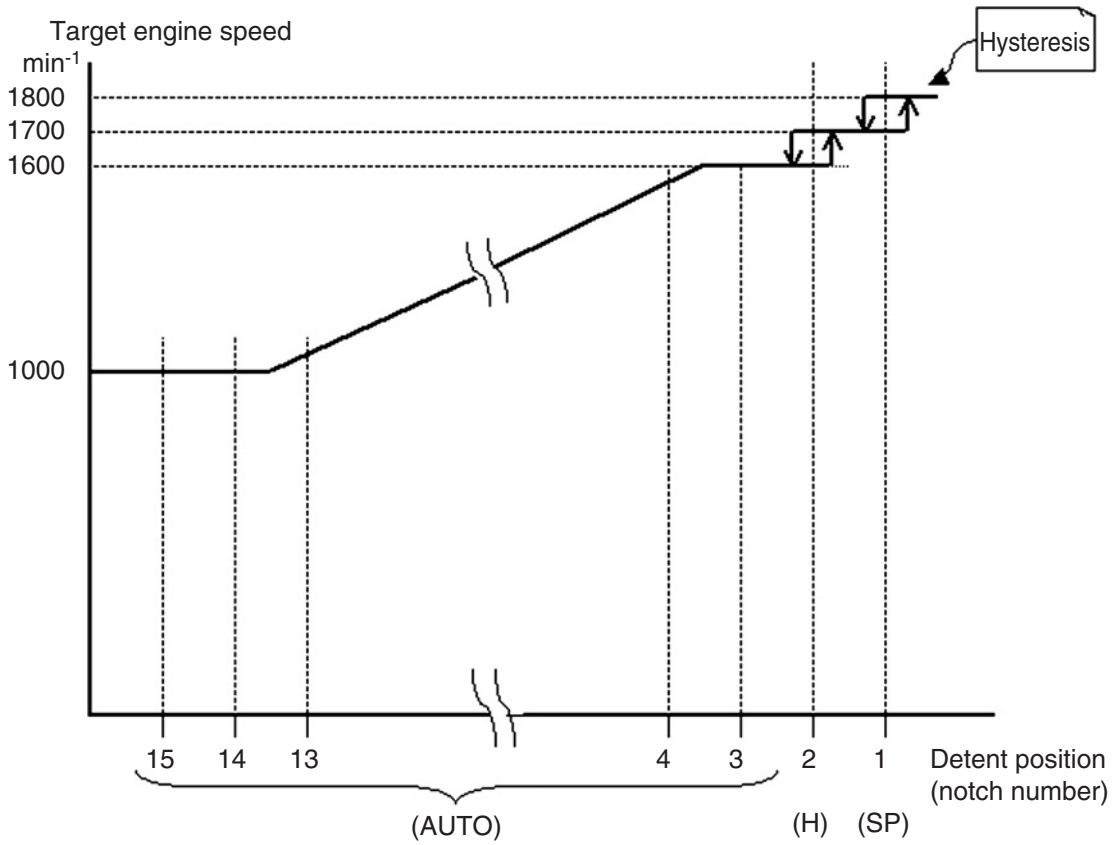

https://truckmanualshub.com/

[4] Potentio-meter characteristic

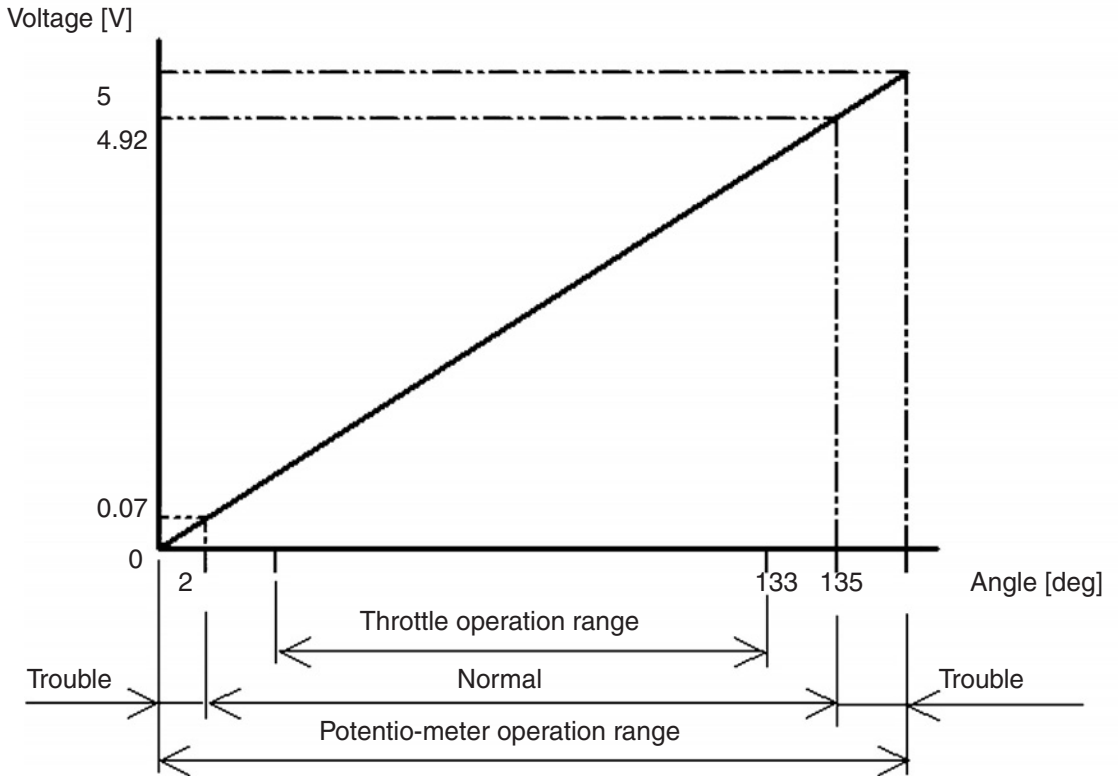

[5] Throttle volume degree of opening calculation
The throttle volume degree of opening (%) that can be checked on the CHK screen is calculated with the standard below.
100 % • • • When the detent is in the 1+ position
0 % • • • When the detent is in the 15- position
Therefore, even if the detent is in the 1 position (SP), this does not necessarily mean that the degree of opening is 100%.
In the same way, even if the detent is in the 0 position, the degree of opening is not necessarily 0%.

https://truckmanualshub.com/

[6] Table

For the angle, voltage, and degree of opening for each detent position, see the following table.

Detent	Angle [deg]	Voltage [V]	Degree of opening [%]
1+	131.2	4.86	100.0
1	128.7	4.77	98.0
1-	126.2	4.67	96.1
2+	109.6	4.06	83.0
2	107.1	3.97	81.1
2-	104.6	3.87	79.1
3+	95.2	3.53	71.7
3	92.7	3.43	69.8
3-	90.2	3.34	67.8
4+	88.0	3.26	66.1
4	85.5	3.17	64.1
4-	83.0	3.07	62.2
5+	80.8	2.99	60.4
5	78.3	2.90	58.5
5-	75.8	2.81	56.5
6+	73.6	2.73	54.8
6	71.1	2.63	52.8
6-	68.6	2.54	50.9
7+	66.4	2.46	49.1
7	63.9	2.37	47.2
7-	61.4	2.27	45.2
8+	59.2	2.19	43.5
8	56.7	2.10	41.5
8-	54.2	2.01	39.6
9+	52.0	1.93	37.8
9	49.5	1.83	35.9
9-	47.0	1.74	33.9
10+	44.8	1.66	32.2
10	42.3	1.57	30.2
10-	39.8	1.47	28.3
11+	37.6	1.39	26.5
11	35.1	1.30	24.6
11-	32.6	1.21	22.6
12+	30.4	1.13	20.9
12	27.9	1.03	18.9
12-	25.4	0.94	17.0
13+	23.2	0.86	15.2
13	20.7	0.77	13.3
13-	18.2	0.67	11.3
14+	16.0	0.59	9.6
14	13.5	0.50	7.6
14-	11.0	0.41	5.7
15+	8.8	0.33	3.9
15	6.3	0.23	2.0
15-	3.8	0.14	0.0

https://truckmanualshub.com/

2. Idling Control (auto / one-touch)

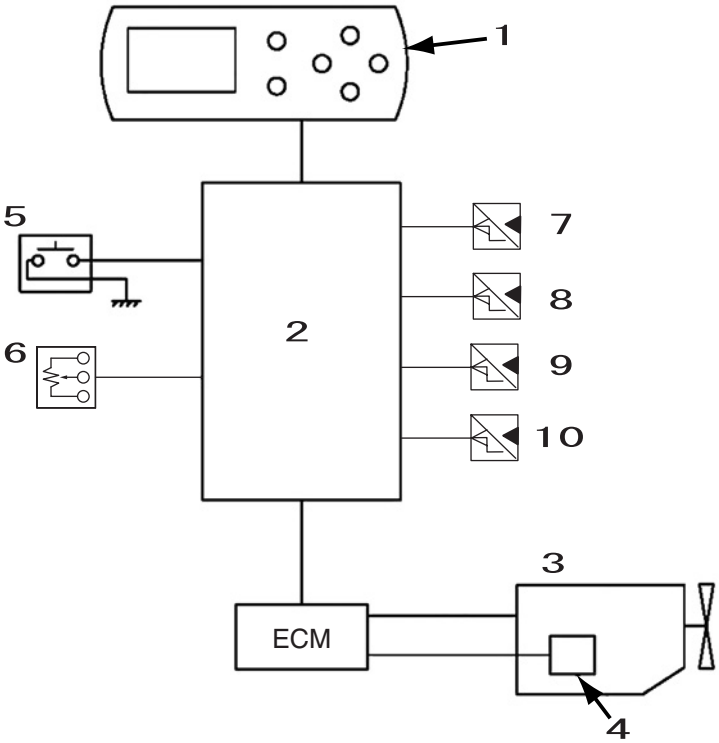

1	Monitor display	5	One-touch idle switch	9	Pressure sensor (travel)
2	Computer A	6	Throttle volume	10	Pressure sensor (arm-in)
3	Engine	7	Pressure sensor (upper side)		
4	Coolant temperature sensor	8	Pressure sensor (swing)		

<Operation explanation>

[1] Auto / one-touch switchover function

The operator can switch between one-touch and auto by pressing the auto idle switch on the monitor in the figure below.

When auto idle is ON, the LED at the side of the switch lights up.

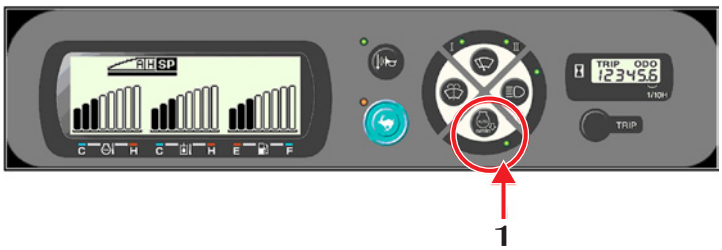

1	Auto idle switch

[2] Auto idle control

1) When auto idle is set, if the lever is left continuously unoperated for 5 seconds, the engine speed automatically becomes the auto idle speed (1200 min^{-1}).
   * This five-second setting for auto idle operation is the default value. This setting can be changed to from 1 to 30 seconds with service support operations.
2) When the lever is operated, the engine speed is automatically returned to the engine speed set for the throttle volume.
3) Even with auto idle set, it is possible to move to auto idle or return from auto idle by pressing the knob switch (one-touch idle switch) on the right operation lever.

[3] One-touch idle control

When auto idle is not set, regardless of lever operation, it is possible to move to auto idle or return from auto idle by pressing the knob switch (one-touch idle switch) on the right operation lever.

The idling speed for one-touch idle control is 1000 min^{-1}.

https://truckmanualshub.com/

[4] Idling speed

1) Auto idling speed • • • 1200 min^{-1}

2) One-touch idling speed • • • 1000 min^{-1}

3) Low idling speed • • • 1000 min^{-1}

The speeds above are the default values. They can be set to from 1000 to 1600 min^{-1} with service support operation. (See Screen Operation in Service Support.) However, the settings are based on the following conditions.
Low idle speed = One-touch idle speed ≦ Auto-idle speed
(The one-touch idle speed and auto-idle speed settings can be changed.)

3. Idling Start

[1] When the engine starts, the engine speed becomes the low idle speed regardless of the throttle position.

[2] When the low idle speed is changed, the engine speed is controlled at this new speed.

[3] During an idling start, the idling icon is displayed at the top left of the monitor.
No message is displayed.

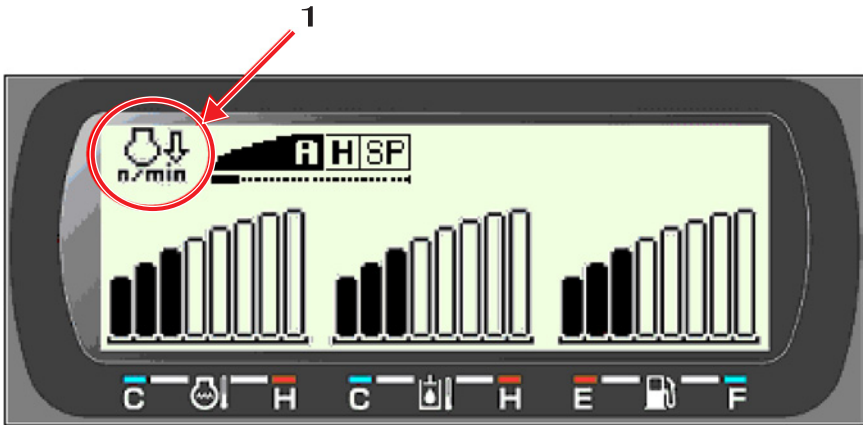

1	Idling icon

[4] An idling start is ended in the following cases and control becomes normal.

1) When the one-touch idle switch is pressed

2) When the throttle volume is operated

3) When the operation lever is operated (upper side, travel, swing, arm-in pressure sensor ON)

[5] Back-up operation

1) Sensor trouble
If trouble occurs in a sensor (upper side, travel, swing, arm-in), the idling start is ended.

2) Throttle volume trouble
Even if the throttle volume is operated, the idling start is not ended. Also, even if the idling start is ended with some other method, the throttle cannot be adjusted.

3) One-touch idle switch trouble
Even if the switch is pressed, the idling start is not ended.

https://truckmanualshub.com/

4. Idle Up

A function that when the engine speed is less than the idling speed, causes lever operation to automatically raise the engine speed to the auto idling speed (Idle speed engine stall prevention function)

<Operation conditions>

[1] Control only when the engine speed is lower than the auto idling speed

[2] The idle up speed is the same as the auto idling speed.(Factory setting 1200 min^{-1})

[3] This control does not operate when the idling speed is higher than the auto idling speed. Also, when auto idling is operated, normally the auto idling function operates.

[4] Even with one-touch idling operating, this control operates to raise the idling speed.

[5] A lever is judged to have been operated when any pressure sensor (upper side, travel, swing, arm-in) comes ON.

[6] If trouble occurs in any of the above pressure sensors, idle up control is not executed.

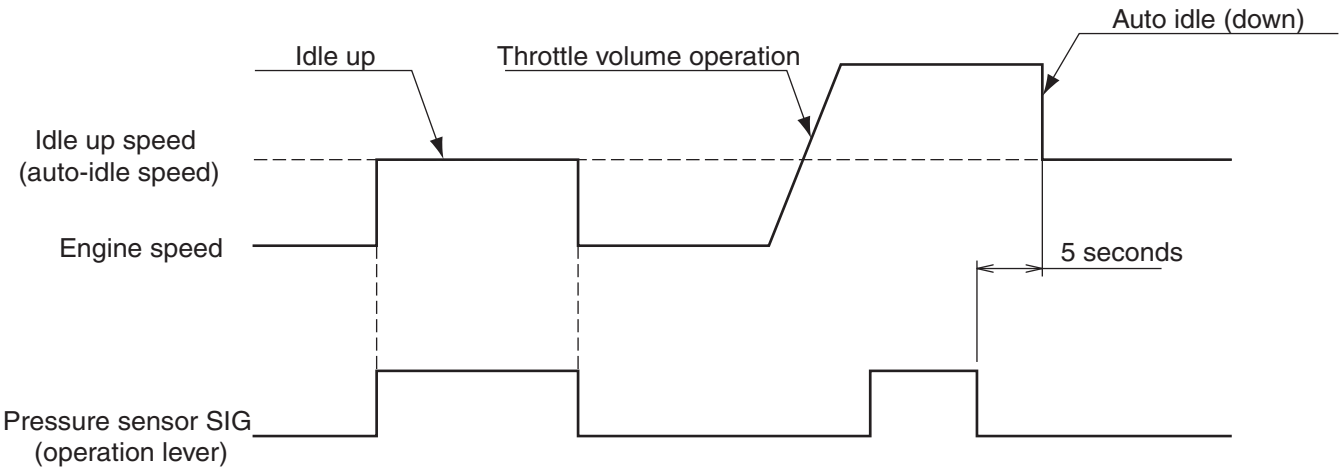

5. Auto Warm Up

If the coolant temperature is low when the engine starts up, warm-up operation is executed, automatically raising the engine speed in steps.

[1] Auto warm up is used if the coolant temperature is lower than 50 ℃ when the engine starts.

[2] If the coolant temperature is 50 °C or higher, auto warm up is not used and an "idling start" is executed.

[3] Operation
The engine speed is raised in steps from the low idle speed until 1800 rpm as below.
When the low idle speed is changed, the engine speed starts from the newly set speed.
The warm up time is the same, 14 minutes.
When the coolant temperature reaches 50 °C, the engine speed falls immediately to low idle. (Idling start)

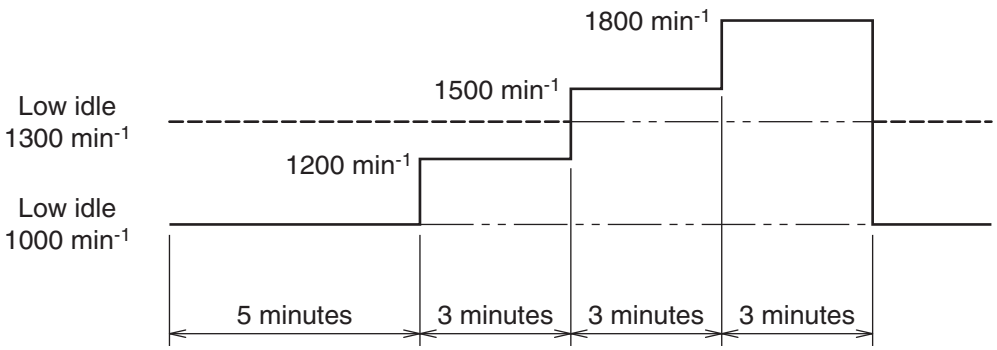

https://truckmanualshub.com/

[4] Monitor display
During auto warm up, the “Auto warm up icon” is displayed at the top left of the monitor.

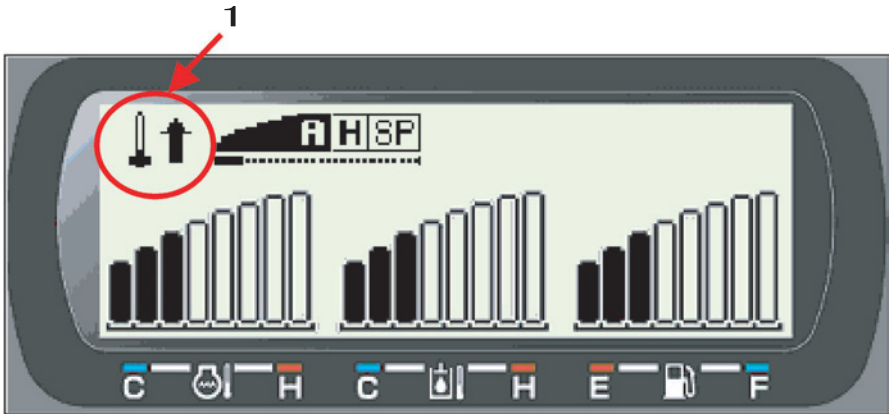

1	Auto warm up icon

[5] In the cases below, auto warm up is ended and operation shifts to "idling start".
1) When the coolant temperature reaches 50 ℃
2) When the one-touch idle switch is pressed
3) When the entire auto warm up process ends (after 14 minutes)

[6] In the cases below, auto warm up is ended and operation shifts to the engine speed for the throttle position.
1) When the lever is operated (as detected by a pressure sensor)
2) When the throttle volume is operated

[7] Back-up operation
1) Sensor trouble
If trouble occurs in a sensor (upper side, travel, swing, arm-in, coolant temperature sensor), auto warm up is not operated. Also, even trouble occurs in a sensor partway through a warm up, the warm up is ended and operation shifts to normal control.
2) One-touch idle switch trouble
Even if the switch is pressed, auto warm up is not ended.
3) Throttle volume trouble
Even if the throttle volume is operated, the auto warm up is not ended.

https://truckmanualshub.com/

Engine Start / Stop Control

1. Engine Start / Stop Judgment

[1] Configuration

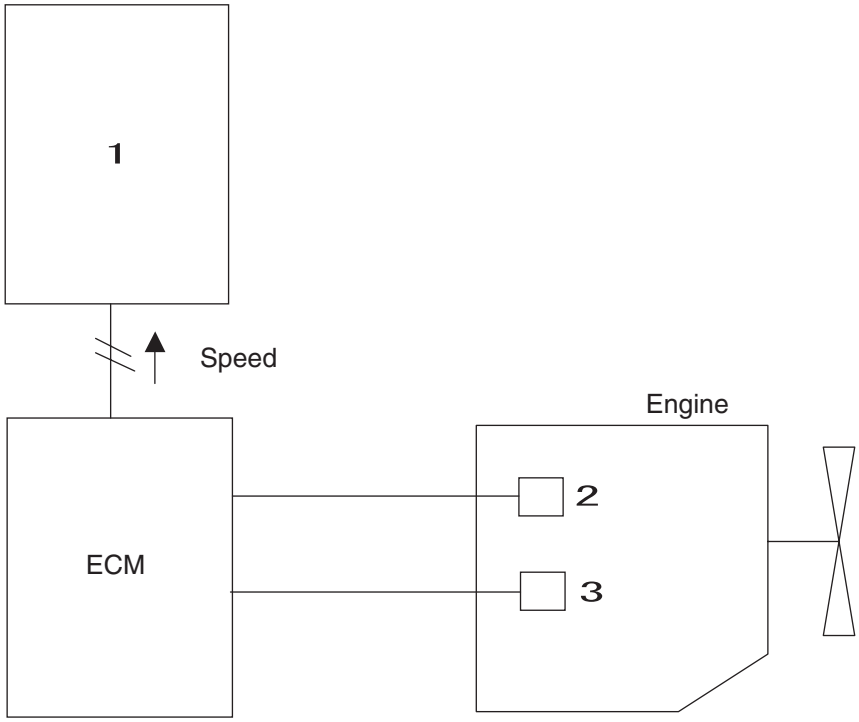

1	Computer A
2	Cam sensor
3	Crank sensor

[2] Summary

Engine start and stop is judged based on the engine speed sent from the ECM with CAN communication.

[3] Judgment value

Start 500 min^{-1}, Stop 200 min^{-1}

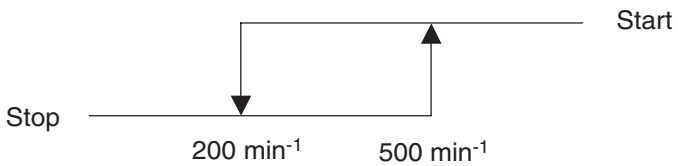

☆) Concerning hysteresis; for Model 3, judged with no hysteresis 500 min^{-1}.

https://truckmanualshub.com/

2. Power-cut Delay

[1] Configuration (fuses etc. omitted)

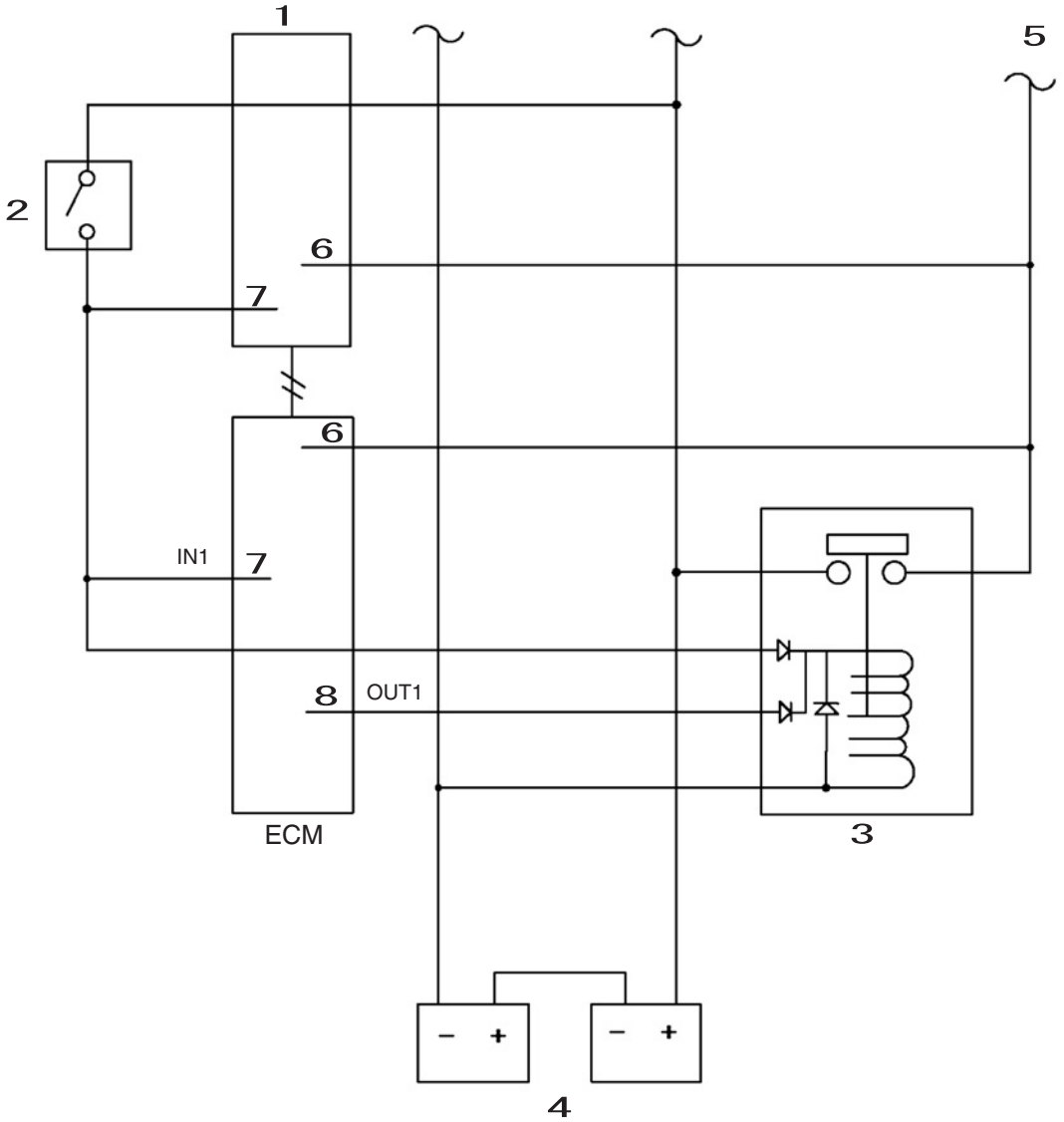

1	Computer A	5	Load A
2	Key switch	6	Power supply
3	Battery relay	7	Key switch signal
4	Battery	8	Battery relay hold

[2] Summary

After the key is switched OFF, after the battery relay is held for a certain period, the power supply is cut off.

[3] Purpose

1) This secures time after the key is switched OFF for data to be written in the EEPROM in the ECM and Computer A.
2) This waits until the engine completely stops to avoid load dumping.

https://truckmanualshub.com/

[4] Operation

1) When the key is ON, the battery relay is held by the battery relay hold output (OUT1) from the ECM and the key switch.
2) After the key is switched OFF, the battery relay is only held by the ECM.
3) After it detects the key going OFF through the key switch signal input (IN1), the ECM starts the count down.
4) After a certain time has passed, the ECM stops output to the battery relay and the battery relay goes OFF.
   At the same time, the power supply to electrical parts, including the ECM and computer is cut. (Except the backup power supply)
5) The time from the key being switched OFF until the power supply goes OFF (the delay time) depends on whether or not the engine was started.
   * After the key is switched ON, if the key is switched OFF without the engine being started = about 4 seconds
   * If the key is switched OFF after the engine was started = about 7 seconds

[5] Differences from Model 3

With Model 3, the main unit side computer (called computer A in Model 5) held the battery relay. With Model 5, the ECM bears this responsibility. (Engine manufacturer requirement)

E

3. Engine Emergency Stop

Function for stopping the engine in an emergency

When the emergency stop switch on top of the left console is pressed, the engine is stopped regardless of the key switch position.

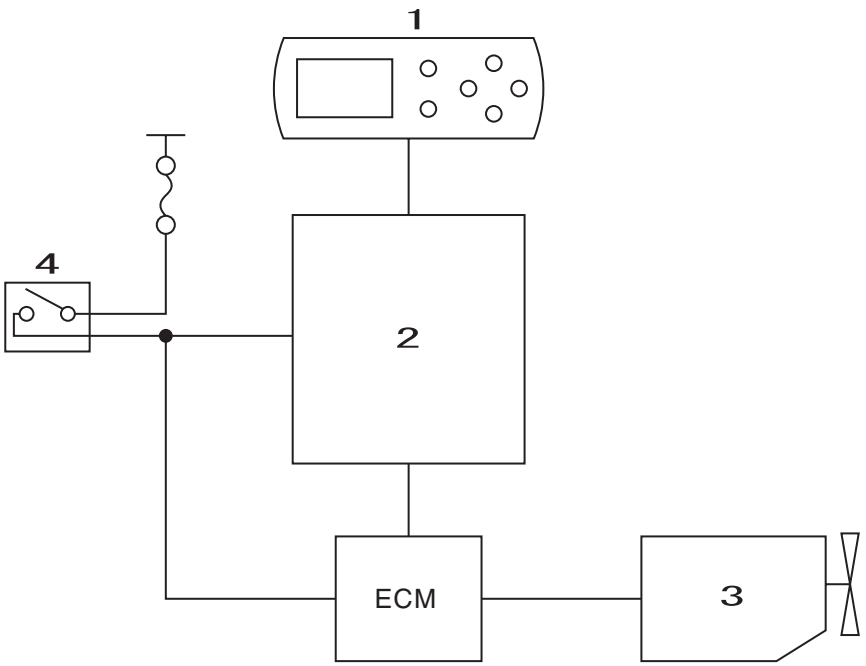

1	Monitor display
2	Computer A
3	Engine
4	Emergency stop switch

[1] Circuit

1) When the emergency stop switch is pressed, a 24 V signal enters the ECM input port.
2) When the 1) signal enters, the ECM controls the injector, suction control valve, and EGR valve to stop the engine.
3) The emergency stop switch signal enters computer A too and computer A sends the engine stop command to the ECM with CAN communication.
4) At the same time, computer A sends the emergency stop and buzzer instructions to the monitor.

https://truckmanualshub.com/

[2] Display, alarm

1) When the emergency stop switch is switched ON, the "ENGINE STOP" message is displayed on the monitor.
2) Even if there is another message, the "ENGINE STOP" message is displayed with priority for five seconds after the switch is switched ON.
3) At the same time as 1), the buzzer in the monitor buzzes intermittently at 1 Hz.
4) If any kind of trouble is detected during the 1 Hz intermittent buzzing of 3), after the 5-second continuous buzzing, which is the trouble alarm, the buzzing returns to the 1 Hz intermittent buzzing.
5) Even if the buzzing continues after the switch ON/OFF message display (for 5 seconds), the message display is not extended.
6) The above message display and buzzer operate whether the engine is running or stopped.

RST-05-06-001p

[3] An emergency stop takes priority over any other control and stops the engine.

* The engine stops even during lifting magnet suction, during elevator cab rising, and fan reverse operation (large machine only).

[4] When an emergency stop is made, it is not recorded in the trouble log.

[5] The engine can be cranked with the emergency stop switch ON, but the engine will not start.

https://truckmanualshub.com/

4. Neutral Start

[1] Purpose and summary

The engine will not start with the gate lever lifted.(It will not crank.)

This prevents accidental operation if the operation lever is accidentally bumped into when the engine is started.

[2] Configuration

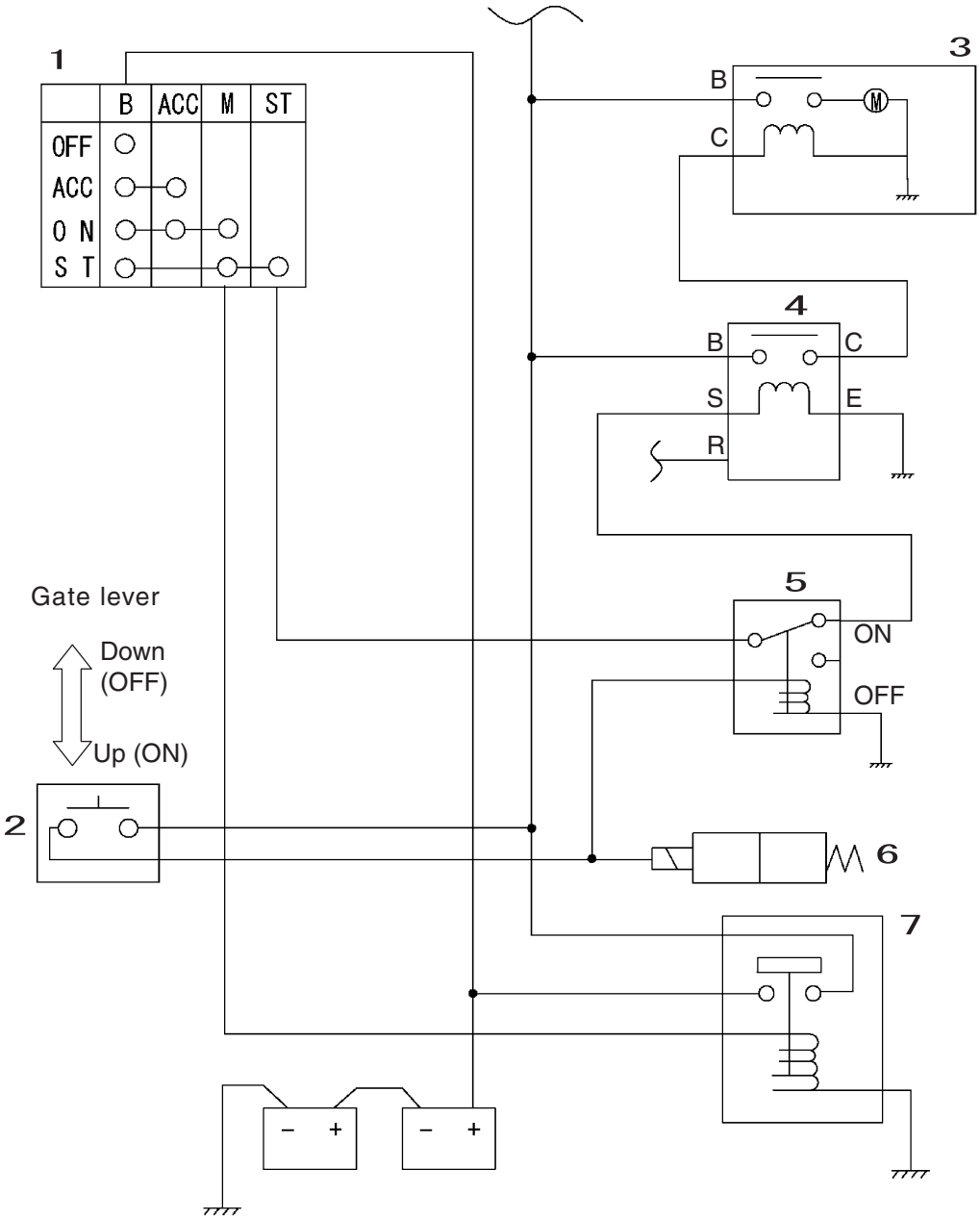

1	Key switch	5	Starter cut relay
2	Gate lock limit switch	6	Lever lock solenoid
3	Starter motor	7	Battery relay
4	Safety relay		

[3] Operation

When the gate lever is raised (and the limit switch comes ON), the starter cut relay is excited, the excitation to the safety relay is cut off, and the engine does not crank. At this time, nothing in particular is displayed on the monitor.

https://truckmanualshub.com/

Pump Control

1. Work Mode Control

<Purpose>

Work mode control enables the operator to select the work mode to match the work contents, for example emphasizing speed, emphasizing fuel economy, etc.

At the same time, the engine speed is adjusted.(throttle adjustment)

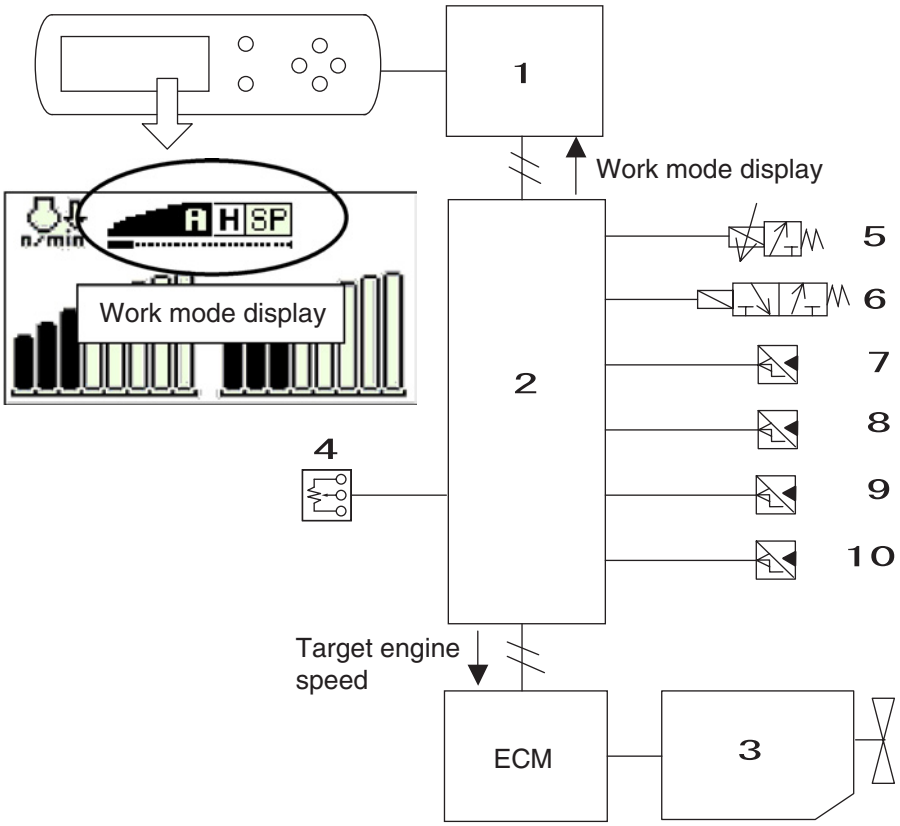

1	Monitor
2	Computer A
3	Engine
4	Throttle volume
5	Pump horsepower control proportional valve
6	Boost solenoid
7	P1 pressure sensor
8	P2 pressure sensor
9	N1 pressure sensor
10	N2 pressure sensor

Operation

[1] Manual switchover (main mode)

The operator can select one of the following work modes by turning the throttle volume.

For the correspondence between the throttle volume detents and the work modes, see the attached table.

Mode	Aim	Display	Monitor buzzer
(1) SP mode	Speed emphasis	A H **SP**	The buzzer buzzes twice when this is selected.
(2) H mode	Balances speed and fuel economy	A **H** SP	The buzzer buzzes once when this is selected.
(3) A mode	Fuel economy emphasis	**A** H SP	No buzzing

[2] Automatic switchover (sub mode)

Each of the main modes that can be selected manually has two sub-modes (high and low).

These sub-modes are switched automatically based on the sensor input values.

* For the high and low currents, refer to the explanation of the 2. Pump Added Horsepower Control in next page.

https://truckmanualshub.com/

2. Pump Added Horsepower Control

<Purpose>

To prevent drop in the engine speed when the lever is operated suddenly, when there is high load, when travelling, etc.

Control current value

	Volume position (detent position)		1	2	3	4 to 8	9 to 15
	Work mode		SP	H	A		
SH210-5	Engine speed (min^{-1})		1800	1700	1600	1599 to 1300	1299 to 1000
	Pump horse power current value (mA)	Max High	600	600	600	314	50
		Max Low	586	570	570	314	50
		Min	314	314	314	314	50
SH240-5	Engine speed (min^{-1})		2000	1900	1800	1799 to 1300	1299 to 1000
	Pump horse power current value (mA)	Max High	600	600	600	290	50
		Max Low	580	560	560	290	50
		Min	290	290	290	290	50
	Boosted pressure		Automatic	Automatic	Normal		

Operation

[1] Reduces the amount of speed drop under high load (SP-H mode)
Operation conditions ..... For high load
When the P1 + P2 pressure becomes high voltage, the current to the pump horsepower control proportional valve Imax is changed Low ⇒ High to increase the pump flow.

[2] Reduces the amount of speed drop under high load when digging with the arm-in (SP-H mode)
When the arm-in operation is detected by the arm-in pilot pressure sensor, high load is detected faster than for other operations.

[3] Response speed up for sudden lever operation
Operation conditions ..... For sudden lever operation
When sudden lever operation is detected by the N1 or N2 negative control pressure sensor, the current to the pump horsepower control proportional valve Imax is changed Low ⇒ High to increase the pump flow.

[4] For travel operation
For travel operation, the pump current is fixed to 600 mA.
However, if the engine speed is 1300 min^{-1} or less, the pump current is fixed to 50 mA. (Prevention of engine stalling is given priority)

E

https://truckmanualshub.com/

3. Pump Horsepower Cut Control

<Purpose>

The pump current is controlled in order to prevent black smoke under overloads and engine speed drop and in order to improve energy saving.

The control methods are the following three.

[1] Overload reduction control

[2] Engine stalling prevention control

[3] PID control

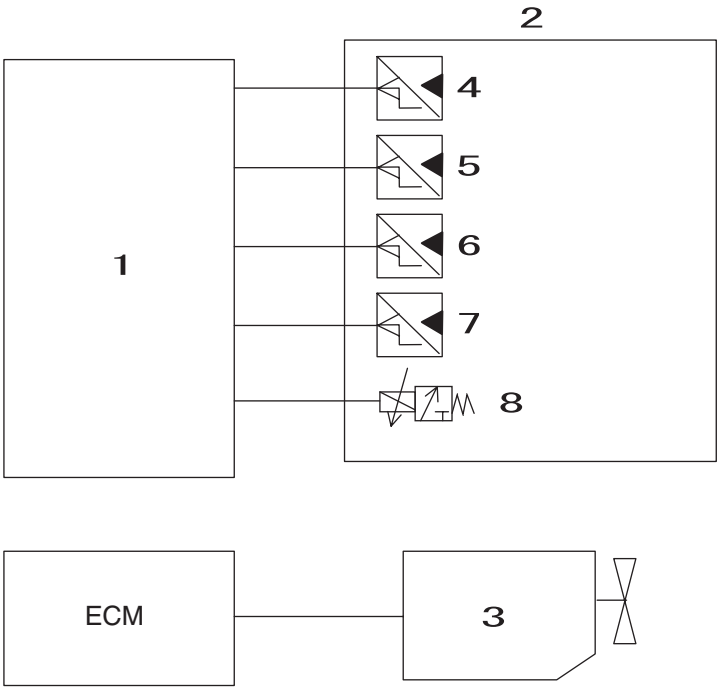

1	Computer A
2	Pump
3	Engine
4	P1 pressure sensor
5	P2 pressure sensor
6	N1 pressure sensor
7	N2 pressure sensor
8	Pump horsepower control proportional valve

(1) Overload reduction control

When the engine is under a overload, the current to the pump horsepower proportional valve first drops to 50 mA.

After that, the current is gradually raised while watching the difference between the actual engine speed and the target engine speed.

Overload reduction control is executed in all work modes.

- The engine is judged to be under a overload when the following conditions are met.

1) Sudden lever operation

When there is sudden lever operation, this is judged from the upper side pressure sensor state.

2) Operation for high loads and sudden loads

Judged from the P1 or P2 pump pressure sensor and from the pump main pressure boost state

(2) Engine stalling prevention control

When the target engine speed is 1300 min^{-1} or less, the current is 50 mA.

(3) PID control

When the engine actual speed falls 30 min^{-1} or more below the target engine speed, the current is gradually lowered to I Min.

When the difference of the actual engine speed from the target engine speed falls below 30 min^{-1} the current rises to the I Max High for the each mode.

Backup control

If trouble occurs in a pressure sensor (P1, P2, upper side), the overload restriction control is not carried out.

If trouble occurs in the pump horsepower control proportional valve, the output from the computer stops.

https://truckmanualshub.com/

4. Power Save Control

<Purpose>

When no lever is operated, the pump load is reduced with the control below to reduce fuel consumption.

The control methods are the following two.

[1] The negative control relief pressure is varied and the negative control pressure is lowered to reduce the pump load.

[2] The pump discharge amount is set to the minimum flow.

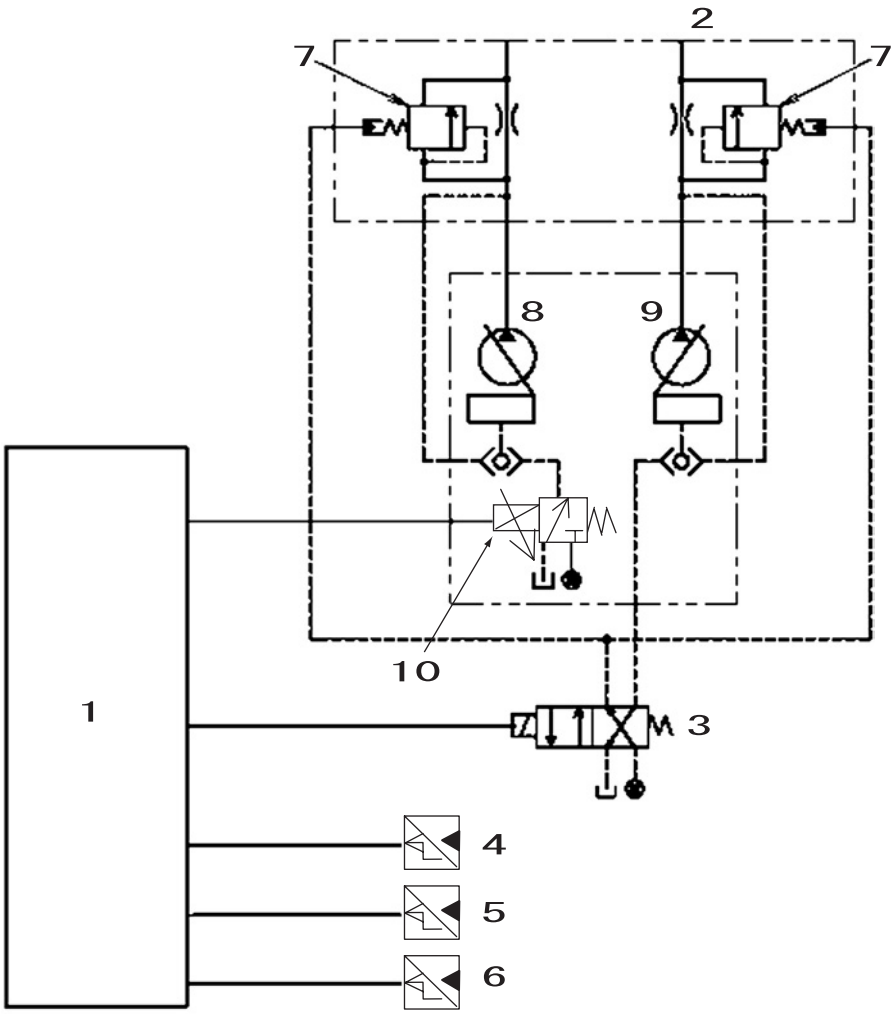

1	Computer A
2	Control valve
3	Power save solenoid
4	Upper side pressure sensor
5	Swing pressure sensor
6	Travel pressure sensor
7	Negative control foot relief valve
8	Pump 1
9	Pump 2
10	P1 flow control proportional valve

<Operation explanation>

[1] Normal operation

If more than one second passes with all the sensor signals to the computer OFF (upper side, travel, and swing pressure), the computer judges that no lever is being operated and outputs to the P1 flow control proportional valve and the power save solenoid valve.

1) P1 pump discharge reduced
   1. The P1 flow volume proportional valve current is increased from 50 mA to 740 mA.
   2. The P1 pump swash plate is switched to the minimum tilt revolution and the discharge amount is set to its minimum.
2) P2 pump discharge reduced
   1. When the power save solenoid valve is switched, the pilot source pressure is fed to the P2 pump negative control port via the solenoid valve.
   2. The P2 pump swash plate is switched to the minimum tilt revolution and the discharge amount is set to its minimum.

https://truckmanualshub.com/

3) Negative control pressure reduction
   1. When the power save solenoid valve is switched, the negative control foot relief valve spring chamber is linked with the tank line and the negative control foot relief valve setting pressure drops from 3 MPa to 1 MPa.
   2. By reducing the negative control relief pressure, the pressure within the circuit is reduced, and the horsepower used by the pump is reduced. This saves energy.

[2] Operation when the engine is stopped with the key ON.
Even if no lever is operated, when the engine stops, the battery save function works and there is no output to the P1 flow control proportional valve or the power save solenoid.

[3] Operation for trouble
If an abnormality occurs on either the input side (upper side, swing, travel pressure sensors) or the output side (P1 flow control proportional valve, power save solenoid valve), the system treats this as operation being underway and control is fixed to the following.
Current to the P1 flow volume valve ••• 50 mA, the power save solenoid valve is always OFF.
<Caution>
During a trouble, even if the abnormality is ended, trouble mode does not end until the key is switched OFF.

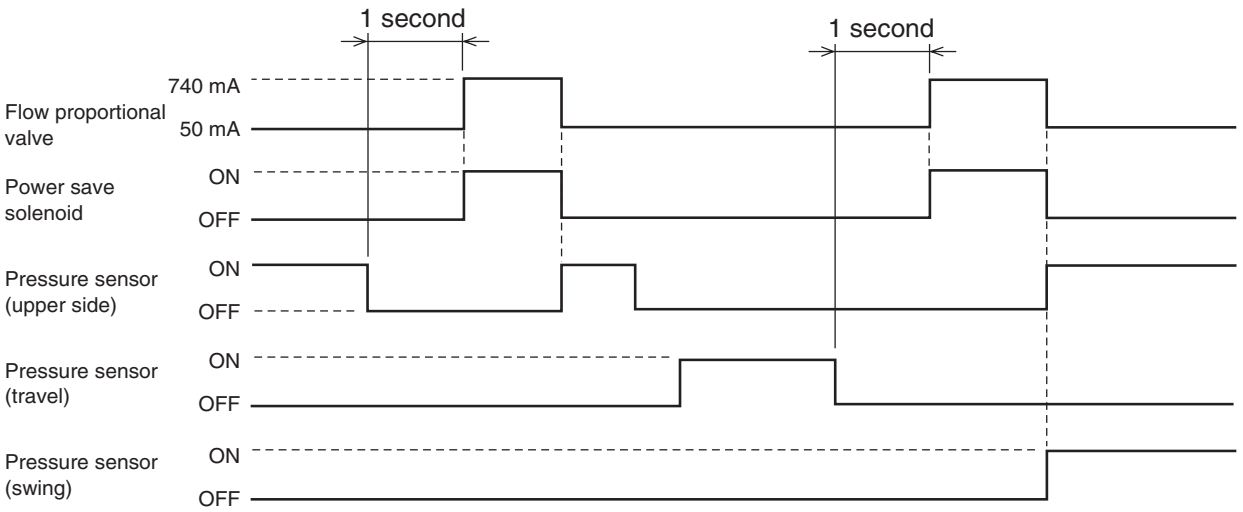

https://truckmanualshub.com/

Swing

1. Swing Brake

[1] Configuration

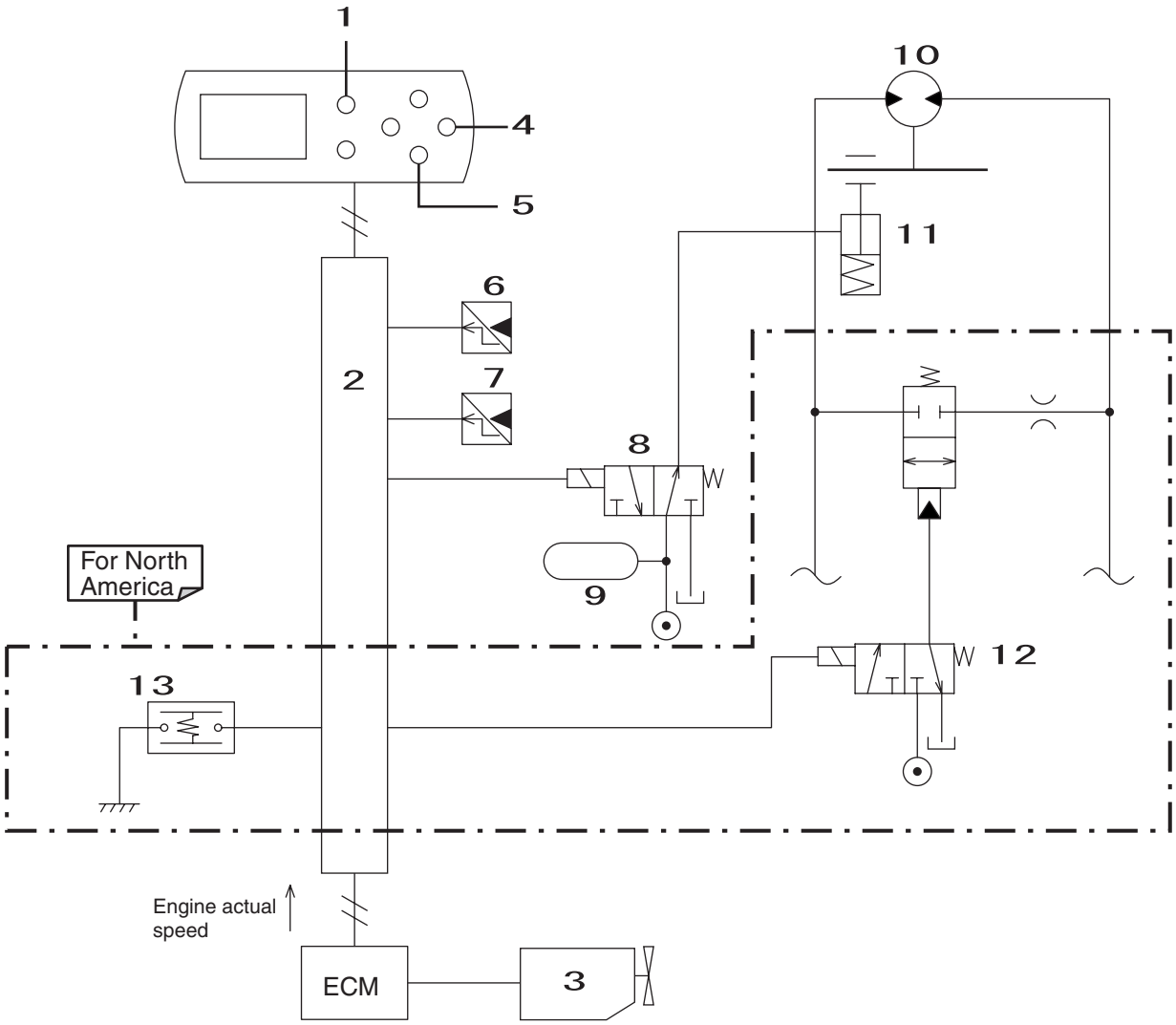

1	Horn volume select switch	8	Swing brake solenoid
2	Computer A	9	Accumulator
3	Engine	10	Swing Motor
4	Working light switch	11	Swing Brake
5	Auto idle switch	12	Free swing solenoid
6	Upper side pressure sensor	13	Free swing switch (momentary)
7	Swing pressure sensor		

[2] Braking function during upper operation
When the upper pressure sensor is ON then brake is OFF.
When the upper pressure sensor is OFF, one second after the brake goes ON.

[3] Braking control through swing opretion
When the swing pressure sensor is ON then swing brake is OFF.
(Swing brake solenoid=OFF).
When the swing pressure is turned OFF, five seconds after the swing brake comes ON.
(Swing brake solenoid=ON).

[4] Swing lock with key OFF
When the key is OFF (during power-cut delay), the swing brake comes ON unconditionally.

https://truckmanualshub.com/

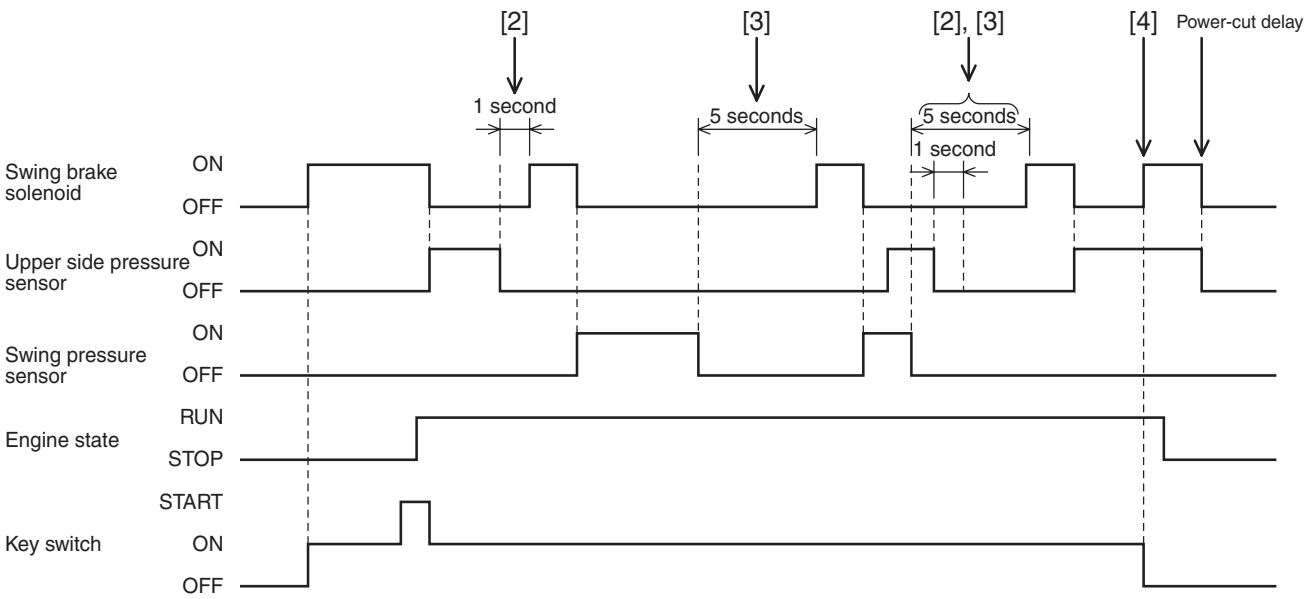

2. Swing Lock (for maintenance)

<Purpose>

This is used for measuring the swing relief pressure and other maintenance tasks.

[1] Swing lock switching

In order to prevent accidental operation under certain special circumstances, sometimes the swing brake need to be left ON all the time. "Swing lock" At this time, the swing lock can be switched ON / OFF by holding down the "horn volume select switch", the "working light switch", and the "auto idle switch" at the same time for 3 seconds.

When turning the key to ON, always start with the swing lock OFF.(Previous data reset)

[2] Swing lock control

When the swing lock is ON, even if the upper side or the swing is operated, the swing brake stays ON. Be particularly careful about swing operation because the swing brake plate is dragged.

(The swing pilot pressure is not shut off. This is no more than a simple swing lock.)

[3] Competition with free swing

If the swing lock is used, even if free swing is ON, the swing brake solenoid comes ON and the free swing solenoid goes OFF.(Swing lock priority)

[4] Mode display

When free swing is ON, the icon in the figure below is displayed on the monitor.

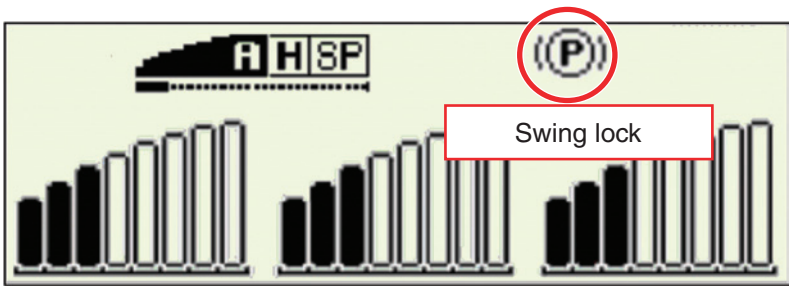

https://truckmanualshub.com/

[5] Time chart (free swing & swing lock)

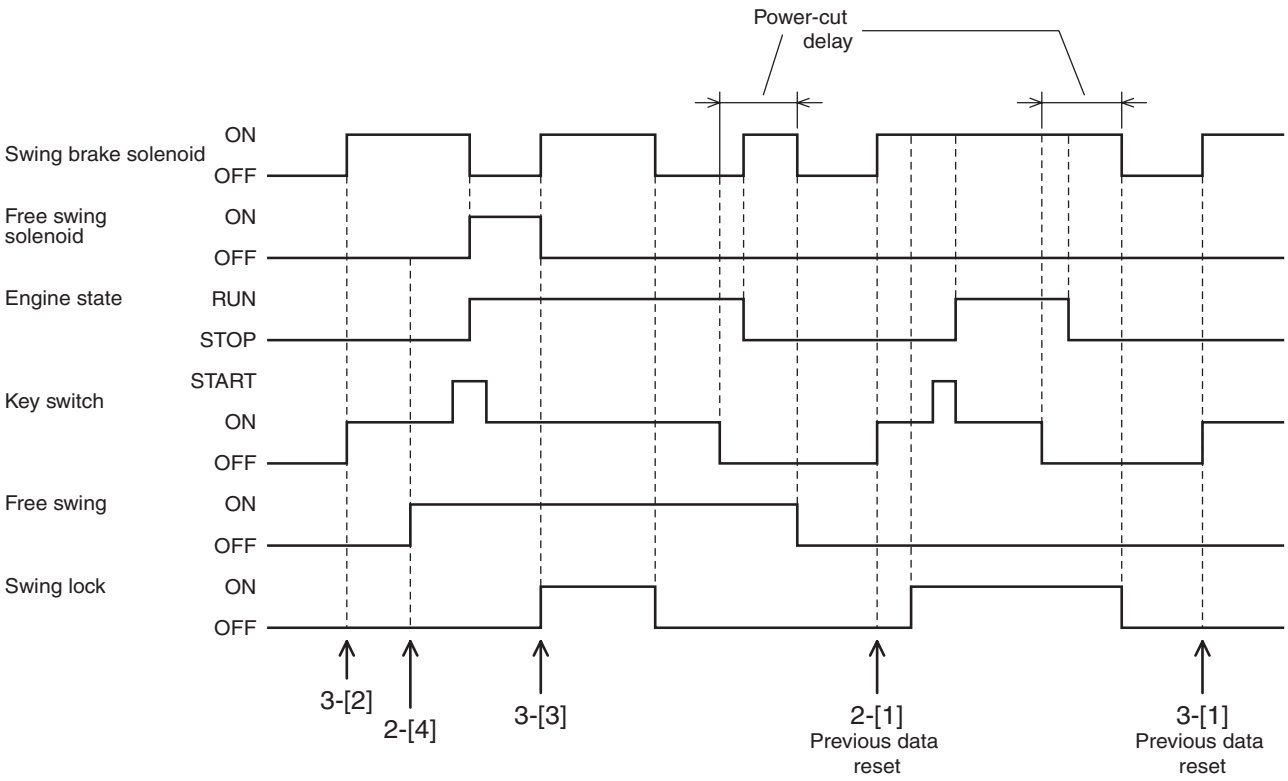

[6] Trouble mode

If trouble occurs in an input (upper side / swing pressure sensor), communication (CAN), or output (swing brake solenoid / free swing solenoid), the system goes into trouble mode. In trouble mode, the swing brake solenoid is OFF and the free swing solenoid is OFF. Even if the trouble is recovered from, this does not recover the system from trouble mode.

E

https://truckmanualshub.com/

3. Swing Relief Cut

<Purpose>

When swing operation is running alone, the pump flow is reduced, and the excess oil ejected from the swing motor relief valve is eliminated.

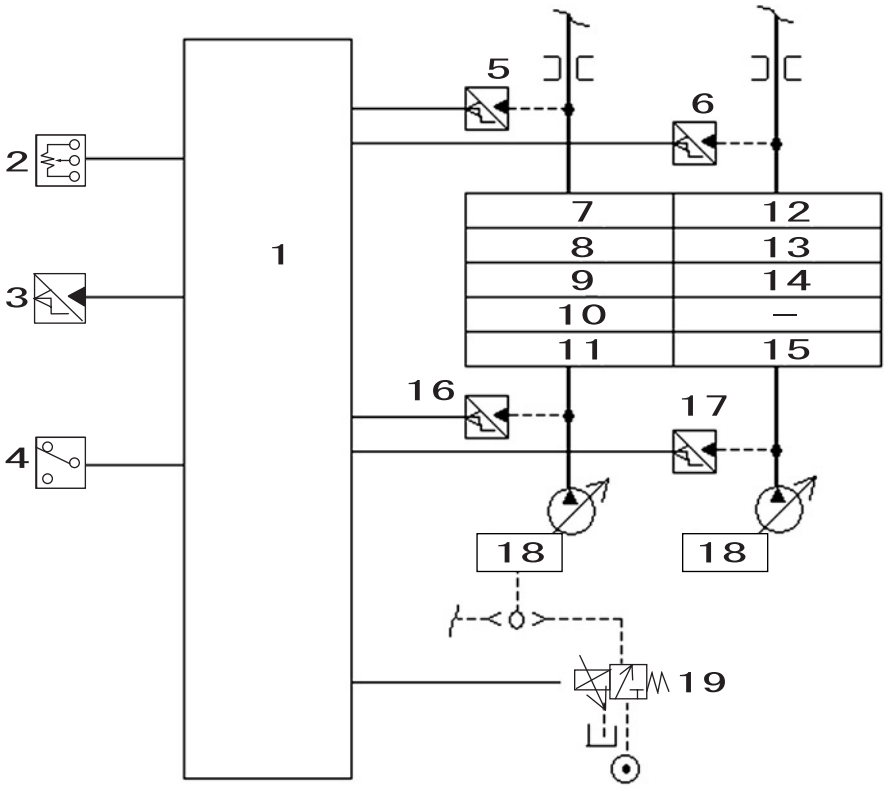

1	Computer A	8	Boom (2)	15	Travel (right)
2	Throttle volume	9	Swing	16	P1 pressure sensor
3	Travel pressure sensor	10	Option 1	17	P2 pressure sensor
4	Option 1 pressure switch	11	Travel (left)	18	Regulator
5	N1 pressure sensor	12	Arm (2)	19	P1 flow control proportional valve
6	N2 pressure sensor	13	Boom (1)		
7	Arm (1)	14	Bucket		

Operation explanation

[1] Operation conditions for swing relief cut control

The swing relief cut control provides relief when the pressure is boosted for the start of the swing due to sudden swing operation and the drained off excess oil is held to the lowest amount possible. The purpose is to provide an energy saving effect.

Control is executed when all the conditions below are satisfied.

1) Sudden swing operation • • • When the swing lever is operated, this is judged from the swing pilot pressure sensor pressure rise.
2) Within 1 second after start of swing
3) Travel non-operation • • • Travel pressure sensor OFF
4) No attachments other than boom-down are operating.
   ••• That no attachment is operating is judged from the N2 negative control pressure & P1 pressure sensor.
5) Option line non-operation • • • Option pressure sensor OFF

https://truckmanualshub.com/

[2] Control contents
For the swing relief cut operation, after the current to the P1 flow control proportional valve is increased and the P1 flow is reduced, while checking the P1 pump discharge pressure, the system gradually reduces the output current to the P1 flow control valve and raises the P1 pump flow to the constant swing speed.

- Swing relief cut control flow
  Judged as swing only + sudden operation ⇒ Swing relief cut operation ⇒ Increased current to P1 flow control proportional valve ⇒
  ⇒ P1 pump flow reduced ⇒ Current gradually decreased while watching swing pressure fall status ⇒ P1 pump flow increased
  <Caution>
  P1 flow control proportional valve: Current (high) ⇒ P1 pump flow (low); Current (low) ⇒ P1 pump flow (high)

[3] Swing relief cut end conditions
1) When swing operation is stopped
2) Travel ON
3) Boom-up, arm-out / in, bucket-open / closed
4) Boom-down sudden operation
5) Boom-down pressure boost

E

4. Swing Speed Limit

Purpose
With the increase in the pump maximum flow, the swing speed at maximum flow is too fast. Therefore, the P1 pump flow is controlled to suppress the speed rise. (Control only in SP mode)
SH210-5 P1 maximum discharge amount held down from 211 L / min to 200 L / min for swing-only operation
SH240-5 P1 maximum discharge amount held down from 234 L / min to 214 L / min for swing-only operation

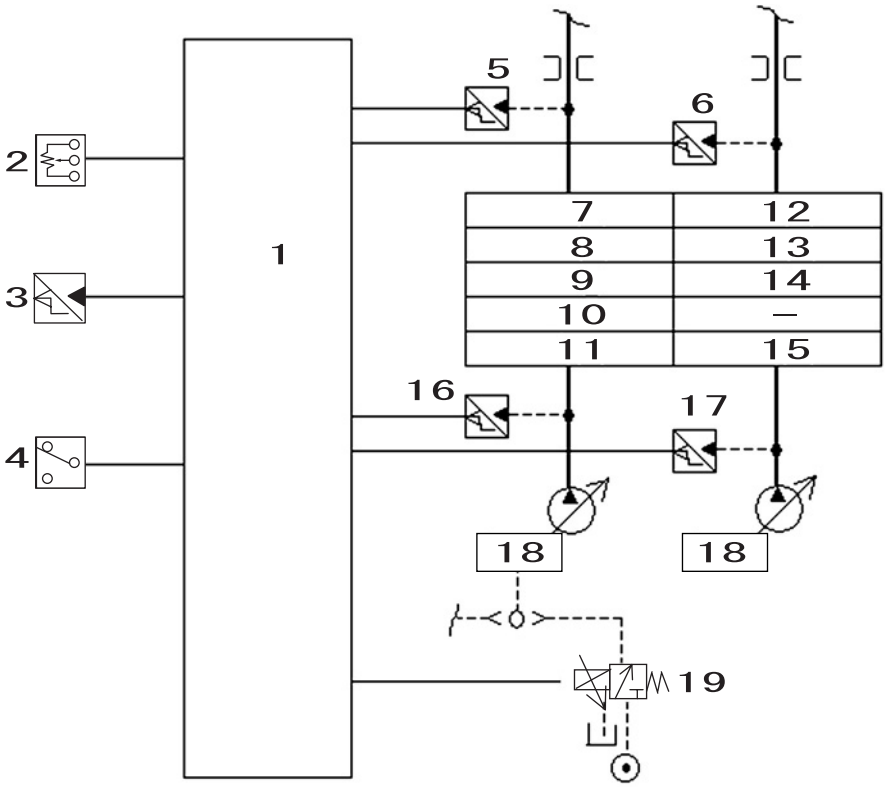

1	Computer A
2	Throttle volume
3	Travel pressure sensor
4	Option 1 pressure switch
5	N1 pressure sensor
6	N2 pressure sensor
7	Arm (1)
8	Boom (2)
9	Swing
10	Option 1
11	Travel (left)
12	Arm (2)
13	Boom (1)
14	Bucket
15	Travel (right)
16	P1 pressure sensor
17	P2 pressure sensor
18	Regulator
19	P1 flow control proportional valve

https://truckmanualshub.com/

Operation explanation

[1] Operation conditions for swing speed limit control
Control is executed when all the conditions below are satisfied.

1) Swing alone full lever operation ••• Judged from the N1 and N2 negative control pressure sensors and P1 and P2 pressure sensors
2) Travel non-operation • • • Travel pressure sensor OFF
3) The work mode is SP mode.

[2] Control contents
(SH210-5)
The output current to the P1 flow control valve is set to the maximum of 350 mA and the P1 pump flow is held down to 200 L / min.
(SH240-5)
The output current to the P1 flow control valve is set to the maximum of 350 mA and the P1 pump flow is held down to 214 L / min.

[3] Swing speed limit end conditions

1) Travel operation ⇒ Immediate end (to prevent drift)
2) Other attachment operation ⇒ Gradual end (to reduce shock)
3) Option circuit operation

https://truckmanualshub.com/

Travel

1. Travel Speed Switchover

The travel motor tilt revolution angle is changed by switching the travel speed between low speed and high speed with the switch.
However, in high-speed mode, if the drive force becomes high due to the functioning of the travel motor itself, the tilt revolution angle is automatically switched to low speed.
After that, when the drive force becomes low, the slope automatically returns to high speed.

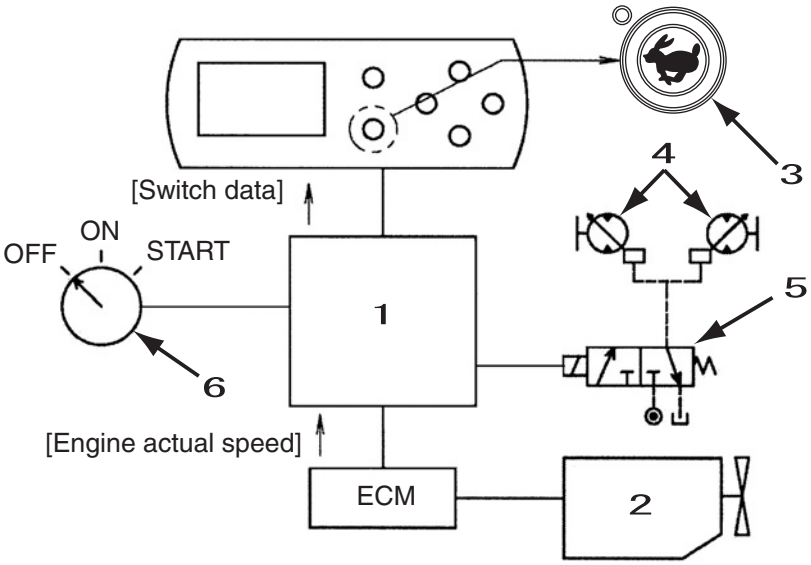

1	Computer A
2	Engine
3	Travel high-speed select switch
4	Travel motor
5	Travel high-speed solenoid
6	Key switch

[1] Operation

1) When the key is ON, the speed becomes low speed. The previous travel mode is reset.
(If the service support operation is changed, it is possible to hold the previous data.)
2) Each time the travel high-speed switch is pressed, the speed is switched between low speed and high speed. During high speed, the LED at the top left of the switch lights up.
3) While the engine is stopped with the key ON, if the high speed travel switch is pressed, the solenoid does not operate. The LED lights up.
(To prevent the battery being run down)
4) In high-speed mode, the tilt revolution angle is automatically switched between low speed and high speed by the travel motor drive force.
However, the electrical control remains at high speed, the high-speed LED remains lit, and the solenoid remains ON.

https://truckmanualshub.com/

[2] Trouble mode
If an abnormality occurs in communication (CAN) or computer solenoid output, the speed is fixed to low speed. (The travel high-speed solenoid comes OFF.)

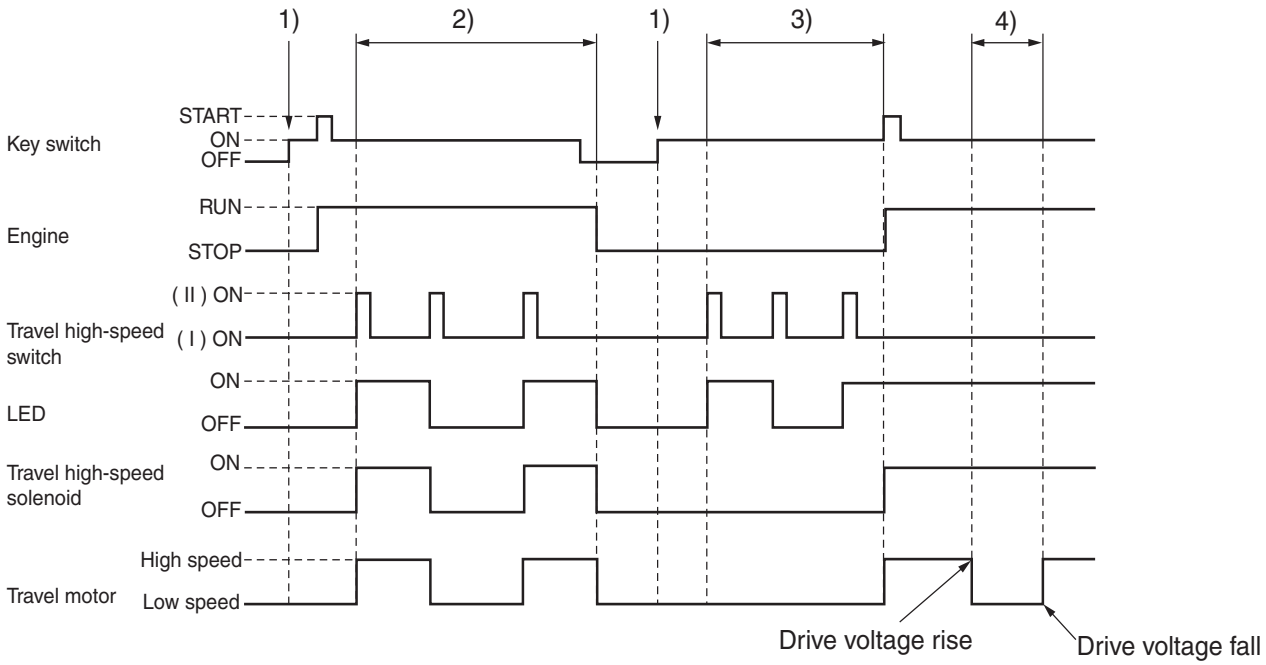

2. Travel Alarm

[1] Configuration

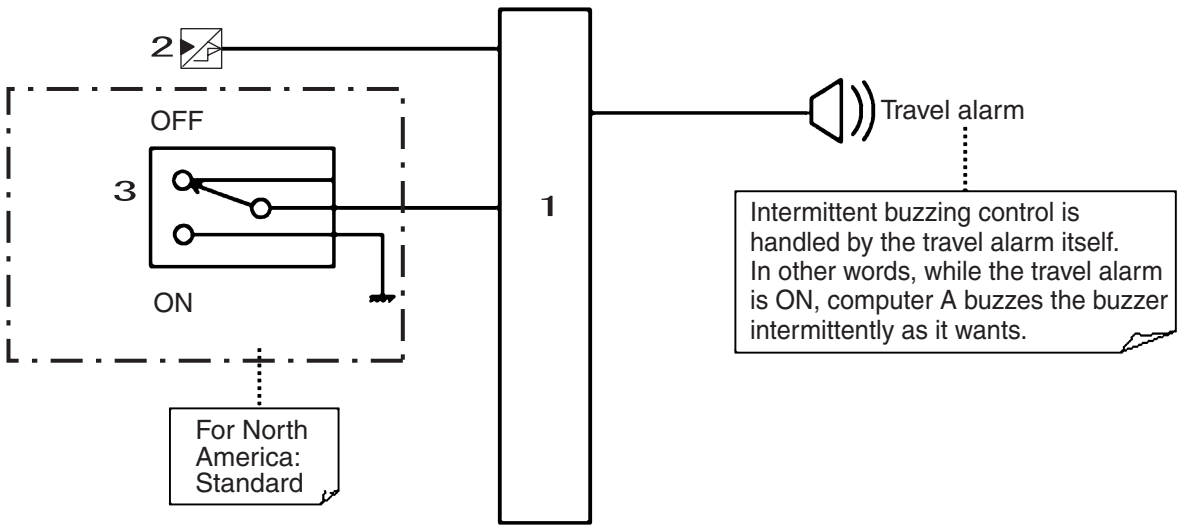

1	Computer A	3	Travel alarm mode select switch (alternator)
2	Travel pressure sensor		

[2] Travel alarm (automatic stop)
When the travel pressure sensor comes ON due to travel operation, the travel alarm starts 1 Hz intermittent buzzing. This buzzing automatically stops after 10 seconds.

[3] Travel alarm (continuous buzzing)
When the travel alarm mode select switch is switched ON, the buzzer buzzes continuously during travel. (Function for North America only)

[4] Signals when key is ON
After the key is switched ON, the travel alarm sounds for 0.4 second as a signal.

https://truckmanualshub.com/

[5] Time chart

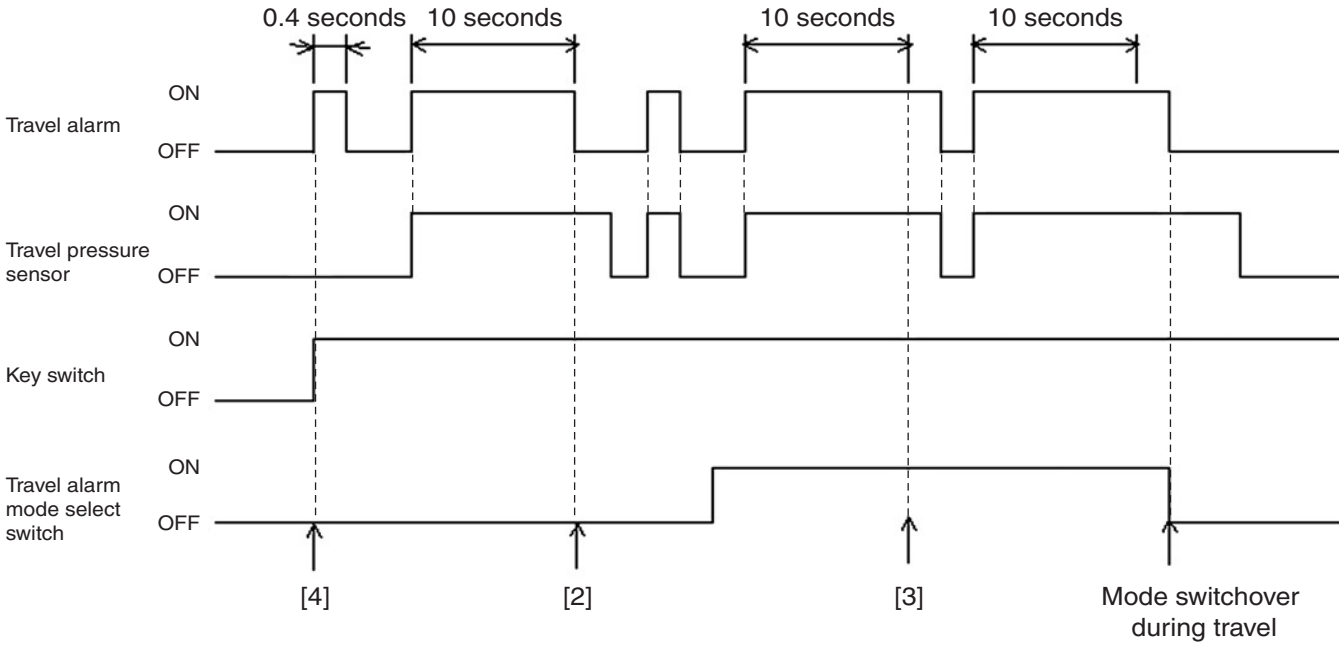

[6] Trouble mode
If trouble occurs in the travel pressure sensor, the machine goes into trouble mode and the travel alarm is always OFF.

E

https://truckmanualshub.com/

Valve Control

1. Lever Lock

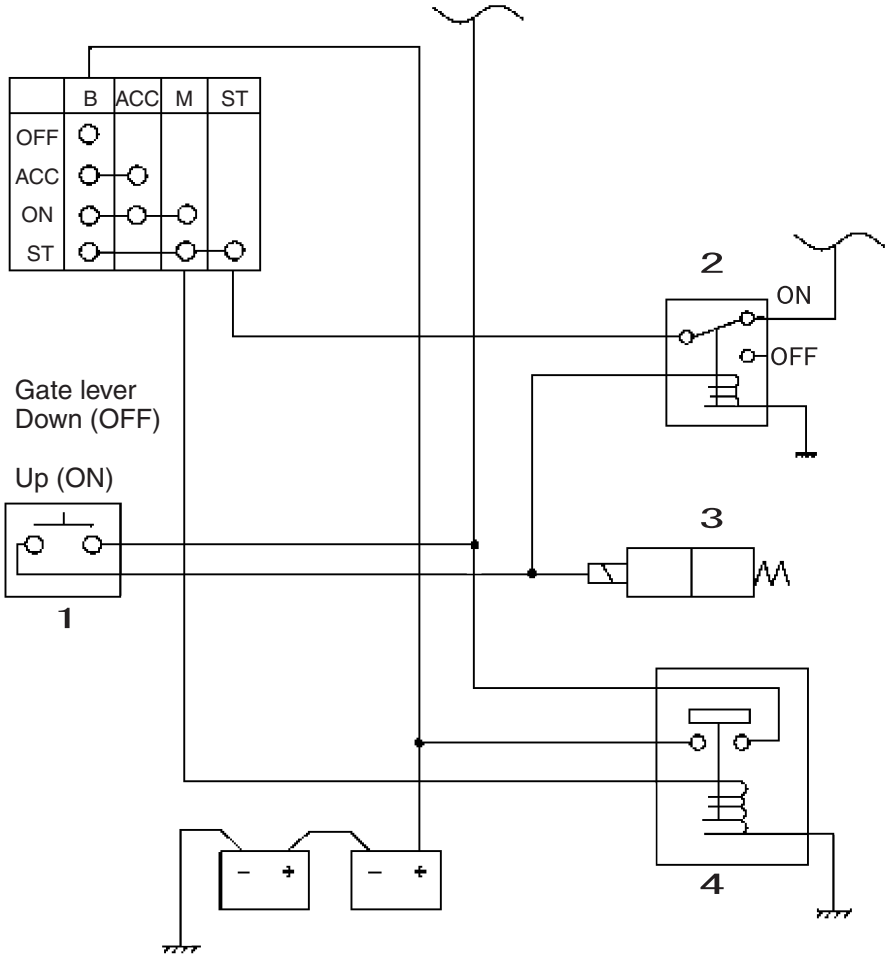

1	Gate lock limit switch	3	Lever lock solenoid
2	Starter cut relay	4	Battery relay

<Operation explanation>

When the battery relay is excited by the key being switched ON, the power enters the lever lock limit switch. When the gate lever is raised, the lever lock switch (limit switch) comes ON and the lever lock solenoid is operated. (For details on neutral start control, see Neutral Start in Explanation of Functions and Operations.)

https://truckmanualshub.com/

2. Solenoid Sticking Prevention

[1] Target solenoid

- Travel high-speed switchover solenoid
- Boost solenoid
- Option switchover solenoid
- Fan reverse solenoid (only for models with hydraulic drive fan)
- Free swing solenoid
- Bucket lock solenoid (only liftcrane application machines)

* Because the swing brake, power save solenoid, and electromagnetic proportional solenoid go ON and OFF frequently in regular work, they are not subject to control.

[2] Operation

When key ON, switched ON / OFF for 0.25 second.

After that, control is normal control. Control ends before the engine starts, so the machine does not operate accidentally.

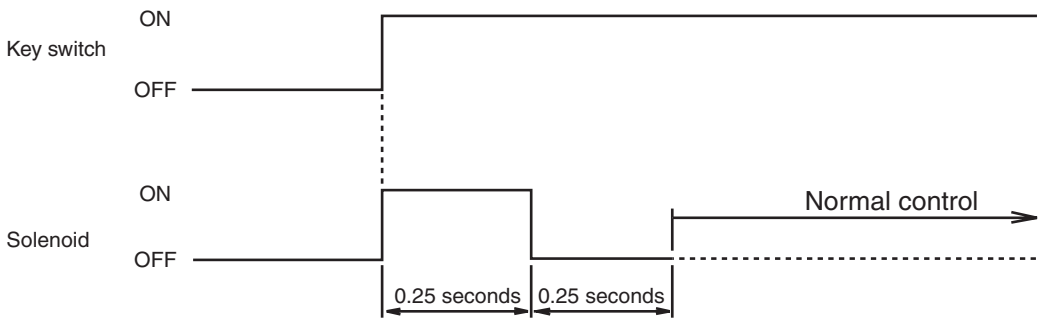

https://truckmanualshub.com/

3. Pressure Boost Control

[1] Configuration

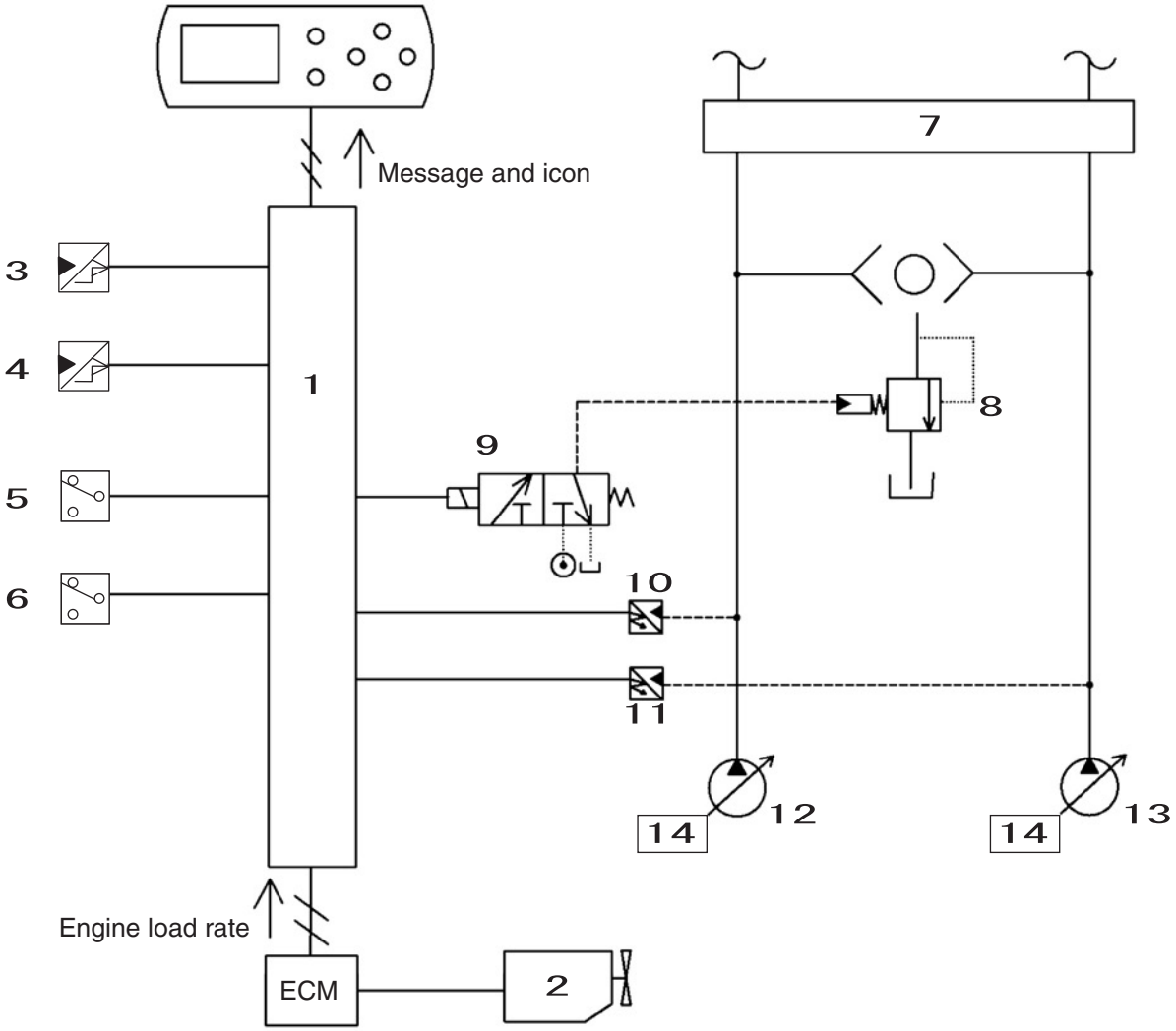

1	Computer A	6	Second option line pressure switch	11	P2 pressure sensor
2	Engine	7	Control valve	12	Pump 1
3	Upper side pressure sensor	8	Main relief valve	13	Pump 2
4	Travel pressure sensor	9	Boost solenoid	14	Regulator
5	Option line pressure switch	10	P1 pressure sensor		

[2] During upper side operation (upper side pressure sensor = ON), the next time the high-load conditions are met, the boost solenoid valve on the 5-stack solenoid valve comes ON, and the main relief valve pressure rises from 34.3 MPa to 36.8 MPa.
<Conditions>
When the engine load ratio rises and the P1 or P2 pump pressure is boosted.

[3] Auto power boost (ended by time restriction)
When the work mode is SP or H, the boost continues a maximum of 8 seconds, then is automatically ended (boost solenoid = OFF). When the work mode is A, this time restriction is eliminated and the pressure boost is always available.

[4] Auto power boost (ended by operation stop)
Even before the time limit for auto power boost, if the upper side pressure sensor goes OFF, the boost is ended.

[5] Boost prohibition
During travel (travel pressure sensor = ON) or the breaker is in use (option line pressure switch = ON and
breaker mode), the boost is not used. (Actuator protection)

https://truckmanualshub.com/

[6] Auto power boost setting
Auto power boost can be switched ON / OFF and boost for breaker operation enabled / disabled with service support operation.

[7] During boosting, icon is displayed on the monitor.

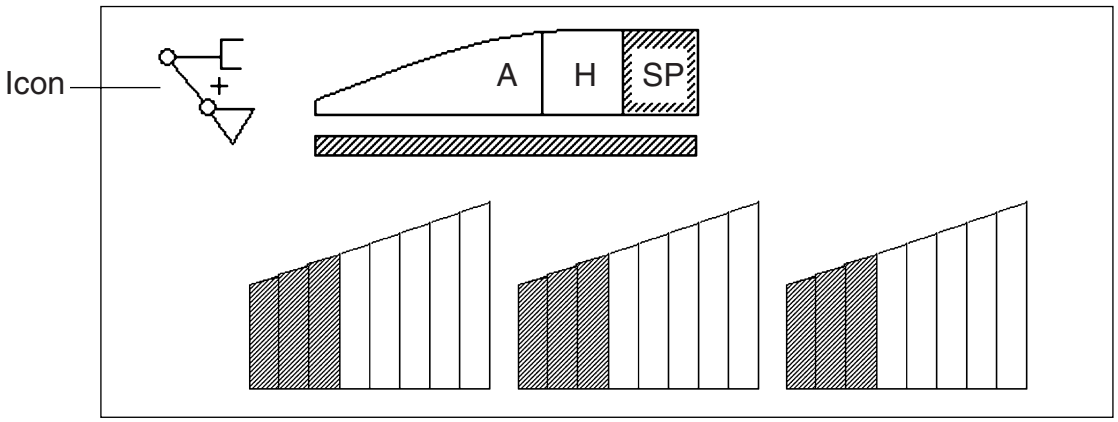

BE06002-002

[8] Time chart (when work mode = SP or H)

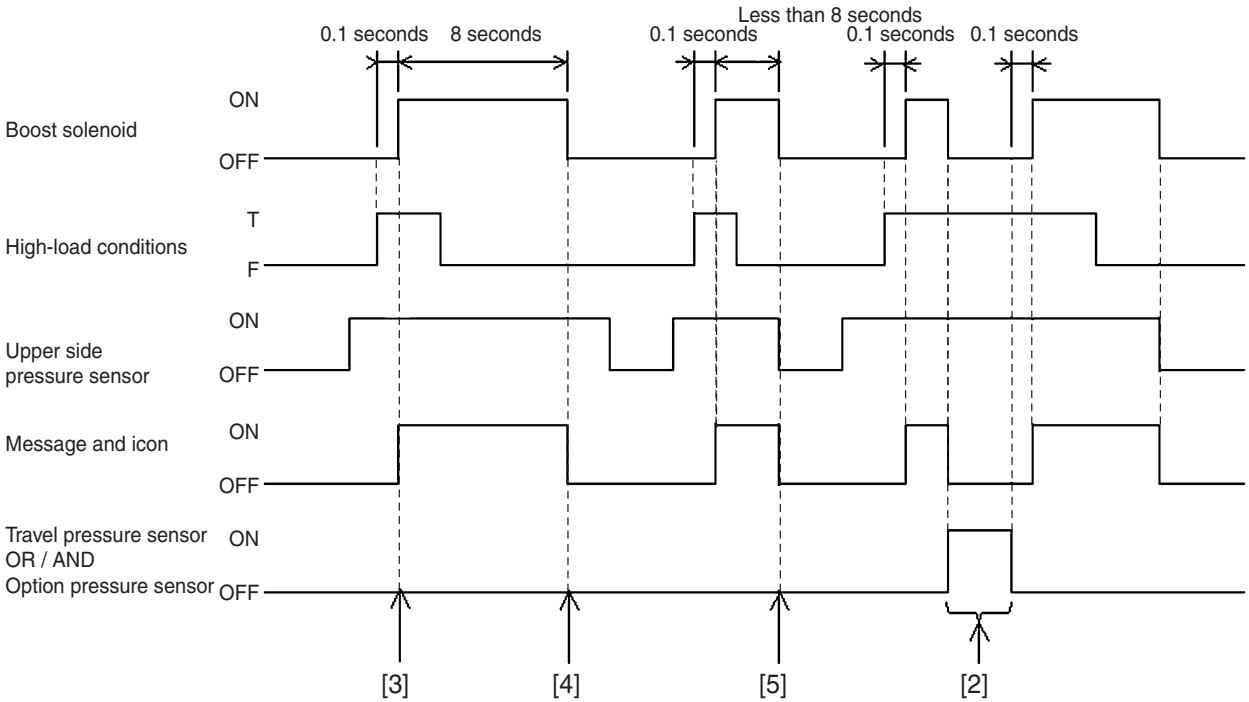

[9] Trouble mode
If trouble occurs in an input (upper side pressure sensor / travel pressure sensor), output (boost solenoid) or communication (CAN), the system goes into trouble mode. In trouble mode, the boost solenoid is fixed to OFF.

* Even if trouble occurs in UART communication , the system does not go into trouble mode.
* Trouble in the (2nd) option line pressure switch cannot be detected.

[10] Recovery from trouble mode
Even if the trouble is recovered from, trouble mode continues.

https://truckmanualshub.com/

Monitor Control

1. Bar Graph (coolant temperature gauge, oil temperature gauge, fuel gauge)

(1) Coolant temperature gauge

[1] Configuration

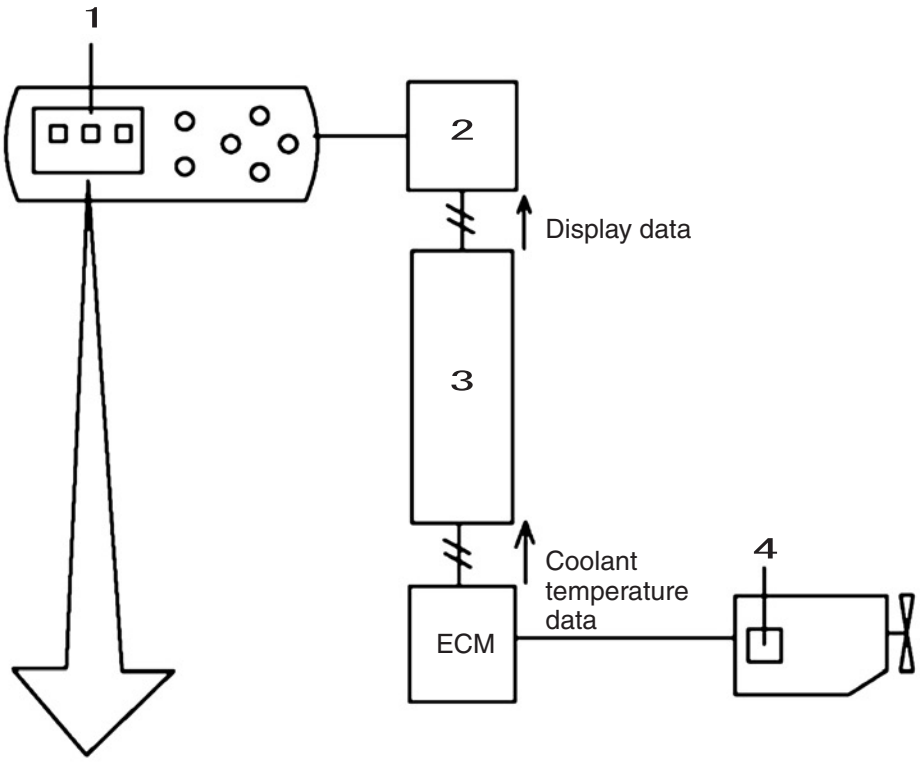

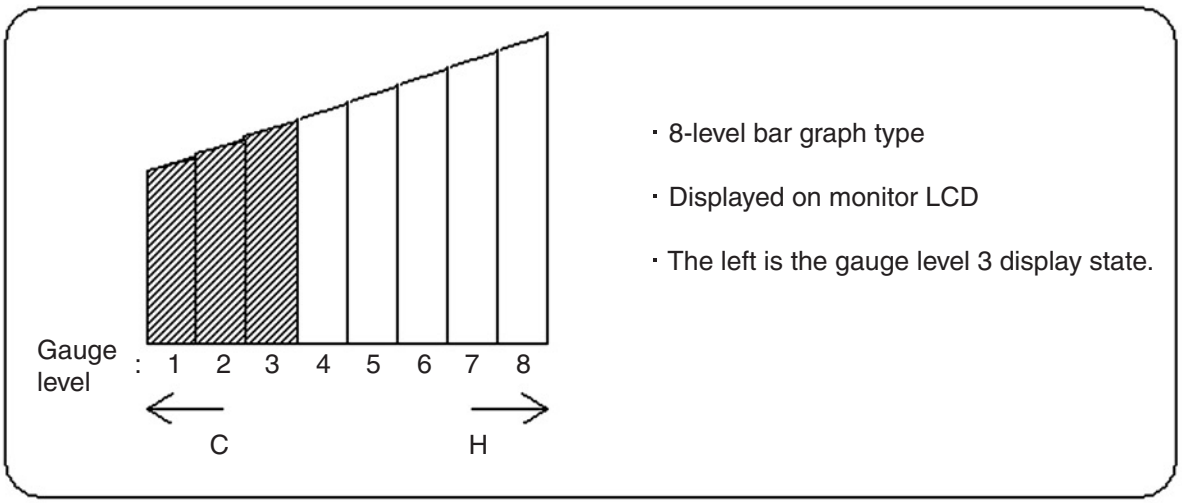

1	Coolant temperature gauge	3	Computer A
2	Monitor	4	Coolant temperature sensor

[2] Operation summary

The ECM reads the coolant temperature from the coolant temperature sensor installed on the engine and send to computer A through CAN communication. After computer A receives the coolant temperature, it judges the gauge level, and sends the display data to the monitor with UART communication.

https://truckmanualshub.com/

[3] Gauge coolant temperature
The gauge level is judged based on the figure below.

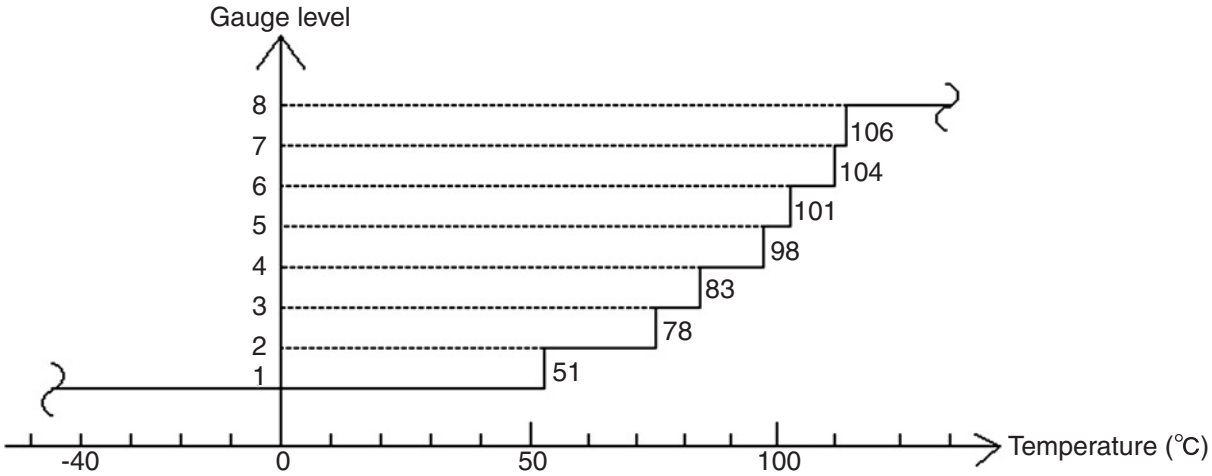

☆The same as current model

[4] Preventing flickering
When the temperature moves up or down near the gauge level fluctuation threshold (for example 51 °C), the gauge goes on and off repeatedly causing flickering. In order to prevent that, the gauge level is judged using the temperature (judgment coolant temperature) after the following processing.

- Judgment coolant temperature = Average of the coolant temperatures acquired the past 32 times
- Coolant temperature acquisition period = 1 second
- Bar graph update period = 32 seconds (updates when the 32nd coolant temperature acquired)

E

https://truckmanualshub.com/

[5] Trouble mode

If trouble occurs in the coolant temperature sensor or CAN bus, the bar graph itself is not displayed.

1) If there is a short, the bar graph display is immediately ended.
2) For a disconnection, the display goes off 3 minutes after the engine starts.

If trouble occurs in UART communication (computer → monitor), the display is fixed at the last state sent.
When the trouble is recovered from, the display returns to normal.
For a disconnection, when the key is switched OFF more than three minutes after the engine starts, then ON again, the display is recovered.

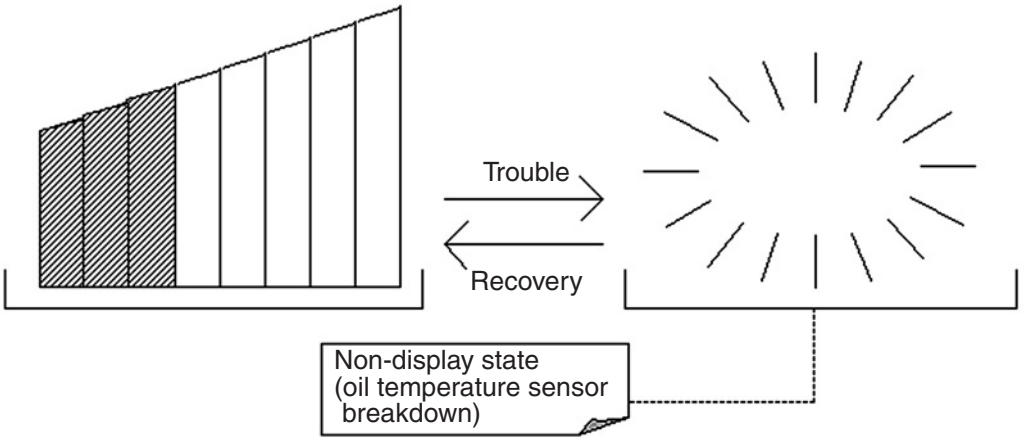

☆) Coolant temperature acquisition during trouble

If a meaningless coolant temperature were acquired and the processing in [4] carried out, display upon recovery would be strange. In order to prevent this, the coolant temperature is not acquired during a coolant temperature sensor or CAN bus trouble.

[6] Message display

When the gauge level reaches 8, "OVERHEAT" is displayed on the monitor and the buzzer buzzes.

https://truckmanualshub.com/

(2) Oil temperature gauge

[1] Configuration

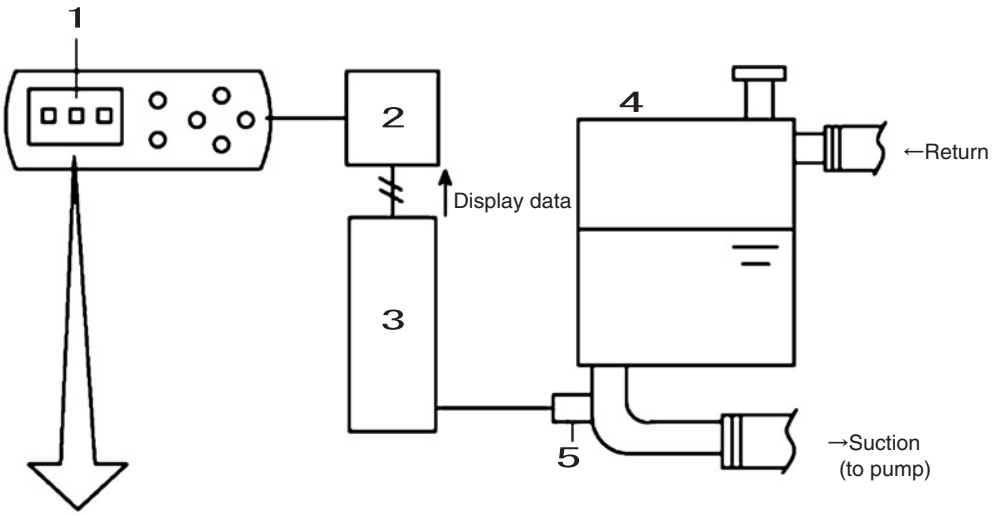

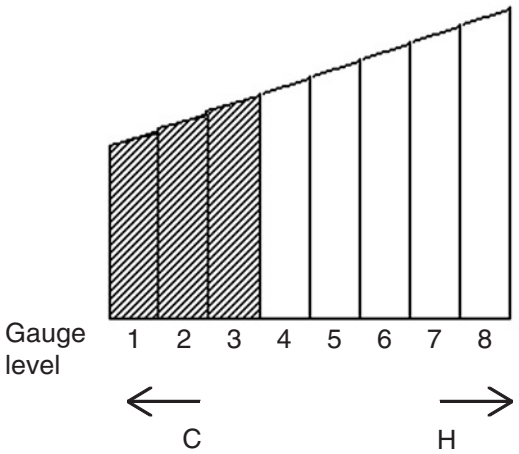

- 8-level bar graph type
- Displayed on monitor LCD
- The left is the gauge level 3 display state.

1	Oil temperature gauge	4	Hydraulic oil tank
2	Monitor	5	Oil temperature sensor
3	Computer A		

[2] Operation summary

Computer A reads the oil temperature from the oil temperature sensor installed in the hydraulic oil and judges the gauge level. The gauge level is sent to the monitor with UART communication.

https://truckmanualshub.com/

[3] Gauge and oil temperature
The gauge level is judged based on the figure below.

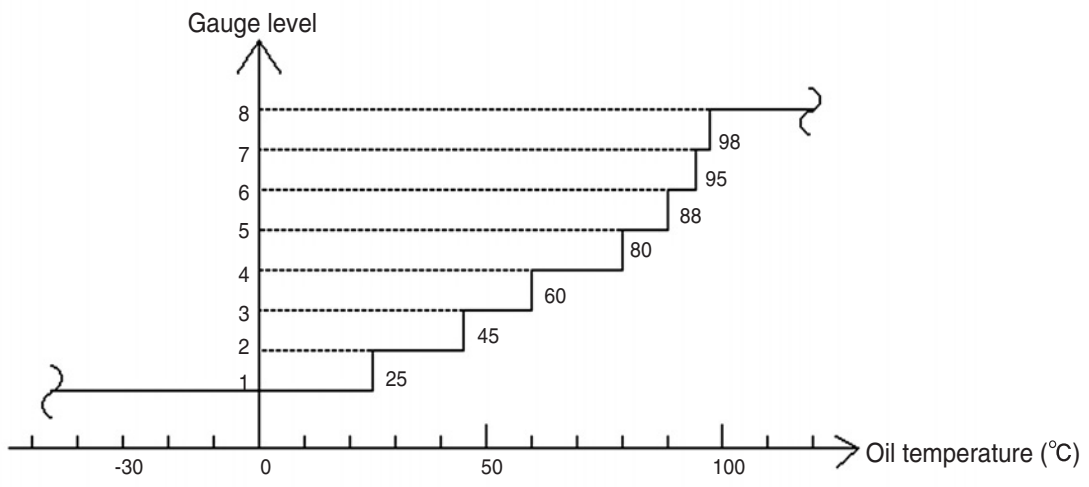

☆The same as current Model 3

[4] Preventing flickering
When the temperature moves up or down near the gauge level fluctuation threshold (for example 25 °C), the gauge goes on and off repeatedly causing flickering. In order to prevent that, the gauge level is judged using the temperature (judgment oil temperature) after the following processing.

- Judgment oil temperature = Average of the oil temperatures obtained the past 32 times
- Oil temperature acquisition period = 1 second
- Bar graph update period = 32 seconds (updates when the 32nd oil temperature acquired)

[5] Trouble mode
If trouble occurs in the oil temperature sensor, the bar graph itself is not displayed. (Only for trouble due to short)
If trouble occurs in UART communication (send: computer → monitor), the display is fixed at the last state sent.
When the trouble is recovered from, the display returns to normal.

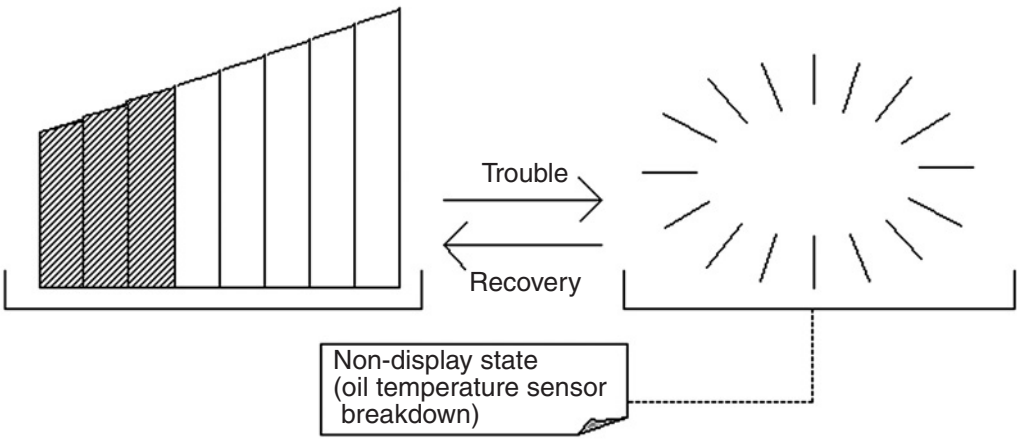

☆) Oil temperature acquisition during trouble
If a meaningless oil temperature were acquired and the processing in [4] carried out, display upon recovery would be strange. In order to prevent this, the oil temperature is not acquired during an oil temperature sensor trouble.

[6] Message display
When the gauge level reaches 8, "OVERHEAT" is displayed on the monitor and the buzzer buzzes.

https://truckmanualshub.com/

(3) Fuel gauge

[1] Configuration

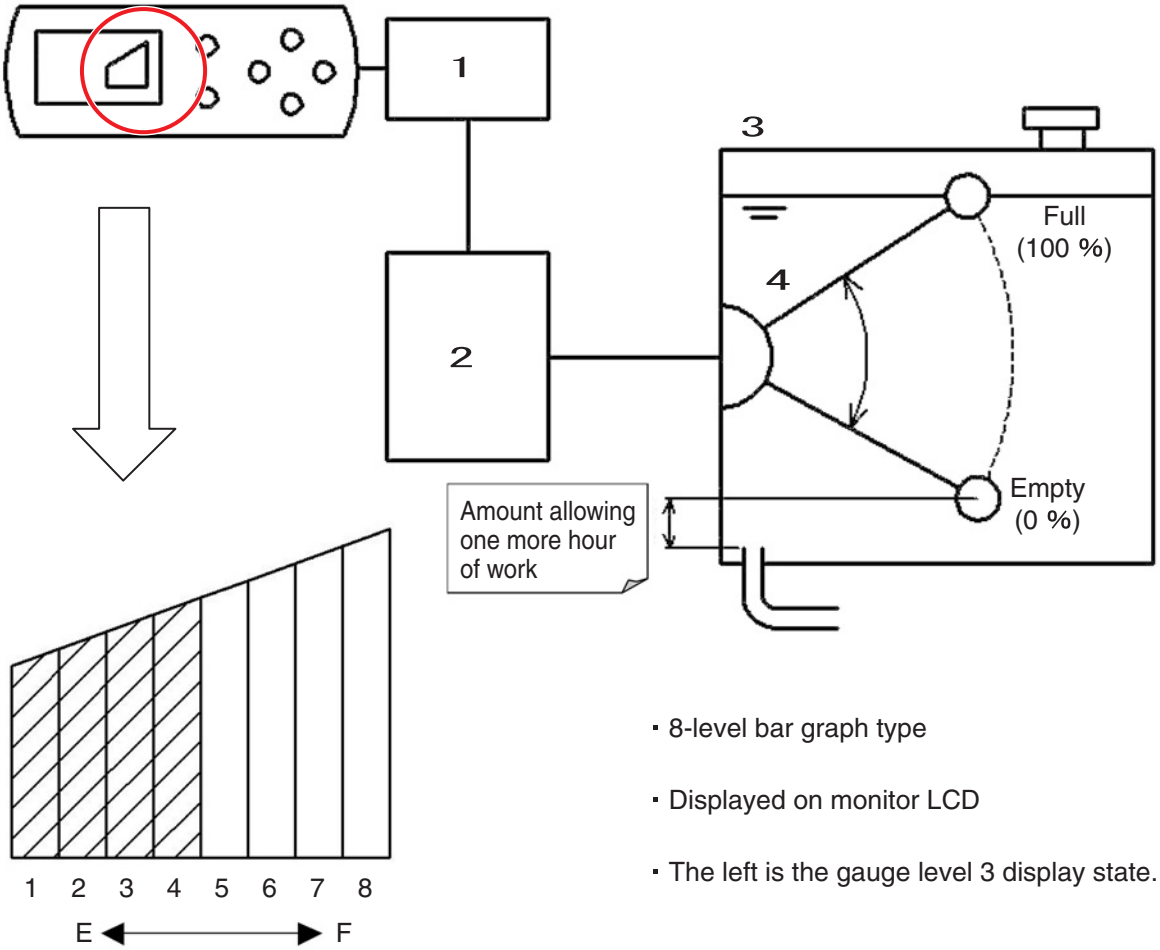

- 8-level bar graph type
- Displayed on monitor LCD
- The left is the gauge level 3 display state.

1	Monitor	3	Fuel tank
2	Computer A	4	Fuel sensor

[2] Operation summary

Computer A reads the fuel level from the fuel sensor installed in the fuel tank and judges the gauge level.

The gauge level is sent to the monitor with UART communication.

https://truckmanualshub.com/

[3] Relationship between gauge level and lever angle

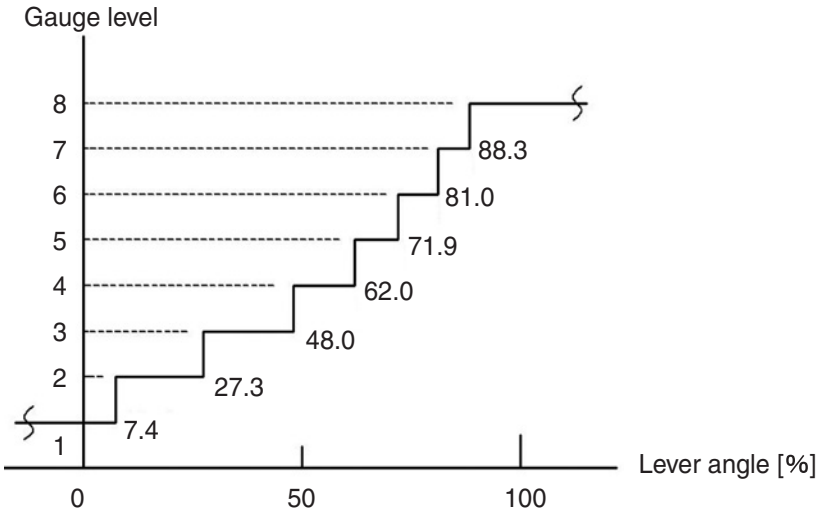

The figures in parentheses ( ) are the fuel sensor lever angles.

Model	Rated [L]	Gauge level and fuel level [L]								Reserve [L]
		8	7	6	5	4	3	2	1	
		(100% to)	(88.3% to)	(81% to)	(71.9% to)	(62% to)	(48% to)	(27.3% to)	(7.4% to)	(0.0%)
SH210-5	410	407.5 to	358.4 to	331.5 to	295.9 to	255.0 to	196.5 to	196.5 to	116.3 to	37.9
SH240-5	↑	↑	↑	↑	↑	↑	↑	↑	↑	↑

[4] Message display
When the gauge level reaches 1, "LOW FUEL" is displayed on the monitor and the buzzer buzzes. (See "Message Display List".)

[5] Preventing flickering
When the fuel surface in the tank shakes and the fuel sensor lever angle moves up or down near the gauge level fluctuation threshold (for example 7%), the gauge goes on and off repeatedly causing flickering.
In order to prevent that, the gauge level is judged using the lever angle (judgment lever angle) after the following processing.

- Judgment lever angle = Average of the lever angles obtained the past 32 times
- Lever angle acquisition period = 1 second
- Bar graph update period = 32 seconds (updates when the 32nd lever angle acquired)

[6] Trouble mode
If trouble occurs in the fuel sensor, the bar graph itself is not displayed.
If trouble occurs in UART communication, the display is fixed at the last state sent.
(Send: Computer A → Monitor)
When the trouble is recovered from, the display returns to normal.

[7] Lever angle acquisition during trouble
If lever angle were acquired and the processing in [5] carried out, display upon recovery would not be normal.
In order to prevent this, the lever angle is not acquired during a fuel sensor trouble.

https://truckmanualshub.com/

Accessories

1. Horn

Basic operation

[1] When the horn switch is pressed, the horn is driven via a relay.

[2] When the volume select switch is switched ON, the LED indicator lights up and only the left horn sounds. (Horn volume down)
The volume select switch state is retained even when the key is switched OFF.(The previous data is held.)

[3] communication with computer
When this switch is pressed, the signal is first sent to the computer and processed.
Then, the drive command is sent to the monitor and the monitor drives the right horn (R) relay.

[4] Trouble mode
If there is an error in UART communication, the monitor goes into trouble mode.
In trouble mode, the monitor carries out the operation in [2] on its own without receiving commands from the computer.
However, the previous data is not held. (The monitor always starts up with normal volume.)
When the error is recovered from, trouble mode ends too and the monitor returns to normal mode.

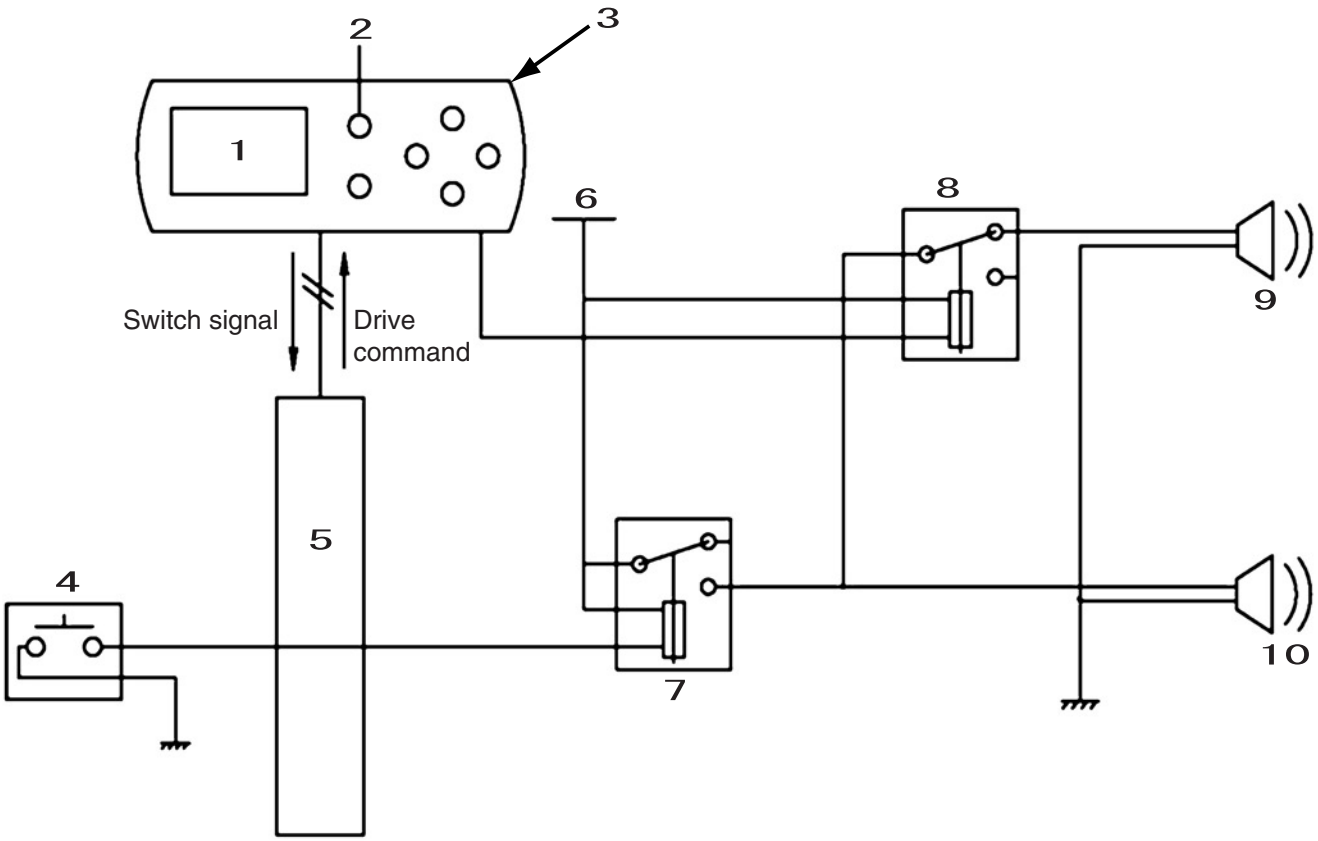

1	Monitor panel	6	Key switch
2	Horn volume select switch	7	Horn (L) relay
3	(Swith LED indicator)	8	Horn (R) relay
4	Horn switch	9	Horn (R)
5	Computer A	10	Horn (L)

https://truckmanualshub.com/

2. Working Light

Basic operation

[1] When turning the key to ON, always start with the working light OFF. (Previous data reset)

[2] Each time the working light switch is pressed, the working light is switched between ON and OFF. (Momentary)
When this light is ON, the LED indicator lights up.

[3] communication with computer
When the working light switch is pressed, the signal is first sent to the computer and processed.
Then, the light command is sent to the monitor and the monitor drives the relay.

[4] Trouble mode
If there is an abnormality occurs in UART communication, the monitor goes into trouble mode. In trouble mode, the monitor carries out the operation in [2] on its own rather than commands from the computer.
When the communication error is recovered from, trouble mode is exited and the monitor returns to normal mode.

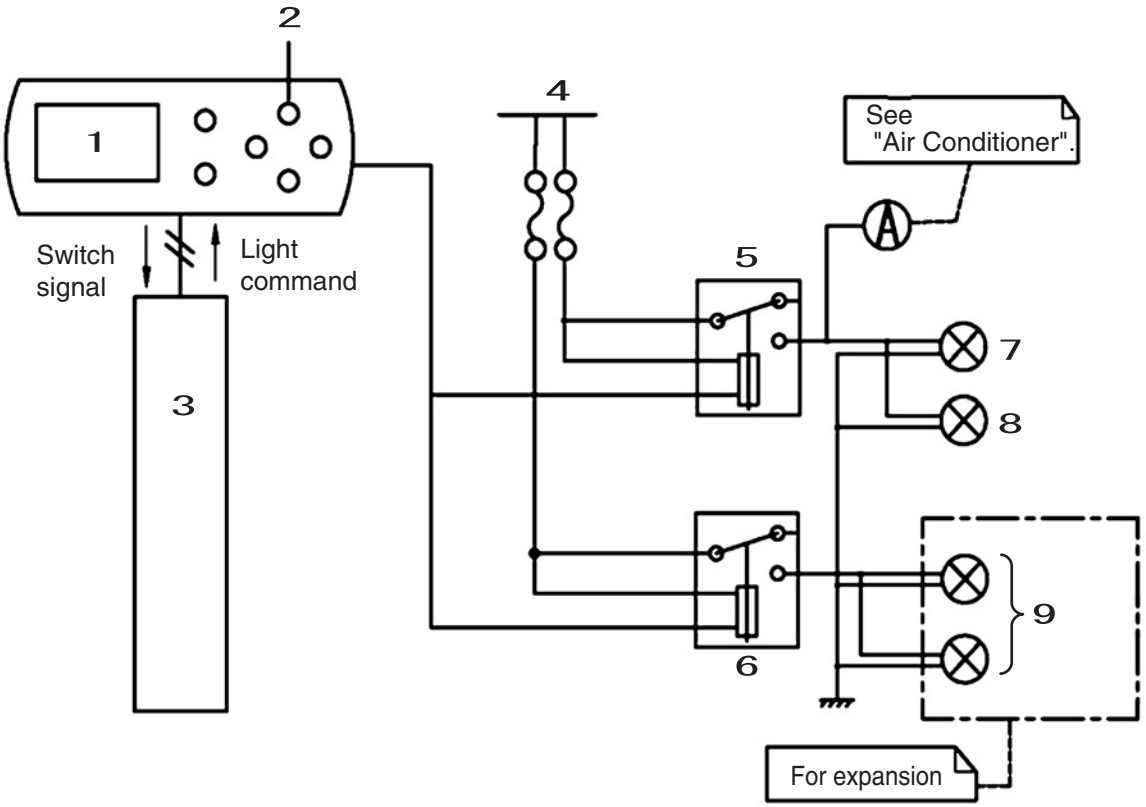

1	Monitor panel	6	Working light relay (cab)
2	Working light switch (with LED indicator)	7	Working light (boom)
3	Computer A	8	Working light (tool etc.)
4	Key switch	9	Working light (cab top)
5	Working light relay (upper)		

https://truckmanualshub.com/

3. Wiper & Washer

[1] Configuration

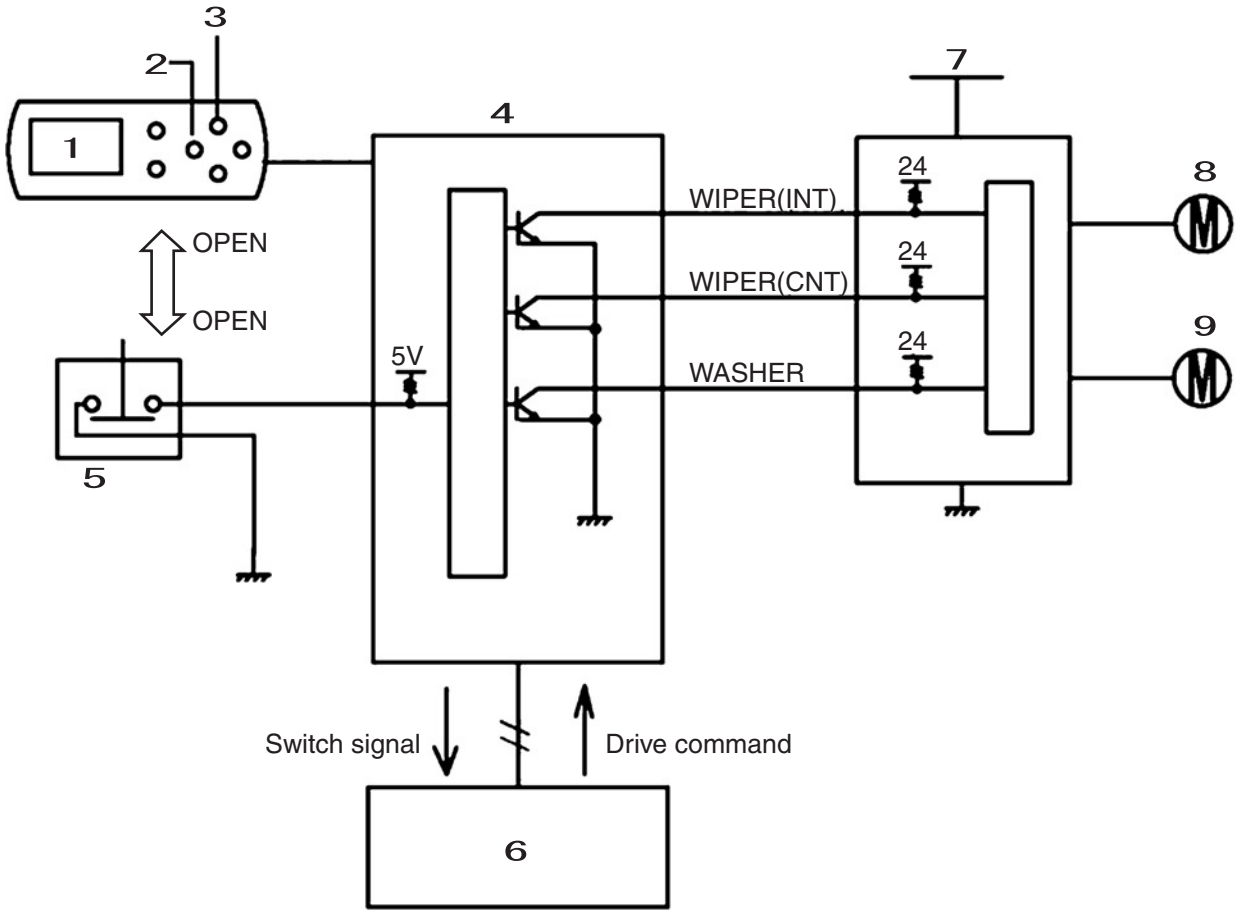

1	Monitor panel	4	Monitor	7	Key switch
2	Washer switch	5	Front window limit SW	8	Wiper motor
3	Wiper switch (with LED indicator)	6	Computer A	9	Washer motor

[2] Wiper basic operation

When the wiper switch is pressed, it switches to the next state in the order: intermittent operation → continuous operation → OFF → intermittent. In intermittent operation, the I LED is lit and in continuous operation, the II LED lights up. (When the wipers are OFF, both are OFF.) When turning the key ON, always start from OFF. (Previous data reset)

[3] Washer basic operation

While the washer is pressed, the washer operates.

[4] Wipers linked with washer

While the washer switch is pressed, after 0.5 second, the washer starts to operate linked with the wipers.
When the washer switch is released, the washer stops, and after two wipes, the wipers stop too.

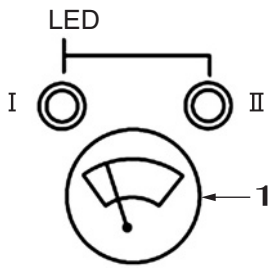

1	Wiper switch

1) Auto rise up
   Even during wiper operation, if the key is turned OFF, the wipers are automatically stopped and retracted.
2) Overload prevention
   If the blades are locked, the monitor output is stopped.

[5] Front window open detection

If the front window is opened while the wipers or washer are operating, it is stopped.
The operations of [2] and [3] are not carried out while the front window is open.

https://truckmanualshub.com/

[6] Wiper computer duty
The wiper computer is responsible for [2] - [4]. [5] is provided by the monitor / computer detecting the front window being opened and the output to the wiper computer being switched OFF.

[7] Computer A duty
Computer A receives switch signals from the monitor through UART communication (wiper switch, washer switch, front window limit switch).
This signal is processed by computer A and the three ports that control the wiper computer (WIPER (INT), WIPER (CNT), and WASHER) are controlled as in the following time chart.

[8] Time chart

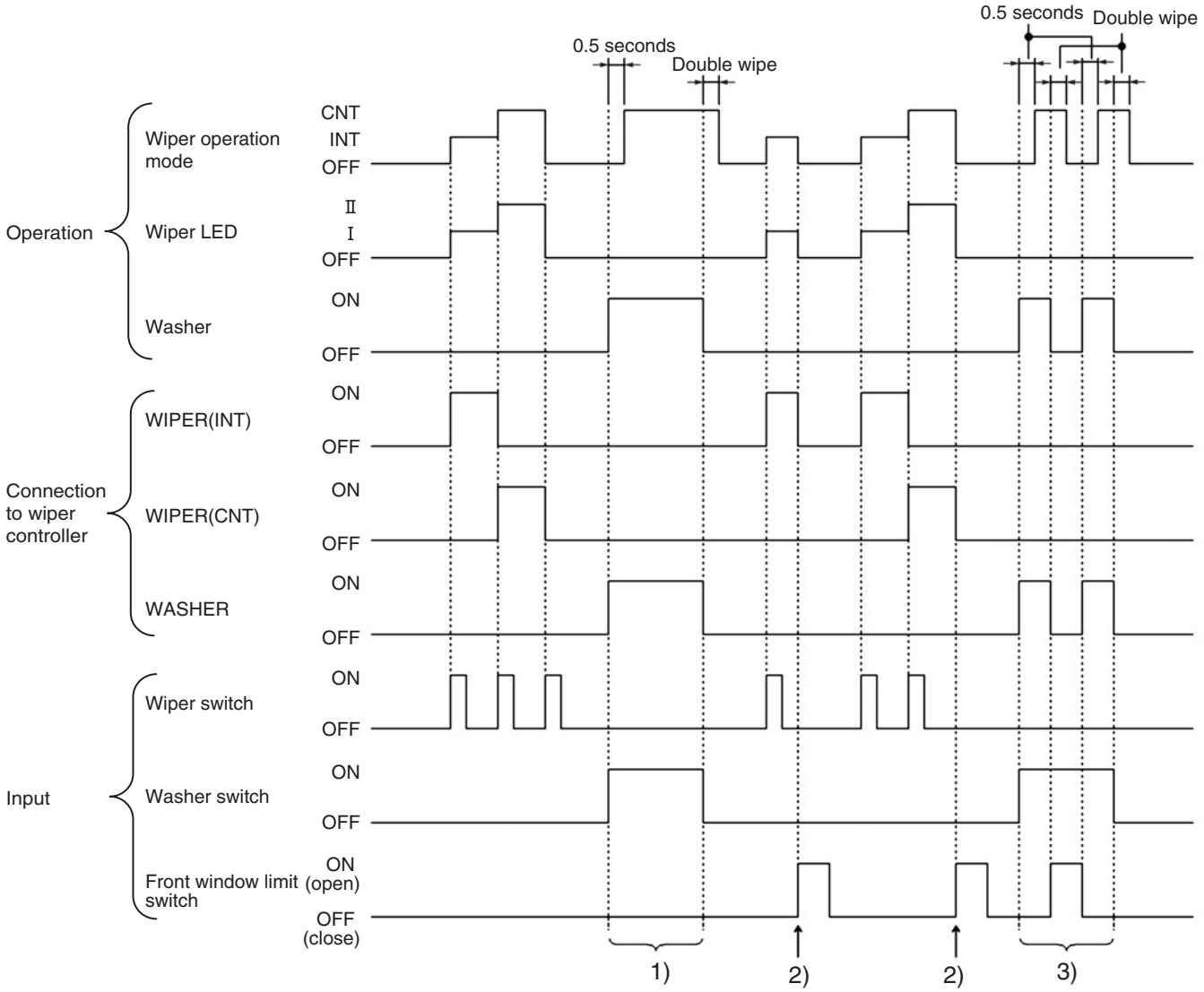

1) During washer operation, wiper operations are handled automatically by the wiper computer even if there is no output to WIPER (INT) or WIPER (CNT).
2) Wiper stop by front window open detection
3) Washer-linked wiper stop by front window open detection

[9] Trouble mode
If there is an error in UART communication, the monitor cannot receive drive commands from computer A. At this time, the monitor goes into trouble mode and executes the same control as for on its own as in [8].
When the UART communication error is recovered from, the monitor recovers from trouble mode and follows the drive commands from computer A.

https://truckmanualshub.com/

4. Room Lamp

[1] Configuration

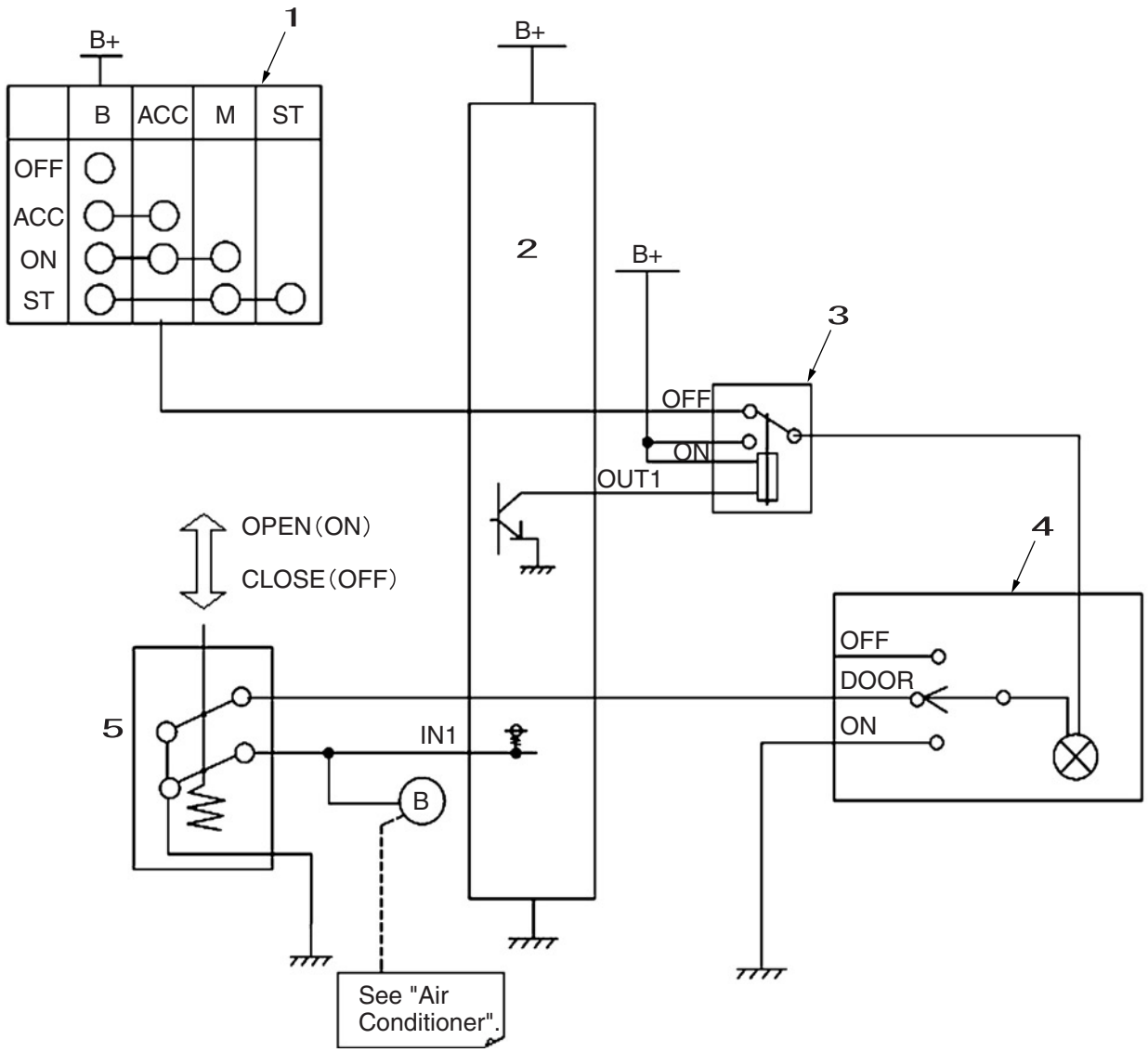

1	Key switch	4	Room lamp
2	Clock unit	5	Door limit switch
3	Room lamp relay		

- The clock unit is not connected with computer A or B and controls the room lamp relay on its own.
- For the Ⓑ connection destination, see "Air Conditioner".
- The clock unit is connected to the backup power supply and continues to operate even if the key is switched OFF.

[2] Door link

When the room lamp switch is set to the DOOR position, the lamp lights when the door is open and goes out when the door is closed.

[3] Auto lamp off

In [2], in order to prevent the battery from being run down, the room lamp goes out 30 seconds after the door is opened. However, this function only works when the key switch is OFF. If it is ACC or ON, auto lamp off does not work.(Because even if the room lamp relay is OFF, power is supplied from ACC.)

The only purpose of this auto lamp off function is to prevent the battery from being run down if the door is left open with the key OFF.

https://truckmanualshub.com/

[4] Time chart
The time chart shows how the function in [3] works. The room lamp switch is set to DOOR.

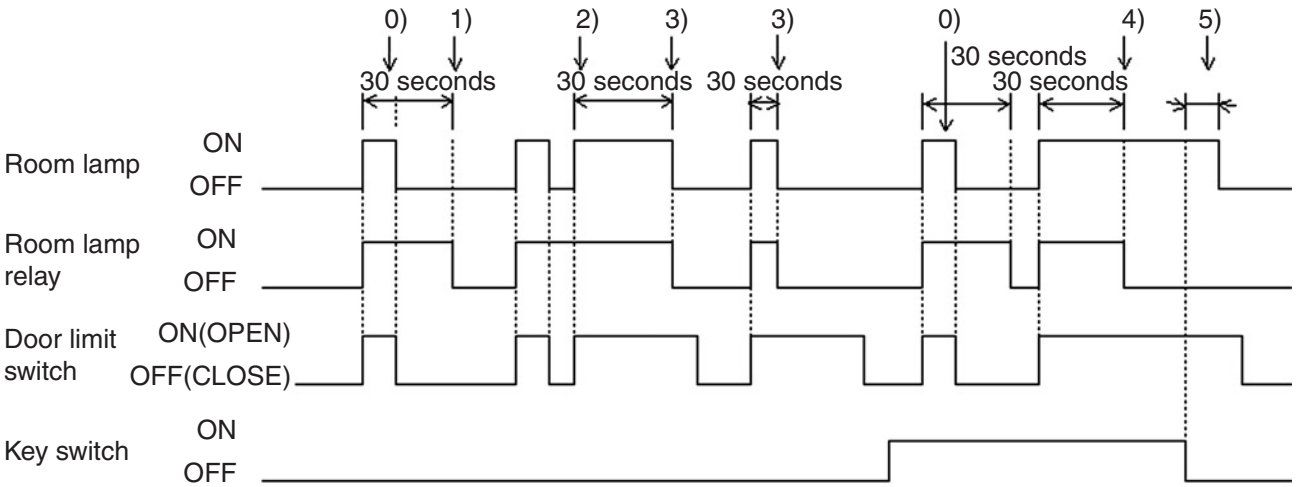

0) Door linked room lamp
1) Even after the door is closed, the room lamp relay is ON for 30 seconds.
2) 30 seconds is counted from the last time the door was closed.
3) After 30 seconds, the lamp goes off automatically.
4) Auto lamp off does not work if the key switch is ON or ACC.
5) When the key is switched OFF, the lamp goes out. (After power-cut delay)

[5] Trouble mode
Since the clock unit does not have a trouble detection function for either input (IN1) or output (OUT1), it does not go into trouble mode.

[6] Time chart
This shows the operation when the room lamp switch is ON.

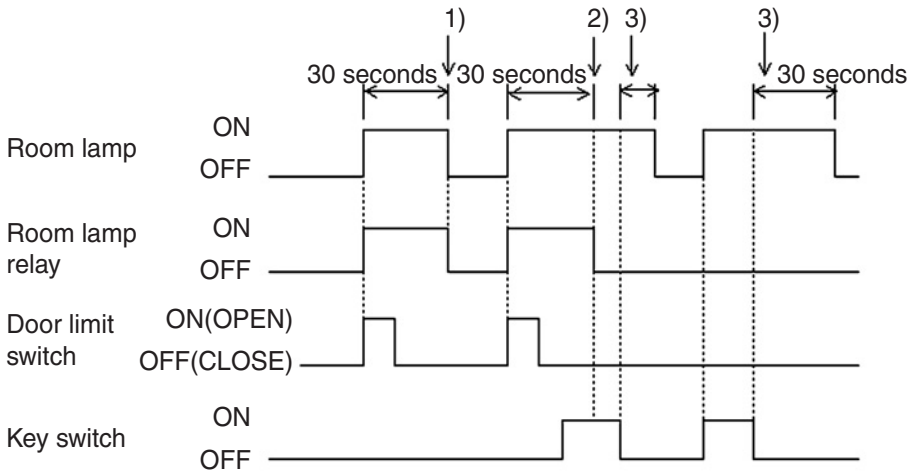

1) If the key is OFF, the lamp goes out automatically after 30 seconds.
2) The door is open, so it does not go out.
3) Power-cut delay

https://truckmanualshub.com/

5. Radio Mute

[1] Configuration

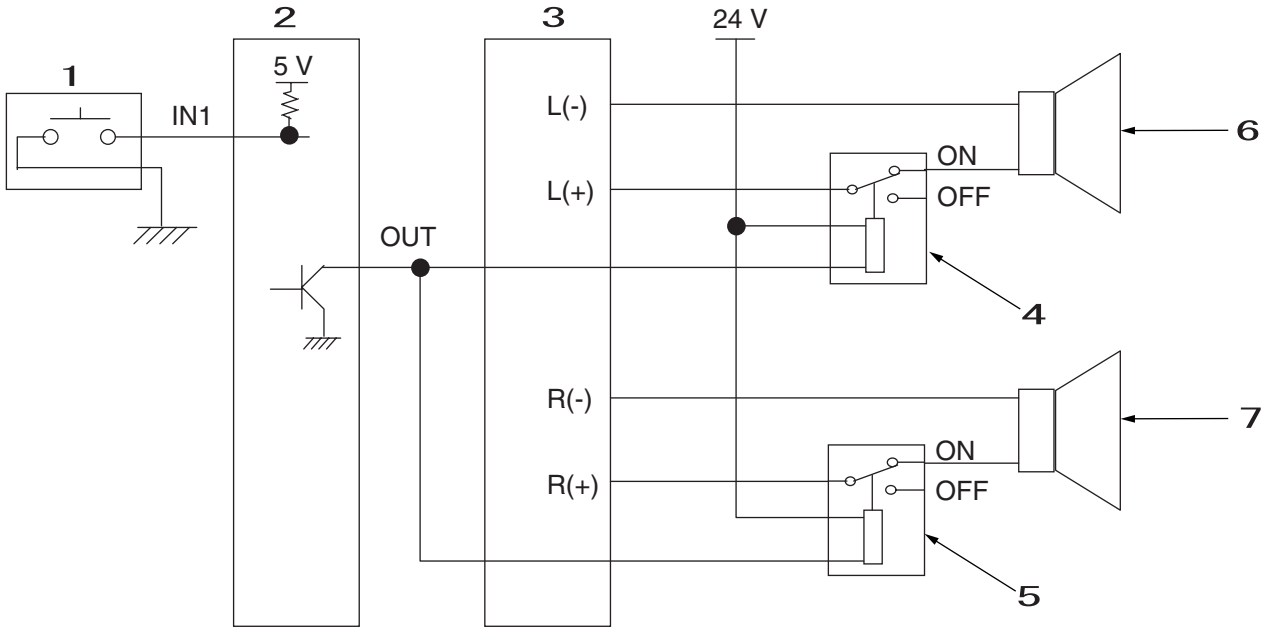

1	Mute switch (knob)	5	Speaker (R)
2	Clock unit	6	Speaker (L) relay
3	Radio	7	Speaker (R) relay
4	Speaker (L)		

[2] Summary and purpose

The radio volume can be switched ON / OFF with one-touch by switching the speaker (L, R) signal lines on and off with a relay.

[3] Operation

Each time the mute switch on the knob is pressed, the radio volume is switched between ON ⇔ OFF. (Momentary)

When the key is switched ON, the radio always starts with mute off (normal radio volume).(Previous data reset)

[4] Battery save

In order to prevent the battery from being run down, when the key is at ACC (accessory), the radio is always set to mute off (normal radio volume).

[5] Time chart

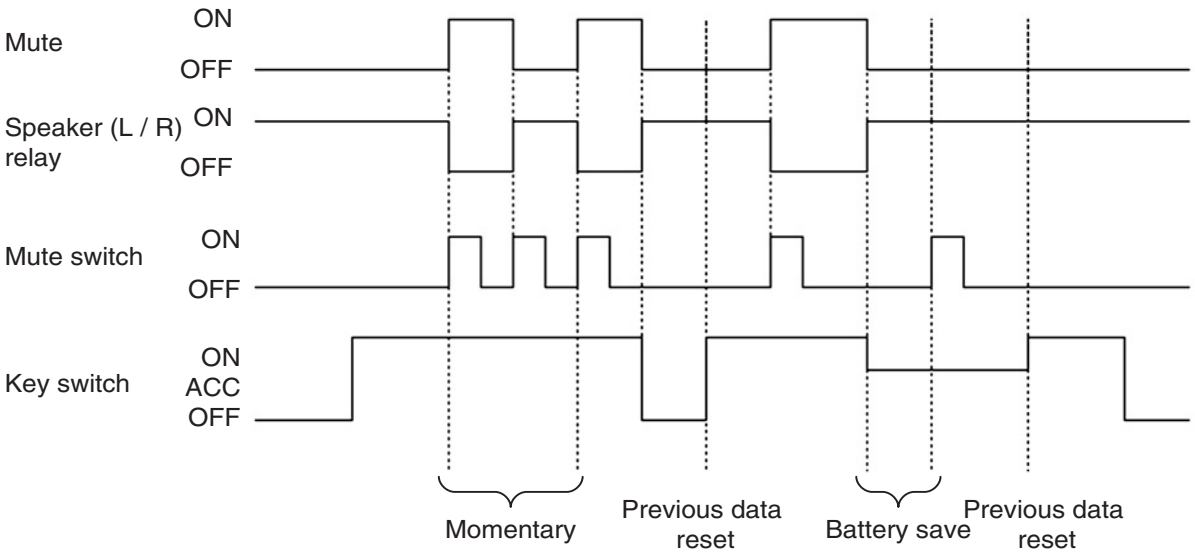

https://truckmanualshub.com/

Others

1. Anti-theft Protection

(1) Anti-theft protection control

If the anti-theft protection password does not match (anti-theft protection is not ended), the machine operation is controlled.

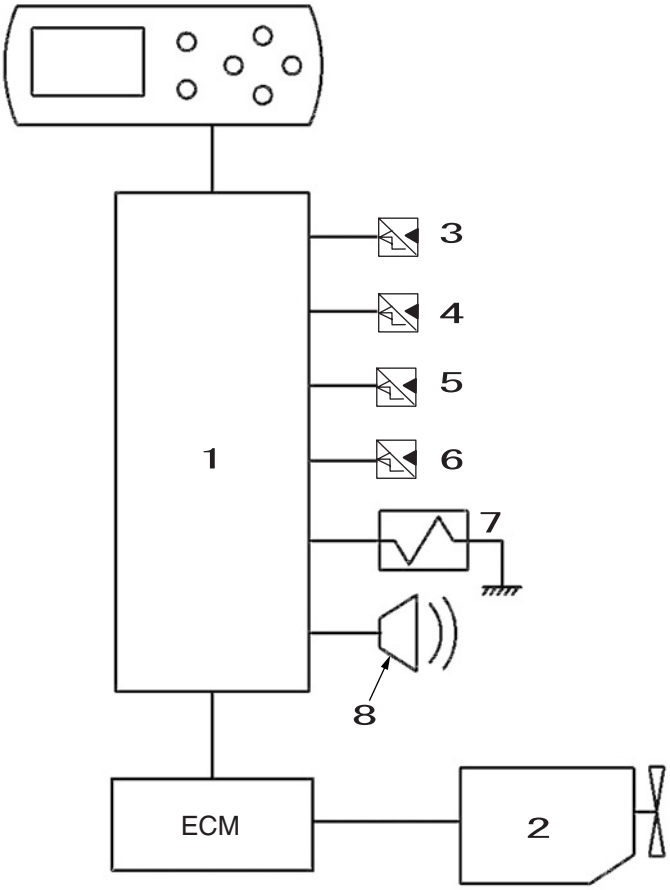

1	Computer A	5	Travel pressure sensor
2	Engine	6	Upper side pressure sensor
3	P1 pressure sensor	7	Swing brake solenoid
4	P2 pressure sensor	8	Travel alarm

[1] If the engine is started without ending the anti-theft protection, the machine is controlled as follows.
1) The engine speed is fixed at low idle.
2) The swing brake cannot be released. (Solenoid operation is not possible.)
3) The travel alarm buzzes continuously.

[2] In the state in [1], if any of the following operations is executed, the engine is forced to stop.
1) Upper side or travel operation (Detected by the corresponding sensor)
2) The P1 or P2 pressure rises to 5 MPa or higher.
3) The engine load is 50 % or higher for two seconds cumulative.
4) The upper side, travel, P1, or P2 pressure sensor is removed.

[3] Even in the state in [1], the anti-theft protection control can be ended by inputting the correct password.

https://truckmanualshub.com/

2. Battery Save Function

[1] Summary and purpose

In order to prevent the battery from being run down when the key is ON and the engine is stopped, solenoid and proportional valve output is suppressed.

[2] Operation

See the table below.

Control targets	Operation when the engine is stopped with the key ON.
Travel high-speed switchover solenoid	Fixed to OFF (low-speed) whether the travel speed select switch ON or OFF However, the LED at the side of the switch is linked with the switch.
Power save solenoid	Fixed to OFF (power save OFF)
Free swing solenoid	Fixed to OFF (free swing OFF) whether the free swing switch ON or OFF However, the free swing icon on the monitor is linked with the switch.
Option return line switchover solenoid	Fixed to OFF (crusher side) whether the breaker / crusher mode switch ON or OFF However, the attachment icon on the monitor is linked with the switch.
Boost solenoid	Fixed to OFF (no boost) regardless of the work mode (throttle volume position) However, the status icon on the monitor is linked with the throttle.
Pump horsepower proportional valve	0 mA, so the standby current for detecting disconnections of 50 mA does not flow. Disconnections are only detected after the engine has started.
Pump flow proportional valve	Same as above

E

https://truckmanualshub.com/

3. Alternator Power Generation Detection

[1] Configuration (fuses etc. omitted)

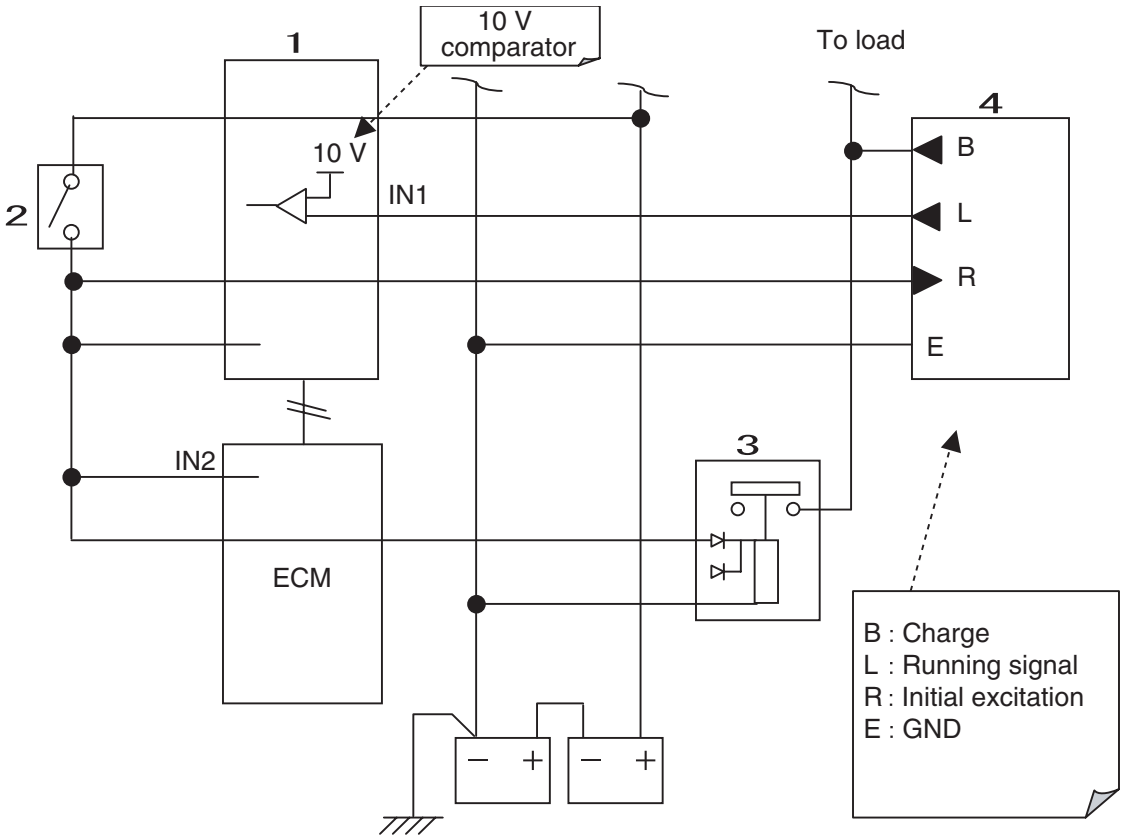

1	Computer A	3	Battery relay
2	Key switch	4	Alternator

[2] Separated from battery voltage
When the battery relay is closed, by looking not at the B terminal, where the battery voltage is applied, but rather to the independent L terminal, defects in the alternator alone are detected. (The battery voltage is monitored by the ECM. (IN2))

[3] Operation
Alternator L terminal output voltage judged with 10V comparator
ON when L terminal voltage ≧ 10 V
OFF when L terminal voltage < 10 V * The threshold value of 10 V has a tolerance of ±1 V.

[4] Power generation defect judgment
If the 10V comparator input is OFF even though the engine is running, it is judged that there is a power generation defect. For details on the judgment conditions, see the "Main Unit Error Code Table".

https://truckmanualshub.com/

4. Overload Alarm

[1] Configuration

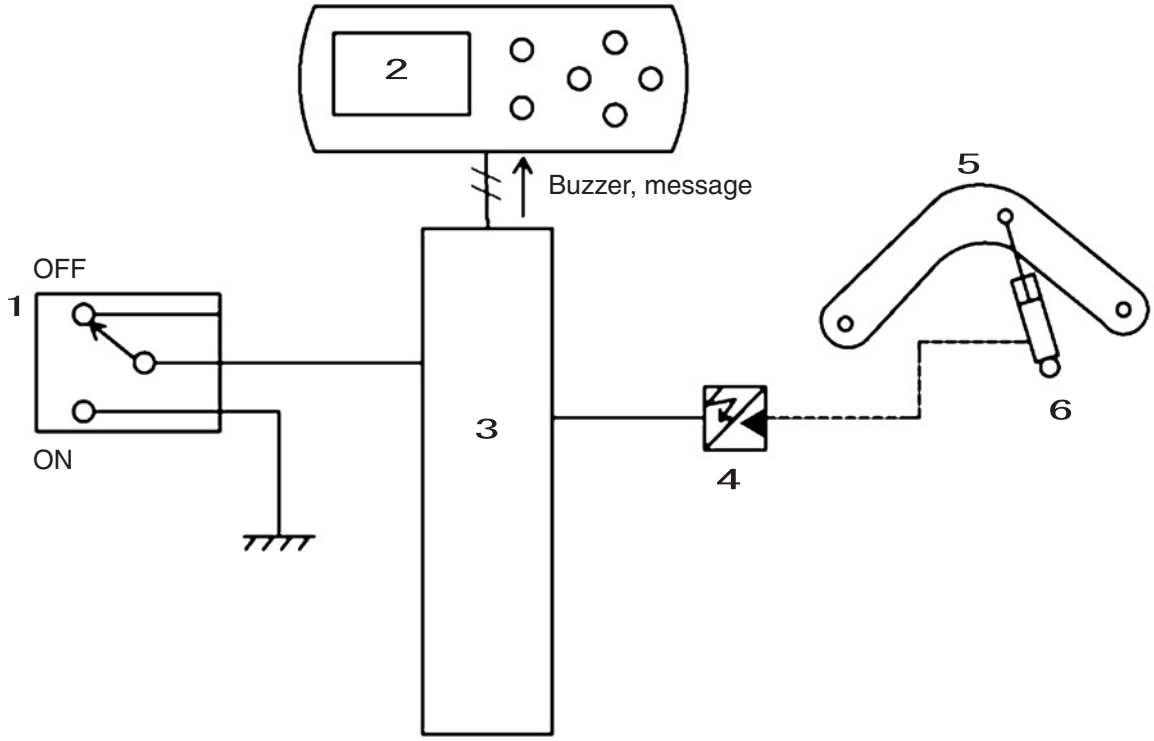

1	Overload alarm switch (alternate)	4	Boom cylinder bottom pressure sensor
2	Monitor panel	5	Boom
3	Computer A	6	Boom cylinder

[2] This function is only mounted on machines for Turkey

[3] Alarm judgment
When the overload alarm switch is ON, the overload alarm is switched ON / OFF according to the following conditions.
ON: (Boom cylinder bottom pressure ≧ set pressure) for 1 continuous second
OFF: (Boom cylinder bottom pressure ≦ set pressure - 2 MPa) for 1 continuous second
* For the set pressure for each model, see "Overload set pressure".
* The set pressure can be changed with CFG.

[4] Operation when alarm judgment ON
The "OVER LOAD" message is displayed on the monitor and the buzzer buzzes intermittently.
This message is handled as an "alert". For details, see "Message Display List".

[5] Ending the alarm
To end an alarm that has been issued, either switch the overload alarm switch OFF or operate the attachment in such a way that the judgment in [2] goes OFF.
Be aware that there is no buzzer stop switch like the one in Model 3.

[6] Trouble mode
If trouble occurs in the boom cylinder bottom pressure sensor, this function goes into trouble mode and the alarm judgment is fixed to OFF.
Even if the trouble is recovered from, trouble mode continues until the key is switched OFF.

[7] Trouble judgment
The boom cylinder bottom pressure sensor trouble judgment is made after the overload alarm switch has come ON once.

https://truckmanualshub.com/

Options

1. Option Line Control

[1] Configuration

[Compatible circuit with second option line]

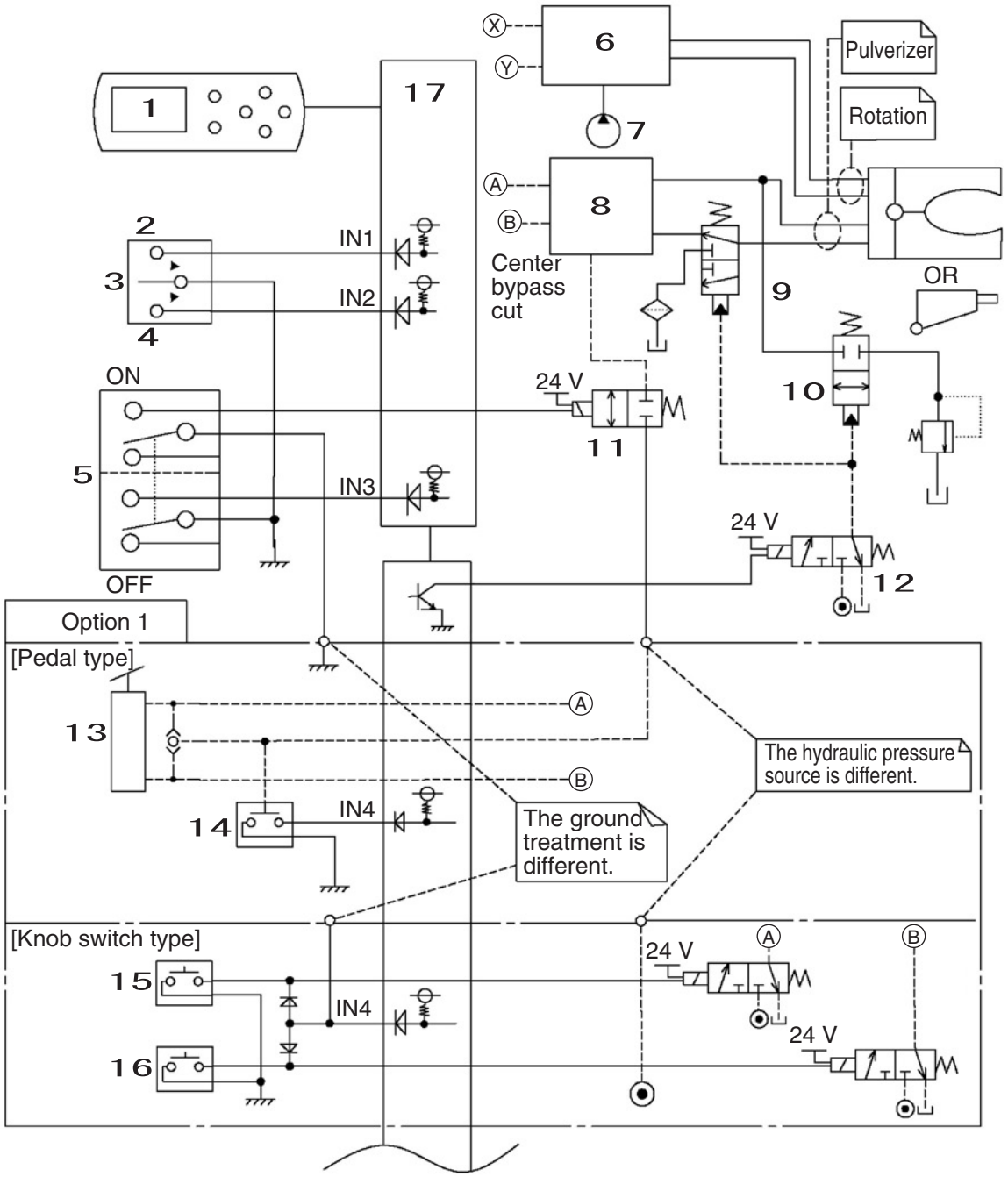

1	Monitor panel	7	4th pump	13	Option 1 pedal
2	Breaker mode switch	8	Control valve	14	Option 1 pressure switch
3	Option select switch	9	3-way valve	15	Option 1 switch (L)
4	Crusher mode switch	10	Shut-off valve	16	Option 1 switch (R)
5	2nd speed confluence select switch	11	2nd speed confluence solenoid valve	17	Computer A
6	Second option control valve	12	Option switchover solenoid valve		

Option select switch switchover (breaker mode ⇔ crusher mode)

<Operation>

When the option select switch is set to the breaker mode switch side, the option switchover solenoid valve is operated and the shut-off valve is switched to the shot off valve and the 3-way valve. When the switch is switched to crusher mode, the option switchover solenoid valve goes OFF.

https://truckmanualshub.com/

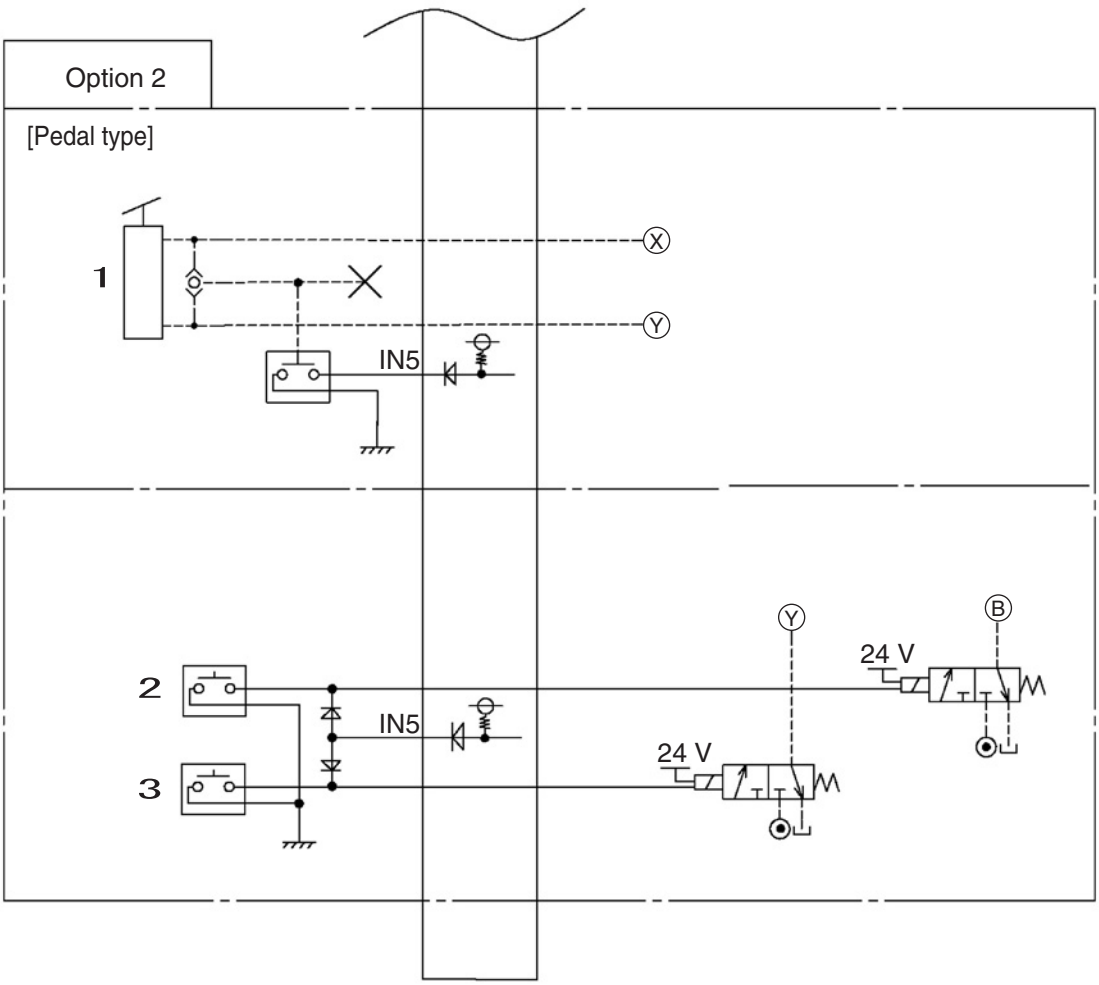

1	Option 2 pedal
2	Option 2 switch (L)
3	Option 2 switch (R)

2nd speed confluence select switch (1st speed ⇔ 2nd speed)

<Operation>

When the 2nd speed confluence switch is switched ON, the 2nd speed confluence solenoid valve switches to 2nd speed contluence.

Difference between pedal type and knob switch type

For the pedal type, 2nd speed confluence solenoid hydraulic pressure source is the secondary pressure via the option 1 pedal shuttle, but for the knob switch type, the 2nd speed confluence solenoid hydraulic pressure source comes directly from the gear pump.
Therefore, when the 2nd speed confluence switch is switched ON, operation becomes always 2nd speed.
In order to prevent this, whereas for the pedal type the ground treatment for the 2nd speed confluence switch is to ground directly,
with the knob switch type, it is set so that the switch is not grounded unless one or the other of the option switches is ON.

* Be careful. With Model 5, the shuttle valve is built into the option 1 pedal remote control valve.

https://truckmanualshub.com/

Mode select switch
When the breaker mode switch / crusher mode switch is pressed, the option line mode changes as follows.

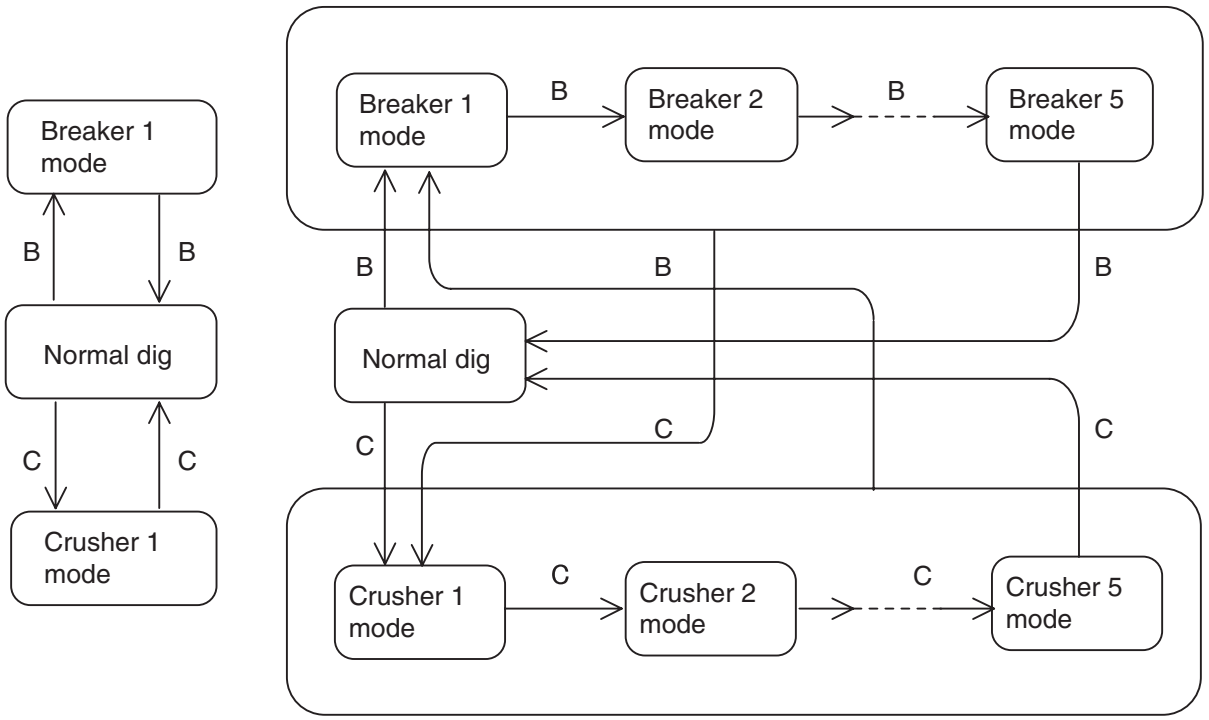

B : Breaker mode switch pressed
C : Crusher mode switch pressed

* The factory setting is that only breaker 1 mode and crusher 1 mode can be selected.
* With settings on the service screen, the number of modes can be increased to five each for the breaker and for the crusher, for a total of 10.

[2] For [1], the following icons are displayed according to the mode.

	Breaker mode	Crusher mode	Normal dig mode
1:	1	1	None
2:	2	2	
3:	3	3	
4:	4	4	
5:	5	5	

https://truckmanualshub.com/

2. Option Line Control

[1] Configuration

[Compatible circuit with second option line (pedal type)]

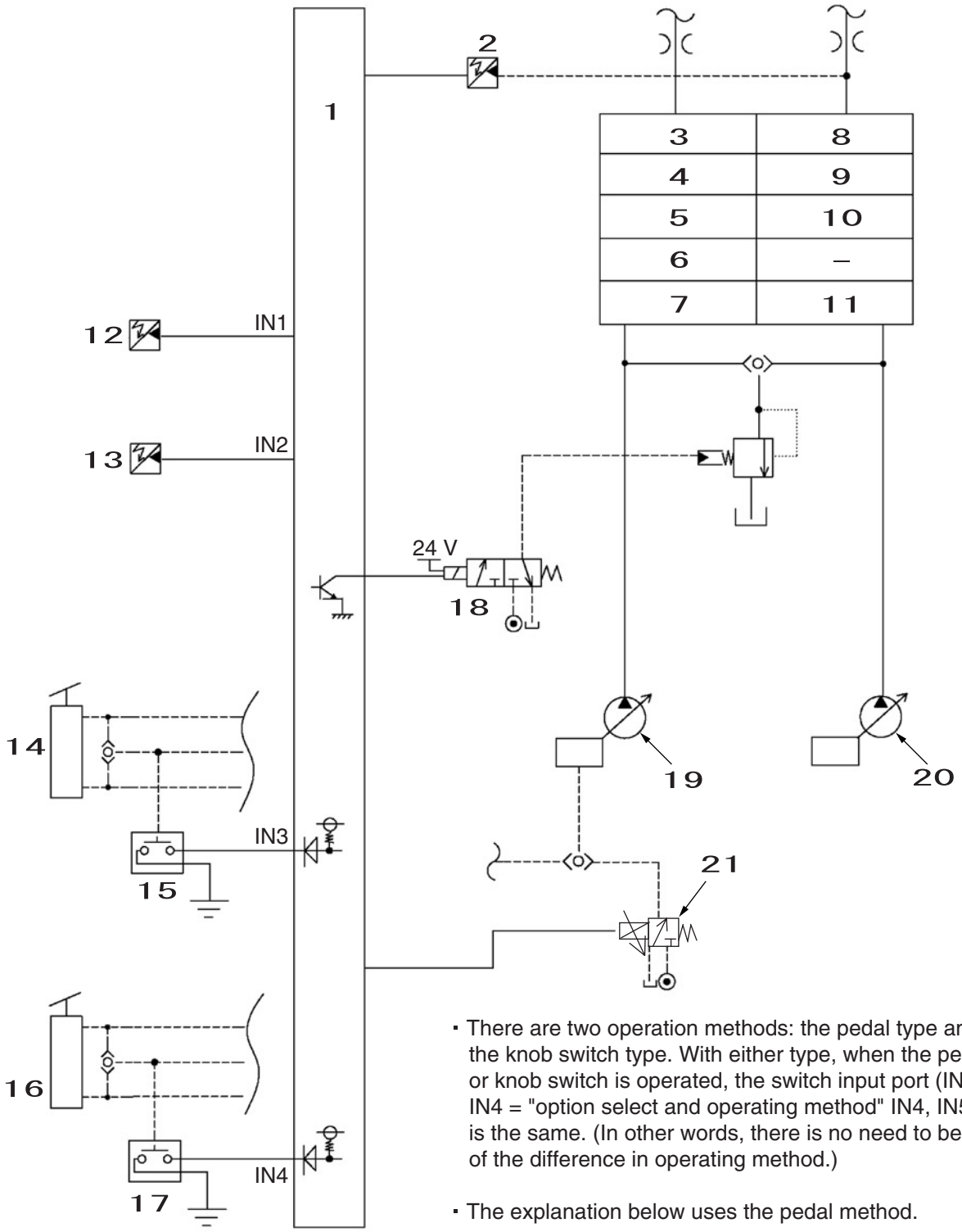

- There are two operation methods: the pedal type and the knob switch type. With either type, when the pedal or knob switch is operated, the switch input port (IN3, IN4 = "option select and operating method" IN4, IN5) is the same. (In other words, there is no need to be aware of the difference in operating method.)
- The explanation below uses the pedal method.

1	Computer A	8	Arm (2)	15	Option pressure switch
2	N2 pressure sensor	9	Boom (1)	16	Second option pedal
3	Arm (1)	10	Bucket	17	Second option pressure switch
4	Boom (2)	11	Travel (right)	18	Boost solenoid
5	Swing	12	Swing pressure sensor	19	P1 pump
6	Option 1	13	Travel pressure sensor	20	P2 pump
7	Travel (left)	14	Option pedal	21	P1 flow control proportional valve

https://truckmanualshub.com/

[2] Option line operation control
The table below shows the control for operation of the option alone and compound operation.

Option line mode	Breaker		Crusher		Option 2	
Operation	Option 1 pressure Switch … ON (IN3 is ground)		Option 1 pressure Switch … ON (IN3 is ground)		Option 2 pressure Switch … ON (IN4 is ground)	
	Option alone	Compound	Option alone	Compound	Option alone	Compound
Boost cut	Yes		Yes		No	
Flow restriction	Yes		Yes	No	No function (4th pump)	
Engine speed / Pump horsepower current	According to the command for the work mode selected with the throttle					

- The flow is not cut for compound crusher operation. (To secure speed for compound operation)
- Since the breaker often works while the machine is jacked up with the boom (compound operation), the flow is cut even for compound work. (The same as the engine reduction for the current breaker)
- The pressure boost is cut when Option 1 and Option 2 are operated at the same time. (Boost cut priority)
- The engine speed and pump horsepower current are according to the work mode currently selected with the throttle.
  (cannot be forced to change to another mode only for breaker/crusher.)

[3] Option 1 operation alone judgment conditions
When all the conditions below are satisfied, it is judged that Option 1 is being operated alone.
<Conditions>

Option 1 pressure switch … ON	Swing pressure sensor … OFF
Travel pressure sensor … OFF	N2 pressure sensor ≧ 2.4 MPa

[4] Flow cut
The maximum flow for option line operation is restricted to the flow for the option line mode selected with "Option line selection & 2nd speed merge".
Also, be careful about the fact that since the flow set for the option line is the flow for SP mode, when used in H/A mode, the flow is slightly less than the display.

[5] Trouble mode
If a trouble occurs in input (swing pressure sensor, travel pressure sensor, N2 pressure sensor) or output (boost solenoid, flow proportional valve),
the machine goes into trouble mode and

- Output command to boost solenoid = fixed to OFF
- Output command to flow proportional valve = fixed to OFF

Trouble mode continues until the key is switched OFF.

https://truckmanualshub.com/

3. Feed Pump Automatic Stop

[1] Configuration

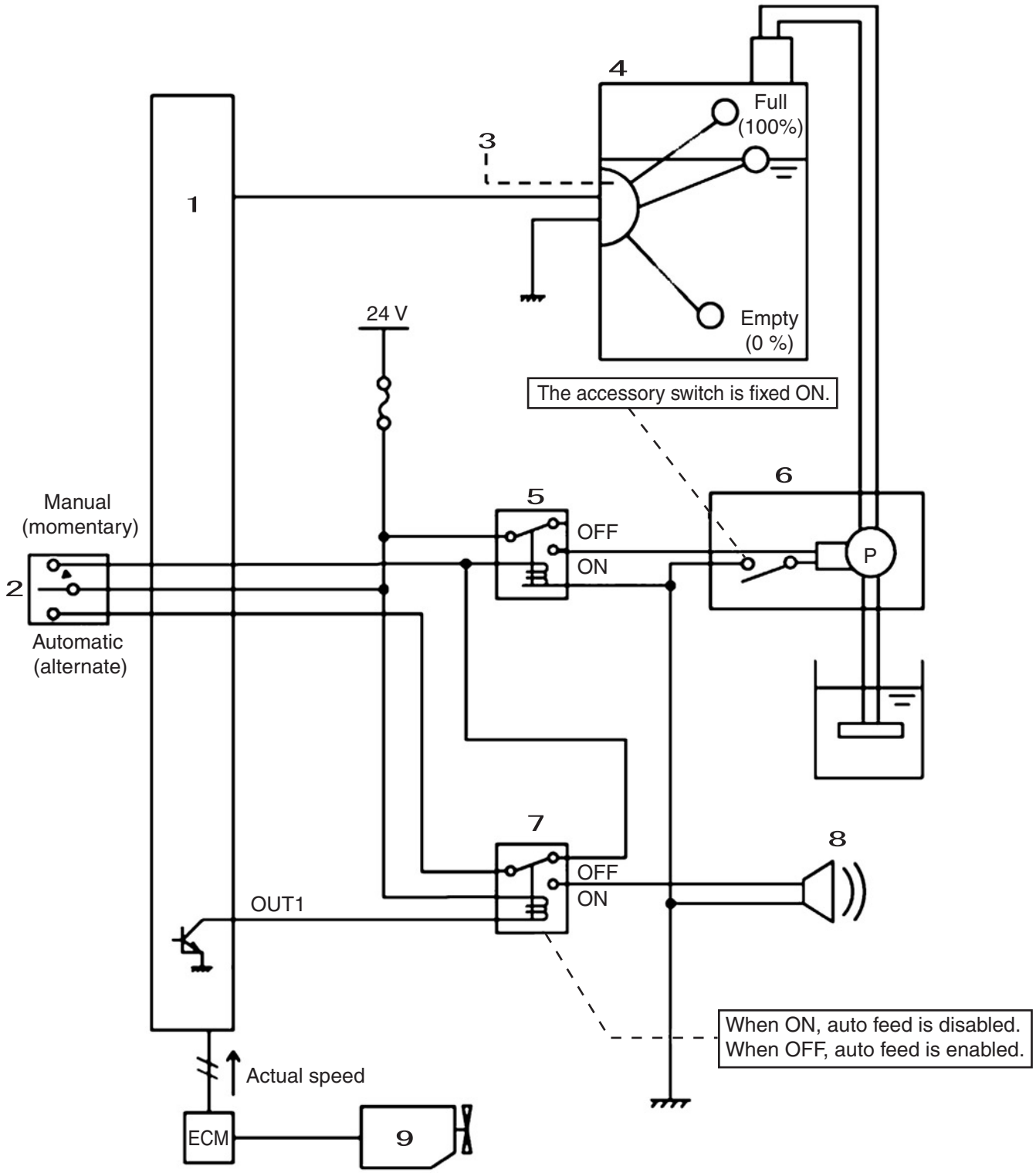

1	Computer A	4	Fuel tank	7	Feed stop relay
2	Feed switch	5	Oil feed start relay	8	Full tank detection buzzer
3	Fuel sensor	6	Oil feed pump made by Jabsco	9	Engine

Feed pump main unit accessory (original) switch this must be fixed ON beforehand in order to use this function.

https://truckmanualshub.com/

[2] Operating method
1) With the engine stopped and the key ON, if the feed switch is flipped down to the Auto side, the fuel feed starts.
2) When the tank is full, the fuel feed stops automatically and the buzzer buzzes to announce that.
3) Returning the feed switch to the center stops the buzzer.
4) To feed more fuel
Press the feed switch manual side. The fuel is fed while the switch is pressed.

[3] Computer control targets
Input = Fuel sensor (0 to 100 %), engine state (running / stopped)
Output = Feed stop relay

[4] System state (when relay OFF)
When the feed switch is set to the Auto side, the start relay comes ON and the pump operates.

[5] System state (when relay ON)
When the feed switch is set to the Auto side, the start relay goes OFF, and the pump does not operate. Also, the buzzer buzzes.

[6] Feed stop relay control (while engine running and key ON)
Always ON (no feed)

[7] Feed stop relay control (while engine stopped and key ON)
When (fuel level $<$ 94 % continuously for 3 seconds), OFF (auto feed enabled)
When (fuel level $\geqq$ 94 % continuously for 3 seconds), ON (auto feed disabled)

https://truckmanualshub.com/

[8] Time chart

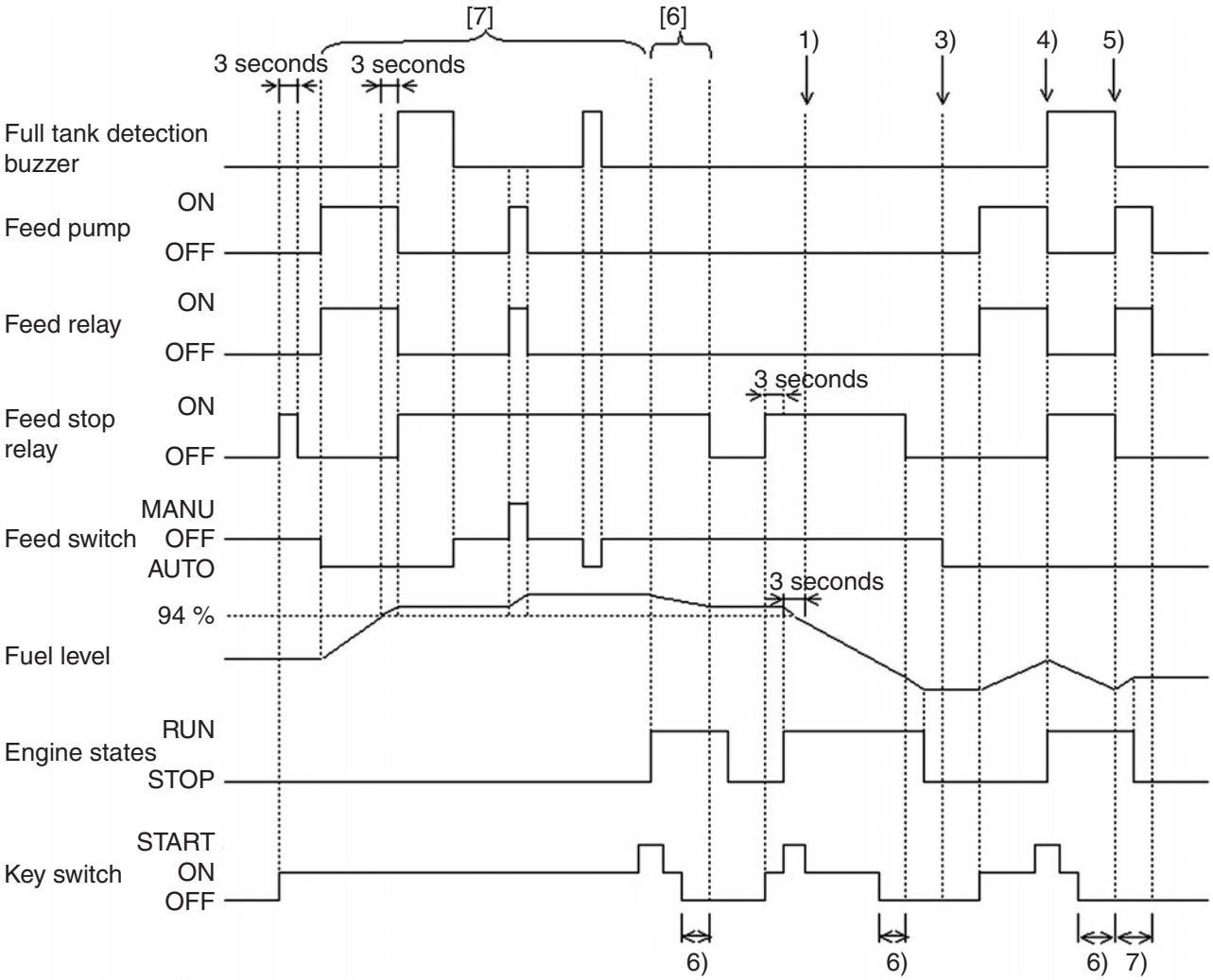

1) Even if the level falls below 94 %, no fuel can be fed as the engine is running.
2) Stopped, so fuel can be fed.
3) Fuel feed is not possible unless the key is switched ON.
4) If the engine is started during fuel feeding, the fuel feed stops.
5) When the operator forgets and leaves the switch switched to the Auto side, the pump operates during the power-cut delay. (When fuel level under 98 %)
6) Power-cut delay

[9] Trouble mode

If trouble occurs in an input (fuel sensor), output (feed stop relay) or communication (CAN), the system goes into trouble mode and the feed stop relay is fixed to OFF. Be careful. In trouble mode, even if the feed switch is set to Auto, the fuel feed is not stopped.

E

https://truckmanualshub.com/

4. Return Filter Clogging Detected

[1] Configuration

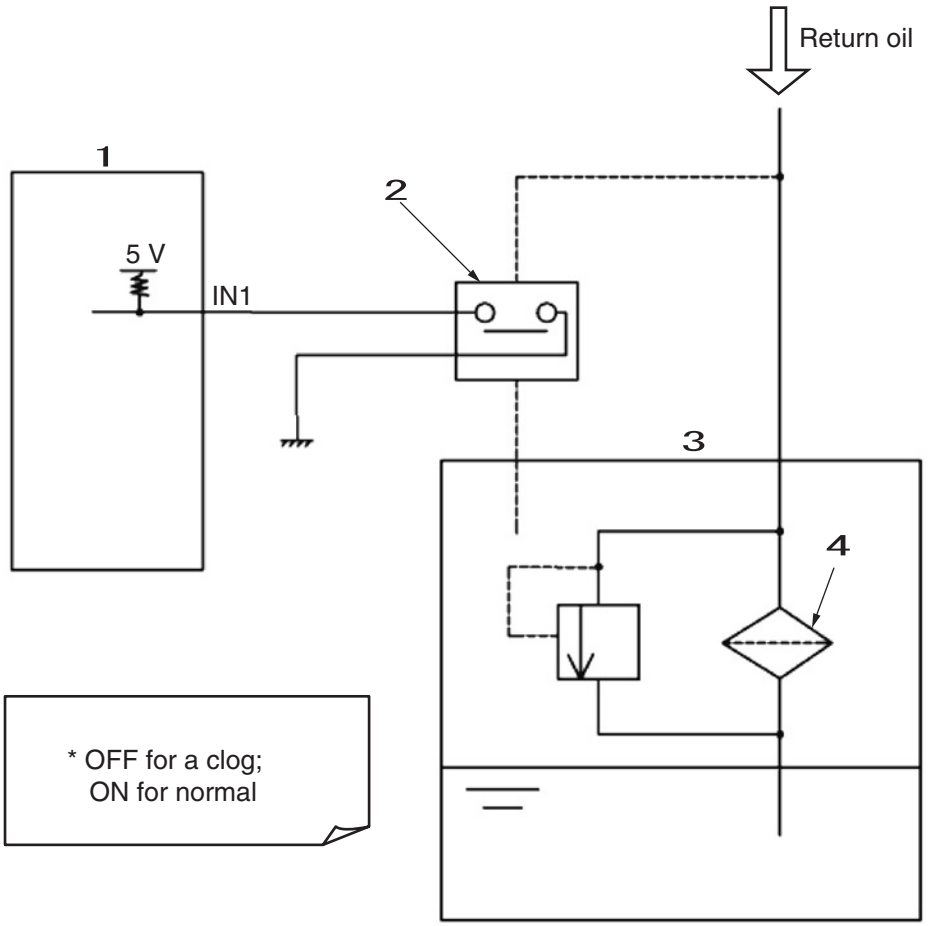

1	Computer A
2	Return filter clog pressure switch
3	Hydraulic oil tank
4	Return filter

[2] Return filter clog pressure switch specifications

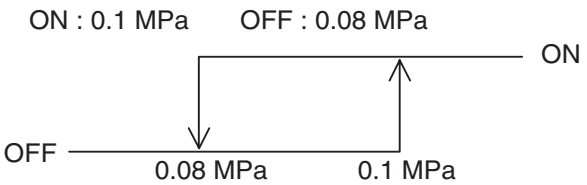

[3] Detection cancellation when breaker used
When the breaker is used, the return oil pressure pulse is intense, so clog detection is not attempted.

[4] Detection cancellation when oil temperature low
When the oil temperature is less than 30 ℃ , its viscosity rises and filter pressure damage increases, so clog detection is not attempted.

https://truckmanualshub.com/

[5] Solution for machines with no breaker setting
Machines with no breaker setting from [3]
(= machines with no return filter clog pressure switch) Even with these machines, filter clogs would be detected. In order to prevent this, a special connector is set that is always shorted.

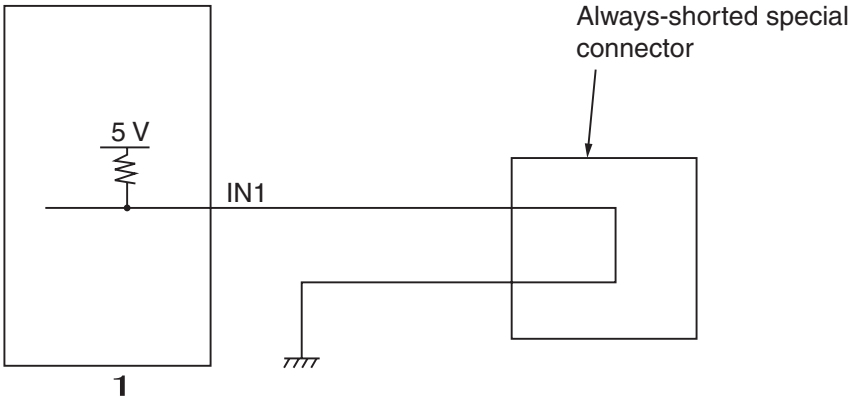

1	Computer A

[6] Disconnection detection
When the key is ON, if IN1 was OFF before the engine was started, the situation is judged to be a disconnection abnormality.

https://truckmanualshub.com/

Screen Operations

1. Screen Shift

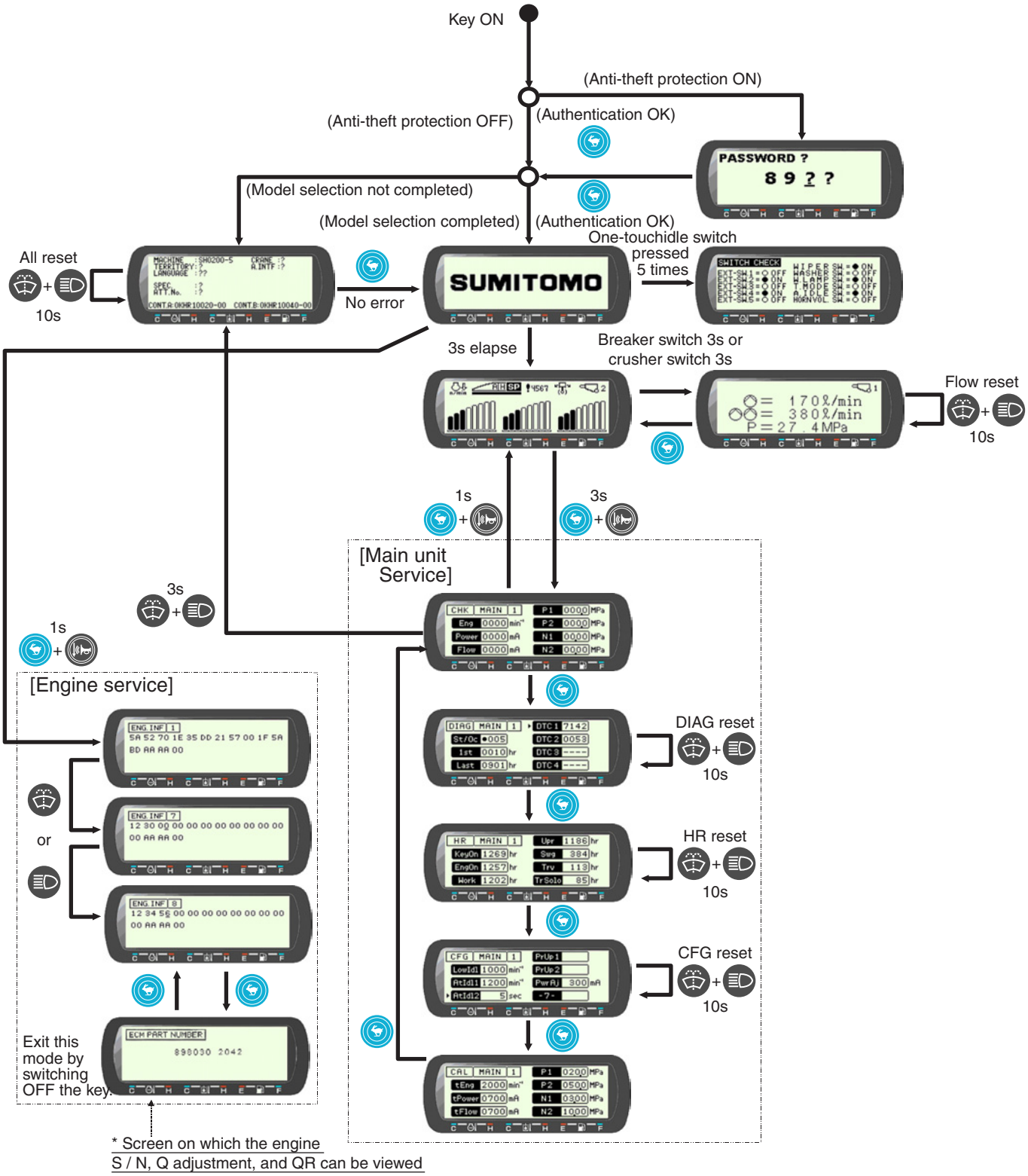

RE07003–001

https://truckmanualshub.com/

Service Support

[1] Operation for shifting to service support screen

1) If both the travel high-speed switch and the horn volume select switch on the switch panel are held down for 3s, the display switches to the service support screen.

2) If both the travel high-speed switch and the horn volume select switch on the switch panel are held down again for 1s , the display returns to the normal screen.

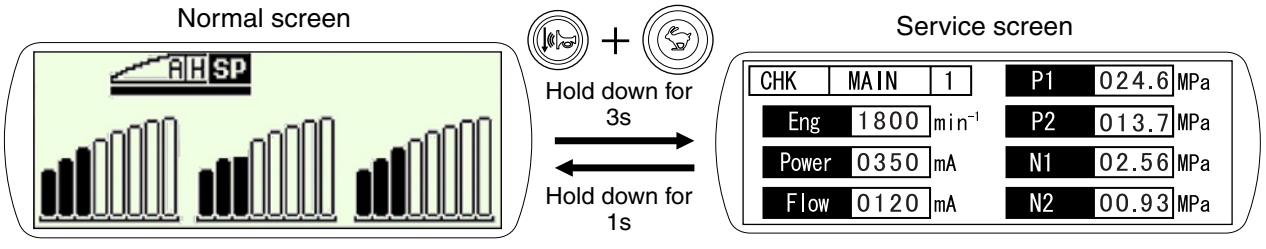

[2] Service support screen switching operation

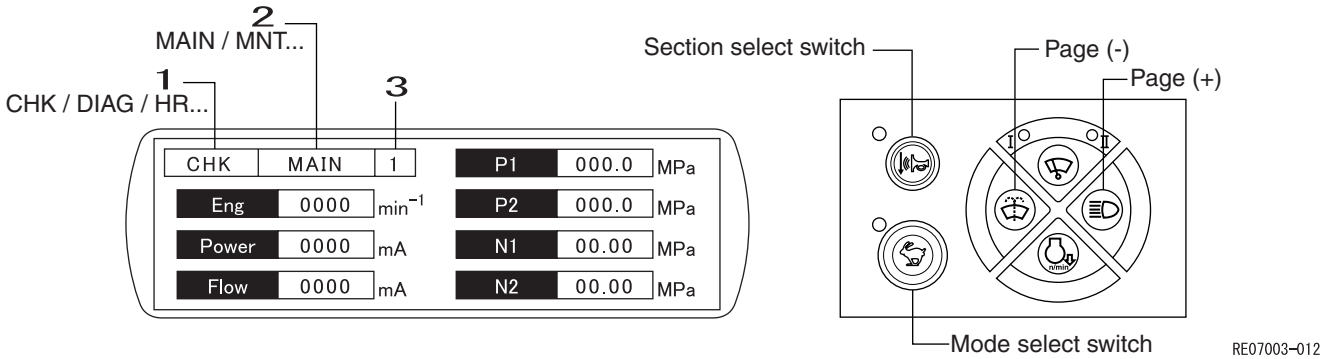

1	Mode	3	Page
2	Section		

1) Mode select switch; switching with travel high-speed switch

2) Section switch; switching with horn volume select switch

3) Page select switch; forward with light switch and back with washer switch

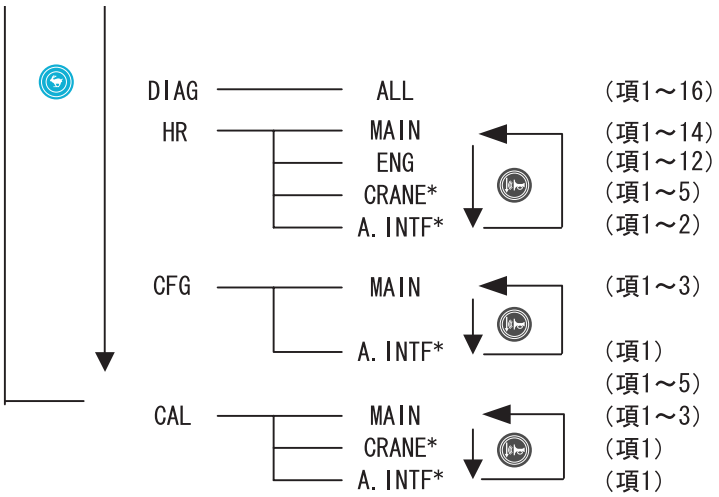

＊標準機では表示されません。

RE07003-002

https://truckmanualshub.com/

Screen Display List

1. CHK (status display) Screen List

In CHK mode, in addition to the machine status (milli-amp, oil pressures, temperatures, etc.), it is possible to check sensor and switch input/output states, as well as the angle, load ratio and work radius, etc. at the applied machine (liftcrane application machine, lifting magnet machine).

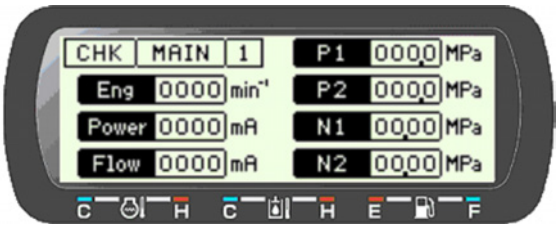

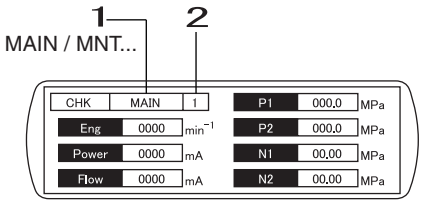

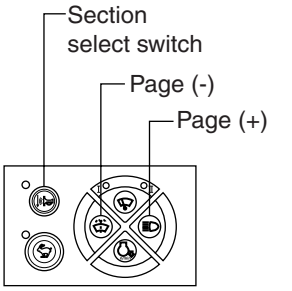

RE07003-007

1	Section
2	Page

For the CHK mode section types and their contents, see the separate sheet.

* From the CHK mode screen, if the wiper switch and the light switch are held down for 3s, the display shifts to the model selection screen.

MAIN

[1] Engine and pump

CHK	MAIN	1	P1	000.0	MPa
Eng	0000	min^{-1}	P2	000.0	MPa
Power	0000	mA	N1	00.00	MPa
Flow	0000	mA	N2	00.00	MPa

Eng	:	Engine speed
Power	:	Actual milli-amp for horsepower control proportional valve
Flow	:	Actual milli-amp for flow control proportional valve
P1	:	Pump 1; Discharge pressure
P2	:	Pump 2; Discharge pressure
N1	:	Pump 1; Negative control pressure
N2	:	Pump 2; Negative control pressure

[2] Temperature and pressure

CHK	MAIN	2	Baro	0000	hPa
CoolnT	0000	°C	EngOil	0000	kPa
HydOil	0000	°C	BstT	0000	°C
FuelT	0000	°C	Air	0000	°C

CoolnT	:	Radiator temperature
HydOil	:	Hydraulic oil temperature
FuelT	:	Fuel temperature
Baro	:	Barometric pressure
EngOil	:	Engine oil pressure
BstT	:	Boost temperature
Air	:	Suction air temperature

[3] Load and boost

CHK	MAIN	3	P1	000.0	MPa
Eng	0000	min^{-1}	P2	000.0	MPa
Load	0000	%	BstT	0000	°C
Power	0000	mA	BstP	0000	kPa

Eng	:	Engine speed
Load	:	Load ratio
Power	:	Actual milli-amp for horsepower control proportional valve
P1	:	Pump 1; Discharge pressure
P2	:	Pump 2; Discharge pressure
BstT	:	Boost temperature
BstP	:	Boost pressure

E

https://truckmanualshub.com/

[4] Load and milli-amp for horsepower control proportional valve

CHK	MAIN	4			
Eng	0000	min^{-1}	P1	000.0	MPa
Load	0000	%	P2	000.0	MPa
Power	0000	mA	N1	00.00	MPa
			N2	00.00	MPa

Eng	:	Engine speed
Load	:	Load ratio
Power	:	Actual milli-amp for horsepower control proportional valve
P1	:	Pump 1; Discharge pressure
P2	:	Pump 2; Discharge pressure
N1	:	Pump 1; Negative control pressure
N2	:	Pump 2; Negative control pressure

[5] Target and actual milli-amp for horsepower control proportional valve

CHK	MAIN	5	-4-		
Eng	0000	min^{-1}	tEng	0000	min^{-1}
Load	0000	%	ThVol	0000	%
Power	0000	mA	tPower	0000	mA

Eng	:	Engine speed
Load	:	Load ratio
Power	:	Actual milli-amp for horsepower control proportional valve
-4-	:	*
tEng	:	Target engine speed
ThVol	:	Throttle volume degree of opening
tPower	:	Target milli-amp for horsepower control proportional valve

[6] Target and actual milli-amp for flow control proportional valve

CHK	MAIN	6			
Eng	0000	min^{-1}	P1	000.0	MPa
Power	0000	mA	N1	00.00	MPa
Flow	0000	mA	Swg	00.00	MPa
			tFlow	0000	mA

Eng	:	Engine speed
Power	:	Actual milli-amp for horsepower control proportional valve
Flow	:	Actual milli-amp for flow control proportional valve
P1	:	Pump 1; Discharge pressure
N1	:	Pump 1; Negative control pressure
Swg	:	Swing pilot pressure
tFlow	:	Target milli-amp for flow control proportional valve

[7] Target and actual milli-amp for hydraulic fan proportional valve

CHK	MAIN	7	HydOil	0000	°C
Eng	0000	min^{-1}	FuelT	0000	°C
CoolnT	0000	°C	BstT	000	°C
Fan	0000	mA	tFan	000	mA

Eng	:	Engine speed
CoolnT	:	Radiator coolant temperature
Fan	:	Actual milli-amp for hydraulic fan proportional valve
HydOil	:	Hydraulic oil temperature
FuelT	:	Fuel temperature
BstT	:	Boost temperature
tFan	:	Target milli-amp for hydraulic fan proportional valve

[8] Pilot pressure

CHK	MAIN	8	Upr	00.00	MPa
P1	000.0	MPa	Swg	00.00	MPa
P2	000.0	MPa	Trv	00.00	MPa
Cyl(B)	000.0	MPa	AmCls	00.00	MPa

P1	:	Pump 1; Discharge pressure
P2	:	Pump 2; Discharge pressure
Cyl (B)	:	Boom bottom pressure
Upr	:	Upper pilot pressure
Swg	:	Swing pilot pressure
Trv	:	Travel pilot pressure
AmCls	:	Arm-in pilot pressure

https://truckmanualshub.com/

[9] Hydraulic circuit; input/output and pressure

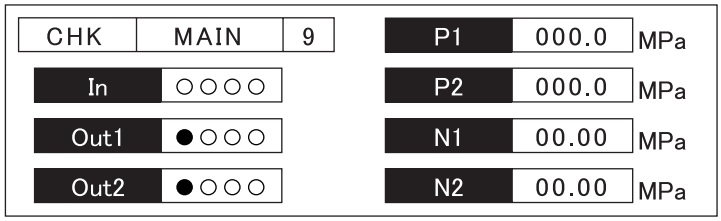

P1	:	Pump 1;	Discharge pressure
P2	:	Pump 2;	Discharge pressure
N1	:	Pump 1;	Negative control pressure
N2	:	Pump 2;	Negative control pressure

Hydraulic circuit input/output state (○ = OFF, ● = ON)

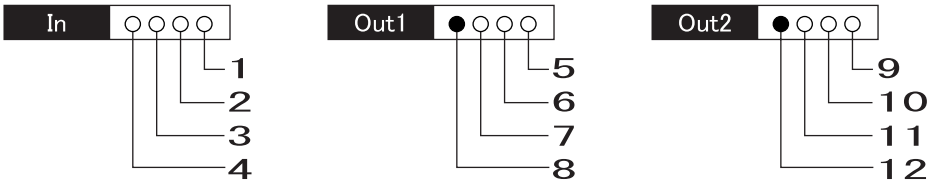

1	Pressure sensor; Arm in	5	Solenoid; Free swing/beacon	9	Relay; Travel alarm
2	Pressure sensor; Travel	6	Solenoid; Travel high-speed switchover	10	Solenoid; Fan reverse (large machine only)
3	Pressure sensor; Swing	7	Solenoid; Boost	11	Solenoid; Option line switchover
4	Pressure sensor; Upper	8	Solenoid; Swing brake	12	Solenoid; Power save

[10] Electrical circuits; Input/output

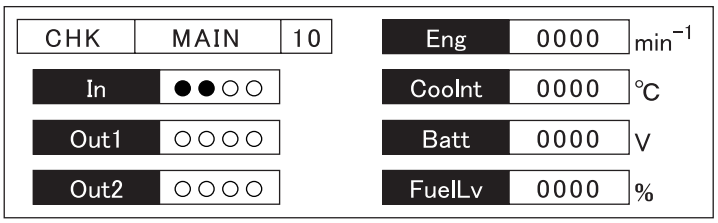

Eng	:	Engine speed
CoolInt	:	Radiator coolant temperature
Batt	:	Battery voltage
FuelLv	:	Fuel level

Electric circuit input/output state (○ = OFF, ● = ON)

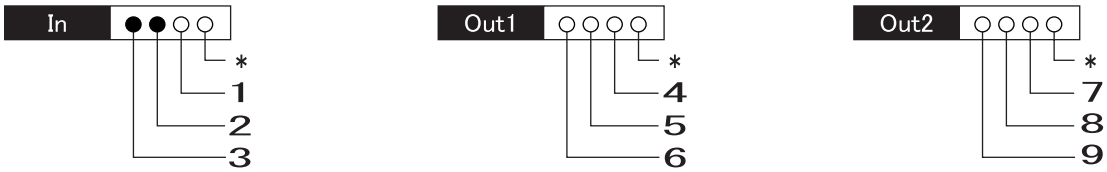

1	Switch; Anti-theft	6	Glow signal
2	Battery charge	7	Engine stop due to trouble
3	Switch; Key	8	Low idle restriction due to trouble
4	AC coolant temperature transmission	9	Restriction on milli-amp for horsepower control proportional valve due to trouble
5	Relay; Feed pump automatic stop		

E

https://truckmanualshub.com/

MNT

[1] Computer S information

CHK	MNT	1	4	0140
1	4400		5	4132
2	0035		6	31 3
3	4783		7	0530

7	0530	1

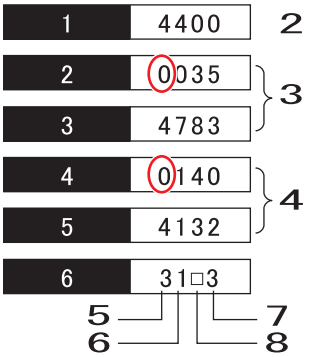

* The longitude and latitude are displayed when the continuous GPS position measurement time is 5 minutes or longer.

CHK	MNT	2	4	0052
1	0605		5	0130
2	2803		6	0130
3	1432		7	0122

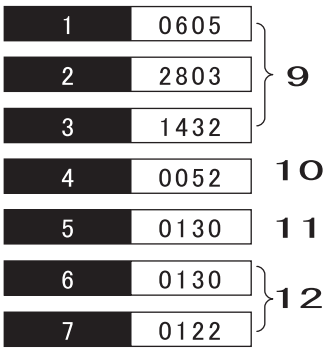

* UTC (universal time coordinate) is the global standard time. Japan is +9 hours from UTC.

Example) If the time is May 28, 2006, 03:14:32 UTC, the time in Japan is May 28, 2006, 12:14:32.

If the time is May 27, 2006, 20:14:32 UTC, the time in Japan is May 28, 2006, 05:14:32.

* Displayed after the completion of GPS position measurement.
* For 3D position measurement, the altitude can be measured.
* GCC is a land station. 130 is the GCC for Japan. (122 is South Korea.)

1	GPS continuous position measurement time (For example, 5 minutes 30 second of continuous position measurement)		
2	Computer S part number bottom 4 digit display (example, KHR14400)		
3	Latitude Inside the ○ , 0 = North hemisphere, 1 = Southern hemisphere (example, 35 degrees 47.83 minutes)		
4	Longitude Inside the ○ , 0 = Longitude east 1 = Longitude west (Example, 140 degrees 41.32 minutes longitude east)		
5	GPS position measurement status 0 = GPS not yet operating, 1 = GPS measuring, 2 = 2D measurement status, 3 = 3D measurement status	7	Default setting send status 0 = Default setting send wait, 1 = Send inhibit wait, 2 = ACK send wait, 3 = Default setting send complete
6	Satellite communication status 0 = No satellite supplement, 1 = Satellite supplement, 2 = Q1200 communication abnormal	8	BLANK
9	UTC (Example: May 28, 2006, 03:14:32) The time in Japan is May 28, 2006, 12:14:32.	10	Altitude (Example: 52 m)
		11	Send GCC number
		12	Supplementary GCC number

https://truckmanualshub.com/

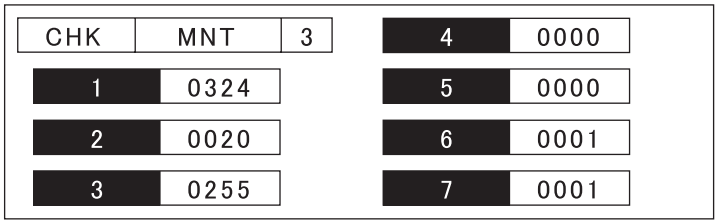

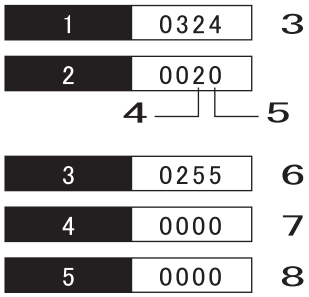

Event send setting
The default state is fuel volume warning, anti-theft operation warning event send inhibited.
These can be changed to enabled with signals from the web server. When this signal is received, No. 4 becomes the display below.

4	Fuel volume warning	Anti-theft operation warning (without position information)	Anti-theft operation warning (with position information)
0028	Inhibited	Inhibited	Inhibited
0156	Enabled	Inhibited	Inhibited
0220	Enabled	Enabled	Inhibited
0188	Enabled	Inhibited	Enabled
0092	Inhibited	Enabled	Inhibited
0060	Inhibited	Inhibited	Enabled

1	Engine start enable setting 0 = Inhibited, 1 = Enabled
2	Send destination count * The send destination is the server, so it is fixed at 1.
3	Time until next sending (example: 3 hours 24 minutes more until the next sending)
4	Send wait message count (example: 2)
5	Q1200 status 0 = Waiting 1 = Sending 4 = Receiving 5 = Receiving complete
6	Send distribution setting (not set)
7	Event send setting
8	Send inhibition setting (not set)

E

https://truckmanualshub.com/

H/W-A

[1] Digital input/output

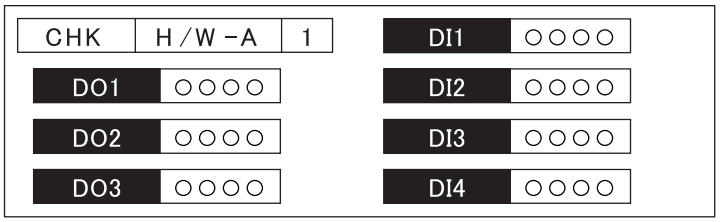

Input/output state (○ = OFF, ● = ON)

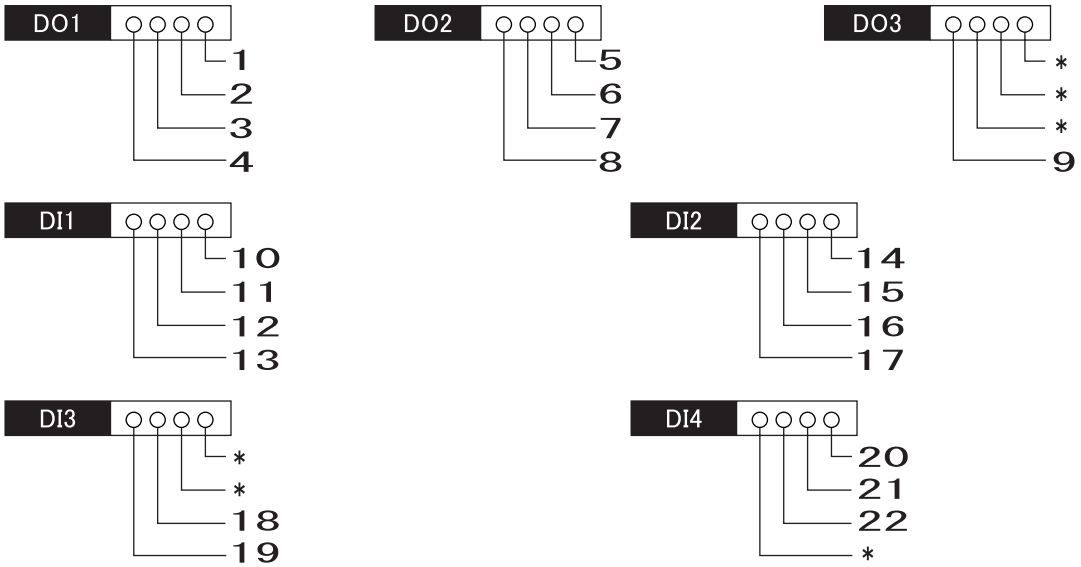

1	Solenoid; Power save	9	Relay; Feed pump	17	Switch; Pressure (Option)
2	Solenoid; Boost	10	Switch; Clog (Air cleaner)	18	Switch; Fan reverse
3	Solenoid; Travel high-speed switchover	11	Switch; Level (Coolant)	19	Switch; Clog (Return filter)
4	Solenoid; Swing brake	12	Switch; Anti-theft	20	Alternator
5	Buzzer; Travel alarm	13	Switch; One-touch idle	21	Switch; Engine emergency stop
6	Solenoid; Option line switchover	14	Switch; Travel alarm/overload	22	Switch; Key
7	Solenoid; Free swing	15	Switch; Free swing		
8	Solenoid; Fan reverse	16	Switch; Pressure (2nd option)		

https://truckmanualshub.com/

[2] Digital output/output monitor

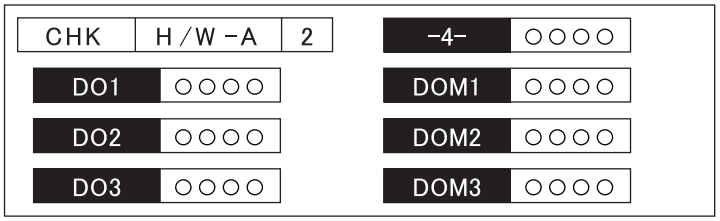

Input/output state (○ = OFF, ● = ON)

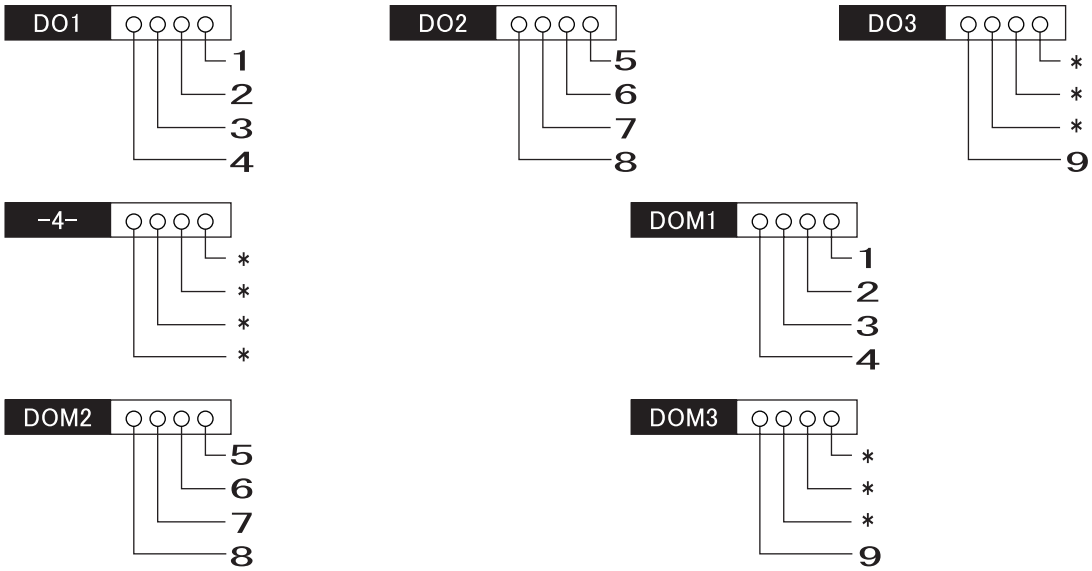

1	Solenoid; Power save	4	Solenoid; Swing brake	7	Solenoid; Free swing
2	Solenoid; Boost	5	Buzzer; Travel alarm	8	Solenoid; Fan reverse
3	Solenoid; Travel high-speed switchover	6	Solenoid; Option line switchover	9	Relay; Feed pump

[3] Potentio-meter voltage

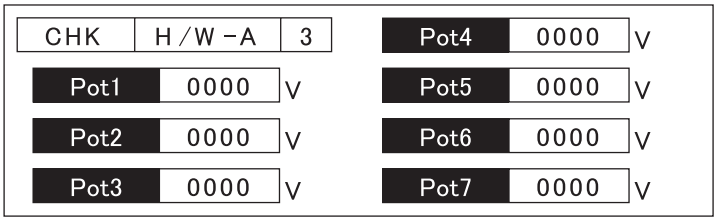

Pot1	:	Sensor pressure	P1
Pot2	:	Sensor pressure	P2
Pot3	:	Sensor pressure	N1
Pot4	:	Sensor pressure	N2
Pot5	:	Sensor pressure	Swing
Pot6	:	Sensor pressure	Upper
Pot7	:	Sensor pressure	Travel

[4] Potentio-meter and sensor voltage (resistance)

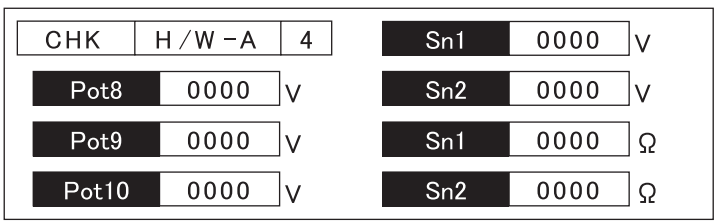

Pot8	:	Sensor pressure	Arm in
Pot9	:	Sensor throttle	
Pot10	:	Sensor pressure	Overload
Sn1	:	Sensor temperature	Hydraulic oil
Sn2	:	Sensor level	Fuel
Sn1	:	Sensor temperature	Hydraulic oil
Sn2	:	Sensor level	Fuel

E

https://truckmanualshub.com/

[5] PWM data

CHK	H/W-A	5	duty	0000	%
PWM#	1		freq	0000	Hz
actcur	0000	mA	volt	0000	V
tgtcur	0000	mA	ovc	----	

PWM#	:	PWM channel number
actcur	:	Actual milli-amp for horsepower control proportional valve
tgtcur	:	Target milli-amp for horsepower control proportional valve
duty	:	Duty
freq	:	Frequency
volt	:	Voltage
ovc	:	Overcurrent detection status (+: Overcurrent/-: Normal)

[6] PWM data

CHK	H/W-A	6	duty	0000	%
PWM#	2		freq	0000	Hz
actcur	0000	mA	volt	0000	V
tgtcur	0000	mA	ovc	----	

PWM#	:	PWM channel number
actcur	:	Actual milli-amp for hydraulic fan proportional valve
tgtcur	:	Target milli-amp for hydraulic fan proportional valve
duty	:	Duty
freq	:	Frequency
volt	:	Voltage
ovc	:	Overcurrent detection status (+: Overcurrent/-: Normal)

[7] PWM data

CHK	H/W-A	7	duty	0000	%
PWM#	3		freq	0000	Hz
actcur	0000	mA	volt	0000	V
tgtcur	0000	mA	ovc	----	

PWM#	:	PWM channel number
actcur	:	Actual milli-amp for flow control proportional valve
tgtcur	:	Target milli-amp for flow control proportional valve
duty	:	Duty
freq	:	Frequency
volt	:	Voltage
ovc	:	Overcurrent detection status (+: Overcurrent/-: Normal)

[8] Frequency and communication

CHK	H/W-A	8	RS232	○
FreqIn	0000	Hz	-5-	
CAN	○○○		-6-	
UART	○		-7-	

FreqIn	:	Frequency input
CAN	:	CAN reception state
UART	:	UART reception state
RS232	:	RS232C communication state
-5-	:	*
-6-	:	*
-7-	:	*

Input/output state (● = receiving)

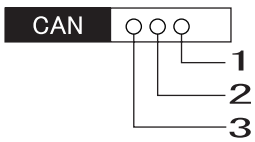

1	Computer S reception state
2	Computer B reception state
3	ECM reception state

https://truckmanualshub.com/

H/W-B

[1] Computer B digital input/output

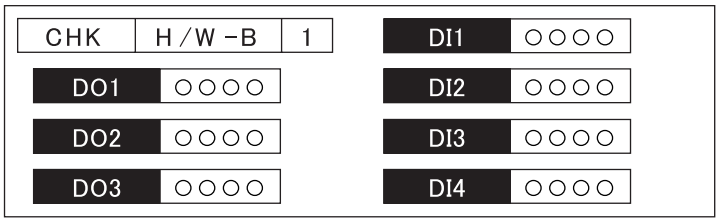

Input/output state (○ = OFF, ● = ON)

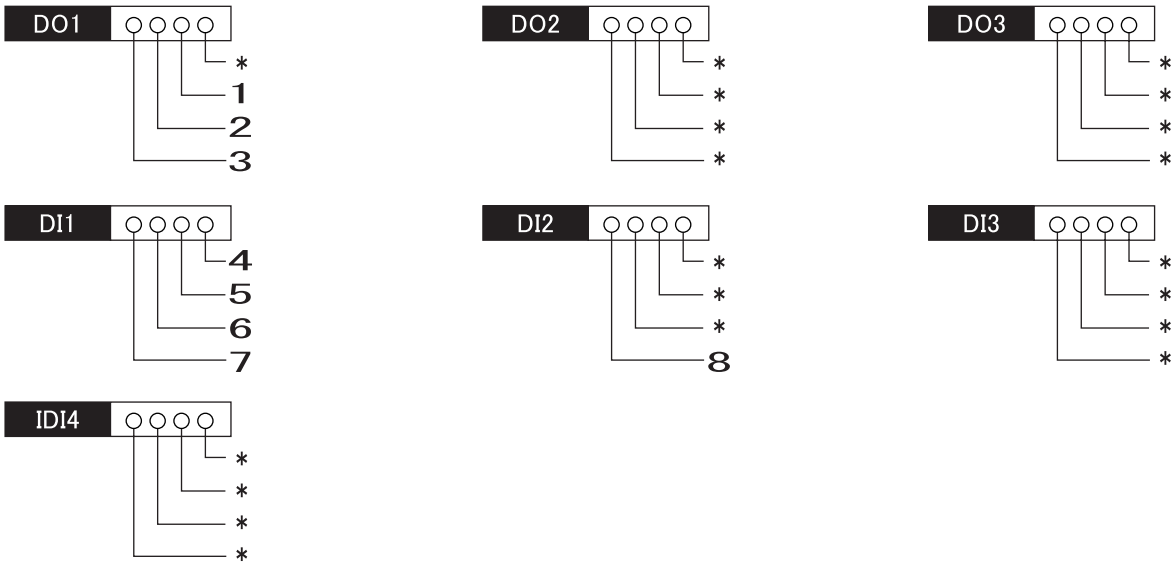

1	Solenoid; Lever lock	4	Switch; Crane mode	7	Switch; Lifting magnet mode
2	Rotating light and bucket lock	5	Switch; Crane (Display switching)	8	Switch; Interference (Shut-off release)
3	Buzzer; Crane	6	Switch; Interference (Temporary release)		

E

https://truckmanualshub.com/

[2] Digital output/output monitor

CHK	H/W-B	2	-4-	○○○○
DO1	○○○○		DOM1	○○○○
DO2	○○○○		DOM2	○○○○
DO3	○○○○		DOM3	○○○○

Input/output state (○ = OFF, ● = ON)

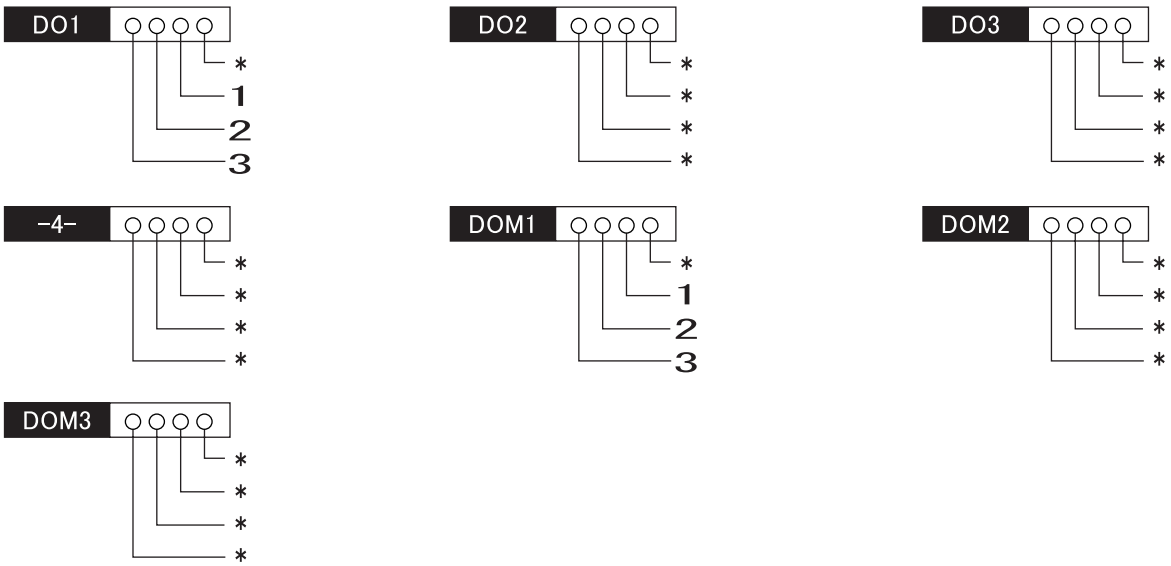

1	Solenoid; Lever lock
2	Rotating light and bucket lock
3	Buzzer; Crane

[3] Potentio-meter voltage

CHK	H/W-B	3	Pot4	0000	V
Pot1	0000	V	Pot5	0000	V
Pot2	0000	V	Pot6	0000	V
Pot3	0000	V	Pot7	0000	V

Pot1 : Sensor; Angle (Boom)
Pot2 : Sensor; Angle (Arm)
Pot3 : Sensor; Angle (Offset)
Pot4 : Sensor; Pressure (Bottom)
Pot5 : Sensor; Pressure (Rod)
Pot6 : *
Pot7 : *

[4] Potentio-meter and sensor voltage (resistance)

CHK	H/W-B	4	Sn1	0000	V
Pot8	0000	V	Sn2	0000	V
Pot9	0000	V	Sn1	0000	Ω
Pot10	0000	V	Sn2	0000	Ω

Pot8 : *
Pot9 : *
Pot10 : *
Sn1 : *
Sn2 : *
Sn1 : *
Sn2 : *

https://truckmanualshub.com/

[5] PWM data

CHK	H/W-B	5	duty	0000	%
PWM#	1		freq	0000	Hz
actcur	0000	mA	volt	0000	V
tgtcur	0000	mA	ovc	----	

PWM# : PWM channel number
actcur : Actual milli-amp for boom proportional valve
tgtcur : Target milli-amp for boom proportional valve
duty : Duty
freq : Frequency
volt : Voltage
ovc : Overcurrent detection status (+: Overcurrent/-: Normal)

[6] PWM data

CHK	H/W-B	6	duty	0000	%
PWM#	2		freq	0000	Hz
actcur	0000	mA	volt	0000	V
tgtcur	0000	mA	ovc	----	

PWM# : PWM channel number
actcur : Actual milli-amp for offset proportional valve
tgtcur : Target milli-amp for offset proportional valve
duty : Duty
freq : Frequency
volt : Voltage
ovc : Overcurrent detection status (+: Overcurrent/-: Normal)

[7] PWM data

CHK	H/W-B	7	duty	0000	%
PWM#	3		freq	0000	Hz
actcur	0000	mA	volt	0000	V
tgtcur	0000	mA	ovc	----	

PWM# : PWM channel number
actcur : Actual milli-amp for arm proportional valve
tgtcur : Target milli-amp for arm proportional valve
duty : Duty
freq : Frequency
volt : Voltage
ovc : Overcurrent detection status (+: Overcurrent/-: Normal)

[8] Frequency and communication

CHK	H/W-B	8	RS232	○
FreqIn	0000	Hz	-5-	0000
CAN	○○○		-6-	0000
UART	○		-7-	0000

FreqIn : Frequency input
CAN : CAN reception state
UART : UART communication state
RS232 : RS232C communication state
-5- : *
-6- : *
-7- : *

Input/output state (● = receiving)

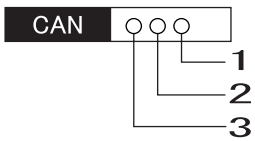

1	Computer S reception state
2	Computer B reception state
3	ECM reception state

https://truckmanualshub.com/

H/W-M

[1] Monitor

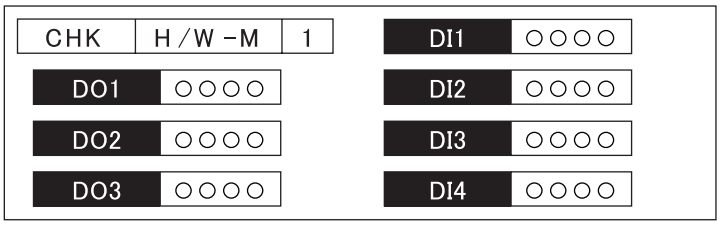

Input/output state (○ = OFF, ● = ON)

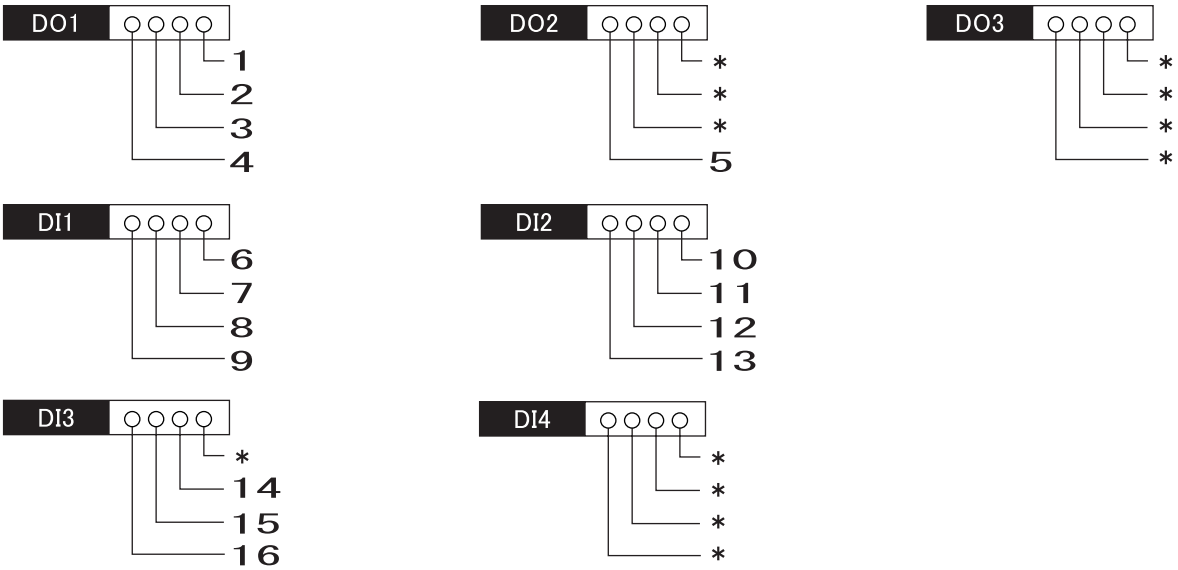

1	Working light	7	Switch; Travel high-speed select	13	Switch; Washer
2	Motor washer	8	Switch; Auto idle select	14	Switch; Reserve
3	Wiper CNT	9	Switch; Horn volume select	15	Switch; 2 pumps flow
4	Wiper INT	10	Switch; Breaker select	16	Switch; Crusher select
5	Relay horn volume switchover	11	Switch; Limit front window		
6	Switch; Working light	12	Switch; Wiper		

https://truckmanualshub.com/

2. DIAG (trouble diagnosis) Screen

[1] In diagnosis mode, you can check from the contents for the trouble currently occurring to a log of trouble that has occurred in the past.

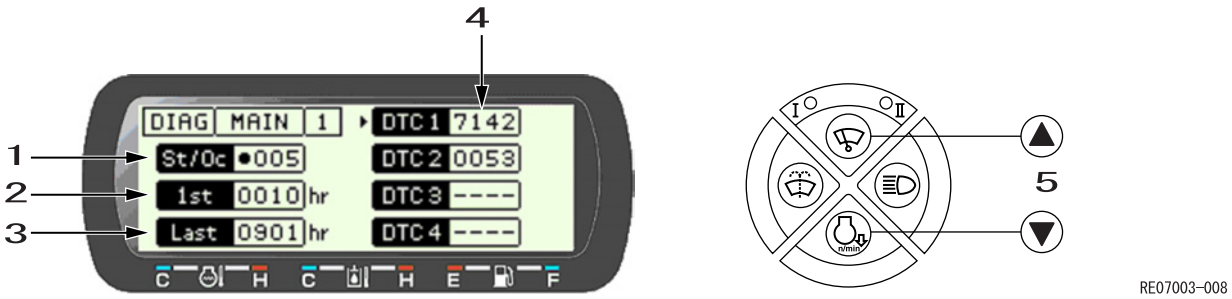

1	Status occurrence count	4	Diagnostic trouble code
2	Initial occurrence time	5	Cursor movement
3	Final occurrence time		

- In "DTC-1" through "DTC-4", the data is displayed in order from the most recently occurring trouble code.
- The cursor is moved with the wiper switch and auto idle switch .
  (The cursor moves between "DTC-1" and "DTC-4".)
  * There is no "section" in diagnosis mode.
- The information for the trouble code for the location under the cursor is displayed in the order "ST/OC", "1st", "Last".
- The ○ mark displayed at the left most of "ST/OC" shows whether or not the trouble is currently occurring.
  The black circle ● means the trouble is currently occurring.
  The clear circle ○ means the trouble is not occurring now, but has occurred in the past.
- "1st" indicates the time at which this trouble occurred the first time and "last" indicates the time at which this trouble occurred the last time.

[2] For details on the "Diagnostic trouble codes" that can be read in diagnosis mode and their contents, see the Main Unit Diagnostic Trouble Code List below.

(1) Screen

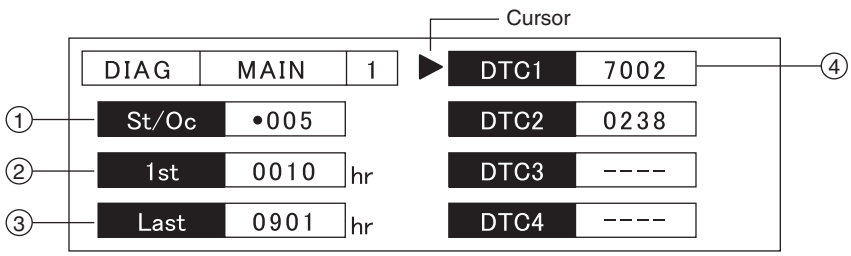

https://truckmanualshub.com/

[1] Displays the status at the cursor and the occurrence count.

St/Oc	•005

…7002 error now occurring / trouble has occurred 5 times in the past

Occurrence count

Status

[Status]

Displays whether the diagnostic trouble code under the cursor is current or from the past.
For ● , the trouble is current or continuing.
For ○ , the status is normal or recovered.
(The trouble is not occurring now, but has occurred in the past.)

[Occurrence count]

The number of times that diagnostic trouble code under the cursor has occurred

[2] Displays the time at which the trouble under the cursor first occurred

1st	0010	hr

…Occurred first at 10 hours

[3] Displays the time at which the trouble under the cursor last occurred

Last	0901	hr

…Occurred last at 901 hours

[4] Diagnostic Trouble Code

The troubles are sorted with the last one to occur at the top of the list.
The diagnostic trouble code under the cursor is displayed in (1) - (3).

DTC1	7002
DTC2	0238
DTC3	----
DTC4	----

…7002 (faulty N1 pressure sensor)

…0238 (Boost pressure sensor abnormally high voltage)

For details on diagnostic trouble code, see the separate Main Unit Diagnostic Trouble Code List.

Maximum display count

4 codes per page X 16 pages = 64 diagnostic trouble codes are displayed. From the 65th code onward, the oldest code is erased. However, even though these codes are not displayed, the data is retained.

(2) Operation

① Cursor up / down
Up operation …wiper switch
Down operation …auto idle switch

② Page forward / back
Forward operation …light switch
Back operation …washer switch

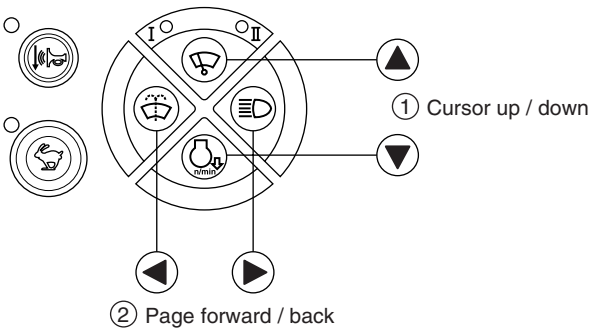

(3) Reset

If the washer switch and the light switch are held down for 10s, the trouble log is reset.

https://truckmanualshub.com/

3. HR (usage log) Screen List

In HR mode, operation times for mechanical parts, electrical parts, etc., operation counts for switches and solenoids, as well as pressure distributions, etc. can be displayed.

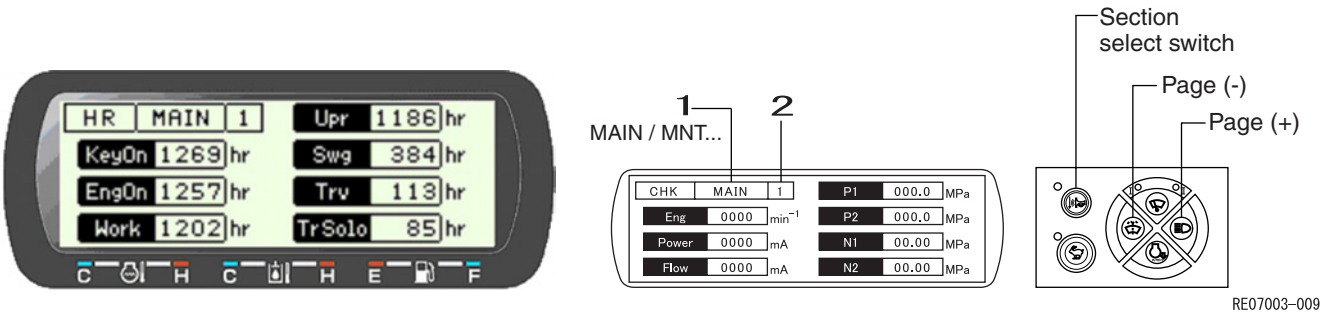

1	Section
2	Page

(1) MAIN

[1] Main unit operation time

HR	MAIN	1		Upr	0000	hr
KeyOn	0000	hr		Swg	0000	hr
EngOn	0000	hr		Trv	0000	hr
Work	0000	hr		TrSolo	0000	hr

KeyOn	:	Computer A power supply ON time
EngOn	:	Alternator power generation time
Work	:	Machine operation time (upper ON or travel ON)
Upr	:	Upper operation time
Swg	:	Swing operation time
Trv	:	Travel operation time
TrSolo	:	Travel single operation time

[2] Electrical parts operation time

HR	MAIN	2		WLight	0000	hr
WpInt	0000	hr		HornLo	0000	hr
WpCnt	0000	hr		DrOpn		hr
Wsh	0000	hr		WinOpn	0000	hr

WpInt	:	Wiper (intermittent)	Operation time
WpCnt	:	Wiper (continuous)	Operation time
Wsh	:	Washer	Operation time
WLight	:	Working light	ON time
HornLo	:	Horn volume low time	
DrOpn	:	*	
WinOpn	:	Front window open time	

[3] Idle time

HR	MAIN	3		4	0000	hr
1	0000	hr		5	0000	hr
2	0000	hr		6	0000	hr
3	0000	hr		7	0000	hr

1	:	Auto idle time
2	:	One-touch idle time
3	:	Boosted pressure time
4	:	Low-speed travel time
5	:	High-speed travel time
6	:	*
7	:	*

[4] Pressure switch operation count

HR	MAIN	4		4	0000	times
1	0000	times		5	0000	times
2	0000	times		6	0000	times
3	0000	times		7	0000	times

1	:	Upper pressure sensor	ON count X 1000
2	:	Swing pressure sensor	ON count X 1000
3	:	Travel pressure sensor	ON count X 1000
4	:	Arm-in pressure switch	ON count X 1000
5	:	1st option pressure switch	ON count X 1000
6	:	2nd option pressure switch	ON count X 1000
7	:	*	

E

https://truckmanualshub.com/

[5] Operation switch operation count

HR	MAIN	5			
1	0000	times	4		times
2	0000	times	5	0000	times
3	0000	times	6	0000	times
			7	0000	times

1 : Key ON count X 10
2 : Engine start count X 10
3 : Front window open count X 10
4 : *
5 : Boost solenoid ON count X 1000
6 : Swing brake solenoid ON count X 1000
7 : Power save solenoid ON count X 1000

[6] Work mode

HR	MAIN	6			
1	0000	hr	4	0000	hr
2	0000	hr	5	0000	hr
3	0000	hr	6	0000	hr
			7	0000	hr

1 : Mode usage time SP-hi
2 : Mode usage time SP-lo
3 : Mode usage time H-hi
4 : Mode usage time H-lo
5 : Mode usage time A1-hi
6 : Mode usage time A1-lo
7 : Mode usage time, other than above

[7] Breaker usage time

HR	MAIN	7			
1	0000	hr	4	0000	hr
2	0000	hr	5	0000	hr
3	0000	hr	6	0000	hr
			7	0000	hr

1 : Breaker 1 operation time
2 : Breaker 2 operation time
3 : Breaker 3 operation time
4 : Breaker 4 operation time
5 : Breaker 5 operation time
6 : Breaker 1-5 operation time
7 : *

[8] Crusher usage time

HR	MAIN	8			
1	0000	hr	4	0000	hr
2	0000	hr	5	0000	hr
3	0000	hr	6	0000	hr
			7	0000	hr

1 : Crusher 1 operation time
2 : Crusher 2 operation time
3 : Crusher 3 operation time
4 : Crusher 4 operation time
5 : Crusher 5 operation time
6 : Crusher 1-5 operation time
7 : *

[9] P1 pressure (P) distribution

HR	MAIN	9			
1	0000	hr	4	0000	hr
2	0000	hr	5	0000	hr
3	0000	hr	6	0000	hr
			7	0000	hr

1 : P < 10 MPa Time
2 : 10 MPa ≦ P < 15 MPa Time
3 : 15 MPa ≦ P < 20 MPa Time
4 : 20 MPa ≦ P < 25 MPa Time
5 : 25 MPa ≦ P < 30 MPa Time
6 : 30 MPa ≦ P < 35 MPa Time
7 : 35 MPa ≦ P Time

[10] P2 pressure (P) distribution

HR	MAIN	10			
1	0000	hr	4	0000	hr
2	0000	hr	5	0000	hr
3	0000	hr	6	0000	hr
			7	0000	hr

1 : P < 10 MPa Time
2 : 10 MPa ≦ P < 15 MPa Time
3 : 15 MPa ≦ P < 20 MPa Time
4 : 20 MPa ≦ P < 25 MPa Time
5 : 25 MPa ≦ P < 30 MPa Time
6 : 30 MPa ≦ P < 35 MPa Time
7 : 35 MPa ≦ P Time

https://truckmanualshub.com/

[11] N1 pressure (P) distribution

HR	MAIN	11			
			4	0000	hr
1	0000	hr	5	0000	hr
2	0000	hr	6	0000	hr
3	0000	hr	7	0000	hr

1 : P < 10 MPa Time
2 : 1.0 MPa ≦ P < 1.5 MPa Time
3 : 1.5 MPa ≦ P < 2.0 MPa Time
4 : 2.0 MPa ≦ P < 2.5 MPa Time
5 : 2.5 MPa ≦ P < 3.0 MPa Time
6 : 3.0 MPa ≦ P < 3.5 MPa Time
7 : 3.5 MPa ≦ P Time

[12] N2 pressure (P) distribution

HR	MAIN	12			
			4	0000	hr
1	0000	hr	5	0000	hr
2	0000	hr	6	0000	hr
3	0000	hr	7	0000	hr

1 : P < 1.0 MPa Time
2 : 1.0 MPa ≦ P < 1.5 MPa Time
3 : 1.5 MPa ≦ P < 2.0 MPa Time
4 : 2.0 MPa ≦ P < 2.5 MPa Time
5 : 2.5 MPa ≦ P < 3.0 MPa Time
6 : 3.0 MPa ≦ P < 3.5 MPa Time
7 : 3.5 MPa ≦ P Time

[13] P1 + P2 pressure (P) distribution

HR	MAIN	13			
			4	0000	hr
1	0000	hr	5	0000	hr
2	0000	hr	6	0000	hr
3	0000	hr	7	0000	hr

1 : P < 20 MPa Time
2 : 20 MPa ≦ P < 30 MPa Time
3 : 30 MPa ≦ P < 40 MPa Time
4 : 40 MPa ≦ P < 50 MPa Time
5 : 50 MPa ≦ P < 60 MPa Time
6 : 60 MPa ≦ P < 70 MPa Time
7 : 70 MPa ≦ P Time

[14] Oil temperature (T) distribution

HR	MAIN	14			
			4	0000	hr
1	0000	hr	5	0000	hr
2	0000	hr	6	0000	hr
3	0000	hr	7	0000	hr

1 : T < 45 ℃ Time (bar graph 1st and 2nd gradation)
2 : 45 ℃≦ T < 60 ℃ Time (bar graph 3rd gradation)
3 : 60 ℃≦ T < 80 ℃ Time (bar graph 4th gradation)
4 : 80 ℃≦ T < 88 ℃ Time (bar graph 5th gradation)
5 : 88 ℃≦ T < 95 ℃ Time (bar graph 6th gradation)
6 : 95 ℃≦ T < 98 ℃ Time (bar graph 7th gradation)
7 : 98 ℃≦ T Time (bar graph 8th gradation)

(2) ENG

[1] Oil temperature/coolant temperature/pressure maximum values
(Measured starting 10 minutes after engine started)

HR	ENG	1			
			Air	0000	℃
CoolInt	0000	℃	BstT	0000	℃
HydOil	0000	℃	BstP	0000	kPa
FuelT	0000	℃	EngOil	0000	kPa

CoolInt : Radiator coolant maximum temperature
HydOil : Hydraulic oil maximum temperature
FuelT : Fuel maximum temperature
Air : Suction air maximum temperature
BstT : Boost maximum temperature
BstP : Boost maximum pressure
EngOil : Engine oil minimum pressure

E

https://truckmanualshub.com/

[2] Engine actual speed (S) distribution

HR	ENG	2			
1	0000	hr	4	0000	hr
2	0000	hr	5	0000	hr
3	0000	hr	6	0000	hr
			7	0000	hr

1 : S < 1025 min^{-1} Time
2 : 1025 min^{-1} ≦ S < 1225 min^{-1} Time
3 : 1225 min^{-1} ≦ S < 1425 min^{-1} Time
4 : 1425 min^{-1} ≦ S < 1625 min^{-1} Time
5 : 1625 min^{-1} ≦ S < 1825 min^{-1} Time
6 : 1825 min^{-1} ≦ S < 025 min^{-1} Time
7 : 2025 min^{-1} ≦ S Time

[3] Coolant temperature (T) distribution

HR	ENG	3			
1	0000	hr	4	0000	hr
2	0000	hr	5	0000	hr
3	0000	hr	6	0000	hr
			7	0000	hr

1 : T < 77 ℃ Time (bar graph 1st and 2nd gradation)
2 : 77 ℃≦ T < 82 ℃ Time (bar graph 3rd gradation)
3 : 82 ℃≦ T < 97 ℃ Time (bar graph 4th gradation)
4 : 97 ℃≦ T < 100 ℃ Time (bar graph 5th gradation)
5 : 100℃≦T<103℃ Time (bar graph 6th gradation)
6 : 103 ℃≦ T < 105 ℃ Time (bar graph 7th gradation)
7 : 105 ℃≦ T Time (bar graph 8th gradation)

[4] Fuel temperature (T) distribution

HR	ENG	4			
1	0000	hr	4	0000	hr
2	0000	hr	5	0000	hr
3	0000	hr	6	0000	hr
			7	0000	hr

1 : T < 40 ℃ Time
2 : 40 ℃≦ T < 50 ℃ Time
3 : 50 ℃≦ T < 60 ℃ Time
4 : 60 ℃≦ T < 70 ℃ Time
5 : 70 ℃≦ T < 80 ℃ Time
6 : 80 ℃≦ T < 90 ℃ Time
7 : 90 ℃≦ T Time

[5] Suction air temperature (T) distribution

HR	ENG	5			
1	0000	hr	4	0000	hr
2	0000	hr	5	0000	hr
3	0000	hr	6	0000	hr
			7	0000	hr

1 : T < -20 ℃ Time
2 : -20 ℃≦ T < 0 ℃ Time
3 : 0 ℃≦ T < 15 ℃ Time
4 : 15 ℃≦ T < 30 ℃ Time
5 : 30 ℃≦ T < 45 ℃ Time
6 : 45 ℃≦ T < 60 ℃ Time
7 : 60 ℃≦ T Time

[6] Boost temperature (T) distribution

HR	ENG	6			
1	0000	hr	4	0000	hr
2	0000	hr	5	0000	hr
3	0000	hr	6	0000	hr
			7	0000	hr

1 : T < 50 ℃ Time
2 : 50 ℃≦ T < 80 ℃ Time
3 : 80 ℃≦ T < 110 ℃ Time
4 : 110 ℃≦ T < 140 ℃ Time
5 : 140 ℃≦ T < 170 ℃ Time
6 : 170 ℃≦ T < 200 ℃ Time
7 : 200 ℃≦ T Time

[7] Atmospheric pressure (P) distribution

HR	ENG	7			
1	0000	hr	4	0000	hr
2	0000	hr	5	0000	hr
3	0000	hr	6	0000	hr
			7	0000	hr

1 : P < 600 hPa Time
2 : 600 hPa ≦ P < 690 hPa Time
3 : 690 hPa ≦ P < 780 hPa Time
4 : 780 hPa ≦ P < 870 hPa Time
5 : 870 hPa ≦ P < 960 hPa Time
6 : 960 hPa ≦ P < 1050 hPa Time
7 : 1050 hPa ≦ P Time

https://truckmanualshub.com/

[8] Engine oil pressure (P) distribution

HR	ENG	8			
1	0000	hr	4	0000	hr
2	0000	hr	5	0000	hr
3	0000	hr	6	0000	hr
			7	0000	hr

1 : P < 0 kPa Time
2 : 0 kPa ≦ P < 150 kPa Time
3 : 150 kPa ≦ P < 300 kPa Time
4 : 300 kPa ≦ P < 450 kPa Time
5 : 450 kPa ≦ P < 600 kPa Time
6 : 600 kPa ≦ P < 750 kPa Time
7 : 750 kPa ≦ P Time

[9] Boost pressure (P) distribution

HR	ENG	9			
1	0000	hr	4	0000	hr
2	0000	hr	5	0000	hr
3	0000	hr	6	0000	hr
			7	0000	hr

1 : P < 150 kPa Time
2 : 150 kPa ≦ P < 180 kPa Time
3 : 180 kPa ≦ P < 210 kPa Time
4 : 210 kPa ≦ P < 240 kPa Time
5 : 240 kPa ≦ P < 270 kPa Time
6 : 270 kPa ≦ P < 300 kPa Time
7 : 300 kPa ≦ P Time

[10] Load ratio (R) distribution

HR	ENG	10			
1	0000	hr	4	0000	hr
2	0000	hr	5	0000	hr
3	0000	hr	6	0000	hr
			7	0000	hr

1 : R < 30 % Time
2 : 30 % ≦ R < 40 % Time
3 : 40 % ≦ R < 50 % Time
4 : 50 % ≦ R < 60 % Time
5 : 60 % ≦ R < 70 % Time
6 : 70 % ≦ R < 80 % Time
7 : 80 % ≦ R Time

[11] Load ratio (R) distribution for SP mode

HR	ENG	11			
1	0000	hr	4	0000	hr
2	0000	hr	5	0000	hr
3	0000	hr	6	0000	hr
			7	0000	hr

1 : R < 30 % Time
2 : 30 % ≦ R < 40 % Time
3 : 40 % ≦ R < 50 % Time
4 : 50 % ≦ R < 60 % Time
5 : 60 % ≦ R < 70 % Time
6 : 70 % ≦ R < 80 % Time
7 : 80 % ≦ R Time

[12] Load ratio (R) distribution for H mode

HR	ENG	12			
1	0000	hr	4	0000	hr
2	0000	hr	5	0000	hr
3	0000	hr	6	0000	hr
			7	0000	hr

1 : R < 30 % Time
2 : 30 % ≦ R < 40 % Time
3 : 40 % ≦ R < 50 % Time
4 : 50 % ≦ R < 60 % Time
5 : 60 % ≦ R < 70 % Time
6 : 70 % ≦ R < 80 % Time
7 : 80 % ≦ R Time

E

https://truckmanualshub.com/

4. CFG (setting change) Screen

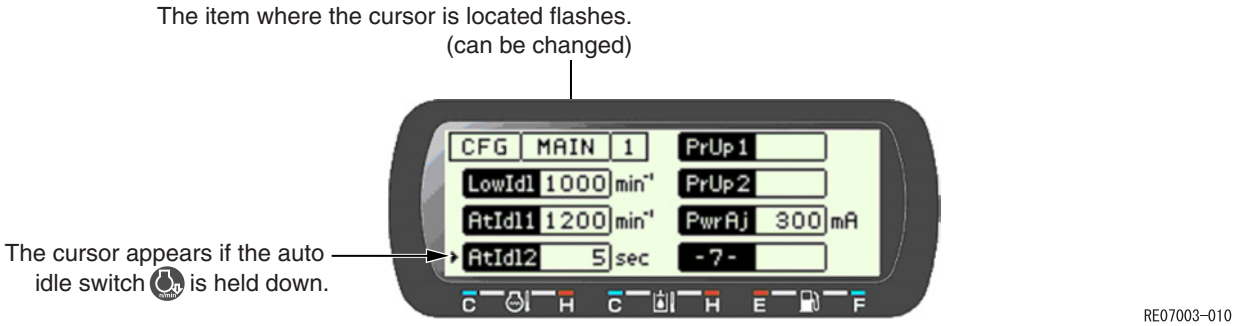

- Hold down the auto idle switch for 1 s. The cursor is displayed and the value starts to flash.
- The flashing value can be changed with the washer switch /working light switch .
- When the travel high-speed switch is pressed, value is finalized and the change is reflected in the actual machine.
- When the horn volume select switch is pressed, the change is cancelled.

(1) Operation

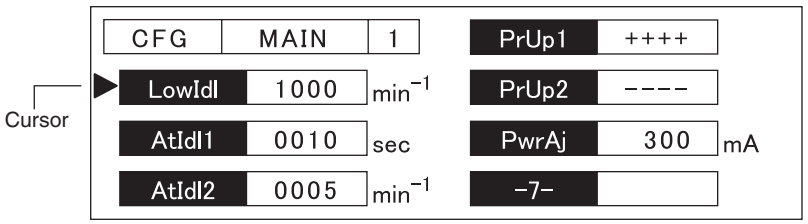

https://truckmanualshub.com/

[1] View mode (screen switching operation)

① Switching to edit mode
Hold down the auto idle switch for 1s. The mode switches to edit mode and the cursor is displayed.

② Page forward / back
Forward operation ··· light switch
Back operation ··· washer switch

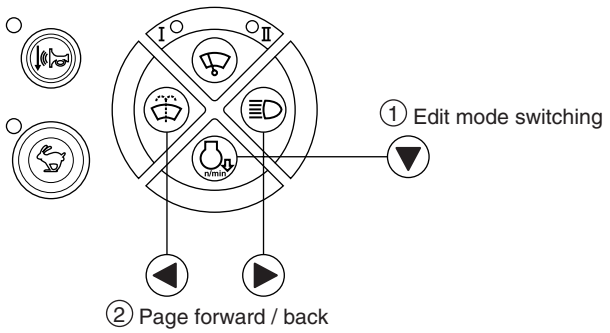

[2] Edit mode (setting change operation)

① Cursor up / down
Up operation ··· wiper switch
Down operation ··· auto idle switch

② Numeric value increase / decrease
Increase value ··· light switch
Decrease value ··· washer switch

③ Enter
Enters the set contents.

④ Cancel
Cancels the set contents.

When ③ or ④ is executed, this exits edit mode and shifts the mode to view mode. (The cursor disappears.)

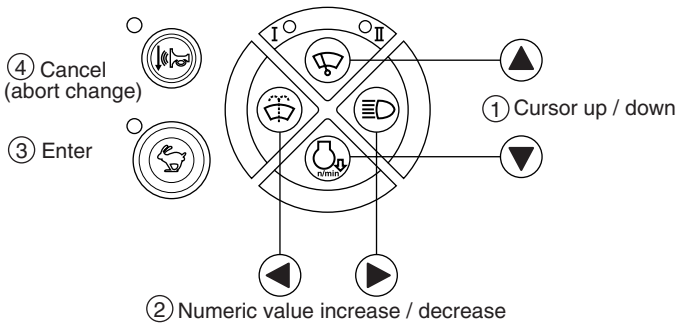

[3] Reset

If the washer switch and the light switch are held down for 10s, the setting contents are reset and all settings return to their default values.

E

https://truckmanualshub.com/

(2) Screen

[1] MAIN 1

CFG	MAIN	1		PrUp1	++++	
LowIdl	1000	min^{-1}		PrUp2	----	
AtIdl1	0005	sec		PwrAj	300	mA
AtIdl2	1200	min^{-1}		-7-		

Item name	Explanation	Setting range	Default value
LowIdl	Low idling speed	Min speed - auto idling speed	1000
AtIdl1	Auto idling shift time	1 to 30	5
AtIdl2	Auto idling speed	Low idling speed - 1500	1200
PrUp1	Auto pressure boost yes/no	+: YES, –: NO	+
PrUp2	Auto pressure boost for option line usage yes/no	+: YES, –: NO	–
PwrAj	Transient load minimum milli-amp	50 to 400	300
-7-			

* PwrAj is the previous high altitude mode.

[2] MAIN 2

CFG	MAIN	2		CoolDn	
TrSpd	----			EPF	++++
TrAlm1	++++			Unit	0000
TrAlm2	0010	sec		-7-	

Item name	Explanation	Setting range	Default value
TrSpd	Travel speed previous data held yes/no	+: YES, –: NO	–
TrAlm1	Travel alarm buzzing yes/no	+: YES, –: NO	+
TrAlm2	Travel alarm automatic stop time	1 to 30	10
CoolDn			
EPF	EPF (Engine Protection Feature) yes/no	+: YES, –: NO	+
Unit	Display unit	0: MPa, 1: PSI, 2: kgf/cm^2	0
-7-			

* Display units … MPa = { MPa, ℃ }, PSI = { psi, °F }, kgf/cm^2 = { kgf/cm^2, ℃ }

https://truckmanualshub.com/

[3] MAIN 3

CFG	MAIN	3		MntMsg	++++	
Spd1			min^{-1}	Cycle	0500	hr
Spd2			min^{-1}	Remain	0500	hr
OvLd	0000		MPa	-7-	++++	

Item name	Explanation	Setting range	Default value
Spd1			
Spd2			
OvLd	Pressure at which alarm starts		
MntMsg	”SERVICE DUE” display yes/no	+: YES, −: NO	+
Cycle	”SERVICE DUE” display range	0 to 5000	500
Remain	Time until next “SERVICE DUE” display	0 to 5000	500
-7-	New harness yes/no	+: YES, −: NO	+

* OvLd is an option for Europe.
* -7- is battery charge and engine emergency stop port substitution.

E

https://truckmanualshub.com/

5. CAL (troubleshooting support) Screen

(1) Operation

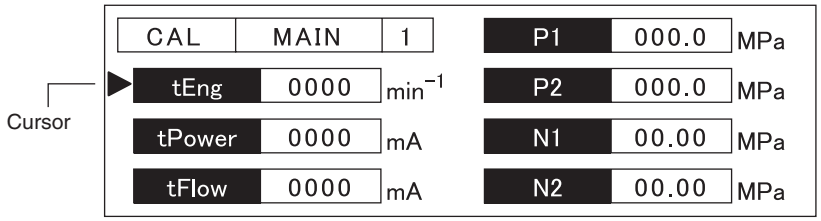

[1] View mode (screen switching operation)

① Switching to edit mode
Hold down the auto idle switch or 1s. The mode switches to edit mode and the cursor is displayed.

② Page forward / back
Forward operation ··· light switch
Back operation ··· washer switch

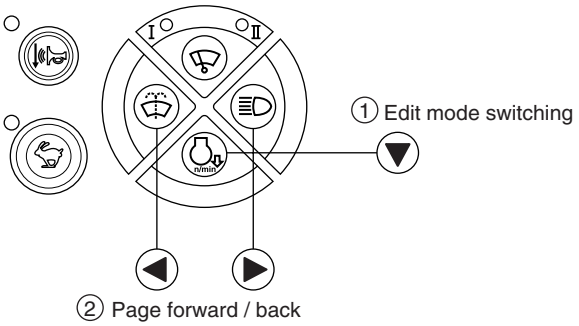

[2] Edit mode (setting change operation)

① Cursor up / down
Up operation ··· wiper switch
Down operation ··· auto idle switch

② Numeric value increase / decrease
Increase value ··· light switch
Decrease value ··· washer switch

③ Enter
Enters the set contents.

④ Cancel
Use the travel high-speed select switch or the horn volume select switch to cancel. Exits edit mode and shifts to view mode. (The cursor disappears.)

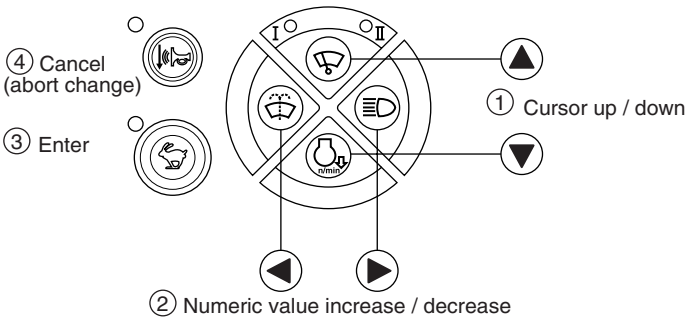

https://truckmanualshub.com/

(2) Screen

[1] Engine pump override 1

CAL	MAIN	1		P1	000.0	MPa
tEng	0000	min^{-1}		P2	000.0	MPa
tPower	0000	mA		N1	00.00	MPa
tFlow	0000	mA		N2	00.00	MPa

Item name	Explanation	Setting range	Default value
tEng	Target engine speed	500 - max speed	Low idling
tPower	Target milli-amp for horsepower control proportional valve	50 to 740	50
tFlow	Target milli-amp for flow control proportional valve	50 to 740	50
P1	P1 pressure	-	-
P2	P2 pressure	-	-
N1	N1 pressure	-	-
N2	N2 pressure	-	-

[2] Engine pump override 2

CAL	MAIN	2		P1+P2	000.0	MPa
tEng	1000	min^{-1}		Eng	0000	min^{-1}
tPower	0500	mA		Power	0000	mA
tFlow	0500	mA		Flow	0000	mA

Item name	Explanation	Setting range	Default value
tEng	Target engine speed	500 - max speed	Low idling
tPower	Target milli-amp for horsepower control proportional valve	50 to 740	50
tFlow	Target milli-amp for flow control proportional valve	50 to 740	50
P1+P2	P1+P2 pressure	-	-
Eng	Actual engine speed	-	-
Power	Actual milli-amp for horsepower control proportional valve	-	-
Flow	Actual milli-amp for flow control proportional valve	-	-

E

https://truckmanualshub.com/

[3] Hydraulic pressure drive fan override

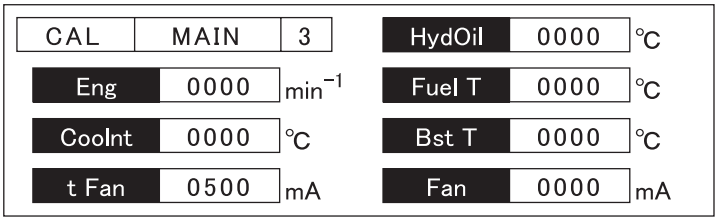

Item name	Explanation	Setting range	Default value
Eng	Actual engine speed	-	-
CoolInt	Coolant temperature	-	-
tFan	Target milli-amp for hydraulic fan proportional valve	50 to 740	50
HydOil	Oil temperature	-	-
FuelT	Fuel temperature	-	-
BstT	Boost temperature	-	-
Fan	Actual milli-amp for hydraulic fan proportional valve	-	-

6. Check the Monitor Switch (self-diagnosis function)

[1] After the key is switched ON, the "SUMITOMO" logo screen is displayed on the monitor. At this time, the display can be switched to the monitor switch check screen by pressing the one-touch idle switch five times.

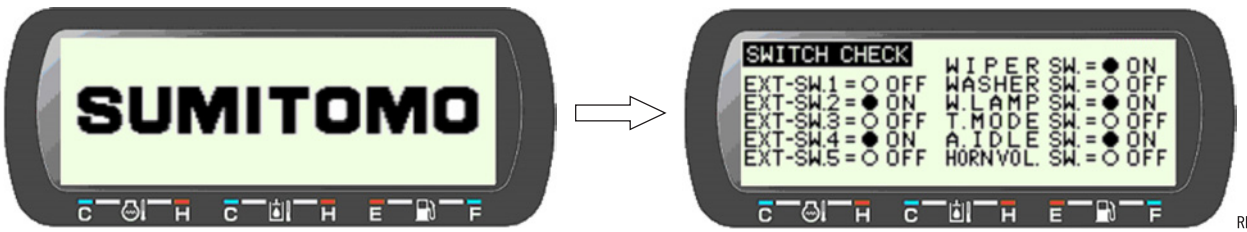

The switch contents are as follows.

SW1	Front window limit switch
SW2	Breaker mode switch
SW3	Crusher mode switch
SW4	2 pumps flow switch
SW5	Not used
WIPER SW	Wiper switch
WASHER SW	Washer switch
W. LAMP SW	Working light switch
T. MODE SW	Travel high-speed select switch
A. IDLE SW	Auto idle switch
HORN VOL. SW	Horn volume select switch

https://truckmanualshub.com/

[2] Configuration

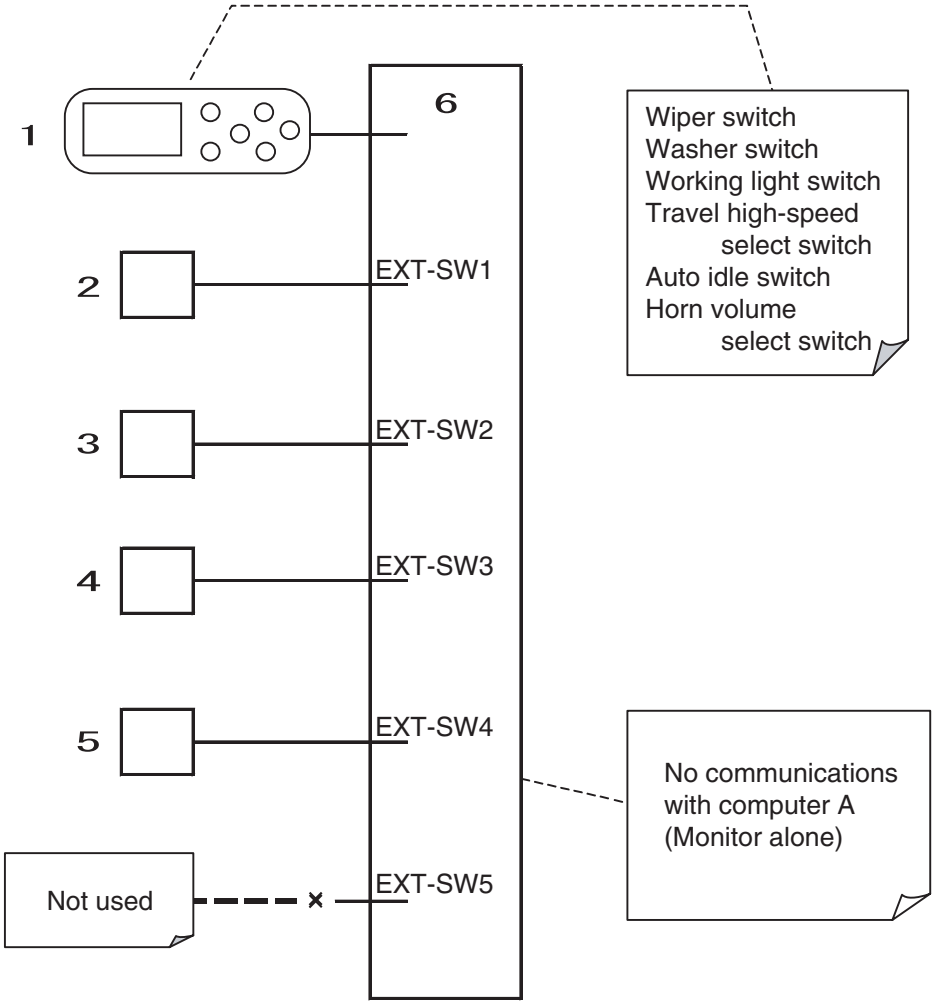

1	Switch panel	4	Breaker mode switch
2	2 pumps flow switch	5	Crusher mode switch
3	Front window limit switch	6	Monitor

[3] Differences from CHK screen [CHK | H/W-M | 1]

Monitor main unit input/output can also be checked on the CHK screen. However, for the CHK screen,

1) after the switch input is sent to computer A with communication,
2) the switch input is processed by computer A and
3) the results are sent to the monitor as screen data

and displayed. On the monitor switch check screen, the switch input recognized by the monitor itself is displayed directly on the screen (without involving communication or computer A), so it is possible to diagnose purely the switches themselves.

https://truckmanualshub.com/

7. Option Flow Setting

[1] When three seconds have passed, the logo screen shifts to the user screen.
With the user screen being displayed, if either the "breaker" or "crusher" rocker switch on the right panel is held down for 3s, the "option flow setting screen" is displayed on the monitor.

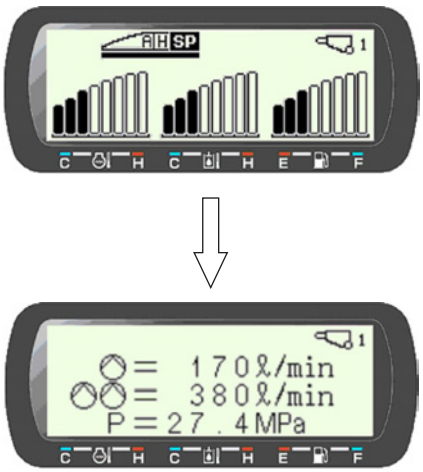

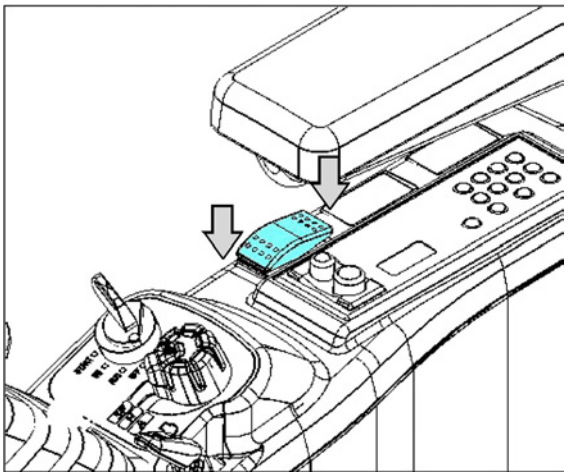

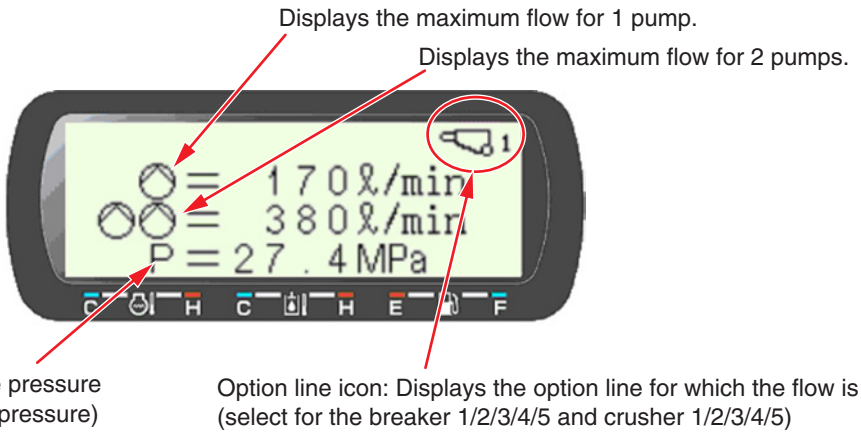

RE07003-006

[2] Flow setting

1. Press the breaker or crusher mode switch to select the mode to set the flow for.

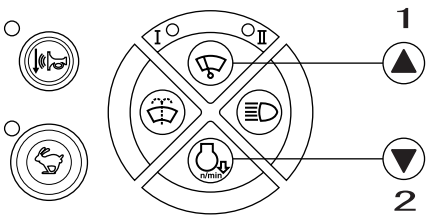

- Rocker switch -

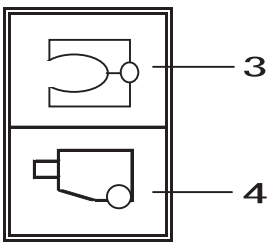

1	Flow increase	3	Crusher mode (1 - 5) switchover
2	Flow decrease	4	Breaker mode (1 - 5) switchover

https://truckmanualshub.com/

2. The flow setting for the selected mode is selected by pressing the wiper switch or auto idle select switch .
   The flow setting can be set to 10 levels from Level 1 to Level 10.
   Caution
   The set flow is the flow value when SP mode is selected.
   Be careful. If run with the engine speed reduced, the actual flow is not the flow displayed.

	Unit	SH210-5	SH240-5
1 pump flow (flow Level 1)	L/min	210	234
1 pump flow (flow Level 2)	L/min	196	218
1 pump flow (flow Level 3)	L/min	182	202
1 pump flow (flow Level 4)	L/min	166	184
1 pump flow (flow Level 5)	L/min	146	161
1 pump flow (flow Level 6)	L/min	129	141
1 pump flow (flow Level 7)	L/min	111	120
1 pump flow (flow Level 8)	L/min	94	100
1 pump flow (flow Level 9)	L/min	74	77
1 pump flow (flow Level 10)	L/min	50	50
2 pumps flow (flow Level 1)	L/min	420	468
2 pumps flow (flow Level 2)	L/min	406	452
2 pumps flow (flow Level 3)	L/min	392	436
2 pumps flow (flow Level 4)	L/min	376	418
2 pumps flow (flow Level 5)	L/min	356	395
2 pumps flow (flow Level 6)	L/min	339	375
2 pumps flow (flow Level 7)	L/min	321	354
2 pumps flow (flow Level 8)	L/min	304	334
2 pumps flow (flow Level 9)	L/min	284	311
2 pumps flow (flow Level 10)	L/min	260	284

[3] There is no need to do anything to finalize the setting. End by leaving this screen or switching OFF the key.
The factory settings for each mode are as follows.
There are no 4 or 5 settings for the breaker or crusher. Just a hyphen is displayed for these settings.

Mode	Flow display
Breaker circuit 1/Crusher 1	Level 3 flow
Breaker circuit 2/Crusher 2	Level 5 flow
Breaker circuit 3/Crusher 3	Level 7 flow
Breaker circuit 4/Crusher 4	---- (Not used)
Breaker circuit 5/Crusher 5	

https://truckmanualshub.com/

8. Anti-theft Setting

[1] Anti-theft setting and password registration

1) Enabling the anti-theft function
With the key OFF, connect the anti-theft knob terminal.
When the male and female knob terminals are connected on the cab main harness in the rear cover, the anti-theft function is enabled. The factory setting is for these knob terminals to be disconnected.

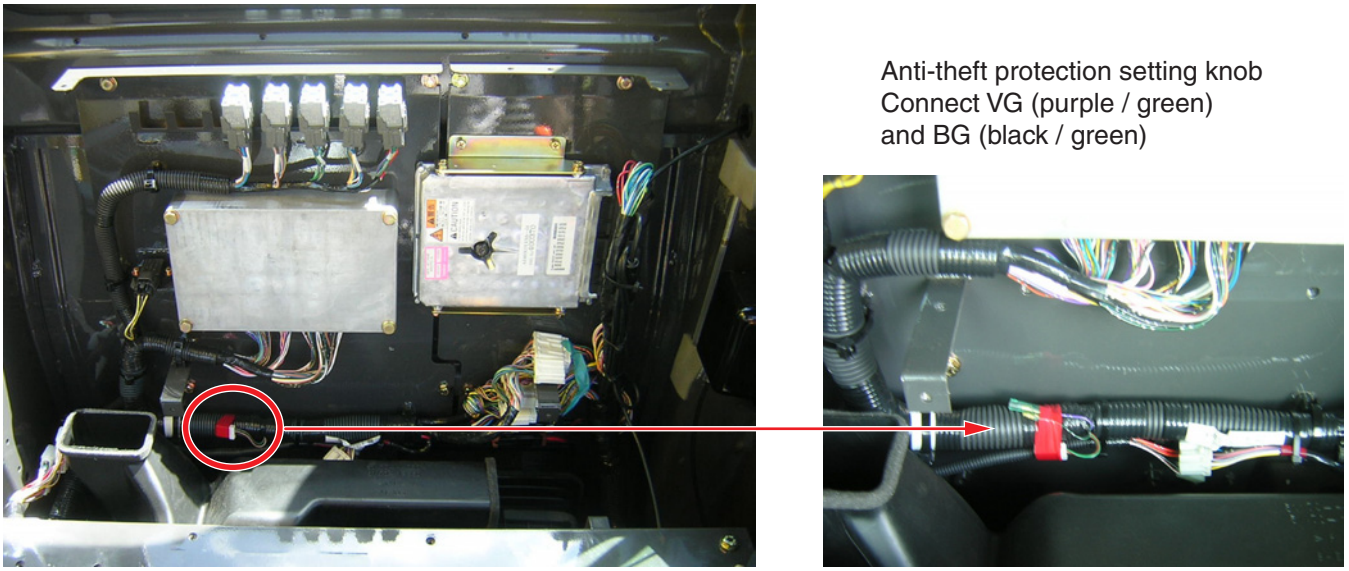

RST–05–07–001cx

2) Setting the password
When the knob terminals are connected, then the key switched ON, the following screen is displayed.
Enter any 4-digit number made up of the numbers 1 to 9.
(If all 4 digits are not input, “ERROR” is displayed.)
Input by using the monitor switches as follows.
When the Enter button is pressed, the password is stored into memory and display returns to the normal screen.

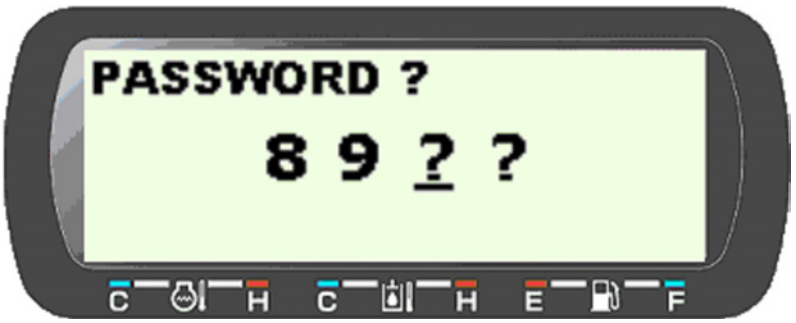

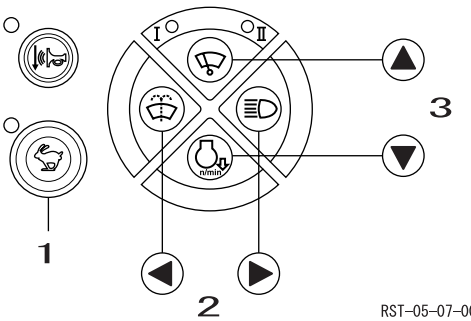

RST–05–07–001cy

1	Enter	3	Numeric value increase/decrease
2	Cursor movement		

3) Changing the password
If the password has been forgotten or it is desired to change the password, if the knob terminal in [1]-1) is disconnected and the key switched ON, the password is cleared. To re-input the password, repeat the procedure in [1].

https://truckmanualshub.com/

[2] Anti-theft function operation

1) Enabling the anti-theft function

1. If the key is switched twice in a row ON→OFF→ON→OFF with the engine stopped, the anti-theft function is switched ON.
   (All the key switching operations must be done within 2s.)
2. When the anti-theft comes ON, the monitor buzzes and the “key” icon is displayed.
   (Once the anti-theft is switched ON, this icon is displayed while the power is OFF.)

3. The next time the key is switched ON, the anti-theft operates and the password input screen is displayed.
   Input the password made up of 4 digits 0 to 9.
   Input by using the monitor switches below.
   If an incorrect number is input, “ERROR” is displayed and the buzzer buzzes.
   The key must be switched OFF, then ON again before the password can be re-input.

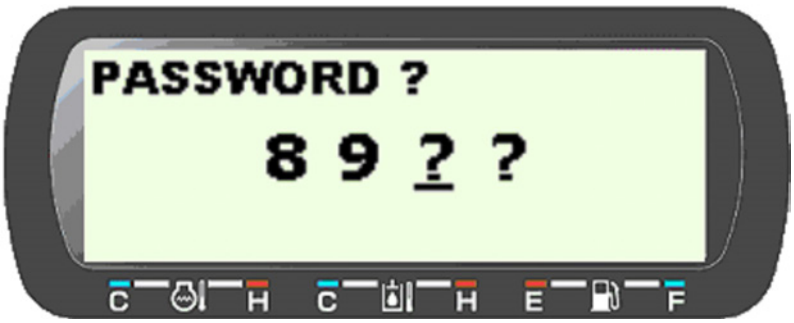

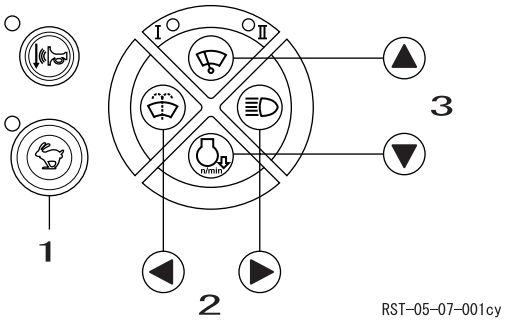

1	Enter	3	Numeric value increase/decrease
2	Cursor movement		

2) Disabling the anti-theft function

1. If the engine is stopped by switching OFF the key, the anti-theft function does not operate.
2. To disable the anti-theft function, disconnect the anti-theft knob terminals VG (purple/green) and BG (black/green). The registered password is canceled.

https://truckmanualshub.com/

9. Model Setting

[1] If the model selection has not been completed, immediately after the key is switched ON, the “Model select screen” is displayed.

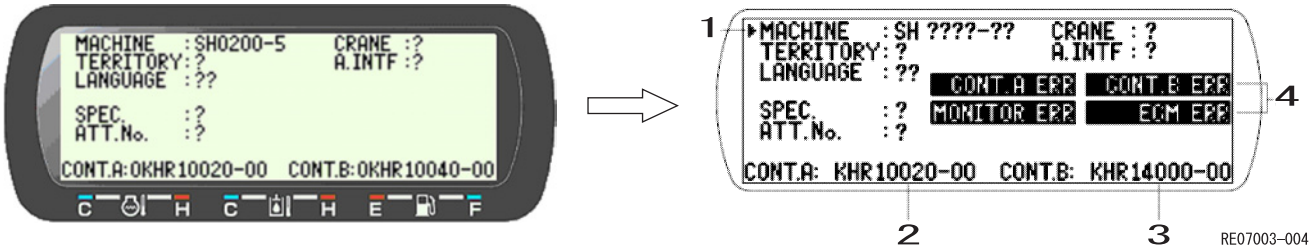

1	Cursor	3	Computer B; Part number
2	Computer A; Part number	4	Error display section

1) For the “CONT. A” item, the part number for computer A is automatically displayed.
2) In the same way, if computer B is connected (for the liftcrane application or interference prevention application), the part number for computer B is automatically displayed for the “CONT. B” item.
3) Items that must be input are displayed with “?”

a) MACHINE : Model (SH120-5, SH150-5, SH180-5, SH200-5, SH240-5, SH290-5)

b) TERRITORY : Destination (0: Domestic, general export, 1: LBX, 2: CASE NA, 3: CASE EU)

c) LANGUAGE : Language (0: Japanese, 1: English, 2: Thai, 3: Chaina, 4: German, 5: French, 6: Italian, 7: Spanish, 8: Portuguese, 9: Dutch, 10: Danish, 11: Norwegian, 12: Swedish, 13: Finnish, 14: Turkish, 15: Arabic, 16: Malay, 17: Indonesian, 18: Icon)

d) SPEC : Main unit specifications (Input 0)

e) ATT. No. : Attachment specification (Input 0)

f) CRANE : 0: No crane
1: Crane

g) A. INTF : 0: No interference prevention function
1: Interference prevention function

4) Input operating method
Input by using the monitor switches as follows.
* When the model select screen is displayed on the monitor, the normal monitor switch functions do not work.

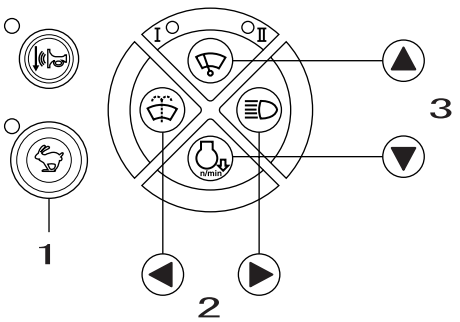

1	Enter button
2	Numeric value change
3	Cursor movement

When the throttle volume position or all the input is complete, press ‘ ’ (Enter button).
(The throttle volume must always be at the "H" mode position.)
If the input is inappropriate (*), “CONT. A. ERR” is displayed.
* When there is still an item left with "?" displayed or the combination of model, destination, specification, and the like is inappropriate.

https://truckmanualshub.com/

5) On the model setting screen, the ECM part number is automatically checked.
   If the input model and the ECM part number do not correspond, “ECM ERR” is displayed.
6) Even after the model selection is complete, it is possible to change just the "LANGUAGE", "CRANE", or "ATT. NO." setting without an all reset, which is discussed below.
7) All reset

- On the model select screen, if the wiper switch and light switch are held down for 10S, the data below is erased. (All reset)
- Data input in model selection → All this data returns to “?”.
- Trouble log
- Usage log
- Data changed with CFG

https://truckmanualshub.com/

10.Engine Screen Information

[1] Purpose

It has been made possible to copy the engine information (Q adjustment, QR code, engine serial number) stored in the ECM to the new ECM when the ECM and injector are replaced.

[2] How to go to this screen

See the service support screen operation.

[3] Engine start restriction

When this screen is displayed, the engine cannot be started.

[4] Screen

The engine information held in computer A can be checked as follows.

1) Pages 1 to 4: Injector cylinder 1 to 4 QR code (Pages 5 and 6 are not used and cannot be input.)

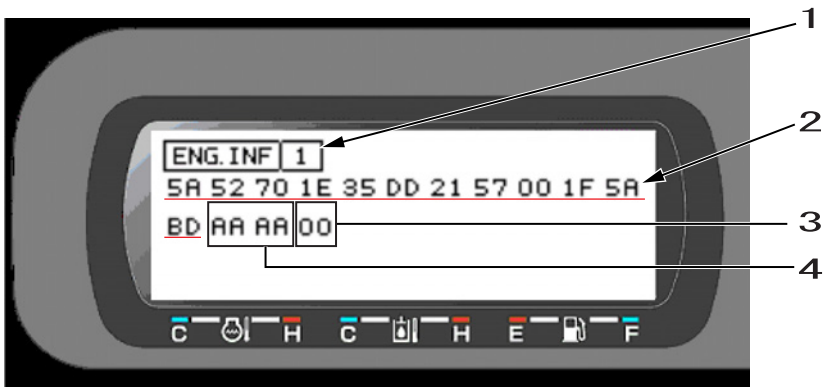

1	Page
2	QR code 24 digits
3	Error code
4	Indicates the display mode. Currently displays the information in computer A.

2) Page 7: Q resistance data

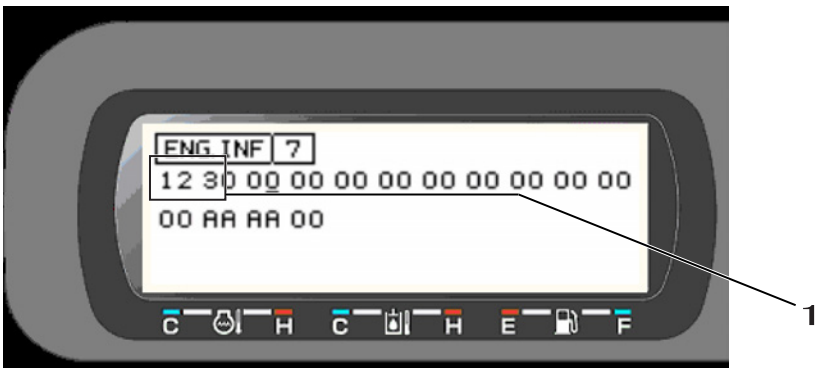

1	Q resistance data 3 digits

3) Page 8: Engine serial number

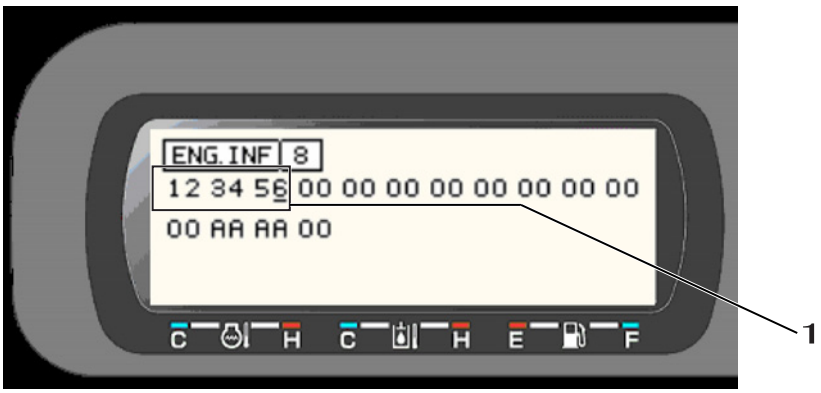

1	Engine serial number 6 digits

https://truckmanualshub.com/

4) ECM part number

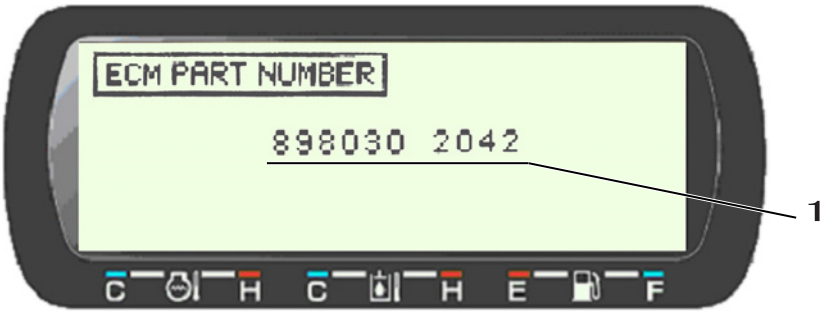

1	ECM part number

[5] Operating method
See the Engine Maintenance Standards.

https://truckmanualshub.com/

Screen Display Details

1. Message Display List

Display	Message type	Display ON timing	Display OFF timing
Low oil press	Warning	When the “Engine oil pressure abnormally low” trouble occurs	None Does not go off while the key is ON.
Check engine	Warning	When the “ECM mismatch” trouble occurs Also, when a diagnostic trouble code is sent from the ECM	None Does not go off while the key is ON.
Elec. problem (*1)	Warning	When any of the troubles below occur “Sensor; Pressure (P1)”, “Sensor; Pressure (P2)”, “Sensor; Pressure (N1)”,“Sensor; Pressure (N2)”, “Sensor; Pressure (Overload)”, “Sensor; Pressure (Bottom)”, “Sensor; Pressure (Rod)”, “Sensor; Pressure (Upper)”, “Sensor;Pressure (Swing), “Sensor; Pressure (Travel)”, “Sensor; Pressure (Arm in)”, “Sensor; Fuel level”, “Sensor; Oil temperature”, “Sensor; Angle (Boom)”, “Sensor; Angle (Arm)”, “Sensor; Angle (Offset)”, “Pressure switch; Return filter clog" “Solenoid; Swing brake”, “Solenoid; Travel high-speed ”, “Solenoid; Power save" “Relay; Feed pump automatic stop”, “Solenoid; Option return circuit”,"Solenoid; Free swing" “Solenoid; Fan reverse”, “Air conditioner signal output”, “Buzzer; Liftcrane" “Rotating light and solenoid; Bucket lock”, “ Solenoid; Lever lock" “Proportional valve; Horsepower pump ”, “Proportional valve; Pump flow" “Proportional valve; Fan”, “Proportional valve; Boom”, “Proportional valve; Offset”, “Proportional valve; Arm”, “communication monitor”, “communication ECM”, “communication computer B”, “communication computer S”, “CAN bus”	None Does not go off while the key is ON.
Overheat	Warning	When any of the troubles below occur ”Abnormally high coolant temperature 1”, “Abnormally high oil temperature”	When all the troubles below are recovered from “Abnormally high coolant temperature 1” “Abnormally high oil temperature”
Low coolant	Warning	When the “Coolant level low” trouble occurs	None Does not go off while the key is ON.
Battery charge	Warning	When the “Abnormally low alternator voltage” trouble occurs	None Does not go off while the key is ON.
Check hyd. oil filter	Warning	When the “Return filter clogged” trouble occurs	None Does not go off while the key is ON.
Air filter	Warning	When the “Air cleaner clogged” trouble occurs	None Does not go off while the key is ON.
Boost temp. high	Warning	When the “Abnormally high boost temperature 1” trouble occurs	When the “Abnormally high boost temperature 1” trouble is recovered from
Low fuel	Warning	When the “Fuel level drop” trouble occurs	When the “Fuel level low” trouble is recovered from
Switch to 1-pump	Alert	When the breaker mode is ON and 2 pumps flow is ON	When the conditions on the left are no longer met
Engine stop	Alert	When the engine emergency stop switch is ON	When the conditions on the left are no longer met
Over load	Alert	When the boom cylinder bottom pressure exceeds the set pressure	When the conditions on the left are no longer met
Engin idling	Icon	During one-touch idling or auto idling	When the conditions on the left are no longer met

https://truckmanualshub.com/

Display	Message type	Display ON timing	Display OFF timing
Power up	Icon	During auto power boost	When the conditions on the left are no longer met
Engin pre heat	Icon	When power ON to glow plug	When the conditions on the left are no longer met
Auto warm up	Icon	During auto warm up	When the conditions on the left are no longer met
Service due	Status	When the key is ON and the hour meter has reached the regulation time	After 1 minute after the key was switched ON

(*1) Even if one of the following troubles occurs, “ELEC. PROBLEM” is not issued.
”BZ travel alarm”, “Monitor thermistor”, “Air conditioner coolant signal output”

Message type

[1] Status.....Message only
[2] Alert .....The intermittent alarm continues to sound at 1-second intervals.
[3] Warning.....The continuous alarm sounds for just 5s.
[4] Icon .....Only an icon is displayed.

E

https://truckmanualshub.com/

Trouble Display

1. Diagnostic Trouble Code Display

[1] Purpose and summary
When a trouble occurs, the diagnostic trouble code (DTC) is displayed on the user screen. This enables the operator to verbally communicate the trouble to the service engineer.

[2] Screen
Displayed with the ! mark next to the work mode followed by a 4-digit number.
If there is no trouble, nothing at all is displayed.

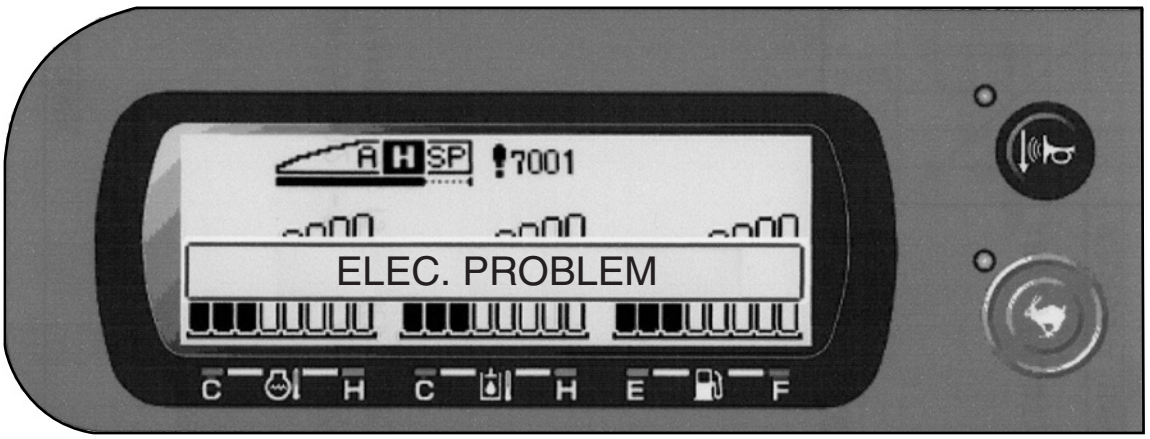

RE07003–039

[3] Trouble display
The “ELEC. PROBLEM” or “CHECK ENGINE” message is displayed.
When trouble occurs, the corresponding diagnostic trouble code is displayed. If the message makes clear the trouble location, the location is not displayed elsewhere.
For details, see the “Main Unit Diagnostic Trouble Code List”. All the diagnostic trouble codes sent from the ECM are subject to display.

[4] Displayed trouble status
Only current and ongoing troubles are displayed. Troubles that have been recovered from are not displayed.

[5] Multiple trouble display
When multiple troubles occur, they are displayed in turn at intervals of 5s.

https://truckmanualshub.com/

2. Main Unit Diagnostic Trouble Code List

(1) Electrical troubles (input) [7000-7199]

Trouble location	Trouble mode	Diagnostic trouble code		Judgment timing	Prerequisites	Occurrence judgment	Recovery judgment
		DTC	Display			Conditions	Conditions
Sensor; Pressure (P1)	Ground short /disconnection	7000	○	Immediately after key switched ON	None	Voltage ≦ 0.25 V	0.25 V < Voltage < 4.75 V
	Power supply short					Voltage ≧ 4.75 V	
Sensor; Pressure (P2)	Ground short /disconnection	7001	○	Immediately after key switched ON	None	Voltage ≦ 0.25 V	0.25 V < Voltage < 4.75 V
	Power supply short					Voltage ≧ 4.75 V	
Sensor; Pressure (N1)	Ground short /disconnection	7002	○	Immediately after key switched ON	None	Voltage ≦ 0.25 V	0.25 V < Voltage < 4.75 V
	Power supply short					Voltage ≧ 4.75 V	
Sensor; Pressure (N2)	Ground short /disconnection	7003	○	Immediately after key switched ON	None	Voltage ≦ 0.25 V	0.25 V < Voltage < 4.75 V
	Power supply short					Voltage ≧ 4.75 V	
Sensor; Pressure (Overload)	Ground short /disconnection	7004	○	Immediately after key switched ON	EU selected as destination	Voltage ≦ 0.25 V	0.25 V < Voltage < 4.75 V
	Power supply short					Voltage ≧ 4.75 V	
Sensor; Pressure (Bottom)	Ground short/ disconnection	7005	○	Immediately after key switched ON	Liftcrane selected	Voltage ≦ 0.25 V	0.25 V < Voltage < 4.75 V
	Power supply short					Voltage ≧ 4.75 V	
Sensor; Pressure (Rod)	Ground short /disconnection	7006	○	Immediately after key switched ON	Liftcrane selected	Voltage ≦ 0.25 V	0.25 V < Voltage < 4.75 V
	Power supply short					Voltage ≧ 4.75 V	
Sensor; Pressure (Upper)	Ground short /disconnection	7020	○	Immediately after key switched ON	None	Voltage ≦ 0.25 V	0.25 V < Voltage < 4.75 V
	Power supply short					Voltage ≧ 4.75 V	
Sensor; Pressure (Swing)	Ground short/dis-connection	7021	○	Immediately after key switched ON	None	Voltage ≦ 0.25 V	0.25 V < Voltage < 4.75 V
	Power supply short					Voltage ≧ 4.75 V	
Sensor; Pressure (Travel)	Ground shor /disconnection	7022	○	Immediately after key switched ON	None	Voltage ≦ 0.25 V	0.25 V < Voltage < 4.75 V
	Power supply short					Voltage ≧ 4.75 V	
Sensor; Pressure (Arm in)	Ground short /disconnection	7023	○	Immediately after key switched ON	None	Voltage ≦ 0.25 V	0.25 V < Voltage < 4.75 V
	Power supply short					Voltage ≧ 4.75 V	
Sensor; Fuel level	Disconnection	7040	○	Immediately after key switched ON	None	Resistance ≧ 100Ω	2Ω < Resistance < 100Ω
	Short					Resistance ≦ 2Ω	
Sensor; Oil temperature	Disconnection	7041	○	3 minutes after engine starts	None	Resistance ≧ 67200Ω (Voltage ≧ 4.93 V)	111Ω < Resistance < 67200 Ω (0.5 V < Voltage < 4.93 V)
	Short			Immediately after key switched ON		Resistance ≦ 111Ω (Voltage ≦ 0.5 V)	
Monitor thermistor (*1)	Disconnection	7045	×	Immediately after key switched ON	None	Trouble bit received from monitor	No trouble bit received from monitor
	Short						
Sensor; Angle (Boom)	Ground short /disconnection	7060	○	Immediately after key switched ON	Liftcrane or interference pre-vention selected	Voltage ≦ 0.2 V	0.2 V < Voltage < 4.8 V
	Power supply short					Voltage ≧ 4.8 V	
Sensor; Angle (Arm)	Ground short /disconnection	7061	○	Immediately after key switched ON	Liftcrane or interference pre-vention selected	Voltage ≦ 0.2 V	0.2 V < Voltage < 4.8 V
	Power supply short					Voltage ≧ 4.8 V	

E

https://truckmanualshub.com/

Trouble location	Trouble mode	Diagnostic trouble code		Judgment timing	Prerequisites	Occurrence judgment	Recovery judgment
		DTC	Display			Conditions	Conditions
Sensor; Angle (Offset)	Ground short /disconnection	7062	○	Immediately after key switched ON	Liftcrane or interference prevention selected	Voltage ≦ 0.2 V	0.2 V < Voltage < 4.8 V
	Power supply short					Voltage ≧ 4.8 V	
Pressure switch return filter clog	Disconnection	7063	○	From immediately after key switched ON until engine starts	None	Pressure switch = OFF	Pressure switch = ON

For items for which × is displayed, the “ELEC. PROBLEM” message is not displayed. Also, there is no DTC display on the user screen.
However, the DTC is recorded on the service (DIAG) screen.

(2) Electrical troubles (output) [7200-7399]

Trouble location	Trouble mode	Diagnostic trouble code		Judgment timing	Prerequisites	Occurrence judgment	Recovery judgment
		DTC	Display			Conditions	Conditions
Solenoid; Swing brake	Disconnection	7200	○	Immediately after key switched ON	None	Output ≠ Output monitor	Output = Output monitor
	Short						
Solenoid; Travel high-speed	Disconnection	7201	○	Immediately after key switched ON	None	Output ≠ Output monitor	Output = Output monitor
	Short						
Solenoid; Boost	Disconnection	7202	○	Immediately after key switched ON	None	Output ≠ Output monitor	Output = Output monitor
	Short						
BZ travel alarm (*1)	Disconnection	7203	×	Immediately after key switched ON	None	Output ≠ Output monitor	Output = Output monitor
	Short						
Solenoid; Power save	Disconnection	7204	○	Immediately after key switched ON	None	Output ≠ Output monitor	Output = Output monitor
	Short						
REL feed pump stop	Disconnection	7205	○	Immediately after key switched ON	None	Output ≠ Output monitor	Output = Output monitor
	Short						
Solenoid; Option return circuit	Disconnection	7206	○	Immediately after key switched ON	None	Output ≠ Output monitor	Output = Output monitor
	Short						
Solenoid; Free swing	Disconnection	7207	○	Immediately after key switched ON	None	Output ≠ Output monitor	Output = Output monitor
	Short						
Solenoid; Fan reverse	Disconnection	7208	○	Immediately after key switched ON	None	Output ≠ Output monitor	Output = Output monitor
	Short						
Air conditioner coolant temperature signal output (*1)	Disconnection	7209	×	Immediately after key switched ON	None	Output ≠ Output monitor	Output = Output monitor
	Short						
BZ liftcrane	Disconnection	7210	○	Immediately after key switched ON	None	Output ≠ Output monitor	Output = Output monitor
	Short						
REL rotating light and bucket lock	Disconnection	7211	○	Immediately after key switched ON	None	Output ≠ Output monitor	Output = Output monitor
	Short						

https://truckmanualshub.com/

Trouble location	Trouble mode	Diagnostic trouble code		Judgment timing	Prerequisites	Occurrence judgment	Recovery judgment
		DTC	Display			Conditions	Conditions
Solenoid; Gate lock	Disconnection	7212	○	Immediately after key switched ON	None	Output ≠ Output monitor	Output = Output monitor
	Short						
Proportional valve; Horsepower pump	Disconnection	7240	○	After engine starts	None	Milli-amp ≦ 30 mA	30 mA < Milli-amp < 3 A
	Short			Immediately after key switched ON		Milli-amp ≧ 3 A	
Proportional valve; Pump flow	Disconnection	7241	○	After engine starts	None	Milli-amp ≦ 30 mA	30 mA < Milli-amp < 3 A
	Short			Immediately after key switched ON		Milli-amp ≧ 3 A	
Proportional valve; Fan	Disconnection	7242	○	After engine starts	None	Milli-amp ≦ 30 mA	30 mA < Milli-amp < 3 A
	Short			Immediately after key switched ON		Milli-amp ≧ 3 A	
Proportional valve; Boom	Disconnection	7243	○	After engine starts	None	Milli-amp ≦ 30 mA	30 mA < Milli-amp < 3 A
	Short			Immediately after key switched ON		Milli-amp ≧ 3 A	
Proportional valve; Arm	Disconnection	7244	○	After engine starts	None	Milli-amp ≦ 30 mA	30 mA < Milli-amp < 3 A
	Short			Immediately after key switched ON		Milli-amp ≧ 3 A	
Proportional valve; Offset	Disconnection	7245	○	After engine starts	None	Milli-amp ≦ 30 mA	30 mA < Milli-amp < 3 A
	Short			Immediately after key switched ON		Milli-amp ≧ 3 A	

For items for which ✕ is displayed, the “ELEC. PROBLEM” message is not displayed. Also, there is no DTC display on the user screen.
However, the DTC is recorded on the service (DIAG) screen.

(3) Mechanical troubles [7400-7599]

Trouble location	Trouble mode	Diagnostic trouble code		Judgment timing	Prerequisites	Occurrence judgment	Recovery judgment
		DTC	Display			Conditions	Conditions
Coolant temperature	Abnormally high temperature 1	7400	○	1 minute after engine starts	Coolant temperature sensor = Normal CAN communication = Normal ECM 5 V power supply voltage = Normal	Coolant temperature ≧ 105 ℃	Coolant temperature < 105 ℃
	Abnormally high temperature 2	7402	○			Coolant temperature ≧ 110 ℃	Coolant temperature < 105 ℃
	Abnormally high temperature 3	7403	○			Coolant temperature ≧ 120 ℃	Coolant temperature < 120 ℃
Oil temperature	Abnormally high temperature	7404	○	1 minute after engine starts	Oil temperature sensor = Normal	Oil temperature ≧ 95 ℃	Oil temperature < 95 ℃
Boost temperature	Abnormally high temperature 1	7405	○	1 minute after engine starts	Boost temperature sensor = Normal, CAN communication = Normal, ECM 5 V power supply voltage = Normal	Boost temperature ≧ 80 ℃	Boost temperature ≦ 70 ℃
	Abnormally high temperature 2	7406	○			Boost temperature ≧ 90 ℃	Boost temperature > 90 ℃
Alternator voltage	Abnormally low voltage	7420	○	10s after engine starts	None	Generated voltage ≦ 10 V	Generated voltage > 10 V
Coolant level	Drop	7421	○	Immediately after key switched ON	None	Level SW = ON	Level SW = OFF

https://truckmanualshub.com/

Trouble location	Trouble mode	Diagnostic trouble code		Judgment timing	Prerequisites	Occurrence judgment	Recovery judgment
		DTC	Dis-play			Conditions	Conditions
Engine oil pressure	Abnormally low pressure	7422	○	30s after engine starts	Oil pressure sensor = Normal, CAN communication = Normal, ECM 5 V power supply voltage = Normal	Pressure ≦ 40 kPa	Pressure > 40 kPa
Air cleaner	Clog	7423	○	10s after engine starts	None	Vacuum SW = ON	Vacuum SW = OFF
Return filter	Clog	7424	○	10s after engine starts	Return filter pressure switch = Normal	Pressure SW = OFF	Pressure SW = ON

(4) Faulty communication [7600-7799]

Trouble location	Trouble mode	Diagnostic trouble code		Judgment timing	Prerequisites	Occurrence judgment	Recovery judgment
		DTC	Dis-play			Conditions	Conditions
CAN bus	Faulty bus	7600	○	Immediately after key switched ON	None	Bus off or error passive	When the occurrence conditions are not met
communication monitor	Faulty reception	7601	○	Immediately after key switched ON	None	Packets not coming from monitor	When the occurrence conditions are not met
	Faulty transmission					Reception from monitor Defective packet received	When the occurrence conditions are not met
communication ECM	Time out	7602	○	Immediately after key switched ON	None	Messages not coming from ECM	When the occurrence conditions are not met
communication computer B	Time out	7603	○	Immediately after key switched ON	Liftcrane or interference prevention selected	Messages not coming from computer B	When the occurrence conditions are not met
communication computer S	Time out	7604	○	Immediately after key switched ON	None	Messages not coming from computer S	When the occurrence conditions are not met
ECM	Mismatch	7605	○	10 s after engine starts	Model selection completed	Model ≠ ECM calibration No.	None No recovery
EEPROM	Faulty data	7606	×	Immediately after key switched ON	None	Previously stored checksum ≠ Current calculated checksum	Previously stored checksum = Current calculated checksum

For items for which × is displayed, the “ELEC. PROBLEM” message is not displayed. Also, there is no DTC display on the user screen.
However, the DTC is recorded on the service (DIAG) screen.

https://truckmanualshub.com/

3. Diagnostic Trouble Code (monitor display)

Trouble contents	Diagnostic trouble code	Main symptoms when trouble occurs	Diagnostic trouble code display conditions	Back-up function	Conceivable cause	Patterns for recovery from trouble
No pump pressure send (second stage)	1093	Engine vibration, idle instability, drop of output power, rev-up defect, black smoke, engine stalling	The ratio for the fuel flow command signal to the SCV is 33 % or less. Differential pressure send amount is 2800 mm^3/s or longer When any of the above occurs and the condition below At 1200 min^{-1} or higher, actual rail pressure is 30 MPa or more below the target rail pressure for 5s or longer	Multi-injection stop Target common rail pressure upper limit (80 MPa)	Fuel system clogged, pipe (hose) blocked Charge fuel pump defect (discharge defect) Wiring defect (short) between ECM and common rail pressure sensor Injector defect Supply pump defect Common rail pressure sensor defect (common rail) Pressure limiter defect (common rail)	1
Faulty boost temperature sensor (abnormally low voltage)	1112	Nothing in particular	The boost temperature sensor voltage is 0.1 V or lower for 4s or longer.	No backup	Wiring defect (disconnection, short, high resistance) between ECM and boost temperature sensor Boost temperature sensor defect ECM internal defect	*2
Faulty boost temperature sensor (abnormally high voltage)	1113	Nothing in particular	The boost temperature sensor voltage is 4.95 V or higher for 4s or longer.	No backup	Wiring defect (disconnection, short, high resistance) between ECM and boost temperature sensor Boost temperature sensor defect ECM internal defect	*2
Overheat	1173	Drop of output power If the coolant temperature exceeds 108 ℃ during overheating, the fuel flow is restricted.	The coolant temperature is higher than 120 ℃ for 5s or longer.	No backup	Wiring defect (short) between ECM and engine coolant sensor Engine cooling system trouble (radiator clog or the like) Engine coolant level too low Engine coolant sensor defect	2
Faulty injection nozzle common 1 drive system	1261	Engine vibration, idling instability, drop of output power Possibility of rev-up defect, engine stalling	Injector monitor inputs for all common 1 system No signal for 3s or longer	Common 1 stop (No. 1, 4 cylinder stop) EGR stop	No 1, 4 injector harness defect (disconnection, short) Injector defect ECM defect	1
Faulty injection nozzle common 2 drive system	1262	Engine vibration, idling instability, drop of output power Possibility of rev-up defect, engine stalling	Injector monitor inputs for all common 2 system No signal for 3s or longer	Common 2 stop (No. 2, 3 cylinder stop) EGR stop	No 2, 3 injector harness defect (disconnection, short) Injector defect ECM internal defect	1
CMP sensor out of phase	1345	No fault during engine rotation, but when it is stopped once, it cannot be restarted.	No correct CMP sensor pulse in crank gap position	No change when error occurs (shift to crank sensor) However, engine cannot be restarted.	Wiring defect (disconnection, short, high resistance) between ECM and CMP sensor Camshaft gear installation defect Flywheel installation defect	1
Faulty main relay system	1625	Engine starting difficulty, power supply not cut off	Main relay input power supply voltage 1 V or lower for 2s or longer Even when the main relay coil OFF command is issued, the relay does not cut off within 5s	No backup	Wiring defect (disconnection, short, high resistance) between ECM and main relay Wiring defect (disconnection, short, high resistance) with fusible link main relay Main relay defect ECM internal defect	2
Faulty A/D conversion	1630	Drop of output power, black smoke	Analog/digital conversion not possible	Analog sensor system default processing (sensors operating with default values, because conversion not possible) Multi-injection stop Target common rail pressure upper limit (80 MPa)	ECM internal defect	2
Faulty 5 V power supply 2 voltage (atmospheric pressure sensor power supply)	1632	Black smoke at high altitudes, insufficient output at low altitudes	Key switch power supply voltage is 5.5 V or higher or 4.5 V or lower for 0.5s or longer.	EGR control stop Default value setting 80 kPa (equivalent to 2500 m)	Power supply circuit wiring defect (short) between ECM and atmospheric pressure sensor ECM internal defect	2
Faulty 5 V power supply 3 voltage (engine oil pressure sensor)	1633	Poor starting and black smoke at low temperatures	Key switch power supply voltage is 5.5 V or higher or 4.5 V or lower for 0.5s or longer.	Control using default values	Power supply circuit wiring defect (short) between ECM and oil pressure sensor ECM internal defect	2
Faulty 5 V power supply 4 voltage (boost pressure sensor)	1634	Black smoke	Key switch power supply voltage is 5.5 V or higher or 4.5 V or lower for 0.5s or longer.	Control using default values	Power supply circuit wiring defect (short) between ECM and boost pressure sensor ECM internal defect	2

https://truckmanualshub.com/

Trouble contents	Diagnostic trouble code	Main symptoms when trouble occurs	Diagnostic trouble code display conditions	Back-up function	Conceivable cause	Patterns for recovery from trouble
Faulty 5 V power supply 5 voltage (common rail pressure sensor, EGR position sensor)	1635	Possibility of poor engine rev-up, drop of output power, black smoke, engine stalling	Key switch power supply voltage is 5.5 V or higher or 4.5 V or lower for 0.5s or longer.	Control using default values	Power supply circuit wiring defect (short) between ECM and common rail pressure sensor ECM internal defect	2
Faulty CAN bus	2104	Engine speed down to 1500 min^{-1}.	Engine rotation that computer A sends with CAN stops for 1s or longer.	Engine speed down to 1500 min^{-1}.	Wiring defect (disconnection, short, high resistance) between ECM and computer A ECM internal defect Computer A internal defect	2
Faulty CAN time-out	2106	Control from actual machine side stops working because CAN communication become impossible.The engine speed drops to 1500 min^{-1}.	Engine rotation that computer A sends with CAN stops for 2s or longer.	Engine speed down to 1500 min^{-1}.	Wiring defect (disconnection, short, high resistance) between ECM and computer A ECM internal defect Computer A internal defect	2
No pump pressure send (fuel leak)	0087	Possibility of engine vibration, idle instability, drop of output power, black smoke, excess output	Actual rail pressure of 15 MPa or lower for 3s or longer	Multi-injection stop Target common rail pressure upper limit (80 MPa)	Fuel system clogged (element), pipe (hose), etc. blocked Wiring defect (short) between ECM and common rail pressure sensor Injector defect Common rail pressure sensor defect Supply pump defect Pressure limiter defect	1
Faulty common rail pressure (1st stage, 2nd stage)	0088	Engine vibration, idle instability, drop of output power, rev-up defect	1st stage Rail pressure exceeds 185 MPa for 5s or longer, common rail pressure sensor voltage is 3.9 V or higher 2nd stage First stage established, rail pressure exceeds 190 MPa for 5s or longer, common rail pressure sensor voltage is 4 V or higher	Multi-injection stop Target common rail pressure upper limit (80 MPa)	Fuel system pipe (hose), etc. blocked Air in fuel system (check hose connection.) Common rail pressure sensor defect Supply pump defect	1
Faulty common rail pressure (pump sending too much pressure)	0089	Engine vibration, idle instability, drop of output power, rev-up defect	Actual rail pressure 40 MPa or more above the target rail pressure for 5s or longer	Multi-injection stop Target common rail pressure upper limit (80 MPa)	Common rail pressure sensor defect Supply pump defect ECM, SCV, common rail pressure sensor connector connection defect	1
SCV drive system disconnection, +B short, ground short	0090	Black smoke and excess output	When the SCV drive milli-amp exceeds the rated milli-amp for 2s or longer When the difference between the target and actual milli-amp exceeds the rated milli-amp for 2s or longer	Multi-injection stop Target common rail pressure upper limit (80 MPa)	SCV defect Wiring defect (disconnection, short, high resistance) between ECM and SCV ECM internal defect	2
Faulty atmospheric pressure sensor (abnormally low voltage)	0107	Black smoke at high altitudes, insufficient output at low altitudes	The atmospheric pressure sensor voltage is 0.5 V or lower for 5s or longer.	EGR control stop Default value setting 80 kPa (equivalent to 2500 m)	Wiring defect (disconnection, short, high resistance) between ECM and atmospheric pressure sensor Atmospheric pressure sensor defect ECM internal defect	2
Faulty atmospheric pressure sensor (abnormally high voltage)	0108	Black smoke at high altitudes, insufficient output at low altitudes	The atmospheric pressure sensor voltage is 3.8 V or higher for 4s or longer.	EGR control stop Default value setting 80 kPa (equivalent to 2500 m)	Wiring defect (disconnection, short, high resistance) between ECM and atmospheric pressure sensor Atmospheric pressure sensor defect ECM internal defect	2
Faulty suction air temperature sensor (abnormally low voltage)	0112	Possibility of white smoke when starting at low temperatures	The suction air temperature sensor voltage is 0.1 V or lower for 4s or longer.	EGR control stop Default value setting Starting: -10 ℃ Running: 25 ℃	Wiring defect (short) between ECM and suction air temperature sensor Suction air temperature sensor defect ECM internal defect	*2
Faulty suction air temperature sensor (abnormally high voltage)	0113	Possibility of white smoke when starting at low temperatures	The suction air temperature sensor voltage is 4.95 V or higher for 4s or longer.	EGR control stop Default value setting Starting: -10 ℃ Running: 25 ℃	Wiring defect (disconnection, short, high resistance) between ECM and suction air temperature sensor Suction air temperature sensor defect ECM internal defect	*2
Faulty engine coolant temperature sensor (abnormally low voltage)	0117	Poor starting at low temperatures, black smoke, drop of output power	The coolant temperature sensor voltage is 0.1 V or lower for 4s or longer.	EGR control stop Default value setting Starting: -20 ℃ Running: 80 ℃	Wiring defect (short) between ECM and engine coolant sensor Engine coolant sensor defect ECM internal defect	*2

https://truckmanualshub.com/

Trouble contents	Diagnostic trouble code	Main symptoms when trouble occurs	Diagnostic trouble code display conditions	Back-up function	Conceivable cause	Patterns for recovery from trouble
Faulty engine coolant temperature sensor (abnormally high voltage)	0118	Increase in noise, white smoke at low temperatures, rough idling	The coolant temperature sensor voltage is 4.85 V or higher for 4s or longer.	EGR control stop, default value setting Starting: -20 ℃ Running: 80 ℃	Wiring defect (disconnection, short, high resistance) between ECM and engine coolant sensor Engine coolant sensor defect ECM internal defect	*2
Faulty fuel temperature sensor (abnormally low voltage)	0182	Nothing in particular	The fuel temperature sensor voltage is 0.1 V or lower for 4s or longer.	Default value setting Starting: -20 ℃ Running: 70 ℃	Wiring defect (short) between ECM and fuel temperature sensor Fuel temperature sensor (supply pump) defect ECM internal defect	*2
Faulty fuel temperature sensor (abnormally high voltage)	0183	Nothing in particular	The fuel temperature sensor voltage is 4.85 V or lower for 4s or longer.	Default value setting Starting: -20 ℃ Running: 70 ℃	Wiring defect (disconnection, short, high resistance) between ECM and fuel temperature sensor Fuel temperature sensor (supply pump) defect ECM internal defect	*2
Faulty common rail pressure sensor (abnormally low voltage)	0192	Engine rev-up defect, hunting	The common rail pressure sensor voltage is 0.7 V or lower.	Default value setting 80 MPa	Wiring defect (disconnection, short, high resistance) between ECM and common rail Common rail pressure sensor defect (common rail) ECM internal defect	2
Faulty common rail pressure sensor (abnormally high voltage)	0193	Possibility of drop of output power and engine stalling	The common rail pressure sensor voltage is 4.5 V or higher.	Default value setting 80 MPa	Wiring defect (disconnection, short, high resistance) between ECM and common rail Common rail pressure sensor defect (common rail) ECM internal defect	2
Injection nozzle #1 drive system disconnection	0201	High engine vibration, idle instability, drop of output power, rev-up defect	No. 1 cylinder injector drive circuit disconnection/short detected No. 1 cylinder injector monitor input No signal for 2.4s or longer	No. 1 cylinder injection stop EGR control stop	Wiring defect (disconnection, short, high resistance) between ECM and No. 1 injector intermediate connector No. 1 injector terminal looseness Wiring defect (disconnection, high resistance) between No. 1 injector intermediate connector and No. 1 injector terminal No. 1 injector defect ECM internal defect	1
Injection nozzle #2 drive system disconnection	0202	High engine vibration, idle instability, drop of output power, rev-up defect	No. 2 cylinder injector drive circuit disconnection/short detected No. 2 cylinder injector monitor input No signal for 2.4s or longer	No. 2 cylinder injection stop EGR control stop	Wiring defect (disconnection, short, high resistance) between ECM and No. 2 injector intermediate connector No. 2 injector terminal looseness Wiring defect (disconnection, high resistance) between No. 2 injector intermediate connector and No. 2 injector terminal No. 2 injector defect ECM internal defect	1
Injection nozzle #3 drive system disconnection	0203	High engine vibration, idle instability, drop of output power, rev-up defect	No. 3 cylinder injector drive circuit disconnection/short detected No. 3 cylinder injector monitor input No signal for 2.4s or longer	No. 3 cylinder injection stop EGR control stop	Wiring defect (disconnection, short, high resistance) between ECM and No. 3 injector intermediate connector No. 3 injector terminal looseness Wiring defect (disconnection, high resistance) between No. 3 injector intermediate connector and No. 3 injector terminal No. 3 injector defect ECM internal defect	1
Injection nozzle #4 drive system disconnection	0204	High engine vibration, idle instability, drop of output power, rev-up defect	No. 4 cylinder injector drive circuit disconnection/short detected No. 4 cylinder injector monitor input No signal for 2.5s or longer	No. 4 cylinder injection stop EGR control stop	Wiring defect (disconnection, short, high resistance) between ECM and No. 4 injector intermediate connector No. 4 injector terminal looseness Wiring defect (disconnection, high resistance) between No. 4 injector intermediate connector and No. 4 injector terminal No. 4 injector defect ECM internal defect	1
Overrun	0219	Drop of output power	The engine speed isthe set speed of 2000 min^{-1} or higher for 1 second or longer.	Injection quantity restriction When the speed drops, the restriction is ended.	Faulty engine main unit (common rail, supply pump, injector) It is necessary to check whether or not there is another diagnostic trouble code. Mechanical engine trouble (turbo damaged, engine oil mixed in) ECM internal defect	2
Faulty boost pressure sensor (abnormally low voltage)	0237	Nothing in particular	The boost pressure sensor voltage is 0.1 V or lower for 3s or longer.	Default value setting 150 kPa	Wiring defect (disconnection, short, high resistance) between ECM and boost pressure sensor Boost pressure sensor defect ECM internal defect	2

https://truckmanualshub.com/

Trouble contents	Diagnostic trouble code	Main symptoms when trouble occurs	Diagnostic trouble code display conditions	Back-up function	Conceivable cause	Patterns for recovery from trouble
Faulty boost pressure sensor (abnormally high voltage)	0238	Black smoke	The boost pressure sensor voltage is 4.9 V or higher for 3s or longer.	Default value setting 150 kPa	Wiring defect (disconnection, short, high resistance) between ECM and boost pressure sensor Boost pressure sensor defect ECM internal defect	2
Faulty crank position (CKP) sensor (no signal)	0335	Possibility of drop of output power, white smoke, engine vibration Possibility of engine stalling (when the CMP sensor is normal, restarting is possible.)	There is a CMP signal, but not a CKP signal.	When the CMP sensor is normal, cam standard control	Wiring defect (disconnection, short, high resistance) between ECM and CKP sensor CKP sensor defect ECM internal defect	1
Faulty crank position (CKP) sensor (faulty signal)	0336	Possibility of drop of output power, white smoke, engine vibration Possibility of engine stalling (when the CMP sensor is normal, restarting is possible.)	CKP signal pulses do not match	When the CMP sensor is normal, cam standard control	Wiring defect (short) between ECM and CKP sensor CKP sensor defect Flywheel ring gear tooth missing ECM internal defect	1
Faulty cam position (CMP) sensor (no signal)	0340	No fault during engine rotation, but when it is stopped once, it cannot be restarted.	There is a CKP signal, but not a CMP signal.	While engine turning: When the CKP sensor is normal, crank standard After engine stop: Restart is impossible due to inability to discriminate cylinders	Wiring defect (disconnection, short, high resistance) between ECM and CMP sensor CMP sensor defect Faulty cam gear Supply pump defect ECM internal defect	1
Faulty cam position (CMP) sensor (faulty signal)	0341	No fault during engine rotation, but when it is stopped once, it cannot be restarted.	When excess cam pulses detected or insufficient cam pulses detected	While engine turning: When the CKP sensor is normal, crank standard After engine stop: Restart is impossible due to inability to discriminate cylinders	Wiring defect (short) between ECM and CMP sensor CMP sensor defect Faulty camshaft gear Supply pump defect ECM internal defect	1
Faulty glow relay	0380	Low-temperature starting defect	The glow relay drive instruction signal and glow relay monitor signal (line 339 in electrical circuit diagram) are different.	No backup	Wiring defect (disconnection, short, high resistance) between fuse and glow relay Wiring defect (disconnection, short, high resistance) between ECM and glow relay Glow relay defect ECM internal defect	1
Faulty EGR position sensor	0487	Nothing in particular	Signal inputs from EGR position sensor U, V, and W all ON or all OFF for 3s or longer	EGR valve all-close command	Wiring defect (disconnection, short, high resistance) between ECM and EGR position sensor EGR valve (position sensor) defect ECM internal defect	2
Faulty EGR valve control	0488	Nothing in particular	When the difference between the target valve lift and the actual position is larger than 20 % for 10s or longer	EGR valve all-close command	Wiring defect (disconnection, short, high resistance) between ECM and EGR motor EGR valve defect ECM internal defect	2
Faulty oil pressure sensor (abnormally low voltage)	0522	Nothing in particular	The oil pressure sensor voltage is 0.1 V or lower for 4s or longer.	No backup	Wiring defect (short) between ECM and oil pressure sensor Oil pressure sensor defect ECM internal defect	2
Faulty oil pressure sensor (abnormally high voltage)	0523	Nothing in particular	The oil pressure sensor voltage is 4.85 V or higher for 4s or longer.	No backup	Wiring defect (disconnection, short, high resistance) between ECM and oil pressure sensor Oil pressure sensor defect ECM internal defect	2
Faulty ROM (ECM internal component part)	0601	Engine stop	Faulty ROM detected Reflash failure	No backup (engine stop)	ECM internal defect	2
Faulty EEPROM (ECM internal component part)	0603	Nothing in particular	Faulty EEPROM detected	No backup	ECM internal defect	2
Faulty CPU (ECM internal component part)	0606	Drop of output power, starting not possible	The CPU monitoring IC detects faulty main CPUs for 100 ms after the key is switched ON. The RUN-SUB pulse (signal between CPU and SUB-CPU) was unchanging for 20 ms or longer.	Multi-injection stop Injection quantity restriction The SUB-CPU stopped the CPU.	ECM internal defect	2

https://truckmanualshub.com/

Trouble contents	Diagnostic trouble code	Main symptoms when trouble occurs	Diagnostic trouble code display conditions	Back-up function	Conceivable cause	Patterns for recovery from trouble
Faulty CPU monitoring IC	0606	Drop of output power	The RUN-SUB pulse (signal between CPU and SUB-CPU) was unchanging for 20 ms or longer.	Injection quantity restriction	ECM internal defect	2
Faulty charge circuit 1	0611	Engine vibration, idling instability, drop of output power Possibility of rev-up defect, engine stalling	When the ECU charge circuit bank 1 voltage is low for 1.5s or longer	Common 1 stop (No. 1, 4 cylinder stop) EGR stop	ECM terminal, ECM ground terminal defect (disconnection, high resistance) ECM internal defect	2
Faulty charge circuit 2	0612	Engine vibration, idling instability, drop of output power Possibility of rev-up defect, engine stalling	When the ECU charge circuit bank 2 voltage is low for 1.5s or longer	Common 2 stop (No. 2, 3 cylinder stop) EGR stop	ECM terminal, ECM ground terminal defect (disconnection, high resistance) ECM internal defect	2
Pressure limiter open	1095	Drop of output power, hunting	When the pressure limiter is open or when the common rail pressure exceeds 200 MPa for 1s or longer	Injection quantity restriction	Fuel system pipe (hose), etc. blocked Air in fuel system (Check hose connection.) Pressure limiter defect Common rail pressure sensor defect Wiring defect (short) between ECM and common rail pressure sensor Supply pump defect ECM internal defect	1

Note:

[1] Patterns for recovery from trouble
There are the following two ways to recover from trouble.
Because the error code is cleared according to conditions, the following main switch operations are required.
Type 1:When the key is switched ON, the engine is started and held for 10 seconds, then the key is switched OFF, the display is recovered to normal.
Type 2:When the key is switched ON and held for 10 seconds, then the key is switched OFF, the display is recovered to normal.
However, for temperature sensors in the section marked *, after the key is switched ON, it is held for 3 to 10 minutes before it is switched OFF.

https://truckmanualshub.com/

4. Sensor Trouble Operation Table

- The table below shows the operations when there is trouble with a sensor (current, recovered from, ongoing).
- '*' indicates that it is not related to (not affected by) that trouble.

Output and function	Input	Upper pressure sensor	Arm-in pressure sensor	Swing pressure sensor	Travel pressure sensor	P1 pressure sensor	P2 pressure sensor	N1 pressure sensor	N2 pressure sensor	Oil temperature sensor	Coolant temperature sensor	Fuel sensor
Backup value	Trouble continuation	0 MPa	0 MPa	0 MPa	0 MPa	0 MPa	0 MPa	0 MPa	0 MPa	-40 ℃	214 ℃	0%
	Recovery	Input value	Input value	Input value	Input value	Input value	Input value	Input value	Input value	Input value	Input value	Input value
Engine target speed	Auto idle	Backup value control (*1)	Backup value control (*1)	Backup value control (*1)	Backup value control (*1)	*	*	*	*	*	*	*
	Idling start	Backup value control (*2)	Backup value control (*2)	Backup value control (*2)	Backup value control (*2)	*	*	*	*	*	*	*
	Auto warm up	Backup value control (*3)	Backup value control (*3)	Backup value control (*3)	Backup value control (*3)	*	*	*	*	*	*	*
	Idle up	Backup value control (*4)	Backup value control (*4)	Backup value control (*4)	Backup value control (*4)	*	*	*	*	*	*	*
Engine	Anti-theft	Fixed to ON (*22)	*	*	Fixed to ON (*22)	Fixed to ON (*22)	Fixed to ON (*22)	*	*	*	*	*
Stop command												
Milli-amp for pump horsepower control proportional valve	Static horsepower control	*	*	*	*	*	*	*	*	*	*	*
	Dynamic horsepower control	Backup value control (*5)	*	*	*	Backup value control (*5)	Backup value control (*5)	*	*	*	*	*
	Travel horsepower boost	*	*	*	Backup value control (*6)	*	*	*	*	*	*	*
	Arm-in boost horsepower	*	Backup value control (*7)	*	*	*	*	*	*	*	*	*
	Engine stall prevention	*	*	*	*	*	*	*	*	*	*	*
Pump flow proportional valve	Relief cut	Fixed to 50 mA (*8)	*	Fixed to 50 mA (*8)	Fixed to 50 mA (*8)	Fixed to 50 mA (*8)	Fixed to 50 mA (*8)	Fixed to 50 mA (*8)	Fixed to 50 mA (*8)	*	*	*
	Speed limit	Fixed to 50 mA (*9)	*	Fixed to 50 mA (*9)	Fixed to 50 mA (*9)	Fixed to 50 mA (*9)	Fixed to 50 mA (*9)	Fixed to 50 mA (*9)	Fixed to 50 mA (*9)	*	*	*
	Power save	Fixed to 50 mA (*10)	*	Fixed to 50 mA (*10)	Fixed to 50 mA (*10)	Fixed to 50 mA (*10)	Fixed to 50 mA (*10)	Fixed to 50 mA (*10)	Fixed to 50 mA (*10)	*	*	*
Power save solenoid	Power save	Backup value control (*10)	*	Backup value control (*10)	Backup value control (*10)	*	*	*	*	*	*	*
Boost solenoid	Auto power boost	Backup value control (*11)	*	*	Fixed to OFF (*13)	Backup value control (*12)	Backup value control (*12)	*	*	*	*	*
	Always boosted	*	*	*	Fixed to OFF (*13)	*	*	*	*	*	*	*
	Boost cut	*	*	*	Fixed to OFF (*13)	*	*	*	*	*	*	*
Swing brake solenoid	Auto brake	Fixed to OFF (*14)	*	Fixed to OFF (*14)	*	*	*	*	*	*	*	*
	Swing lock	Fixed to ON (*15)	*	Fixed to ON (*15)	*	*	*	*	*	*	*	*
	Anti-theft	Fixed to ON (*16)	*	Fixed to ON (*16)	*	*	*	*	*	*	*	*
Travel alarm	Travel alarm	*	*	*	Backup value control (*17)	*	*	*	*	*	*	*
	Key ON alarm	*	*	*	*	*	*	*	*	*	*	*
	Anti-theft	*	*	*	*	*	*	*	*	*	*	*
Coolant temperature gauge	Coolant temperature display	*	*	*	*	*	*	*	*	*	Not displayed (*18)	*
Oil temperature gauge	Oil temperature display	*	*	*	*	*	*	*	*	Not displayed (*19)	*	*

https://truckmanualshub.com/

Input / Output and function		Upper pressure sensor	Arm-in pressure sensor	Swing pressure sensor	Travel pressure sensor	P1 pressure sensor	P2 pressure sensor	N1 pressure sensor	N2 pressure sensor	Oil temperature sensor	Coolant temperature sensor	Fuel sensor
Backup value	Trouble continuation	0 MPa	0 MPa	0 MPa	0 MPa	0 MPa	0 MPa	0 MPa	0 MPa	-40 ℃	214 ℃	0%
	Recovery	Input value	Input value	Input value	Input value	Input value	Input value	Input value	Input value	Input value	Input value	Input value
Fuel gauge	Fuel level display	*	*	*	*	*	*	*	*	*	*	Not displayed (*20)
Air Conditioner	Cold blast prevention	*	*	*	*	*	*	*	*	*	Backup value control (*21)	*

- Symptom -

(*1) Idle cannot be ended.Idles even during work.
(*2) Idle cannot be ended.
(*3) Auto warm up cannot be ended.
(*4) Idle speed cannot be raised.
(*5) Dynamic horsepower control (for transient loads) is not possible.
(*6) No horsepower boost even for travel.
(*7) No horsepower boost even for arm-in.
(*8) No swing relief cut.(deterioration in fuel economy)
(*9) No swing speed limit.(Excessive swing speed)
(*10) No power save.(deterioration in fuel economy)
(*11) Auto power boost stops.(Constant power boost for A mode is executed.)
(*12) Auto power boost is not carried out for a pump load on only one side.
(*13) Boost is always OFF.
(*14) Swing brake is always OFF.
(*15) During a swing lock, held ON even if there is trouble.
(*16) During swinging with anti-theft prevention, held ON even if there is trouble.
(*17) Travel alarm stops.(Key ON alarm sounds)
(*18) Coolant temperature gauge is not displayed.(Goes out)
(*19) Oil temperature gauge is not displayed.(Goes out)
(*20) Fuel level gauge is not displayed.(Goes out)
(*21) Air flow max
(*22) The engine cannot be started if the password has not been input.

https://truckmanualshub.com/

5. EPF (engine protection feature)

This feature controls the engine speed or stopping when the coolant temperature rises, the boost temperature rises, or the oil pressure drops.

- Trouble state -
Recovered = State in which trouble recovered from during the key ON cycle
Ongoing = State in which the key was switched OFF, then ON again with the previous trouble underway (or continuing)

- Degree of speed restriction -
0: None
1: Backup speed
2: Low idle
3: Stop (restart possible, low idle)
4: Stop (restart not possible)

		Degree of speed restriction	Explanation
Coolant temperature over 105 ℃	Trouble underway	0: None	–
	Recovered	0: None	–
	Ongoing	0: None	–
Coolant temperature over 110 ℃	Trouble underway	2: Low idle	–
	Recovered	0: None	When the coolant temperature falls below 105 ℃ , the system recovers and controls returns to normal.
	Ongoing	2: Low idle	When the key is switched ON again and the engine starts, for the time (2 minutes) until judgment starts, the engine speed is restricted to low idle.After that, the status moves to trouble underway or recovered based on the judgment results.
Coolant temperature over 120 ℃	Trouble underway	4: Stop (restart possible)	Engine stop.The engine cannot be restarted until either the key is switched ON again or the coolant temperature recovers to the normal level.
	Recovered	0: None	When the coolant temperature falls below 120 ℃ , the degree of restriction due to the coolant temperature being over 120 ℃ goes to 0. (Normal control) However, if the degree of restriction due to the coolant temperature being over 110 ℃ is not 0, that degree of restriction is applied.
	Ongoing	2: Low idle	When the key is switched ON again and the engine starts, for the time (1 minute) until judgment starts, the engine speed is restricted to low idle.After that, the status moves to trouble underway or recovered based on the judgment results.
Boost temperature over 80 ℃	Trouble underway	2: Low idle	–
	Recovered	0: None	When the boost temperature falls below 70℃, the system recovers and controls returns to normal.
	Ongoing	2: Low idle	When the key is switched ON again and the engine starts, for the time (1 minute) until judgment starts, the engine speed is restricted to low idle.After that, the status moves to trouble underway or recovered based on the judgment results.
Boost temperature over 90 ℃	Trouble underway	4: Stop (restart possible)	Engine stop.The engine cannot be restarted until either the key is switched ON again or the boost temperature recovers to the normal level.
	Recovered	0: None	When the boost temperature falls below 90 ℃ , the degree of restriction due to the boost temperature being over 90 ℃ goes to 0.(Normal control) However, if the degree of restriction due to the boost temperature being over 80 ℃ is not 0, that degree of restriction is applied.
	Ongoing	2: Low idle	When the key is switched ON again and the engine starts, for the time (1 minute) until judgment starts, the engine speed is restricted to low idle.After that, the status moves to trouble underway or recovered based on the judgment results.
Engine oil pressure drop	Trouble underway	4: Stop (restart possible)	Engine stop.The engine cannot be restarted until the key is switched ON again.Recovery cannot be judged until the engine is restarted, so the system does not move from trouble underway to be recovered.
	Recovered	0: None	The engine oil pressure recovers to less than 40 kPa and controls returns to normal.
	Ongoing	2: Low idle	When the key is switched ON again and the engine starts, for the time (30 s) until judgment starts, the engine speed is restricted to low idle.After that, the status moves to trouble underway or recovered based on the judgment.

https://truckmanualshub.com/

Main Data Table (changes from model 3)

		SH210-5 (Exhaustgas third regulation)	SH200-3 (Exhaust gas second regulation)
Engine model name	-	ISUZU 4HK1	ISUZU 6BG1
Model	-	4-cycle, water cooled, overhead camshaft, vertical in-line, direct injection type	4-cycle, water cooled, overhead valve, vertical in-line, direct injection type
Dry weight	kg	480	484
Displacement	cc	5193	6494
Number of cylinders - bore X stroke	mm	4-115×125	6-105×125
Compression ratio	-	17.5	18.0
Rated output	kW / min^{-1}	117 / 1800	103.0 / 1950
Maximum torque	Nm / min^{-1}	628 / 1500	532 / 1600
No load maximum speed	min^{-1}	1800	2000
No load minimum speed (idling)	min^{-1}	1000	900
Rated fuel consumption ratio	g / kW•hr	229.3 max	243.0 max
Fuel unit	-	HP3 model common rail from Denso Corp.	ADS model inline type pump from Bosch Corp.
Control device	-	ECM made by Transtron Inc.	ECU made by Bosch Corp.
Cooling fan	-	7N suction ϕ 650 plastic	7N suction ϕ 600 plastic
Bell mouth type fan guide	-	Yes	Yes
Fan belt	-	Drive by one V-rib belt	Drive by two B-model V belts
Alternator	-	50 A-24 V, made by Nikko Electric	50 A -24 V, made by Mitsubishi Electric Corp.
Starter	-	5.0 kW-24 V, made by Nikko Electric	4.5 kW-24 V, made by Nikko Electric
Turbo	-	RHF55 model made by IHI	RHG6 model made by IHI
Preheat unit	-	QOS-II	QOS-II
Inter cooler	-	Yes	No
Fuel cooler	-	Yes	No
Charge fuel pump	-	Yes	No
Fuel filter	-	4 μ main unit remote type with water separator function	20 μ with water separator function With engine
Fuel pre-filter	-	10 μ main unit remote type with water separator function	-
Oil filter	-	Remote type	With engine
Oil pan capacity	L	13.0 to 20.5	16.4 to 21.5
Oil pan drain cock	-	Yes	No

F

https://truckmanualshub.com/

Engine Summary

Overall Appearance Diagram

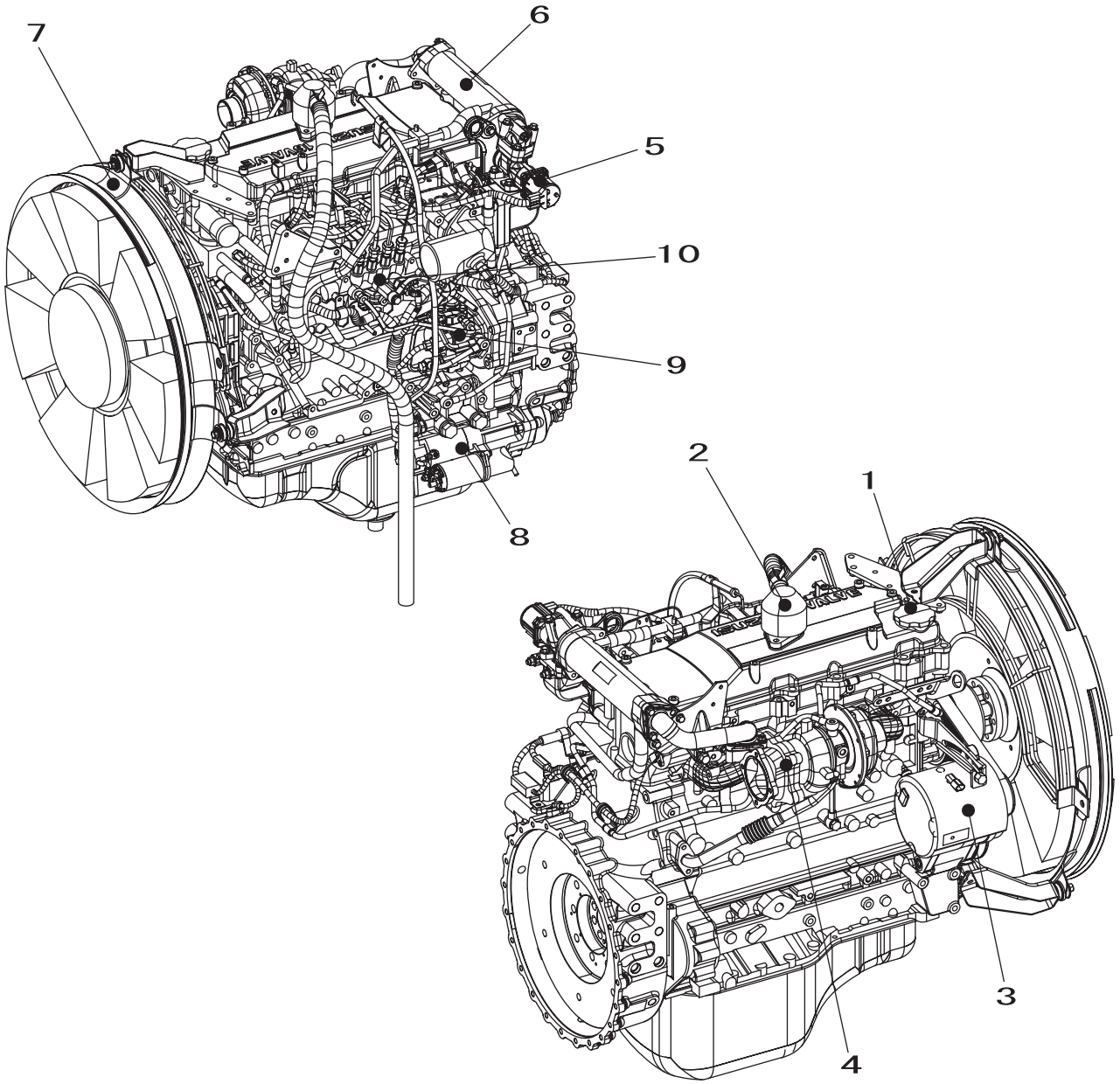

1	Engine oil fill port	6	EGR cooler
2	Air breather	7	Bell mouth type fan guide
3	Alternator	8	Starter motor
4	Turbo	9	Supply pump (SCV)
5	EGR valve	10	Common rail

https://truckmanualshub.com/

Sensor and Auxiliary Equipment Layout (left)

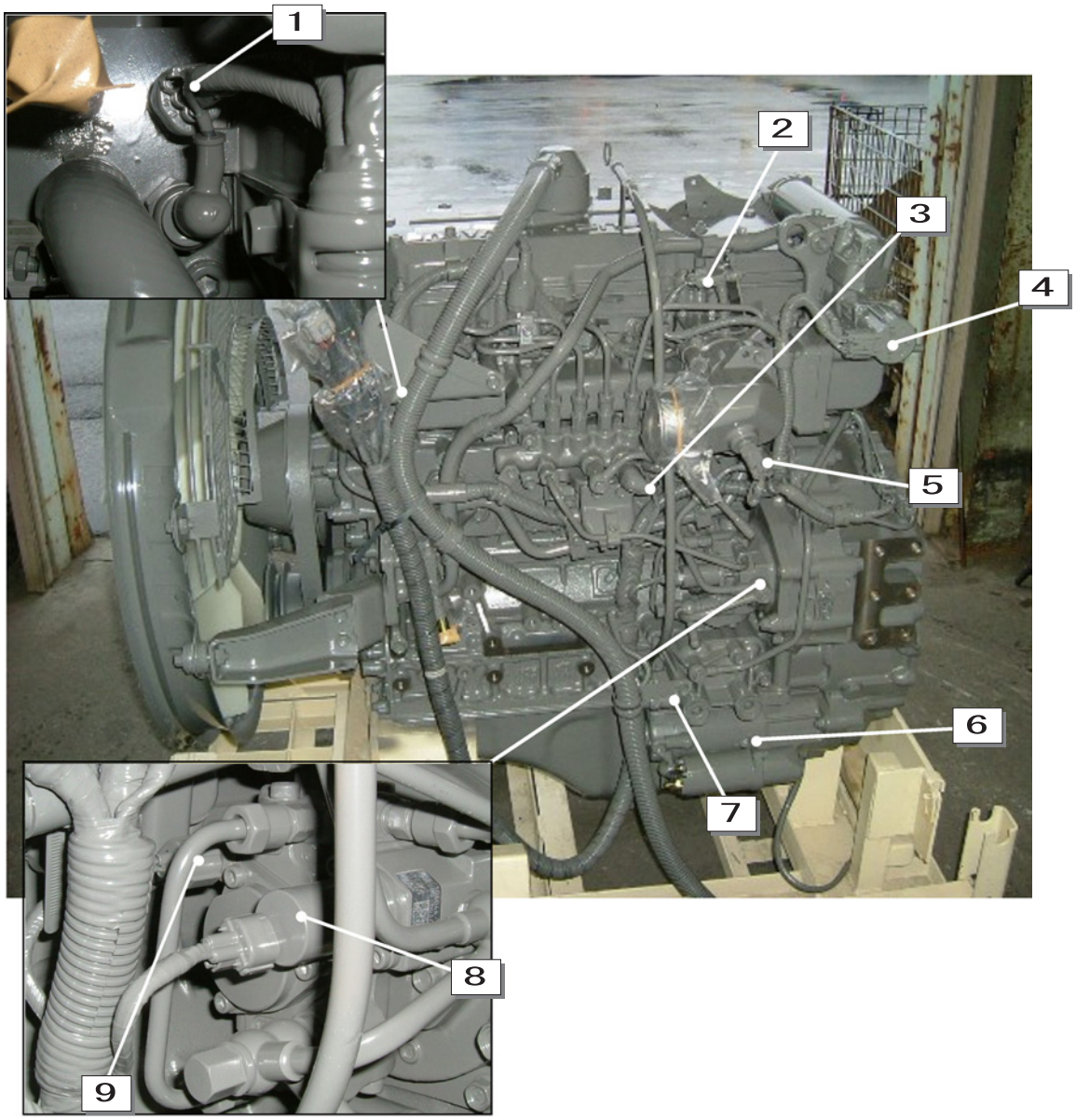

1	Engine coolant temperature sensor	6	Starter motor
2	Boost pressure sensor	7	Oil pressure sensor
3	Common rail pressure sensor	8	Suction control valve (SCV)
4	EGR valve	9	Fuel temperature sensor
5	Boost temperature sensor		

F

https://truckmanualshub.com/

Engine Summary

Sensor and Auxiliary Equipment Layout (rear)

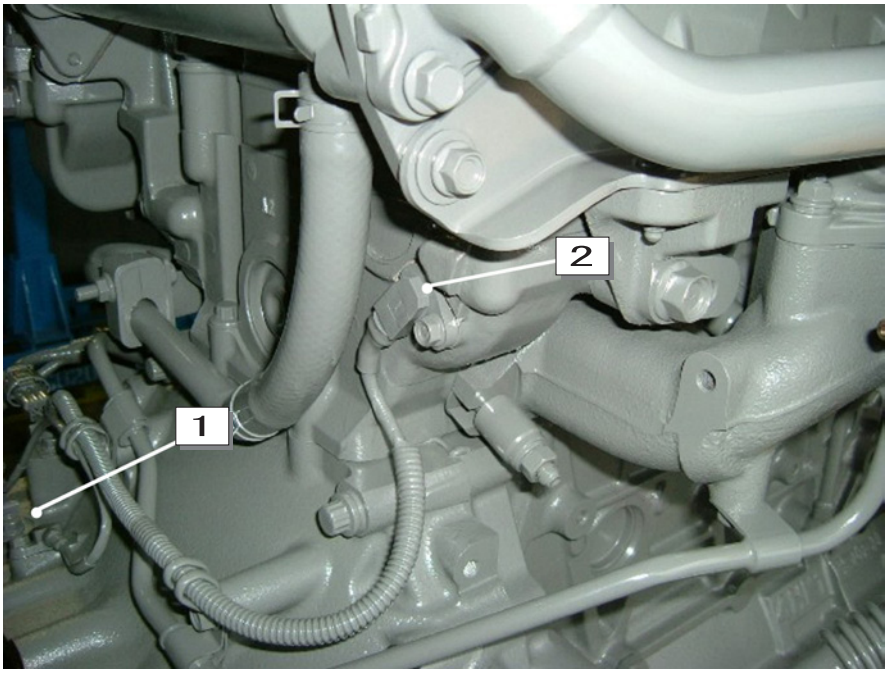

1	Crank position sensor
2	Cam position sensor

Engine System Diagram

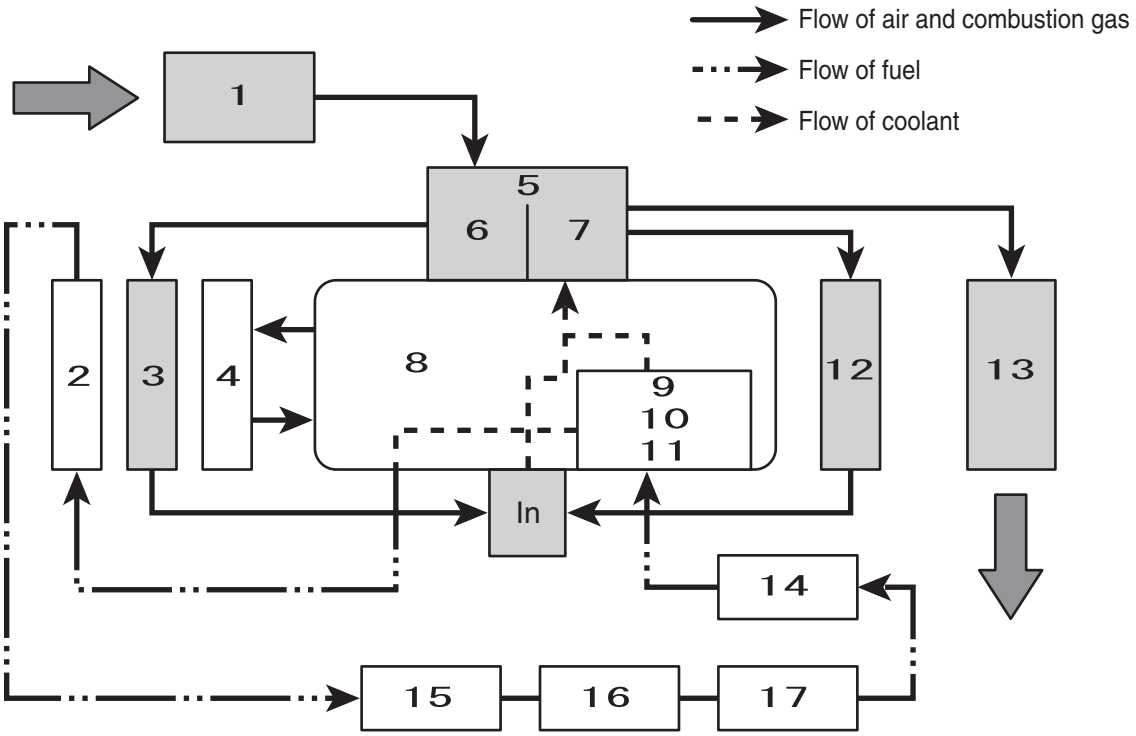

1	Air cleaner	7	Turbine side	13	Muffler
2	Fuel cooler	8	Engine	14	Fuel main filter
3	Inter cooler	9	Injector	15	Fuel tank
4	Radiator	10	Common rail	16	Fuel prefilter
5	Turbo	11	Supply pump	17	Charge fuel pump
6	Compressor side	12	EGR cooler		

https://truckmanualshub.com/

Fuel System Diagram

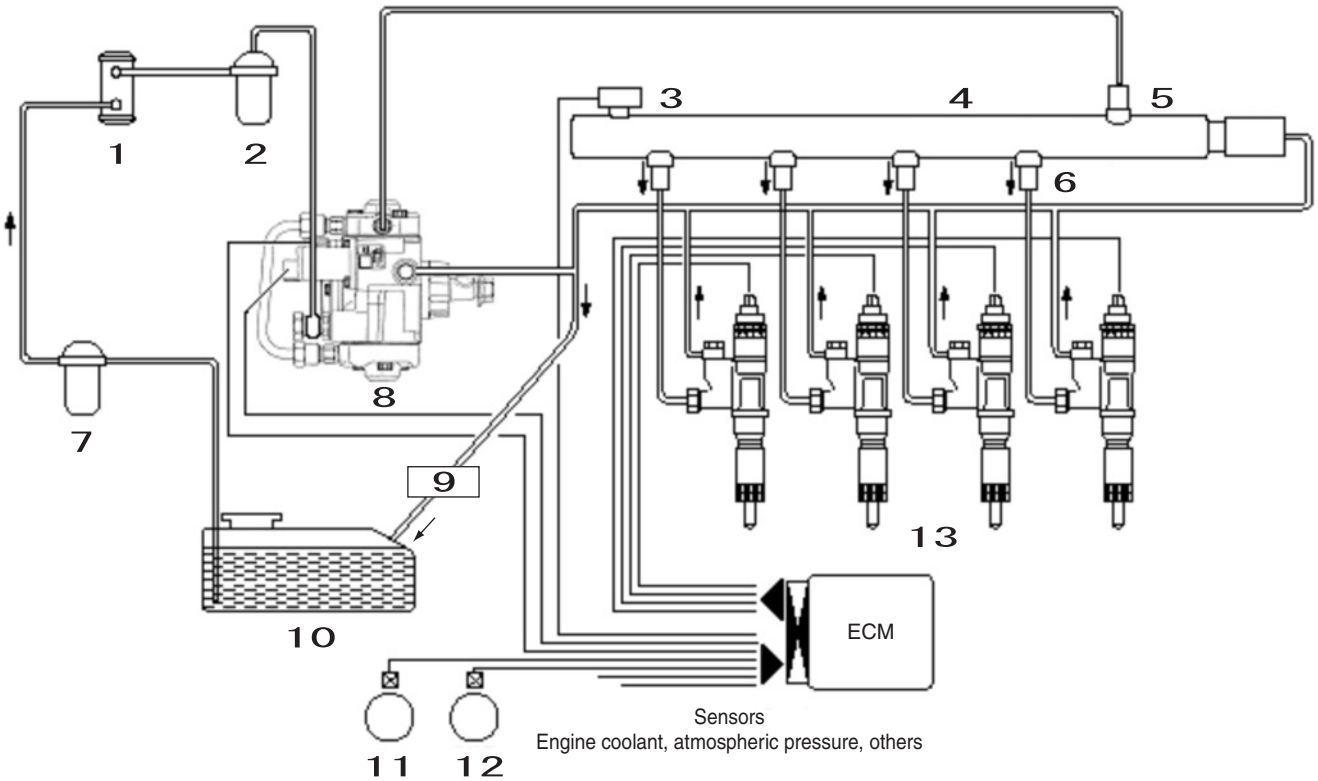

1	Charge fuel pump	6	Flow damper	11	CMP sensor
2	Fuel main filter	7	Fuel prefilter	12	CKP sensor
3	Common rail pressure sensor	8	Supply pump	13	Injector
4	Common rail	9	Fuel cooler		
5	Pressure limiter	10	Fuel tank		

F

https://truckmanualshub.com/

Engine Summary

Detailed Parts Diagrams

1. ECM (engine control module)

Three roles of the ECM

[1] The ECM constantly monitors information sent from the various sensors and controls the power train systems.

[2] The ECM executes system function diagnosis, detects problems in system operation, issues trouble alarms to warn the operator and stores the diagnostic trouble code into memory.
The diagnostic trouble code identifies the area in which the problem occurred and supports repair work by the service engineer.

[3] The ECM puts out 5 V and other voltages to supply power to the various sensors and switches.
The ECM controls output circuits by controlling ground or power supply circuits via one device or another.

https://truckmanualshub.com/

2. Supply Pump / SCV (suction control valve)

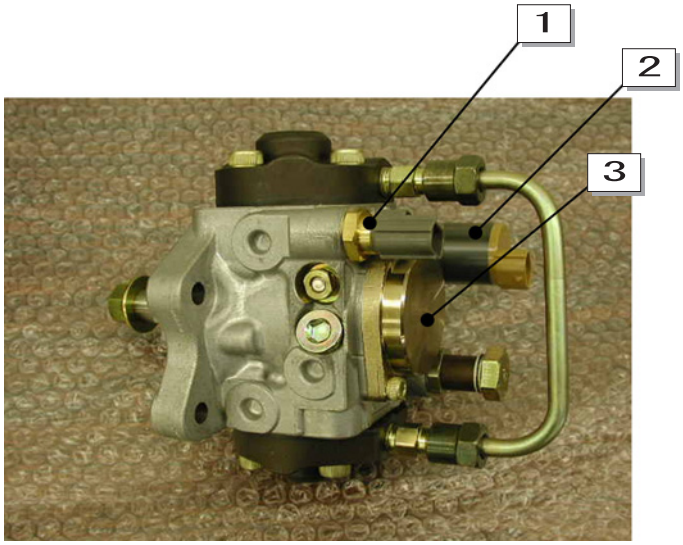

1	Fuel temperature sensor
2	SCV (suction control valve)
3	Feed pump

Supply pump
The supply pump uses the force of the engine rotation to raise the fuel pressure and send fuel to the common rail.The SCV, fuel temperature sensor, and feed pump are installed on the supply pump.

SCV (suction control valve)
The SCV is installed on the supply pump and controls the sending of fuel to the common rail (discharge volume). The ECM controls the electrified time to the SCV and controls the fuel discharge volume.

3. Common Rail / Flow Damper

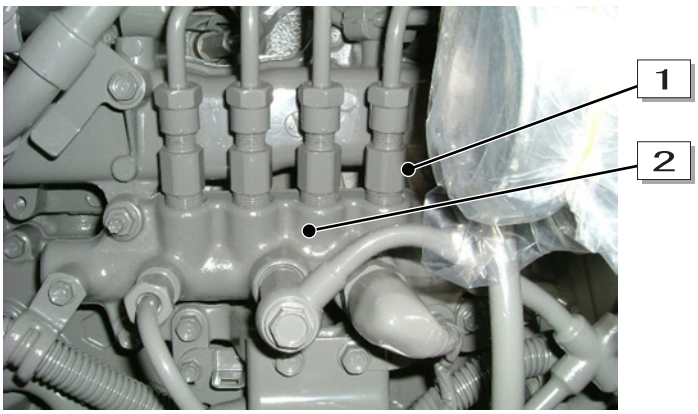

1	Flow damper
2	Common rail

[1] Common rail
The common rail receives the fuel from the supply pump, holds the common rail (fuel) pressure, and distributes the fuel to each cylinder. The common rail pressure sensor, flow dampers, and pressure limiter are installed on the common rail.

[2] Flow damper
The flow dampers are installed on the discharge port of each injector of the common rail. They suppress pressure pulses in the common rail and prevent excess fuel injection from the injectors.
When a flow damper operates, the fuel supply to the injector stops.

https://truckmanualshub.com/

4. Common Rail Pressure Sensor / Pressure Limiter

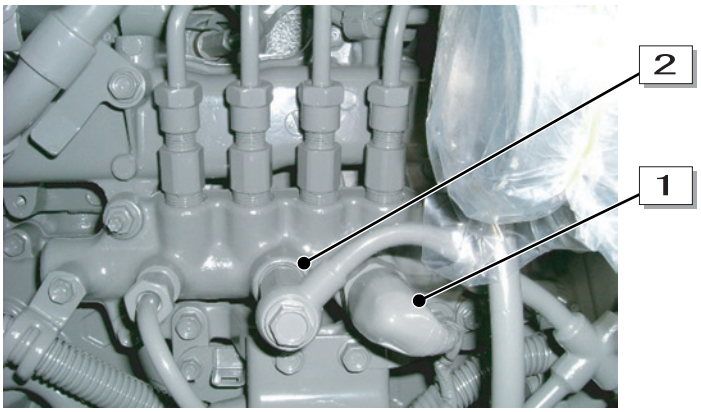

1	Common rail pressure sensor
2	Pressure limiter

[1] Common rail pressure sensor
Sends the pressure inside the common rail to the ECM as a voltage signal. From the signal sent, the ECM calculates the actual common rail pressure (fuel pressure) and uses this for fuel injection control.

[2] Pressure limiter
If the pressure in the common rail becomes abnormally high pressure, the pressure limiter relieves the pressure, and excess fuel is returned to the tank.

5. Injector

The injectors are installed on the cylinder head sections. They are controlled from the ECM and inject fuel. The injector drive voltage is boosted (to 118 V) inside the ECM and applied to the injectors. By controlling the injector electrified time, the ECM controls the fuel injection, injection timing, etc.

https://truckmanualshub.com/

6. Engine Coolant Temperature Sensor

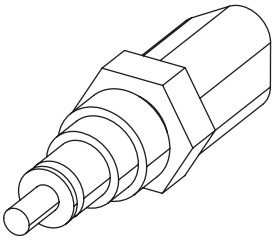

RST-05-01-001ck

The engine coolant temperature sensor is installed on the engine block. The resistance of its thermistor varies with the temperature.
The resistance is low when the engine coolant temperature is high and high when the coolant temperature is low. From the ECM voltage variation, the ECM calculates the engine coolant temperature and uses this for fuel injection control etc.

7. Engine Oil Pressure Sensor

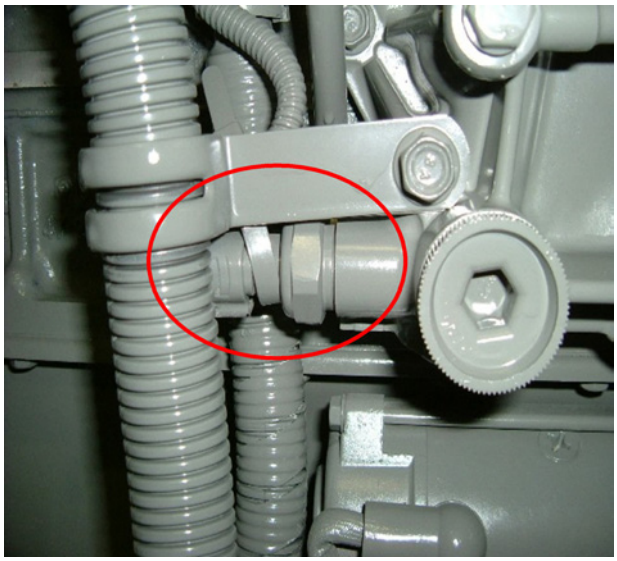

The engine oil pressure sensor is installed near the cylinder block starter motor. It detects the engine oil pressure, converts this pressure into an electrical signal, and sends that signal to the ECM.

F

https://truckmanualshub.com/

8. Cam Position Sensor (CMP sensor)

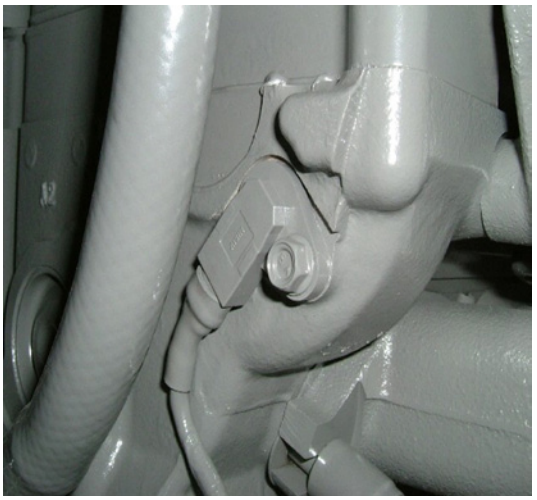

Sends a signal to the ECM when the engine camshaft cam section passes this sensor.
The ECM identifies the cylinders through this sensor input, determines the crank angle, and uses this information to control the fuel injection and to calculate the engine speed.
Also, it provides a back-up function in case of trouble in the CKP sensor. However, if there is trouble in the CMP sensor system, there is no change in the behavior while the engine runs, but after it stops, the engine cannot start.

9. Crank Position Sensor (CKP sensor)

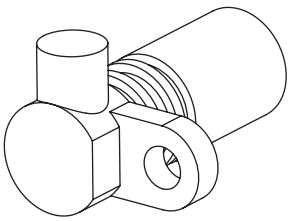

RST-05-01-001bs

Sends a signal to the ECM when the projection section of the engine flywheel passes this sensor.
The ECM identifies the cylinders through this sensor input, determines the crank angle, and uses this information to control the fuel injection and to calculate the engine speed.
In case of trouble in the CKP sensor, the CMP sensor provides a back-up function.

https://truckmanualshub.com/

10.Atmospheric Pressure Sensor

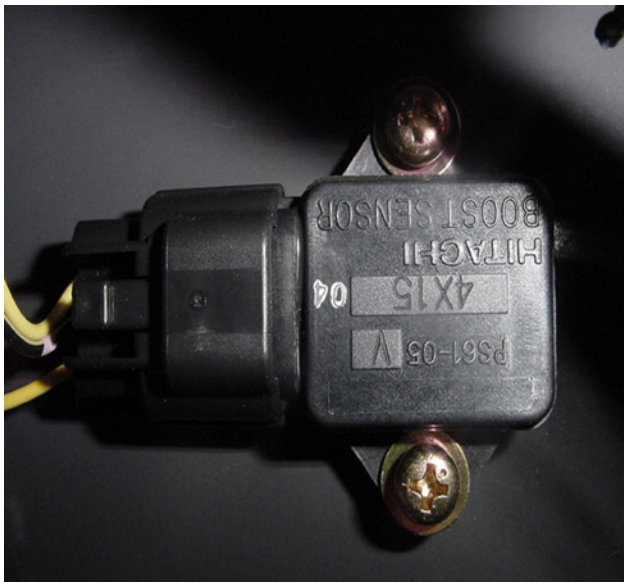

The atmospheric pressure sensor is installed in the cab. The ECM converts the atmospheric pressure into an electric signal and calculates the atmospheric pressure from this voltage signal and corrects the fuel injection quantity according to the atmospheric pressure.

11.Suction Air Temperature Sensor

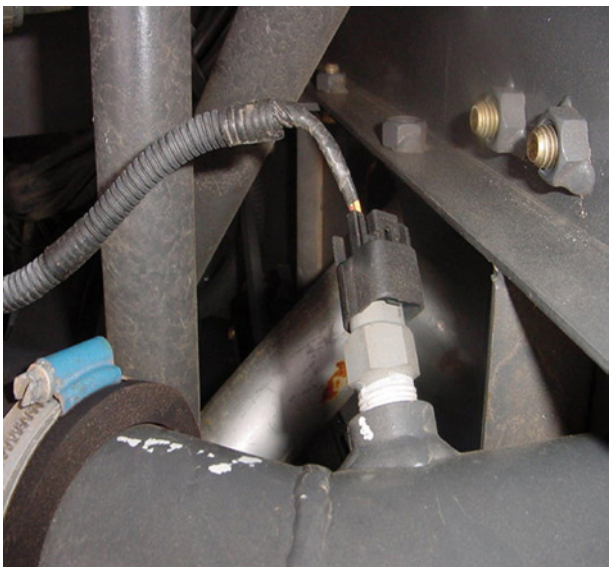

The suction air temperature sensor is installed midway through the suction air duct. It detects the suction air temperature in order to optimize the fuel injection quantity.

https://truckmanualshub.com/

12.Boost Pressure Sensor

The boost pressure sensor uses a pressure hose between the boost pressure sensor and intake pipe to detect the boost (suction air pressure), converts this pressure into an electrical signal, and sends that signal to the ECM.

13.Boost Temperature Sensor

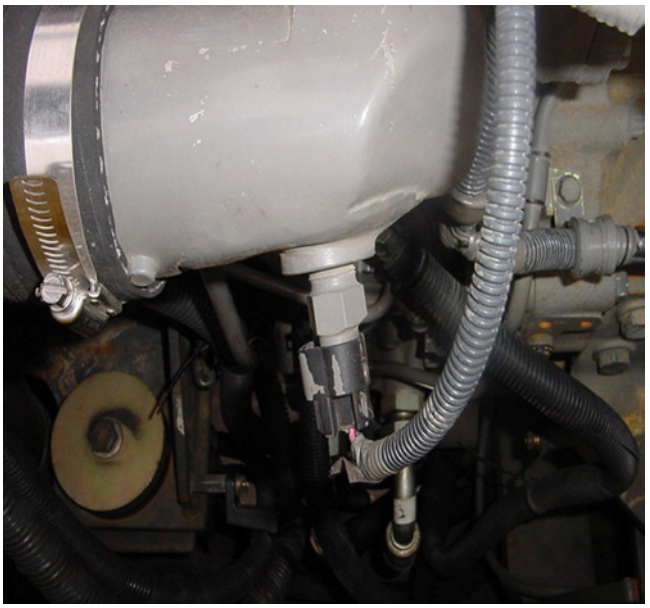

The boost temperature sensor is installed on the upstream side of the EGR valve of the intake manifold.
This sensor is the thermistor type. The internal resistance of the sensor changes with the temperature.

https://truckmanualshub.com/

14.Charge Fuel Pump

Converting the fuel filter and pre-filter to remote operation increased the distance from the fuel tank to the feed pump.
Therefore, this new pump was added to assist in drawing the fuel from the tank and to make it easy to bleed out air during maintenance.
This pump always operates when the key switch is ON.

15.EGR Cooler

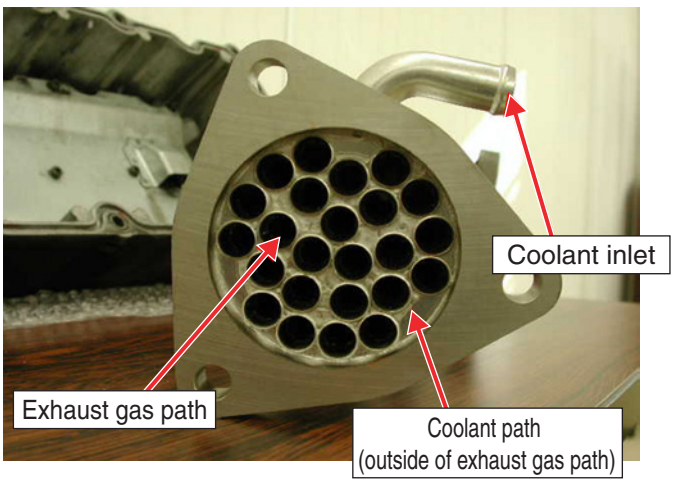

The cooled EGR (cooling unit installed in the path) uses the engine coolant to cool exhaust gas at high temperature (about 700 °C) down to (about 200 °C), to drop the combustion temperature, and to reduce NOx.

https://truckmanualshub.com/

16.Lead Valve (check valve)

The lead valve is installed between the EGR valve outlet and the inlet manifold. It suppresses EGR gas back flow and allows the EGR gas to only flow in one direction.

17.EGR Valve

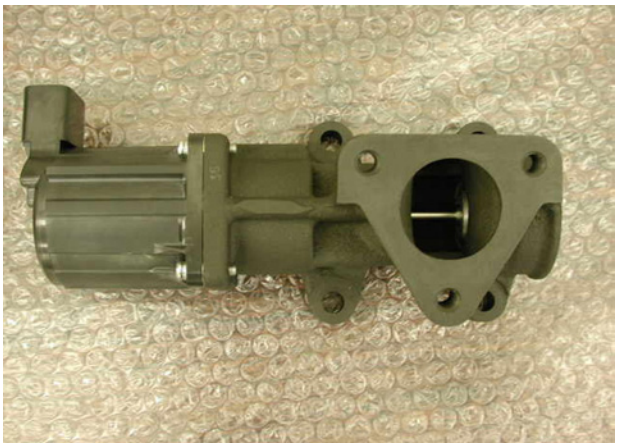

The operation of the EGR valve (lift amount) is controlled by signals from the ECM.

https://truckmanualshub.com/

Engine Control Summary

Electronic control fuel injection system (common rail type)

This is a system in which the engine speed, engine load, and other information (signals from many sensors) are acquired from the engine control module (ECM) and based on that information, the ECM sends electrical signals to the supply pump, injectors, etc. to appropriately control the fuel injection quantity and timing for each cylinder.

Injection quantity control

To provide the optimum injection quantity, the ECM controls the injectors based mainly on the engine speed and the instructed speed from computer A and controls the fuel injection quantity.

Injection pressure control

The injection pressure is controlled by controlling the fuel pressure in the common rail.The appropriate pressure in the common rail is calculated from the engine speed and fuel injection quantity and by controlling the supply pump, the appropriate quantity of fuel is discharged and the pressure sent to the common rail is controlled.

Injection timing control

Instead of a timer function, primarily the appropriate fuel injection timing is calculated from the engine speed, injection quantity, etc. and the injectors controlled.

Injection rate control

In order to improve the combustion in the cylinder, at first only a small amount of fuel is injected (pre-injection), the fuel is ignited, then once the fuel has ignited, a second injection (main injection) is carried out.This injection timing and quantity control is effected by controlling the injectors.

https://truckmanualshub.com/

Function Explanation Table

	Name	Function
1	Common rail	Receives the high-pressure fuel sent under pressure from the supply pump, holds the fuel pressure, and distributes the fuel to each injector.
2	Pressure limiter (common rail component part)	Operates to allow pressure within the common rail to escape if the pressure in the common rail becomes abnormally high.
3	Flow damper (common rail component part)	Installed on the discharge port of each injector. Suppress pressure pulses in the common rail and prevent fuel supply to the injectors when there is pipe damage.
4	Common rail pressure sensor (common rail component part)	Detects the pressure inside the common rail, converts it to a voltage, and sends that voltage to the ECM.
5	Injector	Controlled by the ECM and injects the fuel.
6	Supply pump	Raise the fuel pressure and send it under pressure to the common rail by using the force of the engine rotation.
7	SCV (suction control valve) (supply pump component part)	Controls the fuel pressure (discharge quantity) sent to the common rail. The ECM controls the time during which power is on to the SCV to increase or decrease the amount of fuel discharged.
8	Fuel temperature sensor (supply pump component part)	Detects the fuel temperature and sends it to the ECM. Used for supply pump control etc.
9	EGR (Exhaust Gas Recirculation)	Recirculates part of the exhaust gas in the intake manifold and mixes the EGR gas with the suction air to reduce the combustion temperature and reduce NOx.
10	EGR valve (EGR position sensor)	The EGR valve operation (open and close) timing and the lift amount are controlled by signals from the ECM. (The valve lift amount is detected by the EGR position sensor)
11	EGR cooler	Cools the high-temperature EGR gas by using the engine coolant.
12	Lead valve	Increases the amount of EGR by suppressing back flow of the EGR gas and letting it flow only in one direction.
13	ECM (engine control module)	Constantly monitors the information from each sensor and controls the engine system.
14	QOS (quick on start system)	Determines the glow time according to the engine coolant temperature, operates the glow relay, and makes starting at low temperatures easy and also reduces white smoke and noise immediately after the engine starts.
15	CKP sensor (crank position sensor)	Sends a signal to the ECM when the projection section of the engine flywheel passes this sensor. The ECM identifies the cylinders through this sensor input, determines the crank angle, and uses this information to control the fuel injection and to calculate the engine speed. In case of trouble in the CKP sensor, the CMP sensor provides a back-up function.
16	Oil pressure sensor	Detects the engine oil pressure and sends it to the ECM. Used for oil pressure drop alarms etc.
17	Engine coolant temperature sensor	Detects the engine coolant temperature and sends it to the ECM. Used for fuel injection control, QOS control, etc.

https://truckmanualshub.com/

Explanation of Engine Terms

	Name	Function
18	CMP sensor (cam position sensor)	Sends a signal to the ECM when the engine camshaft cam section passes this sensor. The ECM identifies the cylinders through this sensor input, determines the crank angle, and uses this information to control the fuel injection and to calculate the engine speed. Also provides a back-up function in case of trouble in the CKP sensor. However, if there is trouble in the CMP sensor system, there is no change in the behavior while the engine turns, but after it stops, restarting is difficult.
19	Atmospheric pressure sensor	Detects the atmospheric pressure and sends it to the ECM. The injection quantity is corrected according to the atmospheric pressure.
20	Suction air temperature sensor	Detects the suction air temperature and sends it to the ECM. Optimizes the fuel injection quantity.
21	Boost pressure sensor	Detects the boost (suction air pressure) inside the intake pipe and sends it to the ECM. Used to control fuel injection with the boost pressure.
22	Boost temperature sensor	Detects the boost temperature and sends it to the ECM. Used for fuel injection control etc.

https://truckmanualshub.com/

Technology for Exhaust Gases

1. Common Rail System

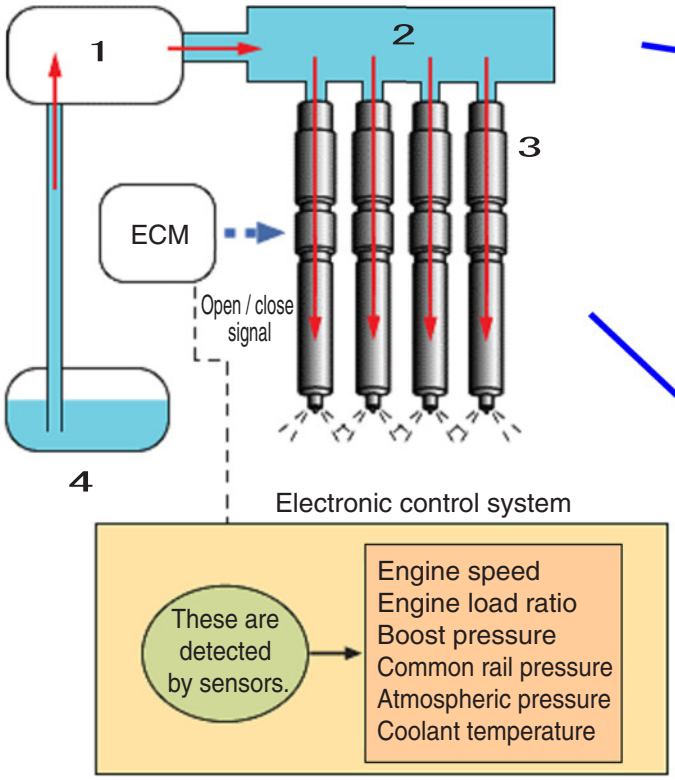

High-pressure fuel is accumulated for all cylinders and fed uniformly to each injector.

The fuel injection pressure, injection timing, and injection quantity are controlled electronically to attain ideal combustion.

1	Supply pump
2	Common rail
3	Injector
4	Fuel tank

F

Explanation of Engine Structure

2. Multi-Stage Fuel Injection (multiple injection)

Start of injection

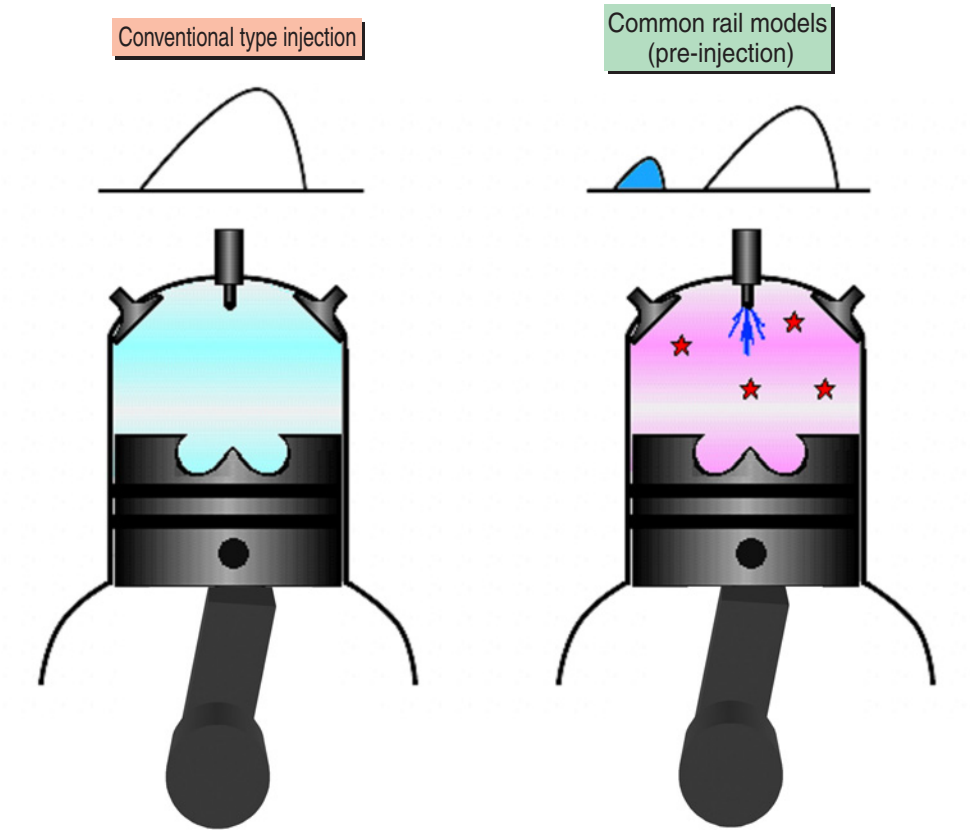

With conventional models, there is the no-injection state, but with common rail models, pre-injection is started and ignition starts.

Ignition

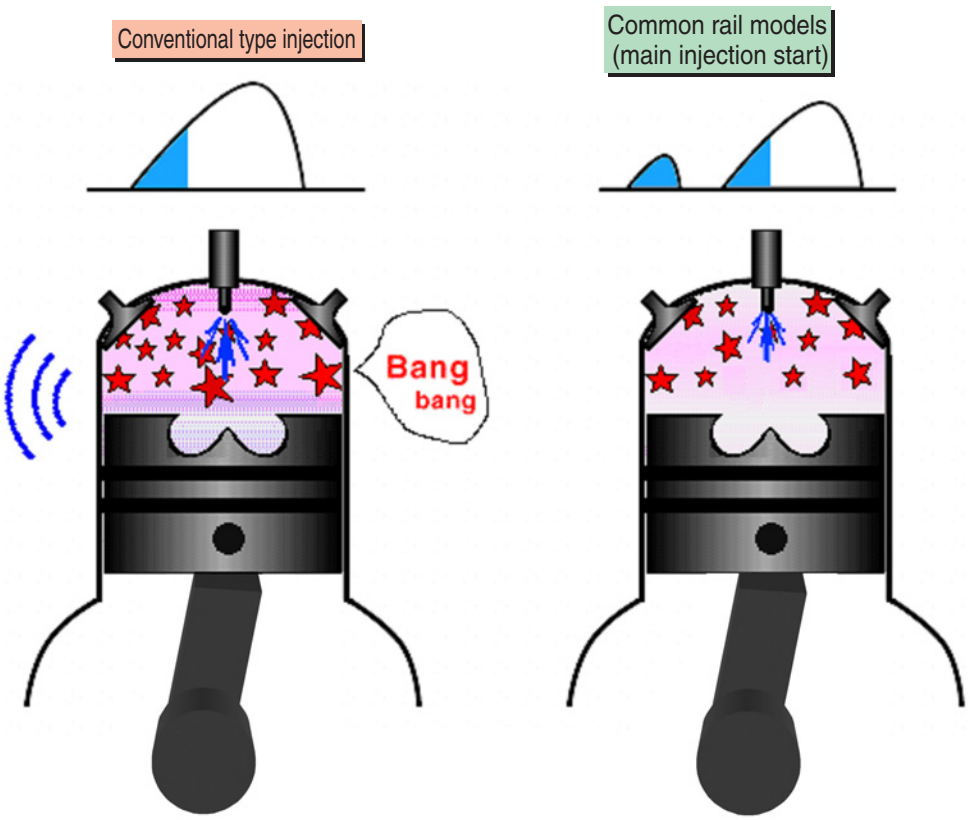

Conventional models start injection at this point in time, but common rail models have already ignited with pre-injection and now start the second injection (main injection).

https://truckmanualshub.com/

Combustion

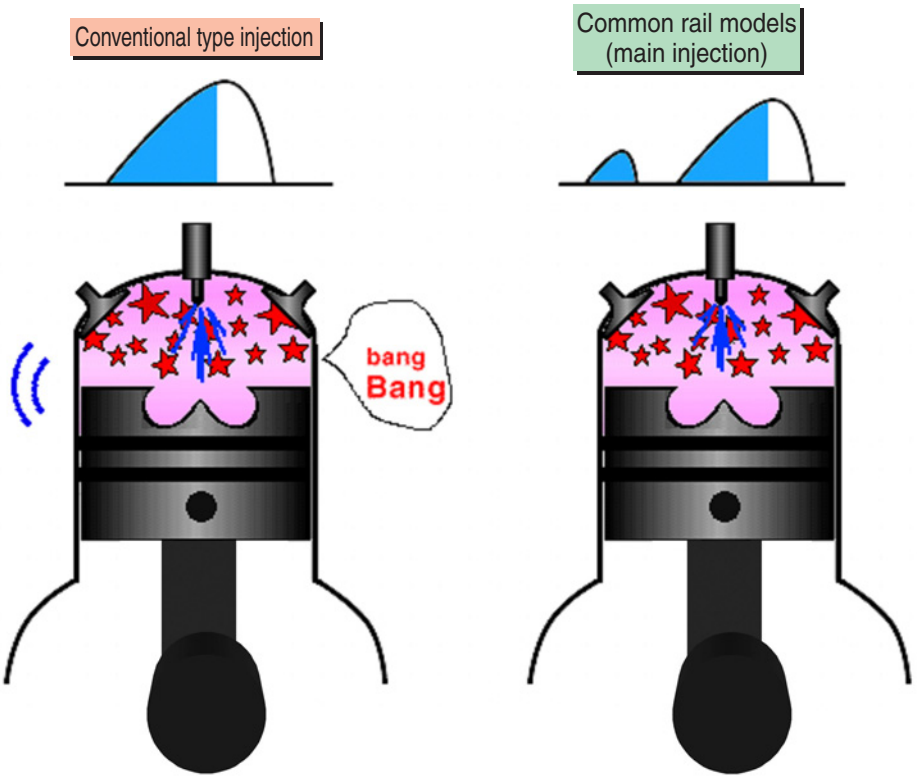

Common rail models divide the high-pressure fuel injection over many times to make it possible to create a uniform, complete combustion state in the combustion chamber and also to reduce the engine noise and vibration.

Explanation of Engine Structure

3. Inter Cooler

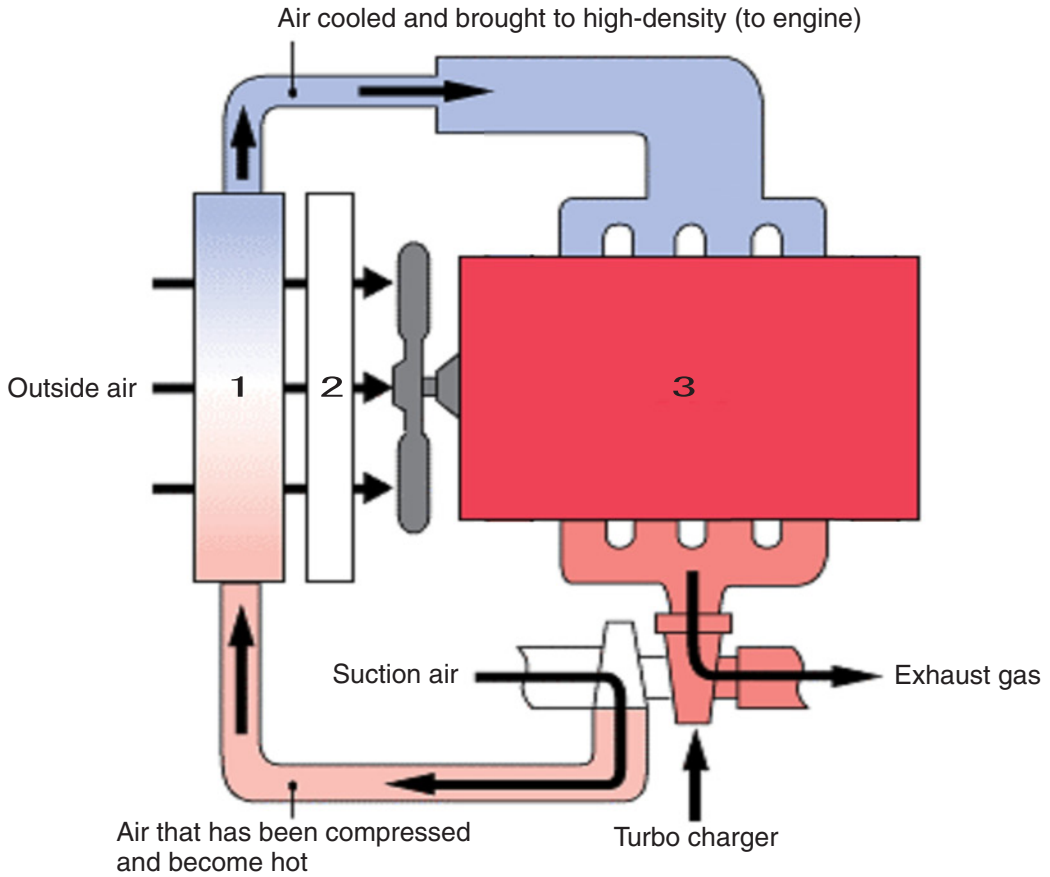

By cooling intake air that had reached high temperature due to turbo-charging, the air density rises and the charging efficiency rises.
This raises the engine fuel efficiency and improves fuel efficiency (CO / CO_2 reduction) and also has the effect of lowering the combustion temperature that reduces NO_x.

1	Inter cooler
2	Radiator
3	Engine

https://truckmanualshub.com/

4. EGR (exhaust gas recirculation)

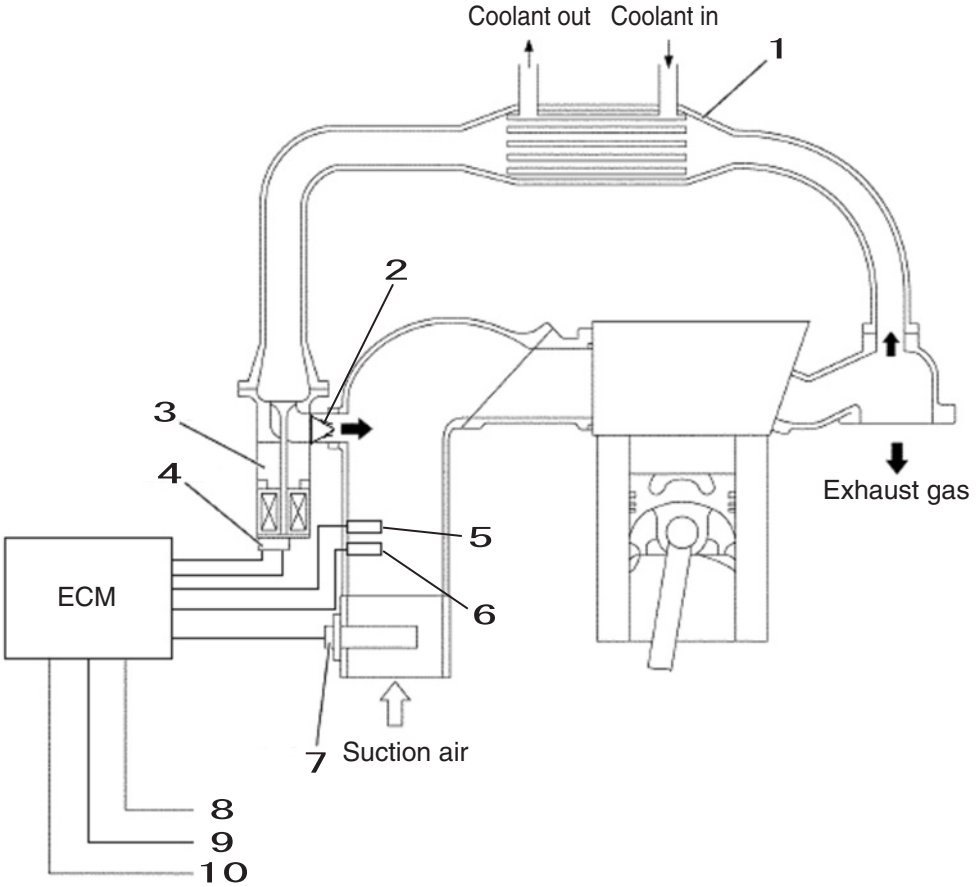

1	EGR cooler	6	Boost pressure sensor
2	Lead valve	7	Suction air temperature sensor
3	EGR valve	8	Engine speed
4	EGR position sensor	9	Engine coolant temperature
5	Boost temperature sensor	10	Engine load

EGR (exhaust gas recirculation)
EGR system is an abbreviation for "exhaust gas recirculation" system. The EGR system recirculates part of the exhaust gas in the intake manifold and mixes inactive gases with the suction air to reduce the combustion temperature and suppress the generation of nitrogen oxides (NOx).The EGR quantity is controlled by the operation (opening and closing) of the EGR valve, which is installed between the exhaust manifold and the intake manifold.

The ERG quantity is determined from the engine speed and engine load rate (fuel injection quantity) and the EGR amount is controlled.A cooling device (EGR cooler) is installed in the EGR gas path to cool the high-temperature EGR gas with this EGR cooler. This cooled EGR gas is mixed with new air intake to make the combustion temperature lower than with normal EGR, which contributes to the reduction of NOx. (Cooled EGR)

Furthermore, a lead valve is used in the EGR system to suppress EGR gas back flow and allow the EGR gas to only flow in one direction.

https://truckmanualshub.com/

Explanation of Engine Structure

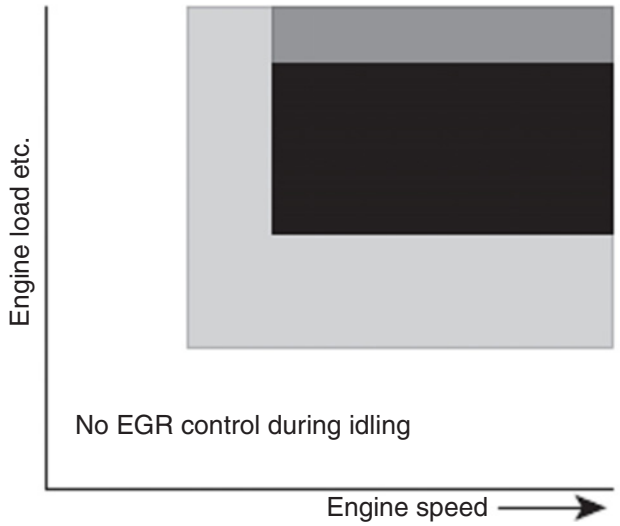

The ECM operates the motor according to such engine states as the speed and load and controls the EGR valve lift amount.
The valve lift amount is detected by the EGR position sensor. The sections shown in darker color in the diagram have larger valve lift amount. The darkest color indicates a lift amount near 100%.

https://truckmanualshub.com/

Engine Overall

1. Comparison of 6BG1 and 4HK1

2 valves OHV

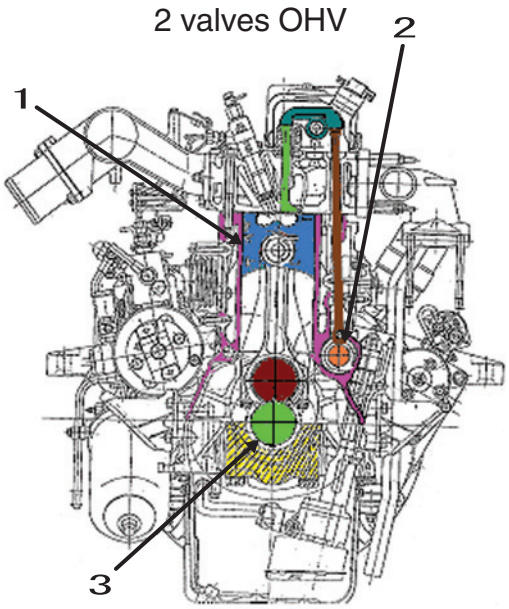

6BG1

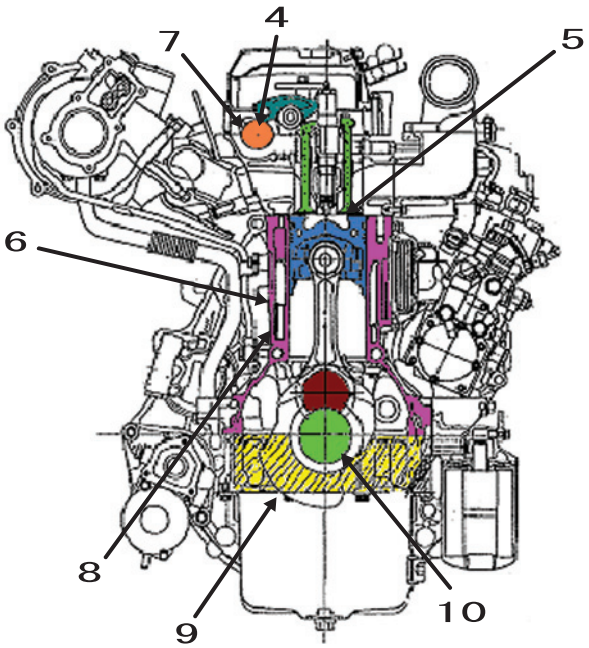

4HK1

1	Liner chrome plating roughness 5 μ	6	Liner phosphate film roughness 3 μ (reduced oil consumption)
2	Cam flat tappet	7	Overhead cam (high-rigidity cylinder head)
3	Crank / journal pin diameter φ80 / φ64	8	High-rigidity cylinder
4	Roller rocker (increases ability of lubricant to withstand wear)	9	Block & ladder frame (high rigidity, high output)
5	4 valves (combustion improvement, high output, high rigidity)	10	Crank / journal pin diameter φ80 / φ73 (high output)

6B engine

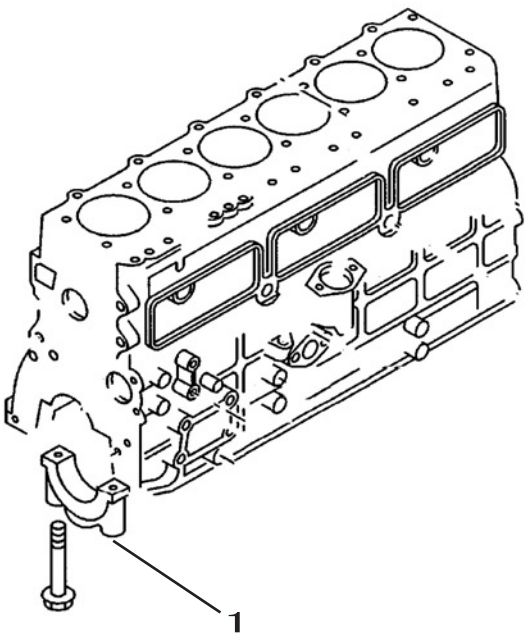

4H engine

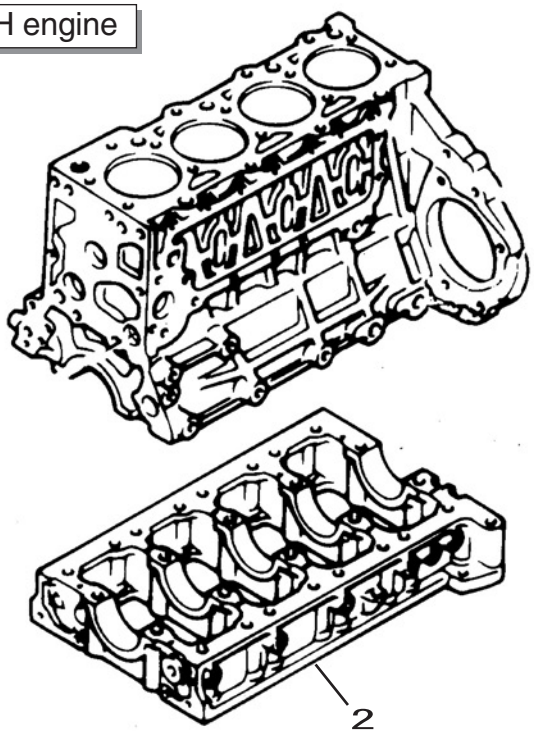

1	Bearing cap structure
2	Ladder frame structure

With the ladder frame structure, the crank shaft bearing is supported as one piece by the frame. (increased engine rigidity and reduced noise)

https://truckmanualshub.com/

Explanation of Engine Operation

Fuel Unit

1. Common Rail System Summary

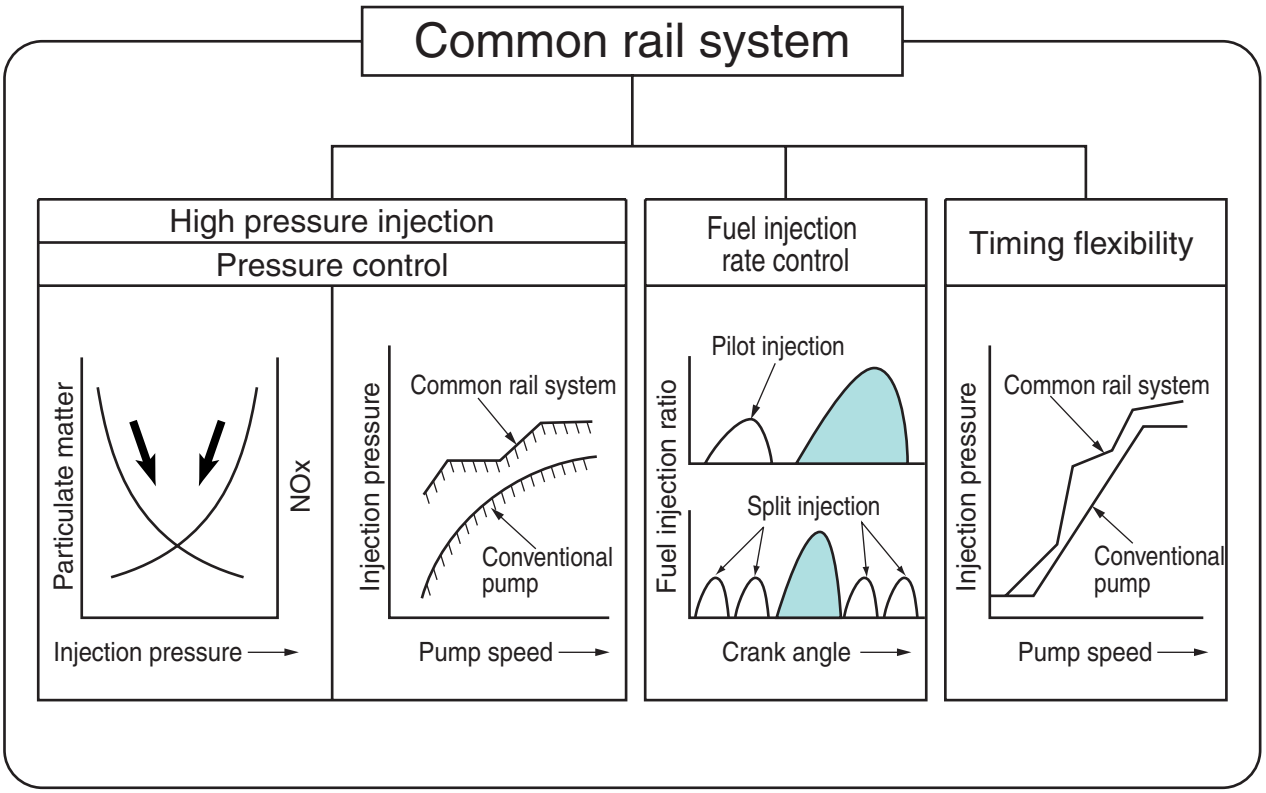

Conventional fuel injection pump

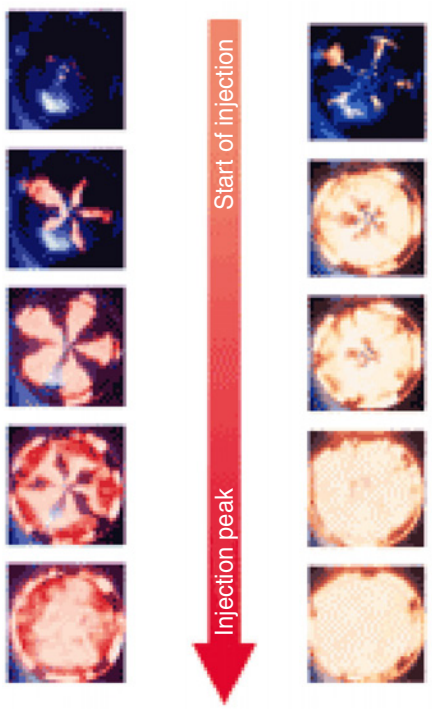

Common rail type high-pressure fuel injection system

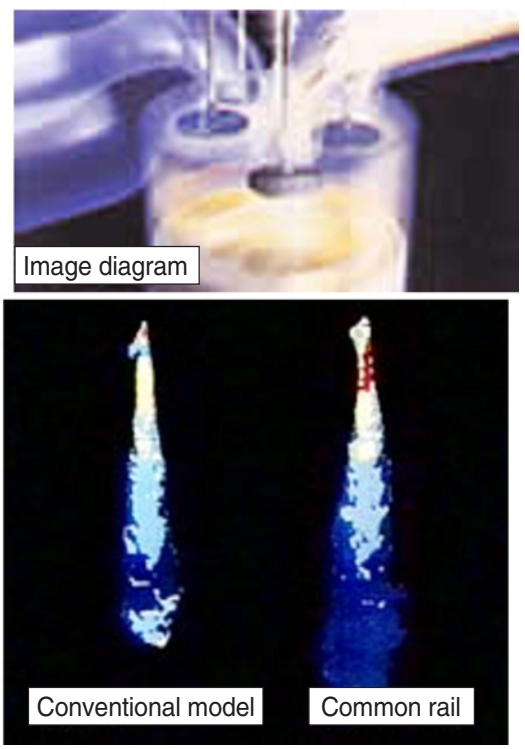

The common rail system pressurizes the fuel to high pressure and injects the fuel mist widely into the cylinder to increase the surface of contact with the air and improve the combustion state.

https://truckmanualshub.com/

Relationship between ECM and sensor actuators

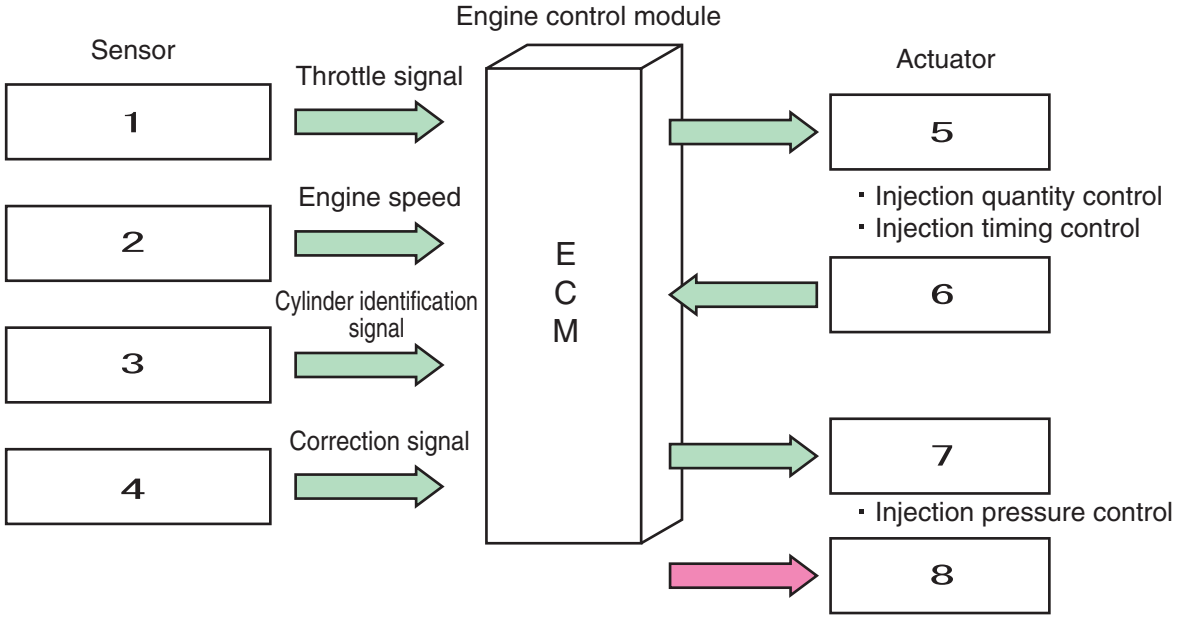

1	Throttle volume (computer A)	5	Injector
2	Crank shaft position sensor	6	Common rail pressure sensor
3	Camshaft position sensor	7	Supply pump
4	Other sensors	8	EGR valve

F

2. Change Points for Injection Method (governor, common rail)

System	Inline type	Common rail system
	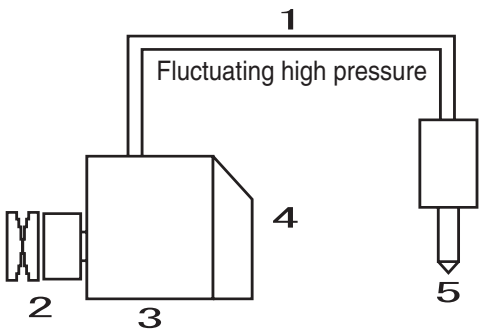	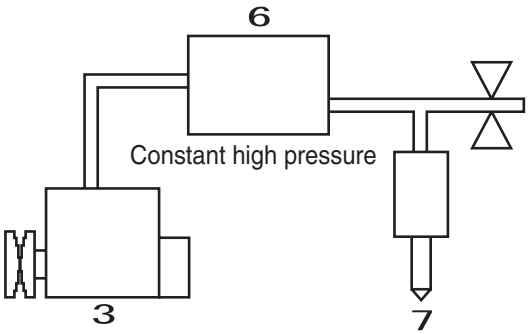
Injection quantity adjustment	Pump (governor)	ECM, injector
Injection timing adjustment	Pump (timer)	ECM, injector
Pressure boost	Pump	Supply pump
Distribution method	Pump	Common rail
Injection pressure adjustment	According to engine speed and injection quantity	Supply pump (SCV)

1	Pipe	5	Nozzle
2	Timer	6	Common rail
3	Supply pump	7	Injector
4	Governor		

https://truckmanualshub.com/

3. Explanation of Injector Operation

(1) When there is no signal from the ECM (state before injection)

The outer valve in the injector is pushed down by the force of the spring A and seals the fuel into the control chamber.
The hydraulic piston and spring B are pushed down by the fuel in the control chamber and the nozzle is in the closed state.

No signal

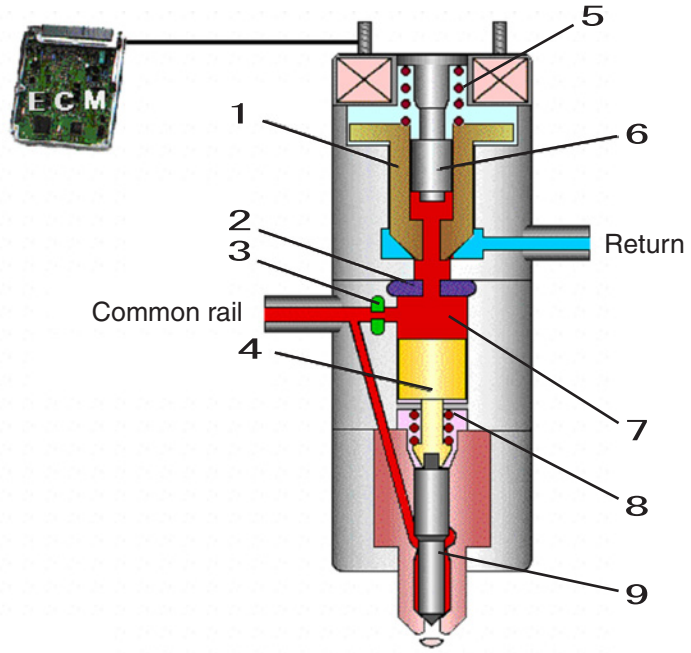

1	Outer valve
2	Orifice 1
3	Orifice 2
4	Hydraulic piston
5	Spring A
6	Inner valve
7	Control chamber
8	Spring B
9	Nozzle

(2) When there is a signal from the ECM

When the signal from the ECM passes power through the injector solenoid, the outer valve compresses the spring A and moves it up.
The outer valve opening allows the fuel in the control chamber to return to the tank via the return line.

Signal input

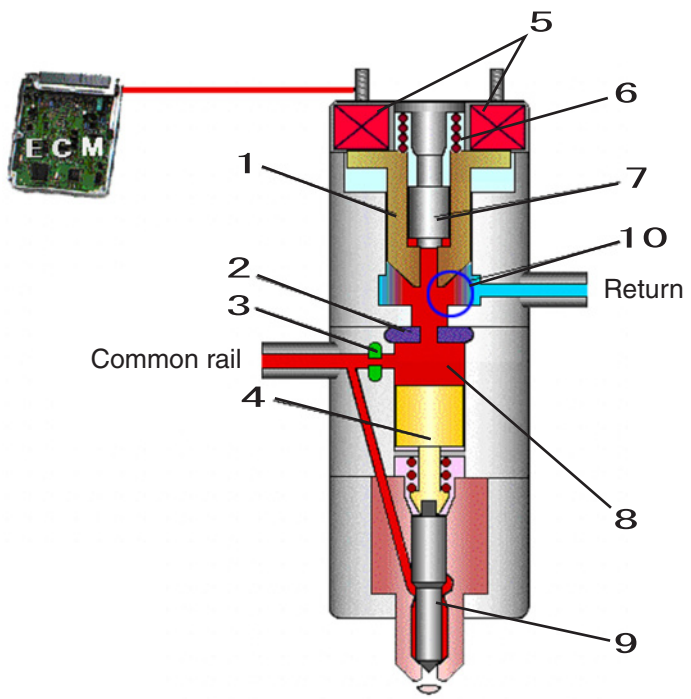

1	Outer valve
2	Orifice 1
3	Orifice 2
4	Hydraulic piston
5	Solenoid
6	Spring A
7	Inner valve
8	Control chamber
9	Nozzle
10	Valve open

https://truckmanualshub.com/

(3) Injection start state

The pressure difference between the control and the nozzle chamber, which is caused by the control chamber opening to return line, opens the nozzle, then fuel is injected.

Start of injection

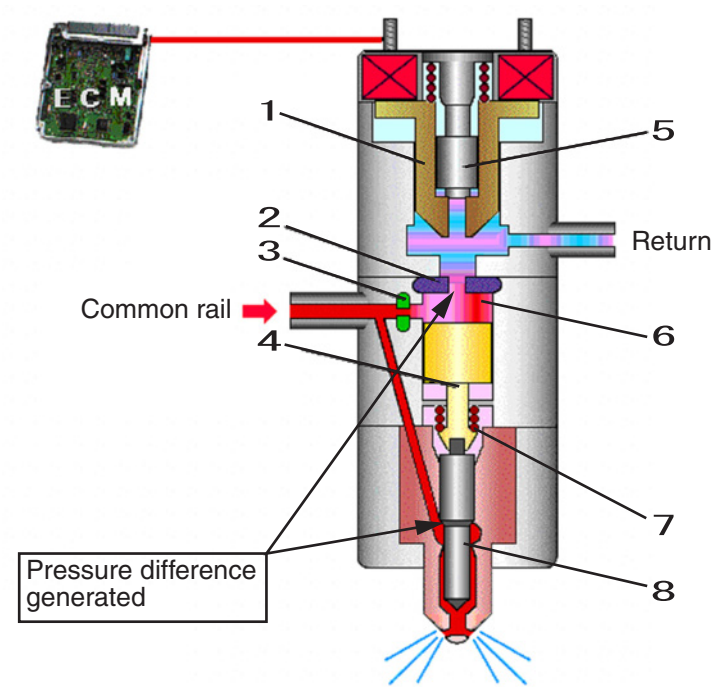

1	Outer valve
2	Orifice 1
3	Orifice 2
4	Hydraulic piston
5	Inner valve
6	Control chamber
7	Spring B
8	Nozzle

(4) When the signal from the ECM is cut off

Because the power to the injector solenoid is cut off, the outer valve is pushed back down by the force of the spring A and the outer valve closes the return line path.

Signal stop

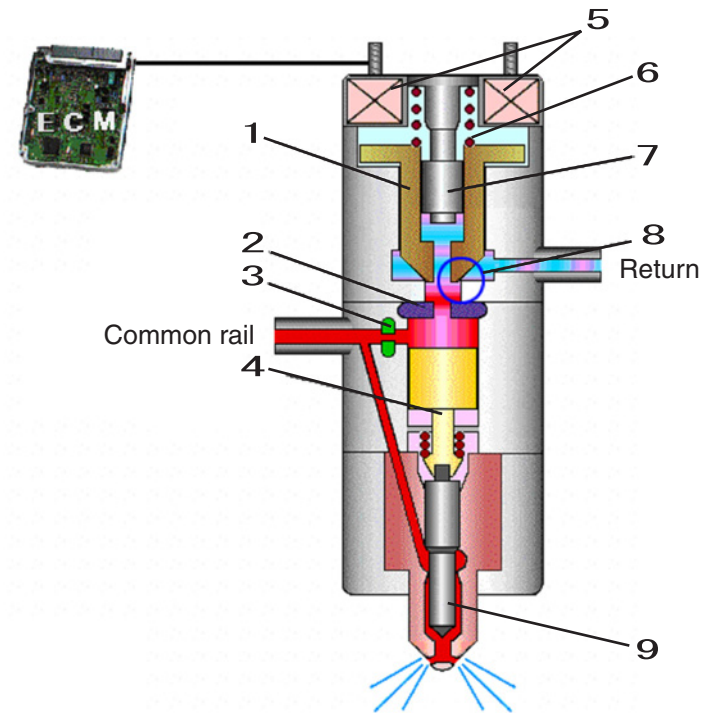

1	Outer valve
2	Orifice 1
3	Orifice 2
4	Hydraulic piston
5	Solenoid
6	Spring A
7	Inner valve
8	Valve close
9	Nozzle

F

https://truckmanualshub.com/

(5) Injection stop state (injection end)

Because the fuel is sealed into the return line, fuel fills the control chamber again.
The hydraulic piston and the spring B are compressed down by the filled fuel and the nozzle is closed.
This ends the injection.

Injection stop

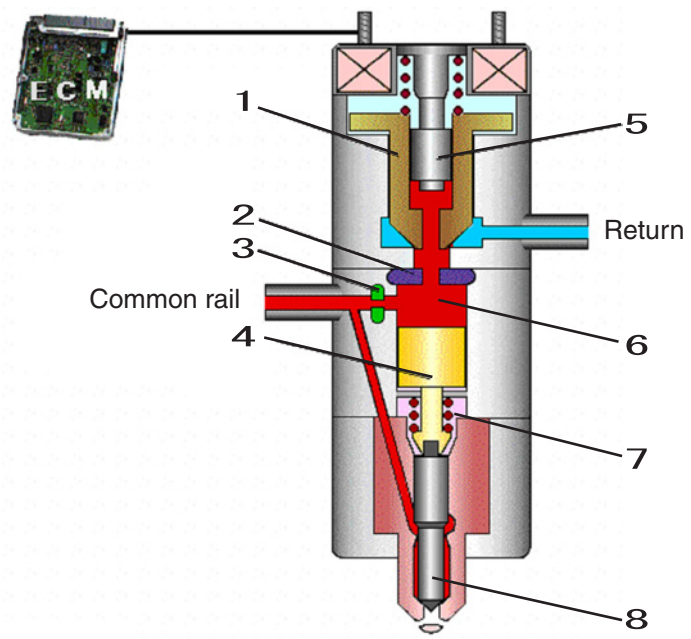

1	Outer valve
2	Orifice 1
3	Orifice 2
4	Hydraulic piston
5	Inner valve
6	Control chamber
7	Spring B
8	Nozzle

https://truckmanualshub.com/

4. Explanation of Supply Pump Operation

The drive shaft is driven by the force of engine rotation.
The feed pump is turned by the power of the drive shaft and draws up fuel from the fuel tank.
The fuel pressurized by the feed pump has feed pressure pulse stabilized by the adjustment valve.
Part of this fuel remains at the suction control valve to lubricate the plunger and cam and is returned to the fuel tank via the over flow.
The signal from the ECM is input to the suction control valve and the opening stroke varies according to the quantity of power passed through.
The quantity of fuel corresponding to the stroke is sent to the suction valve under pressure and is compressed to high pressure at the plunger.
The fuel raised to high pressure at the plunger is sent under pressure from the delivery valve to the common rail.
The fuel temporarily built up in the common rail is distributed to the injectors for each cylinder.

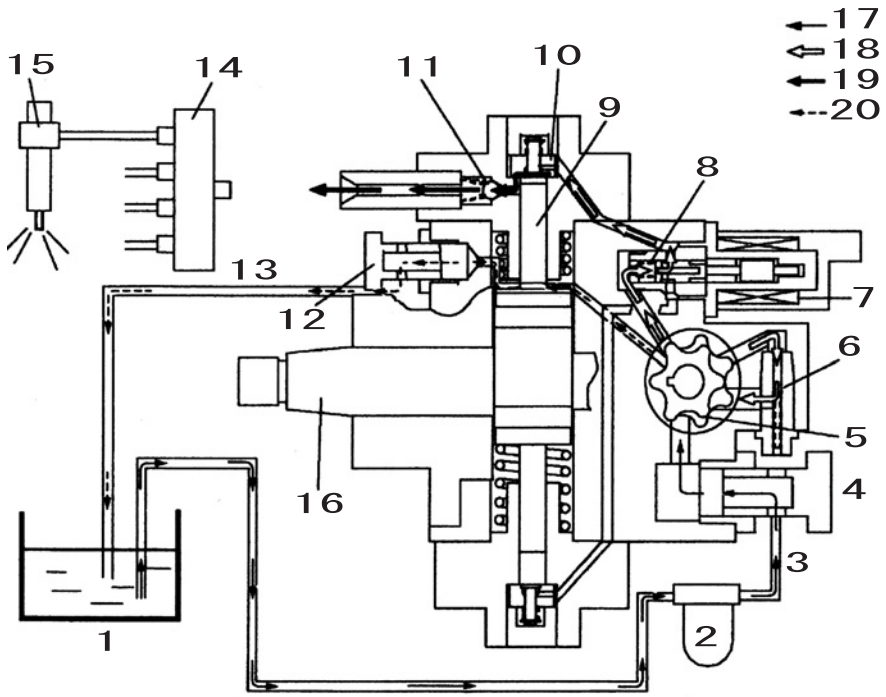

1	Fuel tank	8	Return spring	15	Injector
2	Fuel filter	9	Plunger	16	Drive shaft
3	Suction	10	Suction valve	17	Suction pressure
4	Fuel inlet	11	Delivery valve	18	Feed pressure
5	Feed pump	12	Over flow	19	High pressure
6	Adjusting valve	13	Return	20	Return pressure
7	Suction control valve	14	Common rail		

F

https://truckmanualshub.com/

5. Supply Pump Disassembly Diagram

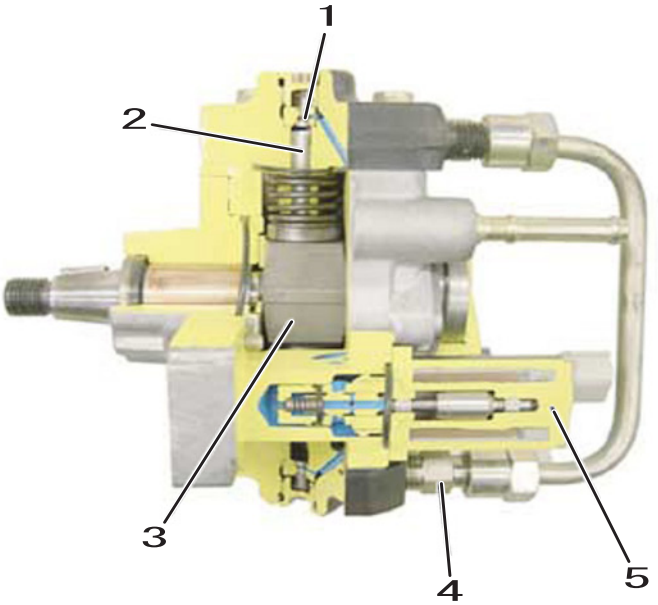

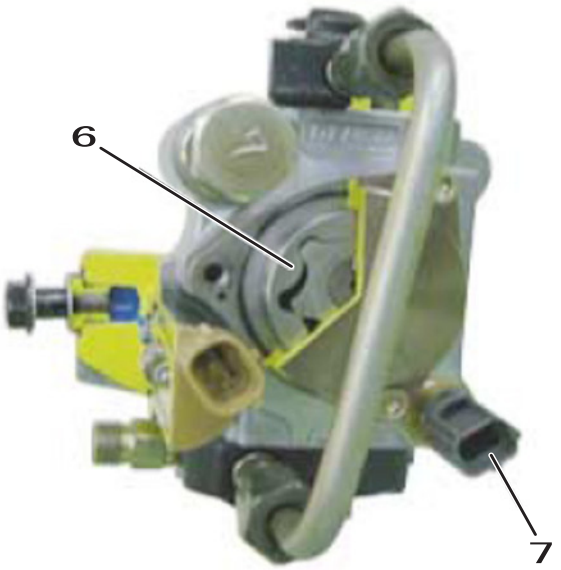

1	Suction valve	5	Suction control valve
2	Plunger	6	Feed pump
3	Cam ring	7	Fuel temperature sensor
4	Delivery valve		

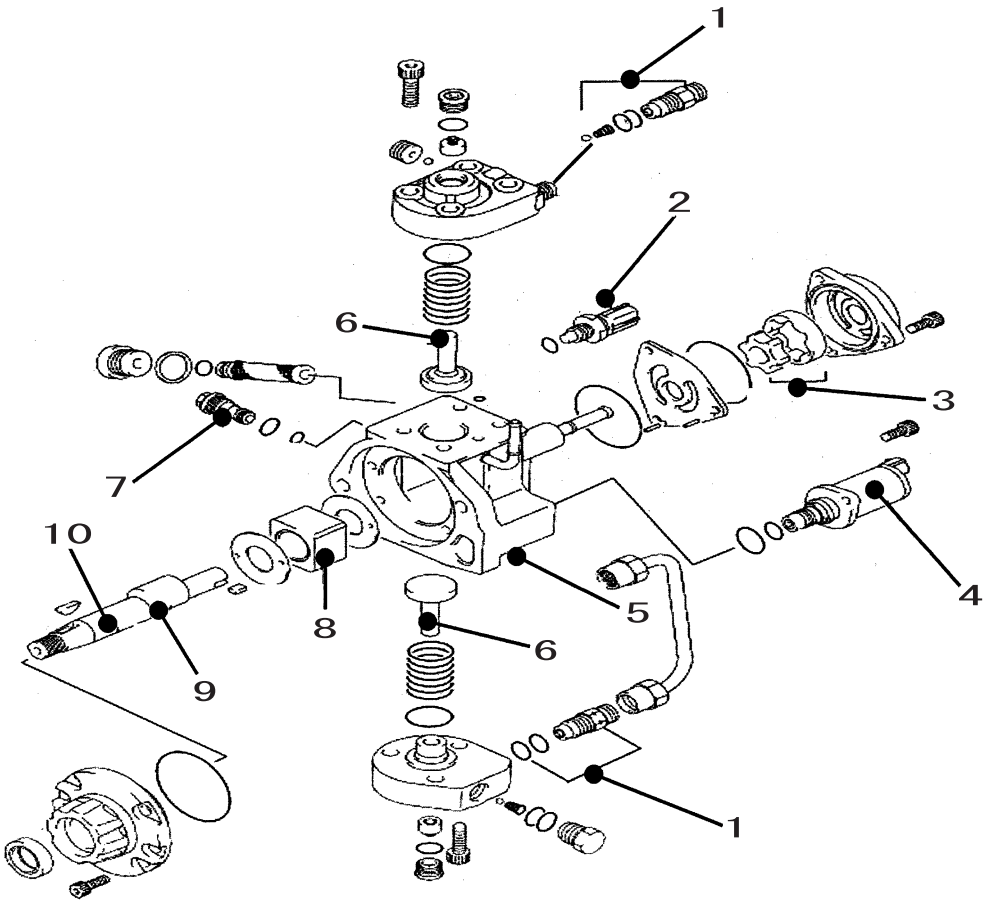

RF04001–002

1	Delivery valve	6	Plunger
2	Fuel temperature sensor	7	Adjusting valve
3	Feed pump	8	Cam ring
4	SCV (suction control valve)	9	Eccentric cam
5	Pump housing	10	Camshaft

https://truckmanualshub.com/

6. Explanation of Flow Damper Operation

Internal structure diagram

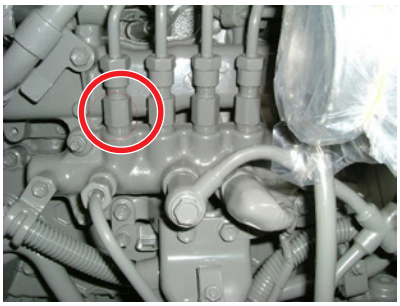

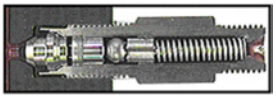

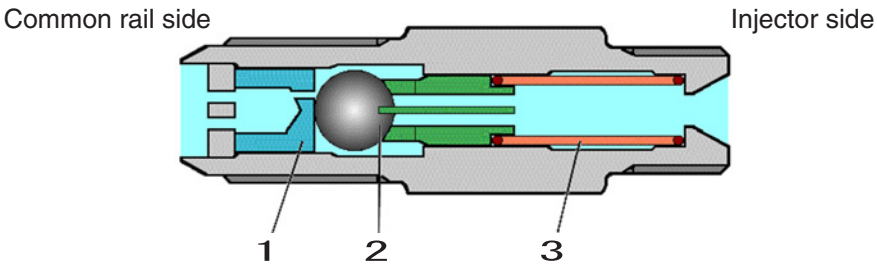

1	Piston
2	Ball
3	Spring

[1] When engine is stopped

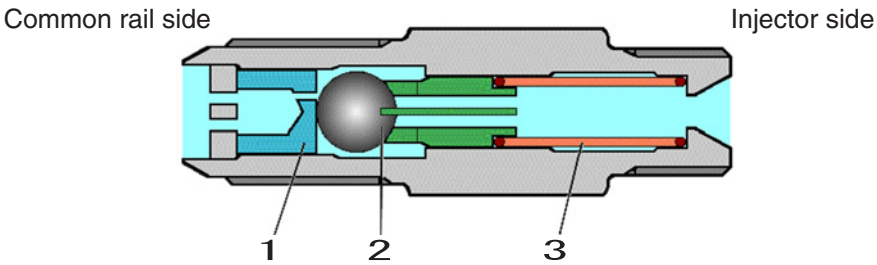

1	Piston
2	Ball
3	Spring

When the engine is stopped, the ball and piston are pressed to the common rail side by the tension of the spring.

[2] When engine starts (damping)

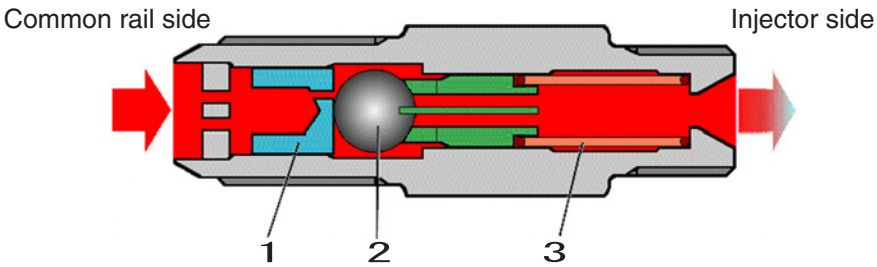

1	Piston
2	Ball
3	Spring

When the engine starts, the fuel pressure from the common rail side is applied and the piston and ball move to the injector side.
The fuel pulses (damping) are absorbed by the spring.

https://truckmanualshub.com/

[3] Faulty fuel outflow

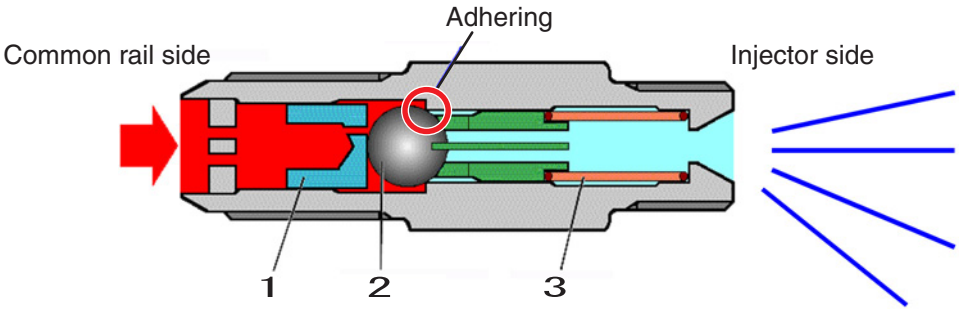

1	Piston
2	Ball
3	Spring

When there is faulty fuel outflow from the injection pipe etc. on the injector side, the injector side pressure drops drastically, so the piston and ball are pushed out by the pressure difference with the common rail side to seal the flow damper with the ball and prevent fuel outflow from the common rail side.

7. Pressure Limiter

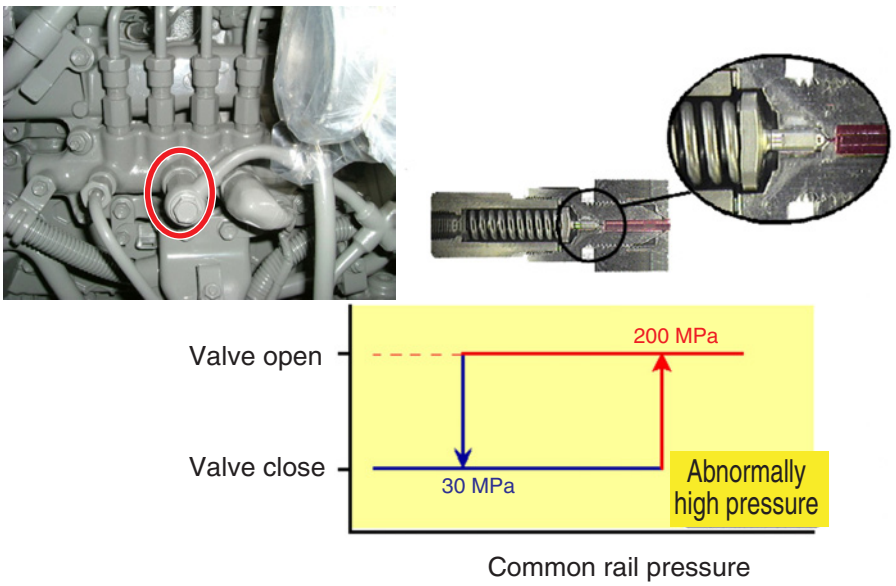

When the pressure within the common rail reaches 200 MPa, for the sake of safety, the pressure limiter opens and returns fuel to the tank.
When the pressure drops to 30 MPa, the valve closes to return operation to normal.

https://truckmanualshub.com/

8. Cautions for Maintenance

(1) Cautions concerning fuel used

With common rail engines, the supply pump and injector are lubricated by the fuel running through them.
Therefore, if any fuel other than diesel is used, this leads to engine trouble, so use of non-specified fuel is strictly prohibited.
Please be aware that troubles resulting from the use of non-specified fuel are not covered by the warranty.

Specified fuel
SUMITOMO approval fuel (Please contact to your dealer about details of SUMITOMO Approval fuel.)

The parts of the fuel system (injector internal part etc.) and the holes and gaps that form the fuel path are made with extremely high precision
Therefore, they are extremely sensitive to foreign matter. Foreign matter in the fuel path can damage it, so use great care to keep out foreign matter.

[1] Clean and care for the fuel line and its surroundings before starting other maintenance.
[2] Those working on the fuel line must have hands clean of dirt and dust.Wearing gloves while working is strictly prohibited.
[3] After removing fuel hoses and fuel pipes, always seal the hoses and pipes by covering the open sections with plastic bags or the like.
[4] When replacing parts, do not open the packing for the new parts until it is time to install them.
[5] Do not reuse any gaskets or O-rings. Replace them with new ones.

https://truckmanualshub.com/

- Do not reuse fuel system high-pressure pipes or injector pipes.If they are removed, replace them with new parts.
- Do not replace a pressure limiter, fuel temperature sensor or flow damper alone.If there is any problem, replace the common rail assembly and all the fuel pipes.

(2) Unreusability of high puressured fuel line.

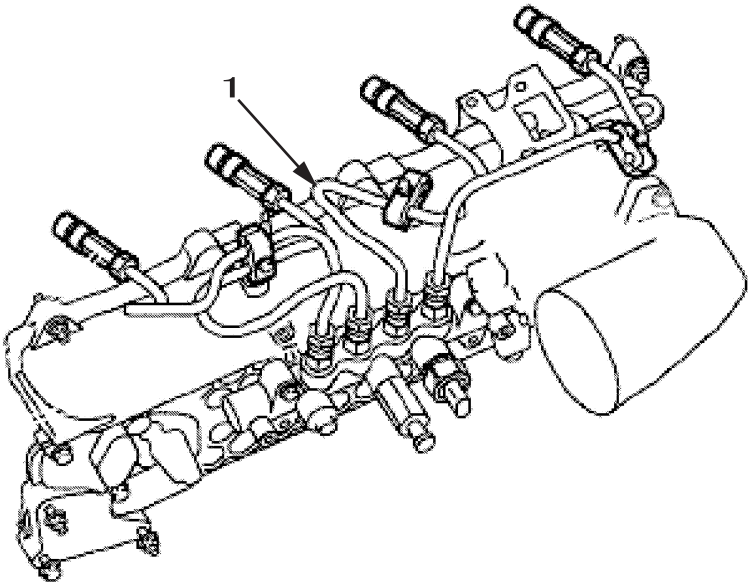

1	Injector pipes

The SCV pump alone cannot be replaced because the fuel temperature sensor is installed on the pump main unit. Always replace the supply pump assembly.

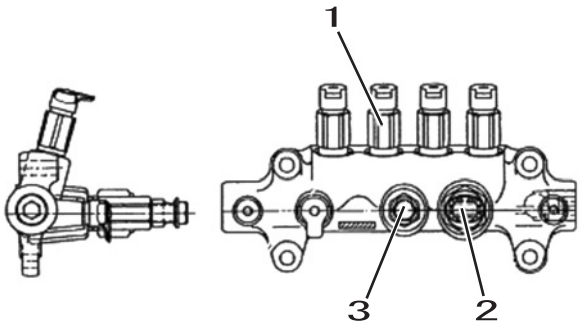

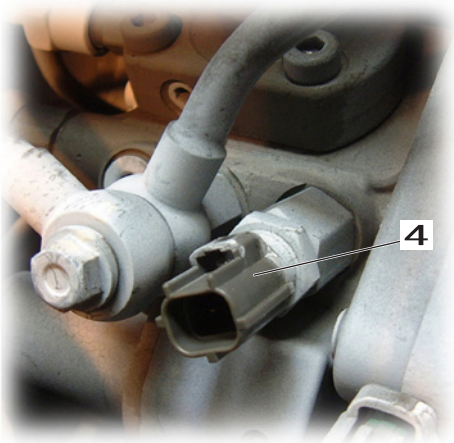

1	Flow damper	3	Fuel temperature sensor
2	Common rail pressure sensor	4	Pressure limiter

https://truckmanualshub.com/

(3) If there is engine trouble, it is strictly prohibited to judge individual cylinders as OK or NG by starting up the engine and loosening the injection pipes.(Never do this. The high-pressure fuel sprays out dangerously.)

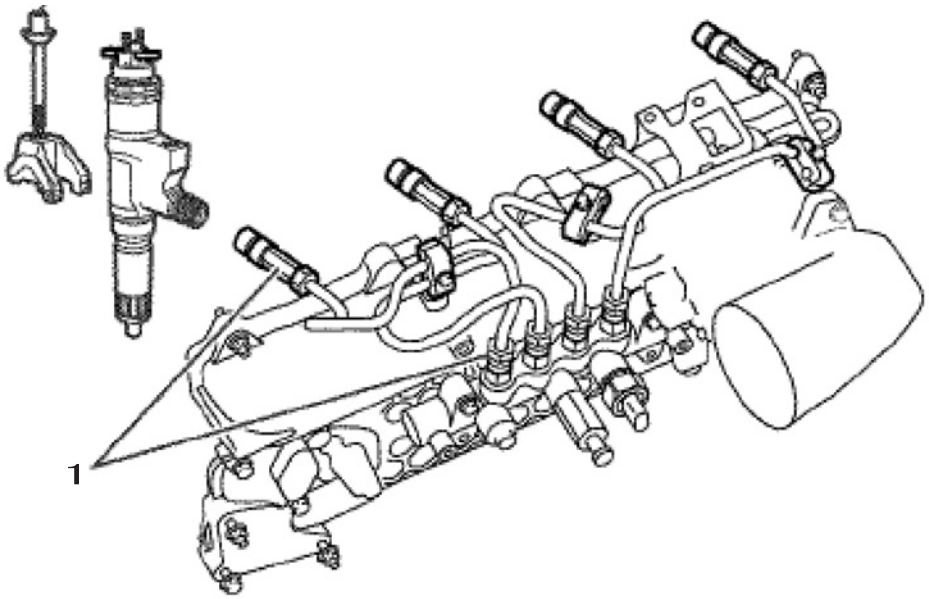

1	Loosening when engine starts strictly prohibited

(4) Be careful. High voltage of 118 V or higher is applied to the injectors.Disconnect the battery cable ground before replacing injectors.

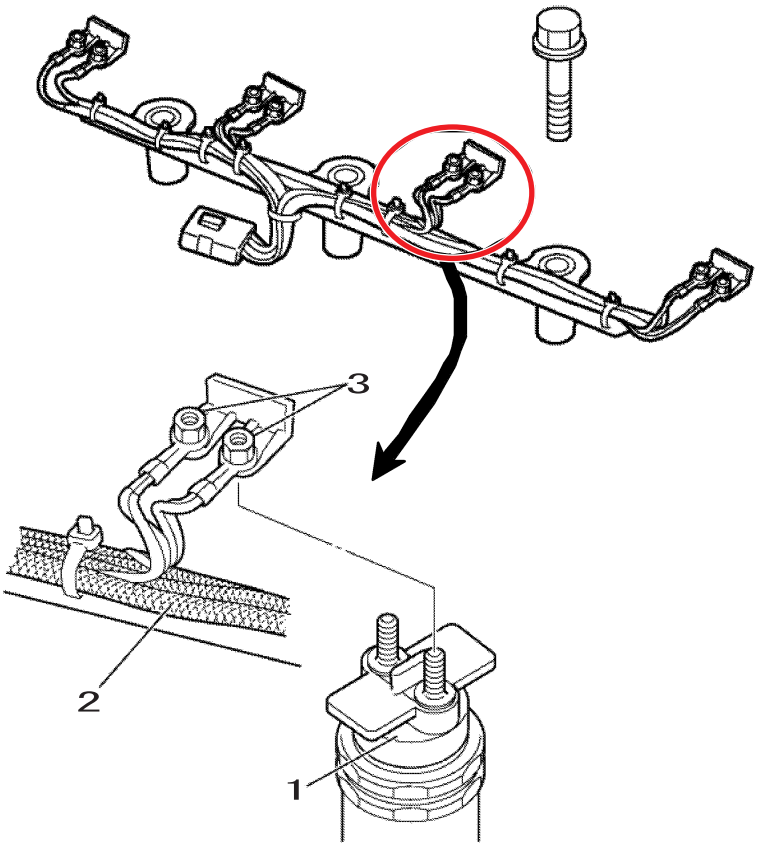

1	Injector
2	Injector harness
3	Injector nut

https://truckmanualshub.com/

Explanation of Engine Operation

Explanation of Engine Control

1. Fuel Injection Quantity Correction

   The ECM calculates the basic injection quantity from the throttle volume boost sensor, CKP sensor, CMP sensor, and other signals.
   According to the common rail pressure, engine coolant temperature, and other conditions at this time, the ECM controls the SCV and controls the injector energization time to attain optimum injection timing and correct the injection quantity.

2. Starting Q Correction

   The engine starting Q correction is terminated at the idling speed + α min^{-1} (+α depends on the coolant temperature.).

   Also, below the system recognition engine speed (30 min^{-1}), the ECM cannot recognize engine rotation, so starting Q correction and engine starting become impossible.

   * Minimum engine starting speed 60 min^{-1}

3. Pre-heat Control (QOS quick on start)

   The ECM determines the glow timing (pre-glow, glow, and after-glow) according to the engine coolant temperature and control the glow relay.
   The QOS system makes starting at low temperatures easier and reduces white smoke and noise immediately after starting.
   When the key is switched ON, the ECM detects the coolant temperature with the signal from the engine coolant sensor and varies the glow time to always obtain the optimum starting conditions.
   Also, the after-glow function makes it possible to stabilize the idling rotation immediately after starting.
   Also, if there is trouble in the engine coolant temperature sensor system, control assumes a fixed coolant temperature of -20 °C for engine starting and 80 °C for running.
   Also, EGR control stops.(Thermostat valve opening temperature 82 °C)

4. Atmospheric Pressure Correction (high altitude correction)

   The ECM calculates the current altitude from the atmospheric pressure sensor signals.
   The ECM controls the SCV and controls the injector power on time to attain optimum fuel flow according to the altitude and other conditions at the time.
   Also, if there is sensor trouble, control assumes a fixed atmospheric pressure of 80 kPa (equivalent to an altitude of 2000 m) and stops EGR control too.

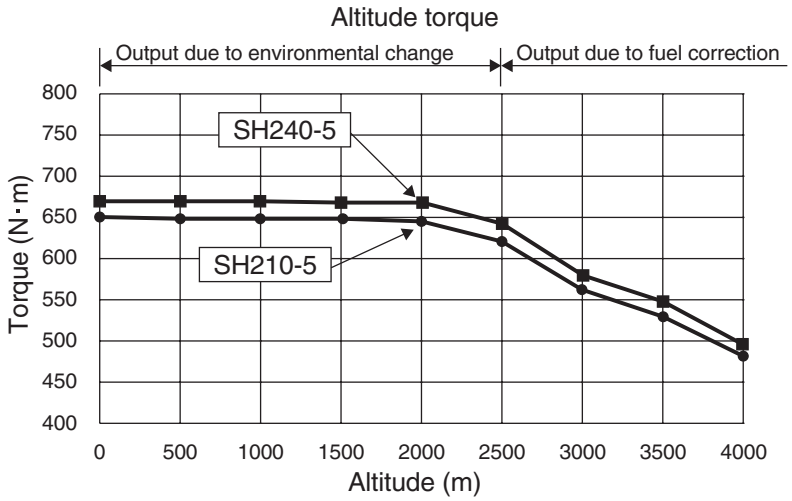

https://truckmanualshub.com/

5. Control for Overheating

When the engine overheats, in order to protect the engine, if the engine coolant temperature exceeds 100 ℃ , fuel flow restriction is started.
If the temperature rises further, the fuel flow is further restricted.
If engine coolant temperature rises to 120 ℃ , the engine is stopped.

The protection function is started one minute after the engine starts. (in order to detect a stable coolant temperature)

Setting	Judgment time	Engine control	Recovery condition
100 ℃	-	ECM: Reduced fuel injection quantity Computer A: Normal	-
105 ℃	8th on coolant tempereture gradation		7 or lower on coolant temperature scale
110 ℃	5 seconds	ECM: Reduced fuel injection quantity Computer A: Idling	
120 ℃	5 seconds	ECM: Reduced fuel injection quantity Computer A: Engine stopped	Key switched ON after engine stopped

* The protection function does not work if any of the error codes below occurs.
0117 (Coolant temperature sensor abnormally low voltage)
0118 (Coolant temperature sensor abnormally high voltage)
2104 (Faulty CAN bus)
2106 (Faulty CAN time-out)
0090 (CAN communication error)

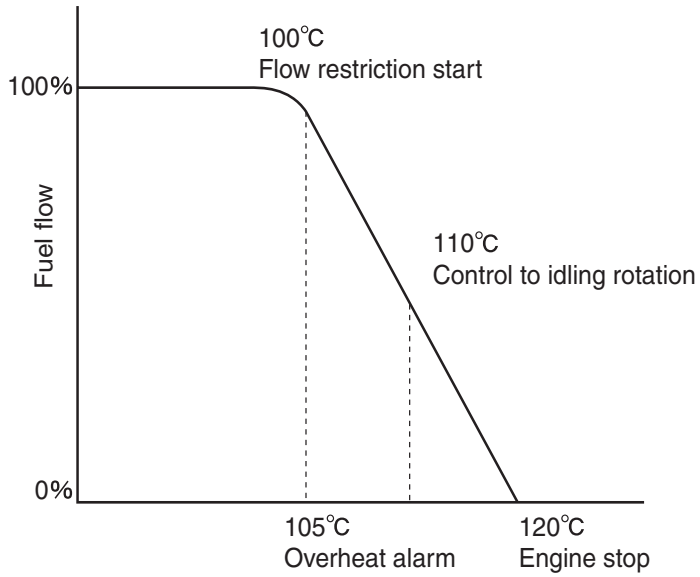

F

https://truckmanualshub.com/

6. Control for Boost Temperature Rise

If the boost temperature exceeds 80 ℃ , fuel flow restriction is started.
If temperature rises to 90 ℃ , the engine is stopped.
The protection function is started one minute after the engine starts.(in order to detect a stable boost temperature)

Setting	Judgment time	Engine control	Recovery condition
80 ℃	5 seconds	ECM: Normal Computer A: Idling control	State of 70 ℃ or less continues for 30 seconds
90 ℃	5 seconds	ECM: Normal Computer A: Engine stop control	Key switched ON after engine stopped

* The protection function does not work if any of the error codes below occurs.
1112 (Boost temperature sensor abnormally low voltage)
1113 (Boost temperature sensor abnormally high voltage)
2104 (Faulty CAN bus)
2106 (Faulty CAN time-out)
0090 (CAN communication error)

7. Control for Engine Oil Pressure Drop

If the engine oil pressure drops, the engine is stopped to prevent engine damage.
The protection function is started 30 seconds after the engine starts. (in order to detect a stable engine oil pressure)

Setting	Judgment time	Engine control	Recovery condition
40 kPa	5 seconds	ECM: Normal Computer A: Engine stop control	Key switched ON after engine stopped

* The protection function does not work if any of the error codes below occurs.
0522 (Oil pressure sensor abnormally low voltage)
0523 (Oil pressure sensor abnormally high voltage)
2104 (Faulty CAN bus)
2106 (Faulty CAN time-out)
0090 (CAN communication error)
1633 (Faulty 5 V power supply 3 voltage / sensor power supply)

8. Start Control (coolant temperature monitoring)

[1] Purpose

When the coolant temperature is 0℃ or lower, the ECM controls the fuel amount depending on the coolant temperature, for stable engine starting.

https://truckmanualshub.com/

9. Long Cranking Control

[1] Purpose

For the purpose of reducing black smoke when starting the engine and as backup in case adequate starting Q (fuel injection) is not obtained, for example due to injector wear, after the stipulated time after the start of cranking, the starting Q is raised the stipulated amount to improve startability.

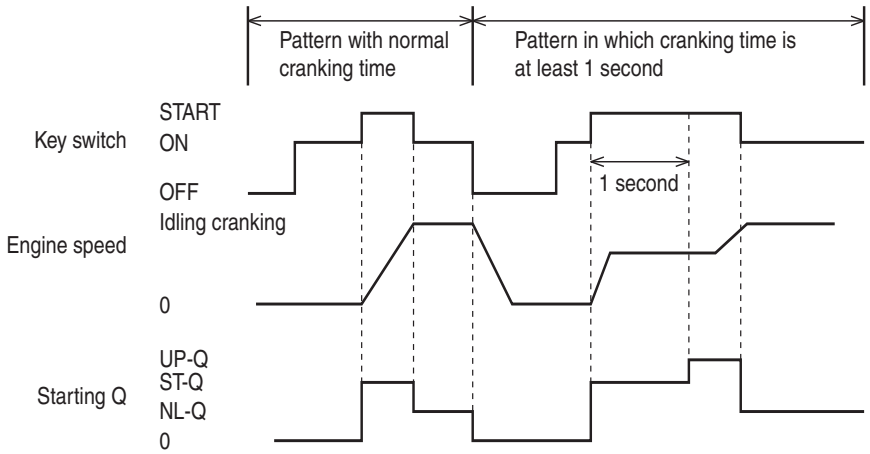

ST-Q: Standard starting Q
UP-Q: Starting Q after increase
NL-Q: Q for no load

10. Starting Control for Reduced Number of Cylinders

When the fact that there is a stopped injector is detected with trouble diagnosis (when an error code is detected), for the purpose of emergency escape, the fuel injection quantity is corrected to secure engine startability.

[1] The injection quantity for the troubled injector is allocated to the normal injectors.(The total injection quantity is made the same.)
* The injector correction factors are as follows.

Number of effective cylinders	4	3	2	1	0
Correction factor	1.0	1.33	2.0	1.0	1.0

Caution:
No control if there is trouble in injectors for 3 or more cylinders.
No control if an injector has a mechanical trouble.

11. Normal Stop (key switch OFF operation)

[1] The key switch is set OFF.
[2] When the ECM recognizes that the key is OFF, [3] to [5] are carried out at the same time.
[3] Injector injection quantity calculation stop
[4] Suction control valve (SCV) full close instruction
[5] EGR valve full close instruction, EGR valve initial correction
[6] When the operations in [3] to [5] end, the trouble log etc. are written to the EEPROM in the ECM.
[7] The main relay is switched OFF and the power feed to the ECM is switched OFF.

https://truckmanualshub.com/

12.Engine Start / Stop Judgment

Engine start and stop is judged based on the engine speed sent from the ECM with CAN communications.

Judgment value Start: 500 min^{-1}

Stop: 200 min^{-1}

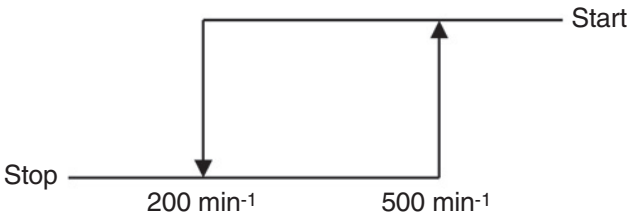

Configuration diagram

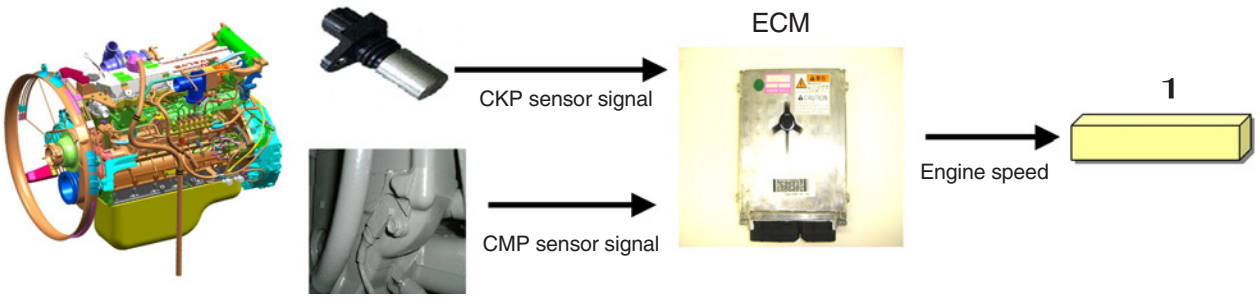

1	computer A

https://truckmanualshub.com/

Engine Information Screen

1. Purpose

   It has been made possible to copy the engine information (Q resistance, QR code, engine serial number) stored in the ECM to the new ECM when the ECM and injector are replaced.

2. How to Go to This Screen

   See the service support operation procedure.

3. Engine Start Restriction

   When this screen is displayed, the engine cannot be started.

4. Screen

   The engine information held in computer A can be checked as follows.
   The information inside the ECM is checked by changing the display mode with the method shown in "Replacing computer A at the Same Time".

   [1] Pages 1 to 4: Injector cylinder 1to 4 QR code (Pages 5 and 6 are not used and cannot be input.)

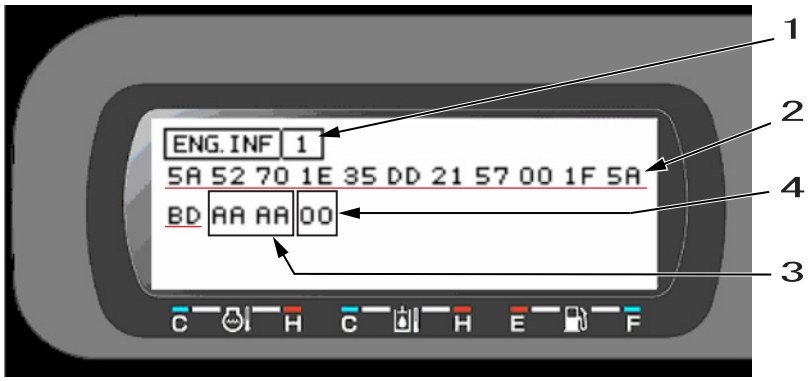

1	Page
2	QR code 24 digits
3	Indicates the display mode. Currently displays the information in computer A
4	Error code

[2] Page 7: Q resistance

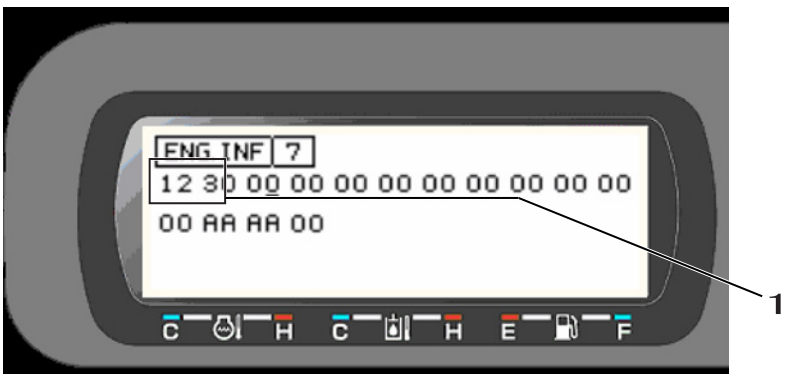

1	Q resistance data 3 digits

[1] Page 8: Engine serial number

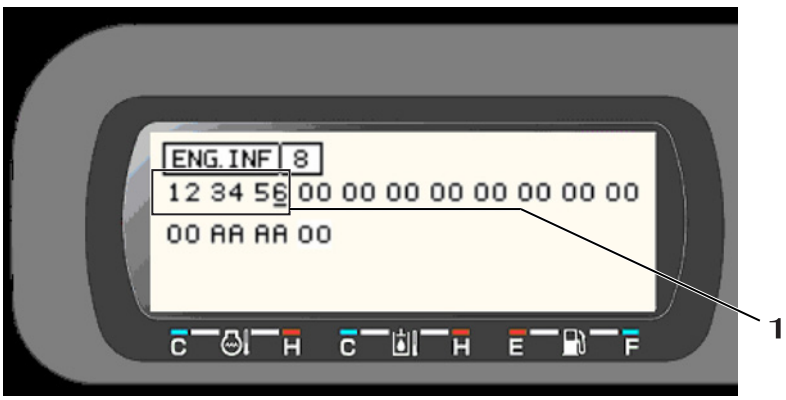

1	Engine serial number 6 digits

https://truckmanualshub.com/

Monitor Operation Method

1. View Mode

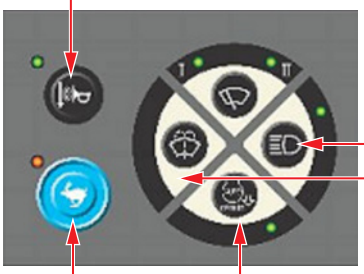

Display mode
(switching between information in computer A / information in ECM)

Page
+/−

Each time this switch is pressed, the second line of each page is switched as follows.

AA AA (Mode displaying information in computer A)

↕

EE EE (Mode displaying information in ECM)

Hold down for 1s to shift to edit mode
(Only valid while QR code is displayed and when in "AA AA" mode.)
Be careful. Shifting to edit mode will not be done when in "EE EE" mode.

Hold down for 3
seconds to start copying the engine information.
(for details, see "Engine Information Copying Method".)

2. Edit Mode

* Can only be shifted to during QR code display.

Cancel editing and exit edit mode

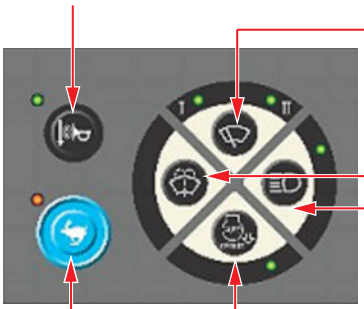

Value increased

Cursor movement

Value decreased

Start the QR code writing and exit edit mode
(For details, see "Rewriting Injector QR Codes".)

https://truckmanualshub.com/

Engine Information (Q resistance, QR code, engine serial number) Copying Method

If the ECM is replaced with a new one for any reason, the engine information is copied with the procedure below.

[1] Arrange for a service ECM.
Engine information can only be copied to a service ECM.

[2] Connect the service ECM and check the following.
1) The old ECM information must still be in computer A.
2) The ECM must match the model.
3) There must be no faulty EEPROM on computer A or the ECM.

[3] Go to the engine information screen, then hold down for 3s. The buzzer buzzes and the copy starts.
* The display may be any page (1 to 8) and either display mode (computer A or ECM).

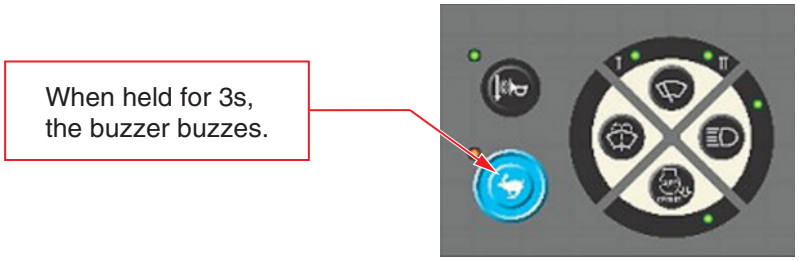

During copying, the display is as below.During writing, the error code 99 is displayed.
Wait about 10s.
When the copy ends normally, the error code 00 is displayed.
When the copy ends abnormally, error code displayed.

Example: Starting copying from the Q resistance screen

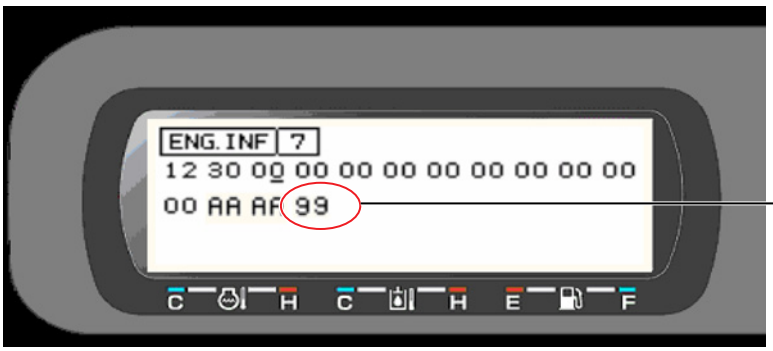

Error code	
00	Normal
01	Message interruption
02	Message internal trouble
03	Outside instruction value constant
04	Engine running
98	Faulty EEPROM
99	Writing

[4] When the copy ends normally, check that the information has been rewritten by switching the key switch OFF → ON once.

F

https://truckmanualshub.com/

Rewriting Injector QR Codes

When an injector is replaced, input and write the QR codes with the following procedure.

[1] Arrange for the replacement injector.
Input the part below from the character array written on the injector.

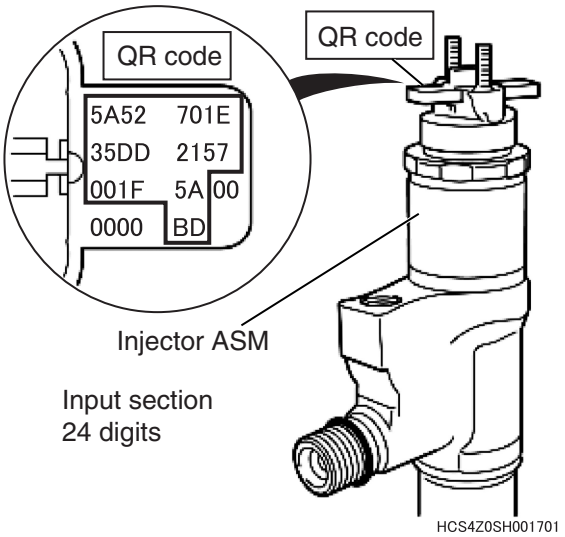

Input the QR codes one at a time.
Engine information screen Pages 1 to 4 correspond to the injectors with those numbers.
(See the figure below.)

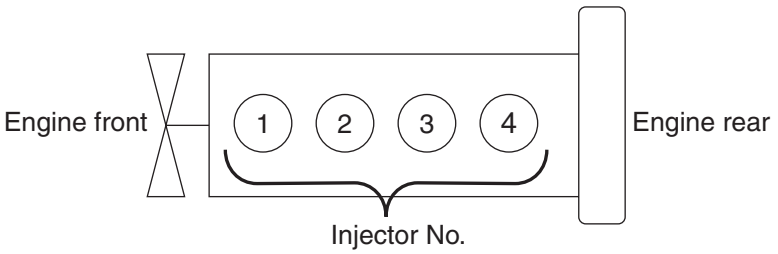

[2] Hold down for 1s to shift to edit mode.

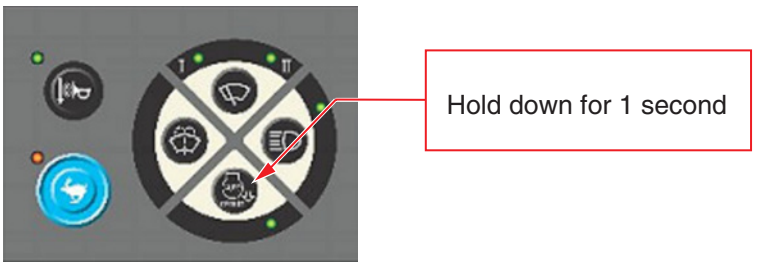

https://truckmanualshub.com/

[3] Cursor is displayed.

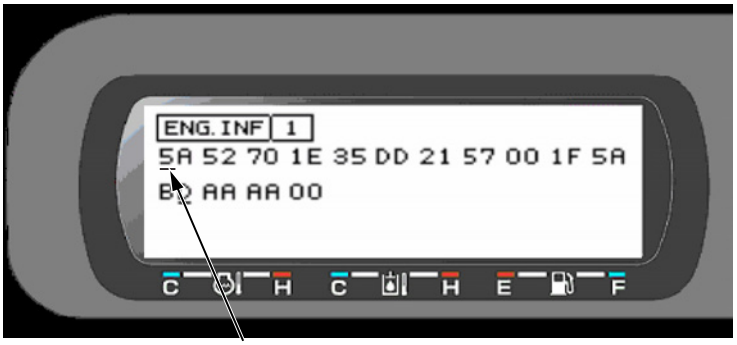

Cursor displayed

[4] Move the cursor with to raise and lower the value with

and input the QR codes written on the injector.

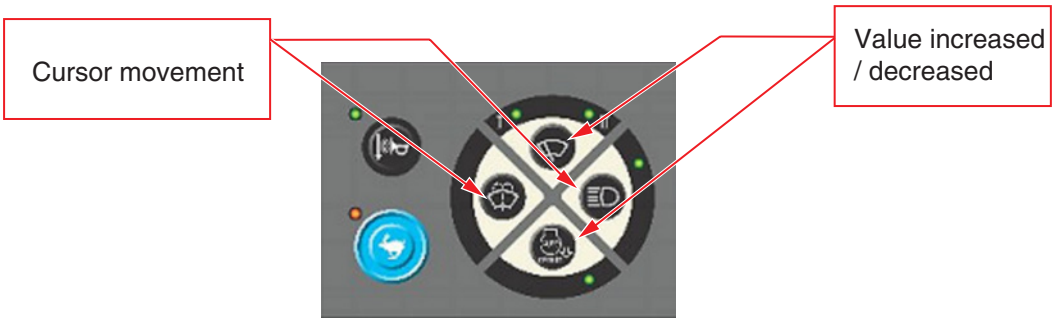

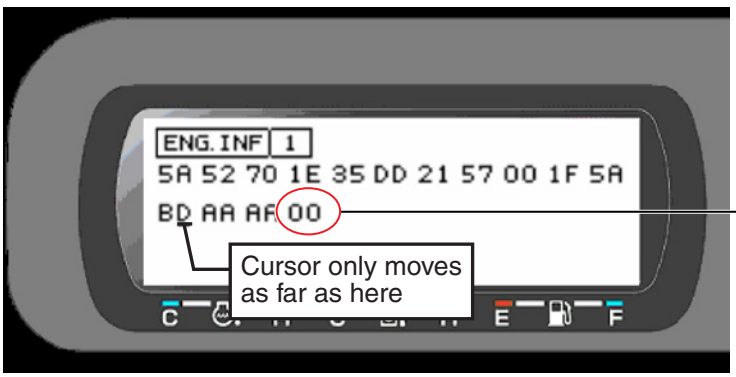

Error code
00 : Normal
01 : Message interruption
02 : Message internal trouble
03 : Outside instruction value constant
04 : Engine running
FF : Writing

[5] When the QR code input is complete, press .

The buzzer buzzes once and the writing starts.
The error code 99 (writing) is displayed. When the copy ends normally, the error code 00 is displayed.

When the copy ends abnormally, an error code is displayed. (To cancel input, press .)

[6] Switch the key switch OFF and then ON again, and check that the QR codes have been written.

F

https://truckmanualshub.com/

When Replacing Computer A at the Same Time

If the ECM and computer A have trouble at the same time and the engine information inside the ECM cannot be used, restore the engine information with the procedure below.

[1] Rather than a service ECM, arrange for an ECM with the engine information already written into it and use that as the replacement.
  * An ECM with the engine information already written into it means one into which the Q resistance data has been written with EMPS.

[2] Input the injector QR codes one at a time. (with the procedure in the preceding item)

Engine Information Acquisition Timing

After factory assembly, engine information is acquired only once the first time the key is switched ON.

Redoing Engine Information Acquisition

Engine information acquisition can be redone by holding down and for 10 s in the engine information screen.

Trouble Display

If the engine information cannot be displayed correctly due to an ECM time-out, CAN communication trouble, or faulty EEPROM, the display is all Fs.

[1] Display for faulty ECM EEPROM, CAN communication trouble, or ECM time-out

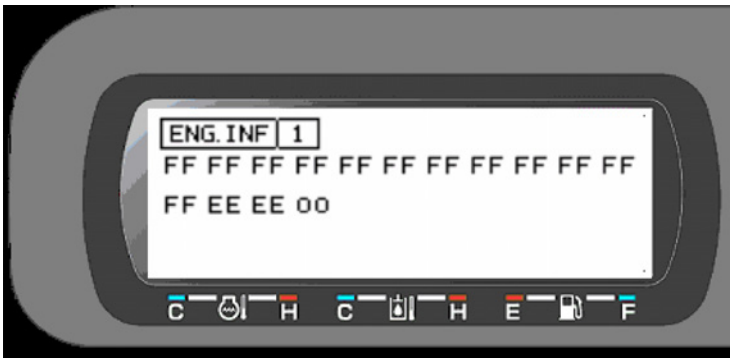

https://truckmanualshub.com/

Exhaust Gas Third Regulation Accessory Electrical Parts Compatibility (ISUZU part number)

Engine model	4J	4H	6H	6U	6W
Supply pump	897381-5551	897306-0448	115603-5081	898013-9100	897603-4140
Common rail	898011-8880	897306-0632	897323-0190	897603-1211	
Injector	898011-6040	897329-7032		897603-4152	115300-4360
Starter	898045-0270	898001-9150	181100-4142	181100-4322	181100-3413
Alternator	898018-2040	897375-0171	181200-6032		181200-5304
EGR valve	897381-5602	898001-1910		116110-0173	
Crank sensor	897312-1081	897306-1131		897306-1131	
Cam angle sensor	897312-1081	898014-8310		Supply pump accessory part	
Coolant temperature sensor	897363-9360	897170-3270		897363-9360	
Fuel temperature sensor	Supply pump accessory part			897224-9930	
Suction air temperature sensor	812146-8300				
Boost temperature sensor	812146-8300				
Boost pressure sensor	809373-2691	180220-0140			
Common rail pressure sensor	Common rail accessory part				
Oil pressure sensor	897600-4340				
Atmospheric pressure sensor	897217-7780				
Glow plug	894390-7775				182513-0443

Caution

[1] For 4J, the crank sensor and the cam angle sensor have the same part number.

[2] The 6U / 6W cam angle sensor is a supply pump accessory part.

[3] The coolant temperature sensor part number is different for the 4H / 6H and the 4J / 6U / 6W.

F

https://truckmanualshub.com/

Features of Materials Subject to Exhaust Gas Regulation

NOx (nitrogen oxides)

The generic term for NO, NO2, N2O2, etc. is me.
I am one cause of acid rain.

PM (particulate matter), black smoke

It is said that black smoke is easy to see and unpleasant to look at.

CO (carbon monoxide)

I am generated when combustion occurs with inadequate oxygen.
I am the material that can cause poisoning symptoms. Diesel engines emit less than gasoline engines.

HC (hydrocarbons)

I am a cause of photo-chemical smog and am reported to affect the respiratory system.

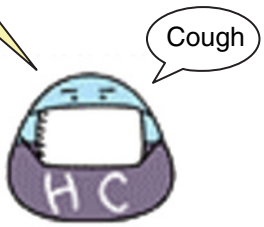

CO2 (carbon dioxide)

I am one of the greenhouse gases that are causing global warming.
But diesel engines emit less than gasoline engines.

Exhaust Gas Regulation Values

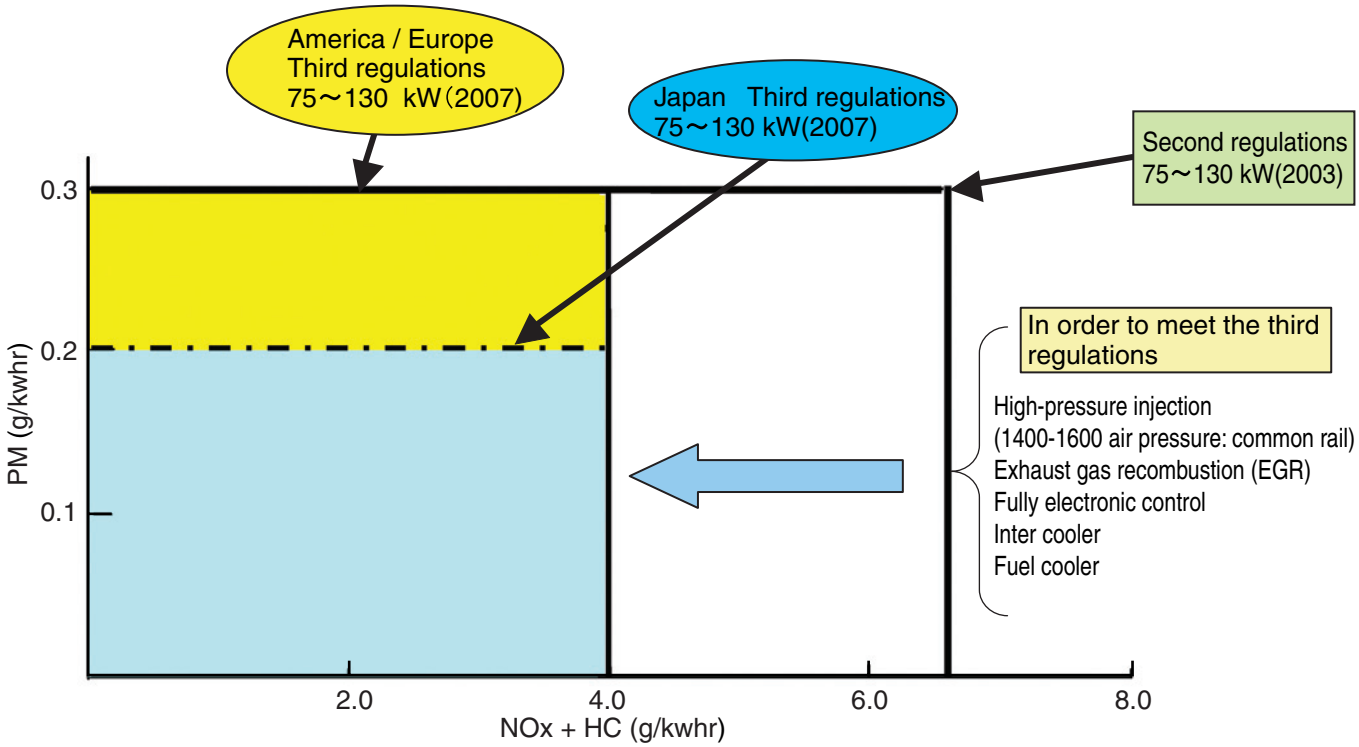

Compared to current engines
- NOx + HC : 40 % reduction
- PM : 30 % reduction in PM

https://truckmanualshub.com/

Exhaust Gas Regulations

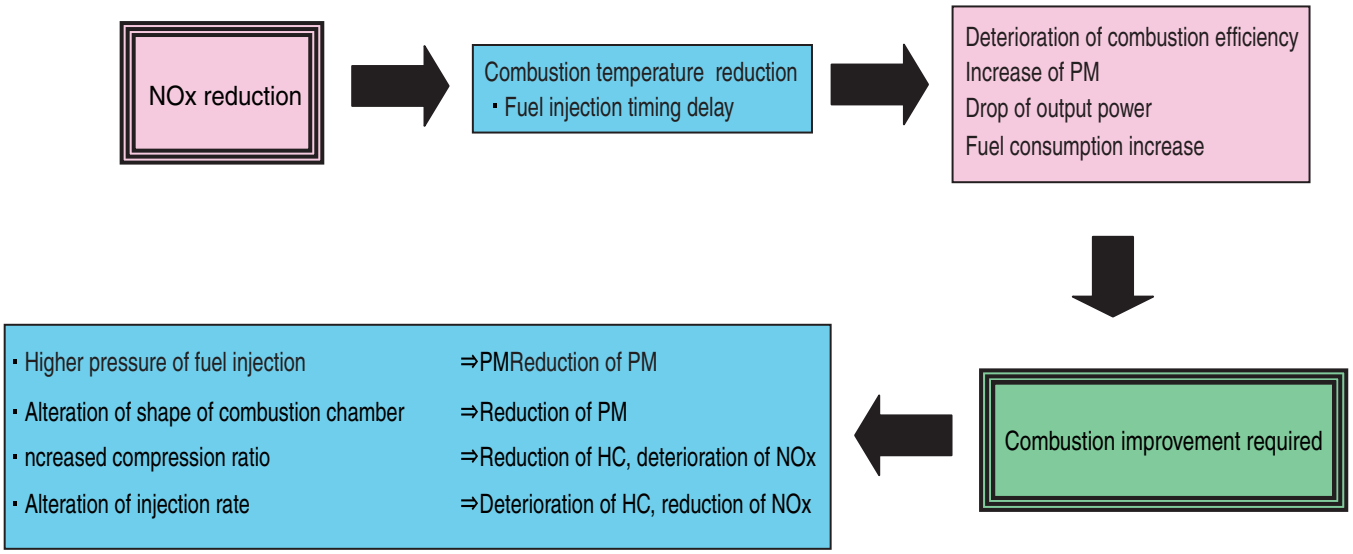

[Example of method for meeting exhaust gas third regulations]

In order to simultaneously reduce both NOx and PM, which are in a trade-off, more complex fuel injection is required. Therefore, injection has become all electronic control. Common rail engine (high pressure injection / multiple injection / injection rate control)

In addition, it depends on the engine size, but it is conceivable that it will be necessary to change from two valves to four valves, mount an inter cooler, and use EGR (exhaust gas recirculation).

* With the Model 5 SPACE5, all these systems are used.

https://truckmanualshub.com/

Engine Fuel and Maintenance of Fuel Filters

In order to meet the emission control regulation of 3rd-stage, the engine components have been made precisely and they are to be used under high-pressure conditions.
Therefore, the specified fuel must be used for the engine.
As a matter of course, not only the guarantee will not be given for the use of a fuel other than the specified but also it may invite a serious breakdown.
In addition, since suitable specifications for the fuel filter elements have been established for this engine, use of the genuine filter is essential.
The following describes the specifications and the requirements of the fuel to be applied, and maintenance of the fuel and the fuel elements.

1. Fuel to be applied

Selection of fuel

Following conditions must be met for the diesel engines, that is the one;

[1] In which no dust even fine one is mixed,
[2] With proper viscosity,
[3] With high cetane rating,
[4] With good flow properties in lower temperature,
[5] With not much sulfur content, and
[6] With less content of carbon residue.

(1) Applicable standards for diesel fuel

Applicable Standard	Recommendation
JIS (Japanese Industrial Standard)	NO.2
DIN (Deutsche Industrie Normen)	DIN 51601
SAE (Society of Automotive Engineers)	
Based on SAE-J-313C	NO. 2-D
BS (British Standard) Based on BS/2869-1970	Class A-1

If a standard applied to the fuel for the diesel engine is stipulated in your country, check the standard for details.

(2) Requirements for diesel fuel

Although conditions required for the diesel fuel are illustrated above, there are other requirements exerting a big influence on its service durability and service life.
Be sure to observe the following requirements for selecting fuel.

Sulfur content	2500 ppm or less
HFRR*	460 mm or less
Water content	0.05 wt% or less

* HFRR (High-Frequency Reciprocating Rig.): An index showing lubricating properties of the fuel.

Sulfur content reacts to moisture to change into sulfuric acid after combustion.
Use of a fuel containing much sulfur content allows it to accelerate internal corrosion and wear.
In addition, much sulfur content quickens deterioration of engine oil allowing its cleaning dispersive property to be worse which results in acceleration of wear of sliding portions.
HFRR is an index that indicates lubricating property of a fuel.
Large value of the index means poor lubrication so that seizure of the machine components may result if such a fuel is used.
Since a fuel with high HFRR value also has lower viscosity, it can easily be leaked out.

https://truckmanualshub.com/

Cautions for Fuel Used

If the fuel is mixed with the engine oil, the oil is diluted to deteriorate its lubricating property resulting in acceleration of wear.
Water content allows inside of the fuel tank to rust which in turn blocking the fuel line and the fuel filter.
This may also cause wear and seizure of the machine components.
If atmospheric temperature goes below the freezing point, moisture content in the fuel forms fine particle of ice allowing the fuel line to be clogged.
Obtain table of analysis for the fuel you are using from the fuel supplier to confirm that it meets the criteria described above.

Important

If a fuel which does not meet the specifications and the requirements for the diesel engine, function and performance of the engine will not be delivered.
In addition, never use such a fuel because a breakdown of the engine or an accident may be invited.
Guarantee will not be given to a breakdown caused by the use of a improper fuel.
Some fuels are used with engine oil or additives mixed together with diesel engine fuel.
In this case, do not use these fuels because damage to the engine may result as the fuel has been contaminated.
It is natural that the emission control regulation of 3rd-stage will not be cleared in case where a fuel that does not meet the specifications and the requirements is used.
Use the specified fuel for compliance of the exhaust gas control.

Important

It you use diesel fuel which contains much sulfur content more than 2500 ppm, be sure to follow the items below for the engine oil selection and maintenance of engine parts.
Guarantee will not be given to breakdowns caused by not to follow these items.

[1] Selection of engine oil
Use API grade CF-4 or JASO grade DH-1.

[2] Exchange the engine oil and engine oil filter element by periodical interval below.

Engine oil	Every 250 hour of use
Engine oil filter element	Every 250 hour of use

[3] Inspect and exchange the EGR parts and fuel injector parts of engine by periodical interval below.

EGR (*) parts	Every 3000 hour of use
Fuel injector parts	Every 3000 hour of use

* EGR : Exhaust Gas Recircultion
For the detail of inspection and replacement for the above engine parts, please contact your nearest SUMITOMO outlet.

[4] In addition above if the value of HFRR or water content in the fuel you use is more then limitation in above table of this manual, please also contact your nearest SUMITIMO outlet.

https://truckmanualshub.com/

2. Maintenance of fuel filters

Be sure to use the genuine fuel filters.

The fuel injection system is precisely constructed and the genuine filter employs finer mesh than conventional filters to improve protection of machine equipment.

If a filter with coarse mesh is used, foreign object passing through the filter enters into the engine so that machine equipment can wear out in a short period of time.

Important

If a fuel filter other than the genuine filter is used, guaranty will not be applied to a fault caused by the use of a wrong filter.

Two kinds of fuel filter, the pre-filter and the main filter, are mounted on the machine.

Be sure to use the genuine fuel filters and replace them at a periodic intervals.

Replacement criteria

	Every 250 hour of use	Every 500 hour of use
Pre-filter	○	
Main filter		○

Since the pre-filter also has a function of water separation, discharge water and sediment when the float reaches lower part of the filter elements.

Time to replace filters may be advanced according to properties of the fuel being supplied.

Running the engine with the fuel filter blocked may cause the engine to be stopped due to establishment of engine error code.

If much foreign objects are found in the fuel, carry out earlier inspection and regular replacement of the filters.

If dust or water get mixed with the fuel, It may cause the engine trouble and an accident.

Therefore, take measures to prevent dust or water from being entered in the fuel tank when supplying fuel.

When supplying fuel directly from a fuel drum can, leave the drum as it stands for a long period of time to supply clean fuel standing above a precipitate.
If it is hard to leave the drum for a long period of time, install a fuel strainer and a water separator before the fuel tank of the machine to supply clean fuel.

Water drain cock is provided on the bottom side of the fuel tank.

Drain water before starting the engine every morning.

In addition, remove the cover under the tank once a year to clean up inside of the tank.

https://truckmanualshub.com/

Change List

○: Changed ×: Deleted ●: New

Change	Part name	Q'ty	Comment
×	Computer	1	Computer eliminated by use of one-piece computer with control panel
○	Motor control	3	Due to the computer change, the motor actuator was also changed (Step motor → DC motor + potentio-meter)
○	Cooler part evaporator	1	Changed due to change in expansion valve
○	Case unit, front	1	The hole position was changed due to the motor actuator change, so the case was also changed.
○	Case unit, rear	1	
○	Case unit, bottom	1	
○	Valve, expansion	1	Expansion valve shape change
○	Thermo-sensor	1	Connector changed
○	Heater core	1	Pipe bore increased (to ϕ17.3)
○	Blower computer (blower amp)	1	
○	Relay	2	Compressor clutch relay added
●	Inside air intake port packing	1	
○	Inside air filter	1	Changed from mesh to paper
○	Outside air filter	1	Thickness increased

G

https://truckmanualshub.com/

Layout Diagram

Air Conditioner Overall Diagram

1. Frame

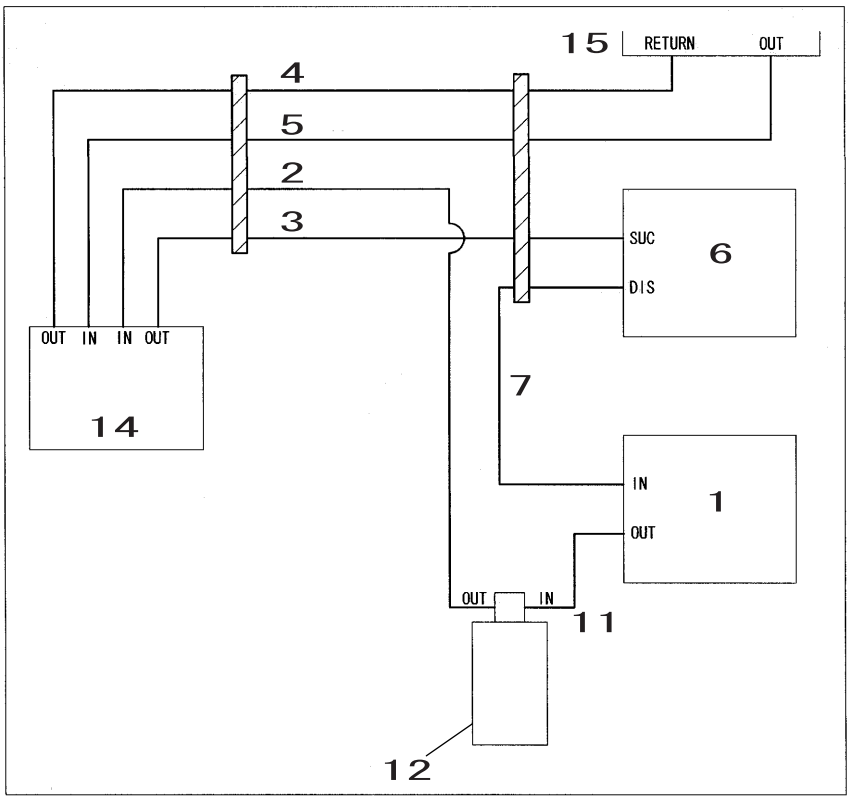

Part name	Code	Q'ty
Air conditioner condenser	1	1
Cooler hose (LIQUID2)	2	1
Cooler hose (SUCTION)	3	1
Rubber hose 16 X 4100	4	1
Rubber hose 16 X 3800	5	1
Air conditioner compressor	6	1
Cooler hose (DISCHARGE)	7	1
Tension pulley (with cover)	8	1
Compressor bracket	9	1
Slide shaft	10	1
Cooler hose (LIQUID1)	11	1
Dryer receiver (D60.05)	12	1
Belt; VB47 (L=1215)	13	1
Air conditioner unit	14	1
Engine	15	1

Hose connection table

KRR11970-E01

https://truckmanualshub.com/

Layout Diagram

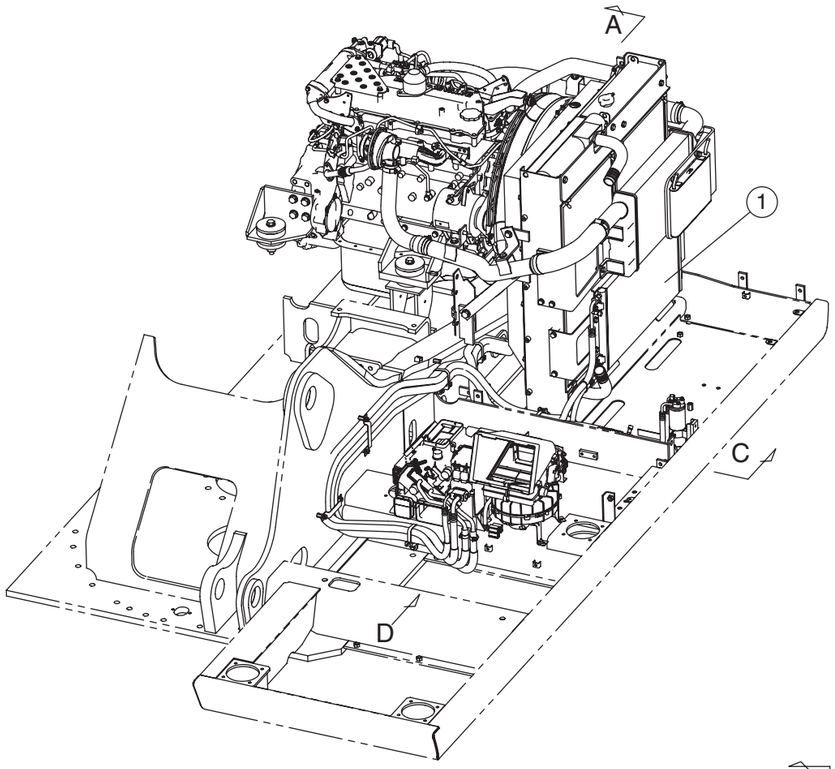

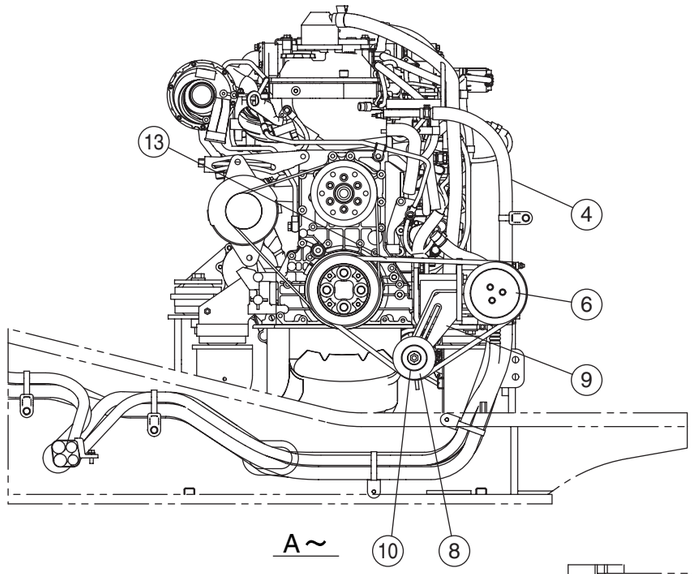

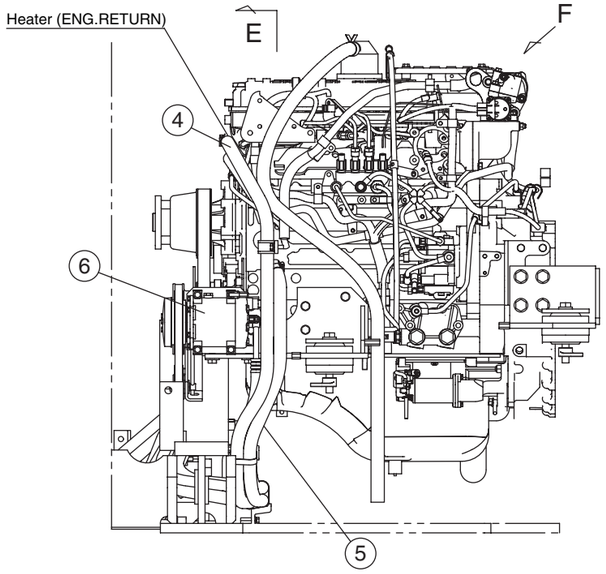

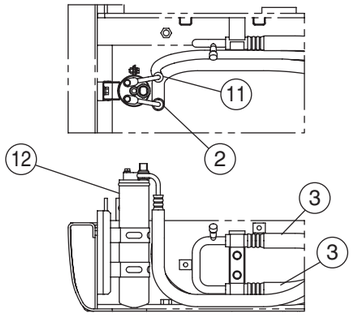

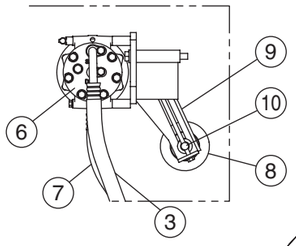

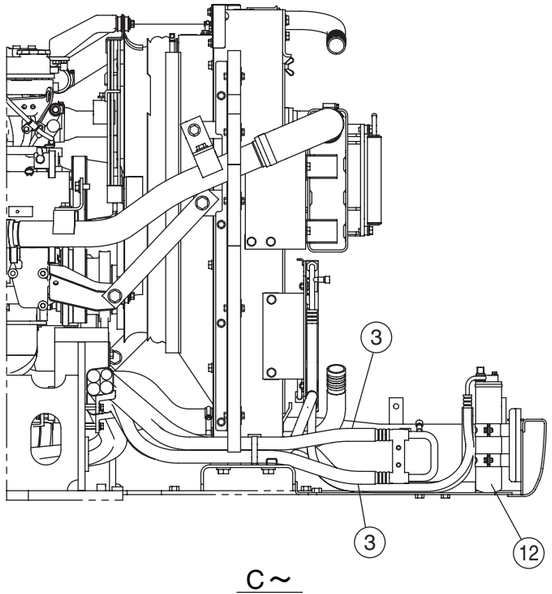

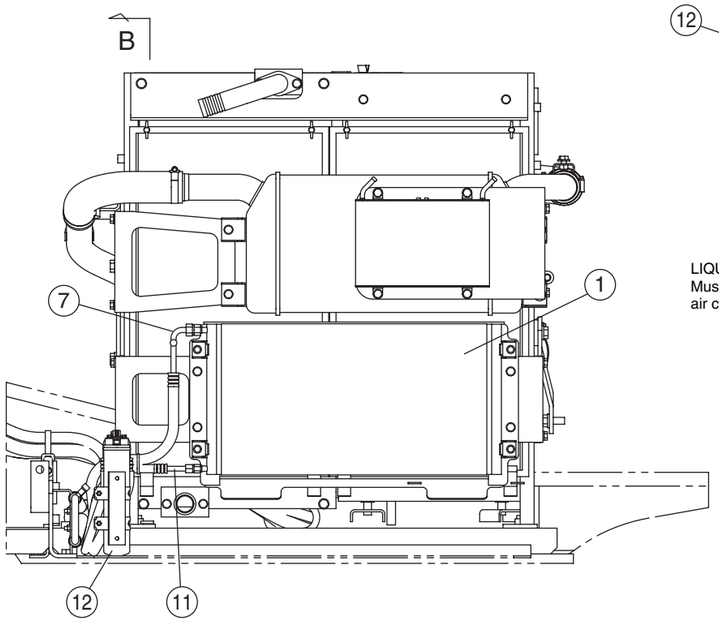

Cushion valve (front side) details

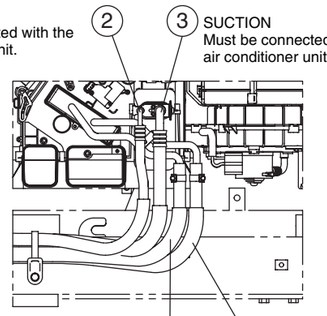

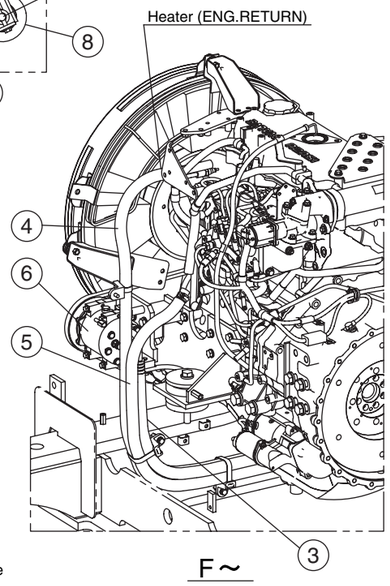

KRR11970-E01

https://truckmanualshub.com/

Layout Diagram

2. Cab

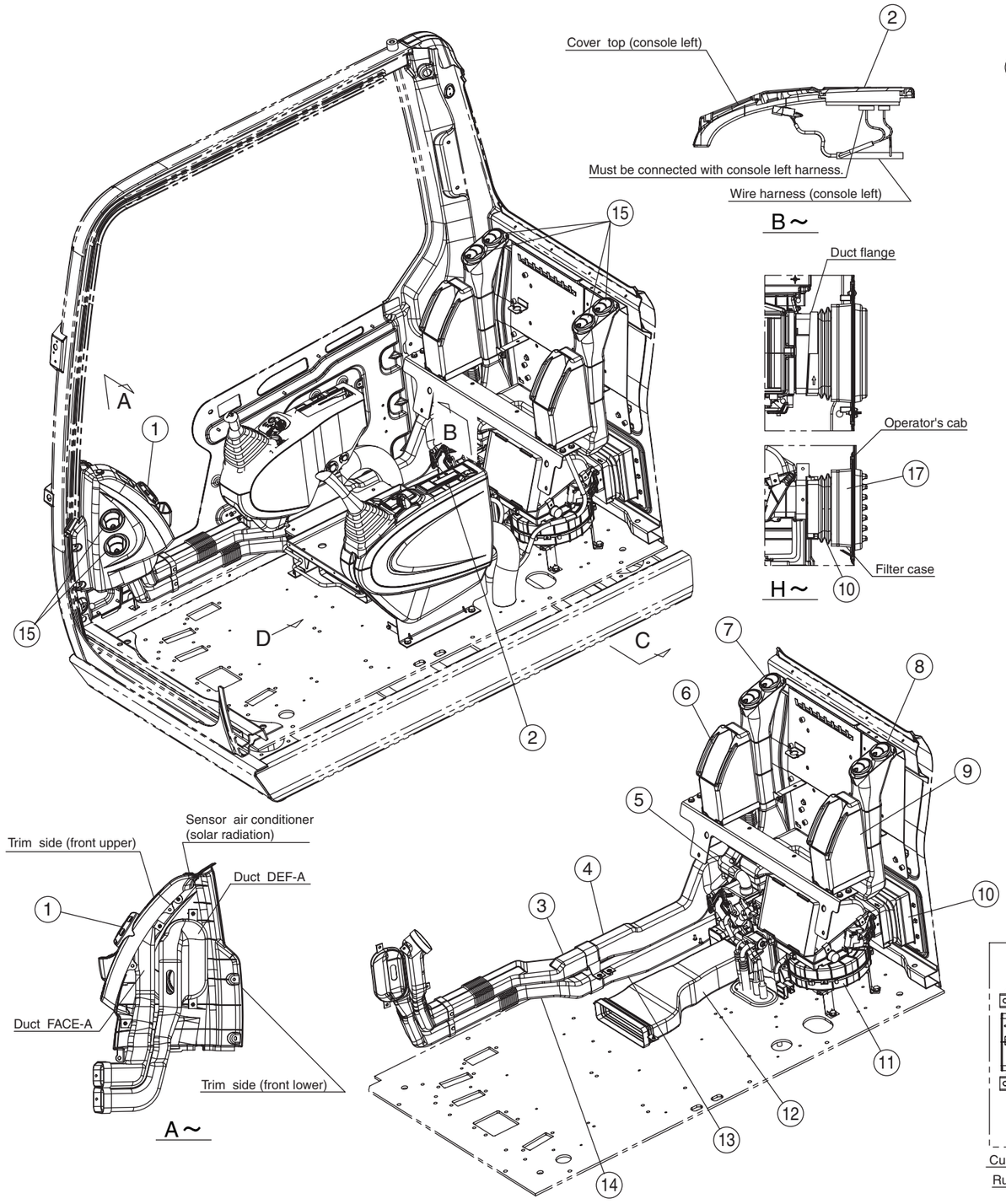

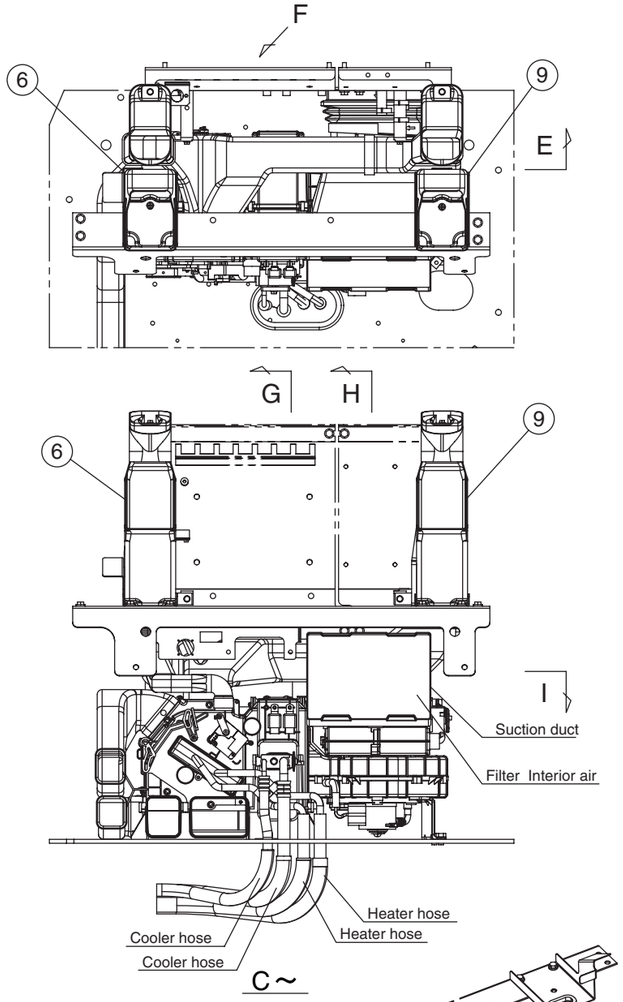

Part name	Code	Q'ty
Face grille	1	1
Control panel	2	1
Duct FACE-B	3	1
Duct FACE-C	4	1
Duct H & C BOX	5	1
Box HOT & COOL	6	1
Duct VENT (RIGHT)	7	1
Duct VENT (LEFT)	8	1
Box REAR	9	1
Duct; intake (FRESH)	10	1
Air conditioner unit	11	1
Duct FOOT	12	1
Duct DEF-C	12	1
Duct DEF-B	14	1
Face grille	15	6
Drain hose	16	2
Air filter	17	1
Box bracket (left)	18	1

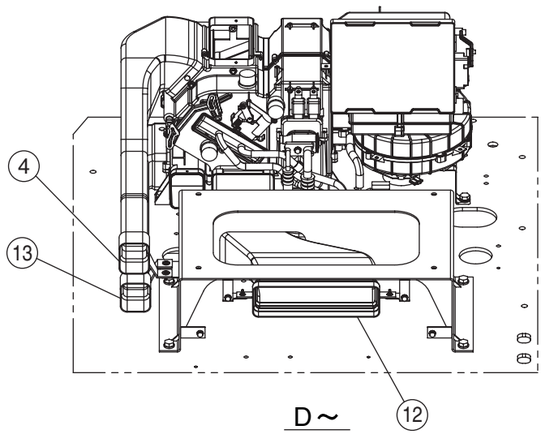

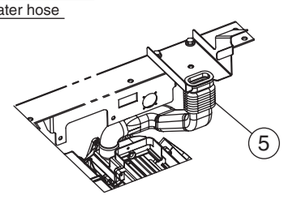

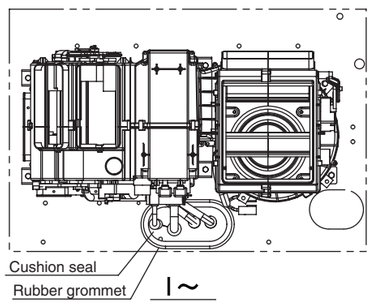

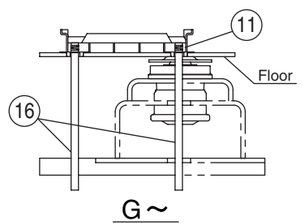

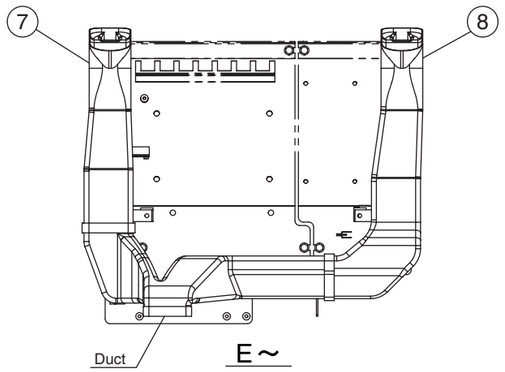

KHR13970-D02

https://truckmanualshub.com/

Equipment Layout Diagram

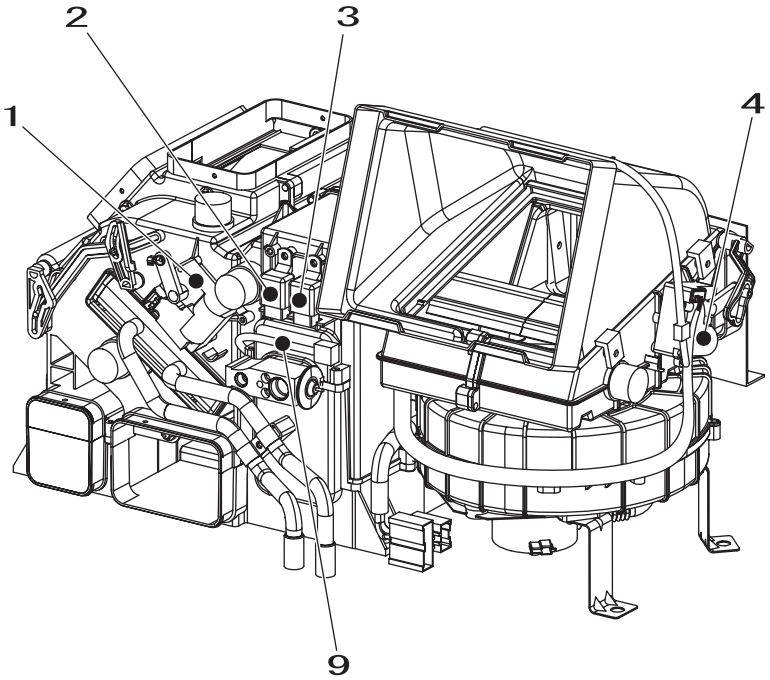

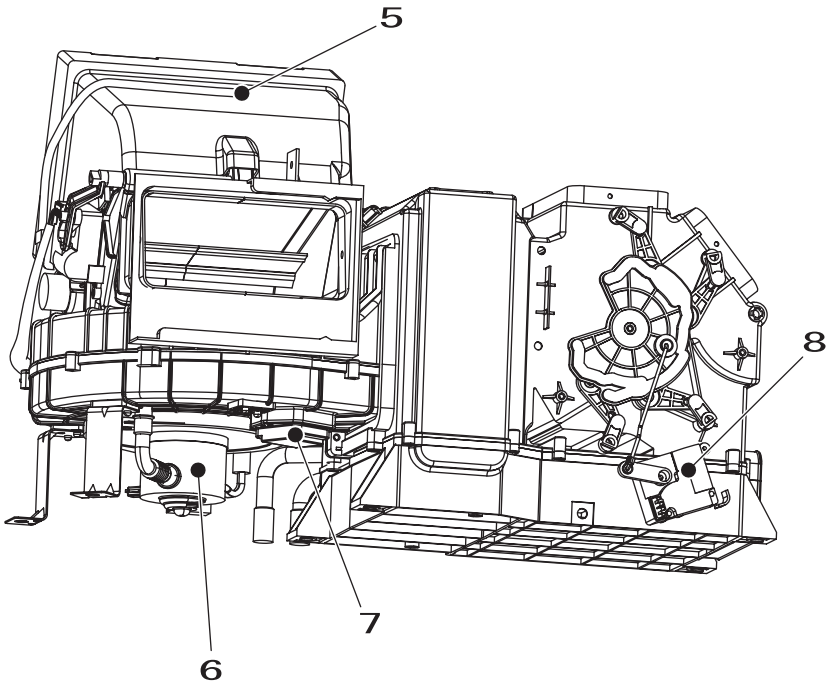

Code	Part name
1	Motor actuator (mode)
2	Compressor relay
3	Blower OFF relay
4	Motor actuator (refresh / recirculate switch)
5	Interior temperature sensor
6	Blower motor
7	Blower amp
8	Motor actuator (air mix)
9	Evaporator sensor

https://truckmanualshub.com/

Circuit Diagram

Air Conditioner Circuit Diagram

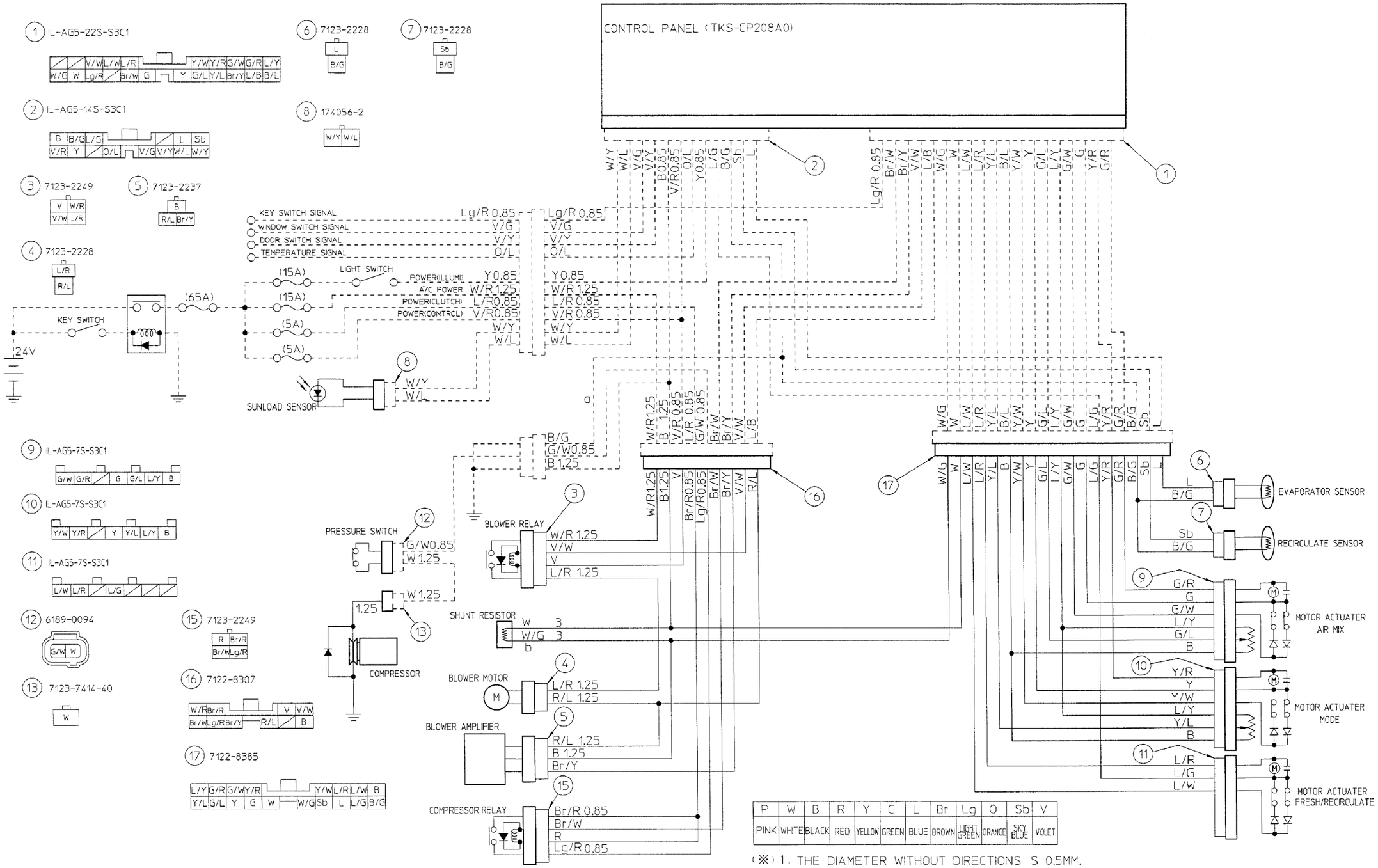

https://truckmanualshub.com/

Explanation of Control

Back-up function

Even when air conditioner operation is stopped (switched OFF) with the ignition key power supply or operation panel ON/OFF switch, the set temperature and all the other setting states are stored in memory, so the next time air conditioner operation starts, it goes into the same state as before it was stopped.

When the ignition key power supply is cut off, the data is backed up by storing it in the internal EEPROM. However, if the main key power supply is cut off within 0.5 seconds of switch input, that switch input is not stored into memory. Also, the data read out from EEPROM when the power is switched ON is judged to see if it is within the valid range. If data outside the valid range was written into memory, for example due to noise, then operation starts from the default settings to avoid abnormal operation.

Fahrenheit temperature display

To switch, hold down both the temperature setting UP and DOWN switches for 5 seconds. The display toggles between Celsius and Fahrenheit display each time the switches are both held down for five seconds.

The Fahrentheit display is a two-digit integer and below the decimal point is not used, so "F" is displayed. However, in case of trouble, this display takes priority.

When this display is switched, the new status is backed up in memory, so even if the main key power supply is switched OFF, the display status is retained. Internal calculations are all done in Celsius. Only the operation panel display is in Fahrenheit. Therefore, the display may differ slightly from the exact Fahrenheit temperature.

Below is shown the Fahrenheit temperature and the corresponding Celsius temperature used in internal processing.

Caution

These specifications are written with Celsius as the standard. Therefore, if the temperature is displayed in Fahrenheit, convert the temperature to centigrade by using the table below.

Fahrenheit and Celsius correspondence	
Fahrenheit display [F]	Interior recognition set temperature (Celsius) [°C]
63	18.0
64	18.5
65	19.0
:	:
77	25.0
:	:
91	32.0

G

https://truckmanualshub.com/

Explanation of Functions

1. Air Mix Motor Actuator Control

[1] Summary explanation
The provisional target degree of opening is determined from the target blow temperature and the current blow mode, various restrictions are applied, and the target degree of opening is calculated. Then drive is output to move the motor actuator position to the target degree of opening.
Below are the details.

[2] Restrictions on operation angle according to the blow mode
When the blow mode motor actuator is in the B / L, FOOT, or DEF position, it is prohibited for this motor actuator degree of opening to be less than 20 °C

[3] Heater unit hysteresis correction operation (motor actuator one-direction stop)
After the actuator moves to the target degree of opening, it returns to the specified position. However, if the target degree of opening is less than 0 °C, the actuator is treated as having reached the target degree of opening when it reaches 0 °C, then it moves to the specified position.
(A stop in the fully-open direction is used as the standard.)

[4] Operation start / stop judgment
1) The operating motor actuator stops when the current position comes within the target position.
2) The stopped motor actuator operates when the current position goes beyond the target position.

[5] Motor actuator operation priority order
The operation priority for this motor actuator is No. 1. This means that if the target degree of opening for this motor actuator changes and operation becomes necessary, even if some other motor actuator is operating, that other motor operation is paused, and this motor actuator operates.

2. Blow Mode Motor Actuator Control

[1] Summary explanation
The blow mode is switched by rotating the diffuser switching damper with the motor actuator. There are two types of control: auto and manual.

[2] Auto control
When the AUTO blow mode signal is recognized, the blow mode changes to auto control. During auto control, the diffuser is switched according to the target blow temperatureAuto control continues until operation of the blow mode select switch is recognized.

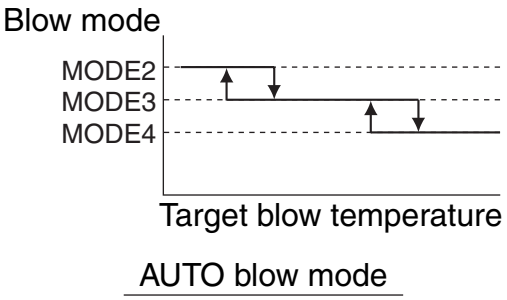

https://truckmanualshub.com/

[3] Manual control

1) When operation of the blow mode select switch is recognized, the motor actuators are driven to attain the output shaft angle below and the display is switched too. Each time operation of the switch is recognized, the display switches MODE1 → MODE2 → MODE3 → MODE4 → MODE1→ ... However, if this switch is pressed during auto control, auto control is ended and the diffuser is fixed at its current position.

2) MODE5 in the table below only occurs when operation of the DEF select switch is recognized. After that, when operation of the blow mode select switch is recognized, the blow mode becomes the one that was in effect just before operation of the DEF switch was recognized.

Blow mode and display and motor actuator angle

Blow mode	MODE 1	MODE 2	MODE 3	MODE 4	MODE 5
Blow mode motor actuator degree of opening	90°	65.5°	46.5°	26.6°	0°
Panel display	FACE	VENT	B/L	FOOT	DEF

[4] Mode unit hysteresis correction operation (motor actuator one-direction stop)
After the actuator moves to the target degree of opening a, it returns to the specified position. However, if a is less than 0 °C, the actuator is treated as having reached the target degree of opening a when it reaches 0 °C, then it moves to the specified position.
(A stop in the VENT or FACE direction is used as the standard.)

[5] Operation start / stop judgment

1) The operating motor actuator stops when the current position comes within the target position.

2) The stopped motor actuator operates when the current position goes beyond the target position.

[6] Blow mode control priority order
The priority order for auto control and manual control is as follows.

Control priority order

Priority order	Control
1	Manual control
2	Auto control

3. Refresh / Recirculate Switch Motor Actuator Control

[1] Recirculate mode
In refresh mode, when it is recognized that the refresh / recirculate switch on the operation panel has been closed, the system goes into recirculate mode. At this time, the display switches to recirculate and the refresh / recirculate switch motor actuator operates to the recirculate angle.

[2] Refresh mode
In recirculate mode, when it is recognized that the recirculate / refresh select switch on the operation panel has been closed, the system goes into refresh mode. At this time, the display switches to refresh and the refresh / recirculate switch motor actuator operates to the refresh angle.

G

https://truckmanualshub.com/

[3] Operation stop judgment
When one of the limiters is detected, operation stops.

Refresh / recirculate mode and refresh / recirculate display and motor actuator angle		
Refresh / recirculate mode	Recirculate	Refresh
Refresh / recirculate motor actuator degree of opening	0 °	90 °
Panel display		

4. Blower Amp Control

[1] Summary explanation
The air flow is controlled by outputting to the blower amp connected in series with the blower motor. The air flow is switched by varying the analog voltage output by changing the PWM output duty ratio and increasing or decreasing the blower motor speed.
There are two types of air flow control: auto air flow control and manual air flow control. Also, in auto air flow control, the air flow is restricted by the cold blast prevention control etc.
Auto air flow control has no levels and manual control has four levels.

[2] Manual air flow control
Each time it is recognized that the air flow UP switch has been closed, Lo → M1 → M2 → Hi the air flow is fixed to the next higher level of air flow. When Hi is already displayed, the air flow is not changed.
In the same way, each time it is recognized that the air flow DOWN switch has been closed, Hi → M2 → M1 → Lo the air flow is fixed to the next lower level of air flow. When Lo is already displayed, the air flow is not changed.
The same is true when air flow control is switched from auto to manual. For example, when AUTO M1 is displayed, if it is recognized that the air flow DOWN switch has been closed, the display becomes Lo and AUTO is no longer displayed.
Also, the change speed for air flow output switchover is the same as discussed for auto below.

Relationship between air flow and PWM output

Air flow	Display	Target % (approx.)
Hi (maximum air flow)	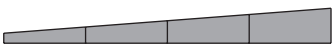	100 %
M2	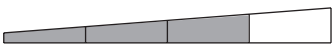	75 %
M1	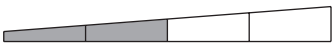	59 %
Lo (minimum air flow)		40 %

https://truckmanualshub.com/

[3] Auto air flow control

When it is recognized that the AUTO switch has been closed, the air flow is controlled automatically and AUTO is displayed.

1) During auto air flow control, the air flow is set according to the target blowing temperature as in Figure 3.
2) Auto air flow control continues until closing of either the air flow UP or air flow DOWN switch is recognized.
3) The auto air flow amount calculation results are continuous, not divided into levels.
4) When it is recognized that the AUTO switch has been closed, the display becomes as in Table 10 according to the results of the auto air flow amount calculation.
5) The normal auto air flow output change is roughly 5 V / second.
6) Auto air flow control is restricted by the cold blast prevention control described in (4), which is the next item.

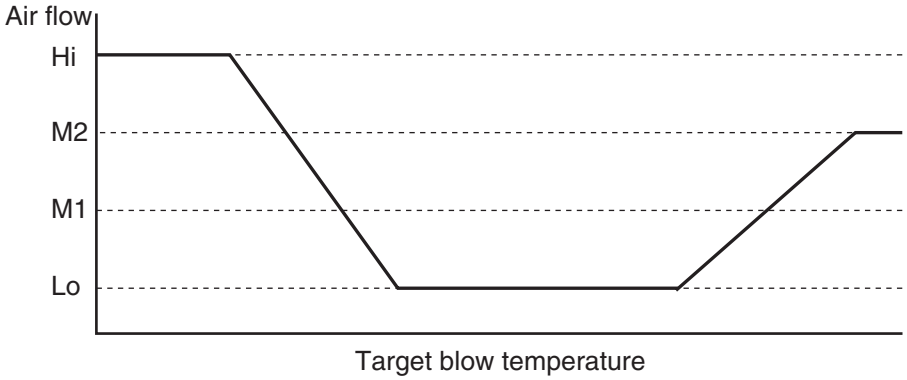

Relationship between air flow and target blow temperature

Display refreshing and air flow output correspondence table

Current display	Item	Target % (approx.)
Lo display	Output range changed to M1	When 53 % or higher
M1 display	Output range changed to Lo	When 46 % or lower
	Output range changed to M2	When 70 % or higher
M2 display	Output range changed to M1	When 64 % or lower
	Output range changed to Hi	When 92 % or higher
Hi display	Output range changed to M2	When 83 % or lower

G

https://truckmanualshub.com/

[4] Cold blast prevention control

The air flow is restricted according to the value of the coolant temperature and other parameters sent from the vehicle side. The air flow restriction has two levels - air flow 0 and air flow Lo. Whether or not to use the restriction is determined from the judgment results.

1) Conditions under which cold blast prevention control is used
   1. Auto air flow
   2. When set temperature - inside air sensor temperature ≥ 11
   3. When the coolant temperature signal from vehicle is the less than 35°C signal or the 35 °C or higher but less than 45 °C signal

   Under the condition above, the inside air sensor temperature is the value immediately after the ignition key power is switched ON and AUTO and Tset are according to the current switch states. Therefore, when the AUTO switch is pressed after the air flow has been set manually, if the coolant temperature is within the cold blast prevention range, the air flow is restricted. In the same way, even if the set temperature is changed, if the conditions are met, the air flow is restricted.

   While cold blast prevention control is being executed, the display corresponds to the restricted air flow.

2) Air flow 0 control

   When the coolant temperature signal from vehicle is the less than 35 °C signal, the air flow is set to 0. This continues until a coolant temperature signal of 30 °C or higher is received. Once a coolant temperature signal of 30 °C or higher is received and these conditions are no longer met, air flow 0 is ended.

3) Air flow Lo control

   When the coolant temperature signal from vehicle is the 35 °C or higher but less than 45 °C signal, the air flow is set to Lo. This continues until a coolant temperature signal of 45°C or higher is received. Also, the same as for (2), this shift is irreversible. Once a coolant temperature signal of 45 °C or higher is received, control is normal.

Coolant temperature signal sent from the vehicle (one cycle)

* Finalized by the same waveform for three cycles. However, for the first combustion after the ignition switch is switched ON, judged with the latest one cycle.
* The default state for the coolant temperature signal when the ignition is switched ON is 45°C or higher.

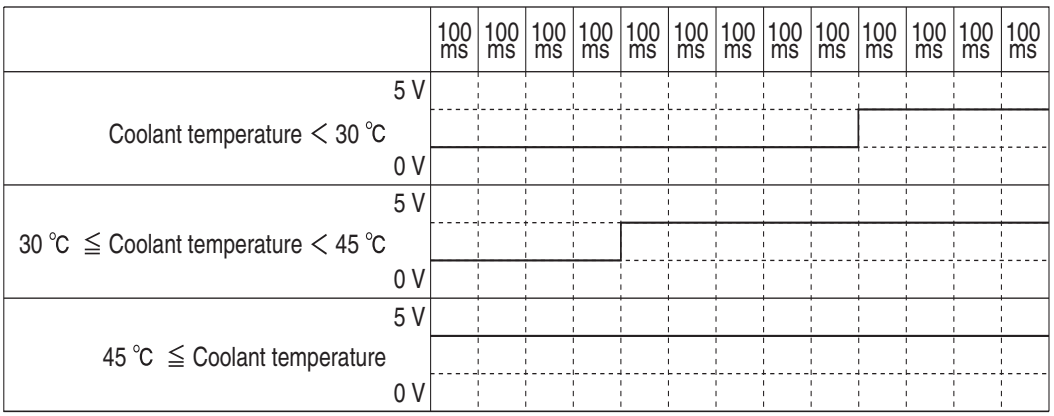

https://truckmanualshub.com/

[5] Air flow control priority order
The priority order for auto air flow control, manual air flow control, and cold blast prevention control is as follows.

Control priority order

Priority order	Control
1	Blower air flow control when mode motor actuator angle switched
2	Manual air flow control
3	COOLMAX control
4	Cold blast prevention control
5	HOTMAX control
6	Auto air flow control

5. Compressor Clutch Control

[1] Summary explanation
The compressor clutch is controlled by the power to the clutch coil being switched ON / OFF by an external relay. This control is executed by thermo operation, the condensation prevention function, and the fletching prevention function. Thermo operation has control mode 1 and control mode 2. These modes are applied according to the blow mode and other conditions. However, for blower air flow 0, the compressor clutch is switched OFF. The operation temperature does not include the thermistor variation.

[2] Thermo operation (AC switch ON)

1) Control mode switchover
- When the blow mode is B / L and the target blow temperature is as in the figure below, control mode 2 is used.
  As the figure shows, there is hysteresis between control modes 1 and 2.
- Other than the above is all control mode 1.

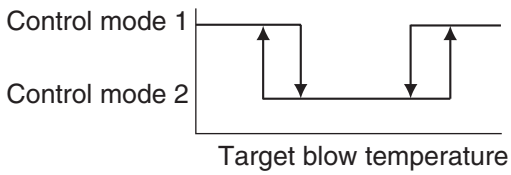

Relationship between control mode and target blow temperature for B / L

2) Control mode 1
- OFF temperature: 5 ± 1 °C
  When this temperature or lower is detected, the compressor clutch is switched OFF.
  (It is kept OFF until a temperature at or above the ON temperature is detected.)
- ON temperature: OFF temperature + 2 ± 0.5 °C
  When this temperature or higher is detected, the compressor clutch is switched ON.
  (It is kept ON until a temperature at or below the OFF temperature is detected.)

3) Control mode 2
- OFF temperature: 5 ± 1 °C
- ON temperature: OFF temperature + 2 ± 0.5 °C

G

https://truckmanualshub.com/

[3] Condensation prevention function

1) Timer set temperature: 8 ± 2 °C
When this temperature or lower is detected, the timer is set and starts counting.(It is not reset until a temperature at or above the timer cancel temperature is detected.)

2) Timer cancel temperature: Timer set temperature + 1 ± 1 °C
When this temperature or higher is detected, the timer is reset.

3) Count-up time: 10 ± 1 minutes
When the timer count reaches this time, the compressor clutch is switched OFF. After this, when the timer recovery temperature or higher is detected, the compressor clutch is switched ON and timer setting is prohibited.

4) Timer recovery temperature: Timer set temperature + 2 ± 1 °C
When this temperature or higher is detected, the compressor clutch is switched ON and timer setting is permitted.

[4] Fletching prevention function

1) Operation conditions
After the end of initial operation, if 5 ± 1 minutes continue with the air flow M2 or higher and the compressor clutch not coming ON even once, the compressor clutch is switched ON one time.
This control is cleared by the ignition key power being switched OFF and this control starts again when this power supply is switched ON again.
Compressor clutch ON time: 1 ± 0.6 seconds

2) This control takes priority over all other control.

[5] AUTO switch link function

When operation of the AUTO switch is recognized, compressor clutch control comes ON and AUTO is displayed.

1) Compressor clutch control is the same control as for the AC switch being switched ON.

2) When it is recognized that the AC switch has been switched OFF, the AUTO display goes out. Even when it is recognized that the AC switch has been switched ON again, AUTO is not displayed.

However, at this time, if the main key power is switched OFF, then ON again, since the AC ON, air flow AUTO, and blow mode AUTO conditions are all met, AUTO is displayed.

6. COOLMAX Control and HOTMAX Control

[1] When the set temperature is 18.0 °C [COOLMAX] (or 18. E)

1) The air mix motor actuator is set to the 0° limiter position (fully closed).

2) For auto air flow control, the air flow is set to Hi.

3) For AUTO blow mode control, the blow mode is set to VENT.

[2] When the set temperature is 32.0 °C [HOTMAX]

1) The air mix motor actuator is set to the 90 ° limiter position (fully open).

2) For auto air flow control, the air flow is set to M2.

3) For auto blow mode control, the blow mode is set to FOOT.

https://truckmanualshub.com/

7. Trouble Detection and Control after Trouble Detected

[1] Summary explanation

If there is trouble in a motor actuator drive line or sensor controller input circuit, the trouble is detected and control from then on changed as described below.

In any of these cases, once trouble has been detected, even when that location is returned to normal, trouble control is not ended. Trouble control is only ended when the ignition key power supply is switched OFF or when air conditioner operation is stopped with the ON / OFF switch on the operation panel. However, motor actuator restriction is only ended by switching OFF the main key power supply.

[2] Trouble in a motor actuator and its input / output circuits

1) Disconnection detection

Immediately after the main key power supply is switched ON, if a motor actuator potentio-meter line is disconnected or shorted, the display in the table below for that motor actuator is carried out and that motor actuator is not driven until the main key power is switched OFF, then ON again.

Disconnection detection display

Trouble location	Trouble display
Air mix motor actuator	HL.E is displayed on the set temperature display LCD.(See the figure below.)
Blow mode motor actuator	The passenger icon display flashes.
Refresh / recirculate motor actuator	Potentio-meter line not used

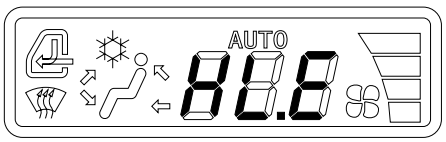

2) Motor lock detection

If the output shaft rotation angle for a motor actuator does not reach its target value within 15 seconds, this is treated as lock detection, output to that motor is stopped, and trouble is displayed on the controller according to the trouble location.

Motor lock detection display

Trouble location	Operation panel trouble display
Air mix motor actuator	HL.E is displayed on the set temperature display LCD.(See the figure below.)
Blow mode motor actuator	The passenger icon display flashes.
Refresh / recirculate switch motor actu-ator	The refresh / recirculate mark flashes.

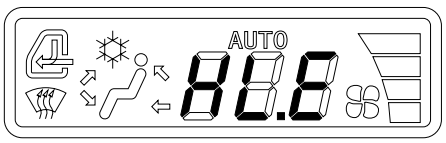

G

https://truckmanualshub.com/

[3] Trouble in a sensor or its input / output circuits (disconnection or short)

1) Disconnection or short in the inside air sensor or its input / output circuits

1. Operator compartment temperature control end
   - All control related to the operator compartment temperature (target blow temperature) is stopped and the air mix degree of opening is directly adjusted according to the temperature adjustment switch input.
   - Accompanying this, the operation panel set temperature display changes as in the figure below.

HL. *

* is a value from 0 to 9. Each time the DOWN switch is closed, this value decreases by 1; each time the UP switch is closed, this value increases by 1.
For any blow mode other than FACE or VENT, the minimum value is set to 1.

Display and control for inside air sensor trouble

* value	Motor actuator degree of opening (°)
0	0 °
1 to 8	* value X 10 °C
9	90 °

2. Auto air flow control end
   - The air flow is temporarily fixed at that in effect when the inside air temperature sensor trouble was detected.
   - The AUTO display is set flashing.
   - After this, the air flow is switched by the manual air flow switch.
3. AUTO blow mode control end
   - The blow mode is temporarily fixed at that in effect when the inside air temperature sensor trouble was detected.
   - The AUTO display is set flashing.
   - After this, the blow mode is switched by the manual blow mode switch.
4. Air mix damper degree of opening display priority
   - Even if the trouble shown by one of the items below occurs during inside air sensor trouble, E is not displayed in the * section below the decimal point and the air mix damper degree of opening display is given priority.
   - HL.E is only displayed for air mix motor actuator trouble.
5. Thermo operation control mode fixed
   - Switching of the control mode according to the blow mode and target blow temperature is stopped and the control mode is fixed at control mode 1.

2) Disconnection or short in evaporator sensor or its input / output circuits

1. Compressor control is not executed and the compressor clutch is always OFF. However, fletching prevention control is executed.
2. E is displayed in the first fraction position of the set temperature display LCD.(See the figure below.)
   (The temperature setting is in 1 °C steps.)
   However, E is not displayed for inside air sensor trouble.
3. The AC mark flashes.

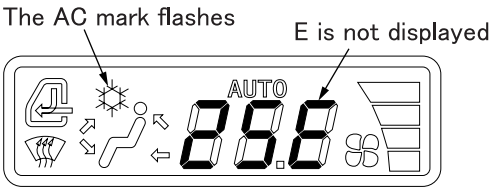

https://truckmanualshub.com/

3) Disconnection or short in solar radiation sensor or its input / output circuits
   1. The solar radiation compensation data is set to 0.
   2. E is not displayed in the first fraction position of the set temperature display LCD as it is for other sensors.
4) Coolant temperature signal trouble
   Cold blast prevention control does not work and normal control is used.

8. Monitor Mode

[1] Summary explanation
Monitor mode is a mode for understanding trouble in the controller itself or in other control. The system goes into monitor mode when there is the special switch input below on the operation panel.

[2] Starting monitor mode
When the air conditioner is operating with basic control, if the operation panel ON / OFF switch closed path continues for one second while the refresh / recirculate switch closed path is ongoing, monitor mode is started.

[3] Monitor contents
1) LCD segment diagnosis
   When monitor mode is entered, the target LCD lights up for one second. An LCD with trouble does not light up.
2) Sensor diagnosis
   The detection value (AD value or °C) for each sensor is displayed.
3) Coolant temperature signal recognition value
   This displays the reception status for the coolant temperature signal sent from the vehicle.

[4] Monitor contents
1) LCD segment diagnosis
   When monitor mode is entered, the target LCD lights up for one second. An LCD with trouble does not light up.
2) Sensor diagnosis
   The detection value (°C) for each sensor is displayed.

[5] Display contents in monitor mode
In monitor mode, the data (detection value for each sensor, coolant temperature signal recognition, etc.) is displayed in the three digits of the 7-segment display for the temperature setting. The data displayed is selected with the blower UP / DOWN switches and AUTO switch. The blower UP / DOWN switches move the display on the dedicated monitor mode 7-segment display through 16 displays, 0 to F, and the corresponding data is displayed.(Table A on next page) Hexadecimal data display and decimal data display can be selected with the AUTO switch. Only for the coolant temperature signal recognition value, the value detected immediately before entry into monitor mode is displayed.
The difference between hexadecimal data and decimal data is indicated by the third digit of the 7-segment display. For hexadecimal data, "H" is displayed there and for decimal data, numbers (0 to 9) are displayed there.

1) Hexadecimal display
   AD values 00H through FFH are displayed. When the AD value corresponds to that in Table B on the next page (or Table C for the solar radiation sensor), this indicates a disconnection or short. In the hexadecimal display, when the value of a sensor changes in monitor mode, the hexadecimal display changes with it. If the display before entering monitor mode was [HL.*], the error judgment value is displayed.(In other words, the value detected before the trouble was detected) In the same way, if the display before entering monitor mode was [**.E], the display becomes **.E and the error judgment value is displayed.

G

https://truckmanualshub.com/

2) Decimal display
From -99.9 °C to 99.9 °C is decimal display. Also, the "-" minus display displays the arrow mark for FOOT mode.

[6] Air conditioner operation in monitor mode
When the system enters monitor mode, all output (operation) through control is stopped and until monitor mode is ended, operations and settings of basic control through all the switches are not possible.

[7] Ending monitor mode
In monitor mode, if the operation panel ON / OFF switch closed path continues for one second while the refresh / recirculate switch closed path is ongoing, monitor mode is ended and the system returns to the basic control state. The same also occurs if the ignition key power supply is switched OFF.

Table A

Dedicated monitor mode 7-segment display	Display contents			
0	Inside air sensor temperature data			
1	Evaporator sensor temperature data			
2	Solar radiation compensation data			
C	Coolant temperature signal status data			
	Trouble	Lower than 30 °C	30 °C or higher and lower than 45 °C	45 °C or higher
	4	1	2	3
3 to 9 and B to F	Data (sensor diagnosis etc.)			

Table B

Sensor name	Short	Disconnection
Inside air sensor	F6H	0CH
Evaporator sensor	F6H	0CH

Table C

Sensor name	5 V short	Ground short
Solar radiation sensor	C7H	0CH

9. Door Switch Control

[1] Summary explanation
This control adds a restriction to air conditioner operation with the door switch or front window switch. Its purpose is to prevent overheating of the ignition unit. Concretely, it suppresses condenser heating and controls in a way restricted in order to obtain a feeling of comfort.

[2] Door switch / front window switch signal
The signal input into the controller is as follows for both the door and front window switches.

1) When door / front window open
When contact closedIn other words, the control controller input is at ground level.

2) When door / front window closed
When contact openPulled up to 5 VDC inside the control controller

https://truckmanualshub.com/

[3] Control restricted by door switch / front window switch

1) Starting restricted control
When either the door or front window is open continuously for one second or longer, it is recognized that the switch is open. At the count of 60 seconds, the buzzer buzzes the same way as for switch input to tell the operator that restricted control is starting and that control starts.

2) Restricted control

1. For both auto and manual blow mode control
Even if auto or manual blow mode is selected, unless the blow mode is FACE, the following air flow restriction is executed.(If the blow mode is FACE, the air flow is not restricted.)
I. If the target blow temperature < 20 °C, the air flow upper limit is set to M1.
II. If the target blow temperature ≥ 25 °C, the air flow restriction in I is ended.

2. When the current blow mode control is AUTO
Auto control with the AUTO blow mode VENT changed to FACE is used.

3. When the current blow mode control is manual selection
Only if the blow mode is VENT immediately after the open switch is recognized, that mode is changed to FACE. After this, all the blow modes can be selected with manual operation.

3) Ending the restriction
When both the door and front window are closed continuously for one second or longer, it is recognized that the switches are closed. After a count of 1 second, the buzzer buzzes the same way as for switch input to tell the operator that restricted control has been ended. When the restricted control is ended, the restriction on the air flow discussed in 1. above and the change from VENT to FACE in 3. are ended and control returns to normal. However, if the blow mode has been manually selected, even if the mode was changed from VENT to FACE by the above restriction, it does not return to VENT when the restricted control is ended.

G

10.Inside Air Filter Clogging Detection Control

[1] Summary explanation
This control recognizes the blower current with the dedicated shunt resistor voltage input, judges from that value whether or not the AC unit inside air filter is clogged and if it judges that that filter is clogged, it issues a warning to encourage the operator to replace the filter.

[2] Filter detection control

1) Starting detection control (detection timing)
Five seconds after the end of initial operation, if the air conditioner is operating and the cold blast prevention conditions are not present, this control is started. Also, this control is executed every 50 hours of air conditioner (blower) operation. However, during a temporary filter clog or filter clog, it is executed every time.

https://truckmanualshub.com/

2) Detection method
Cooling / heating is judged from the operation mode and in this way the air mix motor actuator target position is determined. Also, the mode motor actuator target value is set to FOOT, the blower air flow target value is set to M1, and output is made to attain the target values. When all the target values are attained, the blower current from the shunt resistor voltage is recognized, and the filter clog is judged by comparing this current with the default current value.

(Cooling / heating judgment)

When the operation mode is	FACE or VENT,	: Cooling (COOLMAX)
	When FOOT or DEF	: Heating (HOTMAX)
	When B / L: Final inside air temperature	If < 22 °C, heating
	When B / L: Final inside air temperature	If ≥ 22 °C, cooling

(Detection current threshold)

Relative to the default current value	For cooling	: 0.37 ± 0.02 A min.
	For heating	: 0.51 ± 0.03 A min.

If the value is below this three times in a row, it is judged that there is a clog.

(Default current value)

Current found in the initialization operation described below.

3) Clog warning
(Buzzer)
The buzzer buzzes intermittently at 1 Hz for 10 seconds.
(Display)
"FIL" is displayed on the 7-segment display for the set temperature for 10 seconds. Other marks go out.
However, if there is any switch input, the "FIL" display is ended immediately.

4) Alarm reset
If a reset detection value is recognized during the clog state, the clog state is reset.
The reset detection value is 50 % of the clog detection threshold.

5) ON / OFF switching
This function is switched ON / OFF by pressing the [Refresh / Recirculate], [MODE], and [DEF] switches at the same time. The factory setting for this function is OFF. This function does not come ON until the initialization operation discussed below is executed.
(Buzzer)
When operation of this switch is recognized, there is the normal switch input sound.
(Display)
ON or OFF is displayed on the set temperature 7-segment display, whichever is the state after switching. Other marks go out.

6) Initialization operation
When the [Refresh / Recirculate] and [DEF] switches are pressed at the same time, the default current value is detected and all the data for filter detection is initialized. Before executing this operation, make sure that the air conditioner unit (with a new inside air filter installed), ducts, and grilles (with all grilles fully open) are all installed in their normal states on the vehicle. If initialization is carried out in any other state, there is a danger of the clog detection judgment control making an incorrect judgment. Immediately after replacing the inside air filter with a new one, execute the initialization operation.
(Buzzer)
When operation of the switch is recognized, the buzzer buzzes with the normal switch input sound. When the detection ends, the buzzer buzzes for 3 seconds.

https://truckmanualshub.com/

7) Detection processing avoidance
   - When the inside / outside air damper is not at the recirculate position immediately before the current value is read
   - When the power supply voltage is not in the tolerance range for the voltage during the initialization operation
   - Trouble in any of the motor actuators

https://truckmanualshub.com/

Air Mix Motor Actuator Inspection

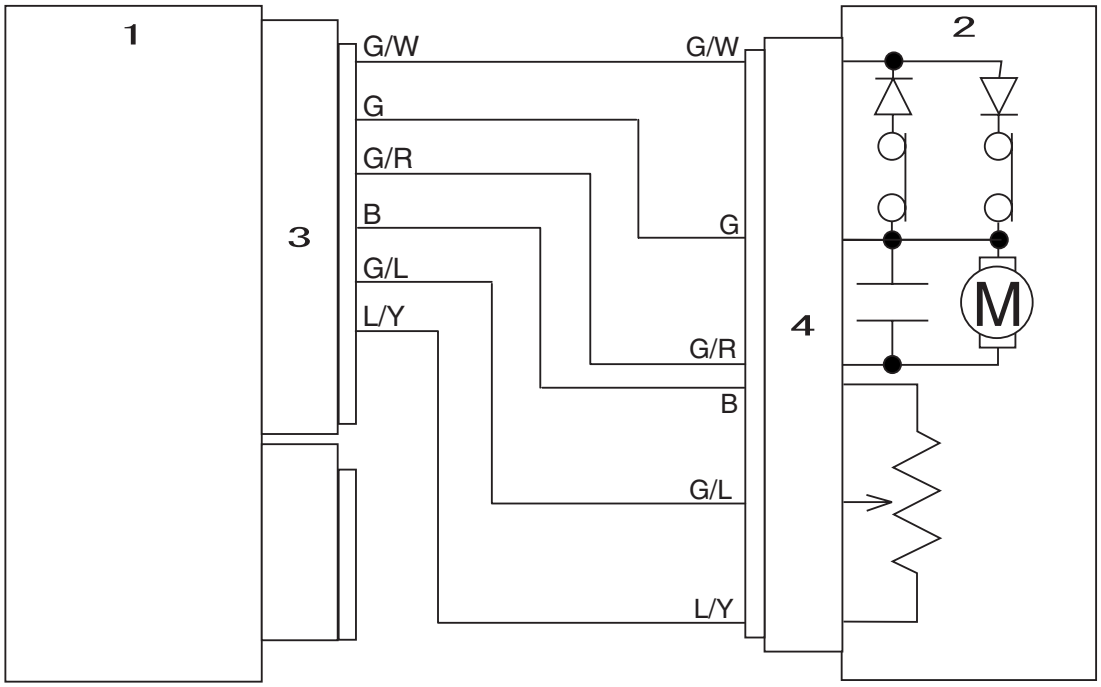

Air mix damper operation defect

↓

See the chart.

↓

Specifying the trouble location

RST-07-04-001a

1	Control panel
2	Air mix motor actuator
3	Connector 1
4	Connector 9

G

https://truckmanualshub.com/

Actuator Inspection

•Chart

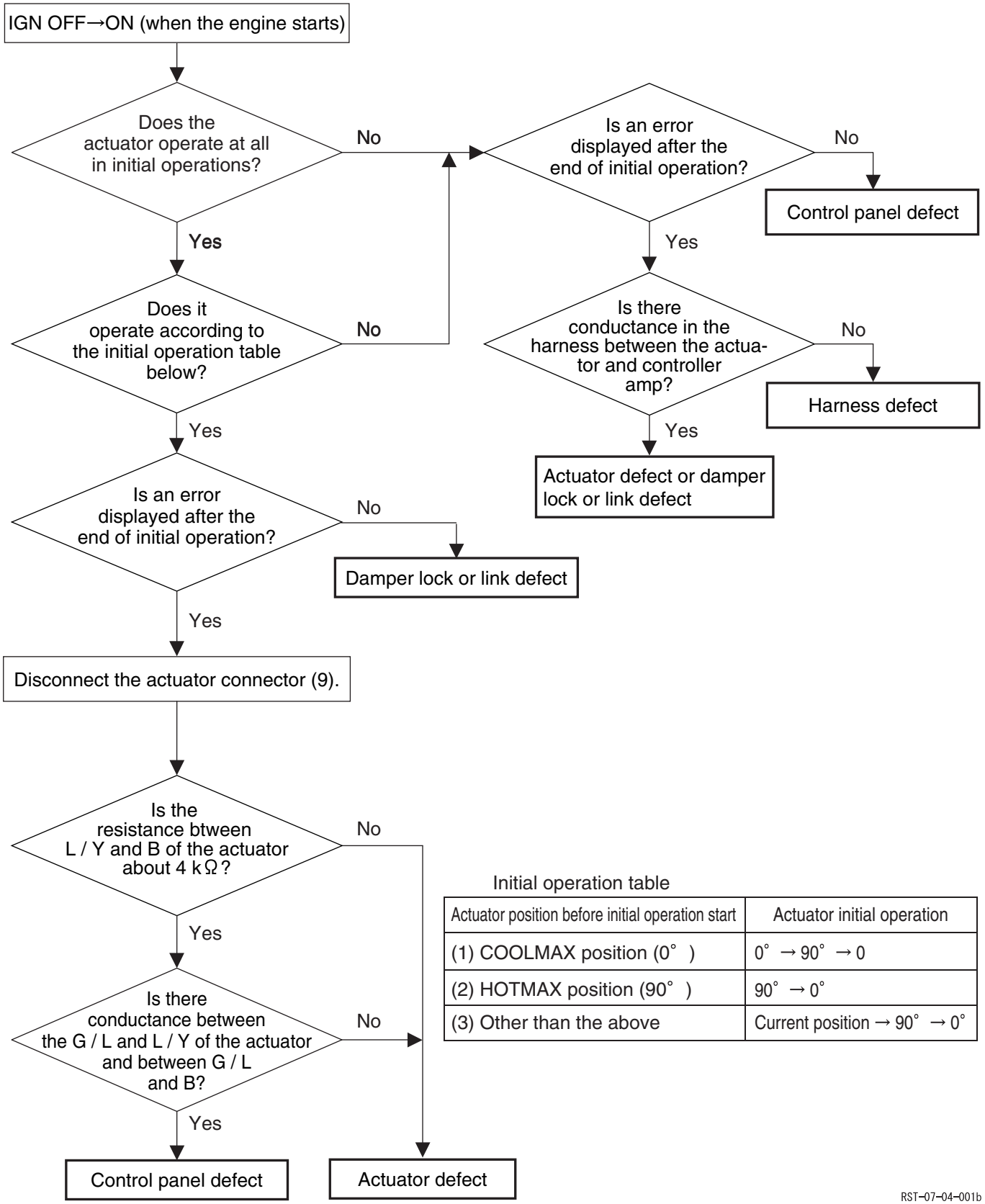

Initial operation table

Actuator position before initial operation start	Actuator initial operation
(1) COOLMAX position (0°)	0° → 90° → 0
(2) HOTMAX position (90°)	90° → 0°
(3) Other than the above	Current position → 90° → 0°

https://truckmanualshub.com/

Refresh / Recirculate Motor Actuator Inspection

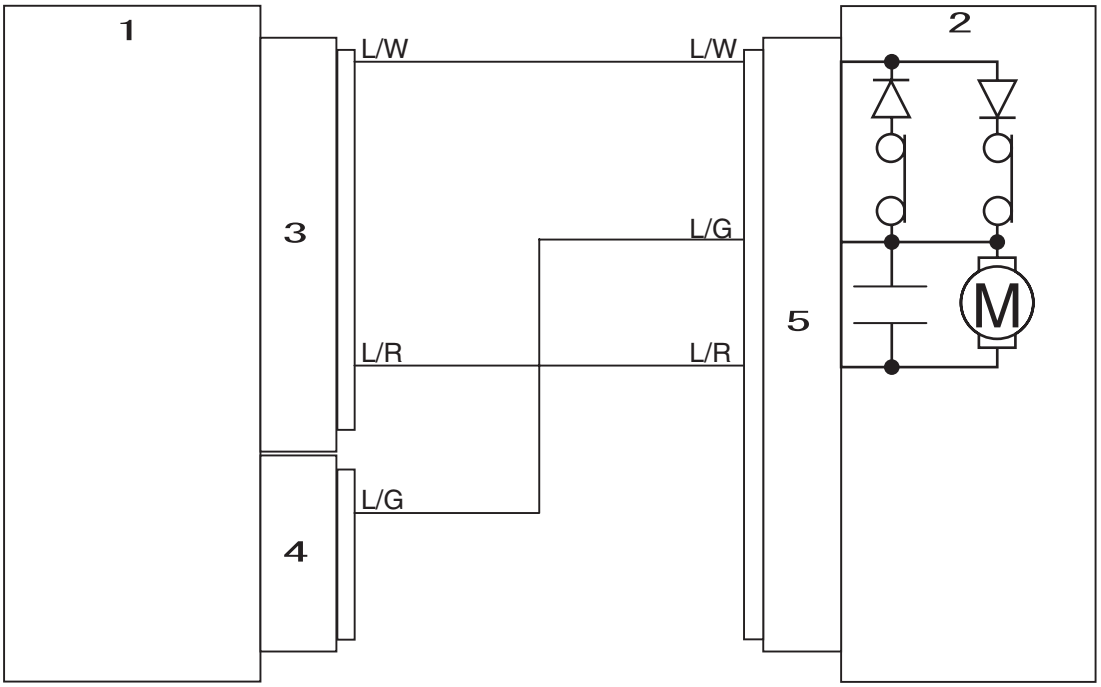

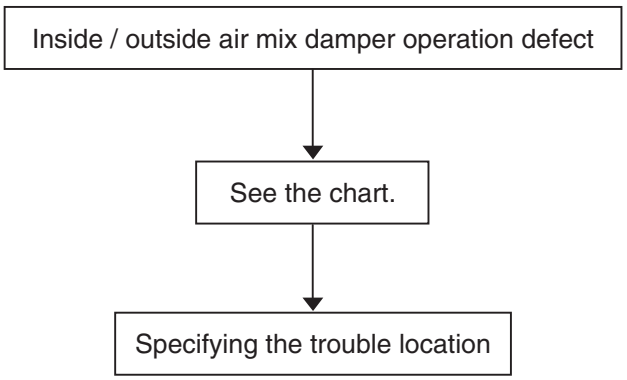

RST-07-04-001c

1	Control panel
2	Mode motor actuator
3	Connector 1
4	Connector 10

G

https://truckmanualshub.com/

Actuator Inspection

•Chart

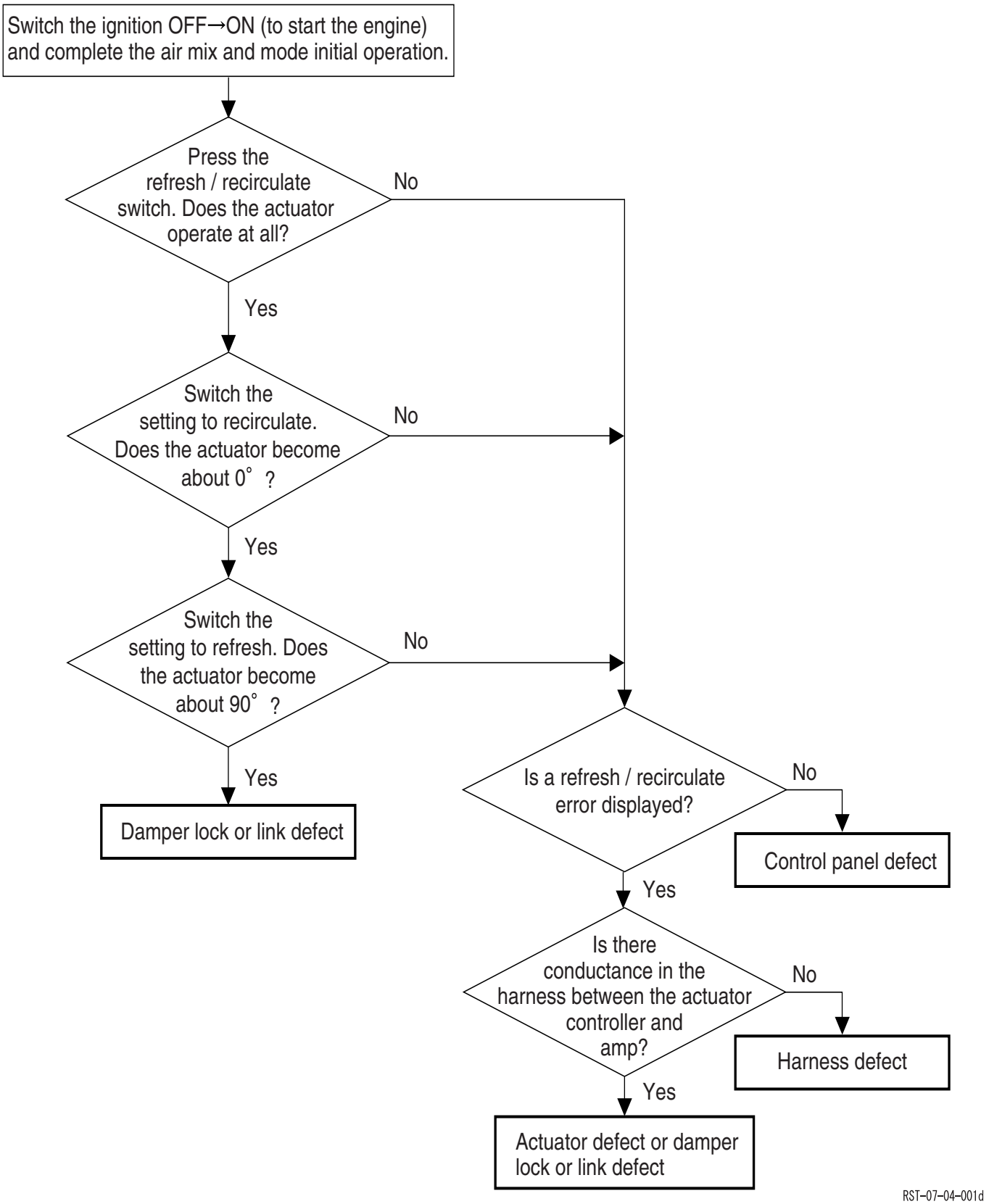

https://truckmanualshub.com/

Mode Motor Actuator Inspection

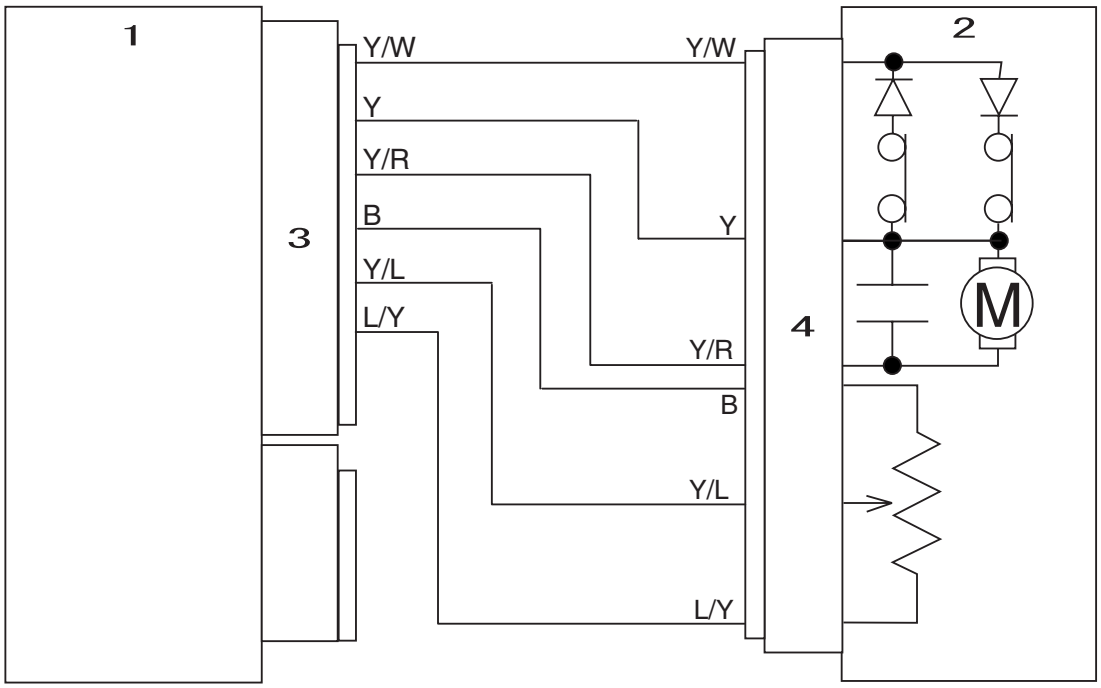

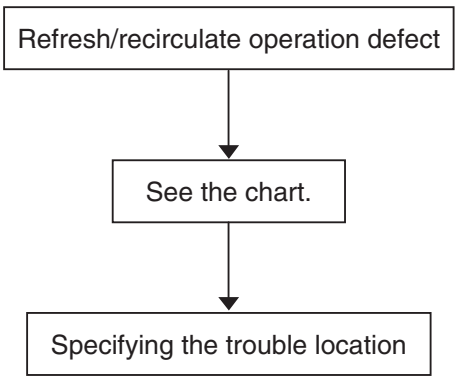

RST-07-04-001g

1	Control panel
2	Refresh / recirculate motor actuator
3	Connector 1
4	Connector 2
5	Connector 11

https://truckmanualshub.com/

Actuator Inspection

•Chart

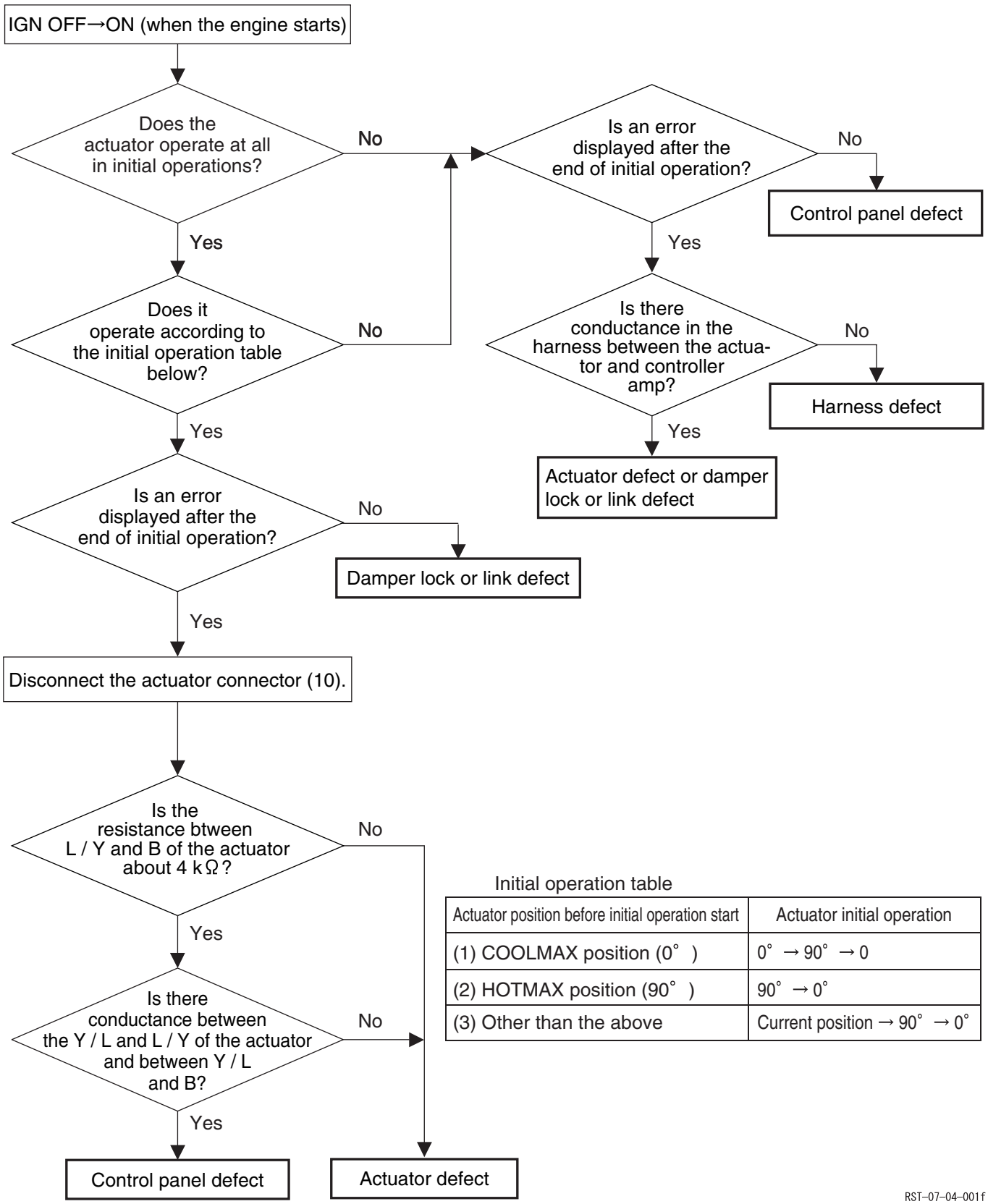

Initial operation table

Actuator position before initial operation start	Actuator initial operation
(1) COOLMAX position (0°)	0° → 90° → 0
(2) HOTMAX position (90°)	90° → 0°
(3) Other than the above	Current position → 90° → 0°

RST–07–04–001f

https://truckmanualshub.com/

Trouble Display and Self-check Procedure

Motor actuator and sensor troubles can be checked on the panel display.

1. Trouble Display Position

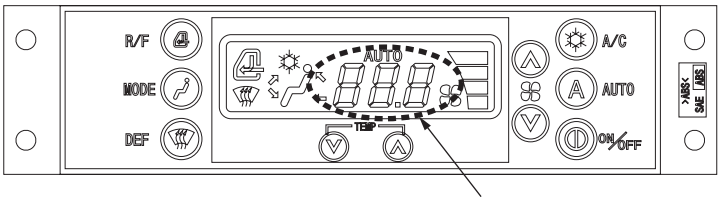

Error displayed on 3-digit 7-segment display

2. Explanation of Trouble Display

(1) Motor actuator trouble

[1] HL.E displayed on three-digit 7-segment display

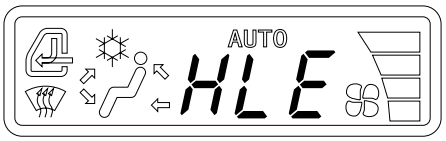

Check the air mix damper motor actuator for harness disconnection or disconnected connector.

[2] MODE flashes.

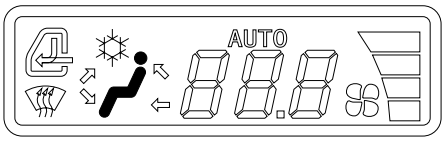

Check the blow mode damper motor actuator for harness disconnection or disconnected connector.

[3] The R / F flashes.

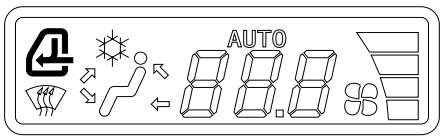

Check the refresh / recirculate motor actuator for harness disconnection or disconnected connector.

Caution

With the panel ON / OFF switch ON, the above display and flashing does not function even if a harness disconnection or disconnected connector occurs.

After trouble occurs, when the panel ON / OFF switch is switched ON, the function is displayed.

After trouble occurs, the trouble display and flashing are not ended until the main switch is switched OFF → ON.

G

https://truckmanualshub.com/

Self-diagnosis Function With Panel Display

(2) Sensor trouble

[1] HL.* displayed on three-digit 7-segment display

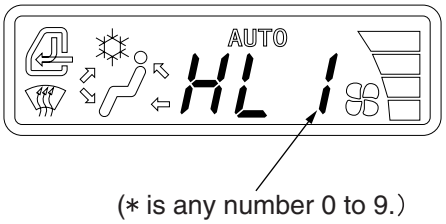

Check the inside air sensor and check its harness for disconnection, short, or connector connection defect.

[2] **.E and the ❄ mark flashing display are displayed on the three-digit 7-segment.
(** displays the set temperature value at that time still remaining.)

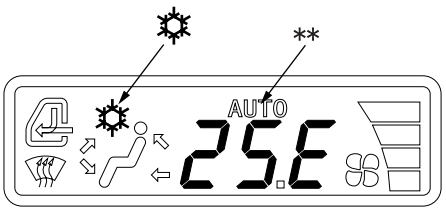

Check the evaporator sensor and its harness for disconnection, short, or connector connection defect.

Caution

The display in [1] and [2] above is displayed on the three-digit 7-segment display when trouble occurs with the panel ON / OFF switch ON.

After the trouble section is repaired, end the trouble display by switching the panel ON / OFF switch OFF → ON.

https://truckmanualshub.com/

3. Explanation of Monitor Mode

2. (2) When sensor trouble is displayed, the sensor status (disconnection, short) can be checked in monitor mode.

(1) Monitor mode display position

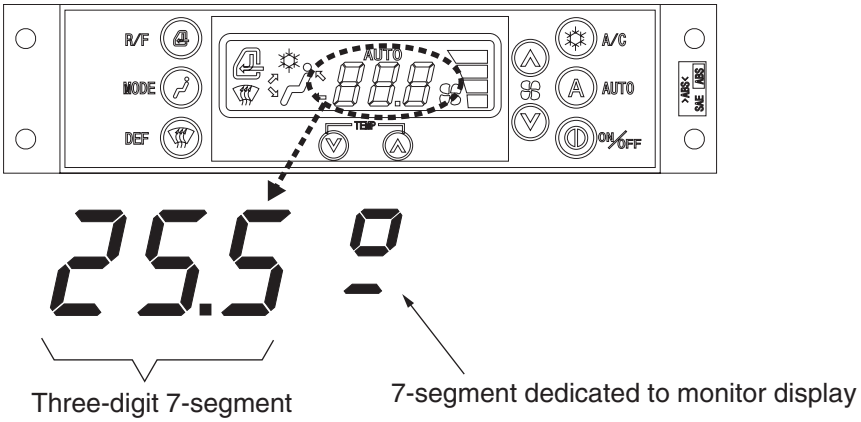

(2) Monitor mode display operation method

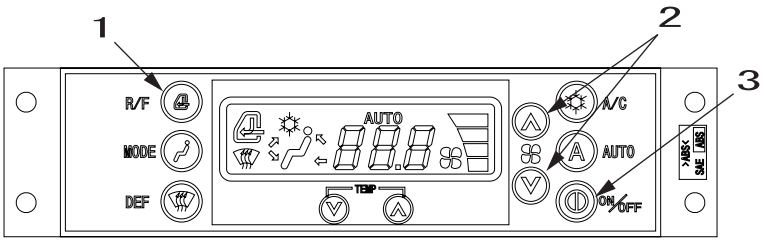

1	Refresh / recirculate switch
2	Blower switch UP / DOWN switch
3	ON / OFF switch

[1] Hold down the refresh / recirculate switch and the ON / OFF switch at the same time for one second or longer.

[2] Press the AUTO switch.
(All the segments light up for one second, then the system enters monitor mode.)

[3] Numbers 0 to 9 or letters A to F are displayed in the second and third digit of the three-digit 7-segment display.
"H" is displayed in the first digit.

[4] The 0 to 2 display on the dedicated 7-segment display is carried out with the blower UP / DOWN switches. The necessary sensor is selected from the table below.

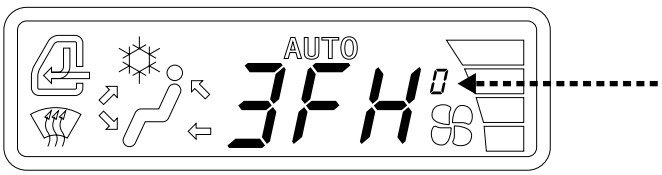

7-segment display
table dedicated to monitor

0	Inside air sensor
1	Evaporator sensor
2	Solar radiation sensor

(Display other than the above (3 to 9, B to F) is not used during service.)

[5] To end the monitor display, either hold down the refresh / recirculate switch and the ON / OFF switch at the same time for one second or longer or switch the vehicle main switch OFF.

Caution

1. **During monitor mode, operations and settings of basic control through all the switches are not possible until the air conditioner control operation is stopped and monitor mode ended.**
2. **During monitor mode, even if a sensor is repaired, the trouble display is recorded in memory, and until the ON / OFF switch is switched OFF, then ON again, the trouble display is not ended.**

G

https://truckmanualshub.com/

Self-diagnosis Function With Panel Display

(3) Display contents in monitor mode

See the dedicated monitor 7-segment display table and three-digit 7-segment table.

[1] Display example 1

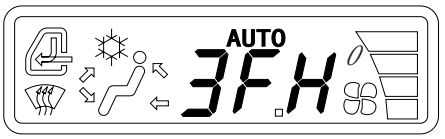

The dedicated monitor 7-segment display is 0 (indicates the inside air sensor state).
From the three-digit 7-segment table 3F → The sensor is normal.
→ The inside air sensor is normal.

[2] Display example 2

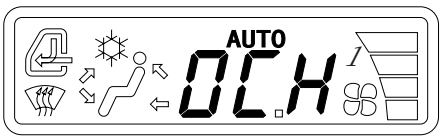

The dedicated monitor 7-segment display is 1 (indicates the evaporator sensor state).
From the three-digit 7-segment table 00 → The sensor is disconnected.
→ The evaporator sensor is disconnected.

[3] Display example 3

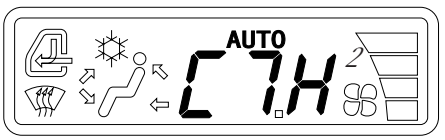

The dedicated monitor 7-segment display is 2 (indicates the solar radiation sensor state).
From the three-digit 7-segment table FF → The sensor is shorted.
→ The solar radiation sensor is shorted.

Three-digit 7-segment table

3rd-digit of 7-segment display	Second digit of 7-segment display: 0	1	2	3	4	5	6	7	8	9	A	B	C	D	E	F
0	Inside air sensor disconnection OCH0 display															
	Evaporator sensor disconnection OCH1 display															
	Solar radiation sensor short OCH2 display															
1																
2																
3																
4																
5																
6																
7																
8																
9																
A																
B																
C																
D	Solar radiation sensor 5 V side short C7H2 display															
E																
F							Inside air sensor short F6H0 display									
							Evaporator sensor short F6H1 display									

Sensors normal

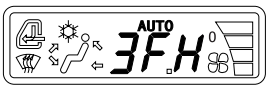

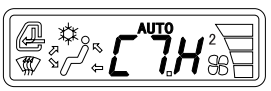

https://truckmanualshub.com/

Air conditioner troubleshooting

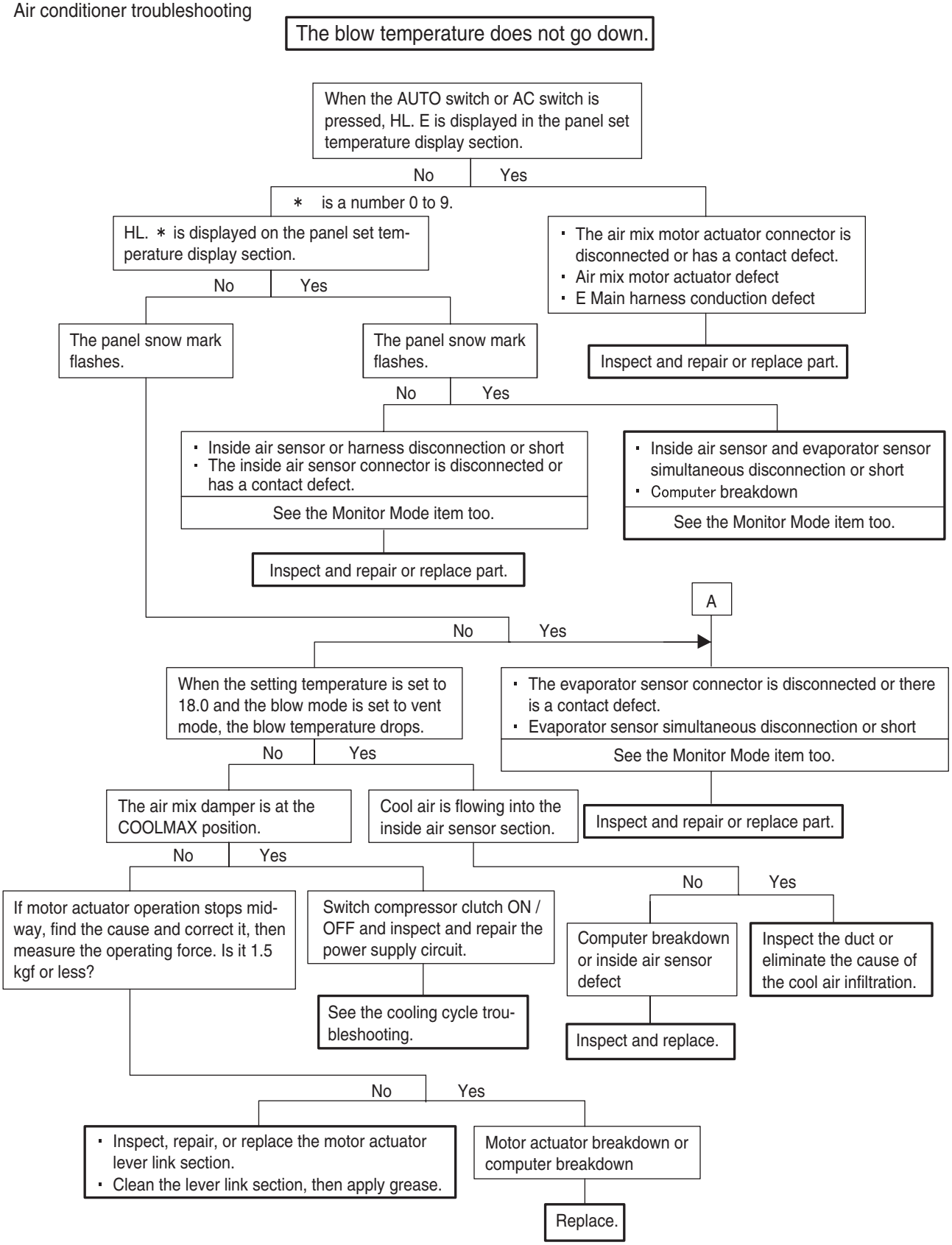

G

https://truckmanualshub.com/

Self-diagnosis Function With Panel Display

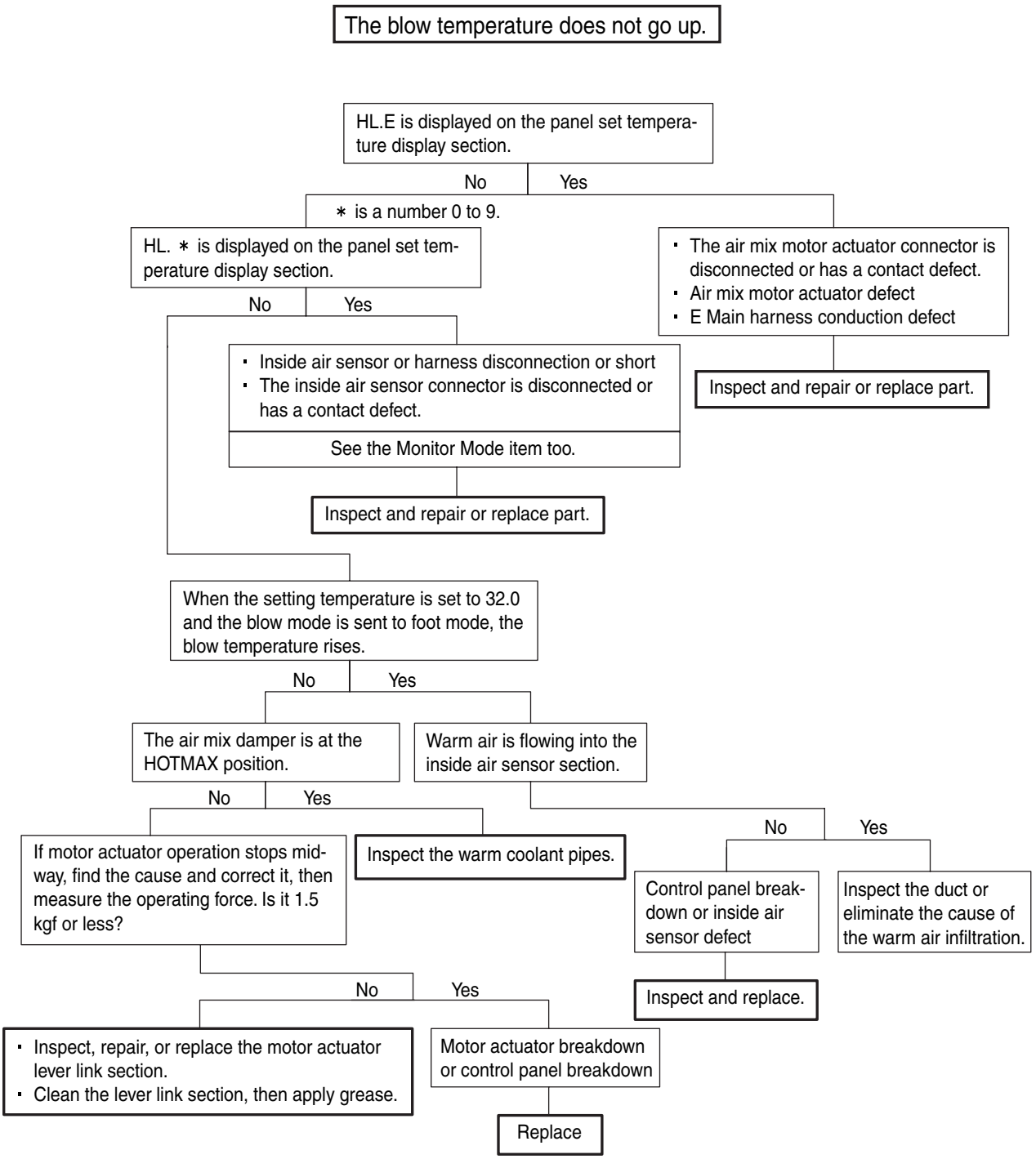

https://truckmanualshub.com/

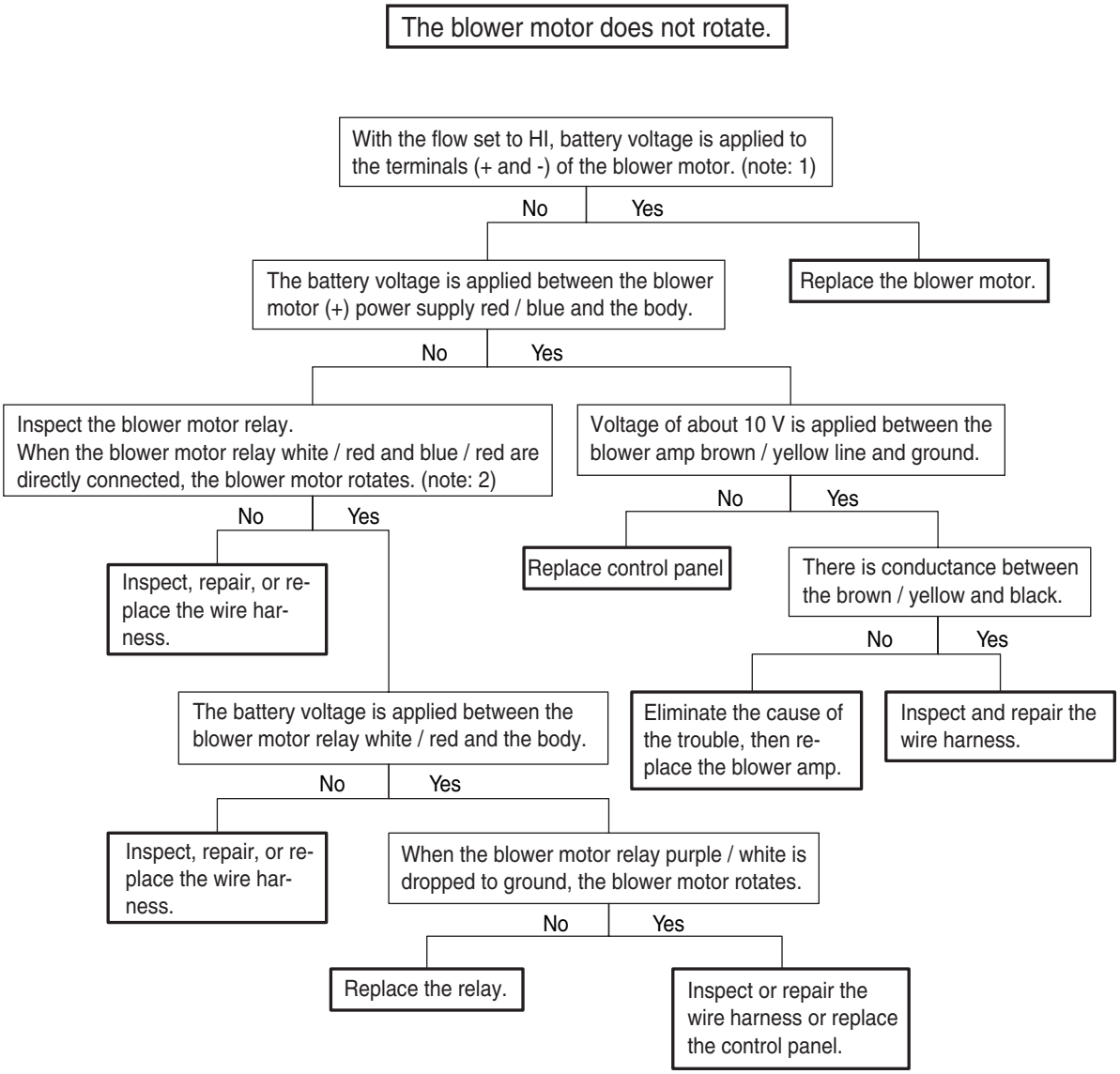

(Note: 1) Measure with the connector connected.
(Note: 2) For the sake of safety, have the air conditioner, vehicle key, and light switches all OFF when working with direct connections in place.

G

https://truckmanualshub.com/

Self-diagnosis Function With Panel Display

The blower motor speed does not change.

-1

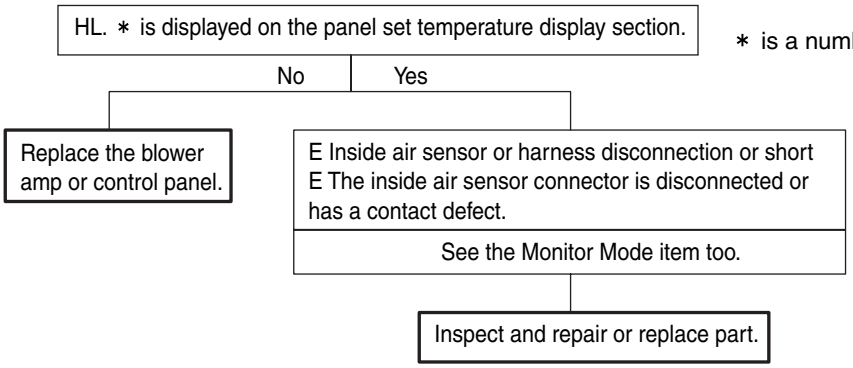

∗ is a number 0 to 9.

-2

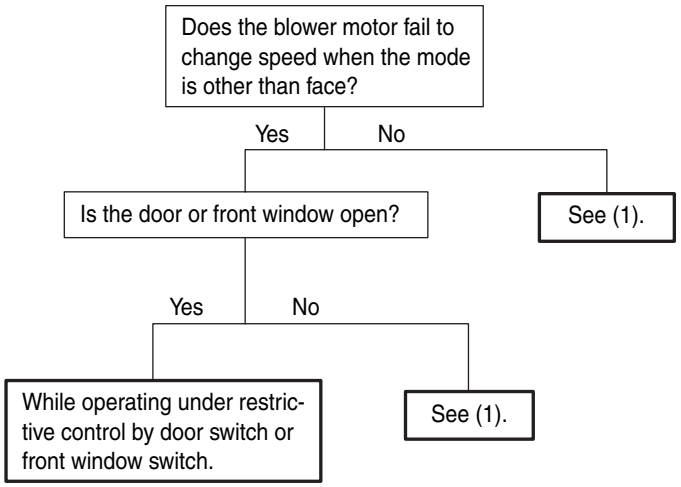

https://truckmanualshub.com/

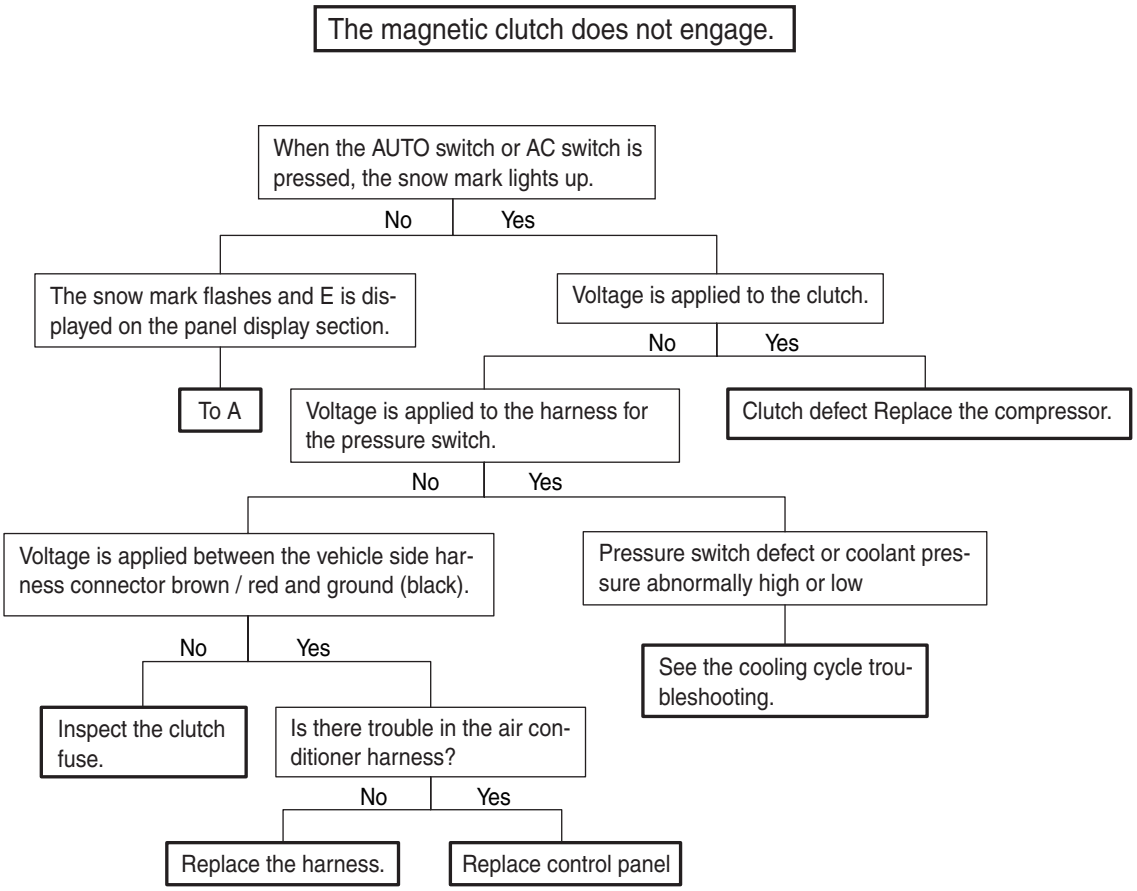

G

https://truckmanualshub.com/

Self-diagnosis Function With Panel Display

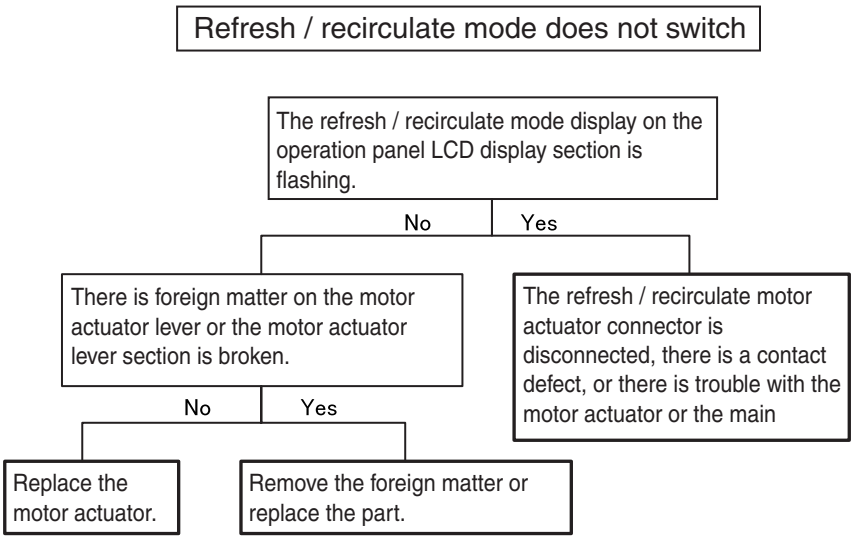

https://truckmanualshub.com/

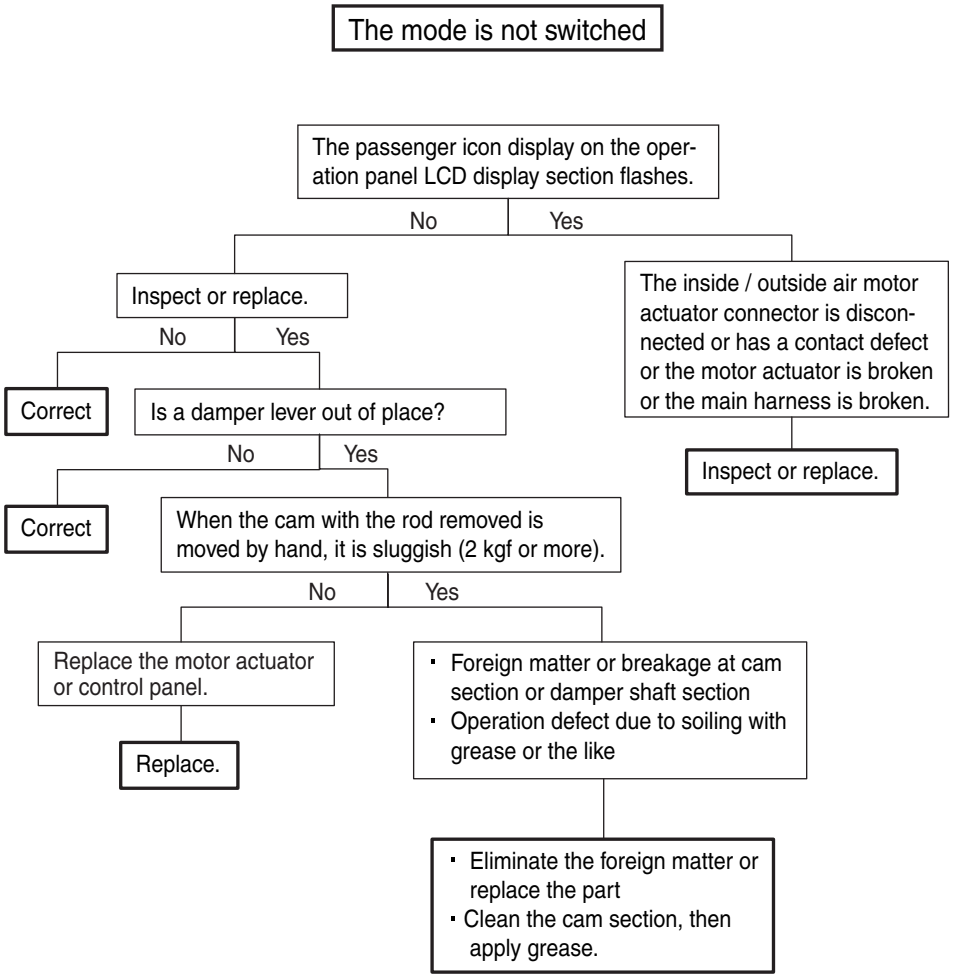

G

https://truckmanualshub.com/

Control Panel and Control Unit

The control panel and control unit are formed into one piece. The operation of its built-in microcomputer compares, operates on, and processes the sensor input signals and control panel switch input signals, switches the output side actuators (refresh / recirculate switching, air mix) and comprehensively controls the fan motor and compressor.
It is equipped with self-diagnosis functions to make trouble diagnosis easier.(For details see the control specifications.)

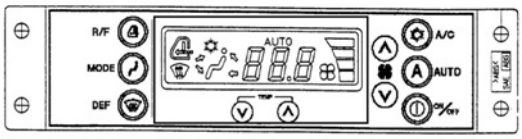

Blower Amp

The blower amp receives the control signals from the control unit and changes the speed of the blower motor.

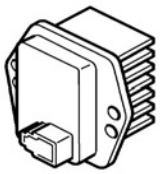

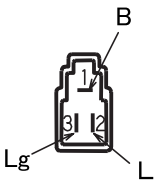

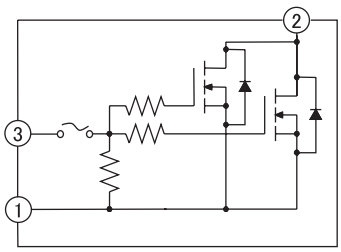

Normal

	Terminal number			Conductance
	1	2	3	
Tester	+		-	Conductance (4.7 kΩ±5 %)
	-	+		No conductance
	+	-		Conductance (diode parallel forward direction)

[1] Remove the blower amp connector.
[2] Check the conductance between the blower amp side terminals.

* The installation position is on the left side of the air conditioner unit.

G

https://truckmanualshub.com/

Part Function and OK / NG Judgment

Relay

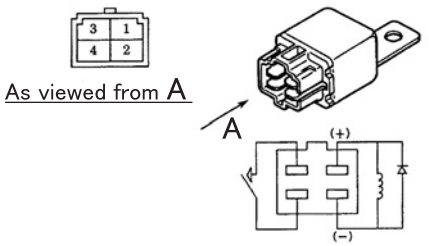

4-pole relays are used for the blower OFF relay and compressor relay.

Blower OFF relay

This relay receives the signal from the control amp and switches the blower OFF relay ON.
When the blower OFF relay is switched ON, the power supply voltage is fed to the blower motor via the blower amp and the blower motor is started.

Compressor relay

The compressor relay is switched ON / OFF by the control amp compressor control;

Relay inspection contents

[1] Relay
[2] Coil resistor: 320 **Ω**
[3] Specification voltage: 20 to 30 VDC
[4] Be careful. The coil side of this relay must be installed with the poles facing correctly.
[5] Inspection: Inspect the conductance between 3 and 4 under the conditions below.

20 - 30 V applied between Terminals 1 and 2	:	Conductance
No voltage applied between Terminals 1 and 2	:	No conductance

Air Mix Actuator

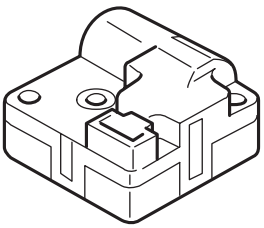

The air mix actuator is installed at the center of the air conditioner unit. It opens and closes the air mix damper via the link. Built into the air mix actuator is the potentio-meter which varies linked with the actuator shaft.

When the target air mix door position is determined by the temperature control switch, the control unit reads in the potentio-meter position in the actuator and determines whether the motor turns forward or reverse.The contacts move linked with the motor. When the contacts move open or the target potentio-meter position is reached, the control unit output signal goes OFF and the motor stops.
(See "Air Mix Motor Actuator Inspection".)

https://truckmanualshub.com/

Refresh / Recirculate Actuator

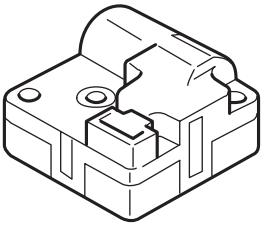

The refresh / recirculate switch actuator is installed on the blower intake unit. It opens and closes the refresh / recirculate damper via the link.
Built into the refresh / recirculate switch actuator is the position detection switch that changes linked with the actuator shaft.

When the refresh / recirculate damper position is determined by the refresh / recirculate switch on the control panel, the control unit reads in the signal of the position detection switch in the actuator and determines whether the motor turns forward or reverse.The contact moves linked with the motor and when the contact reaches the position detection switch and separates, the motor stops.
(See "Refresh / Recirculate Motor Actuator Inspection".)

Blow Mode Actuator

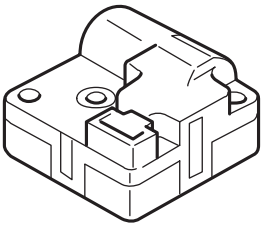

The blow mode actuator is installed on the back surface of the air conditioner unit. It opens and closes the blow damper via the link.
Built into the blow mode actuator is the potentio-meter which varies linked with the actuator shaft.

When the blow mode position is determined by the temperature control switch, the control unit reads in the potentio-meter position in the actuator and determines whether the motor turns forward or reverse.The contacts move linked with the motor. When the contacts move open or the target potentio-meter position is reached, the control unit output signal goes OFF and the motor stops.
(See "Mode Motor Actuator Inspection".)

https://truckmanualshub.com/

Part Function and OK / NG Judgment

Evaporator Sensor

In order to prevent the evaporator freezing, the evaporator blow temperature is detected and the compressor ON / OFF controlled.

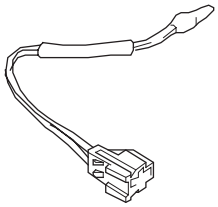

- Evaporator sensor inspection method (specifications value)
  Disconnect the evaporator connector from the main harness and measure the resistance between the sensor side connector terminals using the tester.

Resistance between terminals	When the sensor section detection temperature is 0 °C	: 7.2 kΩ
	When the sensor section detection temperature is 25 ° C	: 2.2 kΩ

Dual Pressure Switch

- The dual pressure switch is installed on the receiver drier. When there is pressure trouble in the coolant high-pressure side line (abnormally high pressure or abnormally low pressure), the dual pressure switch contacts open up to cut off the compressor power and protect the cooling cycle.

Dual pressure switch specifications

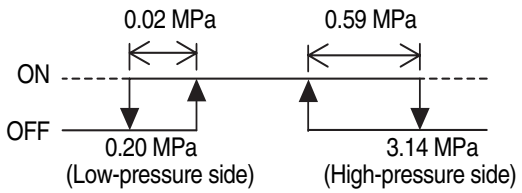

- Simple inspection method for dual pressure switch

[1] With the cooling cycle stopped, disconnect the connector from the switch and check the conductance between the switch side connector terminals using the tester.If there is conductance, the switch is normal.(When the outside air temperature is 0 C or higher)

[2] Connect the gauge manifold high-pressure side hose to the high-pressure side charge port. With the cooling cycle operating, the condenser front surface is covered with the plate top and the high-pressure rises.If the compressor stops around 3.14 MPa, the switch is normal.

[3] With the coolant removed, check the conductance between the switch side connector terminals using the tester.If there is no conductance, the switch is normal.

Solar Radiation Sensor

This is the air conditioner solar radiation correct sensor. It detects the strength of sunlight with a photodiode, converts it into current and sends that to the control panel.

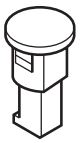

- Solar radiation sensor inspection method
  Disconnect the solar radiation sensor connector from the harness and measure the resistance between the sensor side connector terminals using the tester's voltage measurement mode.
  The voltage must be different when light is striking the photoreceiver section and when it is not.(The voltage is 0 V when absolutely no light is striking the photoreceiver.)

Caution

Always measure with the tester in voltage measurement mode (V mode).

Measuring with the tester in resistance mode (mode) would destroy the sensor.

https://truckmanualshub.com/

Performance Evaluation Check Sheet

√ = Confirmation, S = Measurement, A = Adjustment

Inspection Item	Confirm	Remarks
Fluid/Oil Level Inspection		
1. Radiator fluid level		
2. Engine oil level		
3. Hydraulic oil level		
Brake-in Operation Inspection		
1. Engine start/stop		
2. Air bleeding		
3. Individual operation		
4. Oil leakage		
Hydraulic Oil Contamination Inspection		
Electrical System Inspection		
1. Machine type choice		
2. Monitor display		
3. Mode change functions		
4. One-touch/Auto idle function		
5. Lever lock function		
6. Swing brake function		
7. 2-speed travel function		
8. Swing lock function		
9. Travel alarm function		
10. Power shut-off delay function		
11. Accessories operation		
(1) Radio		
(2) Air conditioner		
(3) Windshield wiperblades		
(4) Vehicle horn		
(5) Working light		
(6) Interior lights		
(7) Clock		
(8) Hour meter		
(9) Backup lights		

Inspection Item	Confirm	Remarks
Engine inspection		
1. Engine speed Idling min^{-1} Maximum with no load min^{-1}		
2. Conditions of engine rotation (1) When idling (2) Without load		(As required)
3. Engine exhaust hue		
4. Engine sound and vibration		
5. Engine stop (1) Turning OFF the key switch (2) Emergency stop switch		
Hydraulic Equipment Inspection		
1. Pressure of each component (refer to separate sheet)		
2. Abnormal sounds of each part		
3. Natural lowering level of each cylinder (refer to separate sheet)		
4. Operation speed of each cylinder (refer to separate sheet)		
5. Swing speed (refer to separate sheet)		(As required)
6. Swing brake performance (refer to separate sheet)		
7. Condition and sound of swing motions		
8. Travel speed (refer to separate sheet)		
9. Turns		
10. Condition and sound of travelling		
Operation Inspection		
1. Operation condition of each lever		
Shoe Tension		
Others		
1. Oil leaks at each part		
2. Oil leaks at rubber hoses or piping		
3. Looseness or fall off of bolts and nuts		
4. Cab inspection		
5. Cylinder inspection		

H

https://truckmanualshub.com/

New Machine Performance

Performance Evaluation Recording Sheet

Model of Machine:		Model Number:			Evaluation Date (mm/dd/yy)		Evaluated by	
Hour Meter:		Attachment Arm m^3 Bucket			Remarks			
1	Engine speed	Idling speed			min^{-1}			
		Maximum engine speed without load			min^{-1}			
2	Pressure check of each component (Evaluate as required)	Relief Name		Operation	Measured pressure			
		Main relief		Standard	MPa			
				Boosting	MPa			
		Swing relief		Left/Right	MPa			
		Pilot relief		-	MPa			
	For measurement and adjustment methods, refer to procedures for hydraulic oil pressure measurement and adjustment in Service Manual.							
3	Drift for each cylinder (10 minutes)	Boom cylinder			mm			
		Arm cylinder			mm			
		Bucket cylinder (when open)			mm			
		Overall (10 minutes)			mm			
4	Operation speed for each cylinder (sec)			1st Reading	2nd Reading	3rd Reading	Total	Average
		Boom	Up					
			Down					
		Arm	Out					
			In					
		Bucket	Open					
			Closed					
5	Swing speed (sec/1 revolution)			1st Reading	2nd Reading	3rd Reading	Total	Average
		Swing Left						
		Swing Right						
6	Swing angle 180×, neutral brake flow angle (degrees)			1st Reading	2nd Reading	3rd Reading	Total	Average
7	Travel speed (sec/6 m)			1st Reading	2nd Reading	3rd Reading	Total	Average
			Forward					
			Reverse					
8	Number of drive sprocket revolutions (sec/10 revolutions)			1st Reading	2nd Reading	3rd Reading	Total	Average
			Front low					
			Back low					
			Front high					
			Back high					
9	Degree of turntable bearing shift		Horizontal		mm			
			Vertical		mm			
10	Amount of shoe tension ranging from the bottom side frame to shoe surface				mm			
11	Travel devition spec.				mm			
12	Travel motor drain flows				L/min			
13	Swing motor drain flows				L/min			
14	Backlash at bucket tiptoe				mm			

https://truckmanualshub.com/

Reference Values(SH210-5)

SP mode (With SUMITOMO Bucket)

Item				Unit	Reference values
1	Engine speed	Idling		min^{-1}	1000 ± 10
		Maximum without load	A mode		1600 ± 10
		Maximum without load	H mode		1700 ± 10
		Maximum without load	SP mode		1800 ± 10
2	Pressure of each part	Main relief	Standard	Mpa	34.3 ± 2.0
			Boosting		37.1 ± 2.0
		Boom relief	Up		39.2 ± 2.0
			Down		33.0 ± 2.0
		Arm relief	Out		40.0 ± 2.0
			In		
		Bucket relief	Open		40.0 ± 2.0
			Close		41.0 ± 2.0
		Swing relief	Left/Right		30.8 ± 2.0
		Travel relief	Travel		34.3 ± 2.0
		4th pump relief			20.6 ± 0.5
		Pilot relief			3.9 ± 1.0
		Option relief	For crusher		
			For Braker		
3	Attachment draft no load for 10 minutes	Boom cylinder		mm	5 below
		Arm cylinder			12 below
		Bucket cylinder			13 below
		Attachment drift			250 below
4	Attachment speed	Boom (Bucket open)	Up (stroke 790)	sec	3.4 ± 0.6
			Down (stroke 790)		2.3 ± 0.6
		Arm	Out		2.7 ± 0.6
			In		3.4 ± 0.6
		Bucket	Open		2.2 ± 0.6
			Close		2.5 ± 0.6

H

https://truckmanualshub.com/

New Machine Performance

SP mode (With SUMITOMO Bucket)

Item				Unit	Reference values
5	Swing speeds (second/1 rev.)		Left/Right	sec	5.1 ± 0.6
6	Swing neutral brake flow angle (180 °)		Left/Right	deg	50 ° below
7	Swing motor drain flows			L/min	10
8	Travel speeds (at 6 m)	Forward/Backward	High speed	sec/6 m	3.8 ± 0.6
				km/h	5.7 ± 0.6
			Low speed	sec/6 m	6.4 ± 0.6
				km/h	3.4 ± 0.4
9	Travel sprocket rev. (second/10 rev.)		High speed	sec	12.7 ± 2
			Low speed		20.7 ± 2
10	Travel devition spec. (at 20 m)	Forward/Backward	High speed	mm	1000 below
			Low speed		
11	Shoe tension adjustment			mm	290 to 310
12	Travel motor drain flows			L/min	15
13	Turntable bearing		Up/Down	mm	1.1 below
			Left/Right		3.8 below
14	Back lash at Bucket tiptoe		Left/Right	mm	61 below
15	Recoil spring specification		Compressed length	mm	556
			Free length		636
16	Coil resistance for all sole-noids at 20 degree		Travel high speed	Ω	40
			2-stage relief		
			Swing brake		
			Lever lock		
			Power save		
17	Proportional valve mill-amps	No load	SP mode	mA	586 ± 20
			H mode		570 ± 20
			A mode		570 ± 20
		2 relief	SP mode		600 ± 20
			H mode		600 ± 20
			A mode		600 ± 20

https://truckmanualshub.com/

Reference Values(SH240-5)

SP mode (With SUMITOMO Bucket)

Item				Unit	Reference values
1	Engine speed	Idling		min^{-1}	1000 ± 20
		Maximum without load	A mode		1800 ± 20
		Maximum without load	H mode		1900 ± 20
		Maximum without load	SP mode		2000 ± 20
2	Pressure of each part	Main relief	Standard	Mpa	34.3 ± 2.0
			Boosting		36.8 ± 2.0
		Boom relief	Up		40.0 ± 2.0
			Down		36.0 ± 2.0
		Arm relief	Out		40.0 ± 2.0
			In		
		Bucket relief	Open		40.0 ± 2.0
			Close		41.0 ± 2.0
		Swing relief	Left/Right		32.3 ± 2.0
		Travel relief	Travel		34.3 ± 2.0
		4th pump relief			20.6 ± 0.5
		Pilot relief			3.9 ± 1.0
		Option relief	For crusher		
			For Braker		
3	Attachment draft no load for 10 minutes	Boom cylinder		mm	5 below
		Arm cylinder			13 below
		Bucket cylinder			12 below
		Attachment drift			200 below
4	Attachment speed	Boom (Bucket open)	Up (stroke 790)	sec	3.3 ± 0.6
			Down (stroke 790)		3.1 ± 0.6
		Arm	Out		2.9 ± 0.6
			In		3.7 ± 0.6
		Bucket	Open		2.5 ± 0.6
			Close		2.9 ± 0.6

H

https://truckmanualshub.com/

New Machine Performance

SP mode (With SUMITOMO Bucket)

Item				Unit	Reference values
5	Swing speeds (second/1 rev.)		Left/Right	sec	5.6 ± 0.6
6	Swing,neutral brake flow angle (180 °)		Left/Right	deg	50 ° below
7	Swing motor drain flows			L/min	10
8	Travel speeds (at 6 m)	Forward/Backward	High speed	sec/6 m	3.9 ± 0.6
				km/h	5.5 ± 0.6
			Low speed	sec/6 m	6.2 ± 1.2
				km/h	3.5 ± 0.6
9	Travel sprocket rev. (second/10 rev.)		High speed	sec	13.0 ± 1.2
			Low speed		20.5 ± 3.6
10	Travel devition spec. (at 20 m)	Forward/Backward	High speed	mm	1000 below
			Low speed		
11	Shoe tension adjustment			mm	290 to 310
12	Travel motor drain flows			L/min	15
13	Turntable bearing		Up/Down	mm	1.0 below
			Left/Right		4.6 below
14	Back lash at Bucket tiptoe		Left/Right	mm	73 below
15	Recoil spring specification		Compressed length	mm	556
			Free length		636
16	Coil resistance for all sole-noids at 20 degree		Travel high speed	Ω	40
			2-stage relief		
			Swing brake		
			Lever lock		
			Power save		
17	Proportional valve mill-amps	No load	SP mode	mA	586 ± 20
			H mode		570 ± 20
			A mode		570 ± 20
		2 relief	SP mode		600 ± 20
			H mode		600 ± 20
			A mode		600 ± 20

https://truckmanualshub.com/

Procedures for Pressure Measurement from the Monotor Display

Monitor and Switch Panel

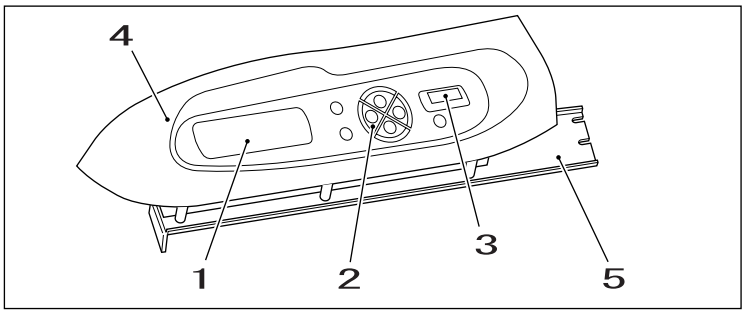

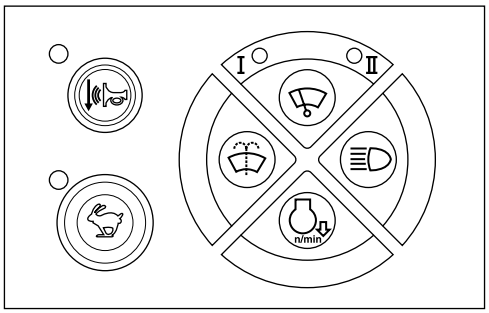

1	Liquid crystal monitor	4	Design panel
2	Switch panel	5	Installation bracket
3	Hour meter		

1. Pressure Measurement Method

   The P1, P2, N1, and N2 pressure can be measured from the monitor display.
   (The pilot pressure cannot be measured.)

2. Operating Method

   [1] If you hold down both the travel mode select switch and the horn volume select switch on the switch panel for 3 seconds, the display switches to the service support screen.

   [2] The respective pressures are displayed in the service support screen's "P1" (P1 pump main pressure), "P2" (P2 pump main pressure, "N1" (N1 negative control pressure, and "N2" (N2 negative control pressure) columns.

   * If you again hold down both the travel mode select switch and the horn volume select switch on the switch panel for 1 second, the display returns to the normal screen.

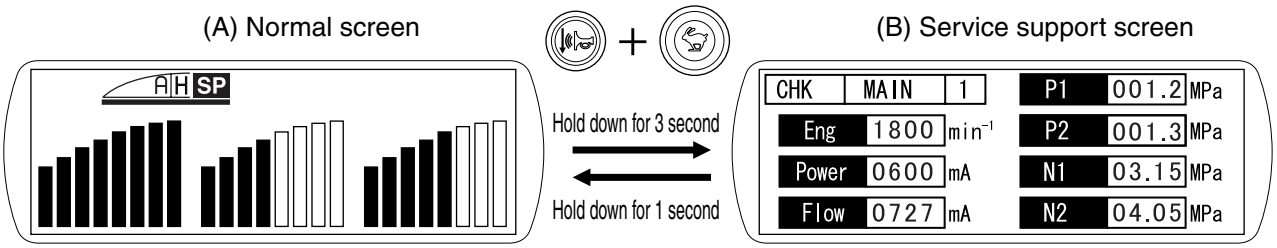

I

https://truckmanualshub.com/

Pressure Measurement and Adjustment Procedures

Procedures for Measuring Hydraulic Oil Temperature from the Monitor Display

1. Hydraulic Oil Temperature Measurement Method

   The hydraulic oil temperature can be measured from the monitor display.

2. Operating Method

   [1] If you hold down both the travel mode select switch and the horn volume select switch on the switch panel for 3 seconds, the display switches to the service support screen.

   [2] With the travel mode select switch (mode select switch), set the mode to "CHK".

   [3] With the horn volume select switch (section switch), set the section "MAIN".

   [4] With the light switch (page +), switch to Page "2".

   [5] The hydraulic oil temperature is displayed in the "Hydoil" column.

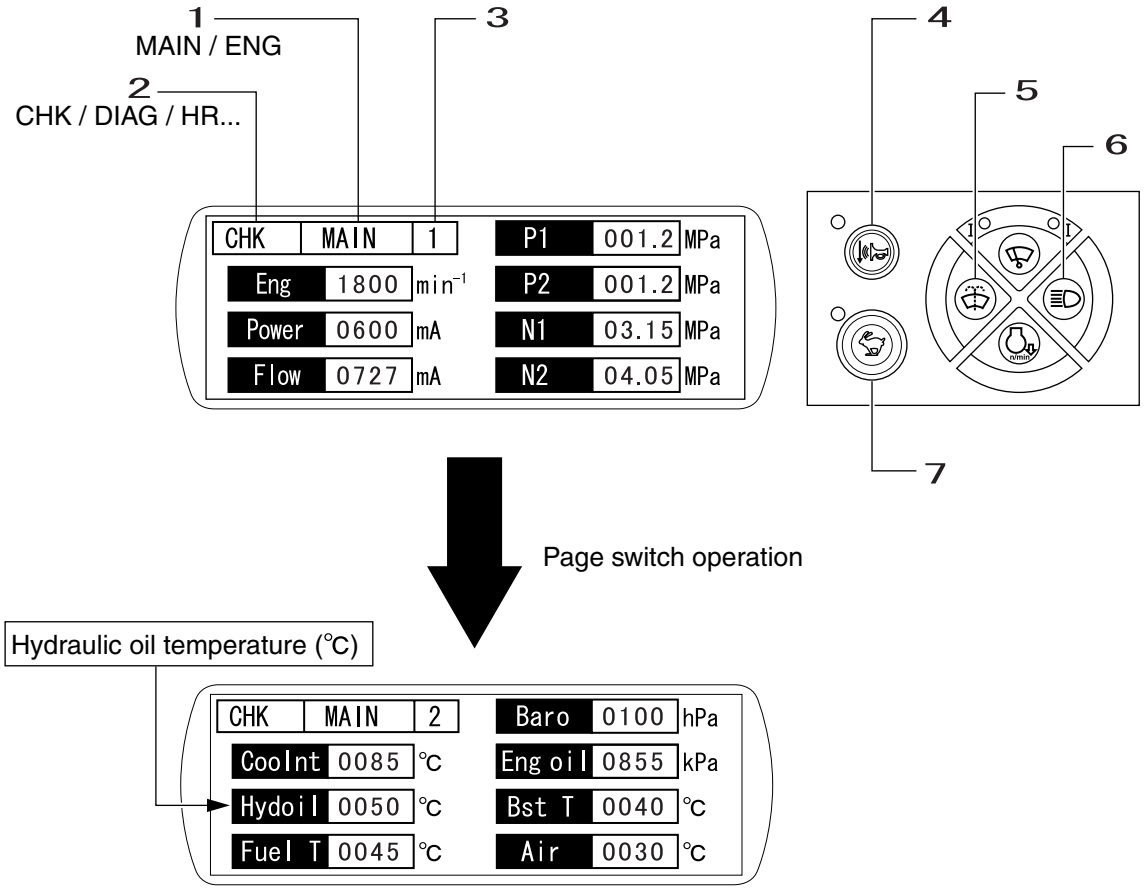

1	Section	5	Page (-)
2	Mode	6	Page (+)
3	Page	7	Mode select switch
4	Section switch		

https://truckmanualshub.com/

Procedures for Pressure Measurement by Installing Pressure Gauge

1. Preparations

Workers 2 Role (Worker 1: Work supervisor, pressure adjustment)

Role (Worker 2: Operator)

2. Items to Prepare

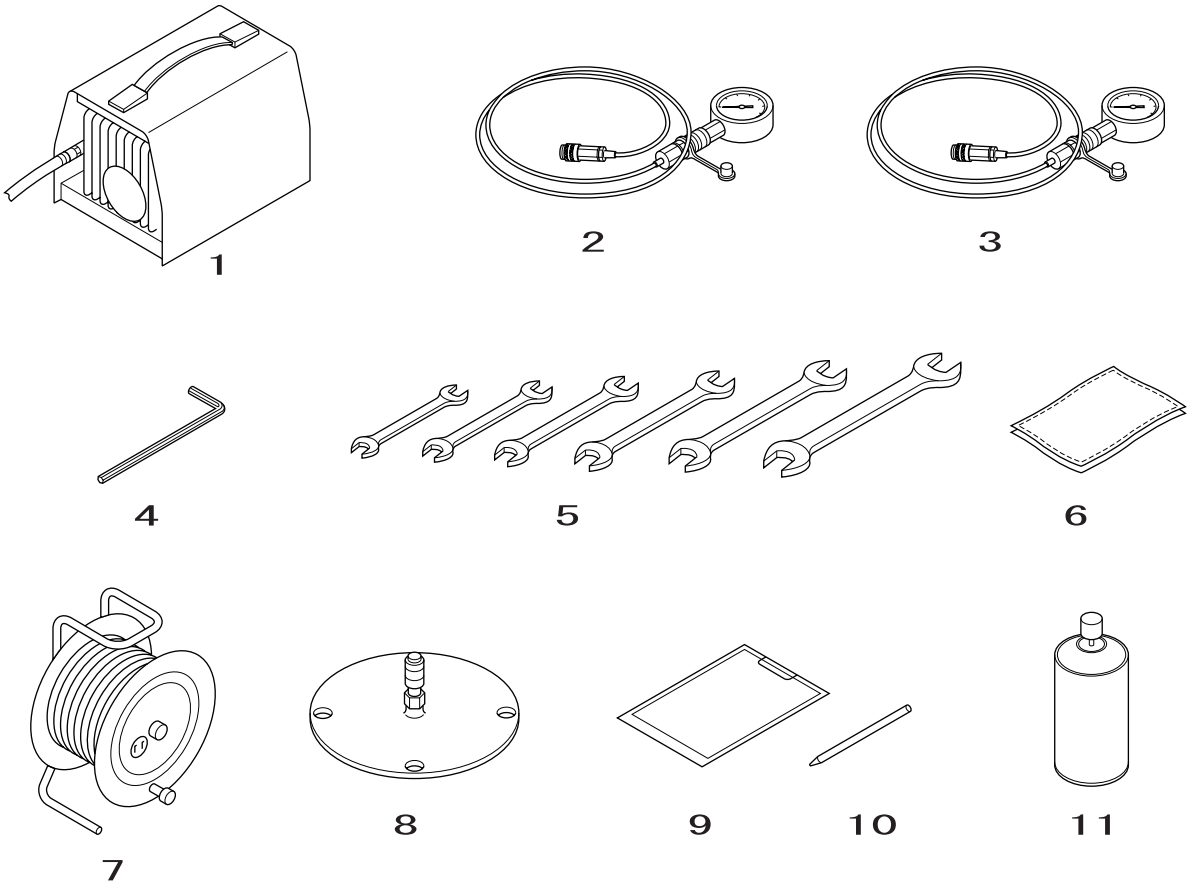

1	Vacuume pump, power supply (for vacuume pump)
2	Pressure gauge (10Mpa X 1)
3	Pressure gauge (60Mpa X 2)
4	Hexagon wrench (8mm, 6 mm)
5	Spanners (17, 19, 24, 27 X 2, 32, 36 X 2)
6	Rags
7	Extension cable
8	Hydraulic oil tank lid (vacuume pump)
9	Recording sheet
10	Pen
11	Cleaning fluid

I

https://truckmanualshub.com/

Pressure Measurement and Adjustment Procedures

Pressure Measuring Ports

There are the following three ports for measuring the pressure.

- Main pressure: pressure ports (P1, P2)
- Negative control pressure: pressure ports (N1, N2)
- Pilot pressure: pressure port (P3)

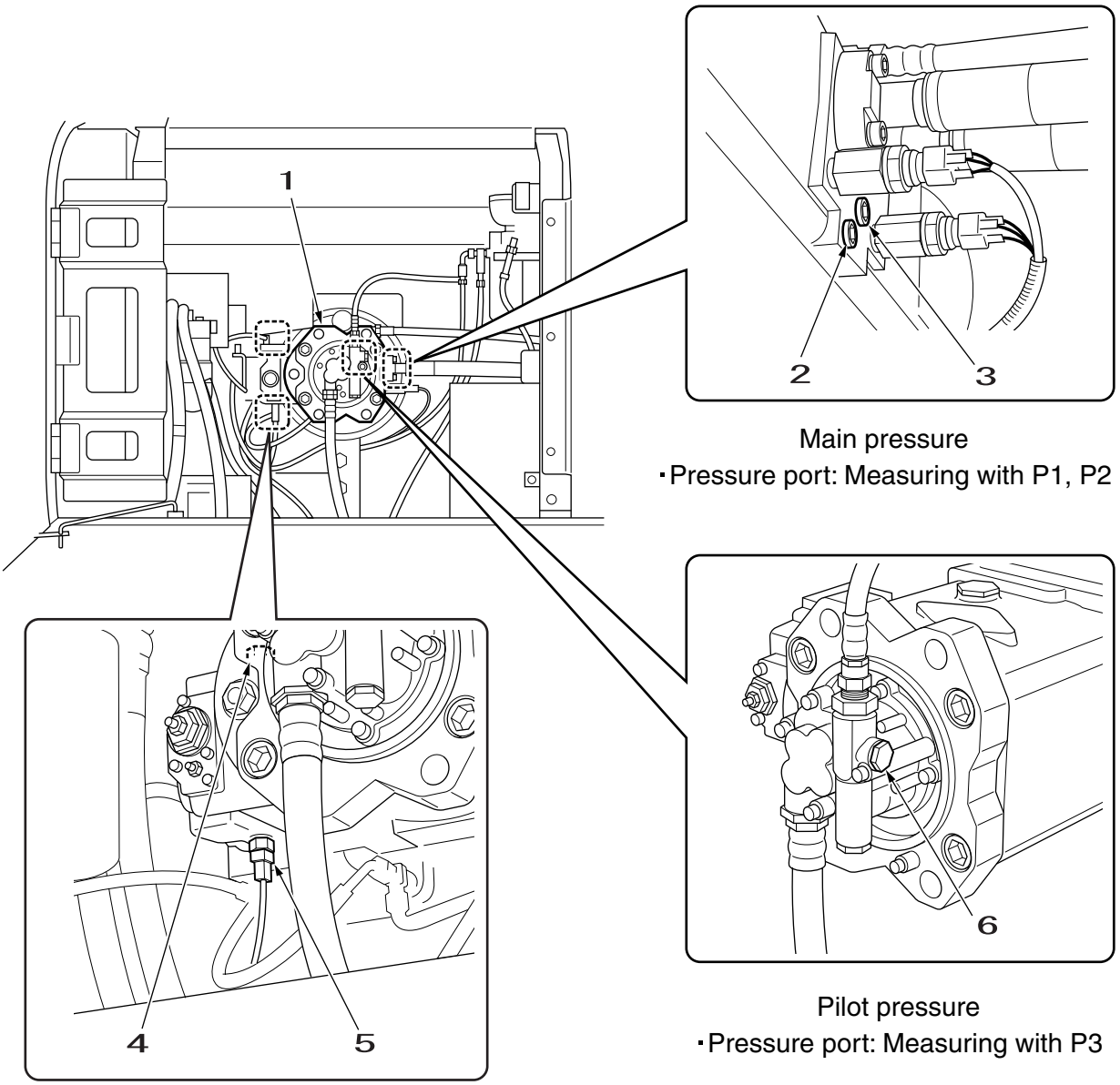

Main pressure
・Pressure port: Measuring with P1, P2

Pilot pressure
・Pressure port: Measuring with P3

Negative control pressure
・Pressure port: Measuring with N1, N2
(Remove the negative control pressure sensor, then Install the pressure gauge.)

1	Pump	4	Pressure port: N1
2	Pressure port: P2	5	Pressure port: N2
3	Pressure port: P1	6	Pressure port: P3

https://truckmanualshub.com/

Control Valve

1. Location of Relief Valves

Position			Tools		Set pressure (MPa)	Pressure per rotation of adjusting screw (MPa)	Measuring port
			Lock nut	Adjusting screw	Lock nut		
①	a	Main (normal use)	Hexagon diagonal 27 mm	Hexagon diagonal 27 mm	34.3	21.3	Monitor P1
①	b	Main (boosted pressure)	Hexagon diagonal 32 mm	Hexagon diagonal 27 mm	36.8	28.4	Monitor P1
②		Boom-up	Hexagon diagonal 17 mm	Hexagon diagonal 6 mm	38.7	21.2	Monitor P2
③		Boom-down			29.4	21.2	Monitor P2
④		Arm-in			38.7	21.2	Monitor P1
⑤		Arm-out			38.7	21.2	Monitor P1
⑥		Bucket-close			38.7	21.2	Monitor P2
⑦		Bucket-open			38.7	21.2	Monitor P2
⑧		Pilot	Hexagon diagonal 24 mm		3.92	2.0	

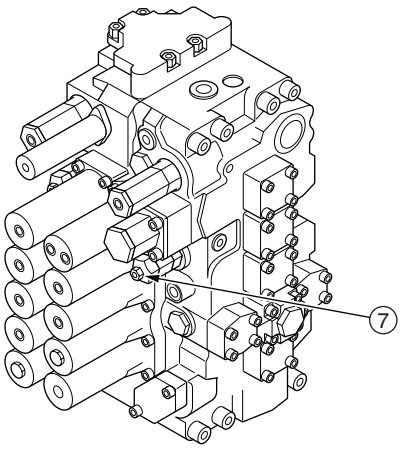

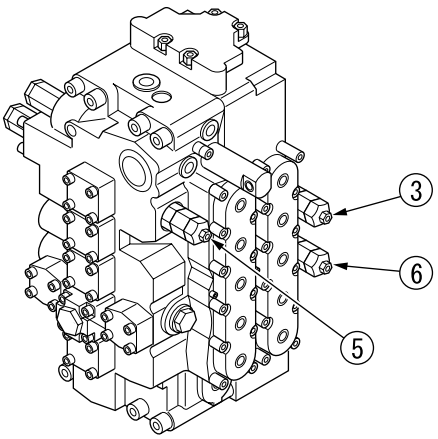

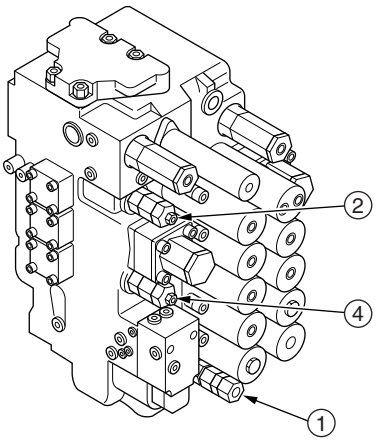

Main relief valve adjustment location details

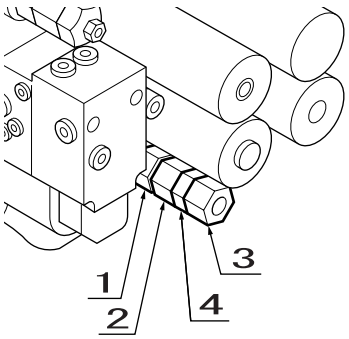

1	Boosted pressure lock nut
2	Boosted pressure adjusting screw
3	Standard pressure adjusting screw
4	Standard pressure lock nut

https://truckmanualshub.com/

Pressure Measurement and Adjustment Procedures

Pressure Measurement Preparations

[1] Items to prepare

1) Pressure gauge — For 10 MPa (for pilot and negative control pressure measurement)
For 60 MPa
(for main pressure measurement)

2) Tools — Spanner (closed wrench) 17 mm
Hexagon wrench 6 mm

3) Others — Rags
Cleaning fluid

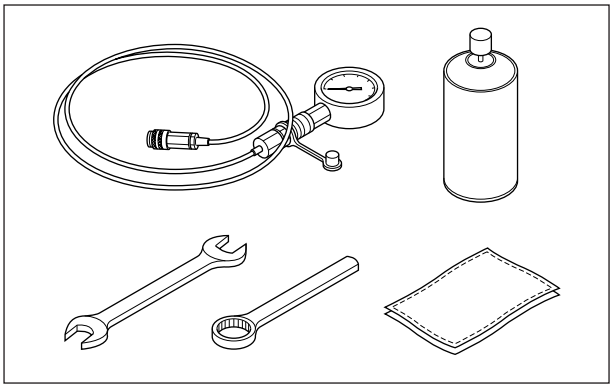

[2] Monitor check
Use the service check to check the no load engine maximum speed and the SP mode pump input current.

Engine MAX	SP mode current
1800 min^{-1}	600 mA (operating)

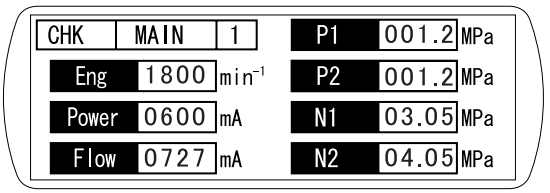

[3] Main unit installation
Put the main unit on solid, level ground, put the bucket cylinder at its open stroke end, the arm cylinder at its out stroke end, lower the boom, and touch the arm top to the ground.

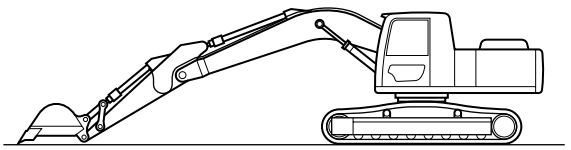

[4] Ignition key
Switch OFF the ignition key, check that the engine has stopped, then switch the ignition key ON again. (Do not start the engine.)

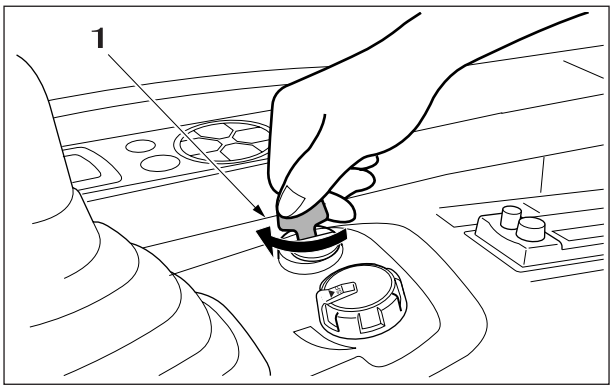

1	Ignition key

https://truckmanualshub.com/

[5] Oil temperature check
Use the service check to check the hydraulic oil temperature.

Oil temperature	45 to 55°C

If the oil temperature is low, raise the oil temperature according to the warm-up operation procedure in the operator's manual.

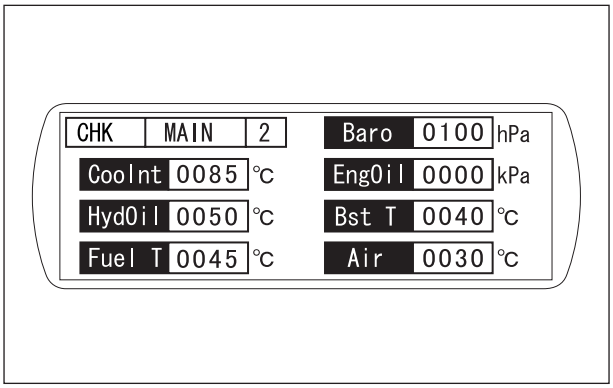

[6] Bleeding pressure from inside circuits
Flip the lever forward, then turn the upper side operation lever about 10 times to bleed out the pressure.

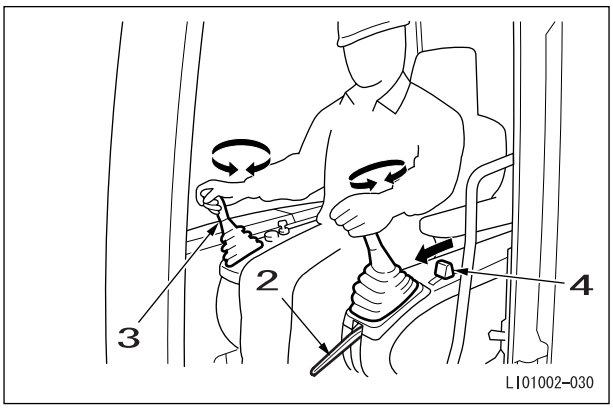

Move the travel lever back and forth about five times to bleed out the pressure.

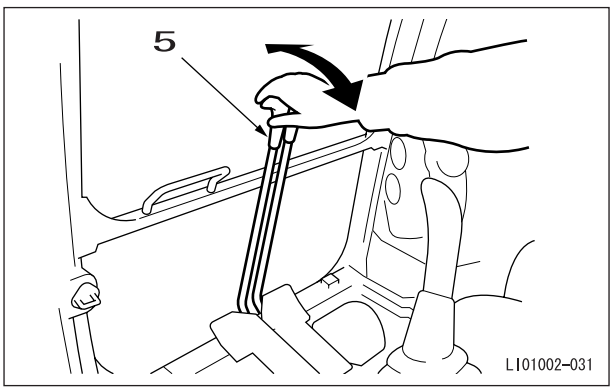

[7] Bleeding pressure from inside the hydraulic oil tank
Press the air breather button on top of the hydraulic oil tank to release the pressure inside the tank.

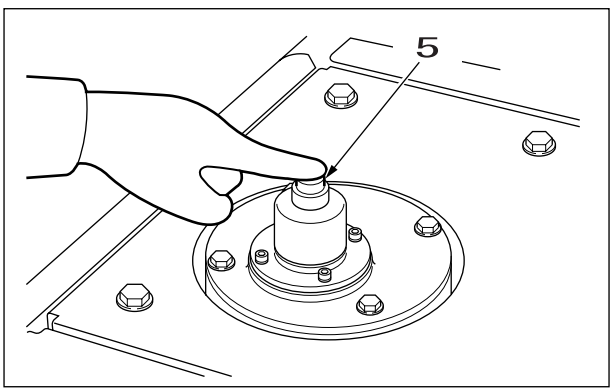

2	Lever
3	Upper side operation lever
4	Travel lever
5	Air breather button

https://truckmanualshub.com/

[8] Side door opening and closing
Open the side door. At this time, be sure to lock.

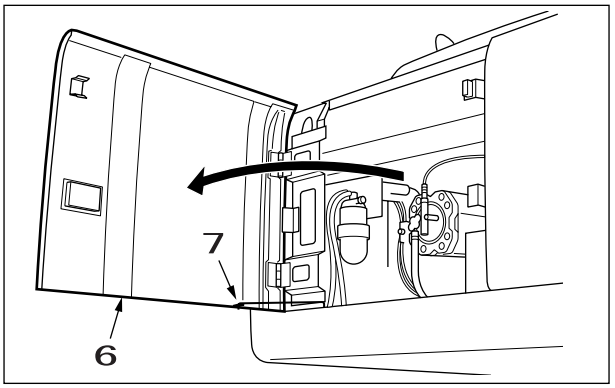

This completes the preparations.

6	Side door
7	Lock

https://truckmanualshub.com/

Pressure Measurement and Adjustment Procedures

1. Main Pressure Measurement

[1] Pressure gauge installation

Install pressure gauges at the pump pressure measuring ports.
(Pressure ports: P1 / P2)

P1: Can be measured	P2: Can be measured
Travel left	Travel right
Option	Bucket
Swing	Boom 1
Boom 2	Arm 2
Arm 1	

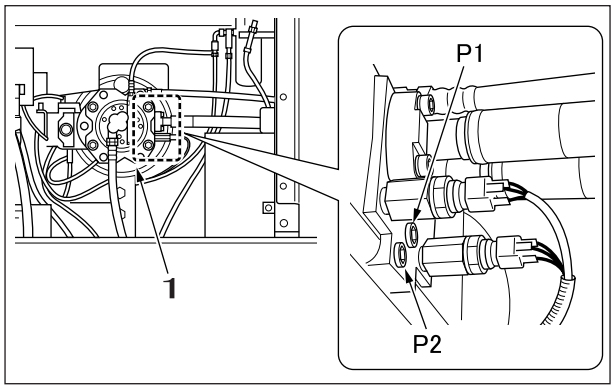

Use a hexagon wrench (8 mm) to remove the caps.

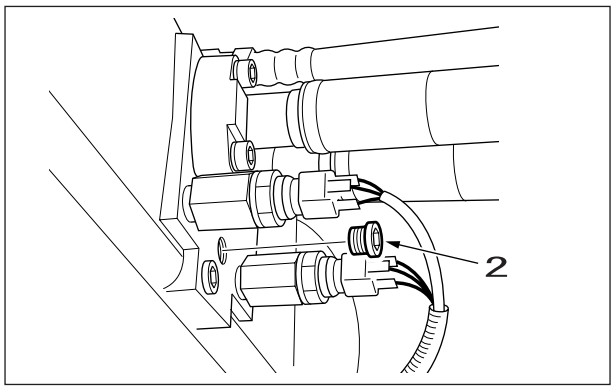

Install adapters where the caps were removed.

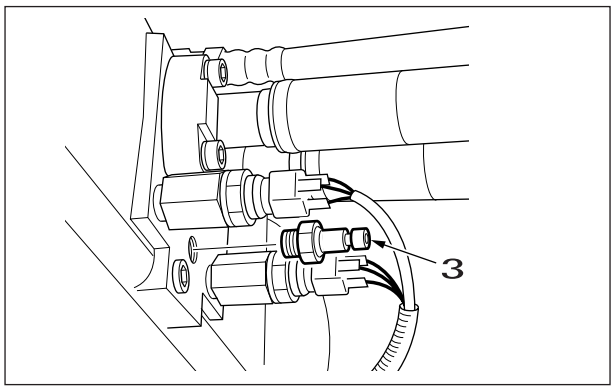

1	Pump
2	Cap
3	Adapter

I

https://truckmanualshub.com/

Install pressure gauges on the adaptors and fasten.

Pressure gauge for 60 MPa
Port size G1 / 4

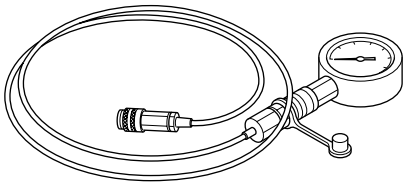

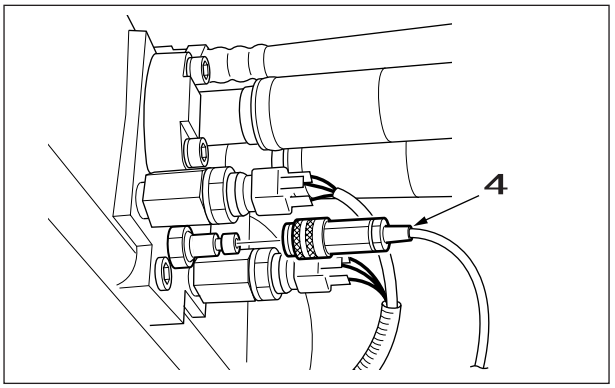

4	Pressure garge

(1) Attachment pressure measurement

Example: Arm-out pressure measurement
Measure with the following operations.

Engine speed	1800 min^{-1}
Work mode	SP mode
Lever operation	Arm-out relief
Oil temperature	45 to 55°C
Measuring port	1st speed: P1 port
	2nd speed: P2 port
Set pressure	Boosted pressure: 36.8 MPa
	Standard: 34.3 MPa

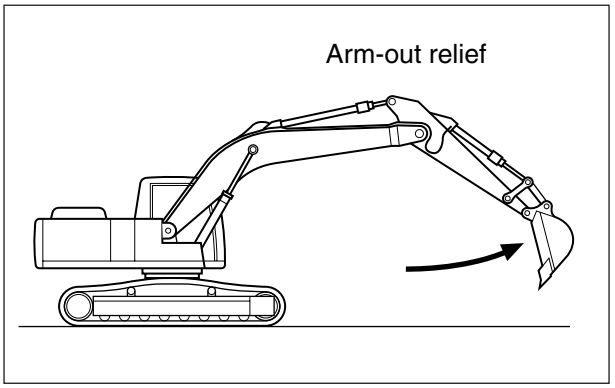

When the attachment operates, since the pressure boost operates automatically, you can check the set boosted pressure for about 8 seconds.After 8 seconds or more, you can check the standard set pressure.
Measure relieving each cylinder with the arm-out and in, the bucket-open and closed, and the boom-up.

Lever operation	Arm-out	Arm-in	Bucket-open	Bucket-close	Boom-up	Boom-down
Engine speed	1800 min^{-1}					
Work mode	SP mode					
Oil temperature	45 to 55°C					
1st speed measuring port	P1	P1	P2	P2	P2	P2
2nd speed measuring port	P2	P2	None	None	P1	P1
Boosted pressure	36.8 MPa	36.8 MPa	36.8 MPa	36.8 MPa	36.8 MPa	29.4 MPa
Standard pressure	34.3 MPa	34.3 MPa	34.3 MPa	34.3 MPa	34.3 MPa	29.4 MPa

Pressure measurement with boom-down

For pressure measurement with the boom-down, put the arm cylinder at its out stroke end, open the bucket, put the bucket tip on the ground, carry out the boom-down operation, and measure.

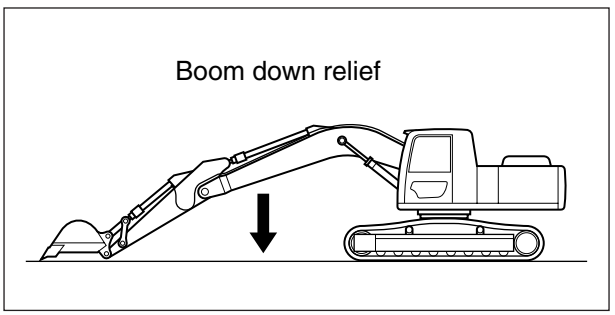

https://truckmanualshub.com/

(2) Travel pressure measurement

[1] Install the stopper on the crawler sprocket section and lock the travel motor.

[2] Measure with the following operations.

Engine speed	1800 min^{-1}
Work mode	SP mode
Lever operation	Travel relief
Oil temperature	45 to 55°C
Measuring port	Left travel: P1 port
	Right travel: P2 port
Set pressure	34.3 MPa

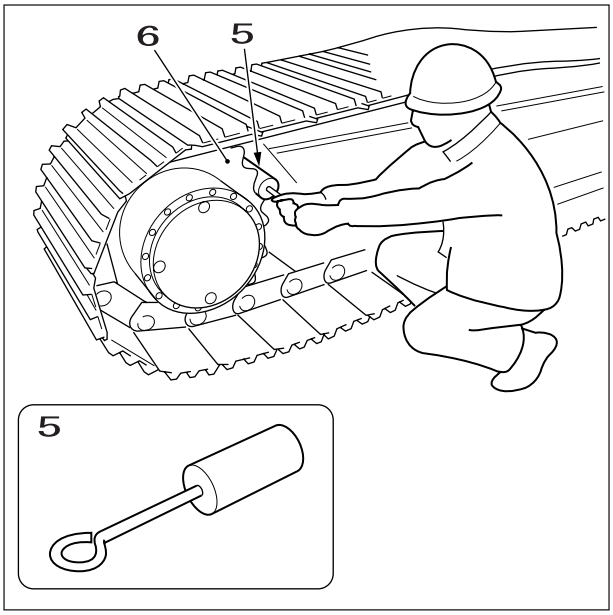

5	Stopper
6	Sprocket

(3) Swing pressure measurement

[1] Set the swing lock with the monitor.

[2] Measure with the following operations.

Engine speed	1800 min^{-1}
Work mode	SP mode
Lever operation	Swing relief
Oil temperature	45 to 55°C
Measuring port	P1 port
Set pressure	29.4 MPa

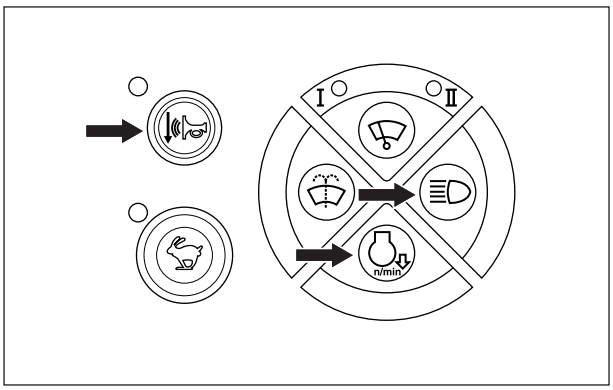

[3] After the end of pressure measurement, release the swing lock with the monitor.

Swing lock switching

In order to prevent accidental operation under certain special circumstances, sometimes the swing brake need to be left ON all the time.(Swing lock) At this time, you can switch the swing lock ON / OFF by holding down the "horn volume select switch", the "working light switch", and the "auto idle switch" at the same time for 2 seconds.When turning the key to ON, always start with the swing lock OFF.(Previous data reset)

https://truckmanualshub.com/

(4) Option Line Pressure Measurement

[1] Close the option line stop valve.

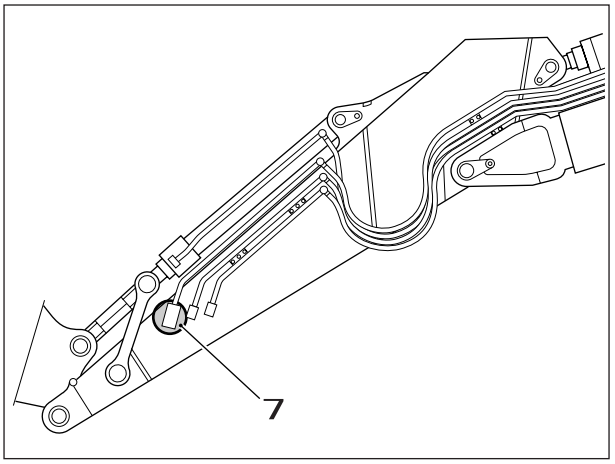

7	Stop valve

[2] With the option operation select switch in the cab, switch to the option line to measure.(Breaker, shuttle)

[3] Measure with the following operations.

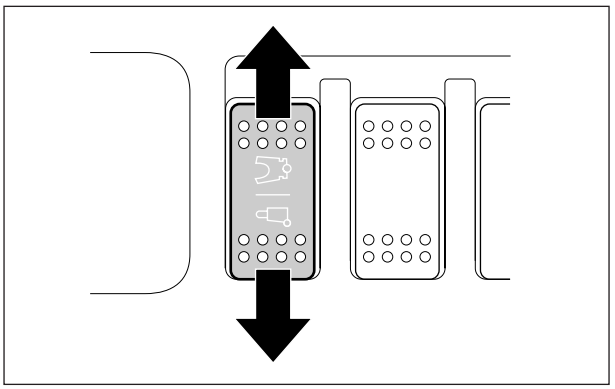

Engine speed	1800 min^{-1}
Work mode	SP mode
Pedal operation	Option relief
Oil temperature	45 to 55°C
Measuring port	1st speed: P2 port
	2nd speed: P1 port
Set pressure	* 29.4 MPa

*Adjust the set pressure to match the specifications of the attachment used.

Factory Pressure Settings

Breaker circuit: 2.94 MPa

Shuttle, combine (crusher) circuit: 17.8 MPa

https://truckmanualshub.com/

2. Pilot Pressure Measurement

(1) Pressure gauge installation

Install a pressure gauge at the pump pressure measuring port. (Pressure port: P3)

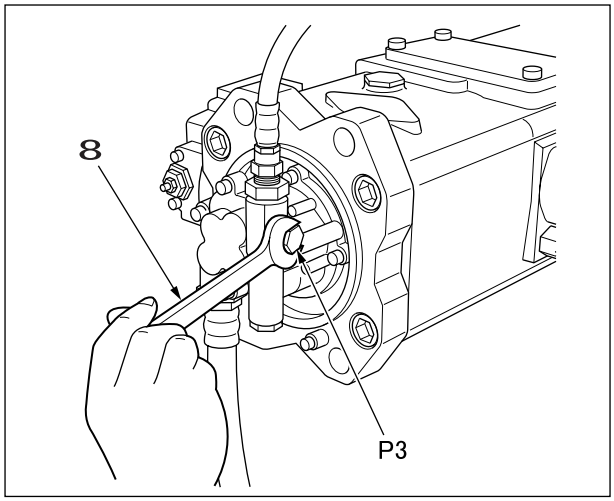

Install the adapter.

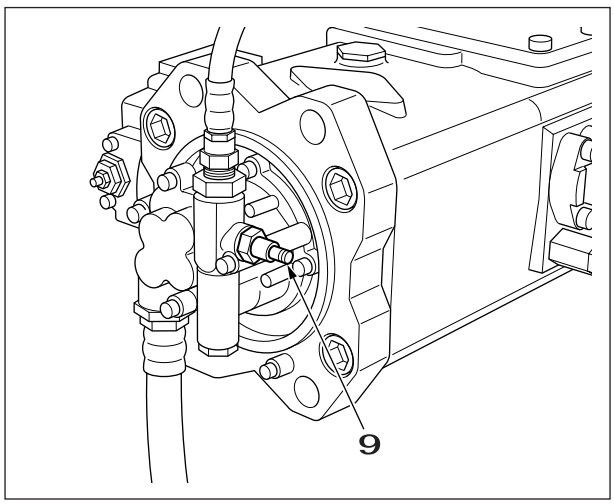

Install the pressure gauge and measure the pressure.

Engine speed	1800 min^{-1}
Work mode	SP mode
Oil temperature	45 to 55°C
Measuring port	P3 port
Set pressure	3.9 MPa

Pressure gauge for 10 MPa
Port size G1 / 4

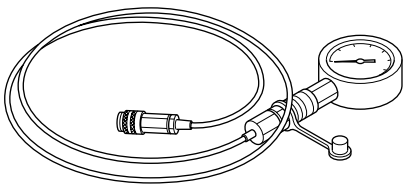

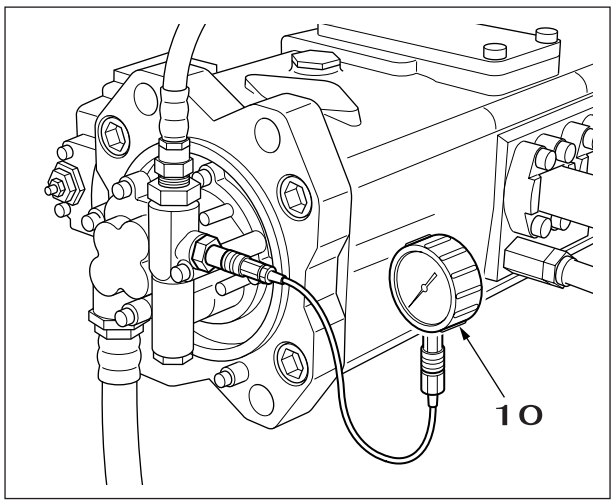

8	Spanner
9	Adapter
10	Pressure gauge

I

https://truckmanualshub.com/

3. Negative Control Pressure Measurement

(1) Pressure gauge installation

Remove the pump N1 or N2 pressure sensor. (The pressure sensor location becomes the measurement point.)

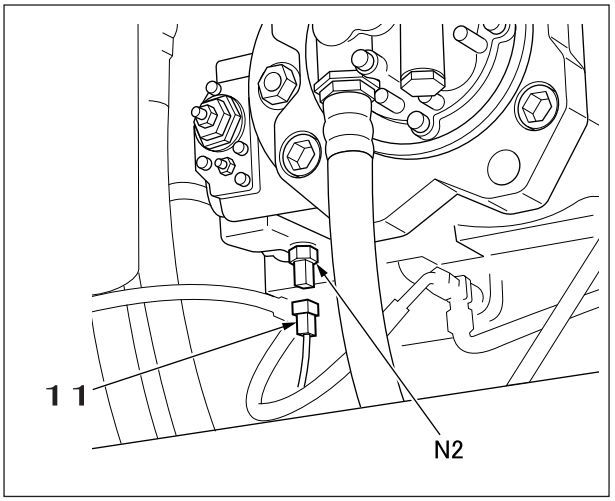

Install the pressure gauge at the port from which the N1 or N2 pressure sensor was removed.

Pressure gauge for 10 MPa
Port size G1 / 4

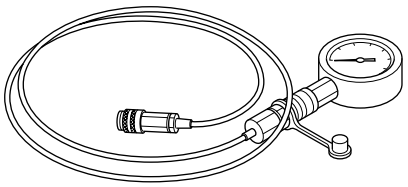

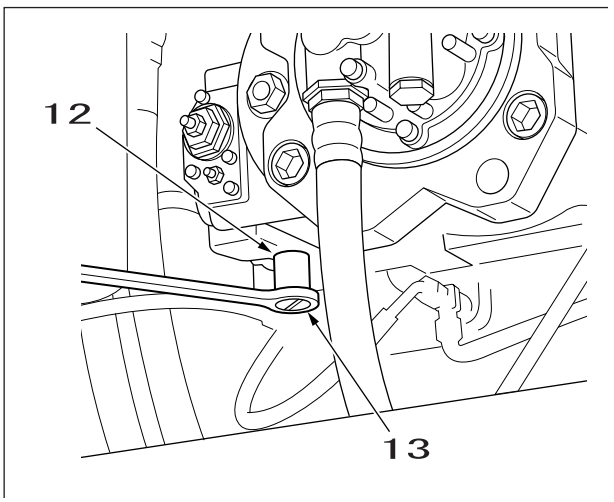

Measure the negative control pressure for each operation.

Engine speed	1800 min^{-1}
Work mode	SP mode
Oil temperature	45 to 55°C
Measuring port	P1 port side: N1 port
	P2 port side: N2 port
Set pressure	3.9 MPa max.

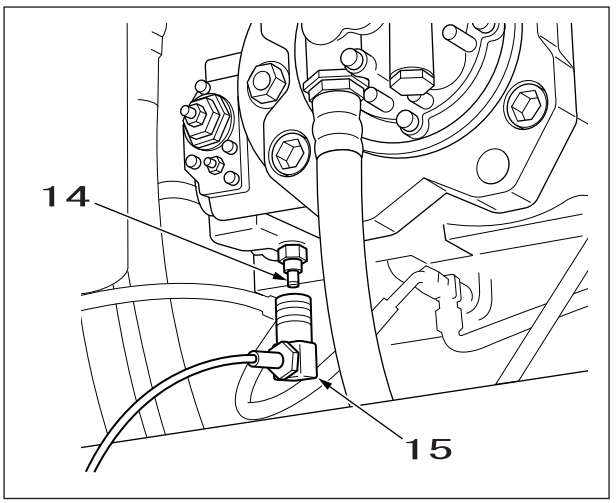

11	Pressure sensor
12	Plug
13	Ratchet
14	Plug
15	Pressure gauge

https://truckmanualshub.com/

Pressure Adjustment

1. Main Pressure Adjustment

Pressure measurement and adjustment preparation work

Pressure is adjusted with control valves.
The following preparations are required for adjusting with control valves.

[1] Engine hood opening and closing
Release the two engine hood lock levers.

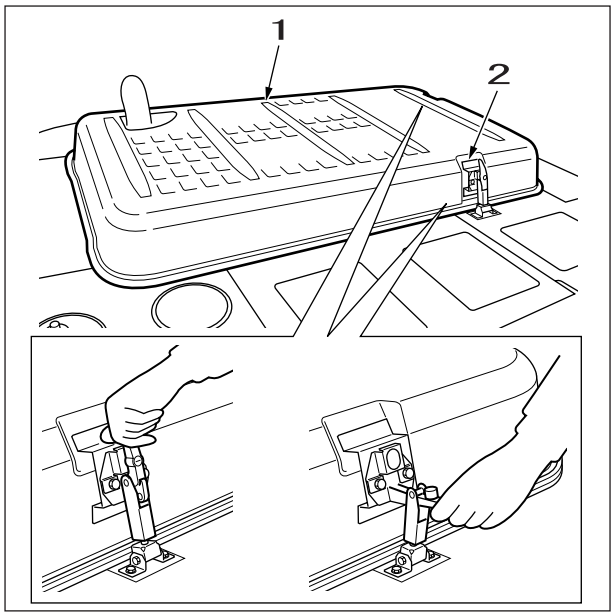

Open the engine hood.
Always check that the lock is locked.

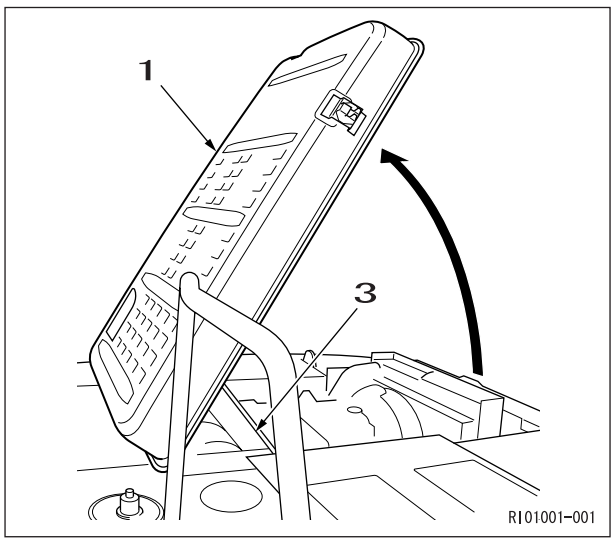

[2] Cover removal
Remove the five screws, then remove the cover.

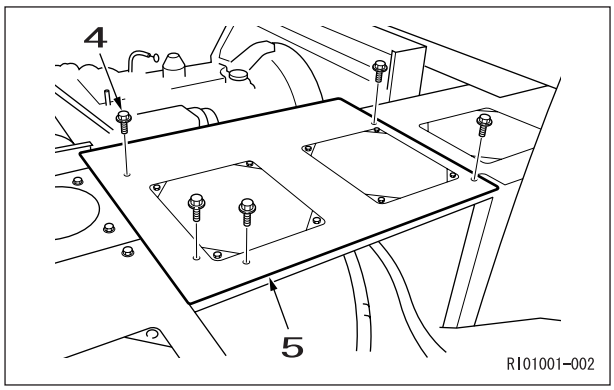

1	Engine hood
2	Lock lever
3	Lock
4	Screw
5	Cover

https://truckmanualshub.com/

(1) Main relief pressure adjustment

Engine speed	1800 min^{-1}
Work mode	SP mode
Lever operation	Arm-in relief
Oil temperature	45 to 55°C
Measuring port	P1 port
Measurement pressure	Boosted pressure: 36.8 MPa
	Standard: 34.3 MPa
Pressure per rotation of adjusting screw	Boosted pressure: 28.4 MPa / rotation
	Standard: 21.3 MPa / rotation

Before adjusting, remove the pilot hose for the boosted pressure signal connected to the main relief valve, then plug the hose side. The procedures for boosted pressure and standard pressure are different.

Boosted pressure

a) Loosen the standard pressure lock nut (27 mm) and tighten the adjusting screw (27 mm).Fasten with a spanner (27 mm) so that the boosted pressure adjusting screw does not turn.
b) After tightening until the adjusting screw stops turning, tighten the lock nut.
c) Start the engine and run it at maximum rotation.
d) Move the arm lever to the in side, set the relief state, and hold.
e) Loosen the boosted pressure lock nut (32 mm) and adjust the set pressure with the adjusting screw (27 mm).
   - When lower than the set pressure, tighten.
   - When higher than the set pressure, first lower below the set pressure, then adjust on the tightening side.
f) After adjustment, fasten the adjusting screw with a spanner (27 mm), then tighten the lock nut.
g) After locking, check the boosted pressure side pressure.
   Repeat a) to f) until the set pressure is correctly adjusted.

Standard pressure

h) Loosen the standard pressure lock nut (27 mm).
i) Loosen the adjusting screw, lower below the set pressure, then adjust on the tightening side.
j) After adjustment, tighten the lock nut while fastening the adjusting screw with a spanner.
k) After locking, check the pressure.
   Repeat h), i), and j) until the set pressure is correctly adjusted.
l) Stop the engine.

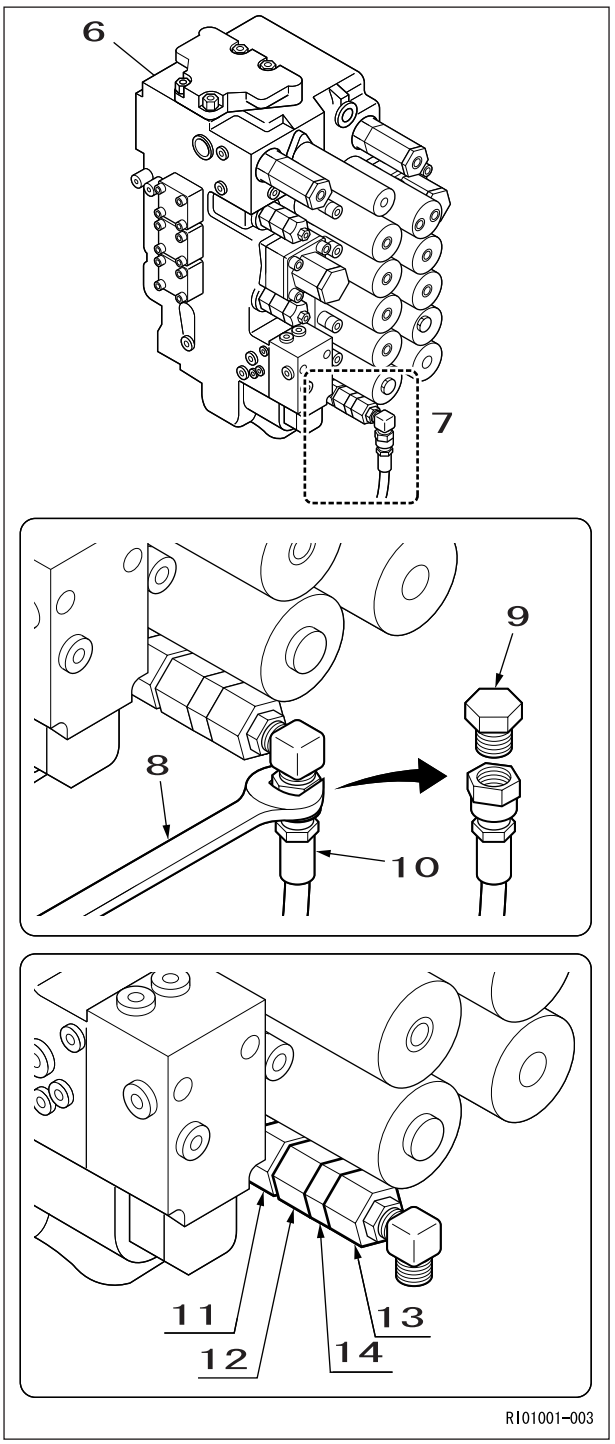

6	Control valve
7	Main relief valve
8	Spanner (19 mm)
9	Plug
10	Pilot hose for the boosted pressure signal
11	Boosted pressure lock nut Spanner size (32 mm)
12	Boosted pressure adjusting screw Spanner size (27 mm)
13	Standard pressure adjusting screw Spanner size (27 mm)
14	Standard pressure lock nut Spanner size (27 mm)

https://truckmanualshub.com/

(2) Overload relief pressure adjustment

Engine speed	1800 min^{-1}
Work mode	SP mode
Oil temperature	45 to 55°C
Measuring port	P1 / P2 port
Measurement pressure	Boom-down: 29.4 MPa
	Others: 38.7 MPa
Pressure per rotation of adjusting screw	Boom-down: 21.2 MPa / rotation
	Others: 38.7 MPa / rotation

Since the overload relief pressure is set higher than the main relief pressure, it is necessary to provisionally set the main relief pressure higher than the overload relief pressure.(Except for boom-down)

Main Relief Pressure Provisional Setting

- Using the main pressure adjustment procedure for reference, temporarily set the boosted pressure and standard pressure to at least 38.7 MPa.
  * For boom-down, since the overload set pressure is lower than the main relief set pressure, there is no need to temporarily set the main relief pressure.

Pressure adjustment

Example: Arm-in overload relief adjustment

[1] Loosen the lock nut and adjust by the turning the adjusting screw.
- When lower than the set pressure, tighten.
- When higher than the set pressure, first loosen to a pressure lower than the set pressure, then adjust on the tightening side.

[2] After adjustment, lock the lock nut.

[3] After adjusting the overload relief pressure, adjust the boosted pressure and standard pressure to their normal values referencing the main pressure adjustment procedure.

* For the position of each overload relief, see the "Control Valve Relief Locations".

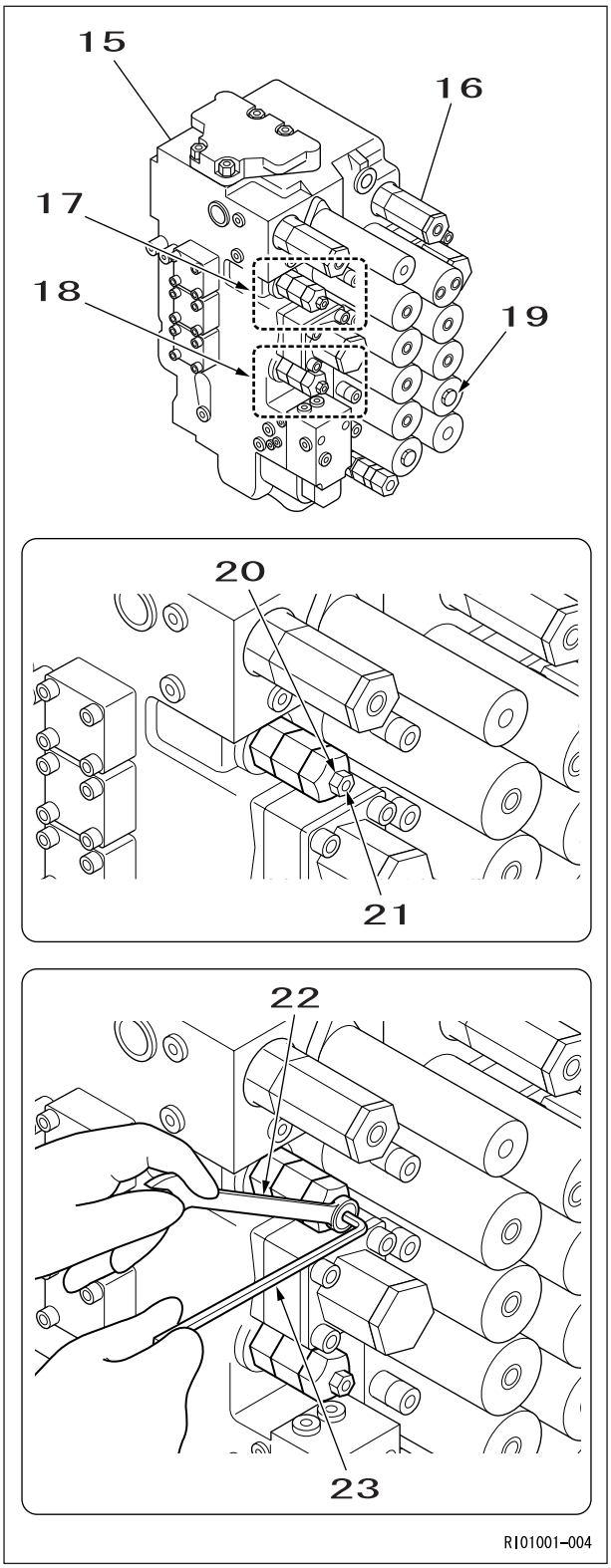

15	Control valve
16	Overload relief
17	Boom-up
18	Arm-in
19	Bucket-open
20	Spanner 17 mm
21	Adjusting screw 6 mm
22	Lock nut 17 mm
23	Hexagon wrench 6 mm

https://truckmanualshub.com/

(3) Swing relief pressure adjustment (SH240-5)

Engine speed	1800 min^{-1}
Work mode	SP mode
Oil temperature	45 to 55°C
Measuring port	P1 port
Measurement pressure	29.4 MPa
Pressure per rotation of adjusting screw	11.6 MPa / rotation

Swing pressure

[1] Using the swing pressure measurement procedure for reference, lock the swing, and check the swing pressure.

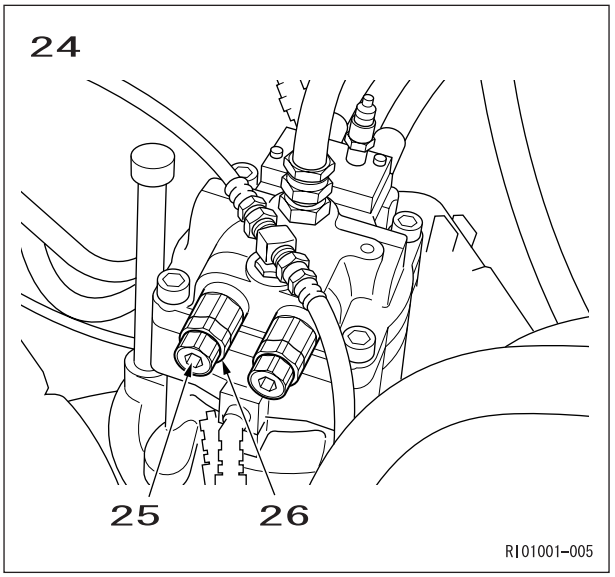

[2] Loosen the lock nut and adjust by the turning the adjusting screw.
- When lower than the set pressure, tighten.
- When higher than the set pressure, first loosen to a pressure lower than the set pressure, then adjust on the tightening side.

[3] After adjustment, lock the lock nut.

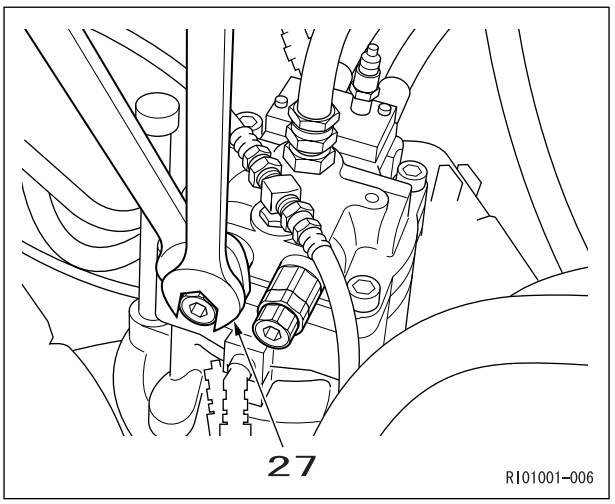

2. Pilot Pressure Adjustment

(1) Pressure measurement

a) Install the pressure gauge.

b) While holding the plug with a spanner (24 mm), adjust with a hexagon wrench (6 mm).

Engine speed	1800 min^{-1}
Lever operation	Neutral
Measuring port	P3
Set pressure	3.9 MPa

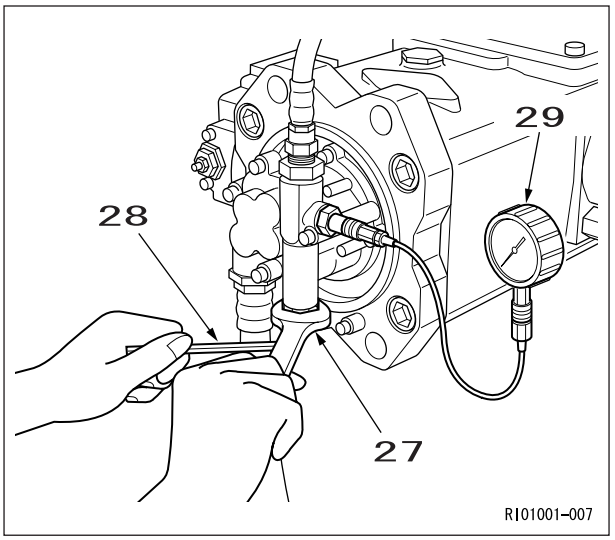

24	Swing relief
25	Adjusting screw Spanner size (24 mm)
26	Lock nut Spanner size (32 mm)
27	Spanner
28	Hexagon wrench
29	Pressure gauge

https://truckmanualshub.com/

Hydraulic Pump Flow Measurement Procedure

Preparations

Workers 3 Role (Worker 1: Work supervisor, pressure adjustment)
Role (Worker 2: Operator)
Role (Worker 3: Flow, pressure measurement, recording)

1. Items to Prepare

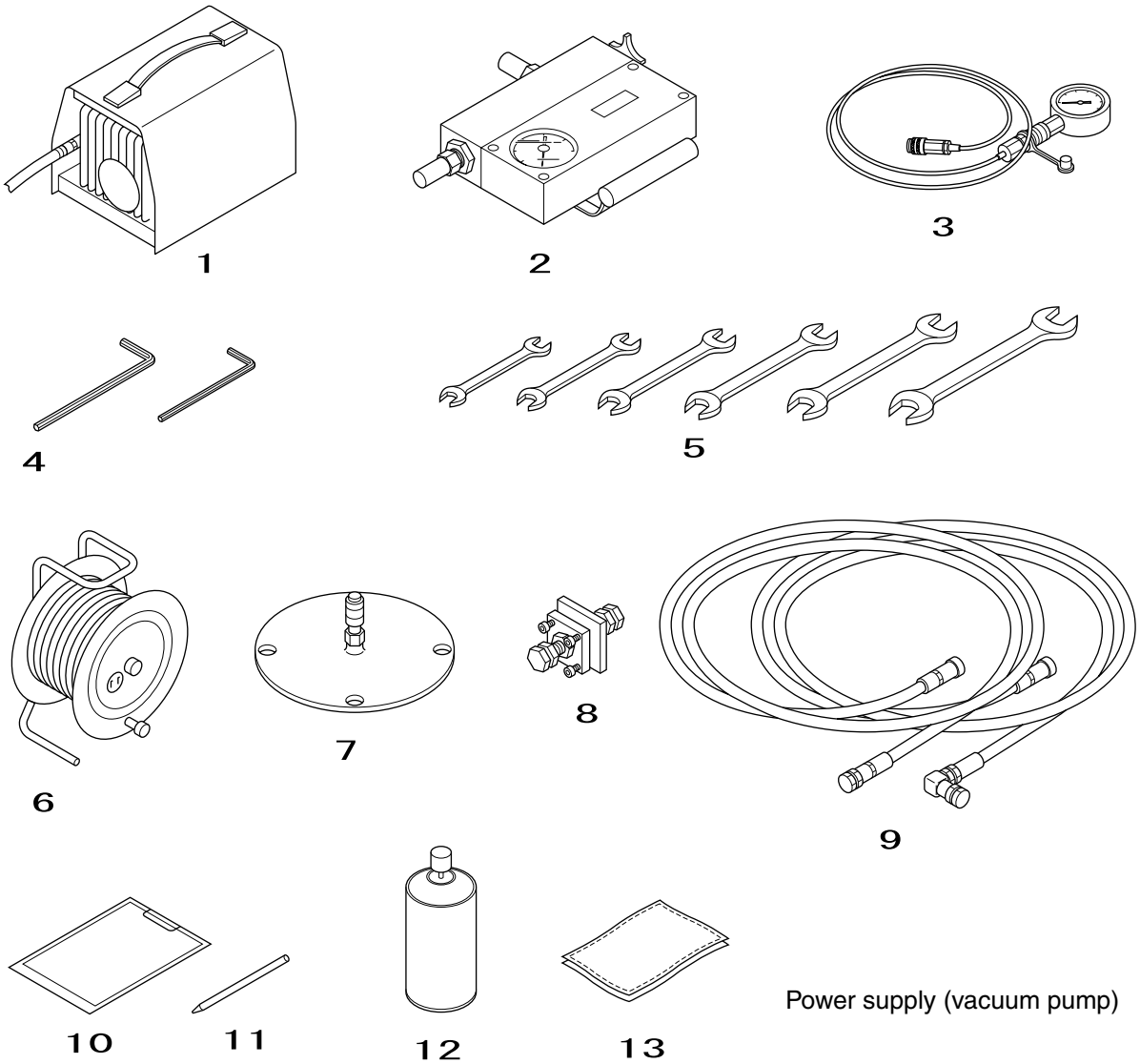

Power supply (vacuum pump)

1	Vacuum pump	8	Adapter (flange type)
2	Flow meter	9	Hydraulic hose (for flow measurement)
3	Pressure gauge (60 MPa X 2)	10	Recording sheet
4	Hexagon wrench (8 mm, 6 mm)	11	Pen
5	Spanners (17, 19, 24, 27 X 2, 32, 36 X 2)	12	Cleaning fluid
6	Extension cord	13	Rags
7	Hydraulic oil tank lid (for vacuum pump)		

https://truckmanualshub.com/

Hydraulic Pump Flow Measurement Procedure

Work Preparations

[1] Check that the main unit is in its work posture (arm-vertical).

[2] Bleed out the pressure.(See the details on Bleeding Pressure in the Pressure Measurement and Adjustment Procedures.)
* Check the swing stop.

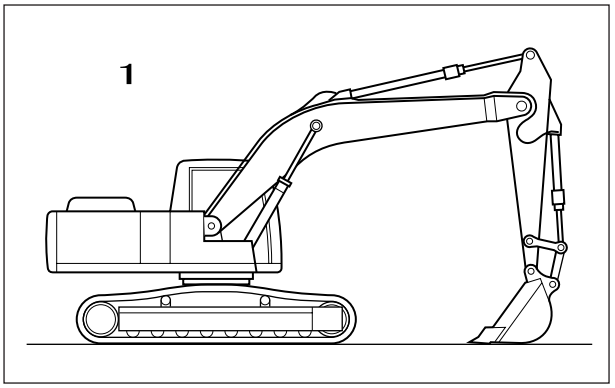

[3] Use a spanner (17 mm) to remove the feed port cover.

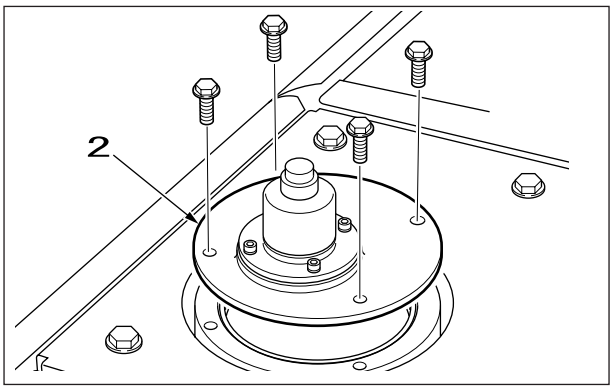

[4] Use the bolts removed in [3] to install the hydraulic oil tank lid.

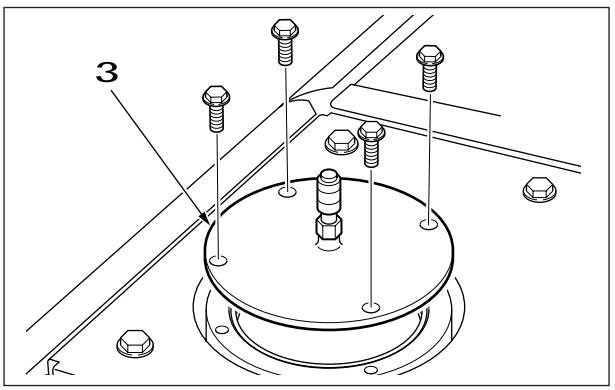

[5] Install the vacuum pump on the hydraulic oil tank lid.

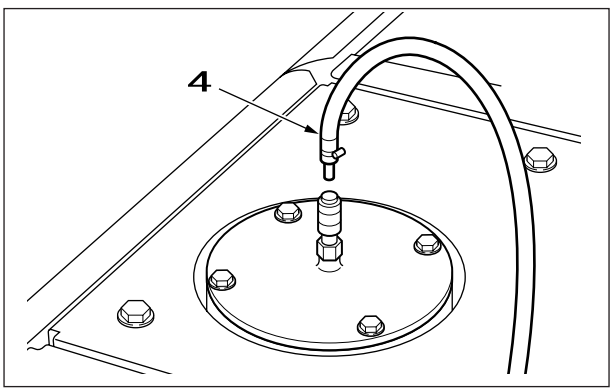

1	Arm-vertical
2	Feed port cover
3	Hydraulic oil tank lid (for vacuum pump)
4	Vacuum pump

https://truckmanualshub.com/

[6] After setting the vacuum pump as in the figure on the right, switch on the power.
(If the cable is too short, use an extension cable.)

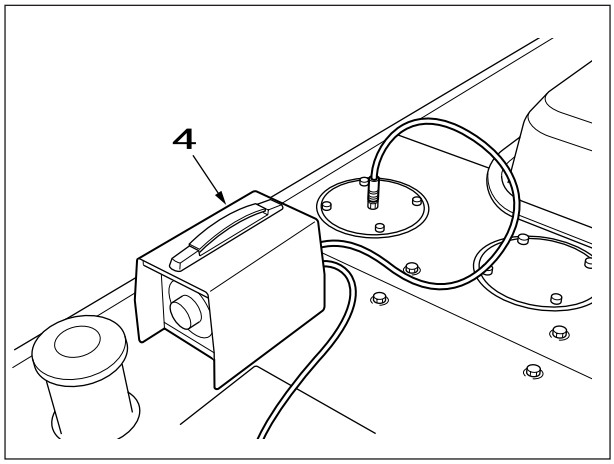

[7] Use a hexagon wrench (8 mm) to remove the split flange and hydraulic hose.
(This explanation uses flow measurement at the P2 pump.)

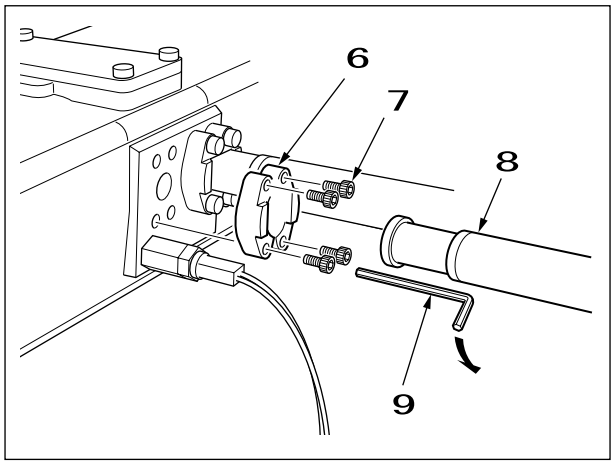

4	Vacuum pump
6	Split flange
7	Bolt
8	Hydraulic hose
9	Hexagon wrench

I

https://truckmanualshub.com/

Hydraulic Pump Flow Measurement Procedure

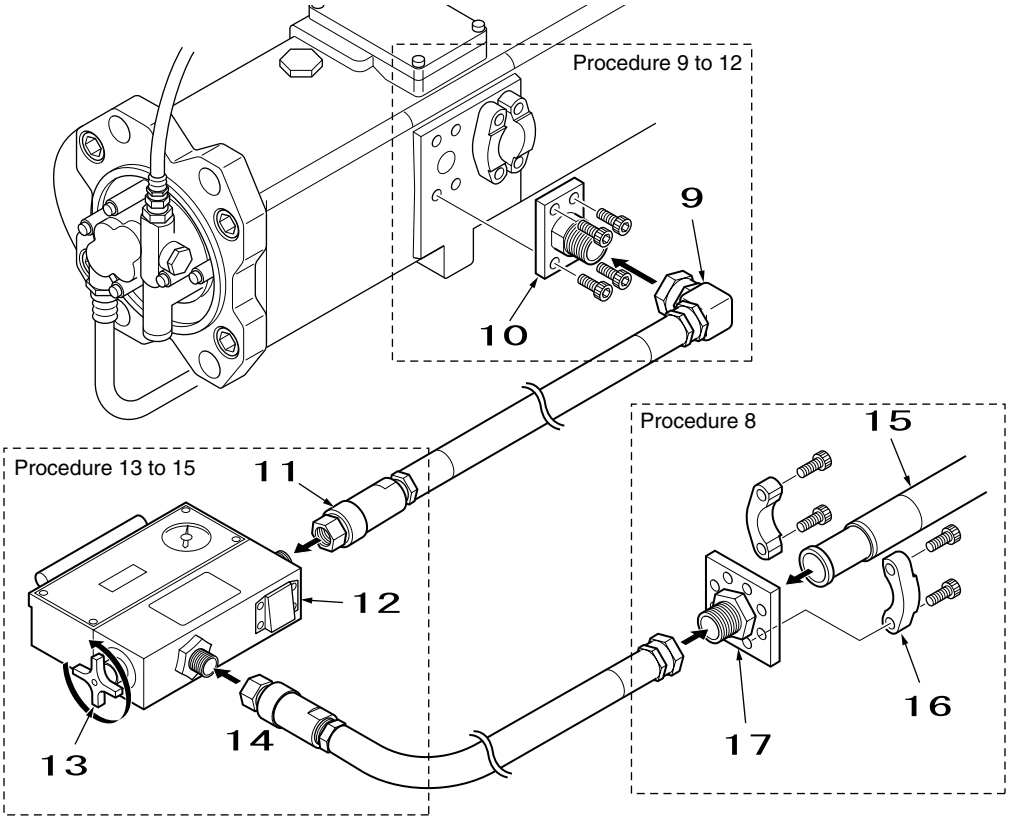

9	Elbow adaptor	14	Hydraulic hose (OUT)
10	Adapter	15	Hydraulic hose
11	Hydraulic hose (IN)	16	Split flange
12	Flow meter	17	Adapter (flange type)
13	Metering valve		

[8] Use the split flange to install the adaptor (flange type) on the tip of the hydraulic hose removed in [7].

[9] Install the adaptor at the position from which the hydraulic hose was removed.

[10] When the parts are set as in the figure above, remove the plug.

[11] Use the spanner to connect the adaptor installed on the pump in [9].

[12] If necessary, install an "elbow adaptor" on the (prepared) hydraulic hose connected to the flow meter IN side.

[13] Install the hydraulic hose on the flow meter IN side, then fasten with the spanner.

[14] Install the (prepared) hydraulic hose on the flow meter OUT side, then fasten with the spanner.
* When connecting, always check the connection positions.
* Always have the metering valve fully open.

[15] Install pressure gauges on P1 and P2.
(See "Main Pressure Measurement".)

[16] Remove the vavuum pump and re-install the hydraulic oil tank the same way it was.

[17] Open the engine hood.
(See "Main Pressure Adjustment".)

[18] Remove the cover.

[19] Remove the pilot hose for the boosted pressure signal, then plug the hose side.
(See "Main Relief Pressure Adjustment".)

This completes the preparation for flow measurement.

https://truckmanualshub.com/

Flow Measurement

[1] Measure the flow.
When measuring the flow, position the workers as in the figure on the left.
(Worker 1: Work supervisor, pressure adjustment)
(Worker 2: Operator)
(Worker 3: Flow, pressure measurement, recording)

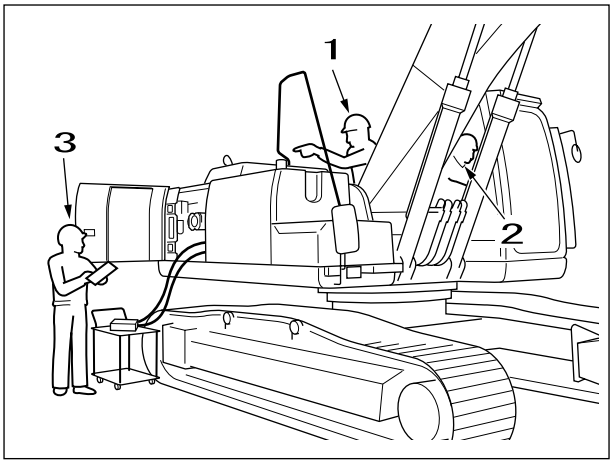

[2] At the signal from the work supervisor, the operator starts the engine.

[3] Check the hydraulic oil temperature on the monitor. (50 °C)
Check that the engine rotation and pump current are normal.

[4] The operator signals the arm-out relief operation to worker 1.

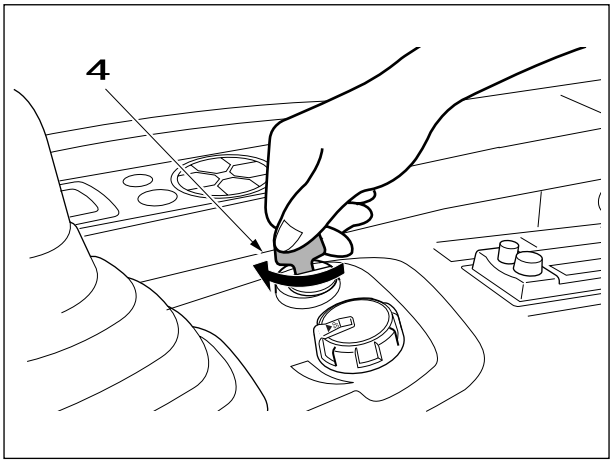

[5] Worker 2 lowers the arm-out port relief.
(Min: 24 MPa P1 + P2)

[6] Start of flow measurement

[7] The arm-out relief operation is carried out.

[8] Data measured in units of 2.0 MPa (P1 + P2)
* The measurement is carried out from 24.0 to 76.0 MPa and ends when the maximum pressure is reached.

[9] Remove the flow meters.
* Because from 40 MPa the pressure exceeds the permitted value for the flow meter pressure gauge maximum pressure

[10] Reset the arm-in port relief valve to normal pressure.
(For details on this adjustment, see "PRESSURE ADJUSTMENT".)

[11] Remove the pressure gauges etc. and put everything back to normal. This completes the work.

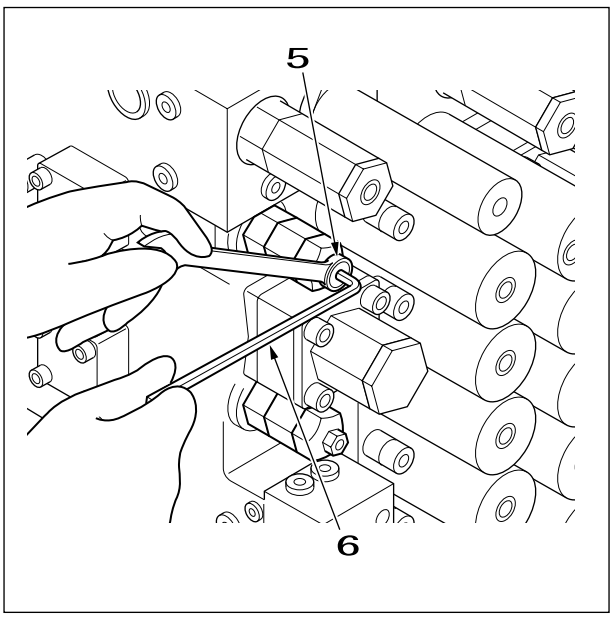

1	Worker 1
2	Worker 2
3	Worker 3
4	Ignition key
5	Lock nut 17 mm
6	Hexagon wrench 6 mm

I

https://truckmanualshub.com/

Drain Volume Measurement Procedure

Preparations

Measuring conditions

Engine speed	1800 min^{-1}
Mode	SP mode
Oil temperature	About 50 °C

* Be careful. The drain volume varies greatly with the oil temperature.

Travel Motor Drain Volume Measurement

[1] Ground the arm as in the figure on the right, then make the shoe crawler on one side float.

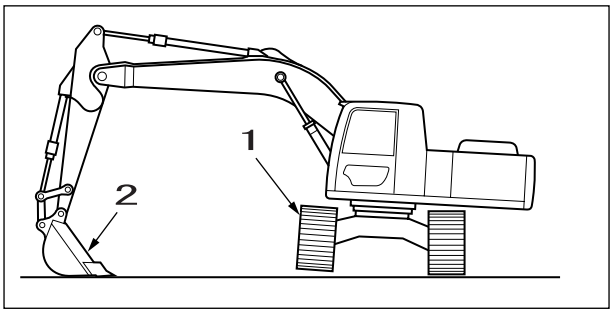

[2] Remove the bolts, then remove the cover.

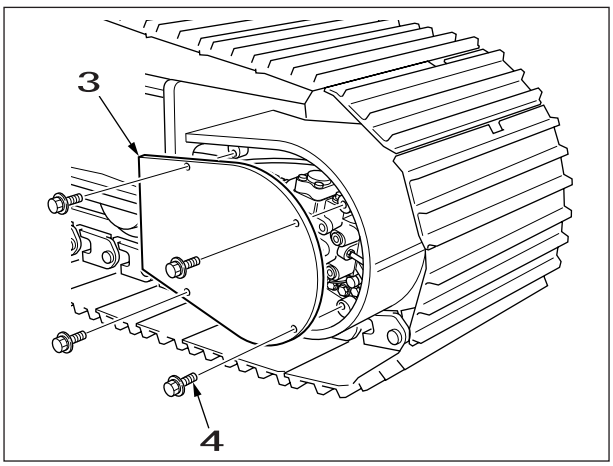

[3] Always lay a rag underneath before removing the drain hose.

[4] Use a spanner to remove the drain hose. (Always install a cap on the drain hose.)

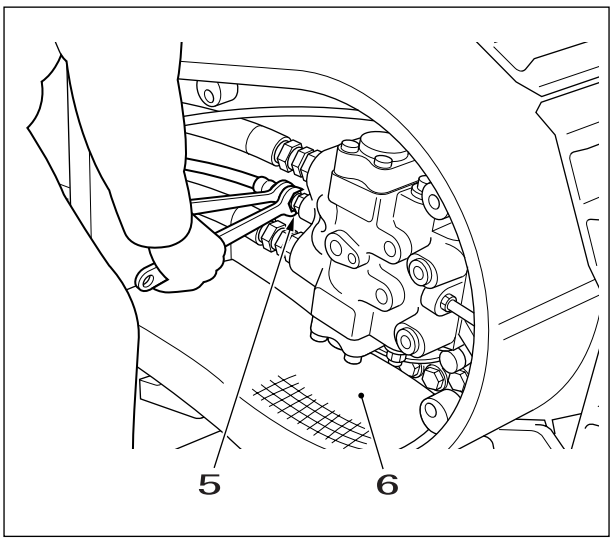

1	Shoe crawler
2	Arm
3	Cover
4	Bolt
5	Drain hose
6	Rags

I

https://truckmanualshub.com/

Drain Volume Measurement Procedure

[5] Install the extension hose for measurement on the side of the motor from which the drain hose was removed.

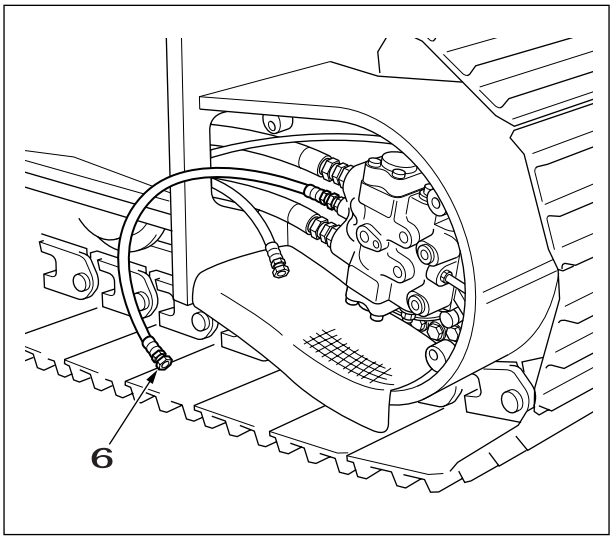

[6] Prepare a waste oil receiver and measuring container and set them as in the figure on the right.

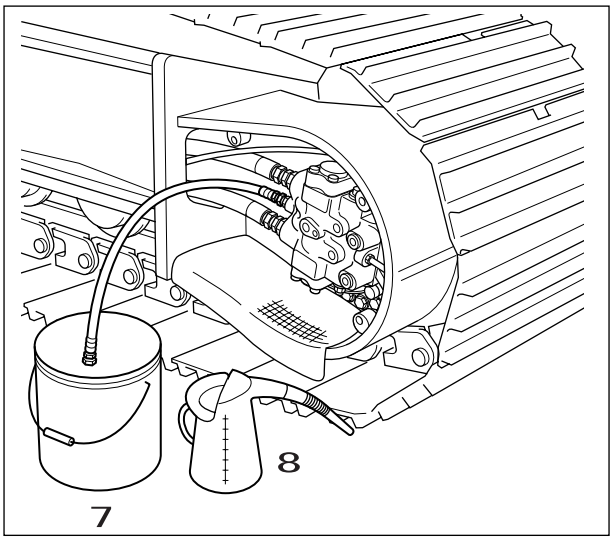

[7] Catch the stopper between the sprocket section and the frame and lock the travel motor.

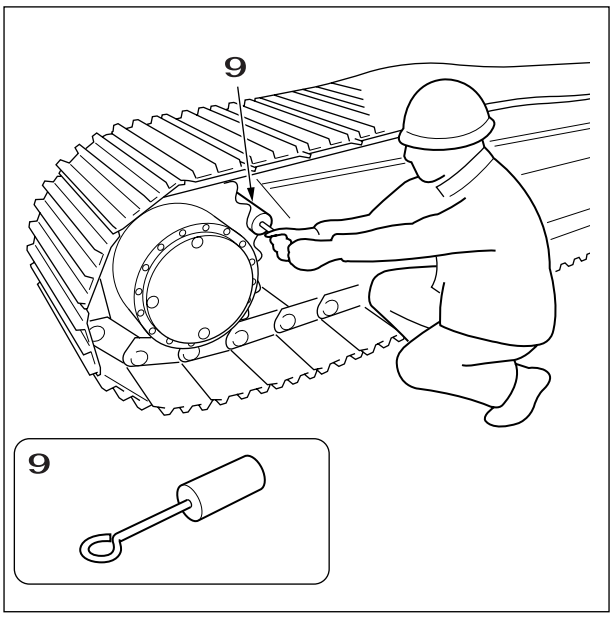

6	Extension hose for measurement
7	Waste oil receiver
8	Measuring container
9	Stopper

https://truckmanualshub.com/

[8] In SP mode at medium speed, relieve the travel operation and at the same time the motor starts, move the extension hose to the measuring container.
(When the motor starts, start measurement with a stop watch.)

[9] After 30 seconds, move the extension hose to the waste oil can.

[10] Measure the volume of oil in the measuring container as the drain volume for 30 seconds.

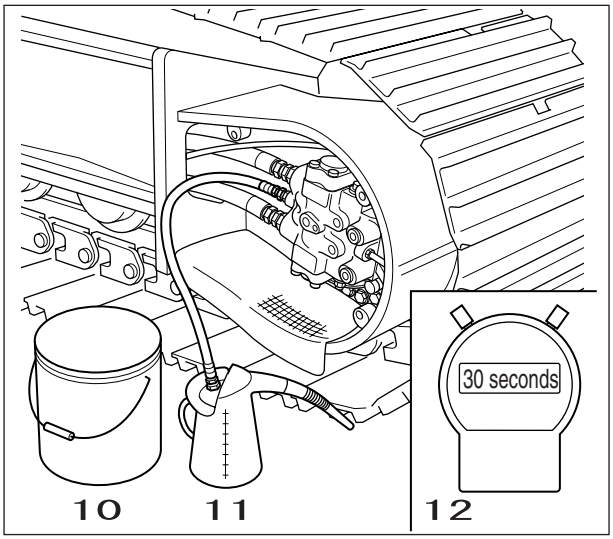

	Advance		Retreat	
	1st speed	2nd speed	1st speed	2nd speed
Right				
Left				

* Measure at least three times each for left, right, advance, and retreat.

10	Bucket
11	Measuring cup
12	Stop watch

I

https://truckmanualshub.com/

Drain Volume Measurement Procedure

Swing Motor Drain Volume Measurement

[1] Remove the two drain hoses and put blind plugs in the hose side of each.
(Spanner size: 27 mm, clamp 22 mm (hose side))

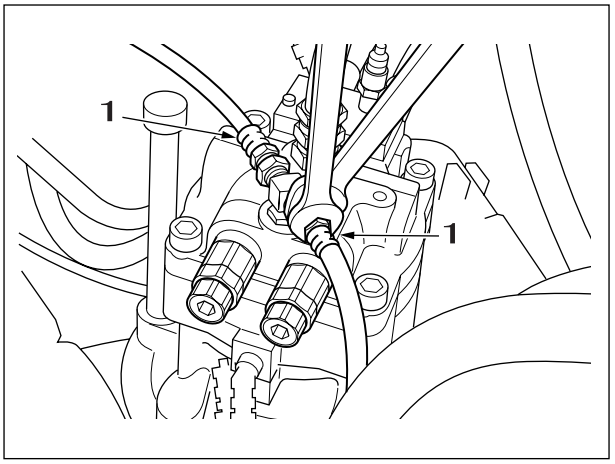

[2] Install the extension hose for measuring the drain volume on one side of the T nipple.Install the hose facing in a direction that makes measurement easy and install a blind plug on the other side.

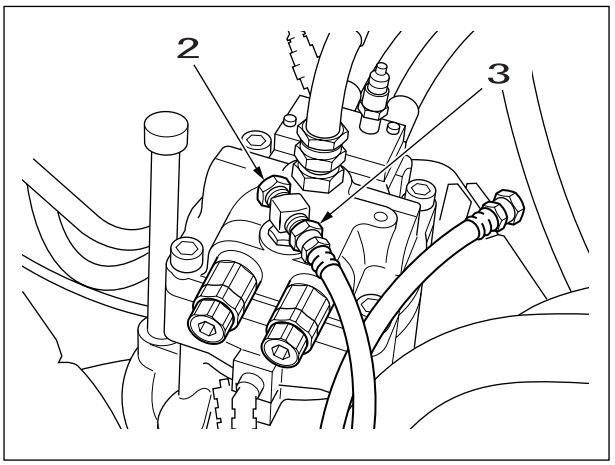

[3] Prepare a waste oil receiver and measuring container and set them as in the figure on the right.
For details on the method for locking the swing motor, see "Swing Relief Pressure Adjustment (SH240-5)".

[4] In SP mode, relieve the swing operation and at the same time the motor starts, move the extension hose to the measuring container.
(When the motor starts, start measurement with a stop watch.)

[5] After 60 seconds, move the extension hose to the waste oil receiver.

[6] Measure the volume of oil in the measuring container as the drain volume for 60 seconds.
Measure at least three times each for left and right.

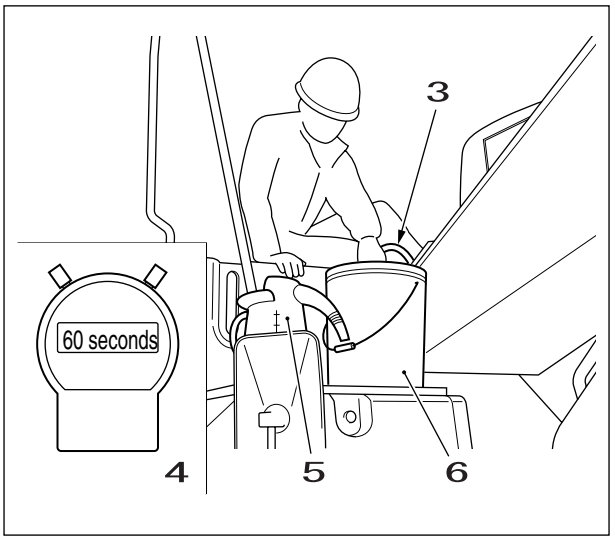

Right	Left

1	Drain hose
2	Blind plug
3	Extension hose
4	Stop watch
5	Measuring cup
6	Bucket

https://truckmanualshub.com/

Caution	Always bleed off any air in the hydraulic circuits after replacing the hydraulic oil, repairing or replacing hydraulic equipment, or removing hydraulic pipes.

	Air bleed procedure mode (when bleeding, follow the procedure below.)				
	Hydraulic pump air bleeding	Cylinder air bleeding	Swing motor air bleeding	Travel motor air bleeding	Check
Hydraulic oil or hydraulic pump replacement	○ →	○ →	○	→	○
Cylinder replacement		○	→	→	○
Swing motor replacement			○	→	○
Swing motor replacement				○ →	○

* Failure to completely bleed off all the air can reduce the service life of hydraulic equipment and lead to damage.

Hydraulic Pump

[1] Loosen the air bleed plug and check that oil oozes from the air bleed port.

[2] If oil does not ooze out, remove the air bleed plug, and fill hydraulic oil from the air bleed port into the pump case.

[3] Temporarily tighten the air bleed plug.

[4] Run the engine at low idle, slightly loosen the air bleed port, and run until oil oozes from the air bleed port section.

[5] Completely tighten the air bleed plug.

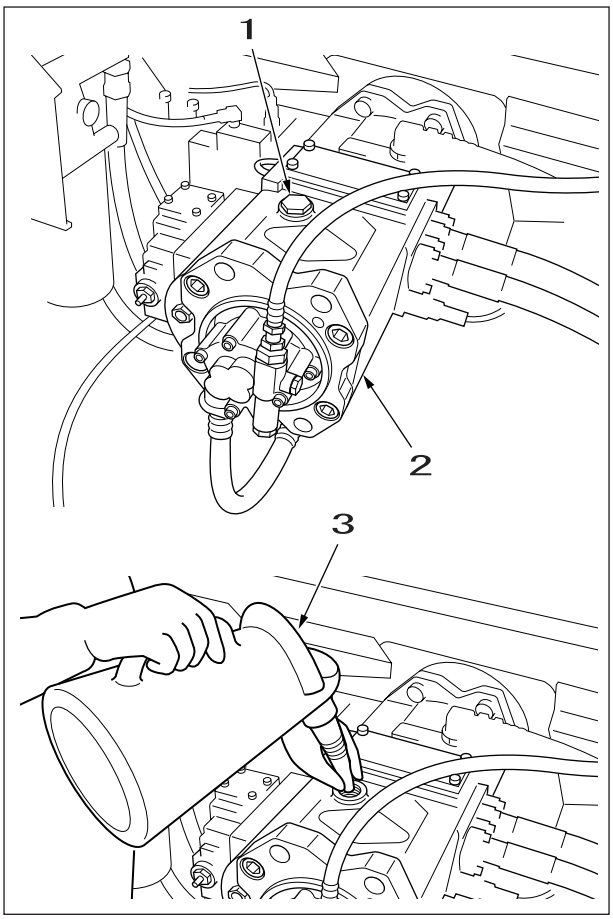

1	Air bleed plug
2	Pump
3	Hydraulic oil

https://truckmanualshub.com/

Air Bleed Procedure

Travel Motor

[1] Remove the bolt , then remove the cover.

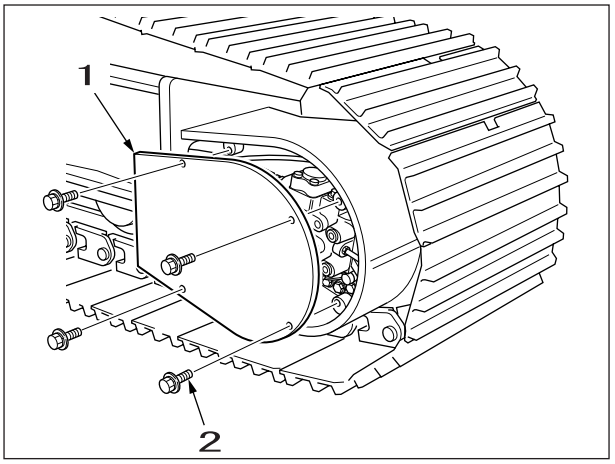

[2] Use a hexagon wrench (6 mm) to remove the air bleed plug as in the figure on the left.

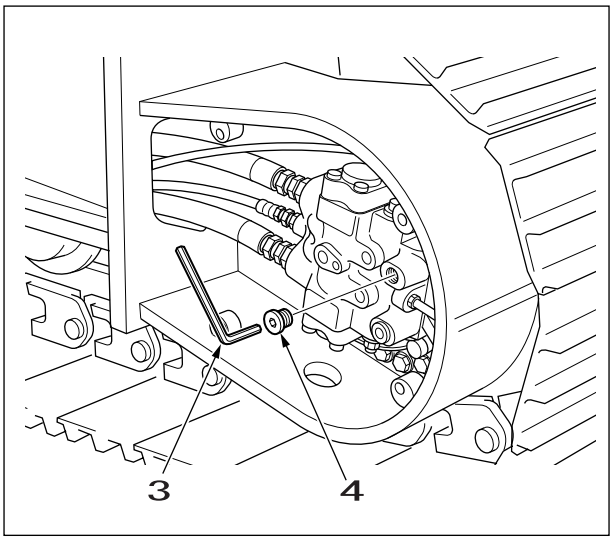

[3] Pour in about 500 cc of hydraulic oil from the air bleed port.

[4] When inside the motor is filled with hydraulic oil, tighten the air bleed plug.

[5] Start the engine and execute a slow travel operation.

[6] Repeatedly travelling forward and back bleeds off the air.

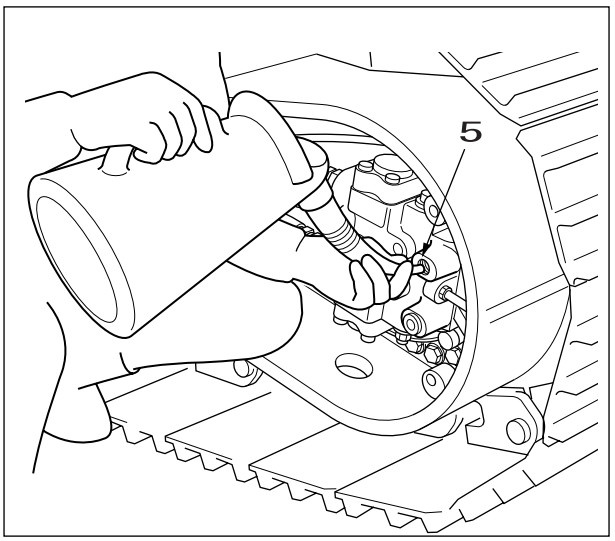

1	Cover
2	Bolt
3	Hexagon wrench
4	Air bleed plug
5	Hydraulic oil

https://truckmanualshub.com/

Swing Motor

[1] Run the engine at low idle, loosen the air bleed plug, and check that oil oozes from the air bleed port section.
* Do not execute a swing operation.

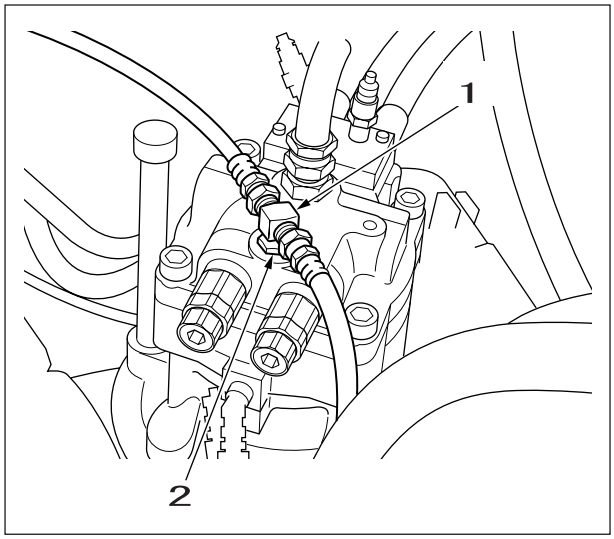

[2] If oil does not ooze out, stop the engine for now, remove the air bleed plug, and fill hydraulic oil into the motor case.

[3] Temporarily tighten the air bleed plug.

[4] Run the engine at low idle, slightly loosen the air bleed port section, and run until oil oozes from the air bleed port section.

[5] Completely tighten the air bleed plug.

[6] With the engine at low idle, slowly swing evenly left and right at least two rotations.

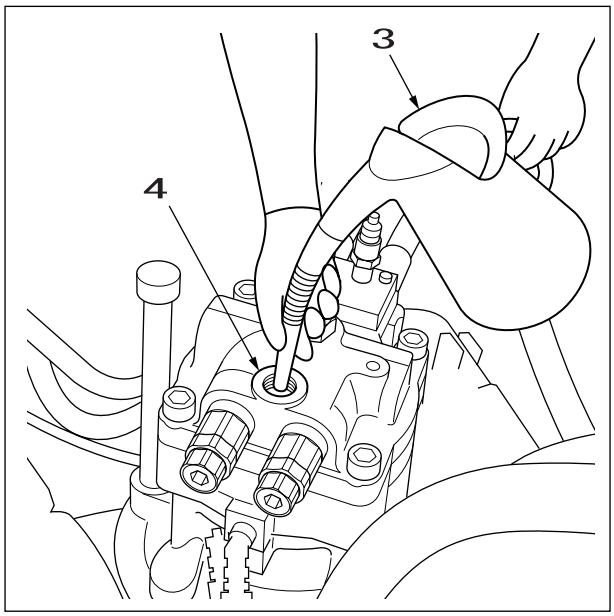

Check

After the air bleeding is complete, stop the engine for at least five minutes to allow any air bubbles in the hydraulic oil tank to dissipate.

1	Drain hose
2	Air bleed plug
3	Hydraulic oil
4	Air bleed port section

I

https://truckmanualshub.com/

Air Conditioner Belt, Fan Belt Replacement

If the belt is loose, battery charging defects, engine overheating, and rapid belt wear occur.

1. Air Conditioner Belt Replacement

[1] Use a box wrench (19 mm) to remove the bolts, then remove the bottom cover .

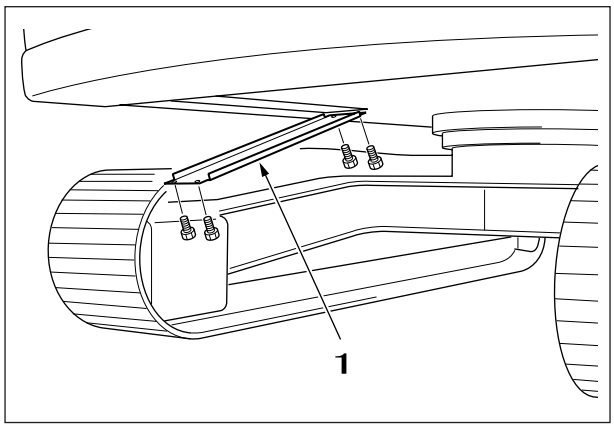

[2] The air conditioner belt is at the position in the figure on the right.

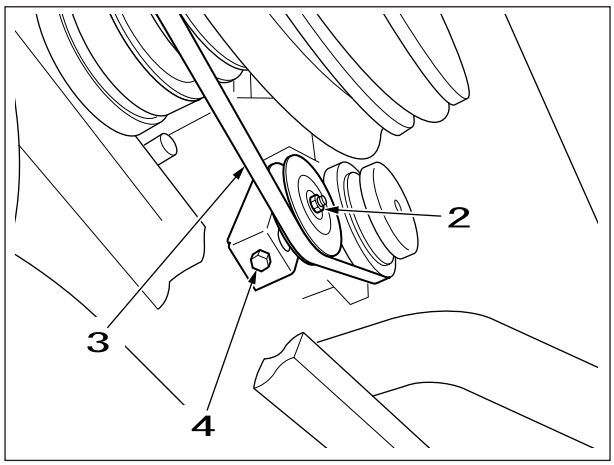

[3] Use a box wrench (14 mm) to remove the nut.

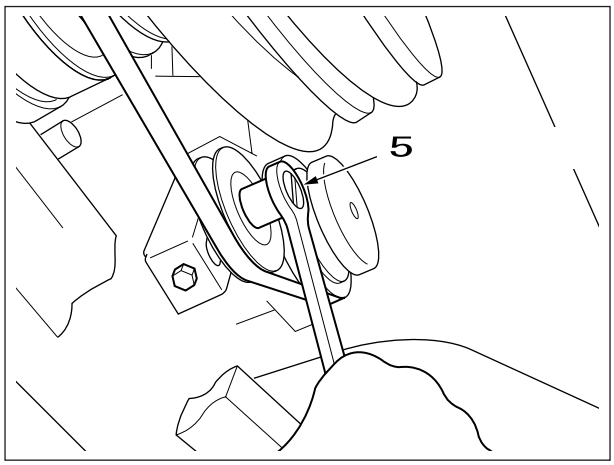

1	Cover
2	Nut
3	Air conditioner belt
4	Tension bolt
5	Box wrench

I

https://truckmanualshub.com/

[4] Use a box wrench (14 mm) to remove the tension bolt.

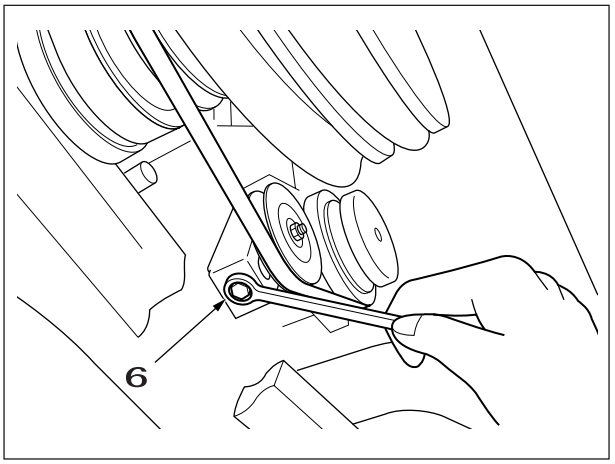

[5] Remove the air conditioner belt from the tension pulley and replace it.

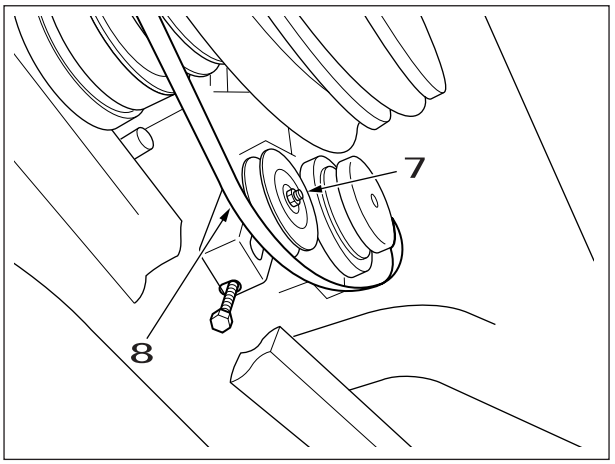

Tension adjustment

After replacing the air conditioner belt, it is necessary to adjust the belt tension.

[1] Use a box wrench (14 mm) to tighten the tension bolt.

[2] Adjust the belt so that when you press the center section of the belt with a finger, it deflects about 1 cm.
(See the figure on the right.)

[3] Securely fasten the nut .

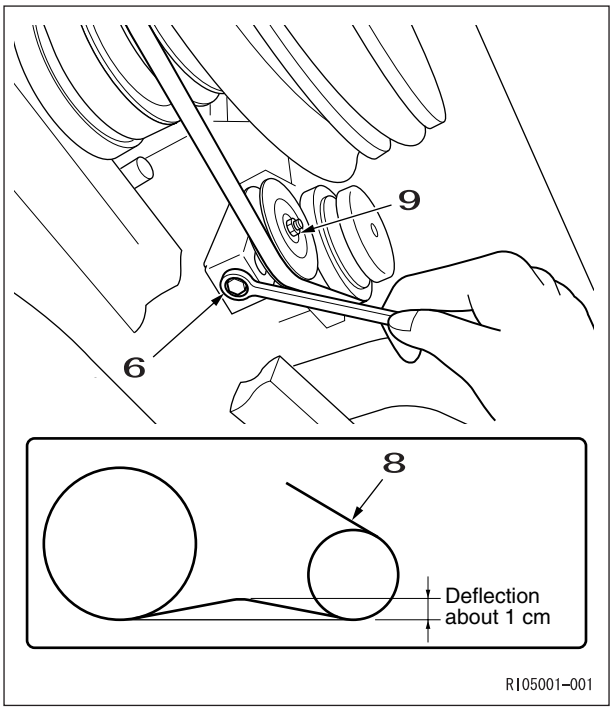

6	Box wrench
7	Tension pulley
8	Air conditioner belt
9	Nut

https://truckmanualshub.com/

2. Fan Belt Replacement

[1] Remove the air conditioner belt.
(See "Air Conditioner Belt Replacement".)

[2] Use a spanner (14 mm) to remove the bolt .

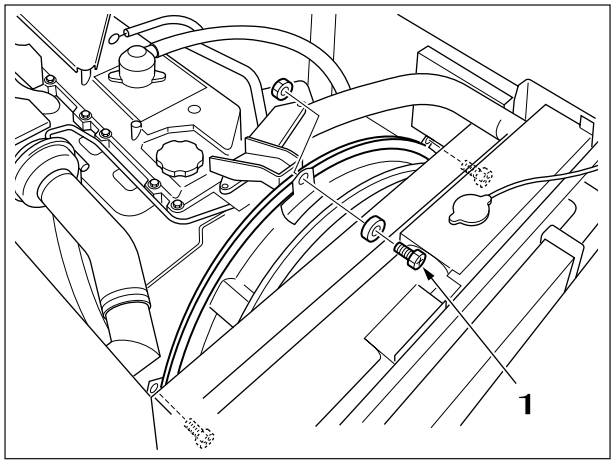

[3] Use a spanner (14 mm) to remove the bolt .

[4] Remove the bracket.

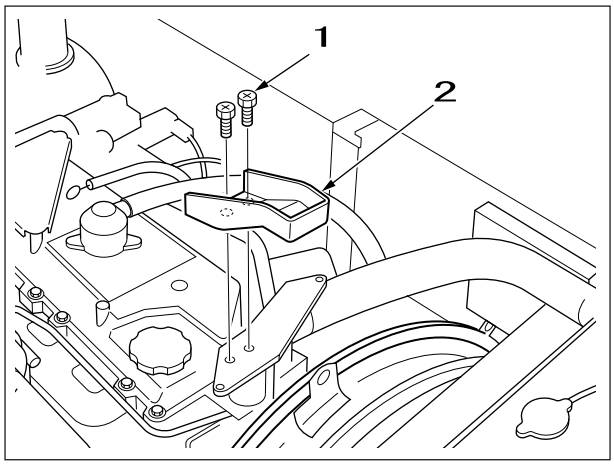

[5] Remove the fan guard .

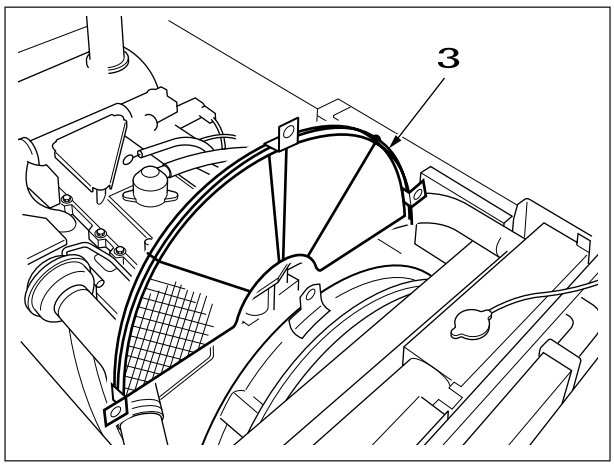

1	Bolt
2	Bracket
3	Fan guard

I

https://truckmanualshub.com/

[6] Use a box wrench (17 mm) to loosen the installation bolts, then free the alternator adjuster plate .

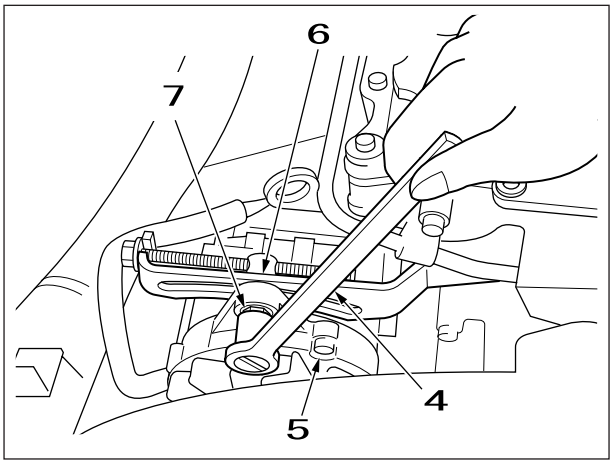

[7] Use a box wrench (17 mm) to loosen the alternator tension bolt .

[8] Remove the fan belt from the alternator .

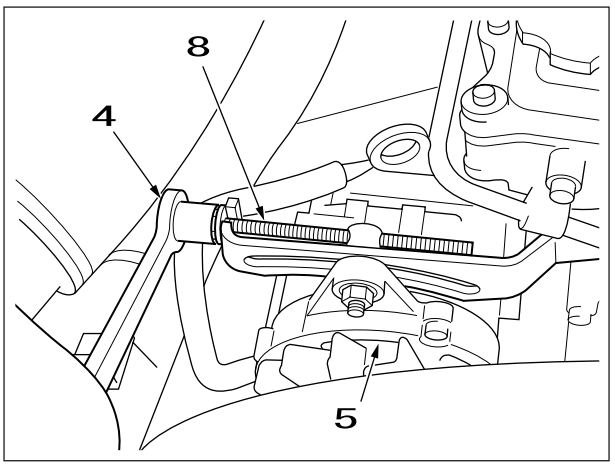

[9] While slowly turning the fan , pass the fan belt over the five one at a time and remove it.

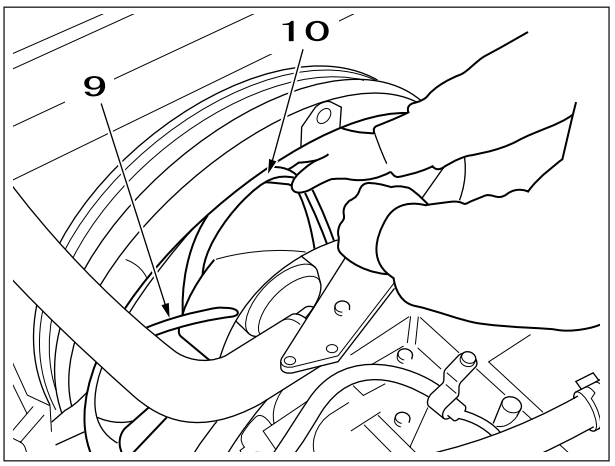

4	Box wrench
5	Alternator
6	Adjuster plate
7	Nut
8	Tension bolt
9	Fan
10	Fan belt

https://truckmanualshub.com/

Tension adjustment

After replacing the fan belt, it is necessary to adjust the belt tension.

[1] Use a box wrench (17 mm) to loosen the alternator tension bolt .

[2] Adjust the belt so that when you press the center section of the belt with a finger, it deflects about 1 cm.

[3] Securely fasten the nut .

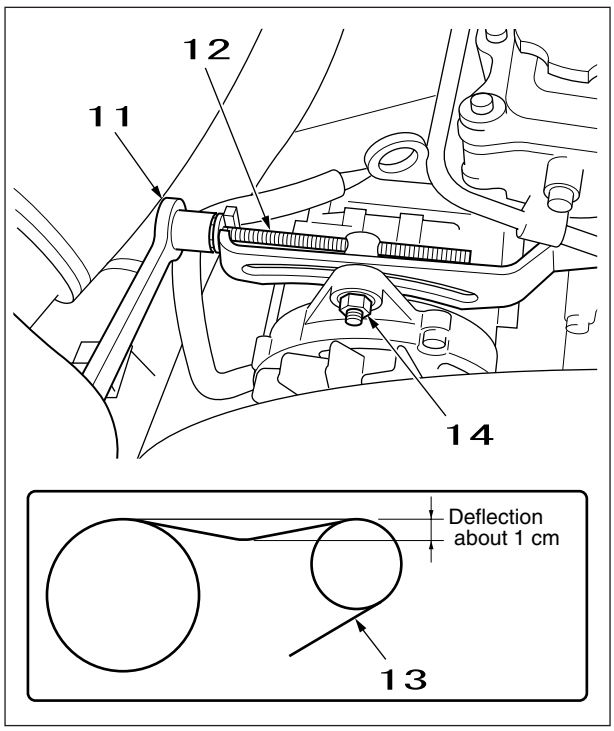

11	Box wrench
12	Tension bolt
13	Fan belt
14	Nut

I

https://truckmanualshub.com/

Fuel Filter Replacement

1. Filter Replacement

When replacing the fuel filter, always bleed the air.

[1] Close stop valve on the fuel line.

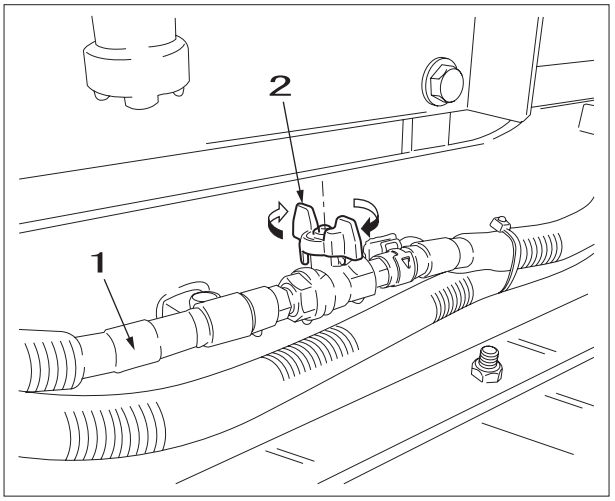

[2] Use a spanner (10 mm) to loosen the air bleed plug .

[3] Loosen the cap at the bottom and drain out any remaining fuel.
* Put a waste oil case underneath.

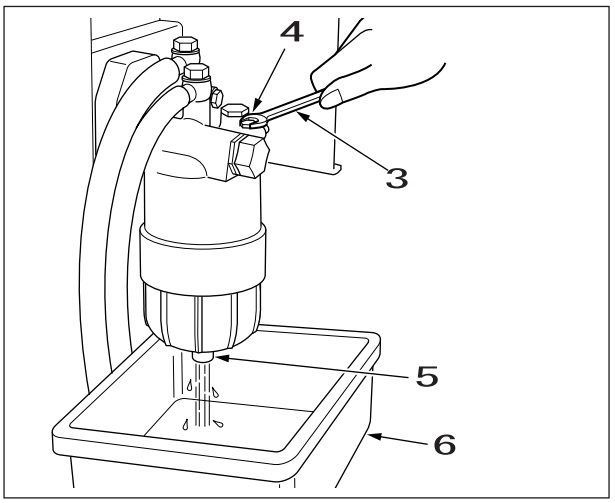

[4] Remove the filter cover with the special filter wrench .

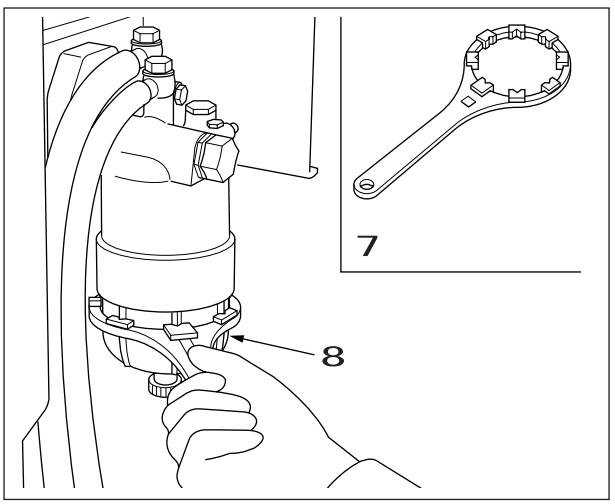

1	Fuel line	5	Cap
2	Stop valve (close)	6	Waste oil case
3	Spanner	7	Special filter wrench
4	Air bleed plug	8	Filter cover

https://truckmanualshub.com/

[5] Remove the element and replace it.

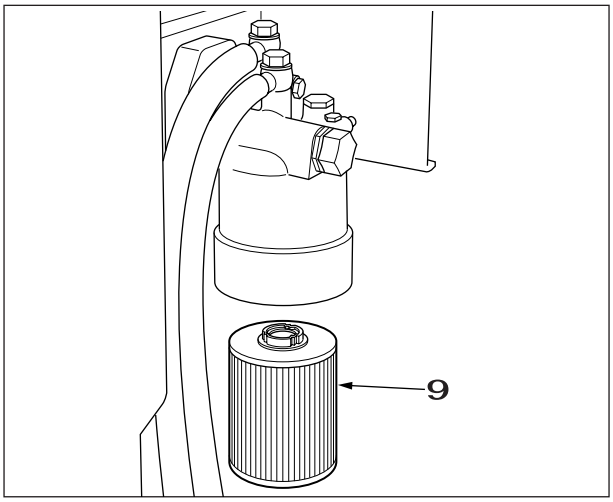

[6] Loosen the fuel line stop valve.
Open stop valve on the fuel line.

9	Element

https://truckmanualshub.com/

2. Air Bleeding

If air gets into the fuel system, this can cause difficulty starting and poor engine condition.When the fuel tank has been emptied, water drained from the fuel, the element replaced, or other such work carried out, always bleed the air.

[1] Install the air bleed hose at the position in the figure on the right.

[2] Use a spanner (10 mm) to loosen the air bleed plug .

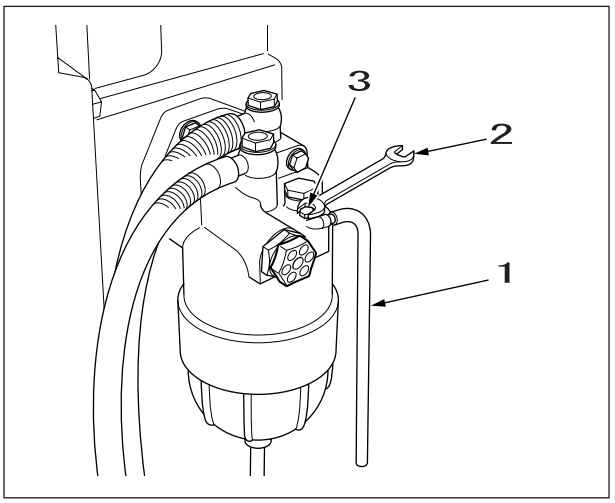

[3] When you turn the filter case priming pump in the direction of the arrow, the knob pops out.

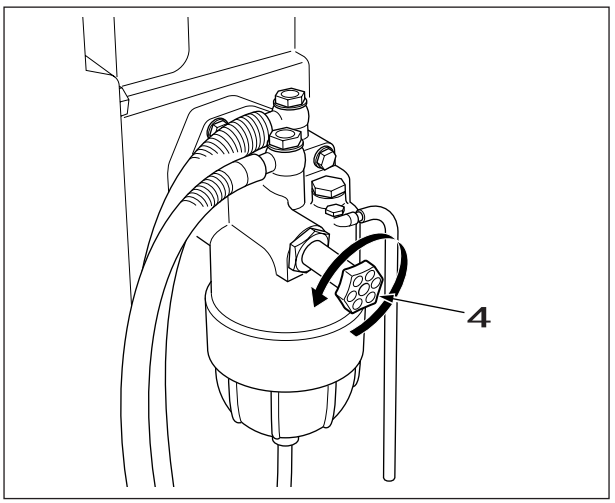

[4] Press the knob a few times.
When fuel appears inside the filter case, gently tighten the air bleed plug for now.Press the knob a few times with the plug and knob as they are.
Finally, hold the knob pressed in and slightly loosen the air bleed plug.
Fuel oozes out from the hose like bubbles.

[5] Repeat the operation in [4] until no more bubbles appear.

[6] Tighten the air bleed plug, then turn the knob and lock it.

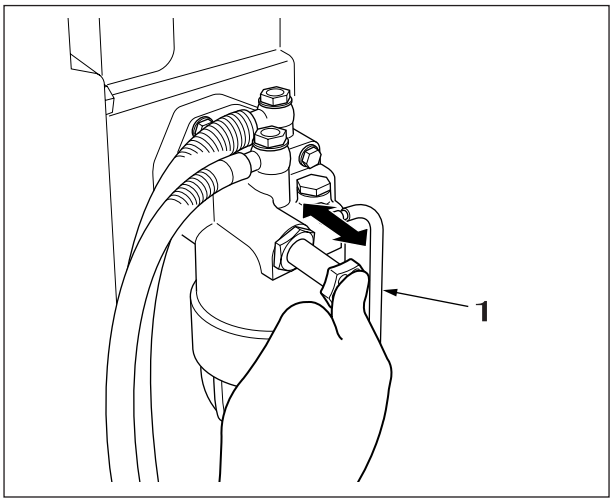

1	Air bleed hose
2	Spanner
3	Air bleed plug
4	Knob

https://truckmanualshub.com/

Engine Oil Filter and Engine Oil Replacement

Caution	If the engine oil is severely dirty or deteriorated, replace it quickly even if it is not yet time for periodic replacement.

1. Engine Oil Replacement
   [1] Open the engine hood.
   [2] Remove the engine oil cap.

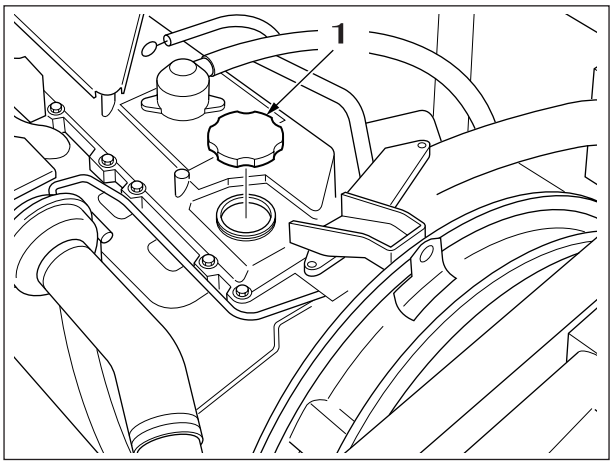

   [3] Put a waste oil can underneath the engine oil drain port.

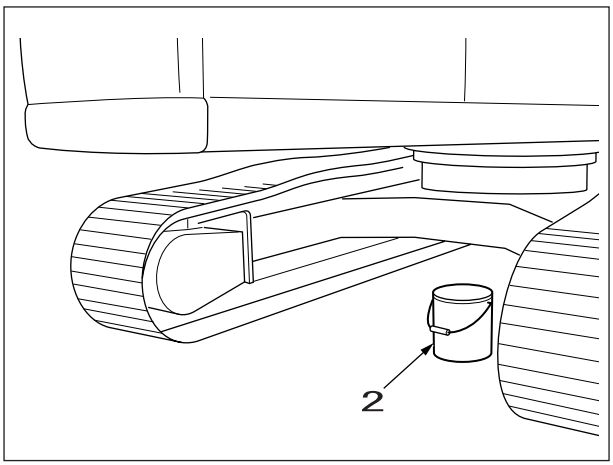

   [4] Remove the bottom cover .

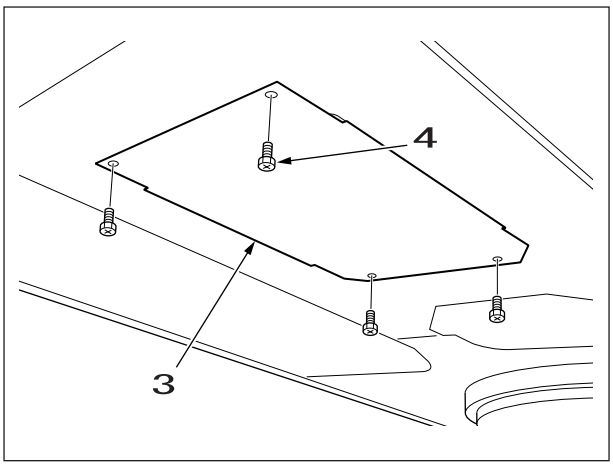

1	Engine oil cap
2	Waste oil can
3	Cover
4	Bolt

I

https://truckmanualshub.com/

[5] Remove the drain plug .

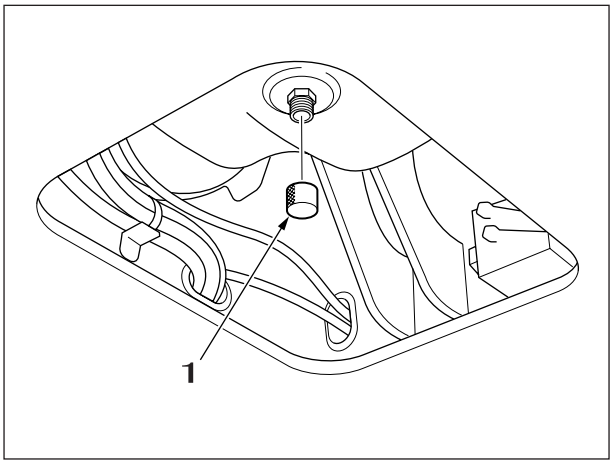

[6] Install the drain plug with hose and screw it in.
The valve is pressed automatically and the oil is drained.

[7] After draining the oil, securely install the drain plug .

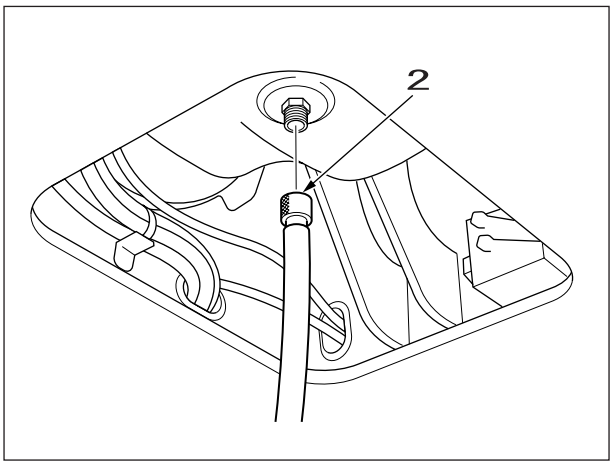

1	Drain plug
2	Drain hose

https://truckmanualshub.com/

2. Engine Oil Filter Replacement

[1] Remove the engine oil filter cover with the special filter wrench .

[2] Replace the engine oil filter .

[3] When installing the engine oil filter , check that the O-ring is not damaged, then install. Also, if you replace the O-ring, apply oil to it before installing it.

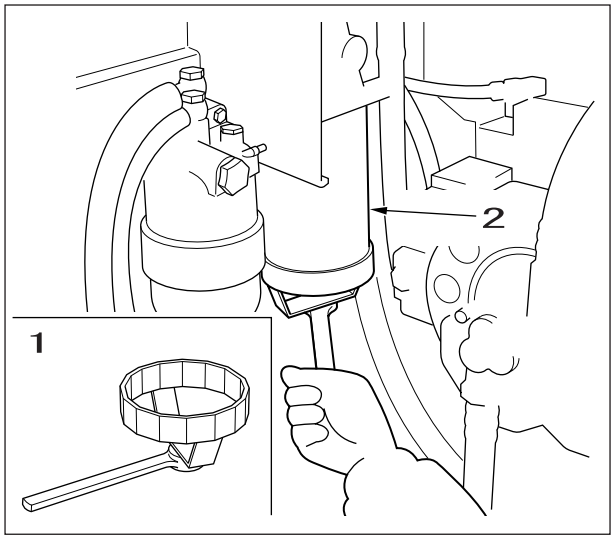

[4] Fill engine oil from the feed port at the top.

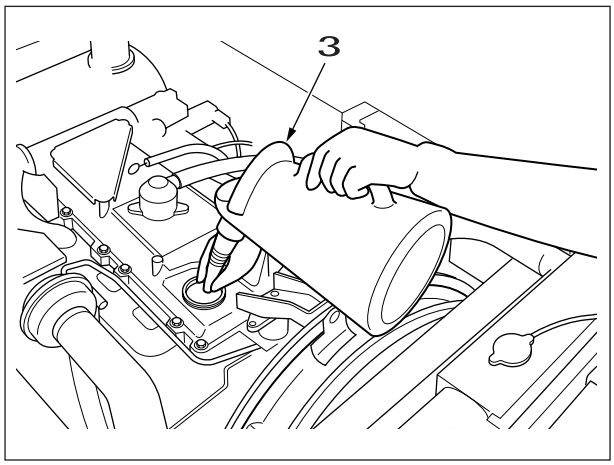

[5] Check on the oil gauge that the oil volume is correct.

[6] Start the engine and let it idle for a few minutes.
During this idling, check for oil leaking.

[7] Stop the engine, wait about 20 minutes, then inspect the oil volume again.
If the oil volume is correct now, the oil change is OK.
If the oil is low, fill more.

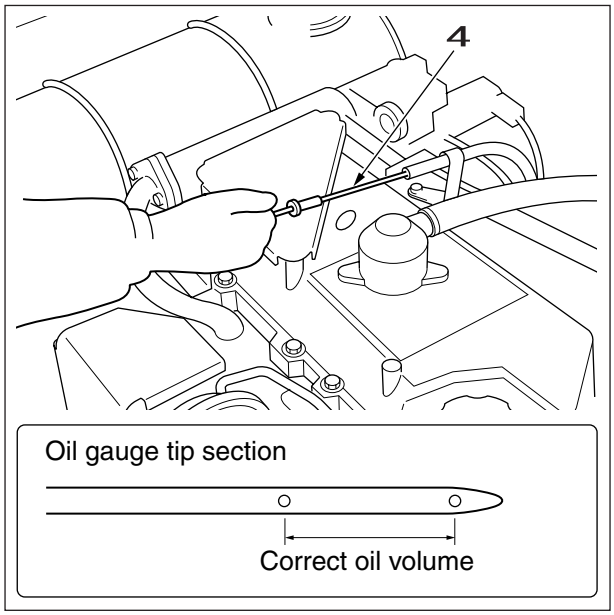

1	Special filter wrench
2	Engine oil filter
3	Engine oil
4	Oil gauge

I

https://truckmanualshub.com/

Radiator Coolant Replacement

[1] Open the engine hood.

[2] Remove the radiator cap .

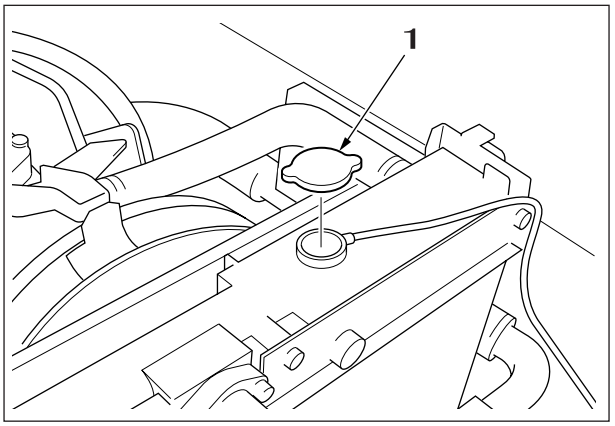

[3] Use a box wrench (19 mm) to remove the bolts, then remove the bottom cover .

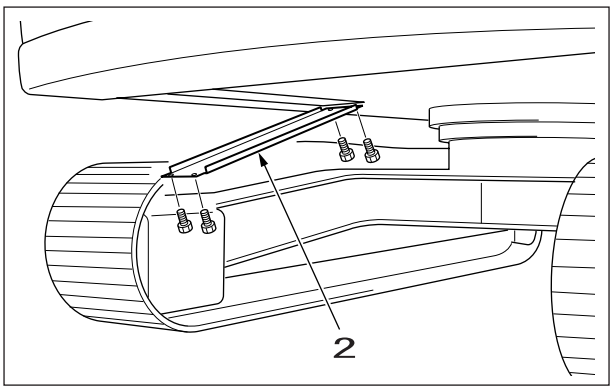

[4] Turn the drain cock to the left and drain the coolant.

[5] Return the drain cock to its original position, fill the radiator with hot water up to the radiator port, then run the engine slightly faster than idling.
Run for about 10 minutes to raise the water temperature to 80 °C, then drain the water.

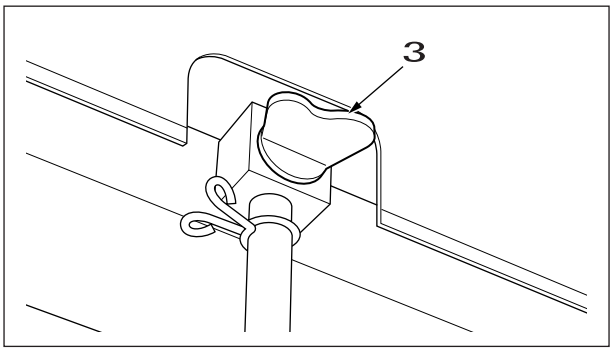

[6] Fill the radiator with coolant up to the radiator port.
Run the engine for about 10 minutes, then adequately bleed air from the cooling system.

[7] Stop the engine and check the coolant level.
If the coolant level is low, fill in more.

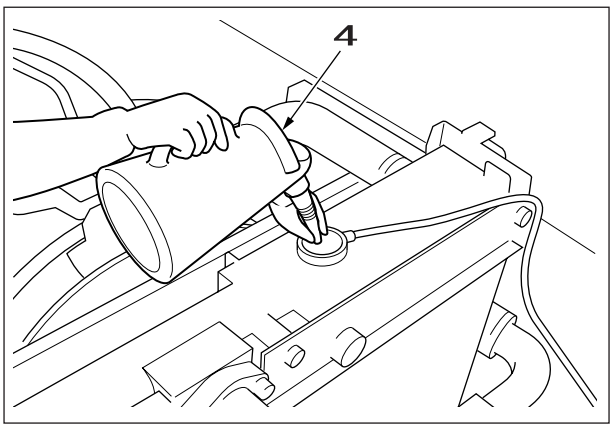

1	Radiator cap
2	Cover
3	Drain cock
4	Coolant

https://truckmanualshub.com/

Air Cleaner Cleaning and Replacement

[1] Open the door .

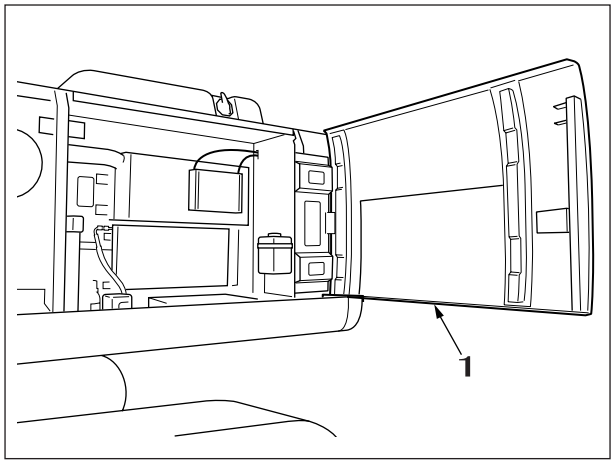

[2] Release the four locks , then remove the cover .

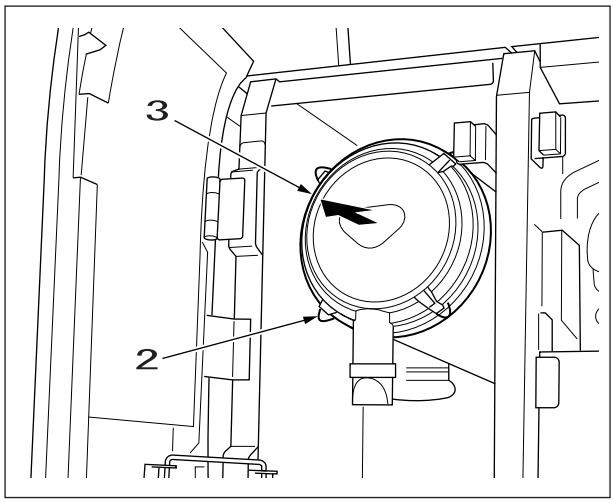

[3] Remove the air cleaner (outer) .

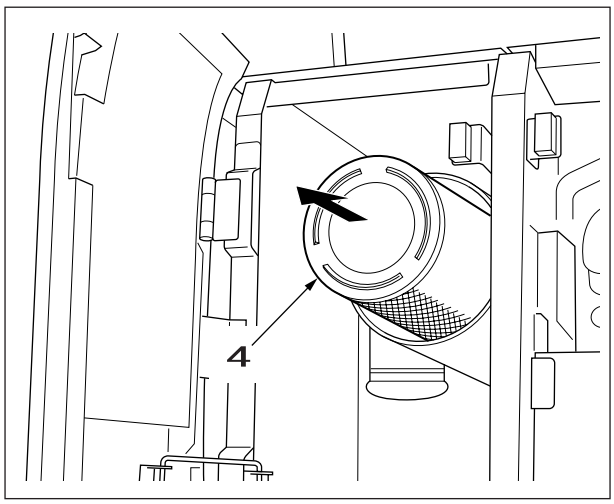

1	Door
2	Lock
3	Cover
4	Air cleaner (outer)

I

https://truckmanualshub.com/

[4] Use a compressed air gun to blow out from the inside of the air cleaner and clean it.

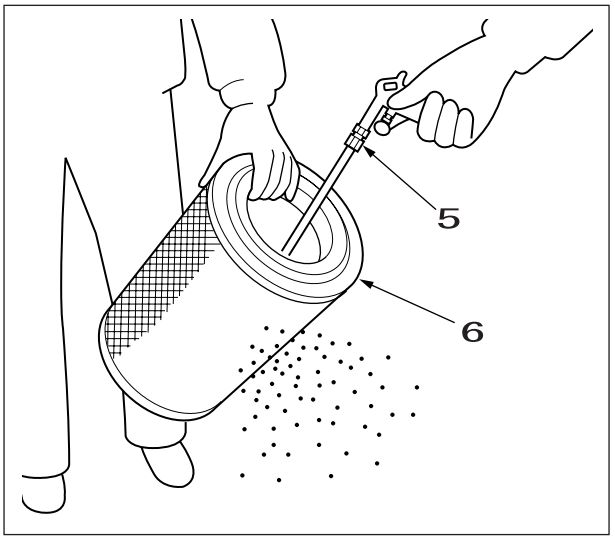

[5] Remove the air cleaner (inner) and replace it. This air cleaner cannot be cleaned.Always replace it.

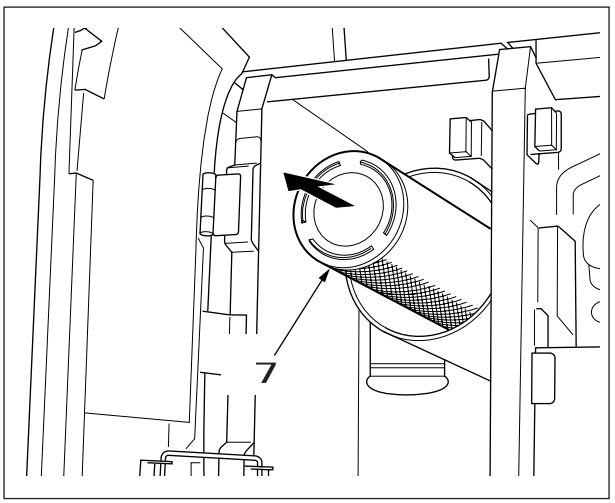

5	Air gun
6	Air cleaner
7	Air cleaner (inner)

https://truckmanualshub.com/

Hydraulic Oil Filter Replacement

Caution	• When replacing the hydraulic oil, be careful to keep dirt, water, sand, and all other foreign matter out of the tank. • When replacing the hydraulic oil, always repalce the filter and element with new ones. • When using with a hydraulic breaker mounted, the deterioration of the hydraulic oil is more severe than for normal excavation work, so maintain the hydraulic oil frequently enough. • Manage the hydraulic oil (by checking samples for contamination and deterioration) every 1000 hour per engine running time."We recommend the Sumitomo Oil Analysis System (Oiltech).)

Put the main unit into the posture for transport or shipping.

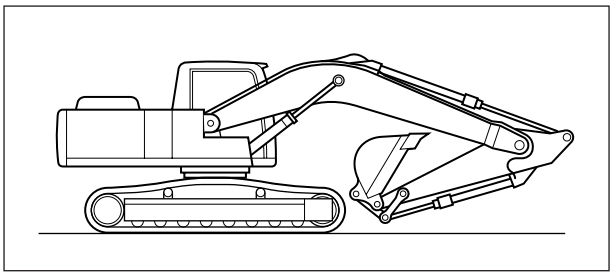

1. Return Filter Replacement

[1] Press the rubber cap at the breather section on the top of the hydraulic oil tank to bleed off the pressure in the tank.

[2] Use a spanner (17 mm) to remove the bolts , then remove the cover .
(There is an O-ring on the rear.)

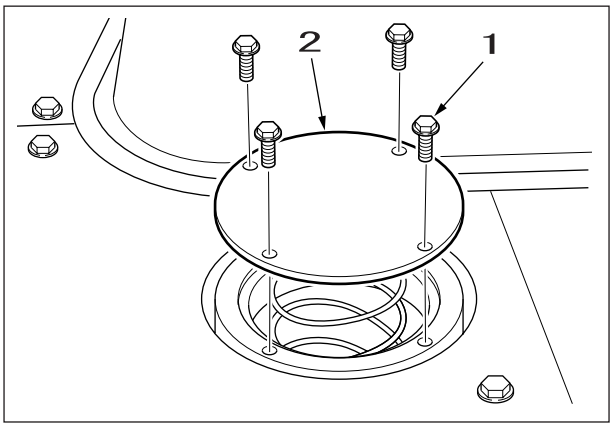

[3] Take the spring , valve , and return filter out from the tank.

[4] Replace the return filter.

[5] If the O-ring on the rear of the cover is worn or damaged, replace it.

[6] The installation procedure is the reverse of the removal procedure.

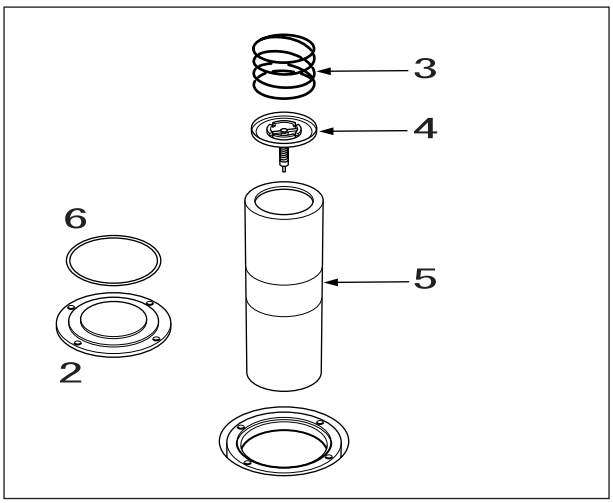

1	Bolt
2	Cover
3	Spring
4	Valve
5	Return filter
6	O-ring

https://truckmanualshub.com/

2. Suction Filter Replacement

[1] Press the rubber cap at the breather section on the top of the hydraulic oil tank to bleed off the pressure in the tank.

[2] Use a spanner (17 mm) to remove the bolts , then remove the feed port cover .
(There is an O-ring on the rear.)

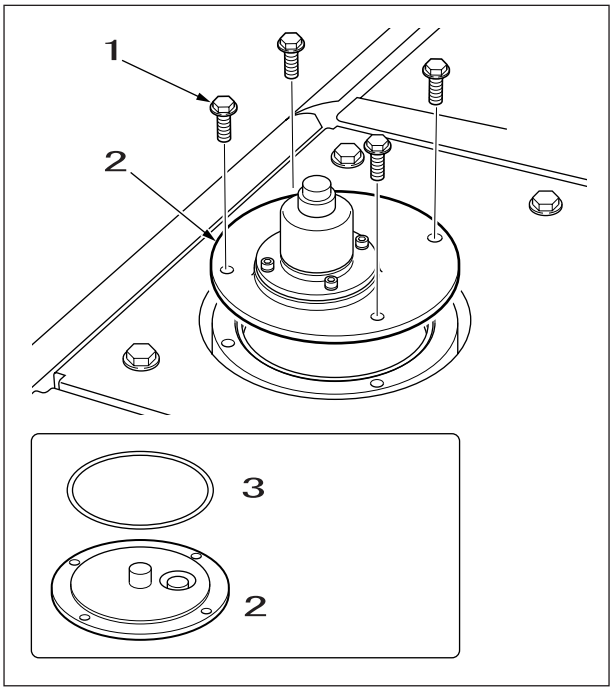

[3] Pull out the suction strainer .

[4] Replace the suction strainer with a new one.

[5] If the O-ring is worn or damaged, replace it.

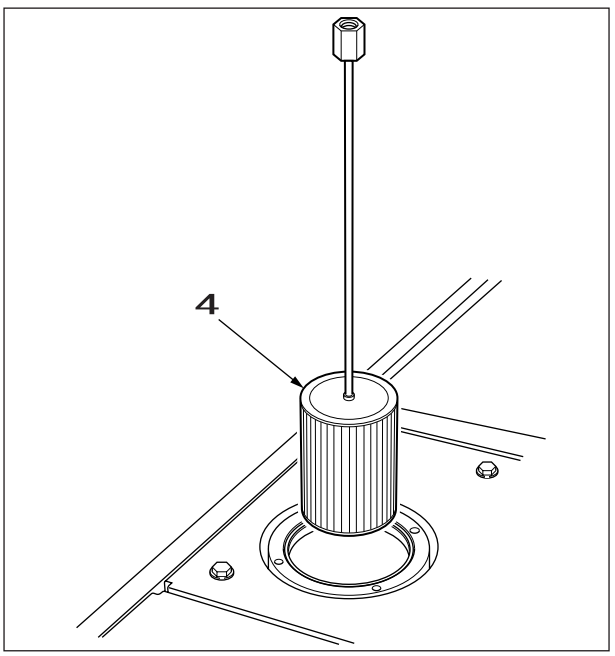

[6] The installation procedure is the reverse of the removal procedure.
* When installing the feed port cover , align it with the position in the fig

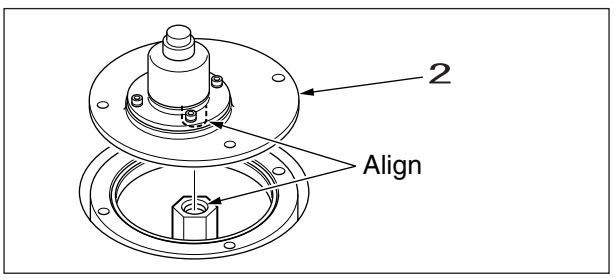

1	Bolt
2	Feed port cover
3	O-ring
4	Suction strainer

https://truckmanualshub.com/

3. Air Breather Element Replacement

[1] Press the rubber cap at the breather section on the top of the hydraulic oil tank to bleed off the pressure in the tank.

[2] Use a spanner (19 mm) to remove the nut .

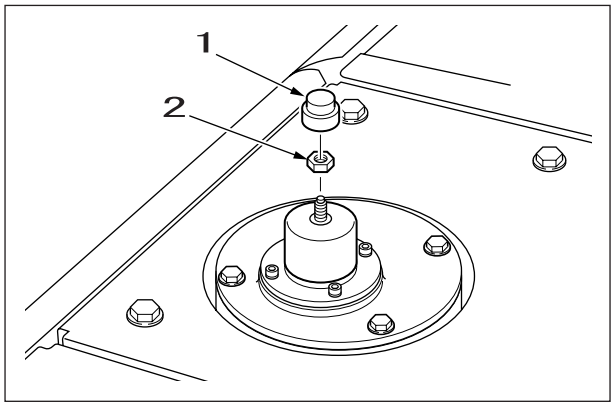

[3] Remove the cover .

[4] Replace the filter element with a new one.

[5] The installation procedure is the reverse of the removal procedure.

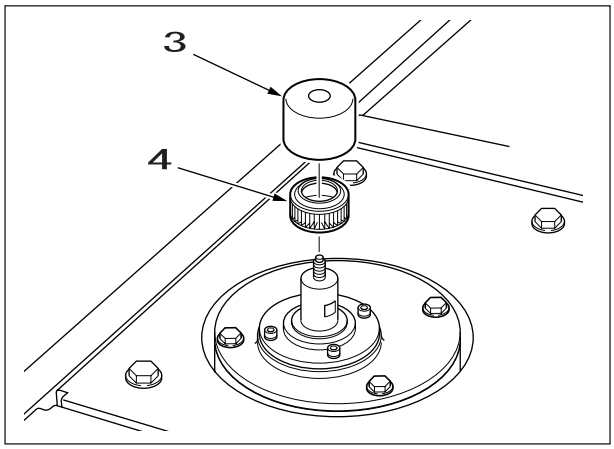

1	Rubber cap
2	Hexagon nut
3	Cover
4	Filter element

4. Pilot Oil Filter Replacement

[1] Use a filter wrench or the like to remove the pilot oil filter cover.

[2] Replace the pilot oil filter.

[3] When installing the pilot oil filter , check that the O-ring is not damaged, then install.
Also, if you replace the O-ring, apply oil to it before installing it.

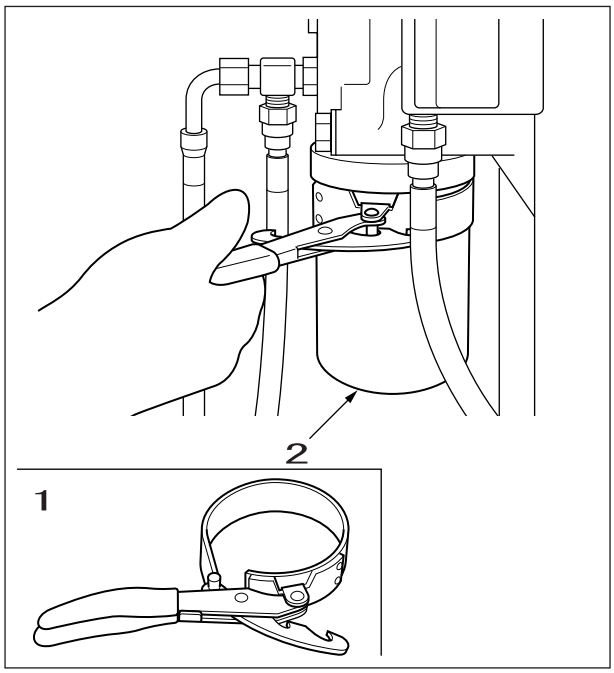

1	Pilot oil filter
2	Filter wrench etc.

I

https://truckmanualshub.com/

5. Hydraulic Oil Replacement

[1] Rotate the main unit slightly before replacing the hydraulic oil.(Enough to make the work easy)

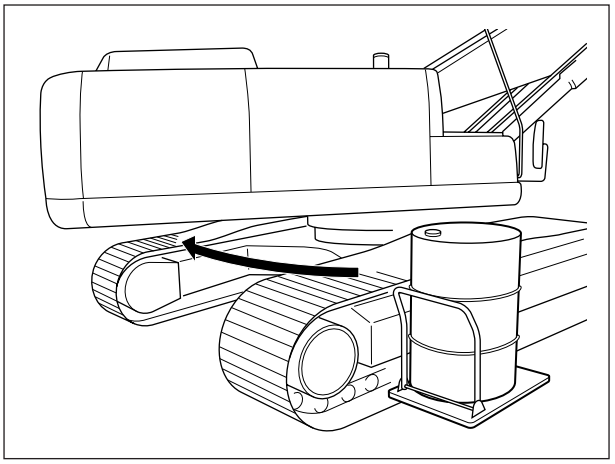

[2] Use a spanner (17 mm) to remove the bolts , then remove the feed port cover .

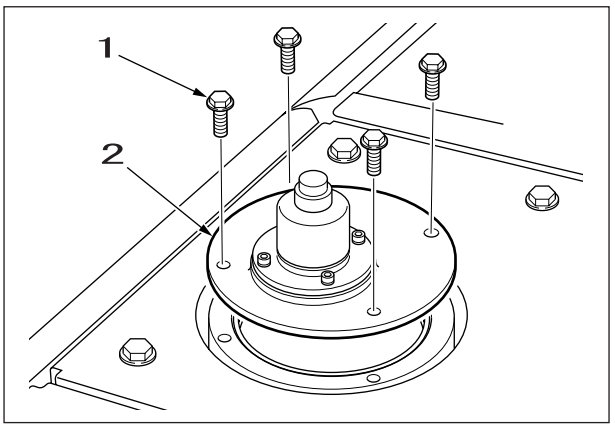

[3] Insert the feed pump into the feed port.

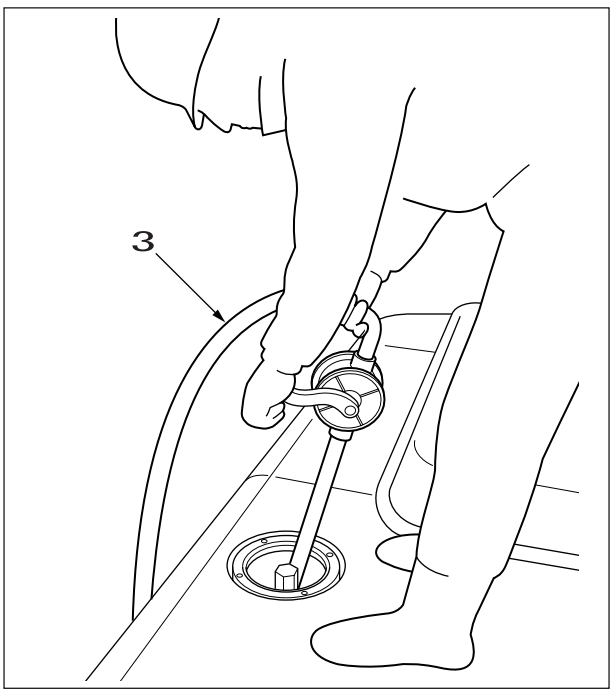

1	Bolt
2	Feed port cover
3	Feed pump

https://truckmanualshub.com/

[4] Prepare a can to drain the hydraulic oil into.

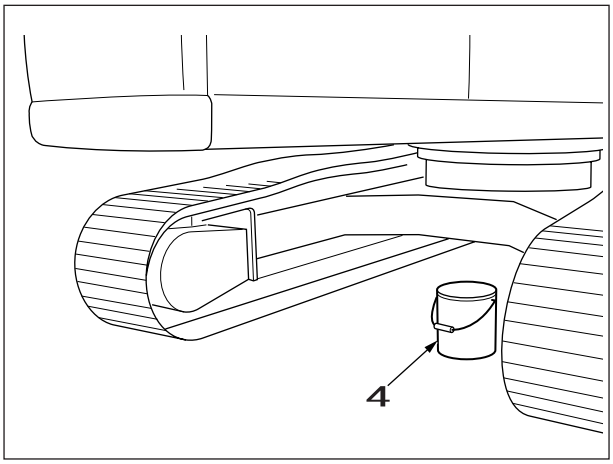

[5] Use a spanner (19 mm) to remove the bottom cover .

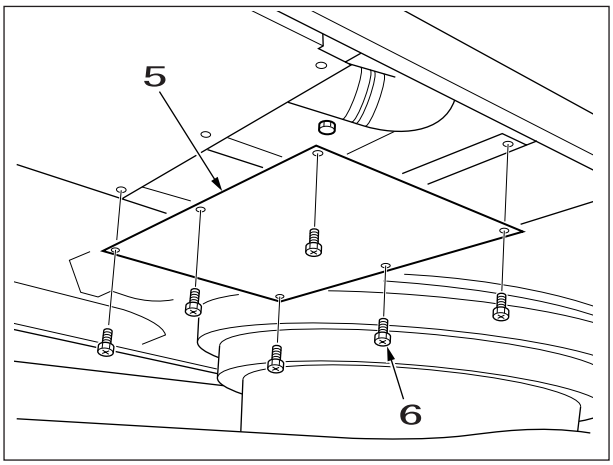

[6] Use a spanner (17 mm) to remove the drain plug .

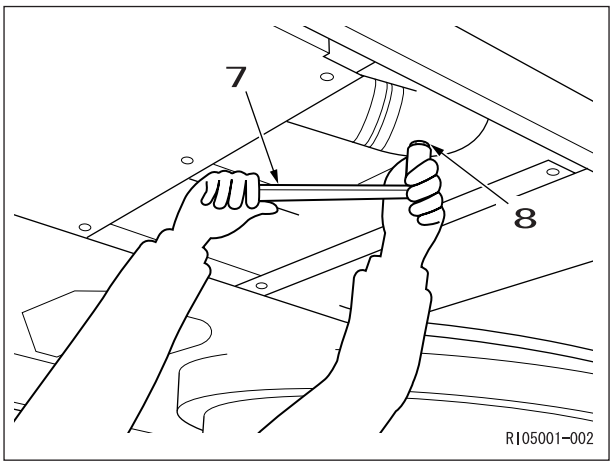

4	Waste oil can
5	Cover
6	Bolt
7	Spanner
8	Drain plug

I

https://truckmanualshub.com/

[7] Drain the waste oil into the drain can .

[8] After draining the waste oil, securely install the drain plug.

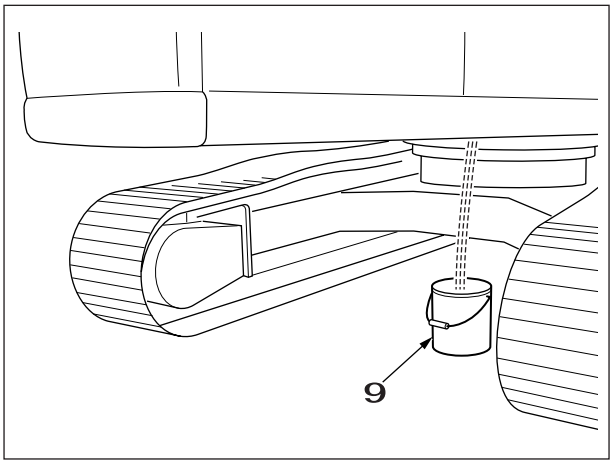

Hydraulic Oil Filling

[1] Fill with the feed pump as in the figure on the right.

[2] Check that the hydraulic oil comes to the correct position on the level gauge.

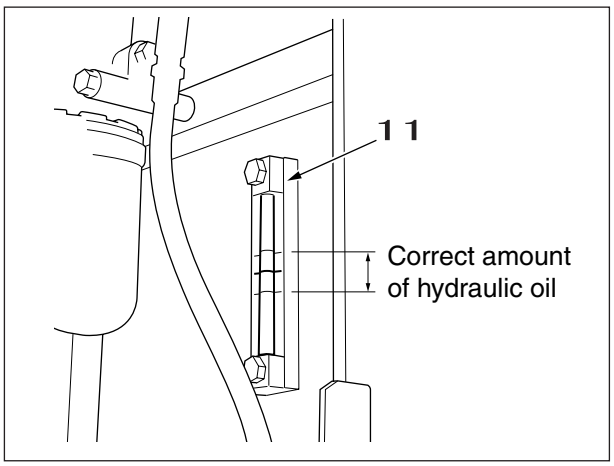

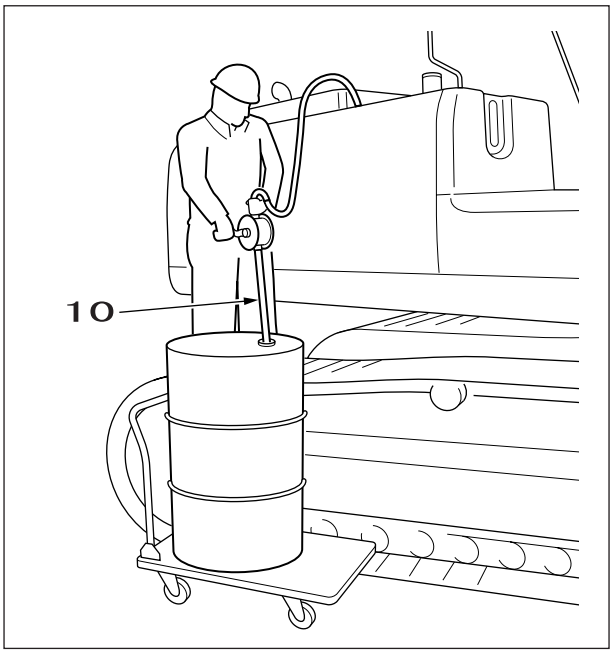

9	Waste oil can
10	Feed pump
11	Level gauge

https://truckmanualshub.com/

Others

1. Coolant Filling

   Remove the reserve tank cap and pour in coolant.

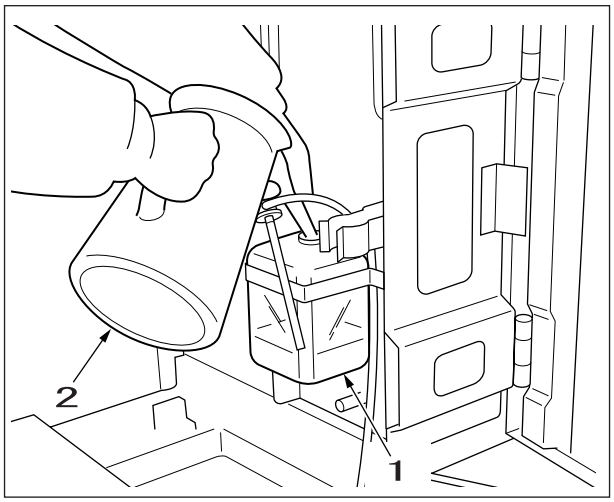

2. Washer Fluid Filling

   Remove the washer tank cap and pour in washer fluid.

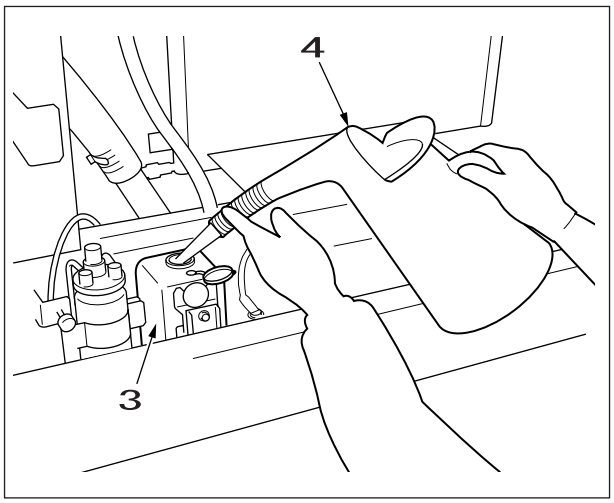

1	Reserve tank
2	Coolant
3	Washer tank
4	Washer fluid

I

https://truckmanualshub.com/

Lever Pattern Change Procedure

The lever pattern operation method (4 patterns) can be changed by changing the connection for the hose on the cushion valve operator cab side.
Before the work, bleed out the pressure.(See Pressure Measurement.)

Items to Prepare

You can change to the following types with the ISO type as the basic type.

- Sumitomo type
- Mitsubishi type
- Shinko type

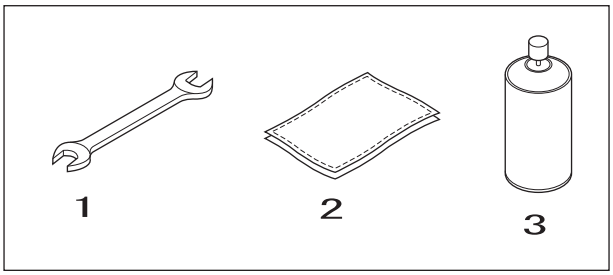

1	Spanner (22 mm)
2	Rags
3	Cleaning fluid

ISO Type

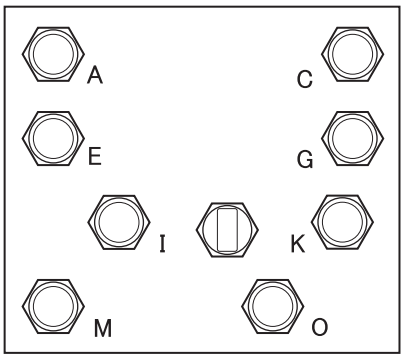

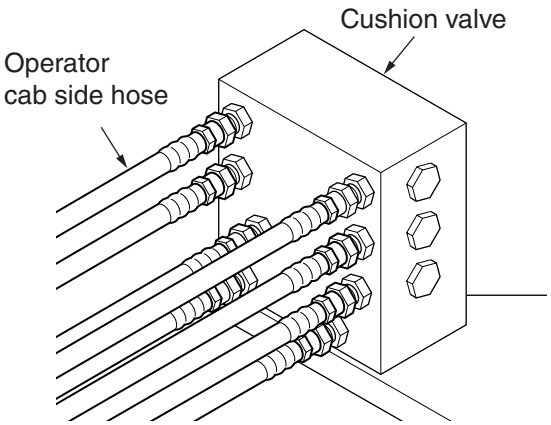

Connection type

Port	ATT	Hose
C	Arm-out	A1
A	Arm-in	A2
K	Swing left	S1
I	Swing right	S2
E	Boom-down	V1
G	Boom-up	V2
O	Bucket-close	B1
M	Bucket-open	B2

I

https://truckmanualshub.com/

Lever Pattern Change Procedure

ISO Type → SUMITOMO Type

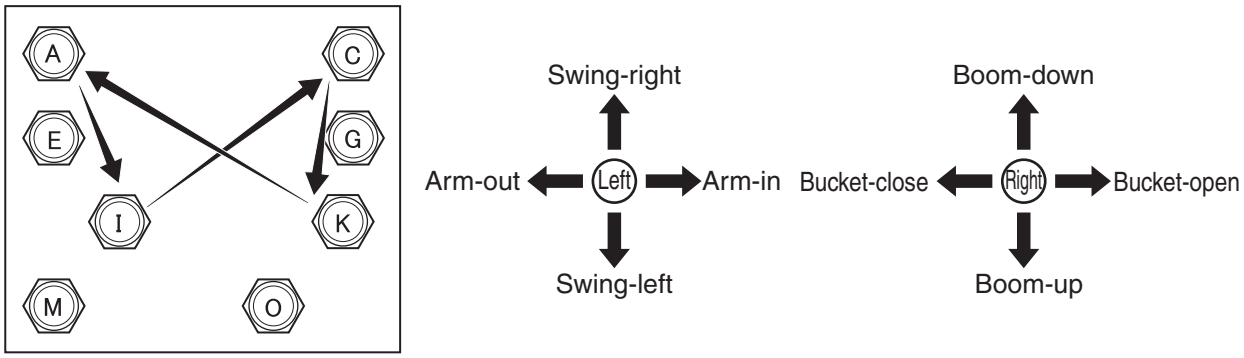

Connection type

Remote controller (right)	Hose No.		Cushion valve		Hose No.	Remote controller (right)
Boom-down	V1	← ISO	E	→ SUMITOMO	V1	Boom-up
Boom-up	V2		G		V2	Boom-down
Bucket-close	B1		O		B1	Bucket-open
Bucket-open	B2		M		B2	Bucket-close

Remote controller (left)	Hose No.		Cushion valve		Hose No.	Remote controller (left)
Arm-out	A1	← ISO	C	→ SUMITOMO	S2	Swing right
Arm-in	A2		A		S1	Swing left
Swing left	S1		K		A1	Arm-in
Swing right	S2		I		A2	Arm-out

ISO Type → MITSUBISHI Type

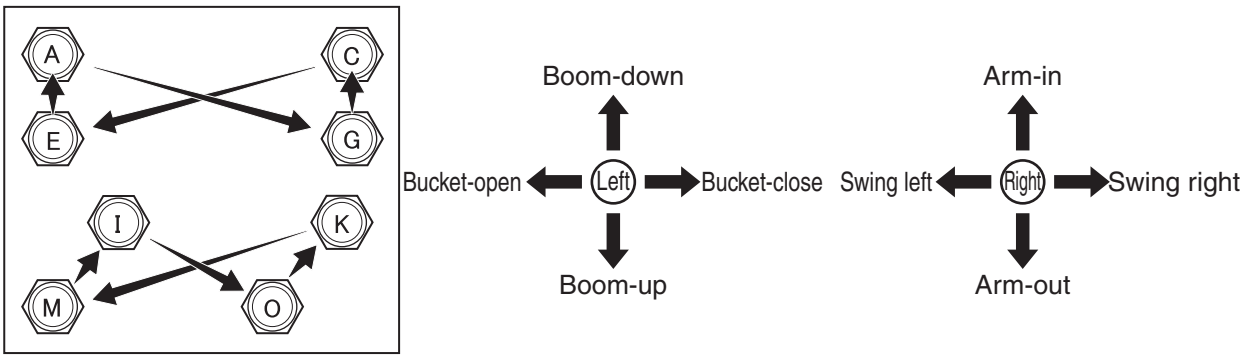

Connection type

Remote controller (right)	Hose No.		Cushion valve		Hose No.	Remote controller (right)
Boom-up	V1	← ISO	E	→ MITSUBISHI	A1	Arm-out
Boom-down	V2		G		A2	Arm-in
Bucket-open	B1		O		S2	Swing right
Bucket-close	B2		M		S1	Swing left

Remote controller (left)	Hose No.		Cushion valve		Hose No.	Remote controller (left)
Arm-out	A1	← ISO	C	→ MITSUBISHI	V2	Boom-down
Arm-in	A2		A		V1	Boom-up
Swing left	S1		K		B1	Bucket-open
Swing right	S2		I		B2	Bucket-close

https://truckmanualshub.com/

ISO Type → SHINKO Ttype

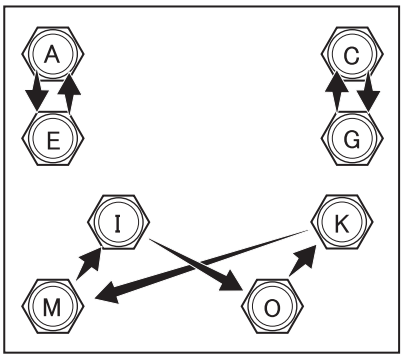

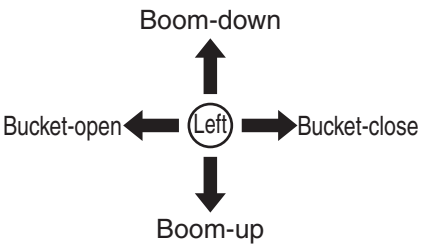

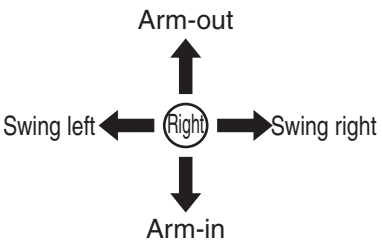

Connection type

Remote controller (right)	Hose No.		Cushion valve		Hose No.	Remote controller (right)
Boom-up	V1	← ISO	E	→ KOBELCO	A2	Arm-in
Boom-down	V2		G		A1	Arm-out
Bucket-open	B1		O		S2	Swing right
Bucket-close	B2		M		S1	Swing left

Remote controller (left)	Hose No.		Cushion valve		Hose No.	Remote controller (left)
Arm-out	A1	← ISO	C	→ KOBELCO	V2	Boom-down
Arm-in	A2		A		V1	Boom-up
Swing left	S1		K		B1	Bucket-open
Swing right	S2		I		B2	Bucket-close

I

https://truckmanualshub.com/

Maintenance Every 250 Hours

1. Battery Inspection and Replacement

Check the color from the battery cover inspection window.

Green: OK
Black: Charge (Charge the battery.)
White: Replace (Replace the battery.)

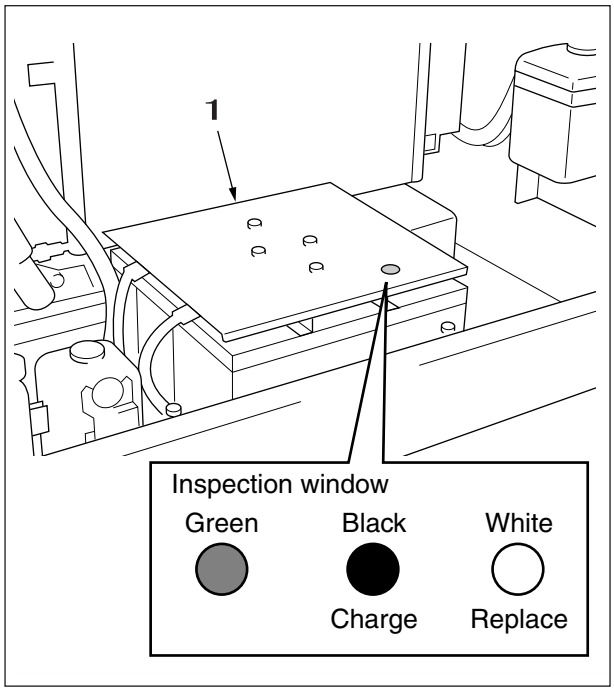

■Battery replacement method

[1] Remove the two screws, then remove the battery cover.

[2] Remove the two cables connected to the battery terminals, then replace the battery with a new one.

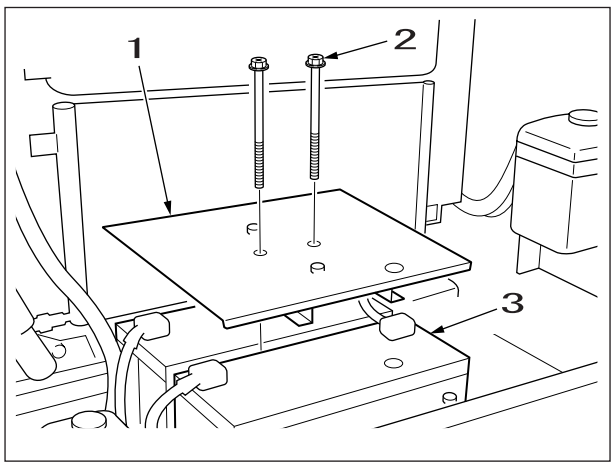

1	Battely cover
2	Screw
3	Battely

https://truckmanualshub.com/

Maintenance After First 250 Hours for New Machine / Every 1000 Hours from then ON

1. Swing Reduction Gear Oil Replacement

SH240-5

[1] Use a spanner (19 mm) to remove the bottom cover.

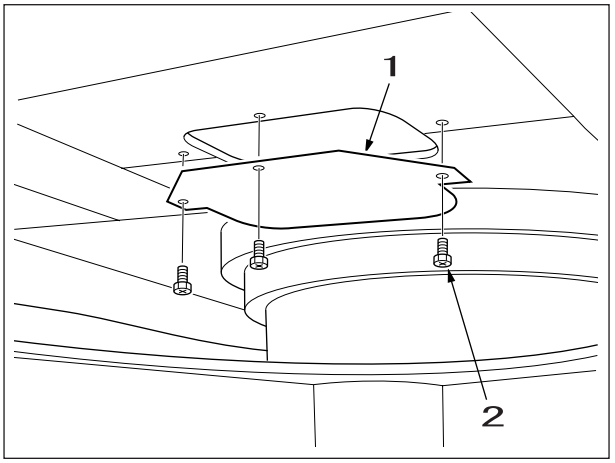

[2] Prepare a waste oil receiver.

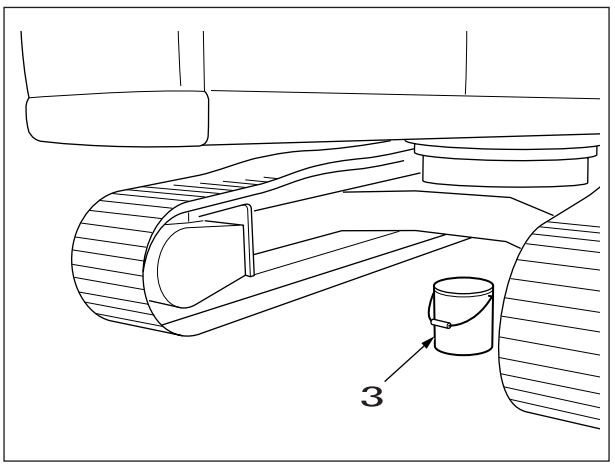

[3] Remove the feed plug.

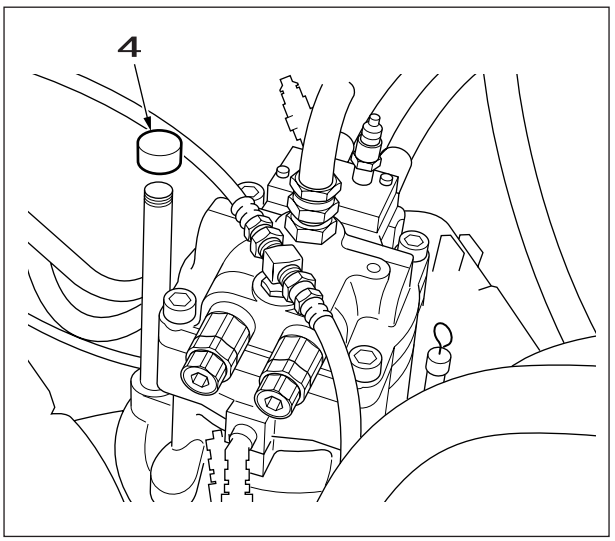

1	Cover
2	Bolt
3	Waste oil can
4	Feed plug

https://truckmanualshub.com/

[4] Use a spanner (27 mm) to remove the drain plug and drain off the oil.

[5] After oil draining is complete, tighten the drain plug.

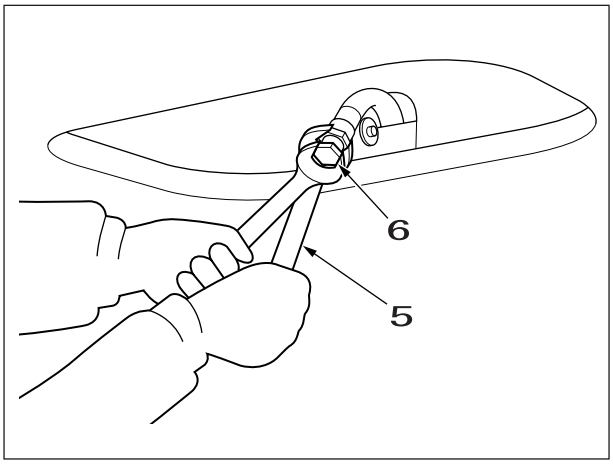

5	Spanner
6	Drain plug

2. Gear Oil Filling

[1] Fill the stipulated amount of oil from the feed port.

[2] When filling with oil, removing the level gauge beforehand facilitates oil filling.

[3] After about 10 minutes, check the oil volume with the level gauge.

[4] If the oil volume is correct, install the drain plug.

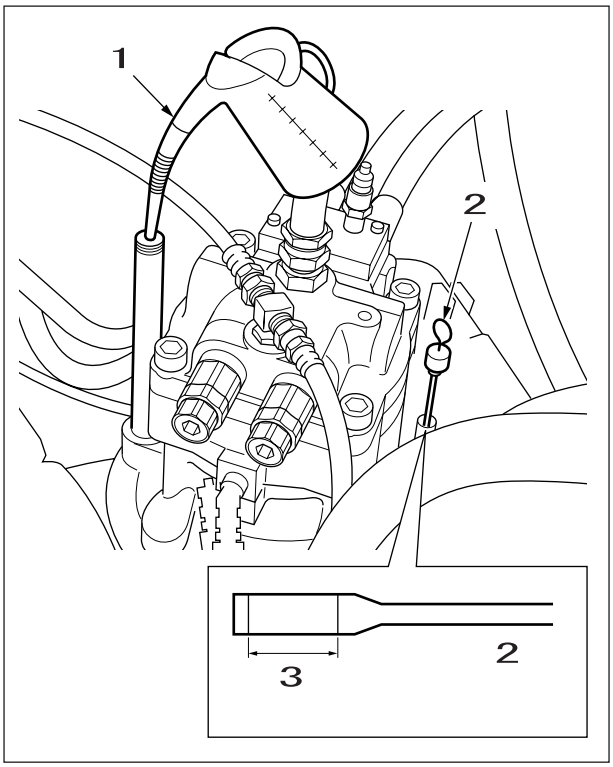

1	Gear oil
2	Level gauge
3	Stipulated amount of oil

I

https://truckmanualshub.com/

3. Replace the Flange Packing at the Bottom of the Fuel Tank.
   [1] Whenever the fuel tank bottom cover is removed, for example for cleaning the fuel tank, replace the packing.
   [2] When installing the packing, apply liquid packing.(See the figure below.)
   - Replacement parts

Part name	Part No.
Joint seat packing	KSH0503
Liquid packing 1104	KYC0075

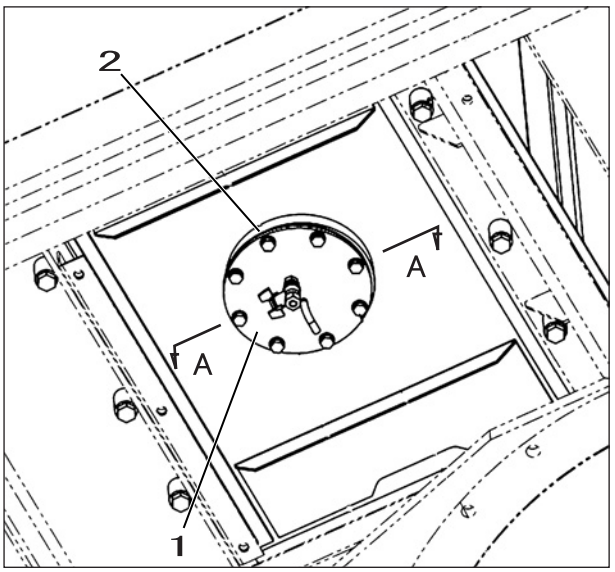

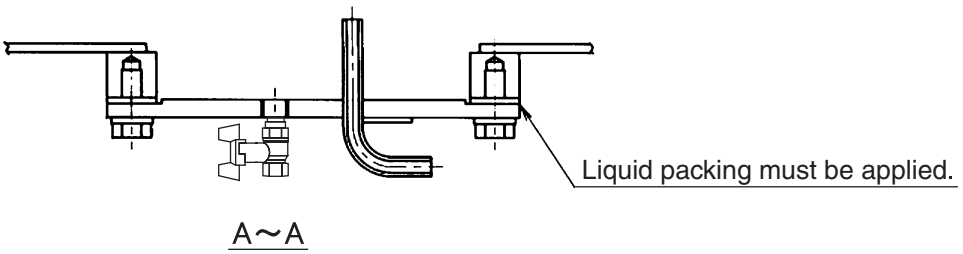

1	Cover
2	Packing

https://truckmanualshub.com/

Bolt and Nut Tightening

- Tighten alternating between left and right and top and bottom so that uniform tightening force is applied.

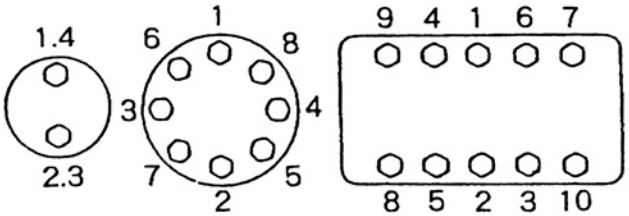

- For bolts at critical locations, apply engine oil to the threads for a uniform tightening force without catching on the thread peaks.
- For bolts and nuts at critical locations and at locations that cannot be inspected from the outside, use wire, cotter pins, folded washers, or the like to securely prevent turning.

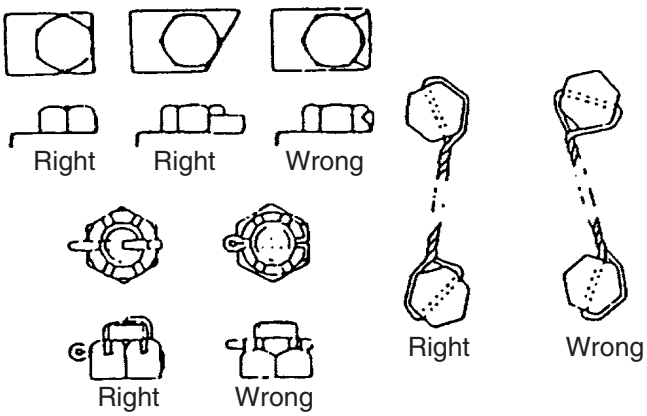

- If Locktite was used on a removed bolt (there is something white sticking to the bolt when it is removed), clean the old Locktite off with cleaning fluid, dry the bolt, then apply 2 to 3 drops of Locktite to the thread section of the bolt.

Bolt and Nut Retightening [After 1st 50 Hours for New Machine][Every 250 Hours]

Tighten and retighten bolts and nuts in each section according to the table.Also before and after day-to-day work, inspect for loose or fallen out bolts and nuts. Retighten any that are loose and replace any that have come out.
Inspect and retighten after the first 50 hours for a new machine and every 250 hours after that.

I

https://truckmanualshub.com/

Bolt Size and Torque Table

Retightening Torque Table

Sign	Retightening location		Bolt nominal diameter	Spanner used	Tightening torque [N•m]
②	Travel motor		M16	24 mm	267 to 312
②	Drive sprocket		M16	24 mm	267 to 312
③	Take-up roller		M16	24 mm	267 to 312
④	Top roller (carrier roller)		M20	30 mm	521 to 608
⑤	Bottom roller (track roller)		M18	27 mm	371 to 432
⑥	Track guard		M18	27 mm	400 to 462
7	Shoe bolt		M20	30 mm	804 ± 49 N•m
8	Counterweight	SH210-5	M33	50 mm	1862 to 1764
		SH240-5			1862 to 2058
9	Turntable bearing (lower frame)	SH210-5	M20	30 mm	468 to 545
		SH240-5	M24	36 mm	784 to 914
10	Turntable bearing (swing frame)	SH210-5	M20	30 mm	468 to 545
		SH240-5	M24	36 mm	784 to 914
⑪	Swing unit	SH210-5	M20	30 mm	539 to 630
		SH240-5	M24	36 mm	784 to 914
⑫	Engine (engine mount)		M16	24 mm	265 to 314
⑬	Engine bracket		M10	17 mm	64 to 73
			M16	24 mm	206 to 247
14	Radiator		M16	24 mm	147 to 177
⑮	Hydraulic pump		M10 M20	17 mm Hexagon socket head	64 to 74 367 to 496
⑯	Hydraulic oil tank		M16	24 mm	232 to 276
⑰	Fuel tank		M16	24 mm	232 to 276
18	Control valve		M16	24 mm	267 to 312
⑲	Center joint		M12	19 mm	88 to 107
20					109 to 127
21	Cab		M16	24 mm	245 to 294
22	Battery		M10	17 mm	20 to 29

Caution
For items marked with ○, always apply Locktite #262 or the equivalent and tighten with the specified torque.
N•m ÷ 9.8 gives the tightening torque in kgf•m.

The tightening for bolts and nuts not otherwise specified in the table above is as follows.

Bolt nominal diameter (size)			M6	M8	M10	M12	M14	M16	M18	M20
Hexagon bolt	Spanner used	[mm]	10	13	17	19	22	24	27	30
	Tightening torque	[N•m]	6.9	19.6	39.2	58.8	98.1	157.0	196.0	294.0
Hexagon socket head bolt	Spanner used	[mm]	5	6	8	10	12	14	14	17
	Tightening torque	[N•m]	8.8	21.6	42.1	78.4	117.6	176.4	245.0	343.0

https://truckmanualshub.com/

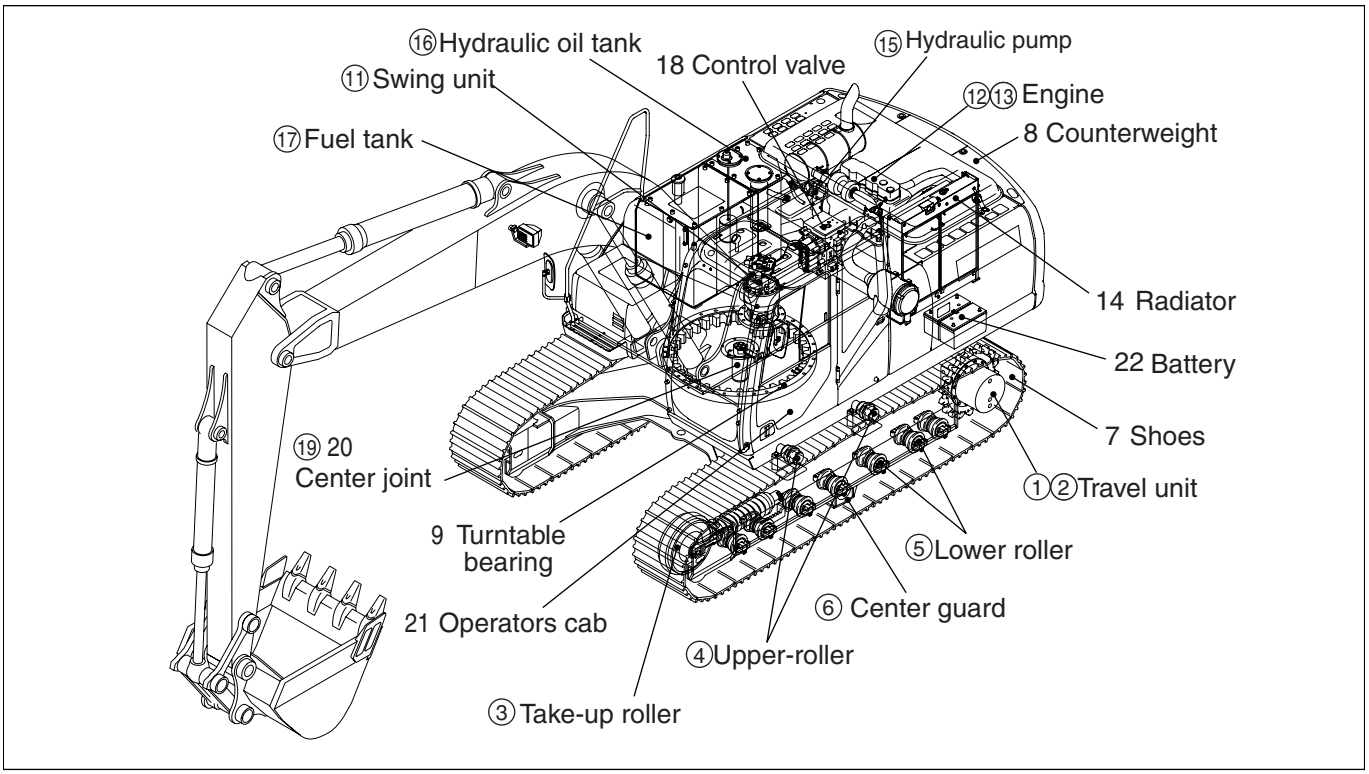

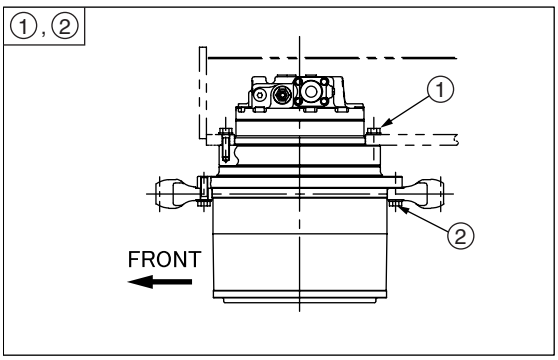

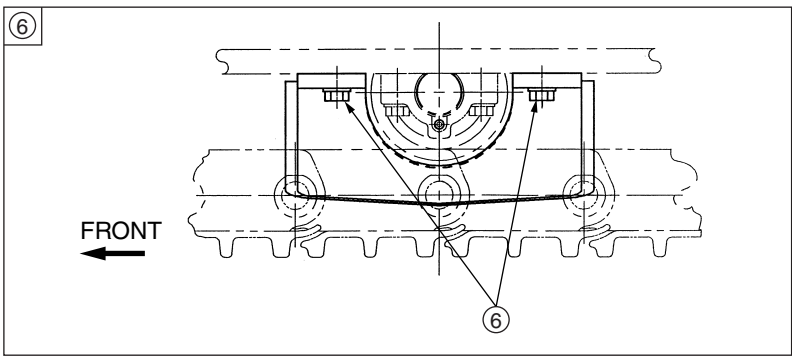

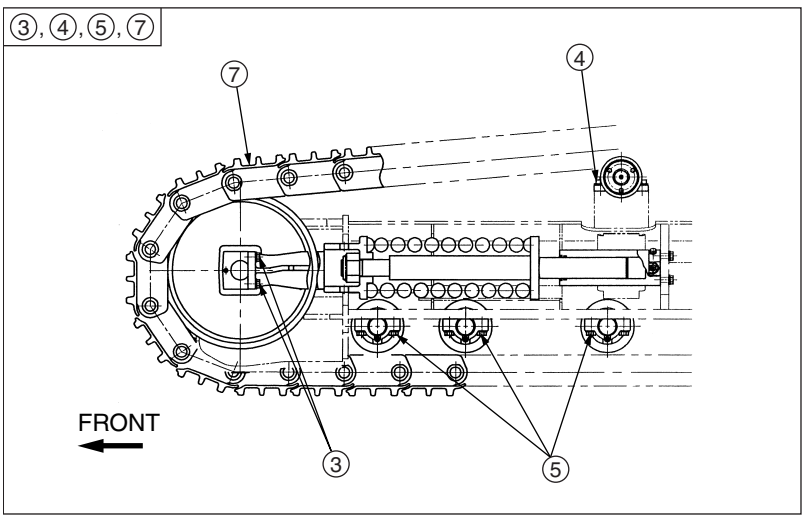

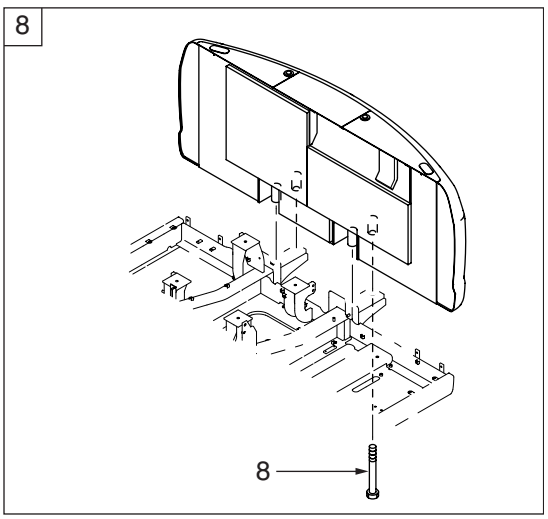

I

https://truckmanualshub.com/

Bolt Size and Torque Table

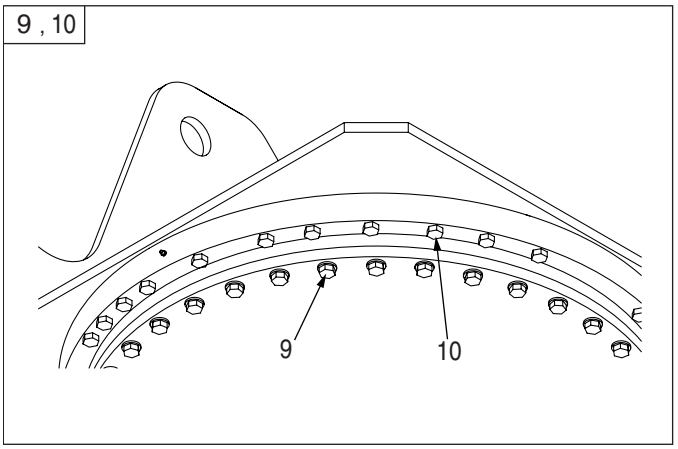

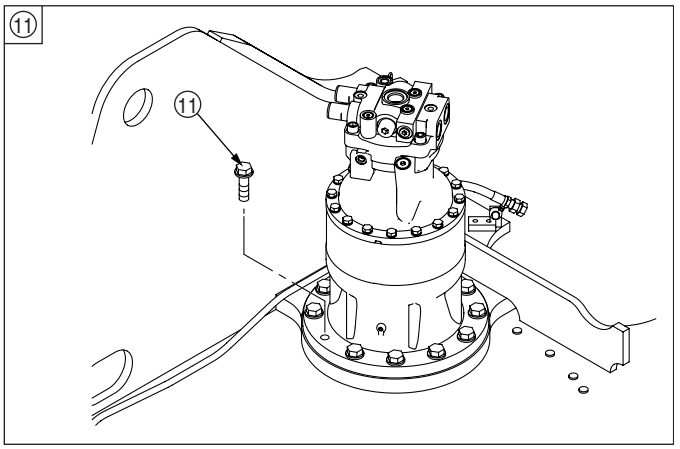

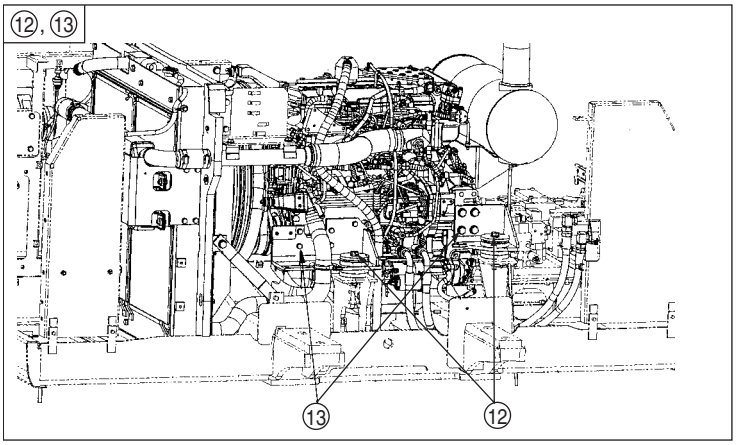

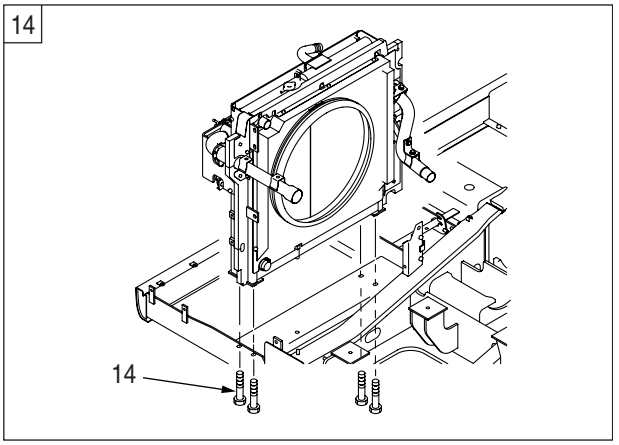

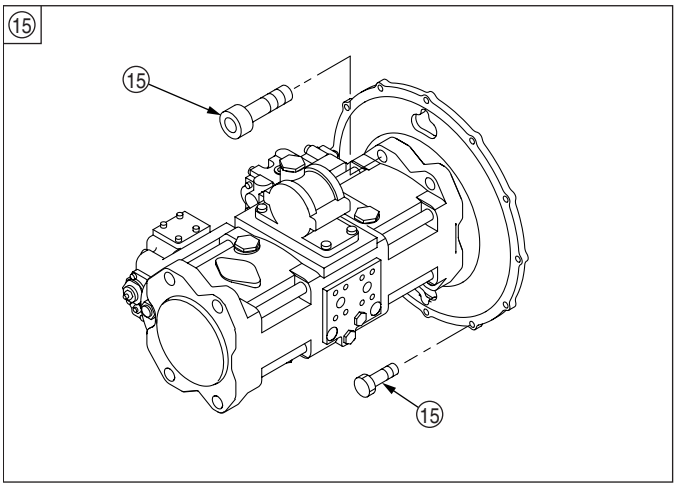

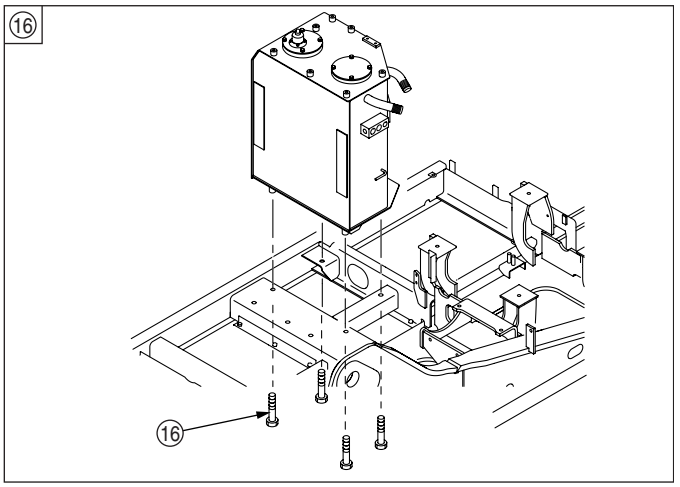

https://truckmanualshub.com/

⑰

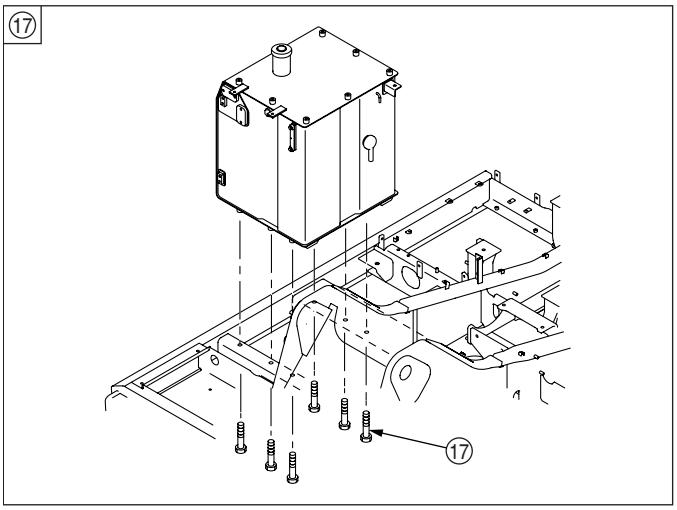

18

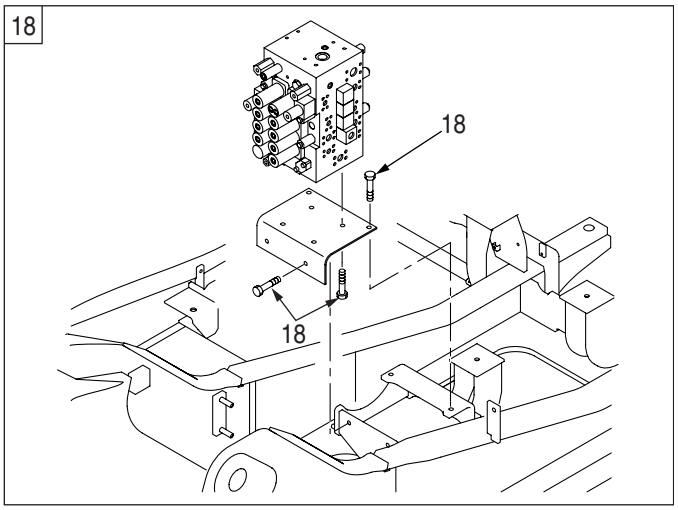

⑲, 20

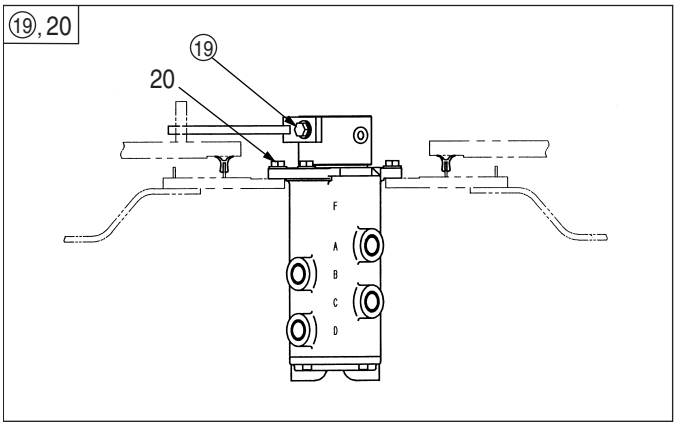

21

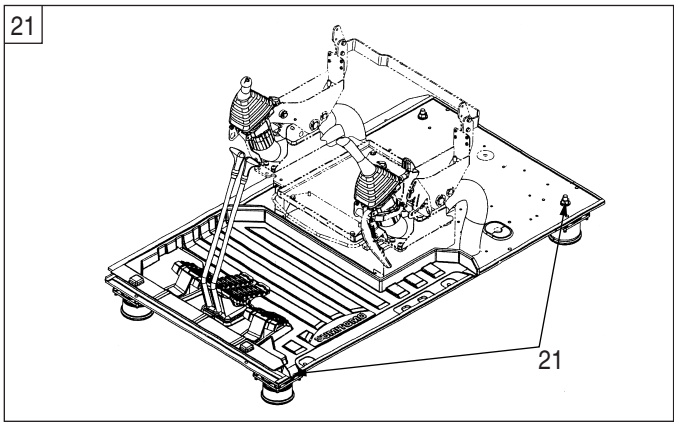

22

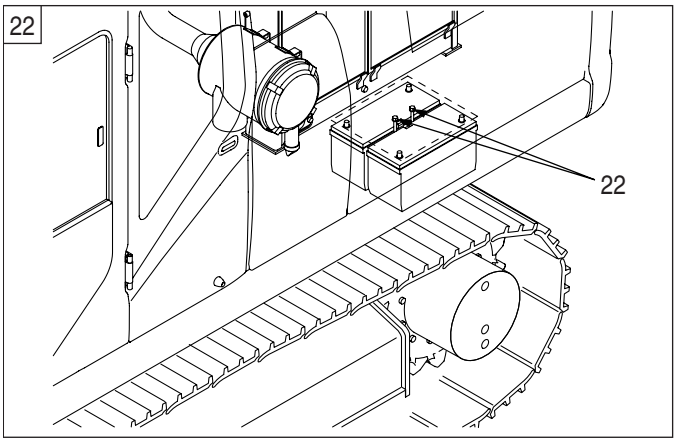

I

https://truckmanualshub.com/

Major Component Weight (standard specifications)

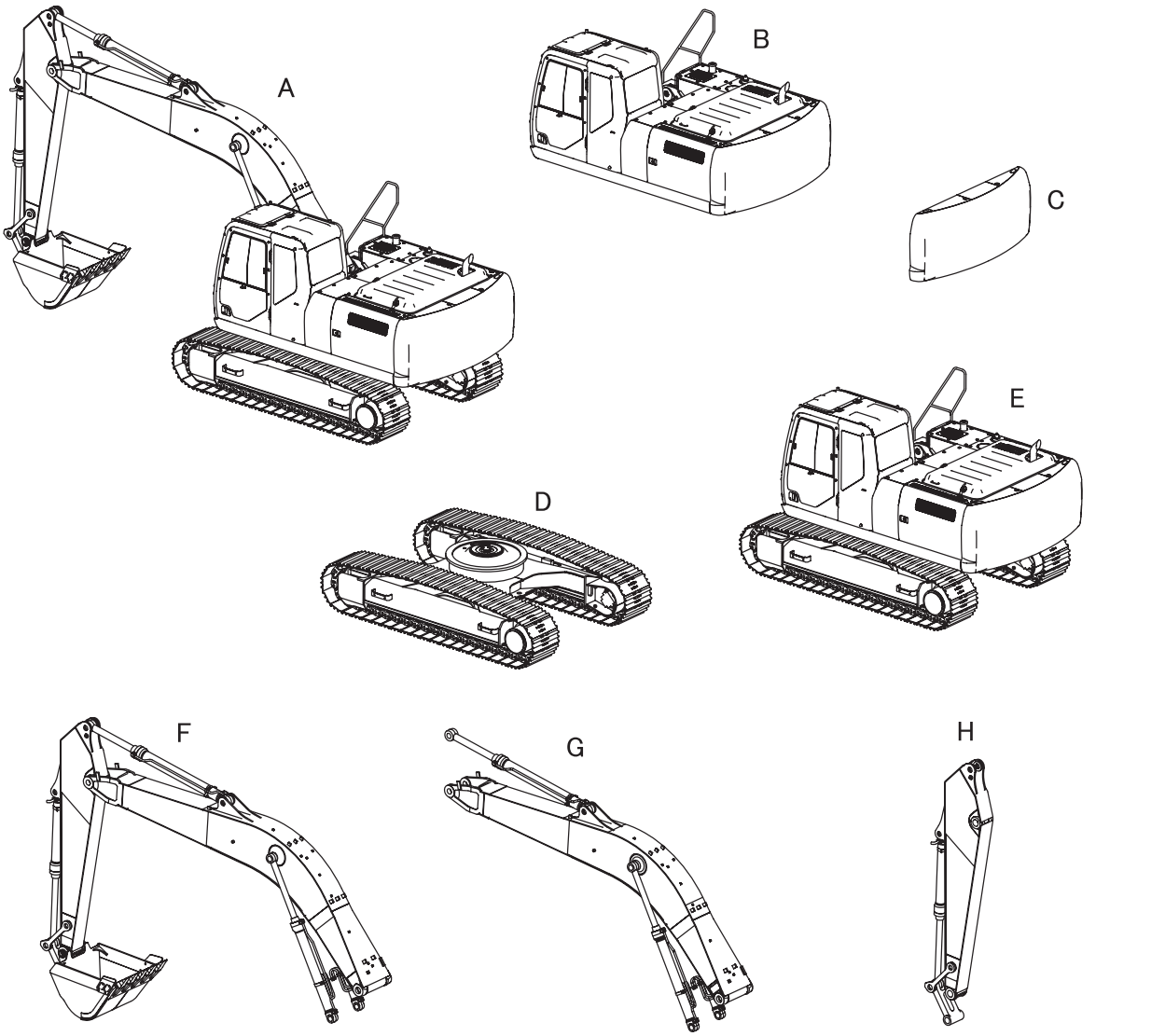

Weight (kg)

Symbol	Component name	SH210-5	SH210LC-5	SH240-5
A	Operating weight	20000	20500	24300
B	Upper component (including counterweight and turntable bearing)	9290	9290	11210
C	Counterweight	3820	3820	5270
D	Lower component (with grouser shoe)	6700	7140	8220
E	Main Unit Weight	15990	16430	19430
F	Attachments	3920	3960	4830
G	Boom (including cylinders)	2230	2230	2710
H	Arm (including cylinders and linkage)	1030	1030	1230

* The weight information is approximate.

J

https://truckmanualshub.com/

Main Unit Weight

Individual Part Weight

Dry weight for each part is shown in the table below

Weight (kg)

	Part name	SH210-5	SH210LC-5	SH240-5
1	Travel unit	328	←	←
2	Take-up roller	87	←	←
3	Upper-roller	17	←	18
4	Lower-roller	31	←	37
5	Swing unit	239	←	297
6	Turntable bearing	263	←	404
7	Engine	534	←	531
8	Radiator	134	←	142
9	Hydraulic pump	144	←	←
10	Fuel tank	160	←	←
11	Hydraulic oil tank	152	←	←
12	Control valve	203	←	←
13	Center joint	31	←	←
14	Boom	1527	←	1831

Shoe Weight (one side)

Weight (kg)

	Part name	SH210-5	SH210LC-5	SH240-5
1	600 mm grouser shoe	1260	1340	1480
2	700 mm grouser shoe	1480	1560	1630
3	800 mm grouser shoe	1610	1710	1780

Arm Weight

Weight (kg)

	Part name	SH210-5	SH210LC-5	SH240-5
1	Standard arm	697	←	792
2	Short arm	670	←	680
3	Long arm	-	-	893

https://truckmanualshub.com/

Bucket Weight

SH210-5 / 210LC-5

	Bucket capacity (m^3)	Weight (kg)	L1 (mm)	L2 (mm)
1	0.5	514	730	830
2	0.8	654	1030	1130
3	0.9	694	1130	1230
4	1.0	747	1260	1360
5	1.1	780	1360	1460
6	0.8HD	726	1036	1136

SH240-5

	Bucket capacity (m^3)	Weight (kg)	L1 (mm)	L2 (mm)
1	0.8	742	985	1086
2	1.0	841	1175	1276
3	1.1	884	1260	1361
4	1.3	945	1460	1561

Bucket shape

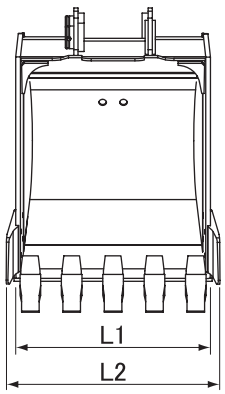

Hoe bucket

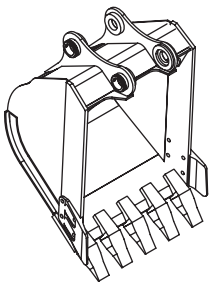

RST-11-01-001b

J

https://truckmanualshub.com/

Compatibility

1. Main Part Compatibility Table (SH210-5)

Region		Part name	SH200-3	Compatibility	SH210-5	Remarks
Lower related	A	Travel motor	KRA10120	← × →	KRA10150	Drive force increased
		Shoe (600 mm)	KRA1788	← O →	KRA11270	
		Lower-roller	KRA1189	← O →	KRA10360	Contact surface with link machining added
		Upper-roller	KRA1717	← O →	KRA1717	
		Take-up roller	KRA1767	← O →	KRA1767	
		Recoil spring	KRA1776	← × →	KRA10170	Specifications change
		Drive sprocket	KRA1665	← O →	KRA10160	Tooth shape change
		Center joint	KRA1875	← O →	KRA11190	The lock bar is different.
Upper related	B	Counterweight	KRB1541	← × →	KRB12620	Shape change
		Turntable bearing	KRB10160	← × →	KRB11710	Power increased
	C	Swing motor assembly	KRC0226	← × →	KRC10010	Specifications change
		Swing motor	LJ01076	← × →	LJ014440	
		Swing reduction gear	LN00111	← × →	LN001820	
	H	Engine	KRH1634	← × →	KRH11180	Third engine
		Radiator / oil cooler	KRH1329	← × →	KRH10810	Parallel type used
		Air cleaner	KRH1569	← × →	KRH10050	Indicator position change
		Muffler	KRH1227	← × →	KRH10880	Size increased
		Fuel tank	KRH1352	← × →	KRH10800	Capacity increased
	J	Hydraulic pump	KRJ6199	← × →	KRJ10290	Specifications change
		Control valve	KRJ10420	← × →	KRJ10310	Specifications change
		Remote control valve (operating machine)	KRJ5804	← × →	KHJ13270	Specifications change
		Remote control valve (travel)	KRJ5803	← O →	KRJ5803	
		Hydraulic oil tank	KRJ6216	← × →	KRJ15660	Shape change
	N	Cab	KHN10020	← × →	KHN13440	Structure change
		Operator seat	KHN3470	← × →	KHN10500	Suspension change
		Console box	KHN2652	← × →	KHN12210	Design change
	R	Computer	KHR2680	← × →	KHR10021	Specifications change
		Monitor display	KHR3825	← × →	KHR10051	Design change
		Air conditioner unit	KHR4135	← O →	KHR13320	Unit main unit only interchangeable
Attachment related	V	Boom (EMS)	KRV17890	← × →	KRV20180	Specifications change
		Arm (EMS)	KRV17610	← × →	KRV20190	The arm tip section has a steel bushing.
		Bucket (0.8 m^3)	KRV2783	← O →	KRV19330	Bottom plate change
		Bucket link	KRV3079	← × →	KRV20240	The bucket link section has a steel bushing.
		Arm link	KRV2365 KRV2366	← × →	KRV2365 KRV2366	
		Boom cylinder	KRV2952 KRV2953	← × →	KRV19520 KRV19540	Specifications change
		Arm cylinder	KRV2954	← × →	KRV19600	Specifications change
		Bucket cylinder	KRV13360	← × →	KRV19640	Specifications change
		Pin bushing				Arm top and bucket pin only interchangeable

The parts numbers are for reference.When arranging for parts, check with the parts manual.

J

https://truckmanualshub.com/

Compatibility

2. Main Part Compatibility Table (SH210LC-5)

Region		Part name	SH200LC-3	Compatibility	SH210LC-5	Remarks
Lower related	A	Travel motor	KRA10120	← × →	KRA10150	Drive force increased
		Shoe (600 mm)	KRA11370	← O →	KRA11370	
		Lower-roller	KRA1189	← O →	KRA10360	Contact surface with link machining added
		Upper-roller	KRA1717	← O →	KRA1717	
		Take-up roller	KRA1767	← O →	KRA1767	
		Recoil spring	KRA1776	← × →	KRA10170	Specifications change
		Drive sprocket	KRA1665	← O →	KRA10160	Tooth shape change
		Center joint	KRA1875	← O →	KRA11190	The lock bar is different.
Upper related	B	Counterweight	KRB1541	← × →	KRB12620	Shape change
		Turntable bearing	KRB10160	← × →	KRB11710	Power increased
	C	Swing motor assembly	KRC0226	← × →	KRC10010	Specifications change
		Swing motor	LJ01076	← × →	LJ014440	
		Swing reduction gear	LN00111	← × →	LN001820	
	H	Engine	KRH1634	← × →	KRH11180	Third engine
		Radiator / oil cooler	KRH1329	← × →	KRH10810	Parallel type used
		Air cleaner	KRH1569	← × →	KRH10050	Indicator position change
		Muffler	KRH1227	← × →	KRH10880	Size increased
		Fuel tank	KRH1352	← × →	KRH10800	Capacity increased
	J	Hydraulic pump	KRJ6199	← × →	KRJ10290	Specifications change
		Control valve	KRJ10420	← × →	KRJ10310	Specifications change
		Remote control valve (operating machine)	KRJ5804	← × →	KHJ13270	Specifications change
		Remote control valve (travel)	KRJ5803	← O →	KRJ5803	
		Hydraulic oil tank	KRJ6216	← × →	KRJ15660	Shape change
	N	Cab	KHN10020	← × →	KHN13440	Structure change
		Operator seat	KHN3470	← × →	KHN10500	Suspension change
		Console box	KHN2652	← × →	KHN12210	Design change
	R	Computer	KHR2680	← × →	KHR10021	Specifications change
		Monitor display	KHR3825	← × →	KHR10051	Design change
		Air conditioner unit	KHR4135	← O →	KHR13320	Unit main unit only interchangeable
Attachment related	V	Boom (EMS)	KRV17890	← × →	KRV20180	Specifications change
		Arm (EMS)	KRV17610	← × →	KRV20190	The arm tip section has a steel bushing.
		Bucket (0.8 m^3)	KRV2783	← O →	KRV20700	Bottom plate change
		Bucket link	KRV3079	← × →	KRV20240	The bucket link section has a steel bushing.
		Arm link	KRV2365 KRV2366	← O →	KRV2365 KRV2366	
		Boom cylinder	KRV2952 KRV2953	← × →	KRV19520 KRV19540	Specifications change
		Arm cylinder	KRV2954	← × →	KRV19600	Specifications change
		Bucket cylinder	KRV13360	← × →	KRV19640	Specifications change
		Pin bushing				Arm top and bucket pin only interchangeable

The parts numbers are for reference.When arranging for parts, check with the parts manual.

https://truckmanualshub.com/

3. Main Part Compatibility Table (SH240-5)

Region		Part name	SH240-3	Compatibility	SH240-5	Remarks
Lower related	A	Travel motor	KBA10060	← × →	KBA10290	Drive force increased
		Shoe (600 mm)	KBA1287	← O →	KBA11230	
		Lower-roller	KBA1123	← O →	KBA10360	Contact surface with link machining added
		Upper-roller	KRA1717	← O →	KRA1717	
		Take-up roller	KRA1767	← O →	KRA1767	
		Recoil spring	KRA1776	← × →	KRA10170	Specifications change
		Drive sprocket	KRA1665	← O →	KRA10160	Tooth shape change
		Center joint	KRA1875	← O →	KRA11190	The lock bar is different.
Upper related	B	Counterweight	KBB0722	← × →	KBB11610	Shape change
		Turntable bearing	KBB10090	← × →	KBB11350	Power increased
	C	Swing motor assembly	KBC0109	← × →	KBC10010	Specifications change
		Swing motor	KBC0108	← × →	KBC10020	Specifications change
		Swing reduction gear	KBC0110	← × →	KBC10030	Specifications change
	H	Engine	KBH1006	← × →	KRH11180	Third engine
		Radiator / oil cooler	KBH1002	← × →	KBH10800	Parallel type used
		Air cleaner	KRH1569	← × →	KRH10050	Indicator position change
		Muffler	KBH0848	← × →	KRH10880	Size increased
		Fuel tank	KRH1352	← × →	KRH10800	Capacity increased
	J	Hydraulic pump	KBJ2892	← × →	KRJ10290	Specifications change
		Control valve	KBJ10200	← × →	KBJ10390	Specifications change
		Remote control valve (operating machine)	KRJ5804	← × →	KHJ13270	Specifications change
		Remote control valve (travel)	KRJ5803	← O →	KRJ5803	
		Hydraulic oil tank	KRJ6216	← × →	KRJ15660	Shape change
	N	Cab	KHN10020	← × →	KHN13440	Structure change
		Operator seat	KHN3470	← × →	KHN10500	Suspension change
		Console box	KHN3237	← × →	KHN12210	Design change
	R	Computer	KHR2680	← × →	KHR10021	Specifications change
		Monitor display	KHR3825	← × →	KHR10051	Design change
		Air conditioner unit	KHR4135	← O →	KHR13320	Unit main unit only interchangeable
Attachment related	V	Boom (EMS)	KBV1638	← × →	KBV15360	Specifications change
		Arm (EMS)	KBV1640	← × →	KBV15700	The arm tip section has a steel bushing.
		Bucket (1.1 m^3)	KBV1355	← O →	KBV13370	Bottom plate change
		Bucket link	KBV1653	← × →	KBV15720	The bucket link section has a steel bushing.
		Arm link	KBV1337 KBV1338	← O →	KBV1337 KBV1338	
		Boom cylinder	KBV1535 KBV1536	← × →	KBV10980 KBV11000	Specifications change
		Arm cylinder	KBV1537	← × →	KBV11020	Specifications change
		Bucket cylinder	KBV1538	← × →	KBV11040	Specifications change
		Pin bushing				Arm top and bucket pin only interchangeable

The parts numbers are for reference.When arranging for parts, check with the parts manual.

J

https://truckmanualshub.com/

4. Main Part Interchangeability Table (SH200 / SH240-5)

Position		Part name	SH200-5	Interchangeability	SH240-5	Remarks
Lower related	A	Travel motor	KRA10150	← × →	KBA10290	Motor specifications different
		Shoe (600 mm)	KRA1788	← × →	KBA1290	Number of links differ-ent
		Lower roller	KRA10360	← O →	KBA10310	Installation compatible
		Upper-roller	KRA1717	← O →	KRA1717	
		Take-up roller	KRA1767	← O →	KRA1767	
		Recoil spring	KRA10170	← O →	KRA10170	
		Drive sprocket	KRA10160	← O →	KRA10160	
		Center joint	KRA11190	← O →	KRA11190	
Upper related	B	Counterweight	KRB12620	← × →	KBB11610	Weight different
		Turntable bearing	KRB11710	← × →	KBB11350	Specifications different
	C	Swing motor assembly	KRC10010	← × →	KBC10010	Specifications different
		Swing motor	LJ014440	← × →	KBC10020	Specifications different
		Swing reduction gear	LN001820	← × →	KBC10030	Specifications different
	H	Engine	KRH10840	← × →	KBH10740	Specifications different
		Radiator / oil cooler	KRH10810	← × →	KBH10800	Specifications different
		Air cleaner	KRH10050	← O →	KRH10050	
		Muffler	KRH10060	← O →	KRH10060	
		Fuel tank	KRH10800	← O →	KRH10800	
	J	Hydraulic pump	KRJ10290	← × →	KBJ10510	Specifications different
		Control valve	KRJ10310	← × →	KBJ10390	Specifications different
		Remote control valve (operating machine)	KHJ13270	← O →	KHJ13270	
		Remote control valve (travel)	KRJ5803	← O →	KRJ5803	
	N	Hydraulic oil tank	KRJ15660	← O →	KRJ15660	
		Cab	KHN12030	← O →	KHN12030	
		Operator seat	KHN10500	← O →	KHN10500	
		Console box	KHN12200	← O →	KHN12200	
	R	Controller	KHR10020	← O →	KHR10020	
		Monitor display	KHR10051	← O →	KHR10051	
		Air conditioner and heater	KHR13320	← O →	KHR13320	
Attachment related	V	Boom (EMS)	KRV20180	← × →	KBV15360	Specifications different
		Arm (EMS)	KRV20190	← × →	KBV15700	Specifications different
		Bucket	KRV19330	← × →	KBV13370	Specifications different
		Bucket link	KRV20240	← × →	KBV15720	Specifications different
		Arm link	KRV2365 KRV2366	← × →	KBV1337 KBV1338	Specifications different
		Boom cylinder	KRV11130 KRV11140	← × →	KBV10980 KBV11000	Specifications different
		Arm cylinder	KRV11150	← × →	KBV11020	Specifications different
		Bucket cylinder	KRV11160	← × →	KBV11040	Specifications different
		Pin bushing		← × →		Specifications different

The parts numbers are for reference.When arranging for parts, check with the parts manual.

https://truckmanualshub.com/

Attachment Installation Methods

Attachment Dimensions

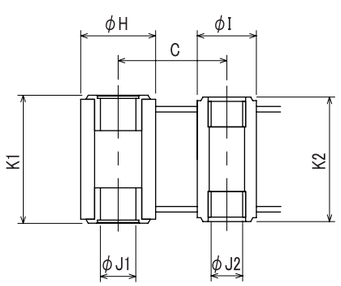

Arm boss

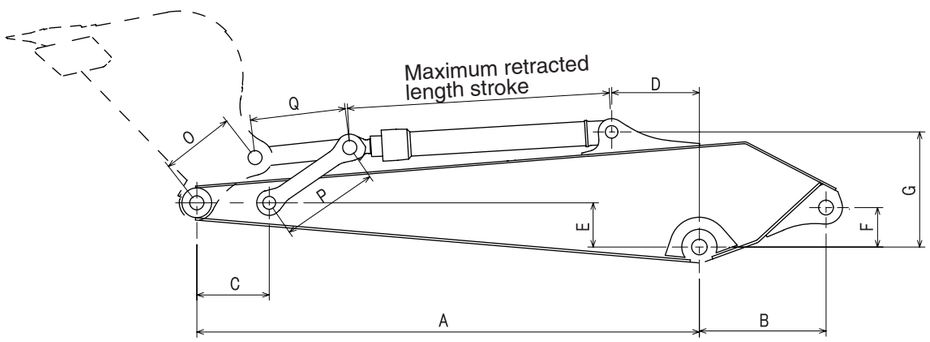

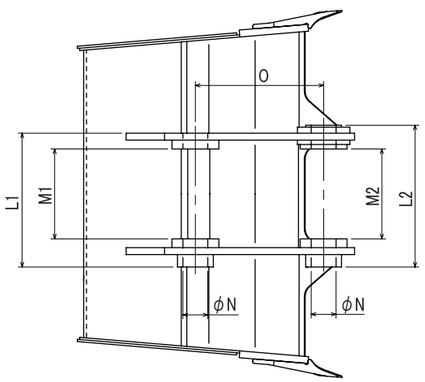

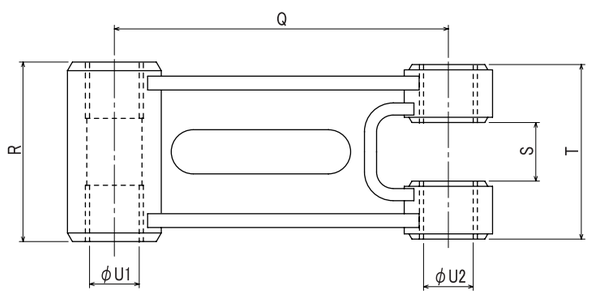

Bucket link

RST-11-04-001a

Position		Standard arm													Bucket						Arm link	Bucket link					
		A	B	C	D	E	F	G	H	I	J1	J2	K1	K2	L1	L2	M1	M2	N	O	P	Q	R	S	T	U1	U2
Dimensions (mm)	SH210-5	2930	796	445	454	256.3	210	717.3	186	140	80	75	306	296	460	476	307	307	80	80	580	560	306	96	296	80	85
	SH240-5	2989.2	886.5	460	388.2	254	281	719.5	196	150	90	80	325	316	485	507	326	326	90	468	620	605	325	106	316	90	90

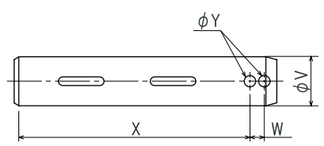

Bucket pin

RST-11-04-001b

Position		Bucket pin								Bucket cylinder		
		Bucket and arm connection section				Bucket and bucket link connection section				Maximum retracted length	Stroke	Cylinder top width
		V	W	X	Y	V	W	X	Y			
Dimensions (mm)	SH210-5	80	26	497	21	80	26	449	21	1565	1050	95
	SH240-5	90	26	528	21	90	26	474	21	1635	1070	105

https://truckmanualshub.com/

Paint Colors

		SUMITOMO No.	MUNSELL No.
1	Vivid yellow	Y-003	2.5Y 7.4 / 12.2
2	MS37 Gray	N-300	1.2Y 3.8 / 0.3
3	Black	S-141	9.0YR 3.3 / 0.1

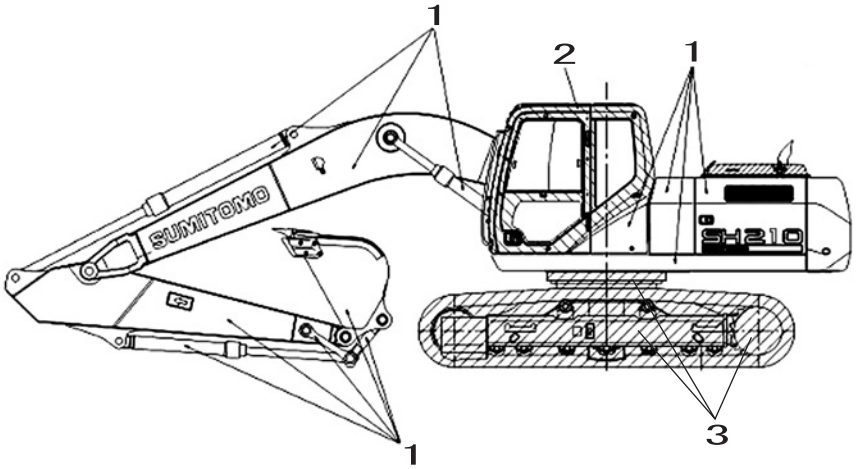

RK05001–001

No.	Paint location	Color	SUMITOMO No.	Painting part No.
1	• The upper of machine (Except cabin, engine, muffler, exhaust pipe, house door, engine hood, frame duct, electric parts, plastics) • Rev.frame (front side) • Attachment	Vivid yellow	Y-003	KHP1444 (urethane)
2	• Inside of house • Rev.frame (expect front and lower side)	MS37 Gray	N-300	KHP1193 (one-coat)
3	• Upper under cover	MS37 Gray	N-300	KHP1444 (urethane)
4	• Outside of cabin	Vivid yellow	Y-003	- (Melamine)
		MS37 Gray	N-300	
5	• Inside of cabin	MS37 Gray	N-300	- (Melamine)
6	• Frames of front window	Black	S-141	- (Melamine)
7	• Floor, bracket trim	MS37 Gray	N-300	KHP1193 (one-coat)
8	• The lower of machine • Rev.frame (lower side) • Include of turntable bearing	Black	S-141	KHP1189 (acryle)
9	• Rev.frame (under engine&inside)	MS37 Gray	N-300	KHP1189 (acryle)
10	• Lower under cover	MS37 Gray	N-300	KHP1193 (one-coat)
11	• Muffler and exhaust pipe	Black	Ceramic coating (K.K)	KHP1200 (heat resist)
12	• House door, side cover	Vivid yellow	Y-003	KHP1445 (baking)
13	• Engine hood	MS37 Gray	N-300	KHP1445 (baking)
14	• Hand rail	Black	S-141	Powder coating
15	• House cover, frame duct, tool box	MS37 Gray	N-300	KHP1445 (baking)
16	• House cover	Black	S-141	KHP1445 (baking)

J

https://truckmanualshub.com/

Unit Conversion Ratio

Weight unit	← × → ← ÷ →	SI unit
Kgf	9.807	N
lbf	4.448	N
Kgf•cm	0.0981	N•m
lbf•ft	1.356	N•m
lbf•in	0.113	N•m
Kgf/cm^2	0.0981	MPa
atm	0.1013	MPa
$lbf•in^2$	0.0069	MPa
mmHg	133.3	Pa
inHg	3386	Pa
Kgf•m/s	0.00981	kW
lbf•ft/s	0.00136	kW
PS	0.7355	kW
HP	0.746	kW
Kgf•m	9.807	J
Kcal	4186	J
$Kgf•s/cm^2$	98067	Pa•s
cP	0.001	Pa•s
P	0.1	Pa•s
cSt	$1×10^{-6}$	m^2/s
St	0.0001	m^2/s

J