https://truckmanualshub.com/
www.pdfmanual4trucks.com

ECB16 | ECB18

OPERATOR MANUAL

< OM-ECB162015006-EN-US >

BYD FORKLIFT

ATTENTION

Lift truck must be inspected at the beginning of each shift

https://truckmanualshub.com/
www.pdfmanual4trucks.com

https://truckmanualshub.com/
www.pdfmanual4trucks.com

ECB16 | ECB18

OPERATOR MANUAL

< OM-ECB162015006-EN-US >

BYD FORKLIFT

https://truckmanualshub.com/
www.pdfmanual4trucks.com

FOREWORD

Declaration

Operation Notice 2
Truck Delivery 2
Working Environment 3

SAFETY STANDARD

General Safety Practices

Modifications, Nameplates, Markings, and Capacity 6
Stopping Distance (Descending Grades) 6
Stability 7
Changing and Charging Storage Batteries for Electric Trucks 7
Trucks and Railroad Cars 7
Relocating Powered Industrial Trucks 7
Operator Training 8
Testing, Retraining, and Enforcement 10

Operating Safety Rules and Practices

Operator Responsibility 11
General 11
Traveling 13
Loading 15
Operator Care of the Truck 16

Maintenance And Rebuild Practices

Operation 18
Maintenance and Inspection 18
Inspection and Repair of Forks in Service on Fork Lift Trucks 19
Tip Over 21

OPERATOR NOTICE

Notice

Operator Qualification 26
Warning decals and signs 27

Data Plate and Loading capacity chart

Date Plate 28

https://truckmanualshub.com/
www.pdfmanual4trucks.com

Loading Capacity Chart 29

TRUCK VIEW AND TECHNICAL SPECIFICATIONS

View

General View 32

Specifications

Technical Drawing 34

Technical Specifications (Dual Drive) 36

Mast Specifications 37

Battery Specifications 37

OPERATING THE FORKLIFT

Seat

Descriptions 40

Basic Seat

Adjustment of lateral position of seat 41

Backrest adjustment 41

Weight adjustment 42

Seat belt 42

Comfort Seat

Adjustment of lateral position of seat 43

Backrest adjustment 43

Weight adjustment 44

Seat belt 44

Document box 45

Drive Control System

Drive control system overall view 46

Adjusting the steering wheel 48

Ignition Switch 48

Horn 49

Check the Braking Oil 50

Parking Brake 51

Selecting Travel Direction 52

Combination Lights Control 53

Multifunction Display

https://truckmanualshub.com/
www.pdfmanual4trucks.com

Overview on Multifunction Display 54
Adjusting Speed Mode (Class) 55
Working Indicator and Messages 56
Setting 57
Error Indicator 58
Trouble-shooting Methods 59

Working Equipment Controlling System
Mechanical levers 60
Fingertip Control 61

Forks
Adjusting the Forks 62

Towing Pin
Use of the Towing Pin 63

Transporting the Forklift
Crane-lifting the Forklift 64
Driving into the Transport Truck 65
Transporting and Unloading the Forklift 65

Transporting Loads
Loading 66
Travelling 66
Unloading 67
Exiting from the Forklift 68

DAILY OR WEEKLY CHECK AND INSPECTION

Daily Inspection
Checklist and Time Interval 72
Forklift Exterior 72
Tires 72
Working Equipment 73
Hydraulic System 73
Seat 73
Multifunction display 73
Lights, Horn and Other Warning Equipment 74
Braking System 74
Driving System and Controlling System 74

https://truckmanualshub.com/
www.pdfmanual4trucks.com

Counterweight 74
Others 74

Weekly Inspection
Checklist and Time Interval 75
Electric System Inspection 75
Tires 75
Braking System 75

REGULAR INSPECTION AND MAINTENANCE

Checklist and Procedures
Inspection Checklist and Procedures 78
Regular Maintenance Checklist 79
Type and Parameters of Oil and Grease 79

Working Equipment
Mast Channel Cleaning and Adjustment 80
Tilt Rotating Pin Lubrication 80
Adjusting the Chains 81
Changing and Replacing Chains 81

Electric
Electric System Inspection 82

Hydraulic System
Before Inspection and Maintenance 84
Hydraulic Oil Level 85
Return Filter Element State Indicator 85
Return Filter Element Replacement 86
High Pressure Filter Element Replacement(Comfort Type Forklift) 87
Check and Replace the Air Filter 87
Hydraulic Oil Replacement 88

Tires Replacement
Condition needs replacement 89
Front Wheels Replacement 90
Rear Wheels Replacement 90

Gear Oil
Gear Oil replacement (Dual Drive) 91

Braking Oil Replacement
Braking Oil Reservoir 92

https://truckmanualshub.com/
www.pdfmanual4trucks.com

Braking Oil Drain Plug 92
Methods of Replacing Braking Oil 93

Steering Axle
Clean 94

Torque On Critical Fasteners
Drive Axle Fasteners 95
Steering Axle Fasteners 95
Wheel Fasteners 96
Counterweight Fasteners 96
Mast Fasteners 97

DECOMMISSIONING AND RESTORING

Decommissioning the Forklift
Decommissioning the forklift for long-term Storage 102
Storage Environment 102

Restoring the Forklift to Service
Procedures to Restore the Forklift to Service 103

OTHER INFORMATION

Contact Informaiton 104

https://truckmanualshub.com/
www.pdfmanual4trucks.com

https://truckmanualshub.com/
www.pdfmanual4trucks.com

https://truckmanualshub.com/
www.pdfmanual4trucks.com

FOREWORD

Thank you for choosing BYD electric forklifts.

The BYD electric forklifts have the best price for value, high safety and easy access to maintenance and they offer great operating experience. To ensure that the BYD electric forklifts deliver its utmost performance, it is essential for operators/proprietors to conduct a correct operation, checking, maintenance and repair.

These operating instructions explain in detail how to correctly operate the BYD electric forklifts, as well as the procedures that you should follow when conducting checks, maintenance and repairs on the forklifts.

Read through every chapter in the manual before operation for the correct use and maintenance of the forklifts. When the forklift is out for rental or transportation, keep this operation instruction together with the forklift and make sure that operators can use the manual whenever necessary.

Upon receiving the forklift, use the shipping list to check for missing items. If there is anything missing, please contact with the after sales service immediately.

Pay attention to the following signs:

⚠ DANGER	Indicates an imminent extremely hazardous situation. Failure to avoid it will cause severe injuries, major property damage or even death.
⚠ WARNING	Indicates a potential extremely hazardous situation. Failure to avoid it might cause severe injuries, major property damage or even death.
⚠ CAUTION	Indicates a potential hazardous situation. Failure to avoid it might cause slight to medium injuries, or property damage.
ⓘ Note	Even for the professional, complying with the instructions will ensure a better operation of the the BYD forklift.

https://truckmanualshub.com/
www.pdfmanual4trucks.com

Declaration

Operation Notice

BYD electric forklifts can only be operated in the designated areas in the factory or in other specific environments, in compliance with local safety regulations on similar equipment.

Inappropriate use of the BYD forklift might cause damages and losses, which the operators or proprietor instead of BYD should be held liable for. If the forklift needs to be operated in the environments other than those mentioned in this manual, contact with your local BYD dealer first for confirmation.

Any modification to the forklift is not allowed unless BYD's written consent is granted. Contact with BYD first before modifying the forklifts.

If you have ordered other auxiliary attachments besides forks, please handle the loads in compliance with the loading capacity of the attachments. All the attachments are provided with operation instructions. Read through the manuals before operation.

This manual is devised based on the standard forklifts. For other questions not covered in the manual, please check with BYD after sales service.

Every BYD forklift has passed through thorough performance tests before shipment. Although proper protection has also been adopted during transportation, it is advised to conduct a thorough inspection when the forklift arrives.

Please contact with BYD if you have any question or if you need the complete test report.

BYD Forklift is subject to ongoing development and optimizing the design of products. BYD Forklift reserves the right to alter the design, equipment, technical features, and technical specifications and so on. No guarantee of particular features of the truck should therefore be assumed from the present operator manual.

Truck Delivery

Before delivering the forklifts to end customers, to guarantee that the forklift is in perfect condition, the followings checks should be conducted at BYD dealers:

1. Check if the wheel nuts are securely fastened.
2. Check the hydraulic oil level.
3. Check the brake.
4. Check the motors.
5. Check the steering function.
6. Check the operation of mast and attachments.
7. Check the high voltage connectors (transportation might have loosened the connectors)

https://truckmanualshub.com/
www.pdfmanual4trucks.com

To avoid inconveniences in future warranty claims, please check the functions of the forklift and check if the forklift is complete. Only sign in the Product Quality Certificate of the BYD forklift after you confirmed that the forklift has complied with the requirements.

Working Environment

Working temperature: 14 ~ 104°F

Gradeability: ≤ 20%

Others: no flammable gas, no flammable dust and no volatile flammable liquid

Contact with your BYD local dealer if the forklift is intended to be used in the following environments:

1. in places where explosives are stored.
2. in dusty areas.
3. in ports or water front with corrosive salt hazards.
4. in chemical factories with acid and other chemical hazards.
5. in potential explosive environments with dust or other explosive gas.
6. in toxic environment.
7. in radioactive environment.
8. in other special environment.

https://truckmanualshub.com/
www.pdfmanual4trucks.com

https://truckmanualshub.com/
www.pdfmanual4trucks.com

SAFETY STANDARD

This Standard defines the safety requirements relating to the elements of operation and maintenance.

https://truckmanualshub.com/
www.pdfmanual4trucks.com

General Safety Practices

Modifications, Nameplates, Markings, and Capacity

Except as provided in next paragraph, no modifications or alterations to a powered industrial truck that may affect the capacity, stability, or safe operation of the truck shall be made without the prior written approval of the original truck manufacturer or its successor thereof. When the truck manufacturer or its successor approves a modification or alteration, appropriate changes shall be made to capacity plates, decals, tags, and operation and maintenance manuals.

If the truck manufacturer is no longer in business and there is no successor to the business, the user may arrange for a modification or alteration to a powered industrial truck, provided however, the user

1. arranges for modification or alteration to be designed, tested, and implemented by an engineer(s) expert in industrial trucks and their safety.
2. maintains a permanent record of the design test(s), and implementation of the modification or alteration.
3. makes appropriate changes to the capacity plate(s), decals, tags, and operation and maintenance manuals.
4. affixes a permanent and readily visible label on the truck stating the manner in which the truck has been modified or altered together with the date of the modification or alteration, and the name of the organization that accomplished the tasks.

The user shall see that all nameplates and caution and instruction markings are in place and legible before operation.

The user shall consider that changes in load dimension may affect truck capacity.

When modifications involve rebuild and repair of the basic unit, they shall be made in accordance with the manufacturer's established criteria and procedures.

Batteries used in electric trucks shall comply with the minimum/maximum battery weight range shown on the truck nameplate.

Stopping Distance (Descending Grades)

When descending a grade, stopping distance will be greater than on-level operation. Methods shall be provided to allow for this condition. Some methods are:

1. Descend grades slowly and carefully.
2. On all grades the load and load-engaging means shall be tilted back, if applicable, and raised only as far as necessary to clear the road surface.
3. Avoid turning, if possible, and use extreme caution on grades, ramps, or inclines; normally travel straight up and down.

https://truckmanualshub.com/
www.pdfmanual4trucks.com

4. If the load are high and affect the operator's visibility of the route ahead,operate the forklift in reverse.

Stability

Some of the conditions that may affect stability are: ground and floor conditions, grade, speed, loading (trucks equipped with attachments behave as partially loaded trucks even when operated without a load on the attachment), battery weight, dynamic and static forces, and the judgment exercised by the operator.

On electric trucks, use only a battery or batteries having a total service weight within the minimum/maximum range specified on truck nameplate.

Changing and Charging Storage Batteries for Electric Trucks

Battery changing and charging facilities and procedures shall be in accordance with ANSI/ NFPA 505.

The charger connector shall not be plugged into the truck connector under any circumstances.

To avoid damage to equipment or injury to personnel, consult manufacturer's procedures when replacing contacts in any battery connector.

Failure to comply with specified nameplate battery weight range could result in truck instability. Lighting for Operating Areas

Controlled lighting of adequate intensity should be provided in operating areas in conformance with ANSI/IES RP7.

Trucks and Railroad Cars

When powered industrial trucks are driven on and off highway trucks or trailers, the brakes on the highway trucks or trailers shall be applied, and wheel chocks or other positive mechanical means shall be used to prevent unintentional movement of highway trucks and trailers.

Provision shall be made to prevent railroad cars from being moved during loading and unloading. Wheel stops, hand brakes, or other recognized positive means shall be used to prevent movement during loading and unloading.

Whenever powered industrial trucks are driven on and off semitrailers not coupled to a tractor, supports may be needed to prevent upending or corner dipping.

Maintain a safe distance from the edge of ramps, platforms, or other similar working surfaces.

Do not move railroad cars or trailers with a powered industrial truck unless the truck is properly designed and equipped for that operation.

Relocating Powered Industrial Trucks

When utilizing lifting equipment such as elevators, cranes, ship hoisting gear, etc., to relocate

https://truckmanualshub.com/
www.pdfmanual4trucks.com

a powered industrial truck, the user shall ensure that the capacity of the hoisting equipment being used is not exceeded.

Personnel who have not been trained to operate powered industrial trucks may operate a truck for the purposes of training only, and only under the direct supervision of the trainer. This training should be conducted in an area away from other trucks, obstacles, and pedestrians.

Operator Training

The operator training program should include the user's policies for the site where the trainee will operate the truck, the operating conditions for that location, and the specific truck the trainee will operate. The training program shall be presented to all new operators regardless of previous experience.

The training program shall inform the trainee of the following:

1. The primary responsibility of the operator is to use the powered industrial truck safely following the instructions given in the training program.

2. Unsafe or improper operation of a powered industrial truck can result in

   (1) death or serious injury to the operator or others

   (2) damage to the powered industrial truck or other property

The training program shall emphasize safe and proper operation to avoid injury to the operator and others and prevent property damage, and shall cover the following areas:

1. fundamentals of the powered industrial truck(s) the trainee will operate, including

   (1) characteristics of the powered industrial truck(s), including variations between trucks in the workplace

   (2) similarities to and differences from automobiles

   (3) significance of nameplate data, including rated capacity, warnings, and the instructions affixed to the truck

   (4) operating instructions and warnings in the operating manual for the truck, and instructions for inspection and maintenance to be performed by the operator.

   (5) type of motive power and its characteristics

   (6) method of steering

   (7) braking method and characteristics, with and without load,(8) visibility, with and without load, forward and reverse

   (8) load handling capacity, weight and load center

   (9) stability characteristics with and without load, with and without attachments

   (10) controls: location, function, method of operation, identification of symbols

   (11) load handling capabilities, forks, attachments

https://truckmanualshub.com/
www.pdfmanual4trucks.com

(12) hazards due to production of carbon monoxide by internal combustion engines and common initial symptoms of exposure

(13) fueling and battery charging

(14) guards and protective devices for the specific type of truck

(15) other characteristics of the specific industrial truck

2. operating environment and its effect on truck operation including

(1) floor or ground conditions including temporary conditions

(2) ramps and inclines, with and without load

(3) trailers, railcars, and dockboards (including the use of wheel chocks, jacks, and other securing devices)

(4) fueling and battery charging facilities

(5) the use of “classified” trucks in areas classified as hazardous due to risk of fire or explosion, as defined in ANSI/NFPA 505

(6) narrow aisles, doorways, overhead wires and piping, and other areas of limited clearance

(7) areas where the truck may be operated near other powered industrial trucks, other vehicles, or pedestrians

(8) use and capacity of elevators

(9) operation near edge of dock or edge of improved surface

(10) other special operating conditions and hazards that may be encountered

3. operation of the powered industrial truck, including:

(1) proper preshift inspection and approved method for removing from service a truck that is in need of repair

(2) load handling techniques: lifting, lowering, picking up, placing, tilting

(3) traveling, with and without loads; turning corners

(4) parking and shutdown procedures

(5) other special operating conditions for the specific application

4. operating safety rules and practices including:

(1) provisions of this Standard in *Operating Safety Rules and Practices* address operating safety rules and practices

(2) provisions of this Standard in *Operating Safety Rules and Practices* address care of the truck

https://truckmanualshub.com/
www.pdfmanual4trucks.com

(3) other rules, regulations, or practices specified by the employer at the location where the powered industrial truck will be used

5. Operational training practice, including:

(1) if feasible, practice in the operation of powered industrial trucks shall be conducted in an area separate from other workplace activities and personnel

(2) training practice shall be conducted under the supervision of the trainer

(3) training practice shall include the actual operation or simulated performance of all operating tasks such as load handling, maneuvering, traveling, stopping, starting, and other activities under the conditions that will be encountered in the use of the truck

Testing, Retraining, and Enforcement

1. During training, performance and oral and/or written tests shall be given by the employer to measure the skill and knowledge of the operator in meeting the requirements of the Standard. Employers may delegate such testing to others but shall remain responsible for the testing. Appropriate records shall be kept.

2. Operators shall be retrained when new equipment is introduced, existing equipment is modified, operating conditions are changed, or an operator's performance is unsatisfactory.

3. The user shall be responsible for enforcing the safe use of the powered industrial truck according to the provisions of this Standard

NOTE: Information on operator training is available from such sources as powered industrial truck manufacturers, government agencies dealing with employee safety, trade organizations of users of powered industrial trucks, public and private organizations, and safety consultants.

https://truckmanualshub.com/
www.pdfmanual4trucks.com

Operating Safety Rules and Practices

Operator Responsibility

Safe operation is the responsibility of the operator.

The operator shall develop safe working habits and also be aware of hazardous conditions in order to protect himself, other personnel, the truck, and other material.

The operator shall be familiar with the operation and function of all controls and instruments before undertaking to operate the truck.

Before operating any truck, truck operators shall have read and be familiar with the operator's manual for the particular truck being operated and they shall also abide by the safety rules and practices in para. *General* through para. *Operator Care of the Truck*.

Before operating any truck, the operator shall be familiar with unusual operating conditions that may require additional safety precautions or special operating instructions.

General

Use 3-point contact when mounting or dismounting a truck when the operator's compartment floor height is 300 mm or higher. Maintain contact with one hand and two feet or two hands and one foot at all times. Keep hands free of items (i.e. food, beverage, tools)

Before starting to operate the truck

1. be in operating position
2. place directional controls in neutral
3. disengage clutch on manual transmission-equipped trucks, or apply brake on power shift or automatic transmission-equipped trucks and electric trucks
4. start engine or turn switch of electric truck to "ON" position

Do not start or operate the truck, any of its functions or attachments, from any place other than from the normal operator's position.

Keep hands and feet inside the operator's compartment. Do not put any part of the body outside the operator compartment of the truck.

Never put any part of the body into the mast structure or between the mast and the truck.

Never put any part of the body within the reach mechanism of the truck or other attachments.

Understand truck limitations and operate the truck in a safe manner so as not to cause injury to personnel. Safeguard pedestrians at all times.

1. Do not drive a truck up to anyone standing in front of an object.
2. Ensure that personnel stand clear of the rear swing area before conducting turning

https://truckmanualshub.com/
www.pdfmanual4trucks.com

maneuvers.

3. Exercise particular care at cross aisles, doorways, and other locations where pedestrians may step into the path of travel of the truck.

Do not allow anyone to stand or pass under the elevated portion of any truck, whether empty or loaded.

Do not permit passengers to ride on powered industrial trucks unless a safe place to ride has been provided by the manufacturer.

Before leaving the operator's position

(1) bring truck to a complete stop

(2) place directional controls in neutral

(3) apply the parking brake

(4) lower load-engaging means fully, unless supporting an elevated platform

When leaving the truck unattended

(1) stop the engine or turn off the controls

(2) if the truck must be left on an incline, block the wheels

(3) fully lower the load-engaging means

Maintain a safe distance from the edge of ramps, platforms, and other similar working surfaces. Do not move railroad cars with a powered industrial truck.

Do not use a truck for opening and closing railroad car doors, unless the truck utilizes a device specifically designed for opening and closing railroad car doors and the operator is trained in its use.

The design of the door-opening device shall require the truck to travel parallel to the railroad car, with the force applied in a direction parallel with the door travel. Care should be exercised when engaging the door opening device with the railroad car door, in order to prevent damage to the doors and/or fork truck by heavy impact forces. The entire door opening operation shall be in full view of the operator. The fork truck shall always be positioned to safeguard the dock attendant while removing the door lock pin. Whenever a railroad car door requires an abnormal force to open, the truck operator shall report the condition to his supervisor or as instructed.

When powered industrial trucks are driven on and off highway trucks and trailers, the brakes on the highway trucks or trailers shall be applied and wheel chocks or other positive mechanical means shall be used to prevent unintentional movement of highway trucks and trailers.

Whenever powered industrial trucks are driven on and off semitrailers that are not coupled to a tractor, supports may be needed to prevent upending or corner dipping. Verify the combined weight of the powered industrial truck including the battery and the load does not exceed the maximum floor capacity of the highway truck, trailer, or container before entering.

Provision shall be made to prevent railroad cars from being moved during loading and unloading. Wheel stops, hand brakes, or other recognized positive means shall be used to prevent

https://truckmanualshub.com/
www.pdfmanual4trucks.com

movement of railroad cars during loading and unloading. Verify the combined weight of the powered industrial truck including the battery and the load does not exceed the maximum floor capacity of the railroad car before entering.

Care shall be taken not to contact overhead installations such as lights, wiring, pipes, sprinkler systems, etc.

Report all accidents involving personnel, building structures, and equipment to the supervisor or as directed.

Do not add to, or modify, the truck.

Do not block access to fire aisles, stairways, or fire equipment.

Traveling

Observe all traffic regulations including authorized plant speed limits. Under normal traffic conditions, keep to the right. Maintain a safe distance, based on speed of travel, from the truck ahead; and keep the truck under control at all times.

Yield the right of way to pedestrians and emergency vehicles such as ambulances and fire trucks.

Do not pass another truck traveling in the same direction at intersections, blind spots, or at other dangerous locations.

Slow down and sound the audible warning device(s) at cross aisles and other locations where vision is obstructed.

Cross railroad tracks at an angle wherever possible. Do not park closer than 2 m (6 ft) to the nearest rail of a railroad track.

Keep a clear view of the path of travel and observe for other traffic, personnel, and safe clearances.

If the load being carried obstructs forward view, travel with the load trailing.

Ascend or descend grades slowly, and with caution.

1. When ascending or descending grades in excess of 5%, loaded rider trucks shall be driven with the load upgrade(High lift order picker trucks are not normally intended for operation on a grade. Consult manufacturer’s operating instructions for recommended operating procedures.).

2. Unloaded trucks should be operated on all grades with the load-engaging means downgrade.

3. On all grades the load and load-engaging means shall be tilted back, if applicable, and raised only as far as necessary to clear the road surface.

4. Avoid turning, if possible, and use extreme caution on grades, ramps, or inclines; normally travel straight up and down.

Under all travel conditions, operate the truck at a speed that will permit it to be brought to a

https://truckmanualshub.com/
www.pdfmanual4trucks.com

stop in a safe manner.

Travel with load-engaging means or load low and, where possible, tilted back. Do not elevate the load except during stacking. This does not apply to trucks that are intended normally to be operated with the load or load-engaging means elevated.

Make starts, stops, turns, or direction reversals in a smooth manner so as not to shift load and/or overturn the truck.

Do not indulge in stunt driving or horseplay.

Slow down for wet and slippery floors.

Before driving over a dockboard or bridge plate, be sure that it is properly secured. Drive carefully and slowly across the dockboard or bridge plate, and never exceed its rated capacity.

Do not drive trucks onto any elevator unless specifically authorized to do so. Verify the combined weight of the powered industrial truck including the battery and the load does not exceed the maximum floor capacity of the elevator before entering. Do not exceed the capacity of the elevator. Approach elevators slowly, and then enter squarely after the elevator car is properly leveled. Once on the elevator, neutralize the controls, shut off power, and set brakes. It is advisable that all other personnel leave the elevator before truck is allowed to enter or leave.

Avoid running over loose objects on the roadway surface.

When negotiating turns, reduce speed to a safe level consistent with the operating environment. Make the turns smoothly. Except when maneuvering at a very low speed, turn the steering control at a moderate, even rate.

The operation of a counterbalanced, center control, high lift truck with a sit-down, nonelevating operator requires special safety considerations, as follows:

1. An industrial truck, loaded or unloaded, may tip over if an operator fails to slow down to a safe speed before making turns. Indications that a truck is being driven at an excessive speed during turning maneuvers include

   (1) tire skidding

   (2) truck side sway

   (3) wheel lift

   (4) the need to grip the steering wheel tightly to keep from sliding out of the seat

2. The likelihood of lateral tipover is increased under any of the following conditions, or combinations of them:

   (1) overloading

   (2) traveling with the load elevated

   (3) braking or accelerating sharply while turning

   (4) rearward tilt or off-center positioning of the load

   (5) traveling on an uneven surface

https://truckmanualshub.com/
www.pdfmanual4trucks.com

(6) traveling at excessive speed

3. Tipping forward can occur and its likelihood is increased under the following conditions, or combination of them:

   (1) overloading

   (2) traveling with the load tilted forward and/or elevated

   (3) hard braking while traveling forward

   (4) suddenly accelerating while traveling in reverse

4. The operator should stay with the truck if lateral or longitudinal tipover occurs. The operator should hold on firmly and lean away from the point of impact.

5. The operator should stay with the truck if it falls off a loading dock or ramp. The operator should hold on firmly and lean away from the point of impact

6. Where the environment presents a severe hazard, or there are other unusual operating conditions, the user may need to establish different and/or additional safety precautions and special operating instructions appropriate for the conditions.

Loading

Handle only stable or safely arranged loads.

1. When handling off-center loads that cannot be centered, operate with extra caution.

2. Handle only loads within the capacity of the truck.

3. Handle loads exceeding the dimensions used to establish truck capacity with extra caution. Stability and maneuverability may be adversely affected.

4. Handle loads only with the load engaging means and do not transport loads or miscellaneous items within the operator’s compartment or other areas of the truck, unless a secure area has been provided and designated by the user.

When attachments are used, extra care shall be taken in securing, manipulating, positioning, and transporting the load. Operate trucks equipped with attachments as partially loaded trucks when not handling a load.

Completely engage the load with the load-engaging means. Fork length should be at least two-thirds of load length. Where tilt is provided, carefully tilt the load backward to stabilize the load. Caution should be used in tilting backward with high or segmented loads (see paras. *General*).

Use extreme care when tilting load forward or backward, particularly when high tiering. Do not tilt forward with load-engaging means elevated except to pick up or deposit a load over a rack or stack. When stacking or tiering, use only enough backward tilt to stabilize the load.

The handling of suspended loads by means of a crane arm (boom) or other device can introduce dynamic forces affecting the stability of a truck. Grades and sudden starts, stops, and turns can cause the load to swing and create a hazard.

https://truckmanualshub.com/
www.pdfmanual4trucks.com

When handling suspended loads:

1. do not exceed the truck manufacturer's capacity of the trucks as equipped for handling suspended loads
2. only lift the load vertically and never drag it horizontally
3. transport the load with the bottom of the load and the mast as low as possible
4. with load elevated, maneuver the truck slowly and cautiously, and only to the extent necessary to permit lowering to the transport position
5. use guy lines to restrain load swing whenever possible

Operator Care of the Truck

At the beginning of each shift and before operating the truck, check its condition, giving special attention to the following:

1. condition of tires
2. if pneumatic tires, check inflation pressure
3. warning and safety devices
4. lights
5. battery
6. controls
7. lift and tilt systems
8. load-engaging means
9. chains and cables
10. limit switches
11. brakes
12. steering mechanism
13. fuel system(s)
14. additional items, attachments, or special equipment as specified by the user and/or manufacturer.

If the truck is found to be in need of repair or in any way unsafe, or contributes to an unsafe condition, the matter shall be reported immediately to the user's designated authority, and the truck shall not be operated until it has been restored to safe operating condition.

If during operation the truck becomes unsafe in any way, the matter shall be reported immediately to the user's designated authority, and the truck shall not be operated until it has been restored to safe operating condition.

https://truckmanualshub.com/
www.pdfmanual4trucks.com

Do not make repairs or adjustments unless specifically authorized to do so.

The engine shall be stopped, and the operator shall not be on the truck while refueling.

Spillage of oil or fuel shall be carefully and completely absorbed or evaporated and fuel tank cap replaced before restarting engine.

Do not use open flames when checking electrolyte level in storage batteries, liquid level in fuel tanks, or the condition of LPG fuel lines and connectors.

https://truckmanualshub.com/
www.pdfmanual4trucks.com

Maintenance And Rebuild Practices

Operation

Operation of powered industrial trucks may be hazardous if maintenance is neglected or repairs, rebuilds, or adjustments are not performed in accordance with the manufacturer's design criteria. Therefore, maintenance facilities (on or off premises), trained personnel, and detailed procedures shall be provided.

Parts manuals and maintenance manuals may be obtained from the truck manufacturer.

In unusual cases not covered by parts manuals and maintenance manuals, consult the truck manufacturer.

Maintenance and Inspection

Maintenance and inspection of all powered industrial trucks and their attachments shall be performed in conformance with the following practices.

1. A scheduled planned maintenance, lubrication, and inspection system shall be followed; consult the manufacturer's recommendations.

2. Only trained and authorized personnel shall be permitted to maintain, repair, adjust, and inspect industrial trucks, and in accordance with manufacturer's specifications.

When lifting trucks for repair or inspection, trucks shall be lifted in safe, secure, stable manner. Removal of components such as counterweights or uprights will change the center of gravity and may create an unstable condition.

Before starting inspection and repair of truck

1. raise drive wheels free of floor or disconnect battery and use chocks or other positive truck-positioning devices.

2. block load-engaging means, innermast(s), or chassis before working on them

3. before disconnecting any part of the engine fuel system of gasoline-powered trucks with gravity feed fuel systems, take precaution to eliminate any possibility of unintentional fuel escape.

4. before disconnecting any part of the engine fuel system of LP gas-powered trucks, close LP tank valve and run engine until fuel in system is depleted and engine stops. If the engine will not run, close LP tank valve and vent fuel slowly in a nonhazardous area.

5. disconnect battery before working on the electrical system.

6. the charger connector shall be plugged only into the battery connector and never into the truck connector.

Operation of the truck to check performance shall be conducted in an authorized area where safe clearance exists.

https://truckmanualshub.com/
www.pdfmanual4trucks.com

1. Before starting to operate the truck

   (1) be in operating position

   (2) disengage clutch on manual transmission-equipped trucks, or apply brake on power shift or automatic transmission-equipped trucks and electric trucks

   (3) place directional controls in neutral

   (4) start engine or turn switch of electric trucks to “ON” position

   (5) check functioning of lift and tilt systems, load-engaging means and attachments, steering, warning devices, and brakes

2. Before leaving the truck:

   (1) stop truck

   (2) fully lower the load-engaging means

   (3) place directional controls in neutral

   (4) apply the parking brake

   (5) stop the engine or turn off power

   (6) turn off the control or ignition circuit

   (7) if the truck must be left on an incline, block the wheels

Avoid fire hazards and have fire protection equipment present in the work area. Do not use open flame to check the level or to check for leakage of any fluid, especially fuel and battery electrolyte. Do not use open pans of fuel or flammable cleaning fluids for cleaning parts.

Brakes, steering mechanisms, control mechanisms, warning devices, lights, governors, lift overload devices, guards and safety devices, lift and tilt mechanisms, attachments, articulating axle stops, and frame members shall be carefully and regularly inspected and maintained in safe operation condition.

Inspection and Repair of Forks in Service on Fork Lift Trucks

1. Forks in use shall be inspected at intervals of not more than 12 months (for single shift operations) or whenever any defect or permanent deformation is detected. Severe applications will require more frequent inspection.

2. Individual Load Rating of Forks. When forks are used in pairs (the normal arrangement), the rated capacity of each fork shall be at least half of the manufacturer’s rated capacity of the truck, and at the rated load center distance shown on the lift truck nameplate.

Inspection. Fork inspection shall be carried out carefully by trained personnel with the aim of detecting any damage, failure, deformation, etc., which might impair safe use. Any fork that shows such a defect shall be withdrawn from service, and shall not be returned to service unless it has been satisfactorily repaired in accordance with para. *Repair and Testing.*

1. Surface Cracks. The fork shall be thoroughly examined visually for cracks and if

https://truckmanualshub.com/
www.pdfmanual4trucks.com

considered necessary, subjected to a nondestructive crack detection process, special attention being paid to the heel and welds attaching the mounting components to the fork blank. This inspection for cracks must also include any special mounting mechanisms of the fork blank to the fork carrier including bolt-type mountings and forged upper mounting arrangements for hook or shaft-type carriages. The forks shall not be returned to service if surface cracks are detected.

2. Straightness of Blade and Shank. The straightness of the upper face of the blade and the front face of the shank shall be checked. If the deviation from straightness exceeds 0.5% of the length of the blade and/or the height of the shank, respectively, the fork shall not be returned to service until it has been repaired in accordance with para. *Repair and Testing.*

3. Fork Angle (Upper Face of Blade to Load Face of the Shank). Any fork that has a deviation of greater than 3 deg from the original specification shall not be returned to service. The rejected fork shall be reset and tested in accordance with para. *Repair and Testing*.

4. Difference in Height of Fork Tips. The difference in height of one set of forks when mounted on the fork carrier shall be checked. If the difference in tip heights exceeds 3% of the length of the blade, the set of forks shall not be returned to service until repaired in accordance with para. *Repair and Testing*.

5. Positioning Lock (When Originally Provided). It shall be confirmed that the positioning lock is in good repair and correct working order. If any fault is found, the fork shall be withdrawn from service until satisfactory repairs have been effected.

6. Wear

   (1) Fork Blade and Shank. The fork blade and shank shall be thoroughly checked for wear, special attention being paid to the vicinity of the heel. If the thickness is reduced to 90% of the original thickness, the fork shall not be returned to service.

   (2) Fork Hooks (When Originally Provided). The support face of the top hook and the retaining faces of both hooks shall be checked for wear, crushing, and other local deformations. If these are apparent to such an extent that the clearance between the fork and the fork carrier becomes excessive, the fork shall not be returned to service until repaired in accordance with para. *Repair and Testing*.

7. Legibility of Marking (When Originally Provided). If the fork marking is not clearly legible, it shall be renewed. Marking shall be renewed per instructions from original supplier.

Repair and Testing.

1. Repair. Only the manufacturer of the fork or an expert of equal competence shall decide if a fork may be repaired for continued use, and the repairs shall only be carried out by such parties.

It is not recommended that surface cracks or wear be repaired by welding. When repairs necessitating resetting are required, the fork shall subsequently be subjected to an appropriate heat treatment, as necessary.

2. Test Loading. A fork that has undergone repairs other than repair or replacement of the positioning lock and/or the marking, shall only be returned to service after being submitted to, and passing except that the test load shall correspond to 2.5 times the

https://truckmanualshub.com/
www.pdfmanual4trucks.com

rated capacity marked on the fork.

Special trucks or devices designed and approved for hazardous area operation shall receive special attention to ensure that maintenance preserves the original, approved safe operating features.

All hydraulic systems shall be regularly inspected and maintained in conformance with good practice. Hydraulic cylinders, valves, hoses, fittings, and other hydraulic components shall be checked to ensure that drift or leakage has not developed to the extent that it would create a hazard.

The truck manufacturer’s capacity, operation, and maintenance instruction plates, tags, or decals shall be maintained in legible condition.

Batteries, motors, controllers, limit switches, protective devices, electrical conductors, and connections shall be inspected and maintained in conformance with good practice. Special attention shall be paid to the condition of electrical insulation.

To avoid injury to personnel or damage to equipment, follow the connector manufacturer’s procedures when replacing the contacts in any battery connector.

Trucks shall be kept in a clean condition to minimize fire hazards and facilitate detection of loose or defective parts.

Modifications and additions that affect capacity and safe truck operation shall not be performed without manufacturer’s prior written approval. Capacity, operation, and maintenance instruction plates, tags, or decals shall be changed accordingly.

Care shall be taken to ensure that all replacement parts, including tires, are interchangeable with the original parts and of a quality at least equal to that provided in the original equipment. Parts, including tires, are to be installed per manufacturer’s procedures.

When removing tires, follow industry safety practices. Most importantly, deflate pneumatic tires completely prior to removal. Following assembly of tires and rims, use a safety cage or restraining device while inflating.

When changing batteries of battery-electric trucks, replacement batteries shall be of the service weight that falls within the minimum/maximum range specified on the truck nameplate by the truck manufacturer.

Tip Over

Misuse of the truck that could lead to tip overs:

1. Not abide by the capacity chart to operate or overload.
2. The load isn't stable.
3. Travel with loads lifted in an elevated position or the mast being tilted forward
4. Operate the forklift fastly.
5. Stack or turn on the slope.

https://truckmanualshub.com/
www.pdfmanual4trucks.com

6. Drive forward when descending the grades with the load.
7. Parking on the slope without block the wheels.

Preferred recommended actions to be taken in the event of tip over or off-dock accidents:

1. Always fasten the seat belt.
2. Hold the steering wheel and brace the foot against the truck.
3. Deviate the tip over side.
4. Stay in the truck.

https://truckmanualshub.com/
www.pdfmanual4trucks.com

https://truckmanualshub.com/
www.pdfmanual4trucks.com

https://truckmanualshub.com/
www.pdfmanual4trucks.com

OPERATOR NOTICE

This chapter instructs on safety operation procedures that should followed during the use of the BYD forklift.

The operator of the BYD forklift should have obtained the driving permit in accordance with local regulations.

Before operating the forklift, check the data plate and capacity chart to know the loading capacity of the forklift and avoid the overloading during operation.

Warning signs and decals are pasted on the forklift. Get familiar with the decals and its contents.

https://truckmanualshub.com/
www.pdfmanual4trucks.com

Notice

Operator Qualification

Forklifts can only be allowed to be operated by people with the qualification regulated by local laws. In the absence of local regulation and law, the operators should be those who have been specially trained and have experience in operating the forklifts. The user or other entrusting part must confirm the qualification of the operators and make use of the tests before authorizing the person to operate the forklift.

The operating company must make sure that the operators understand all the safety messages.

Please abide by relevant regulations and guide-principles, such as:

1. Operation of industrial vehicle.
2. Diver qualification license.
3. Lane and operative area regulation.
4. Diver's right, responsibility and standard of behavior.
5. Special operation area.
6. Maintenance and repair message.
7. Regular check-up.

For the proprietor, make sure following safety instruction on your forklifts are observed.

⚠ DANGER

1. Unauthorized persons are not allowed to operate the forklift.
2. Safety devices and features (such as OPS system) will provide extra safety. Do not deactivate these safety device and features.
3. Make sure that the load is well palletized and trimmed to avoid its protruding the loading surface of forklift and thus slipping, collapsing and falling over.
4. Any modification on the forklift is not allowed. Contact with BYD before making any modification.
5. Any extra drills and welding on the overhead guard will tamper with its rigidity. No drilling or welding on overhead guard is allowed.

⚠ WARNING

1. Do not overload. Before operation, please check the rated loading capacity and loading center on the capacity chart. When an attachment has been installed, abide by the rated loading capacity given on the attachment.

https://truckmanualshub.com/
www.pdfmanual4trucks.com

2. Do not operate the forklift after drinking. It might cause severe human injuries.

⚠ CAUTION

1. Read through the operation instructions before operating the forklift.
2. Operators should wear working boots and working clothes.
3. Do not operate the forklift with wet or greased hands.
4. Conduct the daily checking and regular maintenance on the forklift.
5. Stop operating the forklift when the abnormalities and damages are found on the forklift. Do not use the forklift until the forklift is fully repaired.

Warning decals and signs

The BYD forklifts have warning decals and signs to remind the operators of potential risks, as well as safety notices. Find and read all these decals and signs.

If the warning decals and signs are missing or difficult to read, please contact your local BYD dealer for immediate replacement.

https://truckmanualshub.com/
www.pdfmanual4trucks.com

Data Plate and Loading capacity chart

Date Plate

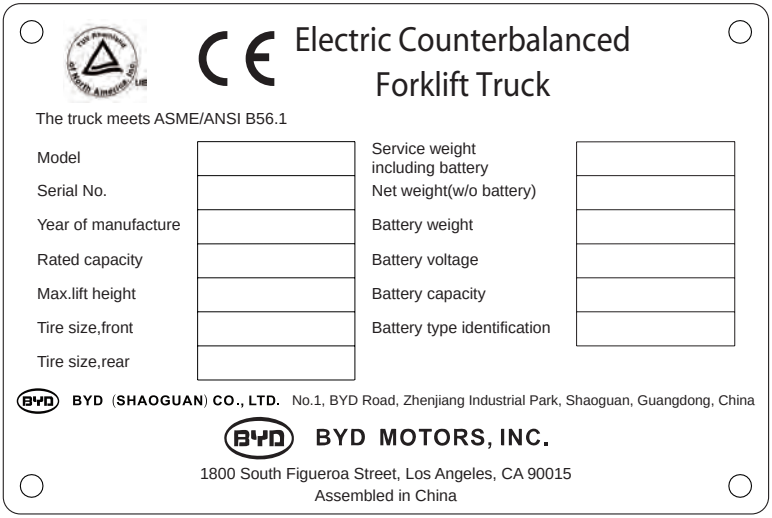

CAUTION

1. Every forklift might have different specification. Check the data plate before operation to confirm the forklift specification.
2. When transporting the load, it should not exceed the rated loading capacity of the forklift. Check and confirm the load of the truck.

Note

1. Date plate is placed in the front of the forklift.
2. After receiving the forklift, check the information on the data plate and confirm if it complies with the one you've ordered.

https://truckmanualshub.com/
www.pdfmanual4trucks.com

Loading Capacity Chart

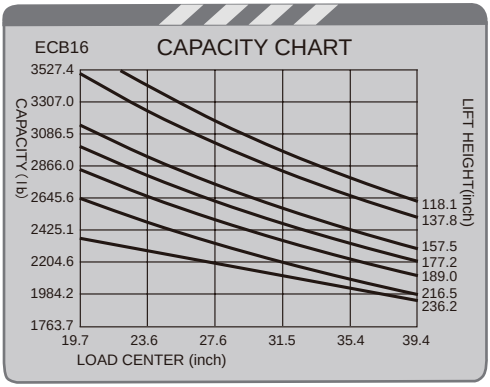

When the load center exceeds the rated one, the loading capacity of the truck is reduced. The Loading capacity chart indicates the maximum loading capacity the forklift has corresponding to the different load center.Suppose the cargo has the load center of 23.6 in and the expected lifting height is 189.0 in.

1. Draw the vertical line at the coordinate of load center and find the crossing point of this vertical line and the curve line of lift height.

2. The ordinate on the Y-axis of the crossing point reads 2645.6 lb, which is the permissible maximum lifting load.

Following the same reasoning, you can calculate the loading capacity in the case of other load center and lifting height.

⚠ CAUTION

1. Forklift specification varies depending on customer requirements. Refer to the load capacity chart for confirmation on the maximum allowed load.

2. The load capacity chart reflects only compact, well palletized and evenly centered loads within the load limit. Otherwise the stability of the forklifts and the rigidity of the related parts will be impaired.

ⓘ Note

1. The loading capacity curve is located on the panel, to the right of the seat.

2. After receiving the forklift, please check the data plate and confirm if it is what you have ordered.

3. Before transporting, check the loading capacity curve when the following condition occurs and check with your local BYD dealer:
   · Load is not centered on the forks or is swinging.
   · Load center is too far.
   · Before operating with attachments.

https://truckmanualshub.com/
www.pdfmanual4trucks.com

https://truckmanualshub.com/
www.pdfmanual4trucks.com

TRUCK VIEW AND TECHNICAL SPECIFICATIONS

This chapter explains the overview of the forklift and its relevant technical specifications.

https://truckmanualshub.com/
www.pdfmanual4trucks.com

View

General View

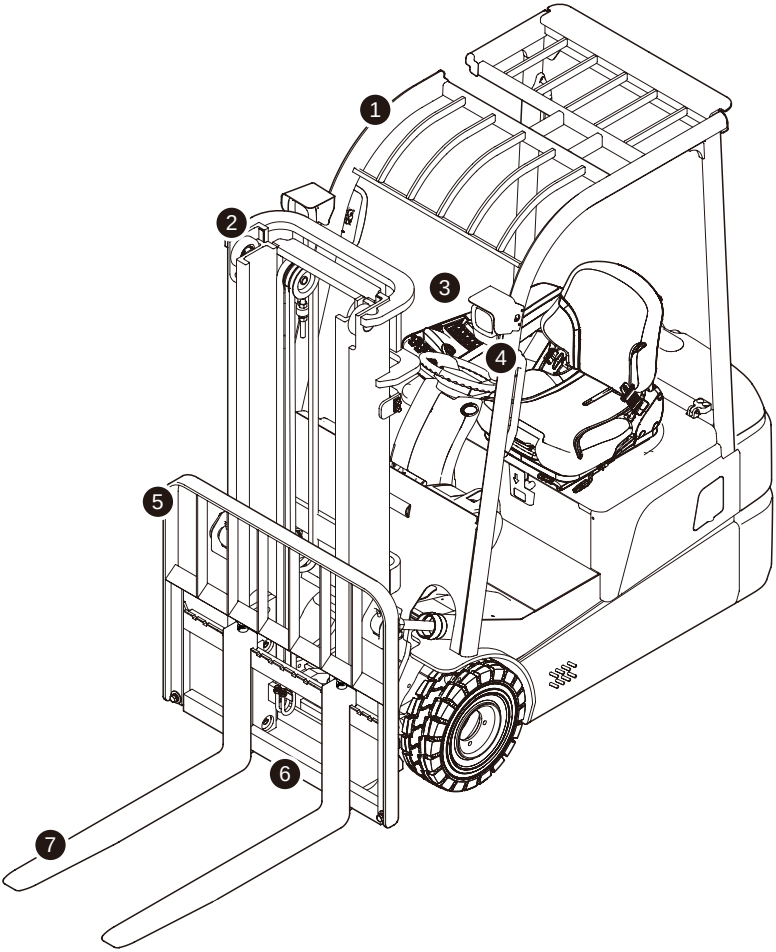

https://truckmanualshub.com/
www.pdfmanual4trucks.com

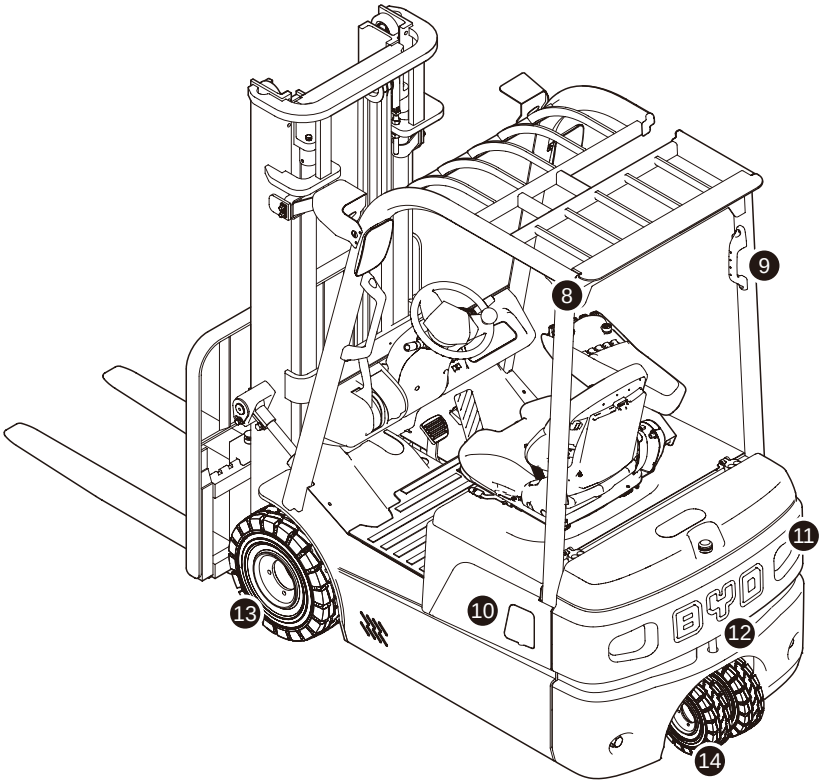

No.	Name	No.	Name	No.	Name
1	Overhead Guard	6	Carriage	11	Counterweight
2	Mast	7	Fork	12	Tow Pin
3	Using Area	8	Rear Lamp	13	Front Wheel
4	Front Lamp	9	Rear Handle	14	Rear Wheel
5	Load Backrest	10	Charging Door		

https://truckmanualshub.com/
www.pdfmanual4trucks.com

Specifications

Technical Drawing

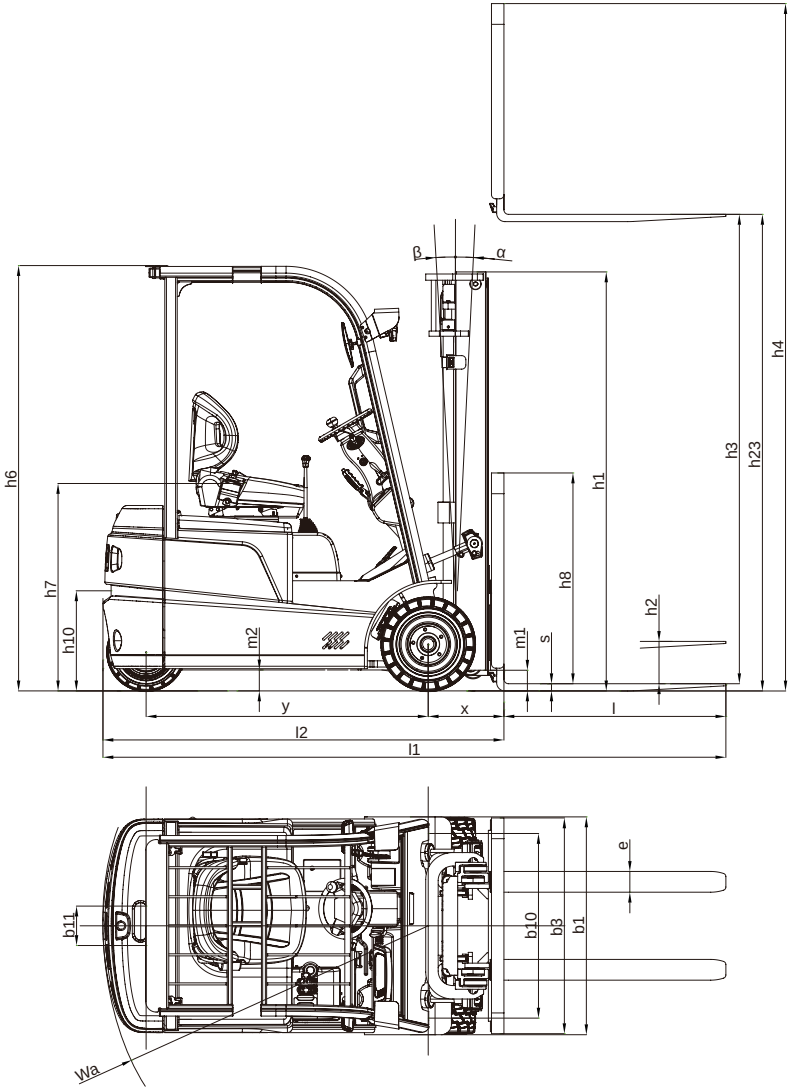

ECB16B,ECB16C

https://truckmanualshub.com/
www.pdfmanual4trucks.com

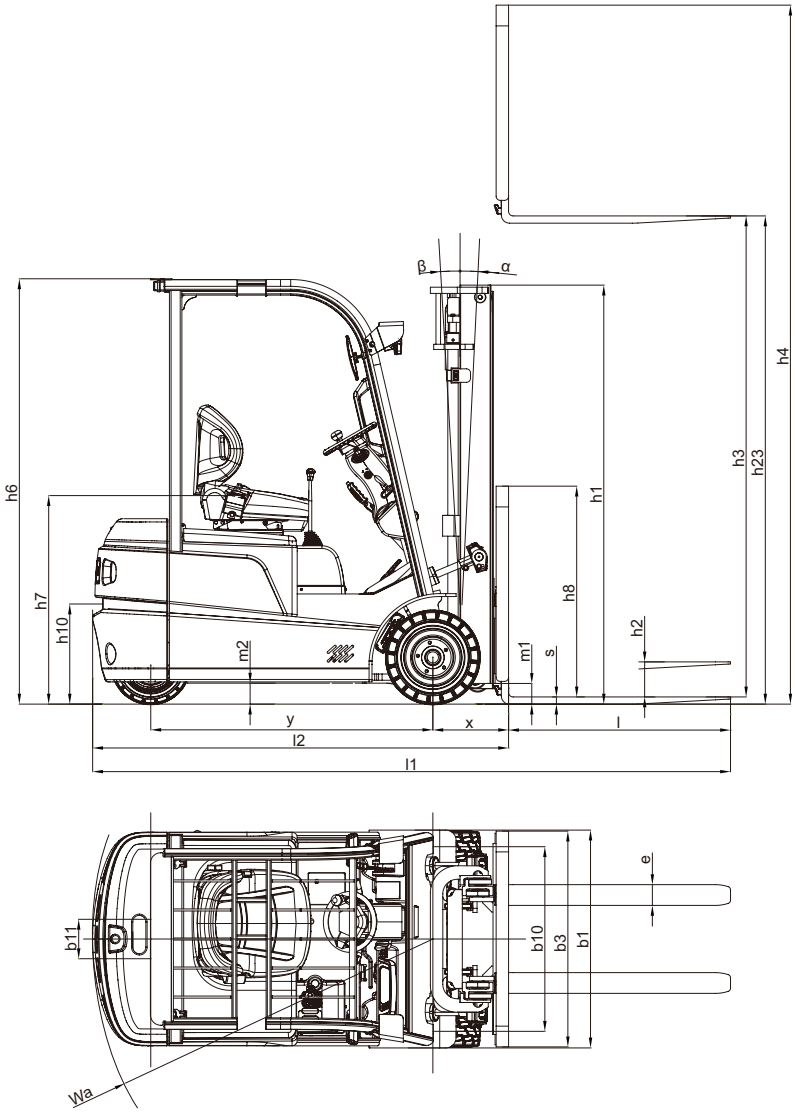

ECB18B,ECB18C

https://truckmanualshub.com/
www.pdfmanual4trucks.com

Technical Specifications (Dual Drive)

Identification	1.1	Manufacturer			BYD	BYD
	1.2	Model			ECB16B,ECB16C	ECB18B,ECB18C
	1.3	Drive			Electric	Electric
	1.4	Operator type			Seat	Seat
	1.5	Rated capacity	Q	lb	3528	3969
	1.6	Load center	c	in	19.69	19.69
	1.7	Load distance, center of drive axle to fork	x	in	14.37	14.37
	1.8	Wheelbase	y	in	53.54	53.54
Weight	2.1	Service weight		lb	6835.5	7276.5
	2.2	Axle load, with load, front/rear		lb	9003.02/1360.49	9911.48/1334.03
	2.3	Axle load, without load, front/rear		lb	3232.53/3602.97	3419.96/3856.55
Wheels, Chassis	3.1	Tires			SE	SE
	3.2	Tire size, front			18×7-8	18×7-8
	3.3	Tire size, rear			15×4.5-8	15×4.5-8
	3.4	Wheels, number front rear (X=driven wheels)			2x/2	2x/2
	3.5	Track width, front	b10	in	35.04	35.04
	3.6	Track width, rear	b11	in	7.48	7.48
	4.1	Tilt of mast/fork carriage forward/backward	a/b	deg	5/7	5/7
	4.2	Height, mast lowered	h1	in	79.53	79.53
	4.3	Free lift	h2	in	5.91	5.91
	4.4	Lift height	h3	in	118.11	118.11
	4.5	Height, mast extended	h4	in	158.86	158.86
	4.6	Height of overhead guard	h6	in	80.71	80.71
	4.7	Seat height	h7	in	38.78	38.78
	4.8	Coupling height	h10	in	18.9	18.9
	4.9	Overall length	l1	in	115.55	118.31
	4.10	Length to face of forks	l2	in	76.18	78.94
	4.11	Overall width	b1	in	41.34	41.34
	4.12	Fork dimensions	s/e/l	in	1.38/3.94/39.37	1.38/3.94/39.37
	4.13	ISO 2328			2A	2A
	4.14	Fork carriage width	b3	in	40.94	40.94
	4.15	Ground clearance, with load, below mast	m1	in	3.74	3.74
	4.16	Ground clearance, center of wheelbase	m2	in	3.74	3.74
	4.17	Aisle width for pallets 1000x1200 crossways	Ast	in	136.22	138.98
	4.18	Aisle width for pallets 800x1200 lengthways	Ast	in	140.94	143.7
	4.19	Turning radius	Wa	in	61.81	64.57
	4.20	Inward turning radius		in	0	0
	5.1	Travel speed, with/without load		MPH	9.94/9.94	9.94/9.94
	5.2	Lift speed, with/without load		MPH	1118.47/1230.32	1118.47/1230.32
	5.3	Lowering speed, with/without load		MPH	1185.58/1118.47	1185.58/1118.47
	5.4	Max. drawbar pull, with/without load		lb	2023.29/1776	2023.29/1798.48
	5.5	Max. gradeability, with/without load		%	20/20	18/20
	5.6	Acceleration time, with/without load		s	4.5/4.0	4.5/4.0
	5.7	Service brake			Mech./Hydr.	Mech./Hydr.
	6.1	Drive motor rating S2 60 min.		kW	5×2	5×2
	6.2	Lift motor rating at S3 15%		kW	16	16
Others	7.1	Type of drive control			AC	AC
	7.2	Operating pressure for attachments		psi	2320.6	2610.68
	7.3	Sound level at the driver's ear		dB(A)	65	65
	7.4	Towing coupling, type			PIN	PIN

https://truckmanualshub.com/
www.pdfmanual4trucks.com

Mast Specifications

Type				2-Stage Standard				2-Stage Free Lift			3-Stage Free Lift			
ECB16 ECB18	Lift height	h3	in	118.1	137.8	157.5	177.2	118.1	137.8	157.5	177.2	196.9	216.5	236.2
	Fork height	h23	in	119.5	139.2	158.9	178.5	119.5	139.2	158.9	178.5	198.2	217.9	237.6
	Height, mast lowered	h1	in	79.5	89	98.8	110.6	79.5	91.3	101.2	80.5	88.4	96.3	104.1
	Load backrest height	h8	in	39.4	39.4	39.4	39.4	39.4	39.4	39.4	39.4	39.4	39.4	39.4
	Height, mast extended (without load backrest)	h4	in	142.7	162.4	182.1	201.8	141.9	161.6	181.3	202	221.7	241.3	261
	Height, mast extended (with load backrest)	h4	in	158.9	178.5	198.2	217.9	158.9	178.5	198.2	217.9	237.6	257.3	277
	Free lift (without load backrest)	h2	in	5.9	5.9	5.9	5.9	55.7	67.5	77.4	55.7	63.6	71.5	79.3
	Free lift (with load backrest)	h2	in	5.9	5.9	5.9	5.9	38.2	50	59.8	39.2	47	54.9	62.8
	Tilt of mast/fork carriage forward/backward	α/β	deg	5/7	5/7	5/7	5/7	5/7	5/7	5/7	5/5	5/5	5/5	5/5
	Load distance, center of drive axle to fork	x	in	14.4	14.4	14.4	14.4	14.4	14.4	14.4	15.6	15.6	15.6	15.6

Battery Specifications

Model		ECB16B,ECB16C		ECB18B,ECB18C	
Battery voltage, nominal capacity	V/Ah	80/230	80/270	80/230	80/270
Battery weight	lb	1433.3	1433.3	1433.3	1433.3

https://truckmanualshub.com/
www.pdfmanual4trucks.com

https://truckmanualshub.com/
www.pdfmanual4trucks.com

OPERATING THE FORKLIFT

This chapter explains how to operate to BYD electric forklift correctly.

Before reading this chapter, refer to Instruction in Safe Operation for the information of forklift data plate, capacity chart and safety warning and decals.

During the delivery of the forklift, make sure the red emergency disconnect switch stays pressed down. Pull the emergency disconnect switch up before operating the forklift.

https://truckmanualshub.com/
www.pdfmanual4trucks.com

Seat

Descriptions

There are two types of seats, the basic seat and the comfort seat.

BASIC means the forklift is equipped with the manual valve, the basic seat and the manual lever.

COMFORT means the forklift is equipped with the E-Valve, the comfort seat and the MFA.

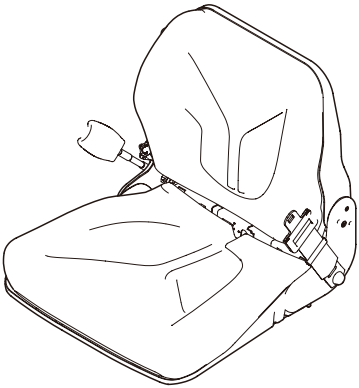

Basic Seat

Comfort Seat

https://truckmanualshub.com/
www.pdfmanual4trucks.com

Basic Seat

Adjustment of lateral position of seat

Pull up the recess of the lever.

Move the seat forward and/or backward to find the right seat position for easier handling of levers, steering and pedals.Return the lever to its folded position and the seat has been adjusted.

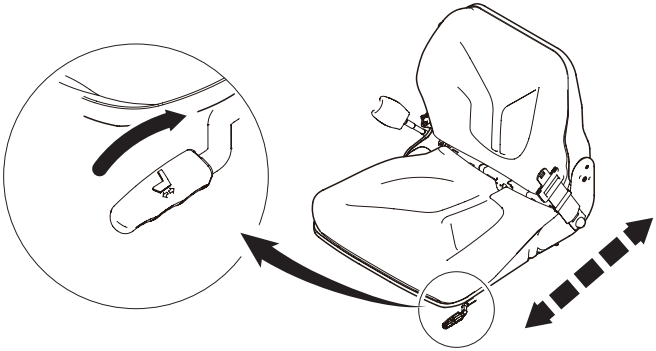

Backrest adjustment

Turning the adjustment knob to "+", the backrest can be moved backwards.

By turning the knob to "-", it can be moved forwards.

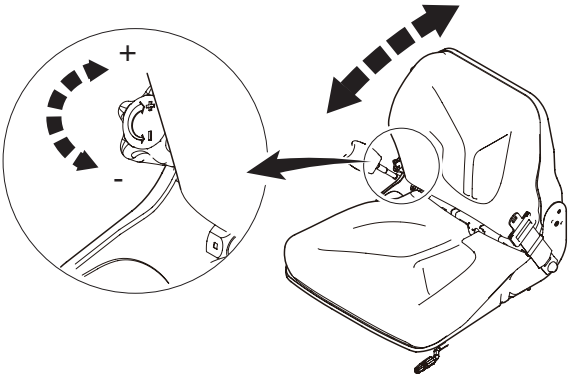

https://truckmanualshub.com/
www.pdfmanual4trucks.com

Weight adjustment

Press the lever for seat weight adjustment up or down.The lever position indicates the adjusted user's weight by means of the symbols.

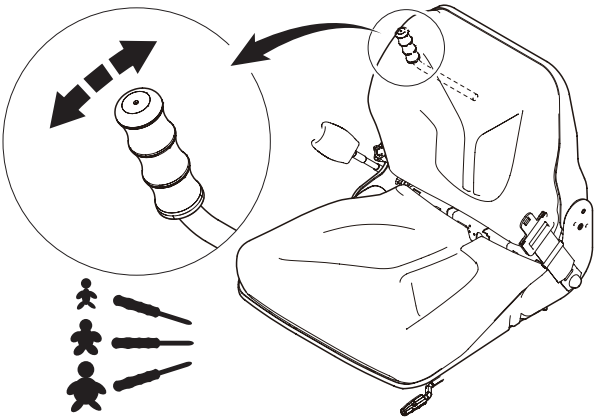

Seat belt

Pull out the seat belt slowly from the retractor.

Put the buckle end into the lock.

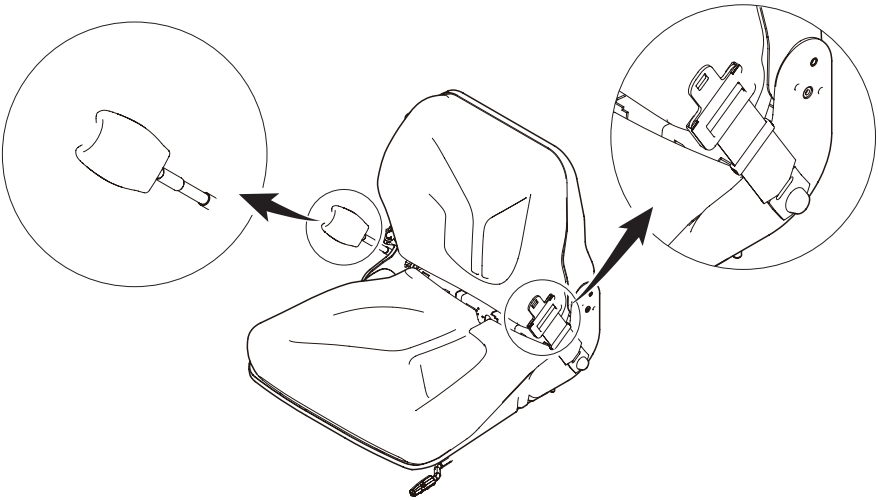

https://truckmanualshub.com/
www.pdfmanual4trucks.com

Comfort Seat

Adjustment of lateral position of seat

Pull up the recess of the lever.

Move the seat forward and/or backward to find the right seat position for easier handling of levers, steering and pedals.

Return the lever to its folded position and the seat has been adjusted.

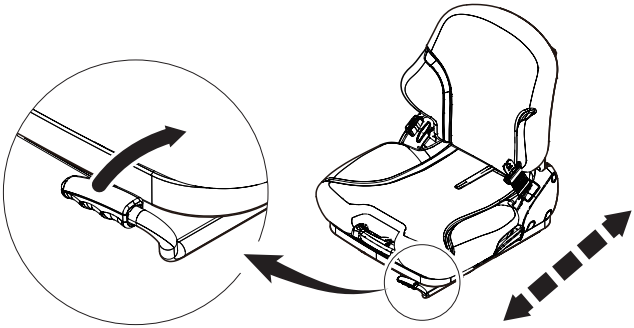

Backrest adjustment

Pull up the locking lever to release the backrest catch. When releasing the backrest catch, do not apply load to the backrest by pressing against it.

By exerting pressure on or off the front or rear part of the seat pan it can be moved to the desired position. Release the locking lever to lock the backrest.

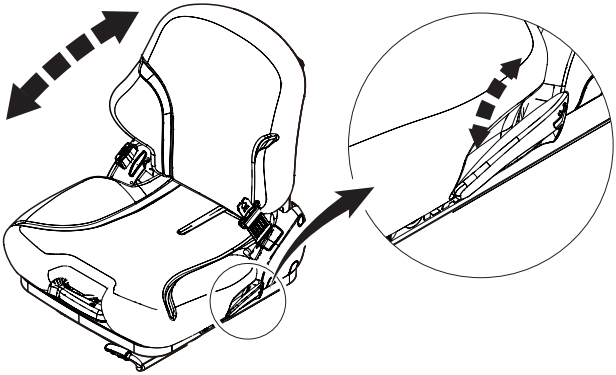

https://truckmanualshub.com/
www.pdfmanual4trucks.com

Weight adjustment

Fold out the weight adjustment lever completely, hold it at the front and move it upwards or downwards (10 movements from minimum to maximum).

Before every new movement, bring the lever back to the starting position (audible locking sound). The driver's weight has been set correctly, when the arrow is in the middle of the viewing window.

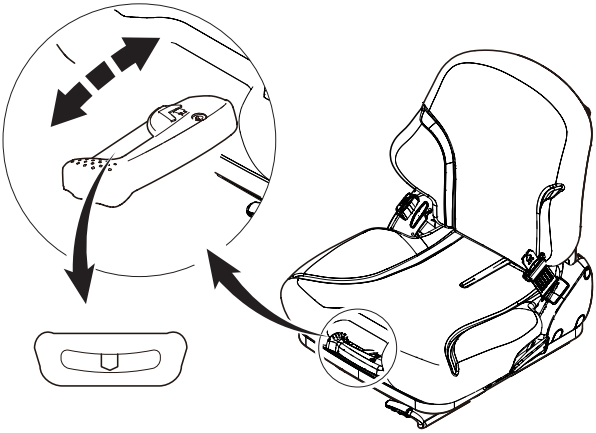

Seat belt

Pull out the seat belt slowly from the retractor.

Put the buckle end into the lock.

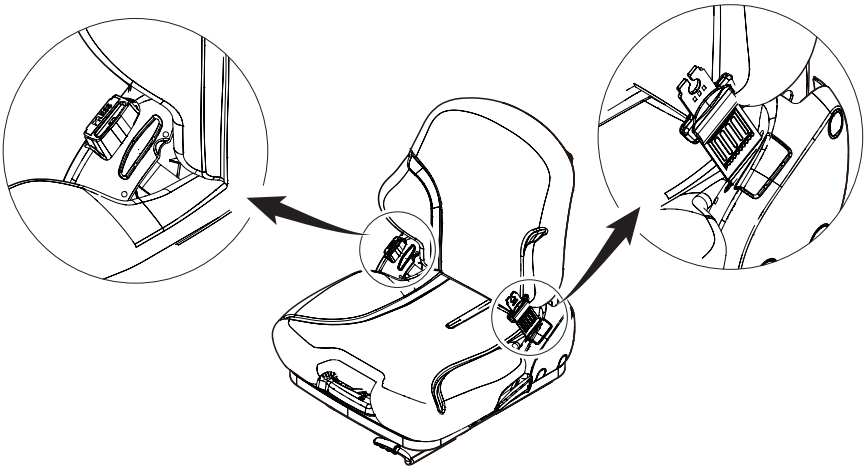

https://truckmanualshub.com/
www.pdfmanual4trucks.com

Document box

There is a document box on the rear side of seat, which could store documents, work gloves and other flat goods.

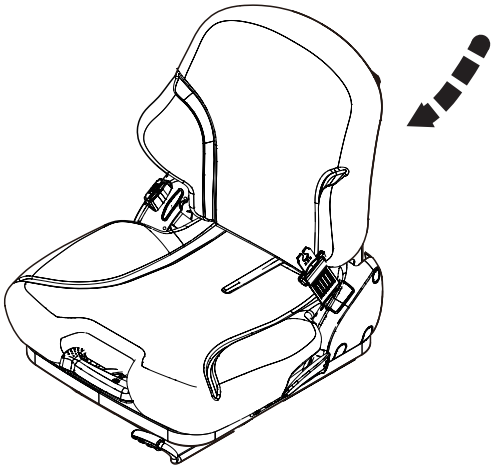

https://truckmanualshub.com/
www.pdfmanual4trucks.com

Drive Control System

Drive control system overall view

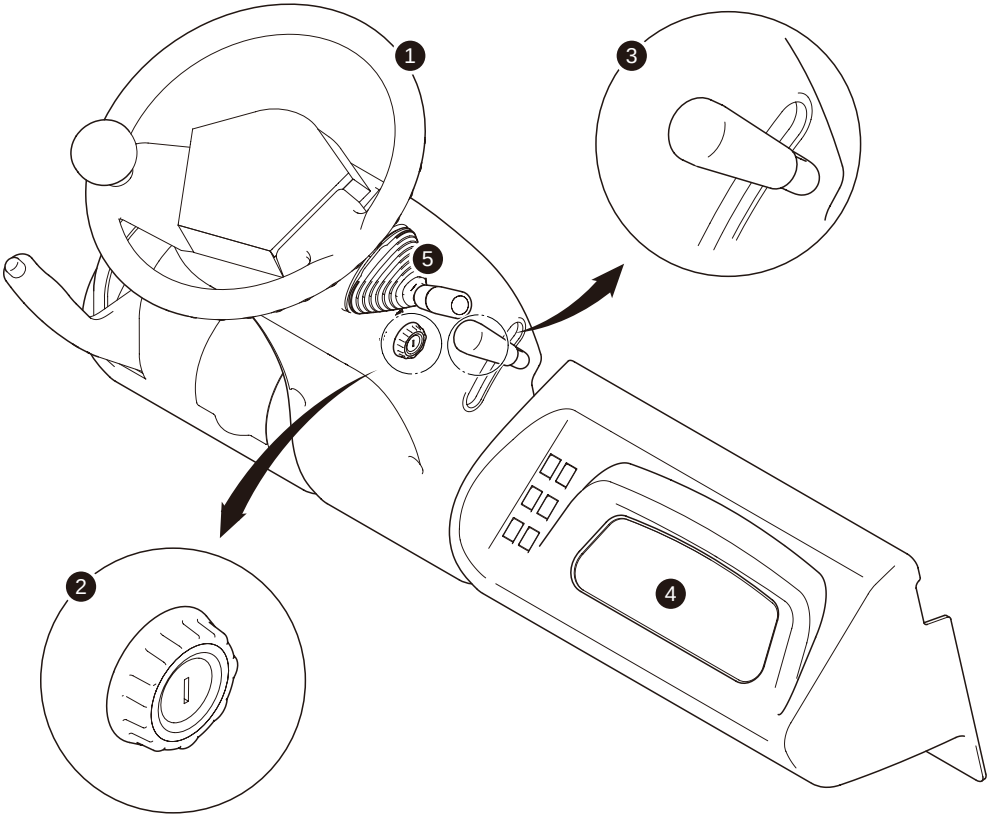

https://truckmanualshub.com/
www.pdfmanual4trucks.com

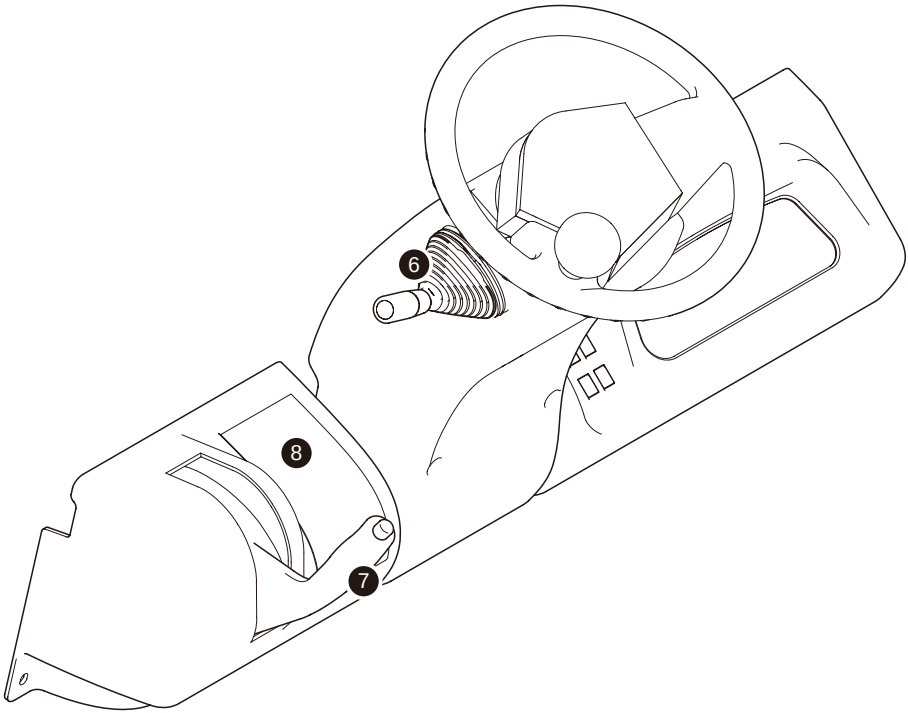

No.	Name	No.	Name	No.	Name
1	Steering Wheel	4	TFT Display	7	Parking Brake
2	Ignition Switch	5	Travel Direction Control Switch	8	Brake Oil Cover
3	Adjustment Lever	6	Combination Lights Control		

https://truckmanualshub.com/
www.pdfmanual4trucks.com

Adjusting the steering wheel

1. Release the steering wheel stop lever and the steering wheel can now be adjusted backwards/forwards.
2. Set the steering wheel to the required position, and then fix the stop lever in position. After adjustment, try moving the steering wheel to check if it is secured.

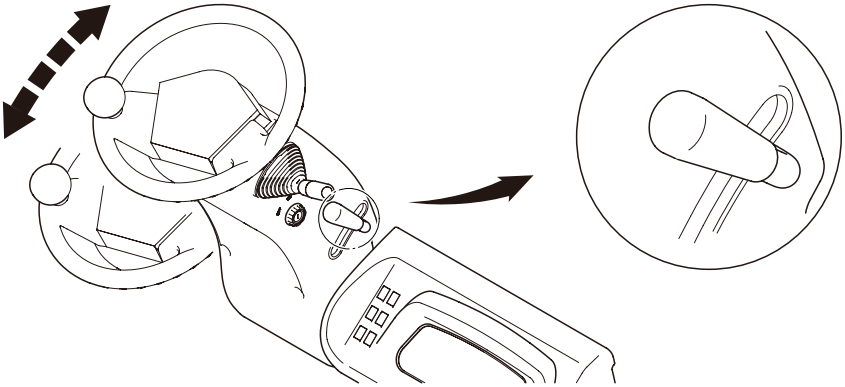

Ignition Switch

OFF: position indicates that the power is cut off and allows entering and removing the key.

ON: position indicates that the forklift is switched on and the display unit is lit.

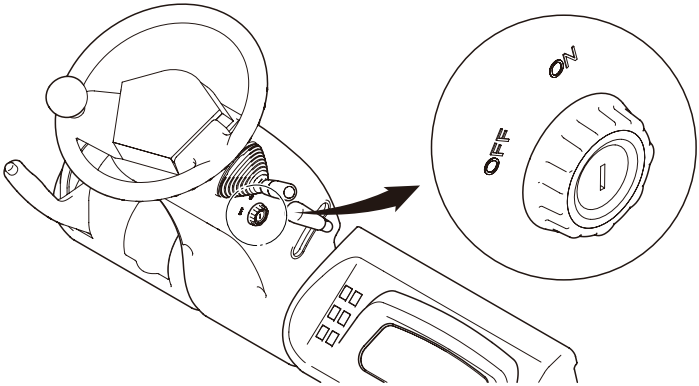

Note

Before starting the forklift, pull up the Emergency Disconnect Switch (in red). Otherwise the forklift cannot be operated.

https://truckmanualshub.com/
www.pdfmanual4trucks.com

Horn

Press down the horn to send audible warning when approaching crossings or when the visibility is limited.

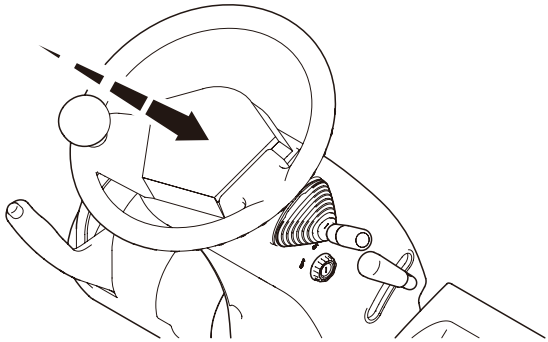

Note

When the key is in OFF position, the horn will not work.

https://truckmanualshub.com/
www.pdfmanual4trucks.com

Check the Braking Oil

Every day before operating the forklift, check the braking fluid level, making sure that it reaches 2/3 of the braking fluid reservoir.

In the case that braking fluid runs extremely low and gets drained, add more braking fluid.

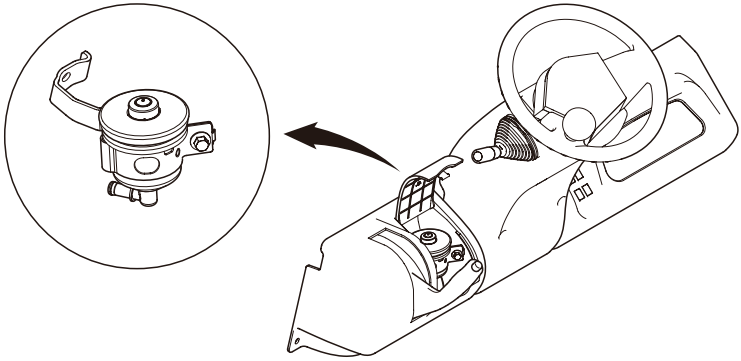

⚠ CAUTION

1. Do not mix different types of braking fluids.
2. Adding unauthorized braking fluids might cause irreparable damage to the braking system. Use only authorized braking fluid.
3. Authorized braking fluid type: DOT4
4. Seek the consent from an authorized dealer or from the manufacturer before using other types of braking fluid. Always contact with an authorized BYD dealer or with BYD if you have any question.
5. The braking fluid is chemical product. Keep it beyond the reach of children and avoid contact with skin.

https://truckmanualshub.com/
www.pdfmanual4trucks.com

Parking Brake

1. After bringing the forklift to a stop with the service brake, hold the hand brake lever and pull it towards your body.

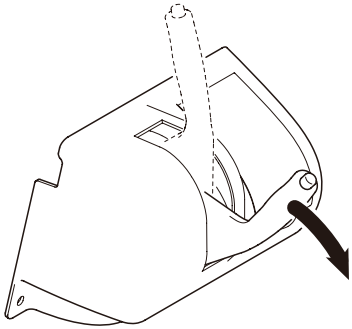

2. To release the hand brake, press down the unlock button on the top of the hand brake lever and push it back.

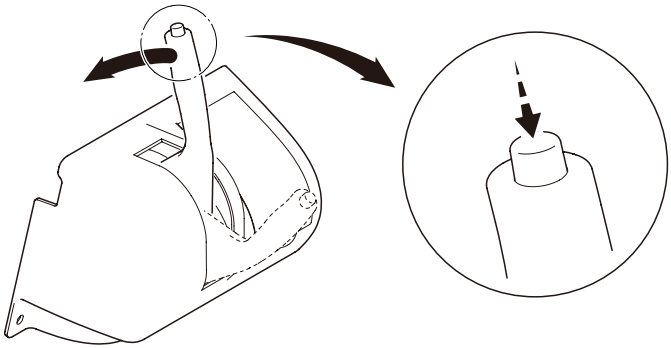

⚠ CAUTION

To park the forklift on a slope, depress the service brake pedal first to stabilize the forklift and then apply the handbrake.

https://truckmanualshub.com/
www.pdfmanual4trucks.com

Selecting Travel Direction

To drive the forklift forward or in reverse, select the travel direction by setting the lever on the left side of steering wheel and depress the accelerator pedal.

1. Forward: pushing the lever forward.
2. Stop.
3. Reverse: pull the lever backward (after pulling it backward, the reversing lights will be lit and the beeper will be sound).

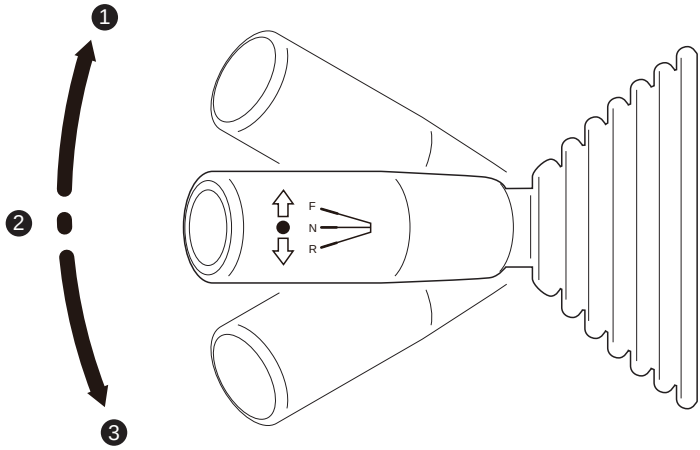

Note

1. The display unit in the instrument panel will show the sign of travel direction corresponding to the direction the operator has chosen.
2. The "COMFORT" forklift doesn't have the travel direction control switch. It's travel direction control button is on the fingertip control.

https://truckmanualshub.com/
www.pdfmanual4trucks.com

Combination Lights Control

1. Left turning light: push the switch forward.
2. Low beam: turn the switch clockwise to the first stop
3. High beam: turn the switch clockwise to the second stop
4. Right turning light: pull the switch backward

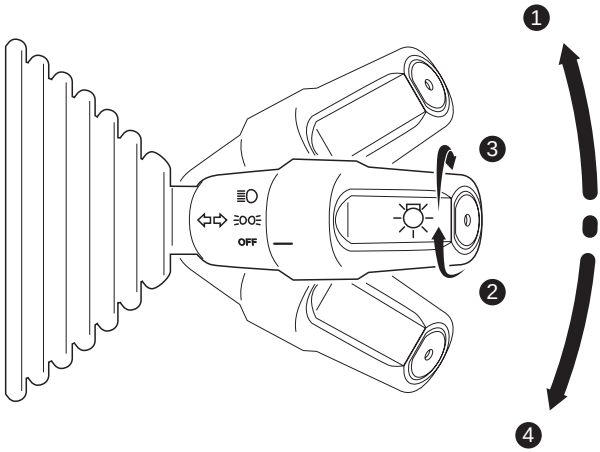

Note

1. When the key is in the OFF position, the turning indicators could still work.
2. When the turning indicator is switched on, it would return automatically to neutral when changing direction is completed.

https://truckmanualshub.com/
www.pdfmanual4trucks.com

Multifunction Display

Overview on Multifunction Display

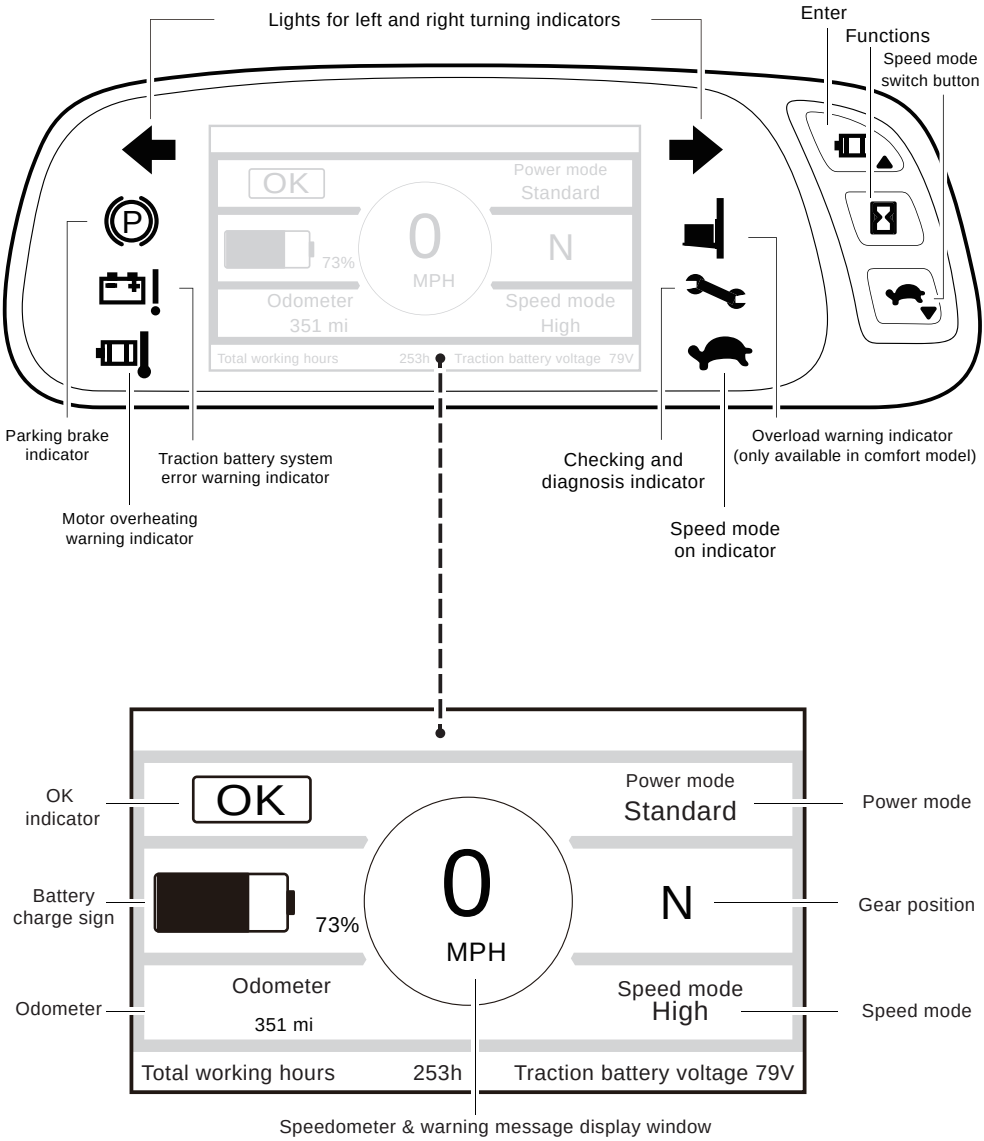

https://truckmanualshub.com/
www.pdfmanual4trucks.com

Adjusting Speed Mode (Class)

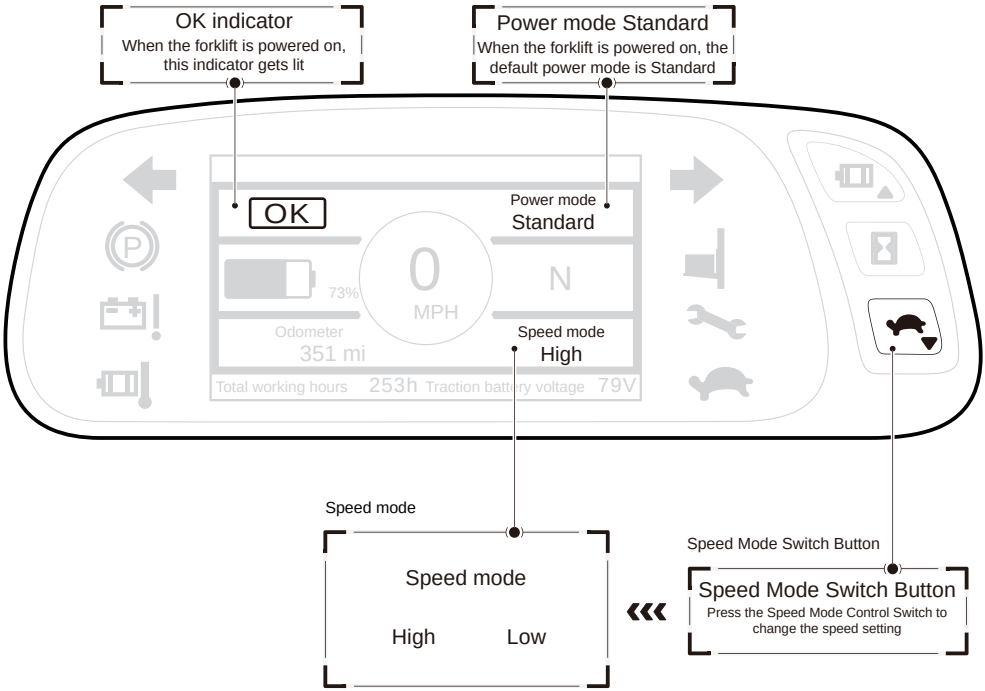

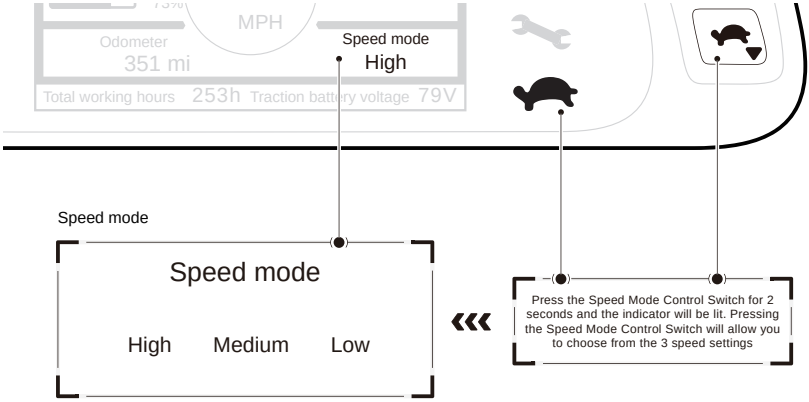

https://truckmanualshub.com/
www.pdfmanual4trucks.com

Working Indicator and Messages

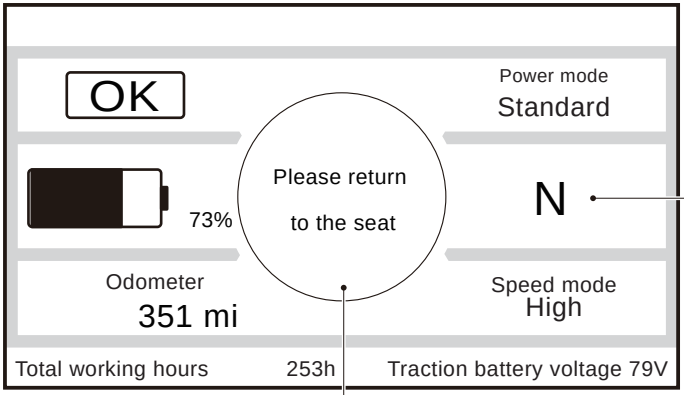

Gear

This indicator shows the gear position that the forklift is engaged in at the moment.
F: Forward
N: Stop/Neutral
R: Reverse

Warning message

Please return to the seat
After the forklift is switched on, if the seat is vacant, warning message will be displayed.

Overloading (only available in comfort model)
When the actual load exceeds the rated loading capacity, this message will be displayed and at the same time the overloading indicator will get lit and the buzzer will sound; when the actual load is below the rated loading capacity, this message will disappear and buzzer will stop.

In case of overload, the overload warning indicator will get lit.

Charge the battery at once
When the battery charge gets below 20%, this message will be displayed, and at the same time the buzzer will sound for 30 seconds and this warning will be repeated every 5 minutes; when the battery charge gets above 20%, this message will disappear and the buzzer will stop.

https://truckmanualshub.com/
www.pdfmanual4trucks.com

Setting

Entering into the Setting, the operator can change the setting on the time, unit, working hours, background light, language and factory setting.

Press the middle button at the left to enter into the Setting.

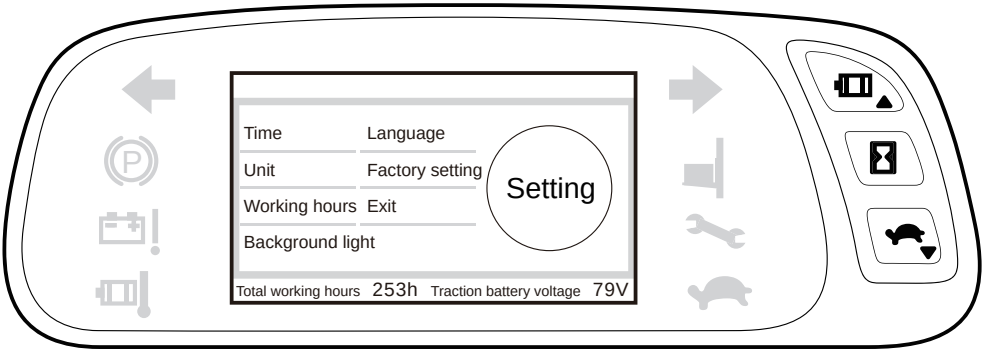

Functions of the 3 buttons:

Moving the cursor up.
Increasing the value of digit and number.

Pressing this button to enter the Setting window.
Select and enter the sub-menu.
Select and confirm the digit and number.

Moving the cursor down.
Reducing the value of digit and number.

https://truckmanualshub.com/
www.pdfmanual4trucks.com

Error Indicator

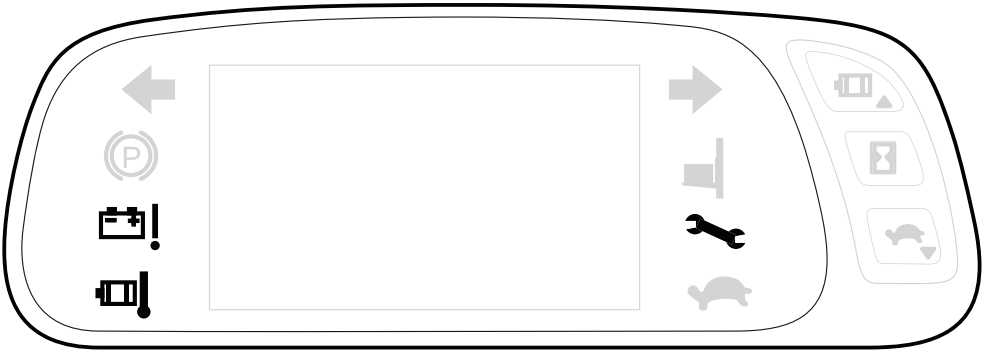

Explanation on the 3 indicators:

Indicator related to the battery, which appears in the case of low battery and battery failure.

Indicator related to the temperature, which appears when some components are overheated.

It appears when driving, lifting and acceleration failures occur.

https://truckmanualshub.com/
www.pdfmanual4trucks.com

Trouble-shooting Methods

The following table contains all the error messages that could be shown in the multifunction display. Please refer to the trouble shooting method for solution when the following error occurs.

Type	Error Message	Solution
Drive	Drive logic error One	If battery charge is below 10%, charge the battery. If battery charge is over 30%, restart the forklift.
	Drive logic error Three	Restart the forklift
	Drive motor 3 phase wire fault	Check the polarities on drive control for a short circuit. If no, restart the forklift.
	Drive system fault	Restart the forklift
	Drive module fault	Restart the forklift
	Drive motor encoder fault	Check if the motor encoder is correctly connected. If so, restart the forklift
	Drive module initiation sequence fault	Return the direction control switch to Neutral and restart the forklift
		Restart the forklift
	Drive module heat sensor fault	Restart the forklift
Lift	Lift logic error one	If battery charge is low, charge the battery. If battery charge is normal, restart the forklift
	Lift logic error three	If load exceeds the rated capacity, stop lifting; otherwise restart the forklift.
	Lifting motor 3 phase fault	Check the polarities on the lifting control for a short circuit. If no, restart the forklift.
	Lifting motor encoder fault	Check if the motor encoder is correctly connected. If yes, restart the forklift.
	Lifting motor heat sensor fault	Restart the forklift
	Lifting motor current sensor fault	Restart the forklift
	Please check the lifting system	
Accelerator	Accelerator pedal false triggering	Check if the accelerator will return normally. Otherwise contact the after sales service.
	Accelerator pedal fault	Contact the after sales service
Others	Main contactor open circuit	Check that the main contactor closes.
	Electrical relay fault	Restart the forklift
	Please check gear	Switch off the forklift, return the lever to Neutral position and restart the forklift
	CAN error	Restart the forklift
Battery	Total voltage error	Restart the forklift
Temperature	Drive module overheating	Shut down the forklift for 5 minutes and restart it.
	Drive motor overheating	
	Lifting module overheating	
	Lifting motor overheating	

* After taking the recommended measures, contact the service personnel if the error message reappears and repeats more than 3 times.

https://truckmanualshub.com/
www.pdfmanual4trucks.com

Working Equipment Controlling System

Mechanical levers

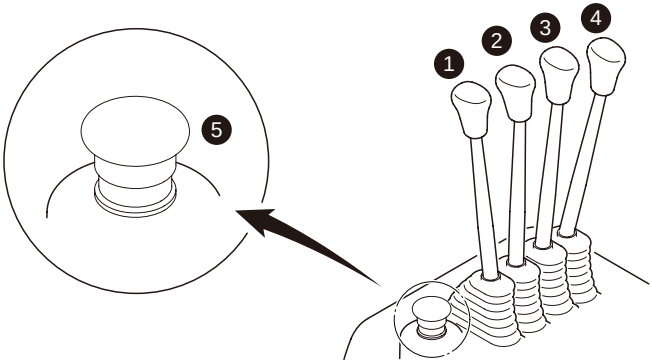

1. Lift: push the lever forward to lower, pull the lever backward to lift.
2. Tilt: push the lever forward to tilt forward, pull the lever backward to tilt backward.
3. Side Shift: push the lever forward to shift leftward, pull the lever backward to tilt shift rightward.
4. Other Attachments: According to the specific attachment.
5. Emergency Disconnect Switch: Press down the emergency disconnect switch when there is an emergency, press down the emergency disconnect switch to cut off the power.Pull up the emergency disconnect switch and it will connect the power of the forklift and the forklift will enter into standby status.

⚠ CAUTION

1. Incorrect operation with Emergency Disconnect Switch might cause an accident and damage the electrical system.
2. Before switching on the forklift, please pull up the Emergency Disconnect Switch first and then turn the switch key.

https://truckmanualshub.com/
www.pdfmanual4trucks.com

Fingertip Control

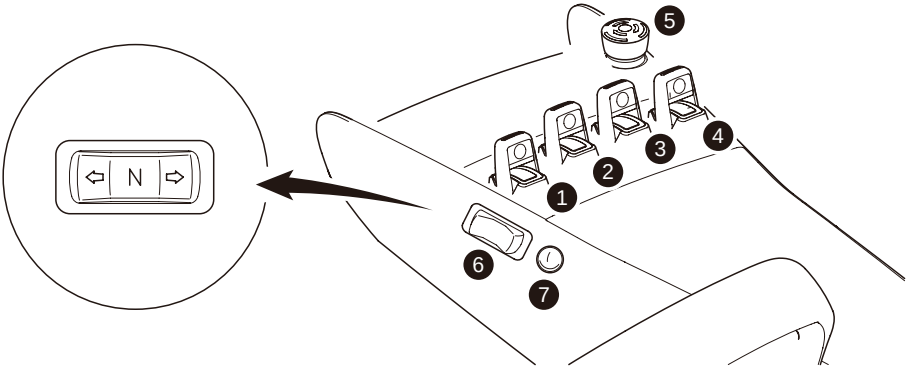

1. Lift: push the button forward to lower, pull the button backward to lift.
2. Tilt: push the button forward to tilt forward, pull the button backward to tilt backward.
3. Side Shift: push the button forward to shift leftward, pull the button backward to tilt shift rightward.
4. Other Attachments: According to the specific attachment.
5. Emergency Disconnect Switch: Press down the emergency disconnect switch when there is an emergency, press down the emergency disconnect switch to cut off the power.Pull up the emergency disconnect switch and it will connect the power of the forklift and the forklift will enter into standby status.
6. Travel direction control button.
7. Horn button.

⚠ CAUTION

1. Incorrect operation with Emergency Disconnect Switch might cause an accident and damage the electrical system.
2. Before switching on the forklift, please pull up the Emergency Disconnect Switch first and then turn the switch key.

https://truckmanualshub.com/
www.pdfmanual4trucks.com

Forks

Adjusting the Forks

1. Pull up the locking pin of the forks.
2. Adjust the spread between the forks based on the dimension of the load.

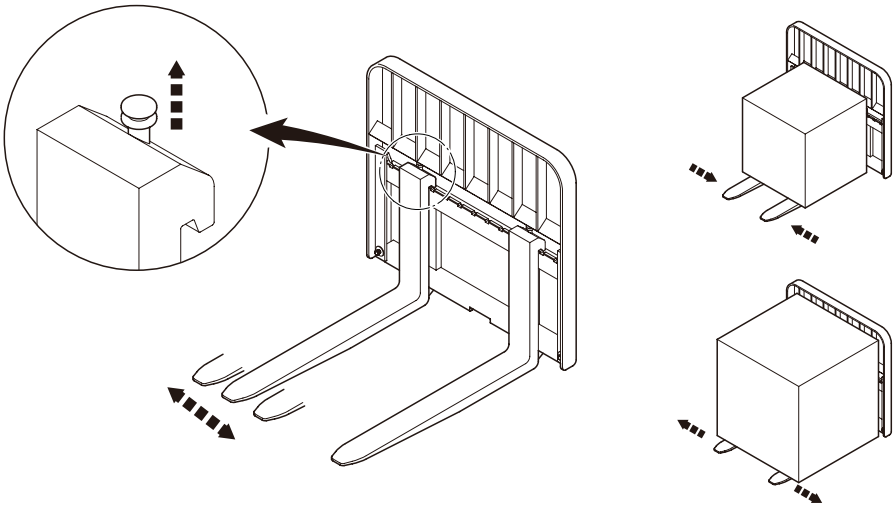

CAUTION

Adjust the forks so that both forks are equidistant from the outside edge of the fork carriage.

https://truckmanualshub.com/
www.pdfmanual4trucks.com

Towing Pin

Use of the Towing Pin

1. Pull up the tow pin.
2. Insert the tiller of the trailer.
3. Insert the tow pin through the tiller.

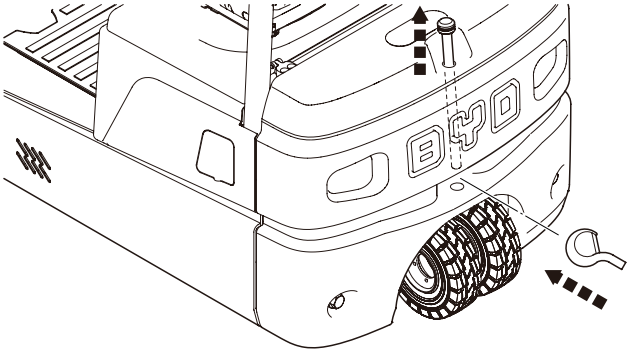

CAUTION

The tow pin can only be used for towing light duty trailers within the factory.

https://truckmanualshub.com/
www.pdfmanual4trucks.com

Transporting the Forklift

Crane-lifting the Forklift

When lifting the forklift with a crane, secure the swings to the attachment points near the top of the mast and the rear parts of the overhead guard. See the following picture.

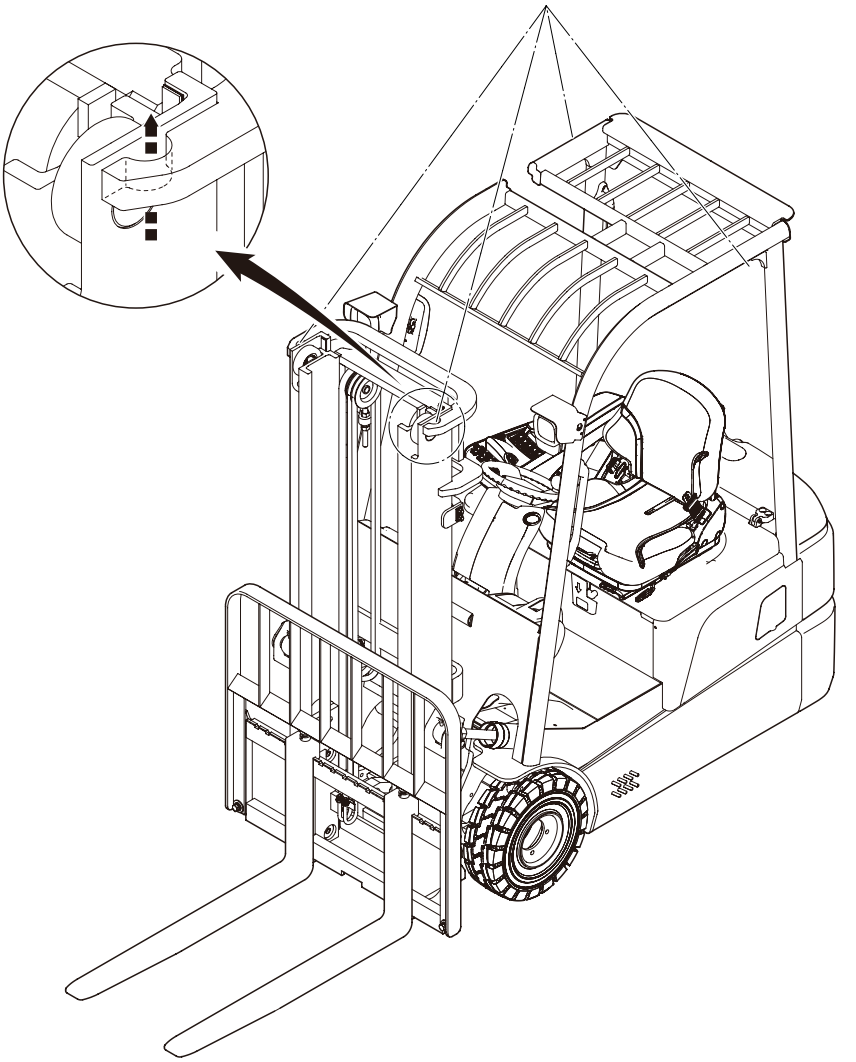

https://truckmanualshub.com/
www.pdfmanual4trucks.com

DANGER

1. When lifting the forklift by crane, do not allow anyone to enter into the working area of the crane.
2. Never use the tow pin opening on the counterweight to crane-lift the forklift.

WARNING

1. Use only a crane with sufficient loading capacity (See the data plate on the forklift)
2. Crane slings should be fastened in such a way that they do not come into contact with any part of the forklift when lifting.
3. Use only strong enough crane slings.

Driving into the Transport Truck

Always drive the forklift into the transport truck on turtle speed mode.

CAUTION

1. Have a supervisor or a second person on site as a lookout.
2. Make sure that the ground is strong enough to avoid the transport truck sinking into the floor.
3. The ramp should be able to withstand the weight of the forklift and be secured to the transport truck or the truck.
4. During loading and unloading, constantly check the rigidity and the stability of the ramp.

Transporting and Unloading the Forklift

1. Use a transport truck or a low flat bed truck to transport the forklift.
2. During transportation, the handbrake must be applied. Secure the wheels with wedges to ensure that the forklift will not slip during transporting.
3. Dismantle the forks before transportation. The dealer will install the forks depending on the customer requirements after arrival.
4. Unloading the forklift by crane follows the same procedure as the loading of the forklift.
5. When driving the forklift out of the transport truck, reverse the forklift with caution at low speed. The rest of the procedure is the same as required for driving the forklift onto the transport truck.

https://truckmanualshub.com/
www.pdfmanual4trucks.com

Transporting Loads

Loading

1. Load on the ground:

   (1) Drive the forklift carefully up to the load and brake the forklift to a stop.

   (2) Tilt the mast forward and place the forks on the floor.

   (3) Insert the forks under the load.

   (4) Raise the forks above the ground and tilt the mast backwards.

   (5) When transporting, drive with caution, pay attention to the route condition and to the people ahead and maintain a proper driving speed. Transport the load to the designated place.

2. Load on the high shelf:

   (1) Drive the forklift carefully up to the load and brake the forklift to a stop.

   (2) Set the mast in the vertical position and raise the forks to the bottom of the load.

   (3) Insert the forks under the load.

   (4) Raise the load until it has left the shelf completely.

   (5) Set the driving direction to reverse and release the brake.

   (6) Reverse the forklift with caution at a low speed until the forklift leaves the stacking area.

   (7) Lower the forks to above the floor and tilt the mast backwards.

   (8) When transporting, drive with caution, pay attention to the route condition and to the people ahead and maintain a proper driving speed. Transport the load to the designated place.

Travelling

1. When travelling with load, make sure that the load is well centered on the forks.

2. After the load is placed on the forks, keep the mast tilted backwards and raise the forks above the floor.

3. During the travelling of the forklift, do not tilt the mast forward or try raising the forks to avoid the danger of forklift nose over and losing stability.

4. If the stacked loads are high and affect the operator’s visibility of the route ahead, operate the forklift in reverse except when the forklift is climbing the slope or inclines.

https://truckmanualshub.com/
www.pdfmanual4trucks.com

⚠ WARNING

1. When driving the forklift on a slope, keep the forks always facing the uphill direction and drive in turtle speed mode.
2. Do not cross or turn around on a slope.

⚠ CAUTION

1. Have a second person as lookout if the visibility of the operator is reduced.
2. Do not depress the brake pedal with a lot of force, since excessive force might cause damage to the braking system.

Unloading

1. Drive the forklift carefully up to the stacking destination and decelerate when approaching.
2. Raise the forks to the proper height.
3. Drive the forks and load into the shelf.
4. Set the mast in the vertical position and lower the forks to the proper height until they get separated from the forks (until the forks are clear of the load).
5. Slowly remove the forks from the bottom of the load. The mast must keep in vertical or tilted forward position.
6. After driving the forks out, raise them and start the next.

⚠ DANGER

1. When approaching the load, do not travel at high speed to avoid crashing.
2. Do not stay beneath the raised load.

⚠ WARNING

1. When transporting the load, the load should be securely fastened on a pallet with the gravity center well centered and with the proper stacking height. Do not damage the packing of the load. The operator should be held responsible for the safe loading and unloading.
2. If the mast is tilted backwards before the forks enter beneath the loads, the forks might damage the load or might not enter fully under the load and cause danger.

ⓘ Note

Pull up the red Emergency Disconnect Switch before switching on the forklift. And then the forklift is ready for operation.

https://truckmanualshub.com/
www.pdfmanual4trucks.com

Exiting from the Forklift

1. After depositing the loads, lower the forks until they touch the floor.
2. Apply the parking brake.
3. Turn the key anticlockwise to OFF position and take it out.
4. Press down the Emergency Disconnect Switch.
5. Unbuckle the seat belt.
6. Exit from the forklift.

https://truckmanualshub.com/
www.pdfmanual4trucks.com

https://truckmanualshub.com/
www.pdfmanual4trucks.com

https://truckmanualshub.com/
www.pdfmanual4trucks.com

DAILY OR WEEKLY CHECK AND INSPECTION

This chapter explains how to conduct daily checks and inspections on BYD forklifts.

The time interval for the daily check tasks depends on the actual use of forklift:

Daily (or every 8 hours) or weekly (or every 40 hours).

Based on actual use of the forklift, the customer could shorten the time interval, but never extend it.

https://truckmanualshub.com/
www.pdfmanual4trucks.com

Daily Inspection

Checklist and Time Interval

If the forklifts works less than 8 hours per day, conduct the following inspection and checks on a daily basis. if daily working hours exceed 8 hours, conduct the following inspection and checks every 8 hours. For details, please see "REGULAR INSPECTION AND MAINTENANCE".

Daily (or every 8 hours) inspection checklist:

Inspection Items	Content
Forklift Exterior	Body
Tires	Wheel nuts and bolts
Working Equipment	Cylinder, hoses, mast, forks
Hydraulic System	Hydraulic oil level, filter indicator
Seat	Seat belt
Multifunction Display	Indicators
Lighting, Horn And Warning Equipments	Lights combination, horn, reverse lights, reverse beeper
Braking System	Braking fluid, handbrake, brake pedal
Driving System And Controlling System	Steering wheel, mechanical levers
Counterweight	Counterweight bolts and the tow pin
Others	Others

CAUTION

These inspections should be conducted before operating the forklift.

Note

1. Before conducting the daily inspection, recheck for any fault and error found earlier.

Forklift Exterior

1. Check the forklift truck body for damage and deformation.
2. Check the floor where the forklift is parked for oil leakage.

Note

If oil leakage occurs, confirm the location of the oil leakage and contact the BYD after sales service.

Tires

1. Check on a daily basis (every 8 hours) if the wheel nuts are secured or loose. Fasten them if they are loose.

https://truckmanualshub.com/
www.pdfmanual4trucks.com

2. Take out debris embedded in the tire.
3. If the four tires are unevenly worn, or the tires are found damaged, or the rims are bent, then replace the tires.

Working Equipment

1. Check the cylinders, oil pipes, and hoses for oil leakage.
2. Check the working equipment for deformation and damage. check if the bolts are securely fastened.

Note

If oil leakage occurs, confirm the location of oil leakage and contact the BYD after sales service.

Hydraulic System

1. Check the hydraulic oil level in the oil tank.
2. Check the state of the filter indicator.

Seat

The seat belt provides protection to the operator. Regular inspection can ensure its correct working in case of an emergency.

1. Pull the seat belt fully out and check for fraying.
2. Check the locking device (belt buckle) of the seat belt, and check if the retractor functions properly.
3. Check if the seat can be adjusted forward and backward, and if the back rest angle and seat suspension can be adjusted.

DANGER

In the case of seat belt failure, stop operating the forklift and replace the seat belt.

Multifunction display

1. Check if the battery voltage and status of charger displayed are correct.
2. Check if any error/fault indicator appears on the instrument panel.
3. Set the direction control switch to “forward”, “neutral” and “reverse” and check if corresponding gear indicator appears.

https://truckmanualshub.com/
www.pdfmanual4trucks.com

4. Check if the turning indicator signs appear when the turning indicator is activated.
5. Check if the 3 control buttons on the instrument panel functions properly.

Lights, Horn and Other Warning Equipment

1. Check if working lights work properly.
2. Check if turning indicators work properly.
3. Set the travel direction control switch to “Reverse” and check if reversing lights work and reversing beeper sounds.
4. Press horn to see if it works.
5. Check if other warning equipments work properly.

Braking System

1. Fully depress and then release the braking pedal and check if there is any abnormality.
2. Check if the parking brake works properly when it is applied. Check the operating force needed to fully apply the parking brake by using an ergometer. Check for abnormal wear on the parking brake.
3. Check the braking fluid level and see if it reaches 2/3 of the braking fluid cup. Add braking fluid if it does not reach 2/3 of the braking fluid cup.

Driving System and Controlling System

1. Turn the steering wheel clockwise and anti-clockwise and check if the steering is smooth.
2. Operate the mechanical levers and check if lifting and tilting are smooth.
3. Depress the acceleration pedal to see if the forklift can accelerate normally.
4. Check for abnormal sounds during forklift operation.

Counterweight

1. Check the counterweight bolts.
2. Check the tow pin.

Others

Check if there are others problems.

https://truckmanualshub.com/
www.pdfmanual4trucks.com

Weekly Inspection

Checklist and Time Interval

If the forklifts work less than 40 hours per week, conduct the following inspection on weekly basis. otherwise conduct the inspection every 40 hours. For details, please see "REGULAR INSPECTION AND MAINTENANCE".

Weekly (or every 40 hours) inspection checklist:

Inspection Items	Content
Electric System Inspection	Connector, fuses, connect bars, Relays
Tires	Wheel, fasten parts
Braking System	Braking fluid, handbrake, brake pedal

Electric System Inspection

1. Check connectors.
2. check fuses and connect bars of the main controller.
3. check fuses and relays in the fuses box.

⚠ WARNING

Disconnect the battery before checking the electric system.

Tires

1. Check on a daily basis (every 8 hours) if the wheel nuts are secured or loose. Fasten them if they are loose.
2. Take out debris embedded in the tire.
3. If the four tires are unevenly worn, or the tires are found damaged, or the rims are bent, then replace the tires.

Braking System

1. Fully depress and then release the braking pedal and check if there is any abnormality.
2. Check if the parking brake works properly when it is applied. Check the operating force needed to fully apply the parking brake by using an ergometer. Check for abnormal wear on the parking brake.
3. Check the braking fluid level and see if it reaches 2/3 of the braking fluid cup. Add braking fluid if it does not reach 2/3 of the braking fluid cup.

https://truckmanualshub.com/
www.pdfmanual4trucks.com

https://truckmanualshub.com/
www.pdfmanual4trucks.com

REGULAR INSPECTION AND MAINTENANCE

This chapter explains how to conduct regular inspections and maintenance on the BYD forklift.

https://truckmanualshub.com/
www.pdfmanual4trucks.com

Checklist and Procedures

Inspection Checklist and Procedures

To allow the the BYD forklift to deliver high performance, it is essential to conduct regular inspections and maintenance. Intervals for regular inspections and maintenance are as follows:

Interval Standard One	6 weeks	3 months	6 months	12 months
Interval Standard Two	250 hours	500 hours	1000 hours	2000 hours

Conduct the regular inspection and maintenance in accordance with the abovementioned two interval standards, whichever comes first.

For example: if the working hours within a period of 6 weeks have exceeded 250 hours, then use the 250 hours as the interval standard and perform the maintenance service accordingly.

If interval standard two is adopted, use the working hours displayed on the display unit as reference for maintenance.

https://truckmanualshub.com/
www.pdfmanual4trucks.com

Regular Maintenance Checklist

Maintenance Interval (Regular components replacement interval, whichever comes first)	6 weeks	3	6	12	months
	250	500	1000	2000	hours
Chains Adjustment	Check				
Chains Lubrication	Lubrication				
Mast Channel Cleaning And Adjustment	Check				
Electric System		Check			
Braking Oil			Replacement		
Return Filter Element		1st Replacement	Replacement		
High Pressure Filter Element		1st Replacement	Replacement		
Return Filter's Air Filter				Replacement	
Hydraulic Oil				Replacement	
Tilt Rotating Pin Lubrication	Lubrication				
Gear Oil	1st Replacement		Replacement		
Steering Axle	Clean				
Torque On Critical Fasteners			Check		

Note

If the working environment is harsh, the maintenance interval should be reduced, and advice from BYD aftersales personnel should be sought.

Type and Parameters of Oil and Grease

Lubricant, oil type and replacement volume table:

Item	Needed	Volume Needed	Type
Drive Axle (Dual Drive)×2	Gear Oil	(0.15~0.17 Gal)×2	Mobilfluid 424
Hydraulic oil	Hydraulic Oil	5.28 Gal	ISO VG46, ISO VG68
Braking System	Brake Fluid	As Needed	DOT4
Tilt Rotating Pin Lubrication	Lithium lubrication grease	As Needed	EP2
Chian	Machine Oil	As Needed	20#(Winter);40#(Other Seasons)

https://truckmanualshub.com/
www.pdfmanual4trucks.com

Working Equipment

Mast Channel Cleaning and Adjustment

1. Check and clean the inner chamber of the mast channel. Make sure that the inner chamber is clean, flat and well lubricated.
2. Check gaps between the inner and the outer mast, and use the adjusting screw to ensure gaps being equal.

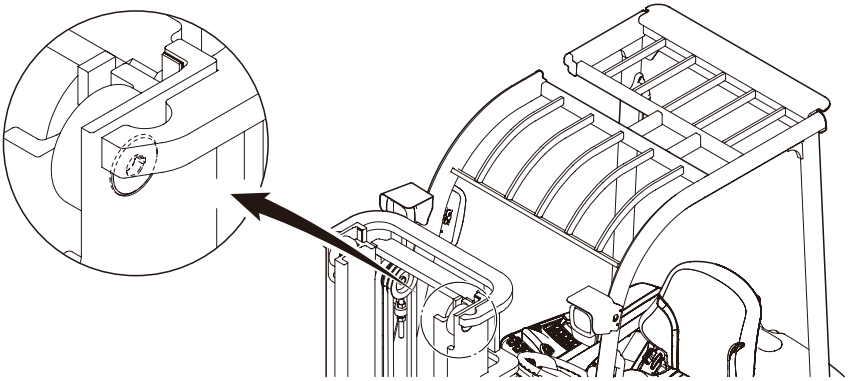

Tilt Rotating Pin Lubrication

1. Lift the mast and tilt it until the grease nipples are exposed.
2. Add lubrication grease.
3. Fully lubricate the axis by tilting the mast several times.

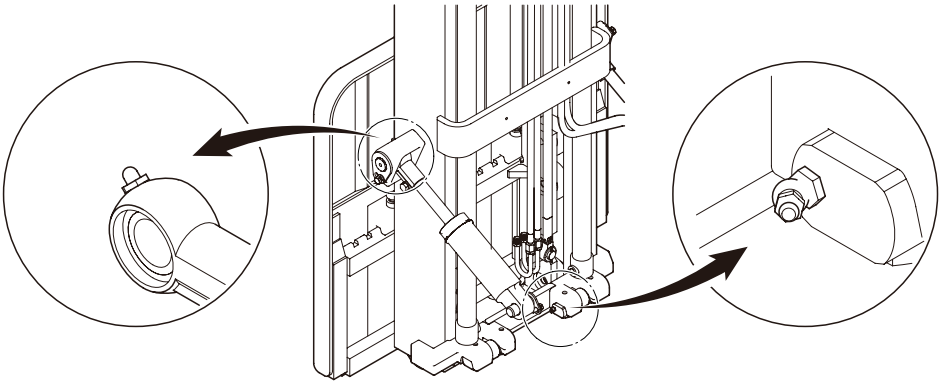

https://truckmanualshub.com/
www.pdfmanual4trucks.com

Adjusting the Chains

1. Park the forklift on a level ground and fully lower the mast and apply the parking brake. Switch off the forklift, take off the key and press down the emergency disconnect switch.

2. Unscrew the adjusting nut (1) and (2), and adjust the length of the chains by adjusting the adjusting screw (2) on the retaining pin.

3. Tighten the adjusting screws (1) and (2) (torque: 81.9~103 ft-lbs).

4. Raise the forks by 11.8 in and check the tensions on the left and right chains. If the tensions are not the same, repeat the above three procedures to readjust.

After the adjustment, inspections on the chains should be conducted: use ergometer to pull the chain when it is 39.4 in above the ground. When the ergometer reads about 11 lb , the chain should have moved down by less than 0.79 in, and then use the same procedures to measure and adjust the other chain.

After adjusting the chains, make sure that when the stroke of cylinders stays at 0 in the forks gets to touch the floor. The middle mast channel is 0~0.39 in higher than inner mast channel.

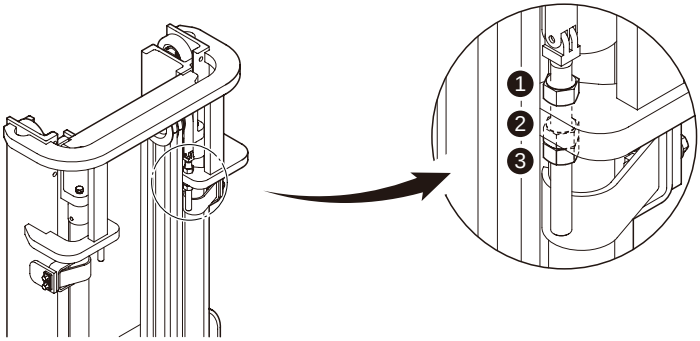

Note

The damage or missing of the plastic guiding rail for the chain of full free lift will damage the performance or the life expectance of the full free lift chains.

Changing and Replacing Chains

Change and replace the chains immediately if they are found damaged.

https://truckmanualshub.com/
www.pdfmanual4trucks.com

Electric

Electric System Inspection

1. Check connectors.

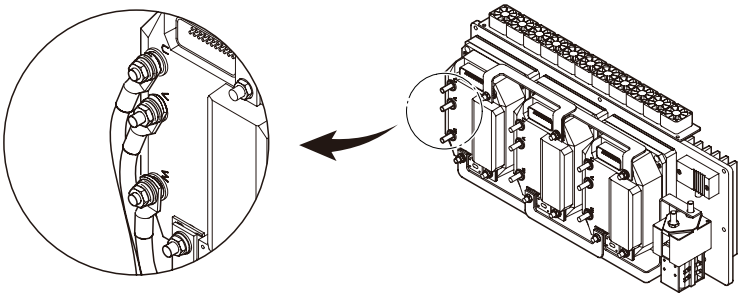

2. check fuses and connect bars of the main controller.

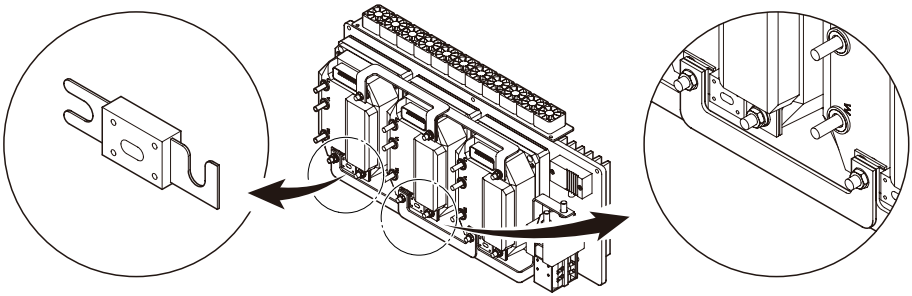

https://truckmanualshub.com/
www.pdfmanual4trucks.com

3. check fuses and relays in the fuses box.

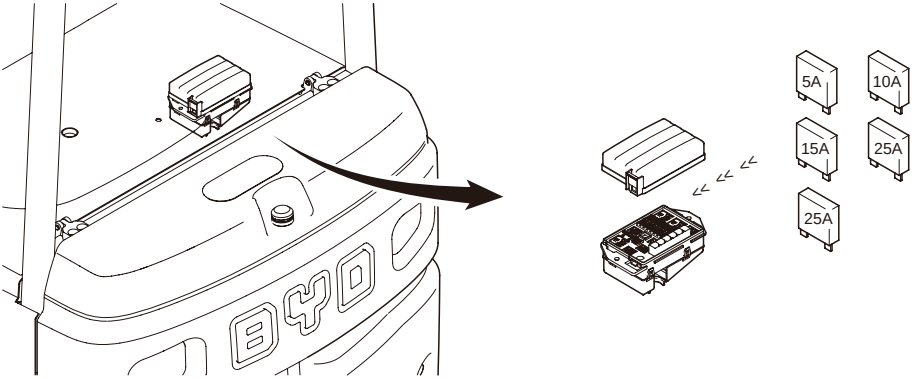

WARNING

Disconnect the battery before checking the electric system.

https://truckmanualshub.com/
www.pdfmanual4trucks.com

Hydraulic System

Before Inspection and Maintenance

Park the forklift on a level ground and fully lower the mast and apply the parking brake. Switch off the forklift, take off the key and press down the emergency disconnect switch.

1. To check the hydraulic oil level and the state of the return filter indicator, open the check door of the foot plate.

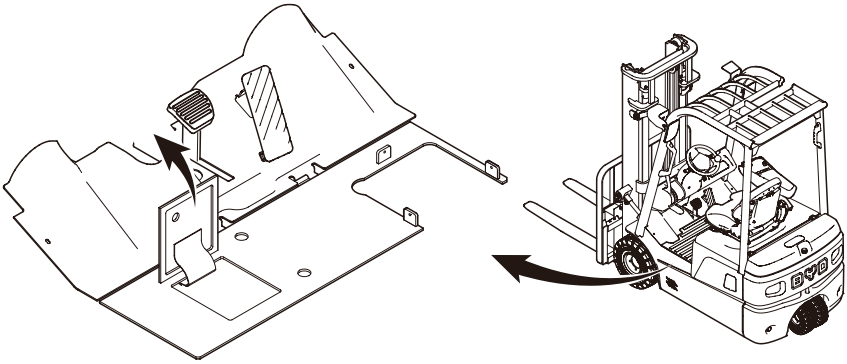

2. To replace filters' elements, open the foot plate.

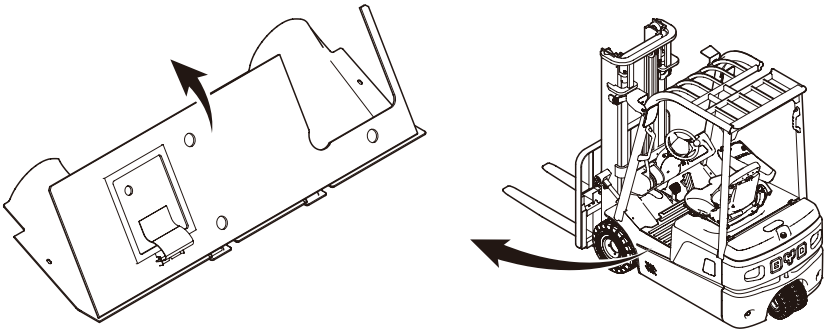

https://truckmanualshub.com/
www.pdfmanual4trucks.com

Hydraulic Oil Level

1. Pull out the oil dipstick, use the clean cloth to wipe the oil on it, and then insert it back.
2. Pull out the oil dipstick again, and then see if the oil level is between two marks.
3. If the oil level is under the lower mark, take of the return filter cap and refill the oil.

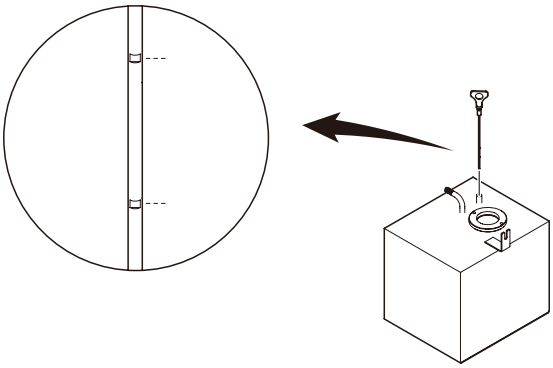

Return Filter Element State Indicator

The indicator of the return filter indicates the state of the filter element.

1. Green area: the element is in good condition.
2. Years area: the element's performance drops and it's better to be replaced within a short time.
3. Redarea: the element is invalid, it must be replaced immediately.

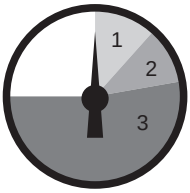

⚠ CAUTION

The element should be replaced if it drops or it's invalid at any time.

https://truckmanualshub.com/
www.pdfmanual4trucks.com

Return Filter Element Replacement

1. Put the clean cloth around the return filter.
2. Unscrew the cover plate and pull the out filter element.
3. Clean the cover plate and check if the seal and the o-ring are in good condition, replace them if necessary.
4. Check if the spread and the o-ring of the new element are in good condition, replace them if necessary.
5. Use clean hydraulic oil to lubricate the the o-ring of the new element, fit the new element carefully and screw the cover plate.
6. After replacement, operate the hydraulic system to check if there is any leakage.

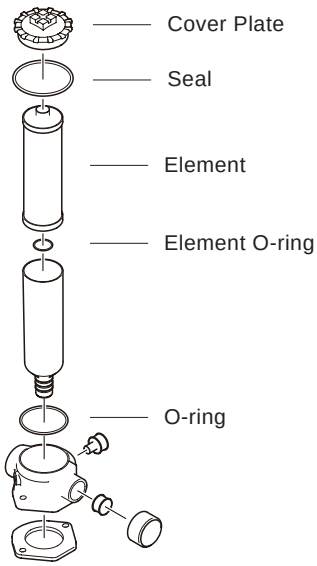

https://truckmanualshub.com/
www.pdfmanual4trucks.com

High Pressure Filter Element Replacement(Comfort Type Forklift)

1. Put the clean cloth around the return filter.
2. Unscrew the filter bowl and pull the out filter element.
3. Clean the filter bowl and check if the o-ring is in good condition, replace it if necessary.
4. Check if the spread and the o-ring of the new element are in good condition, replace them if necessary.
5. Use clean hydraulic oil to lubricate the the o-ring of the new element, fit the new element carefully.
6. Screw in the filter bowl fully and then unscrew by one quarter-turn.
7. After replacement, operate the hydraulic system to check if there is any leakage.

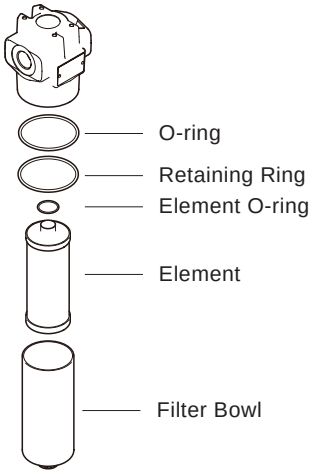

Check and Replace the Air Filter

Check the air filter and replace it if necessary.

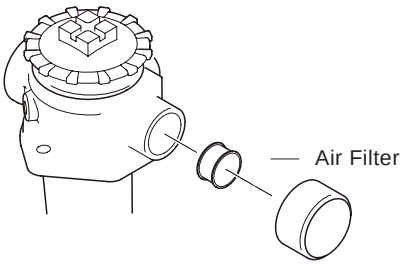

https://truckmanualshub.com/
www.pdfmanual4trucks.com

Hydraulic Oil Replacement

1. Drive the forklift to the maintenance ditch, switch off the truck, remove the key and press down the Emergency Disconnect Switch.

2. Fully lower the forks, apply the hand brake, and place a container below the oil drain of the tank. Unplug the oil drains plug at the bottom of the oil tank and drain the hydraulic oil.

3. Before putting the plug back on, make sure that the seal ring is complete and intact and then secure the plug (Torque: 33.19 ft-lbs).

4. Add a small amount of hydraulic oil first to check if the seal ring on the drains plug is ok. Tighten the plug if oil leakage occurs.

5. Add hydraulic oil into the oil tank and measure the oil level with the dipstick.

6. Remove and clean the residual oil spill on the oil tank and forklift bottom and working area.

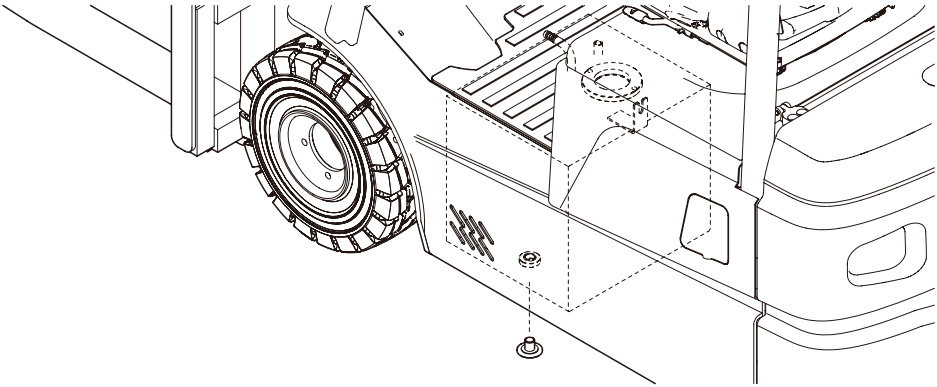

CAUTION

1. Comply with local regulation on measures of precaution for handling oil. When disposing the waste oil, keep children away and do not pour it into the sewer or onto the ground.

2. Do not mix different types of hydraulic oil.

3. Using unauthorized hydraulic oil might cause damage to hydraulic system.

4. Use only authorized hydraulic oil. If you need to switch to other types of hydraulic oils, contact with the BYD forklift after sales service people.

Note

1. If the average oil temperature stays between 104 ~ 140 °F, it is recommended to use ISO VG46.

2. If the average oil temperature exceeds 140 °F, it is recommended to use ISO VG68.

https://truckmanualshub.com/
www.pdfmanual4trucks.com

Tires Replacement

Condition needs replacement

If the wear between the front and rear wheels or left and right wheels is constant, not even, or if the tires and rims are found damaged or bent, contact with BYD after sales service people for inspection and repair.

⚠ CAUTION

1. After jacking up the forklift, do not crawl under the forklift. The slipping and removal of the jack might cause severe injuries.
2. Do not loosen the wheel nuts. If wheel nuts are found loose or abnormal, remove the wheel nuts and dismantle the wheels.
3. Replace the front or rear two tires at the same time, do not just replace one tire.
4. A solid tire could be very heavy. Replace it with caution.

https://truckmanualshub.com/
www.pdfmanual4trucks.com

Front Wheels Replacement

1. Park the forklift on the level floor, apply the handbrake, switch off the forklift, remove the key and press down the emergency disconnect switch.
2. Jack up the forklift until the tires are off the ground and loosen the wheel nuts.
3. Remove the wheel nuts and wheels.
4. When installing the wheels back on, follow the reverse procedures (Torque: 147.6 ft-lbs).

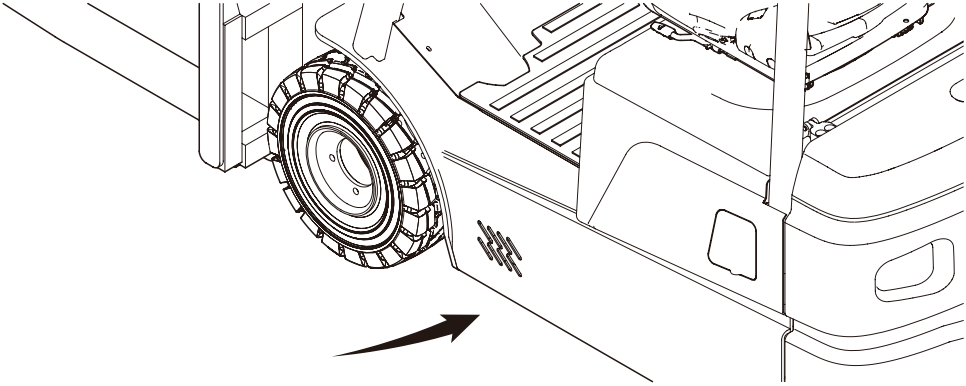

Rear Wheels Replacement

1. Park the forklift on the level floor, apply the handbrake, switch off the forklift, remove the key and press down the emergency disconnect switch.
2. Jack up the forklift until the tires are off the ground and loosen the wheel bolts.
3. Remove the wheel bolts and wheels.
4. When installing the wheels back on, follow the reverse procedures(Torque: 118.08 ft-lbs).

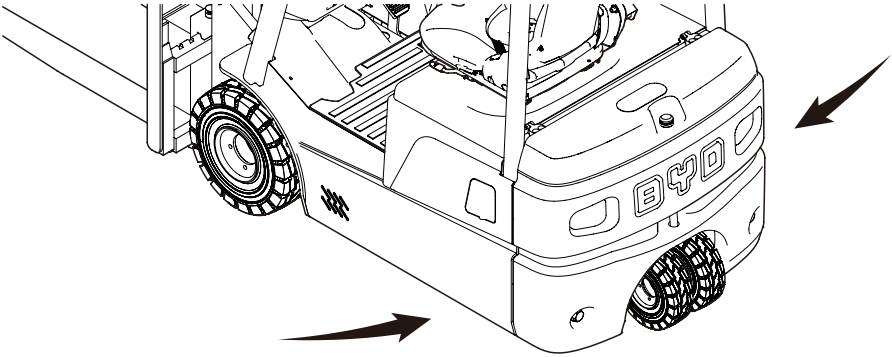

https://truckmanualshub.com/
www.pdfmanual4trucks.com

Gear Oil

Gear Oil replacement (Dual Drive)

1. Run the forklift until the gear box gets lightly heated. Park the forklift on a level floor, apply the hand brake, switch off the forklift, remove the key and press down the emergency disconnect switch.Lift the forklift with jack and secure the wheels with wedges.Remove the wheels.
2. Clean the surrounding areas around the "Oil drain plug", "Oil filler plug" and "Oil dipstick plug". Place a container below the "Oil drain plug".
3. Remove "Oil drain plug","Oil filler plug"and "Oil dipstick plug" and drain all the gear oil.
4. Put the "Oil drain plug" back on and tighten it. (Torque: 4.5ft-lbs)
5. Add the gear oil through oil filler hole until the gear oil overflows out of "Oil dipstick plug".
6. Tighten both "Oil dipstick plug" and "Oil filler plug" (Torque: 4.5ft-lbs)
7. Refit the wheel and replace the gear oil in the gear box on the other side.

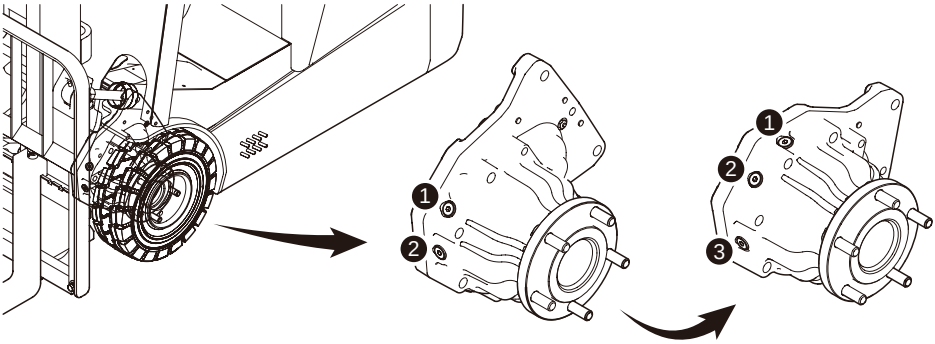

(1) Oil filler plug (2) Oil dipstick plug (3)Oil drain plug

⚠ CAUTION

1. Make sure that the gear oil reaches the lower edge of the oil dipstick plug.
2. Use only Mobifluid 424 gear oil. If you need to use other types of gear oil, contact with BYD after sales service people.
3. The working temperature of gear box cannot exceed 248°F.
4. Every 3000 working hours, check if the piston inside the driving axle exceeds 0.14in. If yes, contact with BYD after sales service personnel.

https://truckmanualshub.com/
www.pdfmanual4trucks.com

Braking Oil Replacement

Braking Oil Reservoir

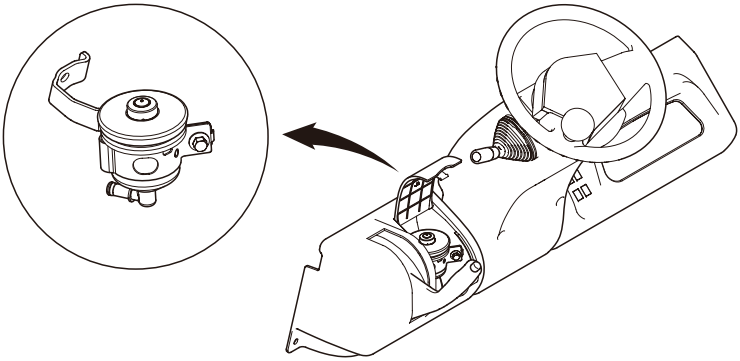

Braking Oil Drain Plug

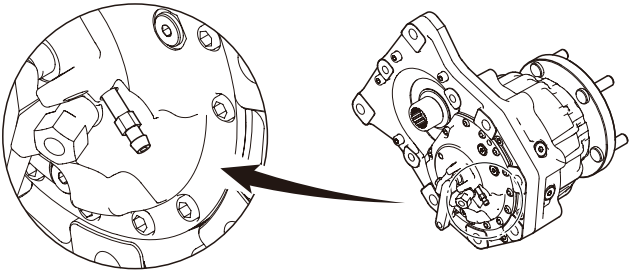

https://truckmanualshub.com/
www.pdfmanual4trucks.com

Methods of Replacing Braking Oil

1. Run the forklift until the driving axle gets lightly heated. Park the forklift on a level floor, apply the hand brake, switch off the forklift, remove the key and press down the emergency disconnect switch.
2. Clean the surrounding area around the braking oil drains plug, and place a container below it.
3. Remove the braking oil drain plug and drain the braking oil.
4. Reinstall the braking oil drain plug and tighten it securely.
5. Add some braking oil into the braking oil reservoir. Slightly loosen the braking oil drains plug to let the air escape. Repeat this procedure more than 3 three times until the air is removed completely and add braking oil to 2/3 of the braking reservoir.
6. Tighten braking oil drain plug (torque: 4.5ft-lbs) and clean the residual oil spill.

⚠ WARNING

The DOT4 type of braking oil has passed the BYD quality test. Using another type of braking oil might influence the braking performance of the forklift. The viscosity of the braking oil is a factor that might influence the braking performance.

https://truckmanualshub.com/
www.pdfmanual4trucks.com

Steering Axle

Clean

Clean the steering axle with the compressed air.

CAUTION

Do not damage the steering axle when cleaning it.

https://truckmanualshub.com/
www.pdfmanual4trucks.com

Torque On Critical Fasteners

Drive Axle Fasteners

Category	No.	Description	Torque (ft-lbs)
Drive Axle Fasteners	1	Drive Axle and Motor Mounting Bolt	36.90
	2	Drive Axle and Motor Mounting Bolt	36.90
	3	Drive Axle Mounting Bolt	95.94
	4	Drive Axle Mounting Bolt	95.94

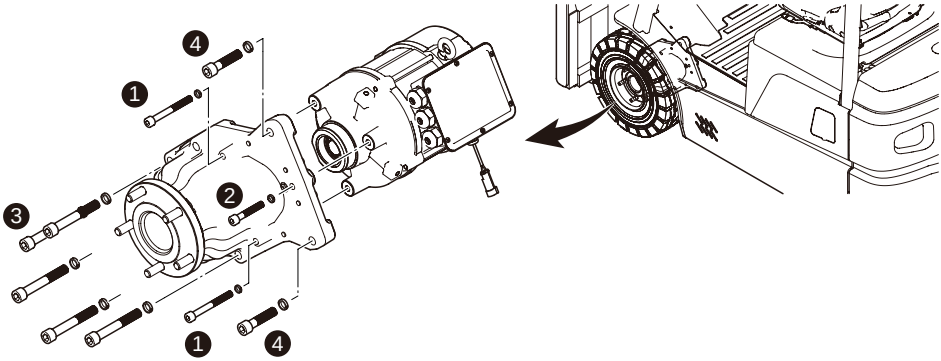

Steering Axle Fasteners

Category	No.	Description	Torque (Ft-lbs)
Steering Axle Fasteners	1	Steering Axle Mounting Bolt	162.36

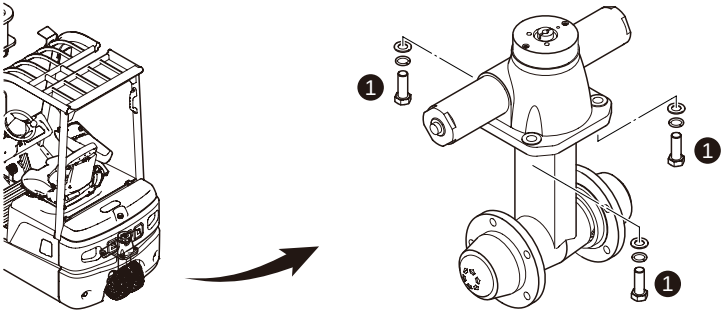

https://truckmanualshub.com/
www.pdfmanual4trucks.com

Wheel Fasteners

Category	No.	Description	Torque (Ft-lbs)
Wheel Fasteners	1	Front Wheel Nut	147.51
	2	Rear Wheel Bolt	118.01

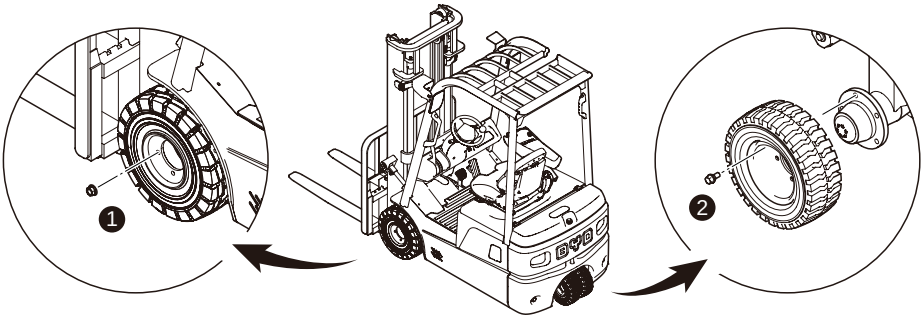

Counterweight Fasteners

Category	No.	Description	Torque (Ft-lbs)
Counterweight Fasteners	1	Counterweight Mounting Bolt	206.52
	2	Slab Counterweight Mounting Bolt	132.76

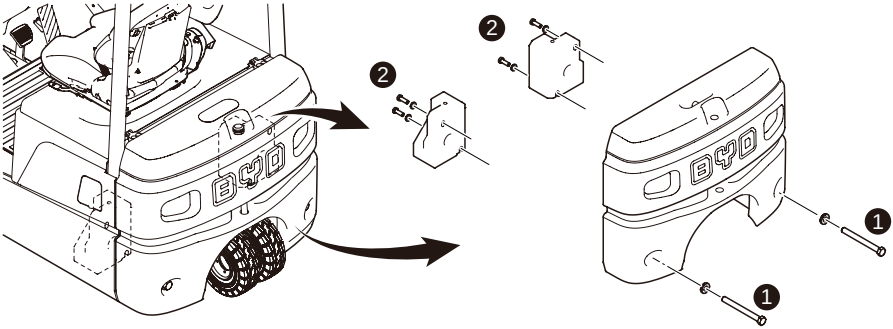

https://truckmanualshub.com/
www.pdfmanual4trucks.com

Mast Fasteners

1. Load Backrest Fasteners

Category	No.	Description	Torque (Ft-lbs)
Load Backrest Fasteners	1	Load Backrest Bolt	88.51

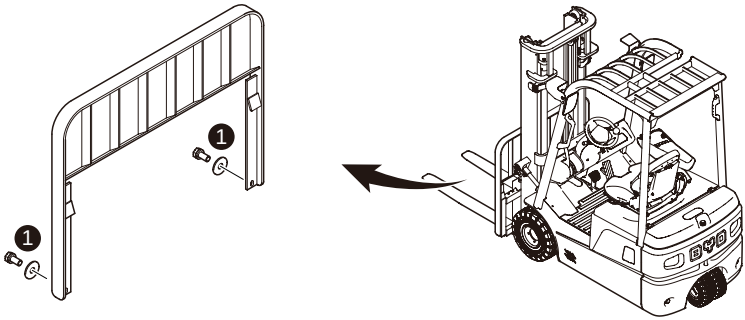

2. Tilt Cylinder Fasteners

Category	No.	Description	Torque (Ft-lbs)
Tilt Cylinder Fasteners	1	Tilt Cylinder and Mast Mounting Bolt	44.25
	2	Tilt Cylinder and Frame Mounting Bolt	14.75
	3	Tilt Cylinder Yoke and rod Mounting Bolt	88.51

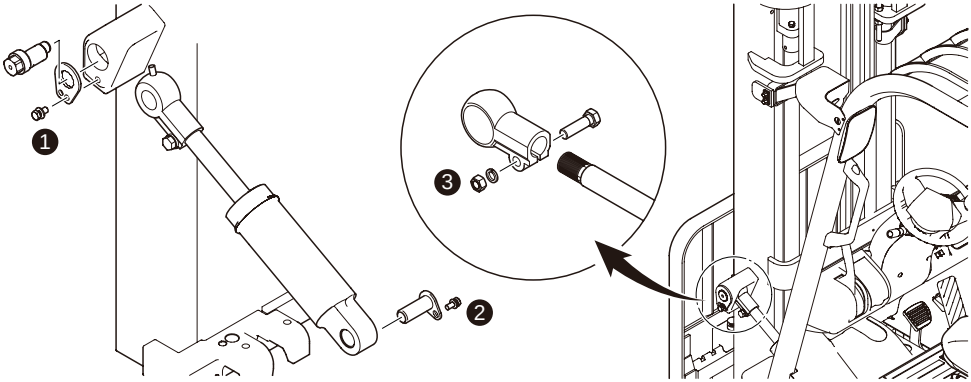

https://truckmanualshub.com/
www.pdfmanual4trucks.com

3. Mast Mounting Fasteners

Category	No.	Description	Torque (Ft-lbs)
Mast Mounting Fasteners	1	Mast and Frame Mounting Bolt	88.51

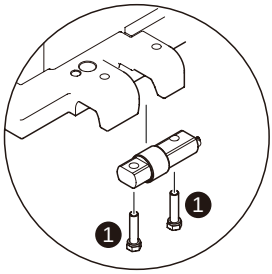

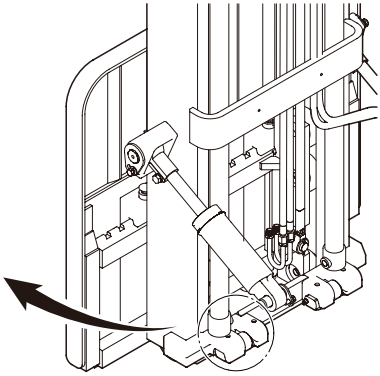

https://truckmanualshub.com/
www.pdfmanual4trucks.com

https://truckmanualshub.com/
www.pdfmanual4trucks.com

https://truckmanualshub.com/
www.pdfmanual4trucks.com

DECOMMISSIONING AND RESTORING

If you do not plan to use the BYD electric forklift for more than three months, follow the instructions in this chapter to decommission and restore the forklift to service.

Even when the forklift is taken out of service for a long time, several tasks need to be carried out on a monthly basis, such as lifting and lowering the forks, tilting the mast and others.

https://truckmanualshub.com/
www.pdfmanual4trucks.com

Decommissioning the Forklift

Decommissioning the forklift for long-term Storage

Clean and remove the dust on the forklift components and conduct the following procedures:

1. Check forklift for oil and water leakage and abnormal components. If yes, repair the forklift first.
2. Lubricate the inside of the hydraulic cylinders by completely lifting/lowering of the forks, tilting masts and handling attachment several times.
3. Lower the forks to a supporting surface so that the lifting chains will no longer be tensioned.
4. Spray a layer of lubricant over the parts left unpainted.
5. Check the hydraulic oil level and add if necessary.
6. Lubricate all the components.
7. Take off the key and make sure that forklift is disconnected from the battery power and press down the emergency disconnect switch. Battery status of charge should be around 50% to avoid over-discharge or full charge for long-term storage. Spray a layer of proper agent (contact the BYD dealer for detailed type of agent) on the electrical connectors.
8. Lubricate the inside part of the hydraulic cylinders monthly by lifting/lowering the forks and tilting mast several times. Operate the attachment some times if there is an attachment.

Storage Environment

1. Do not expose the forklift to rain, snow, frost, smoke and flames.
2. Take precaution measures against rats.

⚠ CAUTION

1. When storing the forklift, place the forklift on a shelf so that the wheels are off the ground to protect the wheels and wheel bearings.
2. Do not cover the forklift with a plastic cover, which will cause water vapor to condense and to accumulate.
3. Ask your BYD dealer for advice if the forklift needs to be decommissioned for more than 6 months.

https://truckmanualshub.com/
www.pdfmanual4trucks.com

Restoring the Forklift to Service

Procedures to Restore the Forklift to Service

Remove and clean the dust on the forklift components and complete the following procedures:

1. Lubricate all the components.
2. Lubricate the inside of the hydraulic cylinders by completely lifting/lowering the forks, tilting masts and handling attachment several times.
3. Check the status of charge of the traction battery.
4. Check the gear oil. Replace it if it contains too much water inside.
5. Check the hydraulic oil. Replace it if it contains too much water inside.
6. Conduct the inspections before daily operation.
7. Operate the forklift.

⚠ CAUTION

The operator should repeatedly check the performance of the forklift brake when operating it for the first time after the forklift has been restored to service.

https://truckmanualshub.com/
www.pdfmanual4trucks.com

OTHER INFORMATION

Contact Informaiton

Importer: BYD Europe B.V.
Address: Vareseweg 53,3047 AT,Rotterdam,Netherlands
Tel:+31-10-2070888 **Fax:**+31-10-2070880

Importer: BYD Motors Inc.
Address: 1800 South Figueroa Street, Los Angeles, CA, 90015
Tel: 213-748-3980 **Fax:** 213-748-3945

Importer: BYD do Brasil
Address: Av. Antonio Boscato, 230 Terminal Intermodal de Cargas – TIC, CEP 13069-119 CAMPINAS - SP
Tel: +55193514-2551

Importer: BYD Japan company Limited
Address: The fifth Yasuda Bldg.5F,2-20-3 Tsuya-cho, Kanagawa-ku, Yokohama-shi,Kanagawa-ken,221-0835,Janpan
Tel: 045-290-6550; 045-290-6616 **Fax:** 81-(0)45-319-1506

Importer: BYD Auto Industry Company Limited
Address: No.3009, BYD Road, Pingshan, Shenzhen, 518118, P.R.China
Tel: +86-755-89888888 **Fax:** +86-755-84202222

Manufacturer: BYD (SHAOGUAN) CO.,LTD.
Address: No.1, BYD Road, Zhenjiang Industrial Zone, Shaoguan, Guangdong, 512040, P.R.China
Tel:+86-751-810 8888

https://truckmanualshub.com/
www.pdfmanual4trucks.com

https://truckmanualshub.com/
www.pdfmanual-trucks.com

ECB16 | ECB18

OPERATOR MANUAL