https://truckmanualshub.com/

VALTRA – VALMET

MEGA MEZZO HI-TEC

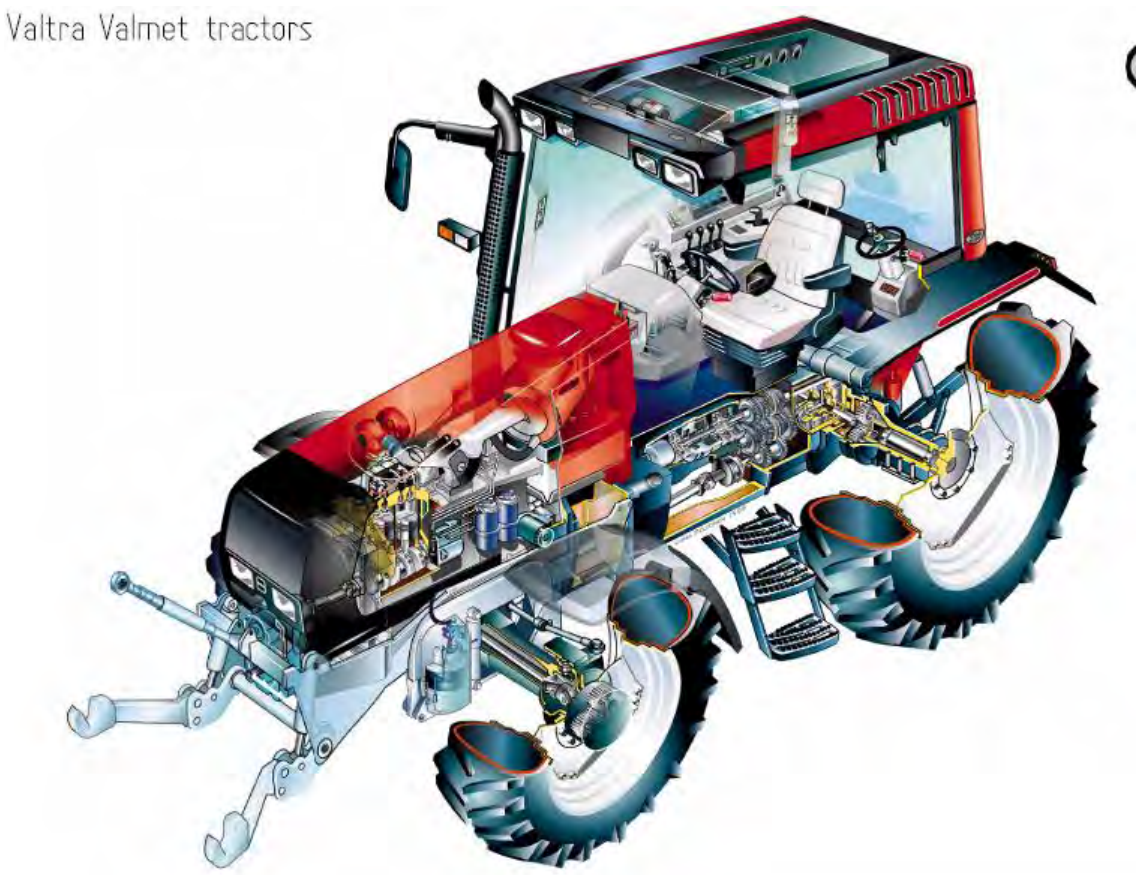

WORKSHOP MANUAL

Downloaded from www.Manualslib.com manuals search engine

https://truckmanualshub.com/

10 General

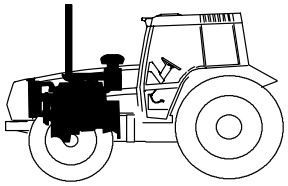

20 Engine

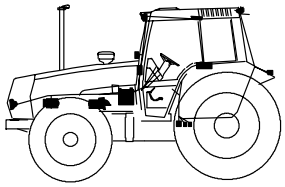

30 Electrical system

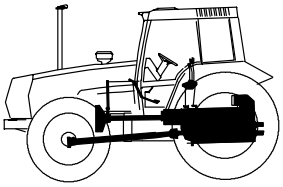

40 Power transmission

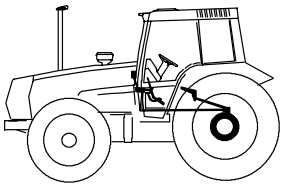

50 Brake system

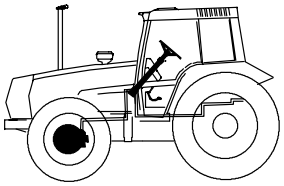

60 Steering system and Front axle

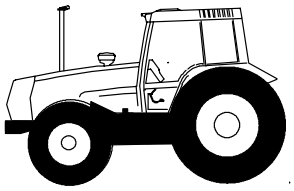

70 Frame and Wheels

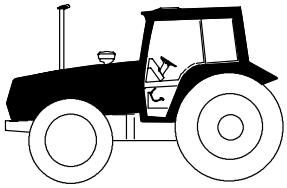

80 Cab and Shields

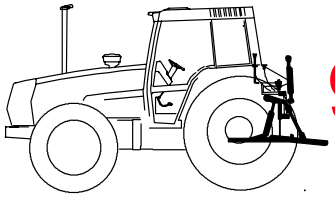

90 Hydraulics

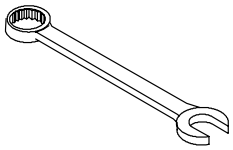

100 Tools

Service Manual

Tractors

Groups 10–100

Valtra Inc.
44200 Suolahti, Finland

Downloaded from www.Manualslib.com manuals search engine

https://truckmanualshub.com/

ValtraValmet – tractors, Stanadyne injectors

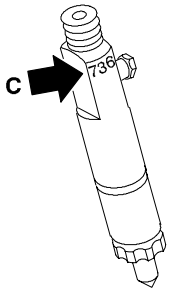

Tractor	Type of injector	Ordering no of compl. injector	Ordering no of nozzle	Nozzle opening pressure, bar	Adjusting pressure, bar (value to be used both with new and used nozzles).	Shims no 1,00...2,00 mm	Code C
6000, 6100 **6200** (–K41123) **6300** (–K42118) **6400** (–K42107) **6600, 6800** (–L23516) **8000, 8100, 8200** **8400** 103 kW (–K34331) **8050** (–L22533) **8150** (–L24138) **8450**(–L24208) **8750, 8550 USA**	S/736	8366 39956	8366 39957	230+10	240	8366 40104...8366 40122	736
6900, 8000R USA, 6200 USA, 6300 USA, 8150Hi **8150** (L24139–)	M/423	8368 54755	8368 54757	270+8	278	8368 62000...8368 62020	423
8550 (–L24115)	S/655	8363 40034	8363 39985	230+10	240	8366 40104...8366 40122	655
6250Hi, 6350Hi, 6750Hi, 6850Hi,8350Hi, 8550Hi **6200** (K41124–) **6300** (K42119–) **6400** (K42108–) **6800** (L23517–) **8550** (L24116–)	M/358	8366 59808	8366 59902	270+8	278	8368 62000...8368 62020	358
6550Hi, 6650Hi, 8050Hi, 8450Hi **6400** (L23506–) **8050** (L22534–) **8400** 110 kW (K32135–L33320) **8450** (L24209–)	M/446	8368 54831	8368 54832	270+8	278	8368 62000...8368 62020	446
8950Hi	M/876	8368 54791	8368 54792	270+8	278	8368 62000...8368 62020	876
8400 118 kW (L23130–)	M/301	8368 54940	8368 54941	270+8	278	8368 62000...8368 62020	301

Downloaded from www.Manualslib.com manuals search engine

Repair instructions

Fuel feed pump and fuel filter (Op no 222)

Bosch in–line pump

A. Bleeding fuel system

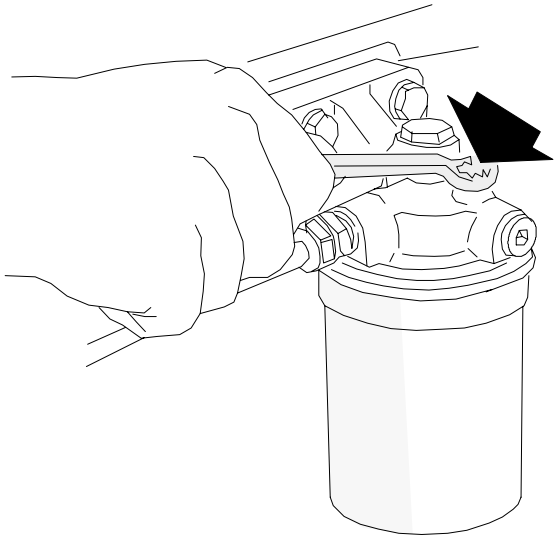

1. Slacken the bleeder screw on the filter head (8200, 8400, 8750 and 8950 have a double filter). Pump with the hand pump until the fuel flowing out at the bleeder screw is free from air bubbles. Then tighten the bleeder screw.

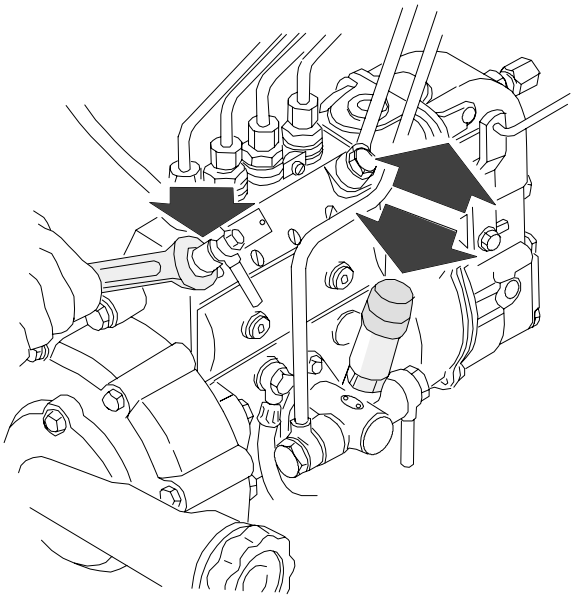

3. Slacken the injection pump overflow valve. Pump with the hand pump until the fuel flowing out is free from air bubbles. Tighten the overflow.

4. Wipe off any fuel from the engine.

B. Bleeding thermostart system

Always remove air from the glow plug fuel pipe when the pipe or reservoir has been emptied during repair work etc. This prevents damages to the glow plug caused by lack of fuel during starting.

1. If the reservoir is empty, fill it e.g. with a drip pot through the breather hole on the reservoir.

2. Open the glow plug pipe connector and drain fuel from the pipe. Connect the pipe.

C. Measuring fuel feed pressure

Note! Measuring equipment, see page **220/3**.

1. Clean the fuel injection pump and the filter and the pipes between them.

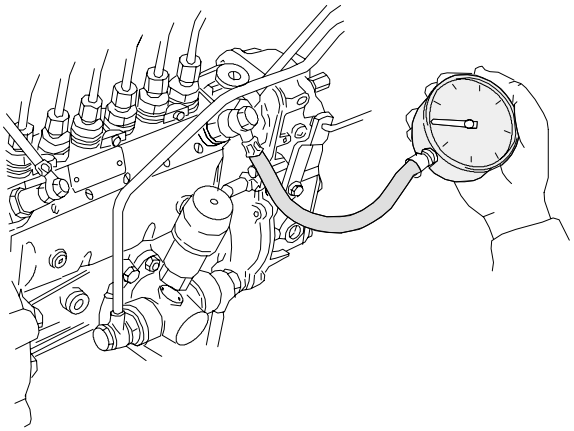

2. Fit the gauge at the banjo connection on the pump, as shown above (between filter and injection pump).

3. Run the engine at low idling for a while and compare the gauge reading with the prescribed value (**0,6–1,0 bar)**.

N.B. If the measured pressure is below the prescribed value, this may be caused by:

– faulty overflow valve
– blocked fuel filter
– faulty fuel feed pump
– blocked or leaking fuel pipes or unions

Downloaded from www.Manualslib.com manuals search engine

D. Checking overflow valve

If the fuel feed pressure deviates from the prescribed value, check the opening pressure of the overflow valve.

1. Connect a pressure gauge to the banjo union in the same way as in previous **instruction C**.

2. Pump with the hand pump until the overflow valve opens. Compare the reading on the gauge at the moment the valve opens with the prescribed value (**0,6 – 1,0 bar**).

3. If the recorded opening pressure deviates from the prescribed value, the overflow valve should be changed.

N.B. If the recorded pressure is considerably lower than the prescribed value, there may be a fault in the hand pump or the fuel feed pump valves.

E. Changing fuel feed pump valves

1. Clean the feed pump. Disconnect fuel pipes to the feed pump. Remove the feed pump.

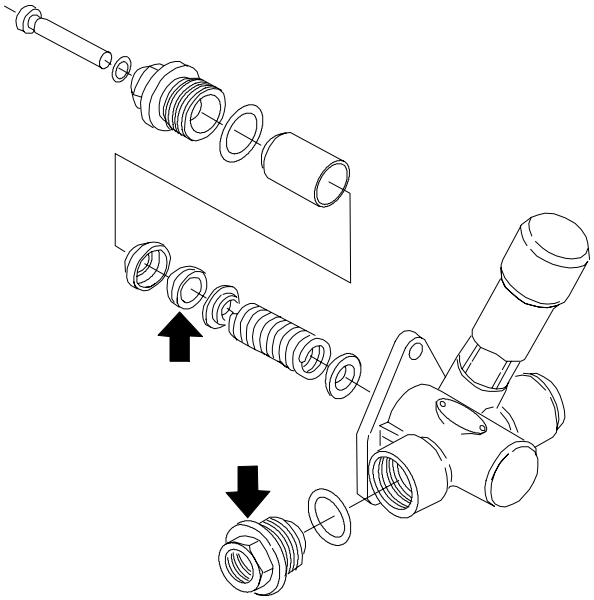

2. Secure the pump in a vice provided with soft jaws. Loosen the tappet body from the pump and remove the piston, seal rings, suction valve and the spring.

3. Detach from the pump body the outlet side threaded connector, in which is placed the pressure valve.

4. Rinse the valves with clean fuel and check the function and possible wear.

5. Change the valve if needed and assemble the pump using new o – rings and gasket

Downloaded from www.Manualslib.com manuals search engine

Fuel injection pump and injectors (Op no 223) (Bosch in–line pump)

Note! Concerning fuel injection pumps with a new type governor, see page **223**/**8**.

A. Checking injection timing

Note! The exact time at which the fuel should be injected into no. 1 cylinder is marked with a punch mark on the flywheel. There is an inspection hole in the flywheel housing and a hole for the locating tool. Due to the excess fuel flowing into the injection pump the control rod must be moved to the drive position when checking the injection timing. Otherwise the timing will be incorrect!

Checking method:

1. Clean the injection pump and its surroundings carefully.

2. Remove the inspection hole rubber plug from the flywheel housing.

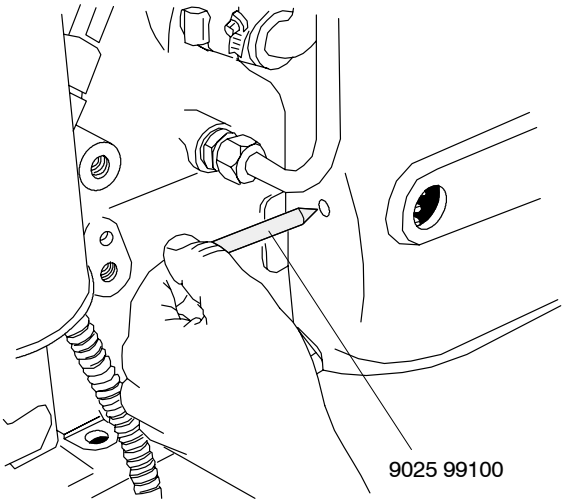

3. Insert the locator (9025 99100) in the hole on the flywheel housing front face.

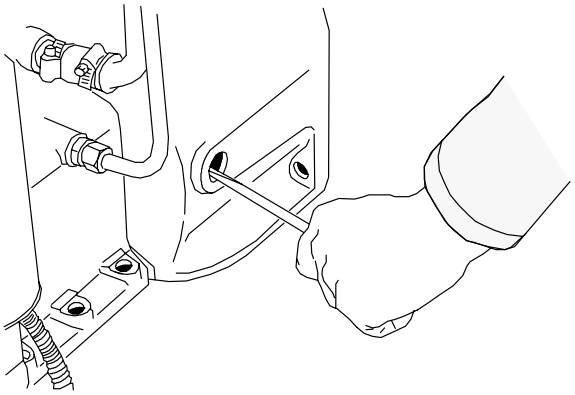

4. Turn the crankshaft to a position where the 1st cylinder piston reaches its compression stroke top dead centre. Then turn the crankshaft backwards until the timing mark on the flywheel passes the inspection hole.

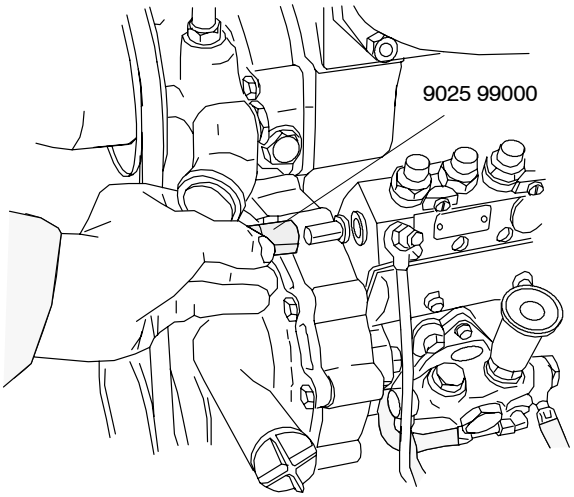

5. Remove the protecting cap for the control rod on the injection pump front face. Fit adjusting tool (sleeve for limiting control rod travel) 9025 99000. The tool moves the control rod to the ”running position”.

6. Disconnect the delivery pipe for the number one cylinder injector at the pump.

7. Clean the delivery valve of fuel. Slowly turn the crankshaft in the correct direction of rotation until the fuel level in the delivery valve just begins to rise.

8. Check if the mark on the flywheel is at the point of the locator which has been inserted into the flywheel housing. Repeat the check procedure. If the injection pump needs to be adjusted, follow the instructions under **heading B**.

9. Fit the delivery pipe and the rubber plug in the flywheel housing. Remove the locator and the sleeve which was used to limit the control rod travel. Start the engine.

B. Adjusting fuel injection timing

Important! Adjusting fuel injection timing on 6800, 8750 and 8950 tractors, see page **223**/**8**. Later on all tractors which have Bosch in–line pump (**G4720–** (320), **G2358–** (420) and **G5294–** (620, 634), the injection timing is adjusted according to instruction on page **223**/**8**.

If the timing is incorrect, adjust as follows:

1. Loosen the retaining nuts (17 mm) of the injection pump and remove the delivery pipes (17 mm).

Downloaded from www.Manualslib.com manuals search engine

https://truckmanualshub.com/

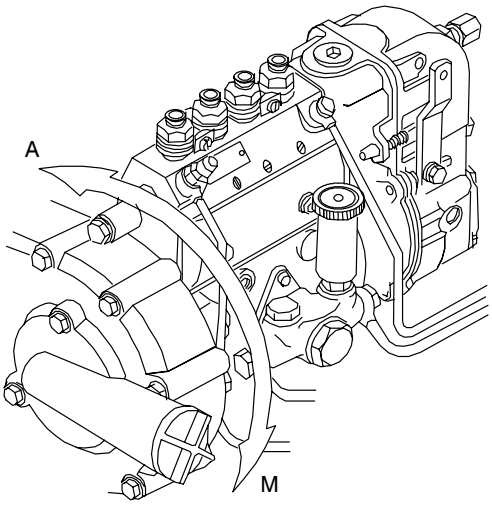

2. If the injection timing is retarded, turn the pump anti–clockwise (viewed from the front end of the pump). If the timing is advanced, turn the pump clockwise.

3. Check once again the injection timing and set again if needed.

4. When the timing is correct tighten the retaining nuts of the pump and fix the delivery pipes.

C. Removing fuel injection pump

1. Clean the injection pump and surrounding engine parts and the pipes and connectors on the injection pump.

2. Disconnect the delivery pipes and the banjo bolts at the supply and return fuel connections. Disconnect the lubricating oil line. Plug all connections.

3. Detach the oil filler pipe/cover from the front cover. Unscrew the pump drive gear nut.

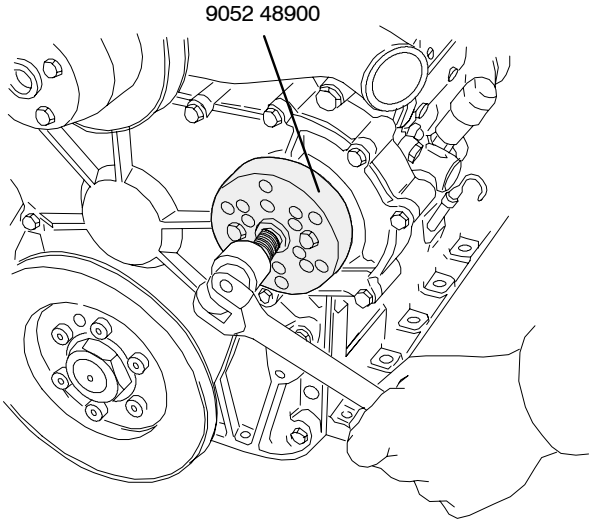

5. Use puller 9052 48900 and loosen the gear from the injection pump camshaft front end.

6. Remove the injection pump attaching nuts (17 mm). Remove the injection pump.

N.B. If the engine is not to be disturbed while the pump is removed, there is no need to secure the pump gear. The gear rests against the idler gear.

D. Fitting fuel injection pump

1. Check the condition of the o–ring between the pump and the timing gear casing. Change the o–ring if necessary.

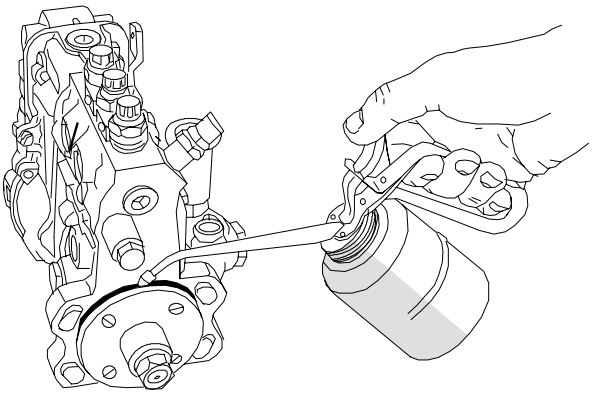

2. Lubricate the o–ring and place the injection pump so that the key on the pump shaft aligns with the key slot inside the gear. Tighten the pump attaching nuts.

3. Tighten the gear nut to **90 Nm**. Fix the oil filler pipe/cover.

4. Connect the supply and return fuel lines. Connect the lubricating oil line. Use new sealing washers.

Downloaded from www.Manualslib.com manuals search engine

5. Bleed the fuel system (**Op no 222 A**).

6. Adjust the injection timing (**Op B**).

7. Fit the delivery pipes.

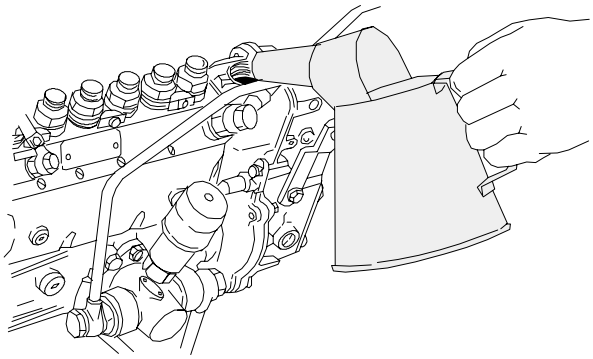

8. If the injection pump is changed or if the lubricating oil has been drained from the pump, fill the pump with lubricating oil before starting the engine. Open the hexagonal socket plug on the governor housing and pour in oil.

Filling quantity: 320 – engines **0,3 l**
420 – engines **0,4 l**
620 – engines **0,6 l**

Same oil specification as in the engine.

E. Checking/changing delivery valve

1. Clean the injection pump, injectors and surrounding parts. Disconnect the delivery pipes.

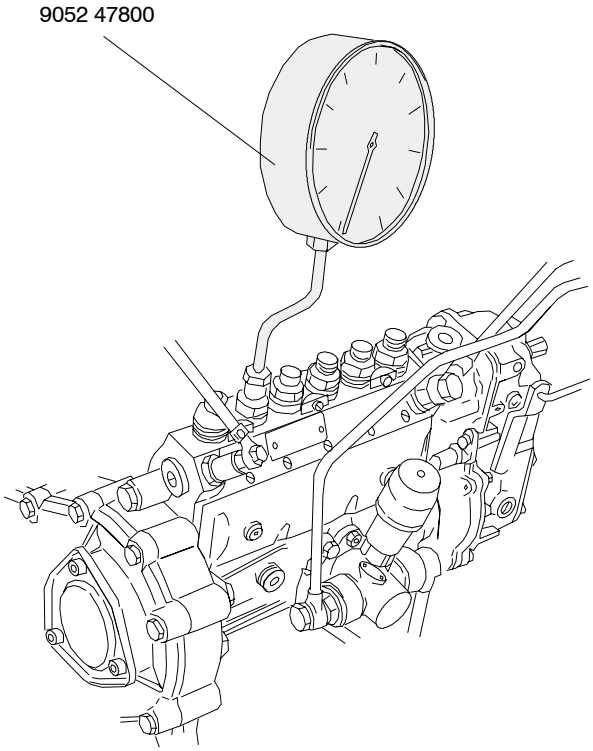

2. Connect the pressure gauge 9052 47800 to the delivery valve holder which is to be checked.

3. Rotate the engine with the starter motor, until the gauge reading is about **330 bar**.

Note! Pressure rises fast, do not damage the gauge. Get ready to pull the stop control out as soon as the gauge reading reaches an adequate pressure value.

4. Let the gauge reading lower at first about **30 bar**. When the gauge shows 300 bar, observe the reading during one minute. During this time the gauge reading must not lower too much (max 30 – 50 bar). If the pressure lowers faster than specified, the delivery valve must be cleaned or replaced.

Note! The delivery valve plunger and guide should always be replaced in pairs.

5. Open the delivery valve holder locking and holder. Remove the valve spring, plunger and the guide.

6. Rinse the plunger and guide in clean fuel or test liquid and at the same time rotate the plunger in its guide and press the sealing surfaces against each other.

Downloaded from www.Manualslib.com manuals search engine

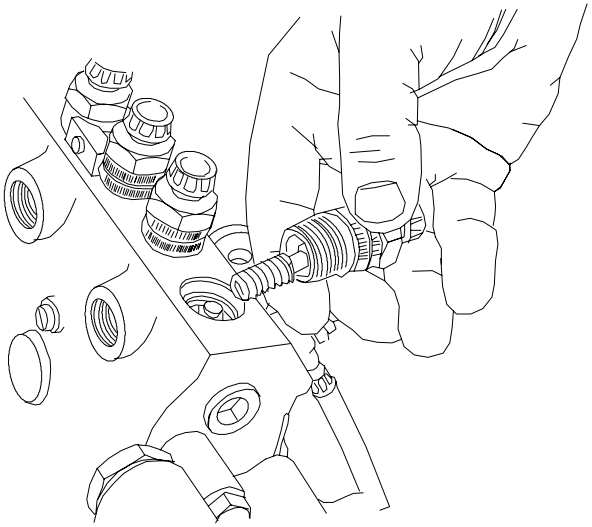

7. Fit the delivery valve into the fuel injection pump. Place the spring in place and tighten the holder.

Note! Renew the sealing ring and o – ring.

8. **Tighten the holder as follows:**

– Tighten first to **30 Nm**.
– Open the holder about 1/2 a turn and tighten to **40 Nm**.
– Open the holder about 1/2 a turn and tighten to **45 Nm**.

F. Adjusting low idling speed

If the idling speed of the engine deviates from the value given in the specifications or if the engine revs vary at the idling speed, adjust the idling speed as follows:

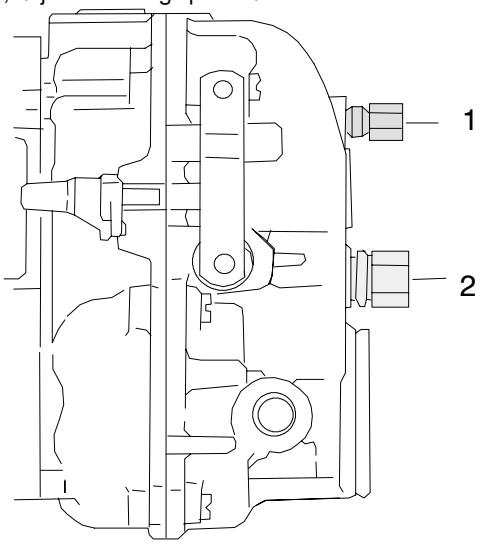

1. Unscrew the idling speed adjusting nut cap (1) and the cap (2) on the idling speed additional spring adjusting screw.

2. Ensure that the throttle lever is in the idling position and that the engine is at normal operating temperature.

3. Start the engine and loosen the adjusting screw of the additional spring so that it does not affect the idling speed.

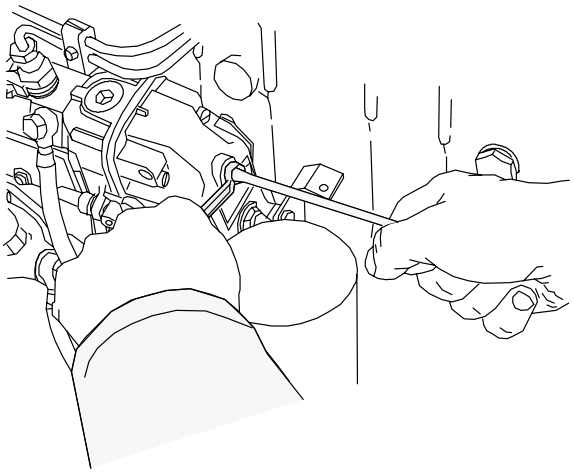

4. Adjust the idling speed using the adjusting screw to about 20 RPM below rated speed and lock the adjusting screw (10 mm).

5. Run the engine a few times and ensure that the idling speed remains as set.

6. Tighten the adjusting screw of the additional spring until the idling speed rises to the rated value. Lock the adjusting screw (17 mm) in this position.

7. Fix the safety caps of the adjusting screws.

Note! Other adjustments (output and max. speed) of the injection pump can only be performed by a specially trained person who has the necessary special tools and gauges available.

Downloaded from www.Manualslib.com manuals search engine

G. Removing injectors

1. Clean the injectors and the area around them. Disconnect the delivery pipes and the leak – off pipes.

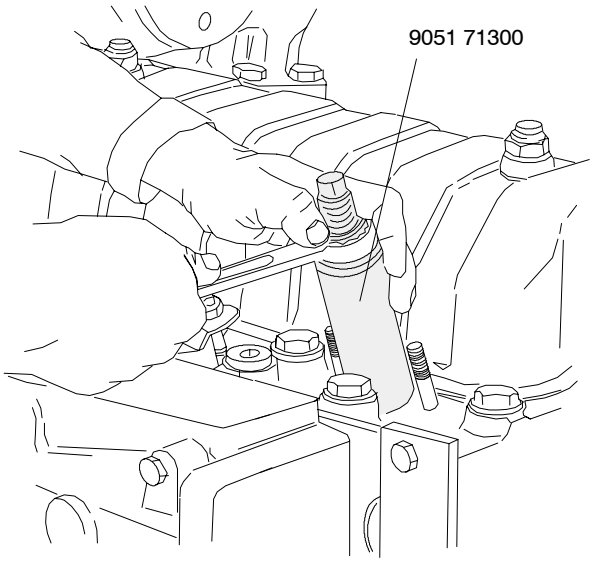

3. Remove the injector attaching nuts (13 mm) and remove the injector from the cylinder head. Fit protective plugs to all connections. If the injector does not rise by hand, use puller 9051 71300.

4. Remove the sealing washers from the bottom of the injector location in the cylinder head if they do no come out with the injector

H. Inspecting injectors

N.B. When pressure testing the injectors, it is important to avoid the nozzle end as the fuel jetting out easily penetrates the skin. Also bear in mind that the fuel ”mist” is dangerous to inhale.

1. Clean the injector with cleaning fluid and a soft brush. The carbon deposits must not be knocked off or removed in any other way which may damage the nozzle.

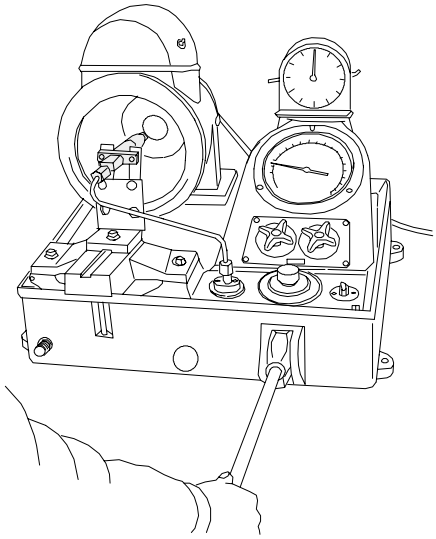

2. Secure the injector in a test bench and check the following:
– injector opening pressure
– the properties of the chattering (creaking) sound and the form of the spray pattern
– sealing of nozzle valve against its seat

Opening pressure

Pump a few times to fill the injector. Increase the pressure in the injector until the chattering (creaking) sound becomes audible. Read off the opening pressure of the injector. If the opening pressure deviates from the given value (230±5 bar), the injector should be taken apart and checked.

Adjustment is achieved by changing the shims. The thickness of the shims varies from 1.00 – 1,90 mm and they are available in increments of 0,05 mm. A thicker shim will raise the opening pressure while a thinner one lowers it. A difference in shim thickness of 0,05 mm changes the opening pressure by approx. 5,0 bar. As the opening pressure of the injector drops slightly after adjustment, the opening pressure should be set to approximately 10 bar above the value given in the specifications. This value applies both to new and used injector.

Chattering sound properties

Testing with a hand powered pump does not create the same circumstances as when the injector is fitted in the engine. Only with new nozzles are the test results reliable. With used nozzles, there is no chattering (creaking) sound when the tester is pumped at a certain rate. This has to do with the design of the nozzles.

However, with a rapid pumping on the tester handle, it should be possible to hear the chattering (creaking) sound or/and see a mist of the fuel jetting out.

Downloaded from www.Manualslib.com manuals search engine

Tightness of nozzle

Press down the tester pump lever until the pressure rises to approx. 20 bar below the adjusting value. Maintain this pressure for approximately 10 seconds and check whether drops of fuel are formed on the point of the nozzle. If the injector leaks, it should be cleaned or the nozzle should be changed.

I. Reconditioning injectors

1. Secure the injector in a suitable way.

2. Unscrew the nozzle cap nut. Remove the nozzle and the parts inside the holder.

3. Clean the nozzle in cleaning fluid both inside and outside.

4. Clean the nozzle holes with a needle (including in cleaning set 8360 83288).

5. Test the movement of the nozzle valve as follows:

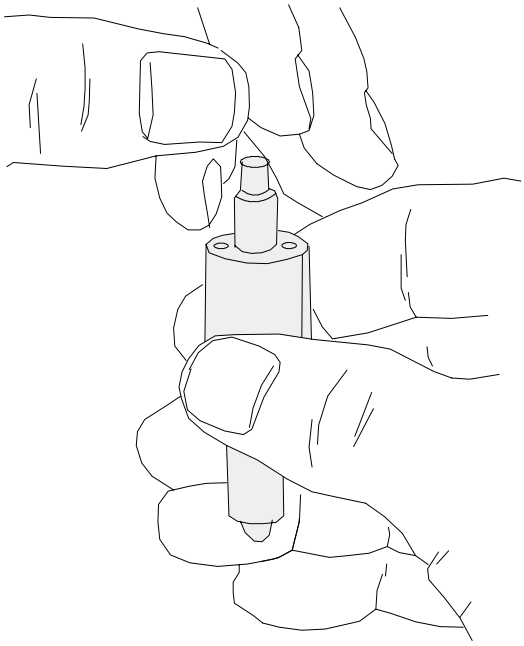

Rinse the parts thoroughly in fuel or testing fluid. Pull the valve out of the nozzle body to 1/3rd of its length. If the fit is correct, the valve should be able to slide down in the nozzle body under its own weight. Turn the valve slightly and repeat the test. Should the nozzle valve bind slightly, it should be changed.

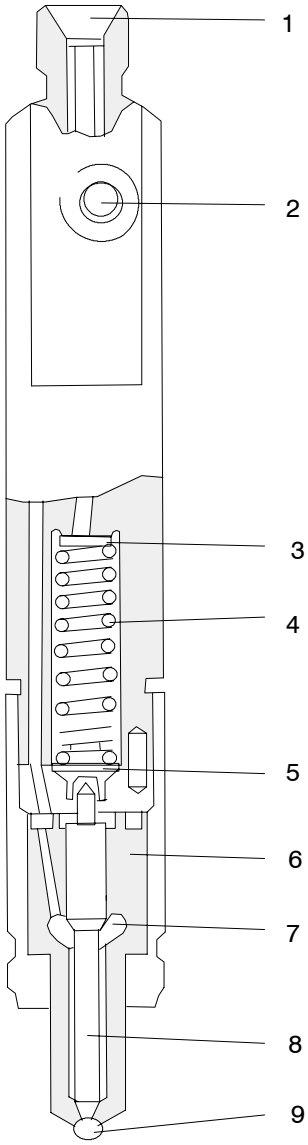

Injector

1. Fuel inlet
2. Leak – off fuel
3. Shims
4. Pressure spring
5. Valve stop spacer
6. Nozzle body
7. Pressure chamber
8. Nozzle valve
9. Nozzle hole

6. Before assembling, all parts should be carefully cleaned in clean fuel or testing fluid.

7. Put the same number of shims back as were fitted earlier. Note possible adjustment of the opening pressure. Assemble the rest of the injector. Note the position of the spring guide and the valve stop spacer.

8. Tighten the nozzle cap nut by hand and then to **60 Nm**.

Downloaded from www.Manualslib.com manuals search engine

J. Fitting injector in engine

1. Clean the injector sealing surface in the cylinder head. If necessary use a reamer 9101 66000.

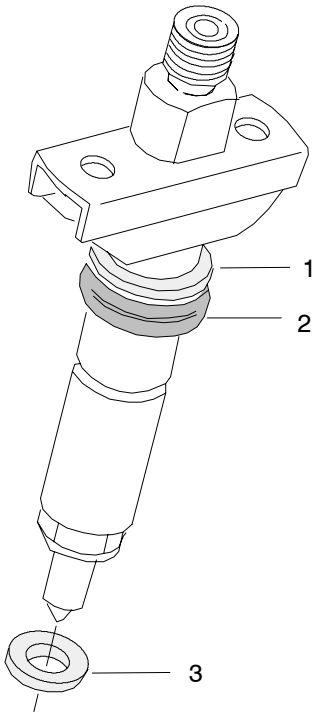

1. Washer
2. Rubber ring
3. Sealing washer

2. Fit the injector in the cylinder head using a new sealing washer.

N.B. The spray pattern from the injector is not symmetrical on purpose. It is therefore important that the injector is fitted correctly in the cylinder head. The connection for the leak – off line should be facing the valve mechanism.

3. Fit the attaching clamp and tighten the nuts (13 mm) evenly to **15 Nm**.

4. Connect the leak – off line (10 mm) together with new sealing washers and connect the delivery pipes (17 mm).

N.B. The screw studs in the cylinder head for the injectors should only be finger tight. If tools have to be used the studs should be tightened only lightly.

Note! Make sure, that the injector is of a correct type. Wrong injectors cause malfunctions and can damage the engine.

K. Fitting delivery pipes

1. Check the state of the pipes. If there are kinks, damage by chafing, or if the tapered sealing end is damaged, the pipes should be changed.

2. Fit the pipes without tension and check that they are at right angles to the union.

3. Fit the clamps for the pipes.

Downloaded from www.Manualslib.com manuals search engine

https://truckmanualshub.com/

L. Adjusting injection timing on 6800, 8750 and 8950 tractors

Important! Adjusting fuel injection timing on 6800, 8750 and 8950 tractors and later on all tractors which have Bosch in–line pump (**G4720–** (320), **G2358–** (420) and **G5294–** (620, 634), the injection timing is adjusted according to this instruction.

Note! On these tractors the injection starting point in the 1st cylinder has been positioned with aid of an indicator pin in the pump governor housing.

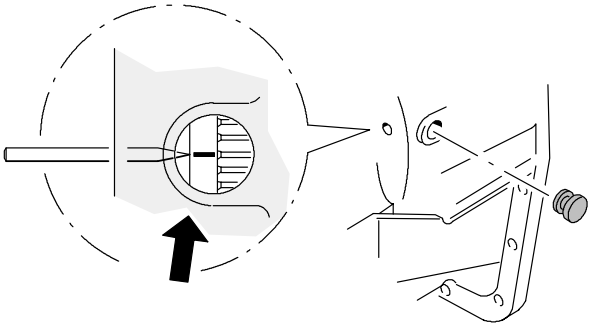

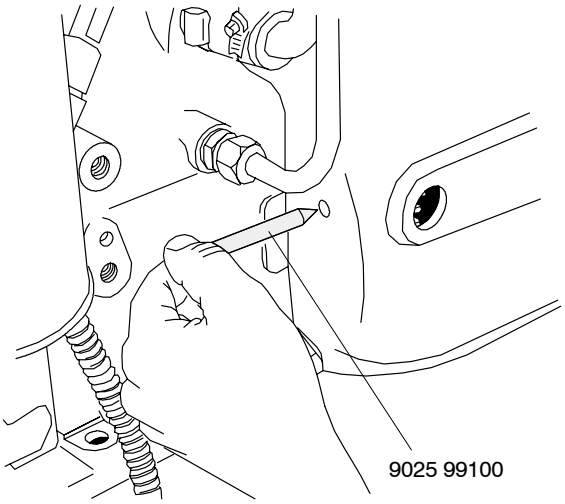

1. Turn the crankshaft to a position where the 1st cylinder piston reaches its compression stroke top dead centre. Then turn the crankshaft backwards until the timing mark on the flywheel is at the point of locator 9025 99100.

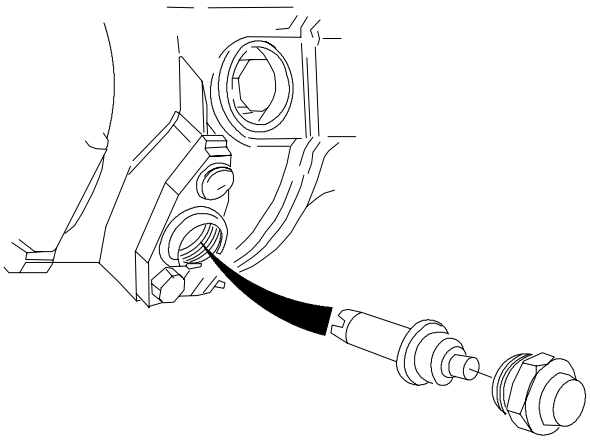

2. Unscrew the plug on the side of the injection pump. Take out the indicator pin.

3. Turn the indicator pin and push it into the hole so that the groove at the end of the pin points towards the pump.

4. If the pin groove fits on the boss on the governor weight assembly, the injection timing is correct. Otherwise, turn the pump to a position where the boss and the pin groove align.

Warning! Do not rotate the crankshaft when the groove end of the pin is inside the pump, since the pin end damages easily and metal pieces remain in the governor housing.

5. When the adjustment is correct, turn the indicator pin so that the groove points outwards (running position) and push the pin into the hole. Refit the plug.

Note! When checking the injection timing, an electric testing device can also be used, e.g. Bosch KDEP 1601 according to the instruction manual of the device.

Downloaded from www.Manualslib.com manuals search engine

Manifold pressure compensator on 6800 tractor (Bosch LDA)

Note! Boost control is fitted also on 8750 and 8950 tractors which have SigmaPower system.

The boost control unit on the governor housing has been connected via a hose to the engine inlet manifold. At low revs the boost pressure is low and engine tends to smoke. The boost control limits amount of injected fuel at low revs so that exhaust gas emissions are below standard R24. This adjustment starts at a certain, adjusted, boost pressure.

The boost control unit membrane is pre–tightened and air tight. A spring in the unit affects the lower surface of the membrane; the other end of the spring rests against the threaded guide sleeve (2). The spring tension can thus be changed in certain limits (adjusted in factory).

With thread equipped pin (1) is attached to the membrane. The lower end of the pin transmits movement of the membrane via an angle piece to the injection pump control rod (3).

When increased boost pressure presses the membrane downwards, also the pin moves downwards against the spring force and allows the control rod to move towards the greater fuel amount, which is injected into the combustion chambers. When the boost pressure decreases, the control rod moves towards the smaller amount of injected fuel.

Important! The boost control unit has been adjusted in the factory, and adjustments afterwards are not necessary.

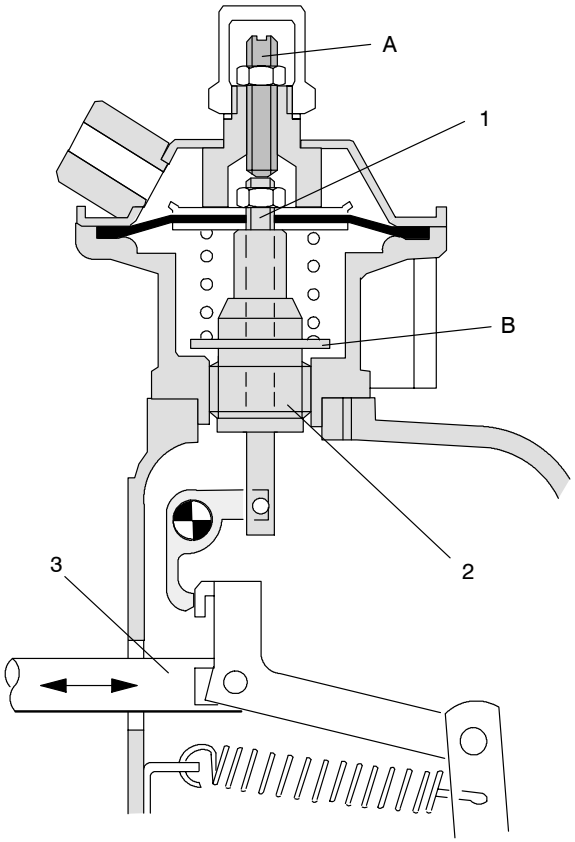

Picture 1. *Boost control*

A. *Adjustment screw with which is adjusted fuel amount, which the injection pump injects at low boost pressure.*

B. *The operating pressure is adjusted by removing the plug and by adjusting wheel B with a screwdriver.*

Cold start solenoid

Note! This solenoid is also fitted on 8750 and 8950 tractors.

When the engine is started, the control rod must move to the starting position. This can be done by moving the boost control lever in the direction of the axle, so that the lever cannot affect any more the injection pump control rod. The mechanism functions with aid of solenoid and a cross shaft.

The solenoid is energised, when the ignition switch is turned in a starting position. The solenoid is energised as long as the starter motor is on. In the starting position, the solenoid is magnetic. When the solenoid moves to the starting position, a click sound can be heard from the injection pump.

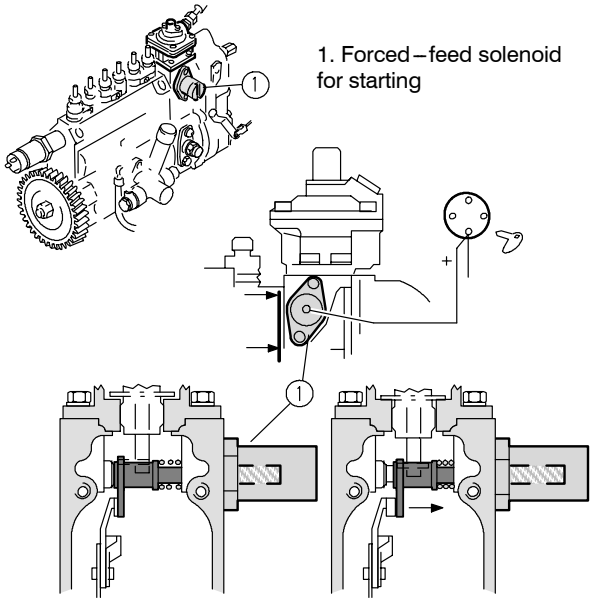

Downloaded from www.Manualslib.com manuals search engine

https://truckmanualshub.com/

BUY NOW

Then Instant Download the Complete Manual

Thank you very much!

Downloaded from www.Manualslib.com manuals search engine