https://truckmanualshub.com/

D-series MkVII

Articulated Dump Trucks

B35D I B40D I B45D I B50D

Blu@dvantage™

BELL

https://truckmanualshub.com/

Get more from your truck

If you're looking to deliver more to your bottom line, choose Bell Articulated Dump Trucks.

These D-series ADTs handle heaped payloads with faster cycle times and best-in-class fuel efficiency - so you'll move more material at lower cost. They're highly reliable too, with high-strength, welded-alloy steel chassis and components that are durable and optimized to reduce unnecessary weight. And with their oscillating frame joint, articulated steering and high-floatation tires, these hard working haulers won't let wet weather or steep grades dampen your plans.

- Extensive use of high-strength, lightweight materials gives these trucks the best payload-to-mass ratios and hauling efficiencies in each class.
- The redesigned sound-suppressed cab features fatigue-beating controls, advanced diagnostic monitor and a sealed-switch module for convenient, fingertip operation of numerous functions.
- With their oscillating frame and high-floatation tires, Bell trucks won't leave you stuck on muddy, rutted or hilly terrain.
- Fuel-efficient emission-certified engines deliver clean power without compromise in all conditions. Leading-edge emissions technology ensures rapid engine response and dependable cold-start performance.

Specifications	B35D	B40D	B45D	B50D
Gross power	295 kW (396 hp)	335 kW (449 hp)	375 kW (503 hp)	375 kW (503 hp)
Operating mass				
Unladen	28,230 kg (62,236 lb)	29,850 kg (65,808 lb)	32,980 kg (72,708 lb)	34,520 kg (76,104 lb)
Laden	60,730 kg (133,887 lb)	66,851 kg (147,381)	73,980 kg (163,098 lb)	79,920 kg (176,193 lb)
2:1 heaped capacity	20,5 m^3 (27 yd^3)	23 m^3 (30 yd^3)	25,5 m^3 (33,5 yd^3)	28 m^3 (37 yd^3)
Rated payload	32,500 kg (71,650 lb)	37,000 kg (81,571 lb)	41,000 kg (90,390 lb)	45,400 kg (100,090 lb)

https://truckmanualshub.com/

Enhancements such as industry leading standards in fuel-efficient emission control, solid state electrical system, spacious cab with refined controls and you have everything you need to maximise uptime and productivity.

https://truckmanualshub.com/

Haul of Fame

Transfer case inter-axle differential delivers equal torque to each axle when traction is favorable. When conditions get ugly, engage the diff-lock on the go to deliver torque to the tires that can best use it.

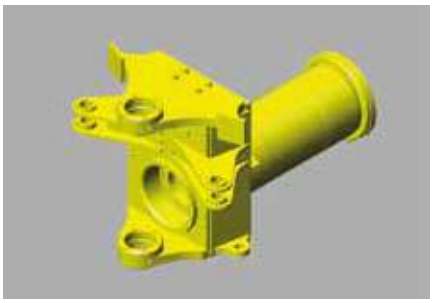

The central oscillation joint, high suspension travel on all axles, and balanced weight distribution provide the agility and ability to navigate hostile terrain.

Front-suspension damping helps minimize vibration, while the centre-mounted seat reduces the roll often experienced in off-road conditions - for comfortable productivity.

Optional tailgate is available for better material retention. The tailgate opens as the bin is raised for dumping. Tie-down straps maintain positive seal throughout haul, ensuring minimal material is lost.

- The best-in-class payload-to-weight ratio means that more of your fuel cost is spent moving the material, not the machine - decreasing your cost per tonne.
- Automatic retardation slows the truck when the operator backs off the accelerator pedal - for more confidence on steep grades and enhanced brake life.
- An industry leading, fully automatic six-speed planetary transmission with torque converter lock up maximizes fuel efficiency.
- Electronic unit injection fuel system provides high injection pressures even at low engine speed for improved cold-starting ability, low-speed response, and reduced emissions.
- Fully automated controlled traction differentials and transfer case diff-lock provide a traction boost in poor underfoot conditions.
- High-travel suspension keeps all tires in constant ground contact for optimum traction.

https://truckmanualshub.com/

Bell ADTs give you the competitive edge. Boasting faster haul cycles and industry-leading fuel economy, they move material at the lowest cost per tonne of any comparable-size truck. Best in-class payload-to-mass ratio gives you more power and agility to carry the load, for maximum productivity and profitability. What really sets these apart from other material movers is their ability to thrive on rough terrain, steep grades and mud. Try one to appreciate the difference.

https://truckmanualshub.com/

Nothing's built as strong as a Be

Built smarter to work harder, these lean machines boast the material-moving muscle you need without the mass to feed.

Their lower mass reduces powertain and structural stress. Other uptime-boosting features include enhanced diagnostics, solid-state sealed switches and re-inforced articulation joints to list but a few. When you know how they're built, you'll run a Bell.

Planetary powershift transmission optimizes shift points and protects the transmission from operator error and abuse. Thicker clutch plates, generous lubrication flow, and heavy-duty cooling ensure long life.

High-strength steel and widely spaced taper roller bearings in the articulation area enhance long-term durability.

The high-strength steel chassis delivers strength and rigidity without excess weight.

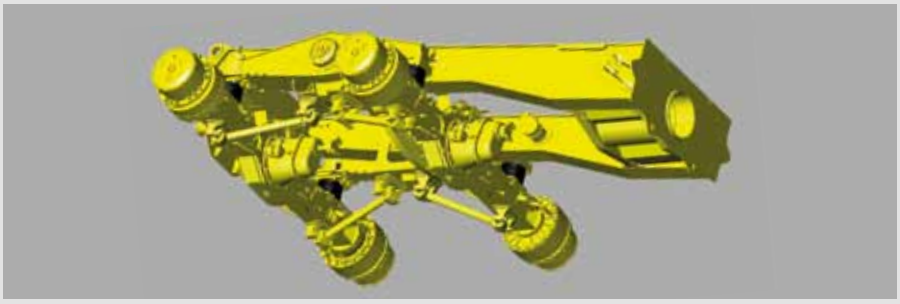

Rough terrain demands tough suspensions. Heavy-duty components absorb shocks and come back for more. You get best-in-class ground clearance, too.

https://truckmanualshub.com/

- Efficient viscous direct-drive engine fans in all Bell trucks provide engine and charge-air cooling.
- Fully enclosed, dual circuit wet disc brakes offer superior braking performance and extended service life essential for wet and muddy conditions. Oil-immersed wet-disc brakes are virtually maintenance-free.
- Class leading engine braking coupled with automated transmission retardation provides superior braking power and reduces service brake wear.
- Hydraulic, transmission and transfer case oil coolers employ a hydraulically driven fan that runs only as needed or when engine loading is low, helping conserve power and fuel.
- Intelligent traction control provides superior traction in poor underfoot conditions.

https://truckmanualshub.com/

Bringing you tomorrow's technology today

A combination of an optimally tuned engine and weight optimized complete machine package ensure that Bell ADTs have a minimal carbon footprint.

Blu@dvantage™

- AdBlue™ is non-toxic, odorless and simple to refill.
- AdBlue™ is injected into the flow of the exhaust gases and reacts with the NOx gases in the catalytic convertor to form harmless Nitrogen and water.
- Field tests on the new Blu@dvantage™ system show up to 15% saving in fuel over previous Bell ADTs.
- AdBlue™ usage is approximately 3-5% of your fuel usage.

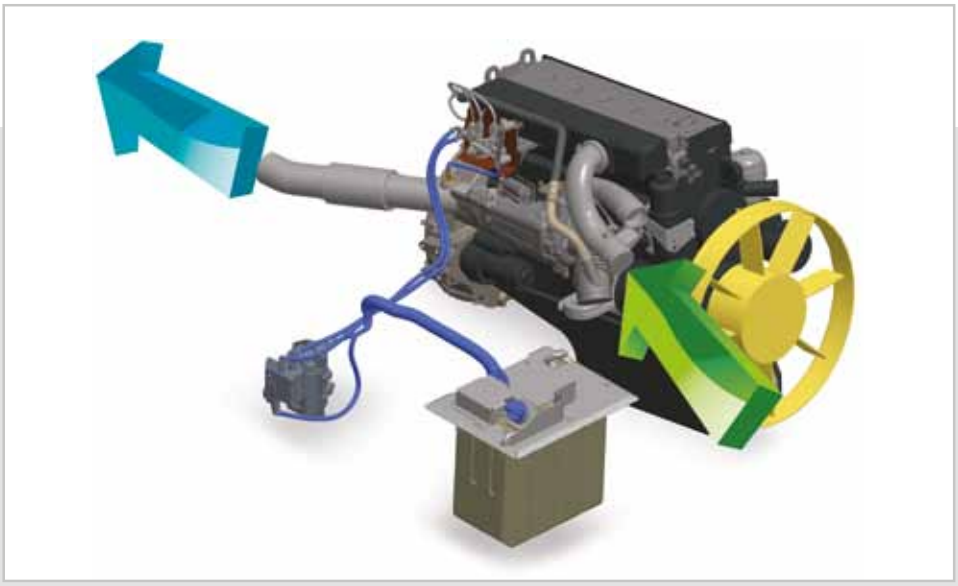

- Reduced emissions
- Improved engine efficiency
- Lower fuel consumption
- Improved power
- Improved torque
- Improved engine response

https://truckmanualshub.com/

Bell Equipment is an industry leader in fuel-efficient emission control with the introduction of SCR-technology (Selective Catalytic Reduction) to be compliant to Stage IIIB & Tier 4i emission standards. Called Bell Blu@dvantage™, it is an SCR package designed specifically for the off-highway market.

With SCR technology customers are able to reduce harmful Nitrogen Oxides while being able to save on fuel. So Blu@dvantage™ is not just healthy for the environment; it's healthy for your wallet too.

https://truckmanualshub.com/

Built for Comfort

What operator wouldn't want to climb behind the wheel of a Bell ADT?

It's spacious, quiet, climate-controlled cab is loaded with productivity-boosting comfort and convenience features that rival some SUVs.

From the state-of-the-art multifunction monitor and fully customizable controls to air-suspension seat, tilt/telescoping steering wheel and optional CD player with high-output speakers, the D-series provides everything your operators need to perform at their best. Unparalleled comfort.

Our innovative Comfort Ride System...

...is available as an option to even further enhance ride comfort by ensuring minimal whole body vibration exposure. Productivity increases, through increased cycle times, and reduced haul road maintenance are even further benefits of the simple, but extremely successful system. Long haul cycles with rough, hard roads will see maximum benefit, especially on the unladen run.

https://truckmanualshub.com/

• An intuitive monitor reveals vital operating information, detailed diagnostic readings of sensors and switches and dump body function settings.

• Convenient sealed switch module provides fingertip control of numerous productivity enhancing functions including: **Dump body upper limit. Soft stop / hard stop selection, I-Tip and Speed Control.**

• Who says you can't take it with you? There's a place for a coffee cup, in-door storage for an insulated flask or other carry-ons, and even a hot/cold box for refreshments.

- Easy-to-understand instruments and intuitive controls wrap around the operator so they're easier to view and operate.
- A fully adjustable air-suspension seat is optimally positioned behind the front axle to help smooth out the ride when the going gets rough.
- You won't find retarder pedals or levers in a Bell truck. Retarder aggressiveness is simply set on the switch pad. Everything else is automatic.
- The adaptive transmission control adjusts clutch engagement to ensure smooth, consistent shifts throughout the life of the truck.
- A heavy-duty bi-level climate-control system with automotive-style louvres keeps the glass clear and cab comfortable.
- The spacious suspension seat and a comprehensive mirror package provide exceptional all-around visibility.
- The standard sound-suppression package significantly reduces noise levels and operator fatigue.

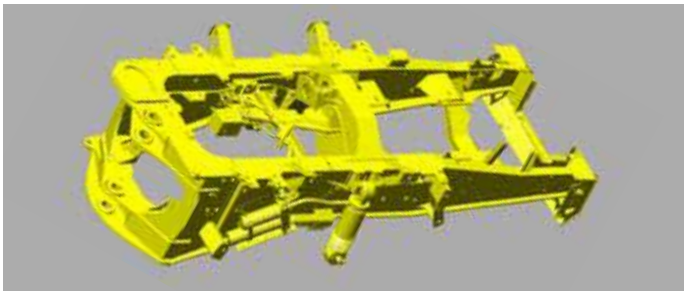

The front suspension consists of an A-frame layout, supported by two independent hydro-pneumatic suspension struts. The spring rate and damping is optimally tuned for a perfect combination of machine comfort and safe handling experience.

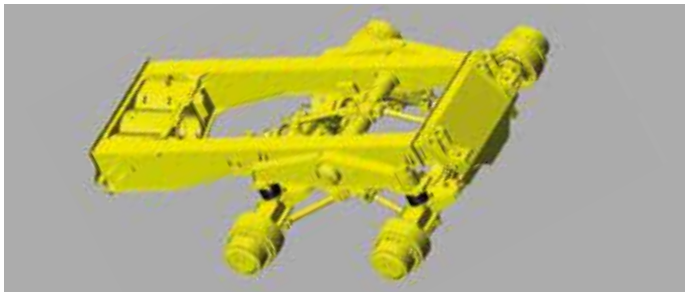

The Comfort-Ride option offers dual stage rubber blocks, which change the suspension characteristics to best match the laden and unladen haul cycles to maximise operator comfort.

https://truckmanualshub.com/

Safety is our Busi too

The exclusive on-board weighing option presents the operator with real time information on the payload while the machine is being loaded. A 'speed restriction' mode can also be activated if the machine is significantly over-loaded.

The park brake automatically applies when neutral is selected and it is not possible to engage neutral at speed. Torque dependent park brake release (hill assist) ensures no roll back on slopes.

https://truckmanualshub.com/

ness

By listening to our customers and reacting quicker to a changing workplace we provide a vehicle that exceeds application safety standards.

The best in class retarder and engine braking automatically applies when the operator lifts his foot off the accelerator. Retarder aggressiveness can be simply adjusted on the sealed switch module ensuring maximum descent control for all conditions.

All trucks can be set up to automatically sound the horn when starting or switching between forward and reverse.

• Keyless start, driver identity, and access codes ensures no unauthorized operation of your equipment.

• The incorporation of a Pitch and Roll sensor in the vehicle allows the bin to not be operated if the truck is in an unsafe position.

• Both operator or site selectable maximum speed control allows the vehicle to automatically de-accelerate and apply the retarder to prevent onsite speeding.

• Our quiet operator cabins are ROPS/FOPS certified with air suspension operator seat. Both operator and trainer seat have retractable lap belts with automatically locking retractors.

• Reverse cameras are available for factory or on site fitment ensuring full view when reversing.

• Full hand-rails (to ISO 2876) can be installed to provide even more safety when performing engine checks.

https://truckmanualshub.com/

Here's the lowdow

daily operating cos

You won't have to dig deep to uncover the many ways we've simplified service and made the D-series less expensive to maintain.

Easy-to-reach dipsticks, see-through reservoirs, sight gauges and grouped service points make quick work of the daily routine. High-hour oil and filter change intervals reduce costs and planned downtime. Quick-change filters and extended engine and hydraulic oil-service intervals reduce costs and provide more uptime. Plus, an advanced diagnostic monitor and diagnostic test ports help you troubleshoot problems and make informed maintenance decisions.

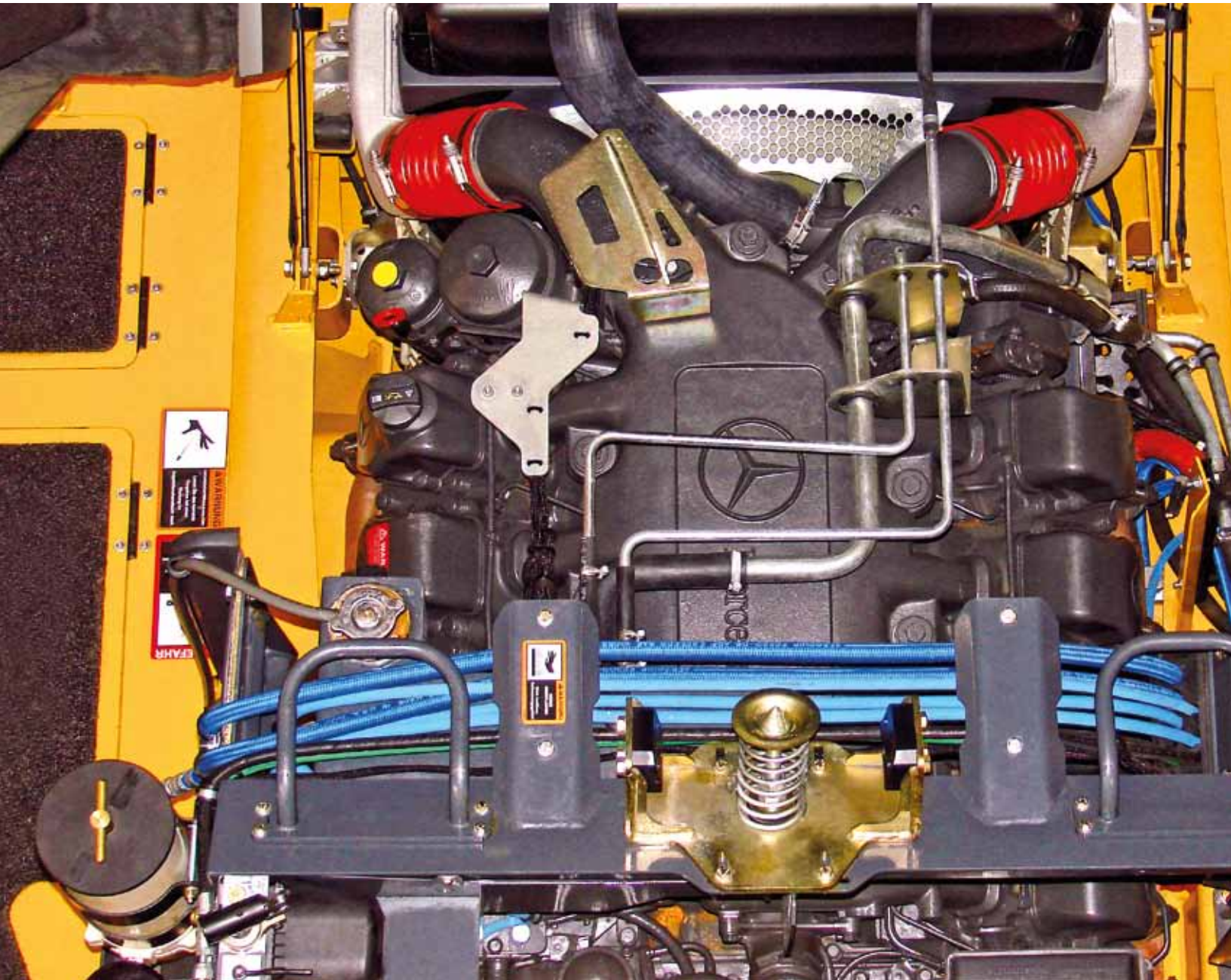

https://truckmanualshub.com/

n on sts

- The load-sensing hydraulic system was designed with simplicity in mind while maintaining efficiency. Fewer components result in greater reliability and service ease.
- Extended engine transmission and hydraulic oil-change for increased uptime and lower operating cost.
- The engine dipstick and oil fill, oil and fuel filters and coolant reservoir are readily accessible.
- Available environmental drains allow quick, no-spill changes.
- Your Bell Service Centre has the parts and backup you need to stay productive and offers a wide variety of preventative maintenance and support programmes to help you control costs.

• If something goes wrong, the diagnostic monitor provides service codes and supporting info to help you quickly pinpoint the problem.

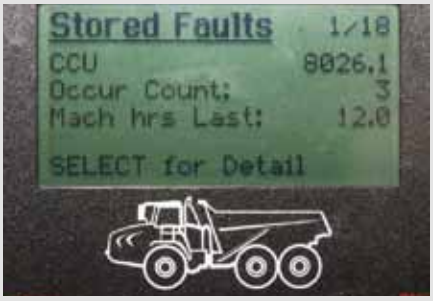

• The cab can be tilted without special tools in minutes, for convenient service access to drivetrain components.

• An in-cab load centre simplifies fuse replacement. Fewer relays, connectors and harnesses mean higher reliability.

• See-through fluid reservoirs and sight gauges let you check fluid levels at a glance.

• Easily accessible test ports allow technicians to troubleshoot problems more quickly.

• The centralised lube bank places difficult-to-reach nipples within reach for easy access. The convenient lube chart helps ensure that nothing gets overlooked.

https://truckmanualshub.com/

Where ever you are...

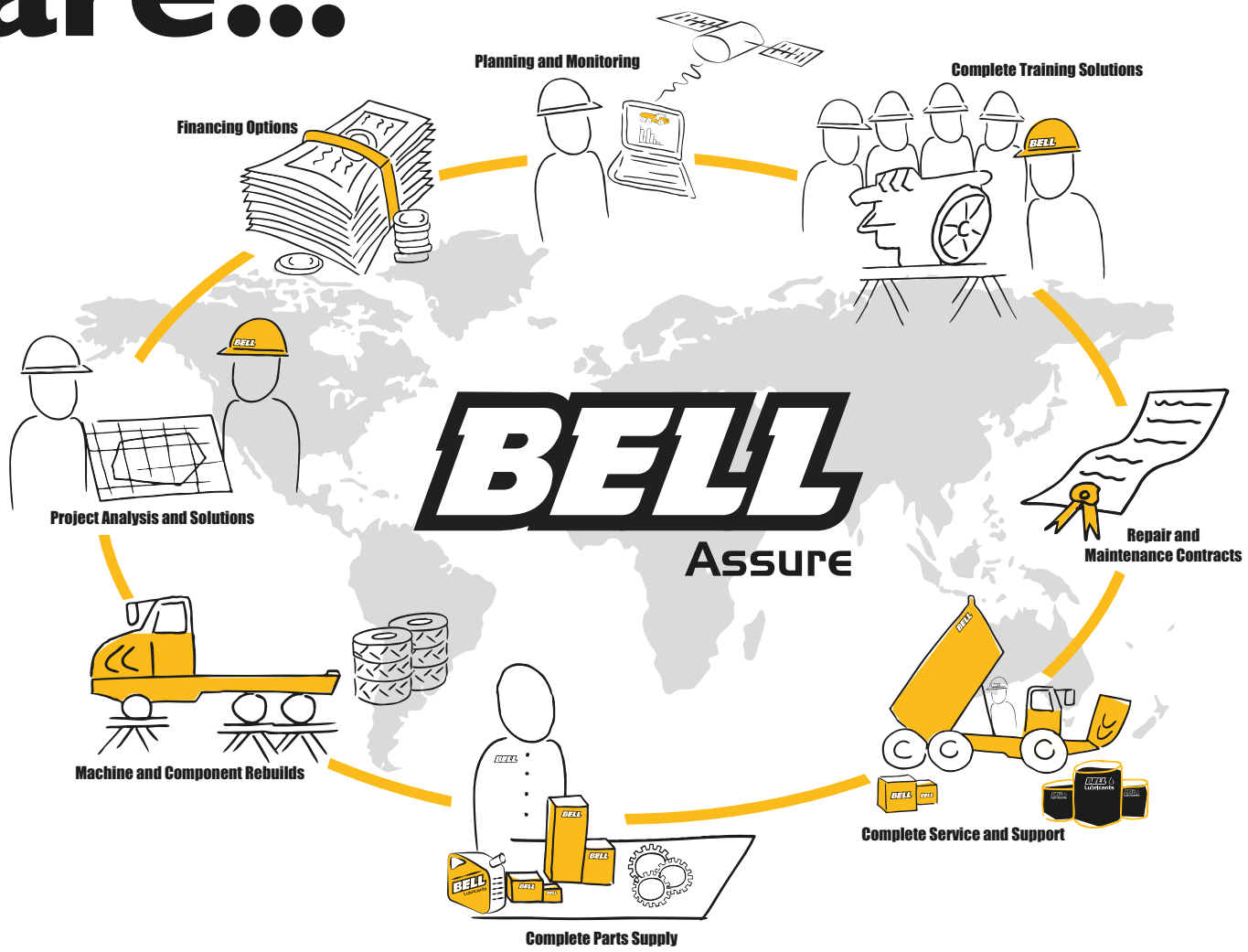

Through our own network as well as approved dealers and strategic alliances we ensure supply and support to the global market.

Develop a lasting and meaningful partnership with Bell Equipment through Bell Assure, your tailor-made support structure furnished with all the after-sales tools you need to give you best value, peace of mind and a unique after-sales experience.

...we have you covered

https://truckmanualshub.com/

Smarter fleet management

BELL Fleetm@tic

Cutting edge technology, helping you run your fleet smarter. Providing accurate, up-to-date operational data, production data and diagnostic data.

Machine operational data is processed and compiled into useful production and performance statistics, accessible via the Bell Fleetm@tic website. These reports are also automated and emailed directly to you. The key to a productive and profitable fleet, lies in the ability to monitor and manage your machines and operators efficiently.

Fleetm@tic:

- Maximise productivity
- Generate machine utilisation reports
- Identify operator training requirements
- Pro-active maintenance planning
- Receive machine health data
- Implement safety features
- Protect investments
- Receive real time geospatial data

https://truckmanualshub.com/

Technical Data - B35D

ENGINE
Mercedes Benz V6, turbocharged, intercooled, low emission diesel engine.

Gross Power
295 kW (396 hp) @ 1,800 rpm

Net Power
288 kW (386 hp) @ 1,800 rpm

Torque
2,000 Nm (1,475 lbft) @ 1,300 rpm

Displacement
11,95 liters (729 cu.in)

Fuel Tank Capacity
445 liters (118 US gal)

Auxiliary Brake
Automatic exhaust brake
Engine Valve Brake (EVB)

AdBlue™ Tank Capacity
40 l (11 US gal)

Certification
OM 501 LA meets EU Stage IIIB/EPA Tier 4i emissions regulations.

TRANSMISSION
Fully automatic Allison planetary transmission.

Layout
Engine mounted

Gear Layout
Constant meshing planetary gears, clutch operated.

Gears
6 Forward, 1 Reverse

Clutch Type
Hydraulically operated multi-disc

Control Type
Electronic

Torque Control
Hydrodynamic, with lock-up in all gears.

TRANSFER BOX
Remote mounted

Manufacturer
Bell VGR

Model
17 100

Layout
Three in-line helical gears

Output Differential
Interaxle 33/67 proportional differential, Pneumatically lockable on the move.

AXLES
High strength steel fabricated with spiral bevel type gears on the Controlled Traction differential and heavy duty outboard planetary gears.

Model
Bell 25T

BRAKING SYSTEM
Service Brake
Dual circuit, full hydraulic actuation wet disc brakes on front and middle axles.

Maximum Brake Force
278 kN (62,344 lbf)

Park & Emergency
Spring applied, air released driveline mounted disc.

Maximum Brake Force
440 kN (98,920 lbf)

Auxiliary Brake
Automatic exhaust brake
Engine Valve Brake (EVB)
Adjustable Hydraulic retarder.

Maximum Retardation
721 kW (967 hp)

WHEELS
Type
Radial Earthmover

Tire
26.5R25

FRONT SUSPENSION
Semi-independent, leading A-frame supported by hydro-pneumatic suspension struts.

REAR SUSPENSION
Pivoting walking beams with laminated rubber suspension blocks.

HYDRAULIC SYSTEM
Variable displacement with load sensing system incorporating a ground driven emergency steering pump.

Flow
300 l/min (79,26 gal/min)

Pressure
25 Mpa (3,626 psi)

Filter
5 microns

STEERING SYSTEM
Hydrostatically actuated by two double acting cylinders, with ground-driven emergency steering pump.

Lock to lock turns
4,7

Steering Angle
42°

DUMPING SYSTEM
Two double-acting, single stage, dump cylinders.

Raise Time
13 s

Lowering Time
7,6 s

Tipping Angle
70°

PNEUMATIC SYSTEM
Air drier with heater and integral unloader valve, serving park brake and auxiliary functions.

System Pressure
810 kPa (117 psi)

ELECTRICAL SYSTEM
Voltage
24 V

Battery Type
Two maintenance free permanently sealed.

Battery Capacity
2 X 105 Ah

Alternator Rating
28 V 80 A

VEHICLE SPEEDS

1st	8 km/h	5 mph
2nd	17 km/h	10,6 mph
3rd	24 km/h	15 mph
4th	37 km/h	23 mph
5th	48 km/h	30 mph
6th	54 km/h	33,8 mph
R	6,3 km/h	3,9 mph

CAB
ROPS/FOPS certified
75 dBA internal sound level measured according to ISO 6396.

Load Capacity & Ground Pressure

OPERATING WEIGHTS		GROUND PRESSURE		LOAD CAPACITY		OPTION WEIGHTS	
UNLADEN	**kg (lb)**	**LADEN** (No sinkage)	**kPa (Psi)**	**BODY**	**m³ (yd³)**		**kg (lb)**
Front	14,120 (31,129)	Front	306 (44)	Struck Capacity	16 (21)	Bin liner	1,119 (2,467)
Middle	7,060 (15,565)	Middle	336 (49)	SAE 2:1 Capacity	20,5 (27)	Tailgate	947 (2,088)
Rear	7,050 (15,543)	Rear	336 (49)	SAE 1:1 Capacity	24,5 (32)	Extra wheelset	714 (1,574)
Total	28,230 (62,236)			SAE 2:1 Capacity			
LADEN		**LADEN** (With sinkage)		with Autogate	21 (27,5)		
Front	18,350 (40,455)	Front	196 (28)				
Middle	21,195 (46,727)	Middle	217 (31)	Rated Payload	32,500 kg		
Rear	21,185 (46,705)	Rear	217 (31)		(71,650 lb)		
Total	60,730 (133,887)						

https://truckmanualshub.com/

Dimensions

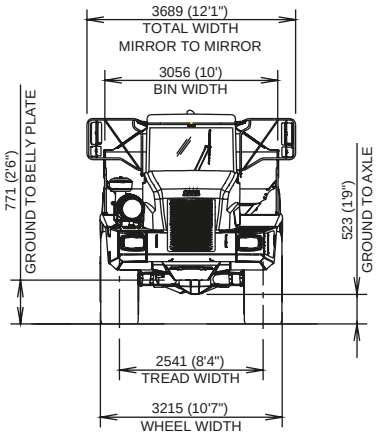

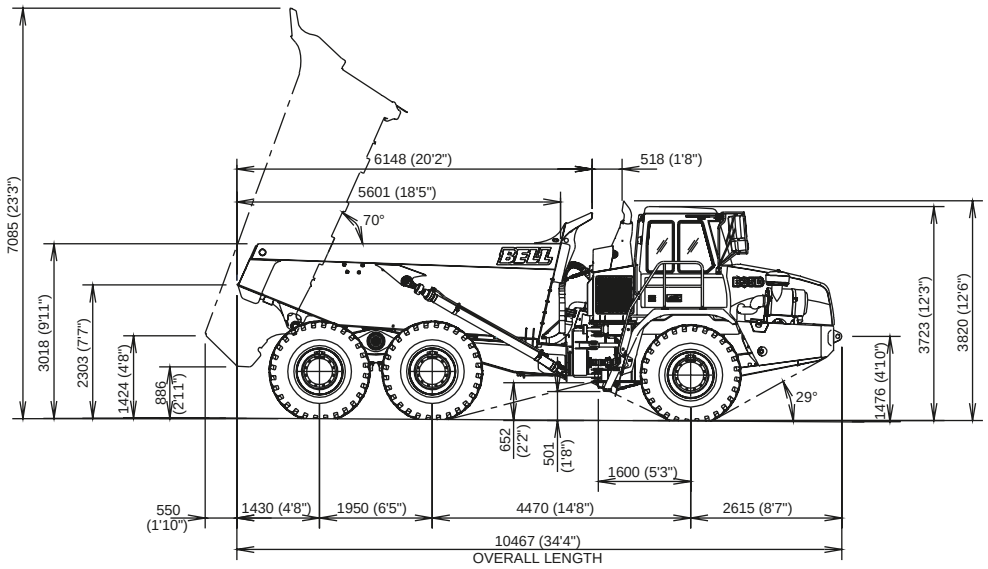

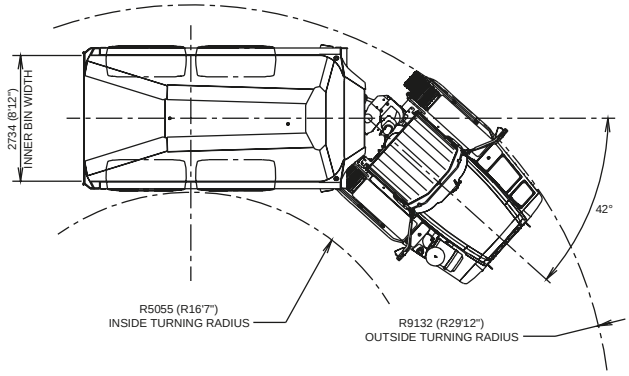

NOTE:
ALL DIMENSIONS SHOWN ARE UNLADEN VALUES.
FOR ILLUSTRATIVE PURPOSES, AN AVERAGE
TYRE DEFLECTION HAS BEEN TAKEN.

Gradeability / Rimpull

1. Determine tractive resistance by finding intersection of vehicle mass line and grade line. NOTE: 2% typical rolling resistance is already assumed in chart and grade line.
2. From this intersection, move straight left across charts until line intersects rimpull curve.
3. Read down from this point to determine maximum speed attained at that tractive resistance.

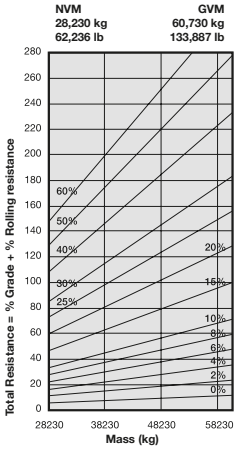

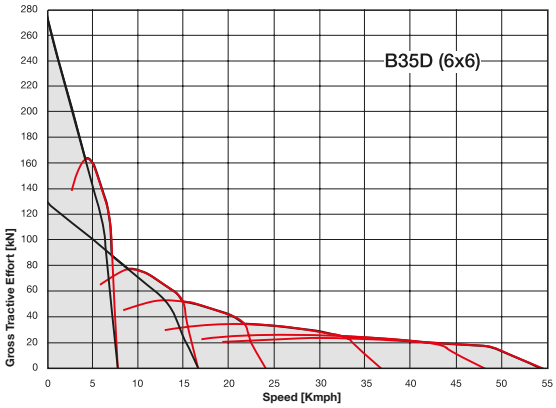

Retardation

1. Determine retardation force required by finding intersection of vehicle mass line.
2. From this intersection, move straight left across charts until line intersects the curve. NOTE: 2% typical rolling resistance is already assumed in chart.
3. Read down from this point to determine maximum speed.

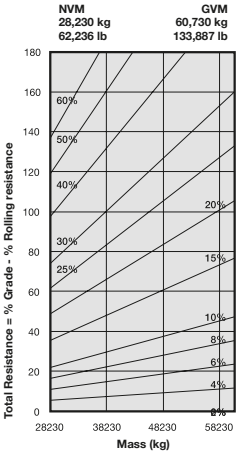

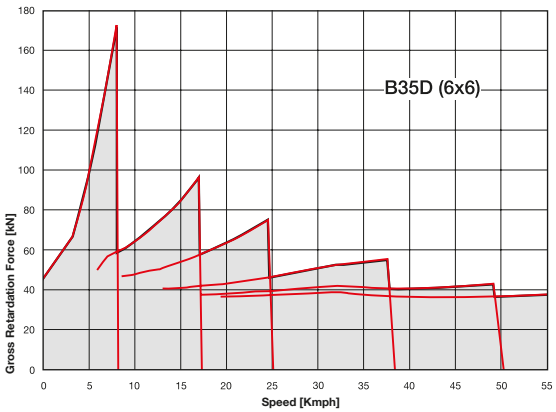

https://truckmanualshub.com/

Technical Data - B40D

ENGINE
Mercedes Benz V6, turbocharged, intercooled, low emission diesel engine

Gross Power
335 kW (449 hp) @ 1,800 rpm

Net Power
325 kW (436 hp) @ 1,800 rpm

Torque
2,100 Nm (1,549 lbft) @ 2,200 rpm

Displacement
11,95 liters (729 cu.in)

Fuel Tank Capacity
300 liters (79,26 US gal)

Auxiliary Brake
Automatic exhaust brake
Engine Valve Brake (EVB)

AdBlue™ Tank Capacity
40 l (11 US gal)

Certification
OM 501 LA meets EU Stage IIIB/EPA Tier 4i emissions regulations.

TRANSMISSION
Fully automatic Allison planetary transmission.

Layout
Engine mounted

Gear Layout
Constant meshing planetary gears, clutch operated.

Gears
6 Forward, 1 Reverse

Clutch Type
Hydraulically operated multi-disc.

Control Type
Electronic

Torque Control
Hydrodynamic, with lock-up in all gears.

TRANSFER BOX
Remote mounted

Manufacturer
Bell VGR

Model
17 100

Layout
Three in-line helical gears.

Output Differential
Interaxle 33/67 proportional differential, Pneumatically lockable on the move.

AXLES
High strength steel fabricated with spiral bevel type gears on the Controlled Traction differential and heavy duty outboard planetary gears

Model
Bell 25T

BRAKING SYSTEM
Service Brake
Dual circuit, full hydraulic actuation wet disc brakes on front and middle axles.

Maximum Brake Force
263 kN (59,125 lbf)

Park & Emergency
Spring applied, air released driveline mounted disc.

Maximum Brake Force
440 kN (98,920 lbf)

Auxiliary Brake
Automatic exhaust brake
Engine Valve Brake (EVB)
Adjustable Hydraulic retarder.

Maximum Retardation
721 kW (967 hp)

WHEELS
Type
Radial Earthmover

Tire
29.5R25

FRONT SUSPENSION
Semi-independent, leading A-frame supported by hydro-pneumatic suspension struts.

REAR SUSPENSION
Pivoting walking beams with laminated rubber suspension blocks.

HYDRAULIC SYSTEM
Variable displacement with load sensing system incorporating a ground driven emergency steering pump.

Flow
300 l/min (79,26 gal/min)

Pressure
25 Mpa (3,626 psi)

Filter
5 microns

STEERING SYSTEM
Hydrostatically actuated by two double acting cylinders, with ground-driven emergency steering pump.

Lock to lock turns
4,7

Steering Angle
42º

DUMPING SYSTEM
Two double-acting, single stage, dump cylinders

Raise Time
13 s

Lowering Time
7,6 s

Tipping Angle
70º

PNEUMATIC SYSTEM
Air drier with heater and integral unloader valve, serving park brake and auxiliary functions.

System Pressure
810 kPa (117 psi)

ELECTRICAL SYSTEM
Voltage
24 V

Battery Type
Two maintenance free permanently sealed.

Battery Capacity
2 X 105 Ah

Alternator Rating
28 V 80 A

VEHICLE SPEEDS

1st	8 km/h	5 mph
2nd	17 km/h	10,6 mph
3rd	24 km/h	15 mph
4th	37 km/h	23 mph
5th	48 km/h	30 mph
6th	54 km/h	33,8 mph
R	6,3 km/h	3,9 mph

CAB
ROPS/FOPS certified
75 dBA internal sound level measured according to ISO 6396.

Load Capacity & Ground Pressure

OPERATING WEIGHTS		GROUND PRESSURE		LOAD CAPACITY		OPTION WEIGHTS	
UNLADEN	**kg (lb)**	**LADEN** (No sinkage)	**kPa (Psi)**	**BODY**	**m³ (yd³)**		**kg (lb)**
Front	14,650 (32,298)	Front	242 (35)	Struck Capacity	18,5 (24)	Bin liner	1,222 (2,694)
Middle	7,810 (17,218)	Middle	302 (44)	SAE 2:1 Capacity	23 (30)	Tailgate	1,002 (2,209)
Rear	7,390 (16,292)	Rear	302 (44)	SAE 1:1 Capacity	27,5 (36)	Extra wheelset	937 (2,066)
Total	29,850 (65,808)			SAE 2:1 Capacity			
LADEN		**LADEN** (With sinkage)		with Autogate	24 (31,5)		
Front	19,587 (43,181)	Front	171 (25)				
Middle	23,842 (52,563)	Middle	201 (29)	Rated Payload	37,000 kg		
Rear	23,422 (51,637)	Rear	201 (29)		(81,571 lb)		
Total	66,851 (147,381)						

https://truckmanualshub.com/

Dimensions

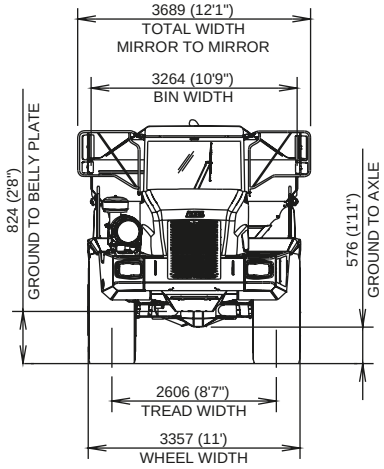

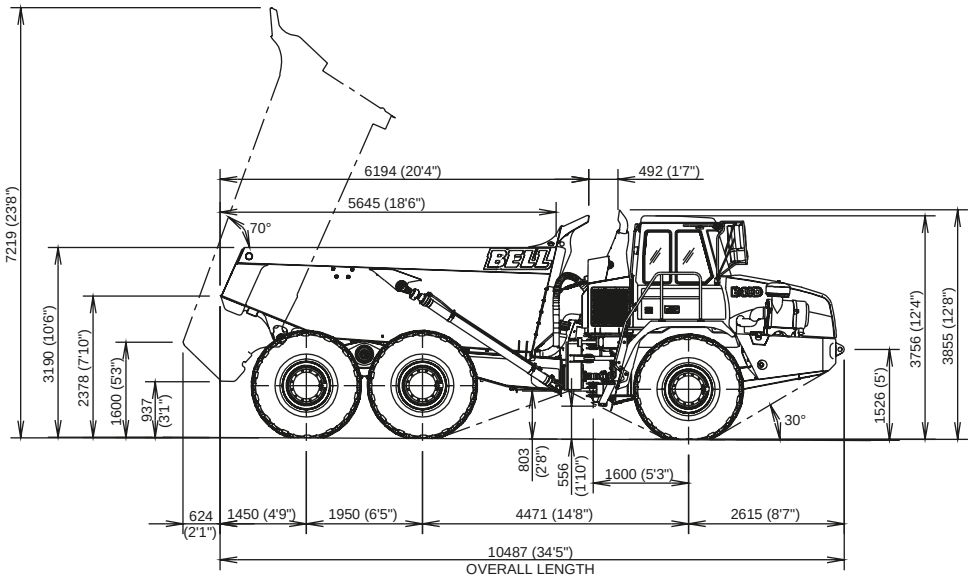

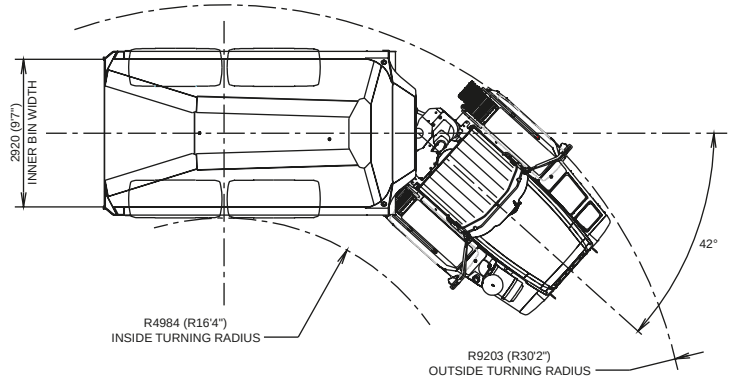

NOTE:
ALL DIMENSIONS SHOWN ARE UNLADEN VALUES.
FOR ILLUSTRATIVE PURPOSES, AN AVERAGE
TYRE DEFLECTION HAS BEEN TAKEN.

Gradeability / Rimpull

1. Determine tractive resistance by finding intersection of vehicle mass line and grade line. NOTE: 2% typical rolling resistance is already assumed in chart and grade line.
2. From this intersection, move straight left across charts until line intersects rimpull curve.
3. Read down from this point to determine maximum speed attained at that tractive resistance.

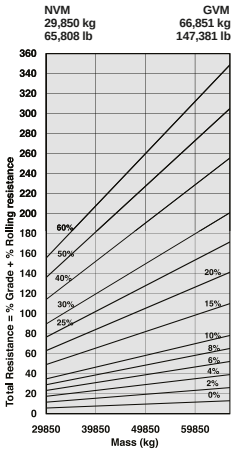

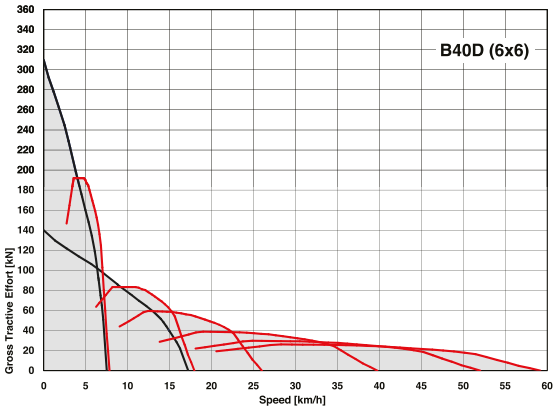

Retardation

1. Determine retardation force required by finding intersection of vehicle mass line.
2. From this intersection, move straight left across charts until line intersects the curve. NOTE: 2% typical rolling resistance is already assumed in chart.
3. Read down from this point to determine maximum speed.

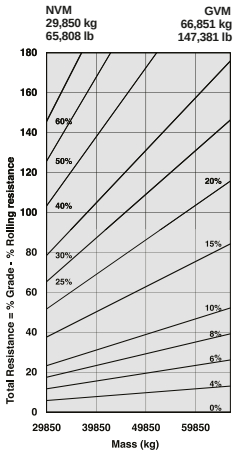

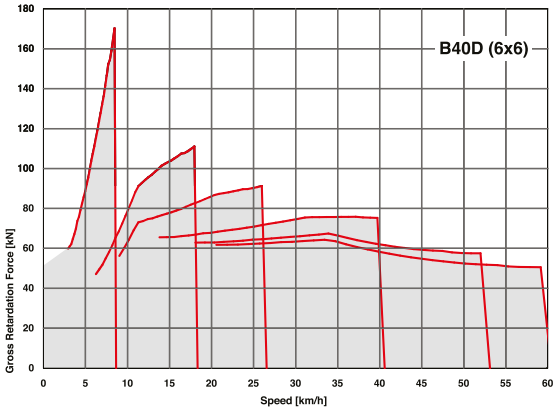

https://truckmanualshub.com/

Technical Data - B45D

ENGINE
Mercedes Benz OM502LA, V-8, Turbocharged and intercooled.

Gross Power
375 kW (503 hp) @ 1,800 rpm

Net Power
364 kW (488 hp) @ 1,800 rpm

Torque
2,400 Nm (1,770 lbft) @ 1,200 rpm

Displacement
15,93 liters (972 cu.in)

Fuel Tank Capacity
575 liters (152 US gal)

AdBlue™ Tank Capacity
66 l (17 US gal)

Certification
OM 502 LA meets EU Stage IIIB/EPA Tier 4i emissions regulations.

TRANSMISSION
Fully automatic planetary transmission with integral retarder.

Layout
Engine mounted

Gear Layout
Constant meshing planetary gears, clutch operated.

Gears
6 Forward, 1 Reverse

Clutch Type
Hydraulically operated multi-disc

Control Type
Electronic

Torque Control
Hydrodynamic, with lock-up in all gears.

TRANSFER BOX
Manufacturer
Bell VGR

Model
17 100

Layout
Three in-line helical gears

Output Differential
Interaxle 33/67 proportional differential, pneumatically spring lockable whilst stationary or on the move.

AXLES
High strength steel fabricated with spiral bevel type gears on the Controlled Traction differential and heavy duty outboard planetary gears.

Final drive type
Outboard heavy duty planetary on all axles.

Housing type
Steel fabricated

BRAKING SYSTEM
Service Brake
Dual circuit, full hydraulic oil immersed wet multidisc brakes on all three axles.

Maximum Brake Force
395 kN (88,583 lbf)

Park & Emergency
Spring applied, air released driveline mounted disc.

Maximum Brake Force
440 kN (98,920 lbf)-Static
105 kN (23,605 lbf)-Dynamic

Auxiliary Brake
Automatic exhaust brake
Engine Valve Brake (EVB).

RETARDATION SYSTEM
Engine Brake
Automatic exhaust brake and Engine Valve Brake (EVB)

Maximum Retardation Power
345 kW (463 hp)

Transmission Retarder
Integral hydrodynamic, output shaft speed dependant, six selectable levels of retardation

Total Retardation Power
797 kW (1,069 hp)

WHEELS
Type
Radial Earthmover

Tire
29.5R25

FRONT SUSPENSION
Semi-independent, leading A-frame supported by hydro-pneumatic suspension struts.

REAR SUSPENSION
Pivoting walking beams with laminated rubber suspension blocks.

HYDRAULIC SYSTEM
Variable displacement with load sensing system serving the prioritized steering, body tipping, suspension and brake functions. A ground-driven, load sensing emergency steering pump is integrated into the main system.

Pump Type
Variable displacement, loadsensing piston.

Flow
350 l/min (93 gal/min)

Pressure
25 Mpa (3,626 psi)

Filter
5 microns

STEERING SYSTEM
Hydrostatically actuated by two double acting cylinders, with ground-driven emergency steering pump.

Angle
42º

Lock to lock turns
4,2

DUMPING SYSTEM
Two double-acting, single stage, dump cylinders.

Raise Time
11.2 s (60º tip angle)

Power Down Time
9.9 s (60º tip angle)

Tipping Angle
70º standard, or any lower angle programmable.

PNEUMATIC SYSTEM
Air drier with heater and integral unloader valve, serving park brake and auxiliary functions.

System Pressure
810 kPa (117 psi)

ELECTRICAL SYSTEM
Voltage
24 V

Battery Type
Two maintenance free permanently sealed.

Battery Capacity
2 X 105 Ah

Alternator Rating
28 V 80 A

VEHICLE SPEEDS

1st	7 km/h	4 mph
2nd	14 km/h	9 mph
3rd	21 km/h	13 mph
4th	31 km/h	19 mph
5th	41 km/h	25 mph
6th	47 km/h	29 mph
R	7 km/h	4 mph

CAB
ROPS/FOPS certified
74 dBA internal sound level measured according to ISO 6396.

Load Capacity & Ground Pressure

OPERATING WEIGHTS		GROUND PRESSURE		LOAD CAPACITY		OPTION WEIGHTS	
UNLADEN	**kg (lb)**	**LADEN** (No sinkage)	**kPa (Psi)**	**BODY**	**m³ (yd³)**		**kg (lb)**
Front	17,230 (37,986)	Front	275 (40)	Struck Capacity	20 (26)	Bin liner	1,360 (2,998)
Middle	7,890 (17,395)	Middle	340 (49)	SAE 2:1 Capacity	25,5 (33,5)	Tailgate	1,076 (2,372)
Rear	7,860 (17,328)	Rear	340 (49)	SAE 1:1 Capacity	31 (41)	Extra wheelset	937 (2,066)
Total	32,980 (72,708)			SAE 2:1 Capacity			
LADEN		**LADEN** (With sinkage)		with Autogate	26,5 (35)		
Front	21,190 (46,716)	Front	189 (27)				
Middle	26,410 (58,224)	Middle	230 (33)	Rated Payload	41,000 kg		
Rear	26,380 (58,158)	Rear	230 (33)		(90,390 lb)		
Total	73,980 (163,098)						

https://truckmanualshub.com/

Dimensions

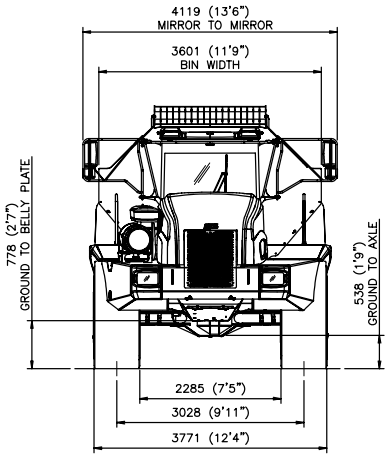

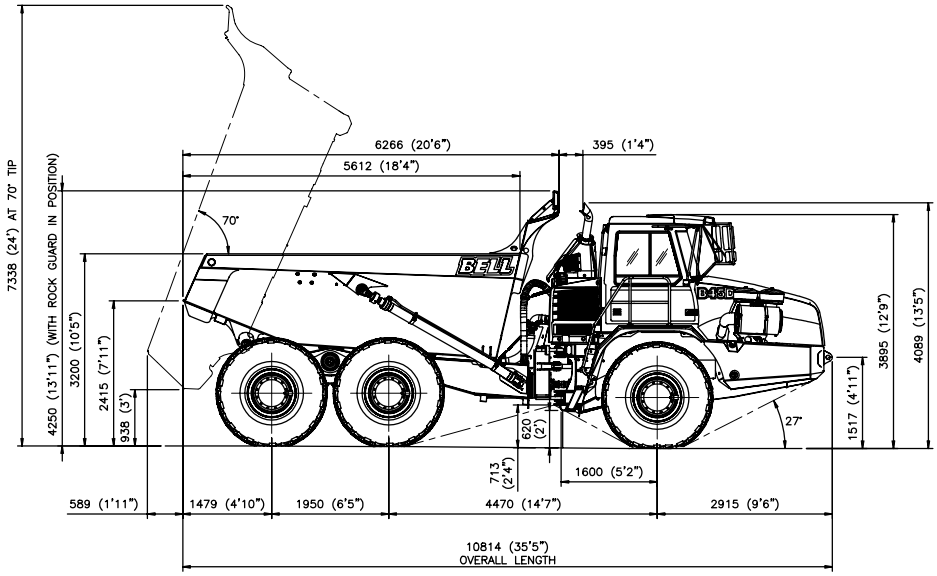

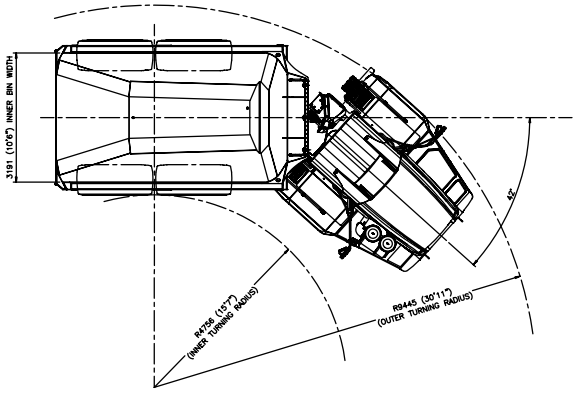

NOTE:
ALL DIMENSIONS SHOWN ARE UNLADEN VALUES.
FOR ILLUSTRATIVE PURPOSES, AN AVERAGE
TYRE DEFLECTION HAS BEEN TAKEN.

Gradeability / Rimpull

1. Determine tractive resistance by finding intersection of vehicle mass line and grade line. NOTE: 2% typical rolling resistance is already assumed in chart and grade line.
2. From this intersection, move straight left across charts until line intersects rimpull curve.
3. Read down from this point to determine maximum speed attained at that tractive resistance.

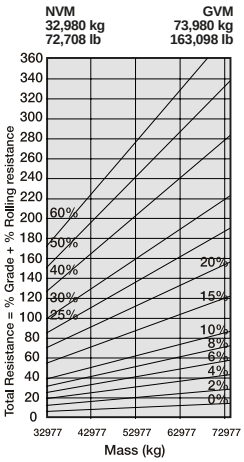

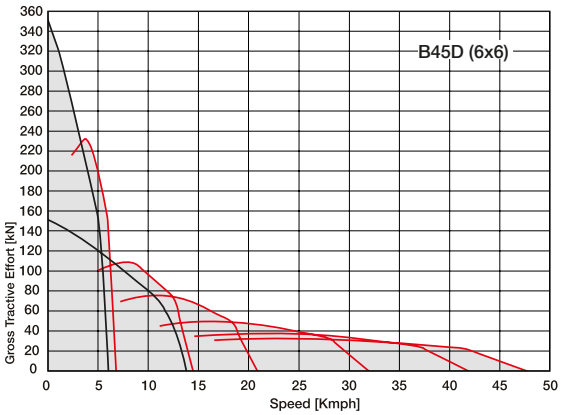

Retardation

1. Determine retardation force required by finding intersection of vehicle mass line.
2. From this intersection, move straight left across charts until line intersects the curve. NOTE: 2% typical rolling resistance is already assumed in chart.
3. Read down from this point to determine maximum speed.

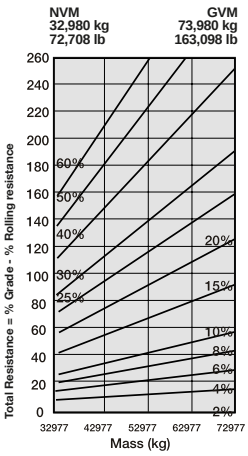

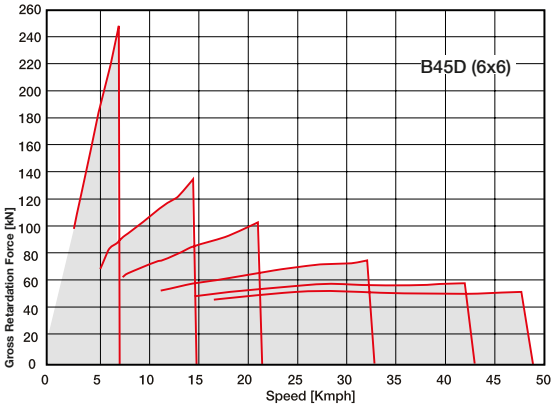

https://truckmanualshub.com/

Technical Data - B50D

ENGINE
Mercedes Benz OM502LA, V-8, Turbocharged and intercooled.

Gross Power
375 kW (503 hp) @ 1,800 rpm

Net Power
364 kW (488 hp) @ 1,800 rpm

Torque
2,400 Nm (1,770 lbft) @ 1,200 rpm

Displacement
15,93 liters (972 cu.in)

Fuel Tank Capacity
460 liters (122 US gal)

AdBlue™ Tank Capacity
66 l (17 US gal)

Certification
OM 502 LA meets EU Stage IIIB/EPA Tier 4i emissions regulations.

TRANSMISSION
Fully automatic planetary transmission with integral retarder.

Layout
Engine mounted with rear output

Gear Layout
Constant meshing planetary gears, clutch operated.

Gears
6 Forward, 1 Reverse

Clutch Type
Hydraulically operated multi-disc

Control Type
Electronic

Torque Control
Hydrodynamic, with lock-up in all gears.

TRANSFER BOX
Manufacturer
Bell VGR

Model
17 100

Layout
Three in-line helical gears

Output Differential
Interaxle 33/67 proportional differential, pneumatically spring lockable whilst stationary or on the move.

AXLES
High strength steel fabricated with spiral bevel type gears on the Controlled Traction differential and heavy duty outboard planetary gears.

Final drive type
Outboard heavy duty planetary on all axles.

Housing type
Steel fabricated

BRAKING SYSTEM
Service Brake
Dual circuit, full hydraulic oil immersed wet multidisc brakes on all three axles.

Maximum Brake Force
391 kN (87,686 lbf)

Park & Emergency
Spring applied, air released driveline mounted disc.

Maximum Brake Force
440 kN (98,920 lbf)-Static
105 kN (23,605 lbf)-Dynamic

Auxiliary Brake
Automatic exhaust brake
Engine Valve Brake (EVB).

RETARDATION SYSTEM
Engine Brake
Automatic exhaust brake and Engine Valve Brake (EVB).

Maximum Retardation Power
345 kW (463 hp)

Transmission Retarder
Integral hydrodynamic, output shaft speed dependant, six selectable levels of retardation.

Total Retardation Power
797 kW (1,069 hp)

WHEELS
Type
Radial Earthmover

Tire
875/65R29

FRONT SUSPENSION
Semi-independent, leading A-frame supported by hydro-pneumatic suspension struts.

REAR SUSPENSION
Pivoting walking beams with laminated rubber suspension blocks.

HYDRAULIC SYSTEM
Full load sensing system serving the prioritized steering, body tipping, suspension and brake functions. A ground-driven, load sensing emergency steering pump is integrated into the main system.

Pump Type
Variable displacement, load sensing piston.

Flow
350 l/min (93 gal/min)

Pressure
25 Mpa (3,626 psi)

Filter
5 microns

STEERING SYSTEM
Hydrostatically actuated by two double acting cylinders, with ground-driven emergency steering pump.

Angle
42º

Lock to lock turns
4,2

DUMPING SYSTEM
Two double-acting, single stage, dump cylinders.

Raise Time
11,2 s (60º tip angle)

Power Down Time
9,9 s (60º tip angle)

Tipping Angle
70º standard, or any lower angle programmable.

PNEUMATIC SYSTEM
Air drier with heater and integral unloader valve, serving park brake and auxiliary functions.

System Pressure
810 kPa (117 psi)

ELECTRICAL SYSTEM
Voltage
24 V

Battery Type
Two maintenance free permanently sealed.

Battery Capacity
2 X 105 Ah

Alternator Rating
28 V 80 A

VEHICLE SPEEDS

1st	7 km/h	4 mph
2nd	14 km/h	9 mph
3rd	21 km/h	13 mph
4th	31 km/h	19 mph
5th	41 km/h	25 mph
6th	47 km/h	29 mph
R	7 km/h	4 mph

CAB
ROPS/FOPS certified
74 dBA internal sound level measured according to ISO 6396.

Load Capacity & Ground Pressure

OPERATING WEIGHTS		GROUND PRESSURE		LOAD CAPACITY		OPTION WEIGHTS	
UNLADEN	**kg (lb)**	**LADEN** (No sinkage)	**kPa (Psi)**	**BODY**	**m³ (yd³)**		**kg (lb)**
Front	17,550 (38,691)	Front	274 (40)	Struck Capacity	22 (29)	Bin liner	1,451 (3,212)
Middle	8,500 (18,850)	Middle	335 (49)	SAE 2:1 Capacity	28 (37)	Tailgate	1,139 (2,511)
Rear	8,470 (18,673)	Rear	335 (49)	SAE 1:1 Capacity	34 (44,5)	Extra wheelset	1,031 (2,273)
Total	34,520 (76,104)			SAE 2:1 Capacity			
LADEN		**LADEN** (With sinkage)		with Autogate	29,5 (39)		
Front	23,440 (51,676)	Front	172 (25)				
Middle	28,225 (62,225)	Middle	207 (30)	Rated Payload	45,400 kg		
Rear	28,255 (62,292)	Rear	207 (30)		(100,090 lb)		
Total	79,920 (176,193)						

https://truckmanualshub.com/

Dimensions

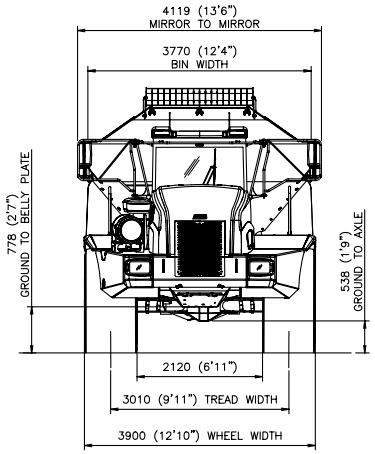

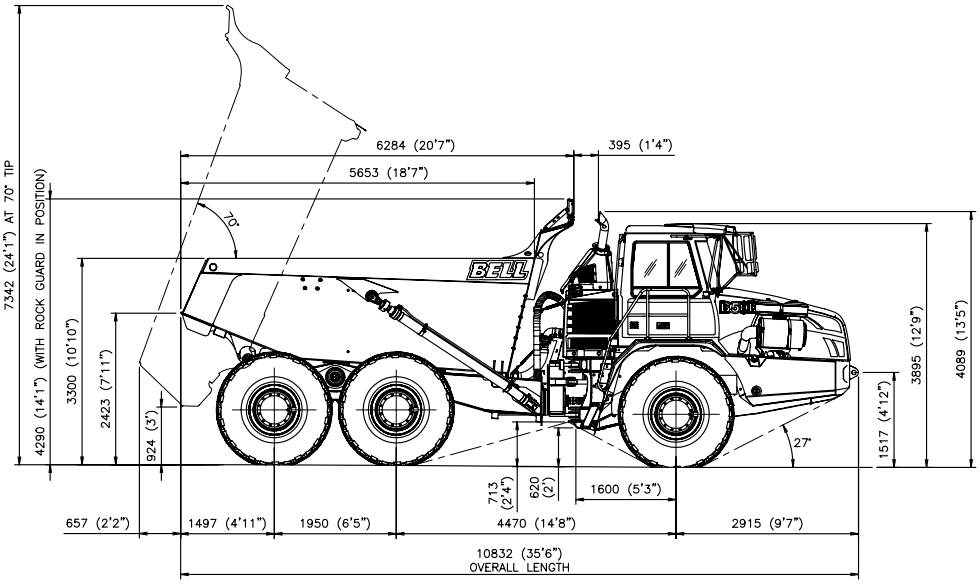

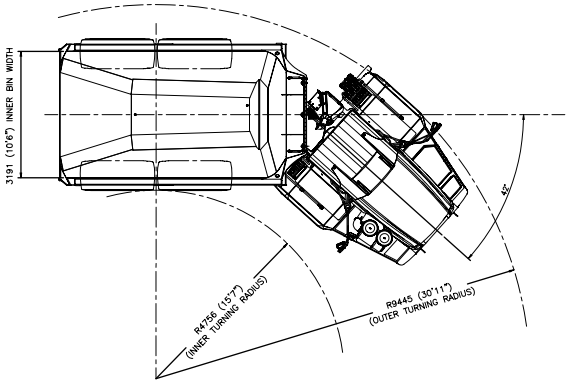

NOTE:
ALL DIMENSIONS SHOWN ARE UNLADEN VALUES.
FOR ILLUSTRATIVE PURPOSES, AN AVERAGE
TYRE DEFLECTION HAS BEEN TAKEN.

Gradeability / Rimpull

1. Determine tractive resistance by finding intersection of vehicle mass line and grade line. NOTE: 2% typical rolling resistance is already assumed in chart and grade line.
2. From this intersection, move straight left across charts until line intersects rimpull curve.
3. Read down from this point to determine maximum speed attained at that tractive resistance.

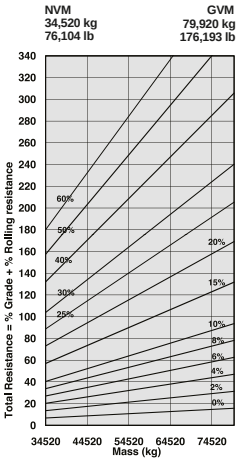

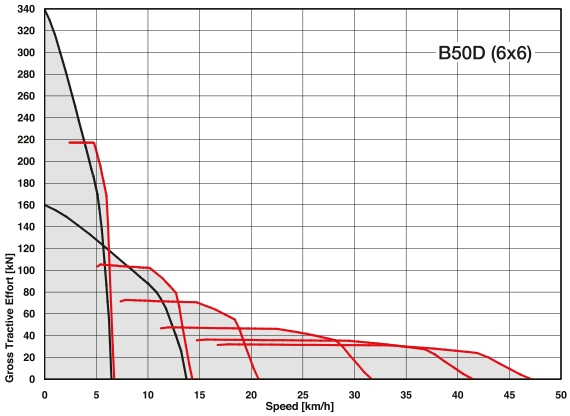

Retardation

1. Determine retardation force required by finding intersection of vehicle mass line.
2. From this intersection, move straight left across charts until line intersects the curve. NOTE: 2% typical rolling resistance is already assumed in chart.
3. Read down from this point to determine maximum speed.

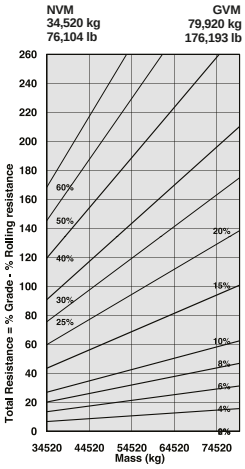

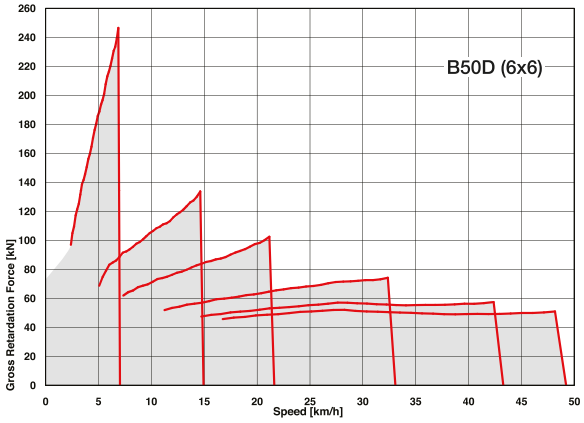

https://truckmanualshub.com/

Features and Options

● STANDARD ▲ OPTION

B35D	B40D	B45D	B50D	
				ENGINE
●	●	●	●	Wet-sleeve cylinder liners
●	●	●	●	Engine valve brake and exhaust brake
●	●	●	●	Dual-element air cleaner with dust ejector valve
●	●	●	●	Precleaner
●	●	●	●	Water separator
●	●	●	●	Provision for fast fill
●	●	●	●	Serpentine drive belt with automatic tensioner
				COOLING
●	●	●	●	Crankshaft-mounted viscous-drive fan
●	●	●	●	Remote proportionally controlled hydraulic fan drive
●	●	●	●	Fan guard
				PNEUMATIC SYSTEM
●	●	●	●	Engine-mounted compressor
●	●	●	●	Air drier with heater
●	●	●	●	Integral unloader valve
				ELECTRICAL SYSTEM
●	●	●	●	Battery disconnect
●	●	●	●	Drive lights
▲	▲	●	●	Deluxe work lights
●	●	●	●	Electric Hooter
●	●	●	●	Air Horn
●	●	●	●	Reverse alarm
●	●	●	●	Rotating Beacon
●	●	●	●	Pitch Roll Sensor
				STEERING SYSTEM
●	●	●	●	Ground-driven secondary steering pump
				CAB
●	●	●	●	ROPS/FOPS certification
●	●	●	●	Tilt cab
●	●	●	●	Gas strut-supported door
●	●	●	●	I-Tip programmable dump-body tip settings
●	●	●	●	Air conditioner
●	●	●	●	Heater
●	●	●	●	AM/FM radio/CD player
●	●	●	●	Rear window guard
●	●	●	●	Wiper/washer with intermittent control
●	●	●	●	Tilt and telescoping steering wheel
●	●	●	●	Centre-mount air-suspension seat
●	●	●	●	Rear window wiper

● STANDARD ▲ OPTION

B35D	B40D	B45D	B50D	
				CAB
●	●	●	●	Retractable seat belt
●	●	●	●	Foldaway trainer seat with retractable seat belt
●	●	●	●	12-volt power outlet
●	●	●	●	Cup holder
●	●	●	●	Cooled/heated lunch box
●	●	●	●	Ashtray
●	●	●	●	Electric adjustable and heated mirrors
●	●	●	●	Deluxe monitor: Analog speedometer / Fuel gauge / Transmission oil temperature gauge / Engine coolant temperature gauge / LED function/warning indicators and audible alarm / Transmission gear selection / Tachometer / Battery voltage / Hour meter / Odometer / Fuel consumption / Tip counter / Trip timer / Trip distance / Metric/English units / Service codes/diagnostics Backlit sealed switch module functions: Wiper control / Lights / Heated mirrors / Retarding aggressiveness / Controlled traction differentials (B35D/B40D/B50D) / Transfer case differential lock / Transmission gear hold / Dump-body tip limit / Automatic dump-body tip settings / Airconditioner/ Heater controls / Preselected Speed Control
				DUMP BODY
●	●	●	●	Dump-body mechanical lock
▲	▲	▲	▲	Body liner
▲	▲	▲	▲	Tailgate
▲	▲	▲	▲	Body heater
▲	▲	▲	▲	Less dump body and cylinders
				OTHER
●				26.5R25 radial earthmover tires
	●	●	▲	29.5R25 radial earthmover tires
		▲	●	875/65R29 radial earthmover tires
●	●			Remote grease banks
▲	▲	●	●	Automatic greasing
●	●	●	●	Onboard Weighing
▲	▲	▲	▲	Load lights
▲	▲	▲	▲	Comfort Ride Suspension
●	●	●	●	Reverse Camera
▲	▲	▲	▲	Hand Rails
▲	▲	●	●	Cab Peak

https://truckmanualshub.com/

Notes

https://truckmanualshub.com/

All dimensions are shown in millimetres, unless otherwise stated between brackets. Under our policy of continuous improvement, we reserve the right to change technical data and design without prior notice. Photographs featured in this brochure may include optional equipment. Blu@dvantage™ is a trademark of Bell Equipment Co. (PTY) Ltd. AdBlue™ is a registered trademark of VDA.

BELL INTERNATIONAL: Tel: +27 (0)35-907 9431
E-mail: marketing@bellequipment.com Web: www.bellequipment.com

Tel: +61 (0)8-9356-1033
Tel: +49 (0)6631 / 91-13-0
Tel: +27 (0)11-928-9700
Tel: +44 (0)1283-712862
Tel: +33 (0)5-55-89-23-56
Tel: +7-495-287-80-02
Tel: +34-91-879-60-19
Tel: +1-855-494-2355

Strong Reliable Machines
Strong Reliable Support

BELL

Broch13900713, D-series ADT (B35-B50D) Mk7.2 Tier 4i, Rev 3-English