https://truckmanualshub.com/

Maintenance manual
CF85

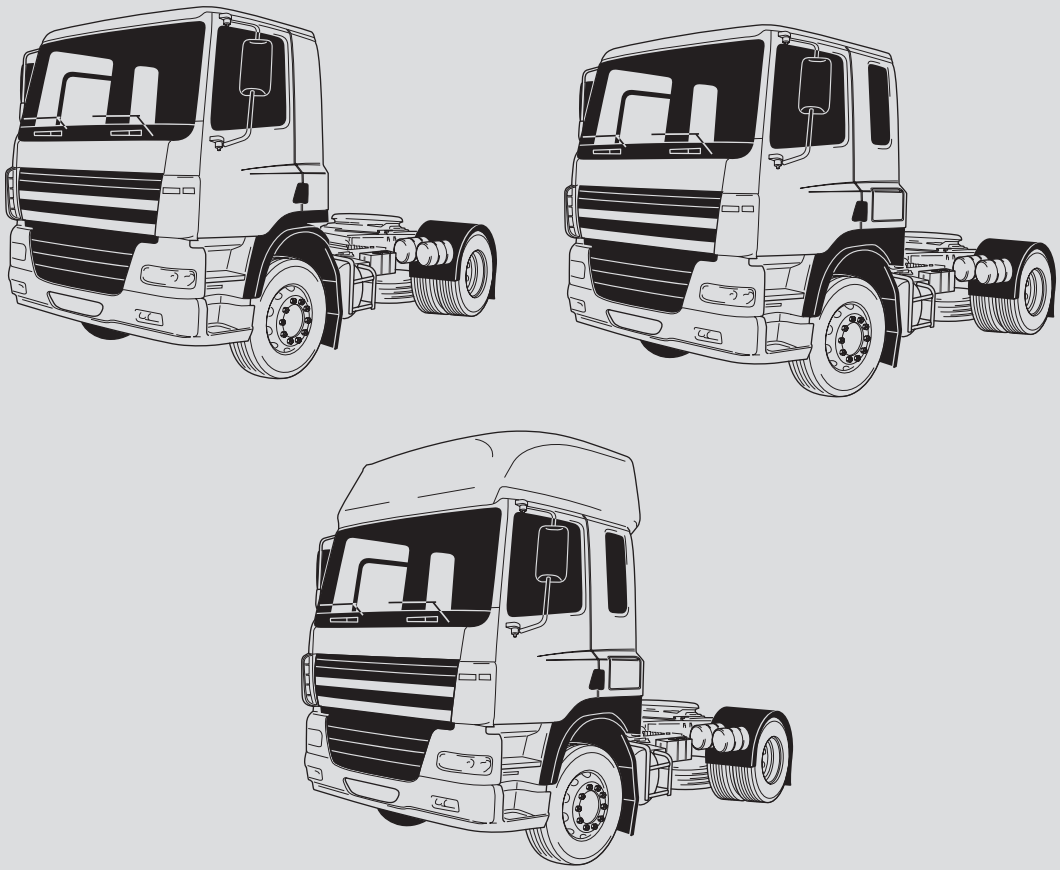

DAF

https://truckmanualshub.com/

https://truckmanualshub.com/

©200423 DAF Trucks N.V., Eindhoven,
The Netherlands.

In the interest of continuing product development, DAF reserves the right to change specifications or products at any time without prior notice.

No part of this publication may be reproduced and/or published by printing, by photocopying, on microfilm or in any way whatsoever without the prior consent in writing of DAF Trucks N.V.

https://truckmanualshub.com/

https://truckmanualshub.com/

TECHNICAL DATA 0

1

THREADED CONNECTIONS 2

FLUIDS, OIL AND LUBRICANTS 3

MAINTENANCE SCHEDULE 4

EXPLANATORY NOTES ON THE MAINTENANCE ACTIVITIES 5

© 200423

https://truckmanualshub.com/

https://truckmanualshub.com/

0

CONTENTS

		Page	Date
1.	**XE ENGINE**	1-1	200423
1.1	General	1-1	200423
1.2	Tightening torques	1-2	200423
1.3	Filling capacities	1-2	200423
2.	**GEARBOX**	2-1	200423
2.1	Tightening torques	2-1	200423
2.2	Filling capacities	2-3	200423
3.	**REAR AXLE**	3-1	200423
3.1	Tightening torques	3-1	200423
3.2	Filling capacities	3-2	200423
4.	**BRAKES**	4-1	200423
4.1	General	4-1	200423
5.	**STEERING GEAR**	5-1	200423
5.1	General	5-1	200423
5.2	Tightening torques	5-2	200423
6.	**FRONT AXLE**	6-1	200423
6.1	Tightening torques	6-1	200423
7.	**LEADING REAR AXLE 09N044 (FTP-TYPE VEHICLES)**	7-1	200423
7.1	General	7-1	200423
7.2	Tightening torques	7-2	200423

https://truckmanualshub.com/

© 200423

https://truckmanualshub.com/

1. XE ENGINE

1.1 GENERAL

XE engine

Valve clearance

Valve clearance (cold/hot)	
Inlet	0.50 mm
Exhaust	0.50 mm

DEB

DEB setting	1.40 mm

V-belt tension

V-belt tension, "AVX" raw edge (1)(N) Application example: air-conditioning compressor drive	
New V-belt (2)	
Setting tension	600
Test tension	≥ 400
Run-in V-belt (3)	
Minimum tension	250
Adjusting tension	350

V-belt tension, "XPB" raw edge (1)(N) Application example: steering pump drive on FAX vehicle	
New V-belt (2)	
Setting tension	1250
Test tension	≥ 950
Run-in V-belt (3)	
Minimum tension	750
Adjusting tension	950

(1) Raw-edge V-belts can be recognised by the absence of textile fabric in the rubber, with the exception of the top of the belt edge, on the edges and the insides of the belt (polished belt edges). Version: either a toothed or a non-toothed belt.
(2) After fitting the new V-belt, set the pre-tension to the "setting tension" and after a trial run check whether the pre-tension complies with the "test tension". If the test tension reading is lower than the value specified in the table, set the V-belt to the minimum "test tension".
(3) If the V-belt tension is lower than the "minimum tension", set the belt to the "adjusting tension".

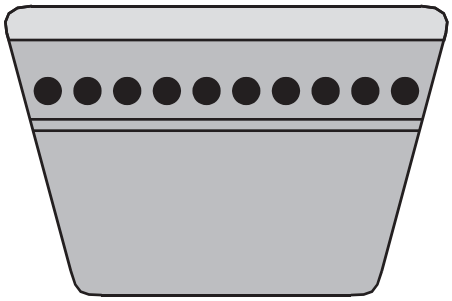

M2121

https://truckmanualshub.com/

0

1.2 TIGHTENING TORQUES

The tightening torques specified in this paragraph are different from the standard tightening torques cited in the overview of the standard tightening torques. The other threaded connections not specified must therefore be tightened to the torque cited in the overview of standard tightening torques.

When attachment bolts and nuts are replaced, it is important - unless stated otherwise - that these bolts and nuts are of exactly the same length and property class as those removed.

XE engine

Lubrication system	
Oil drain plug	60 Nm
Oil filter screw cap	40 Nm
Centrifugal filter central bolt	20 Nm
Fuel system	
Fuel filter screw cap	25 Nm
Cylinder head cover	
Cylinder head cover attachment bolts	25 Nm
DEB	
DEB attachment bolts	110 Nm
DEB set screw nut	25 Nm
V-belt tensioner	
Central bolt, tensioning gear	110 Nm

1.3 FILLING CAPACITIES

XE engine

Lubrication system	
Total capacity (including oil cooler and oil filter)	approx. 34 litres
Capacity of oil sump, maximum level	approx. 30 litres
Capacity of oil sump, minimum level	approx. 22 litres
Cooling system	
Cooling system	approx. 47 litres
With integrated retarder	approx. 57 litres

https://truckmanualshub.com/

2. GEARBOX

2.1 TIGHTENING TORQUES

The tightening torques specified in this paragraph are different from the standard tightening torques cited in the overview of the standard tightening torques. The other threaded connections not specified must therefore be tightened to the torque cited in the overview of standard tightening torques.

When attachment bolts and nuts are replaced, it is important - unless stated otherwise - that these bolts and nuts are of exactly the same length and property class as those removed.

ZF 8S -151/181 and 16S-151/181/221 gearboxes

Level check/filler plug (A)	60 Nm
M24 drain plug (B)	60 Nm
M38 drain plug (B)	120 Nm
Drain plug (C/D)	60 Nm

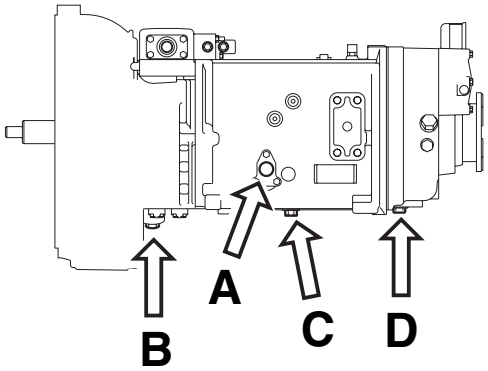

M3023

ZF 8S-151/181 and 16S-151/181/221 with integrated retarder

Drain plug (D)	60 Nm

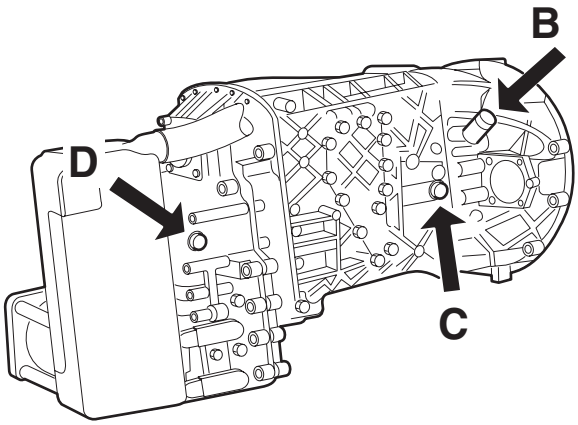

V300186

https://truckmanualshub.com/

Oil filter attachment bolt (1)	23 Nm

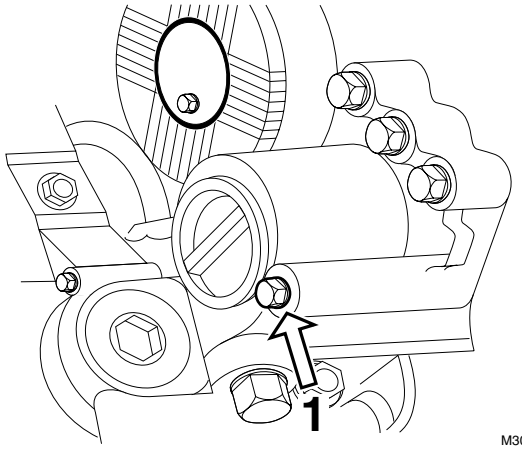

ZF AS Tronic

Level check/filler plug (A)	60 Nm
Drain plug (B/C)	60 Nm

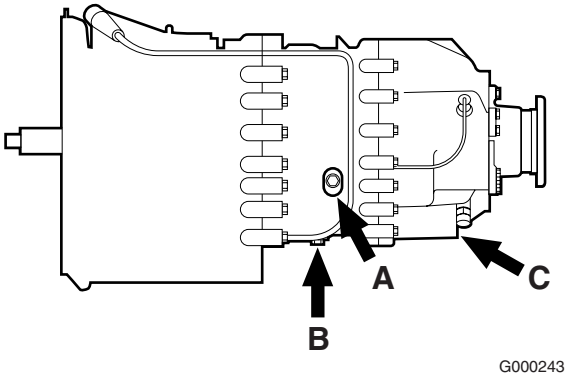

ZF AS Tronic with integrated retarder

Level check/filler plug (A)	60 Nm
Drain plug (B/C)	60 Nm

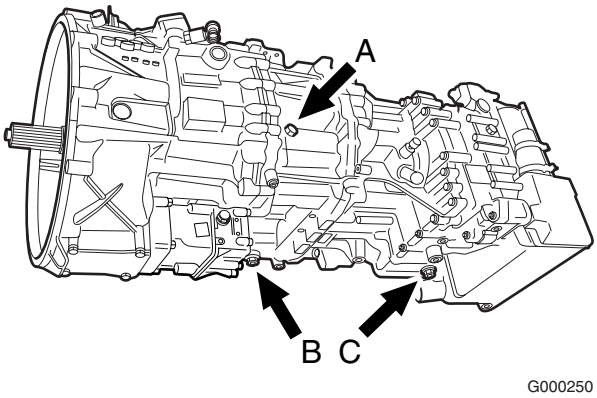

Oil filter attachment bolt (1)	23 Nm

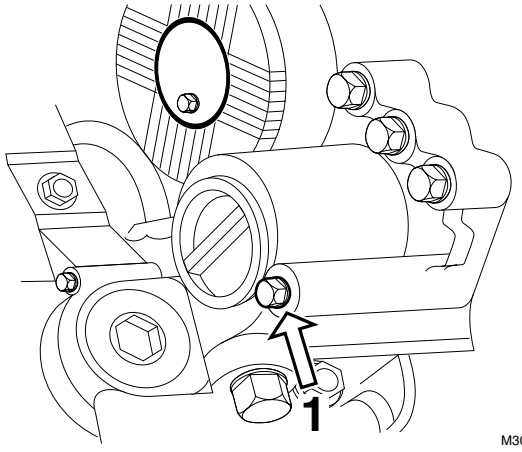

https://truckmanualshub.com/

2.2 FILLING CAPACITIES

ZF gearboxes

ZF 8S/16S-151
Filling capacity approx. 11 litres

ZF 8S/16S-181
Filling capacity approx. 13 litres

ZF 16S-221
Filling capacity approx. 13 litres

ZF 16S-151 with integrated retarder
Filling capacity approx. 11 litres

ZF 16S-181 with integrated retarder
Filling capacity approx. 12 litres

ZF 16S-221 with integrated retarder
Filling capacity approx. 12 litres

ZF AS Tronic gearboxes

ZF 12 AS 1930/2330
Filling capacity approx. 11 litres

ZF 12 AS 2540
Filling capacity approx. 12 litres

ZF 12 AS 1931/2331 with integrated retarder
Filling capacity approx. 12 litres

ZF 12 AS 2541 with integrated retarder
Filling capacity approx. 13 litres

https://truckmanualshub.com/

© 200423

https://truckmanualshub.com/

3. REAR AXLE

3.1 TIGHTENING TORQUES

The tightening torques stated in this paragraph are different from the standard tightening torques stated in the overview of the standard tightening torques. The other threaded connections not specified must therefore be tightened to the torque stated in the overview of standard tightening torques.

When attachment bolts and nuts are replaced, it is important that - unless stated otherwise - these bolts and nuts are of exactly the same length and property class as those removed.

Filler and drain plugs/hub plugs (Torx wrench)	85 Nm
M24 U-bolt nut, property class 8	
If flanged nut	740 Nm ± 55 Nm (1)
If yellow zinc plated hexagonal nut	615 Nm ± 50 Nm (1)

(1) Evenly tighten the two U-bolt nuts alternately.

M24 U-bolt nut, property class 10	
If flanged nut	880 Nm ± 60 Nm (1)
If yellow zinc plated hexagonal nut	615 Nm ± 50 Nm (1)

(1) Evenly tighten the two U-bolt nuts alternately.

M22 U-bolt nut, property class 10 (leading rear axle)	
If flanged nut	700 Nm ± 50 Nm (1)
If yellow zinc plated hexagonal nut	530 Nm ± 40 Nm (1)

(1) Evenly tighten the two U-bolt nuts alternately.

https://truckmanualshub.com/

0

3.2 FILLING CAPACITIES

Differential	Filling quantity with minimum caster	Filling quantity with maximum caster
1339 axle	approx. 18.0 litres	approx. 20.0 litres
1347 axle	approx. 21.5 litres	approx. 23.5 litres
1354 axle	approx. 16.5 litres	approx. 16.5 litres
1355(T) axle (1st axle)	approx. 13.0 litres	approx. 18.0 litres
1355(T) axle (2nd axle)	approx. 11.5 litres	approx. 13.0 litres
1132(T) axle (1st axle)	approx. 17.0 litres	approx. 25.5 litres
1132(T) axle (2nd axle)	approx. 15.0 litres	approx. 17.5 litres

Wheel hub	Filling capacity per hub
1354 axle	approx. 2 litres
1355(T) axle	approx. 2 litres
1132(T) axle	approx. 0.8 litres

© 200423

https://truckmanualshub.com/

4. BRAKES

4.1 GENERAL

Brake travel of automatic brake adjuster (Haldex)	35 - 40 mm
Brake travel of automatic brake adjuster (FTP axle)	25 - 35 mm
Reverse torque of adjusting bolt	> 18 Nm

https://truckmanualshub.com/

© 200423

https://truckmanualshub.com/

5. STEERING GEAR

5.1 GENERAL

Maximum steering ball joint axial clearance	1.5 mm

https://truckmanualshub.com/

0

5.2 TIGHTENING TORQUES

Steering gear

The tightening torques stated in this paragraph are different from the standard tightening torques stated in the overview of the standard tightening torques. The other threaded connections not specified must therefore be tightened to the torque stated in the overview of standard tightening torques.

When attachment bolts and nuts are replaced, it is important that - unless stated otherwise - these bolts and nuts are of exactly the same length and property class as those removed.

Filter plug without flange (A), fluid flow control valve block of EMAS system 125 Nm ± 5 Nm

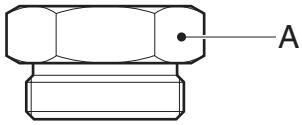

S7 00 906

Filter plug with flange (B), fluid flow control valve block of EMAS system 270 Nm ± 20 Nm

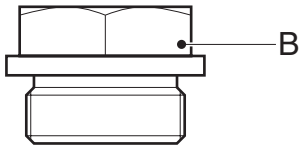

S7 00 907

Note:
- The two plugs are interchangeable.

Attachment bolt, steering column universal joint 54 Nm + 4 Nm (1)

(1) Fit new original attachment bolt and nut.

https://truckmanualshub.com/

6. FRONT AXLE

6.1 TIGHTENING TORQUES

The tightening torques stated in this paragraph are different from the standard tightening torques stated in the overview of the standard tightening torques. The other threaded connections not specified must therefore be tightened to the torque stated in the overview of standard tightening torques.

When attachment bolts and nuts are replaced, it is important that - unless stated otherwise - these bolts and nuts are of exactly the same length and property class as those removed.

U-bolt nut M20, property class 10

If flanged nut	450 Nm ± 40 Nm (1)
If yellow zinc plated hexagonal nut	400 Nm ± 40 Nm (1)

(1) Evenly tighten the two U-bolt nuts alternately.

M22 U-bolt nut, property class 10 (leading rear axle)

If flanged nut	700 Nm ± 50 Nm (1)
If yellow zinc plated hexagonal nut	530 Nm ± 40 Nm (1)

(1) Evenly tighten the two U-bolt nuts alternately.

https://truckmanualshub.com/

© 200423

https://truckmanualshub.com/

7. LEADING REAR AXLE 09N044 (FTP-TYPE VEHICLES)

7.1 GENERAL

Wheel bearing play, 09N044 leading rear axle	0 mm

https://truckmanualshub.com/

0

7.2 TIGHTENING TORQUES

The tightening torques stated in this paragraph are different from the standard tightening torques stated in the overview of the standard tightening torques. The other threaded connections not specified must therefore be tightened to the torque stated in the overview of standard tightening torques.

When attachment bolts and nuts are replaced, it is important that - unless stated otherwise - these bolts and nuts are of exactly the same length and property class as those removed.

Hub nut	100 Nm (1)
Hub cap	500 Nm
U-bolt nut M20, property class 10	553 Nm (2)

(1) Turn back until split pin can be fitted.
(2) Evenly tighten the two U-bolt nuts alternately.

https://truckmanualshub.com/

CONTENTS

	Page	Date
1. THREADED CONNECTIONS	1-1	200423
1.1 General	1-1	200423

2

https://truckmanualshub.com/

2

© 200423

https://truckmanualshub.com/

1. THREADED CONNECTIONS

1.1 GENERAL

The components may have threaded connections that have been treated with lubricant (dipped threaded connection). Galvanised bolts and nuts are wax dipped in the factory. Black annealed and phosphatised bolts and nuts are oil dipped. The advantage of using dipped nuts and bolts is that friction during tightening is reduced, so that the specified pre-tension force can be accurately obtained. The tightening torque can be reduced while the pre-tension force remains the same.

To achieve a small spread in the pre-tension force, the dipped threaded connection must be tightened accurately.
Therefore, always use a reliable torque wrench that provides a high degree of accuracy.

Note:
Have torque wrenches regularly inspected and calibrated.

Re-use of fasteners (bolt/nut/threaded end)

1. Clean the thread (take particular care to remove locking compound residues) and the clamping faces

2. Check the thread for damage.
   To do so, manually screw a new nut/bolt onto the thread to be checked.
   If the new nut/bolt cannot be fully hand-screwed onto the entire thread of the fastener to be checked, the fastener is not allowed to be re-used.

3. Apply one drop of engine oil to the upper turn of the bolt (threaded end)/lower turn of the nut and one drop to the clamping faces (other lubricants are not allowed).

4. If a locking compound has been specified, oil should not be applied to the thread.

https://truckmanualshub.com/

2

The following applies to all threaded connections (for both new and used vehicles):

- in the case of standard connections, apply the lubricant before fitting, and (re)tighten in accordance with the standard for dipped bolts;
- in the case of special connections, apply the lubricant before fitting, and (re)tighten in accordance with the values specified in the instructions.

The instructions for using lubricants also apply to new bolts from the warehouse. Dry threaded connections may not be used because of their highly variable friction coefficients.

Please consult the workshop manual for the specified tightening torque.

https://truckmanualshub.com/

CONTENTS

	Page	Date
1. SPECIFICATIONS	1-1	200423
1.1 General	1-1	200423

3

https://truckmanualshub.com/

3

© 200423

https://truckmanualshub.com/

1. SPECIFICATIONS

1.1 GENERAL

IN ORDER TO SATISFY THE WARRANTY CONDITIONS AND GUARANTEE THE LIFESPAN, SAFETY AND RELIABILITY OF DAF PRODUCTS, IT IS OF THE UTMOST IMPORTANCE THAT THE CORRECT FLUIDS, OIL AND LUBRICANTS, COOLANT AND FUEL ARE USED AND THAT THE REQUIRED REPLACEMENT INTERVALS ARE OBSERVED.

Lubricant, engine coolant and fuel additives - of whatever type - must not be used except in those circumstances specified by DAF.

Always follow the safety instructions below and the instructions that are supplied with the product.

Ask your lubricant and fuel supplier(s) whether the products supplied comply with DAF specifications.

DAF is not liable for damage or problems in the following instances:

1. **use of oil of a lower grade than specified.**
2. **use of oil of a different viscosity than specified.**
3. **if the change interval is exceeded.**
4. **if fuel, lubricants or coolants have been used which do not meet the requirements specified by DAF.**

https://truckmanualshub.com/

Avoid contact with:
Lubricants
Coolant
Fuel
Clutch fluid
In the event of contact with the skin: remove the liquid with paper or a cloth, wash with soap and water. If irritation persists, consult a doctor.
In the event of contact with the eyes: remove with a cloth and rinse with water. If irritation persists, consult a doctor.
If swallowed: DO NOT induce vomiting. Rinse mouth, drink two glasses of water and consult a doctor.
In the event of inhalation: get fresh air and rest.

Note:
Refer to the "Fluids and lubricants" specification manual for the prescribed fluid, oil and lubricant specifications.

© 200423

https://truckmanualshub.com/

CONTENTS

		Page	Date
1.	**MAINTENANCE INTERVALS**	1-1	200423
1.1	Maintenance schedule	1-1	200423
1.2	Explanatory notes on the maintenance schedule	1-2	200423
1.3	Effect of diesel fuel and PTO hours on maintenance intervals	1-4	200423
1.4	Maintenance in special operating conditions	1-4	200423
1.5	First service inspection	1-4	200423
2.	**MAINTENANCE ACTIVITIES**	2-1	200423
2.1	Overview of maintenance activities for the first service inspection	2-1	200423
2.2	Overview of annual maintenance activities	2-2	200423
2.3	Overview of mileage-dependent maintenance activities	2-3	200423
2.4	Overview of intermediate inspection activities	2-4	200423

https://truckmanualshub.com/

4

© 200423

https://truckmanualshub.com/

1. MAINTENANCE INTERVALS

1.1 MAINTENANCE SCHEDULE

The service intervals stated in the maintenance schedule are based on use of the oils and fuels specified by DAF.

Maintenance schedule CF85		Intermediate inspection	X service +	Y service 1x per YEAR +	
I			30.000 km	1 year max. 100.000 km	1 year max. 100.000 km
	Ext.	30.000 km	60.000 km	3 year max. 180.000 km	2 year max. 120.000 km (1)
II			50.000 km	1 year max. 100.000 km	1 year max. 100.000 km
	Ext.	50.000 km	100.000 km	3 year max. 300.000 km	3 year max. 300.000 km (1)
III			75.000 km	1 year max. 150.000 km	1 year max. 200.000 km (2)
	Ext.	60.000 km	120.000 km	3 year max. 450.000 km	3 year max. 450.000 km (3)

G000234

(1) Extended changing intervals not permitted on 1354 and 1355(T) rear axles.

(2) 1 year/maximum 100,000 km for:
- 1132(T), 1354 and 1355(T) rear axles

(3) Extended changing intervals not permitted on 1354 and 1355(T) rear axles.
3 years/maximum 300,000 km for:
- 1132(T) rear axle

https://truckmanualshub.com/

1.2 EXPLANATORY NOTES ON THE MAINTENANCE SCHEDULE

Maintenance group classification
Depending on the use to which the vehicle is put, the vehicle is placed in maintenance group I, II or III.

Maintenance group I
Operation on building sites, in quarries, etc.

- Operation on unmetalled roads
- Traffic in dusty conditions
- Sanitation department vehicles
- Distribution transport with an annual mileage up to 30,000 km.

Maintenance group II
Urban and regional transport

- Distribution traffic in urban areas
- Traffic between adjacent villages/cities

Maintenance group III
(Inter)national traffic

- Long-distance/very long-distance traffic

Standard changing interval
This is the standard changing interval symbol.

See the "Fluids and lubricants" specifications manual for the prescribed oil specification.

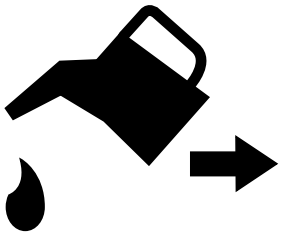

G0 00 230

Extended changing interval
This is the extended changing interval symbol.

If the prescribed oil specification and any additional conditions (see specification manual "Fluids and lubricants") are complied with, an extended changing interval may be applied.

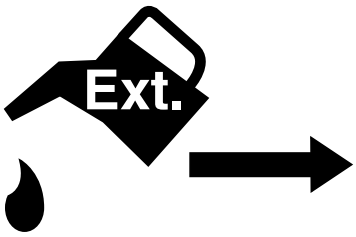

G0 00 229

Note:
An extended changing interval for engine oil may be subject to additional conditions. The additional conditions are included in the "Fluids and lubricants" specification manual.

https://truckmanualshub.com/

Intermediate inspection
This is the intermediate inspection symbol.

Intermediate inspections are based on several visual inspections.

When an extended changing interval is applicable to the engine oil (X-service), an intermediate inspection should be carried out.

X-service
This is the symbol for an X-service.

An X-service is a mileage-dependent maintenance check which consists of changing the engine oil plus a number of visual inspections.

Note:
If the prescribed oil specification and additional conditions (see specification manual "Fluids and lubricants") are met, an extended changing interval (X-service) may be applied.
An X service should be carried out at least once every year.

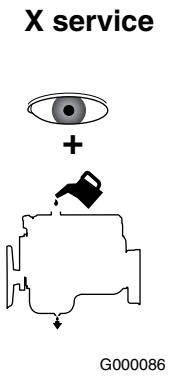

Y-service
This is the symbol for a Y-service.

A Y-service is an annual maintenance check consisting of several maintenance activities plus changing of the gearbox and rear axle oil.

Note:
If the prescribed oil specification (see specification manual "Fluids and lubricants") has been met, an extended changing interval may be applied.

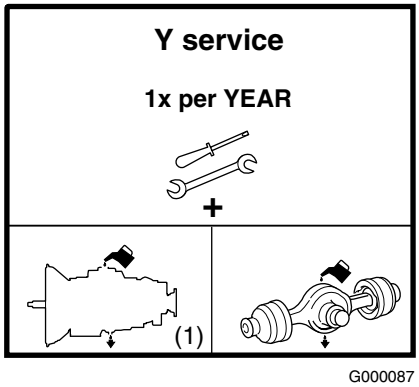

https://truckmanualshub.com/

1.3 EFFECT OF DIESEL FUEL AND PTO HOURS ON MAINTENANCE INTERVALS

Diesel fuels

Sulphur content	Engine oil change interval
> 0,2%	Halve interval to max. of 25,000 km

PTO hours
PTO hours should be converted into mileage according to the following formula:

1 PTO hour = 40 km

1.4 MAINTENANCE IN SPECIAL OPERATING CONDITIONS

Contact a DAF dealer/main branch or importer for vehicles used in very specific or heavy conditions.
The service intervals can be modified, if necessary, in consultation with the dealer/main branch or importer to fit the appropriate operating conditions.

1.5 FIRST SERVICE INSPECTION

The first service inspection should be carried out between the first 7,500 and 10,000 km or at most 8 weeks after delivery of the vehicle, whichever comes first.

Note:
If the vehicle is equipped with a clutch wear indicator, ensure that the lock nut makes contact with the servo housing.
If necessary, make sure that the lock nut makes contact with the housing.

The oil for the 1355 (T) axle must be renewed between the 2,000 and 3,000 km.

© 200423

https://truckmanualshub.com/

2. MAINTENANCE ACTIVITIES

2.1 OVERVIEW OF MAINTENANCE ACTIVITIES FOR THE FIRST SERVICE INSPECTION

- O Change the engine oil
- O Replace oil filter
- O Change the differential oil
- O Changing the hub oil
- O Check components and hose connections for leaks
- O Check/set the load-dependent control valve, leaf suspension
- O Adjust the clutch wear indicator circlip
- O Replace oil filter in fluid flow control valve block of EMAS system
- O Replace steering gear filter element, if vehicle is equipped with an EMAS system
- O Retighten hub nut of leading rear axle 09N044 (FTP-type vehicles)

https://truckmanualshub.com/

2.2 OVERVIEW OF ANNUAL MAINTENANCE ACTIVITIES

ANNUAL MAINTENANCE ACTIVITIES = Y-SERVICE INTERVAL
"Correct if necessary after inspection"

CAB AND ELECTRICAL SYSTEM
O Check pedal rubbers
O Check whether the latest version of the ITS manual is kept in the cab
O Replace interior filter element
O Check fluid level of cab tilting pump
O Check cab fastening

ENGINE, COOLING SYSTEM AND FUEL SYSTEM
O Replace air filter element
O Check air inlet dust trapping valve
O Check/adjust valve clearance (4) Done O Yes O No
O Replace coolant filter
O Check coolant freezing point
O Change coolant (1) Changed O Yes O No

STEERING GEAR AND BRAKE SYSTEM
O Replace steering gear filter element (6) Replaced O Yes O No
O Check steering ball joints
O Replace air dryer filter element
O Check compressor line
O Check automatic slack adjuster
O Check brake cylinder fastening
O Check/adjust load-dependent control valve
O Check fastening of universal joint to steering box input shaft

DRIVE AND CHASSIS
O Check fluid level of hydraulic trailing axle lifting device
O Check pivot points of hydraulic trailing axle lifting device
O Change the differential oil (2) Changed O Yes O No
O Change the hub oil (2) Changed O Yes O No
O Change grease of leading rear axle hubs of FTP-type vehicles (5) Done O Yes O No
O Check operation of differential lock
O Check drive shaft play
O Change the gearbox oil (3) Changed O Yes O No
O Check fifth wheel
O Check trailer coupling
O Check superstructure attachment

OTHER ACTIVITIES
O Check whether there are any field actions that need to be performed on the vehicle.

(1) Every 2 years with coolant according to DAF specification 74001.
Every 4 years with coolant according to DAF specification 74002.
(2) For changing interval see maintenance schedule in maintenance manual.
(3) For changing interval see maintenance schedule in maintenance manual.
When changing the gearbox oil on a gearbox with intarder, the gearbox oil filter must also be renewed.
(4) Check the valve clearance every 2 years after the 2nd Y service and adjust if necessary (example: 1st - 2nd - 4th - 6th ... year).
(5) Once every 3 years at a maximum of 500,000 km.
(6) Every 2 years.

https://truckmanualshub.com/

2.3 OVERVIEW OF MILEAGE-DEPENDENT MAINTENANCE ACTIVITIES

MILEAGE-DEPENDENT MAINTENANCE ACTIVITIES (X-SERVICE)

"Correct if necessary after inspection"

CAB AND ELECTRICAL SYSTEM
O Check/clean battery terminals
O Check/top up battery fluid level
ENGINE, COOLING SYSTEM AND FUEL SYSTEM
O Change the engine oil
O Replace oil filter
O Replace rotor of centrifugal oil filter
O Remove fuel fine filter
O Replace fuel prefilter/water separator filter element
O Check for fuel leaks
O Check poly V-belt Replaced O Yes O No
O Check/adjust V-belt Replaced O Yes O No
O Check components and hose connections for leaks
O Check radiator and intercooler for fouling
O Check exhaust system
STEERING GEAR AND BRAKE SYSTEM
O Check steering ball joint sleeve for damage
O Check the steering oil level
O Check steering gear lines and connections
O Check brake components and brake system for leaks
O Check brake lining thickness
O Check brake pad thickness and brake disc
DRIVE AND CHASSIS
O Check the clutch fluid level
O Check clutch wear indicator
O Check central axle of tandem axle unit for leaks
O Check differential for leaks (1)
O Check oil-lubricated wheel hubs for leaks (1)
O Check greased wheel hubs for leaks
O Check wheel bearing play of leading rear axle 09N044 (FTP-type vehicles)
O Check gearbox for leaks (2)
O Clean gearbox vent and rear axle vent on "offroad/semi-offroad" vehicles
O Check shock absorbers for proper attachment and leaks
O Check condition and attachments of spring leaves, spring clamps and U-bolts
O Check hinge points and axle suspension fastening, air suspension
O Check the air suspension bellows
O Check operation of automatic lubrication system
O Lubricate according to X-service lubrication schedule
OTHER ACTIVITIES
O Check whether there are any field actions that need to be performed on the vehicle.

(1) For changing interval see maintenance schedule in maintenance manual.
(2) For changing interval see maintenance schedule in maintenance manual.
When changing the gearbox oil on a gearbox with intarder, the gearbox oil filter must also be renewed.

https://truckmanualshub.com/

2.4 OVERVIEW OF INTERMEDIATE INSPECTION ACTIVITIES

INTERMEDIATE INSPECTION ACTIVITIES

"Correct if necessary after inspection"
In the case of an extended engine oil changing interval, an intermediate inspection must take place between the X-service inspections.

CAB AND ELECTRICAL SYSTEM
O Check/clean battery terminals
ENGINE, COOLING SYSTEM AND FUEL SYSTEM
O Check the engine oil level
O Check for fuel leaks
O Check poly V-belt Replaced O Yes O No
O Check/adjust V-belt Replaced O Yes O No
O Check components and hose connections for leaks
O Check radiator and intercooler for fouling
O Check exhaust system
O Check fuel prefilter/water separator for moisture
STEERING GEAR AND BRAKE SYSTEM
O Check steering ball joint sleeve for damage
O Check the steering oil level
O Check steering gear lines and connections
O Check brake components and brake system for leaks
O Check brake lining thickness
O Check brake pad thickness and brake disc
DRIVE AND CHASSIS
O Check the clutch fluid level
O Check clutch wear indicator
O Check differential for leaks
O Check oil-lubricated wheel hubs for leaks
O Check greased wheel hubs for leaks
O Check central axle of tandem axle unit for leaks
O Check gearbox for leaks
O Clean gearbox vent and rear axle vent on "offroad/semi-offroad" vehicles
O Check shock absorbers for proper attachment and leaks
O Check condition and attachments of spring leaves, spring clamps and U-bolts
O Check hinge points and axle suspension fastening, air suspension
O Check the air suspension bellows
O Check operation of automatic lubrication system
O Lubricate according to X-service lubrication schedule
OTHER ACTIVITIES
O Check whether there are any field actions that need to be performed on the vehicle.

https://truckmanualshub.com/

CONTENTS

		Page	Date
1.	**SAFETY INSTRUCTIONS**	1-1	200423
1.1	Safety instructions	1-1	200423
2.	**GENERAL**	2-1	200423
2.1	Introduction	2-1	200423
2.2	Technical information	2-2	200423
2.3	Warning symbol	2-2	200423
2.4	Environment	2-3	200423
2.5	Parts	2-3	200423
2.6	Maintenance guidelines	2-4	200423
3.	**INSPECTION AND ADJUSTMENT**	3-1	200423
	Cab and electrical system		
3.1	Checking pedal rubbers	3-1	200423
3.2	Checking the battery fluid level	3-2	200423
3.3	Checking the battery terminals	3-2	200423
3.4	Checking the fluid level of the cab tilting pump	3-3	200423
3.5	Checking the cab fastening	3-3	200423
	Engine, cooling system and fuel system		
3.6	Inspection, engine oil level	3-4	200423
3.7	Inspection and adjustment, valve clearance	3-5	200423
3.8	Inspection and adjustment, DEB play	3-7	200423
3.9	Checking the poly-V-belt	3-7	200423
3.10	Inspection and adjustment, V-belt tension	3-8	200423
3.11	Checking the coolant freezing point	3-10	200423
3.12	Checking for fuel leaks	3-11	200423
3.13	Checking the components and hose connections for leaks	3-11	200423
3.14	Checking the exhaust system	3-11	200423
3.15	Checking the radiator and intercooler for fouling	3-11	200423
3.16	Checking the air inlet dust trapping valve	3-12	200423
	Steering gear and brake system		
3.17	Checking the universal joint attachment on steering box input shaft	3-12	200423
3.18	Checking the steering ball joint sleeve for damage	3-13	200423
3.19	Checking the steering ball joints	3-14	200423
3.20	Checking the steering oil level	3-15	200423
3.21	Checking the steering gear lines and connections	3-15	200423
3.22	Inspecting the compressor line	3-16	200423
3.23	Checking the brake components and brake system for leaks	3-18	200423
3.24	Inspecting the automatic brake adjuster	3-19	200423
3.25	Checking the brake cylinder fastening	3-20	200423
3.26	Inspection, brake lining thickness	3-21	200423
3.27	Checking the brake shoe thickness and brake disc	3-22	200423
	Drive and chassis		
3.28	Checking and adjusting load-sensing air-suspension control valve	3-24	200423
3.29	Checking and adjusting load-sensing leaf-spring control valve	3-27	200423
3.30	Inspection, fluid level of hydraulic trailing-axle device	3-30	200423
3.31	Inspection, pivot points of the hydraulic trailing-axle device	3-30	200423
3.32	Checking the differential for leaks	3-30	200423
3.33	Checking the operation of the differential lock	3-31	200423
3.34	Checking the drive shaft play	3-32	200423
3.35	Inspecting the fifth wheel	3-33	200423
3.36	Checking the trailer coupling	3-34	200423
3.37	Check the superstructure attachment	3-35	200423

5

https://truckmanualshub.com/

		Page	Date
3.38	Checking the clutch fluid level	3-36	200423
3.39	Inspection and adjustment, clutch wear indicator	3-37	200423
3.40	Checking the gearbox for leaks	3-38	200423
3.41	Checking the central axle of the tandem axle unit for leaks	3-38	200423
3.42	Inspection of oil lubricated wheel hubs for leaks	3-38	200423
3.43	Checking the greased wheel hubs for leaks	3-38	200423
3.44	Retightening the hub nut of leading rear axle 09N044 (FTP-type vehicles)	3-39	200423
3.45	Inspection and adjustment, wheel bearing play, 09N044 leading rear axle	3-40	200423
3.46	Checking the shock absorbers for attachment and leaks	3-42	200423
3.47	Checking the condition and attachment of spring leaves, spring clamps and U-bolts	3-42	200423
3.48	Checking the hinge points and axle suspension fastening (air suspension)	3-42	200423
3.49	Checking the air suspension bellows	3-43	200423
3.50	Checking the operation of the automatic lubrication system	3-43	200423
4.	**REMOVAL AND INSTALLATION**	4-1	200423
	Cab and electrical system		
4.1	Removal and installation, interior filter element	4-1	200423
	Engine, cooling system and fuel system		
4.2	Removal and installation, air filter element	4-2	200423
4.3	Removal and installation, coolant filter	4-4	200423
4.4	Removal and installation, engine oil filter	4-5	200423
4.5	Removal and installation, centrifugal filter rotor	4-6	200423
4.6	Removal and installation, fuel filter element	4-7	200423
4.7	Removal and installation, fuel prefilter/water separator filter element	4-9	200423
4.8	Removal and installation, valve cover	4-11	200423
	Steering gear and brake system		
4.9	Removal and installation, steering gear filter element	4-12	200423
4.10	Removal and installation, oil filter in fluid flow control valve block of EMAS system	4-14	200423
4.11	Removal and installation, air dryer filter element	4-15	200423
	Drive and chassis		
4.12	Removal and installation, gearbox filter element	4-17	200423
4.13	Removal and installation, wheel hub	4-19	200423
5.	**DRAINING AND FILLING**	5-1	200423
	Cab and electrical system		
5.1	Topping up battery fluid	5-1	200423
	Engine, cooling system and fuel system		
5.2	Draining and filling the engine oil	5-2	200423
5.3	Draining and filling, cooling system	5-3	200423
5.4	Bleeding the fuel system	5-5	200423
	Drive and chassis		
5.5	Draining and filling, differential	5-7	200423
5.6	Draining and filling the wheel hub	5-10	200423
5.7	Draining and filling, gearbox	5-12	200423
5.8	Filling grease supply of the automatic lubrication system	5-16	200423
6.	**CLEANING**	6-1	200423
6.1	Cleaning the battery poles	6-1	200423
6.2	Cleaning radiator and intercooler	6-2	200423
6.3	Cleaning the vehicle	6-4	200423
6.4	Cleaning gearbox vent(s)	6-6	200423
6.5	Cleaning rear axle vent	6-6	200423

https://truckmanualshub.com/

	Page	Date
7. LUBRICATION	7-1	200423
7.1 Lubricate according to X-service lubrication schedule.	7-1	200423

5

https://truckmanualshub.com/

5

https://truckmanualshub.com/

1. SAFETY INSTRUCTIONS

1.1 SAFETY INSTRUCTIONS

Comply with all the warnings and safety precautions given in this maintenance manual.

First read the instructions and warnings on the labels and stickers that are affixed to various components on the vehicle and follow them. They are provided for your safety and health, so do not ignore them.

Wear clean, fitted clothes and apply protective cream to unprotected parts of your body, if necessary.

Do not run the engine in an enclosed or unventilated area. In other words, make sure that the exhaust gases are effectively extracted.

Remain at a safe distance from rotating and/or moving components.

Never remove the filler cap from the cooling system when the engine is at operating temperature.

Be careful when changing the oil. Hot oil may cause serious injuries.
Various oils and lubricants used on the vehicle may constitute a health hazard.
Avoid unnecessary contact with drained oil.
Frequent contact damages the skin.
This also applies to engine coolant, windscreen washer fluid, refrigerant in air conditioning systems, battery acid and diesel fuel.
So avoid inhalation and direct contact.

When carrying out operations under the cab, make sure the cab is fully tilted.

https://truckmanualshub.com/

To avoid a fire hazard, the engine, the exhaust system and their surroundings must be kept free of flammable fluids and material such as dead leaves and dirt.

Where there is an engine encapsulation, if necessary, the encapsulation panels must be thoroughly cleaned after each inspection interval because of the risk of fire if the inside of the panels is dirty.

Always disconnect the earth connection of the battery before working on the vehicle.

Always use stands to support the chassis or components when working under the vehicle.
Always charge batteries in a properly ventilated area and avoid creating sparks and naked flames.
Fast charging should only be used in an emergency. When fast-charging, the battery positive and negative leads (+ and -) must be disconnected.

© 200423

https://truckmanualshub.com/

2. GENERAL

2.1 INTRODUCTION

This maintenance manual describes all relevant maintenance activities. It also contains safety instructions, which must be strictly adhered to. Activities not described in this manual, e.g. replacing components, overhaul, fault-finding, etc., are described in the DAF workshop instructions.

This maintenance manual assumes that the mechanic is sufficiently experienced and has had the required instruction or training to carry out these maintenance activities in a safe and responsible manner.

The technical data and notes on the maintenance activities have been compiled with the utmost care.

https://truckmanualshub.com/

2.2 TECHNICAL INFORMATION

The technical information in this maintenance manual, such as notes on maintenance activities and technical data required to carry out the maintenance activities in a safe manner, were up-to-date at the time this manual went to press. DAF reserves the right to make changes without prior notice.

Note:
Important changes relating to technical information that is not contained in this manual will be made available in TI sheets (Technical Information Sheet).

2.3 WARNING SYMBOL

When text is accompanied by the warning symbol shown here, the information provided is essential for the health and safety of the mechanic.
This warning symbol is also shown if there are circumstances in which there is a vehicle safety hazard or damage to the vehicle could arise.

M0015

© 200423

https://truckmanualshub.com/

2.4 ENVIRONMENT

By carrying out the maintenance activities in a professional manner, on time and at regular intervals, you will help to reduce the impact on the environment.
This means, for example, noticing and remedying possible leakages in time and keeping the engine in an optimum condition (adjusting valves, replacing air filter element etc.), thus reducing the emission of harmful exhaust gasses.
It should be noted that oils and fluids contain harmful substances that have a negative impact on the environment.
That is why you should take care that drained oils and fluids and also discarded oil and fuel filters, are collected in separate receptacles or containers.
In short: **maintenance activities must be carried out in an environmentally aware manner**.

2.5 PARTS

All DAF parts and components have been carefully attuned to each other, a decisive factor in ensuring the original DAF quality.
It is only logical, therefore, that the original DAF quality can be maintained best if original DAF parts and components are used when replacing parts or components.
As far as maintenance activities are concerned, this includes components such as windscreen-wiper blades, air-dryer elements, gaskets, V-belts and filters.
For example, if "non-original DAF filters" are used, the engine will be insufficiently protected against fine microscopic airborne dust particles, almost imperceptible metal swarf in the oil and dirt in the fuel, resulting in:

- premature replacing of cylinders, pistons, bearings, valves, injector pump and other moving parts
- reduced engine performance
- increased fuel consumption

Therefore, always use original DAF parts and components.

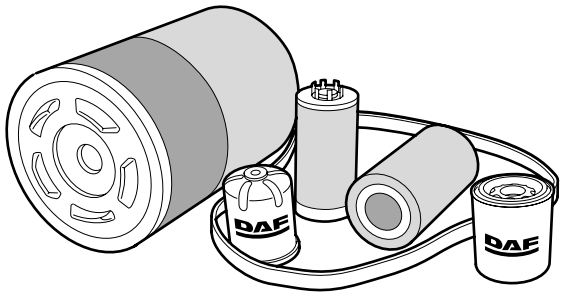

G000183

https://truckmanualshub.com/

2.6 MAINTENANCE GUIDELINES

- When carrying out maintenance activities on the vehicle, it is important that the work is performed under the cleanest possible conditions.
  Filler caps, lubricating points, filler and drain plugs should be cleaned before and after maintenance activities.
- When excessive leakage has been detected at oil seals and/or components, or in case of excessive drops in the oil level, a report should be made and the cause should be remedied.
- It is important to check the gearbox breathers, transfer box, rear axle and driven front axle regularly for fouling and blockages. If the breathers are blocked by dirt, overpressure may cause leaks.
- Depending on the circumstances in which the vehicle is used, e.g. on very bad roads or construction sites, important bolt connections such as the fifth wheel, spring suspension, U-bolts, trailer coupling, steering box attachment, superstructure attachments etc. should be inspected more often and, if necessary, be retightened.
- It is important that a visual inspection and test run are carried out following the maintenance activities.
  Particular attention should be paid to components directly related to driving safety.
- Once a service has been completed new information on the next service (mileage/ date) can be entered on the instrument panel display using DAVIE XD via the VIC.

© 200423

https://truckmanualshub.com/

3. INSPECTION AND ADJUSTMENT

3.1 CHECKING PEDAL RUBBERS

1. Check that the pedal rubbers are still securely mounted on the pedal.

2. Check that the pedal rubbers are not worn out and there is still sufficient tread.

https://truckmanualshub.com/

3.2 CHECKING THE BATTERY FLUID LEVEL

Avoid sparks and open flames in the vicinity of batteries.
Battery acid is an aggressive fluid.
In the event of contact with the skin: rinse the skin with plenty of water for a sustained period. If redness or pain persists, consult a doctor.
Remove any clothing affected and rinse with water.
In the event of contact with the eyes: rinse with plenty of water for at least 15 minutes and consult a doctor.
If swallowed: do NOT induce vomiting. Rinse the mouth, drink two glasses of water and consult a doctor.
In the event of inhalation: get fresh air, rest and consult a doctor.

1. Check the electrolyte level. The electrolyte level must be approx. 10 mm above the plates or up to the level indicator if available.

2. If necessary, top up the batteries, see chapter "Draining and filling".

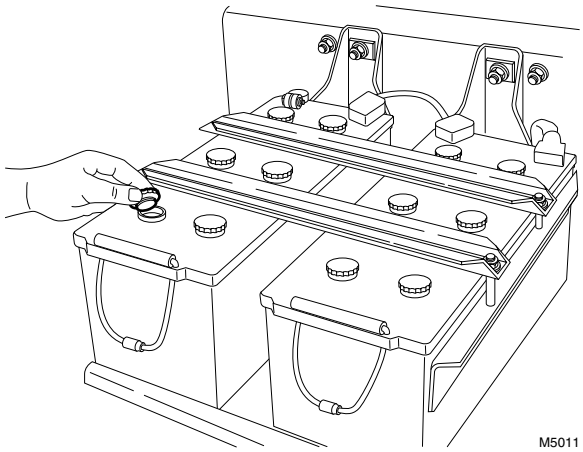

3.3 CHECKING THE BATTERY TERMINALS

1. Visually check the battery terminals for corrosion. Clean the battery terminals if necessary, see chapter on "Cleaning".

2. Check the attachment of the battery terminals.

https://truckmanualshub.com/

3.4 CHECKING THE FLUID LEVEL OF THE CAB TILTING PUMP

1. The fluid level must be checked when the cab is in the driving position.
2. The cock (2) should be in the "tilting back" position (anti-clockwise).
3. Unscrew the filler plug (1) 3 to 4 turns. Wait until the overpressure, if any, has left the reservoir. Remove filler plug (1).
4. Start pumping (maximum 5 pump strokes). Ensure that the pump lever is in the lowest position.
5. Check the fluid level. This level should be no more than 2 cm below the top of the filling opening. Top up if necessary.
6. Fit the filler plug (1) and hand tighten it.

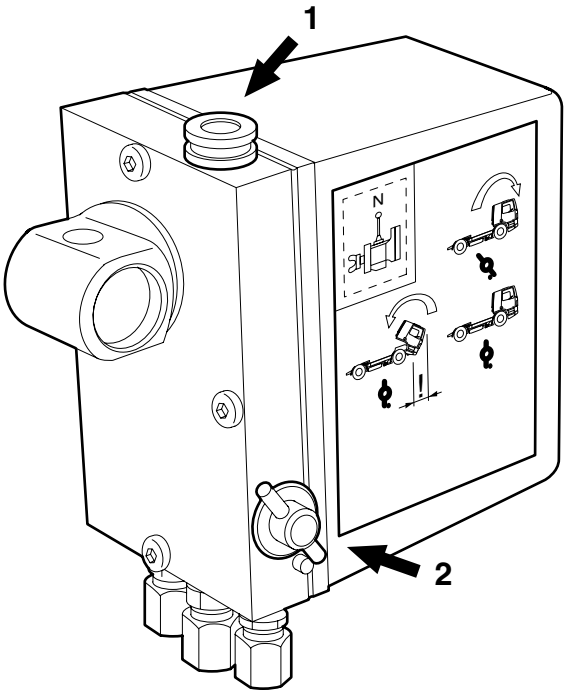

M201062

3.5 CHECKING THE CAB FASTENING

1. Check that all attachment bolts are in place.
2. Visually inspect the attachment of the cab to the tilting mechanism.
3. Visually inspect the seals and condition of the tilting mechanism.

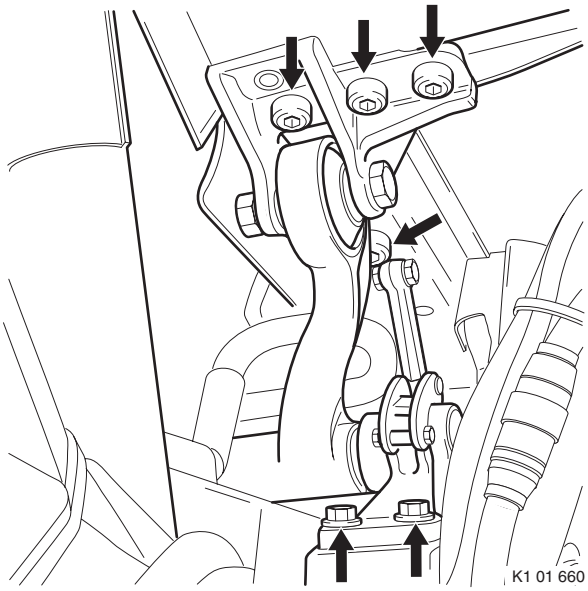
K1 01 660

https://truckmanualshub.com/

3.6 INSPECTION, ENGINE OIL LEVEL

1. Ensure that the vehicle is standing on a flat and level surface.
2. Wait at least 5 minutes before checking the engine oil level of a hot engine.
3. Pull the dipstick (2) out of the holder.
4. Wipe the dipstick clean with a lint-free cloth.
5. Put the dipstick back into the holder.
6. Pull the dipstick out again and check the oil level.

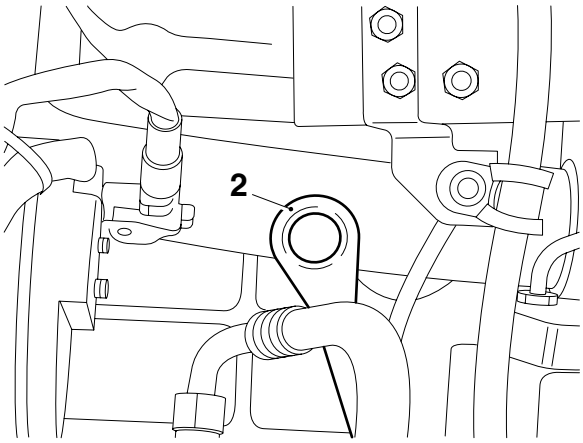

V300384

7. If necessary, top up oil via the filler opening with the red cap (D) to the maximum oil level. Always use the specified oil.
   Do not top up above maximum level.

   Note:
   For the difference between minimum and maximum engine oil level, see "Technical data".

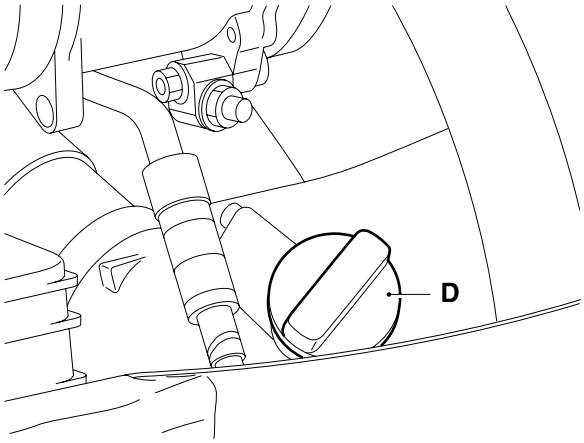

V300389

https://truckmanualshub.com/

3.7 INSPECTION AND ADJUSTMENT, VALVE CLEARANCE

1. Remove the valve covers, see "Removal and installation".

2. Use the special tool (DAF no. 1310477) to turn the crankshaft clockwise, as seen from the timing gear end (this corresponds with the engine's direction of rotation), until the valves of cylinder 1 are in the overlap position. The pistons of cylinders 1 and 6 are now at top dead centre.

   Note:
   "Overlap" is the moment at which the inlet valve starts opening and the exhaust valve finishes closing.

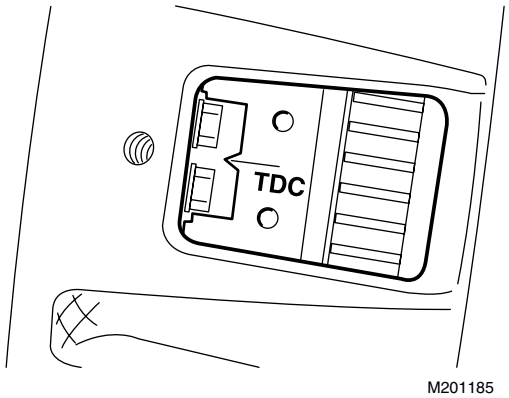

M201185

If the engine has a DEB, you must use a flat ring spanner to loosen the lock nut. This is necessary to avoid damaging the DEB spring plate.

3. Check/correct the valve clearance of cylinder 6. Set the correct valve clearance by loosening the lock nut and turning the adjusting screw in the correct direction. See "Technical data" for the correct valve clearance.

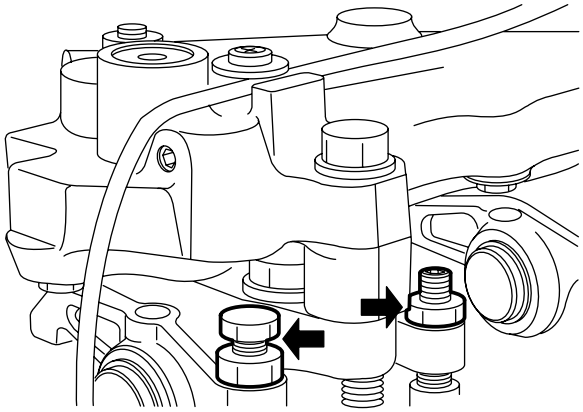
M200539

https://truckmanualshub.com/

4. By cranking the crankshaft 1/3 stroke each time, using special tool (DAF no. 1310477,) the valves can be adjusted according to the injection sequence 1-5-3-6-2-4.

Valves in overlap position of cylinder	Adjusting valves of cylinder
1	6
5	2
3	4
6	1
2	5
4	3

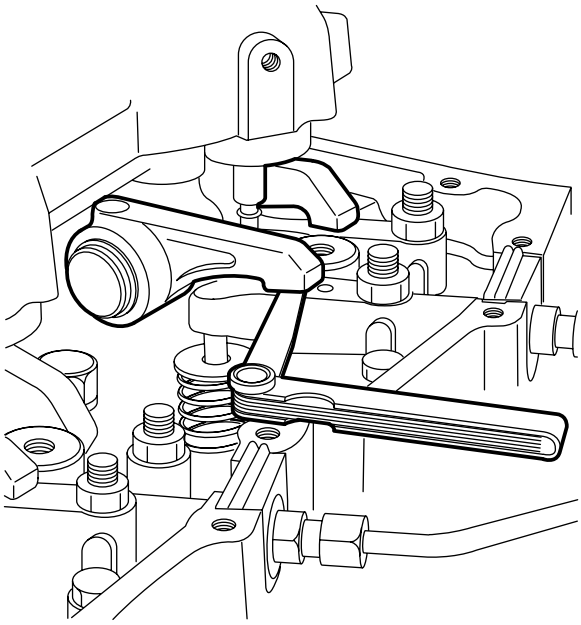

5. If the engine has been fitted with a DEB, the DEB play must be checked following the valve play adjustment.

6. Fit the valve covers, see "Removal and installation".

https://truckmanualshub.com/

3.8 INSPECTION AND ADJUSTMENT, DEB PLAY

1. Remove the valve covers, see chapter "Removal and installation".
2. Tighten the DEB attachment bolts to the specified torque, see main group "Technical data".
3. Using special tool (DAF no. 1310477), crank the engine in the direction of rotation until cylinder 1 has reached the top dead centre (TDC) and the valves of cylinder 6 are in overlap position.
4. Use set screw (B) to set the DEB clearance (A) of cylinders 1, 3 and 5, see main group "Technical data".
5. Then tighten set screw (B) to the specified torque, see main group "Technical data".
6. Using special tool (DAF no. 1310477), crank the engine in the direction of rotation until cylinder 6 has reached the top dead centre (TDC) and the valves of cylinder 1 are in overlap position.
7. Use set screw (B) to set the DEB clearance (A) of cylinders 2, 4 and 6, see main group "Technical data". Then tighten set screw (B) to the specified torque, see main group "Technical data".
8. Fit the valve covers, see chapter "Removal and installation".

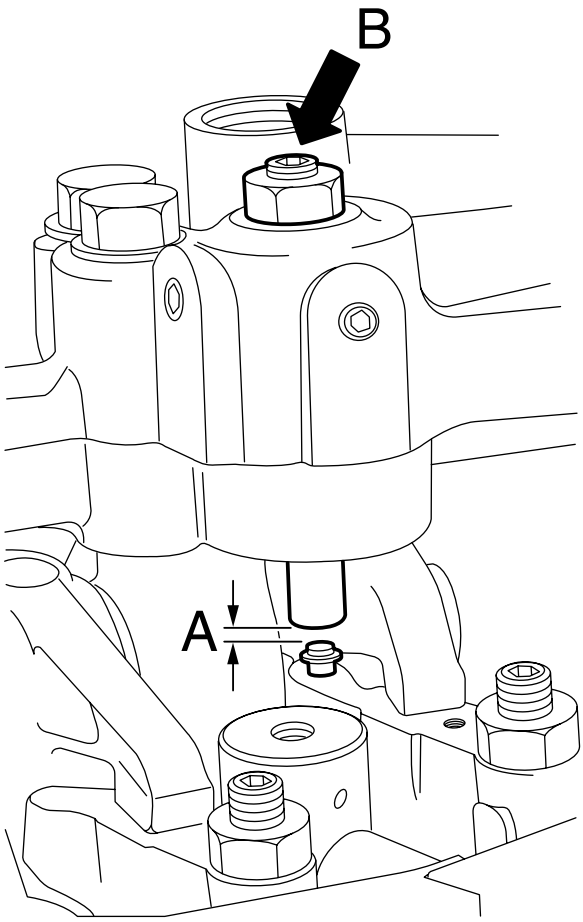

i 400166

3.9 CHECKING THE POLY-V-BELT

1. Check the poly-V-belt for damage and signs of serious wear.

https://truckmanualshub.com/

3.10 INSPECTION AND ADJUSTMENT, V-BELT TENSION

Inspecting the V-belt tension

1. Check the V-belt tension of the air conditioning compressor drive using the Krikit I, special tool (DAF no. 1240442). Check the V-belt tension of the FAX model steering pump drive using the Krikit II, special tool (DAF no. 1240443).

2. Set the gauge to zero by depressing the measuring arm (1).

3. Place the belt tension gauge on the V-belt, halfway between the two pulleys.

4. Slowly depress the V-belt by means of the belt-tension gauge until a click is heard. Then remove the belt tension gauge carefully. Take care not to let the measuring arm move.

5. Take the reading as indicated by the position of the measuring arm in relation to the scale. Compare this reading with the recommended pre-tension, see "Technical data".

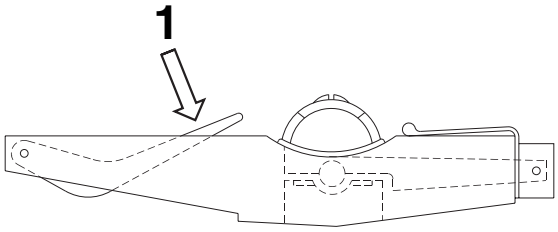

M2061

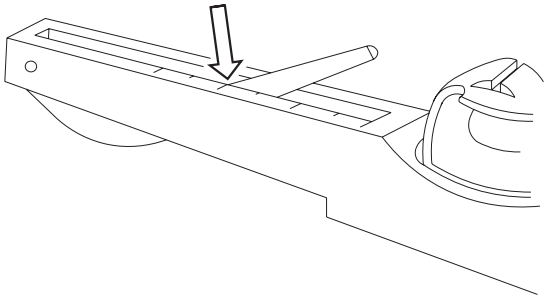

M2062

Adjust V-belt tension of air conditioning compressor drive

1. Slacken the upper attachment bolt (1) of the compressor.

2. Slacken the lower attachment bolt (2) of the compressor.

3. Loosen the attachment bolt from the threaded spindle which is attached to the coolant pump.

4. Shift the compressor using the lock nuts (3) until the correct V-belt tension is achieved, see "Technical data".

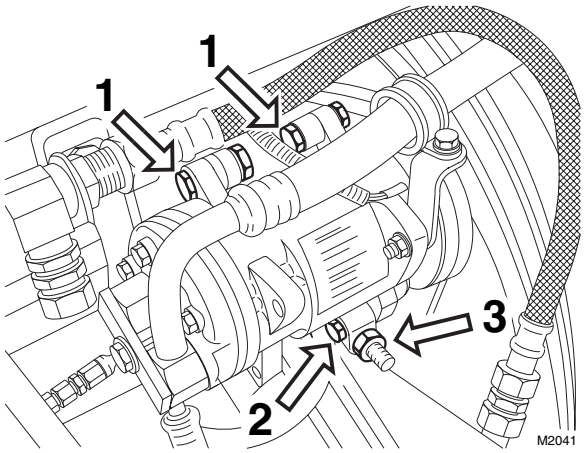

M2041

https://truckmanualshub.com/

Adjusting V-belt tension of FAX model steering pump

1. Slacken the central bolt (1) of the tension roller.
2. Turn the adjusting bolt (2) until the V-belt tension is correct, see "Technical data".
3. Tighten the central bolt (1) to the specified tightening torque, see "Technical data".

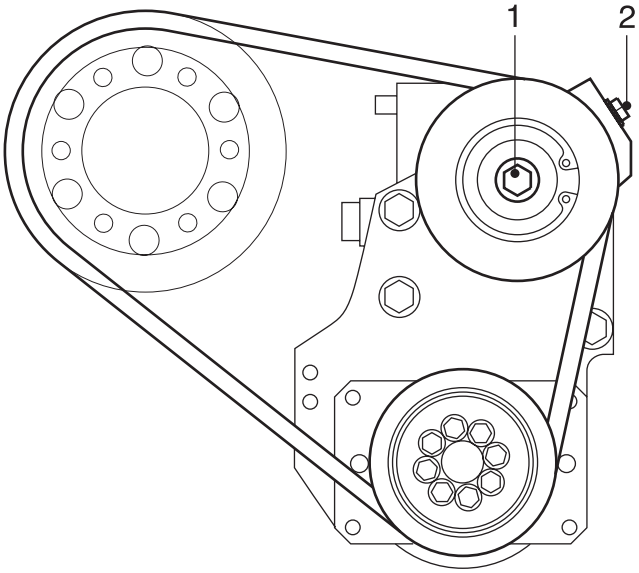

G0 00 270

https://truckmanualshub.com/

3.11 CHECKING THE COOLANT FREEZING POINT

When the coolant is hot, there is an overpressure in the cooling system. Carefully remove the filler cap to release the overpressure.
Do not remove the filler cap when the engine is running.
Coolant is a toxic fluid. Contact with the skin should therefore be avoided.
In the event of contact with the skin: remove with paper or a cloth, wash with soap and water. If irritation persists, consult a doctor.
If swallowed: DO NOT induce vomiting. Rinse mouth, drink two glasses of water and consult a doctor.
In the event of inhalation: get some fresh air and rest.
In order to avoid damaging the cylinder block, do not top up a warm engine with coolant.

1. Check the anti-freeze content of the coolant. Fill the cooling system with anti-freeze, if this has not been done yet. Always use only coolants that meet DAF specifications.

2. Consult the manufacturer's instructions for the correct anti-freeze mixing ratio. Preferably, use 40% anti-freeze on an ethylene glycol base. At this percentage, not only good frost protection, but also good corrosion protection is guaranteed.

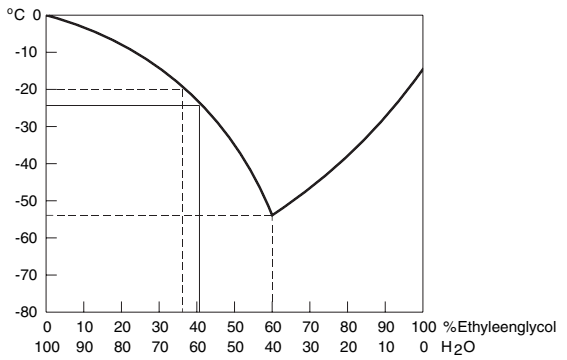

M2016

https://truckmanualshub.com/

3.12 CHECKING FOR FUEL LEAKS

1. Visually inspect all hose connections and fuel system components for leaks.

3.13 CHECKING THE COMPONENTS AND HOSE CONNECTIONS FOR LEAKS

1. Check all hose connections and cooling system components for leaks.
2. Check the hose connections and inlet system components.

3.14 CHECKING THE EXHAUST SYSTEM

1. Visually inspect the exhaust system for leaks.
2. Check the exhaust suspension points.
3. Check that no heat transfer (due to accumulated dirt, for example) can take place to the exhaust system area, such as pipes, components etc.

3.15 CHECKING THE RADIATOR AND INTERCOOLER FOR FOULING

1. Visually inspect the radiator and intercooler for fouling If necessary, clean the radiator and intercooler, see "Cleaning".

https://truckmanualshub.com/

3.16 CHECKING THE AIR INLET DUST TRAPPING VALVE

1. Check the condition of the rubber valves.

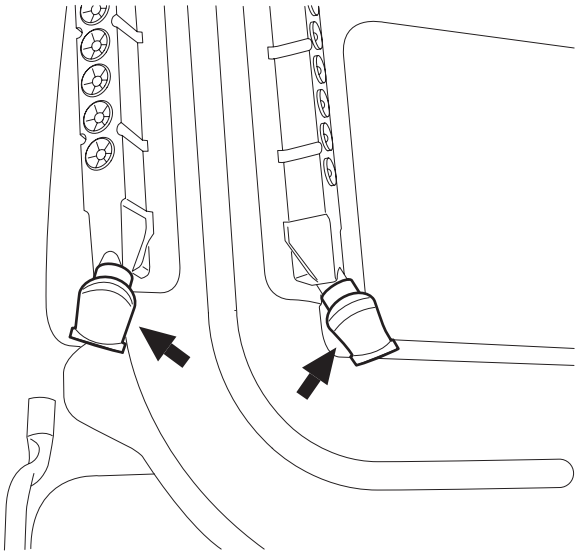

G000238

3.17 CHECKING THE UNIVERSAL JOINT ATTACHMENT ON STEERING BOX INPUT SHAFT

1. Check the universal joint for perceptible play. If perceptible play is detected, the affected part must be replaced.

2. Check whether there is any perceptible play between the spline connection of the universal joint and the steering box input shaft. If perceptible play is detected, the splines on the universal joint and those on the input shaft must be checked for wear. If wear is detected, the affected part must be replaced.

3. If there is perceptible play but the parts are not worn, the attachment bolt and nut must be replaced. Tighten the attachment bolt and nut to the specified torque, see "Technical data".

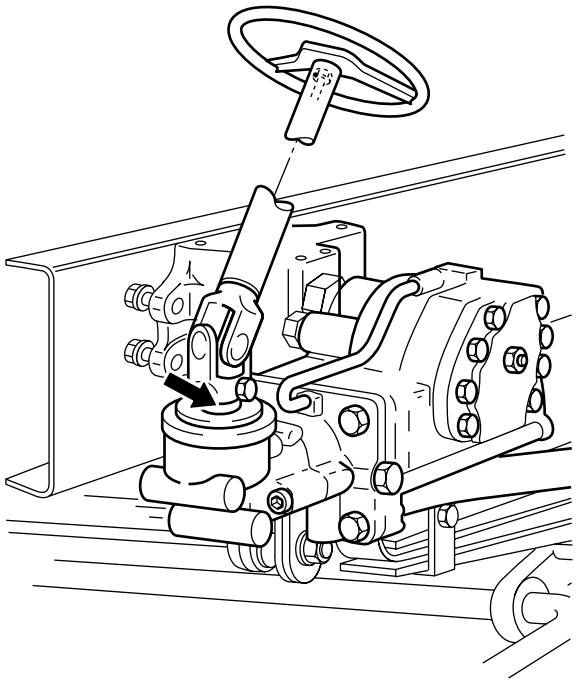

S7 00 639

https://truckmanualshub.com/

3.18 CHECKING THE STEERING BALL JOINT SLEEVE FOR DAMAGE

Inspection, locking devices and dust cover

1. Check that the steering ball joint dust cover or seal is not damaged. Replace the steering ball joint if damaged.

2. If a castle nut is fitted, check that the locking devices are present and undamaged.

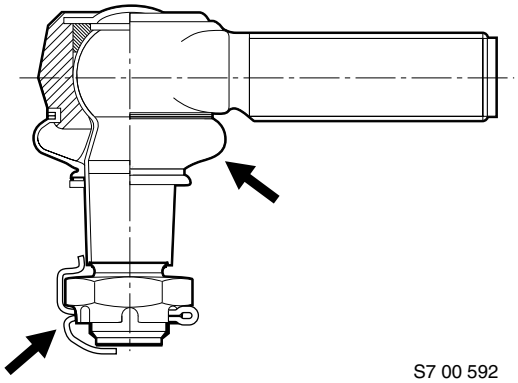

https://truckmanualshub.com/

3.19 CHECKING THE STEERING BALL JOINTS

Checking axial steering ball joint play

1. Check the axial steering-ball joint play using special tool (DAF no. 1329426)

2. First jack up the axle until the wheels come off the ground and put the axle on stands.

3. Make sure that the castle nut split pin (if fitted) at the nut does not come into contact with the head of the threaded end.

4. Screw the thrust washer (8) on to the threaded spindle.

5. Fit the spring retainer (3), spring (4) and pressure sleeve (6) into bracket (1). Fit the locking screw (5). It should be possible to move the pressure sleeve (6) freely.

   Note:
   Fit the correct pressure sleeve (6).
   The pressure sleeve (6) must abut the outer edge of the steering ball joint (7).

6. Loosen thrust bolt (2) until the pressure sleeve (6) with the flange abuts the bracket (A = 0 mm).

7. Fit the special tool over the steering ball joint (7) and turn the threaded spindle (9) by hand until the special tool is tight around the steering ball joint (7).

8. Tighten thrust bolt (2) until its head abuts bracket (1).

9. Measure play "A" between the pressure sleeve and the bracket using a feeler gauge. Compare the reading with the maximum permissible steering ball joint play, see "Technical data".
   If necessary, replace the steering ball joint.

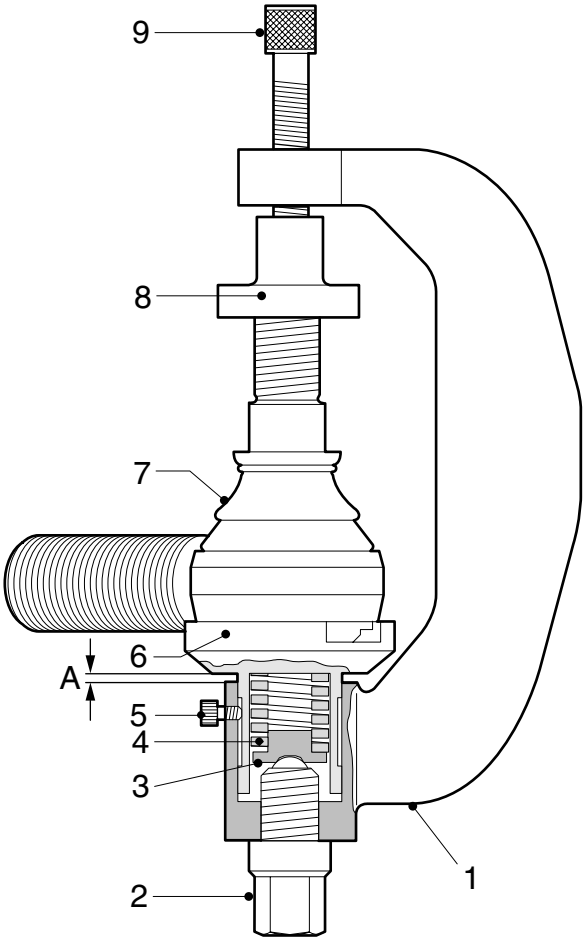

S700426

https://truckmanualshub.com/

3.20 CHECKING THE STEERING OIL LEVEL

1. Check the steering oil level when the engine is not running.

2. Clean the dipstick and its immediate surroundings to prevent any oil from entering the reservoir.

3. Check the fluid level in the reservoir using the dipstick.

4. The fluid level should be between the marks when the steering oil is "cold".

   Note:
   When the steering oil is at operating temperature, the level may be above the top mark on the dipstick.

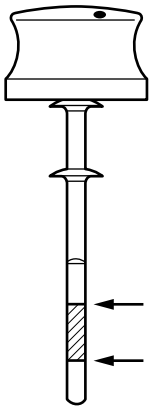

S7 00 676

3.21 CHECKING THE STEERING GEAR LINES AND CONNECTIONS

1. Condition of the pipes
   - Check all pipes for tightness and wear. Where supply pipes are subject to negative pressure, it is particularly likely that porous pipes will give rise to problems (air in the system).
   - If in doubt, always replace the line.

2. Pipe connections
   - Check every pipe connection for leaks.

3. Line route
   - Pipes must not be twisted during assembly. To facilitate checking this, a mark may have been provided on the hose (sometimes in the form of text).
   - Pipes should not touch other parts (to prevent chafing).
   - The course pipes follow should not include any sharp bends; this applies especially to the flexible suction and return pipes.
   - Pipes should not be pinched off by other components.

https://truckmanualshub.com/

3.22 INSPECTING THE COMPRESSOR LINE

Remain at a safe distance from rotating and/or moving components.

Note:
If excessive values are measured, the inside of the air-dryer housing and the silencer on the vent should first be cleaned. Then repeat the inspection.

1. Bring the engine up to operating temperature.
2. Bleed the system to a pressure below the cut-in pressure of the pressure regulator.
3. Remove compressor control line (1) which is hooked up to connection point 23 of the air dryer. Then seal the opening at connection point 23.
4. Build up pressure in the brake system (pressure regulator must cut out).
5. When the engine is not running, remove the safety valve from the compressor line and replace it with a test nipple.
6. Connect a pressure gauge (measuring range 0-16 bar) to the test nipple.
7. Start the engine and run it at maximum speed.

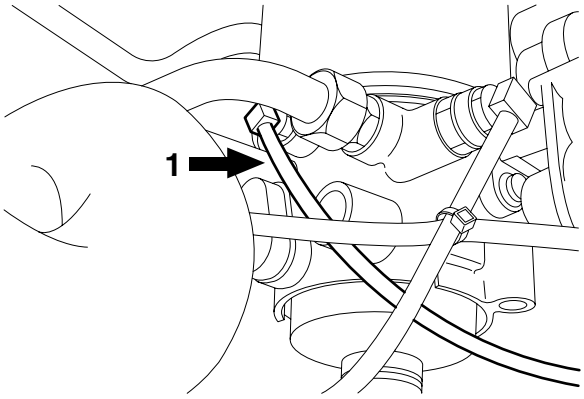

R600521

https://truckmanualshub.com/

8. The pressure gauge should indicate a pressure below 2 bar **with the pressure regulator switched off**. If the measured pressure exceeds the value indicated, the compressor line should be cleaned or replaced.

   Note:
   If the pressure measured is too high, there is excessive carbon deposit in the compressor line. This may be due to the poor condition of the compressor (oil consumption).

9. Run the engine at idling speed.

10. Bleed the brake system until the cut-in pressure of the pressure regulator has been reached and switch off the engine. The needle of the pressure gauge may not drop too quickly now. If necessary, check the system for air leakage. Pay particular attention to the compressor line and compressor.

11. Fit the safety valve.

12. Connect the compressor control line to connection point 23 of the air dryer.

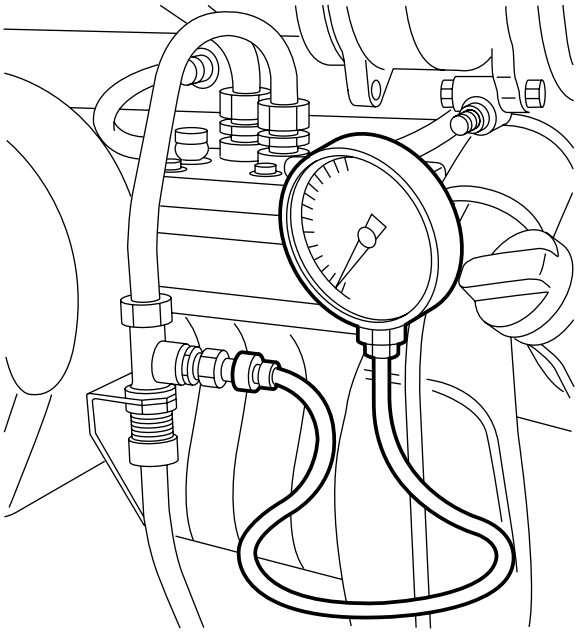

R600249

https://truckmanualshub.com/

3.23 CHECKING THE BRAKE COMPONENTS AND BRAKE SYSTEM FOR LEAKS

1. While operating the service brake, check whether any leaks occur in the brake system. If the brake system of a vehicle has been charged to the maximum pressure, it should generally be possible to drive the vehicle after a period of 16 hours of uninterrupted standstill, without having to first charge the brake system to adequate operating pressure. This implies a maximum pressure drop of approx. 0.4 bar per hour at normal system pressure.

   Note:
   Always connect auxiliary consumers and accessories to circuit 4.

© 200423

https://truckmanualshub.com/

3.24 INSPECTING THE AUTOMATIC BRAKE ADJUSTER

Brake drum

Inspection, brake adjuster travel

1. Measure the basic setting L1.
2. Measure the position when the brakes are applied, L2 (minimum brake system pressure 6 bar).
3. Calculate the brake stroke L3 = L2 - L1, see "Technical data". If the brake stroke differs from the specified value, take the following action:

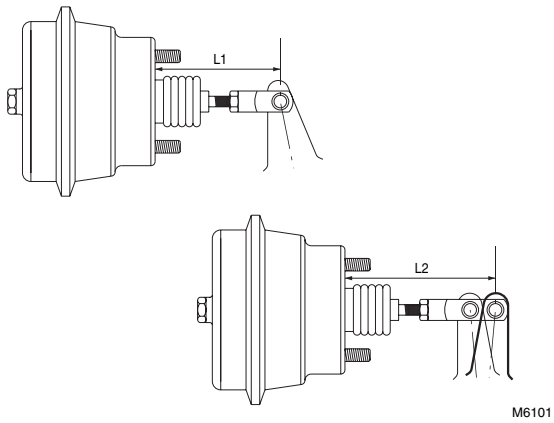

4. Check whether the control plate (1) is locked in respect of the fixed bracket.
5. If not, turn the control plate as far as possible (until the internal stop is felt) in the direction in which the brake adjuster is moved during braking.
6. Fix the control plate in **this** position using the attachment nut on the fixed bracket.
7. Check the internal slip using a torque wrench.

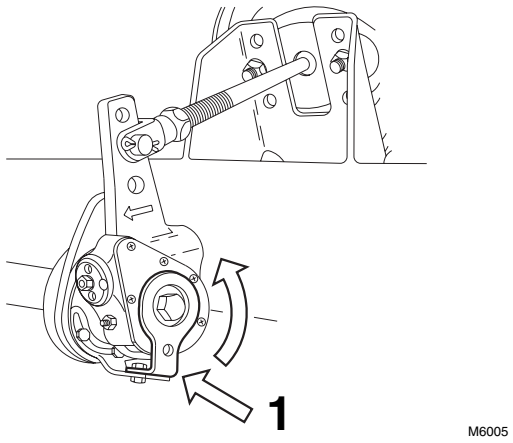

Inspection, internal slip

1. Make certain that there is sufficient pressure in the reservoirs (6.5 bar minimum).
2. Release the parking brake.
3. Fit a torque wrench on the hexagonal adjusting bolt and turn this counter-clockwise. For the permitted value, see "Technical data".
   If the specified reverse torque is **not** reached, but the worm shaft already turns at a **lower** value, the brake adjuster should be replaced.

https://truckmanualshub.com/

3.25 CHECKING THE BRAKE CYLINDER FASTENING

1. Check that the brake cylinders do not move during operation of the service brake.

© 200423

https://truckmanualshub.com/

3.26 INSPECTION, BRAKE LINING THICKNESS

Inspecting the brake lining thickness (FTP axle excepted)

1. Pressurise the air brake system (pressure regulator should cut out) and make sure that the vehicle's parking brake is not engaged.

2. Check the brake lining thickness through the openings in the dust cover.

3. Replace the brake lining if it is worn down to the wear indicator mark on the lining.

   Note:
   If in doubt about the amount of brake lining wear, release the brakes and remove the dust cover.

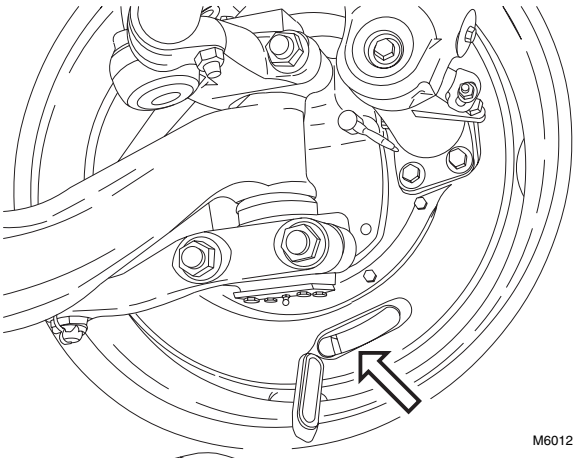

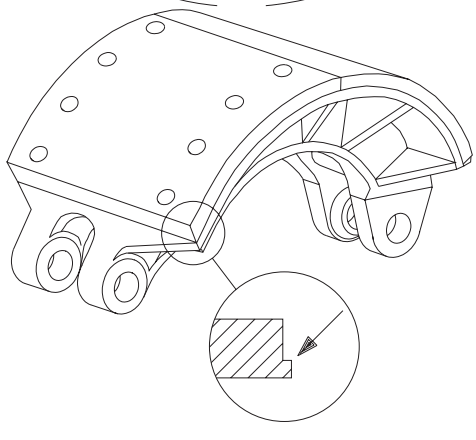

Inspecting the brake lining thickness (FTP axle)

1. Pressurise the air brake system (pressure regulator should cut out) and make sure that the vehicle's parking brake is not engaged.

2. Check the brake lining thickness through the openings in the dust cover.

3. Replace the brake lining if it is worn down to the wear indicator mark on the lining.

   Note:
   If in doubt about the amount of brake lining wear, release the brakes and remove the dust cover.

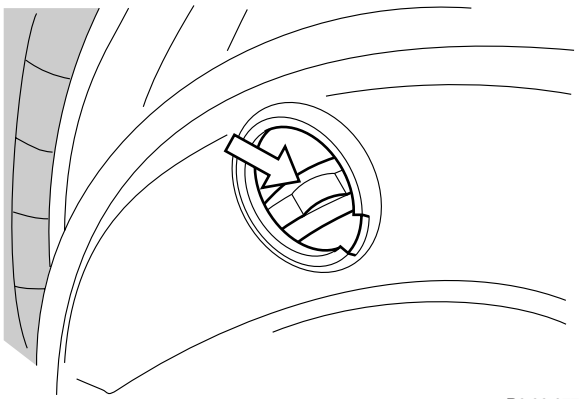

https://truckmanualshub.com/

3.27 CHECKING THE BRAKE SHOE THICKNESS AND BRAKE DISC

Version: Knorr SB 7000

1. Check whether guide bush (4) protrudes from guide sleeve (6) (C).
   If the guide bush (4) is level with the guide sleeve (6) (see detail A) the brake shoe and brake disc thicknesses should be checked.

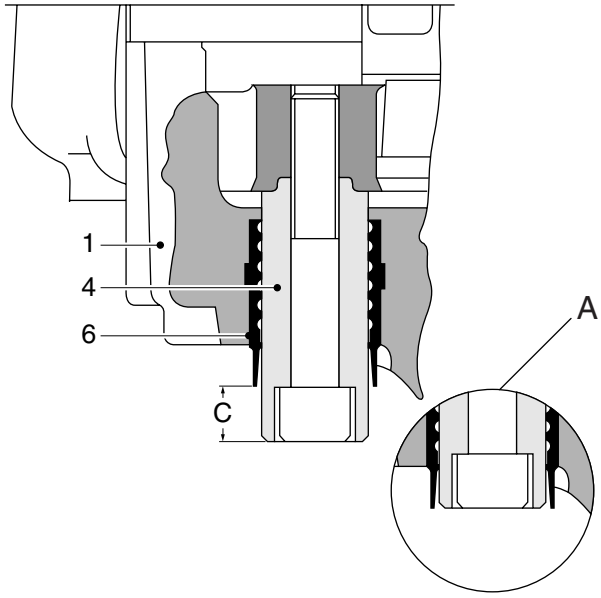

R600481

© 200423

https://truckmanualshub.com/

Version: Knorr SN 7000

1. Check the transition between the ribbed part of the rubber cover and the smooth part (A). If the smooth part is rolled inwards, the brake shoe and brake disc thicknesses must be checked.

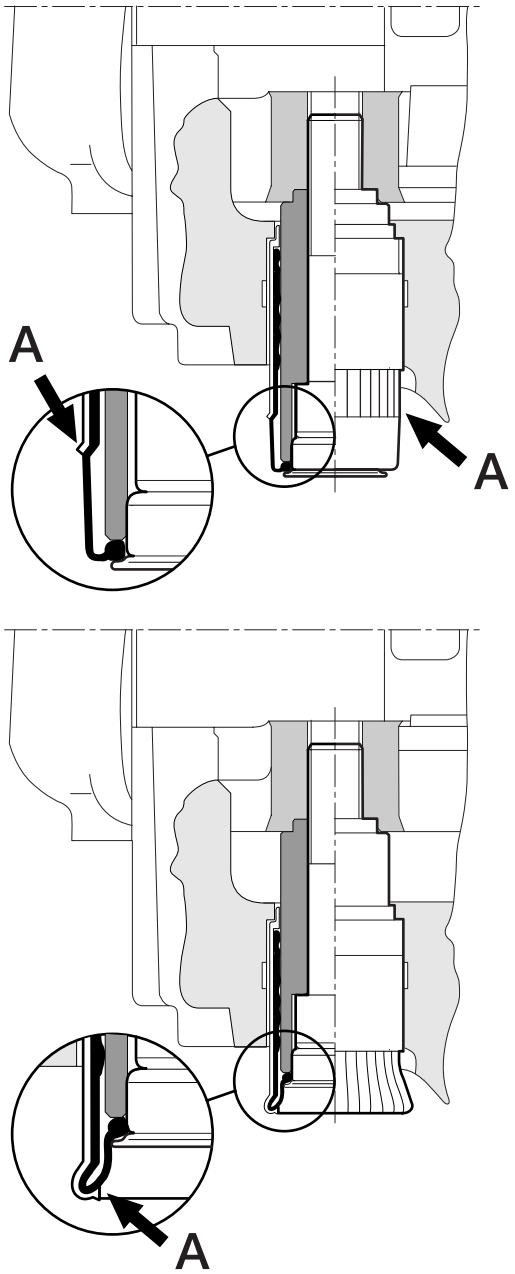

R600730

https://truckmanualshub.com/

3.28 CHECKING AND ADJUSTING LOAD-SENSING AIR-SUSPENSION CONTROL VALVE

Explanatory notes on instruction plate

This plate is mounted on the rear door pillar on the left-hand side of the vehicle. The information on the instruction plate relates to the axle loads, the delivery pressures and bellows pressures, following the sequence of the axles beneath the vehicle.

Therefore, "1" refers to the (first) front axle, "2" to the next following axle, etc.

If the vehicle is fitted with a relay valve in the front axle brake circuit, the box beneath the valve illustration will be blank. Throughout the column, a value of 8.1 bar has been filled in for "delivery pressure p2" under axle "1".

If the vehicle is equipped with a control valve instead of the relay valve mentioned, the box will contain a pressure ratio, e.g."i = 1 : 1.5". The "delivery pressure p2" of axle "1" then indicates variable readings.

These values can be used to check the brake pressure values of the front axle and to carry out the inspection/adjustment below at the same time. To do this, connect a pressure gauge to the test connection of one of the front axle brake cylinders.

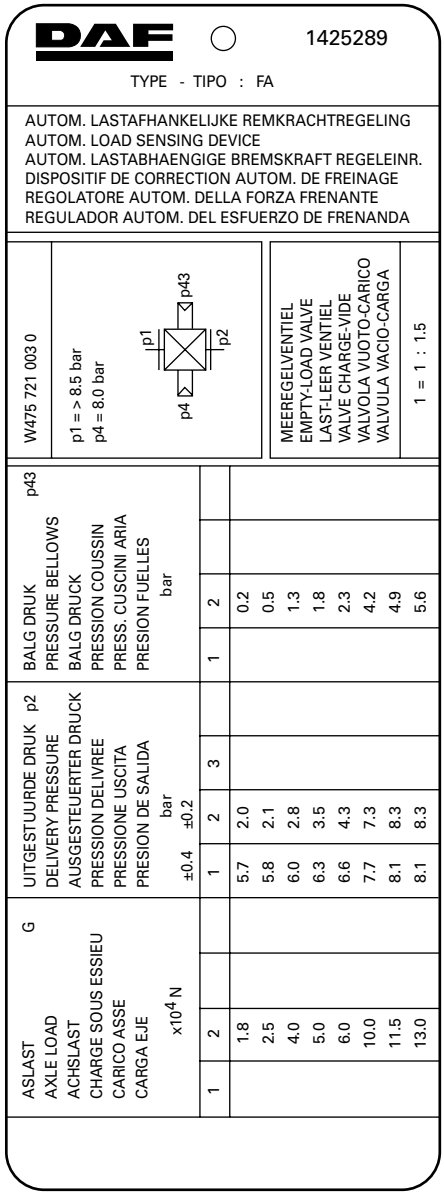

R600472

https://truckmanualshub.com/

Checking and adjusting load-sensing air-suspension control valve

1. Check that the correct valve has been fitted (see instruction plate).

2. Connect pressure gauge (4) to the test connection close to connecting point ¼ on the load-dependent control valve (input pressure).

3. Connect a pressure gauge (2) to the test connection on one of the brake cylinders (service brake connection) of the rear axle.

4. Connect a pressure gauge (43) with a pressure-reducing valve to the simulation connection near connections 41 and 42 of the load-sensing valve (= simulated adjustable bellows pressure).

5. Make sure that the reservoir pressure is higher than 8.5 bar throughout the testing process.

6. Set the simulated bellows pressure to its **second lowest** value, as indicated on the instruction plate.

7. Depress the brake pedal until pressure gauge (4) indicates a pressure of 8 bar.

8. Read the brake pressure of the rear axle on pressure gauge (2) and check that this brake pressure matches the one listed on the instruction plate in the table under "delivery pressure p2" to the rear axle.

9. If the measured value is not correct, depressurise connection (43) and, using a special tool (DAF no. 1329464), turn the adjusting nut (s):
   - braking pressure too high: unscrew the adjusting nut
   - braking pressure too low: screw in the adjusting nut.

   Note:
   When depressurising the simulation connection (pressure gauge 43), the air hose must remain connected to prevent the (actual) bellows pressure from accidentally activating the valve.
   The small socket head screw in the centre of the valve must not be adjusted.

10. Repeat the procedure described in point 6 until the measured braking pressure value is within the tolerance limits.

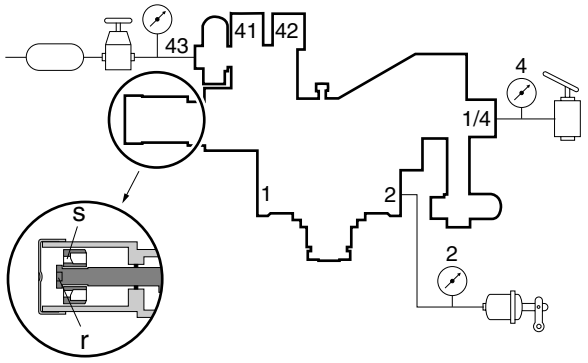

R600473

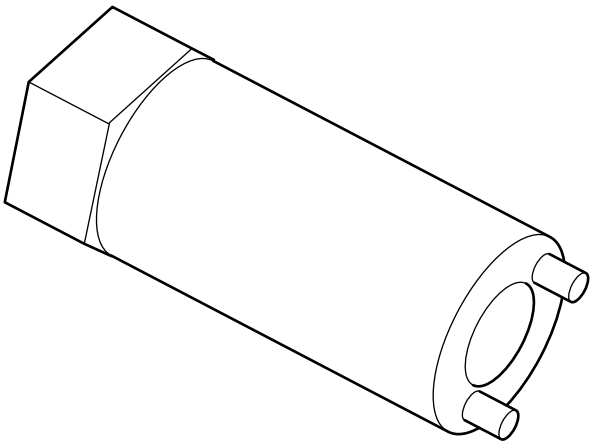
R600478

5

https://truckmanualshub.com/

11. Set the simulated bellows pressure to its **second highest** value, as indicated on the instruction plate.

12. Depress the brake pedal until pressure gauge (4) indicates a pressure of 8 bar.

13. Read the pressure gauge (2) and check that this braking pressure matches the pressure indicated in the table on the instruction plate.

14. If the measured reading is not correct, depressurise connection (43) and turn the adjusting bolt (r) using a Torx screwdriver:
    - braking pressure too high: screw in the adjusting bolt
    - braking pressure too low: unscrew the adjusting bolt.

    Note:
    When depressurising the simulation connection (pressure gauge 43), the air hose must remain connected to prevent the (actual) bellows pressure from accidentally activating the valve.
    The small socket head screw in the centre of the valve must not be adjusted.

15. If the adjusting bolt (r) has been turned, repeat the procedure from point 6.

https://truckmanualshub.com/

3.29 CHECKING AND ADJUSTING LOAD-SENSING LEAF-SPRING CONTROL VALVE

Explanatory notes on instruction plate
This plate is mounted on the rear door pillar on the left-hand side of the vehicle. The data on axle loads and delivery pressures are listed on the instruction plate in the sequence of the axles beneath the vehicle. Therefore, "1" refers to the (first) front axle, "2" to the next following axle, etc.

If the vehicle is fitted with a relay valve in the front axle brake circuit, the box beneath the valve illustration will be blank. Throughout the column, a value of 8.1 bar has been filled in for "delivery pressure p2" under axle "1".

If the vehicle is equipped with a control valve instead of the relay valve mentioned, the box will contain a pressure ratio, e.g."i = 1 : 1.5". The "delivery pressure p2" of axle "1" then indicates variable readings.

These values can be used to check the brake pressure values of the front axle and to carry out the inspection/adjustment below at the same time. To do this, connect a pressure gauge to the test connection of one of the front axle brake cylinders.

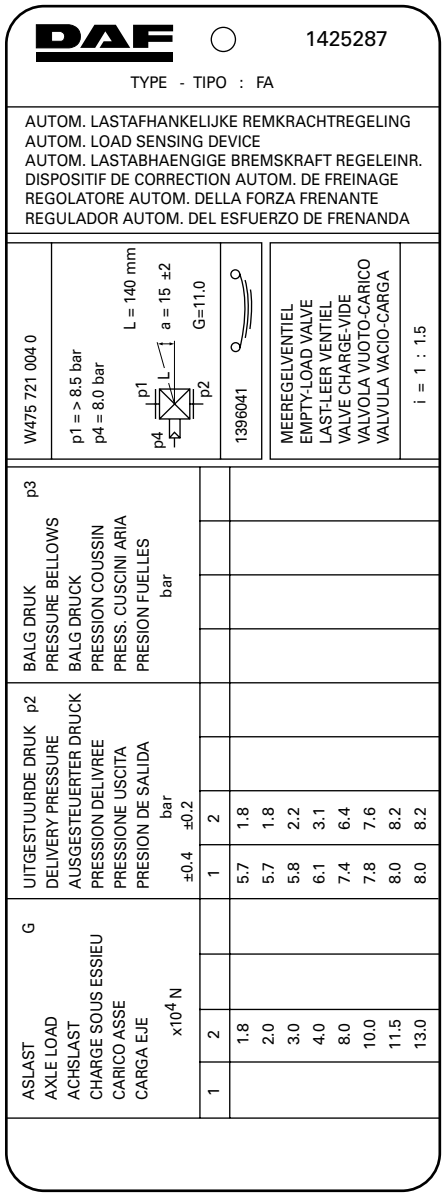

R600479

https://truckmanualshub.com/

Checking and adjusting load-sensing leaf-spring control valve

1. Measure the weight plus load of the rear axle(s).
2. Check the attachment of the control lever and its ease of operation.
3. Check whether the correct valve and the correct springs have been fitted (for information, see the instruction plate).
4. Check the length of the control lever (see "L" on the instruction plate).
5. Connect pressure gauge (4) to the test connection close to connecting point ¼ on the load-dependent control valve (input pressure).
6. Connect pressure gauge (2) to the test connection on one of the brake cylinders (service brake connection) of the rear axle.
7. Make sure that the reservoir pressure is higher than 8.5 bar throughout the testing process.
8. Depress the brake pedal until gauge (4) indicates a reading of 8 bar.
9. Read the brake pressure of the rear axle from the pressure gauge (2) and check that this value matches the one listed on the instruction plate in the table under "delivery pressure p2" to the rear axle.

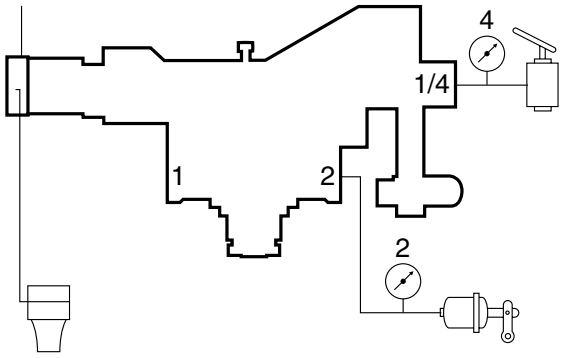

R600562

https://truckmanualshub.com/

10. Correct, if necessary, the brake pressure by moving the rubber sleeve (1) in relation to the vertical connecting rod. **On no account** change the length L of the (horizontal) control lever.

11. Remove the rubber sleeve (2) and move the control lever towards maximum load. Check that the delivery pressure is now allowed through with little or no reduction.

Note:
The small socket head screw in the centre of the valve must not be adjusted.

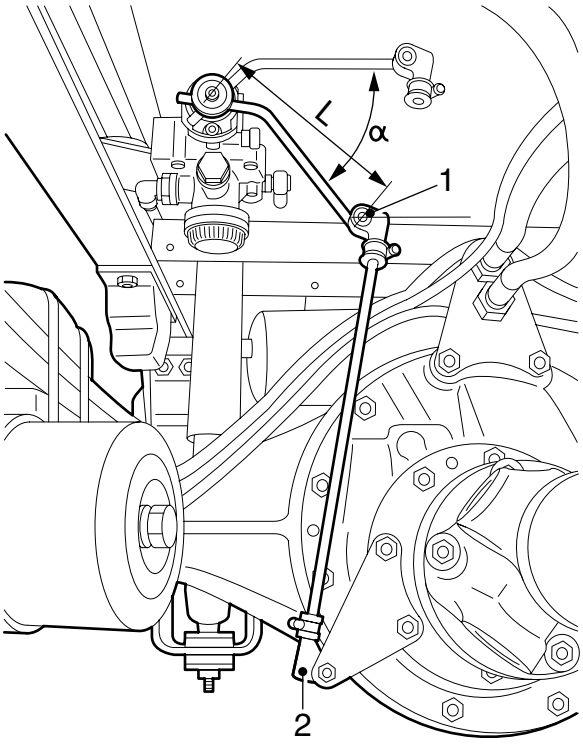

R600781

https://truckmanualshub.com/

3.30 INSPECTION, FLUID LEVEL OF HYDRAULIC TRAILING-AXLE DEVICE

1. Make sure that the trailing axle wheels are fully lowered and on the ground.

2. Check the fluid level. The liquid level must be between the "min." and "max." level mark. If necessary, top up.

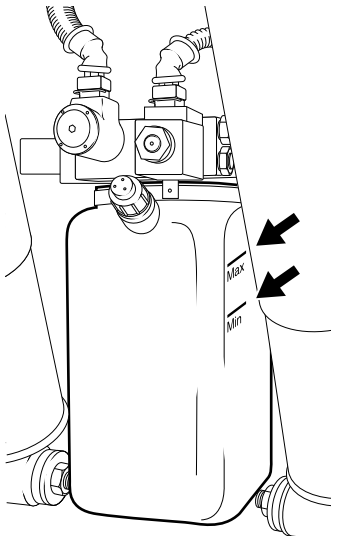

A8 00 282

5

3.31 INSPECTION, PIVOT POINTS OF THE HYDRAULIC TRAILING-AXLE DEVICE

1. Check the play on the pivot points when operating the hydraulic trailing axle.

3.32 CHECKING THE DIFFERENTIAL FOR LEAKS

1. Visually inspect the differential for leaks.

https://truckmanualshub.com/

3.33 CHECKING THE OPERATION OF THE DIFFERENTIAL LOCK

1. Jack up the rear axle and support the axle on stands.

2. Bring the air system to operating pressure.

3. Engage the differential lock. The warning indicator should now be active.

4. Check that there is a "rigid" connection between the driven wheels.

5. Disengage the differential lock. The warning light should now go out and the "rigid" connection between the driven wheels should be broken.

https://truckmanualshub.com/

3.34 CHECKING THE DRIVE SHAFT PLAY

1. Check the universal joints and suspension bearing for play and damage.

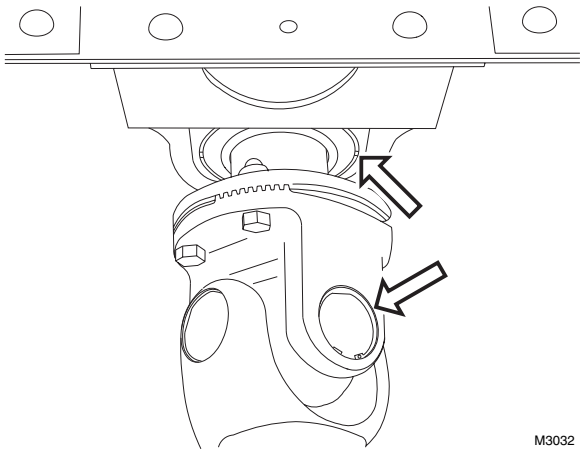

2. Check the sliding joint for axial and radial play.

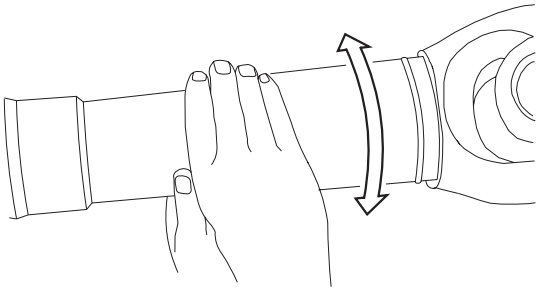

3. There must be no clearly perceptible play on the universal joints, suspension bearing and the sliding joint.

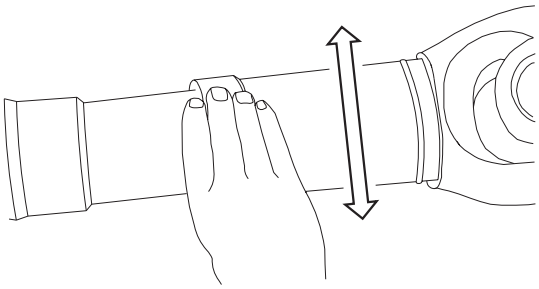

https://truckmanualshub.com/

3.35 INSPECTING THE FIFTH WHEEL

1. Check the attachment of the fifth wheel.

2. Check the play of the closing gear of the fifth wheel.

   Note:
   For maximum play values, consult the manufacturer's instructions or the legal requirements.

3. In the case of fifth wheels with a plastic sliding plate (1), check for wear. The plastic sliding plate (1) must not lie flush with the top of the attachment bolts.

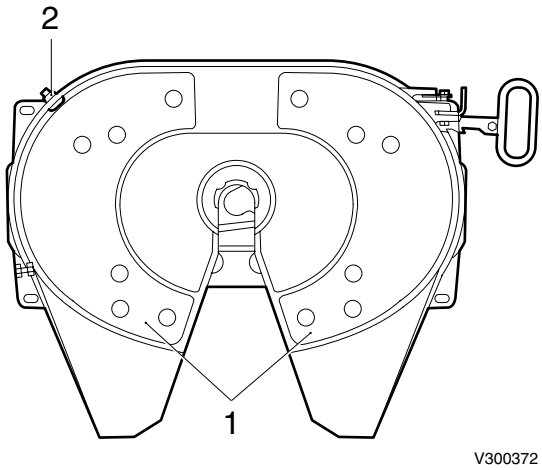

5

https://truckmanualshub.com/

3.36 CHECKING THE TRAILER COUPLING

1. Check the vertical play of the arched pin.
2. Check the radial play of the arched pin.

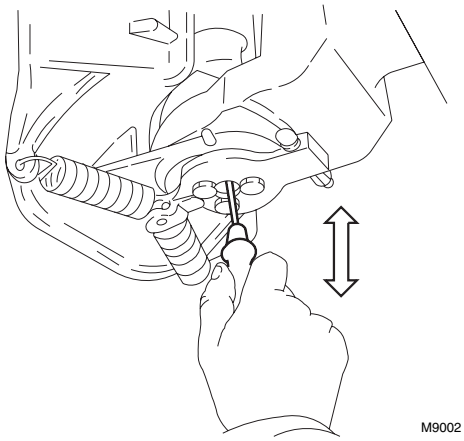

3. Check the vertical and horizontal play of the coupling jaw.

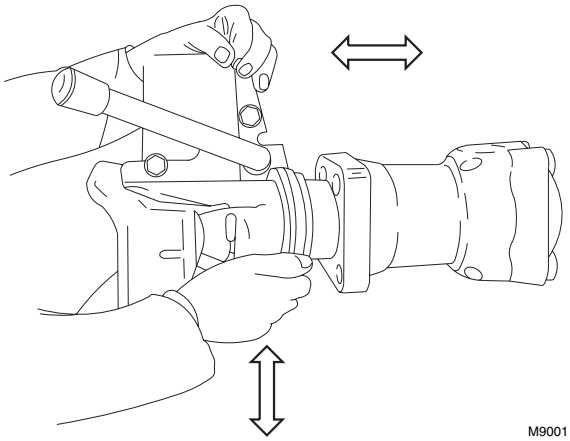

4. Check the diameter of the arched pin.
5. Check the attachment of the trailer coupling and the rear cross member.

   Note:
   For maximum play values, consult the manufacturer's instructions or the specified legal requirements.

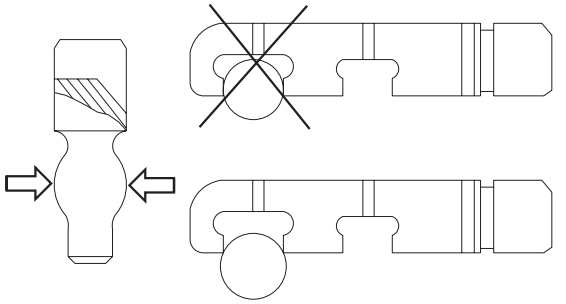

https://truckmanualshub.com/

3.37 CHECK THE SUPERSTRUCTURE ATTACHMENT

1. Check that all attachment bolts are in place.

2. Visually check the attachment of the superstructure for faults. See the DAF superstructure instructions.

https://truckmanualshub.com/

3.38 CHECKING THE CLUTCH FLUID LEVEL

Hydraulic fluid is toxic and can therefore have a damaging effect on your health.
Hence avoid any direct or indirect physical contact.
As hydraulic fluid is also a corrosive fluid, it may damage the paintwork of the vehicle.
Avoid any contact between hydraulic fluid and paintwork.
Always use new and clean hydraulic fluid which has been kept in a sealed container and meets the specifications.
Hydraulic fluid which has absorbed water (from the ambient air) may have an adverse effect on the operation of the clutch system.
Avoid any contact with mineral oil. Even one drop of mineral oil in the system will damage the seals.

1. Check that the fluid level is between the (A) and (B) marks when the cab is in the driving position.

2. Mark (C) applies to fully tilted cabs.

3. Hand tighten the reservoir sealing cap.

   Note:
   There is an air bleed vent in the cap that may be closed if the cap is tightened with too great a force.
   If the air bleed vent is closed off, residual pressure will build up in the system.

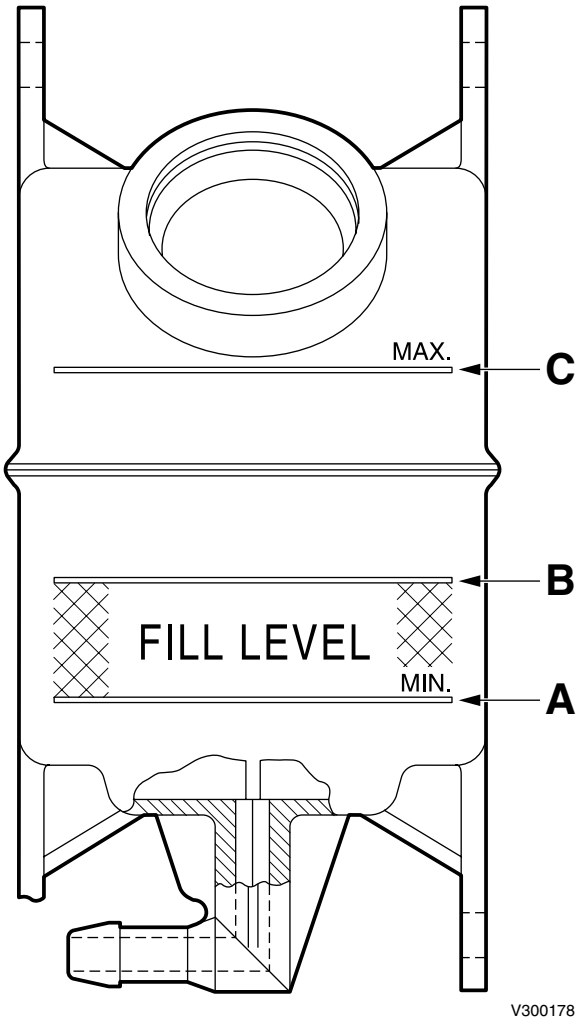

https://truckmanualshub.com/

3.39 INSPECTION AND ADJUSTMENT, CLUTCH WEAR INDICATOR

Checking the clutch wear indicator

1. Visually check that the lock nut (12) makes contact with the housing. If the lock nut (12) no longer makes contact with the housing, the clutch plate is approximately 80% worn.

   Note:
   It is not permissible to remove the circlip, or to move the circlip over the pin. This is to prevent inaccurate indication.

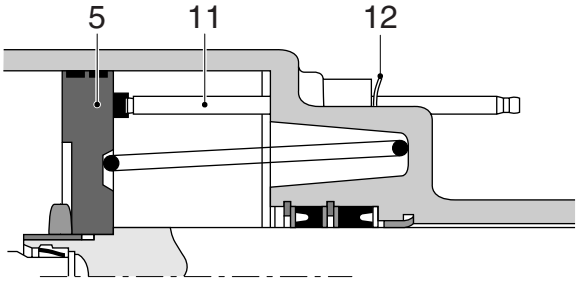

V300355

Adjusting the clutch wear indicator

1. Press the circlip (12) against the clutch servo.

   Note:
   It is not permissible to remove the circlip, or to move the circlip over the pin. This is to prevent inaccurate indication.

5

https://truckmanualshub.com/

3.40 CHECKING THE GEARBOX FOR LEAKS

1. Visually check the gearbox for leaks.

3.41 CHECKING THE CENTRAL AXLE OF THE TANDEM AXLE UNIT FOR LEAKS

1. Visually inspect the central axle for leaks.

3.42 INSPECTION OF OIL LUBRICATED WHEEL HUBS FOR LEAKS

1. Check the wheel hubs for leaks.

   Note:
   If leaks occur in the oil lubricated wheel hubs, the wheel hub should be refilled to the correct level - once the leak has been repaired, see chapter: "Draining and filling".

3.43 CHECKING THE GREASED WHEEL HUBS FOR LEAKS

1. Check the wheel hubs for leaks.

Note:
If there are serious grease marks on the brake disc side of the wheel hub, this could indicate excessive use of assembly grease on new or recently assembled wheel hubs.
On wheel hubs that have not been assembled recently, serious grease marks could indicate a leak in the seal (1). This means that the entire hub unit must be replaced.
Serious oil leakage on the driven rear axle hubs could indicate that the O-ring (2) is not sealing correctly.
If there is an oil leak the hub unit should be dismantled to remedy the problem.

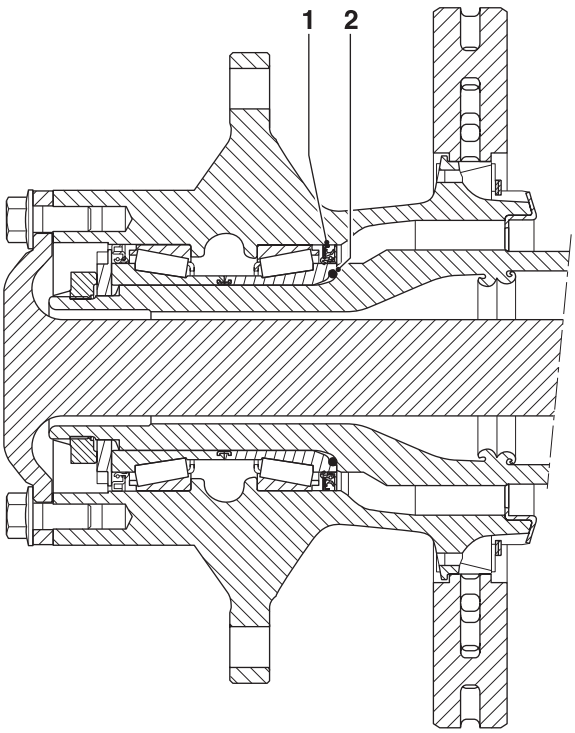

G0 00 271

https://truckmanualshub.com/

3.44 RETIGHTENING THE HUB NUT OF LEADING REAR AXLE 09N044 (FTP-TYPE VEHICLES)

1. Remove the hub cap (4) using special tool (DAF no. 1329498).
2. Lift the leading rear axle.
3. Release the brakes.
4. Remove the split pin (3) from the hub nut (2).
5. Tighten the hub nut to the specified tightening torque, see "Technical data". Turn the wheel at least 5 revolutions in clockwise direction and then 5 revolutions in anti-clockwise direction when fixing the hub nut.
6. Check that the wheel rotates smoothly.
7. Turn back the hub nut until the split pin can be fitted. Fit a new split pin.

   Note:
   There are 2 split pin holes in the axle journal. Select the split pin hole where the hub nut needs to be turned back least.

8. Fit the hub cap. Tighten the hub cap to the specified torque using the special tool (DAF no. 1329498), see "Technical data".
9. Adjust the brakes.

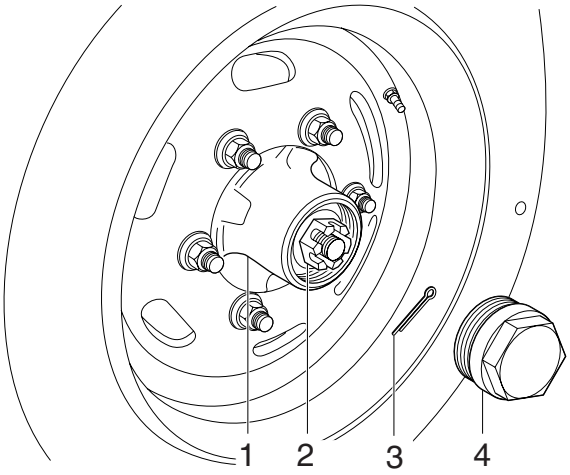

S7 00 657

5

https://truckmanualshub.com/

3.45 INSPECTION AND ADJUSTMENT, WHEEL BEARING PLAY, 09N044 LEADING REAR AXLE

Checking the wheel bearing play

1. Remove the hub cap using special tool (DAF no. 1329498).
2. Lift the leading rear axle and support it properly.
3. Release the brakes.
4. Fit a dial gauge; let the stylus rest against the axle journal.
5. Push and pull on the wheel. Read the value off the gauge. Compare this reading to the specified value. See "Technical data". If the reading falls outside the tolerance range, the wheel bearing play should be re-adjusted.
6. Fit the hub cap. Tighten the hub cap to the specified torque using the special tool (DAF no. 1329498), see "Technical data"'.
7. Adjust the brakes.

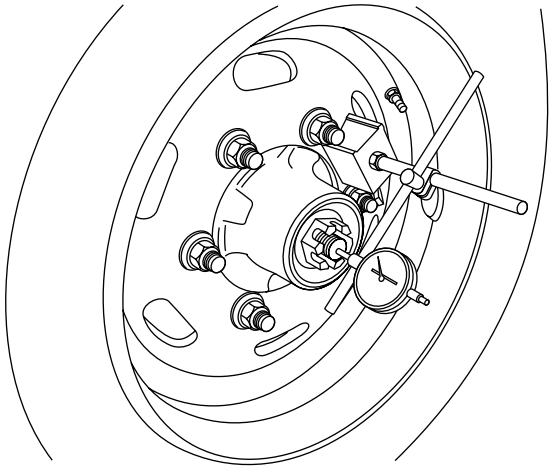

S7 00 635

Adjusting the wheel bearing play

1. Remove the hub cap (4) using special tool (DAF no. 1329498).
2. Lift the leading rear axle.
3. Release the brakes.
4. Remove the split pin (3) from the hub nut (2).
5. Tighten the hub nut to the specified tightening torque, see "Technical data". Turn the wheel at least 5 revolutions in anti-clockwise direction and then 5 revolutions in clockwise direction when fixing the hub nut.
6. Check that the wheel rotates smoothly.
7. Turn back the hub nut until the split pin can be fitted. Fit a new split pin.

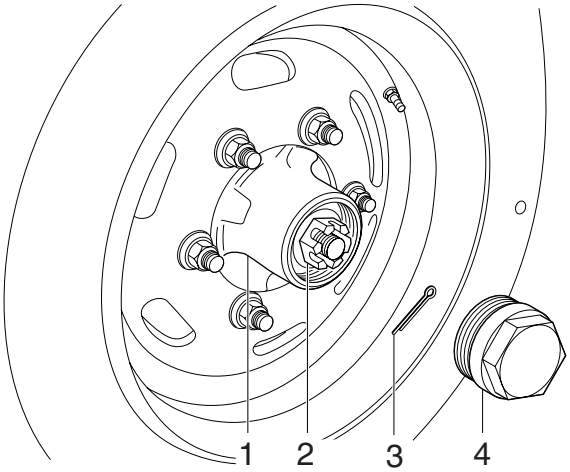

S7 00 657

Note:
There are 2 split pin holes in the axle journal. Select the split pin hole where the hub nut needs to be turned back the smallest distance.

https://truckmanualshub.com/

8. Check the wheel bearing play. Check the bearings for wear if the wheel bearing play remains too large after adjustment.

9. Fit the hub cap. Tighten the hub cap to the specified torque using the special tool (DAF no. 1329498), see "Technical data"'.

10. Adjust the brakes.

https://truckmanualshub.com/

3.46 CHECKING THE SHOCK ABSORBERS FOR ATTACHMENT AND LEAKS

1. Visually inspect the attachment of the shock absorbers and for any leaks.

3.47 CHECKING THE CONDITION AND ATTACHMENT OF SPRING LEAVES, SPRING CLAMPS AND U-BOLTS

Checking U-bolts

1. Visually inspect the condition and attachment of the U-bolts.

2. When retightening the U-bolt nuts, the attachment nut **must not be slackened first** and then tightened to a specific torque, see "Technical data".

3.48 CHECKING THE HINGE POINTS AND AXLE SUSPENSION FASTENING (AIR SUSPENSION)

Torque rod

1. Check the attachment of the torque rod and torque rod supports.

2. Check the pivots of the torque rod for wear and play.

Stabiliser bar

1. Check the attachment of the stabiliser bar and stabiliser bar support.

2. Check the pivots of the stabiliser bar for wear and play.

Ball joints three-point fixation

1. Check the attachment of the ball joints and three-point fixation support.

2. Check the ball joint housing for surface cracks.

3. Check the dust cover for damage.

https://truckmanualshub.com/

3.49 CHECKING THE AIR SUSPENSION BELLOWS

1. Raise the chassis to driving height using the remote control.
2. Clean the air bellows using a cleaning cloth or a soap solution, if required.
3. Check the air bellows for cracks and damage. If there are any cracks or damage through which the webbing is visible, the air bellows should be replaced.
4. Check the air bellows, bellows seating and air line connections for leaks.
   Check that the air bellows are not chafing against air lines, etc. when in the driving position.

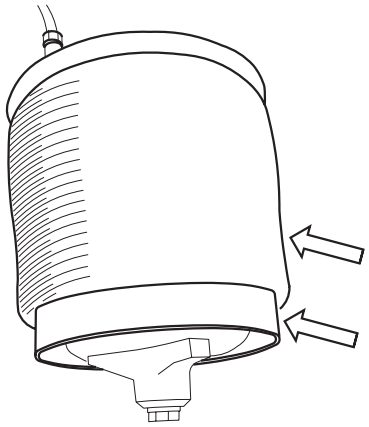

3.50 CHECKING THE OPERATION OF THE AUTOMATIC LUBRICATION SYSTEM

1. Check the system for line fractures and operation of the jets.
2. Check whether all lubricating points are lubricated.
3. Check the lubricant level in the reservoir. If necessary, top up the reservoir, see chapter "Draining and filling".

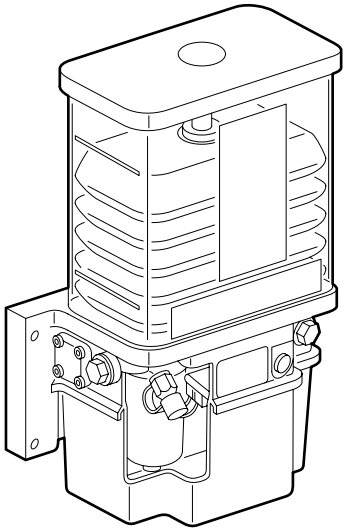

https://truckmanualshub.com/

5

https://truckmanualshub.com/

4. REMOVAL AND INSTALLATION

4.1 REMOVAL AND INSTALLATION, INTERIOR FILTER ELEMENT

Removing interior filter

1. Open the grille.
2. Push the locknut on the filter casing to one side and remove the filter element.

Fitting interior filter

1. Fit the filter element.
2. Push the filter element into the locknut on the filter casing.
3. Close the grille.

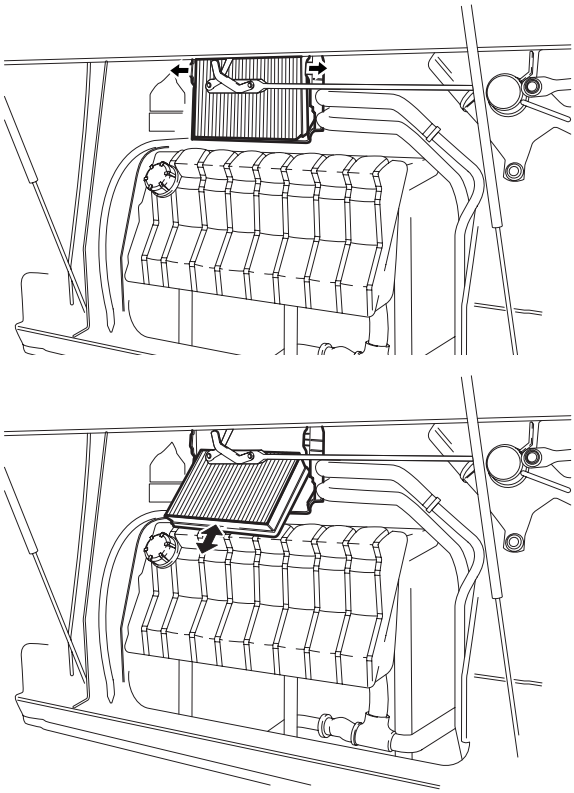

K1 01 033

https://truckmanualshub.com/

4.2 REMOVAL AND INSTALLATION, AIR FILTER ELEMENT

Removing the air filter element

1. Loosen all the clamping brackets (1) of the air filter cover (2).
2. Remove the air filter cover (2).
3. Remove the air filter element (3).
4. Clean the inside of the air filter housing and the air filter cover.

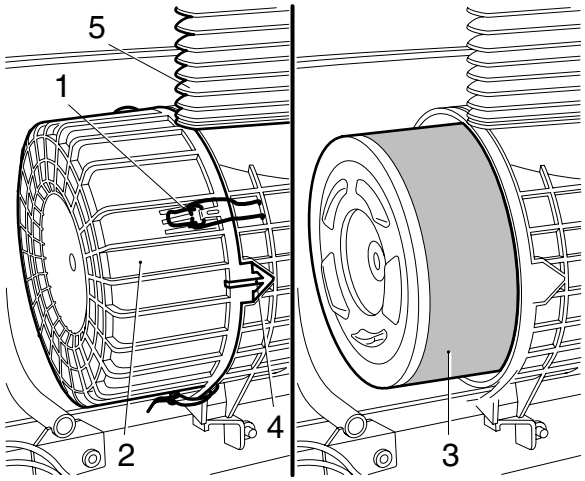

i400443

5. When replacing the air filter element, reset the air filter indicator, if fitted, by pressing the button on the indicator.

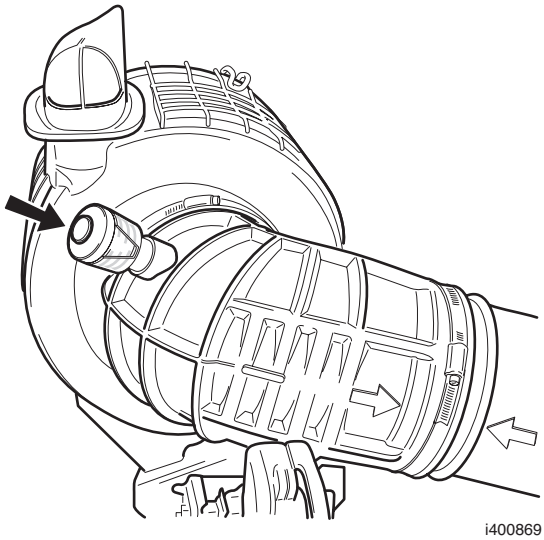
i400869

https://truckmanualshub.com/

Installing the air filter element

1. Fit the air filter element (3) in the air filter housing.
2. Fit the air filter cover. Note the arrow (4) on the air filter cover (2).
3. Fit all the clamping brackets (1).
4. Check that the flexible sealing bellows (5) on the air intake is not damaged. Replace if necessary.

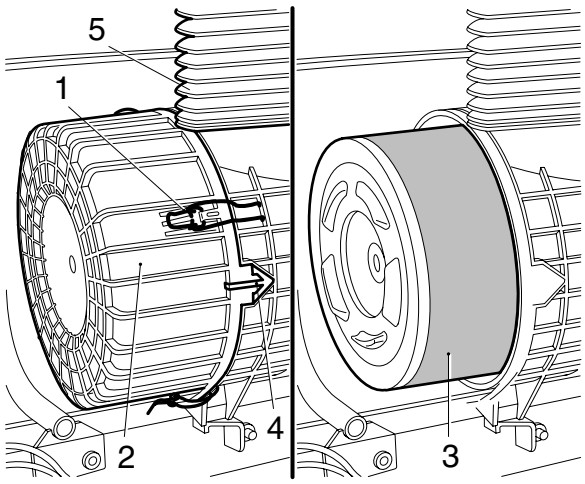

i400443

https://truckmanualshub.com/

4.3 REMOVAL AND INSTALLATION, COOLANT FILTER

When the coolant is hot, there is an overpressure in the cooling system. Carefully remove the filler cap to release the overpressure.
Do not remove the filler cap when the engine is running.
Coolant is a toxic fluid. Contact with the skin should therefore be avoided.
In the event of contact with the skin: remove the liquid with paper or a cloth, wash with soap and water. If irritation persists, consult a doctor.
If swallowed: DO NOT induce vomiting. Rinse mouth, drink two glasses of water and consult a doctor.
In the event of inhalation: get fresh air and rest.
In order to avoid damaging the cylinder block, do not top up a warm engine with coolant.

Removing the coolant filter

1. Place a tray beneath the coolant filter to collect any escaping coolant.
2. Remove the filler cap from the expansion tank.
3. Turn the shut-off valve (1) clockwise to the "C" position.
4. Remove the coolant filter by turning it counter-clockwise.

Installing the coolant filter

1. Clean the sealing face of the coolant filter.
2. Apply a small amount of coolant to the sealing ring of the coolant filter.
3. Fit the coolant filter so that the sealing ring makes contact. Then tighten the filter by hand ½ to ¾ of a turn.
4. Turn shut-off valve (1) anti-clockwise to the "O" position.
5. Fit the filler cap on the expansion tank.
6. Run the engine and check that the coolant filter seals correctly.
7. Check the coolant level.

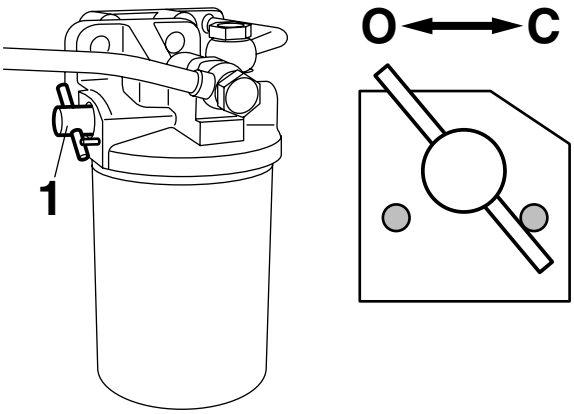

M200372

https://truckmanualshub.com/

4.4 REMOVAL AND INSTALLATION, ENGINE OIL FILTER

To prevent skin injury, avoid unnecessary contact with the drained engine oil.

Removing the engine oil filter

1. Place a tray beneath the engine oil filter.
2. Unscrew the cap (2) a few turns until the engine oil starts to flow out of the filter.
3. Remove cap (2) when the engine oil filter is empty.
4. Remove the filter element (3) from the filter housing (1).

Installing the engine oil filter

1. Replace the sealing ring in the cap (2)
2. Lightly lubricate the sealing ring with engine oil.
3. Fit a new filter element (3) in the filter housing (1).
4. Fit the cap (2) and tighten to the specified torque, see main group "Technical data".

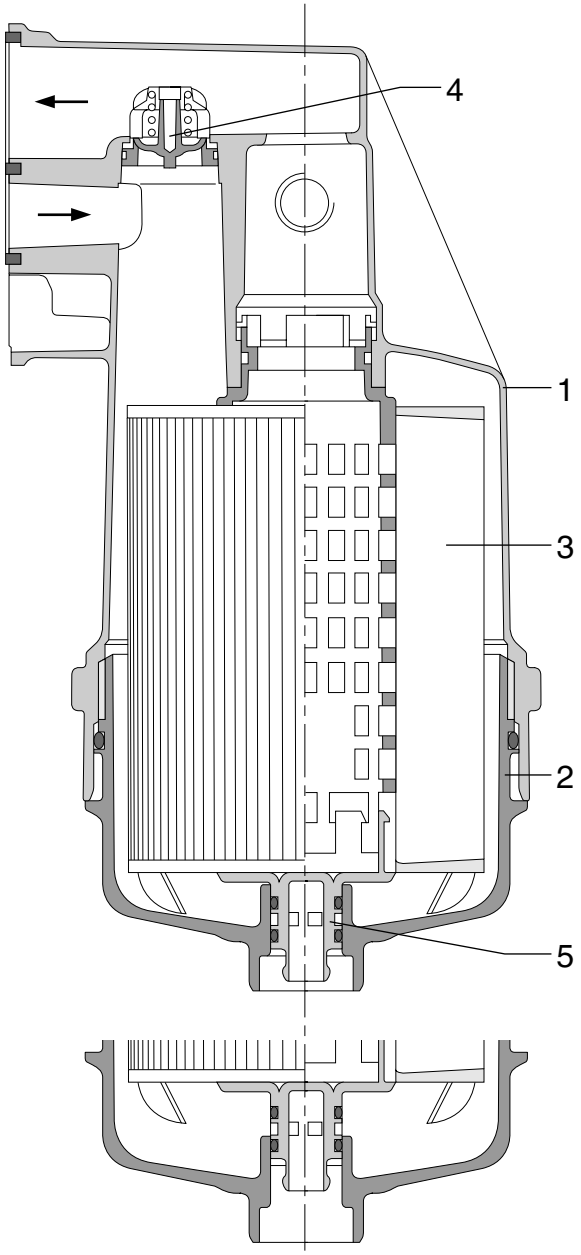

M201049

https://truckmanualshub.com/

4.5 REMOVAL AND INSTALLATION, CENTRIFUGAL FILTER ROTOR

To prevent skin injury, avoid unnecessary contact with the drained engine oil.

Removing the centrifugal filter rotor

1. Clean the cap (3) and the area around it.
2. Remove the central bolt (4) and cap (3).
3. Remove the rotor (2) from the cap (3).

Installing the centrifugal filter rotor

1. Clean the interior of the cap (3).
2. Check the central bolt (4) for damage.
3. Replace the sealing ring (5).
4. Fit the rotor (2) in the cap (3).
5. Lightly oil the sealing ring (5) with engine oil and fit the cap (3).
6. Tighten the central bolt (4) to the specified tightening torque, see main group "Technical data".
7. Start the engine and check for leakage.
8. Inspect the engine oil level.

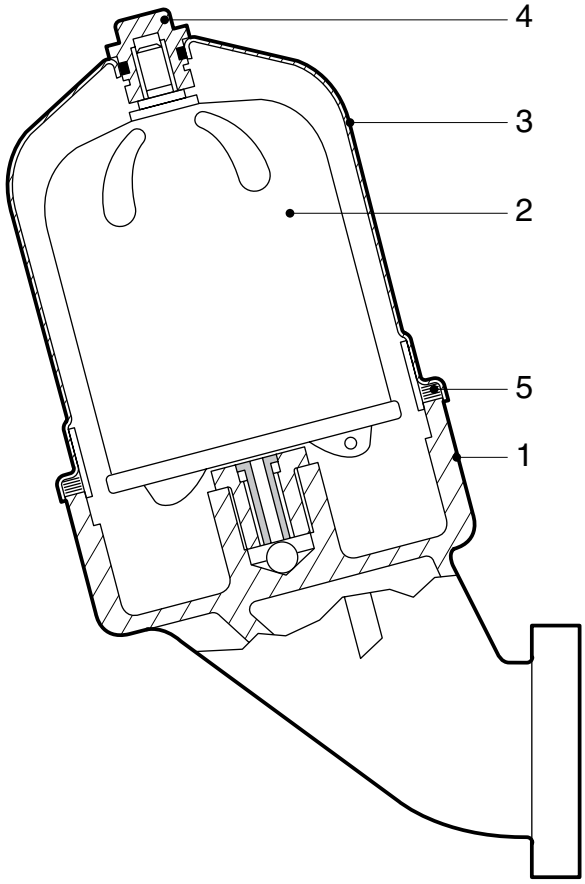

M200526

https://truckmanualshub.com/

4.6 REMOVAL AND INSTALLATION, FUEL FILTER ELEMENT

When removing the fuel filter, a quantity of fuel will escape. Collect the fuel to avoid the risk of fire.

Removing the fuel filter element

1. Remove the cover together with the fuel filter element from the filter housing.

   Note:
   The fuel filter element is a disposable filter, and may not be cleaned and reused. Dispose of the filter as chemical waste.

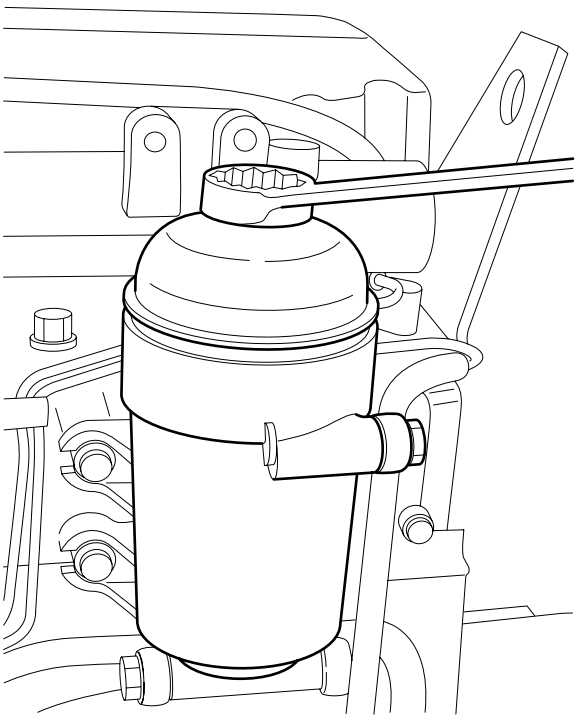

i 400444

https://truckmanualshub.com/

Fitting the fuel filter element

1. Replace the cover O-ring.
2. Fit the fuel filter element in the cover
3. Fit the cover with fuel filter element. Tighten the filter cover to the specified torque. See "Technical data".
4. Pump for approximately 1 minute using the primer pump to partially fill the filter housing with fuel.
5. Start the engine and run it at idling speed for a few minutes; this will allow any air in the filter housing to escape.
6. If the motor will not start up or runs very erratically, the fuel system must be bled, see "Draining and filling".
7. Check the fuel system for leaks.

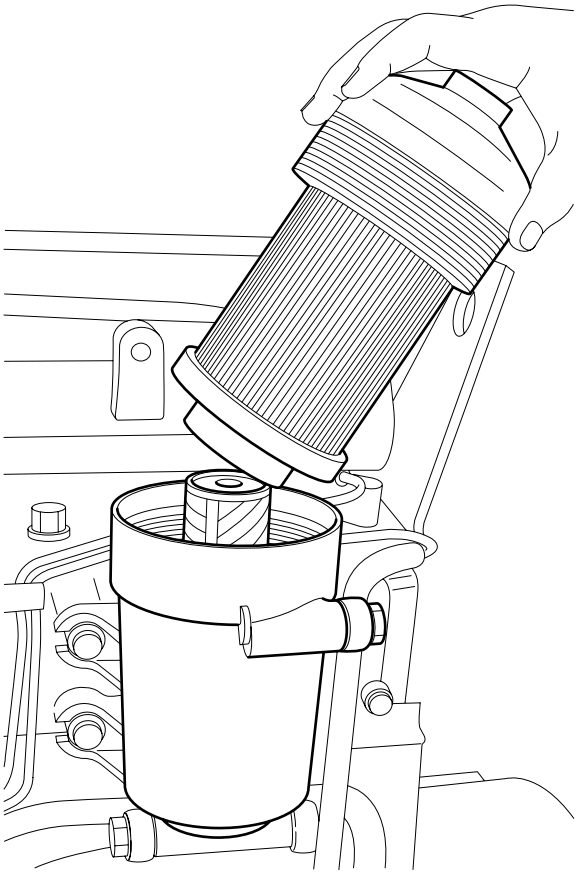

i 400445

https://truckmanualshub.com/

4.7 REMOVAL AND INSTALLATION, FUEL PREFILTER/WATER SEPARATOR FILTER ELEMENT

When removing the fuel prefilter/ water separator, a quantity of fuel will escape. Collect the fuel to avoid the risk of fire.

Version: Racor

Removing the fuel prefilter/water separator filter element

1. Drain the fuel from the filter element by unscrewing the bleed plug (2) and opening the drain plug (8).
2. If fitted, disconnect the water sensor (6) and the heating element (7) connectors.
3. Remove the filter element (4) and the bottom cover (5). Clean the O-ring seal.

Installing the fuel prefilter/water separator filter element

1. Apply a film of engine oil to the O-ring and the new sealing ring.
2. Fit the bottom cover (5) onto the new filter element (4).
3. Fit the bottom cover (5) together with the new filter element (4) to the filter housing (3).
4. Hand-tighten the new filter.
5. If fitted, attach the water sensor and heating element connectors.
6. Check whether the drain plug (8) is tight.
7. Open the air-bleeder plug (2) a couple of turns.
8. Operate the primer pump (1) until fuel comes out of the air-bleeder plug.
9. Close the air-bleeder plug (2).
10. Start the engine and check for leaks. If necessary, retighten the filter element (4) by hand.

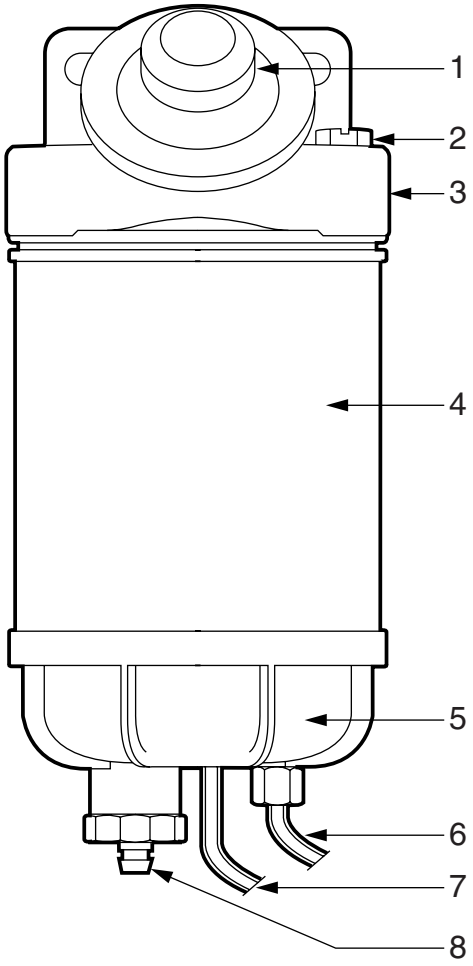

i400356

5

https://truckmanualshub.com/

Version: Mann + Hummel

Removing the fuel prefilter/water separator filter element

1. Drain the fuel from the filter element by unscrewing the bleed plug (2) and opening the drain plug (6).
2. If fitted, unplug the connectors of the water sensor and the heating element.
3. Remove the filter element (4) together with the bottom cover (5) and clean the O-ring seal.

Installing the fuel prefilter/water separator filter element

1. Apply a film of engine oil to the O-ring and the new sealing ring.
2. Fit the bottom cover (5) onto the new filter element (4).
3. Fit the bottom cover (5) together with the new filter element (4) to the filter housing (3).
4. Hand-tighten the new filter.
5. If fitted, attach the water sensor and heating element connectors.
6. Check whether the drain plug (6) is tight.
7. Open the air-bleeder plug (2) a couple of turns.
8. Operate the primer pump (1) until fuel comes out of the air-bleeder plug.
9. Close the air-bleeder plug (2).
10. Start the engine and check for leaks. If necessary, retighten the filter element (4) by hand.

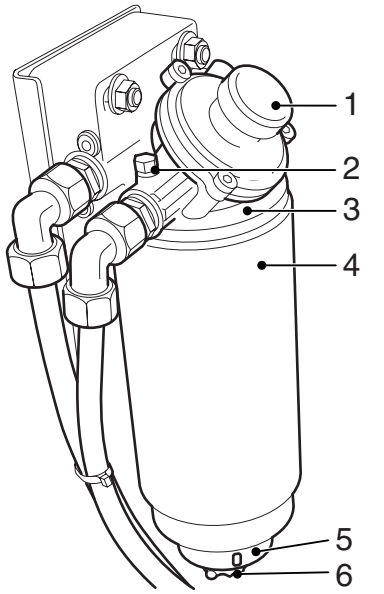

G0 00 266

https://truckmanualshub.com/

4.8 REMOVAL AND INSTALLATION, VALVE COVER

When the engine or parts thereof are opened, dirt may penetrate. This may cause serious damage to the engine. Therefore, the engine should be cleaned thoroughly before any parts are opened.

Removing the valve cover

1. Clean the area around the valve cover.
2. Remove the attachment bolts from the valve cover.
3. Remove the valve cover and the valve cover gasket.

Installing the valve cover

1. Clean the sealing surface of the valve sleeve and the valve cover.
2. Fit the valve cover using a new valve cover gasket.
3. Fit the attachment bolts of the valve cover and tighten them to the specified torque. See the main group "Technical data".

https://truckmanualshub.com/

4.9 REMOVAL AND INSTALLATION, STEERING GEAR FILTER ELEMENT

Version with plastic reservoir

Removing the steering gear filter element

1. Clean the reservoir cover, so that absolutely no dirt can get into the reservoir.
2. Remove the cover (3).
3. Rotate the filter holder (5) a quarter turn. Slowly remove the filter holder (5) together with the filter element (6) from the reservoir (1).

   Note:
   The filter holder and filter element must be removed from the reservoir (1) with care so that no dirt remains in the reservoir (1).
4. Remove the filter element (6) from the filter holder (5).

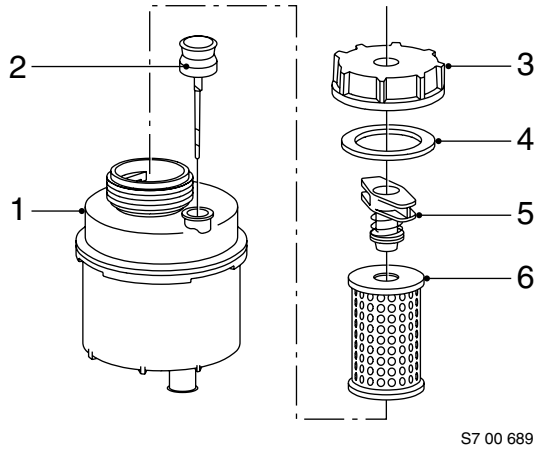

Installing the steering gear filter element

1. Fit a new filter element (6) in the filter holder (5).
2. Fit the filter holder (5) together with the filter element (6) in the reservoir (1) and rotate the filter holder (5) a quarter turn. Make sure that the filter holder (5) engages in its locking element.
3. Check the sealing ring (4) for damage and replace if necessary.
4. Fit the cover (3).
5. Check the fluid level using the dip stick (2), see chapter "Inspection and adjustment".

https://truckmanualshub.com/

Version with steel reservoir

Removing the steering gear filter element

1. Clean the reservoir cover, so that absolutely no dirt can get into the reservoir.
2. Remove the wingnut (1).
3. Remove the steel ring (2) and the sealing ring (3).
4. Remove the cover (5).
5. Remove the rubber bush (6) and steel bush (7).
6. Slowly remove the filter element (8) from the reservoir (9).

   Note:
   The filter element must be removed from the reservoir with care so that no dirt remains in the reservoir.

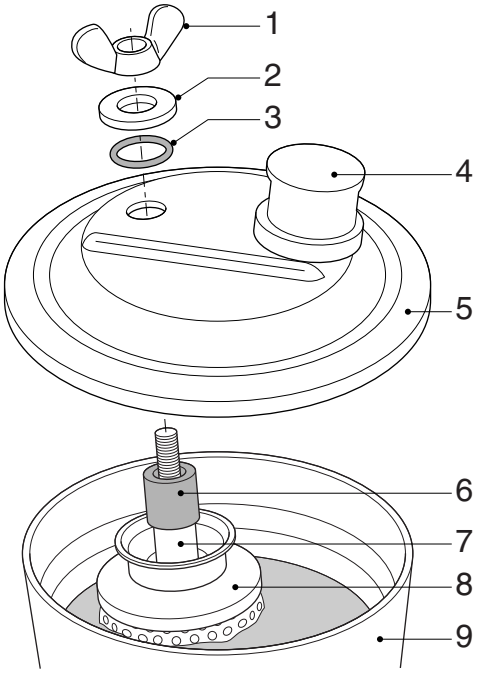

S7 00 720

Installing the steering gear filter element

1. Fit a new filter element (8) into the reservoir (9).
2. Fit the spacer sleeve (7).
3. Check the flexibility of the rubber bush (6) and replace if necessary. Install the rubber bush (6).
4. Check the sealing ring on the cover (5) and replace if necessary. Fit the cover (5).
5. Check the rubber ring (3) and replace if necessary. Install the rubber ring (3) and steel ring (2).
6. Fit the wing nut (1).
7. Check the fluid level using the dip stick (4).

https://truckmanualshub.com/

4.10 REMOVAL AND INSTALLATION, OIL FILTER IN FLUID FLOW CONTROL VALVE BLOCK OF EMAS SYSTEM

Drained steering oil must not be re-used.
Make sure that during filling and bleeding the reservoir always remains filled with oil in order to prevent the pump from drawing in air which would cause foaming in the oil.
Air in the hydraulic system may cause serious damage to the steering pump. Air in the hydraulic system can cause the steering gear to jam occasionally.
If the hydraulic system contains air, a squealing sound will be heard when the steering wheel is turned and pressure is built up.
In the case of serious foaming, the steering oil should be completely drained.

Removing the filter of the fluid flow control valve block

1. Place a receptacle under the valve block.
2. Remove the plug (1) from the valve block.
3. Turn a bolt (M6) into the filter.
4. Remove the filter by pulling the screwed-in bolt.
5. Remove the O-ring from the plug.

Installing the filter of the fluid flow control valve block

1. Always fit a new O-ring to the plug and lightly lubricate the O-ring with oil.
2. Fit the new filter in the valve block.
3. Fit the plug (1).
4. Tighten the plug to the specified tightening torque, see "Technical data".
5. Top up the system.
6. Bleed the steering circuit of the front axle.

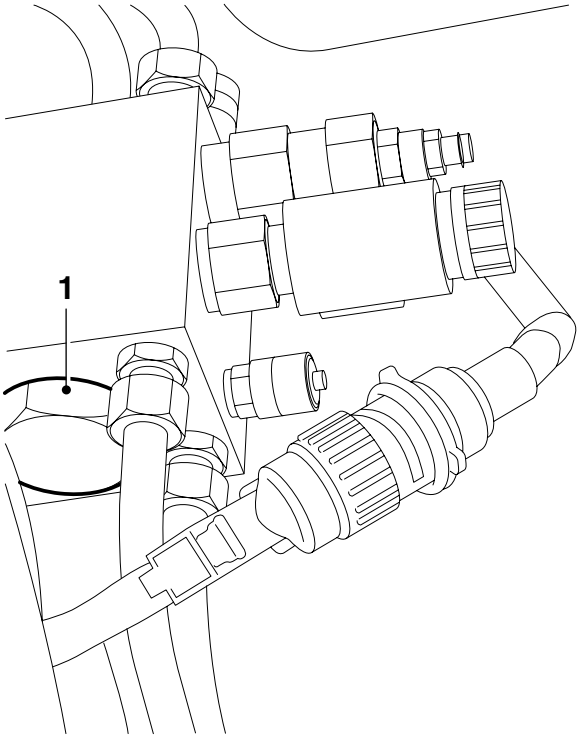

S700848

https://truckmanualshub.com/

4.11 REMOVAL AND INSTALLATION, AIR DRYER FILTER ELEMENT

Note:
To be certain that the air dryer is functioning properly, the air reservoirs should regularly be checked for condensation. If more than the normal amount of water is drained off repeatedly, the air dryer element must be replaced. Under normal circumstances the element must be replaced at least once per year.

Removing air dryer filter element

1. Vent the air dryer by allowing it to regenerate or by loosening the compressor line (1), so that the interior of the air dryer is depressurised.
2. Remove the filter element by turning it anti-clockwise using a filter strap spanner.
3. Dispose of the drying element as if it were an oil filter.
4. Clean the air dryer internally.

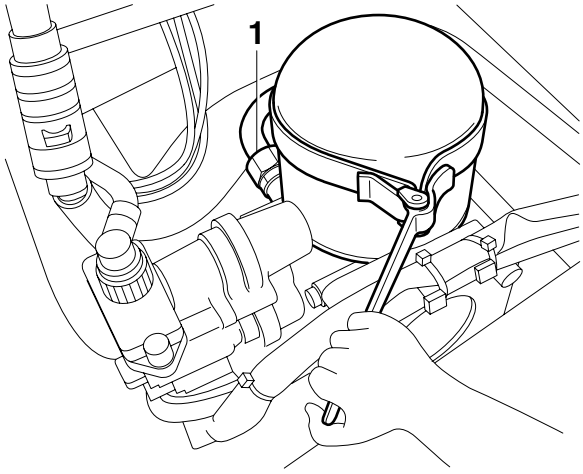

R600525

5. Check the air dryer threaded connection (2) for damage and then lubricate it sparingly with grease.

Installing the air dryer filter element

1. Lubricate the sealing ring of the new filter element sparingly with grease.
2. Fit the filter element by manually tightening it until the sealing ring abuts. Then tighten the element by hand (approx. 1 turn).
3. Fasten the compressor line (1).
4. Pressurise the system and then check the air dryer for any air leaks.

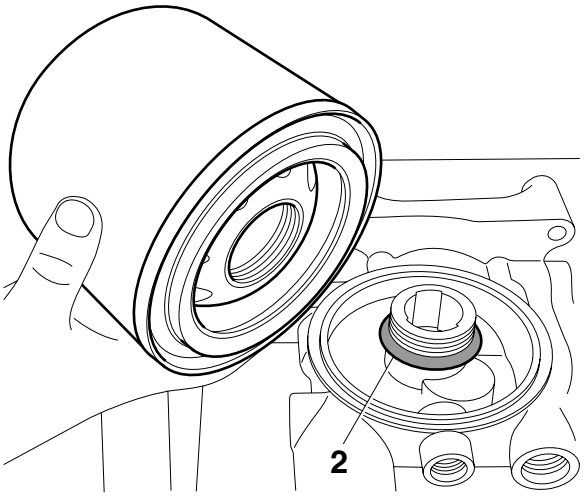

R600526

https://truckmanualshub.com/

5. Using a water-resistant felt pen, write on the sticker the latest date by which the dryer element must be replaced (not later than 1 year after the date of fitting).

R600523

https://truckmanualshub.com/

4.12 REMOVAL AND INSTALLATION, GEARBOX FILTER ELEMENT

To prevent skin injury, avoid unnecessary contact with the drained oil.

ZF gearbox with integrated retarder

Removing the gearbox filter element

1. Remove the attachment bolt (1) of the oil filter.

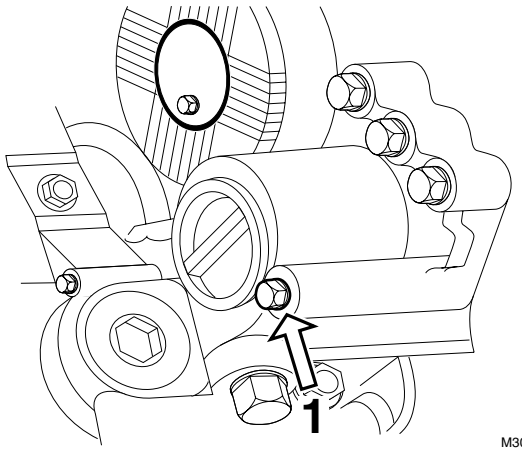

2. Pull the filter cover with the filter from the filter housing.

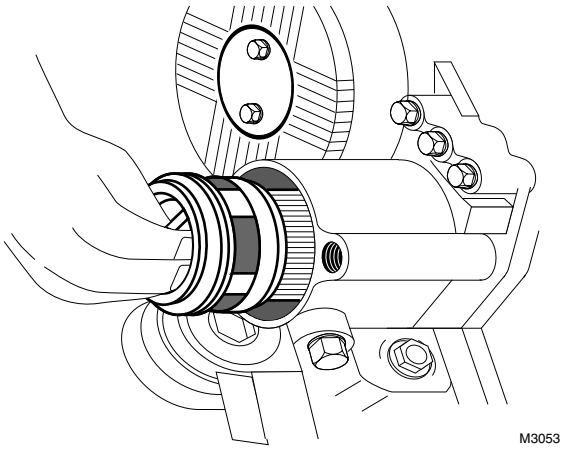

3. Remove the filter (3) from the filter cover (2). Do not clean the filter. The filter must always be replaced.

   Note:
   If the magnetic disk is still attached to the back of the filter, separate it from the filter element and fit it on the new filter element.

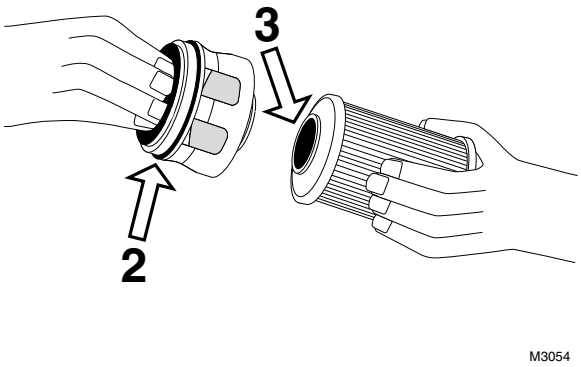

https://truckmanualshub.com/

Installing the gearbox filter element

1. Check the O-ring of the filter cover (2) for damage. If necessary, replace the O-ring. Grease the O-ring.

2. Grease the O-ring of the new filter (3) and place the filter on the filter cover.

3. Then insert the filter and the filter cover into the filter housing.

4. Use a plastic mallet to tap the filter cover into the filter housing.

5. Tighten the attachment bolt (1) to the specified tightening torque, see main group "Technical data".

© 200423

https://truckmanualshub.com/

4.13 REMOVAL AND INSTALLATION, WHEEL HUB

FTP leading rear axle

Removing the wheel hub

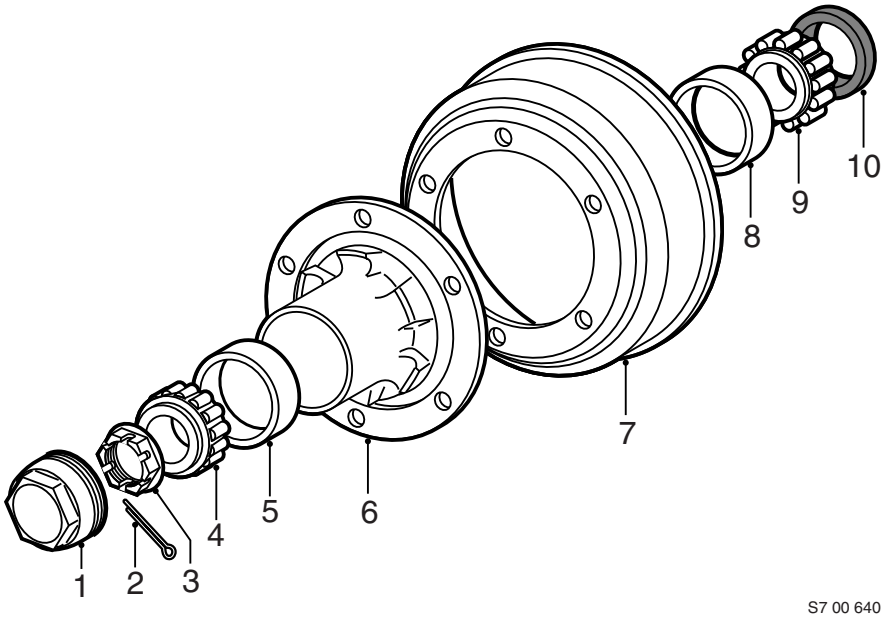

S7 00 640

1. Remove the hub cover (1) using special tool (DAF no. 1329498)
2. Lift the leading rear axle and support it properly.
3. Remove the split pin (2) and the hub nut (3).
4. Remove the outer wheel bearing (4).
5. Remove the hub (6) with the wheel.

Installing the wheel hub

1. Apply new grease to the hub (6).
2. Install the hub with the wheel.
3. Fit the outer wheel bearing (4).
4. Fit the hub nut (3).
5. Adjust the wheel bearing play, see chapter "Inspection and adjustment".
6. Fit the split pin (2).
7. Lower the leading rear axle.
8. Fit the hub cover using special tool (DAF no. 1329498). Tighten the hub cover to the specified torque, see main group "Technical data".
9. Adjust the brakes.

https://truckmanualshub.com/

5

https://truckmanualshub.com/

5. DRAINING AND FILLING

5.1 TOPPING UP BATTERY FLUID

Avoid sparks and open flames in the vicinity of batteries.
Battery acid is an aggressive fluid.
In the event of contact with the skin: rinse the skin with plenty of water for a sustained period. If redness or pain persists, consult a doctor.
Remove any clothing affected and rinse with water.
In the event of contact with the eyes: rinse with plenty of water for at least 15 minutes and consult a doctor.
If swallowed: do NOT induce vomiting. Rinse the mouth, drink two glasses of water and consult a doctor.
In the event of inhalation: get fresh air, rest and consult a doctor.

Topping up battery fluid

1. Clean the top of the battery. If the top of the battery has acid on it, it should be rinsed with water.

2. Remove the plugs and top up the batteries with distilled water to approximately 10mm above the plates or up to the "max" indicator level.

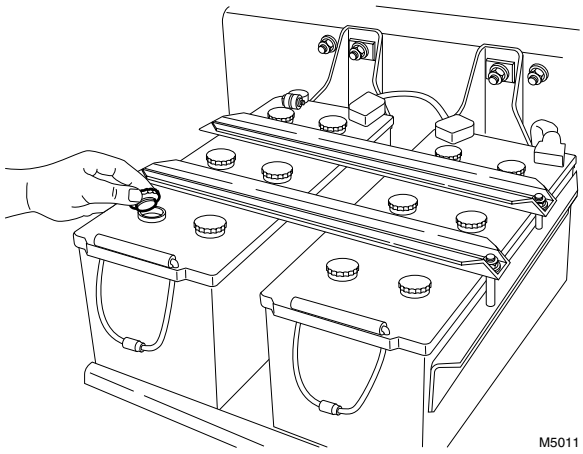

https://truckmanualshub.com/

5.2 DRAINING AND FILLING THE ENGINE OIL

To prevent skin injury, avoid unnecessary contact with the drained oil

Draining the engine oil

1. Ensure that the vehicle is standing on a flat and level surface.
2. Drain the engine oil at operating temperature using the drain plug in the oil sump.
3. Replace the drain plug sealing ring and tighten the drain plug to the specified torque, see "Technical data".

5

Filling the engine oil

1. Through the oil filler pipe (D), fill the engine with the specified amount of engine oil , see "Technical data".
2. Check the engine oil level, see "Inspection and adjustment".

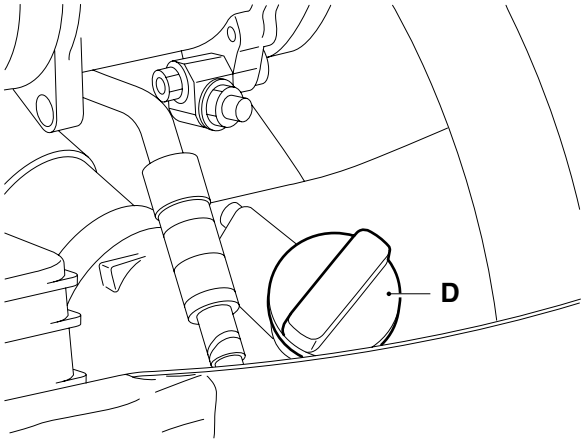

V300389

https://truckmanualshub.com/

5.3 DRAINING AND FILLING, COOLING SYSTEM

When the coolant is hot, there is an overpressure in the cooling system. Carefully remove the filler cap to release the overpressure.
Do not remove the filler cap when the engine is running.
Coolant is a toxic fluid. Contact with the skin should therefore be avoided.
In the event of contact with the skin: remove the liquid with paper or a cloth, wash with soap and water. If irritation persists, consult a doctor.
If swallowed: DO NOT induce vomiting. Rinse mouth, drink two glasses of water and consult a doctor.
In the event of inhalation: get fresh air and rest.
In order to avoid damaging the cylinder block, do not top up a warm engine with coolant.

Draining the cooling system

1. Turn the heater control knob to the maximum "hot" temperature setting. As a result, the heater valve will be fully opened.
2. Remove the cooling system filler cap.
3. Collect the coolant. Position suitable containers under the drain points.
4. Drain the cooling system at the cylinder block via the drain cock (A) and the radiator via the drain plug (B). If an integrated retarder is fitted, remove the coolant drain plug of the heat exchanger.
5. Flush the cooling system.

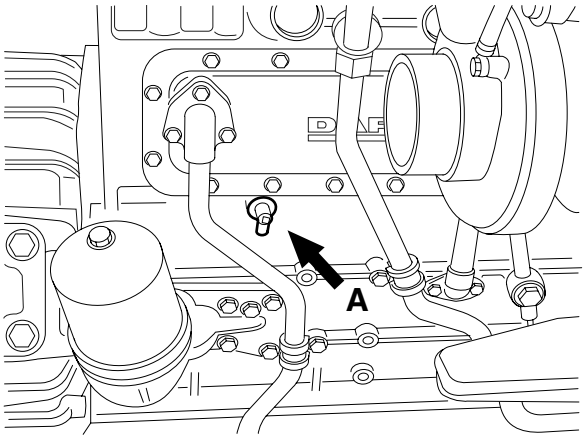

G000181

https://truckmanualshub.com/

6. Close the drain cock (A) and fit the drain plug (B) and, if applicable, the coolant drain plug of the heat exchanger of the integrated retarder.

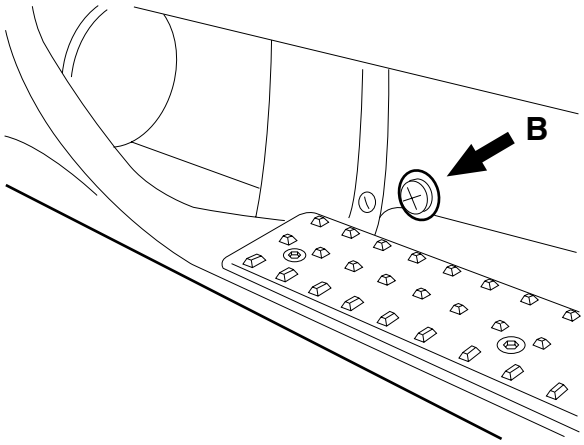

G000182

Filling/bleeding the cooling system

1. Turn the heater temperature control knob in the cab to the maximum "hot" setting.
2. Fill the cooling system with the specified coolant up to the fill opening of the expansion tank.
3. Start the engine and continue to top up the cooling system.
4. The cooling system is auto-bleeding. Bleeding will be audible during topping up. Continue topping up until bleeding is no longer audible.
5. Close the cooling system and allow the engine to warm up until the thermostat has opened.
6. Stop the engine and check the fluid level on the transparent rear side of the expansion tank; add more coolant if necessary.

If the vehicle is fitted with water cab heater

1. Run the engine at idling speed.
2. Switch on the cab heater, using the rocker switch on the dashboard.
3. Turn the heater temperature control knob in the cab to the maximum "hot" setting.
4. Switch on the heater fan.
5. Set the rocker switch on the thermostat in the cab to position 1.

   Note:
   Combustion will start after approximately one minute.

6. Allow the cab heater to operate for approximately 15 minutes.
7. Then check the coolant level.

https://truckmanualshub.com/

5.4 BLEEDING THE FUEL SYSTEM

While bleeding the fuel system, fuel will escape. Collect the fuel to avoid the risk of fire.

Dirt in the fuel system can lead to significant damage to pump units and housing.

Note:
The fuel system has to be bled if it has been opened; this can be done in two ways.

- With the fuel lift pump
- By pressurising the fuel tank

Bleeding using the fuel lift pump

1. Loosen the union nut on the injector.
2. Pump fuel out of the injector pipe with the primer pump until no more air bubbles are visible in the fuel.
3. Tighten the union nut to the specified torque, see "Technical data".
4. Repeat points 1, 2 and 3 for the other injectors.

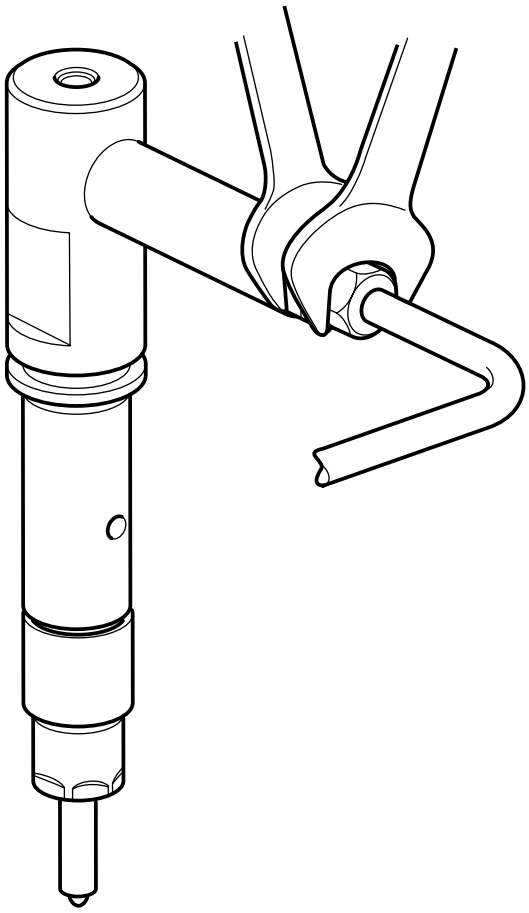

i 400237

https://truckmanualshub.com/

Bleeding by pressurising the fuel tank

To prevent deformation of the fuel tank, the delivery pressure in the fuel tank must not exceed 0.4 bar.

1. Remove the fuel tank cap and replace it by a cap with an adjustable air connection.

   Note:
   Use a cap (without a vent) that has a connection for a pressure reducer valve.

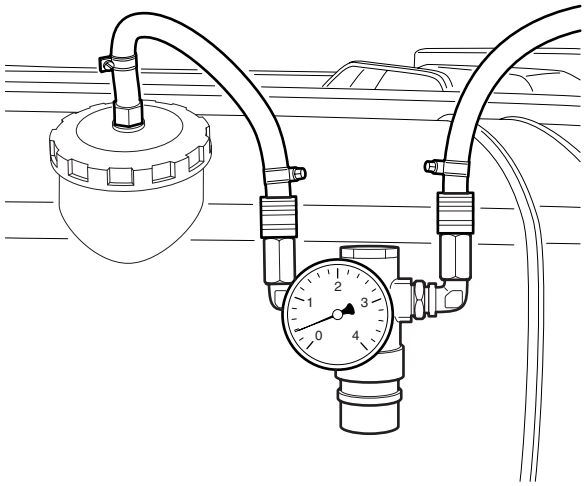

i400600

2. Pressurise the tank to a maximum of 0.2 bar.
3. Loosen the union nut on the injector.
4. Tighten the union nut to the specified torque, see "Technical data".
5. Repeat points 1, 2 and 3 for the other injectors.

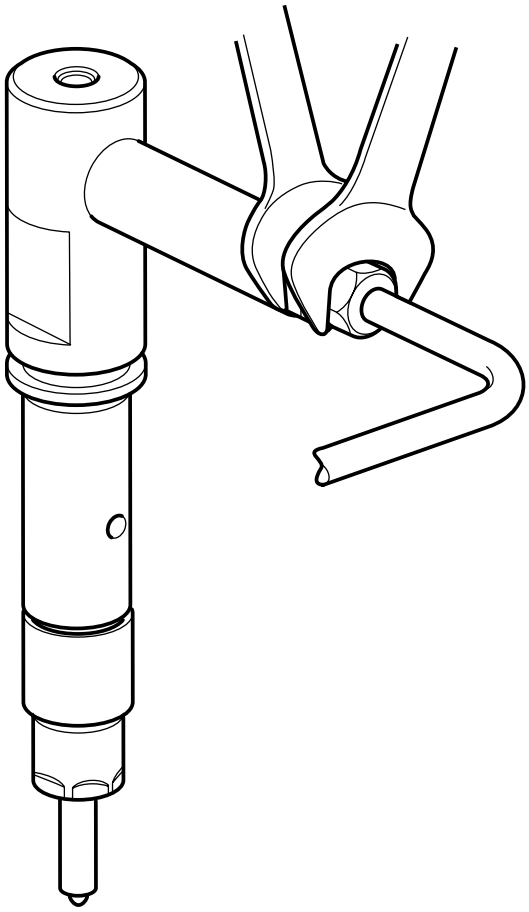

i 400237

https://truckmanualshub.com/

5.5 DRAINING AND FILLING, DIFFERENTIAL

To prevent skin injury, avoid unnecessary contact with the drained oil.

Version: 1339 and 1347 axles

Draining the differential

1. Position the vehicle on a level surface.
2. Remove the level check/filler plug (A) and drain plug (B). Drain the oil.
3. Fit the plug using the special Torx wrench (DAF no. 1329493) and tighten to the specified torque; see "Technical data".

Filling the differential

1. Fill the differential gear through the level check/filler plug (A) with the specified quantity of oil; see "Technical data".
2. Check the oil level after approx. 5 minutes: it should reach up to the level check/filler plug.
3. Fit the level check/filler plug (A) using the special Torx wrench (DAF no. 1329493) and tighten to the specified torque; see "Technical data".

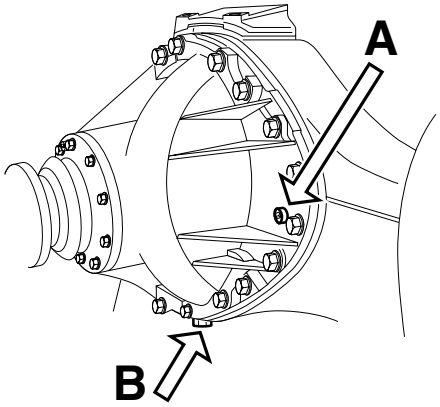

M8013

Version: 1354 axle

Draining the differential

1. Position the vehicle on a level surface.
2. Remove the level check/filler plug (A) and drain plug (B). Drain the oil.
3. Fit the plug using the special Torx wrench (DAF no. 1329493) and tighten to the specified torque; see "Technical data".

Filling the differential

1. Fill the differential gear through the level check/filler plug (A) with the specified quantity of oil; see "Technical data".
2. Check the oil level after approx. 5 minutes: it should reach up to the level check/filler plug.
3. Fit the level check/filler plug (A) using the special Torx wrench (DAF no. 1329493) and tighten to the specified torque; see "Technical data".

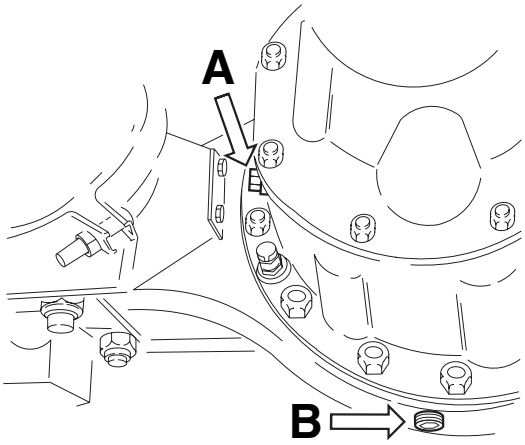

M8048

https://truckmanualshub.com/

Version: 1132(T) 1st axle

Draining the differential

1. Position the vehicle on a level surface.
2. Remove the level check/filler plug (A) and drain plug (B). Drain the oil.
3. Fit the plug using the special Torx wrench (DAF no. 1329493) and tighten to the specified torque; see "Technical data".

Filling the differential

1. Fill the differential gear through the level check/filler plug (A) with the specified quantity of oil; see "Technical data".
2. Check the oil level after approx. 5 minutes: it should reach up to the level check/filler plug.
3. Fit the level check/filler plug (A) using the special Torx wrench (DAF no. 1329493) and tighten to the specified torque; see "Technical data".

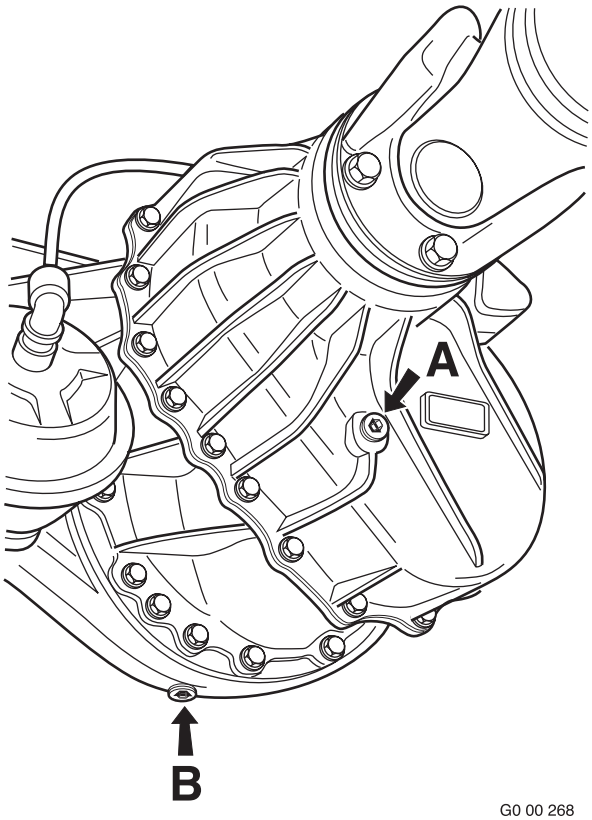

G0 00 268

Version: 1132(T) 2nd axle

Draining the differential

1. Position the vehicle on a level surface.
2. Remove the level check/filler plug (A) and drain plug (B). Drain the oil.
3. Fit the plug using the special Torx wrench (DAF no. 1329493) and tighten to the specified torque; see "Technical data".

Filling the differential

1. Fill the differential gear through the level check/filler plug (A) with the specified quantity of oil; see "Technical data".
2. Check the oil level after approx. 5 minutes: it should reach up to the level check/filler plug.
3. Fit the level check/filler plug (A) using the special Torx wrench (DAF no. 1329493) and tighten to the specified torque; see "Technical data".

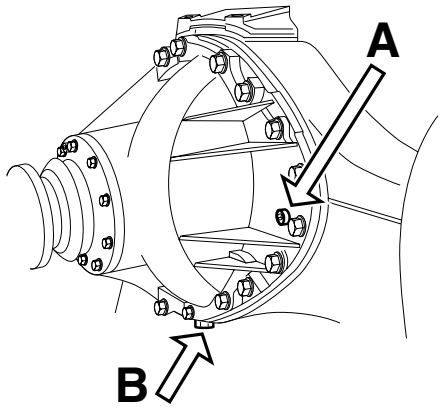

M8013

https://truckmanualshub.com/

Version: 1355(T) 1st axle

Draining the differential

1. Position the vehicle on a level surface.
2. Remove the level check/filler plug (A) and drain plug (B). Drain the oil.
3. Fit the plug using the special Torx wrench (DAF no. 1329493) and tighten to the specified torque; see "Technical data".

Filling the differential

1. Fill the differential gear through the level check/filler plug (A) with the specified quantity of oil; see "Technical data".
2. Check the oil level after approx. 5 minutes: it should reach up to the level check/filler plug.
3. Fit the level check/filler plug (A) using the special Torx wrench (DAF no. 1329493) and tighten to the specified torque; see "Technical data".

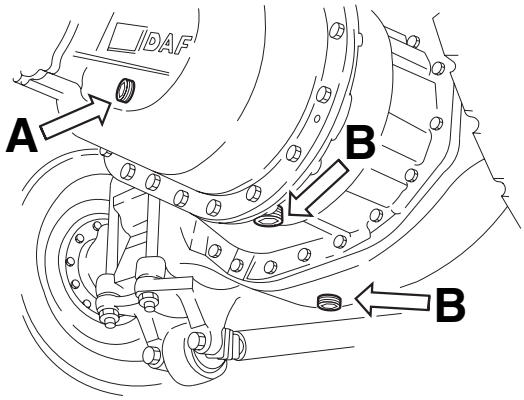

M8049

Version: 1355(T) 2nd axle

Draining the differential

1. Position the vehicle on a level surface.
2. Remove the level check/filler plug (A) and drain plug (B). Drain the oil.
3. Fit the plug using the special Torx wrench (DAF no. 1329493) and tighten to the specified torque; see "Technical data".

Filling the differential

1. Fill the differential gear through the level check/filler plug (A) with the specified quantity of oil; see "Technical data".
2. Check the oil level after approx. 5 minutes: it should reach up to the level check/filler plug.
3. Fit the level check/filler plug (A) using the special Torx wrench (DAF no. 1329493) and tighten to the specified torque; see "Technical data".

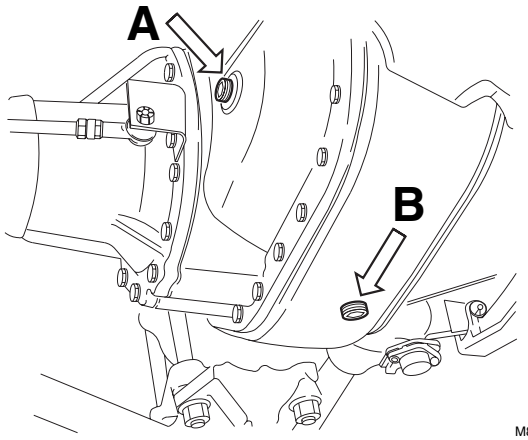

M8050

https://truckmanualshub.com/

5.6 DRAINING AND FILLING THE WHEEL HUB

To prevent skin injury, avoid unnecessary contact with the drained oil.

Version: 1132(T) axle

Draining the wheel hub

1. Position the vehicle on a level surface.
2. Position the wheels in such a way that the oil drain/filler plug (A) is on the underside.
3. Remove the oil level check plug (B) and oil drain/filler plug (A).
4. Drain the oil and let the oil leak out of the hub.

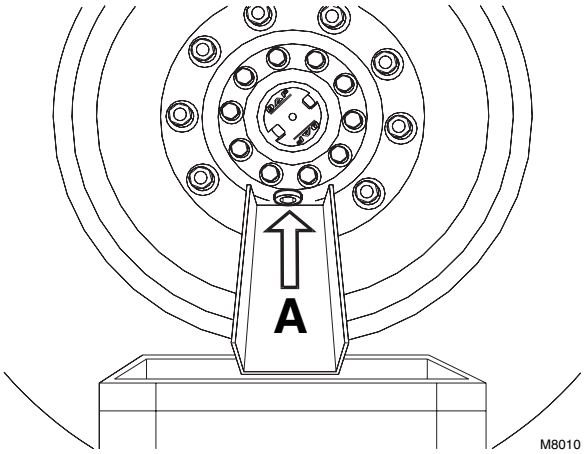

5

Filling the wheel hub

1. Position the wheels so that the arrow on the wheel hub points upwards. The oil drain/filler plug (A) is now in the correct position.
2. Fill the wheel hub with the specified quantity of oil. See "Technical data".
3. Check the oil level after approx. 5 minutes: it should reach up to the level check/filler plug.
4. Fit the plug using the special tool (DAF no. 1329493) and tighten the plug to the specified tightening torque. See "Technical data".

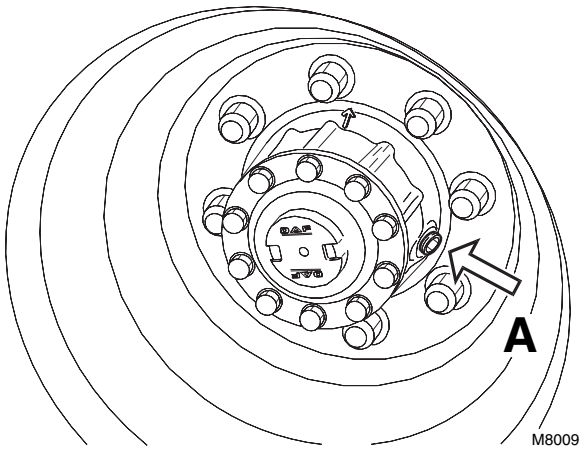

https://truckmanualshub.com/

Version: 1354 and 1355(T) axles

Draining the wheel hub

1. Position the vehicle on a level surface.
2. Position the wheels in such a way that the oil drain/filler plug (A) is on the underside.
3. Remove the oil level check plug (B) and oil drain/filler plug (A).
4. Drain the oil and let the oil leak out of the hub.

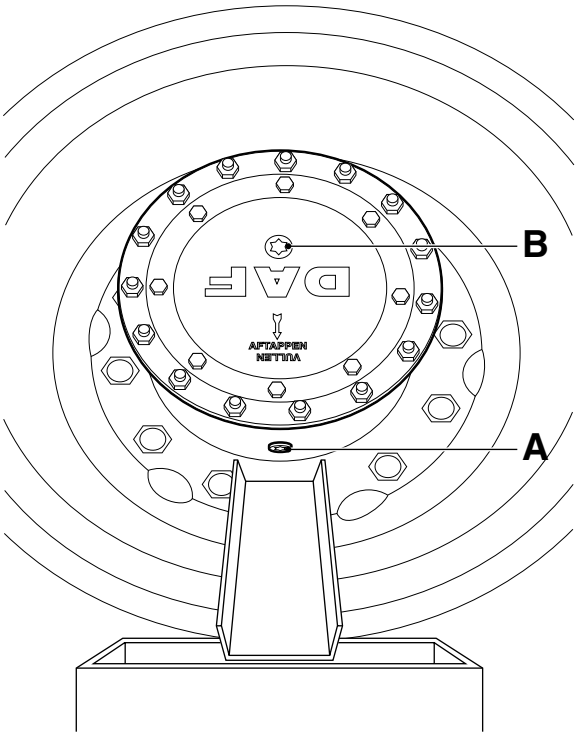

A8 00 363

Filling the wheel hub

1. Position the wheels in such a way that the oil drain/filler plug (A) is at the top.
2. Fill the wheel hub with the specified quantity of oil. See "Technical data".
3. Check the oil level after approx. 5 minutes: it should reach up to the level check/filler plug.
4. Fit the plug using the special tool (DAF no. 1329493) and tighten the plug to the specified tightening torque. See "Technical data".

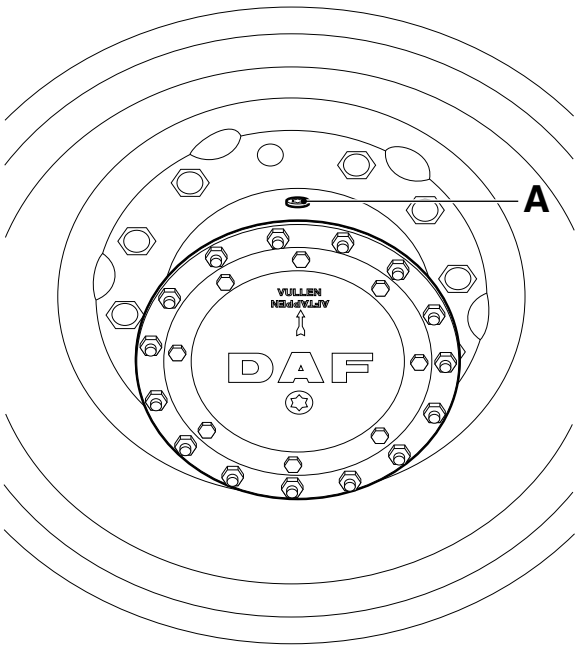

A8 00 364

https://truckmanualshub.com/

5.7 DRAINING AND FILLING, GEARBOX

To prevent skin injury, avoid unnecessary contact with the drained oil.

Version: ZF 8/16S-151/181/221

Draining the gearbox

1. Position the vehicle on a level surface.
2. Drain the gearbox at operating temperature.
3. Remove the drain plugs (B), (C) and (D) and the level check/filler plug (A) and drain the oil.

Filling the gearbox

1. Clean the drain plugs (B), (C) and (D) and tighten them to the specified torque, see "Technical data".
2. Top up the oil through the level check/filling opening (A) until the oil reaches the rim of the filling opening.
3. Fit the level check/filler plug (A), tightening it to the specified torque, see "Technical data".

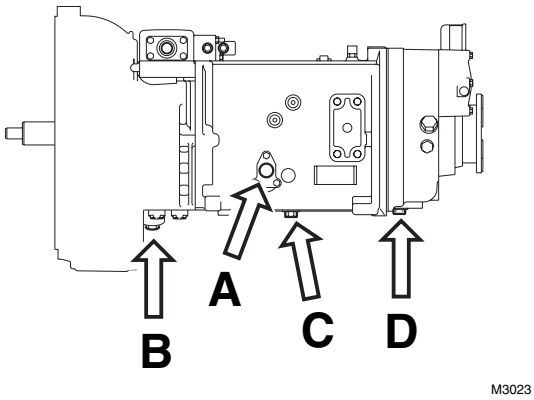

© 200423

https://truckmanualshub.com/

Version: ZF 8/16S-151/181/221 with integrated retarder

Draining the gearbox

1. Before draining take a short test drive. Do **not** activate the retarder during the test drive.
2. Position the vehicle on a level surface.
3. Drain the gearbox at operating temperature.
4. Remove the drain plugs (B), (C) and (D) and the level check/filler plug (A) and drain the oil.

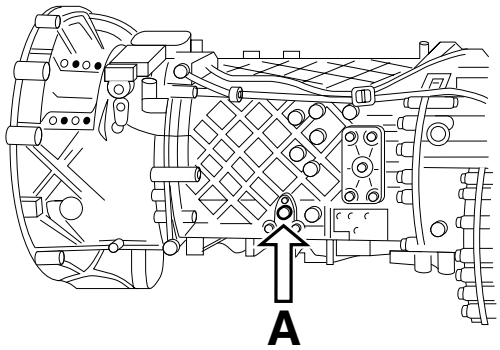

M3051

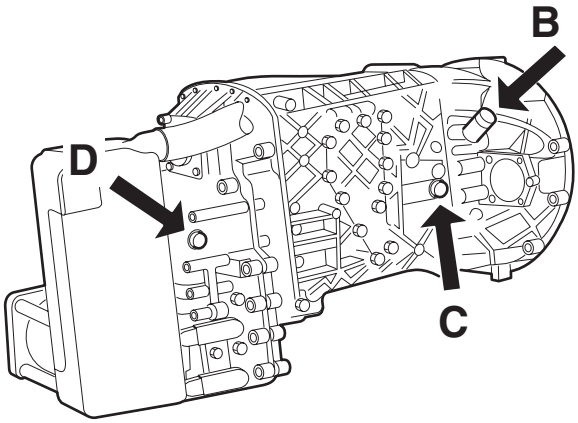

V300186

5. Replace the filter element in the gearbox, see "Removal and installation".

Filling the gearbox

1. Clean the drain plugs and tighten them to the specified torque, see "Technical data".
2. Top up oil through level check/filling opening (A) until the oil reaches the rim of the filling opening (A).
3. Fit the level check/filler plug (A), tightening it to the specified torque, see "Technical data".
4. After filling take a short test drive. Do **not** activate the retarder during the test drive.
5. Check the oil level after having taken the test drive. The oil level must reach the rim of the level check/filling opening (A).
6. Fit the level check/filler plug (A), tightening it to the specified torque, see "Technical data".

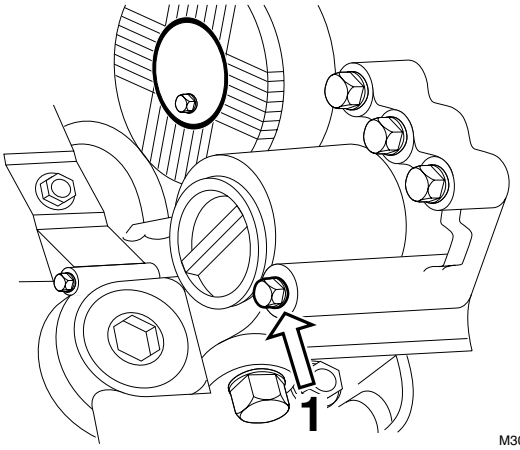

M3052

https://truckmanualshub.com/

Version: ZF AS Tronic

Draining the gearbox

1. Position the vehicle on a level surface.
2. Drain the gearbox at operating temperature.
3. Remove the drain plugs (B) and (C) and the level check/filler plug (A) and drain the oil.

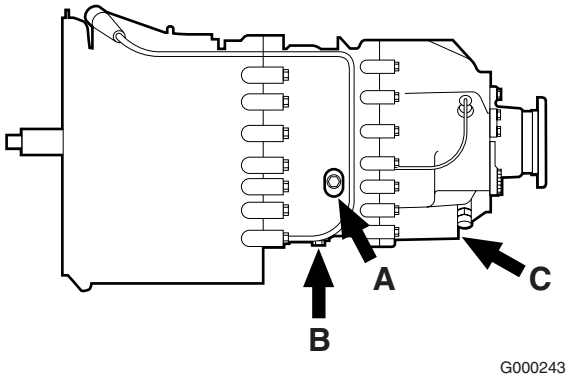

Filling the gearbox

1. Clean the drain plugs (B) and (C) and tighten them to the specified torque, see "Technical data".
2. Top up oil through the level check/filling opening (A) until the oil reaches the rim of the filling opening.
3. Fit the level check/filler plug (A), tightening it to the specified torque, see "Technical data".

5

Version: ZF AS Tronic with integrated retarder

Draining the gearbox

1. Before draining take a short test drive. Do **not** activate the retarder during the test drive.
2. Position the vehicle on a level surface.
3. Drain the gearbox at operating temperature.
4. Remove the drain plugs (B) and (C) and the level check/filler plug (A) and drain the oil.

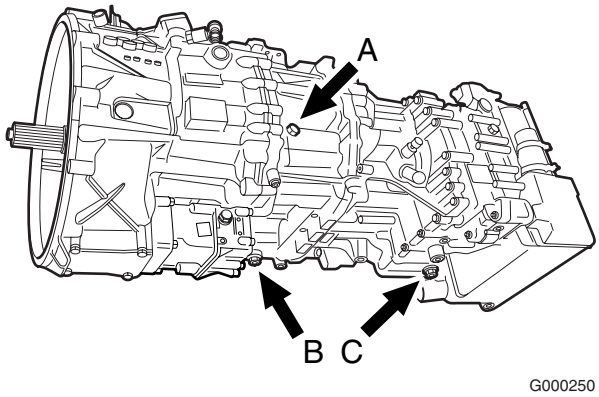

5. Replace the filter element in the gearbox, see "Removal and installation".

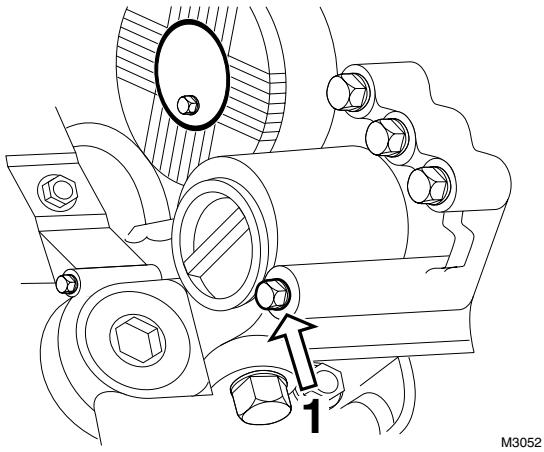

https://truckmanualshub.com/

Filling the gearbox

1. Clean the drain plugs (B) and (C) and tighten them to the specified torque, see "Technical data".

2. Top up oil through the level check/filling opening (A) until the oil reaches the rim of the filling opening.

3. Fit the level check/filler plug (A), tightening it to the specified torque, see "Technical data".

4. After filling take a short test drive. Do **not** activate the retarder during the test drive.

5. Check the oil level after having taken the test drive. The oil level must reach the rim of the level check/filling opening (A).

6. Fit the level check/filler plug (A), tightening it to the specified torque, see "Technical data".

https://truckmanualshub.com/

5.8 FILLING GREASE SUPPLY OF THE AUTOMATIC LUBRICATION SYSTEM

1. Remove the dust cover from the filler coupling.

2. Connect the filler hose to the filler coupling. Ensure that the filler hose is completely filled with grease so that no air bubbles can get into the system.

3. Fill the reservoir to the specified maximum level.

   Note:
   When filling the reservoir, the air above the follower piston will escape. This air will flow down through an opening in the piston line and escape from the pump through the right-angled coupling. Normally a small amount of grease will escape from this coupling during venting.

4. Remove the filler hose from the filler coupling.

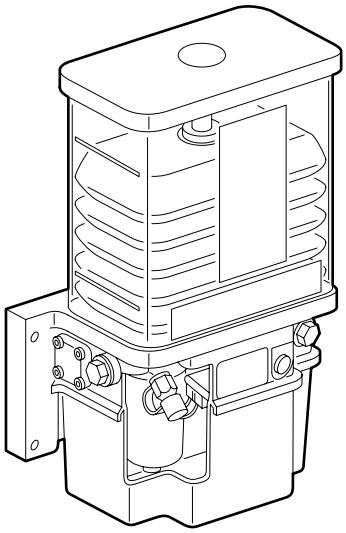

C900331

https://truckmanualshub.com/

6. CLEANING

6.1 CLEANING THE BATTERY POLES

Avoid sparks and open flames in the vicinity of batteries.
Battery acid is an aggressive fluid.
In the event of contact with the skin: rinse the skin with plenty of water for a sustained period. If redness or pain persists, consult a doctor.
Remove any clothing affected and rinse with water.
In the event of contact with the eyes: rinse with plenty of water for at least 15 minutes and consult a doctor.
If swallowed: do NOT induce vomiting. Rinse the mouth, drink two glasses of water and consult a doctor.
In the event of inhalation: get fresh air, rest and consult a doctor.

1. Disconnect the earth lead from the battery terminal.
2. Disconnect the positive lead from the battery terminal.
3. Clean the battery terminals, battery cables and the top of the battery (oxide and dirt discharge the battery).
4. If the top of the battery has acid on it, it should be rinsed with water.
5. Grease the battery terminals with Vaseline.
6. Check the earth lead connection to the chassis and grease the connection with Vaseline.
7. Fit the positive lead to the battery terminal.
8. Fit the earth lead to the battery terminal.
9. Check the routing and attachment of the battery cables.

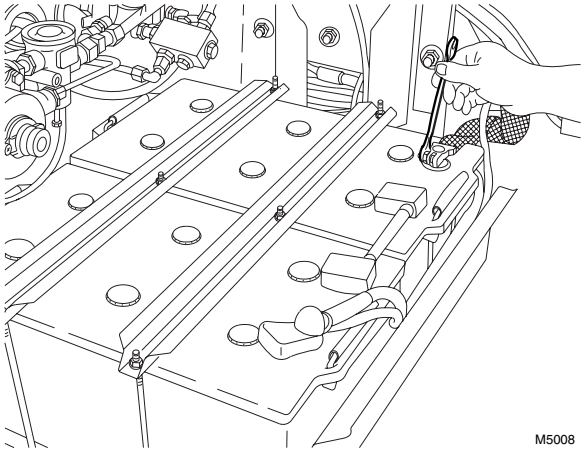

5

https://truckmanualshub.com/

6.2 CLEANING RADIATOR AND INTERCOOLER

Inhalation of dust may have serious consequences for your health. Take the necessary precautions, such as wearing goggles and a facemask.

Key to drawing:

1 Solder up
2 Solder
3 Quick-release coupling for air hose
4 Steel pipe, ∅ 10 mm
5 6 x ∅ 1.5 mm between holes, with a centre-to-centre distance between the holes of 7 mm, drilled on one side

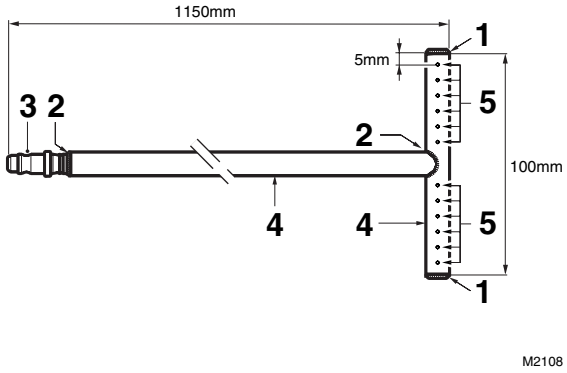

5

Note:
With the aid of a simple tool, the radiator and the intercooler can be blow-cleaned.
The tool (radiator cleaner) cannot be ordered from DAF. It should be manufactured by yourself according to the drawing.

1. Unscrew the protective screen attachment bolts.

2. Remove the protective screen.

3. Clean the protective screen with a hard brush, and blow-clean with compressed air.

4. Insert radiator cleaner (4) between the intercooler (1) and radiator (2), from the bottom upwards, with the air holes facing the intercooler (1).

5. Apply air pressure to the radiator cleaner (4) and continue blow-cleaning the intercooler (1) until no more dirt comes out.

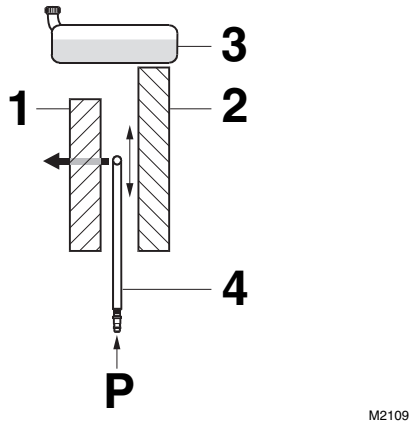

https://truckmanualshub.com/

6. Turn the radiator cleaner (4) over, turning the holes towards the radiator (2), and blow-clean the radiator (2).

7. Fit the protective screen.

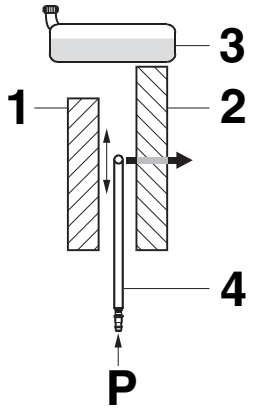

https://truckmanualshub.com/

6.3 CLEANING THE VEHICLE

Before cleaning the vehicle, check the engine, axles, gearbox, etc. for of leaks. Having cleaned the vehicle, it will no longer be possible to check for leaks during the maintenance activities.

- Make sure that doors, windows and roof hatch are securely closed during cleaning.
- When cleaning the universal joint on the steering box, the spider seals may be forced open by the high-pressure jet of water, so that the grease behind them is flushed away. As a result, the spider may get stuck, so that the steering will "jam".
- Do not spray directly onto steering ball joints.
- There is a vent on the power steering fluid reservoir of the steering gear. Water may enter the power steering reservoir via this vent, which will cause damage to the steering gear.
- When cleaning the radiator/intercooler, be careful not to damage the fins.
- Do not aim the high-pressure cleaner jet too long at the air conditioning system condenser. As a result of the high temperature, the pressure in the system will rise too high, which may cause damage to the system.
- Make sure that no water can enter the differential and gearbox via the vents.
- Make sure that no water can enter via the reservoir vents of clutch, brakes, trailing axle, etc.
- The engine and engine compartment can be cleaned with a high-pressure cleaner. Make sure in this case not to spray directly onto seals, electrical components, such as the starting motor, alternator, etc.
- When cleaning UPEC engines with a high-pressure cleaner, do not aim it directly at the pump units. Water could penetrate into the protective covers via the vent holes. This could result in faults in the electrical connections of the pump units.
- If an engine encapsulation is fitted, the encapsulation panels must be thoroughly cleaned after each maintenance job because of the risk of fire if the inside of the panels is dirty.
- Do not aim the high-pressure cleaner jet at electrical connections such as connectors, lighting ducts, etc.

© 200423

https://truckmanualshub.com/

- Make sure that during vehicle cleaning no water enters the air-intake system through the air intake of the flexible seals of the inlet.
- Do not aim the high-pressure cleaner jet at the gear lever unit.
- Do not aim the high-pressure cleaner jet directly at the drive shaft seals, such as the seals of the spider, intermediate bearing and sliding joint.
- When the vehicle has been cleaned, it must be lubricated again with a grease gun or through the central lubrication system. This is important because it prevents the penetration of moisture and dirt at the various pivots.

https://truckmanualshub.com/

6.4 CLEANING GEARBOX VENT(S)

Cleaning gearbox vent(s)

1. Clean the vent(s) and the surrounding area.
2. Remove the vent(s) from the gearbox.
3. Rinse the vent(s) in a cleaning fluid.
4. Blow the vent(s) dry from the inside using compressed air.
5. Install the vent(s) on the gearbox.

6.5 CLEANING REAR AXLE VENT

Cleaning rear axle vent

1. Clean the vent and the surrounding area.
2. Remove the vent from the rear axle.
3. Rinse the vent in a cleaning fluid.
4. Blow the vent dry from the inside using compressed air.
5. Fit the vent to the rear axle.

https://truckmanualshub.com/

7. LUBRICATION

7.1 LUBRICATE ACCORDING TO X-SERVICE LUBRICATION SCHEDULE

Lubrication
Check whether the lubricating points stated below are applicable.

Note:
Where the lubricating points below are marked with an (S), this indicates that the lubricating point is positioned on both the left and right of the vehicle.

Lubricating stub axles (S)

1. To make sure that the grease can penetrate adequately, the stub axles should be lubricated in unloaded condition. The front axle should therefore be completely jacked up.

2. Lubricate the stub axles until grease comes out.

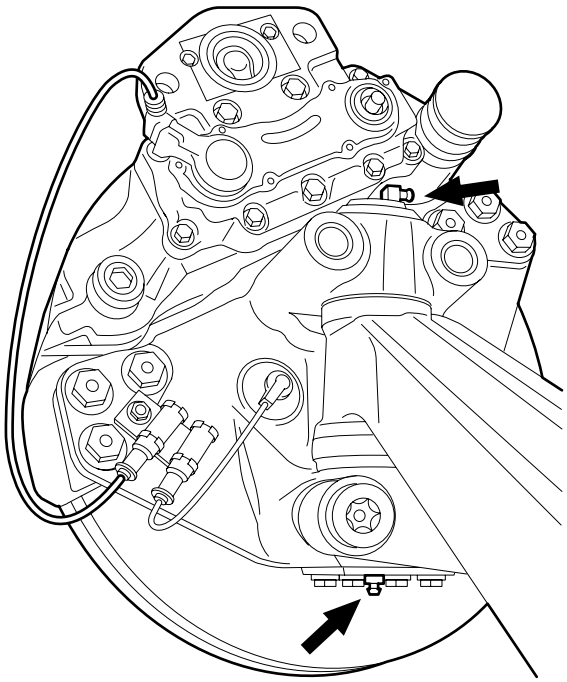

5

https://truckmanualshub.com/

Lubricating the fifth wheel

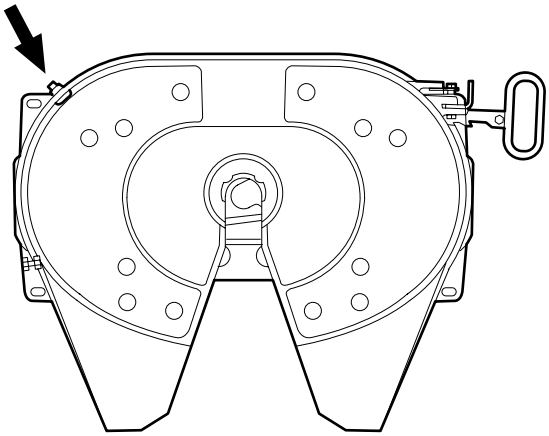

G000192

Lubricating the air-sprung front axle (S)

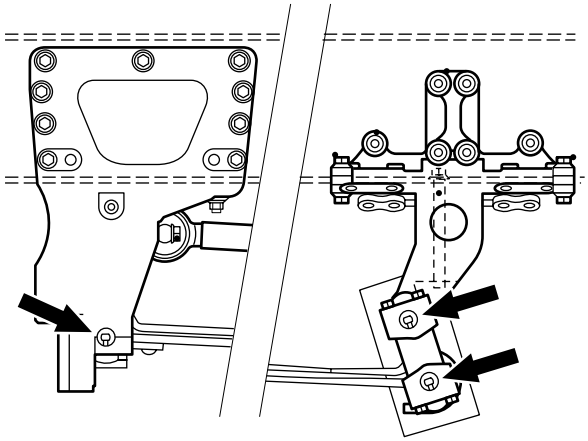

G0 00 193

Lubricating the leaf-sprung trailing axle (S)

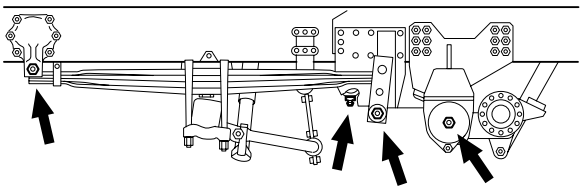

G000191

https://truckmanualshub.com/

Lubricating the leaf-sprung tandem axle (S)

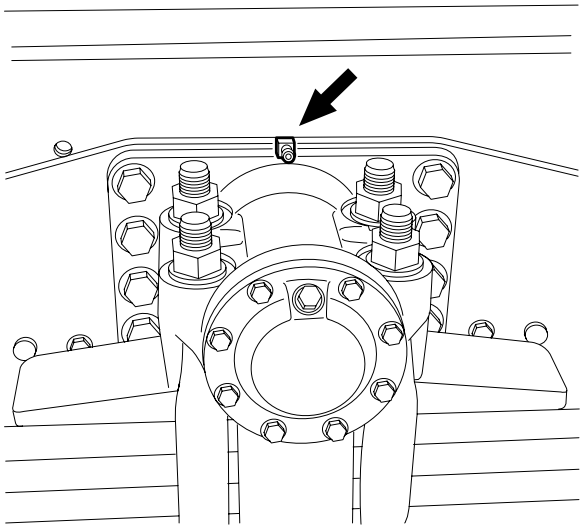

G000187

Lubricating the trailer coupling

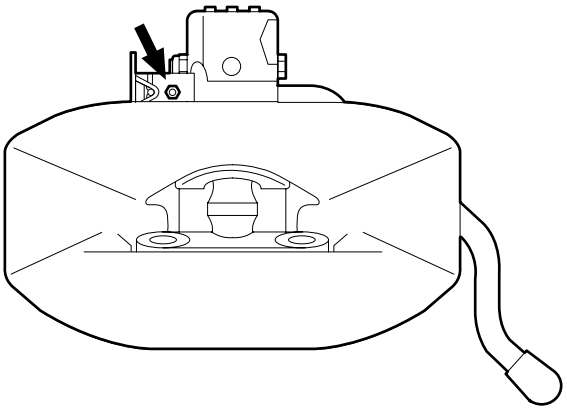

G000188

https://truckmanualshub.com/

Lubricating the rear axle brake camshaft (S)
(drum brake version)

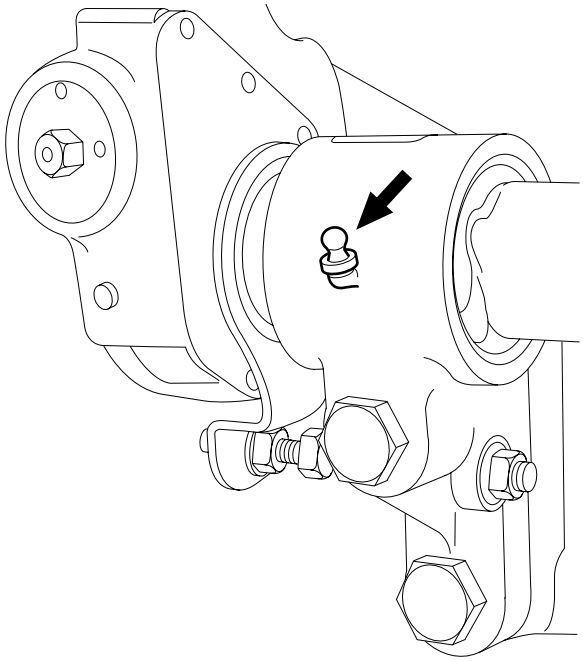

G000194

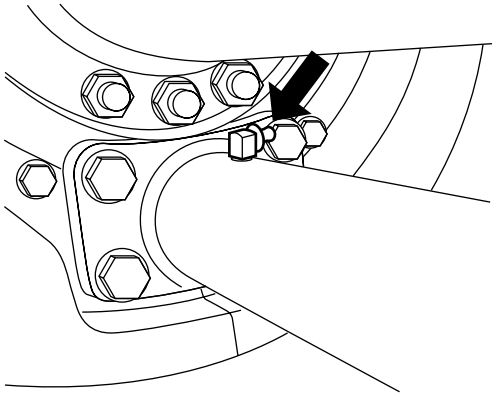

G0 00 267

© 200423

https://truckmanualshub.com/

Lubricating the drive shaft universal joint

1. Grease the universal joints of the drive shaft until the grease comes out of all 4 needle bushes.

   Note:
   If the grease does not come out of all 4 needle bushes, the joint may be turned to soften hardened grease.
   If the grease does not come out of all 4 needle bushes after the prop shaft has been repeatedly turned, the joint needs to be replaced.
   The maximum lubricating pressure should not exceed 15 bar.

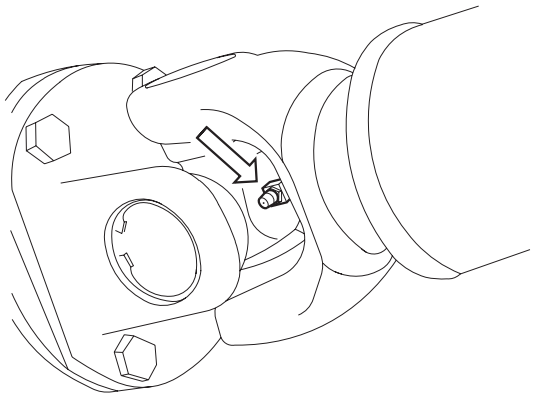

V300899

Lubricating the automatic brake adjusters and FTP leading rear axle brake camshafts

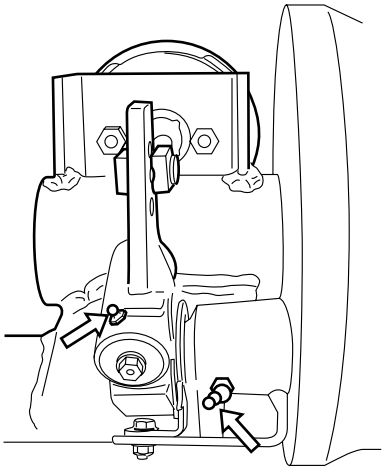

C9 00 346

https://truckmanualshub.com/

5

https://truckmanualshub.com/

https://truckmanualshub.com/

English
Printed in the Netherlands DW13278604