https://truckmanualshub.com/

STC750

STC750 TRUCK CRANE
75 TONS LIFTING CAPACITY

Quality Changes the World

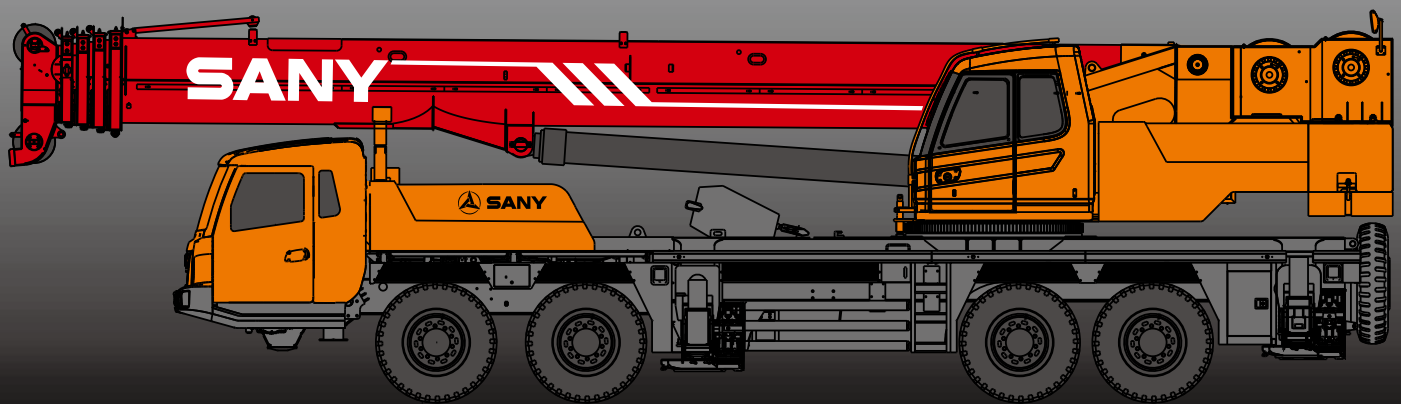

SANY

https://truckmanualshub.com/

SANY Automobile Hoisting Machinery is one of the core business unit of Sany Heavy Industry, mainly engaged in the research and development of high end, mid to large tonnage crane series, including mobile crane, crawler crane, tower crane and loader crane. It has two industrial parks in Ningxiang and Huzhou, since entering the market, the products of Sany Automobile Hoisting Machinery have received worldwide recognition with advanced technology, lean manufacturing, high reliability and excellent service.

https://truckmanualshub.com/

SANY TRUCK CRANE

CONTENT

04 Icon
05 Selling Points
06 Introduction
09 Dimension
10 Technical Parameter
11 Operation Condition
12 Load Chart
15 Wheel Crane Family Map

- Cab
- Carrier frame
- Suspension system
- Hydraulic system
- Outriggers
- Telescopic boom
- Control system
- Engine
- Lattice jibs
- Telescopic system
- Transmission system
- Superlift devices
- Luffing system
- Drive/Steer
- Luffing lattice jib
- Slewing
- Axles
- winch mechanism:
- Counterweight
- Tyres
- Safety system
- Brakes system
- Hoist system
- Electrical system

Excellent and stable chassis performance / chassis system

Double-axle drive is used, providing good trafficability and comfortableness under complex road condition with reliable traveling performance.
Engine has the multimode power output function, which reduces power consumption.
The use of tipping over early-warning technology provides high stability and safety of the overall operation.

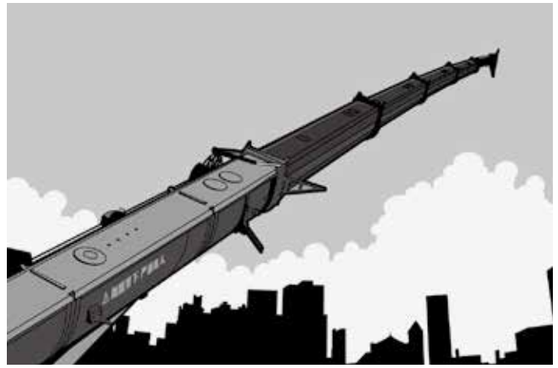

Ultra long, super strong and highly sensitive load lifting capacity

Five-section boom of high strength steel structure and optimized U-shaped cross section reduces weight significantly with higher safety rates. Jib mounting angles are 0°, 15°and 30°, which ensures fast and convenient change-over between different operating conditions so as to improving working efficiency of the machine.

Highly efficient, stable, energy-saving and adjustable hydraulic system

Hydraulic system load feedback and constant power control is applied to provide strong lifting capacity and good micro-mobility. Unique steering buffer design is adopted to ensure stable braking operation.

Safe, stable, advanced and intelligent electric control system

Self-developed controller SYMC specially for engineering machinery is configured. The adoption of CAN-bus full-digital network control technology ensures stable control signal, simple harness and high reliability. Timely feedback of data information can achieve the monitoring of the overall working status in real-time. The load moment limiter equipped with the comprehensive intelligent protection system is used with accuracy within ±5% to provide a comprehensive logic and interlock control, thus ensuring more safe and reliable operation.

https://truckmanualshub.com/

Superstructure

Cab

- It is made of safety glass and anti-corrosion steel plate with ergonomic design such as full-coverage soften interior, panoramic sunroof and adjustable seats etc., and humanized design providing more comfortable and relaxing operation experience. The display of load moment limiter integrates main console and operation display system, which clearly show the data of all operating superstructure conditions for lifting operation.

Hydraulic system

- High-quality key hydraulic components such as main oil pump, rotary pump, main valve, winch motor, and balancing parts etc. are adopted to achieve stable and reliable operation of the hydraulic system. Superior operation performance is guaranteed by accurate parameter matching.
- Through the adoption of load sensitive variable displacement piston pump, pump displacement can be adjusted in real-time, achieving high-precision flow control with no energy loss during operation.
- Main valve has flow compensation and load feedback control function, enabling stable and convenient control of single action and combined action under different operation conditions .
- Winch adopts the electronically controlled variable motor to ensure high operation efficiency. Max. single line speeds of main and auxiliary winches is up to 130m/min.
- Slewing system is equipped with the integrated slewing buffer valve with free slipping function to ensure more stable starting and control of the slewing operation and excellent micro-mobility.
- Hydraulic oil tank capacity: 975L.

Control system

- CAN-bus instrument: CAN-bus instrument with a combined intelligent control electrical system is used for easy reading of the traveling parameters at any time. The engine fault warning function is applied to ensure convenient and fast troubleshooting.
- Automatic outrigger system: Electrically controlled outrigger with automatic leveling and fault diagnosis warning function is adopted, which is flexible and fast to operate.
- With fully security protection system, main and auxiliary winches are equipped with over-roll out limiter and height limiters to prevent over-rolling out and over-hoisting of steel rope, including tip-over and limit angle protection.
- Load moment limiter: The adoption of high intelligent load moment limiter system can comprehensively protect lifting operation, ensuring accurate, stable and comfort operation.
- The fault diagnosis system can detect superstructure electricity, chassis (for major safety failure) and engine for fault to ensure reliable operation of the crane.

Luffing system

- Dead-weight luffing provides more stable luffing operation at low energy loss.
- Luffing angle: -2°~ 80°.

Telescopic system

- Five-section boom is applied with basic boom length of 11.8m, full-extended boom length of 45m, jib length of 16m and fully extended boom lifting height of 45m respectively. Max. lifting height is 61m including jib. It is made of fine grain high-strength steel with U-shaped cross section and with telescopic operation controlled independently by dual-cylinder rope.

Slewing system

- 360° rotation can be achieved with Max. slewing speed of 2.0r/min. Hydraulic controlled proportional speed adjustment is applied to provide stable and reliable operation of the system. Unique rotary buffer design ensures more stable braking.

Superstructure

Hoisting system

- With high efficiency of winch, larger gear ratio and stable operation.
- Closed winch brake and winch balance valve effectively prevent imbalance of the hook.
- With load sensitive function, the main valve winch is highly effective and energy-saving.
- Two main hooks: 800kg and 320kg, the Max. lifting weight are 75t and 30t,one auxiliary hook:140kg, Max lifting weight is 5t. Wire rope of main winch: left-handed wire rope: 20-35W×7-1960-U-SZGB8918 L245m. Wire rope of auxiliary winch: left-handed wire rope: 20-35W×7-1960-U-SZGB8918 L145m.

Safety system

- Load moment limiter: Load moment limiter calculation system based on lifting load mechanical model is established using an analytical mechanics method with rated lifting accuracy up to ±3% through on-line non-load calibration, providing full protection to lifting operation. In case of overload operation, system will automatically issue an alarm to provide safety protection for manipulation.
- Hydraulic system is configured with the balance valve, overflow valve and two-way hydraulic lock etc. components, thus achieving stable and reliable operation of the hydraulic system.
- Main and auxiliary winches are equipped with over roll-out limiter to prevent over rolling-out of wire rope.
- Boom and jib ends are equipped with height limiters respectively to prevent over-hoisting of wire rope.
- Equipped with length sensor, angle sensor and press sensor to indicate the working condition of whole crane in real-time, giving an alarm and cutting off the dangerous action automatically.

Counterweight

- Counterweight is 4500kg, flexible counterweight is 2000kg.

Chassis

Cab

- Cab is made of new steel structure self-developed by SANY, featuring excellent shock absorption and tightness, which is configured with swing-out doors at both sides, pneumatically suspended driver's seat and passenger's seat, adjustable steering wheel, large rearview mirror, comfortable driver's chair with a headrest, anti-fog fan, air conditioner, stereo radio and complete control instruments and meters, providing more comfortable, safe and humanized operation experience.

Carrier frame

- Designed and manufactured by SANY, anti-torsion box structure is welded by fine-grain high-strength steel plate to provide strong load bearing capacity.

Axles

- Axles 3 and 4 are drive axles and axles 1 and 2 are steering axles, with axle and wheel differentials and wheel differential. The use of welding process for axle housing provides stronger load bearing capacity.

Engine

- Type: Inline six-cylinder, water cooled, supercharged and inter-cooling diesel engine
- Rated power: 275kw/2100r/min
- Environment-protection: Emission complies with EuroIII standard
- Capacity of fuel tank: 350L

https://truckmanualshub.com/

Chassis

Transmission system

- Gearbox: Manual gearbox is adopted with 9-gear and large speed ratio range applied, which meets the requirements of low gradeability speed and high traveling speed.
- Transmission shaft: With optimized arrangement of the transmission shaft, the transmission is stable and reliable. For most optimized transmission, face-tooth coupling transmission shaft is used with large transmission torque.

Brakes system

- Air servo brakes are used for all wheels with dual-circuit brake system applied, engine is equipped with an exhaust brake.
- Brakes system includes traveling brake, parking brake, emergency brake and auxiliary brake.
- Traveling brake: All wheels use the air servo brakes and dual-circuit brake system.
- Parking brake: Force driven by accumulator is applied on the third to fourth axle.
- For emergency brake, accumulator is used not only for cutting-off brake but also for emergency brake.
- Auxiliary brake is exhaust brake with brake safety ensured while travelling downhill.

Suspension system

- All axles adopt the plate spring suspension systems with plate spring passed 100,000 fatigue tests and with optimization of performance parameters of the front and rear plate springs applied to ensure strength and also to provide comfort ridding.

Steering system

- Hydraulic power mechanical steering system is applied for axle 1, with unloading valve installed in the steering gear.

Outriggers

- Four-point supporting of the H-shaped outriggers ensures easy operation and strong stability with Max. span up to 6.1m×7.6m. They are made of fine-grain high-strength steel sheet with full hydraulic transverse telescopic outriggers adopted for first and second outriggers and with automatic horizontal adjustment applied for outriggers through a vertical cylinder.

Tyres

- 12*12.00R24-20PR

Electrical system

- With 2*12V maintenance-free batteries, the crane power can be cut off manually via a mechanical master power switch. The use of CAN-bus control system can achieve information interaction between superstructure and undercarriage.

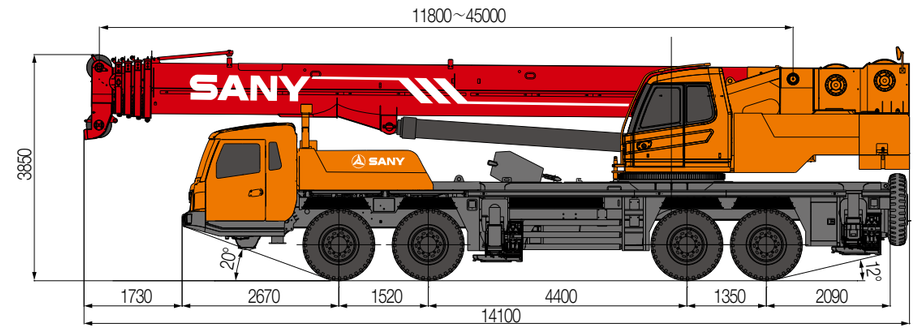

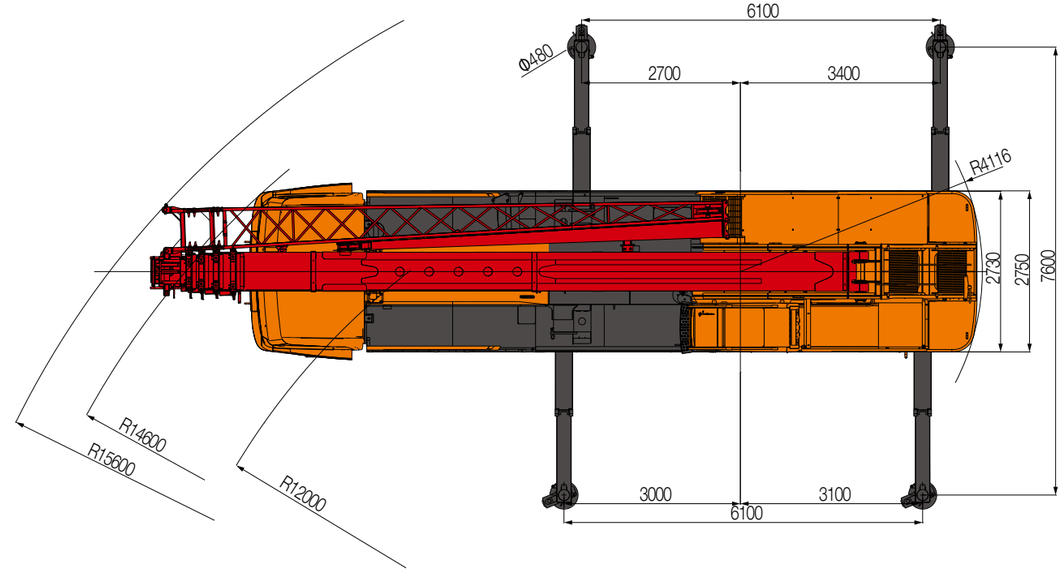

https://truckmanualshub.com/

Type	Item		Parameter
Capacity	Max. lifting capacity		75 t
Dimensions	Overall length		14100 mm
	Overall width		2750 mm
	Overall height		3850 mm
	Axle distance	Axle-1,2	1520 mm
		Axle-2,3	4400 mm
		Axle-3,4	1350 mm
Weight	Overall weight		46000 kg
	Axle load	Axle load-1,2	20000 kg
		Axle load-3,4	26000 kg
	Rated power		275 kW/2100 rpm
	Rated torque		1550 N.m/1200 rpm
Traveling	Max.traveling speed		80 km/h
	Turning radius	Min.turning radius	12 m
		Min.turning radius of boom head	15.6 m
	Wheel formula		8 × 4
	Min.ground clearance		230 mm
	Approach angle		20 °
	Departure angle		12 °
	Max.gradeability		37%
	Fuel consumption per 100km		≤ 55 L
Main Performance Data	Temperature range		– 20 °C ~ +45 °C
	Min.rated range		3 m
	Tail slewing radius of swingtable		4.116 m
	Boom section		5
	Boom shape		U-shaped
	Max.lifting moment	Base boom	2560.2 kN·m
		Full-extend boom	1254.4 kN·m
		Full-extend boom+jib	414.9 kN·m
	Boom length	Base boom	11.8 m
		Full-extend boom	45.0 m
		Full-extend boom+jib	61 m
	Outrigger span (Longitudinal×Transversal)		6.1 × 7.6 m
	Jib offset		0 °, 15 °, 30 °
Working speed	Max.single rope lifting speed of main winch (no load)		130 m/min
	Max.single rope lifting speed of auxiliary winch (no load)		130 m/min
	Full extension/retraction time of boom		120 / 130 s
	Full lifting/descending time of boom		80 / 80 s
	Slewing speed		2.0 r/min
Aircondition	Aircondition in up cab		Cooling and Heating
	Aircondition in low cab		Cooling and Heating

STC750 Working Ranges

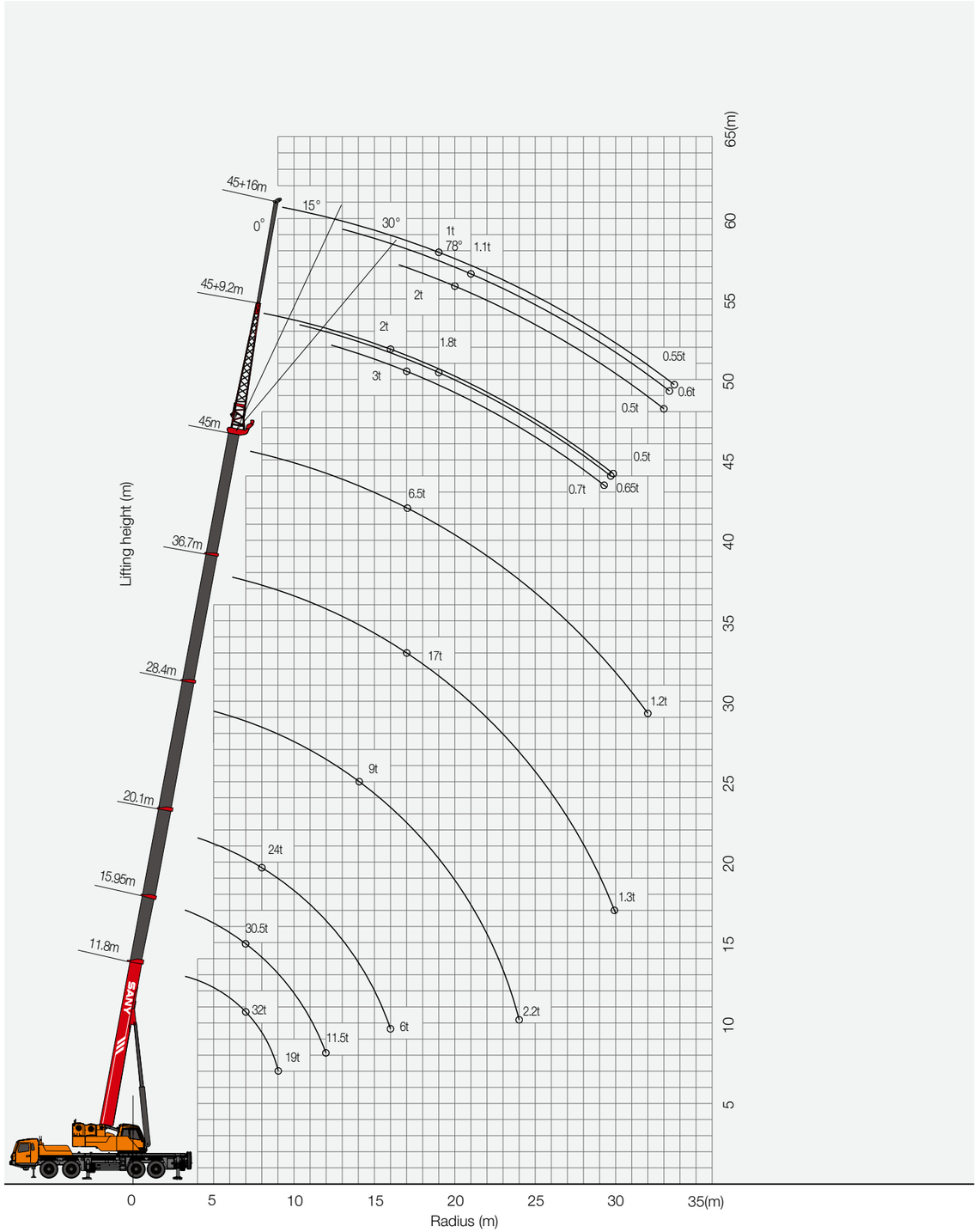

https://truckmanualshub.com/

Unit:Kg

Prerequisites:
① Boom operating conditions(fully extended boom length),min.length is 11.8m and max.length is 45m
② The span of outriggers is 6.1m×7.6m
③ 360°rotation is applied
④ Counterweight is 4.5T

Working range(m)	Main boom									Working range(m)
	11.8m	15.95m	20.1m		28.4m		36.7m		45m	
3	75000	54000	43000	30000						3
3.5	70000	54000	43000	29000						3.5
4	62000	51000	43000	27000	30000	16000				4
4.5	56000	48000	40900	25000	30000	16000				4.5
5	51000	45000	38000	23000	30000	16000				5
5.5	47000	42000	35400	21000	29000	15500				5.5
6	41500	39000	33100	19500	27500	15000				6
6.5	36000	35000	31100	16500	26000	15000	16000	9500		6.5
7	32000	30500	28500	15000	24500	14000	16000	9500		7
8	25000	24500	24000	13000	22000	13000	15000	9000	9500	8
9	19000	20000	20000	10000	19500	12000	15000	9000	9500	9
10		16500	17000	9000	16000	11000	14000	9000	9000	10
11		13500	14000	8000	13600	9500	13000	8500	9000	11
12		11500	12000	7600	12000	8000	12000	8200	9000	12
13			9000	7200	10500	7500	11000	8000	9000	13
14			8500	6800	9000	7000	10000	7000	8500	14
15			6500	6500	7500	6500	9200	6500	8250	15
16			6000	6000	6800	6000	7800	5100	8000	16
18					5000	5500	6000	4000	6500	18
20					4000	5000	4800	3800	5100	20
22					2900	4000	3800	3600	4100	22
24					2200	3200	2900	3300	3300	24
26							2200	3000	2600	26
28							1700	2500	2000	28
30							1300	2000	1500	30
32									1200	32
Number of lines	12	9	9		6		5		3	Number of lines
Telescoping condition(%)										
I	0%	50%	100%	0%	100%	0%	100%	0%	100%	I
II	0%	0%	0%	33%	33%	66%	66%	100%	100%	II

Unit:Kg

Prerequisites:
① Boom operating conditions(fully extended boom length),min.length is 11.8m and max.length is 45m
② The span of outriggers is 6.1m×7.6m
③ 360°rotation is applied
④ Counterweight is 4.5T+2T

Working range(m)	Main boom									Working range(m)
	11.8m	15.95m	20.1m		28.4m		36.7m		45m	
3	75000	54000	43000	30000						3
3.5	70000	54000	43000	29000						3.5
4	62000	51000	43000	27000	30000	16000				4
4.5	56000	48000	40900	25000	30000	16000				4.5
5	51000	45000	38000	23000	30000	16000				5
5.5	47500	42000	35400	21000	29000	15500				5.5
6	43000	39000	33100	20000	27500	15000				6
6.5	39000	36000	31100	18200	26000	15000	16000	9500		6.5
7	35000	32500	28500	16200	25000	14000	16000	9500		7
8	26500	26200	26100	13000	22000	13000	15000	9000	9500	8
9	20500	21500	21000	10000	20000	12500	15000	9000	9500	9
10		17500	17500	9000	17000	11500	14000	9000	9000	10
11		14300	14500	8000	14500	9600	13000	8600	9000	11
12		12000	12300	7600	12500	8500	12500	8250	9000	12
13			10100	7200	11500	7500	12000	8000	9000	13
14			9000	6800	9500	7000	10500	7000	8500	14
15			7400	6500	8700	6500	9400	6500	8250	15
16			6300	6000	7200	6000	8400	5500	8000	16
18					5200	5500	6500	5200	6800	18
20					4100	5000	5200	5000	5500	20
22					3100	4200	4100	4500	4500	22
24					2400	3800	3200	4000	3500	24
26							2500	3500	2800	26
28							2000	3000	2200	28
30							1500	2500	1700	30
32									1400	32
Number of lines	12	9	9		6		5		3	Number of lines
Telescoping condition(%)										
I	0%	50%	100%	0%	100%	0%	100%	0%	100%	I
II	0%	0%	0%	33%	33%	66%	66%	100%	100%	II

https://truckmanualshub.com/

STC750 TRUCK CRANE

LOAD CHART

Unit:Kg

Prerequisites:
① Boom operating conditions(fully extended boom length +jib length),max.length is 45m+9.2m
② The span of outriggers is 6.1m×7.6m
③ 360°rotation is applied
④ Counterweight is 4.5T

Working angle	Main boom+Jib		
	0°	15°	30°
80°	3500	2400	2000
78°	3500	2400	2000
77°	3200	2300	1900
75°	3000	2200	1800
73°	2700	2000	1700
71°	2500	1800	1600
68°	2200	1700	1400
66°	2000	1500	1300
63°	1800	1400	1100
61°	1500	1200	950
58°	1100	950	750
56°	700	650	550
Min.elevation angle	55°		

Unit:Kg

Prerequisites:
① Boom operating conditions(fully extended boom length +jib length),max.length is 45m+16m
② The span of outriggers is 6.1m×7.6m
③ 360°rotation is applied
④ Counterweight is 4.5T

Working angle	Main boom+Jib		
	0°	15°	30°
80°	2800	1500	1100
78°	2400	1450	1000
77°	2400	1400	1000
75°	2300	1300	950
73°	2000	1200	850
71°	1800	1100	850
68°	1500	1000	800
66°	1300	950	760
63°	1100	850	720
61°	950	750	650
58°	650	600	550
56°	500		
Min.elevation angle	55°		

STC750 TRUCK CRANE

WHEEL CRANE FAMILY MAP

TRUCK CRANE

STC200
Maximum Load Capacity: 20t
Telescopic Boom: 4 Sections, 10.6-33m

STC250
Maximum Load Capacity: 25t
Telescopic Boom: 4 Sections, 10.65-33.5m

STC250H
Maximum Load Capacity: 25t
Telescopic Boom: 5 Sections, 10.5-39.5m

STC300S
Maximum Load Capacity: 30t
Telescopic Boom: 5 Sections, 10.6-40.5m

STC300TH
Maximum Load Capacity: 30t
Telescopic Boom: 4 Sections, 10.6-33.5m

STC300H
Maximum Load Capacity: 30t
Telescopic Boom: 5 Sections, 10.5-39.5m

STC500
Maximum Load Capacity: 50t
Telescopic Boom: 5 Sections, 11.5-43m

STC550
Maximum Load Capacity: 55t
Telescopic Boom: 5 Sections, 11.5-43m

STC600S
Maximum Load Capacity: 60t
Telescopic Boom: 5 Sections, 11.3-43.5m

STC750
Maximum Load Capacity: 75t
Telescopic Boom: 5 Sections, 11.8-45m

STC800S
Maximum Load Capacity: 80t
Telescopic Boom: 5 Sections, 12.2-47m

STC1000
Maximum Load Capacity: 100t
Telescopic Boom: 5 Sections, 13.5-52m

STC1000C
Maximum Load Capacity: 100t
Telescopic Boom: 6 Sections, 13.25-60m

STC1000S
Maximum Load Capacity: 100t
Telescopic Boom: 5 Sections, 12.26-58m

STC1200S
Maximum Load Capacity: 120t
Telescopic Boom: 7 Sections, 12.6-63.5m

STC1300C
Maximum Load Capacity: 130t
Telescopic Boom: 6 Sections, 13.3-60m

STC1600
Maximum Load Capacity: 160t
Telescopic Boom: 6 Sections, 13.4-62m

STC2200
Maximum Load Capacity: 220t
Telescopic Boom: 6 Sections, 14.35-68m

ALL TERRAIN CRANE

SAC1800
Maximum Load Capacity: 180t
Telescopic Boom: 6 Sections, 13.5-62m

SAC2200
Maximum Load Capacity: 220t
Telescopic Boom: 6 Sections, 13.5-62m

SAC2600
Maximum Load Capacity: 260t
Telescopic Boom: 6 Sections, 15.65-73m

SAC3000
Maximum Load Capacity: 300t
Telescopic Boom: 7 Sections, 15.4-83m

SAC3500
Maximum Load Capacity: 350t
Telescopic Boom: 6 Sections, 15.2-70m

SAC6000
Maximum Load Capacity: 600t
Telescopic Boom: 7 Sections, 17.1-90m

ROUGH-TERRAIN CRANE

SRC250
Maximum Load Capacity: 25t
Telescopic Boom: 4 Sections, 9.9-31.5m

SRC350
Maximum Load Capacity: 35t
Telescopic Boom: 4 Sections, 10-31.5m

SRC550
Maximum Load Capacity: 55t
Telescopic Boom: 4 Sections, 11.25-34.5m

SRC550H
Maximum Load Capacity: 55t
Telescopic Boom: 5 Sections, 11.5-43m

SRC750
Maximum Load Capacity: 75t
Telescopic Boom: 5 Sections, 11.8-45m

SRC1200
Maximum Load Capacity: 120t
Telescopic Boom: 5 Sections, 13-49m

https://truckmanualshub.com/

Quality Changes the World

SANY AUTOMOBILE HOISTING MACHINERY

Address: SANY Industrial Park, Jinzhou Development Zone,
Changsha, Hunan, China.
Service Hotline: 4006098318
Email: crd@sany.com.cn
For more information, please visit: www.sanygroup.com

For our consistent improvement in techonology, specifications may change without notice.
The machines illustrated may show optional equipment which can be supplied at additional cost.

Version: 2015.08

Distributed By: