https://truckmanualshub.com/

Combilift Ltd.

Operators & service Manual

Models:

C3500kg / C4000kg / C4500kg / C4800kg / C5000kg / C5000XL
C6000lbs / C8000lbs / C9000lbs / C10,000lbs / C10,000XL

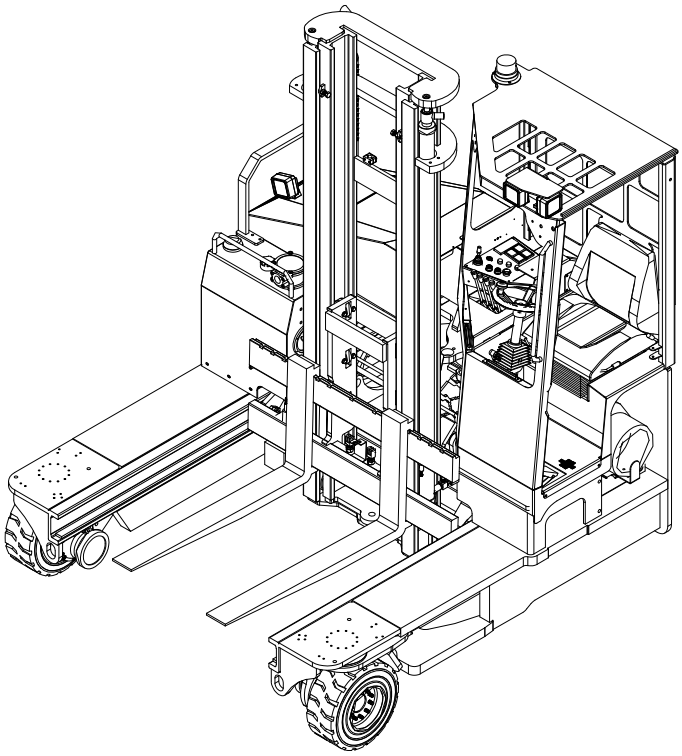

Serial Number: _____

Combilift ltd.
Gallinagh
Co. Monaghan
Ireland

Tel: + 353 47 80500
Fax: + 353 47 80501
E-Mail: info@combilift.com

www.COMBiLiFT.COM

C4000-OM-EN-08 (c)

https://www.forkliftpdfmanuals.com/

https://truckmanualshub.com/

CUSTOMISED HANDLING SOLUTIONS

Dear Customer,

Thank you for choosing us and showing your faith in the Combilift range of products. With this Combilift Product you now own a machine designed by our team of experienced engineers using the most up to date design techniques and technology with the sole aim of producing a machine that is efficient, reliable, safe and the right tool for your businesses material handling needs. The Combilift product possesses a vast range of multi functional application possibilities that makes it one of the leading products in the material handling industry.

Combilift Ltd

The Purpose of this operators Manual

This Manual contains all of the information you will require to operate your Combilift product safely and efficiently. It is essential that this manual remain with the machine at all times. It is essential that the operator read this manual before attempting to operate the Combilift.

Always follow all safety instructions laid out in this manual

All instructions, prohibitive or otherwise, found in this manual should be adhered to at all times. They are there to protect your life and the lives of others.

Always perform the Daily Inspection as indicated in this manual and follow the guidelines on service intervals.

www.COMBiLiFT.COM

https://www.forkliftpdfmanuals.com/

https://truckmanualshub.com/

Preface:

This operator's manual has been written to provide the operator of this Combilift product with regard to providing information to the operator in order to ensure that this Combilift is operated in a safe and efficient manner. It does not take precedence over any local or nationally applicable laws or regulations with regard to the operation of lift trucks. If you are unsure, contact your local authorities in order to determine what tests and training courses must be completed in order to be fully qualified in the operation of this type of material handling equipment.

The information found has been arranged in a manner to ensure the safe operation of the machine. As can be seen the general principles of safe operation are presented before how the machine actual operates. It is essential that the operators spend time familiarising themselves not only with the machine, but with the information contained in this manual also.

Throughout this manual there are a number of instructions that have been highlighted in a number of ways. These instructions must be followed at all times as they indicate warnings and advice which if not heeded can result in damage to the truck, product, or property. In the worst case failure to adhere to the warnings and advice can result in serious injury and even death.

The table of contents on the following pages show the structure of the information contained in this manual and make for easier location of information.

https://www.forkliftpdfmanuals.com/

https://truckmanualshub.com/

Contents

Section 1: Operating Instructions & Conditions 1-1
1.1: Understand the Capacity of your Lift-Truck 1-1
1.2: Centre of Gravity (CG) 1-1
1.3: Load Chart 1-3
1.4: Serial Plate 1-3
1.5: Operator Qualification 1-3
1.6: Operating Conditions 1-4

Section 2: Machine Layout & Operator Controls 2-1

Section 3: Safe Operation 3-1
3.1: Entering and Exiting the Operator Cabin..... 3-1
3.2: Starting the Engine..... 3-1
3.3: Moving..... 3-2
3.4: Parking 3-4
3.5: Loading & Unloading The Truck 3-5
3.6: Travelling Safely with a Load..... 3-7
3.7: Fuel Handling & Storage 3-8

Section 4: Maintenance & Service Information 4-1
4.1: Maintenance Schedule 4-1
4.2: Initial Service – Conducted at 100 hours of Operation..... 4-7
4.3: Engine Oil And Engine Oil Filter (service Interval = 250Hours)..... 4-7
4.4: Engine Coolant (Service interval = 2000Hours)..... 4-9
4.5: Hydraulic Oil and Filters 4-10
4.6: Mast Maintenance (Service Interval = 250Hours)..... 4-12
4.7: Greasing Mast Carriage Channels 4-13
4.8: Water Pump V- Belt..... 4-13
4.9: Fuel Filter – Diesel Trucks (Service interval = 500 Hours)..... 4-14
4.10: Air Filter Element (Service Interval = 500 Hours) 4-14
4.11: Grease Point Chart 4-15
4.12: Diesel Particulate Filter (DPF)..... 4-15

https://www.forkliftpdfmanuals.com/

https://truckmanualshub.com/

Section 5: Technical Information & Circuit Diagrams 5-1
5.1: Towing the Combilift..... 5-1
5.2: Mechanical Brake Release..... 5-2
5.3: Checking The Charge Pressure..... 5-3
5.4: Fuse Box 5-4
5.5: Dash Relay Layout (Relay Loom) 5-5
5.6: Dash Relay Layout (PLC Loom) 5-6
5.7: Steering & Hydraulic Functions Circuit 5-7
5.8: Hydraulic Drive Circuit: 5-8
5.9: Standard Diesel Electric Circuit: 5-9
5.10: Standard LPG Electric Circuit: 5-12
5.11: Tier IV LPG Electric Circuit: 5-15
5.12: Diesel Electric Circuit (PLC):..... 5-18
5.13: LPG Electric Circuit (PLC): 5-20
5.14: Tier IV LPG Electric Circuit (PLC)..... 5-22
5.15: Colour Codes for Electric Circuits:..... 5-24
5.16: PLC Details..... 5-25
5.17: PLC Diagnostics 5-28

https://www.forkliftpdfmanuals.com/

https://truckmanualshub.com/

Section 1: Operating Instructions & Conditions

1.1: Understand the Capacity of your Lift-Truck

The basic function of a lift truck is to lift, move and place materials. It operates on the seesaw principle - two weights on opposite sides of a fulcrum. In this case, the load on the forks must be balanced by the weight of the Combilift. The location of the centre of gravity of both the Combilift and the load is a major factor.

1.2: Centre of Gravity (CG)

The centre of gravity of any object is the single point about which the object is balanced in all directions. Every object has a centre of gravity. When the lift truck picks up a load, the truck and load have a new, combined centre of gravity.

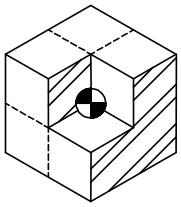

The Combilift has moving parts that change its centre of gravity. The centre of gravity moves forward and back as the mast is extended and retracted and also as the mast is tilted backwards and forwards. The centre of gravity also moves up and down as the mast moves up and down.

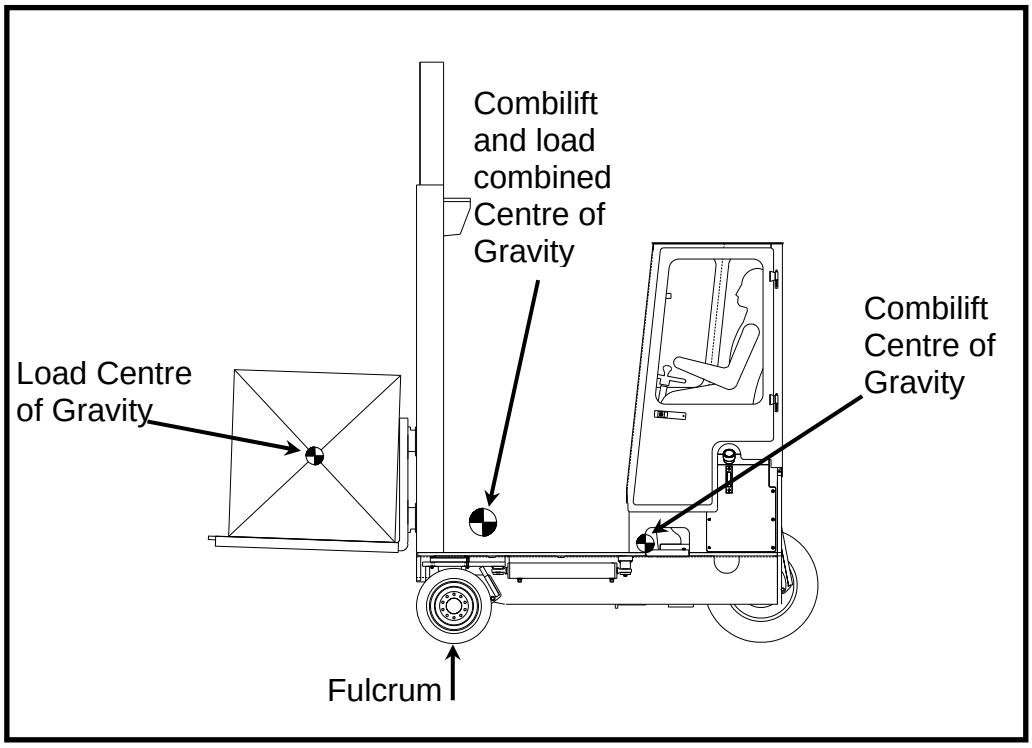

https://www.forkliftpdfmanuals.com/

https://truckmanualshub.com/

The centre of gravity and therefore stability is also affected by the size, weight, shape and position of the load; the height to which it is raised; extension of mast forward and backward; tilt and side shift. Truck movement such as acceleration, braking, turning and uneven surfaces will also affect truck stability.

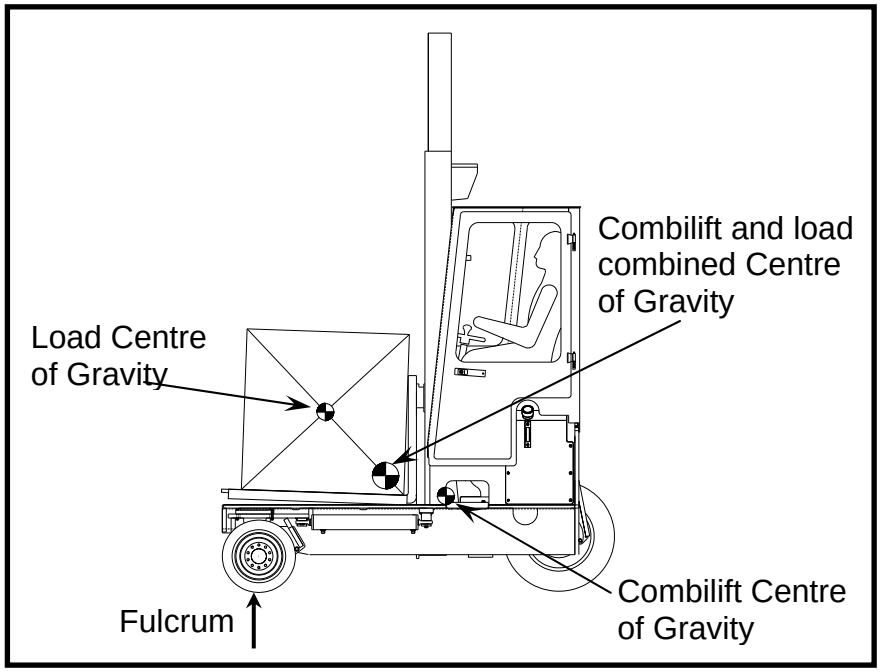

To keep the lift truck stable, the centre of gravity must stay within the area of the lift truck represented by a triangle drawn between the three wheels. If the centre of gravity moves forward of the triangle front, the lift truck will tip forwards. If it moves outside the right or left of the triangle the truck will tip to the side.

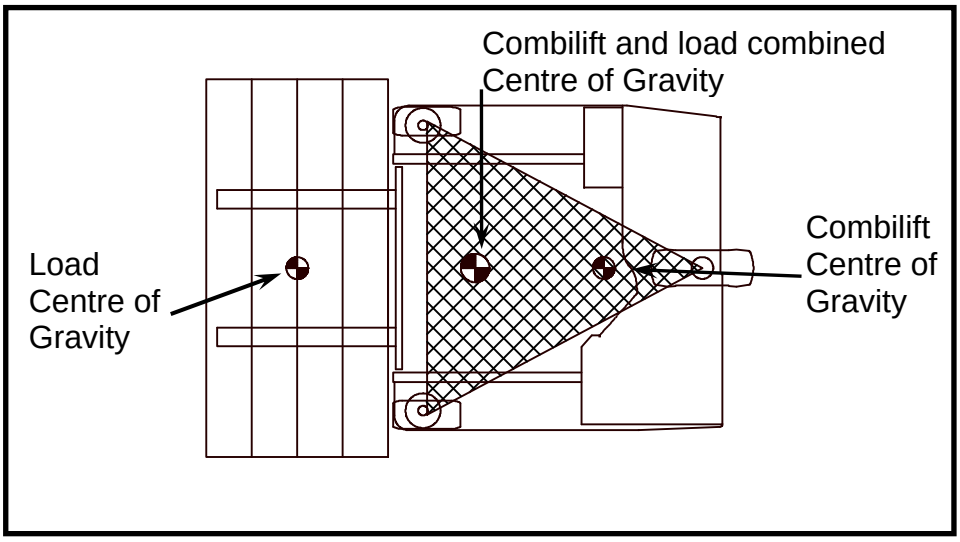

https://www.forkliftpdfmanuals.com/

https://truckmanualshub.com/

1.3: Load Chart

The rated capacity of the truck is illustrated on a load chart located inside the cabin. The load centre is determined by its centre of gravity and is measured from the front face of the forks to the centre of gravity of the load. It is assumed that the centre of gravity in the vertical direction is no greater than the specified horizontal load centre.

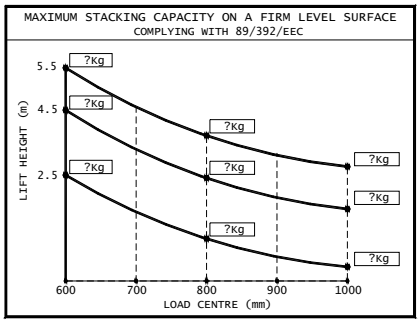

It is the responsibility of the operator to determine that the weight of the load to be handled is not greater than the capacity shown on the load chart. The operator **must not** handle any load that is greater than the capacity shown.

1.4: Serial Plate

The Serial Plate is the Metal Disc that is fixed to the Combilift in the cabin of every machine. It is engraved with a number of details, which are required by law. These are:

- The Trucks serial Number
- Its rated Capacity
- It’s unladen weight
- It’s date of manufacture
- The manufacturers name and address.

This plate should not be removed by anyone. If lost order a replacement from Combilift immediately.

1.5: Operator Qualification

The Combilift must NOT be operated by any other individual other than those who have been trained to do so. Training should be carried out either by Combilift Driver training personnel or a Combilift authorised training organisation. Details of these organisations can be acquired from Combilift Ltd.

Drivers should be aware of all local authority regulations and laws regarding qualification of drivers for material handling equipment.

https://www.forkliftpdfmanuals.com/

https://truckmanualshub.com/

1.6: Operating Conditions

The Combilift can operate on a variety of different surfaces and in various conditions but the following should be noted:

Ground Surface:
Floor and road surfaces should be of adequate load capacity, firm, smooth and level. Approaches to kerbs, railway crossings etc. should also be firm, smooth and adequately ramped to prevent possible displacement.

Aisle Dimensions:
Aisles should be arranged to eliminate corners, angles, inclines, steep ramps, narrow passages and low ceilings. When Operating in guided aisles ensure that the mast is retracted fully before entering the aisle. Enter the aisle slowly to reduce impact on the rollers and guide rails.

Headroom:
Structures over aisles, which may be potential obstacles should be defined and marked with a conspicuous colour. Low doorways should be marked with their clearance limits.

Warning

Always be aware of overhead electrical power cables. Always remain a **minimum of 5M** from overhead power lines as an electric arc can occur even when approaching an electric line. This poses a high risk for not only the operator but for other personnel nearby.

Operating in Hazardous Areas:
Standard trucks are not equipped to operate in cold stores, flammable or explosive areas, corrosive atmospheres or areas containing a high degree of dust contamination.

Gradients:
When differences in levels exist, low gradient ramps should be provided, having smooth, gradual level changes at top and bottom to prevent shocks to the load or fouling of the forks. Except in emergencies, do not turn the truck on gradients. Correct gradient procedure should be followed at all times (see Safe Operation in section 3) Do not park on a gradient. In an emergency apply parking brake and chock wheels, but do not leave the truck unattended.

https://www.forkliftpdfmanuals.com/

https://truckmanualshub.com/

Adverse Weather Conditions:
There are a number of weather conditions for which extra care must be taken.

- High Winds: Do not operate the truck in winds that are greater in speed than 50km/hr as this can have serious effects on the stability of the machine.

- Electrical Storms: Always discontinue operation of the truck in the event of an approaching electrical storm due to the associated risks of lightning.

- Extreme Temperatures: The Combilift is rated to operate between -30°C and +50°C. If the temperature falls below or rises above this range discontinue operation of the machine in order to prevent damage to various components

https://www.forkliftpdfmanuals.com/

https://truckmanualshub.com/

Section 2: Machine Layout & Operator Controls

It is essential before you start operating the Combilift to be familiar with the main components and controls of the machine. The picture below indicates all of the major components of the Combilift.

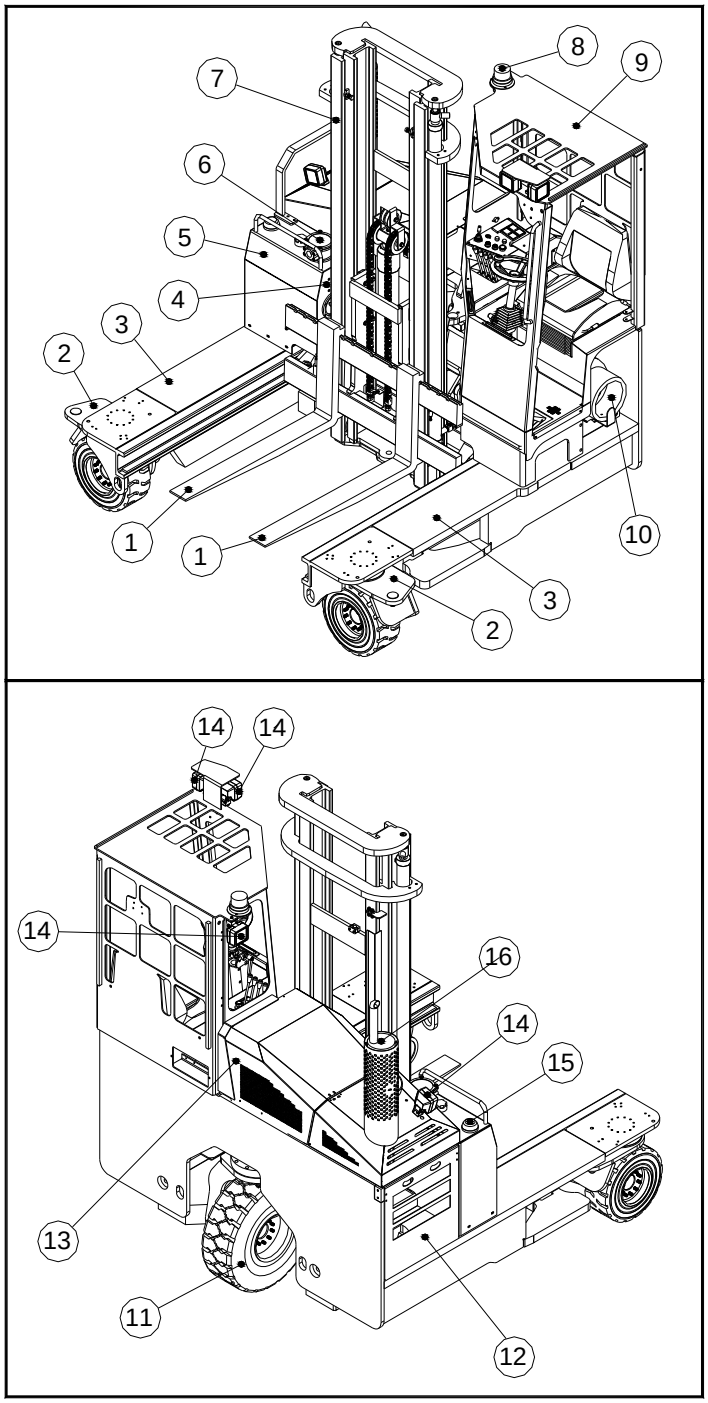

Component Layout

1. Forks
2. Front Swivels
3. Platforms
4. Hydraulic Oil level Gauge
5. Hydraulic Tank
6. Hydraulic Return Filter
7. Mast
8. Strobe Beacon
9. Overhead Guard /Operator Cabin
10. LPG Tank / Diesel Tank
11. Rear Swivel
12. Access Panel
13. Bonnet
14. Worklights
15. Hydraulic Tank Filler Cap
16. Exhaust

Now that the main components of the truck have been identified, the next step is to identify the operator controls and how they function.

https://www.forkliftpdfmanuals.com/

https://truckmanualshub.com/

Ignition Switch:

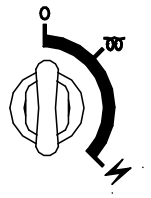

- This is a three-position key switch located on the dash, which isolates the electrical system when in the off position.

Parking Brake Switch

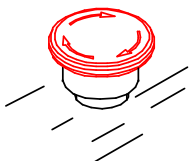

- The park brake switch is the red button located on the dash
- To APPLY the brake, depress the button. The button will lock in the depressed position.
- To RELEASE the brake, rotate the button clockwise. It should pop up into its normal position
- The Machine will NOT drive with the parking brake on

Direction Control Lever

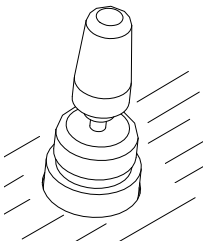

- The directional control lever is the 5-postion lever located on the dash. It can be set to forward, reverse, left, right, or neutral.
- In order to select a direction of travel, push the lever in the desired direction.
- Always return the lever to the neutral position when the truck is not moving

Note

The truck will NOT start unless the directional control lever is in the neutral position.

Horn Button

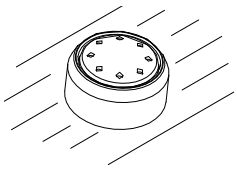

- The horn Button is the push button located on the dash next to the parking brake.
- To operate the horn, depress the button.

Light Switch:

- This is a two- position switch located on the dash
- Position 1 – Lights on
- Position 2 – Lights off

https://www.forkliftpdfmanuals.com/

https://truckmanualshub.com/

Water Temperature gauge

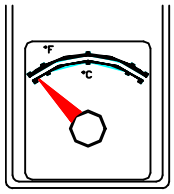

- This gauge Monitors the temperature of the engine cooling system
- The truck must not be operated if the gauge pointer moves to the red area as this indicates a fault in the cooling system

Hour Meter

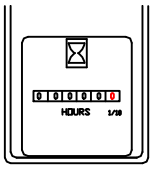

- The hour meter records how many hours the truck has been operating for in hours and tenths of an hour.
- Use meter to determine maintenance intervals

Oil Pressure Indicator Light

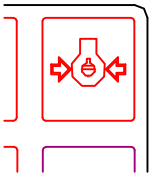

- When the key switch is in the 'ON' position, with the engine at rest, the oil pressure indicator is illuminated.
- If the indicator is illuminated when the engine is 'running' then this indicates low engine oil pressure and/or insufficient oil in the sump.

Note

Do **NOT** run engine if oil pressure indicator is illuminated.

Battery Charge Indicator Light

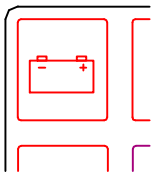

- This charging lamp indicates whether the alternator is charging the system or not. With the key switch turned ON and the engine not running, this red charge lamp should illuminate.
- If the charging lamp remains illuminated with the engine running, it indicates a malfunction of the charging system or associated components.

Pre-Heat Indicator Light – (diesel engines)

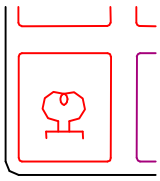

- The Pre-heat indicator is a lamp connected to the glow plugs on the diesel engine.
- When operating in cold conditions, wait until the pre-heat indicator extinguishes before attempting to start engine

Low fuel level indicator light

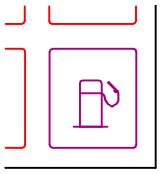

- The low-level indicator light illuminates whenever the fuel level on the truck reaches a certain level.
- On LPG engines a buzzer will also sound.

https://www.forkliftpdfmanuals.com/

https://truckmanualshub.com/

- Whenever the light illuminates the truck should be refuelled immediately.

Note

ALWAYS adhere to all safety precautions for refuelling the truck.
(See Section 3.7:)

Parking Brake Indicator Light

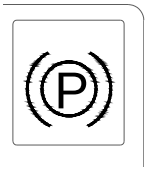

- The Parking Break indicator light indicate whether the brake is “ON” or “OFF”

Mode Indicator Lights

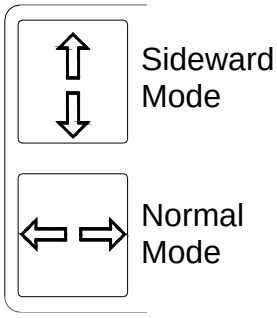

- The Mode indicator lights indicate which mode of travel the machine is in.
- If the machine is in normal mode, then the normal mode indicator light will illuminate
- If the machine is in sideward mode, then the sideward mode indicator light will illuminate
- Note: Modes of travel are covered in more detail in section 3 of this manual

Carousel Indicator Light

- The carousel indicator light is only used when the machine is in sideward mode.
- When the front wheels are steered in to a certain position, the carousel indicator light will illuminate. It is at this point that the carousel mode is activated and the machine can turn on its own axis.
- To deactivate the carousel the operator simply steers the wheels out of the carousel position

Lift Control Lever

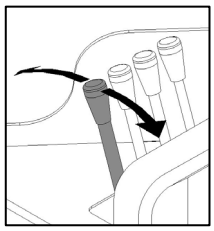

- The lift control lever controls the lift function of the Mast.
- To raise the forks, PUSH the lever FORWARD
- To lower the forks, PULL the lever BACKWARDS

Reach Control Lever

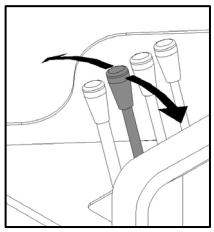

- The reach control lever controls the movement function of the mast carriage.
- To extend the mast carriage forward, PUSH the lever FORWARD
- To retract the mast carriage backwards, PULL the lever BACKWARDS

https://www.forkliftpdfmanuals.com/

https://truckmanualshub.com/

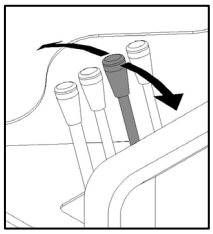

Tilt Control Lever

- The lift control lever controls the lift function of the Mast.
- To tilt the mast forward, PUSH the lever FORWARD
- To tilt the mast backward, PULL the lever BACKWARDS

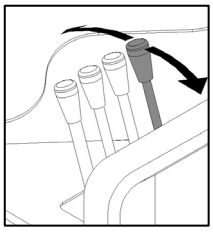

Auxiliary Function Lever

- This lever controls the flow of oil to an attachment when fitted.
- On trucks fitted with attachments providing more than one function, the truck may be fitted with a button on the fourth function lever. The operators must acquaint themselves with the operation of these special provisions before using the truck.
- Combilift have a number of standard functions which can be fitted to the truck and operate off the auxiliary function lever. These include:

    - Fork Positioner
    - Side shift
    - Telescopic forks
    - Lift Drop Forks

- Take time to familiarise yourself with the auxiliary functions on the Combilift and how they are operated by the auxiliary lever

Warning

Adding an attachment to a Combilift will alter the rated capacity of the machine. A load chart must be obtained from Combilift Ltd for any attachment that is fitted to indicate this change in capacity

Warning

ONLY attachments that have been approved by Combilift engineers may be fitted to Combilift Trucks

Wipers

- The wipers are located on the front windows.
- They are activated by the switching on the wiper motor.

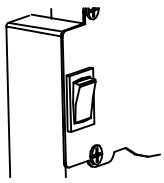

https://www.forkliftpdfmanuals.com/

https://truckmanualshub.com/

Brake / Inching Pedal

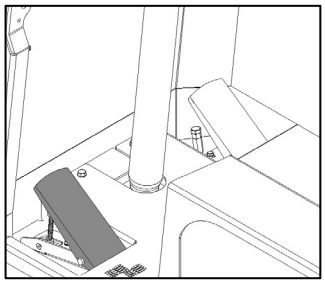

- The Brake/ inching pedal is the pedal on the floor on the left hand side of the steering Column as shown in the diagram opposite
- The combined Brake/Inching Pedal has two functions:
    - Stop drive to slow the machine down.
    - It may be used to permit slow speed, for precise manoeuvring of the truck in confined spaces.

Accelerator Pedal

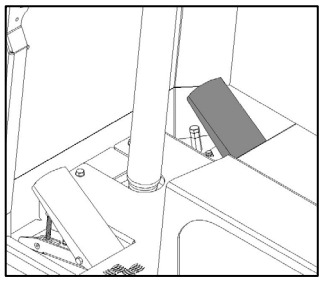

- The accelerator pedal is located on the floor on the right hand side of the steering column.
- The accelerator pedal provides the operator control of the truck speed.
- To INCREASE truck speed, DEPRESS pedal.

Steering Wheel / Column

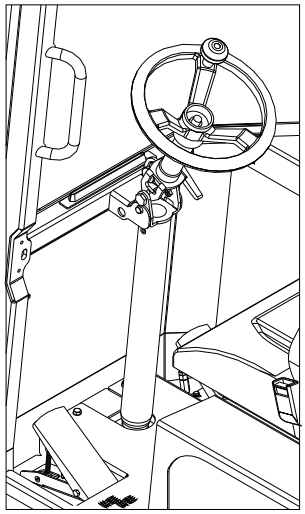

- All models have both front and rear-end steering.
- When in forward mode the front wheels are fixed and the rear wheel steers the truck.
- Rear-end steering allows sharper turns in confined areas but demands greater driver care when turning.
- When in sideward mode, the rear wheel is fixed and the front wheels steer the truck.
- When driving forwards, turn steering wheel clockwise to turn truck clockwise, turn steering wheel anti clockwise to turn truck anti clockwise.
- When driving in reverse, turn steering wheel clockwise to turn truck anti clockwise, turn steering anti clockwise to turn truck clockwise.
- When driving in sideward mode, turning the steering wheel clockwise will turn truck clockwise. Turning the steering wheel anti clockwise to turn truck anti clockwise.
- The same is true for travel in either direction when in sideward mode.
- The steering wheel is also equipped with a spinner knob for easier steering
- The angle of the steering column is adjustable to increase driver comfort.
- To adjust the angle of the steering column, loosen the locking handle on the side of the column by turning the handle clockwise.
- Adjust the steering column to the desired angle
- Lock the column in position by retightening the locking handle by turning it anticlockwise

https://www.forkliftpdfmanuals.com/

https://truckmanualshub.com/

Seat Adjustment

- It is the responsibility of the Operator to ensure that the seat is adjusted according to operator weight, height etc before operating the truck.
- ALWAYS report any malfunctioning of the seat adjustments immediately.
- ALWAYS wear the seat belt provided.
- DO NOT adjust the seat when vehicle is in operation.
- Keep clear of moving parts.
- Authorised & competent personnel should carry out Installation & Maintenance only

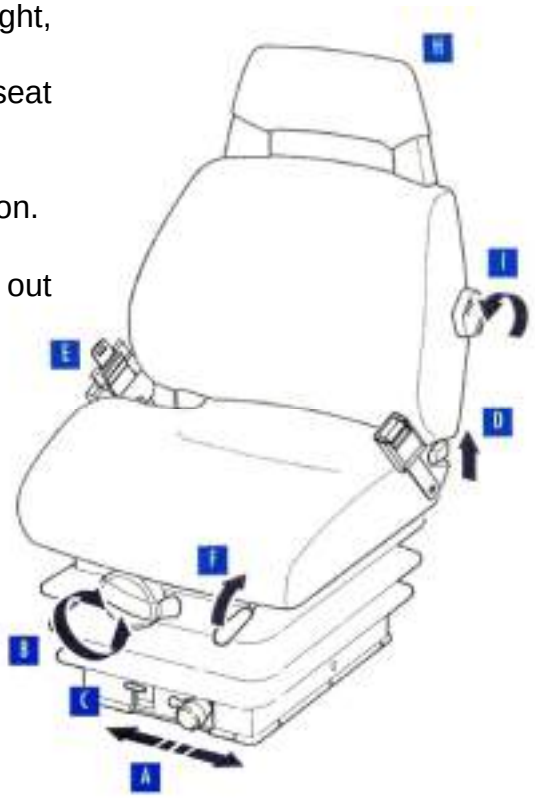

A Upstop Adjustment

B Height Adjustment – Depending on operator weight, rotate knob clockwise, to increase, and anti-clockwise to reduce suspension stiffness.

C Using the height adjustment knob ‘B’, adjust the yellow ride indicator ‘C’ to the middle of the green area when seated.

D Backrest angle adjustment

E Seat belt

F Horizontal Adjustment (Slide rails)

H Backrest Extension

I Lumbar Support adjustment (5 positions)

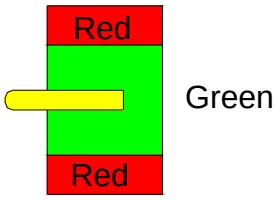

Mast Height Cutout Override Button

- This optional feature uses a push button switch, which is connected to a sensor on high-lift Triplex masts.
- When the mast is above 3.5m (138”) high, the machine will not drive.
- To re-commence driving the operator must either:
    - Lower the forks of the machine using the lift control lever

      OR
    - Press the mast drive enable button located on the dash.

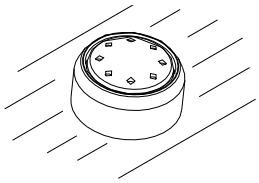

https://www.forkliftpdfmanuals.com/

https://truckmanualshub.com/

Heater Switch (Optional)

- A four position rotary switch, located which selects off, low, medium or high fan speeds.

Heater Temperature Control Switch (Optional)

- To increase cabin temperature, turn anti-clockwise.
- To decrease cabin temperature, turn clockwise.

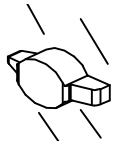

Battery Isolator Key Switch

- This switch is used to disconnect power from the battery in the event of an emergency.
- The switch is located inside the access panel on the right hand side of the Combilift. (See diagram below)
- It can be accessed without removing the panel through the access hole provided
- When the Combilift is not in use turn switch to 'OFF' position, by turning switch ANTI-CLOCKWISE.
- The Combilift will not start unless the switch is returned to the 'ON' position, by turning the switch CLOCKWISE

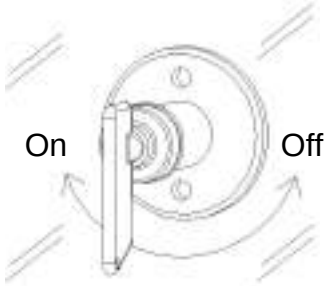

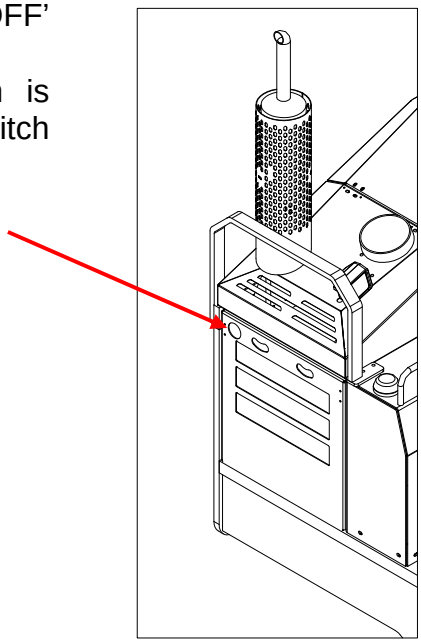

Engine Management Light (Yellow Light On Dash)

- If this light comes on it means the engine control unit (ECU) has detected a problem with the engine.
- If the light is on and the engine is running smoothly you can drive the truck. However, it should be checked at the earliest convenience. If the engine is running poorly the truck should not be driven.
- The ECU will store the fault information that will allow the fault to be diagnosed when the ECU is connected to a PC.

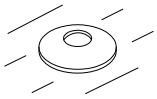

https://www.forkliftpdfmanuals.com/

https://truckmanualshub.com/

Section 3: Safe Operation

Many people are under the impression that driving a lift truck is like driving any other vehicle. This is not the case. Lift trucks are designed for the purpose of lifting, and moving heavy loads in confined spaces. For this reason it is essential that operators are trained to operate the machines correctly and ensure that they always operate the machine in a safe and controlled manner. This section looks at how the machine should be operated.

3.1: Entering and Exiting the Operator Cabin

When entering or exiting the cabin of the Combilift, the three point contact method should always be used. The three point contact method is when an operator has three of their four limbs (hands & feet) in contact with the truck. There are a number of handgrips as well as a footstep available to allow easy and safe access to the operator cabin. DO NOT use the steering wheel as a handgrip. When in the cabin of the Combilift, ALWAYS wear the seat belt provided.

3.2: Starting the Engine

Diesel Engine

- Ensure that the parking brake is applied and that the directional control lever is in the neutral position
- Insert the key into the ignition switch and turn clockwise to the preheat position. The charge indicator lamp must light up.
- Depress the accelerator.
- Turn the ignition key further clockwise to the “Start” position. After the engine starts, release the ignition key which will return automatically to the ON position.
- Check that all the indicator lamps are extinguished and that all gauges are registering correctly.

LP Gas System

- Open the valve on the LPG tank.
- Ensure that the parking brake is applied and that the directional control lever is in the neutral position
- Insert the key into the ignition switch and turn clockwise to the ‘ON’ position. The charge indicator lamp must light up.
- Turn the ignition key further clockwise to the ‘start’ position.
- As soon as the engine starts, release the ignition key, which will automatically return to the ‘ON’ position.
- Check that all warning lamps are extinguished and that all gauges are registering correctly

https://www.forkliftpdfmanuals.com/

https://truckmanualshub.com/

Note

The truck will NOT start unless the directional control lever is in the neutral position.

Note

The starter must not be operated continuously for more than 30 seconds. If the engine does not start, return the key to the 'OFF' position and wait 10 seconds before trying again.

Note

When the machine is started the wheels will remain in whatever position they were in when the machine was stopped until the operator selects a direction of travel on the directional control lever

3.3: Moving

Because the Combilift is capable of multi directional travel it is important to be aware of how the truck moves and how to drive it in a safe manner.

Important

The Combilift has two different modes of travel. These are:

Normal Mode: The front wheels are parallel to the platforms. Steering is performed by the Rear Swivel.

Sideward Mode: The front wheels are at 90° to the platforms. Steering is performed by the Front Swivels.

Moving Forward

- Select forward on the directional control lever.
- Depress the brake/inching pedal fully
- Look around to make sure your way is clear
- Release the parking brake and sound the horn
- Slowly release the brake/ inching pedal
- As the truck starts to move, depress the accelerator pedal to increase speed
- To stop depress the inching pedal fully.

(**Note**: If the machine is already in sideward mode, wait for the wheels to realign. Once the wheels are in position continuer as per the instructions)

https://www.forkliftpdfmanuals.com/

https://truckmanualshub.com/

Moving Backward

- Select reverse on the directional control lever.
- Depress the brake/inching pedal fully
- Look around to make sure your way is clear
- Release the parking brake and sound the horn
- Slowly release the brake/ inching pedal
- As the truck starts to move, depress the accelerator pedal to increase speed
- To stop depress the inching pedal fully

Changing Mode

The Combilift will automatically realign the wheels when a direction of travel is selected that requires the machine to change from one mode to the other. In order to change mode:

- Bring the machine to a complete stop.
- Apply the Parking Brake
- Select the direction you wish to travel in that is requires the machine to be in the other mode of travel.
- As the wheels start to realign depress the accelerator pedal lightly to speed up the operation.
- Once the mode change operation has finished and the light has illuminated in the dash follow the normal driving instructions for that mode of travel

Moving Left (Sideward Mode)

- Select left on the directional control lever.
- Depress the brake/inching pedal fully
- Look around to make sure your way is clear
- Release the parking brake and sound the horn
- Slowly release the brake/ inching pedal
- As the truck starts to move, depress the accelerator pedal to increase speed
- To stop depress the inching pedal fully

Moving Right (Sideward Mode)

- Select reverse on the directional control lever.
- Depress the brake/inching pedal fully
- Look around to make sure your way is clear
- Release the parking brake and sound the horn
- Slowly release the brake/ inching pedal
- As the truck starts to move, depress the accelerator pedal to increase speed
- To stop depress the inching pedal fully

https://www.forkliftpdfmanuals.com/

https://truckmanualshub.com/

3.4: Parking

When parking the Combilift always ensure that one of the two recommended parking methods are used to ensure the safety of the operator and others. There are two recommended methods for parking your Combilift. One is called the Attended parking method, for cases where the operator needs to exit the machine but will be no more than 25 feet (7 metres) away. The other is the Unattended parking method, for cases where the operator must exit the machine but will be further than 25 feet away

The Attended Parking Procedure

- Bring machine to a complete stop.
- Once stopped, apply the parking brake and set the directional control lever to the neutral position.
- Lower the forks till they are on the ground and tilt the mast forward.
- If loaded, retract the mast and rest the load on the platforms of the machine.
- Leave the engine running
- Remove the seatbelt from its retainer and exit the Combilift by using the three – point contact method
- Stay within 25 feet (7 metres) of the machine at all times.

The Unattended Parking method

- Bring machine to a complete stop.
- Once stopped, apply the parking brake and set the directional control lever to the neutral position.
- Lower the forks till they are on the ground and tilt the mast forward.
- If loaded, retract the mast and rest the load on the platforms of the machine.
- Turn off the machine.
- Remove the seatbelt from its fastener and exit the Combilift by using the three – point contact method as discussed earlier.
- Chock wheels if on an incline
- Turn off LP supply on LP gas machines

https://www.forkliftpdfmanuals.com/

https://truckmanualshub.com/

3.5: Loading & Unloading The Truck

This section provides information on the correct way to pick up a load and set down a load. There are a number of safety guidelines that should be adhered to at all times when lifting or placing loads.

- NEVER try to lift a load that the weight of which is not known
- ALWAYS consult the capacity chary for your truck before lifting a load.
- Avoid sudden and jerky movements

Adjusting the Load Forks

Forks should be spaced as far apart as the load being moved will allow. Both forks should always be the same distance from the centre of the fork carriage.
To adjust:

- Raise forks approximately 25mm (1”) off the floor.
- Apply parking brake and switch off engine.
- Lift up the keeper pin and slide the forks along the carriage.
- When the forks are set to the desired position ensure that the keeper pin is engaged in a slot on the top of the fork carriage bar.

Loading in Normal Mode

- Lower/raise forks to the required height.
- Enter the centre of the load.
- Drive as close to the load as possible.
- Extend mast to secure load if not already extended
- Apply parking brake.
- Lift load.
- Tilt rearward to secure load.
- Raise load above platform height.
- Retract mast fully
- Double fork load if necessary until load is tight against face of forks.
- Lower forks until load is just above platform height. Rest the load on the platforms where possible

Placing a Load in Normal Mode

- Drive the front of the machine as close to the placing area as possible.
- Apply parking brake.
- Lower/raise the forks to the required height.
- Extend mast.
- Lower load.
- Tilt forward.
- Retract mast if operating in confined spaces.
- Drive rearward until machine is clear of load

https://www.forkliftpdfmanuals.com/

https://truckmanualshub.com/

Loading in Sideward Mode

- Retract the mast fully.
- Drive the front of the machine as close to the load as possible.
- Drive until the machine is at the centre of the load.
- Apply parking brake.
- Lower/raise the forks to the required height.
- Extend mast.
- Lift load.
- Double fork load if necessary until load is tight against face of forks. (See section on “double forking”)
- Tilt rearward to secure the load.
- Raise load above platform height.
- Retract mast fully.
- Lower forks until load is just above platform height. Rest the load on the platforms where possible.

Placing a Load in Sideward Mode

- Drive the front of the machine as close to the placing area as possible.
- Apply parking brake.
- Lower/raise the forks to the required height.
- Extend mast.
- Lower load.
- Tilt forward.
- Retract mast fully.
- Release parking brake.
- Continue to drive in the sideward direction.

Stacking

- Slowly approach stack with load retracted and tilted backwards.
- Stop at face of stack, select neutral and apply parking brake.
- Elevate load until clear of stack top. Operate accelerator pedal to ensure that engine speed is sufficient to prevent stalling and to give the required lifting speed.
- Extend mast until load is above the stack.
- Tilt mast to vertical position and lower load onto stack.
- Retract mast fully and lower forks to 150mm (6”) above ground before moving off.

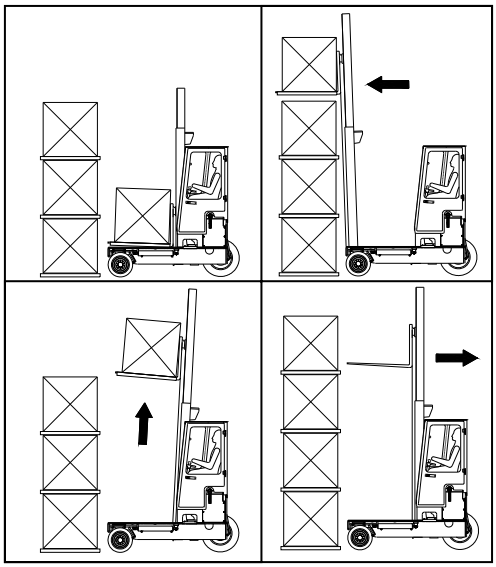

https://www.forkliftpdfmanuals.com/

https://truckmanualshub.com/

De Stacking

- Approach stack with mast retracted and in vertical position.
- Stop at face of stack, select neutral and apply parking brake.
- Elevate forks to permit entry into pallet.
- Extend mast and enter the pallet with the forks.
- Elevate load until clear of stack and tilt mast backwards to stabilise load. Operate accelerator pedal to ensure that the engine speed is sufficient to prevent stalling.
- Retract mast fully and lower load to 150mm (6”) above ground, or where possible on to the platforms

Double Forking a Load

If it is not possible to engage forks fully when lifting a load it will be necessary to move the load closer to the front of the machine before lifting.

Note

The lift capacity of the Combilift is reduced if the forks are not fully engaged

To Double Fork a Load:

- Raise the load slightly and retract the mast sufficiently to bring the load closer to the machine.
- Lower the load ensuring that it is still properly supported
- Extend the mast again until the load is against the fork face.
- The load is now ready to be lifted.

3.6: Travelling Safely with a Load

- When travelling with a load always keep the load as low as possible.
- Have the load resting on the platforms of the Combilift whenever possible.
- Try to avoid sudden and erratic movements with the machine. Accelerate and brake as smoothly as possible.
- When approaching a junction or corner, slow down, sound the horn and proceed only when you are sure that your path is unobstructed.
- Remember to turn slowly.

https://www.forkliftpdfmanuals.com/

https://truckmanualshub.com/

3.7: Fuel Handling & Storage

3.7.1 General

- The facilities for storing and handling liquid fuels of all kinds MUST be strictly in accordance with all current regulations.

WARNING

Adequate fire fighting equipment must be readily available in the refuelling area at all times.

SAFETY RULES

No smoking, naked lights or other sources of ignition should be permitted in the vicinity of the refuelling area and signs to this effect should be clearly posted and free from obstructions at all times. Litter and other readily ignitable materials should not be permitted to accumulate or be stored in the area.

3.7.2 Refuelling - Diesel

- Trained and authorised personnel should carry out refuelling at designated points only.
- Before refuelling the truck, switch off the engine, apply brakes and vacate truck.
- If a pump appliance is not available, fuel MUST be stored and transported in clean, uncontaminated and approved containers. Containers MUST comply with current regulations and be clearly labelled.
- When refuelling the truck, always ensure that the hose nozzle or the can pourer is making good electrical contact with the tank filler tube to prevent the accumulation of a hazardous charge of static electricity. Exercise adequate care to prevent fuel spillage or over-filling.
- After refuelling the truck, replace the tank filler cap and ensure that it is securely fitted and leak free. Clean up any spillage using non-combustible absorbent material before restarting the engine.

Note

Where Diesel Particulate Filters (DPF) are fitted Diesel Fuels with a maximum sulphur content of 15ppm (parts per million) MUST be used.
Diesel Fuels specified to EN 590 or ASTM D975 S15 are Strongly Recommended.

3.7.3 Refuelling - L.P. Gas

- Trained and authorised personnel should carry out recharging and changing L.P. Gas containers at designated points only.
- LP Gas trucks should not be refuelled or stored near underground entrances, lift shafts or any other place where leakage could collect in a potentially dangerous gas pocket.

https://www.forkliftpdfmanuals.com/

https://truckmanualshub.com/

- Trucks equipped with exchangeable fuel containers should ALWAYS ensure that the service valve on the container is closed and all gas in the connecting hoses used BEFORE disconnecting the quick release coupling.
- All reserve containers should be stored with the service valves closed and on racks arranged such that the container is in the same relative position as when installed on the truck.
- Careless handling of gas containers can result in serious accidents. Extreme care should be exercised at all times when transporting containers to ensure that they are not dropped or damaged.
- Containers should always be transported in the vertical position to ensure that the pressure within the container is in the form of vapour, not liquid.
- Damage such as dents, scrapes or gouges in the container may materially weaken the structure of the container and render it unsafe for use.
- All containers should be checked regularly for dents, scrapes and gouges in the pressure vessel section.
- Also Check for:
  - Damage to the various valves and the liquid level gauge.
  - Debris in the relief valve.
  - Deterioration, damage or loss of flexible seals in the filling or Servicing connections.
  - Indications of leakage at valves or threaded connections i.e. Signs of frost on fittings and hoses usually signify a leak.
  - Any defective or damaged container should be removed from service immediately.
  - Any leaking container should be moved immediately to a safe distance from the truck, free from all ignition leaks.

https://www.forkliftpdfmanuals.com/

https://truckmanualshub.com/

Section 4: Maintenance & Service Information

4.1: Maintenance Schedule

In order to keep the Combilift in optimum working condition it is necessary to service the truck at regular intervals. The Chart below details the intervals (in hours of machine operation) at which maintenance tasks should be performed.

Item		Service Interval (Hrs)			
		Daily	*250*	*500*	*2000*
Check Engine Oil		●			
Change Oil Filter Cartridge			●		
Change Engine Oil			●		
Check Air Filter Cartridge				●	
Change Air Filter Cartridge				●	
Change Diesel Engine Glow plugs					●
Change LPG engine Spark Plugs					●
Check Engine Mounts				●	
Check Engine Mount Bolts				●	
Check Engine Idling Speed				●	
Change Both Diesel Fuel Filters				●	
Engine Belts	Check for Wear	●			
	Check Tension	●			
Check Cooling Fan		●			
Check Radiator		●			
Check Engine Coolant Level		●			
Change Coolant in Cooling System					●
Check Oil Cooler		●			
Check Hydraulic Oil Level		●			
Change Hydraulic Oil					●
Change Hydraulic Suction Filter Cartridge				●	
Change Hydraulic Return Filter Cartridge				●	
Change Hydraulic In-Tank Strainer Filter					●
Check Battery Electrolyte levels			●		
Check Swivel Bearings (Slew Rings)				●	
Check Mast Carriage Bearings				●	
Check Mast Carriage Wear Pads & Alignment				●	
Check Mast Bearings		●			
Check Mast Chains		●			
Lubricate & Adjust Mast Chains			●		
Grease Mast Channels			●		
Grease Mast Carriage Channels			●		
Check Wheel Nuts		●			
Torque Wheel Nuts			●		
Check Hydraulic Hoses for Leaks		●			
Check Hydraulic Hoses for Signs of Wear		●			

Grease All Points Indicated on the Grease Point Chart <u>Weekly</u>

https://www.forkliftpdfmanuals.com/

https://truckmanualshub.com/

There are a number of items indicated on the maintenance chart that must be performed on a daily basis. These checks are essential in keeping the truck in optimum working condition. These and a number of other checks form what is known as the daily inspection of the lift truck.

In most countries, it is required by law for the operator to perform the daily inspection and for the company to have a written record of these checks. Contact your local authorities in order to find out what regulations are in place regarding daily inspections of industrial equipment of this nature.

The daily inspection must be carried out at the start of the working day before the machine commences operation. Alternatively if your company operates a multi shift system the checks should be carried out by operators at the beginning of each shift. The inspection can be broken into 3 sections:

- **The Visual Checks**
- **The Engine Checks**
- **The Operational Checks**

The details of the Inspection should be recorded on a Checklist like the one provided (page 4-6) and a record of these inspections should be kept on file within your company's records.

The Visual Checks

These checks are performed by doing a "walk around" inspection of the machine. The checks are performed by checking the following items as detailed below.

Warning

Before attempting any checks ensure that you are wearing the correct safety equipment, i.e. gloves, safety boots, eye protection in form of safety glasses or a full-face shield.

- **Overall condition** – Look for scrapes, dents, and other signs of damage. Watch for missing or loose nuts and bolts. Check underneath the machine for signs of leaking fuel, engine coolant, or oil.

- **Tyres and wheels** – Check that all the wheel nuts are present and tight. Look for cuts in the tyres or foreign objects in the rubber. Also look for Plastic straps, wire, and other debris caught between the wheel and the wheel motor. **Note: Always wear gloves when checking the tyres to avoid injury on sharp pieces of debris.**

https://www.forkliftpdfmanuals.com/

https://truckmanualshub.com/

- **Forks** – Check that the Forks have no signs of excessive wear or cracking. Check that both locating pins are in place and operational.

- **Mast** – Check for twisting and distortion in the channels. Look for signs of cracking and check that there are no missing or loose bolts. Check the mast chains for wear, missing links and pins. Make sure that the chains are of equal tension and are adequately lubricated. **DO NOT place your hands inside the mast at any stage to check the chains tension.** Press on the chains with a long stick or screwdriver. Check around the lift and tilt cylinders for signs of leakage. Also check all the hoses attached to the mast for signs of leaking oil.

- **Overhead Guard** – look for signs of damage and cracking to the overhead guard. Report any signs of damage immediately to your supervisor.

The Engine Checks (service interval = Daily)
These are a series of checks that ensure that the engine of the truck is in good working order.

- **Check All the Fluid levels** – i.e. the engine oil, the engine coolant, and the hydraulic oil level. Do not operate the truck if any of these fluid levels are below the min value reading.

- **Check the radiator and oil cooler** – Make sure that no leaves, dust or other debris have built up on, or between, the radiator and oil cooler.

- **Check all the belts and hoses** – Check that all of the belts and hoses are in good condition. Look for visible signs of wear and fray.

- **On diesel machines** – check the tank for signs of leakage or corrosion. Ensure that the filler cap is on correctly

- **On LPG machines**, the fuel tank needs to be checked regularly.

  - Check the tank for scrapes, dents and other damage.
  - Check that the tank is located on the locator pin.
  - Check the restraining straps
  - Check hose and connections for leaks – **Use a soapy water solution. NOT your hands. LP Gas can cause severe burns.**
  - Check that the tank fits inside the profile of the machine.

Warning

Always wear appropriate protective clothing such as gloves and face shield when checking LP tanks and fittings. LP can cause frostbite when released, due to its very low temperature.

https://www.forkliftpdfmanuals.com/

https://truckmanualshub.com/

The Operational Checks (service Interval = Daily)
These checks are performed in order to ensure that every part of the Combilift functions correctly and in a safe manner. The checks are performed as follows:

- **Check the seat belt** – Enter the cabin using the three point contact method. Make sure that the seat belt functions correctly. Check for any cuts or fraying along the belt and that it secures correctly into the retainer. **Always wear the seat belt provided when you are driving the Combilift.**

- **Check the seat** – All Combilift machines come with adjustable air suspension seats. The operator must ensure that the seat is correctly adjusted for their individual height and weight. Instructions on how to set the seat are in the operators' manual.

- **Turn on the Machine –** Insert the key into the ignition and turn the key to the "On" position. This will allow power to flow through the electrical system. Several lights should illuminate in the dash.

- **Test the horn** – the horn button is on the dash to the right hand side of the operator. The Truck should not be operated if the horn is not functioning. Depress the button to test the horn.

- **Starting the engine** - Ensure that the Parking brake is applied by depressing the large red button on the dash. Also ensure that the directional control lever is in the Neutral position. Turn the key to the start position to start the engine and then release the key. It will return to the on position.

- **Listen** – Listen to the engine for a few seconds before driving off. Be alert for any strange sounds or noises from the engine. Also be on the look out for any strange odours that may indicate a problem such as a very strong smell of gas or burning. If you detect anything, which is not normal, stop the machine immediately and investigate the problem.

- **Check the Dash** – look at the dash and make sure that the warning lights are all extinguished. The only light that should be on after the engine is started should be the parking brake. Should any other lights be illuminated, stop the machine and report the fault to your supervisor. A full list of all the gauges, indicators and controls along with each function can be found in section 2 of the this manual.

- **Check the mast functions** – After checking that there is adequate space and headroom perform the checks on the mast functions. Raise and lower the mast making sure that the operation is smooth and controlled. Extend the mast forward and then retract it. Again watch for any signs of sticking. Tilt the mast fully forwards and backwards. Then test any auxiliary function that may be fitted to **Your** Combilift.

https://www.forkliftpdfmanuals.com/

https://truckmanualshub.com/

- **Check the Brakes** – With the parking brake still applied, select forward on the directional control lever. Keeping both feet away from the pedals, sound the horn, and release the parking brake. The machine should start to move slowly forward. Depress the inching pedal fully. The machine will stop. Release the pedal and the machine will move off again. Then reapply the parking brake and the machine will stop. If either brake is not working do not operate the machine and report the fault to your supervisor. In the highly unlikely event of neither brake working, the machine can be stopped by switching off the engine. Make sure that you have adequate space to perform this test and that it is performed on a level surface.

- **Check the Directional Control Lever** – With the engine running and the parking brake applied, select forward mode. Sound the horn and release the parking brake. The machine should move forward. Depress the inching pedal to stop the machine. Sound the horn, select reverse on the directional control stick and release the inching pedal. The machine should now travel backwards. Depress the inching pedal to stop the machine and apply the parking brake. Select left travel on the directional control lever. The wheels will start to realign for sideward mode. When the wheels are fully in position, sound the horn and release the parking brake. The machine should now travel to the left. Depress the inching pedal to stop the machine, select right travel on the directional control lever, sound the horn and release the inching pedal. The machine should now travel to the right.

- **Check the steering** – Set the steering wheel to the most comfortable position for driving by use of the adjustment lever on the right hand side of the column. With the engine running and the parking brake applied, turn the steering wheel fully clockwise and counter-clockwise. The steering should move easily in either direction, and not seem excessively stiff or loose. Perform this check in both normal mode and sideward mode.

On completion of the inspection the operator should:

- Report any defect immediately to the supervisor / appropriate person
- Never operate a lift truck that is in need of repair
- Repairs should only be performed by authorised personnel

In order to keep a record of these daily inspections it is advised that a daily inspection checklist like the one provided on the next page should be used when performing the checks. A copy of this checklist should be kept on file at all times in order to keep track of the machines service history as well as any faults that occur.

Note

Remember, in most countries, it is against the law NOT to perform these checks or keep a record of the inspections.

https://www.forkliftpdfmanuals.com/

https://truckmanualshub.com/

Customised Handling Solutions

Operators Daily Inspection Sheet

Model: _____ Serial No: _____

Date: _____ Shift No: _____

Inspect the Combilift before each shift. Should the Combilift be found to require servicing or if during the operation the Combilift malfunctions or becomes unsafe, stop the truck and report the situation immediately to the designated authority. DO NOT operate the Combilift or attempt to service it. Servicing is only to be conducted by a qualified technician.

Mark the Appropriate Box with **X** OK **Machine OK** [ ] **Service Required**

		Mon		Tues		Wed		Thurs		Fri		Sat		Sun	
Visual Checks	**Damage** *Bent, Dented or Broken Parts*	OK		OK		OK		OK		OK		OK		OK	
	Leaks *Tank, Valves, Fittings, Hoses*	OK		OK		OK		OK		OK		OK		OK	
	Tires *Chunks missing, Loose wheel nuts*	OK		OK		OK		OK		OK		OK		OK	
	Forks *Bent, Damaged or Worn*	OK		OK		OK		OK		OK		OK		OK	
	Mast (inc. Chains) *Damage, Signs of bending, loose chains*	OK		OK		OK		OK		OK		OK		OK	
	Overhead Guard *Damage, Cracking*	OK		OK		OK		OK		OK		OK		OK	
	Engine *Smell, Belts tight and in good condition*	OK		OK		OK		OK		OK		OK		OK	
	Engine Oil level *Signs of damage or leaking*	OK		OK		OK		OK		OK		OK		OK	
	Coolant Level *Acceptable Range*	OK		OK		OK		OK		OK		OK		OK	
	Hydraulic Oil Level *Acceptable Range*	OK		OK		OK		OK		OK		OK		OK	
	Radiator & Oil Cooler *Build up of leaves, dust or debris*	OK		OK		OK		OK		OK		OK		OK	
	Hoses *Good Condition, No signs of wear*	OK		OK		OK		OK		OK		OK		OK	
	Fuel Tank / LPG Cylinder *Signs of damage or leaking*	OK		OK		OK		OK		OK		OK		OK	
Operational Checks	**Safety Equipment** *Horn, Operator Restraint, Reversing Bleeper*	OK		OK		OK		OK		OK		OK		OK	
	Engine *Starts and runs OK, no unusual noise*	OK		OK		OK		OK		OK		OK		OK	
	Mode change *Wheels realign smoothly, no sticking*	OK		OK		OK		OK		OK		OK		OK	
	Travel *No unusual Noise, Smooth changes*	OK		OK		OK		OK		OK		OK		OK	
	Steering *No excessive play or restriction in either mode*	OK		OK		OK		OK		OK		OK		OK	
	Inching Pedal *Stops travel, smooth deceleration*	OK		OK		OK		OK		OK		OK		OK	
	Parking Brake Functions and releases	OK		OK		OK		OK		OK		OK		OK	
	Hydraulic Controls Forks-Lift/lower, mast-in/out, tilt, Aux functions	OK		OK		OK		OK		OK		OK		OK	
	Hour Meter Reading														
	Operator Initials														
	Supervisors Initials														

Notes (regarding repair, etc): _____

_____

_____

https://www.forkliftpdfmanuals.com/

https://truckmanualshub.com/

4.2: Initial Service – Conducted at 100 hours of Operation

The initial service is conducted at this interval to ensure that the truck is optimum working condition upon leaving the factory. In order to complete the initial service the following task must be completed.

- Change engine oil & oil filter.
- Replace fuel filter.
- Check fan belt tension and adjust if required.
- Replace hydraulic suction filter (located at rear of hydraulic tank)
- Replace return filter (located on top of the hydraulic tank)
- Check hydraulic oil level.
- Check coolant level.
- Check the machine for hydraulic, coolant and fuel leaks.
- Check air cleaner and replace if necessary.
- Check all mast carriage-bearing lock nuts are tight.
- Check all bolts and fittings are tight.
- Check radiator, and if necessary, clean fins
- Grease all points indicated on grease point chart
- Check all wheel nuts for tightness.
- Check mast chains; lubricate and adjust if required.

Note

All grease points indicated on the grease point chart MUST be greased weekly using an appropriate EP2 Grease

Note

All wheel nuts should be checked daily and torqued every 250 hours:
Front Wheel nuts (210Nm or 155ft/lbs)
Back Wheel nuts (300Nm or 220ft/lbs)

4.3: Engine Oil And Engine Oil Filter (service Interval = 250Hours)

The engine oil used in the Combilift should have the correct temperature range for the ambient temperature in which the machine is to be operating. Temperature affects the viscosity of the oil and therefore its lubricating properties. All Combilift trucks leave the factory with a special, high multi-grade oil in the engine and this can be used all year round except in very cold climates.

https://www.forkliftpdfmanuals.com/

https://truckmanualshub.com/

Recommended Engine Oil Specification:

Diesel: API – CF (See notes at 4.12: if diesel particulate filter is fitted)
SAE 15W40 – All Temperatures
SAE 10W30 – All Temperatures

LPG: API – SJ/CF
SAE 10W30 – All Temperatures
SAE 15W40 – Above -18°C (0°F)

In order to change the Oil and oil filter, the following steps should be taken,

- Extend the mast carriage forward in order to gain access to the engine oil filter and oil drain plug.
- Position a suitable container beneath the Oil drain plug as indicated by the diagram opposite. (Container must be capable of holding 10.5 litres)
- Remove the drain plug and allow the system time to drain completely
- Once the system has drained completely, dispose of the used oil in a safe and responsible manner

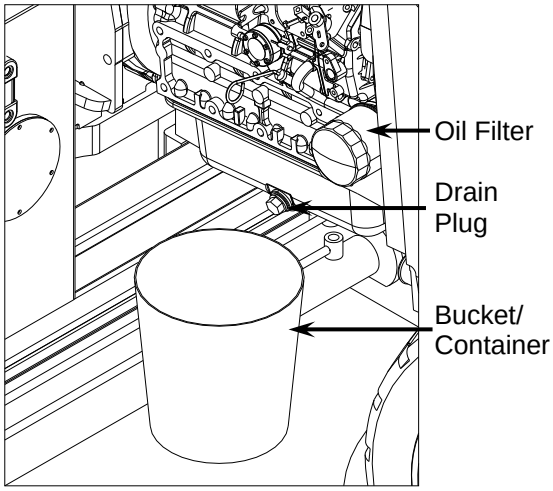

Note

Do not pour fluids into the ground, down a drain or into a stream, pond or lake. Observe relevant environmental protection regulations when disposing of oil, coolant, fuel, electrolyte and other harmful waste

- Remove the engine oil filter located on the front of the engine as indicated by the diagram above
- Apply some engine oil to the new oil filter cartridge before fitting
- Install the new engine oil filter cartridge, ensuring that the O-ring seal is correctly placed. Only use a genuine Combilift component
- Reinstall the drain plug and tighten appropriately

https://www.forkliftpdfmanuals.com/

https://truckmanualshub.com/

- Fill the engine with the appropriate volume of oil ensuring that the oil with the correct temperature range is used. The Volume of oil required is:

  - Kubota Diesel Engine: 9.5 Litres / 2.5 US Gallons
  - GM LPG engine: 4.7Litres / 1.24 US Gallons

- Check the oil level on the dipstick. Ensure that the oil level is at the upper notch on the dipstick.

4.4: Engine Coolant (Service interval = 2000Hours)

The coolant must consist of a mixture of 50% water to 50% coolant additive (glycol based with anti-corrosion additives). This will give frost protection down to -25°C and also protect the alloy parts in the cooling system against corrosion. Therefore, the concentration of coolant additive must not fall below 40%. If greater frost protection is required, the coolant additive can be increased but only up to 60% (frost protection to -40°C approx.). Any greater proportion of coolant will decrease the frost protection and also the anti corrosive properties.

The coolant level is monitored via the coolant reservoir located on the left hand side of the cabin as shown in the diagram below. The coolant level should always be kept between the upper and lower levels indicated on the reservoir and topped up as is deemed necessary.

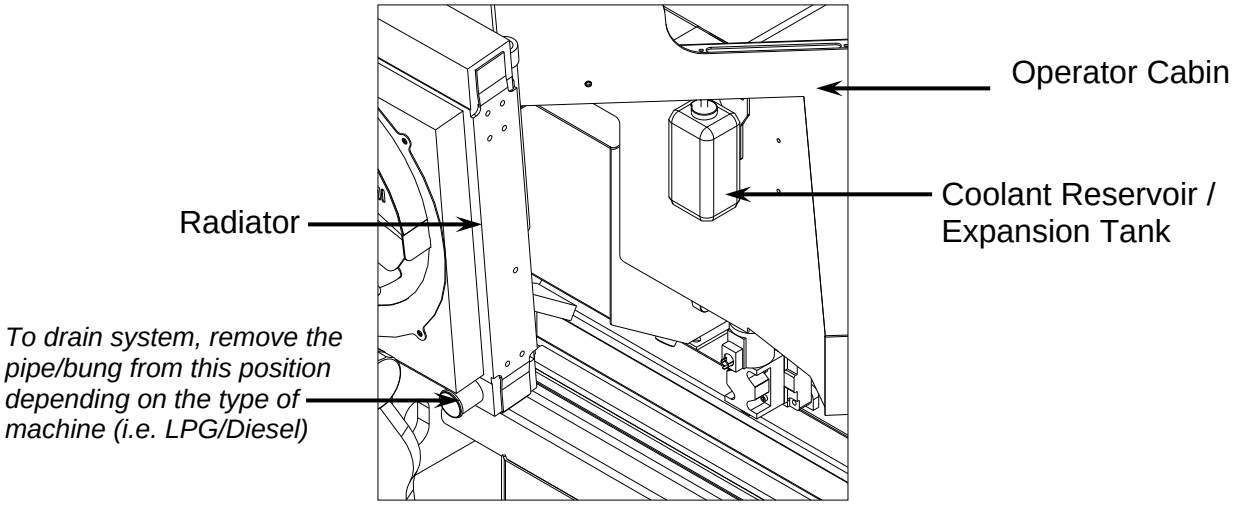

To drain the cooling system, remove the filler cap from the top of the radiator and the pipe / bung from t bottom right hand corner of the radiator (as shown).

https://www.forkliftpdfmanuals.com/

https://truckmanualshub.com/

4.5: Hydraulic Oil and Filters

The hydraulic oil used in the Combilift should conform to the International Standard. I.S.O. G344 HV grade oils with improved viscosity / temperature characteristics. It should also have the correct temperature range for the ambient temperature in which the machine is being operated. If the operating temperature is outside the standard range, the standard oil should be replaced with the correct grade.

Ensure that the correct type is used in the relevant ambient temperature. The table below indicates a number of commercially available oils and the temperature ranges that they are suitable for

AMBIENT OPERATING TEMPERATURE	**Low Range -20°C to25°C -4°F to 77°F**	**Standard Range -10°C to35°C 14°F to 77°F**	**High Range 0°C to45°C 32°F to 113°F**
Castrol: Hyspin	AWH 32	AWH 46	AWH 68
B.P. Bartran	HV 32	HV 46	HV 68
Esso: Univis	N 32	N 46	N 68
Mobil	13 M	15 M	16 M
Shell: Tellus oil	T32	T46	T68
Texaco	HDZ 32	HDZ 46	HDZ 68

Note

The Sequence in which the brand names are listed does not signify any grading as to their quality or preference.

Note

The machine is supplied with an AWH46 hydraulic fluid when leaving the factory. Please check if this is suitable for the ambient temperature in which the machine is to be operated

Note

Before adding hydraulic oil, ensure that all cylinders are retracted and fill to upper level on the hydraulic oil level gauge

There are a total of 3 filters on or in the hydraulic oil tank that must be replaced at certain intervals. These filters are:

1. **The Suction Filter**
2. **The Return Filter**
3. **The In-Tank Strainer Filter**

The locations of these filters are shown in the diagram on the next page.

https://www.forkliftpdfmanuals.com/

https://truckmanualshub.com/

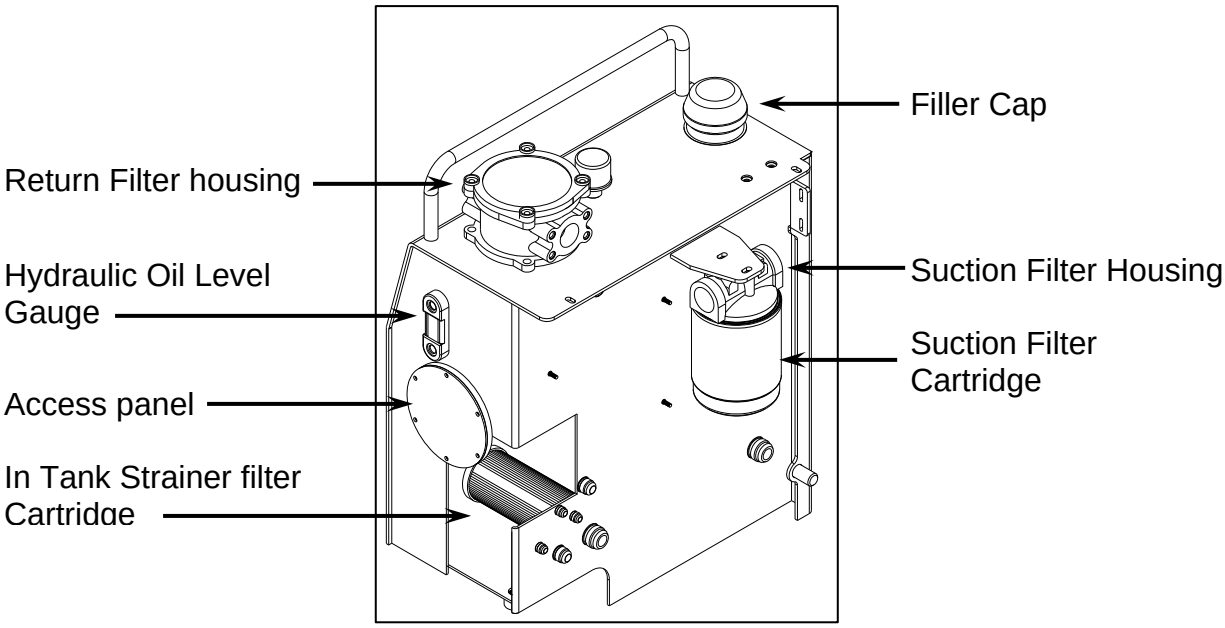

Suction Filter: (service Interval = 500Hours)
The suction filter, located on the back of the tank as shown in the diagram below, must be replaced initially after 100 hours and then at intervals of every 500 hours (or 8 months depending on which occurs first)

To replace the Suction Filter:

1. Raise mast before removing suction filter.
2. Loosen and remove the old filter cartridge.
3. Fill the new filter cartridge with hydraulic oil of the same grade as that already in the tank.
4. Smear some of the oil on the O-ring seal on the top of the filter cartridge
5. Install the new filter cartridge onto the filter housing. Hand tighten the cartridge into position.
6. Only use a genuine Combilift component

Return Filter: (service Interval = 500 Hours)
The return filter, located on the top of the tank, must be replaced at intervals of every 500 hours (or 8 months depending on which occurs first).

To replace the Return Filter:

1. Remove the four bolts from the lid of the filter housing in order to gain access to the filter element.
2. Remove the retaining spring from the top of the filter element
3. Remove the old filter element and replace with the new filter element. Only use a genuine Combilift component.
4. Fit the retaining spring into the top of the filter element and refit the housing lid.

https://www.forkliftpdfmanuals.com/

https://truckmanualshub.com/

In-Tank Strainer Filter: (Service Interval = 2000 Hours)
The In-Tank Strainer Filter, located in the bottom left hand corner of the tank, must be replaced at intervals of every 2000 hours (or 24 months depending on which occurs first). The strainer filter can only be accessed when the hydraulic tank has been drained.

To replace the In-Tank Strainer Filter:

1. Drain the hydraulic oil tank through the drain plug in the bottom of the tank
2. Remove the access panel on the side of the tank
3. Insert your hand into the tank and remove the filter by rotating it anti-clockwise.
4. Fit the new strainer filter. Only use a genuine Combilift component.
5. Replace the access panel in the side of the tank, remembering to correctly fit the access panel O-ring seal.

Change Hydraulic Oil (service interval = 2000Hours)

- Drain Hydraulic system including tank. Once completed fill system to the appropriate level with Hydraulic oil of the same grade as that, which was already in the tank.
- Capacity of Hydraulic oil in the Hydraulic system = 80 litres approx

4.6: Mast Maintenance (Service Interval = 250Hours)

Mast chains should be checked for elongation periodically and adjusted as required. The chains must be adjusted so that the upper mast stops never come into contact with each other and the lower mast stops never come into contact with each other. Adjust all chains evenly. An interval of 250 hours can be taken as a typical value, under normal working conditions.

Periodic lubrication of the mast chains is required to ensure maximum life span is achieved. Use SAE 20 oil in cold conditions and SAE 40 oil in warm conditions. Frequency of lubrication depends largely on operating conditions.
A lubrication interval of 250 hours can be taken as a typical value, under normal working conditions.

Periodic lubrication of the mast channels is required to ensure maximum life span is achieved. All roller surfaces must be greased periodically where the fork carriage bearings and mast section bearings run. The frequency of this operation is at the discretion of the user and essentially depends upon the working conditions. A lubrication interval of 250 hours can be taken as a typical value, under normal working conditions. For this purpose use graphite grease, avoid spray greases.

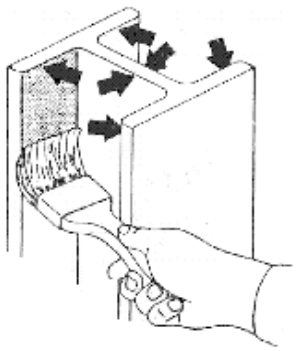

https://www.forkliftpdfmanuals.com/

https://truckmanualshub.com/

Additional Mast Maintenance (Contact Combilift for further information)

- Replacement of hydraulic cylinder seals.
- Replacement of chains.
- Replacement of bearings.

4.7: Greasing Mast Carriage Channels

The mast carriage channels must be greased periodically **only on the vertical (side) surfaces** where the wear pads run. The frequency of this operation is at the discretion of the user and essentially depends upon the working conditions and the workplace. A lubrication interval of about 250 hours can be taken as a typical value, under normal working conditions. For this purpose use EP2 grease.

4.8: Water Pump V- Belt

The engine is kept cool via the coolant that is pumped round the cooling system. The water pump is powered by the Water pump V-belt. This is located on the engine as shown and checked as follows:

Check the belt tension. Perform this when the engine IS NOT running. Press on the belt with a stick or rod. Ensure that the deflection is no more that 10mm to 12mm. If it is adjust the belt via the pulley adjusting bolts

Check the belt condition: Inspect the condition of the belt. Be on the look out for signs of damage and wear. If the belt is damaged replace it immediately. Also check if the belt has sunk deeply into the pulley as this indicates excessive wear. Again replace the belt immediately if this is the case.

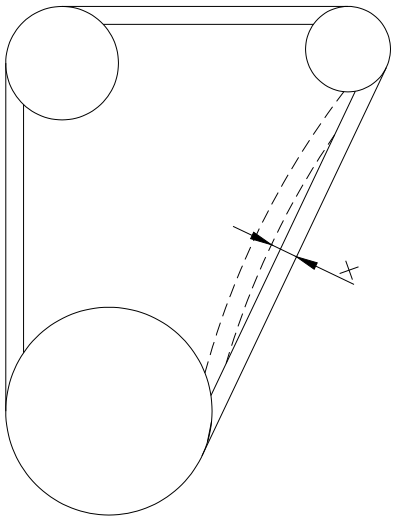

https://www.forkliftpdfmanuals.com/

https://truckmanualshub.com/

4.9: Fuel Filter – Diesel Trucks (Service interval = 500 Hours)

On all diesel engine Combilifts, there are two fuel filters located on the rear of the fuel tank. The first filter, the small plastic filter, is to prevent particles entering the electric fuel pump. The second larger filter is to prevent any remaining particles entering the engine. These must be replaced in accordance with the maintenance chart. They are both accessed by extending the carriage forward and entering the frame of the machine.

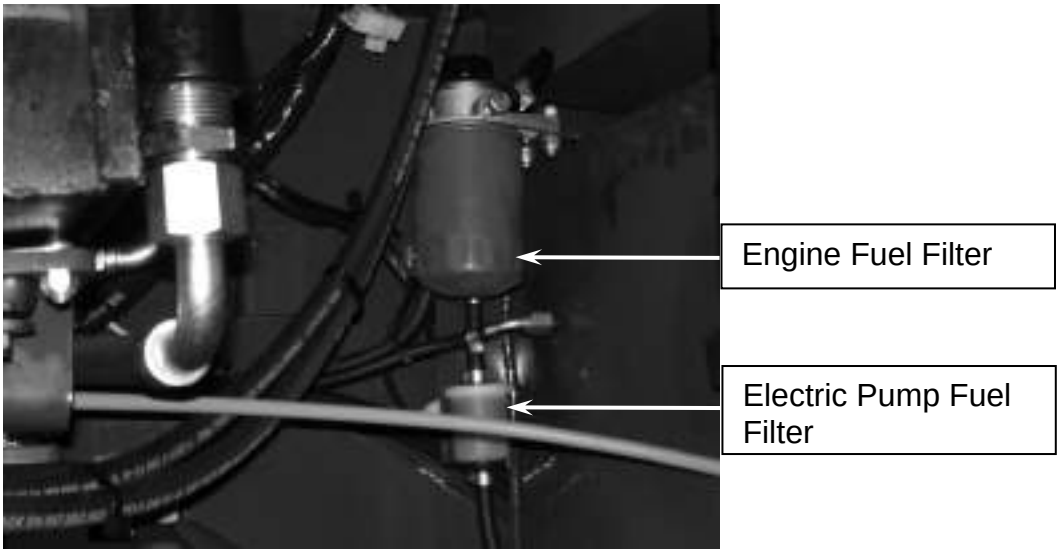

4.10: Air Filter Element (Service Interval = 500 Hours)

The air filter housing is located under the bonnet on the right hand side of the machine as shown in the diagram below. In order to access the filter housing, remove the side access panel. The air filter cartridge must be replaced at intervals of every 500 hours (or 8 months depending on which occurs first). Always ensure that the Dust Valve is pointing down.

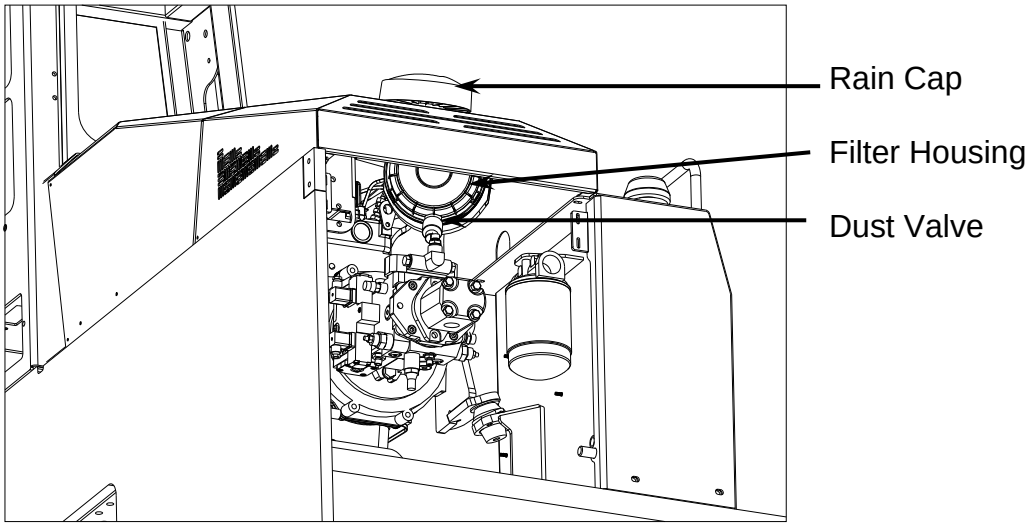

https://www.forkliftpdfmanuals.com/

https://truckmanualshub.com/

In order to change the air filter Cartridge, take the following steps:

1. Open the access panel from the side of the machine
2. Remove the end cap from the filter housing
3. Remove the existing air filter cartridge and replace with the new cartridge. Only use a genuine Combilift component.
4. Replace the End cap of the housing ensuring that the Dust valve is pointing downwards as shown.
5. Close the access panel on the side of the machine

4.11: Grease Point Chart

The diagram below indicates all of the points on the Combilift that must be greased regularly. A copy of this diagram is located in the operator compartment in the form of a decal / Information sticker. All Points should be greased weekly with an appropriate EP2 grease.

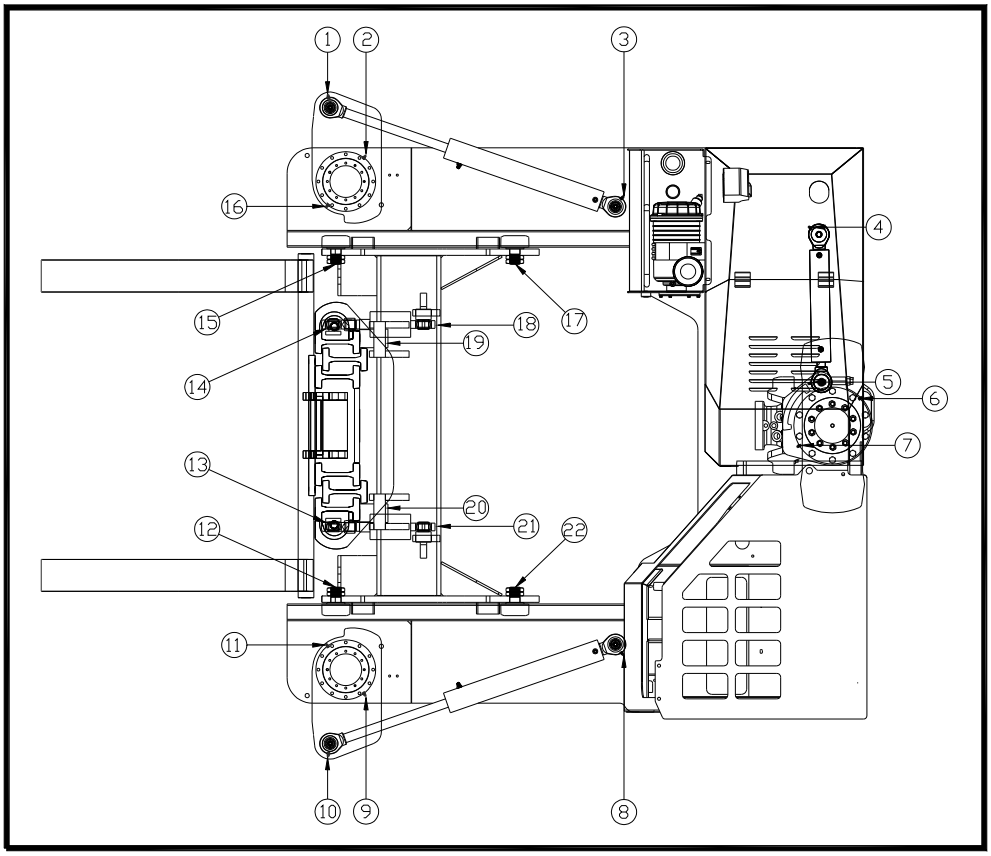

1. Steering Front
2. Swivel back
3. Steering back
4. Rear Steering
5. Rear Steering
6. Swivel Front
7. Swivel back
8. Steering back
9. Swivel front
10. Steering front
11. Front Bearing
12. Carriage Bearing
13. Front tilt
14. Front tilt
15. Carriage Bearing
16. Swivel Front
17. Carriage Bearing
18. Rear Tilt
19. Mast bushing
20. Mast Bushing
21. Rear Tilt
22. Carriage Bearing

https://www.forkliftpdfmanuals.com/

https://truckmanualshub.com/

4.12: Diesel Particulate Filter (DPF)

The diesel particulate filter requires high temperature exhaust gases to burn off any soot that may accumulate there. If the exhaust gas temperatures do not regularly reach the required level to burn off the soot it may lead to a blockage. Reduced engine performance and increased fuel consumption may result from a blockage.

In most cases it is possible to clear a blockage by working the engine hard (e.g. driving the truck with a full load up an incline) for a period of at least 5 minutes so that the exhaust gases reach the temperature required to burn off the soot. However in some cases the DPF may need to be removed and cleaned.

Avoid prolonged periods of idling to prevent any blockages from occurring i.e. switch off the engine when not in use.

Note

Where Diesel Particulate Filters (DPF) are fitted Diesel Fuels with a maximum sulphur content of 15ppm (parts per million) MUST be used.
Diesel Fuels specified to EN 590 or ASTM D975 S15 are Strongly Recommended.

Note

If a diesel particulate filter (DPF) is fitted to the truck then API CJ-4 engine oil **MUST** be used.

https://www.forkliftpdfmanuals.com/

https://truckmanualshub.com/

Section 5: Technical Information & Circuit Diagrams

5.1: Towing the Combilift

Should the need arise to Tow the Combilift it is necessary to first apply the bypass condition on the hydrostatic pump in order to prevent It from being damaged. It will then be necessary to mechanically release the brakes on the motors.

Hydrostatic transmission / Bypass condition.

In this case the travel drive is switched on the free wheel position. For this purpose the high-pressure valves of the variable displacement pump have a so-called bypass function. By turning the relevant screw (item 1) the valve is so released that free oil circulation is made possible. In order to bypass the motor, screw in item 1 until it is level with the nut.

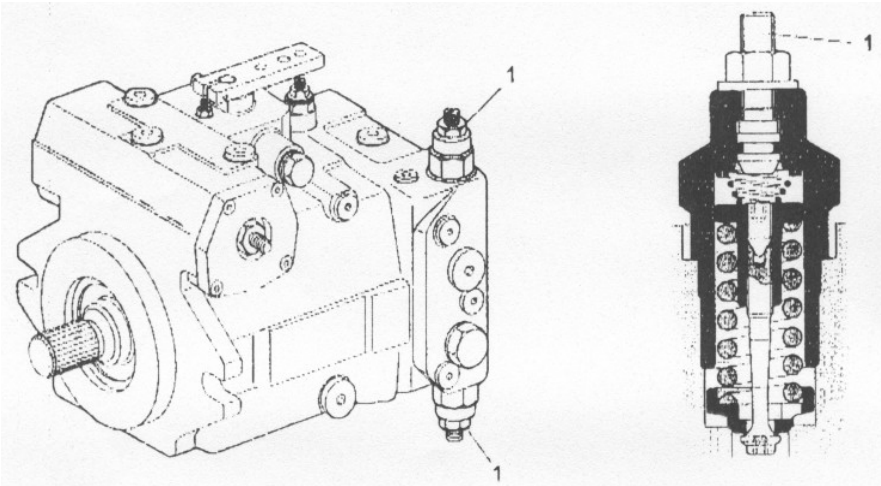

Towing Speed

The maximum permissible towing speed of 2 km/h **should not be exceeded.**

Towing distance

The towing distance should not exceed 1 km. (With no boost available to the hydraulic circuit drains, the heat generation in he hydraulic motor rotary group has to be taken into account.)

Termination of the towing operation

After termination of the towing operation turn back item 1t its original position. The original set pressure valve is thereby available. Screw item 1 up to stop. Tighten the nut

https://www.forkliftpdfmanuals.com/

https://truckmanualshub.com/

5.2: Mechanical Brake Release

In order to release the brake, follow the steps laid out below.

1. Extract the plug from the rear cover of the motor. (Labelled 142 in the diagram opposite)

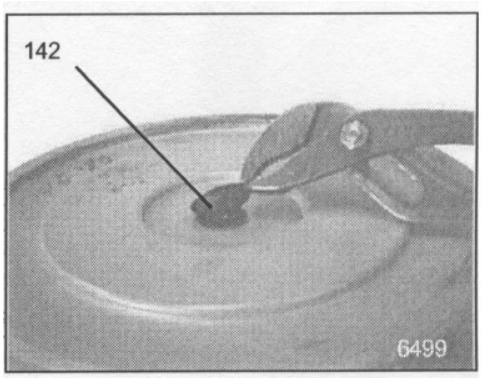

2. Insert a socket head bolt as shown in the diagram with a nut fully inserted onto the bolt.

3. Using a spacer similar to the one shown on the diagram tighten the bolt into the Brake assembly at the rear of the motor

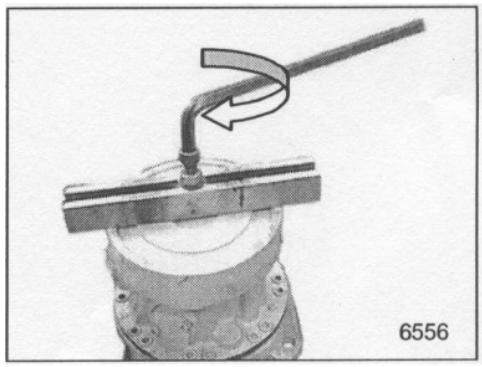

4. When the bolt is in tight, loosen the nut off the bolt by turning it anticlockwise as shown. This action will release the brake and allow the motor to turn freely

5. To reapply the brake, repeat the steps above in reverse order.

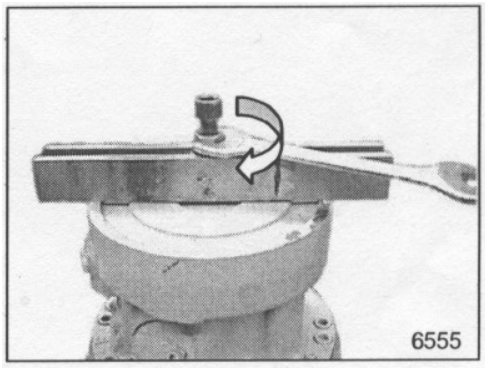

https://www.forkliftpdfmanuals.com/

https://truckmanualshub.com/

5.3: Checking The Charge Pressure

In order to check the charge Pressure, the following steps should be taken. When the reading is taken the charge pressure should measure between 16 bar and 22 bar (230PSI and 320PSI

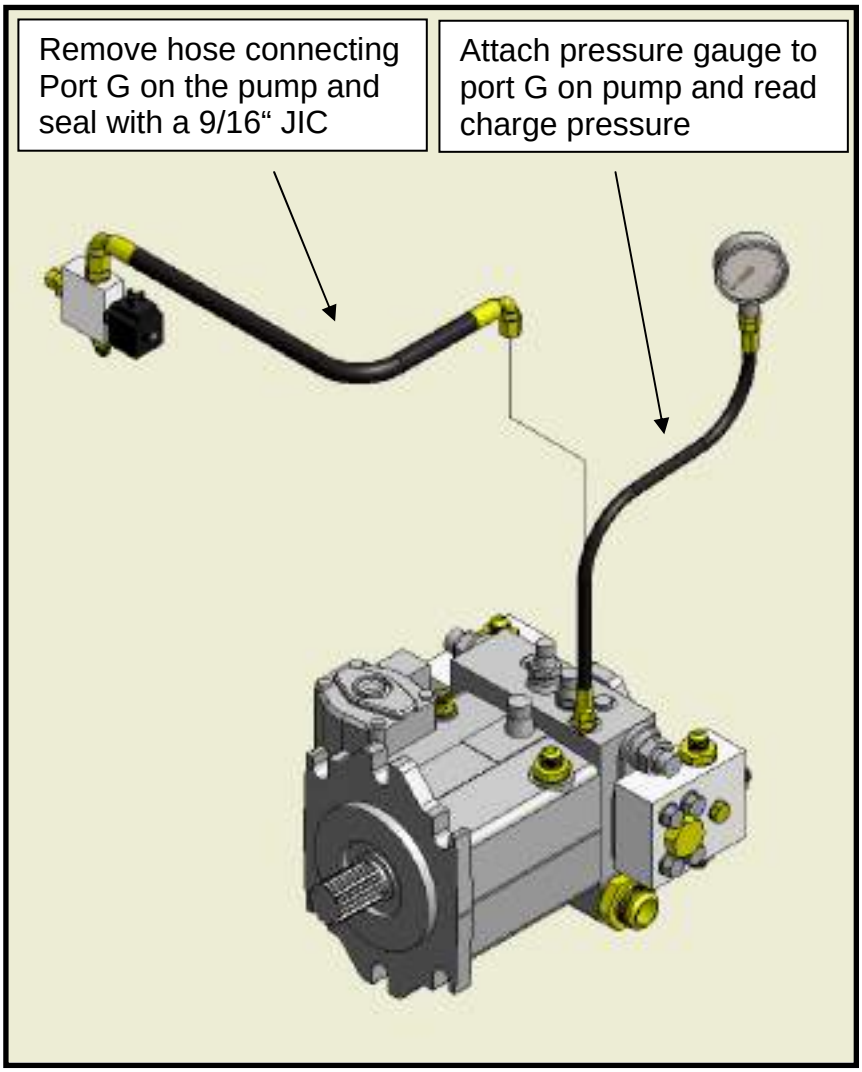

Warning

Ensure that the Machine is switched off until the pressure gauge has been attached before trying to read the charge pressure.

https://www.forkliftpdfmanuals.com/

https://truckmanualshub.com/

5.4: Fuse Box

The diagram below shows the layout of the fuse box & the rating for each fuse.

Relay Loom Fuse Table		
Fuse	Amps	Function
1-Diesel	7.5	Mast Height Override, Dash Display Lights, Glow Plug Light, Glow Plug Relay, Alternator
1 – LPG	7.5	Mast Height Override, Dash Display Lights, Alternator Plug
2	7.5	Forward/Reverse Supply, Joystick Supply, Neutral Relay, Reverse Bleeper
3 – Diesel	7.5	Pull Hold Solenoid, Fuel Pump
3 – LPG	7.5	Ignition Coil, Fuel Commander
4	20	Steering Solenoid Supply
5	7.5	Push Button Brake Switch, Inch Pedal Brake Switch, Brake Light, Brake Solenoid Supply
6	10	Wipers
7	15	Front Work Lights
8	15	Side Work Lights, Optional Cabin Interior Light
9	7.5	Cabin Heater Fan, Cabin Cooling Fan, Optional Radio
10	7.5	Horn
11	7.5	Optional Extra Solenoid (e.g. Independent Fork Positioner)
12	7.5	4-Way Switching Supply
13	7.5	Flashing Beacon
14	7.5	Optional Road Lights

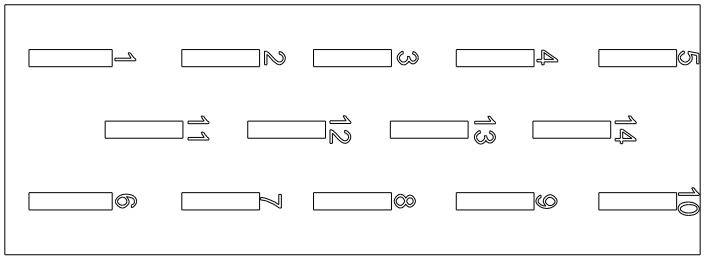

PLC Loom Fuse Table		
Fuse	Amps	Function
1-Diesel	7.5	Mast Height Override, Dash Display Lights, Glow Plug Light, Glow Plug Relay, PLC Supply
1 – LPG	7.5	Mast Height Override, Dash Display Lights, PLC Supply
2	7.5	Joystick Supply, Neutral Relay, Reverse Bleeper
3 – Diesel	7.5	Pull Hold Solenoid, Fuel Pump
3 – LPG	7.5	Ignition Coil, Fuel Commander
4	20	Steering Solenoid Supply, PLC Output Supply
5	7.5	Push Button Brake Switch, Inch Pedal Brake Switch, Brake Light, Brake Solenoid Supply
6	10	Wipers
7	15	Front Work Lights
8	15	Side Work Lights, Cabin Interior Light
9	7.5	Cabin Heater Fan, Cabin Cooling Fan, Optional Radio
10	7.5	Horn
11	7.5	Proximity Switch Supply, Guide Roller Light
12	7.5	Spare
13	7.5	Flashing Beacon
14	7.5	Spare

https://www.forkliftpdfmanuals.com/

https://truckmanualshub.com/

5.5: Dash Relay Layout (Relay Loom)

Below is a diagram of the layout of the relays inside the dash in the cabin of the Combilift truck with a relay loom.

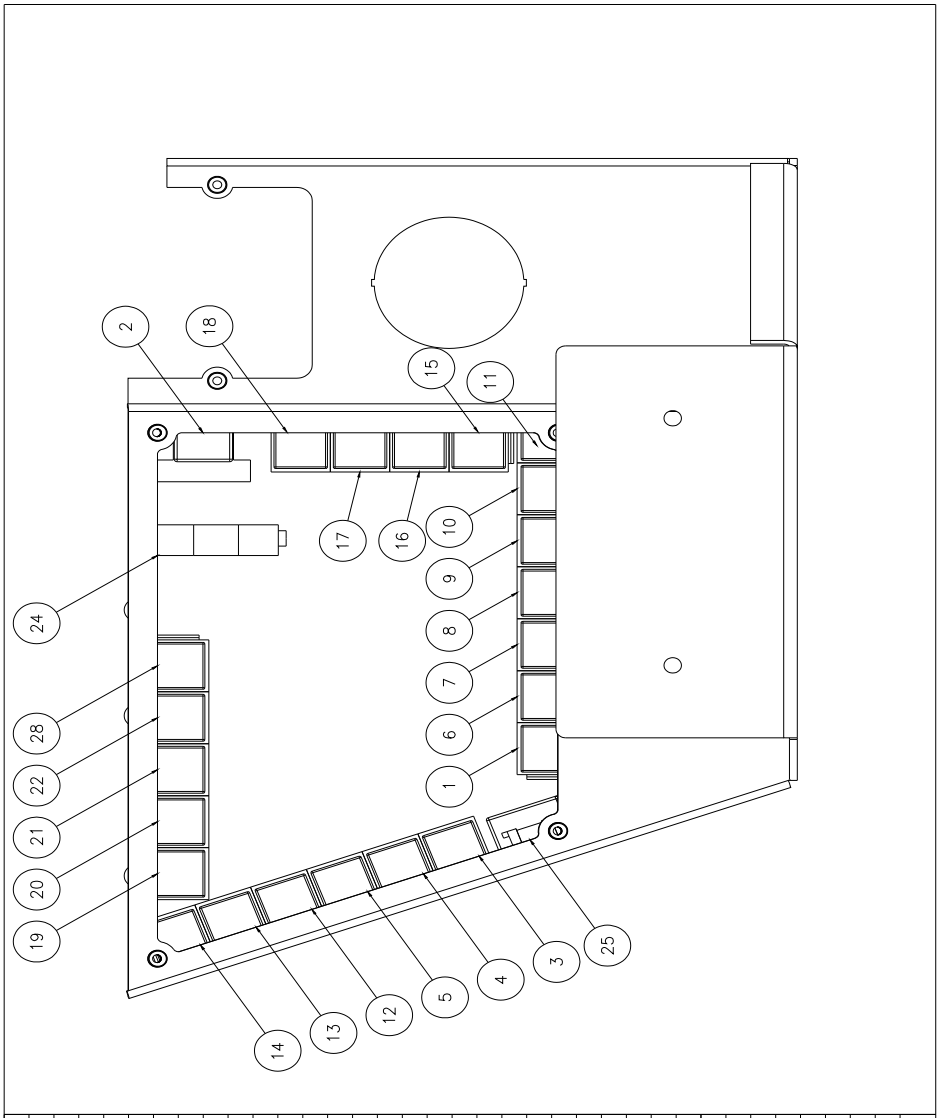

Item	Qty	Description	Ref No	Serial break
1	1	STARTER RELAY (4 PIN 70 AMP)	CPE00039-00	
2	1	GLOW PLUG RELAY	CPV00044-00	
3	1	FORWARD SOLENOID (5 PIN)	CPE00029-00	
4	1	REVERSE SOLENOID (5 PIN)	CPE00029-00	
5	1	BRAKE (5 PIN)	CPE00029-00	
6	1	REVERSE BLEEPER (5 PIN)	CPE00029-00	
7	1	4-WAY (5 PIN)	CPE00029-00	
8	1	4-WAY (5 PIN)	CPE00029-00	
9	1	4-WAY (5 PIN)	CPE00029-00	
10	1	4-WAY (5 PIN)	CPE00029-00	
11	1	4-WAY (5 PIN)	CPE00029-00	
12	1	4-WAY SUPPLY (5 PIN)	CPE00029-00	
13	1	HIGH MAST PROX. SWITCH (5 PIN)	CPE00029-00	
14	1	REFLEX STEERING (5 PIN)	CPE00029-00	
15	1	NEUTRAL CUT OFF (5 PIN)	CPE00029-00	
16	1	0 DEGREE SUPPLY (5 PIN)	CPE00029-00	
17	1	90 DEGREE SUPPLY (5 PIN)	CPE00029-00	
18	1	CHANGE OVER DRIVE SOL. (5 PIN)	CPE00029-00	
19	1	CAROUSEL (5 PIN)	CPE00029-00	
20	1	CAROUSEL (5 PIN)	CPE00029-00	
21	1	CAROUSEL (5 PIN)	CPE00029-00	
22	1	SPOT LIGHTS (5 PIN)	CPE00029-00	
24	1	TIMER RELAY (TV48)	CPE00095-00	
25	1	STOP TIMER	CPE00092-00	
28	1	SPARE (5 PIN)	CPE00029-00	
		OPTIONAL RELAYS		
23	1	INDICATOR RELAY-ROADLIGHTS (4PIN)	CPE00130-00	
26	1	BRAKE RELAY-ROAD LIGHTS (5 PIN)	CPE00029-00	
27	1	ROLLER POSITION (5 PIN)	CPE00029-00	
28	1	CAROUSEL ALARM (5 PIN)	CPE00029-00	
29	1	LIFT HEIGHT BUZZER (5 PIN)	CPE00029-00	
30	1	LIFT INHIBIT SOLNOID (5 PIN)	CPE00029-00	
31	1	FOOT PEDAL BRAKE,ROADLIGHTS(5PIN)	CPE00029-00	
32	1	EXTRA SOLNOID ON MAST (5 PIN)	CPE00029-00	
33	1	EXTRA SPOT LIGHTS ON MAST (5 PIN)	CPE00029-00	

https://www.forkliftpdfmanuals.com/

https://truckmanualshub.com/

5.6: Dash Relay Layout (PLC Loom)

Below is a diagram of the layout of the relays inside the dash in the cabin of the Combilift truck with a PLC loom.

Relay	Function
1	Starter
1a	Glow Plug Timer
9	Steering Solenoid Supply
15	Neutral Cut-Off
22	Work Lights (Spot Lights)

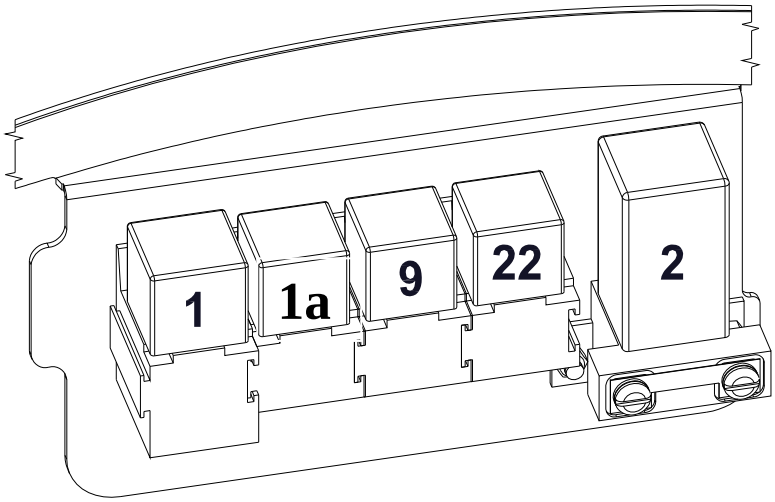

https://www.forkliftpdfmanuals.com/

https://truckmanualshub.com/

5.7: Steering & Hydraulic Functions Circuit

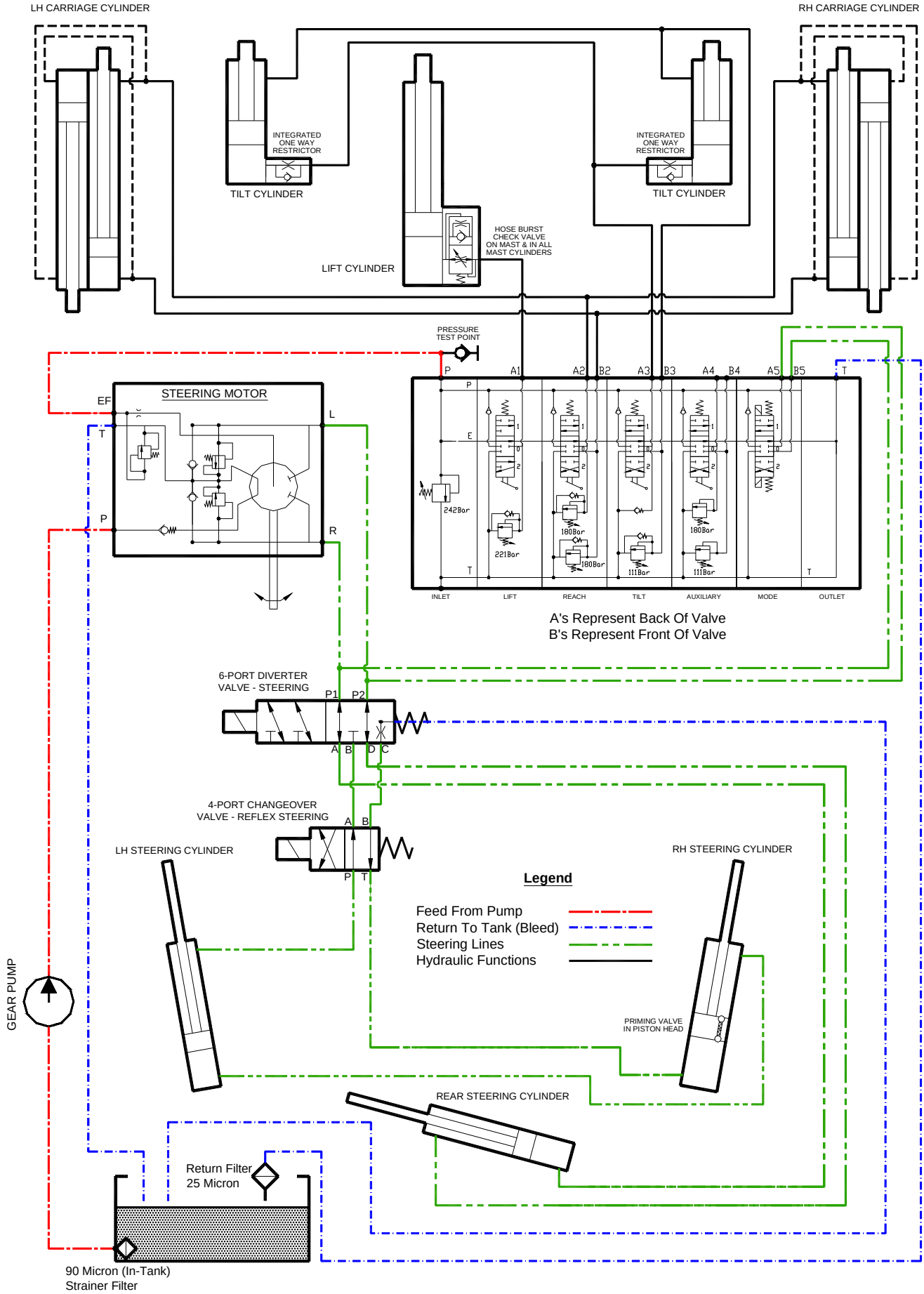

https://www.forkliftpdfmanuals.com/

https://truckmanualshub.com/

5.8: Hydraulic Drive Circuit:

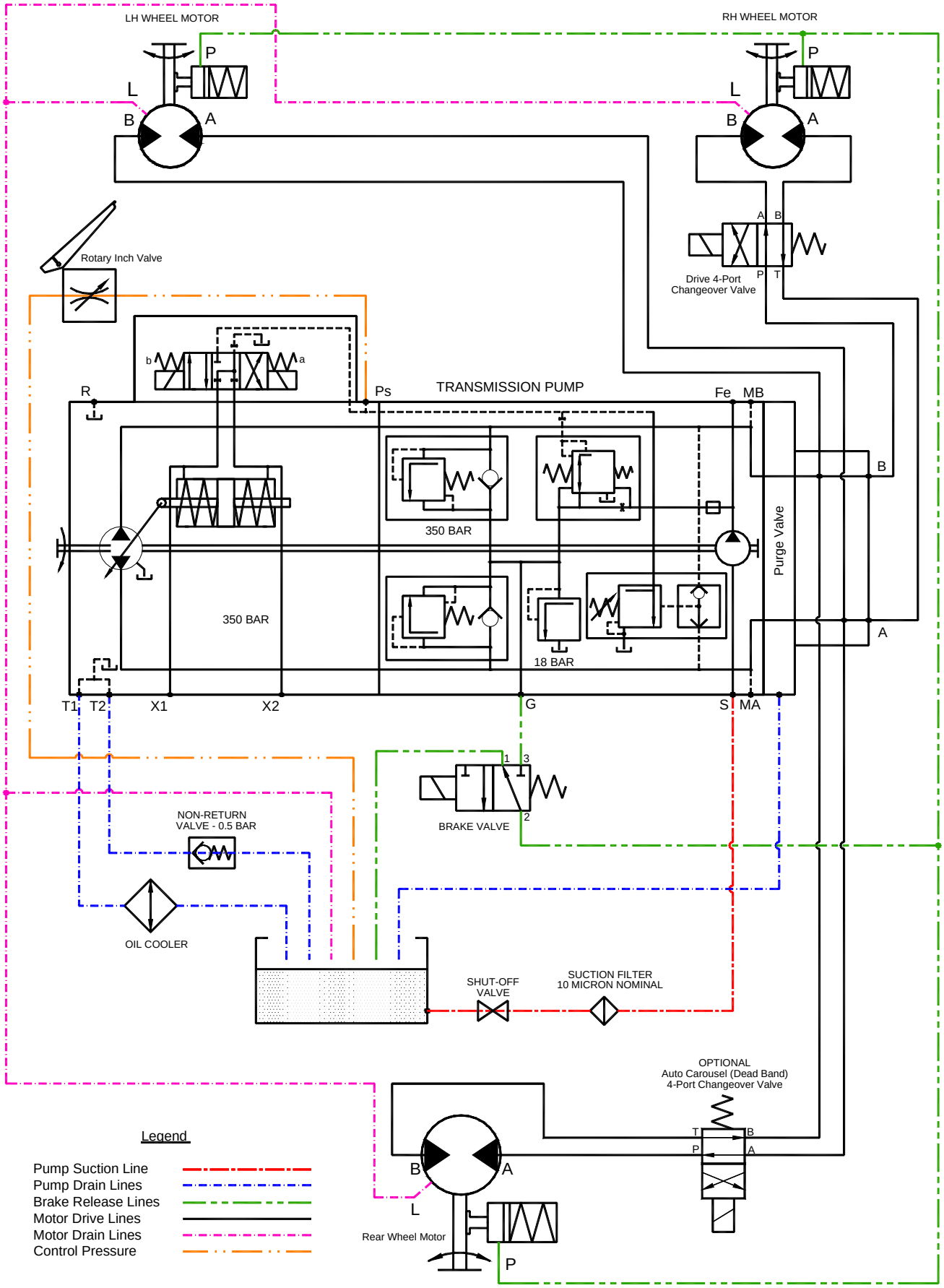

https://www.forkliftpdfmanuals.com/

https://truckmanualshub.com/

5.9: Standard Diesel Electric Circuit:

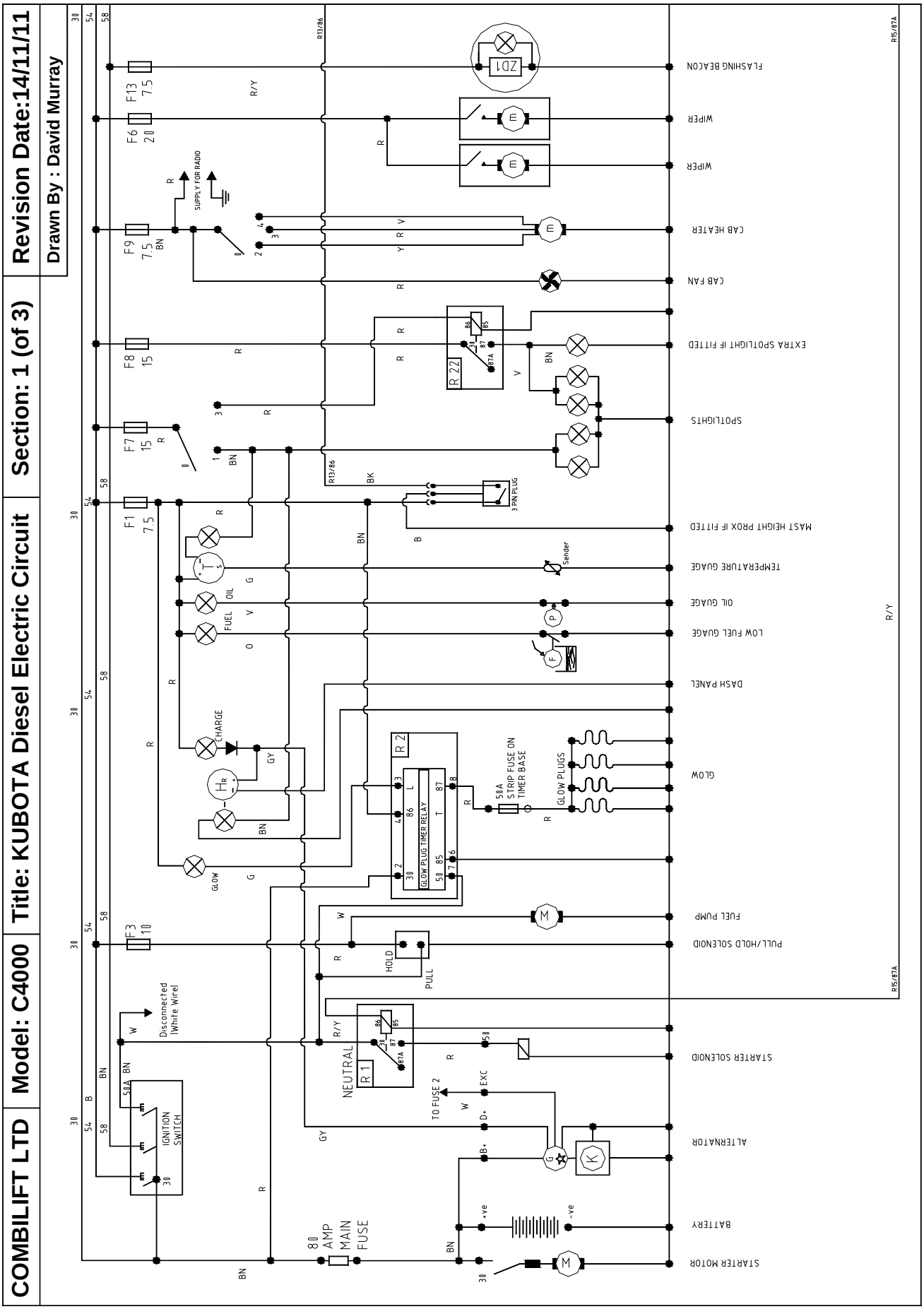

https://www.forkliftpdfmanuals.com/

https://truckmanualshub.com/

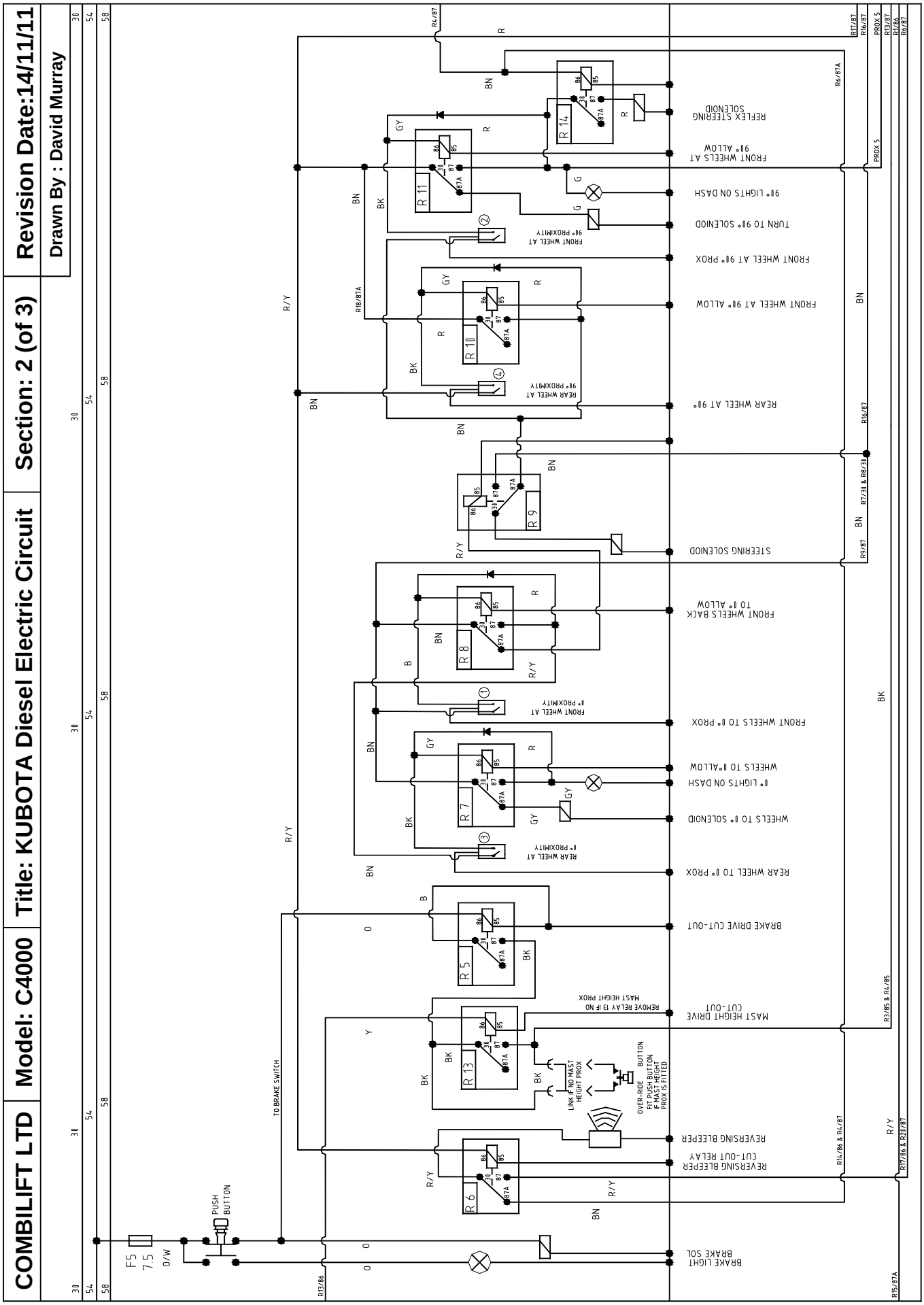

https://www.forkliftpdfmanuals.com/

https://truckmanualshub.com/

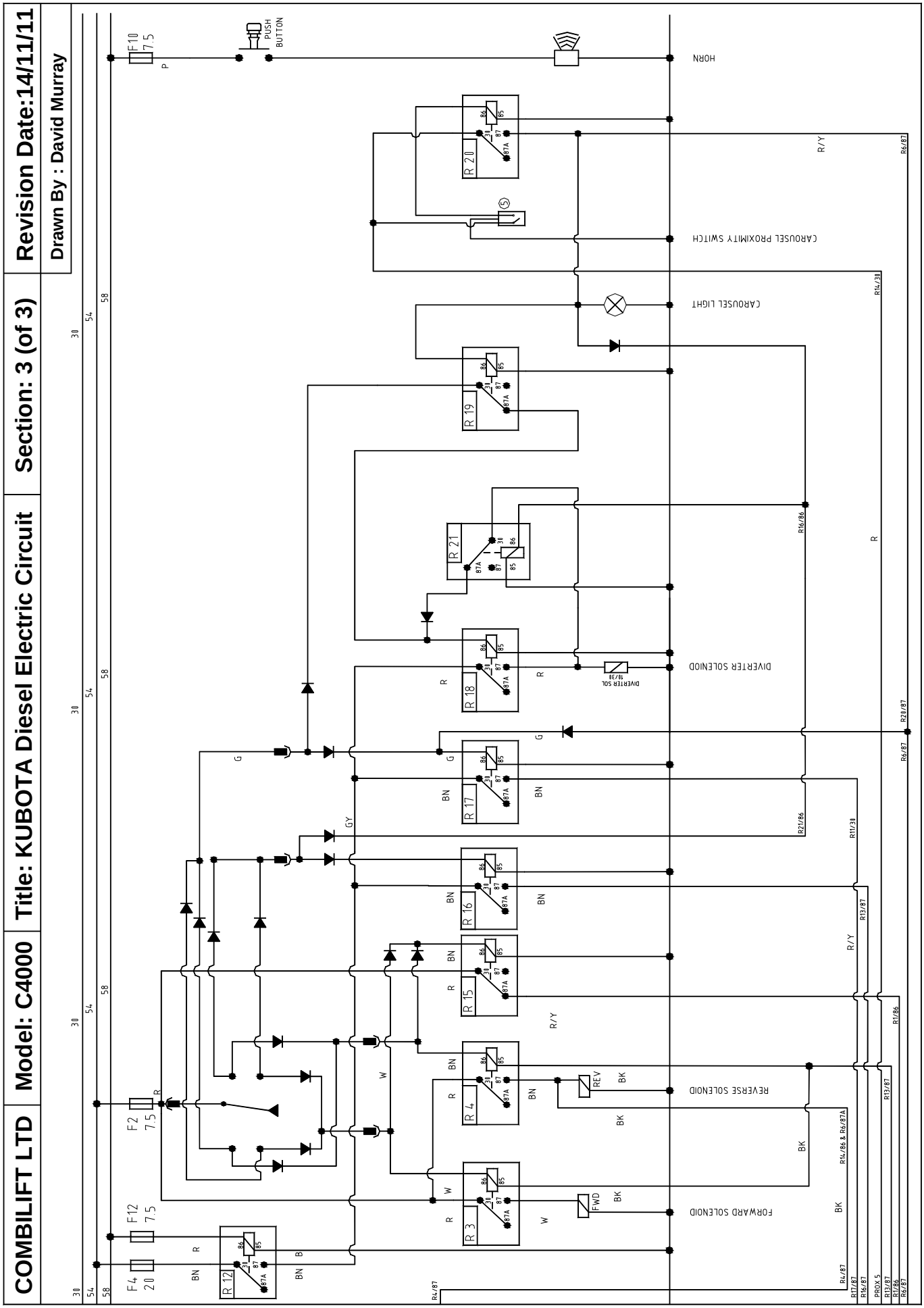

https://www.forkliftpdfmanuals.com/

https://truckmanualshub.com/

5.10: Standard LPG Electric Circuit:

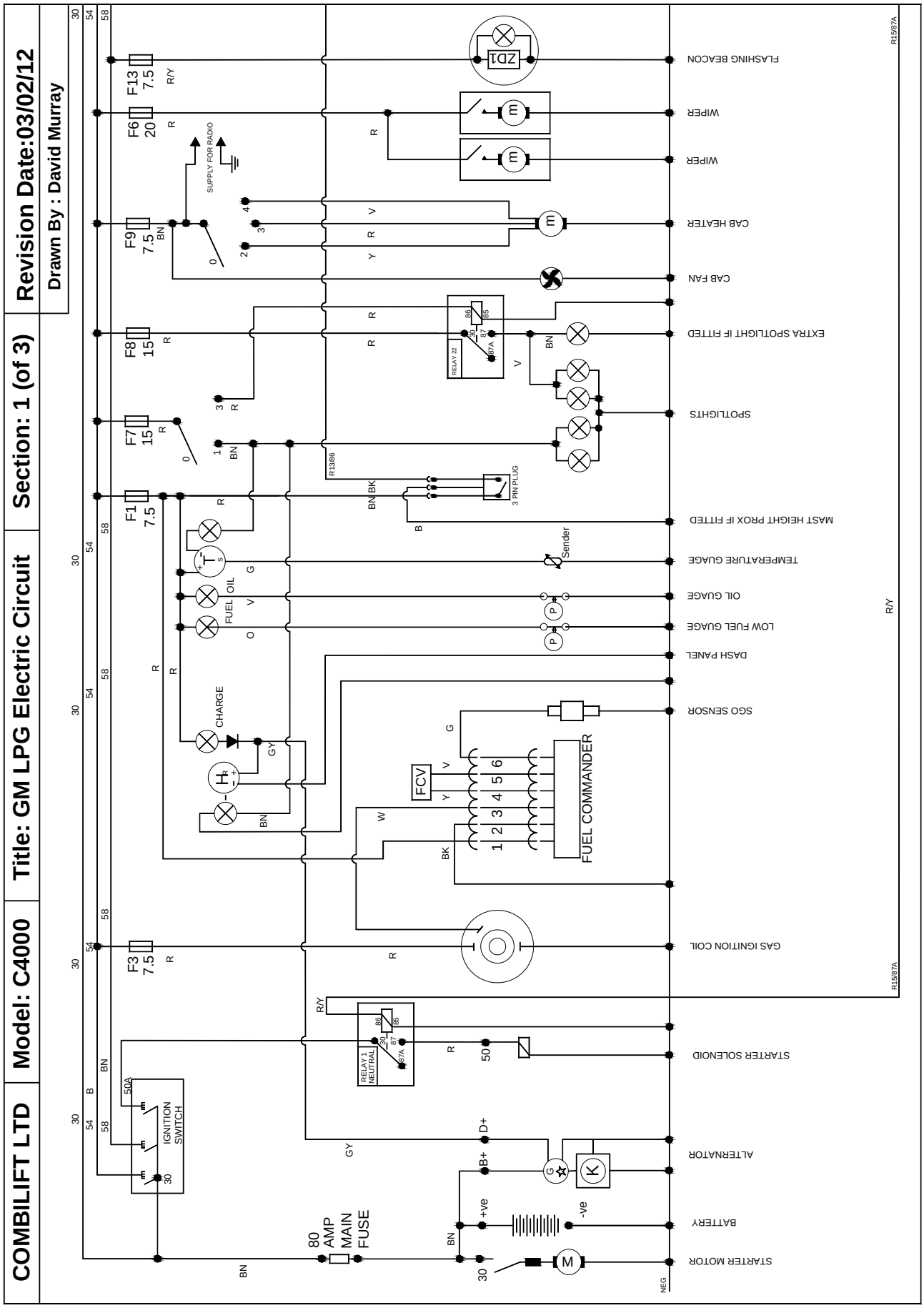

https://www.forkliftpdfmanuals.com/

https://truckmanualshub.com/

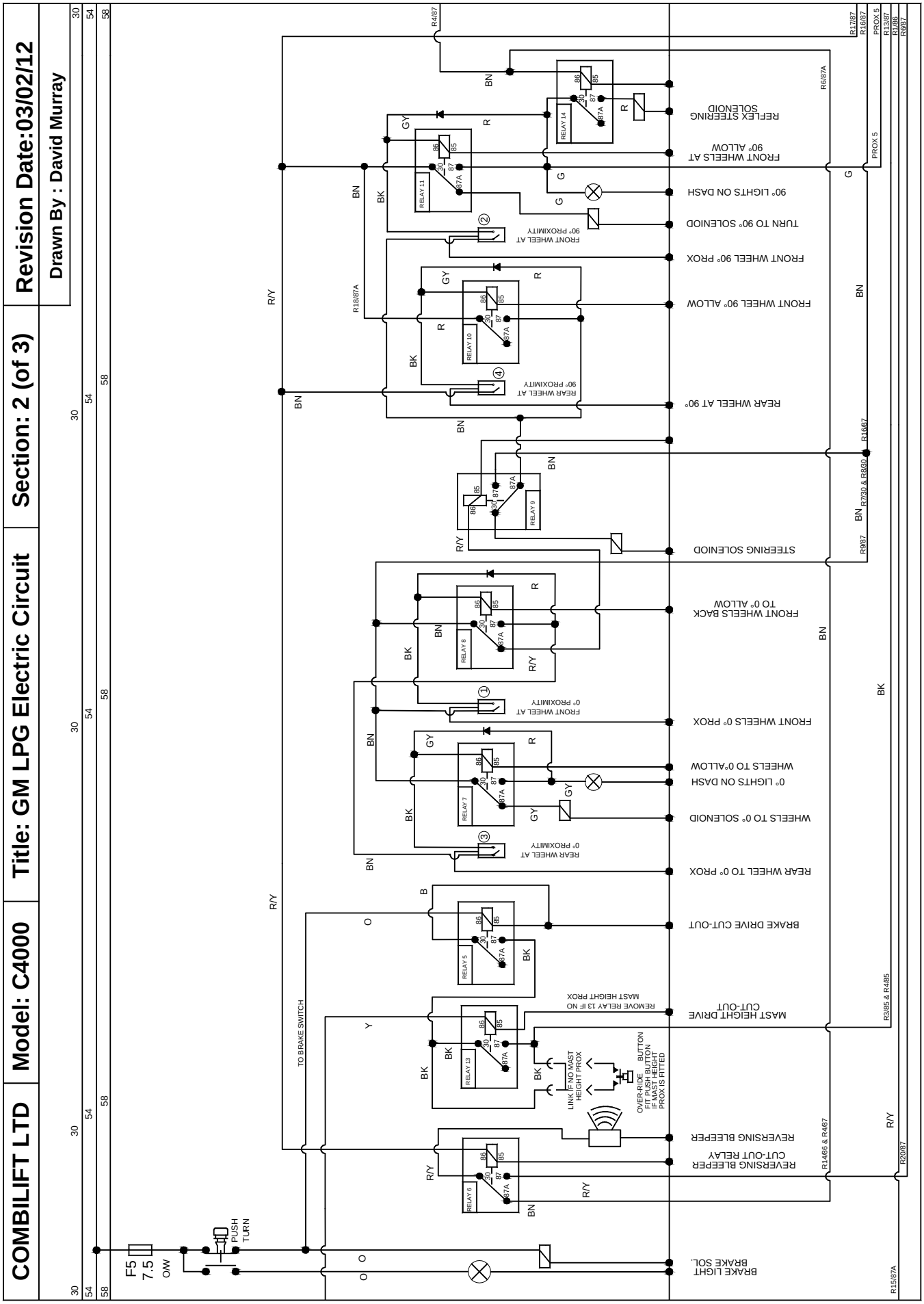

https://www.forkliftpdfmanuals.com/

https://truckmanualshub.com/

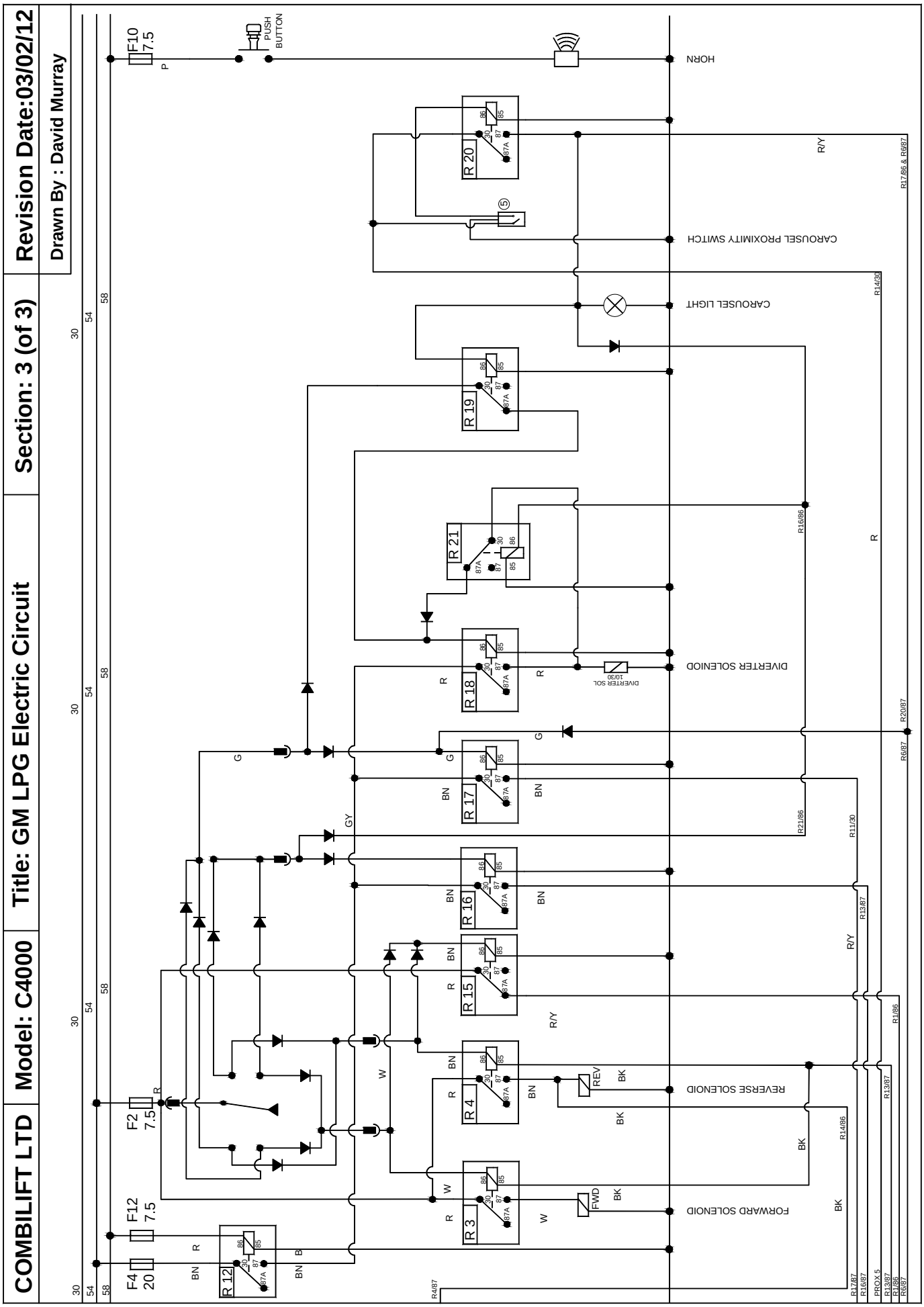

https://www.forkliftpdfmanuals.com/

https://truckmanualshub.com/

5.11: Tier IV LPG Electric Circuit:

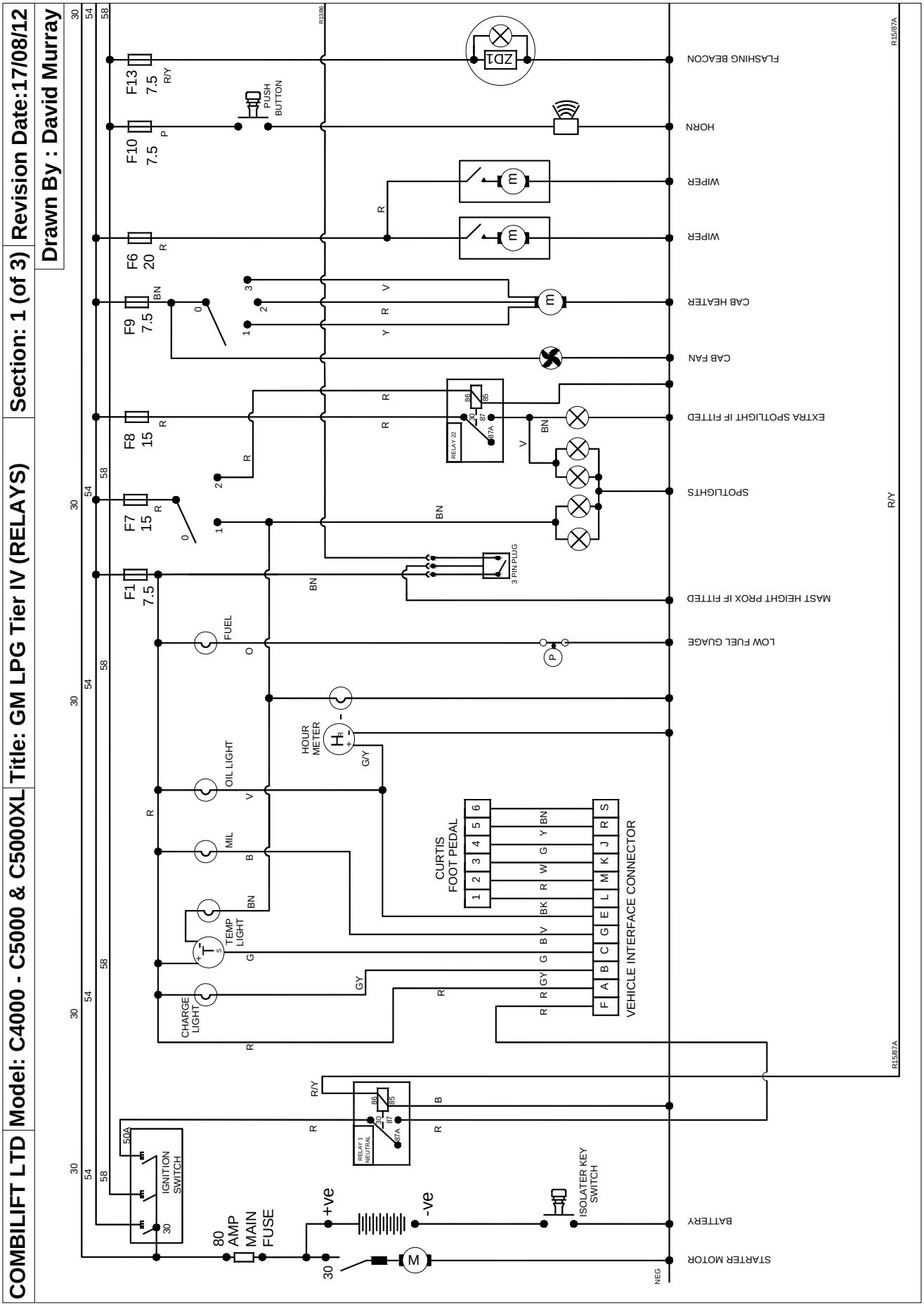

https://www.forkliftpdfmanuals.com/

https://truckmanualshub.com/

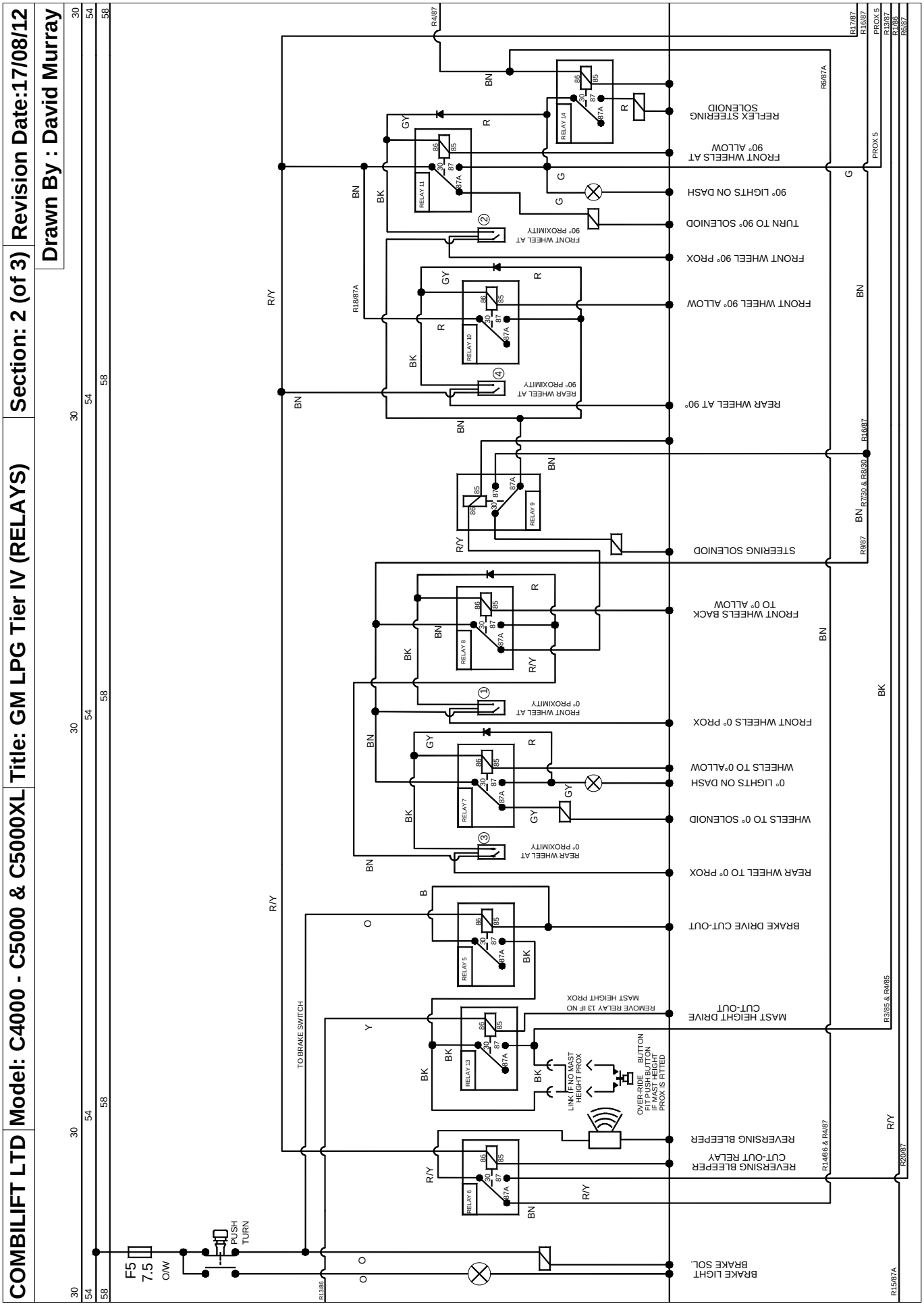

https://www.forkliftpdfmanuals.com/

https://truckmanualshub.com/

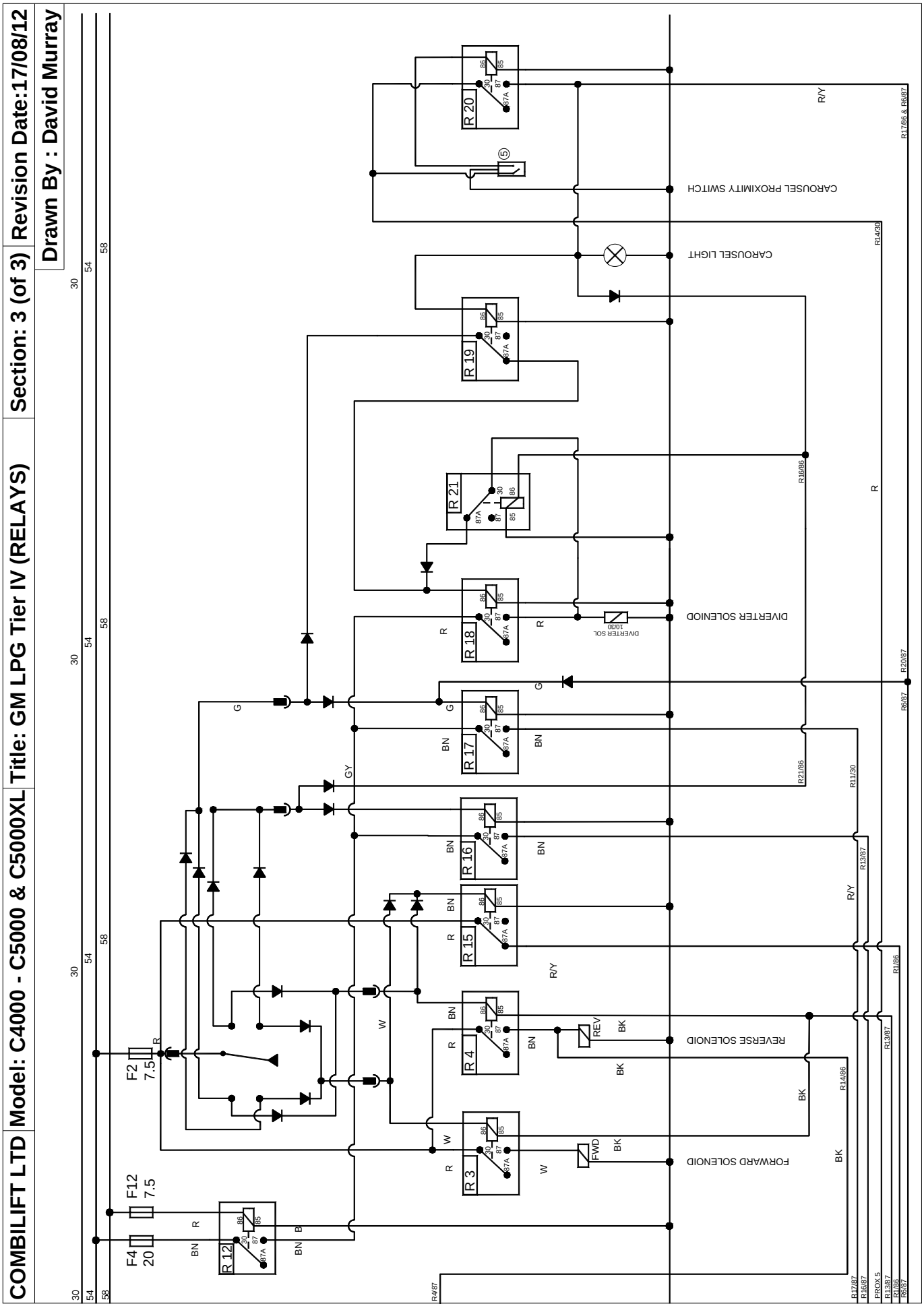

https://www.forkliftpdfmanuals.com/

https://truckmanualshub.com/

5.12: Diesel Electric Circuit (PLC):

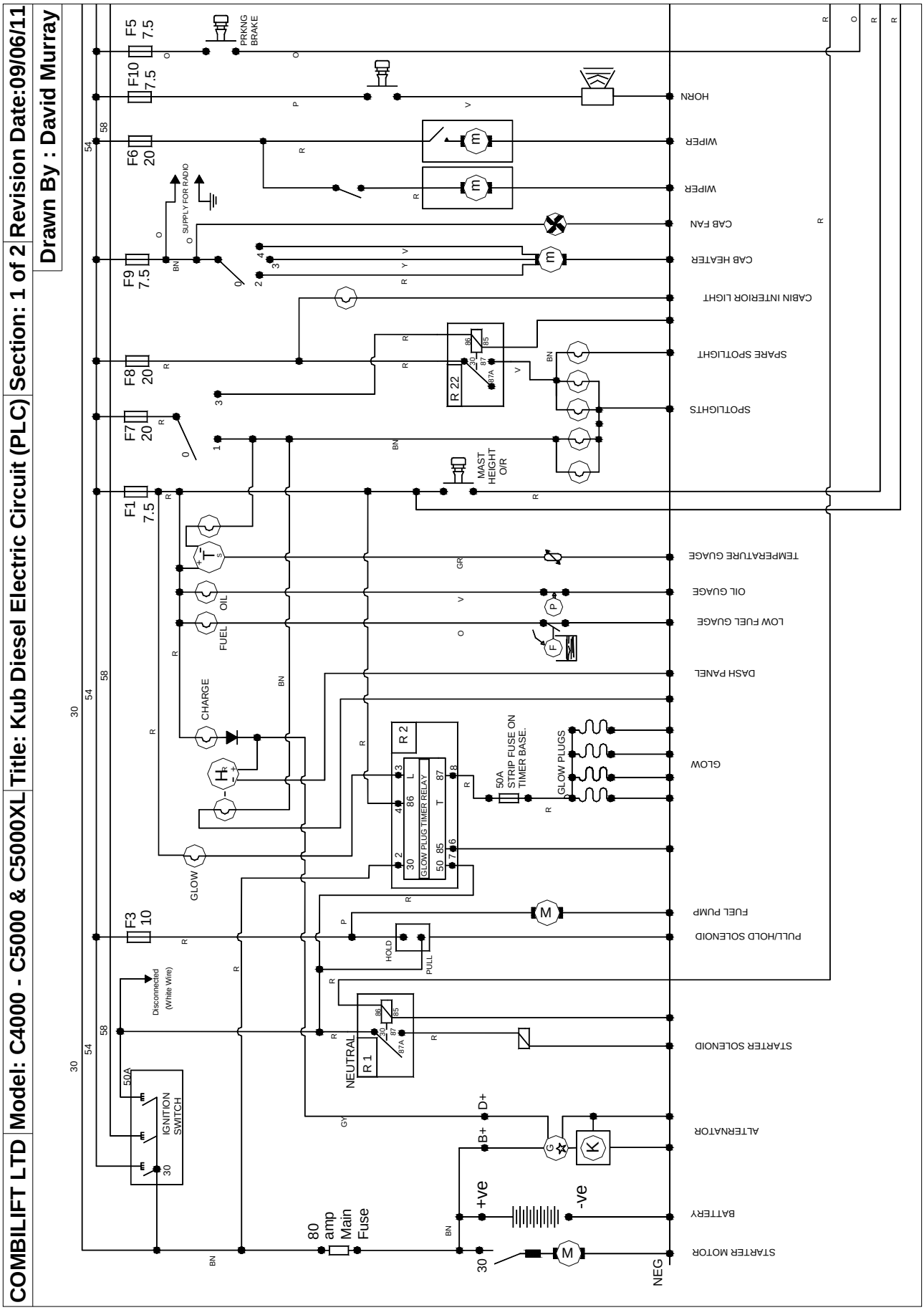

https://www.forkliftpdfmanuals.com/

https://truckmanualshub.com/

COMBILIFT LTD | Model: C4000 - C5000 & C5000XL | Title: Kub Diesel Electric Circuit (PLC) | Section: 2 of 2 | Revision Date:09/06/11

Drawn By : David Murray

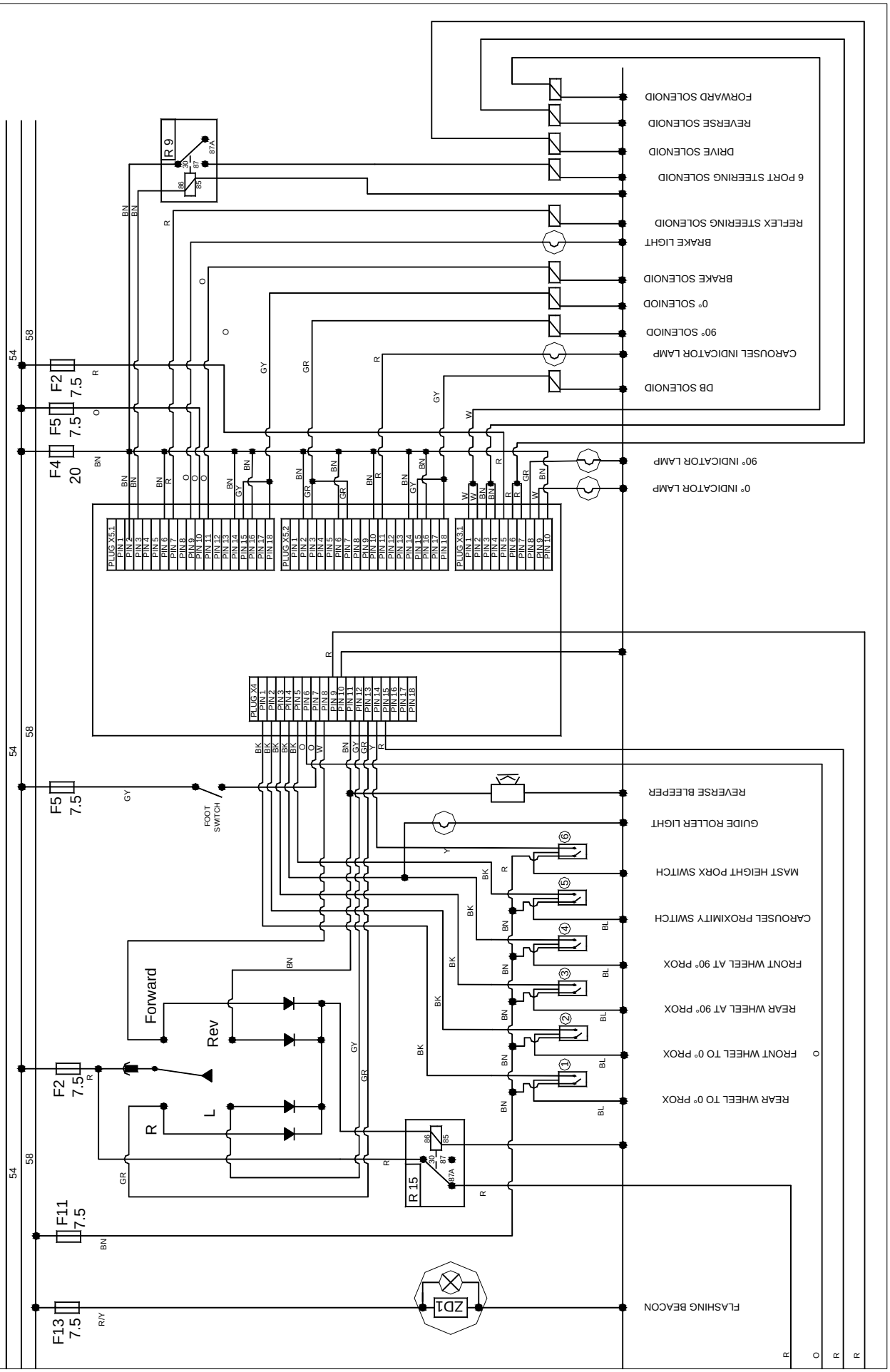

https://www.forkliftpdfmanuals.com/

https://truckmanualshub.com/

5.13: LPG Electric Circuit (PLC):

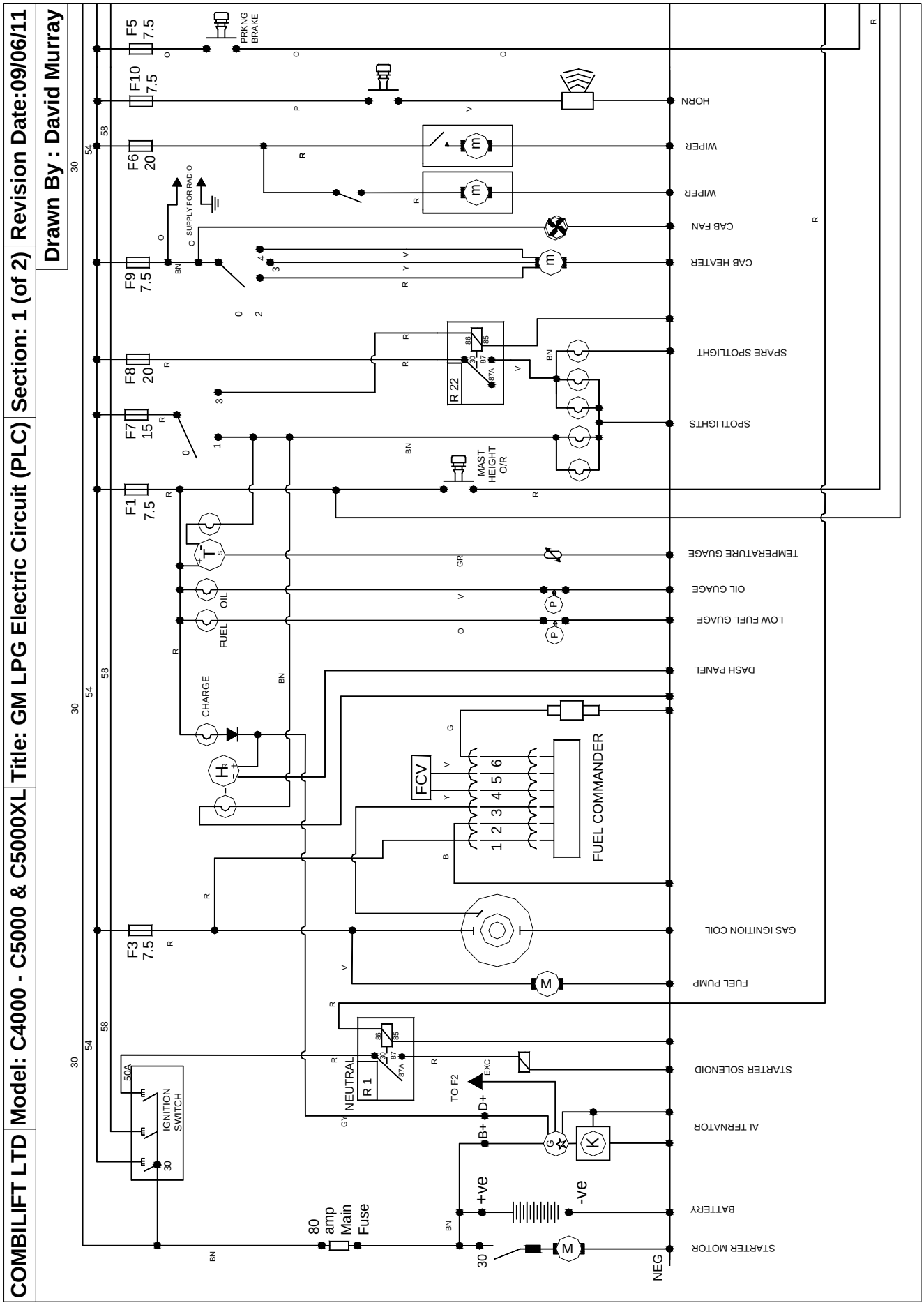

https://www.forkliftpdfmanuals.com/

https://truckmanualshub.com/

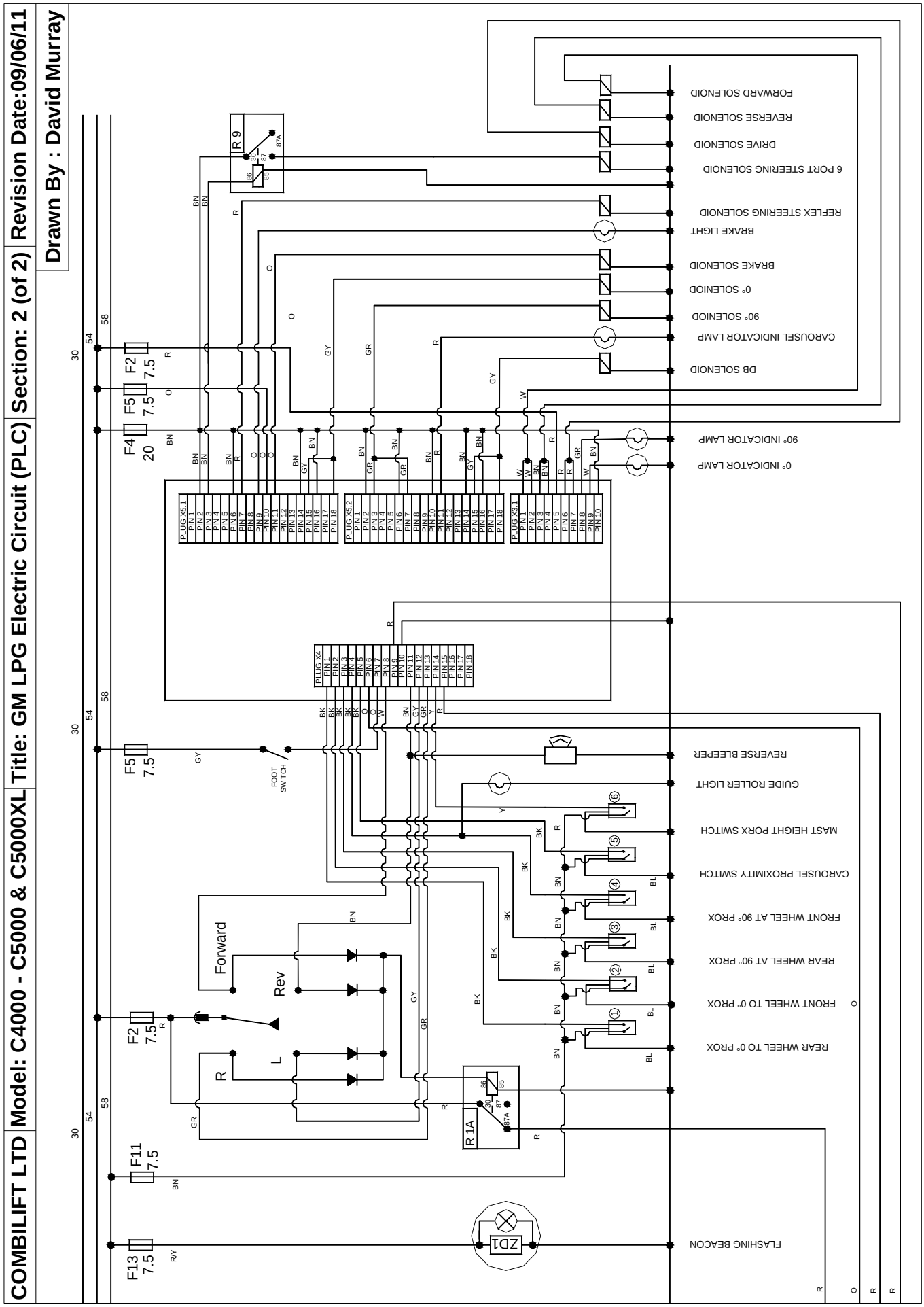

https://www.forkliftpdfmanuals.com/

https://truckmanualshub.com/

5.14: Tier IV LPG Electric Circuit (PLC)

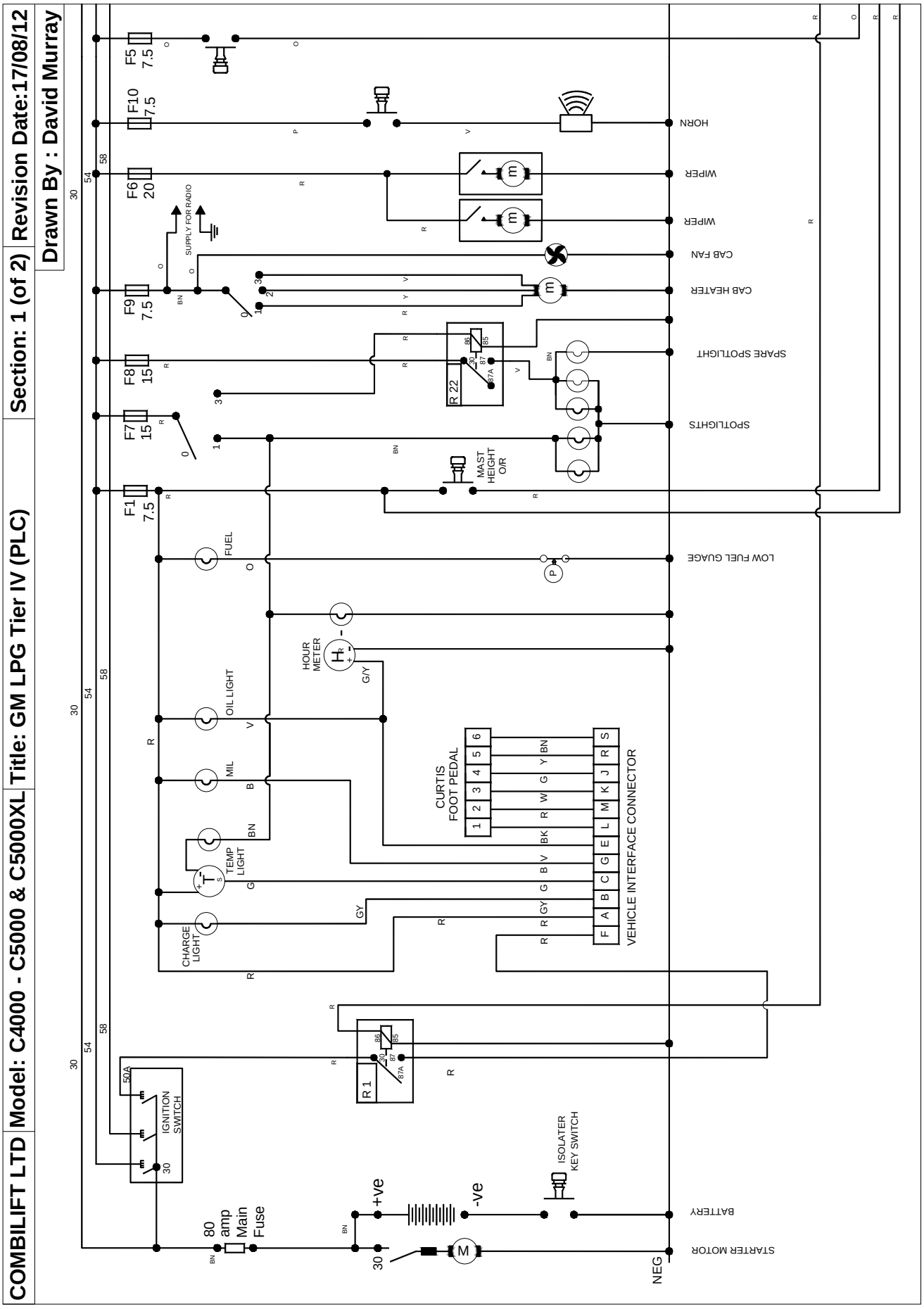

https://www.forkliftpdfmanuals.com/

https://truckmanualshub.com/

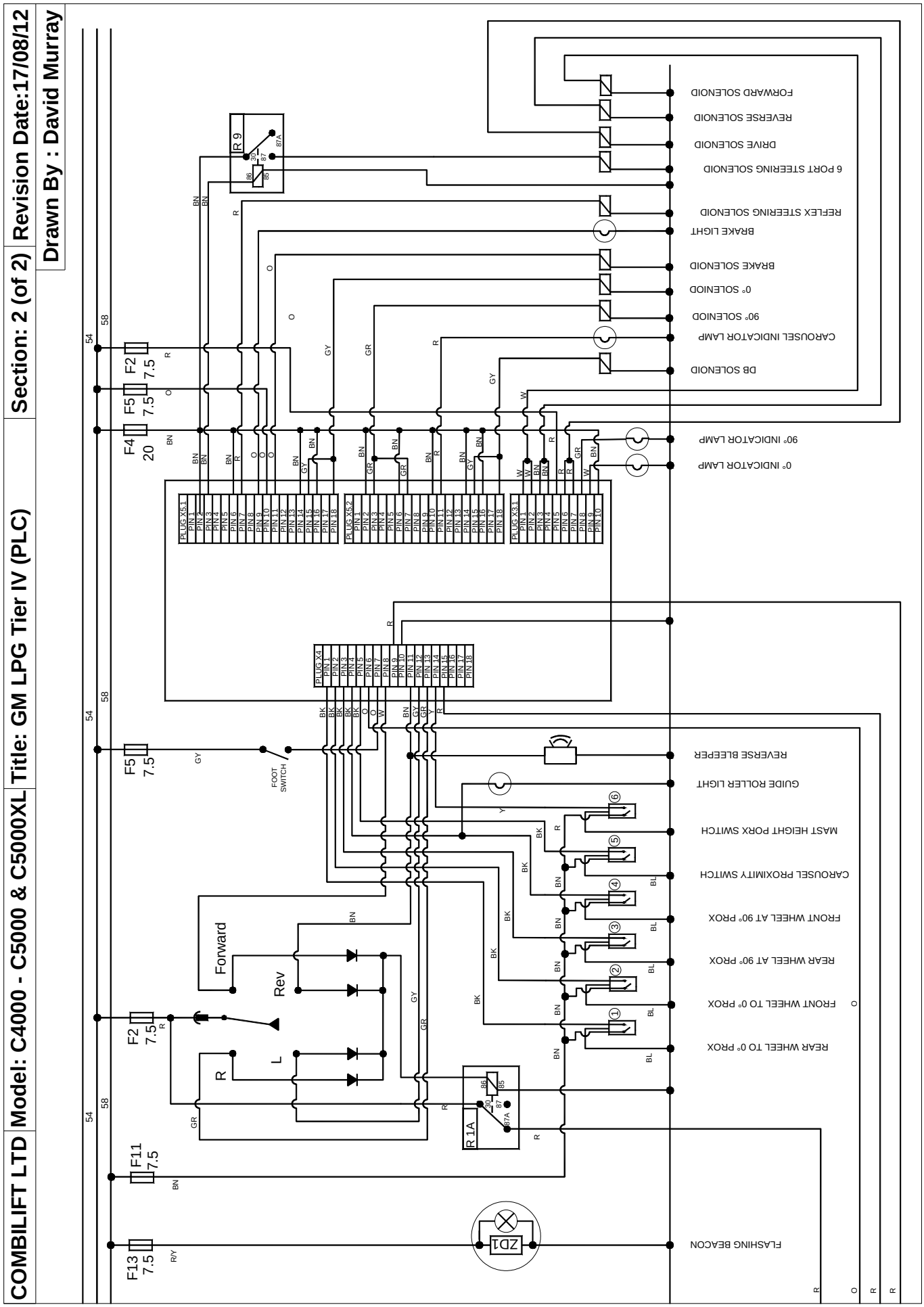

https://www.forkliftpdfmanuals.com/

https://truckmanualshub.com/

5.15: Colour Codes for Electric Circuits:

CODE - COLOUR

BK - BLACK
BN - BROWN
BL - BLUE
R - RED
O - ORANGE
Y - YELLOW
GR - GREEN
V - VIOLET
P - PINK
GY - GREY
W - WHITE
G/Y - GREEN / YELLOW
R/Y - RED / YELLOW
O/W - ORANGE / WHITE

NEGATIVE WIRES ARE NORMALLY BLUE OR BLACK, DEPENDING ON WHAT UNIT IS BEING INVESTIGATED.
TAKE ALL NEGATIVES TO BE BLACK UNLESS STATED OTHERWISE.

https://www.forkliftpdfmanuals.com/

https://truckmanualshub.com/

5.16: PLC Details

The diagram below shows the layout of the major components of the PLC board that need to be known in order to correctly find and repair faults.

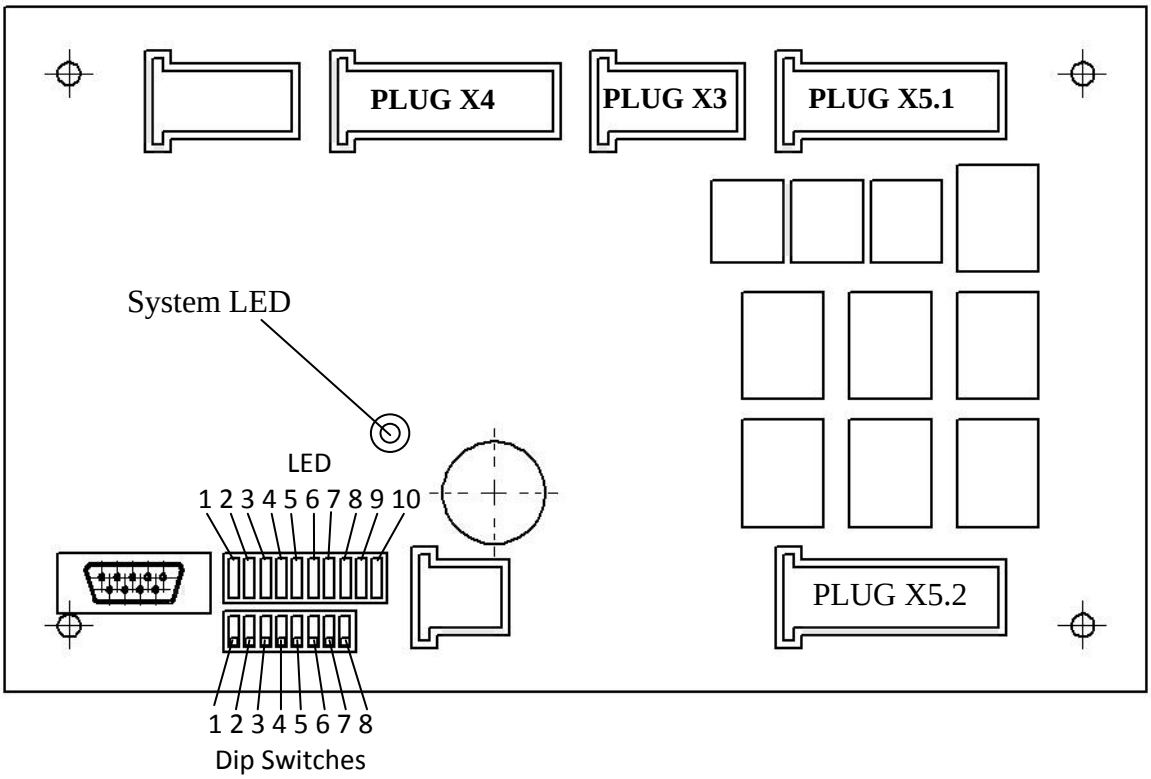

The pins in each of the plugs on the board are laid out as follows.

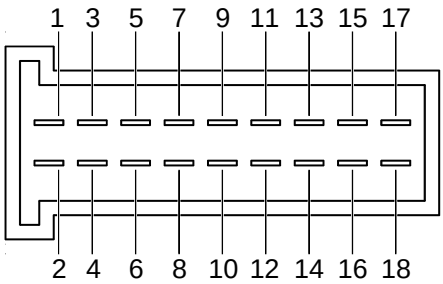

The System LED tells the operator what the PLC is doing. The following table gives an explanation of what the System LED is indicating.

System LED Status	Meaning
No LED	No power Supply to PLC
Flashing Green (Fast)	PLC is not Programmed
Flashing Green (Slow)	PLC is Programmed & Running Normally
Static Green	PLC is Programmed but not Running
Static Red	PLC has Failed (Replace PLC)

Each of the plugs has a specific function as do the pins on each plug. The tables on the following pages give details of the functions on each of the plugs and the pin associated with each function.

https://www.forkliftpdfmanuals.com/

https://truckmanualshub.com/

INPUTS

Plug	Pin	Function	Wire Colour
X4	01	Rear Wheel @ Zero Degree Proximity Switch	Black
X4	02	Front Wheel @ Zero Degree Proximity Switch	Black
X4	03	Rear Wheel @ Ninety Degree Proximity Switch	Black
X4	04	Front Wheel @ Ninety Degree Proximity Switch	Black
X4	05	Carousel Steering Proximity Switch (DB Proxy)	Black
X4	06	Park Brake Switch Signal	Orange
X4	07	Inching Pedal Brake Switch Signal (Optional)	Purple
X4	08	Forward Signal Fron Direction Lever	White
X4	09	Power Supply to Board (Supplied From Fuse 1)	Red
X4	10	Negative for Board power Supply	Blue / Black
X4	11	Reverse Signal From Direction Lever	Brown
X4	12	Left Signal From Direction Lever	Green
X4	13	Right Signal From Direction Lever	Grey
X4	14	Mast Height Proximity Switch Signal	Black
X4	15	Mast Height Over Ride Button	??
X4	16	Optional Extra	??
X4	17	Optional Extra	??
X4	18	Optional Extra	??

OUTPUTS

Plug	Pin	Function	Wire Colour
X3	01	Forward Solenoid 01	White
X3	02	Forward Solenoid 02	White
X3	03	Reverse Solenoid 01	Brown
X3	04	Reverse Solenoid 02	Brown
X3	05	Common Supply for Pins 01-04 (From Fuse 2)	Red
X3	06	Drive Solenoid 01	Red
X3	07	Drive Solenoid 02	Red
X3	08	Ninety degree Indicator Light	Green
X3	09	Zero Degree Indicator Light	White
X3	10	Common Supply to pins 06-09 (From Fuse 4)	Red

https://www.forkliftpdfmanuals.com/

https://truckmanualshub.com/

Outputs (continued)

Plug	Pin	Function	Wire Colour
X5.1	01	*Not Used*	*n/a*
X5.1	02	Common Supply for Output 08 (From fuse 4)	Brown
X5.1	03	Steering Solenoid (Six Port)	Brown
X5.1	04	*Not Used*	*n/a*
X5.1	05	*Not Used*	*n/a*
X5.1	06	Common Supply for Output 09 (From fuse 4)	Brown
X5.1	07	Reflex Solenoid	Red
X5.1	08	*Not Used*	*n/a*
X5.1	09	*Not Used*	*n/a*
X5.1	10	Common Supply for Output 10 (From fuse 5)	Orange
X5.1	11	Brake Solenoid	Orange
X5.1	12	*Not Used*	*n/a*
X5.1	13	*Not Used*	*n/a*
X5.1	14	Common Supply for Output 11 (From fuse 4)	Brown
X5.1	15	Zero Degree Solenoid 01	Grey
X5.1	16	Common Supply for Output 12 (From fuse 4)	Brown
X5.1	17	*Not Used*	*n/a*
X5.1	18	Zero Degree Solenoid 02	Grey

Plug	Pin	Function	Wire Colour
X5.2	01	*Not Used*	*n/a*
X5.2	02	Common Supply for Output 13 (From fuse 4)	Brown
X5.2	03	Ninety Degree Solenoid 01	Green
X5.2	04	*Not Used*	*n/a*
X5.2	05	*Not Used*	*n/a*
X5.2	06	Common Supply for Output 14 (From fuse 4)	Brown
X5.2	07	Ninety Degree Solenoid 02	Green
X5.2	08	*Not Used*	*n/a*
X5.2	09	*Not Used*	*n/a*
X5.2	10	Common Supply for Output 15 (From fuse 4)	Brown
X5.2	11	Optional Extra (not assigned)	???
X5.2	12	*Not Used*	*n/a*
X5.2	13	*Not Used*	*n/a*
X5.2	14	Common Supply for Output 16 (From fuse 4)	Brown
X5.2	15	Carousel Steering Solenoid 01	Grey
X5.2	16	Common Supply for Output 17 (From fuse 4)	Red
X5.2	17	*Not Used*	*n/a*
X5.2	18	Carousel Steering Solenoid 02	Grey

https://www.forkliftpdfmanuals.com/

5.17: PLC Diagnostics

The diagnostics function can be used to make sure all components are working correctly.

Mode 1 – Joystick Function

Move Switch '1' to the 'ON' position

- **Neutral Position – No LED**
- **Forward Position – LED 1**
- **Reverse Position – LED 2**
- **Left Position – LED 3**
- **Right Position – LED 4**

FORWARD

LEFT

NEUTRAL

RIGHT

REVERSE

- If the joystick is working correctly each LED will only light with the joystick in the corresponding position.
- If the joystick is malfunctioning the LED corresponding to the position will not light up.

Mode 2 – Proximity Sensor Function

Move Switch '2' to the 'ON' Position

Front Wheel 0 Degree Sensor – LED 1

Rear Wheel 0 Degree Sensor – LED 2

Carousel Sensor – LED 3

Front Wheel 90 Degree Sensor – LED 4

Rear Wheel 90 Degree Sensor – LED 5

- Proximity Sensors can be energised by switching from Forward Mode to Sideward mode.
- If a LED does not light it should be energised manually to rule out the failure of the corresponding proximity sensor.
- Once activated the LEDs will remain lit until the switch is reset to the OFF position.

Mode 3 – Switch Mode

Move Switch ‘3’ to the ‘ON’ Position

Park Brake – LED 1

Mast Height Override Switch – LED 2

Mast Height Proximity Sensor – LED 3

- The Park Brake will only remain lit while the park brake is engaged.
- LED 2 will be ON constantly on all machines that do not have the Mast Height Override Function.
- To energise the mast height proximity sensor lift the forks to the height of the proximity sensor.

Mode 4 – Solenoid Mode

NOTE: This mode must only be used with the key turned on, **NOT** with the engine running.

Forward, Reverse, 0° and 90° Solenoids
Move Switch ‘4’ to the ‘ON’ Position to test.

Use the directional joystick to energise the solenoids as below

FWD Solenoid

0° Solenoid

90° Solenoid

REV Solenoid

Steering, Reflex, Carousel and Drive Solenoids
Move Switch ‘5’ to the ‘ON’ Position to test.

Steering Solenoid

Carousel Solenoid

Drive Solenoid

Reflex Solenoid

- The LED on each solenoid should be lit along with the LED on the board.
- If the solenoid LED does not light, a wiring problem may be present.
- If the solenoid LED is lit but a problem remains the solenoid and/or the valve should be checked for malfunction.