OPERATOR'S HANDBOOK

Mack® RH Drive
Australia

(CSM / CMM / CHM / CLX / CXX)

21847026

© Mack Trucks, 2012

Mack® RH Drive Australia

OPERATOR'S HANDBOOK

21847026

OPERATOR'S HANDBOOK

Mack® RH Drive
Australia

(CSM / CMM / CHM / CLX / CXX)

21847026
January 2012

Contents

INTRODUCTION....1
IMPORTANT....1
TO THE OWNER....1
In Appreciation....1
About This Handbook....2
THE VEHICLE....3
Basic Configuration....3
Vehicle Management and Control System (V-MAC®)....3
COMPONENT IDENTIFICATION....4
VIN Locations....4
Engine Identification....6
Transmission Identification....8
WARRANTY INFORMATION....12
Air Brake System....12
CUSTOMER SERVICE....13
Call 1-800-655-333 for Action Service....13
Questions and Complaints....13
Addresses....14

SAFETY INFORMATION....15
SAFETY STATEMENT....15
ADVISORY LABELS....16
Advisory Label Definitions (In Handbook)....17
Advisory Label Locations (On Vehicle)....18
mDRIVE Transmission Label....25
CAB ENTRY/EXIT....26
Three-Limb Contact....26
Driver Side....27
Passenger Side....29
DOOR LOCKS....31
SEAT BELTS....31
Seat Belt Operation....32
SAFETY TIPS FOR COLD WEATHER OPERATION....35
Driver Visibility....35
Outside Mirror Heater....36
Air Horn Shield....36
Emergency Reflector Kit (If Equipped)....37
Fire Extinguisher (Optional)....37

INSTRUMENTS AND CONTROLS....38
CAB INTERIOR....38
INSTRUMENT PANEL....39
Tell-Tales....39
Panel Arrangement....39
Function of Optional Switches....58
CAB CLIMATE CONTROL....63

LIGHT CONTROL PANEL 65
LOWER CONSOLE PANEL 66
STEERING COLUMN 67
Combination Starter and Electrical Switch 67
Steering Wheel Adjustment 67
Turn Signal Lever 67
Stalk Switch (Co-Pilot® Only) 70
FLOOR PEDALS 72
MISCELLANEOUS CONTROLS 73
Dome Light 73
Air Horn 74
Accessory Power Outlets 74

OPERATION 76
BEFORE OPERATING THE VEHICLE 76
Driver's Daily Walk-Around Inspection 76
New Vehicle Break-In 78
WINDSHIELD WASHER RESERVOIR 80
HOOD OPERATION 81
Opening the Hood 81
Closing the Hood 82
Locking the Hood 82
HOSE TENDERS 83
DOORS 84
Standard Door Panel 84
Locking the Cab Door 86
Power Window Regulators 86
REMOTE KEYLESS ENTRY — (OPTIONAL) 87
Transmitter Operations 88
Battery Replacement 89
MIRROR BREAKAWAY STRUT (IF EQUIPPED) 92
MACK ENGINE INFORMATION 93
Precautions and Warnings 93
Engine Model Designations 94
MACK POWERLEASH™ ENGINE BRAKE (IF EQUIPPED) 95
Engine Brake Switch 96
PowerLeash+ Mode 97
Grade Gripper (If Equipped) 100
How the Engine Brake is Activated 102
Cruise Control with the MACK PowerLeash™ Engine Brake 103
ON THE ROAD WITH THE MACK POWERLEASH™ ENGINE BRAKE 104
Over Flat Terrain 105
Descending a Grade 106
On Slippery Road Surfaces 108
CRUISE AND ENGINE SPEED CONTROL 109
Cruise Control 109

Engine Speed Control 114
BRAKE OPERATION 117
Air Brake System 117
Automatic Slack Adjusters 118
Parking Brake System 118
Parking 119
Anti-Lock Brake System (ABS) 120
Automatic Traction Control (ATC) (If Equipped) 126
GOOD DRIVING HABITS 126
Weight Ratings 126
Instruments 126
Shutting Down the Engine 127
General Observation 127
STARTING THE VEHICLE 127
General Information 127
Starting MP Engines 128
Engine Warm-Up 131
Engine Idling 131
Shutting Down the Engine 132
COLD WEATHER OPERATION 134
Cold Weather Starting Tips 134
COUPLING A TRAILER 135
UNCOUPLING A TRAILER 136
MOVING THE VEHICLE — GENERAL INFORMATION 138
Braking 138
Shifting 138
Engine Temperature 139
Clutch (If Equipped) 140
POWER TAKE-OFF (PTO) OPERATION 142
PTO Precautions 143
PTO Classification 143
Side-Mounted PTO Locations 144
PTO Operating Procedures 144
TRANSMISSION SHIFTING INSTRUCTIONS 145
Shifting Instructions for Allison Automatic Transmissions 145
Shifting Instructions for mDRIVE Transmissions 145
MACK T310 Shifting Instructions 146
MACK T310M, T310ME and T310MLR Shifting Instructions 149
MACK T318, T318L and T318LR Shifting Instructions 153
MACK T31821, T318L21 and T318LR21 Shifting Instructions 159
AXLES 165
Rear Axles Other Than MACK 165
MACK Rear Axles 165
Engaging the Power Divider Lockout 167

Mack, Emissions Solution 168

DIESEL PARTICULATE FILTERS 168
Exhaust Aftertreatment System 171
Safety Information 172
Exhaust Aftertreatment System Components and Operations 173
Selective Catalytic Reduction (SCR) 173
Diesel Exhaust Fluid (DEF) 175
Aftertreatment Diesel Particulate Filter (DPF) 179
Aftertreatment Control Module (ACM) or Urea Dosing System (UDS) 180
Exhaust Aftertreatment System 181
Driver Warnings and On Board Diagnostics (OBD) 186
On Board Diagnostics (OBD) 186
Instrument Cluster 187
Malfunction Indicator Lamp (MIL) 189
Aftertreatment DEF Tank Level – Driver Warning & Inducement 190
Misfilling Diesel or Aftertreatment DEF Tanks 191
SCR Tampering - Driver Warning & Inducement 192
Warranty and Maintenance 193
Exhaust Aftertreatment System Maintenance 193
MP Engine Maintenance Intervals 193

MAINTENANCE AND LUBRICATION 195
MAINTENANCE INTRODUCTION 195
TURBOCHARGER 195
CLEANING YOUR VEHICLE 196
Exterior Washing 196
Cab and Hood 198
Chassis 198
Cab Interior 199
Waxing 199
Polishing 199
Winter Warnings 199
TOWING 200
ENGINE OIL LEVEL CHECK 202
Power Steering Reservoir 203
FUEL TANK 203
Fuel Tank Cap 203
COOLING SYSTEM 203
Coolant Level Check 204
Draining the Cooling System 204
Refilling the Cooling System 204
Protecting the Cooling System 205
Cooling System Maintenance 205
Accessory Drive Belt Routing (MP8) 206
Accessory Drive Belt Routing (MP10) 206
WHEELS 208
Wheel Inspection 208

Tyres....209
BATTERY....212
Jump-Starting Engine....213
ELECTRICAL....214
Circuit Breaker and Relay Panels....214
Additional In-Line Fuse, Circuit Breaker and Relay Lcations....216
mDRIVE Relay Center....218
Electrical Grease....219
Circuit Protection Charts....220
Electrical Accessory Connection Points....222

METRIC CONVERSIONS....227
METRIC CONVERSIONS....227

IMPORTANT

Your new MACK truck contains many new technological advancements that may require new servicing techniques and methods. An authorized MACK truck dealer is in the best position to provide technicians who have the necessary training, experience and tools to properly service your truck.

TO THE OWNER

In Appreciation

Thank you for buying a MACK vehicle. With proper care and maintenance, your new MACK will help you gain a competitive edge with its fuel-efficient drivetrain combinations, low maintenance, extended service intervals and, eventually, good resale value.

This MACK® model is available for a wide range of applications. Because of this versatility, drivetrains and components vary and operating instructions may differ from one model to another. While every effort has been made to cover all current arrangements, do not hesitate to consult your MACK distributor if a question arises. Honest, personal service is standard with every MACK sale.

CAUTION

MACK Trucks, would like to point out the important role that the driver plays in the life of the vehicle. Only trained and informed drivers should operate this vehicle.

We, at MACK Trucks, hope that you will be happy with your new MACK® model, and that you see many years of trouble-free driving.

This vehicle was built to conform to all federal standards and regulations applicable at the time of manufacture.

2 INTRODUCTION

About This Handbook

This handbook is referred to as the *MACK® Right-Hand Drive Series (MetroLiner, Granite™, Trident, SuperLiner, Titan) Operator's Handbook*. Its identification number is 21847026. Keep this handbook with the vehicle at all times to ensure that each owner and/or operator will have access to all pertinent information relating to the operation and handling of this vehicle.

This handbook was prepared to provide the driver with all relevant information concerning the daily operation of this vehicle. Please read it thoroughly; pay particular attention to advisory labels that have been included to draw attention to important issues of operator safety and overall performance.

Information and illustrations in this handbook are based on the latest production usage at the time of printing and are subject to change without prior notice.

Note: Basic maintenance and lubrication procedures are found in this manual beginning with “MAINTENANCE INTRODUCTION”, page 195. For further information, refer to the *Maintenance and Lubrication Manual*.

THE VEHICLE

Basic Configuration

This MACK® model features a conventionally styled, aerodynamic cab.

Vehicle Management and Control System (V-MAC®)

The Vehicle Management and Control System (V-MAC) is an electronic control system that manages engine and vehicle functions. In addition, the DataMax™ portion of V-MAC monitors and stores a variety of information (i.e., maintenance schedules, overspeed logs, fault tables, trip summaries).

For a complete description of the V-MAC IV system, refer to the applicable *V-MAC® IV Vehicle Management and Control with Co-Pilot® Display Operator's Guide*, which is supplied with the vehicle.

Additional information concerning service, diagnostics, programming and vendor equipment interface application is available from the MACK Trucks, Service Publications Department. Contact your local MACK dealer for details.

WARNING

Never cut into the V-MAC system wire harness to power additional equipment. If such equipment is to be installed, contact your MACK dealer for assistance.

COMPONENT IDENTIFICATION

Locate the following serial numbers and write them in the boxes provided next to each illustration.

VIN Locations

The Vehicle Identification Number (VIN) is displayed in two locations (a frame rail stamping and a label). The 17-digit VIN must be identical in both locations.

The **VIN frame stamping** is located on the right outside frame rail and the left inside frame rail.

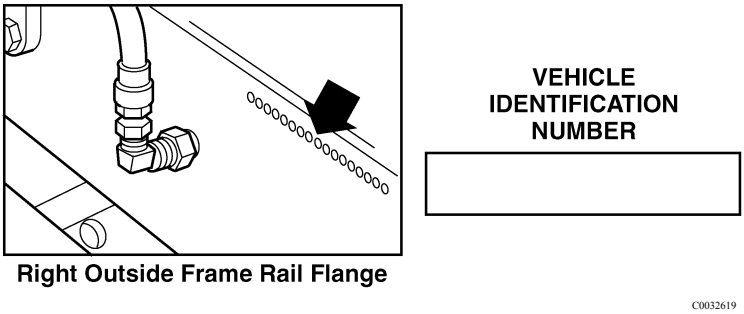

Right Outside Frame Rail Flange

The **VIN Label Special Rating**is located on the driver-side door jamb, below the latch striker plate.

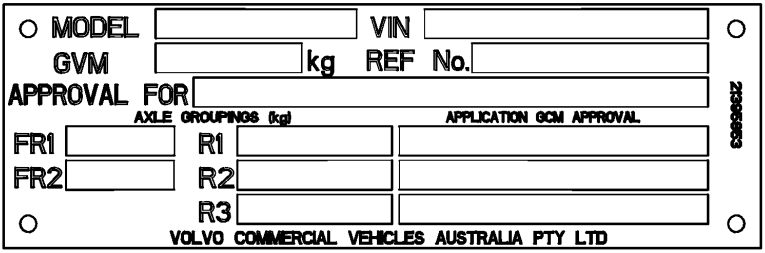

W8061401

The **VIN Label** is located on the driver-side door jamb, below the latch striker plate.

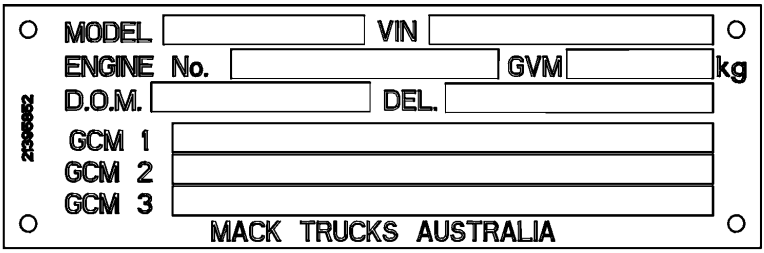

W8061400

Engine Identification

On **MACK MP** engines, the engine serial number is stamped on the left side of the engine block, below the inlet manifold.

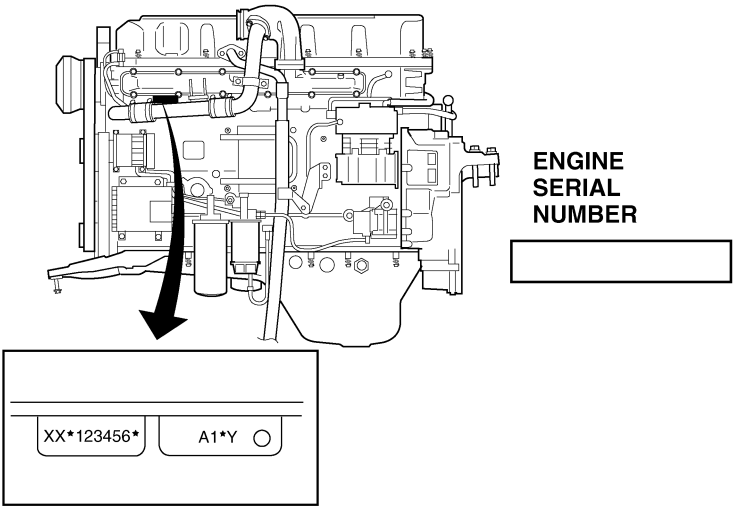

In compliance with the emissions standards requirements, an engine exhaust emissions control sticker is affixed to one of the engine valve covers for all MACK engines. This sticker provides basic engine identification information.

The engine information sticker is found on the top of the front cylinder head cover on **MACK MP** engines.

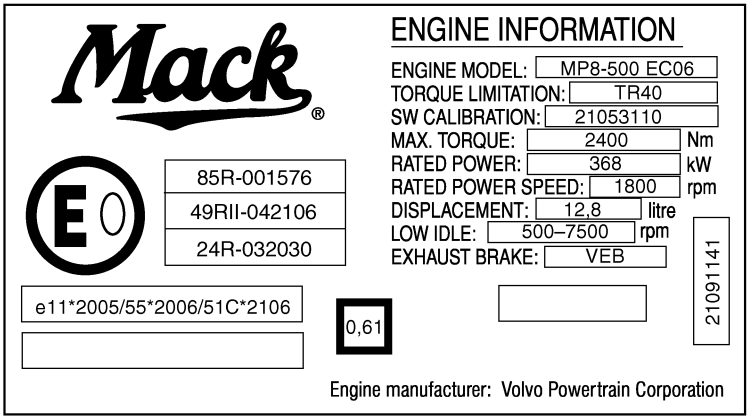

C0032622

On **Cummins® ISL** engines, the engine dataplate is located on the engine rocker level cover, but also may be located on the gear housing.

Cummins Engine Company, Inc. Columbus, Indiana 47202-3005 Made in U.S.A. 3925422	Engine Cert. I.D.	C.I.D/ L.	Family	CPL	Model ISL	FEL	EPA	CARB
					Catalyst No.	NOX		
WARNING: Injury may result and warranty is voided if fuel rate, rpm or altitude exceeds published maximum values for this modeland application.	Timing-T.D.C.				Engine No.	PM		
	Valve Lash Cold		Int	Exh.	Ref. No.			
	Firing Order				Fuel rate at adv. HP		mm3 stroke	
Date of Mfg.	Idle Speed (rpm)		E.C.S.		Advertised HP	at		rpm

W8061484

On **Cummins® ISX** engines, the engine dataplate is located on the engine rocker level cover, but also may be located on the gear housing.

Cummins Engine Company, Inc. Columbus, Indiana 47202-3005 Made in U.S.A. 3925422	Engine Cert. I.D.	C.I.D/ L.	Family	CPL	Model ISX	FEL	EPA	CARB
					Catalyst No.	NOX		
WARNING: Injury may result and warranty is voided if fuel rate, rpm or altitude exceeds published maximum values for this modeland application.	Timing-T.D.C.				Engine No.	PM		
	Valve Lash Cold		Int	Exh.	Ref. No.			
	Firing Order				Fuel rate at adv. HP		mm3 stroke	
Date of Mfg.	Idle Speed (rpm)		E.C.S.		Advertised HP	at		rpm

W8061485

Transmission Identification

The **MACK T300 Series transmission** serial number is located on the rear left side of the main case.

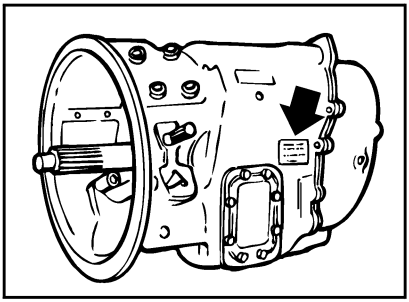

MACK T300 Transmission Serial Number

C0032623

The **Allison MD transmission** identification plate is located on the rear right side of the main case, near the lower end.

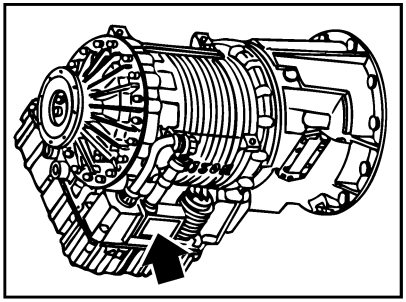

Allison MD Transmission Serial Number

C0032624

All **Eaton® Fuller® transmission** identification plates are located on the front left side of the main case.

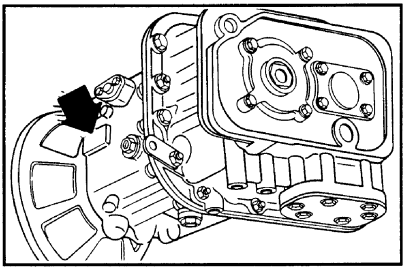

Eaton Fuller Transmission Serial Number

C0032625

The **MACK carrier assembly** serial number is located on the front right side of the housing.

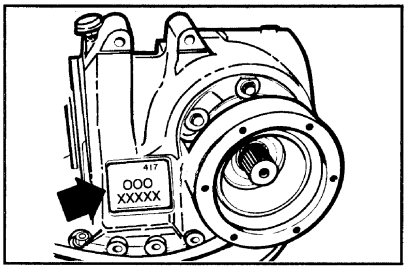

Carrier Assembly Serial Number

C0032626

The **Eaton® Spicer® rear axle** serial number is located on the rear of the axle housing toward the carrier.

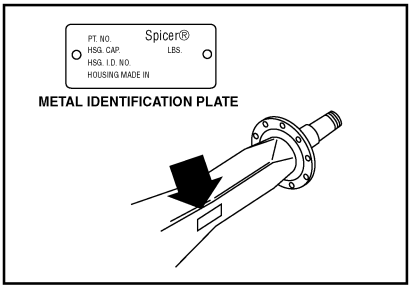

Rear Axle Serial Number

C0032627

The **Eaton® Spicer® carrier assembly** serial number is located on the left side of the forward carrier, and the top of the rear carrier.

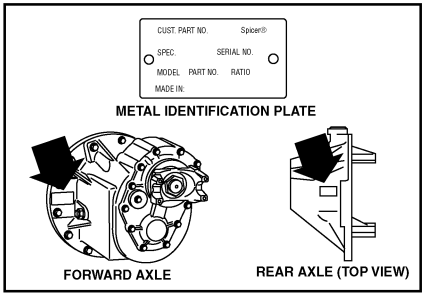

Carrier Serial Number

C0032628

The **MERITOR rear axle** identification tag is located on the left or right rear of the rear axle housing, next to the carrier.

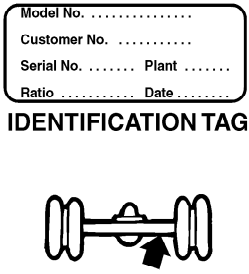

Rear Axle Serial Number

C0032629

The **MERITOR carrier assembly** serial number is located on the left side of the forward carrier, and the top of the rear carrier.

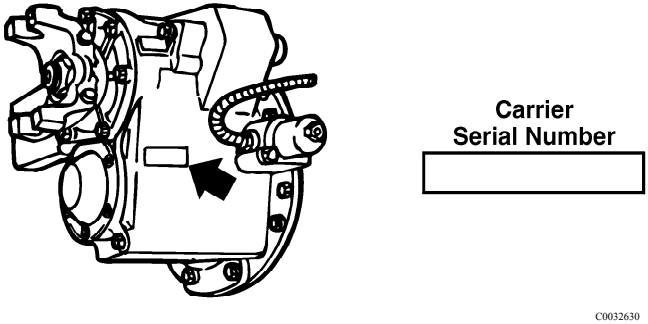

The **SISU carrier assembly** serial number is located on the top center of the main case.

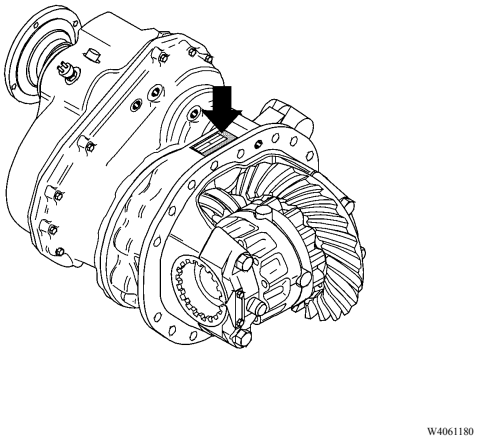

WARRANTY INFORMATION

Air Brake System

The MACK Standard Vehicle Warranty applies to the air brake system, as set forth in the Warranty, but only if the air brake system has not been subjected to unauthorized additions, deletions or modifications. If any such unauthorized additions, deletions or modifications are performed, MACK Trucks, disclaims any and all liability for any loss or damage arising out of a malfunction of the air brake system.

The air brake system was designed and built to conform to all applicable federal motor vehicle safety standards in effect at the time of manufacture.

Tractor air systems are designed for operation as a tractor only, and truck air systems are designed to be operated as a truck only. If a tractor is going to be converted for operation as a truck, the air brake system must be reconfigured to that of a truck. Conversely, if a truck is going to be converted for operation as a tractor, the air brake system must be reconfigured to that of a tractor. Consult your local MACK distributor for additional information.

If any unauthorized additions, deletions or modifications are made to any portion of the air brake system which is required by Australian Design Regulations, MACK Trucks, makes no representation as to conformity with the Regulations.

CUSTOMER SERVICE

Call 1-800-655-333 for Action Service

The Action Service customer support system is a toll-free nationwide hotline that operates 24 hours a day, seven days a week, including holidays. If you break down on the road, simply call 1-800-655-333. There is a staff of trained, experienced technicians ready to help. They can help troubleshoot a problem to get you back on the road, arrange to send roadside assistance or arrange for towing to the nearest MACK dealership.

Action Service provides personalized service. The person who initially takes your call will be the same person who sees that your situation is resolved quickly and to your satisfaction. If a follow-up call is necessary, the same familiar voice will be on the other end of the line.

Action Service technicians can also help you plan ahead to keep your operation running efficiently by scheduling routine maintenance and lubrication service, or by locating the nearest MACK dealership.

Questions and Complaints

Your satisfaction is our most important concern.

If questions or complaints arise, first discuss the matter with the service manager at the MACK facility involved. If you are not satisfied with the service manager's response, contact the branch manager, principal or general manager of the distributorship. If assistance is required at a service dealer, contact the owner of the establishment.

If, for any reason, you need further assistance after dealing with the personnel at a MACK subsidiary or distributor, contact the regional service manager at the nearest MACK regional service office. The regional service manager has the responsibility and the authority to recommend action in most cases and (with the aid of relevant district service personnel) will make every effort to conduct a fair review of the situation.

Addresses

The addresses, telephone and fax numbers of the MACK Trucks, regional offices are:

United States

Northeast Region — 7900 National Service Road., Mail: P.O. Box 26259, Greensboro NC 27402, , TEL: (336) 291-9001

Southeast Region — 6768 Southlake Parkway, Morrow, GA 30260, TEL: (770) 960-0511, FAX: (770) 960-0593

Central Region — 900 S. Frontage Rd., Suite 100, Woodridge, IL 60517, TEL: (630) 910-3330, FAX: (630) 910-3331

Southwestern and Western Regions — 5605 N. MacArthur Blvd., #550, Mail: P.O. Box 165408, Irving, TX 75016-5408, TEL: (972) 518-1614, FAX: (972) 550-0389

Canada

Executive Office — MACK Canada, Inc., 2100 Derry Road West Suite 410, Mississauga, L5N 0B3, TEL: (905) 366-3400, FAX: (905) 366-0165

Australia

Executive Office — 20 Westgate St., Wacol 4077, Mail: P.O. Box 364, Richlands, QLD 4077, Australia, TEL: 61-7-3718-3500, FAX: 61-7-3718-3391

International

7900 National Service Road., Mail: P.O. Box 26259, Greensboro NC 27402, , TEL: (336) 291-9001

SAFETY STATEMENT

MACK Trucks, cannot anticipate every possible occurrence which may involve a potential hazard. An accident can be avoided by recognizing potentially hazardous situations before a dangerous situation occurs. Correctly performed service procedures are critical for technician safety and safe, reliable operation of the vehicle.

DANGER

Do not operate the engine in an enclosed area. All internal combustion engines give off various fumes and gases while running. Inhalation of exhaust fumes can cause death.

DANGER

Do not sit in a parked vehicle for any extended amount of time with the engine running if there are leaks in the exhaust system. Exhaust fumes could leak into the cab area and death can result. On a regular basis inspect the exhaust system for leaks and repair any leakage.

DANGER

Driver attitude is the most important part of any effective vehicle safety system. MACK Trucks, strongly encourages all drivers and passengers to use their seat belts, drive defensively, remain alert and respect the speed limits. Many accidents can also be avoided through regular vehicle maintenance.

WARNING

Certain everyday procedures such as washing the vehicle and cleaning the windshield can also be hazardous because of the vehicle's height. MACK Trucks, does NOT recommend climbing up on the vehicle to perform these operations. Instead, stand on the ground and use brushes and squeegees mounted on extension poles. When better access is necessary (for instance, when washing the cab roof), use sturdy ladders held in place by someone on the ground.

DANGER

Engine-driven components such as Power Take-Off (PTO) units, fans and fan belts, driveshafts and other related rotating assemblies, can be very dangerous. Do not service engine-driven components unless the engine is shut down. Always keep body parts and loose clothing out of range of these powerful components to prevent serious personal injury. Be aware of PTO engagement or nonengagement status. Always disengage the PTO when not in use.

WARNING

Secure loose objects. Loose objects in the cab or sleeper can be dangerous in a sudden stop or on bad roads. Secure any appliance added to the vehicle, such as a refrigerator or a radio.

WARNING

Keep clear of fan when engine is running. Fan may start to rotate at high speed without warning.

ADVISORY LABELS

Throughout this book you will find paragraphs labeled *Danger, Warning, Caution, Note and Service Hint. Danger, Caution and Warning* labels are also found in various locations on the vehicle to alert drivers, operators and service technicians to situations which can cause personal injury or equipment damage. The labels shown are applicable to the MACK® model chassis at the time of publication and are representative of what can be typically found on a MACK® model. (Your vehicle may not contain all of the labels illustrated in this handbook, or may be located in different locations depending on build specification.) These labels are for your benefit. Please look through this section and note the labels, their locations and what they explain. Be sure to replace any label that is damaged.

Advisory Label Definitions (In Handbook)

Cautionary signal words (Danger-Warning-Caution) may appear in various locations throughout this manual. Information accented by one of these signal words must be observed to minimize the risk of personal injury to service personnel, or the possibility of improper service methods which may damage the vehicle or cause it to be unsafe. Additional Notes and Service Hints are used to emphasize areas of procedural importance and provide suggestions for ease of repair. The following definitions indicate the use of these advisory labels as they appear throughout the manual:

DANGER

Danger indicates an unsafe practice that could result in death or serious personal injury. Serious personal injury is considered to be permanent injury from which full recovery is NOT expected, resulting in a change in life style.

WARNING

Warning indicates an unsafe practice that could result in personal injury. Personal injury means that the injury is of a temporary nature and that full recovery is expected.

CAUTION

Caution indicates an unsafe practice that could result in damage to the product.

Note: Note indicates a procedure, practice, or condition that must be followed in order for the vehicle or component to function in the manner intended.

Note: A helpful suggestion that will make it quicker and/or easier to perform a procedure, while possibly reducing service cost.

Advisory Label Locations (On Vehicle)

Labels Found on Chassis

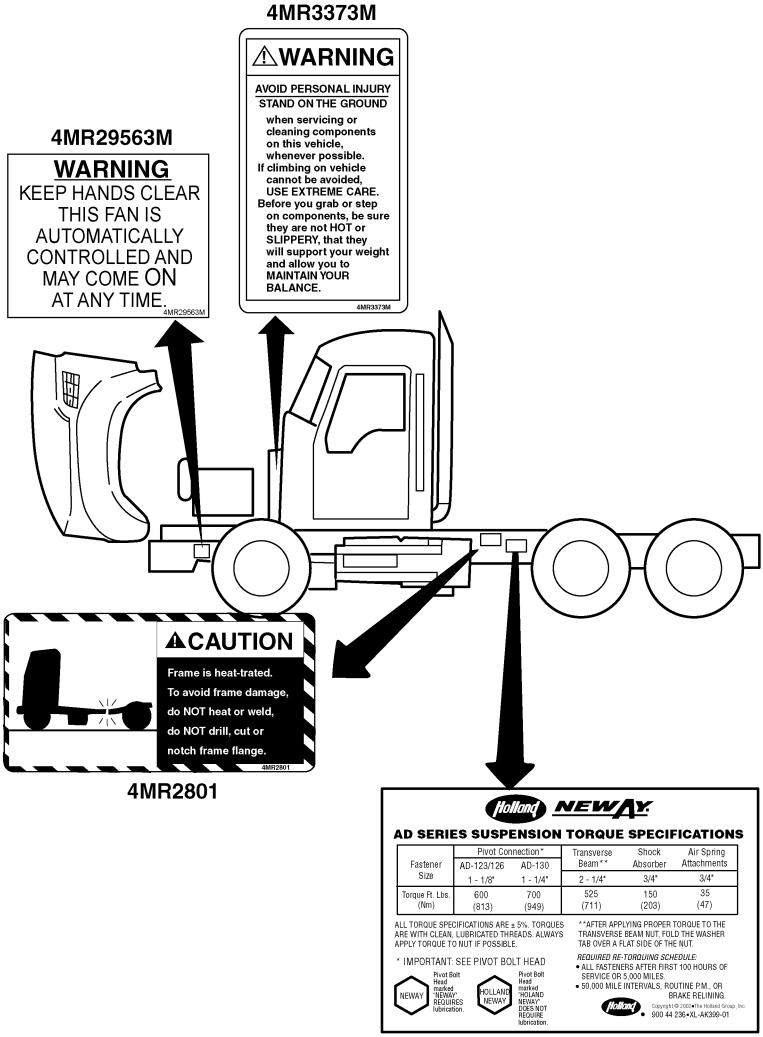

(IF EQUIPPED WITH A NEWAY AD SERIES SUSPENSION)

C0032631

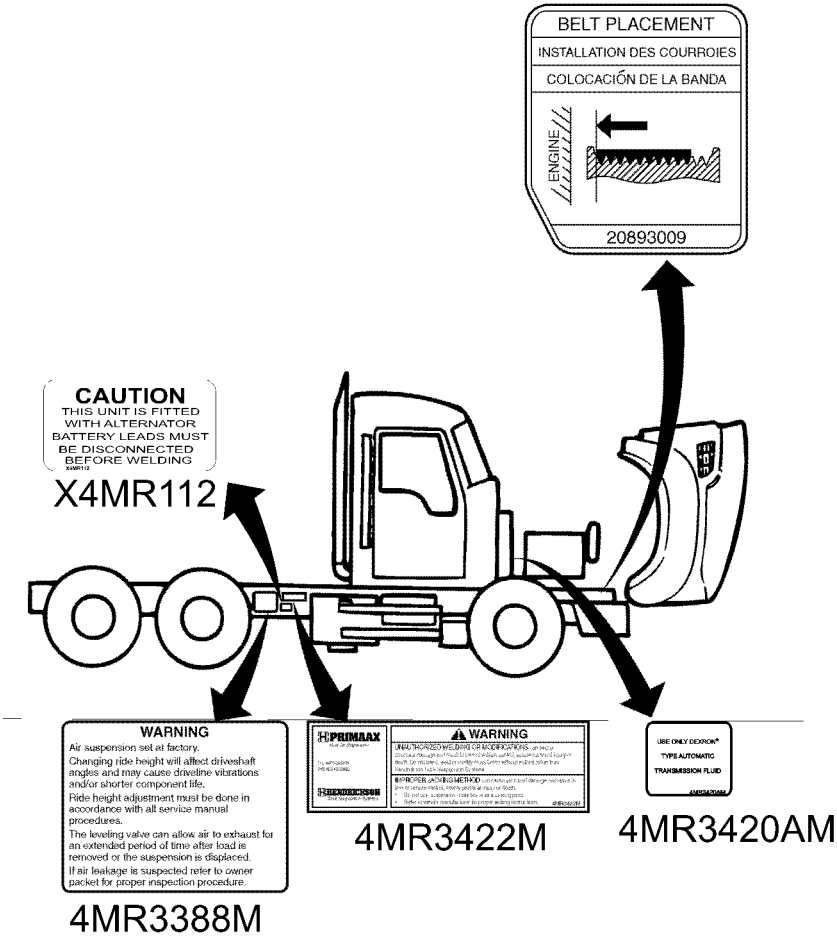
BELT PLACEMENT
INSTALLATION DES COURROIES
COLOCACIÓN DE LA BANDA
ENGINE
20893009
CAUTION
THIS UNIT IS FITTED WITH ALTERNATOR BATTERY LEADS MUST BE DISCONNECTED BEFORE WELDING
X4MR112
X4MR112
WARNING
Air suspension set at factory.
Changing ride height will affect driveshaft angles and may cause drivetine vibrations and/or shorter component life.
Ride height adjustment must be done in accordance with all service manual procedures.
The leveling valve can allow air to exhaust for an extended period of time after load is removed or the suspension is displaced.
If air leakage is suspected refer to owner packet for proper inspection procedure.
4MR3388M
PRIMAAX
WARNING
UNAUTHORIZED WELDING OR MODIFICATIONS
PROPER JACKING METHOD
4MR3422M
USE ONLY DEXRON®
TYPE AUTOMATIC
TRANSMISSION FLUID
4MR3420AM
4MR3420AM

W8061742

DANGER
WITH OR WITHOUT PRE-HEATER
DO NOT USE ETHER OR
STARTING FLUID. EXPLOSION
OR FIRE MAY RESULT
WARNING
To avoid personal injury and/or damage to electrical system, follow battery jumping procedure in operator's handbook. Electrical system is negative ground. Battery cables are color coded. Red is positive (+): Black is negative (–). Do NOT reverse.
4MR2797M
4MR2797M
CAUTION
To avoid damage to sensitive electronic equipment, disconnect ALL battery cables and harnesses to electronic control units before welding. Do NOT disconnect batteries while engine is running.
4MR21059M
4MR21059M

C0032633

4MR2351A

BATTERY SERVICE WARNING
THIS IS A NEGATIVE GROUND SYS.

1. BATTERY CABLES ARE COLOR CODED RED-POSITIVE, BLACK-NEGATIVE REVERSING CONNECTIONS WILL DAMAGE ELECTRONIC COMPONENTS.
2. CONNECT POSITIVE TO POSITIVE, NEGATIVE TO NEGATIVE WHEN BOOSTER BATTERIES ARE USED FOR STARTING.
3. DISCONNECT BATTERIES AND ALTERNATOR BEFORE WELDING OR USING FAST CHARGER.

4MR2351A-P1

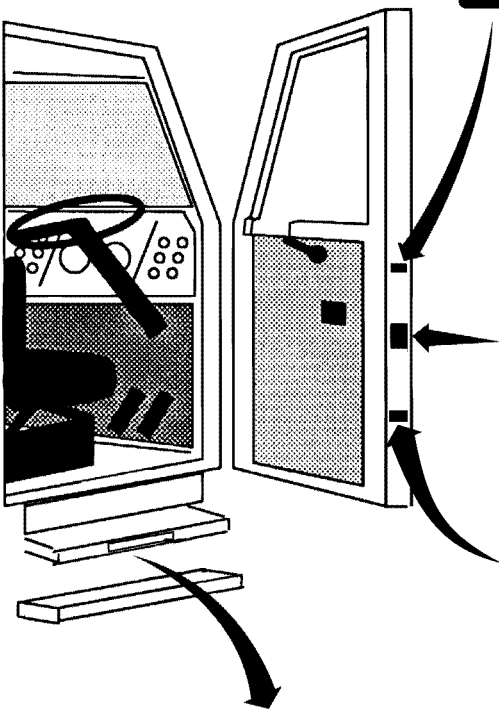

4MR3190M

WARNING

GUIDELINES FOR ENTERING AND EXITING TO AVOID SERIOUS INJURY

Face cab when entering AND exiting.
Place papers, coats, etc., in cab BEFORE entering — take out AFTER exiting — keep hands free to grip handholds.
Keep hands and shoes clean — check hands and shoes for grease, mud, etc., BEFORE entering or exiting.
Keep 3 limbs (2 hands & 1 foot or 1 hand & 2 feet) in FIRM contact with steps and handholds at ALL times.
Be sure where you step and grab —keep the areas clean.
Be EXTRA careful in rainy, snowy, etc., weather.
Do NOT jump from vehicle.

MACK TRUCKS AUSTRALIA

Competent Entity No.: L0106

This vehicle was manufactured to comply with the Cab Strength requirements of the UN/ECE Regulation No. 29

4MR29628AM

4MR29628AM

WARNING

Avoid serious injury. Do NOT step on fuel tank, battery box, frame, etc., unless adequate slip resistant surfaces and handholds are provided.

4MR2821M

W8061397

Labels Found on Driver-Side Sun Visor

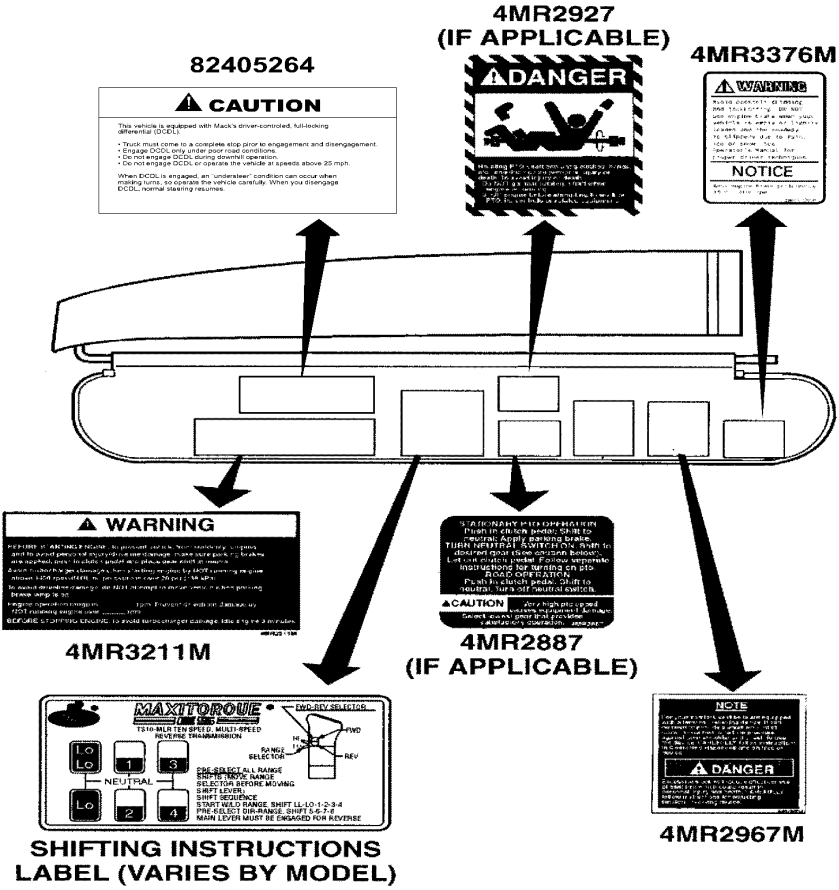

W8061402

Labels Found on Passenger Seat Base

WARNING

TO AVOID SERIOUS DAMAGE, REMOVE AXLES OR PROPELLER SHAFTS BEFORE TOWING

X 50 RU 242

C0032636

Labels Found on Coolant Tank

VCS COOLANT ONLY

WARNING

DO NOT MIX

C0032637

⚠ WARNING
⚠ CUIDADO
DO NOT OPEN HOT
NO ABRIR CALIENTE
FILL TO MAX LINE ON TANK
LLENAR HASTA LINEA MAXIMA EN EL TANQUE
4MR21132

C0032638

FOR COOLANT CHANGE ONLY:	
SOLO PARA CAMBIAR ANTICONGELANTE	
1. FILL TO BRIM FULL	1. LLENAR A TOPE
2. IDLE ENGINE 2 MINUTES	2. DEJAR MOTOR FUNCIONAR SIN CARGA POR 2 MINUTOS
3. TOP-OFF TO BRIM FULL	3. RELLENAR A TOPE

C0032640

R-134a Refrigerant Label

The servicing caution label 4MR3283M is located under the hood behind the receiver dryer bracket.

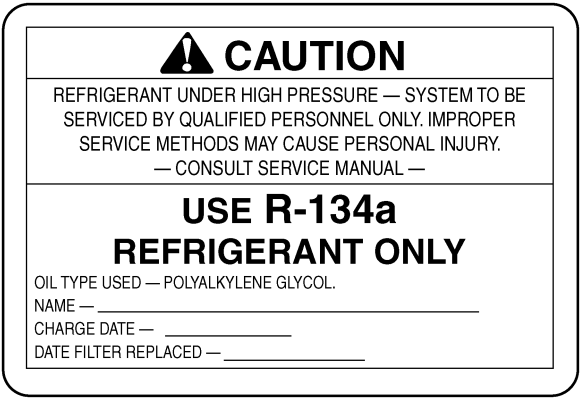

C0032642

Diesel Particulate Filter

The warning label 21550677 is located in the cab on the cluster fascia.

W8061396

*m*DRIVE Transmission Label

There is a label with operating information about the ***m***DRIVE transmission located on the dash, next to the ***m***DRIVE gear selector. It is extremely important that this information is read and understood before the vehicle is operated.

Note: For Australian vehicles, the operating information label is located on the driver's side sunvisor.

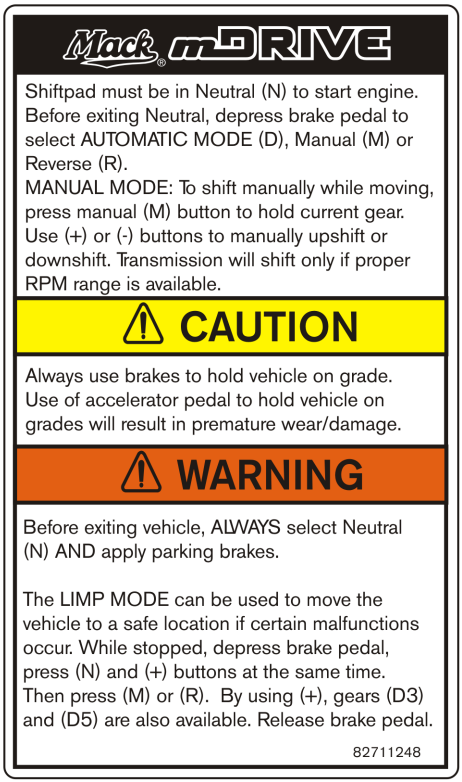

W4059435

mDRIVE Transmission Label, Premium Gear Selector

CAB ENTRY/EXIT

Three-Limb Contact

WARNING

When entering or exiting a cab, the driver and/or passenger must have at least three limbs in contact with the vehicle or ground at all times. This means that a minimum of two hands and one foot, or one hand and two feet must be in FIRM contact with the vehicle or ground.

WARNING

When entering or exiting the cab, be aware of the condition of the steps and handrails. Clean any fuel, oil or grease off of the steps before entering the cab. During cold weather operation, ice and snow may accumulate and should be cleaned off to prevent slipping.

During cold, wet conditions when ice, slush, or snow may accumulate on the cab doorstep and other external surfaces, extra caution must be observed when entering or exiting the cab.

WARNING

GUIDELINES FOR ENTERING AND EXITING TO AVOID SERIOUS INJURY
— Face the cab when entering AND exiting.
— Place papers, coats, etc., in cab BEFORE entering. Take out AFTER exiting. Keep hands free to grip handholds.
— Keep hands and shoes clean. Check hands and shoes for grease, mud, etc., BEFORE entering or exiting.
— Keep 3 limbs (2 hands and 1 foot or 1 hand and 2 feet) in FIRM contact with steps and handholds at ALL times.
— Be sure of where you step and grab the handholds. Keep the areas clean.
— Be EXTRA careful in rainy, snowy, etc., weather.
— Do NOT jump from vehicle.

Note: The illustrations on the following pages are typical for purposes of emphasizing a safe method for hand/foot placement and movement during cab entry/exit. Your vehicle may not look exactly like the one pictured.

Note: The arrows in the illustrations are intended to show movement. Notice that three-limb contact is maintained even when one foot, or one hand, is moving.

Driver Side

The following cab entry and exit procedures, along with the safety guidelines outlined in Three-Limb Contact earlier in this section, should be used with this MACK vehicle.

Entry

These entry procedures are illustrated on the following page:

1 With both feet firmly on the ground, grab the outside handhold with both hands or grab the outside handhold with one hand and grab the steering wheel or inside handhold (if equipped) with the other hand. Then raise one foot to the bottom step. (See figure 1.)

2 Maintain a firm grip on the handholds and/or steering wheel and raise your other foot to the top step. (See figure 2.)

3 While still gripping the handholds and/or steering wheel, raise one foot to the cab floor. (See figure 3.)

4 Move one hand at a time to the steering wheel, inside handhold (if equipped) or cab interior. Bring the other foot inside the cab and sit down. (See figure 4.)

Exit

To exit, follow the illustrations in reverse order:

1 With both hands gripping the steering wheel, inside handhold (if equipped) or cab interior, stand up and face the inside of the cab. Move one foot to the top step. (See figure 4.)

2 Move one hand to the outside handhold and grip the steering wheel, inside handhold (if equipped), or cab interior with the other hand. With one foot firmly on the top step, lower the other foot to the bottom step. (See figure 3.)

3 Maintain a firm grip on the handholds and/or steering wheel, and keep one foot firmly on the bottom step. Then lower the other foot to the ground. (See figure 2.)

4 With both hands firmly gripping the handholds and/or steering wheel, lower the other foot to the ground. (See figure 1.)

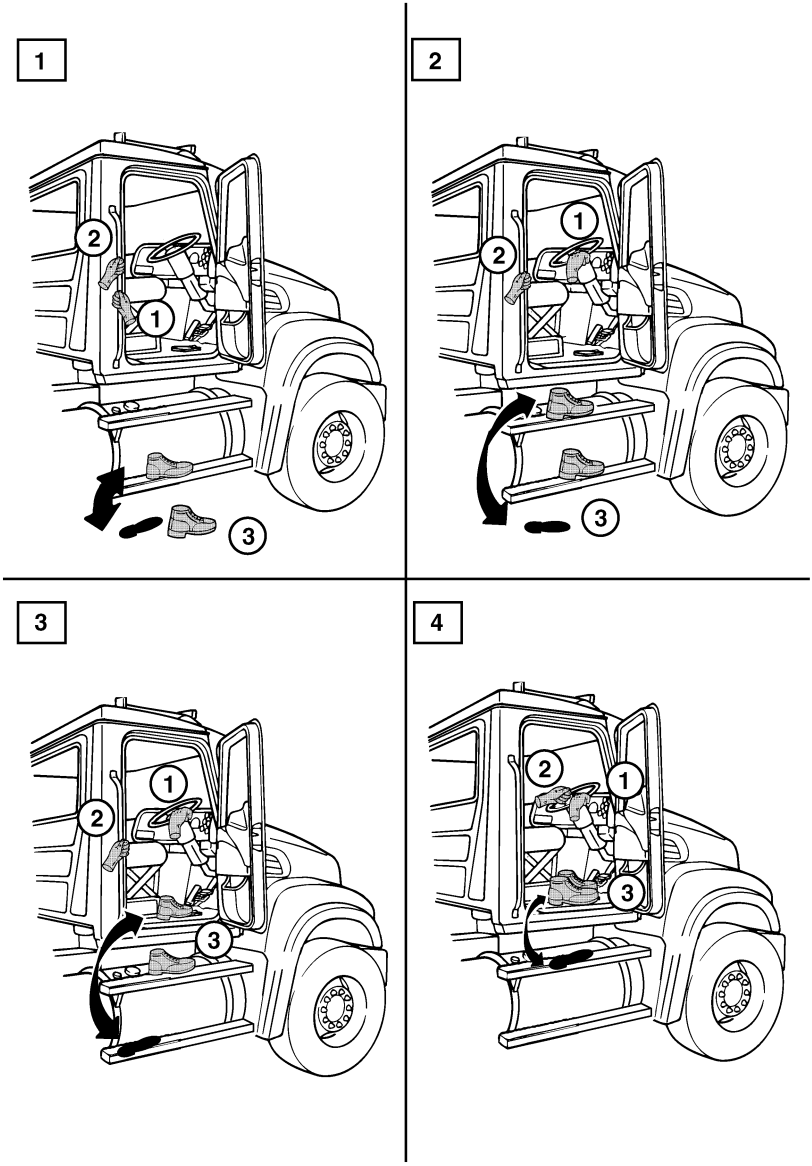

C0032643

Passenger Side

The following cab entry and exit procedures, along with the safety guidelines outlined in the Three-Limb Contact section, should be used with this MACK vehicle.

Entry

These entry procedures are illustrated on the following page:

1 Facing the cab with both feet firmly on the ground, grab the outside handhold with both hands. Then raise your left foot to the bottom step. (See figure 1.)

2 Maintain a firm grip on the outside handhold with both hands and raise your right foot to the top step. (See figure 2.)

3 With both feet firmly on the steps, transfer your right hand to the inside handhold. Then raise your left foot to the top step. (See figure 3.)

4 Transfer your left hand to the cab interior keeping a firm grip on the inside handhold with the right hand. Bring the left foot to the cab floor. Then bring your right foot inside the cab and sit down. (See figure 4.)

Exit

To exit, follow the illustrations in reverse order:

1 With the left hand gripping the interior and the right hand gripping the inside handhold, stand up and face the inside of the cab. Move your right foot to the top step. Move your left foot to the top step. (See figure 4.)

2 Keep a firm grip with your right hand on the inside handhold and transfer the left hand from the interior to the outside handhold. Then move your left foot to the bottom step. (See figure 3.)

3 Maintaining your grip on the outside handhold with your left hand, move your right hand also to the outside handhold. With your left foot firmly planted on the bottom step, lower your right foot to the ground. (See figure 2.)

4 Continue holding the outside handhold with both hands as you lower your left foot to the ground. (See figure 1.)

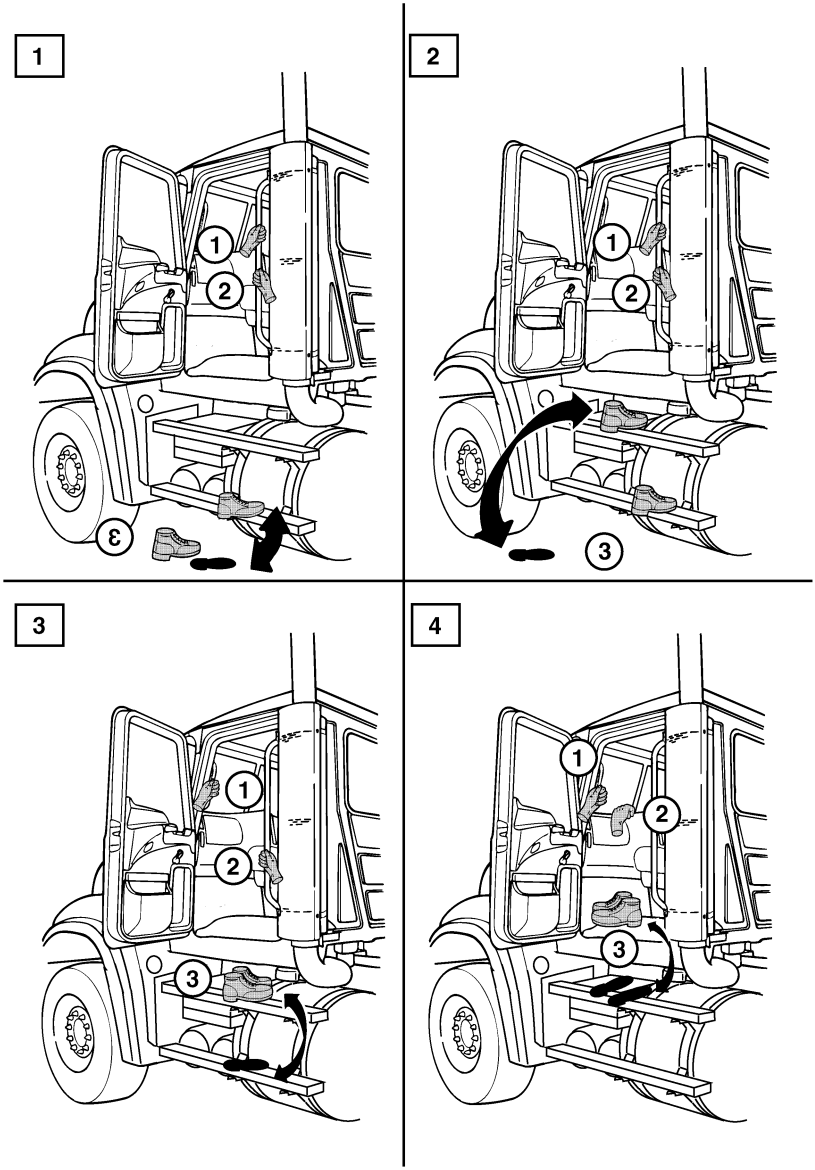
1
1
2
3
2
1
2
3
3
1
2
3
4
1
2
3
C0032645

DOOR LOCKS

WARNING

Always lock the doors while driving. This will lessen the chance of personal injury. Locking the doors helps prevent the occupants from being ejected from the vehicle in the event of an accident.

For additional information on the operation of doors and locks, refer to the *OPERATION* section of this handbook.

SEAT BELTS

DANGER

Seat belts should always be secured BEFORE the vehicle is set in motion. Failure to use seat belts can result in SEVERE bodily injury or death. Unbelted riders could be thrown into the windshield or other parts of the cab, or thrown out of the cab entirely.

Seat Belt Operation

MACK vehicles are equipped with locking retractable seat belts.

For all seating positions in your MACK vehicle, this type of seat belt is a combination lap and shoulder belt.

This type of belt is designed to lock (prevent belt travel out of the retractor) only during sudden stops or impacts. This feature allows the operator to move freely under normal conditions.

Fastening Seat Belt

1 Pull clip so the belt crosses your shoulder and lap and insert it into the buckle until an audible snap is heard.
2 Make sure the clip is securely fastened into the buckle.
3 To tighten the lap portion of the combination belt, pull upward on the shoulder portion until the lap portion fits snugly. The belt should rest as low on your hips as possible.

⚠ DANGER

Never wear the shoulder portion of the belt under your arm or behind your back. Improper use will increase your chances of injury during a collision.

⚠ DANGER

To prevent possible injury the belt must be positioned low over the pelvis, below the abdomen. If the belt is buckled too high, it will apply force to the abdomen, not the pelvic region, and could cause serious internal injuries during a sudden stop.

⚠ DANGER

Do NOT wear seat belt loosely. Do NOT use one belt for more than one person

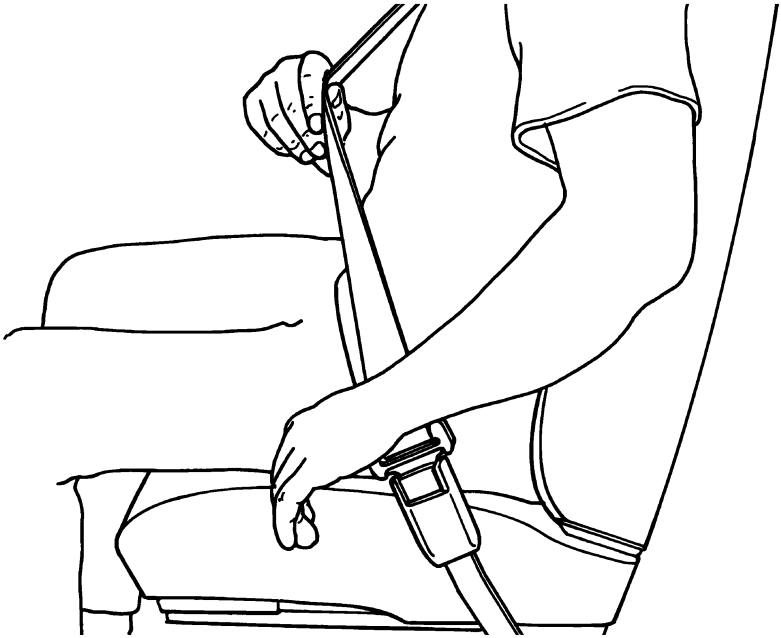

C0032646

Unfastening Seat Belt

Push down on the button to release the belt.

Seat Belt Maintenance

- Keep belt clean and dry.
- Clean with mild soap solution and lukewarm water.

⚠ DANGER

Do NOT bleach or dye belt, as this may cause severe loss of strength. Do NOT install belt in a truck with a weakened floor until the floor has been replaced or reinforced.

- Periodically inspect the following areas and replace any inadequate parts:

Buckle and Latchplate — The buckle and latchplate should mate easily with a solid click and release easily and quickly with moderate pressure on the release button. All metal seat belt components should be free of signs of damage, corrosion or rust.
Webbing — The webbing should show no signs of wear, fraying or holes, and it should be reasonably free of dirt which could find its way into the retracting mechanism.
Retractors — The retractors should function smoothly and maintain an appropriate amount of tension. Loose webbing is an indicator that maintenance is needed; it's likely that a too-loose belt will fail to tighten properly when necessary.
Seat Belt Mounting Components — The tethering should be free of wear and debris; the webbing should show no signs of wear, fraying or holes; and the metal components should be free of signs of damage, corrosion or rust.

⚠ DANGER

Seat belt assemblies must be replaced after an accident if they have been subjected to loading by occupants (even if no damage is obvious), or if they have been damaged by an accident (bent retractor, torn webbing, etc.). If there is any question regarding belt or retractor condition, replace the appropriate part.

SAFETY TIPS FOR COLD WEATHER OPERATION

Driver Visibility

Poor driver visibility is not only annoying, but extremely unsafe under any circumstance. Without proper maintenance of visibility-related components, adverse weather conditions such as rain, snow and frost can seriously reduce visibility. Take time before winter arrives to check the following:

- Windshield Wipers
  - Check windshield wiper operation and speeds.
  - Inspect condition and travel of blades. Install new refills for any blades that are cracked, brittle, torn, or coated with road oil along the wiping edge.
- Windshield Washers
  - Check operation of windshield washer.
  - Inspect system hoses and replace if brittle or worn.
  - Inspect washer reservoir. Drain and flush if dirt particles are evident in washer solution.
  - Fill reservoir with water.
- Heater/Defroster
  - Check operation and blowers for speed control, noise and temperature.
  - Inspect heater core for signs of corrosion and/or leakage.
  - Check that the defroster blend door is operating correctly and that all ducting is connected properly.
  - Be sure that vents are not obstructed by debris or other objects.

Outside Mirror Heater

In areas of frequent rain and fog, it may be beneficial to install heated mirrors which will demist cab mirrors. Heated mirrors eliminate the need to pull off the highway and stand on the roadside to clean the mirrors during poor driving conditions.

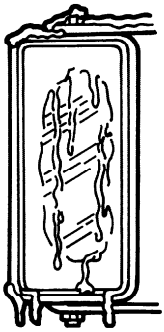

C0032648

Air Horn Shield

Installation of an air horn shield is recommended to prevent contamination of the air horn bell (maintaining maximum sound output).

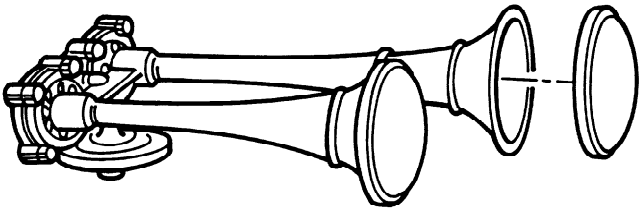

C0032650

Emergency Reflector Kit (If Equipped)

Your chassis may be equipped with an emergency reflector kit.

Your kit includes red reflector triangles and can be stored in the following locations:

- Passenger floor next to the seat
- In the sleeper cab tool box

Fire Extinguisher (Optional)

Your vehicle may be equipped with a fire extinguisher which is located inside your cab. Check your fire extinguisher regularly to make sure it is fully charged.

CAB INTERIOR

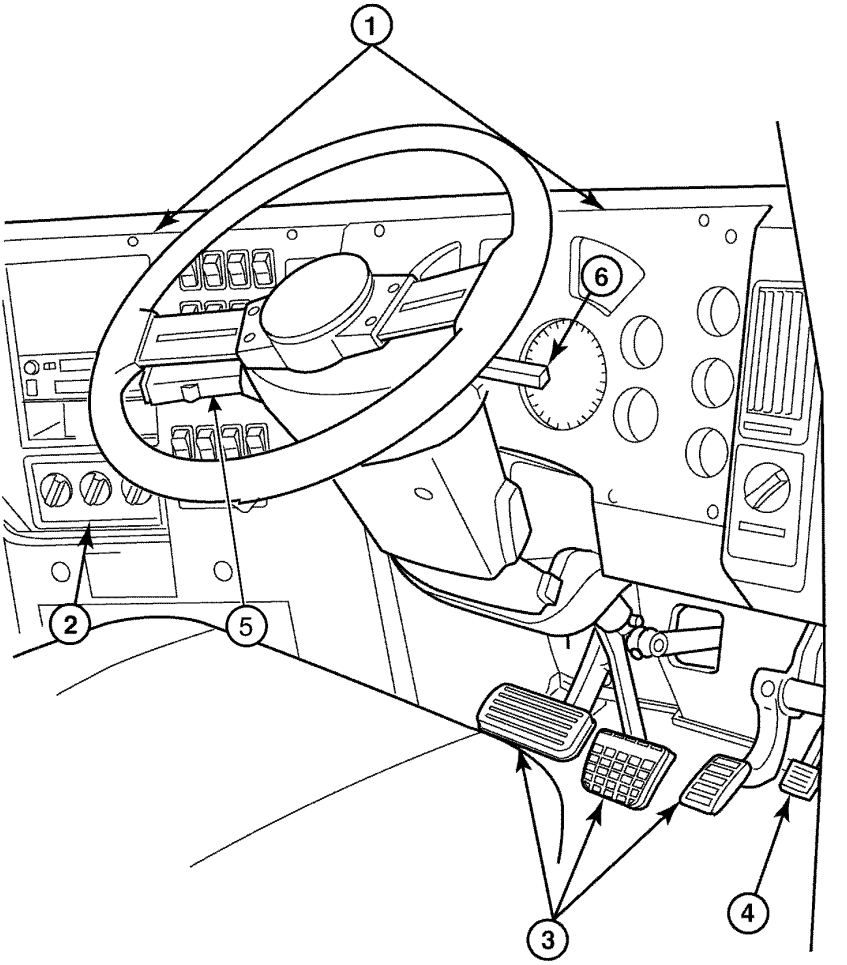

1. Instrument Panels	4. Tilt Control Pedal
2. Cab Climate Control Panel	5. Hazard Switch, Turn Signal, Flash, HI/LO Beam, and Flash to Pass
3. Foot Pedals	6. Co/Pilot control stalk

INSTRUMENT PANEL

Tell-Tales

A tell-tale is a display that indicates the actuation of a device, a correct or defective condition, or a failure to function.

The operator should become familiar with these symbols in order to recognize and react (if necessary) to the indicated condition. Tell-tale symbols are shown in the instrument panel illustrations on the following pages.

Colors

To promote visual recognition internationally, specific colors for tell-tales have been established. Unless governmental regulations (in the area where the vehicle is to be used) or engineering directives specify otherwise, the standard colors are:

- **Blue —** high-beam headlights/engine maintenance
- **Flashing Green —** turn signals
- **Flashing Red —** hazard condition involving the safety of personnel
- **Steady Green —** system in operation
- **Steady Red —** warning, immediate action required
- **Amber —** early warning, such as low fuel or Anti-Lock Brake System (ABS) malfunction

Panel Arrangement

Your view from the driver seat should look something like the illustrations shown. The layout is designed to provide the operator with a good view of the gauges and controls (which are placed so they are within easy reach). The instrument panel, as shown in the following drawing, is broken down into several main sections. For easy identification we refer to them as Panels A, B, C, D, E and F (where necessary).

Note: This section shows the instruments and controls available for this vehicle at the time of publication. However, depending on options, your vehicle may not have all the instruments and controls shown here, and they may not be in the same position.

INSTRUMENT PANEL GAUGE LAYOUT

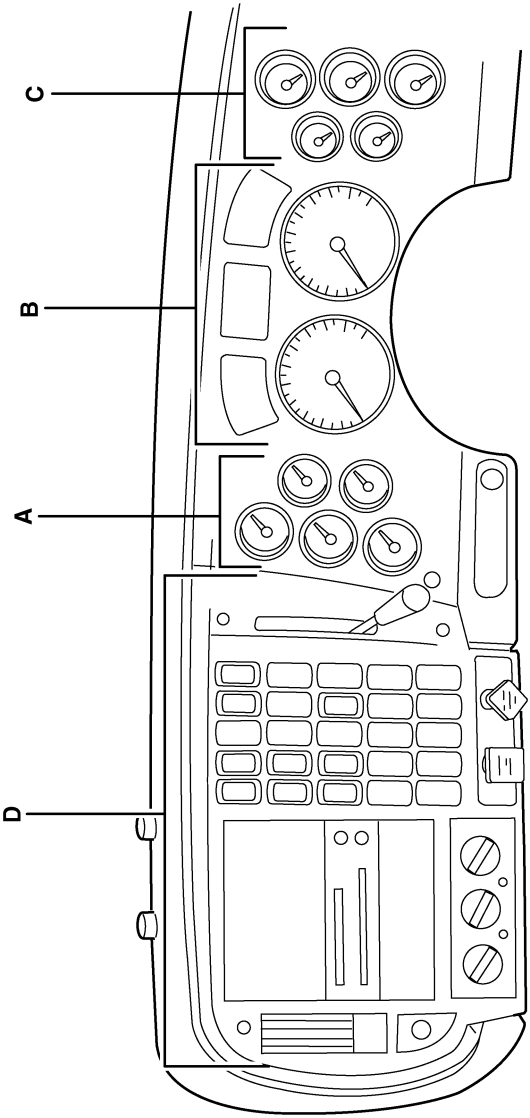

Panel A (SCR)

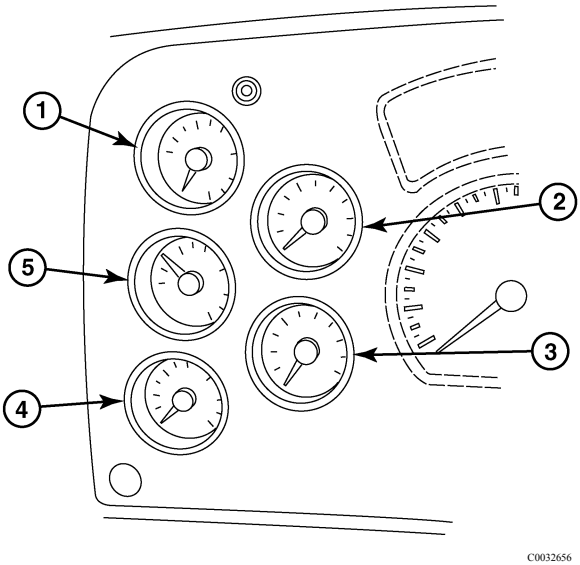

1. Manifold Pressure Gauge (If Equipped)	4. Exhaust Pyrometer (If Equipped)
2. Oil Pressure Gauge	5. Transmission Oil Temperature Gauge (If Equipped)
3. Engine Water Temperature Gauge (Only with SCR emission)	

Panel A (DPF)

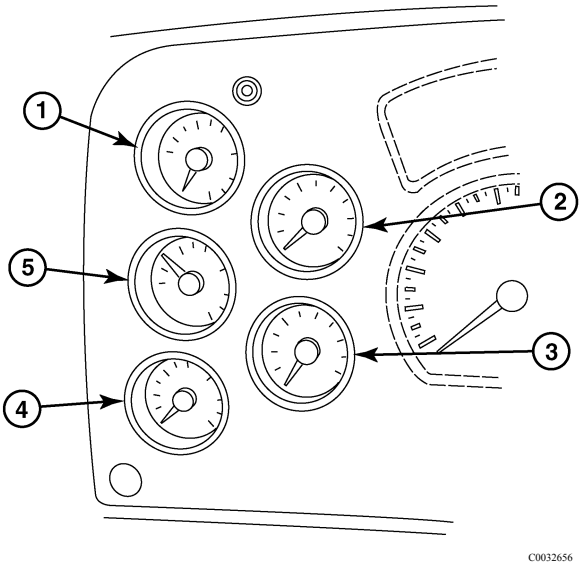

1. Manifold Pressure Gauge (If Equipped)	4. Exhaust Pyrometer (If Equipped)
2. Oil Pressure Gauge	5. Transmission Oil Temperature Gauge (If Equipped)
3. Engine Oil Temperature (only with Cummins® DPF)	

Panel B (SCR)

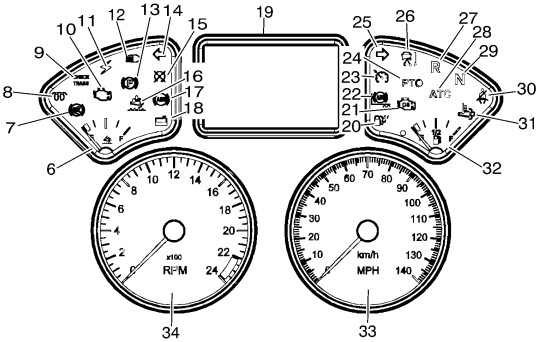

6. Aftertreatment DEF Level Gauge	21. Engine Over Speed Indicator (Red)
7. Grade Gripper Indicator (Amber)	22. Trailer Anti-Lock Brake System (ABS) Indicator (Amber)
8. Pre-Heat Start Indicator (Amber) (If Equipped)	23. Cruise Control On Indicator (Green)
9. Check Transmission Indicator (Amber)	24. Power Take-Off Operating Indicator (Green)
10. Malfunction Indicator Lamp (MIL) (Amber)	25. Right Turn Signal Indicator (Green)
11. Check Lamp (Amber)	26. Bendix Adaptive Cruise Control (ACC) Indicator (Red)
12. High Beams Indicator (Blue)	27. Reverse Indicator (Amber)
13. Parking Brake Indicator (Red)	28. Automatic Traction Control (ATC) Indicator (Amber)
14. Left Turn Signal Indicator (Green)	29. Neutral Indicator (Amber)
15. Engine Shutdown Indicator (Red)	30. Fasten Seat Belt Warning Indicator (Red)
16. Aftertreatment DEF Low Level Indicator (DEF)	31. HEST Indicator (High Exhaust Temperature)
17. Anti-Lock Brake System (ABS) Indicator (Amber)	32. Fuel Gauge
18. Low Coolant Level Indicator (Amber)	33. Speedometer
19. Co-Pilot®	34. Tachometer
20. Water in Fuel Indicator (Amber) (If Equipped)	

Panel B (DPF)

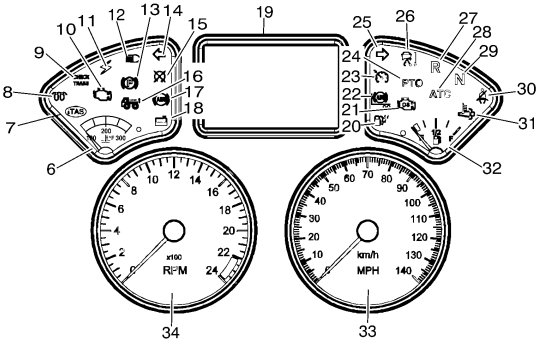

19
25
26
27
28
29
30
31
32
33
34
10
11
12
13
14
15
9
8
7
6
16
17
18
24
23
22
21
20
FTO
ATC
R
N
x100
RPM
km/h
MPH
W3062227

6. Coolant Temperature Gauge	21. Engine Over Speed Indicator (Red)
7. Integrated Temp-A-Start Indicator (Amber) (If Equipped)	22. Trailer Anti-Lock Brake System (ABS) Indicator (Amber)
8. Pre-Heat Start Indicator (Amber) (If Equipped)	23. Cruise Control On Indicator (Green)
9. Check Transmission Indicator (Amber)	24. Power Take-Off Operating Indicator (Green)
10. Malfunction Indicator Lamp (MIL) (Amber)	25. Right Turn Signal Indicator (Green)
11. Check Lamp (Amber)	26. Bendix Adaptive Cruise Control (ACC) Indicator (Red)
12. High Beams Indicator (Blue)	27. Reverse Indicator (Amber)
13. Parking Brake Indicator (Red)	28. Automatic Traction Control (ATC) Indicator (Amber)
14. Left Turn Signal Indicator (Green)	29. Neutral Indicator (Amber)
15. Engine Shutdown Indicator (Red)	30. Fasten Seat Belt Warning Indicator (Red)
16. Air Suspension Low Indicator (Amber)	31. HEST Indicator (High Exhaust Temperature)
17. Anti-Lock Brake System (ABS) Indicator (Amber)	32. Fuel Gauge
18. Low Coolant Level Indicator (Amber)	33. Speedometer
19. Basic Display or Co-Pilot® (If Equipped)	34. Tachometer
20. Water in Fuel Indicator (Amber) (If Equipped)	

Panel C

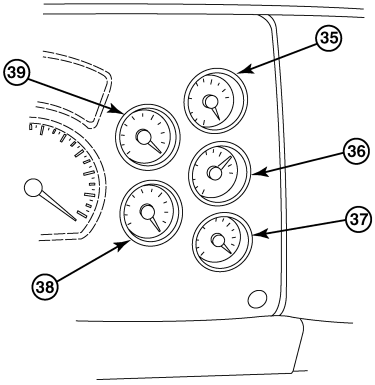

C0032660

35. Air Application or Air Suspension Gauge (If Equipped)	38. Secondary Air Pressure Gauge
36. Front Rear Axle Oil Temperature Gauge (If Equipped)	39. Primary Air Pressure Gauge
37. Rear Rear Axle Oil Temperature Gauge (If Equipped)	

Panel D (Cummins)

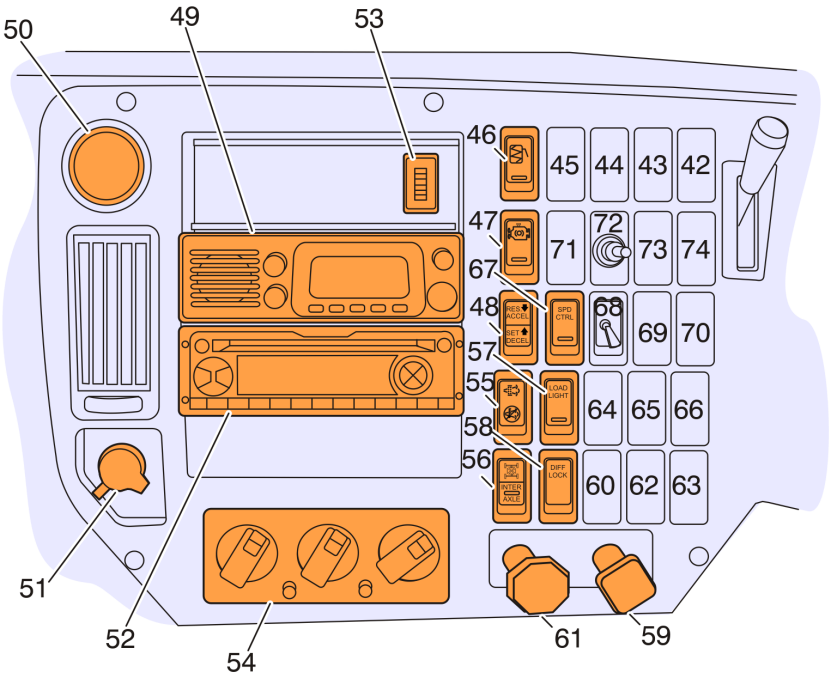

42. Optional Switch*	50. Air Filter Restriction Indicator (If Equipped)
43. Optional Switch*	51. Accessory Power Outlet
44. Optional Switch*	52. Radio Box
45. Optional Switch*	53. Mic
46. Heated Mirror Defrost Switch	54. Cab Climate Control
47. Engine Brake Switch	55. DPF Smart Switch

48. Resume/Set Switch	56. Power Divider Lockout Switch
49. CB Radio	57. Load Light Switch

58. Differental Lockout Switch	67. Speed Control Switch
59. Parking Brake Valve	68. Wiper Switch
60. Optional Switch*	69. Optional Switch*
61. Trailer Air Supply Valve	70. Optional Switch*
62. Optional Switch*	71. Optional Switch*
63. Optional Switch*	72. Power Mirror Switch
64. Optional Switch*	73. Optional Switch*
65. Optional Switch*	74. Optional Switch*
66. Optional Switch*	

Panel D (*m*DRIVE)

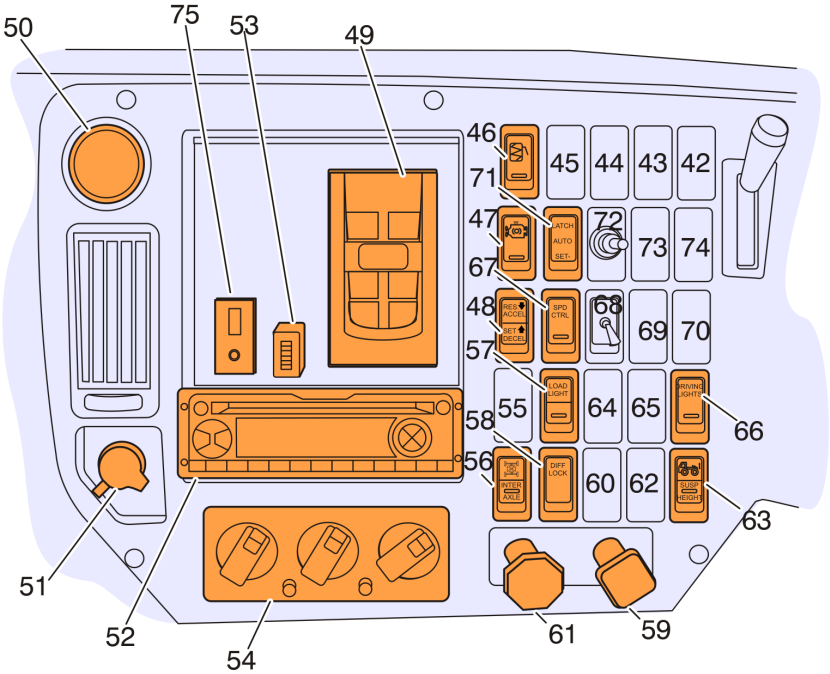

42. Optional Switch*	50. Air Filter Restriction Indicator (If Equipped)
43. Optional Switch*	51. Accessory Power Outlet
44. Optional Switch*	52. Radio Box
45. Optional Switch*	53. Mic
46. Heated Mirror Defrost Switch	54. Cab Climate Control
47. Engine Brake Switch	55. Optional Switch*

48. Resume/Set Switch	56. Power Divider Lockout Switch
49. *m*DRIVE Control Panel	57. Load Light Switch

58. Differental Lockout Switch	67. Speed Control Switch
59. Parking Brake Valve	68. Wiper Switch
60. Optional Switch*	69. Optional Switch*
61. Trailer Air Supply Valve	70. Optional Switch*
62. Optional Switch*	71. Latch Switch
63. Suspension Height Switch	72. Power Mirror Switch
64. Optional Switch*	73. Optional Switch*
65. Optional Switch*	74. Optional Switch*
66. Driving Lights Switch	75. AUX/USB Port

* The switches shown in parentheses are listed in their likely position on the panel; however, they may be at other switch locations depending on the customer's requirements. See “Function of Optional Switches”, page 58 for a description of the optional switches, listed in alphabetical order.

1. Manifold Pressure Gauge (If Equipped) – Measures the charge air boost pressure in the intake manifold.

2. Engine Oil Pressure Gauge – Indicates engine oil pressure. The normal operating oil pressure for a MACK MP engine (at governed speed) is between 275.8 and 620.5 kPa (40 and 90 psi). At idling speed, the oil pressure should be between 275.8 and 413.9 kPa (40 and 60 psi).

3. Engine Coolant Temperature Gauge (SCR) – Indicates the temperature of the engine coolant. The normal operating temperature for MACK engines is between 77°C and 107°C (170°F and 225°F). The driver will receive a warning if coolant temperature reaches 106°C (223°F) and engine shutdown will occur at 108°C (227°F) if the engine coolant temperature shut down option is enabled.

CAUTION

Coolant temperature must NOT exceed 107°C (225°F).

3. Engine Oil Temperature Gauge (DPF) – Indicates oil temperature.

4. Exhaust Pyrometer (If Equipped) – Indicates the temperature of exhaust gases (about 12 to 16 inches from the diesel particulate filter inlet connections). This helps the operator select the proper gear for load and grade conditions, thereby avoiding excessive exhaust temperatures.

CAUTION

Do NOT exceed the maximum exhaust temperature indicated by the red line on the gauge. To reduce exhaust temperature, downshift or reduce engine power. If operating in cold climates with a winterfront, open the winterfront.

5. Transmission Oil Temperature Gauge (If Equipped) – Indicates transmission oil temperature.

CAUTION

The maximum safe oil temperature for MACK transmissions is 121°C (250°F) for mineral-based oil, or 148°C (300°F) for synthetic oil. Continued operations with oil above this temperature will cause rapid deterioration of the oil's lubricating properties and is NOT recommended. Consult the vendor manual for non-MACK components.

6. Aftertreament DEF Tank Level gauge (SCR) – Tells the amount of DEF fluid in the tank.

6. Coolant Temperature Gauge (DPF) – Normal operating range (77°C to 107°C; 170°F to 225°F). Once the engine reaches this temperature, it can be operated in a normal fashion.

7. Grade Gripper (Amber) (SCR) – Grade Gripper provides anti-roll back assistance during the transition from a stopped position to starting on a grade.

7. Integrated Temp-A-Start (Amber) (If Equipped) (DPF) – "Integrated Temp-A-Start" saves fuel by reducing the amount of time spent idling to keep the vehicle's batteries charged, the engine warm, or the cab and sleeper comfortable. Once the optional 'Integrated Temp-A-Start' feature is activated via a dash switch, the system will automatically start and stop the truck engine. Safety overrides prevent the system from activation if the transmission is in gear, the hood is up, or the parking brake is released. Integrated Temp-A-Start voltage and temperature target settings are fully programmable through either VCADS service support software, or, if enabled via the Co-Pilot instrument cluster display

8. Pre-Heat Start Indicator (Amber) (If Equipped) – Indicates that the intake pre-heat is enabled. Wait to start engine until light goes out.

9. Check Transmission (Amber) – A amber tell-tale light that illuminates when transmission oil temperature reaches a pre-determined level (depending on transmission make and model) indicating an overheat condition or It may also come on if an active fault code is present in the transmission.

10. Electronic Malfunction Indicator (Amber) – Illuminates when V-MAC® detects an electronic malfunction. Refer to the *V-MAC® IV Vehicle Management and Control with Co-Pilot® Display Operator's Guide*. The electronic malfunction lamp may turn on when operating the vehicle in a bob-tail mode with the engine brake turned on and cruise control active. Cruise control will become inoperative but can be reset by shutting off, then restarting the engine. This condition can be corrected by resetting the "Service Brake Fault Threshold with Engine Brake" function. Refer to V-MAC® IV Customer Data Programming.

Note: Consult the appropriate vendor engine manual if your vehicle is not equipped with a MACK engine.

11. Check Lamps

12. High Beam Indicator (Blue) – Indicates that high beams are on.

13. Parking Brake Indicator (Red) – Indicates that the parking brake is engaged.

14. Left Turn Signal Indicator (Green) – Flashes green when the left turn signal is activated.

15. Engine Shutdown Indicator (Red) – Indicates the occurrence of a condition which requires that the engine be shut down (i.e., low water level, low oil pressure or high water temperature). If the engine shutdown feature is enabled, the engine will be forced to idle. Once vehicle is stopped, the engine will shut down. If the engine shutdown feature is disabled, the indicator will function as a warning light but the engine will not shut down.

16. Air Suspension Low Indicator (Amber) (DPF)

16. Aftertreatment DEF Low Level Indicator (DEF) (SCR) – Icon illuminated when the fluid level is low. It also flashes when the level becomes critically low.

17. Anti-Lock Brake System (ABS) Indicator (Amber) – Indicates an ABS malfunction. If the light turns on and stays on, a malfunction is indicated. For additional information on operating an ABS-equipped vehicle, refer to “Anti-Lock Brake System (ABS)”, page 120of the *Operation*section.

Note: When an ABS malfunction is detected, anti-lock braking in the affected wheel(s) will be disabled and normal braking will return; the other wheels will retain anti-lock braking. Operate the vehicle normally and have the ABS system serviced to correct the fault.

18. Low Coolant Level Indicator (Amber) – Illuminates when the coolant level in the coolant surge tank is below the specified level. Stop and add coolant. Use typical warnings, etc., for filling coolant.

19. CO-PILOT® – Co-Pilot® is an in-dash computer that allows the vehicle operator to monitor information supplied by the V-MAC® electronic control system. The Co-Pilot® enhances the functions of V-MAC® by entering requested information with the stalk switch. The Co-Pilot® is very "user friendly" and prompts the operator with messages on the display screen. For more information on how to use the Co-Pilot®, please consult the *V-MAC® IV Vehicle Management and Control with Co-Pilot® Display Operator's Guide.*

20. Water in Fuel Indicator (Amber) (If Equipped) – Illuminates when water accumulates in the primary fuel filter sediment bowl. Stop the engine and drain the fuel from the sediment bowl.

21. Engine Over Speed Indicator (Red) – Illuminates when maximum engine RPM is exceeded.

22. Trailer Anti-Lock Brake System (ABS) Indicator (Amber) – Indicates an ABS malfunction. If the light turns on and stays on, a malfunction is indicated. For additional information on operating an ABS-equipped vehicle, refer to “Anti-Lock Brake System (ABS)”, page 120of the *Operation* section.

Note: When an ABS malfunction is detected, anti-lock braking in the affected wheel(s) will be disabled and normal braking will return; the other wheels will retain anti-lock braking. Operate the vehicle normally and have the ABS system serviced to correct the fault.

23. Cruise Control Indicator (Green) – Indicates that cruise control is engaged.

24. Power Take-Off Operating Indicator (Green) – Indicates PTO operation.

25. Right Turn Signal Indicator (Green) – Flashes green when turn signal is activated.

26. Bendix Adaptive Cruise Control Indicator ACC (Red) – Requesting the driver to take immediate evasive action by applying more braking power and/or steering clear of the vehicle ahead to avoid potential collision.

27. Reverse Indicator (Amber) – Indicates that the transmission is in Reverse.

28. Automatic Traction Control (ATC) Indicator (Amber) – Indicates that ATC is operating and will flash when in deep mud and snow mode.

29. Neutral Indicator (Amber) – Indicates that the transmission is in Neutral.

30. Fasten Seat Belt Warning Indicator (If Equipped) (Red)

31. High Exhaust System Temperature (HEST) Icon – when (HEST) illuminates do not park or operate the vehicle near people, or any flammable materials, vapors, or structures.

32. Fuel Gauge – Registers the fuel level in the supply tank(s).

33. Speedometer – Indicates road speed in miles and/or kilometers per hour.

34. Tachometer – Indicates engine speed in revolutions per minute (RPM). Tachometer readings should be used as a guide for shifting, as well as to prevent engine damage due to overspeed.

35. Air Application Gauge (If Equipped) – Indicates the air pressure being delivered to the service brake chambers in the tractor (and trailer, if equipped); OR

Air Suspension Gauge (If Equipped) – Indicates the air pressure being delivered to the air suspension system 689 kPa (100 psi range).

36. Front Rear Axle – Indicate front rear axle oil temperature.

37. Rear Rear Axle Oil Temperature Gauges (If Equipped) – Indicate rear axle oil temperature.

CAUTION

The maximum safe oil temperature for MACK rear axles is 121°C (250°F). Continued operation with oil above this temperature will cause rapid deterioration of the oil's lubricating properties and is NOT recommended. Consult the vendor manual for non-MACK components.

38. Secondary Air Pressure Gauge – Indicates the air pressure in the secondary air brake system. Secondary air pressure is supplied to the steering axle brakes.The normal operating air pressure is between 759 kPa (110 psi) and 897 kPa (130 psi). If pressure drops below 517 kPa (75 psi) ±34 (± 5 psi), the warning buzzer and warning light will go on. Determine the cause of failure before proceeding.

39. Primary Air Pressure Gauge – Indicates the air pressure in the Primary air brake system. Primary air pressure is supplied to the rear brakes. The normal operating air pressure is between 759 kPa (110 psi) and 897 kPa (130 psi). If pressure drops below 517 kPa (75 psi) ±34 (± 5 psi), the warning buzzer and warning light will go on. Determine the cause of failure before proceeding.

41. Hand-Control Brake Lever – Pull down to activate the trailer brakes, or the rear axle brakes in the case of a platform truck.

WARNING

The hand-control brake system must NOT be used for parking. Do NOT use to apply service brakes while vehicle is in motion. Do not leave the vehicle while hand-control brake is applied.

42. Optional Switch – Refer to “Function of Optional Switches”, page 58

43. Optional Switch – Refer to “Function of Optional Switches”, page 58

44. Optional Switch – Refer to “Function of Optional Switches”, page 58.

45. Optional Switch – Refer to “Function of Optional Switches”, page 58.

46. Heated Mirror Defrost Switch – Defrost the mirrors

47. Engine Brake Switch

48. Resume/Set Switch – This is a V-MAC® switch; refer to the *V-MAC® IV Vehicle Management and Control with Co-Pilot® Display Operator's Guide* for more information.

49. CB Radio (If Equipped) (Cummins)

49. *m*DRIVE Automatic Transmission Selector (If Equipped) – See your *m*DRIVE Transmission Operator's Manual supplied with this vehicle.

50. Air Filter Restriction Indicator (If Equipped) – Indicates that the element needs servicing or replacement. When the red flag locks into position, service as soon as possible to prevent engine damage; then reset the indicator after the filter change. Check the air filter restriction indicator daily.

51. Accessory Power Outlet – See instructions under Accessory Power Outlets listed in the Instrument and Controls Section of this manual.

52. Radio Box – See separate owner's manual on radio instruction.

53. Microphone – Used for hand free communication

54. Cab Climate Control – See instructions under Cab Climate Control listed in the Instrument and Controls Section of this manual.

55. DPF Smart Switch (Cummins) – This is a three-position switch where the middle position is neutral.

- Upper Position – Regeneration position
- Middle Position – Neutral Position
- Down Position – Inhibit Position

55. Optional Switch (*m*DRIVE) – Refer to “Function of Optional Switches”, page 58

56. Power Divider Lockout Switch (*m*DRIVE)

57. Load Light Switch (*m*DRIVE) – Refer to “Function of Optional Switches”, page 58

58. Differental Lockout Switch (*m*DRIVE –

59. Parking Brake Valve – Yellow diamond-shaped knob. Pull to apply. Push to release. Applies tractor parking brakes and trailer brakes, if equipped.

60. Optional Switch – Refer to “Function of Optional Switches”, page 58

61. Trailer Air Supply Valve – Red octagonally-shaped knob. Pull to apply trailer emergency brakes. Push to pressurize the trailer air reservoir, releasing the trailer emergency brakes.

Note: The trailer air supply valve should NOT be used for parking.

62. Optional Switch – Refer to “Function of Optional Switches”, page 58

63. Suspension Height Switch (*m*DRIVE) – Refer to “Function of Optional Switches”, page 58

64. Optional Switch – Refer to “Function of Optional Switches”, page 58

65. Optional Switch – Refer to “Function of Optional Switches”, page 58

66. Optional Switch (Cummins) – Refer to “Function of Optional Switches”, page 58

66. Driving Light Switch (*m*DRIVE) – Turns on the driving lights.

67. Speed Control Switch – – This is a V-MAC® switch; refer to the *V-MAC® IV Vehicle Management and Control with Co-Pilot® Display Operator's Guide* for more information

68. Wiper Switch – manually turns on wipers.

69. Optional Switch – Refer to “Function of Optional Switches”, page 58

70. Optional Switch – Refer to “Function of Optional Switches”, page 58

71. Optional Switch (Cummins) – Refer to “Function of Optional Switches”, page 58

71. Latch Switch (*m*DRIVE)

72. Power Mirror Switch – Controls the power mirrors.

73. Optional Switch – Refer to “Function of Optional Switches”, page 58

74. Optional Switch – Refer to “Function of Optional Switches”, page 58

75. AUX/USB Port (*m*DRIVE)

• AUX Port – Use this port to have audio from any unit played over the vehicle audio system.

• USB Port – Insert a memory stick, with MP3 music downloaded, and the music will be heard from the vehicle audio system. The music can be controlled with the radio or steering wheel features (if equipped). You can also use this port with the USB style MP3 players.

• AUX and USB together – Use both ports together for IPOD control. A special cable is required for this function. Once the IPOD is connected, it will display a MACK logo on the IPOD screen and will let you know that the IPOD can now be controlled by the radio or steering wheel features (if equipped). At this point, the IPOD can be stored out of sight. This port will also charge the IPOD.

For more information on the AUX/USB port, please refer to the radio manual that is supplied with your vehicle.

Function of Optional Switches

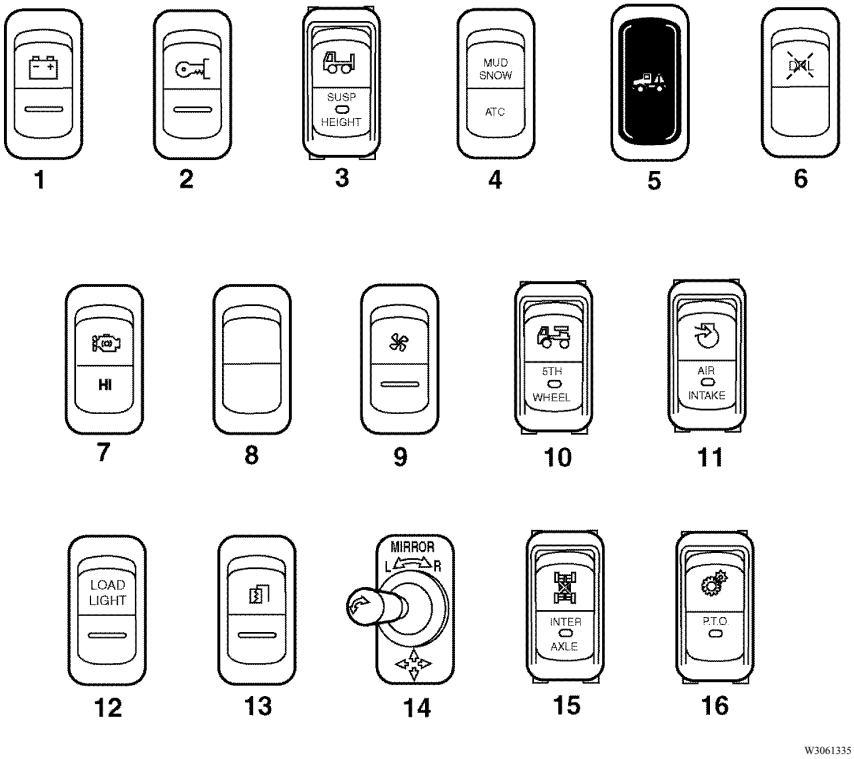

Optional Switches

1. Accessory Battery Power Switch	9. Fan Control Manual Override Switch
2. Accessory Ignition Power Switch	10. 5th Wheel Slide Switch
3. Air Suspension Control Switch	11. Inside/Outside Air Switch
4. Automatic Traction Control Switch	12. Load Light Switch
5. Body Warning Lamp	13. Mirror Defrost Switch
6. Daytime Running Lights Override Switch	14. Motorized-Mirror Joy Stick
7. Engine Brake Switch	15. Power Divider Lockout Switch
8. Blank Switch	16. Power Take-Off Control Switch

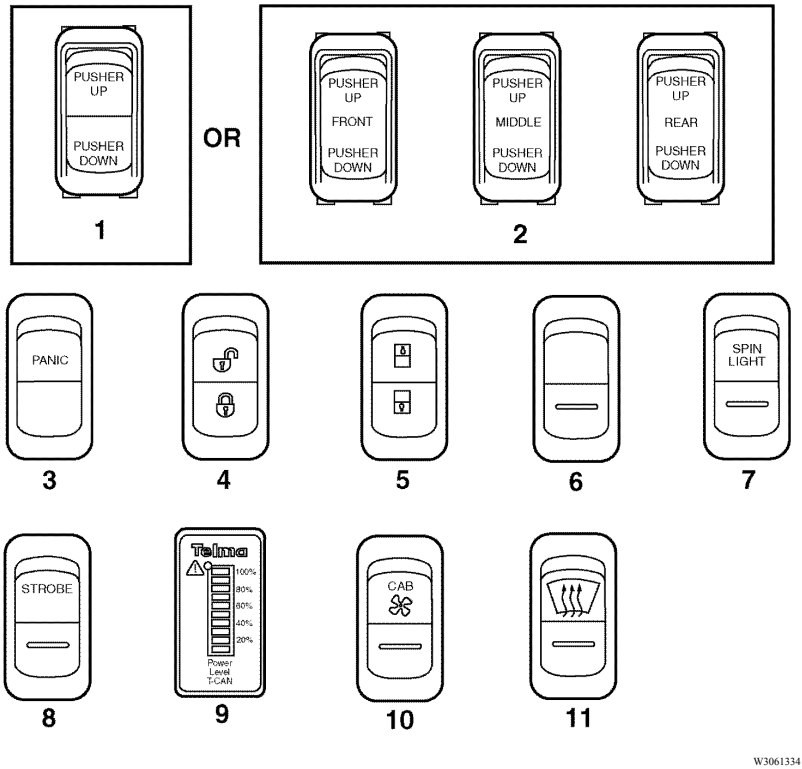

Optional Switches

1. Push Axle Up/Down Switch	7. Spin Light Switch
2. Push Axle Up/Down Switches	8. Strobe Switch
3. QUAL COMM Panic Button	9. Telma Retarder Lamp
4. Right-Hand Only Door Lock Switch	10. Vent Fan Switch
5. Right-Hand Only Window Lift Switch	11. Windshield Defrost Switch
6. Blank Switch	

The following optional switches, listed in alphabetical order, may appear on *Panel D* in this manual.

• **Accessory Switch (Battery Power)** – This switch may be used to power optional accessory equipment that requires battery voltage, with the key switch turned OFF.

• **Accessory Switch (Ignition Power)** – This switch may be used to power optional accessory equipment that requires ignition voltage, with the key switch turned ON.

• **Air Suspension Control Switch** – This switch exhausts the air from the air bags of the suspension. It may be used when coupling or uncoupling trailers.

CAUTION

When preparing to connect a tractor to a trailer, make sure that the height of the 5th wheel matches the height of the underside of the trailer. Failure to do so will result in the trailer being improperly connected. After the trailer has been coupled and the trailer landing gear has been raised, make sure that the 5th wheel jaws have properly engaged the trailer king pin, and there is no gap between the 5th wheel plate and the bottom of the trailer.

CAUTION

DUMP BODY: Always exhaust the air from the bags before raising the dump body to protect the air bags and improve chassis stability while dumping. If the dump body is raised while the air suspension is pressurized, damage to the air bags may result.

CAUTION

Do not drive the vehicle with the air bags exhausted. Repressurize the air bags before driving the vehicle.

Note: Engine speed and road speed will automatically be limited if the vehicle is moved with the air bags exhausted.

For information concerning trailer coupling and uncoupling, refer to the *Operation* section of this manual.

CAUTION

Be sure to deactivate the heavy mud/snow function when no longer needed. Continued operation with the heavy mud/snow function active will result in vehicle damage. If after a reasonable amount of time (no more than five minutes) the vehicle is still not passive, deactivate the ATC and put on chains.

• **Automatic Traction Control Switch/Heavy Mud/Snow** – Activate for increased traction control in heavy mud or snow. (See “Automatic Traction Control (ATC) (If Equipped)”, page 126 in the *Operation* section of this manual for more details.) When the operator presses the top of the rocker switch, the heavy mud/snow function ATC indicator lamp blinks continuously. The ATC lamp stops blinking when the ATC mode switch is pressed again or ignition key cycled.

• **Engine Brake Switch** – Used to activate the engine brake. Refer to the *Operation* section in this handbook for more information.

• **Load Light Switch** – Press top of the switch in to turn light on. Press bottom of switch to turn light off.

• **Mirror Defrost** – Push the top in to activate mirror defrost.

• **Motorized-Mirror Joy Stick** – This control is designed like a "joy stick." ROTATE the stick to the right to control the right mirror. ROTATE the stick to the left to control the left mirror. PUSH the stick up, down, left or right, as indicated, to correctly position the selected mirror.

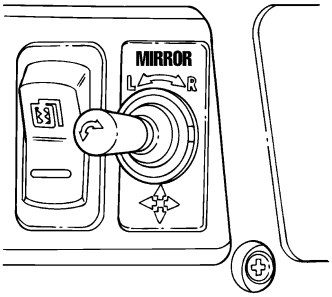

C0029215

• **Power Divider Lockout Switch** – See "Inter-Axle Power Divider Lockout (If Equipped)" in the *Operation* section of this manual.

• **Power Take-Off Control Switch** — Press the top in to turn the PTO on. Push the bottom in to turn it off.

• **Push Axle Up/Down Switch** — The operator controls the raise and lower functions with the instrument panel-mounted auxiliary axle switch

• **Right-Hand Only Door Lock** — Push the top in to lock the right-hand door.

• **Right-Hand Only Window Lift** — Press the top of the switch to raise the right-hand window. Press bottom of switch to lower right-hand window.

• **Spin Light Switch** — Press the top of the switch to activate the rotating beacon light. Push the bottom to turn light off.

• **Strobe Switch** — Press the top of the switch to turn the strobe light on. Push the bottom of the switch to turn light off.

• **Telma Rear Axle Mounted Retarder Indicator Lamp (If Equipped)** — The Telma does not have a disable switch. It is always on and will operate at different levels depending on application of service brake. The indicator will show you the level you are retarding the vehicle: 20%, 40%, 60%, 80% or 100%.

Note: The Telma retarder is disabled if there is an ABS event.

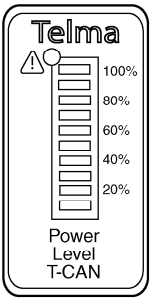

C0029217

• **Vent Fan Switch** — Press switch up to turn vent fan on. Push switch down to turn vent fan off.

• **Windshield Defrost Switch** — Press switch up and release to defrost front windshield.

CAB CLIMATE CONTROL

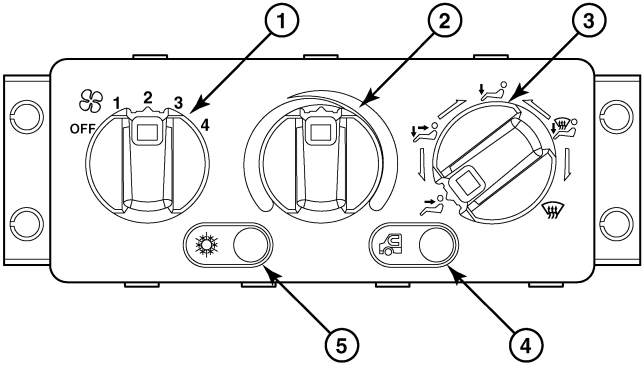

C0032677

1. Blower Control Knob	4. Fresh/Recirculation Button
2. Temperature Control Knob	5. A/C ON/OFF Button
3. Mode Knob	

1 **Blower Control Knob —** This knob controls fan speed from OFF to 4 (highest speed).

2 **Temperature Control Knob —** Controls the temperature of the air in the cab from COOL (far left) to HOT (far right).

3 **Mode Selection Knob —** Controls the direction of air flow around the cab as follows:

Note: The Mode Selection knob can be rotated to any position (see above). This allows the operator to select the desired amount of blend between the positions.

Directs airflow through the dash panel air vents only.

Directs airflow through both the dash panel and floor air vents (bi-level).

Directs airflow through the floor vents only.

Directs airflow through the floor vents and the windshield for defrosting and/or defogging.

Directs airflow only to the windshield for defrosting and/or defogging.

C0032678

4. **Fresh/Recirculation Switch or Button —** Selects the cab intake air between fresh air (from outside the cab) and recirculated air (inside the cab).

Note: For maximum air conditioner performance, select recirculated air.

5. **Air Conditioner ON/OFF Switch or Button —** Activates the air conditioning system.

LIGHT CONTROL PANEL

The light control panel is located on the driver side of the dash. This panel controls the interior panel lights and headlights.

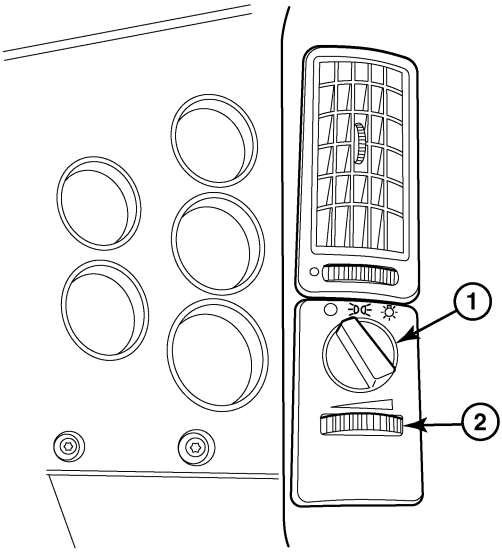

C0032679

1. Light Control Knob	2. Panel Dimmer Switch

With the light control knob in the left position, all lights are off. With the knob in the middle position, the parking lights and interior panel lights will illuminate. With the knob in the far right position, the headlights will turn on.

To adjust the intensity of the panel light, move the panel dimmer switch back and forth.

LOWER CONSOLE PANEL

The lower console panel is located under the Cab Climate Control area of the middle dash.

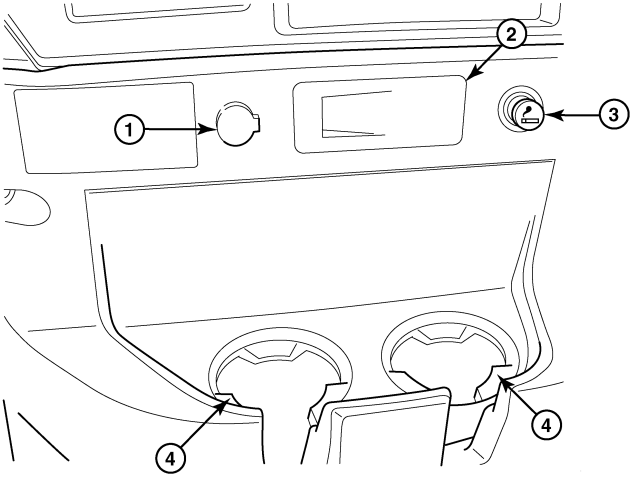

C0032681

1. Accessory Power Outlet	3. Cigar Lighter
2. Ashtray	4. Cup Holder

STEERING COLUMN

Combination Starter and Electrical Switch

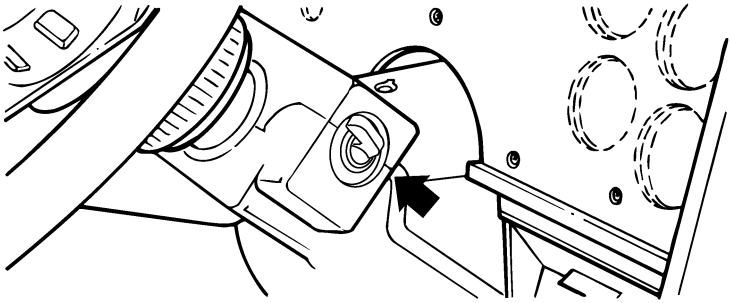

C0032682

This switch starts the engine (turn the switch clockwise) and activates the accessory relay (turn the switch counterclockwise). When the switch is turned ON (in a clockwise direction), a warning buzzer sounds if air system pressure is below 448 ± 34 kPa (65 ± 5 psi) or if there is low oil pressure. The buzzer shuts off as soon as sufficient air/oil pressure is restored.

Steering Wheel Adjustment

WARNING

Adjust the steering wheel position BEFORE attempting to move the vehicle to avoid losing control of the vehicle.

Adjusting (Tilt and Telescope)

Push down on the foot pedal located at the right kick panel to adjust the wheel to any position within a pre-defined range. Note that you must continue to hold the pedal down while adjusting. When the adjustment is complete, release the pedal.

Turn Signal Lever

Note: The turn signals are not self-cancelling and must be returned to the middle position manually

The turn signal lever is located on the steering column. It performs a number of functions, including activating the high and low beams, signal switch and the hazard switch. The signal switch can be used for courtesy flashing of marker lights and for the flashing of high beams.

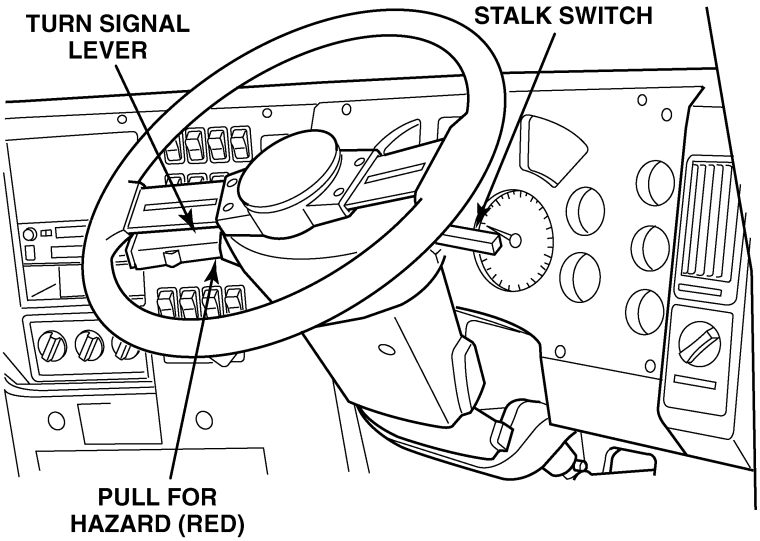

C0032684

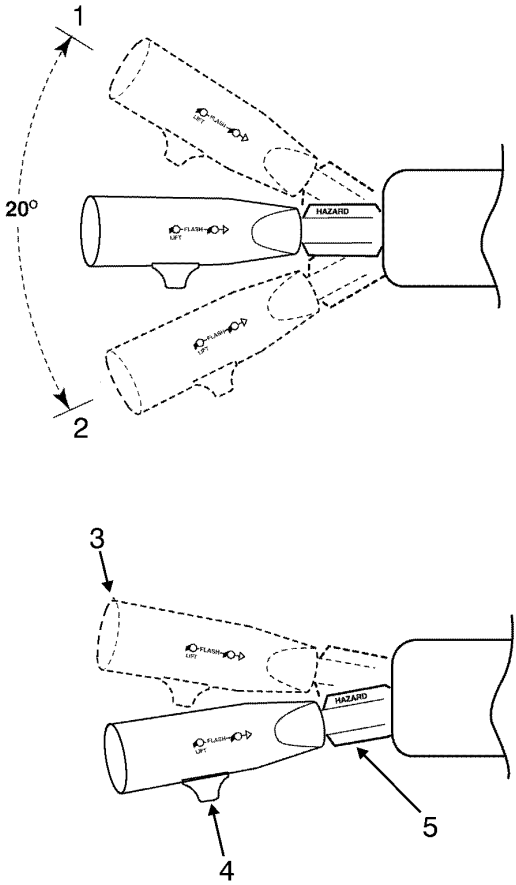

W3061333

1. Handle in Right turn position and cancel of hazard warning.	2. Handle in Left turn position and cancel position of hazard warning.
3. Lift handle for headlight dimmer.	4. Push for courtesy flashing of High beams.
5. Pull for warning hazard position.	

Stalk Switch (Co-Pilot® Only)

The stalk switch (Co-Pilot® only) is located on the right side of the steering column and contains three depressible buttons: ***ESC***, ***Enter*** (↵) and ***Up & Down***. The stalk switch is used to access, navigate, view and change information available in the driver information display (Co-Pilot® display).

The following illustration shows the stalk switch.

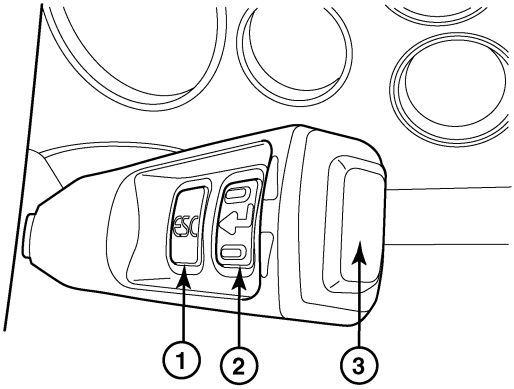

C0032686

1. ESC (Escape) 2. ↵ (Enter)	3. Up & Down

Navigation of Co-Pilot® Menu

ESC BUTTON

The ***ESC*** (Escape) button on the stalk switch takes the Co-Pilot® back to the previous screen or level in the menu.

Note: The ***ESC*** button does not function at Start Up or when the vehicle is moving. The ***ESC*** button is used only when the vehicle is stationary.

ENTER (↵) BUTTON

The ***Enter*** (↵) button on the stalk switch selects the highlighted menu items during menu selection. During Start Up and when moving the vehicle, the ***Enter*** (↵) button is also used to confirm or acknowledge a pop-up screen. Sometimes, the ***Enter*** (↵) button takes the Co-Pilot® back to the previous screen.

UP & DOWN BUTTONS

The ***Up & Down*** buttons at the end of the stalk switch allow the user to highlight the various available menu items. Sometimes, these buttons are used to enter information into the displays.

- **Up Button —** Once at the top of the menu items that can be selected, pressing the ***Up*** button will take the display to the last item in the menu.

For more information on Co-Pilot® display, please refer to the V-MAC® IV Vehicle Management and Control with Co-Pilot® Display Operator's Guide.

FLOOR PEDALS

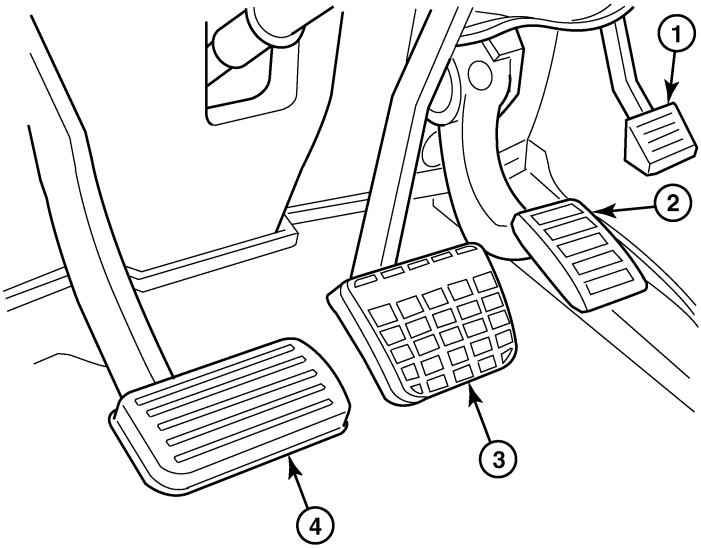

1 **Steering Wheel Adjustment Pedal —** Push down on the foot pedal to tilt the wheel to any position between fully tilted up to fully tilted down. You must hold the pedal down while adjusting. When the adjustment is complete, release the pedal.

2 **Accelerator Pedal —** Depress to increase engine/vehicle speed; release to decrease engine/vehicle speed.

3 **Brake Treadle Valve —** Depress to activate the service brakes.

4 **Clutch Pedal —** Depress to disengage the clutch. The clutch pedal is only found on trucks equipped with manual transmissions.

MISCELLANEOUS CONTROLS

Dome Light

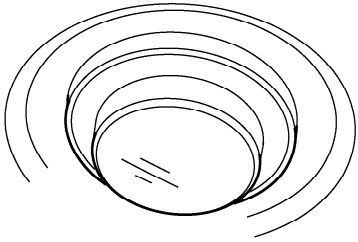

C0032690

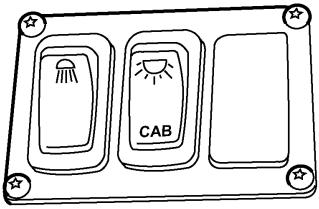

DRIVER SIDE SWITCH

C0032869

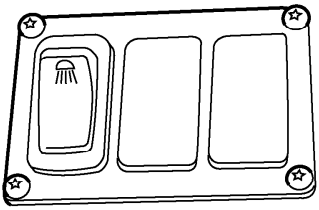

PASSENGER SIDE SWITCH

C0032870

With the switch in the bottom position on the driver side and on the passenger side, the dome light will come on when the cab door is opened and go off when it is closed. Push the switch up to turn the dome light on when the doors are closed for either the driver side or the passenger side. Depress the CAB switch above the driver up when doors are closed to turn both dome lights on.

Air Horn

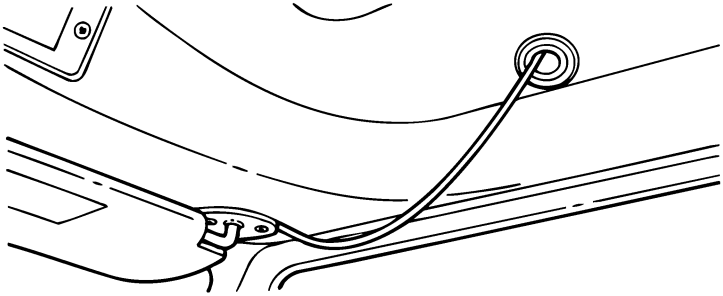

C0032871

The air horn(s), if equipped, is activated by pulling down on the cord that is located above the driver near the overhead console.

Accessory Power Outlets

Additional 12-volt accessory power outlets are located on the dashboard. One is located next to the radio and the other is located below the radio (see figures below). These cigar light-type outlets supply 12 volts of fused (20A) power when the ignition switch is turned to the ignition or accessory position.

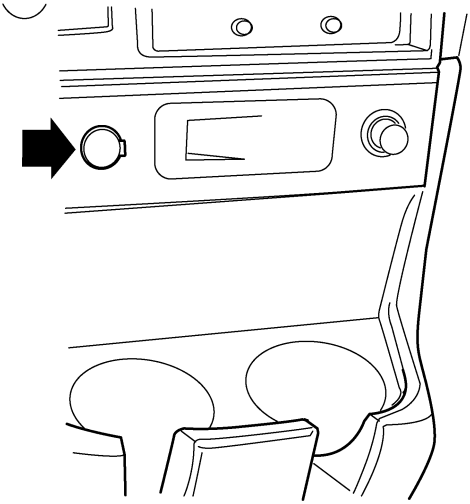

C0032872

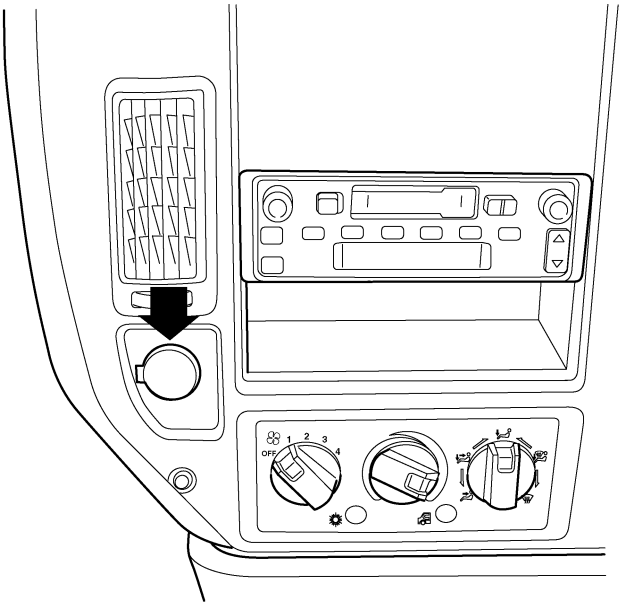

C0032873

CAUTION

Maximum amperage for all power receptacles in cab and sleeper is 15 amps. Do NOT exceed maximum amperage as equipment damage may result.

BEFORE OPERATING THE VEHICLE

Driver's Daily Walk-Around Inspection

With the proper care, your MACK® model will give you years of efficient performance.

Before each shift, the driver should perform the following inspections:

WARNING

To avoid serious injury, do NOT step on fuel tank, battery box, frame, etc., unless adequate slip-resistant surfaces and handholds are provided.

Fluids

- Engine oil
- Engine coolant
- Fuel
- Power steering fluid
- Windshield washer fluid

Leaks

- Air, coolant, oil, fuel, power steering fluid

Wheels and Tyres

- Tyre air pressure
- Tyre/wheel condition
- Wheel stud nuts
- Front wheel bearings (oil)

Fasteners

- Steering linkage
- Seat belts
- Doors and windows
- Battery box covers
- Fuel tank straps
- Hood or engine compartment covers

Air Reservoir

- Drain to remove moisture

Lights/Reflectors

- Replace defective and burned-out bulbs
- Replace broken lenses and reflectors

Gauges and Instruments

- Air pressure gauge
- Oil pressure gauge
- Temperature gauge
- Voltmeter

Component Operation

- Brakes (service and parking)
- Horn
- Heater and defroster
- Signaling devices
- Windshield wipers/washers
- Foot pedals
- Back-up alarms (if equipped)

Component Adjustment

- Sideview mirrors
- Seats

New Vehicle Break-In

To ensure many years of reliable, trouble-free operation, the following break-in procedures are recommended:

Note: Oil change, filter change and chassis lubrication are required at the 5000 km vehicle break-in interval.

Refer to the preventive maintenance schedules outlined in the *Maintenance and Lubrication Manual* for recommended lubrication change intervals for the following items:

- Gear oils (transmission, rear axle carrier[s], front drive axle carrier, transfer case, flywheel PTO)
- Engine oil
- Oil filters
- Fuel filters

Note: It is important that components be filled with lubricants meeting the specifications as given in the *Maintenance and Lubrication Manual.*

Note: When checking oil levels, the vehicle must be parked on level ground, and the units at normal operating temperature. Components must be filled to the correct level. DO NOT OVERFILL.

Note: Oil and filter change intervals in this manual pertain to components built by MACK Trucks, For information concerning oil and oil filter change intervals for vendor components, refer to the specific vendor component service literature.

During the First 5000 Kilometers (3,000 Miles)

- After the first 200 km (125 miles), retorque the wheel nuts using an accurately calibrated torque wrench. Recheck this torque again after 800 km (500 miles).
- Check oil and coolant levels frequently
- Check brake and clutch adjustments per recommended maintenance schedule, and adjust as needed.
- Observe the instruments often, and shut down the engine at the first sign of any abnormal readings.
- Report all leaks, loose fasteners, unusual noises, etc., to the service representative at the nearest MACK dealership so they can be checked and corrected.
- Check the spring clip torque (U-bolts).
- Check the U-bolt torque on the MACK or Hendrickson air suspension at the end of the first 1600 km (1000 miles).

After the First 5000 Kilometers (3,000 Miles) or Before 6400 Kilometers (4,000 Miles) or Before 3 to 4 Months

- Retorque the spring clip (U-bolts).

At the First Inspection Interval

- Check front and rear axle alignment and adjust if the alignment is out of specifications.
- Check steering knuckle to axle beam clearance.

Although this quality-built vehicle has been inspected, lubricated and adjusted at the MACK Trucks Assembly Plant, an occasional air, oil or coolant leak may develop. Quick action to correct these minor items will prevent a major repair later. Take the vehicle to the nearest MACK service center as soon as any abnormal condition becomes evident.

Initial Valve Adjustment Intervals

Refer to the *Maintenance and Lubrication Manual* for detailed information concerning the Initial Valve Adjustment Interval.

WINDSHIELD WASHER RESERVOIR

As shown in the drawing below, the windshield washer reservoir is located under the hood, against the passenger cab bulkhead.

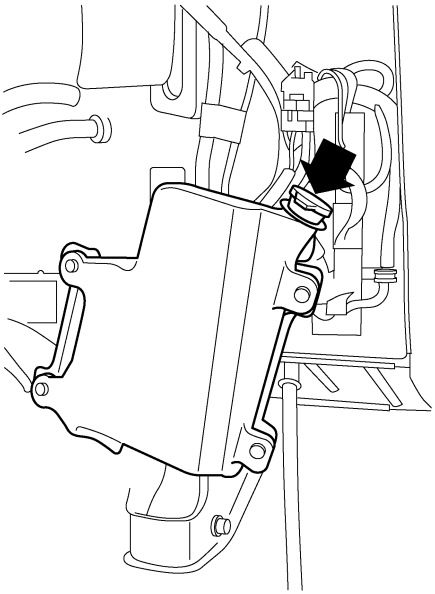

C0032874

HOOD OPERATION

Opening the Hood

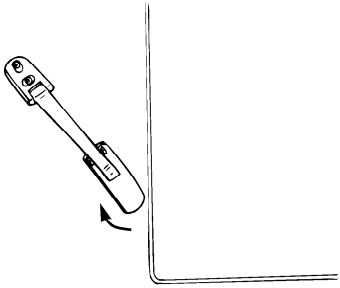

C0032875

1. With the hood in the locked position, pull outward on the plastic handle and disengage the locking tab from the hood latch.
2. Swing the rubber strap up and out of the way.
3. Repeat this procedure on the other side of the hood.

Note: When the hood is opened, the safety latch will drop down into the locked position.

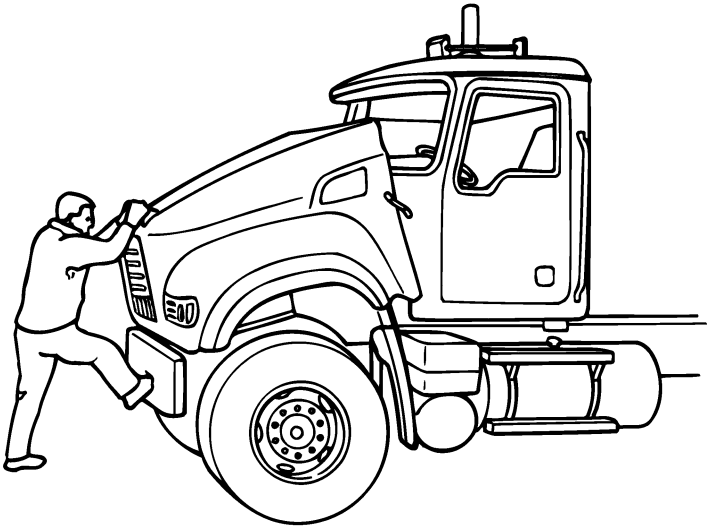

C0032876

4. Using the Bulldog as a handle, pull on the hood to raise it over the engine. You may put one foot on the bumper if necessary.
5. Pull steadily on the hood until it comes over the center and stops fully open.

WARNING

NEVER take both feet off the ground to tilt the hood. Keep at least one foot on the ground to avoid a slip or fall. If it is difficult for you to raise the hood, get the help of someone who can lift from the rear of the hood.

WARNING

Little effort is required to open or close the hood. NEVER take both feet off the ground to tilt the hood. Keep at least one foot on the ground to avoid a slip or fall.

Closing the Hood

Note: Remember to remove all tools, rags and test equipment from the engine compartment before closing the hood.

WARNING

Before closing the hood, be sure no one is in the way of the hood's descent.

Locking the Hood

To lock the hood, secure the rubber hold-down straps on each side of the hood.

1 With the hood down, set the rubber strap in position and force the locking discs into the hood latch.
2 Push inward on the plastic handle to lock the rubber strap in place.
3 Repeat this procedure on the other side of the hood.

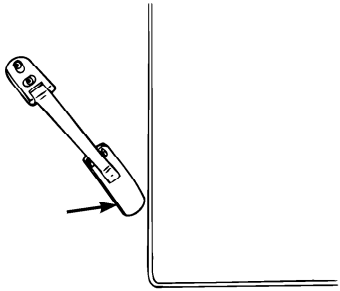

C0032877

CAUTION

Be sure the hood is latched securely. If the latch is not completely engaged, the hood could open during operation and cause vehicle damage.

HOSE TENDERS

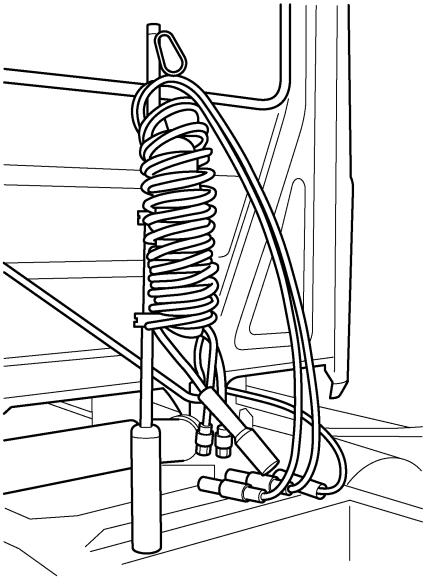

C0032878

CAUTION

Avoid loose hoses. Air lines and tractor-to-trailer electrical connections must be secured to the tractor hose tenders (hose hanger, towel bar, pogo stick, etc.) to prevent them from tangling in the driveline.

DOORS

Standard Door Panel

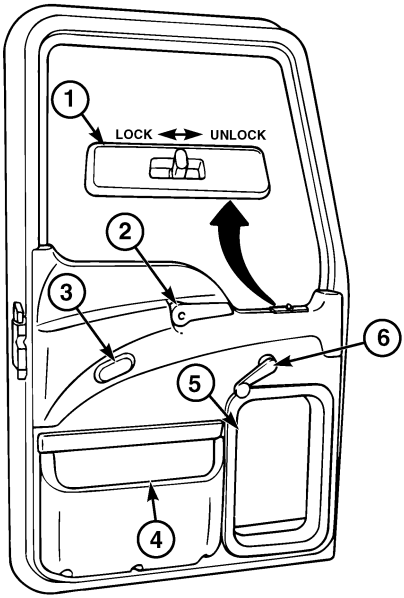

Manual Locks and Windows — Passenger Side (Left) Shown

1. Manual Door Lock	4. Storage Pouch
2. Door Handle	5. Lower View Window (Passenger Side Only)
3. Door Light	6. Window Crank

1 **Manual Door Lock —** Push backward to lock. Push forward to unlock. The lock opening appears red when unlocked.

2 **Door Handle —** Lift handle to open.

3 **Door Light —** The door light automatically comes on when the door is opened and goes out when the door is closed.

4 **Storage Pouch —** Large, rigid storage pouch.

5 **Lower View Window —** Provides safe viewing of low lying obstacles on construction sites.

6 **Window Crank —** Turn counterclockwise to open, clockwise to close.

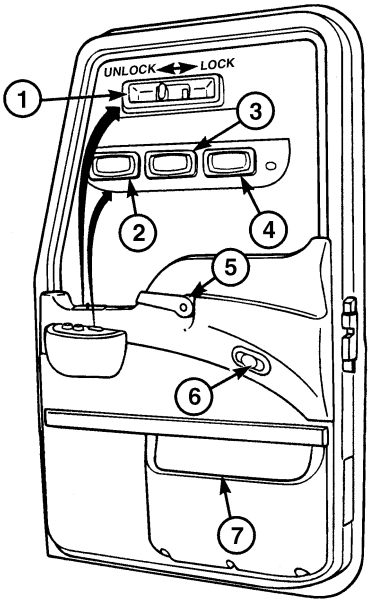

C0032880

Power Locks and Windows — Driver Side (Right) Shown

1. Manual Door Lock	5. Door Handle
2. Left Side Power Window Control	6. Door Light
3. Right Side Power Window Control	7. Storage Pouch
4. Power Door Lock	

1 **Manual Door Lock —** Push backward to lock. Push forward to unlock. The lock opening appears red when unlocked.

2 **Left Side Power Window Control —** Push back of button for DOWN, front of button for UP.

3 **Right Side Power Window Control —** Push back of button for DOWN, front of button for UP.

4 **Power Door Lock —** Push back of button to lock, front of button to unlock. The power lock controls both doors.

Note: The left side (passenger) door has a power control for the left side window only.

5 **Door Handle —** Lift handle to open.

6 **Door Light —** The door light automatically comes on when the door is opened and goes out when the door is closed.

7 **Storage Pouch —** Large, rigid storage pouch.

Locking the Cab Door

The doors can be locked using the manual door lock (item 1 in the illustration) or a power door lock switch (item 4 in the illustration).

Power door lock switches (on both sides of the cab) lock and unlock both cab doors at the same time. To lock the doors, push the rear of the rocker switch. To unlock the doors, push the front of the rocker switch.

To lock with the door open, push the lock lever forward and release. The lock lever will return to the home position and the door will be locked when closed. To unlock, pull the paddle and open the door.

Power Window Regulators

To open the windows, push and hold the rear of the rocker switch (item 3 in the illustration). To close the windows, push and hold the front of the rocker switch. Release the rocker switch to stop the window at the desired position.

REMOTE KEYLESS ENTRY — (OPTIONAL)

This vehicle is equipped with a Remote Keyless Entry system. This system operates by means of a hand-held remote control that locks and unlocks the cab doors.

The remote control door lock transmitters are supplied in pairs; each one is attached to a key ring.

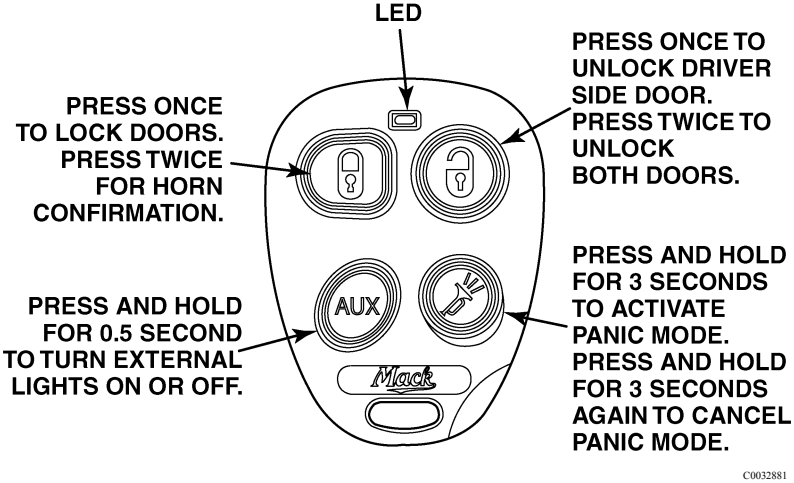

Each transmitter is powered by a 3-volt battery and is water resistant. Information concerning battery replacement, troubleshooting and programming the transmitters is provided in this section.

The receiver in the vehicle is capable of recognizing four transmitters. Replacement transmitters are available; however, they must be programmed to match the specific receiver (refer to the "Programming the Transmitter" section).

Transmitter Operations

The door transmitter has four buttons (labeled LOCK, UNLOCK, AUX and HORN) to control operation of the system. When any of the buttons is pressed, a coded Ultra-high frequency (UHF) radio signal is transmitted to the receiver in the vehicle.

The transmitter must be within approximately 10 meters (33 feet) of the vehicle for the receiver to detect the coded signal. The Remote Keyless Entry system has no affect on the normal operation of the power door locks.

When the LOCK button is pressed, the doors will lock and the lights will flash once indicating that the doors are locked. The dome light will be on for 5 seconds upon locking the door by remote. For audible confirmation of the door lock, press the LOCK button a second time and the horn will beep once to confirm the doors are locked.

When the UNLOCK button is pressed once, the drivers door will unlock and the lights will flash twice indicating that the door is unlocked. The dome light will be on for 30 seconds upon unlocking the door by remote. Pushing the UNLOCK button a second time within 3 seconds will unlock both doors.

Note: If AUTO RE-ARM feature is selected, the keyless entry system will automatically re-arm itself 60 seconds after the doors are unlocked with remote transmitter. Automatic re-arm will cancel if any door is opened before the 60 seconds timer has elapsed.

Press and hold the AUX button on the transmitter for 0.5 second to turn perimeter or trailer access lights "On" or "Off" (if equipped).

Press and hold the HORN button on the transmitter for 3 seconds. The horn will immediately sound and running lights will flash. During panic mode, the normal function of this transmitter button will be suspended. LOCK and UNLOCK buttons cannot be used to lock and unlock the doors. To stop the alarm, press and hold the HORN button on the transmitter again for 3 seconds. If the button is not pressed, the alarm will automatically stop after 60 seconds.

Battery Replacement

Under normal use, the transmitter battery should last approximately two years. When battery replacement becomes necessary, use a Panasonic® 3 volt, type CR2032, or equivalent. Replace the battery as follows:

1. Open the transmitter by inserting a dime between the two halves of the transmitter case (near the key ring hole) and twisting.

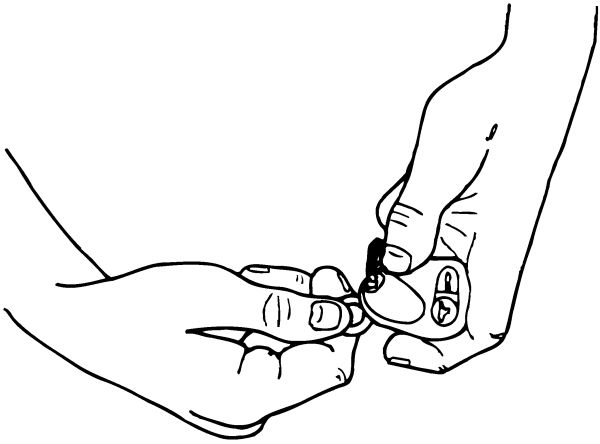

C0032882

2. Remove the battery.
3. Install a new battery with the positive (+) side down.

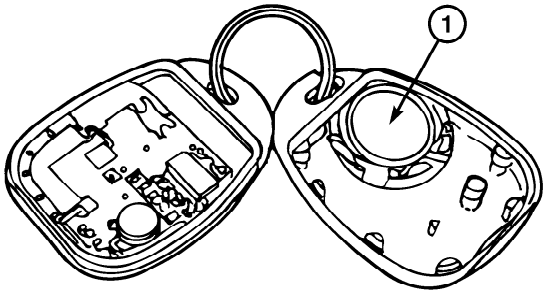

C0032883

1. Battery, positive (+) side down

4. Align the transmitter case halves, then snap the case together.
5. Check the operation of the transmitter.

Troubleshooting

The following checks may be used to diagnose any problems which may arise with Remote Keyless Entry system operation. Remember to check all transmitters.

1 Lower the windows, turn the ignition key to the OFF position and close the doors.

2 Stand near the driver's side door, aim the transmitter at the vehicle and operate both functions of the transmitter. Repeat for all transmitters, if applicable.

- If a single function on one transmitter is inoperative, replace the transmitter.
- If all functions on any of the transmitters are inoperative, reprogram all transmitters and repeat the troubleshooting procedures. Refer to the "Programming the Transmitter" section.
- If one transmitter cannot be programmed, replace the battery in the transmitter. Refer to the "Battery Replacement" section.

3 If all functions on all transmitters operate, stand approximately five feet from the vehicle (at several points around the vehicle), and check the operation of all transmitters at each point.

- If one transmitter does not operate at some point where another transmitter does operate, replace the battery in the transmitter that does not operate.
- If all transmitters operate approximately five feet from the vehicle, the system is operating properly and no repairs should be attempted.

Programming the Transmitter:

1 Turn the ignition switch to the ON position.

2 Access the keyless entry module, located behind the D-Panel.

3 Push the Program switch on the keyless entry module three times. The program LED on the module will be solid, to indicate you are now in the Transmitter Programming Mode.

4 Press any button on one of the transmitters until the horn responds with a chirp and the LED will flash once, to confirm the first transmitter is now programmed.

5 If necessary, repeat Step 3 to program the 2nd, 3rd and 4th transmitters.

Note: If more than four transmitters are programmed, the system will only retain the last four transmitters programmed.

6 To exit Programming Mode, turn the ignition switch to the OFF position, or simply wait 15 seconds. The LED will be off to confirm exit.

Feature Programming:

1 Turn the ignition switch to the ON position.

2 Access the keyless entry module, located behind the D-Panel.

3 Push the Program switch on the keyless entry module six times. The horn will chirp six times, and the program LED on the module will be solid, to indicate you are now in the Feature Programming Mode.

4 Press and release the transmitter button corresponding to the feature you want to change.

Note: The horn chirps and LED pulses will indicate the new setting.

5 Press the transmitter button again to change the feature again. Keep pressing the transmitter button until the module advances to your desired setting.

Press Transmitter Button	One Chirp/LED One Pulse **Factory Default Setting**	Two Chirps/LED Two Pulses
🔒	The Remote function can operate with ignition "on"	The Remote function cannot operate with ignition "on"
🔓	Automatic Re-Arm OFF	Automatic Re-Arm ON
AUX	External Light turns on for 3 minutes	External Light turns on for 5 minutes
	Three Chirps/LED Three pulses = External Light turns on for 10 minutes.	
	Four Chirps/LED Four pulses = External Light turns on for 15 minutes.	
	Five Chirps/LED Five pulses = External Light turns on for 20 minutes.	

6. To exit Programming Mode, turn the Ignition to the "Off" position, or simply wait for 15 seconds. The horn will respond with a short + long beep and the LED turns off to confirm exit.

MIRROR BREAKAWAY STRUT (IF EQUIPPED)

The mirror breakaway strut steadies the mirror, and is designed to "break-away" should the mirror hit an object. The breakaway strut needs no maintenance, and should never need to be replaced.

To re-attach the strut to the mirror bracket:

1 Push mirror bracket forward, as far as it will go.
2 Align end of strut with slot in receptacle.
3 Pull bracket rearward to snap strut in place. The strut head should be centered fore-aft in the receptacle.

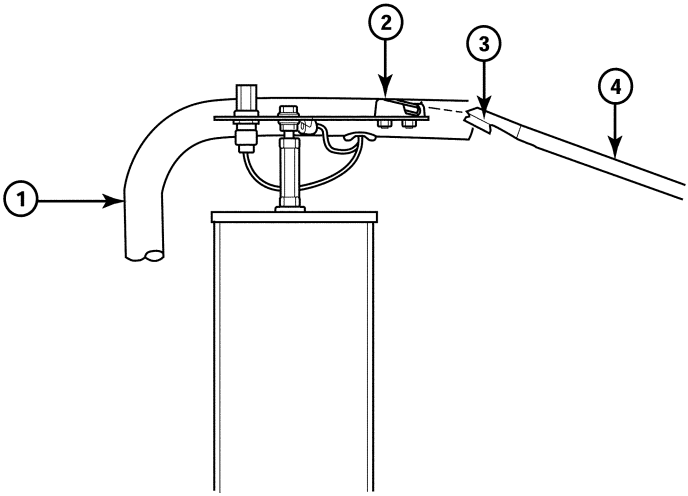

C0032884

1. Mirror Bracket	3. Plastic Strut Head
2. Receptacle	4. Mirror Breakaway Strut

MACK ENGINE INFORMATION

For engine starting procedures, refer to “STARTING THE VEHICLE”, page 127.

Precautions and Warnings

CAUTION

Do not permit a heavy load to drive the engine above the governed speed. Operate in a gear low enough to allow the engine to accelerate to (or maintain) governed speed when applying the throttle.

WARNING

Misuse or modification of a turbocharger can result in serious injury and property damage. In addition, extreme care must be taken to avoid foreign material induction, excessive exhaust temperatures and lack of lubrication.

Engine Model Designations

The MACK engine model designation system uses letters and numbers to provide a complete unit description.

MP8 Engine ID Letters and Number

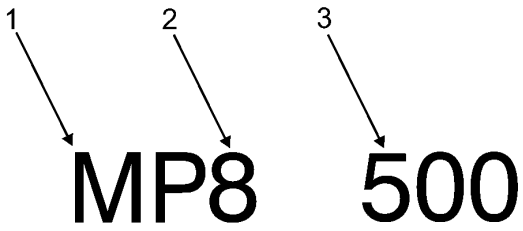

W0061332

1. MACK Power	2. Rounded Cubic Inch Displacement
3. Peak Horsepower	

MP8 Used as an Example

MACK POWERLEASH™ ENGINE BRAKE (IF EQUIPPED)

Engines may be equipped to be PowerLeash™ upgradeable. These engines will be equipped with PowerLeash™ camshaft. These engines are identified on the engine information sticker.

If your vehicle is equipped with the MACK PowerLeash™ Engine Brake, it is important that you take the time to become familiar with your engine brake before putting it into operation.

WARNING

Operation of any vehicle on wet or slippery roads requires extreme caution. Because the engine brake converts the engine to a retarding device, it should NOT be used on wet or slippery roads if the vehicle has a single driving axle or if it has tandem driving axles that are lightly loaded. Use of an engine brake under these conditions can cause the vehicle to skid or a combination vehicle to jackknife.

Engine Brake Switch

The Engine Brake switch is located on the dashboard. The Engine Brake switch is a three-position switch located on the instrument panel.

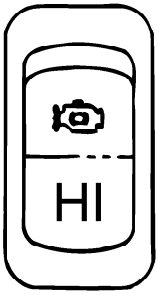

Engine Brake Switch

HI	Full Engine Braking Power
LO	Half Engine Braking Power
OFF	No Engine Braking Power

C0032886

To operate the vehicle without the engine brake active, leave the dash-mounted switch in the OFF position.

CAUTION

Engine Stalling and potential engine damage can result from operation of the engine brake at cold oil temperatures. Vehicles equipped with an Engine Brake have also been equipped with a V-MAC® control feature that will prevent engine brake activation until the engine coolant reaches a temperature of at least 52°C (125°F). The driver should be alert to the fact that the engine brake will not function until sufficient warm-up time has elapsed, regardless of the dash switch setting.

PowerLeash+ Mode

Note: When the MACK® PowerLeash+™ Engine Brake is active and the transmission is shifting gears, there will be a momentary interruption of the braking torque. This may result in a temporary increase of vehicle speed if travelling downhill. The operator will experience the same momentary loss of engine braking as is experienced when downshifting a conventional manual transmission.

MACK® PowerLeash+™ is standard with ***m***DRIVE transmissions. It is possible to activate the engine brake after the engine has reached normal working temperature.

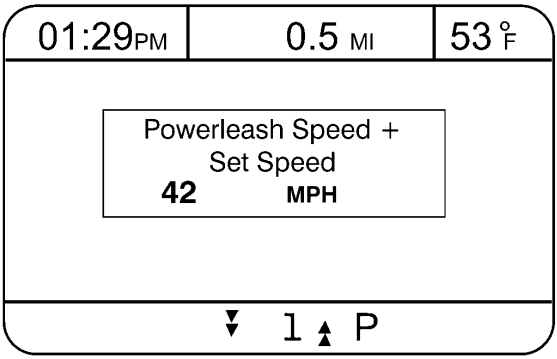

W4060025

PowerLeash Active Co-Pilot Display Screen

To activate the PowerLeash+ ™ Engine Brake, utilize the following dash switches:

Control Switch: The left most switch is the PowerLeash+ **ON-OFF** or control switch. Depress the engine brake icon to illuminate the switch and activate the PowerLeash+ engine brake functions. Once the PowerLeash+ activates the **PowerLeash Speed +...** screen displays in the Co-Pilot®.

Note: The PowerLeash+ will not operate if the control switch is in the **OFF** position.

Note: An exception exists if the vehicle is equipped with a Bendix Active Cruise Control & Collision Warning system. If the vehicle is equipped with these features the Bendix system assumes all fueling and braking control when in active cruise control mode.

Mode Switch: The PowerLeash+ Mode switch is used to select the type of engine brake operation needed. The individual switch functions are as follows:

- **Latch Mode:** Pressing **LATCH** activates the LATCH mode. In this mode the engine brake activates whenever zero (0) pedal is applied. The LATCH mode will only function with the cruise control disabled. Typically this mode is used to activate the brake every time the throttle pedal is released. The PowerLeash+ setting is automatically set at 100% in LATCH mode.
- **Auto Mode:** This is the normal and recommended mDRIVE driving mode for PowerLeash+. The Auto mode can be used whether the vehicle is equipped with or without cruise control. If the cruise control is engaged, Mack's Cruise 'n Brake feature will activate. If the cruise control is not engaged, the engine brake activation will depend on the switch's **SET -** setting.

  Anytime the Mode switch is in the center position, PowerLeash+ is in Auto mode. Auto mode allows the driver to control the vehicle's downhill speed. The vehicle speed is controlled without the need to manually adjust the braking effort or apply the service brakes.

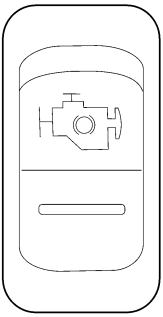

W4059732

Control Switch

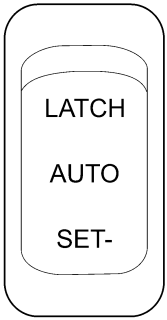

W4059733

Mode Switch

Grade Gripper (If Equipped)

Grade Gripper provides anti-roll back assistance during the transition from a stopped position to starting on a grade. The brake system maintains pressure in the brake chambers for a predefined period of time after the service brake pedal is released, which allows the driver time to move their foot from the brake pedal to the accelerator pedal.

⚠ DANGER

Grade Gripper is only intended to temporarily hold the vehicle on a grade before the vehicle is put into motion. The vehicle brake must be applied, independent of Grade Gripper, to hold the vehicle on a grade for an extended period of time. Failure to follow this instruction can result in loss of vehicle control and serious personal injury or death.

When available, Grade Gripper is enabled at key-on. Pressing a dash-mounted switch will temporarily disable Grade Gripper. The Grade Gripper Disabled screen displays in the Co-Pilot®. Grade Gripper is re-enabled by pressing the switch again, or when vehicle speed exceeds 20 Km/h (12 mph). A key off-on cycle also re-enables Grade Gripper. If a Grade Gripper fault occurs, the Grade Gripper Disabled screen in the Co-Pilot® displays and the feature is permanently unavailable until the fault is repaired.

W4060049

W4059233

Grade Gripper Active Co-Pilot Screen

When Grade Gripper is enabled, it activates automatically, but only when the following conditions exist:

- Vehicle speed is zero
- Vehicle is on a greater than 2 percent incline or decline
- Gear selector keypad is pressed to adjust to the D mode on an incline or R mode on a decline
- Service brake is applied
- ABS is functioning normally
- There has been no ABS activity in the preceding stops

When the service brake pedal is released, the brakes are applied for approximately 3 seconds or until the accelerator pedal is depressed, whichever occurs first.

How the Engine Brake is Activated

When the engine brake is "enabled" (switch in either LOW or HIGH position), your engine V-MAC® electronic control system commands engine brake power (engine brake "active") only when the following conditions are true:

- The foot-operated engine accelerator pedal is not depressed.
- The clutch pedal is not depressed (manual shift transmissions only).
- The engine speed is at least 900 rpm.

If the engine brake is active, the engine brake will automatically be deactivated by depressing either the accelerator or the clutch, or if the engine speed drops below 900 rpm. As soon as all of the engine brake "active" conditions are again true (taking your foot off the accelerator, for example), the engine brake will again be activated. In order to disable the engine brake, simply return the dash-mounted control switch to the OFF position.

⚠ DANGER

The engine brake should never be considered a substitute for the vehicle service brakes. The service brakes should always be maintained in good working order, and should always be viewed as the primary vehicle slowing system. Service brakes are always used to bring the vehicle to a complete stop.

Cruise Control with the MACK PowerLeash™ Engine Brake

When the MACK PowerLeash™ Engine Brake is enabled at the same time your V-MAC® cruise control is in use, the engine brake automatically activates when necessary to slow the vehicle to the cruise set point speed. You can select one of two possible options:

- The engine brake is activated 2 mph above the cruise set point.
- The engine brake is activated as soon as cruise control commands fueling to zero (vehicle has just reached cruise set point and fuel has been turned off).

The first option is the more popular choice for highway use and is the default mode. Consult your V-MAC® IV Vehicle Management and Control with Co-Pilot® Display Operator's Guide for more information about this option. Your local MACK dealer can change the current selection.

The engine brake's ability to control maximum vehicle speed is limited to the selected retarding power of the engine brake. If the engine brake dash-mounted control switch is set to the LOW position, only half of the available braking power is used. If the dash-mounted control switch is set to the HIGH position, the cruise control invokes full engine brake power.

Note: Deactivating the cruise control function does not disable the engine brake.

The MACK PowerLeash™ Engine Brake may be activated or deactivated by other vehicle systems such as ABS and Headway control systems. Refer to the literature concerning these systems for additional information.

ON THE ROAD WITH THE MACK POWERLEASH™ ENGINE BRAKE

If you are not familiar with the use and operation of a heavy-duty diesel engine brake, it is essential that you read the following section carefully. It is very important that you take the time to gain experience with your MACK PowerLeash™ Engine Brake in good driving conditions, before using it in difficult or hazardous driving conditions, such as steep descents or slippery roads. Of course, there is no substitute for driver training by a qualified specialist.

The following information is intended as a guideline to safe and appropriate use of the MACK PowerLeash™ Engine Brake. It is difficult to describe every possible driving condition. Certain circumstances may require a more conservative approach than will be described. When encountering any new driving route or situation, err on the side of caution.

Over Flat Terrain

The LOW power position is likely adequate to control vehicle speed in situations where the roadway is relatively flat or has modestly graded rolling hills, and if total vehicle weight is light.

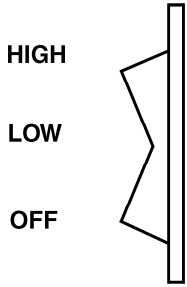

C0032887

As grades and vehicle weight increase, it will be necessary to use the HIGH position.

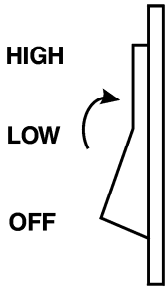

C0032888

Descending a Grade

⚠ DANGER

The MACK PowerLeash™ Engine Brake assists you in establishing faster downhill descent speeds than in a similarly configured and loaded vehicle without an engine brake; nevertheless, even with an engine brake, there are limits to the maximum vehicle speed at which you can travel on downhill grades and still keep your vehicle safely under control. Always approach these situations with caution, and gain the experience necessary for each grade and driving condition to determine the appropriate downhill descent speed.

For a certain vehicle and load condition, a "control speed" may be established for a given descent. The control speed is the vehicle speed at which the retarding forces of air drag, rolling resistance and engine brake power are equally balanced by the natural force of gravity that causes the vehicle to accelerate down the hill, resulting in a steady, controlled vehicle speed. The additional vehicle slowing power offered by the MACK PowerLeash™ Engine Brake allows the driver to descend the hill in a higher gear than normal (at a faster control speed), without overspeeding the engine.

For example, consider that you are descending a grade with a specific vehicle and an assumed total vehicle weight. You will find that without an engine brake, you must descend this grade in third gear to maintain a steady 16 kph (10 mph)at 2,000 engine rpm, without the need to apply the service brakes.

DESCENT SPEED WITHOUT MACK ENGINE BRAKE

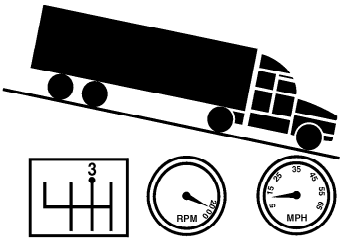

C0032889

Switch the MACK PowerLeash™ Engine Brake to the HIGH position, and now it is possible to descend the same grade in sixth gear to maintain a steady 56 kph (35 mph) at 2,000 engine rpm.

CAUTION

The maximum allowable engine speed is listed on the Warning label on the sun visor. Do NOT exceed the maximum allowable engine speed.

DESCENT SPEED WITH MACK ENGINE BRAKE

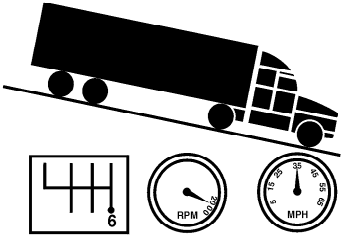

In any gear selection higher than sixth gear (in this example), it would be necessary to occasionally apply the service brakes to maintain a safe vehicle speed and to avoid overspeeding the engine.

DANGER

As with any vehicle, regular and excessive application of the service brakes during a downhill descent can lead to a brake lining overheat condition, resulting in a very dangerous loss of service brake retarding capability.

Note: The previous figures apply only to this hypothetical example. Specific vehicle control speeds and engine speeds for a given descent are dependent upon the actual vehicle and engine configurations, the gross weight of the vehicle, and the percent grade of the road.

On Slippery Road Surfaces

As with many aspects of operating a heavy-duty vehicle, special care should be taken when using the MACK PowerLeash™ Engine Brake on slippery road surfaces. The potential for unpredictable loss of vehicle traction is a serious concern; in some situations the engine should not be used at all.

As always, approach untested driving conditions with caution. Avoid use of the MACK PowerLeash™ Engine Brake in these situations until you have gained some experience under normal driving conditions.

As a rule, make sure that the vehicle is demonstrating good tractability with the engine brake off before checking for tractability with the engine brake enabled. Then, provided traffic conditions are safe for "testing" tractability, switch the MACK PowerLeash™ Engine Brake to the LOW position. If the vehicle shows any signs of loss of control (ABS activation or vehicle swerving, for example), immediately switch the engine brake back to the OFF position.

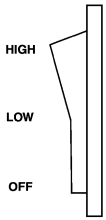

C0032891

Only if the vehicle demonstrates good control in the LOW position (again, only in safe driving conditions) should you test in the HIGH position, if desired. Return to the LOW position and proceed with caution if there is any sign of loss vehicle control.

Note: Always monitor vehicle tractability in slippery road conditions, and make adjustments to engine brake switch position and vehicle speed as necessary. Always test the LOW power position setting before moving to the HIGH position.

CAUTION

Do not enable the MACK PowerLeash™ Engine Brake during bobtail operations, or when operating on slippery roads with an empty or lightly loaded trailer.

CRUISE AND ENGINE SPEED CONTROL

With vehicle management and control (V-MAC) IV, the operator has the ability to precisely control engine speed (RPM) and set cruise control speeds, as well as setting the engine low idle speed. These functions are performed by using the speed control switches located on the dashboard. Instructions for setting cruise control and engine speed control are given on the following pages. For an explanation of engine low idle adjustment, refer to V-MAC® IV Vehicle Management and Control with Co-Pilot® Display Operator's Guide..

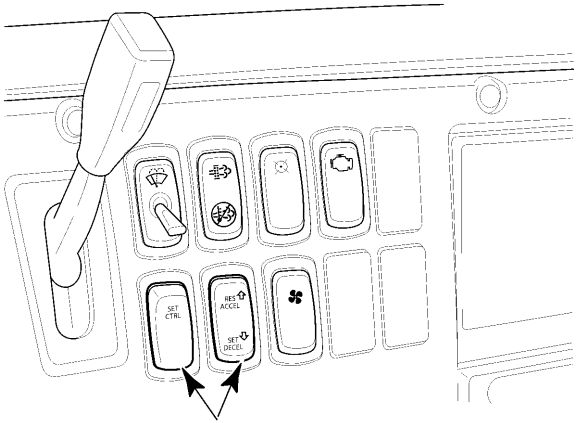

Speed Control Switches

Cruise Control

Engaging Cruise Control

The speed control functions of the vehicle management and control (V-MAC) IV system are very similar to the cruise controls found on most automobiles. The system will maintain a set speed and will allow acceleration and deceleration through the system switches. Cruise control can be enabled or disabled using customer data programming, included in the VCADS software.

To set the cruise control for normal highway operation, the following conditions must be met.

1 Vehicle road speed must be above the customer-programmable speed value 24 – 56 kph (15 to 35 mph).

2 The service and parking brake must not be applied.

3 The clutch must be engaged (pedal released).

Effective August 11, 2008, a change was made to the Vehicle Electronic Control Unit (VECU) software which affects the cruise control. As an added test to ensure that the service brake switch is functional, the vehicle operator must press and release the brake pedal after the engine has been started. This test verifies that the service brake switch is functioning. The test also confirms that the cruise control will deactivate when the service brakes are applied. If the brake pedal is not depressed after starting the engine, the cruise control will not function. This change affects both newly manufactured vehicles, and vehicles on which the VECU has been reprogrammed.

Note: For vehicles manufactured prior to August 11, 2008 the VECU has been reprogrammed.

Once the above conditions are satisfied, activate the cruise control as follows.

1 Move the Speed Control ON/OFF switch to the ON position.

2 At the desired road speed, press and release the SET switch. The vehicle will maintain at the set speed.

Note: Pressing the top of the Speed Control ON/OFF switch activates, or turns the switch ON. Pressing the bottom of the switch deactivates, or turns the switch OFF.

Note: To shift, simply disengage the clutch, change gears, then re-engage the clutch. Cruise control will resume automatically if programmed to Auto Resume. When double clutching, DO NOT bring the clutch pedal to the fully engaged position.

CAUTION

Transmission gear changes must not be made without the use of the clutch while in the cruise control mode. Failure to use the clutch will cause the engine speed (RPM) to increase to the high idle limit, which may cause severe powertrain damage.

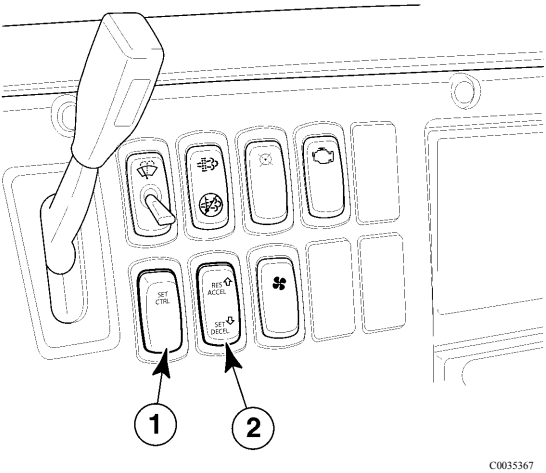

Speed Control On/Off and Set/Decel Switches

Accelerating to a Higher Speed

To accelerate to a higher speed, three methods are available:

1. **Press the accelerator pedal (AP). This method will accelerate the vehicle for as long as the pedal is pressed. (Release the pedal to return to the speed set previously.)**

2. **Press the ACCEL switch.** This method will accelerate the vehicle for as long as the switch is pressed. The new vehicle speed is set when the switch is released. (Press the DECEL switch to decelerate the vehicle. The vehicle will decelerate for as long as the DECEL switch is pressed. The new vehicle speed is set when the switch is released.)

Note: The MAX speed set by the accelerator pedal may be different from that set by the ACCEL switch.

3. The speed can also be “bumped” (known as bump speed) up or down. Tap the ACCEL side to bump up 1.6 kmh (1 mph) or tap the DECEL side to bump down 1.6 kmh (1 mph).

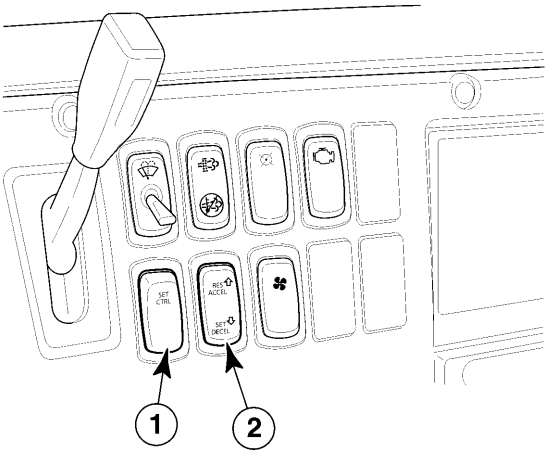

Speed Control On/Off and Resume/Accel Switches

Disengaging Cruise Control

To disengage cruise control, use any one of the following methods:

1 **Apply the service brake.** This method will disengage the cruise control while maintaining the set speed in the system memory. To resume the previously set speed, press and release the RESUME switch.

2 **Disengage the clutch.** This method will disengage the cruise control while the clutch is disengaged and will resume the speed control when the clutch is re-engaged. This programmable option provides for automatic resume after shifting.

3 **Move the Speed Control ON/OFF switch to the OFF position.** This method not only disengages the cruise control but also clears the set speed from the system memory. To reactivate the cruise control, it is necessary to move the switch to the ON position and select a new set speed.

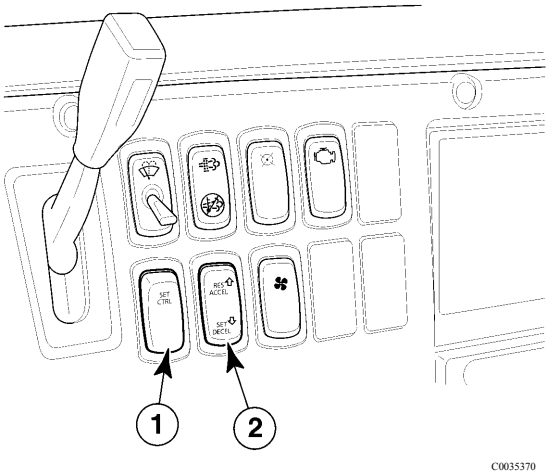

Speed Control ON/OFF Switch

Engine Speed Control

Engine Speed Control Operation

The vehicle management and control (V-MAC) IV system also allows the operator to set and maintain increased engine speeds. The system provides two different speed control functions: Electronic Hand Throttle control and PTO control. electronic hand throttle (EHT) controls engine speed when PTO is not engaged.

Both systems allow two modes of control:

1 Single Speed Control (SSC) increases the engine RPM to a speed preprogrammed into the system memory. This mode is intended for operation of the PTO at maximum efficiency.
2 Variable Speed Control (VSC) allows the driver to set any engine RPM within the preprogrammed low and high limits set in the system memory. This mode is primarily intended for general PTO applications and engine warm-up.

Note: Brake conditions are configurable, but the standard setting is park brake on and service brake off to engage.

Single Speed Control (SSC)

To use single speed control functions, the following conditions must be met:

1 For power takeoff (PTO) operation, the PTO must be engaged. For electronic hand throttle (EHT) operation, the service brake must be OFF.
2 The clutch must be engaged (not pressed).

To activate SSC, move the Speed Control switch to the ON position, then press and release the SET switch. The engine speed (RPM) will jump to the preprogrammed speed. SSC can also be programmed for Auto Set mode. When enabled, simply move the Speed Control switch to the ON position and engage the PTO or activate a customer-defined switch (usually setting the park brake). Engine speed will go to the preprogrammed speed.

Variable Speed Control (VSC)

To use the variable speed control functions, the following conditions must be met:

1 The clutch must be engaged.

2 The park brake must be set.

To activate VSC, move the Speed Control switch to the ON position. Increase engine RPM using the accelerator pedal (AP). At the desired engine speed (RPM), press and release the SET switch. This speed setting will be maintained.

To increase the RPM, press and hold the ACCEL switch until the desired speed is attained. Or, press the accelerator pedal until the desired speed is attained and then press and release the SET switch.

To decrease engine RPM, press and hold the DECEL switch until the desired speed is reached and then release the switch.

RPM can also be “bumped” up or down. Tap the ACCEL side to increase RPM, or the DECEL side to decrease RPM by the customer-programmed amount (default setting is 50 RPM).

VSC can also be programmed for Auto Set mode. When enabled, simply move the Speed Control switch to the ON position and activate a customer-defined switch (usually setting the parking brake). The RPM will go to the preprogrammed minimum speed.

The “ramp rate” for EHT, and for each PTO in PTO control, can be programmed to increase and decrease in speed to a customer-specified speed by using the ACCEL/DECEL switch.

Disengaging SSC or VSC Functions

To disengage the speed control settings, use any one of the following methods:

- Move the Speed Control switch to the OFF position.
- Disengage the clutch.
- Apply the service brakes.
- Release the parking brake.

Note: When the PTO is engaged on vehicles equipped with SSC, the SSC will take precedence over the VSC.

Note: To reactivate the VSC to the previously set speed, press and release the RESUME switch. If the Speed Control ON/OFF switch is used to disengage the VSC, a new speed must beset. The RESUME switch will work only if the VSC was disengaged by using the clutch or service brake.

Maximum Engine Speed Limit

This mode allows the maximum engine speed (RPM) to be limited, based on preprogrammed speeds, when PTO or Electronic Hand Throttle (EHT) controls are engaged. The engine will not operate beyond these speeds when the control (PTO or EHT) is engaged. The operator has no control over this operation, and cannot change or override these preset limits.

Vehicle Limiting Speed

These programmable modes allow the maximum vehicle speed to be restricted to a preprogrammed speed limit. The driver has no control over this operation, and cannot change or override these preset limits. Another feature of the vehicle limiting speed function is “Lower Gear Road Speed Limit Feature Activation.” This option, when selected, will limit vehicle speed in gears below top gear to a value less than the top gear road speed limit. The purpose of this option is to encourage the operator to operate the vehicle in top gear, where the optimum fuel economy can be achieved.

There are two programmable “top gear” Vehicle Limiting Speeds — one for cruise and the other for use with the accelerator pedal (AP).

Vehicle Limiting Speed can also be limited to separate values for each power takeoff (PTO).

Note: The vehicle limiting speed in cruise control mode can be lower or equal to the vehicle limiting speed in accelerator pedal mode.

High Acceleration Control

Under light load, high vehicle acceleration conditions, the maximum engine acceleration may be limited to prevent wheel slippage. Engine speed (RPM) will be limited to a value just above the rated speed of the engine.

This condition should not prevent the driver from shifting to the next gear. If the engine is limited, it is an indication that wheel slippage conditions may be present and that the driver should drive less aggressively under these lightly loaded conditions.

BRAKE OPERATION

Air Brake System

This chassis features a dual braking system which has two complete air circuits: a primary circuit for rear brakes and a secondary circuit for front brakes. Each circuit receives air from separate reservoirs. Although there are two air circuits, they operate as one brake system through the dual-circuit treadle valve. This provides the driver with easy, graduated control when applying and releasing the brakes.

The air pressure in the two circuits is monitored by gauges on the instrument panel. When air pressure drops below 517 ± 34 kPa (75 ± 5 psi) in either system at any time other than vehicle startup, pull to the side of the road and determine the problem. If air pressure continues to drop below 276 ± 34 kPa (40 ± 5 psi) in BOTH systems, spring brakes will automatically apply. The Low Air Pressure Warning indicator and buzzer will be activated if low air pressure occurs in either circuit.

In tractor applications, the Trailer Supply Valve (red octagonal knob) will immediately pop out in the event of a trailer breakaway or sudden trailer air line failure, which will apply the trailer spring brakes. In the event of a slow leak in the trailer air system, the trailer supply valve will pop out when system Pressure reaches 483 kPa (70 psi). This protects the tractor air system from further pressure loss.

If the Trailer Supply Valve is held in, in an attempt to override application of the trailer spring brakes, the Park Brake Valve (yellow diamond knob) will automatically pop out and apply the parking brakes when system pressure drops to approximately 138–207 kPa (20–30 psi).

The air brake system consists of three main elements:

- The compressor, governor and reservoirs supply and store the air pressure.
- The brake application valve controls the brake application pressures.
- The brake chambers control the brake mechanism.

Air Brake Operation

CAUTION

Avoid sudden stops. Constant, sudden stops may negatively affect the performance of braking and driving parts.

When slowing for a stop, leave the clutch engaged for as long as possible to use the braking effect of the engine. When forward speed has dropped to a little above idling speed, push clutch pedal in and brake to a complete stop.

Automatic Slack Adjusters

Automatic slack adjusters are designed to automatically maintain proper brake chamber pushrod travel and compensate for brake lining wear during normal use. Manual adjustment of an automatic slack adjuster should never be performed except when performing brake or wheel service (such as backing off the brake shoes for wheel removal, brake shoe relining/replacement, brake drum reconditioning, etc.).

When pushrod travel exceeds specifications (as given in the "BRAKE ADJUSTMENT" section of the *Maintenance and Lubrication Manual,*) on a vehicle equipped with automatic slack adjusters, a mechanical problem with the slack adjuster, brake components or improper installation of the slack adjuster is indicated. If brakes are found to be out of adjustment, the vehicle must be taken to the nearest repair facility as soon as possible to have the problem investigated and corrected.

⚠ DANGER

Automatic slack adjusters should not be manually adjusted in an effort to correct excessive pushrod stroke, because this condition indicates that a problem exists with the automatic adjuster, with the installation of the adjuster, or with related foundation brake components, which manual adjustment will not fix. Manual adjustment of automatic slack adjusters is a dangerous practice that could have serious consequences, because it gives the operator a false sense of security about the effectiveness of the brakes, which are likely to go out of adjustment again soon.

Parking Brake System

Spring-type parking brakes are standard on all single and tandem rear axles.

The spring brake system consists of an air cylinder with heavy springs, which is integrated with the spring brake air chamber. When there is no pressure in the air chamber, the springs expand (causing a brake application). When air pressure is applied to the air chamber, the springs are compressed (releasing the brakes).

Parking Brake Operation

The parking brakes can be applied and released from the cab, using the hand-operated push/pull control valve with the yellow diamond knob.

In the event of a significant air pressure loss in both the air brake systems, the spring brake air chambers will be automatically exhausted (applying the brakes). The parking brakes will remain applied until enough pressure is available to recompress the springs.

Parking

WARNING

- NEVER use the trailer parking brake system alone.
- NEVER use the tractor parking brake system alone.
- ALWAYS use the tractor and trailer parking brake systems together.
- ALWAYS apply the parking brakes when parking and make sure the parking brakes are holding the vehicle from moving before leaving the driver's seat.
- When parking on a grade, use wheel chocks under the rear wheels or turn the front wheels to the curb. Do not leave diesel engine vehicles in gear; if the vehicle should move, the engine may start by heat of compression.
- Check brake adjustment frequently to be sure that the brakes will lock and hold the vehicle when parked.
- Do not use the parking brake to slow or stop the vehicle when in motion, except in an emergency.
- Do not use hand control valve for parking.

Anti-Lock Brake System (ABS)

ABS Operation

When operating an ABS-equipped vehicle, the following guidelines should be used.

- Apply the brakes as normal. If the anti-lock brake system begins to function, maintain brake pressure. Do NOT release the brakes.
- Avoid rapidly pumping the brakes. The anti-lock brake system automatically applies and releases the brakes up to five times per second.
- When towing a trailer, watch the trailer through the mirrors. Adjust brake application as necessary to keep the combination in a straight line. Make sure the trailer follows the tractor properly.
- An amber trailer ABS lamp on the instrument panel will illuminate for several seconds at start-up during an initial function check. When a trailer ABS fault occurs, the lamp will remain illuminated until the fault is cleared. If there is a loss of communication between the tractor and trailer, the lamp will blink three times. Refer to “Anti-Lock Brake System (ABS)”, page 120 for more information.

MACK Road Stability Advantage (If Equipped)

The MACK Road Stability Advantage (RSA) is an available option on certain MACK highway tractors and straight trucks. The RSA system, which is based on the Bendix ABS-6 Advanced with ESP (Electronic Stability Program) System, aids the operator in maintaining control of the vehicle during jackknife or rollover events by applying select brakes and reducing engine power as required by the specific situation. This system is integral with the anti-lock brake system and uses the standard ABS components (such as wheel speed sensors and modulator valves). Additionally, a steering angle sensor and a yaw rate/lateral acceleration sensor package provides information concerning vehicle movement to the electronic control unit.

Before delivery to the end user, a parameter set tuned for the specific vehicle and the VIN for the chassis are loaded into the ABS electronic control unit. This ensures optimal performance of the MACK RSA system for the specific vehicle.

Alterations and Modifications

Alterations and Modifications to RSA-equipped vehicle, are **NOT ALLOWED**

- Wheel base changes (either lengthening or shortening)
- Addition of an auxiliary lift axle or removal of factory-installed lift axle
- Major body changes (conversion of tractor to truck or an axle)
- Suspension or steering system components modification
- Axle ratio changes
- Axle configeration (ex. adding or removing)
- Trailer connection (ex. adding or removing)

These changes will adversely affect performance of the road stability system. Should such changes be unavoidable, the system must be disabled by having a qualified technician replace the Bendix Advanced EC-60 (ABS control unit with ESP) with a Bendix Premium EC-60 ECU (ABS control unit without ESP).

⚠ DANGER

Failure to disable the RSA system on a vehicle that has been modified or altered will result in serious vehicle braking and performance issues, including unnecessary system interventions. These interventions could lead to a loss of vehicle control.
In addition to disabling the system, any cab labels, such as warning and caution labels relating to the Bendix ABS-6 Advanced with ESP system located on the sun visor must be removed, and notations must be made in the operators manuals so that the vehicle operator has a clear understanding as to which ABS options are installed on the vehicle.

The location of the yaw rate/lateral acceleration sensor must not be altered.

Aftermarket steering wheels must not be used. Only OEM-supplied replacement steering wheels should be used. During any procedure that involves removal and reinstallation or replacement of the OEM steering wheel, care must be used not to crush or damage the steering angle sensor which is mounted on the steering column.

Increasing steering angle beyond maximum is NOT permitted. However, steering angles may be increased to the maximum factory settings if required. Refer to the applicable steering system service manual for detailed information.

The steering angle sensor must be recalibrated following any adjustments or changes to the steering system.

Changing steer axle and/or drive axle track width is permissible.

Changing front or rear axle brake drums to drums having a different flange thickness is permissible.

The ABS with ESP ECU requires a precise rolling circumference ratio between the front steer axle and the rear drive axles for optimum performance of the system. For this reason, the system continuously calculates the precise ratio and stores the information in the ECU memory.

CAUTION

Effectiveness of the RSA system relies on the accuracy of the reported vehicle speed. If major changes to tire sizes are made, such that changes to the vehicle speedometer/odometer settings are required, the ABS with ESP, the ECU must be reprogrammed with the new values by a qualified technician.

Vehicle Modifications

Alterations to the vehicle, such as changes to the wheel base (either lengthening or shortening), the addition of an auxiliary lift axle or removal of a factory-installed auxiliary lift axle, or major body changes, such as conversion of a tractor to a truck or an axle, suspension or steering system component modification, are NOT allowed, as these changes will adversely affect performance of the road stability system. Should such changes be unavoidable, the system must be disabled by having a qualified technician replace the Advanced EC-60™ ECU with a Premium EC-60™ ECU.

WARNING

Failure to disable the RSA system on a vehicle that has been modified will result in serious vehicle braking and performance issues, including unnecessary system interventions. These interventions could lead to a loss of vehicle control.
In addition to disabling the system, any cab labels, such as warning and caution labels relating to the Bendix® ABS-6 Advanced with ESP® system located on the sun visor must be removed, and notations must be made to the operator's manuals so that the vehicle operator has a clear understanding as to which ABS options are installed on the vehicle.

Location of the yaw rate/lateral acceleration sensor must not be altered. When servicing is required, the sensors must be replaced with identical components using the original equipment mounting brackets and tightening torque specifications (20 N.m [15 lb-ft]).

The following additional changes MUST NOT be made to an "as-built" vehicle:

- Changes to maximum steering angle (to the left or right)
- Changes to steer axle and/or drive axle track width
- Changing the front and/or rear brake drums to drums having a different flange thickness

Tyre Size Calibration

The ECU requires a precise rolling circumference ratio between the front steer axle and the rear drive axles for optimum performance of the system. For this reason, the system continuously calculates the precise ratio and stores the information in the ECU memory.

CAUTION

Effectiveness of the RSA system relies on the accuracy of the reported vehicle speed. If major changes to tire sizes are made, such that changes to the vehicle speedometer/odometer settings are required, the Advanced EC-60™ ECU must be reprogrammed with the new values by a qualified technician.

Enhanced Stability Program

Enhanced Stability Program (ESP) is an optional system that uses existing ABS and ATC components with the addition of electronic sensors and brake valves. The system will automatically apply and release individual brakes to improve vehicle control when extreme conditions are detected. In the event a pending rollover situation is sensed, the system applies all brakes to reduce vehicle speed to lessen the possibility of rollover. Please refer to the applicable vendor manual for more information.

Precautions When Installing Electrical Equipment

Connecting electrically powered or electrically controlled equipment to the vehicle may cause interference with other vehicle components (e.g., the ABS system). The amount of interference will depend on the operating frequency of any new signals and the degree to which transient signals are coupled into the vehicle system.

Note: Whenever new electrical equipment is installed, it is the obligation of the installer to ensure that the new equipment does not interfere with the proper operation of all other electrical systems on the vehicle.

If new electrical equipment is installed, a vehicle checkout procedure should be performed.

1 Perform the checkout procedure under the following conditions:
   - Engine running
   - Brake system air pressure in operating range
   - Vehicle stationary
   - Brake pedal fully depressed
2 Operate the new equipment under all starting, running and shutdown conditions.
3 Listen for signs of air exhausting from ABS modulator valves (which is an indication of an interference condition).
4 Correct all interference conditions before operating the vehicle.

   Note: The center pin of the standard seven-pin trailer electrical connector has been standardized as the dedicated connection for uninterrupted power for trailer ABS. This pin is always hot when the tractor ignition is turned on.

⚠ DANGER

Some trailers manufactured prior to the trailer ABS regulations may use the center pin to power certain trailer auxiliary equipment. The possibility exists that this auxiliary equipment may be unexpectedly activated by the truck or tractor electrical system, resulting in personal injury or damage to equipment. Caution must be used when connecting the trailer electrical connector to ensure that power to the center pin will not unintentionally activate any trailer auxiliary equipment.

Automatic Traction Control (ATC) (If Equipped)

Automatic Traction Control (ATC) provides improved traction on slippery surfaces by reducing wheel spin. The system operates automatically as follows:

- If a drive wheel starts to spin, ATC applies air pressure to the brake of the spinning wheel. Doing this transfers engine torque to the wheels that have better traction.
- If all drive wheels are spinning, ATC limits engine torque which, in turn, reduces wheel spin to provide improved traction.

When ATC automatically becomes active, the ATC indicator lamp turns on to alert the operator. The lamp turns off when the wheel(s) stops spinning.

Heavy Mud/Snow Function (If Equipped)

ATC may also include a heavy mud/snow function which allows the operator to activate ATC when additional traction is needed. This function is activated with the ATC mode switch which is located on the dashboard. The heavy mud/snow function increases available traction by increasing permissible wheel spin.

When the operator selects the heavy mud/snow function, the ATC indicator lamp blinks continuously. The ATC lamp stops blinking when the ATC mode switch is turned off.

GOOD DRIVING HABITS

Weight Ratings

Do not overload the vehicle. The gross vehicle mass (GVM) and gross combination mass (GCM) for a given model may vary due to the tyres, wheels/rims, suspensions, axles and/or frame of a specific vehicle. For safety and durability reasons, do not exceed the GVM and GCM's listed on your vehicle's Certification Label.

Instruments

Glance at the instruments frequently. When problems develop, take prompt steps to correct them.

Shutting Down the Engine

After a hard run, allow the engine to idle three minutes before shutdown to stabilize the temperature of all engine parts. Quick shutdowns can cause engine damage and prevent the turbocharger from being properly lubricated. For additional options, see “Shutting Down the Engine”, page 132.

General Observation

Make it a habit at stops to walk around your truck and look for fuel, oil and coolant leaks. Also check the condition of tyres, wheel nuts, springs and lights. Stop trouble before it stops you!

STARTING THE VEHICLE

General Information

Before putting the key in the ignition switch, set the parking (spring) brake, disengage the clutch (if equipped) and put the transmission in NEUTRAL.

CAUTION

Do not engage the starting motor too soon after an incomplete start of the engine, or the starter may be damaged. Wait at least five seconds before attempting to restart the engine.

CAUTION

Do not rev the engine at start-up. Turbocharger damage may result because lubricants need time to establish a film between moving parts.

CAUTION

If the engine does not start immediately, limit cranking periods to 30 seconds to avoid overheating and damaging the starter.

WARNING

Make sure clutch is depressed and transmission is in neutral before engaging the starter! Failure to do so could cause the vehicle to jerk forward unexpectedly causing serious damage or bodily harm.

Starting MP Engines

Use the following procedure:

1. Crank the engine until it starts.

Note: Do NOT apply the throttle pedal during engine cranking.

CAUTION

DO NOT engage the starting motor too soon after an incomplete start of the engine, or the starter may be damaged. Wait at least five seconds before attempting to restart the engine.
If the engine does not start immediately, limit cranking periods to 30 seconds to avoid overheating and damaging the starter.
DO NOT rev the engine at start-up. Turbocharger damage may result. Lubricants need time to establish a film between moving parts.

2. After the engine has started, warm the engine until the coolant temperature reaches normal operating range (77°C to 107°C; 170°F to 225°F). Once the engine reaches this temperature, it can be operated in a normal fashion.

Note: Warm-up time can be reduced by increasing engine idle speed between 1000 and 1200 rpm by either applying the throttle pedal or by using the Electronic Hand Throttle feature (if equipped).

Note: For bobtail or unloaded applications, the engine may be warmed up by moving the vehicle with "light" throttle application after only one minute of idle.

Priming the MP Fuel System

DANGER

Before working on or inspecting a vehicle, set the parking brakes, place the transmission in neutral and block the wheels. Failure to do so can result in unexpected vehicle movement and can cause serious personal injury or death.

DANGER

To avoid potential fire hazard, do not service any part of the fuel system while smoking or in the presence of flames, sparks or hot surfaces, or when working on an operating engine. Failure to follow these precautions can result in fire. To guard against burns from direct contact with hot fuel, wear adequate protective clothing (face shield, heavy gloves and apron, etc.) when working on a hot engine.

WARNING

DO NOT work near the fan with the engine running. The engine fan can engage at any time without warning. Anyone near the fan when it turns on could be seriously injured. Before turning on the ignition, be sure that no one is near the fan.

1 Unlock the hand primer pump by pushing the pump handle in and turning it counterclockwise.

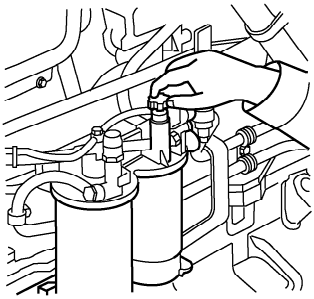

C0032892

2 Pump the hand primer until the force of pumping increases.

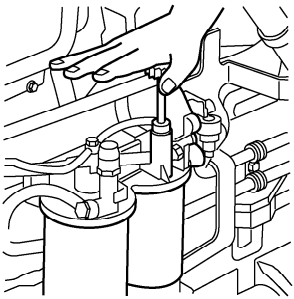

C0032893

Note: When the fuel system is empty, 200 or more pump strokes may be needed to properly prime the system.

Note: There are NO bleed nipples to be opened in order to prime the fuel system.

3 Lock the hand primer pump by retracting it into the housing and turning it clockwise.

4 Start the engine and run it at an increased idle speed for approximately 5 minutes to remove any remaining air in the system.

5 Check the fuel system for leaks.

Note: If the engine does not start following this procedure, contact your local MACK dealer.

Engine Warm-Up

CAUTION

Idling the engine unnecessarily for long periods of time wastes fuel and fouls injection nozzles. Unburned fuel causes carbon formation and oil dilution. NEVER race an engine during warm-up.

Engine damage can occur if the engine is not warmed up to a minimum operating temperature of 77°C (170°F) before putting the vehicle into full operation.

Heavy-duty diesel engines are designed to operate at optimum efficiency when they are running loaded at (or very near) normal operating temperature, where efficient combustion takes place. When the engine is operated unloaded, lightly loaded (i.e., stop-and-go operations, PTO operations, or periods of extended engine idling) or in cold weather conditions, normal operating temperature may not be achieved or maintained. As a result, carbon and/or varnish build-up will occur and lubricating oil will become contaminated with combustion by-products.

Cold weather operations place added demands on a diesel engine. When operating in cold climates (particularly in stop-and-go operations, PTO operations or periods of extended engine idling), minimum operating temperature must be maintained to prevent engine damage resulting from valve varnishing and carbon build-up.

Note: Many accessories are available for cold weather operations. Refer to the *Maintenance and Lubrication Manual* for additional information concerning cold weather accessories.

Engine Idling

Idling the engine unnecessarily for long periods of time wastes fuel, fouls injector nozzles and can lead to valve carbon and varnish deposits. Unburned fuel causes carbon formation and oil dilution. Shut the engine down when prolonged loading or unloading of cargo is required.

When starting a cold engine, or if the vehicle has been parked and the engine coolant has fallen well below normal operating temperature, a fast idle speed of approximately 1200 rpm should be maintained to help the engine warm up more quickly.

Shutting Down the Engine

Standard Shutdown

After a hard run, allow the engine to idle three minutes before shutdown in order to stabilize the temperature of all engine parts. Quick shutdowns can cause engine damage and prevent the turbocharger from being properly lubricated.

CAUTION

Operating the engine below normal operating temperature for extended periods of time will allow varnish/carbon deposits to build up on the valve stems and guides. This will cause the valves to stick in the guides after the engine has been shut down and could result in push rod damage when the engine is restarted. If the engine has been operated below normal operating temperature for an extended period of time (and the odor of raw diesel fuel is detected or unburned fuel can be seen at the exhaust stack), the engine should be operated under "load" until normal operating temperature is achieved BEFORE shutting down the engine.

V-MAC IV Shutdown Option: Idle Cooldown

This feature provides a means of cooling down the engine and turbocharger. If the idle cooldown option is enabled using VCADS Pro MACK Support Software and the system senses that the turbocharger may be hot, the engine will not shut down when the vehicle stops, the parking brake is set and the key switch is turned to the OFF position. This feature allows the driver to lock the truck and walk away while still providing adequate cooldown. All switched accessories will then turn off once the engine has stopped. If this option is set, the engine can be shut down immediately by cycling the key switch.

The idle cooldown timer is set to 3.5 minutes as soon as the engine load exceeds 25%, provided that the engine has been running at least 60 seconds. After the load drops below 25%, the timer begins counting down. If the key switch is turned off before the timer expires, the engine will continue to run until the timer reaches zero.

If a pyrometer is installed, the idle cooldown function will use the pyrometer reading, shutting the engine down when the temperature drops below 232°C (450°F), or after 3.5 minutes, whichever comes first.

The default for this option is set at OFF from the factory.

Note: The parking brake must be on for the idle cooldown function to work.

Engine Shutdown System (If Enabled)

The engine is protected by a system that prevents engine damage by shutting down the engine whenever a potentially damaging condition (such as loss of oil pressure, loss of coolant or engine overheating) is detected. If the system detects such a condition, a warning indicator light and an alarm will alert the driver before the engine actually shuts down.

Engine Shutdown Indicator — During normal operating conditions, this indicator should illuminate as soon as the key switch is turned on. After the engine is started, it will remain illuminated until engine oil pressure reaches normal idling range. During shutdown, if the system detects a condition that could lead to engine failure, the Engine Shutdown indicator will illuminate prior to engine shutdown.

COLD WEATHER OPERATION

Cold Weather Starting Tips

DANGER

Do NOT, under any circumstances, use starting fluid (ether) on engine whether or not equipped with an inlet manifold air heater element. An explosion can occur.

- Save the batteries. Do not overtax the batteries by cranking the starter for more than 30 seconds without interruption. Allow about two minutes between attempts at starting the vehicle; this allows the starter to cool and the batteries to re-energize.

  Note: Always make sure that the battery is fully charged in cold weather.
- Use the correct grade of oil for the prevailing winter temperature.
- Drain the fuel tanks and filters regularly to prevent water accumulation in the fuel system. This accumulation can freeze in fuel tanks, fuel lines and filters.

WARNING

Do NOT — under any circumstances — add gasoline, alcohol, used oil or additives with metallic particles to the fuel.

COUPLING A TRAILER

1. Position the tractor directly in front of the trailer.
2. Back the trailer slowly until the fifth wheel just contacts the trailer plate.
3. Place the transmission in neutral and apply the parking brakes.
4. Connect the trailer glad hands and electrical connector.

CAUTION

Make sure the trailer air lines and the trailer electrical cord are properly supported so they will not be pinched or caught while the tractor is being backed under the trailer.

5. Check that the fifth wheel height matches the height of the underside of the trailer. If the trailer is too high, use the landing gear to lower the trailer until fifth wheel and trailer height match. If the vehicle is equipped with an air suspension and the trailer is too low, use the air suspension control switch to exhaust air from the suspension air bags until fifth wheel and trailer height match.

CAUTION

Failure to match fifth wheel height with trailer height will result in the trailer being improperly connected.

6. Back under the trailer slowly until the trailer king pin engages. Back slowly to avoid hitting the king pin too hard, and stop as soon as the king pin is locked into the fifth wheel.
7. If equipped with an air suspension, use the air suspension control switch to reinflate the suspension air bags.
8. Raise the trailer landing gear slightly off the ground.
9. With the trailer parking brakes applied, pull the tractor ahead slightly to ensure that the trailer is locked onto the tractor.
10. Push the trailer air supply valve (red octagonal knob) in to supply the trailer system with air pressure. With the air system at normal operating pressure, check the trailer air brake system for excessive leakage and proper operation.
11. Inspect the coupling to ensure the trailer is properly connected. Make sure there is no space between the fifth wheel and the trailer plate and that the fifth wheel jaws have closed around the shank of the king pin. Check that the locking lever is in the "lock" position and make sure the safety latch is in position over the locking lever.
12. After ensuring that the trailer is properly connected, raise the landing gear to its maximum height.
13. If wheel chocks were placed at the trailer wheels, remove the chocks and store.

CAUTION

If equipped with an air suspension, do NOT operate the vehicle with the suspension air bags deflated. Always reinflate the suspension air bags after coupling or uncoupling a trailer.

UNCOUPLING A TRAILER

1 Park the tractor/trailer combination on a level surface. Make sure the parking surface will support the weight of the trailer, and make sure that the tractor is lined up straight with the trailer. Pulling out from under a trailer at an angle may damage the landing gear.

2 Pull the trailer air supply valve (red octagonal knob) out to apply the trailer parking brakes.

3 Back the tractor slightly to ease pressure on the fifth wheel jaws. Apply the tractor parking brakes while still backing against the king pin so the combination will be held with pressure off the fifth wheel jaws.

4 Block the trailer wheels to prevent the trailer from moving.

5 Lower the trailer landing gear until the gear makes firm contact with the ground.

6 Disconnect the glad hands and the trailer electrical connector. Connect the glad hands to the dummy couplers at the back of the tractor and install the trailer electrical connector into the receptacle provided at the back of the cab.

CAUTION

Make sure the trailer air lines and electrical cord are properly suspended so they will not become tangled or damaged while the tractor is being driven.

WARNING

Keep legs and feet clear of the tractor rear wheels to avoid serious injury should the vehicle move when the fifth wheel is unlocked.

7. Unlock the fifth wheel.

8. Pull the tractor ahead slightly (approximately twelve inches) so that the king pin disengages the fifth wheel jaws.

9. If equipped with an air suspension, use the air control switch to exhaust the air from the suspension air bags.

10. Pull the tractor ahead until the fifth wheel is out from under the trailer. Stop the tractor with frame under the trailer. This prevents the trailer from falling should the landing gear collapse or sink into the ground.

11. Place the transmission in neutral and apply the parking brakes.

12. Inspect the parked trailer to make sure the ground is supporting the trailer and the landing gear is not damaged.

13. If equipped with an air suspension, use the air suspension control switch to reinflate the suspension air bags.

14. Release the parking brakes and drive the tractor forward until the tractor is clear of the trailer.

⚠ CAUTION

If equipped with an air suspension, do NOT operate the vehicle with the suspension air bags deflated. Always reinflate the suspension air bags after coupling or uncoupling a trailer.

MOVING THE VEHICLE — GENERAL INFORMATION

Braking

Avoid sudden stops. Constant sudden stops may negatively affect braking performance and driving parts. When slowing, leave the clutch (if equipped) engaged as long as possible to use the braking effect of the engine.

CAUTION

When using the braking effect of the engine, final gear selection is critical. If gear selection is too high, the vehicle will buck which could cause loss of control.

Shifting

Operate in a gear low enough to allow the engine to accelerate to (or maintain) governed engine speed when applying full throttle. Allowing the engine to lug causes excessive strain on the engine, which could damage pistons, rings, cylinder walls, or bearings. However, be sure not to overspeed the engine.

DANGER

Always select the proper gear ratio BEFORE descending a grade (to avoid a runaway vehicle and to stay within safe and legal speed limits). Do NOT coast down hills. Gear ratios should be selected to allow the engine to operate between peak torque and rated speed.

CAUTION

Do not permit a load to drive the engine above governed speed. When descending steep grades, use lower gears and watch the tachometer. Overspeeding will cause severe drivetrain damage and eventually destroy the engine.

CAUTION

Running the engine at a speed that is too low for the load (or grade of the road) can cause damage to the drivetrain.

Shifting at the proper time will result in increased fuel efficiency, as well as a decrease in costly repairs. Remember that once the engine falls below peak torque, both torque and horsepower will drop off very rapidly. Before this happens, downshift to the next lower gear.

For vehicles with transmissions that have extreme reduction gearing coupled with high rear-axle loads, a torque-limiting device should be used. This device limits the amount of fuel that can be delivered to the engine and prevents overloading of drivetrain components while in extreme reduction gears.

Always use the same gear going downhill as uphill. This will reduce brake wear and prevent damage to the engine from overspeeding.

Engine Temperature

Before entering high-speed traffic conditions, allow the engine to reach normal operating temperature. A normal operating range is between 77°C and 104°C (170°F and 220°F) for stationary vehicles

.

Clutch (If Equipped)

To avoid shock damage, release the clutch pedal smoothly, without shock-loading the driveline (especially on grades while carrying heavy loads). Do not ride the clutch pedal. Premature wear of the clutch facing and release bearing may result.

CAUTION

Always use the lowest drive gear combination to start the vehicle moving to avoid premature clutch failure.

1 To move the vehicle, start the engine and wait until it reaches operating temperature.

2 Disengage the clutch by pushing the pedal to the floor.

3 Shift the transmission into first or LO gear (see "Transmission Shifting Instructions" for specific procedures).

4 Release the parking brake.

CAUTION

If the Parking Brake indicator is on, do NOT attempt to move the vehicle because driveline damage may result.

5. Engage the clutch smoothly by allowing the clutch pedal to come up slowly. For comfortable starts, do not apply the accelerator until the clutch begins to engage.

CAUTION

Never allow your foot to ride the clutch pedal when the clutch is engaged. This will cause premature failure and increased clutch wear.

6. As the vehicle gains speed, continue shifting until the transmission is in the highest gear possible (with engine in operating range).

Note: When the vehicle is equipped with a torque-limiting device, the engine must be warmed up to operating temperature before attempting to move in either REVERSE or LO-LO range.

Clutch Brake Operation

The clutch brake is designed to stop the rotation of the transmissions input shaft while the truck is standing still. This makes shifting into first or reverse gears easier. Inadvertent use of the clutch brake will make shifting from a gear difficult (i.e., shifting from reverse with the clutch brake applied and the vehicle is stationary).

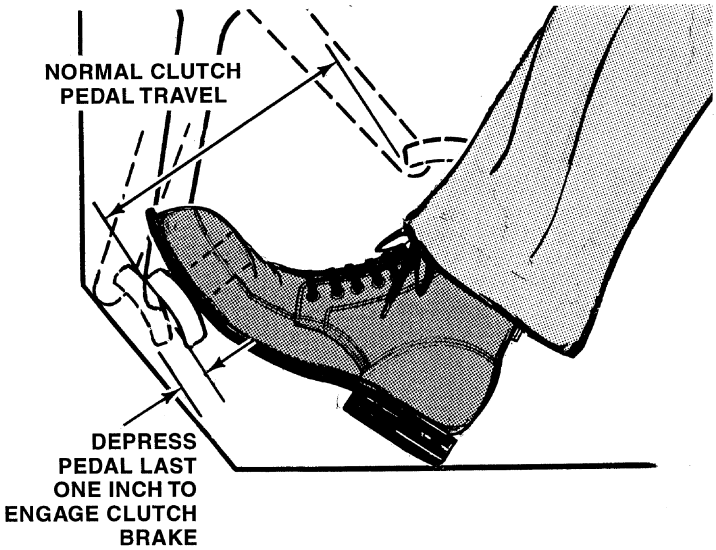

C0032894

1 With the vehicle standing still, apply the clutch brake by pushing the clutch pedal all the way to the floor; the clutch brake is applied when the clutch pedal is fully depressed (the last one inch of travel past normal pedal travel).

   Note: When the clutch is disengaged, a slight but definite resistance to clutch pedal downward travel will be felt in the last one inch.

2 Shift the transmission into first or reverse gear, engage the clutch and accelerate. The clutch brake is only to be used when the vehicle is stopped and is shifted into first or reverse gears. It is not designed to be used as an upshifting aid.

CAUTION

Clutch brake damage may result if used while the vehicle is in motion. The clutch brake must NOT be used when making a downshift or an upshift.

Double-Clutching

Double-clutching is a way to bring the speed of the transmission gears into synchronization so that the shift can be made without a clash. The engine is used to speed up the countershaft for a downshift and to slow it down for an upshift.

Note: For all nonsynchronized transmissions, double-clutching is necessary on downshifts and upshifts. It is advisable to use the torque-limiting clutch brake to engage first and REVERSE gears and to double-clutch for gear ratio changes.

1 Depress the clutch pedal and shift to NEUTRAL.

2 Release the clutch pedal and increase (downshift) or decrease (upshift) engine speed until it roughly corresponds to the road speed of the desired gear.

3 Depress the clutch pedal and complete the shift. Then release the clutch pedal.

POWER TAKE-OFF (PTO) OPERATION

If the vehicle is equipped with a Power Take-Off (PTO) unit, be sure to read the following section.

PTO Precautions

DANGER

Power Take-Off (PTO) units and related equipment can be very dangerous. Any PTO installation, repair or replacement should include a warning indicator light which indicates PTO engagement. The light must be located close to the PTO control and clearly visible to the operator.

DANGER

PTO units are driven by engine or drivetrain components (flywheel, crankshaft, transmission). Do not attempt to service the PTO and related units unless the engine is shut down.

DANGER

Always keep body parts and loose-fitting clothing out of the range of drivetrain components, or personal injury may result.

DANGER

Always be aware of the current PTO status (engaged or disengaged) and the position of the vehicle body (dump body controlled by PTO, etc.). Be sure to disengage the PTO when not in use.

PTO Classification

Rear-mounted PTO units, for MACK transmissions, are categorized according to operation.

Intermittent Service — The PTO unit is operated, under load, for less than seven minutes and then allowed to cool before it is operated again.

Note: If a PTO unit is operated for less than seven minutes but is "not" allowed to cool down before operating again, it is considered in Continuous Service.

Continuous Service — The PTO unit is operated, under load, for seven minutes or more.

Note: Rear-mounted PTO units operating under the Continuous Service guideline must not be run at more than 70% of the PTO output-rated torque/horsepower.

Side-Mounted PTO Locations

The first choice location for Side-Mounted PTOs is either of the PTO openings on the main box.

The second choice, which is the compound PTO opening, is restricted to those applications specifically requiring multi-speed PTOs with reverse capability, such as some mechanical winches or unique speed or multiple PTO requirements. However, a word of caution is in order when using these locations. Operators should be trained to understand and follow the proper operating procedures as described in the cab instructions, and avoid using the neutralizing feature as a power disconnect for vehicle propulsion.

PTO Operating Procedures

Specific PTO operating procedures are described at the end of applicable transmissions in the following section.

TRANSMISSION SHIFTING INSTRUCTIONS

CAUTION

The maximum safe operating oil temperature for MACK transmissions is 121°C (250°F) for mineral-based oil, and 148°C (300°F) for synthetic-based oil. Continued operation with oil above this temperature will result in rapid deterioration of the oil's lubricating properties and is NOT recommended.

CAUTION

To avoid transmission damage, the vehicle must be completely stopped before being shifted from REVERSE to any forward speed (and vice versa).

CAUTION

Never coast with the transmission in neutral. Never coast with the clutch depressed.

Shifting Instructions for Allison Automatic Transmissions

Please refer to the applicable Allison automatic transmission operator's manual provided with your vehicle for complete shifting and operating instructions.

Shifting Instructions for *m*DRIVE Transmissions

Please refer to the applicable *m*DRIVE Transmission Operator's Handbook provided with your vehicle for complete shifting and operating instructions.

MACK T310 Shifting Instructions

CAUTION

Make sure air pressure is at least 620 kPa (90 psi) and unit is warmed before making range shifts. Always start in LO range. This also applies to dynamometer testing. When the truck is stationary, do NOT shift into HI range and then start moving the truck. Otherwise, damage to the synchronizer may result.

The T310 unit is a range-shifted transmission which has 10 forward "highway" speeds. This transmission features a LO and HI auxiliary compound section controlled by an air shift range selector located on the shift lever. The compound section is equipped with a synchronizer to facilitate LO-/HI- range shifting.

The LO range provides five low ratios. Never attempt to move the vehicle from a stopped position in any gear higher than fourth speed gear. Depending on load, grade, or road conditions, it may be necessary to start in first, second, third or fourth speed gears. In HI range there are five forward gears that can be shifted in the standard manner. Always remember, however, to double clutch whether moving up or down through these gears. Reverse gear can be used in LO range only.

Upshift — With the shift lever in NEUTRAL, flip the air shift range selector down to LO range. Then shift the transmission into first gear. Shift up to second, third, fourth and fifth speed gears, double clutching between the gears. When maximum engine RPM has been reached in fifth gear, flip the air shift range selector up to HI range (preselect). Then move the shift lever through NEUTRAL to sixth gear. As the shift lever passes through NEUTRAL, the transmission is placed into Hi range. Continue following the normal sequence (7-8-9-10), being sure to double clutch from one gear to the next.

Downshift — Shift from 10th speed gear down through the HI range (9-8-7-6), double clutching through each gear. While still in sixth speed gear, flip the air shift range selector down to LO range (preselect). Then move the shift lever through NEUTRAL to fifth speed gear. As the shift lever passes through NEUTRAL, the transmission is placed into LO range. Then, shift down to fourth, third, second and first speed gears, double clutching between all gears.

CAUTION

• Always start in LO range according to shift marker plate instructions. Never start in a gear higher than fourth speed gear, even when dynamometer testing.
• When the truck is stationary, do not shift into HI range and then start moving the truck. Damage to the synchronizer can result.
• Be careful not to overspeed the engine during downshifting. Damage to powertrain components may result.

Reverse — Reverse can be used in LO only. To make a range shift in reverse, bring the truck to a complete stop. Flip the range selector lever to range desired (preselect). Move the shift lever out of reverse through NEUTRAL and then back into reverse again. As the lever moves through NEUTRAL, the range shift will be completed.

CAUTION

To avoid transmission damage, do NOT change range while moving in REVERSE.

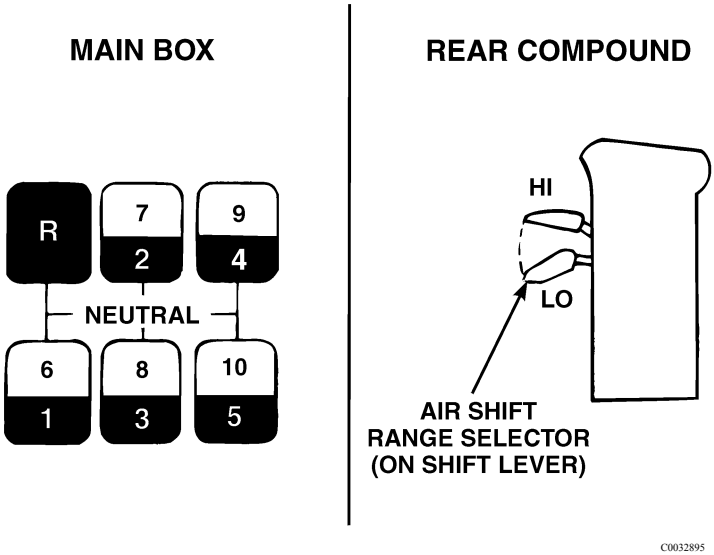

T310 TRANSMISSION RATIOS

Gear (Main Box)	Ratios	
	LO	HI
1/6	13.81	2.67
2/7	10.05	1.94
3/8	7.18	1.39
4/9	5.17	1.00
5/10	3.75	0.73
R/R	14.73	2.85

MACK T310M, T310ME and T310MLR Shifting Instructions

CAUTION

Make sure air pressure is at least 620 kPa (90 psi) and unit is at operating temperature before making range shifts. Always start in LO range. This also applies to dynamometer testing. When the truck is stationary, do NOT shift into HI range and then start moving the truck. Otherwise, damage to the synchronizer may result.

The T310M is a range-shifted transmission which has 10 forward speeds. There is a LO and HI auxiliary compound section controlled by an air-shift selector on the shifter. This compound section is equipped with a synchronizer to facilitate LO-HI range shifting. The T310M transmission also provides a multi-speed reverse feature by means of reverse gearing in the compound case which works in conjunction with LO-LO, first and second speed gears in the main box. The air-shift selector must be moved to the R (REVERSE) position in order to utilize the multi-speed reverse feature.

LO range provides six low ratios for six forward gears in the T310M. HI range provides four additional forward gears which can be shifted in the standard manner. Remember, however, to double-clutch when moving up or down through the gears. For normal highway use, start in LO range, first gear and shift through second, third and fourth. The LO-LO and LO positions in LO range for this transmission are designed for use in off-highway and slow-moving operations such as curb pouring, material spreading, heavy load/steep grade. REVERSE is used in LO range for four reverse speeds.

Upshift — Begin in first gear (shown as 1/5 on shift pattern diagram) with air-shift selector in LO range. Upshift to second gear (2/6 on shift pattern diagram) LO range in the normal manner (double-clutching). When ready to upshift again, depress the clutch pedal and release the accelerator pedal in the normal manner. Repeat this shifting pattern through the remaining gears up to fourth speed (4/8 on shift pattern diagram). When maximum engine RPM has been reached in fourth gear, flip the air-shift selector to HI range (preselect), then double-clutch and shift to fifth gear. As the shift lever passes through NEUTRAL, it will put the transmission in HI range. Continue to upshift through normal sixth, seventh and eighth gears, while double-clutching.

Downshift — Downshift as normal from eighth to seventh, sixth and fifth in HI range (double-clutching between all gears). The next lower shift will be to fourth gear LO range. While still in fifth gear, flip the air-shift selector to LO range (preselect), then double-clutch and move the shift lever through NEUTRAL to fourth gear. The move through NEUTRAL activates the air-shift mechanism, this time to LO range. The next lower gear is third gear LO range. Double-clutch down through the remaining gears to first gear LO range as needed.

CAUTION

When the truck is stationary, do NOT shift into HI range and then start moving the truck. Damage to the synchronizer may result.

Reverse is used in LO range only. To avoid transmission damage when shifting Forward to Reverse or Reverse to Forward:

- Bring vehicle to a stop.
- Move lever to NEUTRAL.
- Select low range.
- Select F or R as desired.
- Select lowest lever gear position.
- Release and depress clutch pedal.
- Select desired gear.

T310M, T310ME AND T310MLR

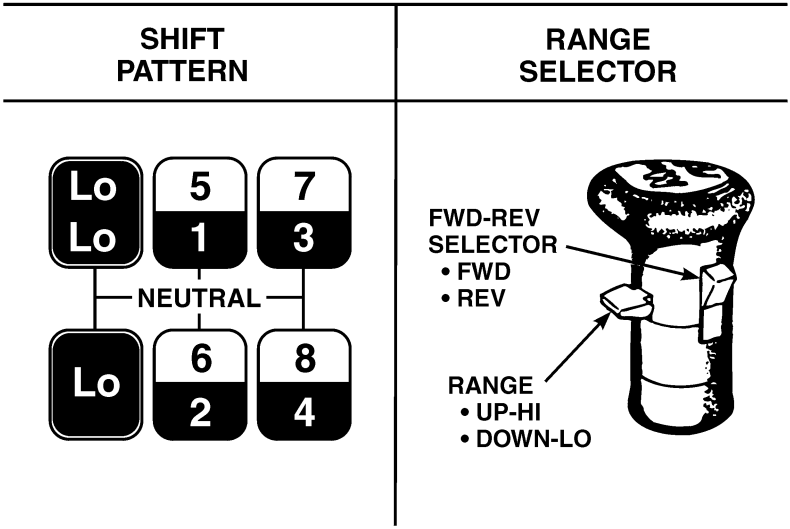

T310M AND T310ME TRANSMISSION RATIOS

Gear (Main Box)	LO Range	HI Range	Reverse
LO-LO	17.35		15.22
LO	11.40		10.00
1/5	7.45	1.94	6.54
2/6	5.33	1.39	4.67
3/7	3.83	1.00	3.37
4/8	2.78	0.73	2.44

T310MLR TRANSMISSION RATIOS

Gear (Main Box)	LO Range	HI Range	Reverse
LO-LO	27.30		23.96
LO	13.90		12.22
1/5	7.45	1.94	6.54
2/6	5.33	1.39	4.67
3/7	3.83	1.00	3.37
4/8	2.73	0.71	2.40

Preferred Method for Engaging T310M or T310MLR High Range Gear for Output Shaft Driven Power Take-Off Operation

After positioning the vehicle for power take-off operation:

1 Shift the transmission to NEUTRAL.

2 Engage power take-off drive.

3 Move range selector to HI range.

4 Disengage engine clutch.

5 Select "tenth" gear (8 on the shift marker plate) for T310M or T310MLR.

6 Engage clutch when power take-off operation is desired.

CAUTION

When the truck is stationary, do NOT shift into HI range and then start moving the truck. Damage to the synchronizer may result.

MACK T318, T318L and T318LR Shifting Instructions

CAUTION

Make sure air pressure is at least 620 kPa (90 psi) and unit is at operating temperature before making range shifts. Always start in LO range. This also applies to dynamometer testing. When the truck is stationary, do NOT shift into HI range and then start moving the truck. Otherwise, damage to the synchronizer may result.

Note: When making a SPLIT SHIFT FROM GEAR TO GEAR, the splitter switch must not be actuated, either up or down, until the main box is in neutral.
When making a SPLIT SHIFT IN THE SAME GEAR to a preselected gear, especially under heavy load, the splitter will not shift until the driveline torque is relieved. This can be done by depressing the clutch pedal and releasing it, or by backing off the throttle and reapplying it. The splitter switch must not be actuated, either up or down, until IMMEDIATELY before the driveline torque is relieved.
When making a RANGE SHIFT, it is important to preselect the range shift. This means that the range selector must be moved to its next position (up or down) BEFORE the gearshift lever is moved. Then move the gearshift lever through NEUTRAL to the next desired gear position. As the lever passes through NEUTRAL, the range shift will be completed.

Upshift — For purposes of explaining the shifting procedures through ALL gears, assume that the vehicle has a full load and will climb a slight grade.

To prepare for moving the vehicle, position the shift lever in NEUTRAL, select LO-split using the splitter switch, and select LO range using the range selector.

Refer to the shift pattern and move the shift lever to LO speed gear (LO range, LO-split). Apply accelerator and engage the clutch, then accelerate to governed speed. Select HI on the splitter switch (preselect) and release the accelerator pedal long enough for the split shift to complete. Reapply the accelerator. Shift through first LO-split, first HI-split, second LO-split, second HI-split and so on, until you reach fourth HI-split. Remember to double-clutch between gears.

To continue while in fourth gear HI-split, flip the range selector up to HI range (preselect), and as you move the shift lever through NEUTRAL to fifth gear, move the splitter switch from HI to LO. As the lever moves through NEUTRAL, the range shift to HI will be completed. You are now in fifth gear LO-split (HI range). Continue shifting to fifth HI-split, sixth LO-split, sixth HI-split and so on, until you reach eighth HI-split. Remember to double-clutch between gears.

To upshift from LO-split to HI-split (in the same gear), accelerate the engine to governed speed, move the splitter switch to HI (preselect), depress the clutch and back off the accelerator pedal. Reapply the accelerator and engage the clutch when the audible shift is heard, or when the engine speed falls by approximately 200 rpm. Depressing the clutch may not be necessary to break the driveline torque, but this will vary with road and load conditions.

To upshift from a HI-split gear to the next higher gears LO-split (in the same range), accelerate the engine to governed speed, then move the splitter switch to LO as you move the shift lever through NEUTRAL to the next higher gear. Note that the splitter switch must not be actuated down to the LO position until the main box is in NEUTRAL.

Downshift — Shift from eighth HI-split to eighth LO-split, then seventh HI-split, seventh LO-split and so on (double-clutching between the gears), until you reach fifth LO-split.

To continue while in fifth gear LO-split, flip the range selector down to LO range (preselect), and as you move the gearshift lever through NEUTRAL to fourth gear, move the splitter switch from LO to HI. As the shift lever moves through NEUTRAL, the range shift to LO will be completed. You are now in fourth gear HI-split (LO range). Continue downshifting, using the shift lever and splitter in the normal manner, until you reach LO speed gear (LO range, LO-split).

To downshift from HI-split to LO-split (in the same gear) as engine speed falls, move the splitter to LO (preselect), then release and reapply the accelerator pedal. An audible shift completion should be heard.

To downshift from a LO-split gear to the next lower gear's HI-split (in the same range) as engine speed falls, move the splitter switch to HI as you move the shift lever through NEUTRAL to the next lower gear. Note that the splitter switch must not be actuated up to the HI position until the main box is in NEUTRAL. Remember to double-clutch between gears using the accelerator pedal to synchronize the transmission components.

T318 and T318L Reverse — Reverse can be used in LO range only.

T318LR Reverse — Reverse can be used in LO and HI range.

To make a range shift in reverse, bring the truck to a complete stop. Flip the range selector to the range desired (preselect). Move the shift lever out of reverse through NEUTRAL, and then back into reverse again. As the lever moves through NEUTRAL, the range shift will be completed.

CAUTION

To avoid transmission damage, do NOT change range while moving in REVERSE.

T318, T318L AND T318LR

SHIFT PATTERN	RANGE SELECTOR
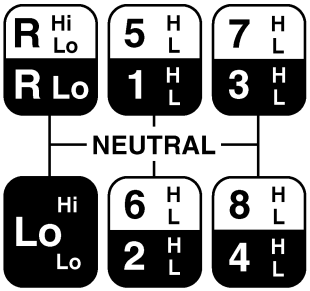	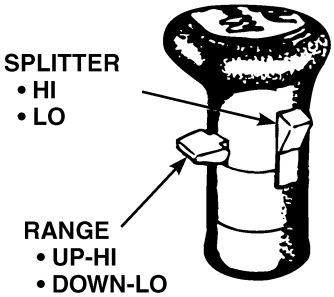

C0032897

T318, T318L AND T318LR TRANSMISSION RATIOS

Gear (Main Box)	Splitter	Range	Ratios		
			T318	T318LR	T318L
LO	LO	LO	13.44	16.42	16.42
LO	HI	LO	11.40	13.93	13.93
1	LO	LO	8.78	8.78	8.78
1	HI	LO	7.45	7.45	7.45
2	LO	LO	6.28	6.28	6.28
2	HI	LO	5.33	5.33	5.33
3	LO	LO	4.52	4.52	4.52
3	HI	LO	3.83	3.83	3.83
4	LO	LO	3.22	3.22	3.22
4	HI	LO	2.73	2.73	2.73
Range Shift Here					
5	LO	HI	2.29	2.29	2.29
5	HI	HI	1.94	1.94	1.94
6	LO	HI	1.64	1.64	1.64
6	HI	HI	1.39	1.39	1.39
7	LO	HI	1.18	1.18	1.18
7	HI	HI	1.00	1.00	1.00
8	LO	HI	0.84	0.84	0.84
8	HI	HI	0.71	0.71	0.71
R	LO	LO	15.91	28.98	15.91
R	LO	HI	13.49	24.58	13.49
R	HI	HI	3.52	6.41	3.52

Rear Case, Side-Mounted PTO Operating Procedures (T318, T318L and T318LR)

When engaging the PTO —

1 Select LO-split using the splitter switch and select LO range using the range selector.

Note: The transmission MUST be in LO range and LO-split at all times during PTO operation.

2 Depress the clutch pedal to disengage the clutch.

3 Set the parking brakes.

4 Move the main box shift lever to the NEUTRAL position.

5 Move the dash-mounted compound NEUTRAL control valve to the ON position, which moves the synchro clutch to a NEUTRAL position.

6 Engage the PTO.

7 Move the main box shift lever to the desired ratio.

8 Release the clutch pedal to engage the clutch.

9 Operate the PTO-driven load.

When disengaging the PTO —

1 Depress the clutch pedal to disengage the clutch.

2 Move the main box shift lever to NEUTRAL.

3 Disengage the PTO.

4 Move the dash-mounted compound NEUTRAL control valve to the OFF position, which moves the synchro clutch back to LO range.

5 Move the shift lever to the desired main gear box ratio.

6 Release the parking brakes.

7 Release the clutch pedal to engage the clutch.

Preferred Methods for Engaging T318(L)(LR) "Eighteenth" Gear (or any HI-range gear) for Output Shaft Driven Power Take-Off Operation

After positioning the vehicle for power take-off operation, and with vehicle wheels off the ground:

Method #1

1 Shift the transmission to NEUTRAL.
2 Engage power take-off drive.
3 Move the range selector to HI range.
4 Disengage the engine clutch and select REVERSE.
5 Feather the clutch until the transmission range clutch engagement is heard.
6 Disengage the engine clutch.
7 Select 18th speed gear for T318LR.
8 Engage the clutch when power take-off operation is desired.

After positioning the vehicle for power take-off operation, and with vehicle wheels on the ground:

Method #2

1 Shift the transmission to NEUTRAL.
2 Move the range selector to HI range.
3 Disengage the engine clutch and select REVERSE.
4 Feather the clutch until the transmission range clutch engagement is heard.
5 Disengage the engine clutch.
6 Engage power take-off drive.
7 Select 18th speed gear for T318LR.
8 Engage the clutch when power take-off operation is desired.

MACK T31821, T318L21 and T318LR21 Shifting Instructions

CAUTION

Make sure air pressure is at least 620 kPa (90 psi) and unit is at operating temperature before making range shifts. Always start in LO range. This also applies to dynamometer testing. When the truck is stationary, do NOT shift into HI range and then start moving the truck. Otherwise, damage to the synchronizer may result.

Note: When making a SPLIT SHIFT FROM GEAR TO GEAR, the splitter switch must not be actuated, either up or down, until the main box is in neutral.
When making a SPLIT SHIFT IN THE SAME GEAR to a preselected gear, especially under heavy load, the splitter will not shift until the driveline torque is relieved. This can be done by depressing the clutch pedal and releasing it, or by backing off the throttle and reapplying it. The splitter switch must not be actuated, either up or down, until IMMEDIATELY before the driveline torque is relieved.
When making a RANGE SHIFT, it is important to preselect the range shift. This means that the range selector must be moved to its next position (up or down) BEFORE the gearshift lever is moved. Then move the gearshift lever through NEUTRAL to the next desired gear position. As the lever passes through NEUTRAL, the range shift will be completed.

Upshift — For purposes of explaining the shifting procedures through ALL gears, assume that the vehicle has a full load and will climb a slight grade.

To prepare for moving the vehicle, position the shift lever in NEUTRAL, select LO-split using the splitter switch, and select LO range using the range selector.

Refer to the shift pattern and move the shift lever to LO speed gear (LO range, LO-split). Apply accelerator and engage the clutch, then accelerate to governed speed. Select HI on the splitter switch (preselect) and release the accelerator pedal long enough for the split shift to complete. Reapply the accelerator. Shift through first LO-split, first HI-split, second LO-split, second HI-split and so on, until you reach fourth HI-split. Remember to double-clutch between gears.

To continue while in fourth gear HI-split, flip the range selector up to HI range (preselect), and as you move the shift lever through NEUTRAL to fifth gear, move the splitter switch from HI to LO. As the lever moves through NEUTRAL, the range shift to HI will be completed. You are now in fifth gear LO-split (HI range). Continue shifting to fifth HI-split, sixth LO-split, sixth HI-split and so on, until you reach eighth HI-split. Remember to double-clutch between gears.

To upshift from LO-split to HI-split (in the same gear), accelerate the engine to governed speed, move the splitter switch to HI (preselect), depress the clutch and back off the accelerator pedal. Reapply the accelerator and engage the clutch when the audible shift is heard, or when the engine speed falls by approximately 200 rpm. Depressing the clutch

may not be necessary to break the driveline torque, but this will vary with road and load conditions.

To upshift from a HI-split gear to the next higher gear's LO-split (in the same range), accelerate the engine to governed speed, then move the splitter switch to LO as you move the shift lever through NEUTRAL to the next higher gear. Note that the splitter switch must not be actuated down to the LO position until the main box is in NEUTRAL.

Downshift — Shift from eighth HI-split to eighth LO-split, then seventh HI-split, seventh LO-split and so on (double-clutching between the gears), until you reach fifth LO-split.

To continue while in fifth gear LO-split, flip the range selector down to LO range (preselect), and as you move the gearshift lever through NEUTRAL to fourth gear, move the splitter switch from LO to HI. As the shift lever moves through NEUTRAL, the range shift to LO will be completed. You are now in fourth gear HI-split (LO range). Continue downshifting, using the shift lever and splitter in the normal manner, until you reach LO speed gear (LO range, LO-split).

To downshift from HI-split to LO-split (in the same gear) as engine speed falls, move the splitter to LO (preselect), then release and reapply the accelerator pedal. An audible shift completion should be heard.

To downshift from a LO-split gear to the next lower gear's HI-split (in the same range) as engine speed falls, move the splitter switch to HI as you move the shift lever through NEUTRAL to the next lower gear. Note that the splitter switch must not be actuated up to the HI position until the main box is in NEUTRAL. Remember to double-clutch between gears using the accelerator pedal to synchronize the transmission components.

T31821 and T318L21 Reverse — Reverse can be used in LO range only.

T318LR21 Reverse — Reverse can be used in LO and HI range.

To make a range shift in reverse, bring the truck to a complete stop. Flip the range selector to the range desired (preselect). Move the shift lever out of reverse through NEUTRAL, and then back into reverse again. As the lever moves through NEUTRAL, the range shift will be completed.

CAUTION

To avoid transmission damage, do NOT change range while moving in REVERSE.

T31821, T318L21 AND T318LR21

SHIFT PATTERN	RANGE SELECTOR
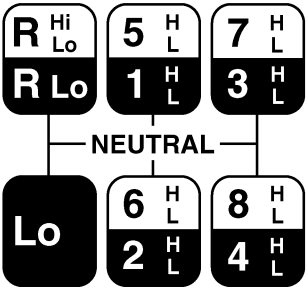	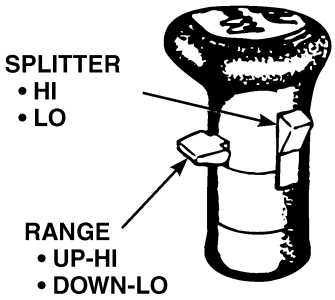

C0032898

T31821, T318L21 AND T318LR21 TRANSMISSION RATIOS

Gear (Main Box)	Splitter	Range	Ratios		
			T318	T318LR	T318L
LO	LO	LO	13.44	16.42	16.42
LO	HI	LO	11.40	13.93	13.93
1	LO	LO	8.78	8.78	8.78
1	HI	LO	7.45	7.45	7.45
2	LO	LO	6.28	6.28	6.28
2	HI	LO	5.33	5.33	5.33
3	LO	LO	4.52	4.52	4.52
3	HI	LO	3.83	3.83	3.83
4	LO	LO	3.22	3.22	3.22
4	HI	LO	2.73	2.73	2.73
Range Shift Here					
5	LO	HI	2.29	2.29	2.29
5	HI	HI	1.94	1.94	1.94
6	LO	HI	1.64	1.64	1.64
6	HI	HI	1.39	1.39	1.39
7	LO	HI	1.18	1.18	1.18
7	HI	HI	1.00	1.00	1.00
8	LO	HI	0.84	0.84	0.84
8	HI	HI	0.71	0.71	0.71
R	LO	LO	15.91	28.98	15.91
R	HI	LO	13.49	24.58	13.49
R	HI	HI	3.52	6.41	3.52

Rear Case, Side-Mounted PTO Operating Procedures (T31821, T318L21 and T318LR21)

When engaging the PTO —

1 Select LO-split using the splitter switch and select LO range using the range selector.

Note: The transmission MUST be in LO range and LO-split at all times during PTO operation.

2 Depress the clutch pedal to disengage the clutch.

3 Set the parking brakes.

4 Move the main box shift lever to the NEUTRAL position.

5 Move the dash-mounted compound NEUTRAL control valve to the ON position, which moves the synchro clutch to a NEUTRAL position.

6 Engage the PTO.

7 Move the main box shift lever to the desired ratio.

8 Release the clutch pedal to engage the clutch.

9 Operate the PTO-driven load.

When disengaging the PTO —

1 Depress the clutch pedal to disengage the clutch.

2 Move the main box shift lever to NEUTRAL.

3 Disengage the PTO.

4 Move the dash-mounted compound NEUTRAL control valve to the OFF position, which moves the synchro clutch back to LO range.

5 Move the shift lever to the desired main gear box ratio.

6 Release the parking brakes.

7 Release the clutch pedal to engage the clutch.

Preferred Methods for Engaging T318(L)(LR)21 "Eighteenth" Gear (or any HI-range gear) for Output Shaft Driven Power Take-Off (PTO) Operation

After positioning the vehicle for power take-off operation, and with vehicle wheels off the ground:

Method #1

1 Shift the transmission to NEUTRAL.

2 Engage power take-off drive.

3 Move the range selector to HI range.

4 Disengage the engine clutch and select REVERSE.

5 Feather the clutch until the transmission range clutch engagement is heard.

6 Disengage the engine clutch.

7 Select 18th speed gear for T318L(R)21.

8 Engage the clutch when power take-off operation is desired.

After positioning the vehicle for power take-off operation, and with vehicle wheels on the ground:

Method #2

1 Shift the transmission to NEUTRAL.

2 Move the range selector to HI range.

3 Disengage the engine clutch and select REVERSE.

4 Feather the clutch until the transmission range clutch engagement is heard.

5 Disengage the engine clutch.

6 Engage power take-off drive.

7 Select 18th speed gear for T318L(R)21.

8 Engage the clutch when power take-off operation is desired.

AXLES

Rear Axles Other Than MACK

Please refer to the operator's manual provided with your vehicle for axles other than MACK.

MACK Rear Axles

MACK Trucks, provides axle housings in three capacity classifications:

- Medium Duty
- Heavy Duty
- Extra-Heavy Duty

To deliver the appropriate amount of torque to the driving wheels, MACK offers dual-reduction carriers in a variety of ratios.

MACK Trucks, offers a large variety of four-wheel-drive tandem axles with top-mounted, dual-reduction carriers (for straight line through drive). Carriers are also available in a large number of ratios.

All four-wheel-drive tandem carriers are available with the MACK inter-axle power divider third differential (with or without a power divider lockout).

MACK rear axles are designed so the entire load is carried by the axle housing (through the wheel bearings mounted on the housing spindle). The rear axle shafts are either free-splined (both ends) or integral flange type. Both types of axle shafts can be removed without removing or disturbing the rear wheels.

To avoid excessive tyre wear, proper maintenance must be practiced and rear axle tyres must be matched.

CAUTION

The maximum safe operating oil temperature for a MACK rear axle is 121°C (250°F) for mineral-based oil, and 148°C (300°F) for synthetic-based oil. Continued operation with oil above this temperature will result in rapid deterioration of the oil's lubricating properties and is NOT recommended.

Inter-Axle Power Divider Lockout (If Equipped)

The MACK power divider can be rendered inoperative, during short periods of poor traction, using a power divider lockout. When the power divider lockout is engaged, both axles are locked together (in positive through-drive) for maximum traction with no differential action between axles. It is not necessary to stop the vehicle to engage the power divider lockout. The lockout may be engaged while the vehicle is moving at less than 18 km/h as long as the wheels are not spinning.

CAUTION

Do not engage the power divider lockout if the wheels are spinning.

Note: Even when no traction is available at the spinning wheel, the driver can "feather" the brakes (apply the brakes slightly), creating enough resistance at that wheel to allow power to the axle with traction. Feathering brakes should not be done with power divider lockout engaged.

Note: For vendor axles, see the vendor manual furnished with the vehicle.

Engaging the Power Divider Lockout

Normally, the Power Divider switch is in the OUT (disengaged) position. In poor traction conditions, it may be necessary to provide positive through-drive to both axles by flipping the switch to the locked (engaged) position.

1 Push switch to engage.

2 Momentarily release the accelerator pedal to allow the shift to take place, then drive through the slippery area.

Note: A lockout indicator lamp will remain lit as long as the lockout is engaged. This is to remind the driver to release the lockout as soon as normal traction is regained.

3 When driving conditions permit, unlock the power divider by moving the Power Divider switch back to the OUT (disengaged) position. Then release the accelerator pedal momentarily (to shift out of the locked position) and drive as usual.

CAUTION

Do NOT (under any circumstances) engage or disengage the lockout while the drive wheels are actually slipping or spinning; clashing between the lockout sliding clutch and the outer cam may result.

DIESEL PARTICULATE FILTERS

Your new MACK chassis is equipped with a ADR80/03 emission compliant engine, with an engine exhaust aftertreatment system (Diesel Particulate Filter) and selective catalytic reduction (SCR) system. Vehicles equipped with a Diesel Particulate Filter require the use of EO-O Premium Plus (or VDS-4) specification high performance diesel engine oil and Ultra Low Sulfur Diesel (ULSD) fuel.

WARNING

The Diesel Particulate Filter (DPF) on this vehicle may be damaged by any immersion in water, and void warranty. Do not allow water to enter the DPF..

CAUTION

Use of diesel fuel other than ULSD and engine oils other than EO-O Premium Plus (or VDS-4), will adversely affect performance, efficiency and durability of the DPF system and the engine, to the point where the engine may not run at all. Manufacturer's warranties will also be rendered void due to usage of improper fuel. Unapproved fuel additives (including engine oil) are NOT permitted.

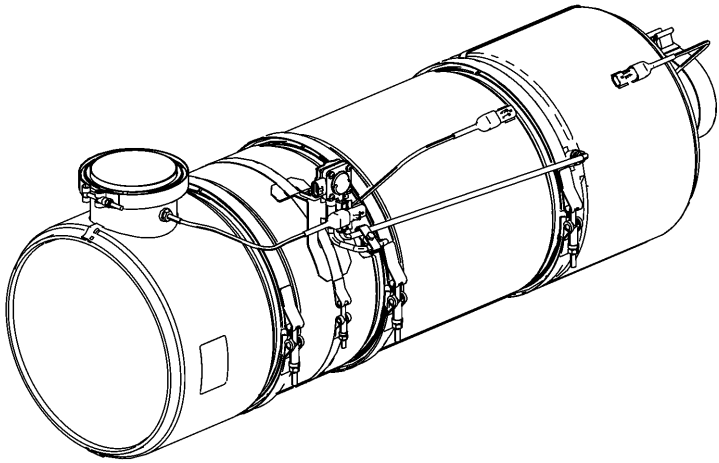

W4061331

A Diesel Particulate Filter (DPF) takes the place of the standard muffler. The DPF is used to meet EPA requirements to help reduce soot and particulate emissions into the atmosphere. The particulates are removed by collecting in the DPF unit, where they are eventually oxidized with passive regeneration or active regeneration of the filter. The electrical system and exhaust aftertreatment system of the vehicle will determine when regeneration is required. Mack Trucks, uses conventional exhaust aftertreatment system.

Conventional exhaust aftertreatment systems use passive-active regeneration. The passive regeneration process oxidizes the particulates captured in the DPF while the vehicle is in operation. An oxidation catalyst raises the exhaust temperature to approximately 500–625 °C (932–1157°F), the temperature at which a chemical reaction takes place to oxidize the soot (active regeneration)

Depending on how the vehicle is set up, regeneration can occur while the vehicle is being driven (referred to as a "moving" regeneration) or when the vehicle is parked and idling (referred to as a "parked" regeneration).

CAUTION

When active regeneration occurs (with either system), the temperature of the exhaust will be elevated. DO NOT park the vehicle with the exhaust outlet under low hanging overhead flammable objects such as trees, awnings, etc., that could be damaged by elevated exhaust temperatures. DO NOT remove the diffuser.

CAUTION

If the vehicle is in a location that may be hazardous when an active regeneration begins (i.e., in close proximity to flammable materials or gases), the regeneration should be stopped by pushing the DPF switch to the "Stop Regeneration" position.
If an active regeneration is stopped by the vehicle operator, it should be initiated at a later time when the vehicle is in a safe location. However, if an active regeneration is

stopped repeatedly, the vehicle may need to be taken to a MACK service facility. The service facility will use a service tool to manually initiate the regeneration.

WARNING

Be aware that temperature around the area where the exhaust enters the body, as well as the product contained in the body, may be elevated, particularly during DPF regeneration.

Exhaust Aftertreatment System

MACK SCR Standard System View

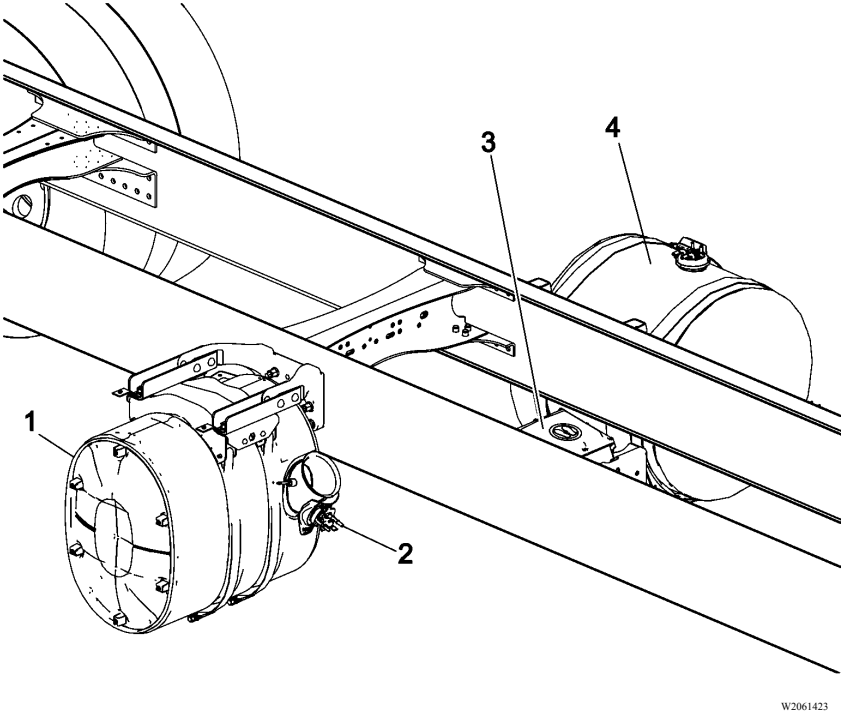

1. Selective Catalytic Reduction (SCR) Catalyst
2. Aftertreatment DEF Dosing Injector
3. Aftertreatment DEF Dosing Unit (Control Module)
4. Aftertreatment DEF Tank

Diesel Exhaust Fluid (DEF) is a reactant that's key to the SCR process. It's a nontoxic, ultra-pure solution of urea and ultra-pure water. Urea is a compound of nitrogen that turns to ammonia when heated. It is used in a variety of industries, perhaps most commonly as a fertilizer in agriculture. The fluid is non flammable, and is not dangerous when handled as recommended. However, it is highly corrosive to certain metals, especially copper and brass. Read the separate section concerning the handling of DEF solution.

Safety Information

Mack utilizes the use of a Diesel Particulate Filter (DPF) and Selective Catalytic Reduction (SCR) to meet emissions. These systems are designed to require very little driver interface to maintain correct operation. The DPF technology utilizes a passive regeneration; requiring no fuel to be injected to clean the DPF and an active regeneration (fuel is injected) to clean out the DPF producing very high exhaust outlet temperatures. Certain vocational duty cycles will require the use of fuel and/or a parked regeneration to clean out built-up soot in the particulate filter. Exhaust temperatures will increase during a parked regeneration. When parking the vehicle to perform a parked regeneration keep away from any flammable materials, vapors or structures.

⚠ DANGER

Exhaust gases and components can be at extremely high temperatures during regeneration. When parking the vehicle, keep away from any flammable materials, vapors, or structures.

⚠ DANGER

The temperature of the exhaust system components during the regeneration process can exceed 350 degrees C (660 F). The exhaust gas leaving the system can reach 505 degrees C (930 F). Various factors (including ambient temperature and duration of the regeneration process) determine when these components will return to normal operating temperature after regeneration has completed.
Be extremely careful around these hot components. Contact with these components can result in serious personal injury.

Exhaust Aftertreatment System Components and Operations

Selective Catalytic Reduction (SCR)

Selective Catalytic Reduction (SCR) is an emissions-reduction technology with the ability to deliver near-zero emissions of nitrogen oxides (NOx), a smog-causing pollutant and greenhouse gas. SCR's performance has been proved in millions of kilometers of real-world trucks in other countries, as well as in long-term field tests in the U.S.

SCR reduces NOx emissions to very low levels, while at the same time delivering excellent fuel economy and reliability. The system doesn't change the design or of the basic engine. Rather, SCR is an aftertreatment system which converts NOx in the exhaust stream into harmless gases. Modern diesels already use exhaust aftertreatment systems, called diesel particulate filters, to control emissions of another pollutant, soot (also known as particulate matter or PM).

SCR works by injecting Diesel Exhaust Fluid (DEF) into the exhaust. DEF is a solution of ultra-pure water and urea. DEF works with the heat of the exhaust and a catalyst to convert NOx into nitrogen and water vapor - two harmless and natural components of the air we breathe. The end result is cleaner air, excellent fuel efficiency and a reliable emissions control system for today's modern diesel engine.

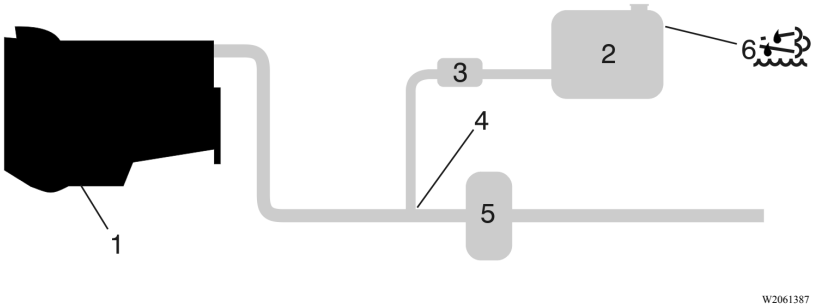

1. Diesel Engine
2. Aftertreatment DEF Tank
3. Aftertreatment DEF Pump
4. Aftertreatment DEF Dosing Unit
5. Selective Catalytic Reduction (SCR) Catalyst
6. Aftertreatment DEF Tank Gauge

The Mack SCR system is simple and effective, with few components. It consists of a Aftertreatment DEF tank positioned near the standard diesel tank, plus a Aftertreatment DEF pump, Aftertreatment DEF Dosing unit and SCR catalyst.

The advantage of using DEF is that it enables the engine to use less EGR -- and higher oxygen levels -- for better combustion, while meeting the EPA near-zero NOx emissions requirement of NOx. By using DEF, we avoid the disadvantages of increasing EGR to massive levels. This results in better fuel economy from your Mack engine.

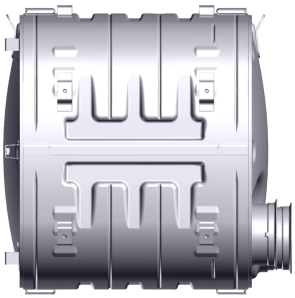

W2055493

Horizontal SCR,

CAUTION

Do not put diesel fuel in the Aftertreatment DEF tank. Diesel fuel, if sprayed into the hot exhaust along with the DEF, could ignite explosively causing a fire resulting in personal injury or damage to the exhaust system.

W3036787

Note: Common Names and References for Diesel Exhaust Fluid (DEF): AdBlue™, Urea, NOx Reduction Additive and Air1™

Diesel Exhaust Fluid (DEF)

Diesel Exhaust Fluid (DEF) is a reactant that's key to the SCR process. It's a nontoxic, aqueous solution of urea and water. Urea is a compound of nitrogen that turns to ammonia when heated. It is used in a variety of industries, perhaps most commonly as a fertilizer in agriculture. The fluid is not flammable, nor is it dangerous when handled normally. However, it is highly corrosive to metal, particularly copper and aluminium. Read the separate section concerning the handling of DEF solution. Only use approved DEF fluid. Use only **Diesel Exhaust Fluid** that is **clearly labeled as meeting ISO-22241** standards, and **certified by the American Petroleum Institute.** The container **must display the API certification seal. Never use agricultural or industrial grade urea.** Use of fluids other than API certified Diesel Exhaust Fluid will compromise aftertreatment system performance, increase emissions, and may impact your product warranties. **Never dilute DEF with water or any other fluid.**
It is recommended that DEF not be stored in extreme hot or cold conditions, or for prolonged periods. Follow the instructions for proper storage and handling as indicated on the container or provided with the purchase.

Note: Agriculture mixtures are not pure enough for use in the SCR system and impurities in the solution will comprise the SCR system.

Description	Min./Max.
Urea Content	31.8 to 33.2 % by weight
Density	20 °C (68 °F) 1.0870 1.0930 g/cm^3
Refracting Index	at 20 °C (68 °F) 1.3814 1.3843
Alkalinity	as NH3: 0.2 %
Biuret	0.3 %
Aldehyde	5 mg/kg
Insolubles	20 mg/kg
Phosphate (PO4)	0.5 mg/kg
Calcium	0.5 mg/kg
Iron	0.5 mg/kg
Copper	0.2 mg/kg
Zinc	0.2 mg/kg
Chromium	0.2 mg/kg
Nickel	0.2 mg/kg
Aluminium	0.5 mg/kg
Magnesium	0.5 mg/kg
Sodium	0.5 mg/kg
Potassium	0.5 mg/kg

Diesel Exhaust Fluid (DEF) Handling

When handling DEF solution, it is important to prevent contact with electrical connections. There is a risk that the DEF will cause oxidation that cannot be removed. Water or compressed air do not help, since DEF quickly oxidizes certain metal. If a disconnected connector comes into contact with the DEF solution it must be replaced immediately to prevent the DEF solution from creeping further into the copper wiring.

CAUTION

When detaching hoses and components, do not spill DEF on disconnected or unsealed connectors. If DEF is spilled on a disconnected or unsealed connector, the connector must be replaced immediately.

Things to know about spilled Diesel Exhaust Fluid (DEF)

If urea solution comes into contact with the skin: rinse with plenty of water and remove contaminated clothing.
If urea solution comes into contact with the eyes: rinse for several minutes and call for medical help if necessary.
If inhaled: breathe fresh air and call for medical help if necessary.
Do not allow the DEF solution to come into contact with other chemicals.
The DEF solution is not flammable. If the DEF solution is exposed to high temperatures, it breaks down into ammonia and carbon dioxide.
The DEF solution is highly corrosive to certain metals, including copper and brass.
If the DEF solution is spilled onto the vehicle, wipe off the excess and rinse with water. Spilled DEF solution can form concentrated white crystals on the vehicle. Rinse off these crystals with water.

Note: Do not flush DEF spillage into the normal drain system.

WARNING

DEF spilt onto hot components will quickly vaporize. Turn your face away!

Diesel Exhaust Fluid(DEF) Consumption

DEF consumption is related to fuel consumption. A gauge much like a fuel gauge will indicate the level of DEF in the tank. A DEF low-level warning will activate when DEF is low. If a driver runs out of DEF completely, vehicle power will be reduced. When the DEF tank is refilled, the engine will resume normal power.

Note: DEF tanks are sized to optimize with fuel capacity requirements.

Diesel Exhaust Fluid (DEF) Availability

For DEF availability please contact your local MACK dealer.

Aftertreatment Diesel Particulate Filter (DPF)

CAUTION

Use of diesel fuel other than ULSD and engine oils other than EO-O Premium Plus (or VDS-4), will adversely affect performance, efficiency and durability of the Aftertreatment DPF system and the engine, to the point where the engine may not run at all. Manufacturers warranties can also be rendered void due to usage of improper fuel. Unapproved fuel additives (including engine oil) are NOT permitted. Blends of No. 1D and No. 2D grades of ULSD are recommended and allowable for cold weather operations.

The exhaust aftertreatment system virtually eliminates exhaust smoke. White exhaust vapor (water condensation) may be visible during a cold start. If black exhaust smoke is visible during engine operation, this indicates a problem with the exhaust aftertreatment system. Take the vehicle to an authorized Mack Truck dealer immediately.

Vehicles equipped with a ADR80/03 emission compliant engine have an exhaust aftertreatment system which includes a Selective Catalytic Reduction (SCR) system and a Conventional Aftertreatment Diesel Particulate Filter (DPF). The Aftertreatment DPF takes the place of the standard muffler, and it reduces particulate emissions into the atmosphere. Soot and other particulate matter are collected by a filter where it is eventually oxidized using a regeneration process. Vehicles equipped with a Aftertreatment DPF require the use of EO-O Premium Plus (or VDS-4) specification high performance diesel engine oil and Ultra Low Sulfur Diesel (ULSD) fuel.

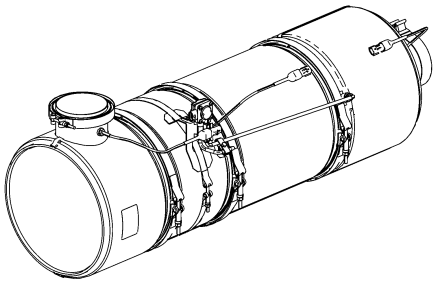

W4061331

Aftertreatment Control Module (ACM) or Urea Dosing System (UDS)

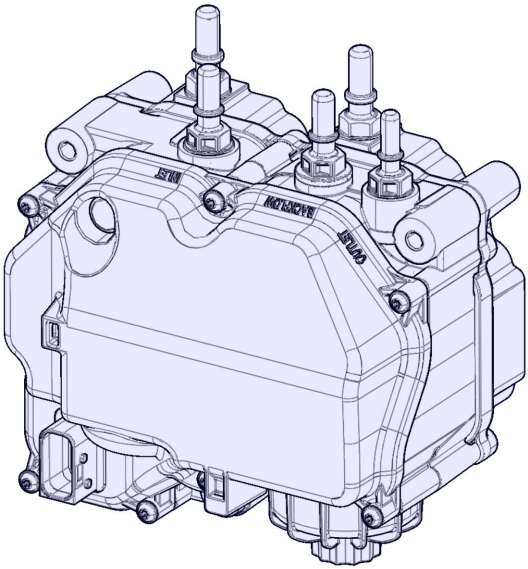

W4071222

The ACM/UDS controls the following components in the exhaust aftertreatment system:

- Aftertreatment DEF Dosing Unit
- Aftertreatment DEF Pump
- Aftertreatment DEF Return Valve

The ACM/UDS also monitors the following values in the exhaust aftertreatment system:

- Aftertreatment DEF Dosing Pressure
- Aftertreatment DEF Tank Temperature
- Aftertreatment DEF Tank Level
- Aftertreatment DEF Tank Level Sensor
- NOX Sensors

The ACM/UDS is combined with the pump unit mounted on the chassis crossmember behind the cab.

Exhaust Aftertreatment System

Aftertreatment DPF Regeneration

For more detailed information refer to Electronic Vehicle Managment (V-MAC) IV with Co-Pilot Display Operators Guide.

DPF Smart Switch– This is a three-position switch where the middle position is neutral.

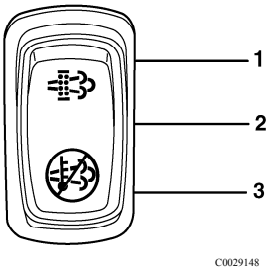

DPF Smart Switch

1. Upper Position – Regeneration Position 2. Middle Position – Neutral Position	3. Down Position – Inhibit Position (if equipped)

CAUTION

During the Aftertreatment DPF Regeneration, the exhaust gas temperature will be elevated. DO NOT park the vehicle with the exhaust outlet near flammable objects such as trees, awnings, etc. that could be damaged by elevated exhaust gas temperatures.

CAUTION

If the vehicle is in a location that may be hazardous when DPF Regeneration begins (i.e., in close proximity to flammable materials or gases, inside tunnels, parked under flammable objects, etc.), the DPF Regeneration should be stopped (if equipped). If DPF Regeneration is stopped by the vehicle operator, it must be initiated at a later time when the vehicle is in a safer location. DPF Regenerations that are stopped and never restarted at a later time, however, will require that the vehicle be taken to an authorized Mack Truck dealer to have the Aftertreatment Regeneration manually started with special service tools.

Note: During vehicle operation, idle speed may increase when the vehicle is stopped at a traffic light to maintain heat in the DPF for passive regeneration.

There are two types of Aftertreatment DPF Regeneration: Passive regeneration and Parked regeneration.
Passive regeneration occurs when the exhaust gas within the aftertreatment system is hot enough to remove soot without injecting additional fuel into the DPF system. Active regeneration require additional fuel injection into the DPF.

Parked Regeneration

The Aftertreatment DPF Regeneration system is self-monitoring. Under certain duty cycles driver action is needed to perform a parked regeneration. When driver action is needed to perform a parked regeneration, an icon at the top of the DPF Smart switch will illuminate to notify the vehicle operator. The DPF Smart switch allows the vehicle operator to either stop or start regeneration. (Certain conditions must be met, however, before regeneration can be manually started.)

Parked regeneration allows the operator to start and/or stop the regeneration manually when the vehicle is parked and the engine is idling. The operator is notified that a regeneration is needed when the icons on the DPF Smart switch illuminate. The operator should perform the regeneration as soon as possible.

Please refer to the instructions below on how to use the DPF Smart switch for parked regenerations.

1. Move the vehicle to a safe location, apply the park brake and allow the engine to idle.

WARNING

When a regeneration is in process, the temperature of the exhaust will be elevated. DO NOT park the vehicle with the exhaust outlet under low hanging overhead flammable objects such as trees, awnings, etc., that could be damaged by elevated exhaust temperatures. DO NOT attempt to regenerate inside a garage or enclosed area if the tail pipe is attached to an exhaust ventilation system as the hose material may not be rated for the high temperature.

2. Press and hold the top part of the DPF Smart switch momentarily to initiate the regeneration.

3. During regeneration, the icons on the switch will shut off. The HEST indicator on the instrument cluster will light up to notify of high exhaust temperatures.

4. For Aftertreatment DPF filter systems, the engine speed may ramp as high as 1,100 rpm.
5. Parked regeneration can take between 45 and 90 minutes to complete.

6. After regeneration has completed and the exhaust temperature has returned to normal, the HEST indicator will shut off.

7. To stop regeneration, press the switch down to the inhibit position (if equipped). When the bottom of the switch is illuminated, regeneration is stopped. The switch will remain locked in this position and the light will stay illuminated. The driver has the option of stopping a regeneration if the vehicle is in an area where elevated exhaust temperatures will pose a hazard (i.e., tunnel, under trees, in an area where there is flammable material, etc.).

Note: The HEST lamp will remain On if it comes On during the regeneration, and remain On until the exhaust temperature returns to normal.

CAUTION

Failure to perform a regeneration in a timely manner after notification may result in engine derate, a clogged DPF, damage to the DPF and engine shutdown.

DANGER

During the regeneration process, the temperature of the exhaust gases will be elevated. DO NOT park or stop for an extended period under low hanging overhead flammable objects such as trees, awnings, structures, etc., that could be damaged by elevated exhaust temperatures. Further, if the vehicle is being operated in an area where flammable vapors exist, the regeneration process must be interrupted. Failure to heed these cautions may result in fire or explosion causing serious personal injury or death.

Note: Do not initiate a parked regeneration if the vehicle is in a location that may be hazardous (i.e., in close proximity to flammable materials or gases),
If a parked regeneration is stopped by the vehicle operator, it should be initiated at a later time when the vehicle is in a safe location. However, if a parked regeneration is stopped too many times, the vehicle must be taken to a MACK service facility. The service facility will use a service tool to manually initiate the regeneration.

WARNING

The exhaust gas leaving the system can reach 500–625 ° C (932–1157° F). Various factors (including ambient temperature and duration of the regeneration process) determine when these components will return to normal operating temperature after regeneration has completed. Be extremely careful around these hot components. Contact with these components can result in serious personal injury.

CAUTION

When the inhibit position is pressed, the switch will remain in a locked position. It is important, therefore, to immediately set the switch back to the neutral position when safe to do so. Failure to set the switch back to the neutral position may result in an engine derate, clogged diesel particulate filter or damage to the filter.

ENGINE EXHAUST AFTERTREATMENT SYSTEMS (EATS)

DEF Indicators:	(solid)	(flashing)	(flashing) + Message
Diesel Exhaust Fluid (DEF) Condition:	The DEF tank is low.	The DEF tank is empty. Engine is in derate mode.	The DEF tank is empty. The vehicle is limited to 5 mph.
DEF Action:	Refill the DEF tank.	Refill the DEF tank now (before adding diesel).	Refill the DEF tank now (before operating vehicle).
DEF Indicators:	(flashing)	(flashing)	(flashing)
Diesel Particulate Filter (DPF) Condition:	The DPF filter is full.	The DPF filter is overfull. Engine is in derate mode.	The DPF filter may be clogged with soot. Engine is in shutdown mode.
DPF Action:	Initiate a parked manual regeneration at next available stop.	IMMEDIATELY stop and initiate a parked regeneration.	Service EATS system immediately.
See Operator's Manual for Further Detail			

W8056653

Driver Warnings and On Board Diagnostics (OBD)

On Board Diagnostics (OBD)

Beginning with your ADR80/03 compliant Vehicle, On Board Diagnostics (OBD) is introduced. This is very similar to the On Board Diagnostics (OBD) system that has been required on passenger cars for many years.

On Board Diagnostics (OBD) is a system that monitors the functions of emissions related components and alerts the vehicle operator to any detected need for an emission related repair. When the systems detects a needed repair to an emissions related component it activates the Malfunction Indicator Lamp (MIL).

The list of emissions related components can be found in the Warranty and Maintenance section of this manual.

Instrument Cluster

The aftertreatment icons are located in the instrument cluster per the following images.

(Example) Instrument Cluster

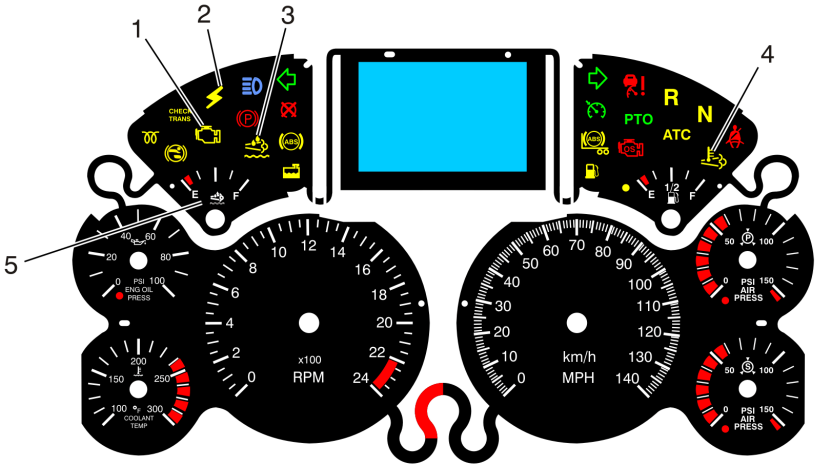

1. Malfunction Indicator Lamp (MIL)	**2.** CHECK Lamp	**3.** Aftertreatment DEF Low Lamp
4. High Exhaust Temperature (HEST) Lamp	**5.** Aftertreatment DEF Tank Gauge	

Instrument Cluster Icons

Aftertreatment icons are displayed either on the instrument cluster or Driver Information Display (DID). There are 3 aftertreatment icons:

- Aftertreatment DPF Regeneration Required DID and DPF Switch
- High Exhaust System Temperature (HEST)
- Aftertreatment DEF Tank Low Level Indicator

The Aftertreatment DPF Regeneration Required icon flashes when the Diesel Particulate Filter is full/overfull and regeneration is needed.

W3007445

Aftertreatment DPF Regeneration Required Icon (NOT IN AUS)

The High Exhaust System Temperature icon illuminates when a parked Aftertreatment DPF Regeneration Required is initiated. It also indicates high exhaust gas temperature during a passive regeneration. When the HEST icon is illuminated, do not park or operate the vehicle near people, or any flammable materials, vapors, or structures.

W3007444

High Exhaust System Temperature (HEST) Icon

The Aftertreatment DEF Tank Low Level Indicator icon illuminates when the fluid level is low. It also Flashes when the level becomes critically low.

Aftertreatment DEF Tank Low Level Indicator (DEF)

Malfunction Indicator Lamp (MIL)

- MIL indicates government Regulation On Board Diagnostics (OBD) faults
- **Lamp may remain active after repair until system confirms repair**

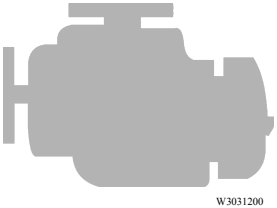

MIL Lamp

Aftertreatment DEF Tank Level – Driver Warning & Inducement

The vehicle instrument cluster has a Aftertreatmrnt DEF Tank Level Gage.

Triggers	Aftertreatment DEF Tank Low Level Indicator	Amber Warning Lamp	Inducement
> 12% Aftertreamnet DEF Tank Nevel Gauge	None	None	None
> =12% Aftertreamnet DEF Tank Nevel Gauge	W2029416	None	None
0% Aftertreament DEF Tank Level Gauge (4% DEF Remaining)	W2029415	None	25% Torque Reduction
0% Aftertreament DEF Tank Gauge Insufficient DEF Pump Pressure Diesel Fuel Refueling > 15%	W2029415	None	8km/h (5mph) Road Speed Limit (RSL)

Note: Vehicle has to be stationary before 8 km/h (5 mph RSL) becomes active.

Exit conditions for DEF Quality "8 km/h (5 mph) Road Speed Limit" (RSL) Inducement

First Restart: Return to 25% torque reduction until proper DEF quality evaluation. If poor DEF quality is detected during the next monitoring cycle then the 8 km/h (5 mph) limit is resusmed after vehicle is stationary for 20 minutes. After the second restart a Service Tool is required to exit the 8 km/h (5 mph) RSL.

Misfilling Diesel or Aftertreatment DEF Tanks

Although diesel fuel and Aftertreatment DEF caps are clearly labeled and filler necks and nozzles are different accidents can happen.

Contamination of fluids by- misfilling of diesel or DEF in the wrong tank may result in vehicle malfunction.

Results of misfilling DEF in Diesel Tank

- Engine may run poorly or not at all
- Injectors may be damaged
- Exhaust system corrosion may occur between turbocharger and Aftertreatment DPF
- On Board Diagnostic (OBD) Diagnostic Trouble Codes (DTC)
- Costly repairs

Results of misfilling Diesel in Aftertreatment DEF Tank

- Aftertreatment SCR system may be damaged by Diesel
- SCR Catalyst may be damaged by diesel (chemical damage)
- Emissions may be non-compliant
- On Board Diagnostic (OBD) Diagnostic Trouble Codes (DTC)
- Costly repairs

Note: DEF tank has a magnetic interlock and fuel station DEF fluid dispensing nozzle with a magnetic valve, have to meet to prevent from dispensing into anything other than the DEF tanks.

SCR Tampering - Driver Warning & Inducement

1. Disconnected Aftertreatment DEF tank level sensor	4. Disconnected Aftertreatment DEF pump
2. Blocked Aftertreatment DEF line or dosing unit	5. Disconnected SCR wiring harness
3. Disconnected Aftertreatment DEF dosing unit	6. Disconnected NOx Sensor

Triggers	Aftertreatment DEF Tank Low Level Indicator	Warning Lamp	Inducement
No Tampering	None	None	None
Tampering DTC Pending	None	W3031623	None
Tampering DTC Confirmed	None	W3031623	None
Tampering DTC Initial Detected + 10 hour	None	W3031623	25% torque reduction
Tampering DTC Initial Detected + 40 hours Diesel Fuel Refueling >15%	None	W3031623	8 km/h (5 mph) road speed limit

Note: Operator can not override the 8 km/h (5mph) road speed limit.

Note: Vehicle has to be stationary before 8 km/h (5 mph RSL) becomes active.

Warranty and Maintenance

Exhaust Aftertreatment System Maintenance

The vehicle must be taken to an authorized Mack Truck dealer to remove the ash from the Aftertreatment Diesel Particulate Filter (DPF) and clean the Aftertreatment Doser.

MP Engine Maintenance Intervals

Component	Operation	Km (Miles)/Maximum Months/Hours
Fuel Filter (MP8 and MP10)	Change	Each oil change*
Water Separator (MP8 and MP10)	Filter change	Each oil change*
Air Filter	Change	Replace the air cleaner at least once a year or every 160 000 km (100,000 mi), whichever comes first. Or, replace the air cleaner when either the air cleaner gauge on the air cleaner locks in the red or when the dash-mounted gauge shows an air inlet restriction of 5 kPa (in H20).
Coolant	Change	500 000 (300, 000) 48 months or 8000 hours for MP8 VS and VS+, whichever comes first
Valves/Injectors (MP8) **	Adjust	For POC L, M, H and S 400 000 (250,000) or 24 months, whichever comes first. For POC VS and VS+ 200 000 (125,000) 12 months / 4000 hours
Valves/Injectors (MP10) **	Initial Adjust	100 000 (60,000) or 6 months, whichever comes first
Valves/Injectors (MP10) **	Adjust	For POC L, M, H and S 200 000 (125,000) or 12 months, whichever comes first. For POC VS 100,000 (60,000) or 6 months

Component	Operation	Km (Miles)/Maximum Months/Hours
Drive Belts MP8 and MP10	Change	500 000 (300,000) or 36 months, whichever comes first. For POC VS 100 000 (62,125) or 6 months
Catalyzed Aftertreatment Diesel Particulate Filter (DPF) (If equipped) (Cummins)	Change	Refer to the appropriate Cummins operator's manual or a certified Cummins dealer.
Aftertreatment Hydrocarbon Doser (If equipped) (Cummins)	Clean	Refer to the appropriate Cummins operator's manual or a certified Cummins dealer.
Catalyzed DPF Filter (If equipped)	Change	Refer to the appropriate Cummins operator's manual or a certified Cummins dealer.
Diesel Exhaust Fluid (DEF) Pump Filter (MP8 and MP10)	Change	180 000 (112,000) or 12 months
Diesel Exhaust Fluid (DEF) Tank Filler Neck Filter Cleaning (MP8 and MP10)	Clean	180 000 (112,000) or 12 months, whichever comes first
*Under certain conditions (for example, irregular fuel quality), the fuel/water separator filters may require more frequent replacement.		
**Valves must be adjusted whenever the rocker shaft has been removed and reinstalled for any reason.		

MAINTENANCE INTRODUCTION

Preventive maintenance is vital to the life of your new vehicle. This section of the Operator's Handbook covers items of importance concerning the proper care of MACK vehicles. A well-run maintenance and lubrication program is the best way to ensure a long life of productive operation.

The operator plays an important role in the proper care of this equipment. By performing daily checks and observing the equipment while in operation, minor defects can be caught and corrected before they become major problems. Make sure any problems are corrected before putting the equipment into operation.

If you have any questions concerning the proper care, maintenance and lubrication of your vehicle, or if you need help in developing a preventive maintenance program, contact the service manager at the local MACK Sales, Parts and Service Center.

Note: This handbook contains basic maintenance information. For complete maintenance and lubrication procedures, refer to the *Maintenance and Lubrication Manual* .

TURBOCHARGER

The engine turbocharger operates at very high speed, temperatures and pressure. Turbo bearing lubrication is critical, particularly for a newly installed turbo or one which has not been operated for a period of time and all oil has drained from the bearing and shaft surfaces. To avoid turbocharger bearing failure, the following instructions are recommended:

- Start the engine at least every 30 days to ensure turbo bearing lubrication. Operate engine at low idle for at least three minutes before increasing RPM or driving the vehicle.
- If the engine has not been run for more than 30 days, turbo pre-lube procedure is necessary:
  1. Remove turbo air intake duct and oil line connection at turbo.
  2. Fill oil inlet fitting to overflow with clean engine oil.
  3. Using fingers at compressor wheel, carefully spin and wiggle the turbo shaft to distribute the oil over all bearing surfaces.
  4. Reconnect air intake duct and again fill turbo oil port to overflow, connect oil line and start engine.
  5. Operate engine at low idle for at least three minutes before increasing RPM or driving the vehicle.

CLEANING YOUR VEHICLE

The best protection against environmental influences that can hurt your vehicle's finish is frequent washing and waxing. How often this is required depends on how much the vehicle is used, where it is parked and weather conditions. Frequent washing is required to remove oils, dirt and grime that can stain and oxidize the painted and polished surfaces of your new truck.

Exterior Washing

Recommendations for the first 30 days...

- Only wash the vehicle by hand with cool water, a mild car wash solution and a soft cloth or sponge. Stiff brushes or sponges can mar the finish and damage the surface. Do not use a commercial truck wash.
- Wash the vehicle in the shade, never in direct sunlight.
- Do not dry wipe the finish; always use clean water. Dry wiping could scratch the finish.
- Do not park near factories with heavy smoke fallout for extended periods of time.
- Bird droppings have high acid content and can damage freshly painted surfaces. They should be cleaned off as soon as possible.
- Do not spill gasoline, diesel fuel, oil, antifreeze, transmission fluid, windshield washer fluids, or any solvents of the like on the new finish. If you do...IMMEDIATELY rinse off with water. DO NOT WIPE.
- Do not scrape ice or snow from surface. Brush off the loose material with a soft snow brush.

Recommendations for the first 90 days...

- Do not wax or polish the vehicle; this will allow the finish to dry and harden completely. (Do not use waxes or polishes that contain silicone.)

Note: Vehicles should be washed only in special wash bays to protect the environment from cleaning agent contamination.

⚠ DANGER

Vehicle cleaning products must be handled carefully, as these products may be poisonous. Keep all cleaning products out of the reach of children.

Note: Do not wash the vehicle in direct sunlight.

WARNING

Do not clean the underside of the fenders, cab, chassis, etc., without protecting the hands and arms, as injuries may result when scraping against sharp edges.

DANGER

Test the service brakes after washing the vehicle. Moisture and/or ice on the brakes can affect braking efficiency.

Note: When washing the vehicle in cold/freezing weather, avoid direct water spray into the door lock cylinders, as the water may freeze in the lock mechanisms.

CAUTION

To ensure durability, proper care of the paint finish is important. Chemicals used to wash the vehicle should have a neutral pH (range between 6 and 8), and detergents containing butyl cellosolve or potassium hydroxide should not be used.

CAUTION

For chassis used in concrete operations, do not use muriatic acid or similar types of products to clean concrete from the cab or frame surfaces. Use of these types of products will damage the paint finish and void the vehicle warranty.

Cab and Hood

- Soften the dirt on your cab with plenty of water and rinse.
- Clean truck with a soft sponge/brush starting at the roof and working downward using slight pressure.
- Use mild detergent. Never use strong soaps or chemical detergents. Any commercially available cleaner designed specifically for automotive finishes may be used for cleaning the cab and hood surfaces. PPG Industries, Inc., 3M company and Mequiar's™ have a complete line of automotive cleaning products available that are approved for use on MACK vehicles.
- Rinse the sponge or brush often to keep it clean.
- If possible, clean wheels and dirtier areas with a separate sponge/brush. This will help avoid scratching body paint with grit from other areas.
- Rinse truck thoroughly with water and wipe dry with a soft clean chamois or all cotton towels to avoid surface scratches and water spotting.

CAUTION

Do not clean the underside of the fenders, cab, chassis, etc. without protecting your hands and arms. You may injure yourself on sharp-edged parts.

Chassis

- Wash away excess dirt and grime with water from a hose.
- Use a mild detergent/soap and a soft brush to remove road grime and salts that can collect on the frame.
- Rinse thoroughly with a hose.

  Note: Cleaning of your chassis on a regular basis will help deter accelerated corrosion and rust on the frame and components. Chemicals used for ice and snow removal and dust control can collect on the frame. If these are not removed in a timely manner, accelerated corrosion can occur on fuel lines, frame, and other components even though they have corrosion protection.

Cab Interior

- For cleaning vinyl upholstery and lining: wipe with a soft cloth, using a good commercial upholstery cleaner. Do not use acetone, lacquer thinner, etc.
- For cleaning fabric upholstery: use an upholstery shampoo specially designed for this purpose. Follow the directions on the manufacturer's label.

Waxing

- Always use waxes and polishes that are non-abrasive. Do not use waxes or polishes that contain silicone.
- When water does not form small drops and roll off clean paint, apply a coat of good hard wax.
- Even if a liquid wax solution is used on a regular basis, it is advisable to protect the finish with a hard wax at least twice a year.
- Your truck may have a basecoat plus clearcoat. Use a basecoat/clearcoat wax on your paint finish.

Polishing

Polish your truck only if the paint has lost its shine and the gloss cannot be brought back with wax. It is recommended to have a professional polish your truck to avoid swirl marks or damage to the painted surface.

Winter Warnings

- If you rinse your vehicle with a hose, avoid direct water into lock cylinders. You may experience freezing of the lock mechanism.
- Test brakes after each vehicle wash. Moisture and ice on brakes can affect braking efficiency.

A well kept vehicle can look like new after many years of service. Proper care and maintenance can help you keep your vehicle's beauty and value. You can get an assortment of MACK Trucks approved cleaning products from your local MACK dealer.

TOWING

Tow pins, hooks, eyes, etc., are located in or behind the front bumper. These devices meet the recommendations for towing set forth by the Technology and Maintenance Council (TMC) of the American Trucking Association and can be used for towing a disabled vehicle from the immediate location.

CAUTION

Do NOT lift and tow any vehicle by tow pins, hooks, eyes, etc. If the vehicle is mired in heavy mud, snow, etc., use a suitable sling-type towing arrangement.

Note: Tow pins, hooks, eyes, etc., are NOT intended for use as long-term towing devices.

CAUTION

Failure to disconnect the driveline or lift the drive wheels off the ground before towing or pushing the vehicle can cause serious transmission damage.

DANGER

If the drive shaft has been removed for towing, DO NOT reuse bearing retainer bolts or stamped strap bolts, or stamped straps. Reuse of bearing retainer bolts or stamped strap bolts, or stamped straps can cause driveline failure, which can result in separation of the driveline from the vehicle. A separated driveline can result in property damage, serious personal injury or death.

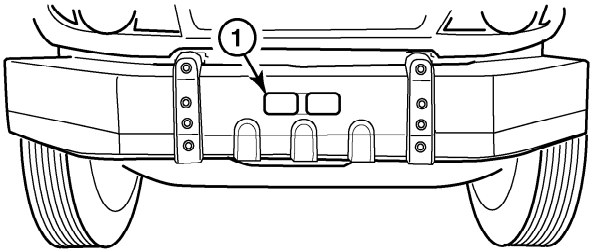

C0032899

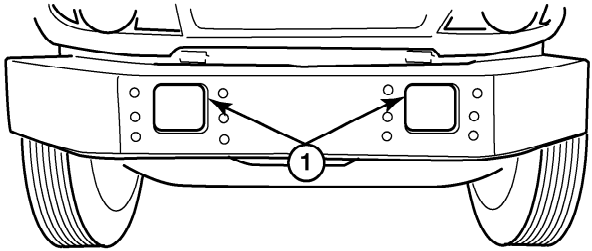

C0032900

1. Towhook Access

ENGINE OIL LEVEL CHECK

As the operator of this vehicle, it is important for you to perform the daily inspections necessary to keep your truck in good shape. Maintaining the proper oil level in your engine crankcase cannot be overemphasized.

Before checking the oil, remember these important points:

- Measurement of the oil level must be taken on level ground.
- The best time to check oil level is while the engine is COLD (prior to starting at the beginning of the work day, or after the vehicle has sat approximately 2 hours). At normal operating temperature (engine oil temperature above 79.4°C [175°F]), oil level can be checked 15 minutes after shut down.

CAUTION

Failure to wait a sufficient amount of time (2 hours if engine oil temperature is below 79.4°C [175° F]) or 15 minutes if oil temperature is above 79.4°C [175°F]) will result in an inaccurate dipstick reading.

- The level must be close to the FULL line (at least between the LOW and FULL lines) on the dipstick, but must NOT exceed the FULL line (refer to illustration below).

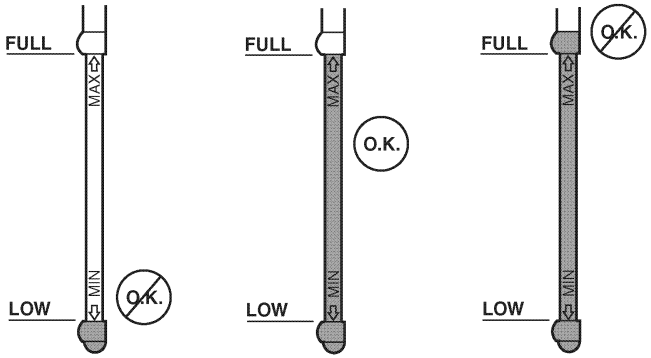

C0032901

Power Steering Reservoir

The Power Steering system uses Dextron.

FUEL TANK

Your vehicle may be equipped with an isolated fuel tank. If so equipped, the following label will be affixed to the fuel tank decal.

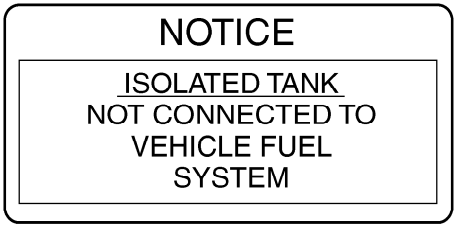

C0032902

Fuel Tank Cap

Use MACK approved non-vented cap only or tank damage may result. DO NOT fill to more than 95% of liquid capacity.

COOLING SYSTEM

The cooling system is a pressurized system. The coolant is circulated by a centrifugal pump. It is a typical system in most respects, but there are a few things to keep in mind when checking or working on the cooling system.

WARNING

Keep clear of fan when engine is running. Fan may start to rotate at high speed without warning.

WARNING

Avoid injury when checking coolant in a hot engine. Wait for the engine to cool prior to checking the level whenever possible.

Coolant Level Check

WARNING

Turn the cooling system pressure cap counterclockwise slowly. After the pressure has completely dissipated, continue turning to remove the cap.

The MACK® chassis has a pressurized plastic coolant expansion tank where quick checks of coolant level can be made and additional coolant can be added to the system. The expansion tank is mounted on the radiator.

Periodically, the coolant level should be checked by observing the coolant in the expansion tank.

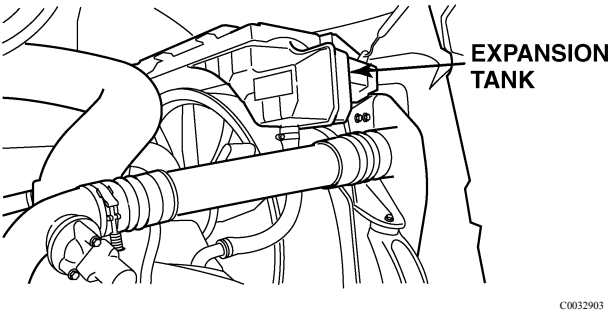

Draining the Cooling System

Whenever repairs are to be made which would require disconnection of coolant hoses, etc., the cooling system should be drained. Carefully remove the filler cap and open all coolant drain cocks.

Refilling the Cooling System

Close all drain cocks and fill only with the proper VCS coolant mixture. Run engine with the pressure cap removed until operating temperature is reached and the thermostat opens. Recheck level and add coolant if required. Run the engine long enough to be sure the system is free of air and has the correct amount of coolant.

Protecting the Cooling System

CAUTION

For use down to – 25° C (– 17 °F), 40% plus (+) or minus (–) 2% of **Bulldog VCS coolant-water**.

Note: Top off cooling system only with premixed coolant.

Note: The piping arrangement may cause capacity variation depending on the type of cooling system and optional external cooling devices which may be attached. Therefore, it is difficult to tell exactly how much coolant it will take to fill any one particular system.

CAUTION

Do NOT use coolant solutions which contain anti-leak additives.

CAUTION

Do NOT use soluble oil-type coolants in any MACK cooling system.

Cooling System Maintenance

The cooling system must be maintained by performing regularly scheduled maintenance as outlined in the *Maintenance and Lubrication Manual*. Cold weather operations, however, place added demands on the cooling system. Prevent potential cold weather problems by performing a quick check of the cooling system as outlined below:

- Make a general check for cooling system leaks.
- Inspect hoses and clamps for leaks and condition. Tighten hose clamps to specifications (as required).
- Check coolant level. Add fresh coolant (in specified concentration) as necessary.
- Check and record degree of coolant. Add coolant as necessary to obtain required protection level.

For additional information concerning the cooling system, refer to the *Maintenance and Lubrication Manual* .

Accessory Drive Belt Routing (MP8)

The following diagram shows the accessory drive belt and main belt routing with and without air conditioning. This diagram is located in a clear area on the outside of the left frame between the radiator and center line of the front axle.

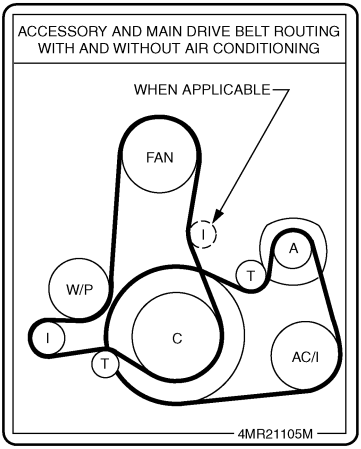

ACCESSORY AND MAIN DRIVE BELT ROUTING
MP8 ENGINE

C0032904

Accessory Drive Belt Routing (MP10)

The following diagram shows the accessory drive belt and main belt routing with air conditioning. This diagram is located in a clear area on the outside of the left frame between the radiator and center line of the front axle.

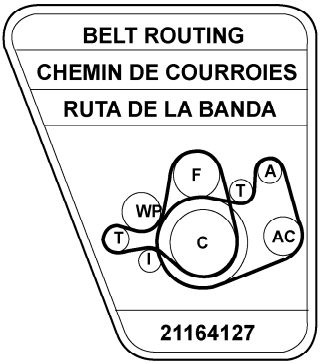

1

C0029965

Accessory and Main Drive Belt Routing

1. Accessory and Main Drive Belt Routing MP10

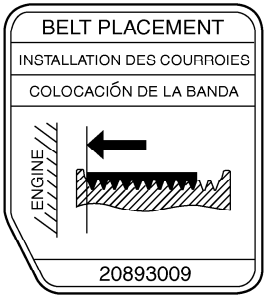

C0029855

Accessory and Main Drive Belt Routing

WHEELS

Wheel Inspection

Look at the wheels and cap nuts. Inspect them for evidence of cap nut looseness. Rust streaks from the cap nut ball seat are an indication of looseness. Refer to the *Maintenance and Lubrication Manual* for complete procedures concerning wheel inspection and wheel nut tightening.

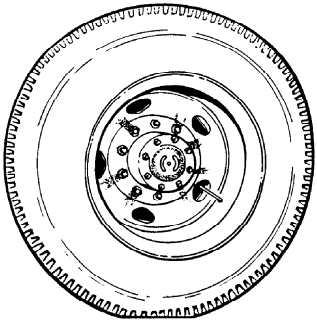

C0032906

Look for cracks around the hand hole, stud hole and wheel. Look for broken studs, wheel damage or improperly seated lock rings.

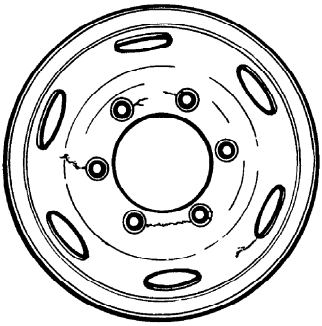

C0032907

Tyres

DANGER

Tyres used on multipiece rims must be assembled and inflated only by experienced, qualified personnel. Tyres must be inflated in a safety cage whenever possible. If, however, a safety cage is not available, use a portable lock-ring guard. The tyre must be deflated prior to removal of the tyre-and-rim assembly from the vehicle. Remove the valve core to ensure complete deflation.

DANGER

NEVER position your body in front of the rim during inflation.

CAUTION

NEVER use water-based sealants, puncture proofing, or liquid balance materials containing water in All-Steel Radial Ply truck tyres.

Inflation Pressure

To ensure maximum mileage and overall performance from your tyres, it is essential that they operate at the correct inflation pressure for the load carried. Inflation pressure should be checked daily while the tyres are cold. Always use an accurate tyre pressure gauge. NEVER bleed air from a hot tyre, as it will then be underinflated. Refer to the specific tyre manufacturer's data books, or to the vehicle certification label for a complete listing of tyre inflation pressures. For additional information concerning tyre care, refer to the *Maintenance and Lubrication Manual* .

WARNING

UNDER NO CIRCUMSTANCES should you drive on underinflated or overloaded tyres. A tyre in this condition builds up excessive heat which can result in sudden tyre destruction, property damage and personal injury.

CAUTION

Never bleed air from your tyres in an attempt to gain traction for a vehicle stuck in snow, ice or mud. This practice provides no additional traction and typically results in underinflated tyres. Never bleed air from a hot tyre since that tyre will then be underinflated.

To adjust for pressure fluctuations induced by temperature changes associated with winter weather, it is recommended that tyre inflation pressure be checked daily when the tyres are cold (i.e., before the vehicle is driven). Always use an accurate tyre pressure gauge.

Inspection

Inspect your tyres daily. Look for bulges, cracks, cuts, penetrations and/or oil contamination. If any such damage is found, the tyre must be thoroughly inspected by a qualified tyre inspector and repaired or discarded immediately, at his discretion. Also, check for uneven wear. If found, a thorough inspection of front end parts and alignment should be made by a qualified mechanic. Refer to the *Maintenance and Lubrication Manual* for more information.

Tyre Manufacturer's Data Book

Specific and more detailed information can be obtained by referring to the technical data books provided by each tyre manufacturer.

Subjects of interest are:

- High-speed or low-speed operation
- Repair, retreading and regrooving
- Use of tyre chains
- Mixing radial and bias tyres on the same vehicle
- Use of dynamometers
- Tyre mounting/dismounting

CAUTION

For important tyre information (i.e., high speed limits, inflation pressures, etc.), consult the product information available through the specific tyre manufacturer.

Oil Contamination of Tyres

Lubricating oils, fuel oil, gasoline and other petroleum derivatives, if allowed to contact tyres, will soften the rubber and destroy the tyre. Preventive maintenance is necessary to ensure that oil leakage does not occur. The following areas should be inspected on a regular basis:

- Axle end seals
- Engine seals
- Transmission seals
- Drive axle seals
- Oil filters
- Oil and hydraulic lines (if equipped)
- Refer to the *Maintenance and Lubrication Manual* , specific tyre manufacturer's books, or to the vehicle certification label, for additional information concerning tyres and their care.

BATTERY

CAUTION

To avoid damage to sensitive electronic equipment, disconnect ALL battery cables and harnesses to electronic control units before welding. Do NOT disconnect batteries while engine is running.

Jump-Starting Engine

If you encounter a situation in which it is necessary to jump-start an engine, use the following procedures.

WARNING

Batteries which are to be linked together must be of the same voltage (12 to 12, 24 to 24). Take care to observe proper polarity when connecting batteries. Batteries produce explosive gases. Keep sparks, flames, cigarettes, etc., away from batteries at all times. Protect your eyes by wearing safety goggles. Be sure vehicles are NOT touching each other.

CAUTION

To avoid damaging any electronic controllers when jump-starting a V-MAC vehicle, always turn the ignition switch OFF before connecting the batteries.

1 Connect positive (+) cable to positive (+) post of discharged battery.

2 Connect the other end of the same cable to the positive (+) post of the booster battery.

3 Connect the second cable, negative (-) side, to the other post of the booster battery.

4 Make the final connection to the negative (-) battery terminal of the stalled vehicle, and stand back.

5 Start the vehicle with the booster batteries and then start the stalled vehicle. Shut down the vehicle with the booster batteries and remove the cables in the reverse order of connection.

WARNING

Do NOT connect the final negative (-) connection to the frame of the stalled vehicle. This would cause all current to flow through the master ground circuit breaker resulting in overload.

ELECTRICAL

Circuit Breaker and Relay Panels

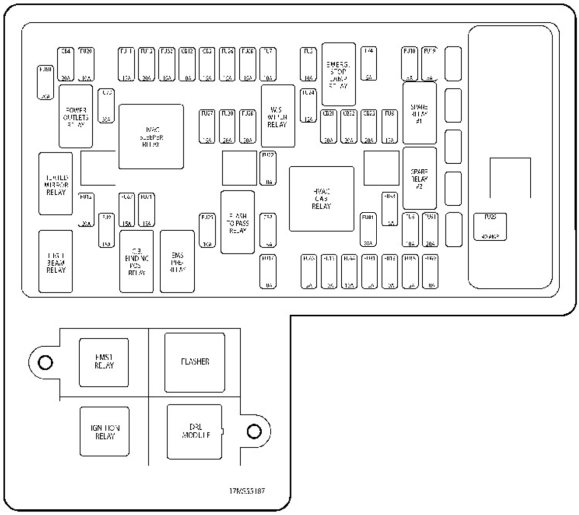

W3071778

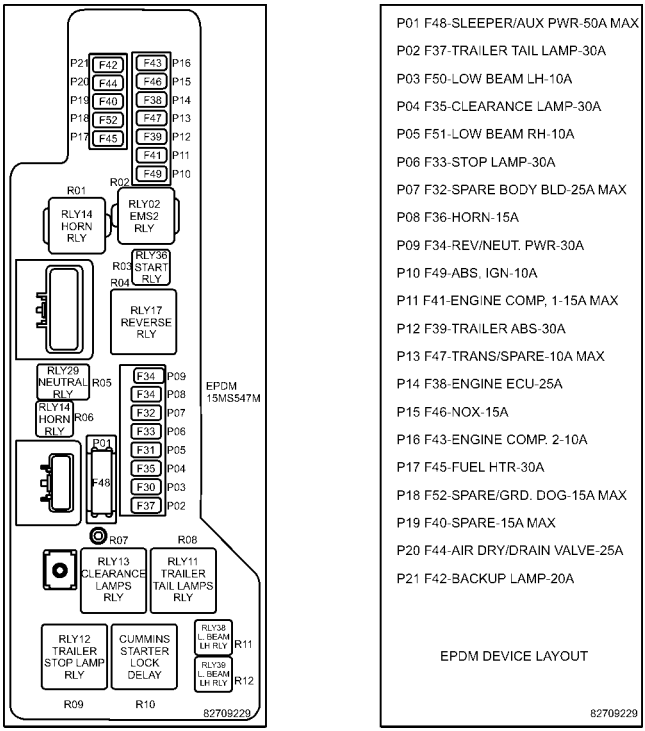

W3061560

Note: For circuit breaker designations, refer to the Circuit Protection charts.

Fuses are standard equipment for all circuits except the headlamps and windshield wipers. Circuit breakers are available as optional equipment.

CAUTION

For proper installation of electrical accessories, all wiring should meet SAE requirements and be routed through the circuit protection panel with proper amperage fuses or Type II circuit breakers. (Headlights and wipers will be on Type I, cycling-type circuit breakers.)

The headlight circuits are protected by SAE Type I (automatic reset-cycling) circuit breakers that automatically interrupt then restore the flow of current through the circuit in the event of an overload. This cycling will continue until the cause of the overload is repaired.

SAE Type II (automatic reset, non-cycling) circuit breakers (if equipped) provide a complete circuit disconnect until the overload is corrected. The power to the affected circuit breaker must be shut off before the circuit breaker will reset itself.

The circuit protection panel also provides access to battery, ignition and ground terminals for non-factory installed electronic equipment. (On V-MAC chassis, there are two serial link terminals for easy local connection of a trip recording device.)

Additional In-Line Fuse, Circuit Breaker and Relay Lcations

Cab

- **All Models**
- 150A Circuit Breaker
- Mounted in battery location

12V Urea Dosing System

- **All MP Engine Models**
- 1 fuse located near Aftertreatment Control Module (ACM) mounting on chassis cross member under or behind cab
- F07A 30A
- **Metroliner with Cummins ISL**
- 3 fuses located on chassis related to UDS
- Left Hand front chassis wiring near left hand cab leg
- ADS Fuse 20A (Battery Supply)
- Left Hand front chassis wiring near trailer connector block mounted at left hand rear bonnet mount
- NOX Sensor 20A
- ADS 5A (Key Switch)

Ultrashift +

- **Metroliner**
- Battery Box
- 1 fuse left hand chassis harness transmission to cab. Should be with UDS fuse but can be tied back along harness near rear of engine and fuel filter
- FU_INL_1 30A

Cummins Engine

- **Metroliner ISL**
- 1. Engine fuse located left hand rear of engine around fuel filter
- FB02C Fuse 30A

  Note: Earlier engines had 2 @ 15A
- 2. Pre-heater fuses and relays mounted on left hand bonnet support bracket
- FB03 and FB04 Cummins pre-heater 125A
- RLY42C and RLY42D Cummins pre-heater

- **Titan, Superliner ISX**
- 1 engine fuse located left hand of engine near 39 pin interface connector
- FB02C Fuse 30A

  Note: Earlier engines had 2 @ 15A

*m*DRIVE Relay Center

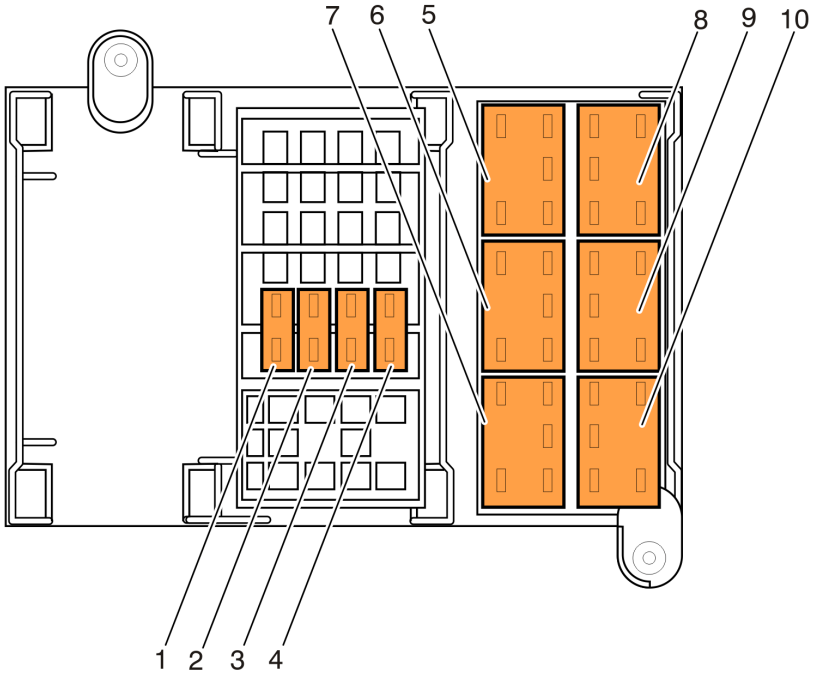

W3061662

*m*DRIVE Backside Panel

1. **10 amp Fuse** (F71A) Ignition Power to GSECU	2. **20 amp Fuse** (F80) Battery power to TECU
3. **30 amp Fuse** (F81A) Battery power to relay 73	4. **10 amp Fuse** (F79) Battery power to gear Selector and GECU
5. **Relay 93** Engine Retarder LATCH	6. **Relay 72** GSECU Ignition
7. **Relay 91** Engine Retarder AUTO	8. **Relay 47** *m*DRIVE Reverse Signal
9. **Relay 73** *m*DRIVE Power	10. **Relay 94** Engine Retarder ENABLE

Electrical Grease

To prevent corrosion of the lamp socket terminals, particularly with the clearance and marker lamp, apply a coating of electrical sealing grease, such as Lubriplate DS-ES or TEK-519, to the socket and terminal assemblies.

⚠ **CAUTION**
Do not use electrical grease on any V-MAC connectors.

Circuit Protection Charts

Cab Circuit Protection			
#1	#2 — 15A	#3 - 15A	#4 - 20A
Open	Headlamps, DRL Module, Fog Lamps	Park & Tail Lps., Marker Lamps	Direct Lps., Flasher
#5 - 10A	#6 - 10A	#7 - 10A	#8 - 15A
Tractor Stop Lps.	Dome Lps., Courtesy Lps.	Ign. Switch	Air Solenoid
#9 - 15A	#10 - 5A	#11 - 15A	#12 - 10A
CB Posts	Communication Connector (DDL), Radio	Battery Stud	Electric Door Locks
#13 - 20A	#14	#15 - 20A	#16 - 10A
ABS	Open	Heated Mirrors	Vehicle Control Unit (VCU)
#17 - 10A		#18 - 10A	#19 - 5A
Clutch Switch, Engine Brake, Cruise On/Off & Set/Resume, Override Switch, Park Brake, PTO w/o T2000, Spare (VCU) Relay Coils		Power/Spare	ABC Cluster
#20 - 10A	#21 - 20A	#22 - 20A	#23 - 20A
Moto Mirrors	Windshield Wiper & Washer	LH Window Lift Motor	RH Window Lift Motor
#24 - 15A	#25 - 40A	#26 - 15A	#27 - 15A
Spare Batt./Ign. Power	Heater/Air Conditioner	Hook-Up Lps.	Ignition Stud
#28 - 20A	#29 - 10A	#30 - 20A	#31 - 15A
Htd. seats	EMS #1 Relay Coil/Short Range Wireless	Opt. Ign. Power Sw., Spare	Auto shift trans. or spare
#53 - 15A	#60 - 20A	#61 - 20A	#62 - 15A
A/C Comp. Clutch	2-Power Outlet Sockets	Aux. sw's/Spare	Spare/Battery
#63 - 5A	#64 - 10A	#65 - 15A	#67 - 15A
ABC Gauge Cluster	Cold Start	VORAD Module	Spare/Battery
#68 - 15A	#69 - 10A	#70 - 30A	#71 - 15A

Cab Circuit Protection			
Cigar Lighter	Keyless Entry Module	HVAC Sleeper	Transmission
#72 - 15A	#74 - 5A	#81 - 30A	
HVAC/Control Unit	Illumination	Transmission Power mDRIVE	

Engine Circuit Protection (V-MAC IV)			
#32 - 30A	#33 - 30A	#34 - 30A	#35 - 30A
Spare Body Bld.	Trailer Stop Lps.	Reverse/Neutral Power	Cab & Trailer Clearance Lps.
#36 - 15A	#37 - 30A	#38 - 25A	#39 - 30A
Horn	Trailer Tail Lps.	Engine Control Unit (ign.)	Trailer ABS Power
#40 - 15A	#41 - 15A		#42 - 20A
Spare	Engine Compartment		Back-Up Lps.
#43 - 10A	#44 - 25A	#45 - 30A	#46 - 20A
Engine Compartment	Air Dryer, Htd. Drain Valve	Fuel Heater	NOx Sensor/Spare
#47 - 10A	#48 - 50A	#49 - 10A	#50 - 10A
Meritor Trans. EOA or Spare	Sleeper Box	ABS	Low Beam L.H.
#51 - 10A	#52 - 15A		
Low Beam R.H.	Spare		

Electrical Accessory Connection Points

CAUTION

The electrical systems on all MACK chassis include a circuit breaker located in the ground circuit. Any additional electrical components that may be added MUST not be connected directly to the battery or negative connection of the starter. Doing so may defeat the protection provided by this circuit breaker. Components may be ground connected to other locations, such as frame or engine grounding points.

This MACK chassis is ready for convenient installation of electrical accessories. Use only the designated CB jacks on the dashboard, or battery post (12 volts), ignition, ground post, buffered tachometer (RPM) output, and buffered speedometer (MPH) output connections available on the electrical equipment panel. Each connection point is described below.

Battery Post (BATT)

This is a 12-volt, unswitched battery power connection. It can be used to power external devices that require power at all times, even when the key is turned off. This source is protected by a 20-amp circuit breaker.

Ignition Post (IGN)

This is a 12-volt, switched battery power connection. It can be used to power external devices that require power only when the key is turned on. This source is protected by a 15-amp circuit breaker.

Ground Post (GND)

This is a ground connection. It can be used as a power return connection for external devices.

Tachometer (RPM) Output

This terminal is to be used for devices requiring information for engine speed signals. (See the Warning and Note above.)

WARNING

The tachometer output, speedometer output, and serial links A and B are for specific hookups. These terminals should be used only for their specified purposes and connection to these terminals should be done only by a qualified service technician.

Note: The tachometer output and speedometer output are 50% duty cycle, Transistor-Transistor Logic (TTL) compatible, square wave signals that are calibrated to provide a standard pulse rate of 12 pulses per engine revolution for the tachometer output and 18,645 pulses per kilometer for the speedometer output. TTL compatibility of these outputs may be affected by other devices connected to these outputs.

Speedometer (KPH) Output

This terminal is to be used for devices requiring information for vehicle speed signals. (See the Warning and Note below).

SAE/ATA J1708 Posts (Serial Links A and B)

This is a serial communication interface. It conforms to the SAE/ATA J1708 Recommended Practice for Serial Data Communications Between Microcomputer Systems in Heavy-Duty Vehicle Applications. (See the Warning above.)

Body Installer's Interface Connector

An optional body builder interface harness is available to provide an easy, reliable method of connecting into the vehicle electrical system without having to cut and splice into the chassis wire harnesses. This harness provides connections to the V-MAC® IV system when signals for PTO inputs, Set/Decel inputs, engine speed, vehicle speed, etc., are required. The harness also provides spare power and ground connections both inside and outside the cab.

The MACK® chassis offers two optional body builder interface connectors located inside the frame rail on the right-hand side of the chassis behind the cab.

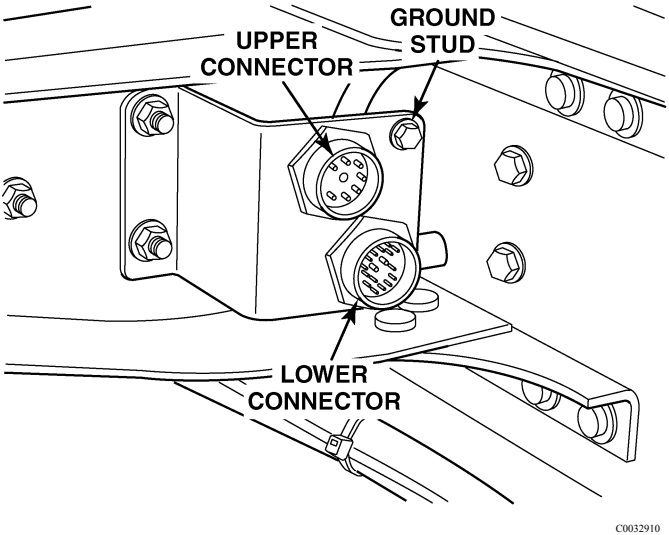

Inside the Frame Rail

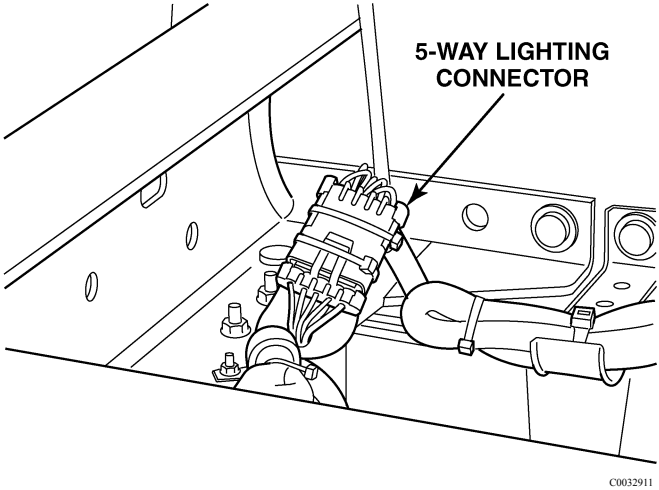

Inside the Back of the Frame Rail

These connectors provide connections to the following circuits:

Upper Connector:

Electrical Connection	Fused amps
12V battery feed	30A
12V battery feed	30A
12V Ignition feed	30A
12V Ignition feed	30A
Reverse Power feed/Neutral Power feed	15A
Stop Lamp Signal	30A
Tail Lamp Signal	30A
Clearance Lamp Signal	30A

Lower Connector:

Electrical Connection	Fused amps
Back Up Lamp Signal	15A
Dash Mounted 12V Battery Switch**	20A
Dash Mounted 12V Ignition Switch**	20A
PTO 1 & PTO 2 Signals	
Speed Control Input	
Set Speed Input	
Resume Speed Input	
Throttle Signal	
J1587/1708 Diagnostic Bus Connectors (-/+)	
RH & LH Turn Lamp Signals	
RH & LH Turn/Stop Lamp Signals	
Buffered MPH & RPM Output Signals	
Dash Mounted Body Lamp Signal*	
Spare: 14 Gauge (5)***	
Spare: 16 Gauge (1)***	

* An input signal (12V) connection is included in Body Link if the Body Lamp is ordered.

** Output power is included in Body Link II if auxiliary or extra dash mounted battery and ignition power dash rocker switches are ordered.

*** Spare connectors are typically used to wire unique bodybuilder controls into the dash area.

5-Way Lighting Connector:

- Parking Lamps
- Reverse Lamps
- Left Stop-Turn
- Right Stop-Turn
- Ground Connections

METRIC CONVERSIONS

Note: Use all tools on the fasteners they were made to be used on. Use metric tools on Sl metric units only. Never try to use metric tools on U.S. pound-inch units or U.S. pound-inch tools on Sl metric units.

CAUTION

Potential external/internal thread mismatch condition(s) may occur with certain metric thread-inch thread fastener combinations, and with fastener combinations involving incompatible metric fastener systems. A given thread mismatch condition can result in thread stripping and/or assembly weakness leading to potential service failure, thereby rendering a vehicle non-operational and/or unsafe for operation. The specific external/internal thread combinations from which such problems can result are identified and set forth in Maintenance and Lubrication Manual.

SI to U.S. Conversions		
25.4 millimeters	=	1 inch
1.61 kilometers	=	1 mile
.473 liter	=	1 pint (U.S. liquid)
.946 liter	=	1 quart (U.S. liquid)
.01639 liter	=	1 cubic inch
1.3558 Newton meters	=	1 pound-foot
.746 kilowatt	=	1 horsepower
6.895 kilopascals	=	1 pound/square inch
(1.8 x degrees Celsius) + 32	=	degrees Fahrenheit
.83267 Imperial gallon	=	1 gallon (U.S. liquid)
U.S. to SI Conversions		
.03937 inch	=	1 millimeter
.6214 mile	=	1 kilometer
2.1134 pints (U.S. liquid)	=	1 liter
1.0567 quarts (U.S. liquid)	=	1 liter
61.024 cubic inches	=	1 liter
.7376 pound-foot	=	1 Newton meter
1.34 horsepower	=	1 kilowatt
.145 pound/square inch	=	1 kilopascal
.556 x (degrees Fahrenheit -32)	=	degrees Celsius
1.2009 gallons (U.S. liquid)	=	1 Imperial gallon