https://truckmanualshub.com/

Unimog

Operating Instructions

Mercedes-Benz

https://truckmanualshub.com/

Symbols

⚠ WARNING

Warning notes make you aware of dangers which could pose a threat to your health or life, or to the health and life of others.

Environmental note

Environmental notes provide you with information on environmentally aware actions or disposal.

! Notes on material damage alert you to dangers that could lead to damage to your vehicle.

ℹ These symbols indicate useful instructions or further information that could be helpful to you.

▶	This symbol designates an instruction you must follow.
▶	Several consecutive symbols indicate an instruction with several steps.
(▷ page)	This symbol tells you where you can find further information on a topic.
▷ ▷	This symbol indicates a warning or an instruction that is continued on the next page.
`Display`	This text indicates a message on the display.

https://truckmanualshub.com/

Welcome to the world of Mercedes-Benz

Before you first drive off, read these Operating Instructions carefully and familiarise yourself with your vehicle. Please adhere to the information and warning notes in these Operating Instructions for your own safety and to ensure a longer operating duration of the vehicle. Failure to observe the instructions may lead to damage to the vehicle or personal injury.

The equipment or model designation of your vehicle may differ according to:

- model
- order
- country specification
- availability

The illustrations in this manual show a left-hand-drive vehicle. The location of vehicle parts and controls for right-hand drive vehicles differ accordingly.

Mercedes-Benz is constantly updating its vehicles to the state of the art.

Mercedes-Benz therefore reserves the right to introduce changes in:

- design
- equipment
- technical features

Therefore, the descriptions provided may occasionally differ from your own vehicle.

The following are components of the vehicle:

- Operating Instructions
- Maintenance or Service Booklet
- Equipment-dependent supplements

Always keep these documents in the vehicle. If you sell the vehicle, always pass the documents on to the new owner.

ℹ You can get to know some of the important features of your vehicle in German and English in the interactive Operating Instructions on the Internet at:

www.mercedes-benz.de/betriebsanleitung-unimog

You can also use the Mercedes-Benz Guide smartphone app:

Apple® iOS

Android™

Please note that the Mercedes-Benz Guide app may not yet be available in your country.

The technical documentation team at Daimler AG wishes you safe and pleasant motoring.

4055840516

https://truckmanualshub.com/

https://truckmanualshub.com/

Index 4

Introduction 27

At a glance 35

Safety 47

Opening and closing 55

Driver's workstation 63

Climate control 97

On-board computer and displays 109

Audio systems 147

Driving mode 157

Hydraulic system 227

Working mode 261

Maintenance and care 285

Breakdown assistance 311

Wheels and tyres 337

Technical data 355

https://truckmanualshub.com/

1, 2, 3 ...

24 V socket
Centre console 92

A

ABS (Anti-lock Braking System)
ABS Off-road program 165
Braking with anti-lock protection ... 165
Important safety notes 164
ABS off-road program
Activating/deactivating 165
Access steps
Cleaning 288
Important safety notes 288
Tailgate 276
Active charcoal filter
Cleaning 303
AdBlue®
Additive 366
Consumption 215
Disposal 366
Gauge 111
General notes 365
High outside temperatures 366
Important safety notes 218
Low outside temperatures 366
Purity 366
Refuelling 218
Service product 365
Storage 366
Tank 218
AdBlue® empty (display message)
Yellow event window 131
AdBlue® reserve (display message)
Yellow event window 131
AdBlue® very low (display message)
Yellow event window 131
Additional mirror
Vehicles with mowing door 72
Additional turn signal
Replacing bulbs 83
Adjusting
Auxiliary headlamps 78
Adjusting the headlamp range 75
Adjusting the volume
Audio equipment 122
Radio 122
Air conditioning
General notes 98
Air-conditioning system
Climate control 99
Switching on/off 101
Air-recirculation mode
Activating/deactivating 100
Airflow
Setting 100
Alarm
Operating (on-board computer) 120
Attachments/add-on equipment 31
Audio equipment
Adjusting the volume (steering wheel buttons) 122
Operating (on-board computer) 122
Audio system
Bluetooth® settings 153
General notes 148
Important safety notes 148
Operating system (overview) 150
Automatic car wash 289
Automatic gearshift
see Telligent automatic gearshift
Auxiliary consumers 327
Auxiliary headlamp
Turn signal lamp 83
Auxiliary headlamps
General notes 77
Lighting system 77
Replacing bulbs 83
Auxiliary heating
Air distribution and temperature 105
Engine preheating 106
Fuels 102
Immediate heating mode 104
Important safety notes 102
Mandatory switch-off 103
Preselected heating mode 105
Problem (fault) 107
Timer 104
Auxiliary heating system
Alarm function 106

https://truckmanualshub.com/

Axle loads
Vehicle identification plate 356
Axle reduction ratio
Vehicle identification plate 356

B

Ballast weights
Weights 262
Batteries
Care 309
Charging 309
Checking the fluid level 308
Disconnecting and connecting 308
Disconnecting/connecting the battery cover 307
Important safety notes 306
Maintenance 306
Battery cover
Disconnecting/connecting 307
Battery isolator switch
Interrupting the voltage supply 91
Re-establishing a voltage supply 91
Voltage supply 90
Before pulling away
Checking the supply pressure in the compressed-air brake system .. 161
Important safety notes 159
Bleeding the fuel system
With prefilter 322
Without prefilter 322
BlueTec® exhaust gas aftertreatment
AdBlue® service product 365
Notes 30
Status indicator 114
Bluetooth®
Activating/deactivating 154
Connection requirements 154
Notes 153
Pairing a mobile phone 154
Settings 153
Body
Cleaning 287
Bottle holder
Important safety notes 93
Brake fluid
Hydraulic clutch mechanism system 361
Notes 361
Brake lamp
Replacing bulbs 85
Brake supply pressure in circuit 1 too low (display message)
Red event window 139
Brake system
Checking for leaks 163
Service brake 163
Brakes
Checking for leaks in the compressed-air brake system 163
Display message in the red event window 142
Brakes, axle 1 Maintenance due immediately (display message)
Yellow event window 134
Braking
ABS 164
Anti-lock protection 165
Continuous brake 167
Engine brake 167
Four-wheel parking brake 166
Parking brake 166
Releasing the spring-loaded parking brake cylinders 335
Breakdown assistance
Bleeding the fuel system 322
Cab safety prop 312
Charging the compressed-air system from an outside source 330
Chock 314
Compressed-air pistol with compressed-air hose 312
Draining the fuel prefilter 321
Fire extinguisher 312
First-aid kit 312
Fuses 327
Important safety notes 312
Jack 312
Jump-starting 331
Pump lever, storing 312
Releasing the spring-loaded parking brake cylinders 335
Renewing the fuel filter 320

https://truckmanualshub.com/

Replacing the fuel prefilter 319
Square spanner 312
Starting and stopping the engine with the cab tilted 318
Tilting the cab 314
Tool bag 312
Towing and tow-starting 333
Tyre inflator hose 312
Warning lamp 312
Warning triangle 312
Wheel wrench 312
Window cleaner/scraper 313

Buttons
see On-board computer

C

Cab
Cable ducts 95
Notes on tilting 314
Problems in tilting the cab 318
Tilting 314
Tilting back 316
Tilting forwards 315
Tilting unit 314

Cab safety prop
Vehicle tool kit 312

Cab tilting pump
Pump lever 313

Cable ducts
Cab 95

Cables and compressed-air lines
Trailer 220

Camera
Driving systems 196
Important safety notes 196

Capacities (technical data) 367

Care
see Cleaning and care

CD radio
Anti-theft protection 148
Bluetooth® settings 153
Function overview 153
Operating system (overview) 150

Centre console
Front 40
Rear 41
Switch panel overview 40

Changing a bulb
Front foglamps 83
Overview of bulbs 81
Rotating beacon 86
Side-mounted turn signal lamps 84
Strobe light 87
Working-area lamp 86

Changing a wheel
Fitting a wheel 325
Important safety notes 323
Positioning a jack 324
Removing a wheel 324
Retightening wheel nuts 326
Tyre inflator connection 326

Changing bulbs
Licence plate lighting 85
Notes 79
Perimeter lamp 85

Chassis
Cleaning 287

Chassis protection
Cleaning and care 290

Check tyre pressure (display message)
Red event window 143

Checking the anti-corrosion protection 305

Child
Restraint system 52

Cleaning
Active charcoal filter 303
Fine particle filter 303

Cleaning and care
Access steps 288
After driving off-road or on a construction site 290
Automatic car wash 289
Chassis and body 287
Chassis and underbody protection 290
cleaning seat covers 286
Cleaning the exterior 286
Cleaning the interior 286
Engine cleaning 289
High-pressure cleaning 288
Light-alloy wheels 289
Notes on care 286
Seat belts 286

https://truckmanualshub.com/

Cleaning the air filter
Maintenance 304
Cleaning the interior
Cleaning and care 286
Cleaning the radiator
Air conditioning condenser 301
Charge-air cooler 302
Engine radiator 301
Hydraulic oil cooling fan 302
Hydrostatic drive system oil cooler 303
Important safety notes 301
Power hydraulics oil cooler 302
Radiator quick cleaning system 191
Torque converter clutch oil cooler .. 303
Working hydraulics oil cooler 303
Cleaning the release valve on the air intake duct
Maintenance 304
Cleaning the vehicle exterior
Cleaning and care 286
Important safety notes 286
Climate control
Air conditioning 101
Auxiliary heater 102
Cooling 101
Dehumidifying 101
Demisting the windscreen 101
Function control panel 99
Mixed air operation 100
Overview 99
Residual heat 101
Setting the air distribution 100
Setting the air vents 101
Setting the airflow 100
Setting the temperature 100
Switching air-recirculation mode on/off 100
Switching windscreen heating on/off 90
Clutch
Faulty, Visit workshop (display message in the yellow event window) 136
Heavily loaded (display message in the grey event window) 130
Heavily loaded (display message in the yellow event window) 136
Clutch actuation system
see Hydraulic clutch actuation system
Clutch faulty (display message)
Red event window 141
Clutch pedal
Folding out (display message, grey event window) 130
Clutch/transmission circuit
Checking the supply pressure 161
Cockpit
Overview 36
Switch panel overview 40
Cold climate package
Before cold-starting 224
Cold-resistant service products 224
Cold-start limits 224
Coolant preheating 224
Engine does not start 225
General notes 224
Starting the engine 225
Winter driving 224
Combination switch
Lighting system 75
Overview 44
Compressed-air brake system
Checking the reservoir pressure 161
Draining 304
Compressed-air connection
Cab 94
Compressed-air lines and cables
Trailer 220
Compressed-air pistol with compressed-air hose
Vehicle tool kit 312
Compressed-air reservoir
Draining 304
Identification plate 380
Technical data 379
Compressed-air reservoir circuit 1
Draining 304
Compressed-air reservoir circuit 2
Draining 304
Compressed-air reservoir for auxiliary consumers
Draining 304
Compressed-air reservoir for tyre pressure control system
Draining 304

https://truckmanualshub.com/

Compressed-air reservoir regeneration
Draining 304
Compressed-air system
Charging from an outside source ... 330
Display message in the yellow event window 135
Condensation in compressed-air reservoir (display message)
Yellow event window 135
Constant working speed
Engine speed setting 263
Constant working speed mode
Activating/deactivating using the control lever and with the blue button 264
Activating/deactivating using the control lever without the blue button 264
Activating/deactivating with the buttons on the steering wheel 263
Consumption
AdBlue® 215
Fuel 215
Oil (engine) 215
Continuous brake
Activating/deactivating 168
Important safety notes 167
Continuous consumers
Working hydraulics circuit I 252
Control lever
Changing the installation position 95
Conversions/equipment 31
Coolant
Additive with antifreeze protection 362
Additive without antifreeze protection 362
Checking coolant level and topping up 293
Service product 362
Coolant level too low (display message)
Red event window 140
Coolant temperature
Checking (on-board computer) 125
Coolant temperature too high (display message)
Yellow event window 135
Crawler gears
With Telligent® automatic gearshift 184
With Telligent® gearshift 184
Cruise control
Activating 194
Activating while driving 194
Activation conditions 194
Adjusting the speed tolerance 195
Deactivating 196
Driving 195
Driving tips 195
Important safety notes 193
Overtaking 196
Overview 194
Selecting 194
Setting a speed 195
Setting the speed and the speed tolerance 195
Cruise control lever
Hydrostatic drive system 205
Overview 44
Telligent automatic gearshift 175
Telligent gearshift 169
Cumulation
Working hydraulics circuit II, vehicles with gear pump 255
Cup holder
Important safety notes 93

D

Data plate
Engine 356
Daylight driving lamps
Switching on/off 74
Declarations of conformity 29
Device camera
Connecting 197
Driving systems 196
General notes 197
Switching on/off 198
Diagnostic data
Calling up (on-board computer) 125

https://truckmanualshub.com/

Diagnostics connection
Operating safety and vehicle approval 29
Diesel
Refuelling 216
Diesel fuels
Fuel additives 365
Important safety notes 364
Low outside temperatures 365
Setting the fuel grade (sulphur content) in the on-board computer 364
Diesel particle filter
Automatic regeneration 213
Blocking regeneration 214
Filter replacement 215
Full, Stop vehicle, Consult service centre (display message in the red event window) 139
Important safety notes 213
Manual regeneration not possible (display message, grey event window) 129
Regeneration disabled (display message in the grey event window) 129
Starting manual regeneration 214
Diesel particle filter full, engine performance is reduced (display message)
Yellow event window 131
Diesel particle filter saturated (display message)
Yellow event window 131
Diesel particle filter saturation level increased (display message)
Yellow event window 131
Diesel reserve (display message)
Yellow event window 134
Differential lock
Engaging 190
Important safety notes 190
Differential locks
Disengaging 190
Diodes
Layout 328
Dipped-beam headlamps
Replacing bulbs 82
Setting for driving abroad (symmetrical) 73
Switching on/off 74
Direction of travel preselection
Telligent automatic gearshift with cruise control lever 176
Telligent gearshift with cruise control lever 170
Telligent® automatic gearshift with operating lever 176
Telligent® gearshift with operating lever 170
Display
Instrument cluster 38
On-board computer 115
Outside temperature 112
Setting the language (on-board computer) 127
Time 112
Total distance recorder 112
Trip meter 112
Display and instrument cluster controls malfunction (display message)
Yellow event window 137
Display messages
see Grey event window
see Red event window
see Yellow event window
Distance recorder
Total distance recorder 112
Doors
Access steps (entering and exiting) 60
Entering and exiting 60
Grab handles (entering and exiting) 60
Mowing door, important safety notes 57
Normal door, important safety notes 56
Draining
Compressed-air reservoir circuit 1 304
Compressed-air reservoir circuit 2 304
Compressed-air reservoir for auxiliary consumers 304

https://truckmanualshub.com/

Compressed-air reservoir for tyre pressure control system 304
Compressed-air reservoir regeneration 304
Fuel prefilter 321
Drive control faulty (display message)
Yellow event window 135
Driving abroad
Lighting system 73
Symmetrical dipped beam 73
Driving and braking characteristics
Changed (display message in the red event window) 142
Driving mode
Differential lock 190
Radiator quick cleaning system 191
Torque converter clutch 185
Tyre pressure control system 186
Driving off-road
ABS off-road program 165
Important safety notes 210
Rules for driving off-road 211
see Off-road driving
Driving style
see Fuel consumption
Driving systems
Camera 196
Cruise control 193
Device camera 196
Front camera 196
Hydrostatic drive system 198
Reversing camera 196
Speed limiter 191
Driving the vehicle
Attached equipment 209
Important safety notes 209
Driving time
Checking (on-board computer) 119
Driving tips
Diesel particle filter 213
Driving 209
Driving abroad 73
Driving with a high centre of gravity 209
Off-road driving 210
Running-in 208
Symmetrical dipped beam 73
Use of cable winches 213
Warning buzzer 216
Dual-mode steering
Changing steering position 70
Important safety notes 70
Overview 70

E

Electromagnetic compatibility
Declaration of conformity 29
Electronic immobiliser
Overview 59
Emergency equipment 312
Engine
Changing the power output 30
Checking the operating hours (on-board computer) 125
Cleaning 289
Cold start 224
Data plate 356
Diagnostics indicator lamp 113
Does not start 323
Oil consumption 215
Operating safety 30
Rectifying faults 323
Setting the oil grade (on-board computer) 127
Setting the oil viscosity (on-board computer) 127
Starting 160
Starting and stopping with the cab tilted 318
Stopping 162
Technical data 357
Engine brake 167
Engine data plate 356
Engine faulty (display message)
Yellow event window 135
Engine oil
Checking the oil level 297
Checking the oil level (on-board computer) 125
Consumption 215
Miscibility 362
Multi-grade engine oils 361
Oil change 361

https://truckmanualshub.com/

Quality 361
SAE classification 361
Scope of use 361
Setting viscosity (on-board computer) 127
Single-grade engine oil 361
Topping up 297
Engine oil level
Checking 297
Engine oil pressure too low (display message)
Red event window 140
Engine power output reduced (BlueTec® exhaust gas aftertreatment) (display message)
Yellow event window 131
Engine preheating
Switching on/off 106
Engine speed mode
Automatic activation 262
Equipment operation 262
General notes 262
Manually activating/deactivating .. 262
Engine speed setting
Constant working speed 263
General notes 263
Idling speed 263
Engine-driven power take-off
Constant working speed 263
Power take-off 265
Entry lamp
Replacing bulbs 86
Equipment driving mode
Power take-offs 264
Equipment operation
Engine speed mode 262
Front mounting plate 268
Front PTO shaft 267
Transport of equipment 269
Working on equipment 272
Working with equipment 270
Equipment socket
on the vehicle exterior 92
Events
Display (on-board computer) 125
Exterior lighting control
Bulb failure indicator 77
Exterior mirrors
Adjusting 71
Adjusting the exterior mirrors when using dual-mode steering 72
Adjusting the mirror arm 72
Heating 72
Important safety notes 71
External mirror
Additional mirror, vehicles with mowing door 72

F

Fine particle filter
Cleaning 303
Fire extinguisher
Vehicle tool kit 312
First-aid kit
Vehicle tool kit 312
Fitting equipment
Important safety notes 269
Notes on connecting/disconnecting equipment 269
To the tipper platform 274
Float settings
Activating/deactivating using the keypad 246
Activating/deactivating with the control lever 247
Working hydraulics circuit I 246
Fluid level
Battery 308
Coolant 293
Foglamps
Switching on/off 74
Fording 212
Four-wheel parking brake
Applying/releasing 166
Front camera
Driving systems 196
general instructions 197
Front flap
Closing 292
Opening 292
Opening/closing 291
Removing 293
Removing/replacing 292
Replacing 293

https://truckmanualshub.com/

Square spanner 312
Front foglamps
Replacing bulbs 83
Front mounting plate
Equipment operation 268
Front PTO shaft
Constant working speed 263
Correct use 267
Cover 268
Displaying the operating hours 125
Engaging/disengaging 268
Important safety notes 267
Limiting the PTO shaft speed 268
Limiting working speed 268
Maintenance 299
Method of operation 267
Fuel
Additives 365
Bleeding the system 322
Diesel 364
Gauge 111
Important safety notes 216
Refuelling 216
Fuel consumption
Driving style 215
General notes 215
Operating conditions 215
Fuel filter with water separator
Draining the prefilter 321
Replacing the prefilter 321
Fuel prefilter
Replacing 319
Fuel prefilter with water separator
Important safety notes 320
Fuses
Closing the fuse box 327
Important safety notes 327
Layout 328
Opening the fuse box 327

G

Gauge
AdBlue® 111
Fuel 111
Gearshift
see Telligent gearshift
General driving tips 208
Generator is not charging battery (display message)
Yellow event window 137
Genuine Mercedes-Benz parts 32
Getting into and out of the vehicle
Overview 60
Grey event window
Clutch heavily loaded 130
Folding out the clutch pedal 130
Manual regeneration not possible (diesel particle filter) 129
Refill washer fluid reservoir 130
Regeneration disabled (diesel particle filter) 129
Gross vehicle weight
Vehicle identification plate 356

H

Hazard warning lamps
Switching on/off 76
Headlamp cleaning system
Operation 89
Headlamp flasher 75
Headlamp range control
Adjusting 75
Headlamps
Replacing bulbs 82
Heating
Windscreen heating 90
Heating system
Climate control 99
High-pressure cleaning 288
Hydraulic clutch mechanism system
Brake fluid 361
Hydraulic clutch operation system
Checking the fluid level and topping up 295
Important safety notes 294
Hydraulic connections
Controlling, working hydraulics circuit I 244
Power hydraulics 233
Working hydraulics 230
Hydraulic fluid
Checking the oil level (working hydraulics) 298

Checking the oil level of the steering 297
Environmentally-compatible hydraulic fluids 364
General notes 363
Topping up (power hydraulics) 299
Topping up (working hydraulics) 298
Hydraulic fluids
Synthetic ester 364
Hydraulic system
"Settings", "Limits" menu windows 240
Activating/deactivating 230
Buttons overview, vehicles with gear pump 229
Buttons overview, vehicles with positioning pump 229
Changing the installation position of the control lever and controls 95
Continuous consumers 252
Control lever overview 228
Controlling hydraulic connections 244
Displaying the operating hours 125
Float positions 246
Flow rate 374
Flow rates, vehicles with a gear pump 374
Flow rates, vehicles with a positioning pump 374
Front working hydraulics circuit II, activating/deactivating, vehicles with positioning pump 256
Hydraulic connections 230
Hydraulic connections, types 373
Hydraulics input window 237
Hydraulics menu window 235
Important safety notes 228
Load profile 1 or load profile 2 function 239
Lowering restrictor 245
Menus and input windows in the on-board computer 234
Menus, brief instructions for the control lever 235
Menus, brief instructions, buttons on the steering wheel 234
Menus, general notes 234
Overview 228
Overview of controls 228
Power hydraulics circuit III/IV 258
Problems connecting hydraulic lines to working hydraulics circuit II 233
Schematic diagram of power hydraulics 372
Schematic diagram of working hydraulics 370
Settings menu window 240
Settings, automatic menu windows 242
Settings, back menu windows 243
Settings, function button menu windows 241
Settings, resetting menu windows 243
Settings, save menu windows 242
Side and rear working hydraulics circuit II, activating/deactivating, vehicles with positioning pump 257
Snow plough load relief 248
Types 228
Working functions menu window ... 236
Working functions menu window, control lever operation 237
Working functions menu window, operation using the buttons on the steering wheel 236
Working hydraulics circuit I 244
Working hydraulics circuit II, vehicles with gear pump, activating/deactivating 253
Hydrostatic drive system
Activating 199
Activating/deactivating standby mode, vehicles with Telligent® automatic gearshift 201
Checking oil level 299
Constant working speed 263
Deactivating 200
Display message, red event window 144
Displaying the operating hours 125
Driving 201
Driving with the control lever 207

https://truckmanualshub.com/

Driving with the cruise control lever 205
Driving, driving mode 202
Driving, handling characteristics 201
Driving, work mode 202
General notes 198
Work limiter 204
Working mode cruise control 203
Working mode cruise control with work limiter 203
Working speeds 199
Hydrostatic unit faulty. Please apply brakes! (Display message)
Red event window 144

I

Identification plate
Compressed-air reservoir 380
Vehicle 356
Idling speed
Engine speed setting 263
Ignition lock
Key positions 159
Immobiliser
Activating 60
Deactivating 59
Notes 59
Implied warranty 27
Increased brake force and pedal travel (display message)
Red event window 142
Insect protection on the radiator 32
Instrument cluster
AdBlue® 111
Displays 38
Fuel gauge 111
Important safety notes 110
Odometer 112
Rev counter 110
Time and outside temperature 112
Warning and indicator lamps 39
Instrument lighting
Setting (on-board computer) 126
Interior lamp
Replacing bulbs 88
Interior lighting
Reading lamp 76
Switching on/off 76

J

Jack
Pump lever 313
Vehicle tool kit 312
Jump-start
Socket 93
Jump-starting
Important safety notes 331
Jump lead 332
Jump-starting socket 332
Socket 93
Jump-starting socket
Jump-starting 332

K

Key
Replacement key 56
Key positions
Ignition lock 159

L

Language
Setting (on-board computer) 127
Licence plate lamp
Replacing bulbs 85
Light
Working area lamp 77
Light switch
Important safety notes 74
Lighting system 74
Overview 74
Light-alloy wheels
Cleaning 289
Lighting system
Auxiliary headlamps 77
Combination switch 75
Driving abroad 73
Exterior lighting control 77
Hazard warning lamps 76
Headlamp range control 75
Interior lighting 76
Light switch 74
Notes on changing bulbs 79
Overview of bulbs 81

https://truckmanualshub.com/

Replacing bulbs 82
Rotating beacons 79
Strobe lights 79
Working-area lamps 77
Lights
Combination switch 75
Daytime driving lights 74
Dipped-beam headlamps 74
Driving abroad 73
Foglamps and rear foglamps 74
Hazard warning lamps 76
Headlamp range control 75
Limit speed (display message)
Yellow event window 131
Limiter
Deactivating 193
Load-sensing connections, vehicles with positioning pump
Connecting attached equipment with load sensing connections 232
Overview of connections 231
Working hydraulics 231
Loads
Ballast weights 262
Locking (doors)
From inside (central locking button) 57
Locking system
Key 56
Locking/unlocking the doors
Mowing door, inside 58
Mowing door, outside 58
Normal door, from inside with buttons 57
Normal door, from inside with release lever 57
Normal door, from outside with key 56
Normal door, from outside with remote control 57
Normal door, inside 57
Normal door, outside 56
Lowering restrictor
Working hydraulics circuit I 245

M

Main-beam headlamps
Replacing bulbs 82
Switching on/off 75
Maintenance
Batteries 306
Checking anti-corrosion protection 305
Checking oil level, Hydrostatic drive system) 299
Checking the engine oil level 297
Checking the oil level of the power hydraulics 299
Checking the oil level of the steering and topping up oil 297
Checking the oil level of the working hydraulics 298
Checking the vehicle assemblies for leaks 305
Cleaning the active charcoal filter .. 303
Cleaning the air filter 304
Cleaning the fine particle filter 303
Cleaning the radiator 301
Cleaning the release valve on the air intake duct 304
Coolant level 293
Displaying maintenance due date (on-board computer) 123
Draining compressed-air reservoir circuit 1 304
Draining compressed-air reservoir circuit 2 304
Draining compressed-air reservoir for auxiliary consumers 304
Draining compressed-air reservoir for tyre pressure control system 304
Draining compressed-air reservoir regeneration 304
Draining the compressed-air brake system 304
Draining the tyre pressure control system 304
Front PTO shaft 299
Hydraulic clutch operation system 294
Notes 291

https://truckmanualshub.com/

Replacing the wiper blades 300
Torque converter clutch 296
Windscreen washer system 296
Manoeuvring/tow-starting and towing away
Notes 333
Maximum permissible axle loads
Vehicle identification plate 356
Maximum permissible gross vehicle weight
Vehicle identification plate 356
Menus
On-board computer, hydraulics 234
On-board computer, overview 117
Minimum tyre tread depth 338
Mirror arm
Adjusting 72
Mirror heating
Exterior mirror 72
Mirrors
Additional mirror 72
Adjusting the exterior mirrors when using dual-mode steering 72
Adjusting the mirror arm 72
Mixed air operation
Switching on/off 100
Mobile phone
External pairing 155
Important safety notes 96
Operating (on-board computer) 121
Pairing 154
Mowing door washer system
Operation 90
Mowing door windscreen wiper
Switching on/off 89
Multifunction lever
Overview 45
Multifunction steering wheel
Adjusting 70
Dual-mode steering 70
Overview 42

O

Occupant safety
Children in the vehicle 51
Important safety notes 48
Pets in the vehicle 53
Restraint system introduction 48
Seat belt 48
Odometer
Trip meter 112
Off-road driving
Check list after driving 212
Checklist before driving off-road 210
Driving downhill 211
Driving on sand 212
Fording 212
Oil
Topping up (steering system) 297
see Engine oil
Oil change 361
Oil level
Checking (power hydraulics) 299
Checking (steering system) 297
Checking (working hydraulics) 298
On-board computer
Activating backup drive mode (transmission shift system) 120
Alarm 120
Areas in the display 116
Audio and communications menu .. 120
Axles menu window 123
Calling up the diagnostic data 125
Calling up/resetting trip computer 119
Calling up/resetting trip data 119
Checking driving time 119
Checking the coolant temperature 125
Checking the engine operating hours 125
Checking the oil level 125
Checking the range 119
Checking the reservoir pressure 124
Checking the rest period 119
Controls 115
Displaying events 125
Displaying maintenance due date .. 123
Displaying the operating hours 125
Displaying trailer/semitrailer data 123
Displaying vehicle speed 119
Driving mode menu 119
Event window (display messages) .. 128
Hydraulics menu window 123

https://truckmanualshub.com/

Hydraulics, menus and input windows 234
Layout 115
Menus at a glance 117
Monitoring info 124
Notes on messages 128
Operating the audio equipment 122
Operating the telephone 121
Operation and maintenance menu 123
Outside temperature display 118
Overview of warning and indicator lamps 144
Red warning/ indicator lamp 146
Setting instrument lighting 126
Setting the display language 127
Setting the engine oil grade 127
Setting the engine oil viscosity 127
Setting the rear axle oil grade 128
Setting the transmission oil grade .. 127
Setting the unit of measurement ... 126
Setting the units 126
Settings menu 126
Showing the power hydraulics oil level 125
Time 118
Total distance recorder 118
Trip data menu 118
Trip meter 118
Tyres menu window 123
Yellow warning/ indicator lamp 146

Opening/closing
Rear window 61

Operating and road safety (tyres)
General notes 338
Tyres 338

Operating hours
Checking (on-board computer) 125
Front PTO shaft 125
Hydraulic system 125
Hydrostatic drive system 125

Operating Instructions
Before the first journey 27
General notes 27
Implied warranty 27
Vehicle equipment 27

Operating lever
Telligent® automatic gearshift 176
Telligent® gearshift 170

Operating safety
Implied warranty 27

Operating safety and registration
Attachments/add-on equipment 31
BlueTec® exhaust gas aftertreatment 30
Changes in engine performance 30
Installations and conversions 31
Notes on body/equipment mounting directives 31
Notes on fitting equipment 32

Operating safety and vehicle approval
Correct use 27
Declaration of conformity 29
Notes on operating the vehicle 29
Qualified specialist workshops 30
Registering your vehicle 30

Operating system
see On-board computer

Outside temperature display
Instrument cluster 112
On-board computer 118

Overhead control panel
Overview 37

Overview of hydraulic system controls 228

P

Pairing 154

Parking
Vehicle 162

Parking brake
Applying 166
Applying (display message) 142
Four-wheel parking brake 166
Releasing 166
Testing 166

Parking up the vehicle 310

Perimeter lamp
Replacing bulbs 85

Perimeter/side marker lamp
Replacing bulbs 85

Pets in the vehicle 53

Platform dropside
Important safety notes 274

https://truckmanualshub.com/

Platform dropsides
Access steps 276
Letting the tailgate swing freely 275
Opening 275
Opening the tailgate 275
Rear platform dropside 275
Removing 275
Removing the post 276
Removing the tailgate 276
Tipper platform 274
Power hydraulics
Checking the oil level 299
Hydraulic connections 233
Important safety notes 299
Schematic diagram 372
Showing the oil level (on-board computer) 125
Topping up the hydraulic fluid 299
Power hydraulics circuit III/IV
Activating/deactivating 258
General notes 258
Power steering
see Steering
Power supply
see Voltage supply
Power take-off
Pulling away in equipment driving mode 266
Shifting gears in equipment driving mode 266
Stopping in equipment operating mode 266
Power take-offs
Engine-driven power take-off 265
General notes 264
Transmission-driven power take-off 265
Power windows
see Side windows
Preparing for a journey
Checking emergency equipment/first-aid kit 158
Checking the vehicle lighting, turn signals and brake lamps 158
Fuel/AdBlue® level 159
Visual check of the vehicle exterior 158
Protection of the environment
General notes 28
Pulling away
Vehicle 162
Pump lever
Assembling/disassembling 313
Cab tilting pump 313
Jack 313
Vehicle tool kit, storing 312
Wheel wrench 313

Q

Qualified specialist workshop 30
Quick change system for the tipper platform
Installing 284
Removing 282

R

Radiator cover 32
Radio
Adjusting the volume 122
Changing the audio source or title/station 122
Radio-based vehicle components
Declaration of conformity 29
Range
Checking (on-board computer) 119
Rear axle
Setting the oil grade (on-board computer) 128
Rear axle ratio
Vehicle identification plate 356
Rear foglamp
Replacing bulbs 85
Switching on/off 74
Red event window
Brake supply pressure in circuit 1 is too low 139
Check tyre pressure 143
Clutch faulty 141
Coolant level too low 140
Diesel particle filter full, Stop vehicle, Consult service centre 139
Driving and braking characteristics changed 142
Engage parking brake 142

Engine oil pressure too low 140
Hydrostatic unit faulty. Please apply brakes! 144
Increased brake force and pedal travel 142
Torque converter clutch 141
Transmission faulty, Park vehicle safely 141
Refill washer fluid reservoir (display message)
Grey event window 130
Refuelling
AdBlue® 218
Fuels 216
Relays 328
Layout 328
Remote control
Checking the batteries 58
Locking/unlocking a normal door 56
Replacing batteries 58
Teaching-in 59
Replacement key 56
Replacing bulbs
Auxiliary headlamps 83
Bi-xenon bulbs 79
Entry lamp 86
Headlamps 82
Interior lighting 88
Tail lamp 85
Replacing the fuel filter 320
Replacing the window blades
Important safety notes 300
Replacing wiper blades
Mowing door 301
Windscreen 300
Reserve level
AdBlue® 111
Fuel 111
Reservoir pressure
Checking (on-board computer) 124
Residual heat
Climate control 101
Rest period
Checking (on-board computer) 119
Restraint system
Introduction 48
Rev counter
Overview 110
Reversing camera
Driving systems 196
General notes 197
Reversing lamp
Replacing bulbs 85
Rotating beacon
Changing a bulb 86
Rotating beacons
Adjusting the stand height 79
Lighting system 79
Switching on/off 79
Running-in
Driving tips 208

S

SAE classification (engine oils) 361
Safety
Children in the vehicle 51
Operating safety 29
Safety inspection
Supply pressure in the compressed-air brake system 161
Supply pressure in the transmission/clutch circuit 161
Safety prop
Tipper platform 274
Seat
Double front passenger seat 69
Luxury suspension seat 66
Standard seat 65
Suspension seat 66
Swivel seat 67
Seat belt
Correct usage 49
Lap belt 51
Seat belts
Adjusting the height 50
Cleaning 286
Fastening 50
Important safety guidelines 48
Introduction 48
Releasing 51
Seat operation
Co-driver's bench seat 69
Luxury suspension seat 66

https://truckmanualshub.com/

Seat heating 69
Standard seat 65
Suspension seat 66
Swivel seat 67
Seats
Cleaning the cover 286
Correct driver's seat position 64
Important safety notes 64
Switching seat heating on/off 69
Securing loads
Tipper platform 273
Securing the load
Tipper platform 273
Service products
AdBlue® 365
Brake fluid 361
Coolant 362
Diesel 364
Diesel fuels 364
Display message in the yellow event window 134
Engine oil 361
For drive axles and transmissions .. 362
Fuel additives 365
General notes 360
Hydraulic fluids 363
Settings (on-board computer) 127
Transmission oil 362
Winter diesel fuel 365
Setting the air distribution 100
Setting the volume
Telephone calls 121
Side windows
Important safety notes 60
Opening/closing 61
Side-mounted turn signal lamps
Changing a bulb 84
Snow chains
Checking the tyre clearance 223
Important safety notes 223
Snow plough load relief
Automatic snow plough system 251
Float setting 251
Important safety notes 248
Pressing the snow plough briefly onto the road 252
Switching on/off 248
Switching to standby mode using buttons 251
Switching to standby mode using the control lever 250
Working hydraulics circuit I 248
Socket
12 V centre console 91
Cab rear wall 92
Diagnostics connection 92
Equipment socket, 32-pin 92
on the vehicle exterior 92
Sockets
Centre console 91
Spare key 56
Specialist workshop 30
Speed
Display (on-board computer) 119
Speed limitation
Maximum speed 215
Speed limiter
Activating 192
Activating while driving 192
Activation conditions 192
Driving 193
Important safety notes 191
Overtaking 193
Overview 192
Selecting 192
Setting limit speed 192
Spring-loaded parking brake cylinders
Releasing 335
Technical Data 357
Square spanner
Vehicle tool kit 312
Steering
Check oil level 297
Steering play (table) 357
Topping up oil 297
Steering fluid too low (display message)
Yellow event window 134
Steering wheel buttons
see On-board computer
Stickers
General safety notes 27
Stopping
Vehicle 162

https://truckmanualshub.com/

Stowage space and stowage compartments
Cup and bottle holder 93
Strobe light
Replacing bulbs 87
Strobe lights
Adjusting the stand height 79
Lighting system 79
Switching on/off 79
Sun visor
Practical tips 93
Supply pressure
Checking in the compressed-air brake system 161
Checking in the transmission/clutch circuit 161
Switching the auxiliary headlamps on/off 78
Switching the flow rate
Working hydraulics circuit II, vehicles with gear pump 254
Swivel seat
Fastening the lap belt 51

T

Tachograph
On-board computer 119
Tail lamp
Replacing bulbs 85
Technical data
Capacities 367
Compressed-air reservoir 379
Compressed-air system 357, 360
Coolant temperature 357
Engine 357
Engine data plate 356
Front PTO shaft 357
Reservoir pressure in the compressed-air system 357
Spring-loaded parking brake cylinders 357
Steering play 357
Tightening torques for wheel nuts .. 357
Tyre pressure 357
Vehicle dimensions 375
Vehicle identification plate 356
Telephone
Adjusting the volume for calls 121
Operating (on-board computer) 121
see Mobile phone
Telligent automatic gearshift
Cruise control lever 175
Direction of travel preselection with the cruise control lever 176
Kickdown 178
Rapid change of direction 181
Telligent gearshift
Cruise control lever 169
Direction of travel preselection with the cruise control lever 170
Telligent® automatic gearshift
Automatic drive program, driving ... 178
Automatic drive program, selecting 177
Automatic neutral position 178
Changing into neutral 178
Clutch pedal 181
Crawler gears 184
Direction of travel preselection with operating lever 176
Drive program, selecting 177
Drive programs and drive functions 177
Engaging reverse gear 180
Important safety notes 174
Manual drive program, driving 179
Manual drive program, selecting 177
Multifunction lever and gear indicator 174
Operating lever 176
Pulling away 177
Stopping 178
Working gears 182
Telligent® automatic gearshift clutch pedal
Folding in 182
Folding out 181
Malfunctions 181
Telligent® gearshift
Crawler gears 184
Direction of travel preselection with operating lever 170
Driving 171

https://truckmanualshub.com/

Engaging reverse gear 173
Important safety notes 168
Multifunction lever and gear indicator 168
Operating lever 170
Pulling away 171
Pulling away with gear preselection 171
Quick change of direction 174
Shifting gears 171
Stopping 173
Working gears 182

Telligent®-gearshift
Pulling away without gear preselection 171

Temperature
Outside temperature display 112
Setting (heating/air conditioning) 100

Theft-deterrent system
Immobiliser 59

Tightening torques
Wheel nuts 357

Tilting system
Problems in tilting the cab 318

Time
In the display 112

Tipper operation
Before tipping 277
Important notes 277
Raising/lowering the tipper platform 277

Tipper platform
Correct use 272
Enabling/disabling the tipper function, vehicles with working hydraulics 278
Enabling/disabling the tipper function, vehicles without working hydraulics 277
Fitting equipment to the tipper platform 274
Loading the tipper platform 272
Method of operation 272
Platform dropside access steps 276
Platform dropsides 274
Quick change system for the platform 282
Raising/lowering the tipper platform trailer, vehicles with working hydraulics 279
Raising/lowering the tipper platform trailer, vehicles without working hydraulics 278
Raising/lowering the tipper platform vehicle, vehicles with working hydraulics 279
Raising/lowering the tipper platform vehicle, vehicles without working hydraulics 277
Raising/lowering, vehicles with working hydraulics 278
Raising/lowering, vehicles without working hydraulics 277
Removing the tipper platform with a crane 280
Safety prop 274
Securing 274
Securing loads 273
Tipper operation 277

Tipper platform with a crane
Important safety notes 280
Installing 282
Removing 280

Tool bag
Vehicle tool kit 312

Topping up washer fluid 296

Torque converter clutch
Checking the oil level 296
Driving mode 185
Driving mode with power take-off .. 185
Red event window 141
Topping up the oil 296

Total distance recorder
Instrument cluster 112

Tow-starting/towing away
Releasing the spring-loaded parking brake cylinders 335

Towing/tow-starting
Attaching the tow bar 334
Important safety notes 333
Tow-starting the vehicle 334
Towing a vehicle while the engine is not running 334
Towing a vehicle while the engine is running 335

https://truckmanualshub.com/

Towing a vehicle with operational gearshift 335
Towing a vehicle with transmission, transfer case or axle damage 335
Towing the vehicle 334
Trailer
Compressed-air lines and cables ... 220
Coupling up 220
Displaying data (on-board computer) 123
Testing the parking brake 166
Trailer coupling 219
Transmission
Faulty, Park vehicle safely (display message in the red event window) 141
Faulty, Visit workshop (display message in the yellow event window) 136
Setting the oil grade (on-board computer) 127
Transmission / clutch reservoir pressure too low (display message)
Yellow event window 135
Transmission oil
Service product 362
Transmission shift system
Activating backup drive mode (on-board computer) 120
Transmission-driven power take-off
Constant working speed 263
Power take-off 265
Transmission/clutch
Display message in the red event window 141
Display message in the yellow event window 136
Transmission/clutch circuit
Checking the supply pressure 161
Transporting
Equipment 269
Trip computer
Calling up/resetting (on-board computer) 119
Trip data (on-board computer) 119
Trip meter
Instrument cluster 112
Turn signal lamp
Auxiliary headlamp 83
Turn signals
Switching on/off 75
Tyre inflater hose
Vehicle tool kit 312
Tyre inflator connection
Flat tyre 326
Tyre pressure
Effect 338
Important safety notes 340
Tyre pressure control system
Automatic mode, selecting the pressure level 186
Automatic mode, selecting the vehicle load 188
Draining 304
important safety notes 186
Manual mode, adjusting via the on-board computer 188
Manual mode, adjusting with the button 189
Manual mode, general notes 188
Preparing for a journey 186
Switching automatic mode on/off 186
Tyre pressure control system limited (display message)
Yellow event window 137
Tyre pressure table
Explanatory notes for the table 353
For off-road driving 352
On firm surfaces 342
Tyre pressures
Determining 341
Tyres
Changing tyres 340
Condition 339
Damage 339
Load-bearing capacity 339
Minimum tyre tread depth 338
Retreaded 340
Service life 339
Types 339
Tyre speed rating 339

https://truckmanualshub.com/

U

Underbody protection
Cleaning and care 290
Unit of measurement
Setting (on-board computer) 126
Units
Setting (on-board computer) 126
Universal carrier
Centre console 94
Using cable winches
Driving tips 213

V

Vehicle
Data acquisition 33
Equipment 27
Implied warranty 27
Operating safety 29
Parking 162
Pulling away 162
Registration 30
Socket 91
Stopping 162
Unlocking/locking a mowing door 57
Unlocking/locking a normal door 56
Vehicle assemblies
Checking for leaks 305
Vehicle bodies 31
Vehicle dimensions
Technical data 375
Vehicle identification number (VIN) 356
Vehicle identification plate
Axle loads 356
Axle reduction ratio 356
Maximum permissible axle loads ... 356
Maximum permissible gross vehicle weight 356
Overview 356
Rear axle ratio 356
Vehicle tool kit
Left-hand stowage compartment under the cab 312
Stowage compartment in the rear of the cab 312
Stowage space in the rear left of the cab 312
Vehicle tool kit and emergency equipment
Important safety notes 312
Ventilation
Climate control 99
Setting the vents 101
VIN
Vehicle identification number 356
Voltage supply
Battery isolator switch 90
General notes 90

W

Warning and indicator lamps
On-board computer 144
Warning buzzer
Sounding 216
Warning lamp
Vehicle tool kit 312
Warning triangle
Vehicle tool kit 312
Warning/indicator lamps
Engine diagnostics (BlueTec®6 vehicles) 113
Instrument cluster 39
Warnings
Stickers 27
Wheel chock 314
Wheel nuts
Retightening 326
Tightening torques 357
Wheel wrench
Pump lever 313
Vehicle tool kit 312
Window
Rear window 61
Window cleaner/scraper
Vehicle tool kit 313
Windows
see Side windows
Windscreen
Demisting 101
Windscreen heating
Switching on/off 90

https://truckmanualshub.com/

Windscreen washer system
Topping up fluid 296
Windscreen, operation 89
Windscreen wiper and washer system
Mowing door 89
Windscreen wipers
Switching windscreen wipers on/off 88
Windscreen 88
Windscreen, lateral end position 88
Winter diesel fuel
Service products 365
Winter driving
Cold climate package 224
Parking in extremely cold conditions 222
see Winter operation
Winter operation
AdBlue® 365
Before the journey 222
Driving in extremely cold conditions 222
Important safety notes 221
Radiator cover 32
Snow chains 223
Windscreen 222
Winter diesel fuel 365
Winter driving 221
Wiper blades
Replacing 300
Work limiter
Hydrostatic drive system 204
Working area lamp
Adjusting 77
Overview 77
Switching on/off 77
Working gears
General notes 182
With Telligent® automatic gearshift 182
With Telligent® gearshift 182
Working hydraulics
Connecting attached equipment with load-sensing connection 232
Hydraulic connections 230
Load-sensing connections, vehicles with positioning pump 231
Overview of load sensing connections 231
Schematic 370
Working hydraulics circuit I
Activating 244
Activating/deactivating 244
Checking the oil level 298
Continuous consumers 252
Controlling hydraulic connections 244
Deactivating 244
Float settings 246
Hydraulic connections 230
Hydraulic system 244
Lowering restrictor 245
Schematic diagram 370
Snow plough load relief 248
Topping up the hydraulic fluid 298
Working hydraulics circuit II
Checking the oil level 298
Front, activating/deactivating, vehicles with positioning pump 256
Hydraulic connections 230
Schematic diagram 370
Side and rear, activating/deactivating, vehicles with positioning pump 257
Topping up the hydraulic fluid 298
Vehicles with gear pump, activating/deactivating 253
Vehicles with gear pump, assignment of flow rate 254
Vehicles with gear pump, cumulation 255
Vehicles with gear pump, switching the flow rate 254
Vehicles with positioning pump, general notes 256
Working hydraulics: oil level too low (display message)
Yellow event window 138
Working mode cruise control
Hydrostatic drive system 203
Working on equipment
Equipment operation 272

https://truckmanualshub.com/

Working with equipment
For earth-moving 270
For maintenance of grassland and plant protection 271
Front loader operation 271
Important safety notes 270
With a wide working range 271
Working-area lamps
Replacing bulbs 86

Y

Yellow event window
AdBlue reserve® 131
AdBlue® empty 131
AdBlue® very low 131
Brakes, axle 1 Maintenance due immediately 134
Clutch faulty, Visit workshop 136
Clutch heavily loaded 136
Compressed-air system 135
Condensation in compressed-air reservoir 135
Coolant temperature too high 135
Diesel particle filter fill level increased 131
Diesel particle filter full 131
Diesel particle filter full, engine performance is reduced 131
Diesel reserve 134
Display and instrument cluster controls malfunction 137
Drive control faulty 135
Engine faulty 135
Engine power output reduced 131
Generator is not charging battery .. 137
Speed limitation 131
Steering fluid too low 134
Transmission faulty, Visit workshop 136
Transmission/clutch reservoir pressure too low 135
Tyre pressure control system limited 137
Working hydraulics: oil level too low 138

https://truckmanualshub.com/

Operating Instructions

Before the first journey

The Operating Instructions, Maintenance or Service Booklet and the equipment-dependent Supplements are integral parts of the vehicle. Keep these documents in the vehicle at all times. If you sell the vehicle, always pass all of the documents on to the new owner.

Read these documents carefully and familiarise yourself with the vehicle before the first journey.

For your own safety and a longer vehicle life, always follow the instructions and warning notices in these Operating Instructions. Disregarding them may lead to damage to the vehicle or personal injury.

Implied warranty

! Follow the instructions in this manual about the proper operation of your vehicle as well as about possible vehicle damage. Damage to your vehicle that arises from culpable contraventions against these instructions are not covered either by Mercedes-Benz implied warranty or by the New or Used-Vehicle Warranty.

Vehicle equipment

These Operating Instructions describe all the models and standard and optional equipment of your vehicle that were available at the time of going to print. Country-specific deviations are possible. Bear in mind that your vehicle may not be equipped with all the functions described. This also applies to safety-relevant systems and functions. The equipment in your vehicle may therefore differ from that shown in the descriptions and illustrations.

All systems found in your vehicle are listed in your vehicle's original purchase agreement.

Contact a Mercedes-Benz Service Centre if you have any questions about equipment or operation.

Correct use

Observe the following information when driving your vehicle:

- the safety notes in these Operating Instructions
- the technical data in these Operating Instructions
- traffic rules and regulations
- laws and safety standards pertaining to motor vehicles

Various warning stickers are attached to the vehicle. If you remove any warning stickers, you or others could fail to recognise certain dangers. Leave warning stickers in position.

The Unimog is designed as an equipment carrier, tractor unit and chassis for a variety of different equipment.

Correct use includes:

- using the Unimog as a standard vehicle as delivered
- using the Unimog in conjunction with attachments and bodies that comply with the Mercedes-Benz body/equipment mounting directives
- compliance with Mercedes-Benz maintenance or service and care specifications
- use of genuine Mercedes-Benz spare parts

⚠ **WARNING**

Modifications to electronic components, their software as well as wiring could affect their function and/or the operation of other networked components. This could in particular also be the case for systems relevant to safety. They might not function properly anymore and/or jeopardise the operational safety of the vehicle. There is an increased risk of an accident and injury.

Do not attempt to modify the wiring as well as electronic components or their software. Always have work on electrical and electronic components carried out at a qualified specialist workshop.

https://truckmanualshub.com/

If you carry out modifications to electronic components, their software or wiring, this could result in the invalidation of your vehicle's operating permit.

⚠ **WARNING**

Gases and liquids from substances that constitute a health hazard or react aggressively can escape, even from securely closed containers. If you transport these substances inside the vehicle, this may affect your health and impair your concentration while you are driving. It may also cause malfunctions or electrical component system failures. There is a risk of fire and accident.

Do not store or transport any substances in the vehicle that are hazardous to health or react aggressively.

Substances that constitute a health hazard or react aggressively include, for example:

- solvents
- fuel
- oil and grease
- cleaning agents
- acid

Protection of the environment

Economical and environmentally aware driving

Environmental note

Daimler AG has a declared policy of comprehensive environmental protection.

The objective is to use natural resources sparingly and in a manner that takes the requirements of both nature and humanity into account.

You too can help to protect the environment by operating your vehicle in an environmentally responsible manner.

Fuel consumption and the rate of engine, transmission, brake and tyre wear depend on the following factors:

- the operating conditions of your vehicle
- your personal driving style

You can influence both factors. For this reason, observe the following notes:

Operating conditions

- avoid short trips as these increase fuel consumption.
- make sure that the tyre pressures are always correct.
- do not carry any unnecessary weight.
- a regularly serviced vehicle will contribute to environmental protection. You should therefore adhere to the service intervals.
- all maintenance work should be carried out at a qualified specialist workshop.

Personal driving style

- do not depress the accelerator pedal when starting the engine.
- do not warm up the engine with the vehicle stationary.
- drive carefully and maintain a safe distance from the vehicle in front.
- avoid frequent and heavy acceleration and braking.
- change gear in good time and use each gear only up to ⅔ of its maximum engine speed.
- switch off the engine when waiting in stationary traffic.
- keep an eye on the vehicle's fuel consumption.

https://truckmanualshub.com/

Operating safety and vehicle approval

Information on vehicle operation

There is a risk of damage to the vehicle if:

- the vehicle makes contact with the ground, e.g. on a high kerb or a loose road surface
- you drive too quickly over an obstacle, e.g. a kerb or a pothole
- a heavy object hits the underbody or chassis component

In these or similar situations, the vehicle body/frame, the underbody, chassis components, wheels or tyres could be damaged even if this is not visible from the outside. Components that have been damaged in this way can unexpectedly fail or no longer be able to assimilate the loads occurring in the event of an accident. If the underbody panelling is damaged, flammable material, such as leaves, grass or twigs, could collect between the underbody and underbody panelling. These materials could ignite if they remain in contact with hot components of the exhaust system for an extended period.

⚠ **WARNING**

Flammable material such as leaves, grass or twigs may ignite if they come into contact with hot parts of the exhaust system. There is a risk of fire.

When driving off road or on unpaved roads, check the vehicle's underside regularly. In particular, remove parts of plants or other flammable materials which have become trapped. In the case of damage, contact a qualified specialist workshop.

Have the vehicle checked and repaired immediately at a qualified specialist workshop. If you become aware when continuing the journey that driving safety has been effected, stop as soon as possible in accordance with the traffic conditions. In such cases, consult a qualified specialist workshop.

Declaration of conformity

Radio-based vehicle components

The following note applies to all radio-based components of the vehicle and the information systems and communication devices integrated in the vehicle:

The components of the vehicle which receive and/or transmit radio waves are compliant with the basic requirements and all other relevant regulations stipulated by Directive 1999/5/EC.

You can obtain further information from any Mercedes-Benz Service Centre.

Electromagnetic compatibility

The electromagnetic compatibility of the vehicle components has been checked and certified according to the currently valid version of Regulation ECE-R 10.

Diagnostics connection

The diagnostics connection is only intended for the connection of diagnostic equipment at a qualified specialist workshop.

⚠ **WARNING**

If you connect equipment to a diagnostics connection in the vehicle, it can affect the operation of the vehicle systems. This may affect the operating safety of the vehicle. There is a risk of an accident.

Do not connect any equipment to a diagnostics connection in the vehicle.

! If the engine is switched off and equipment on the diagnostics connection is used, the starter battery may discharge.

Connecting equipment to the diagnostics connection can result in emissions monitoring information being reset, for example. As a result, it is possible that the vehicle will not fulfil the requirements of the next emissions inspection in the main inspection.

https://truckmanualshub.com/

Changing the engine power output

! Increased power could:

- change emission levels
- cause malfunctions
- lead to consequential damage

The operating safety of the engine cannot be guaranteed in all situations.

Any tampering with the engine management system in order to increase the engine power output will lead to the loss of warranty entitlements.

If the vehicle's engine power output is increased:

- tyres, suspension, braking and engine cooling systems must be adapted to the increased engine power output.
- have the vehicle recertified.
- report changes in power output to the vehicle insurers.

This will otherwise lead to the invalidation of the vehicle’s general operating permit and its insurance cover.

If you sell the vehicle, inform the buyer of any alterations to the vehicle's engine power output. If you do not inform the buyer, this may constitute a punishable offence under national legislation.

Qualified specialist workshops

A qualified specialist workshop has the necessary specialist knowledge, tools and qualifications to correctly carry out the work required on the vehicle.

This is especially the case for work relevant to safety. Observe the notes in the Maintenance or Service Booklet.

The following work should always be carried out at a qualified specialist workshop:

- work relevant to safety
- service and maintenance work
- repair work
- modifications as well as installations and alterations
- work on electronic components

Mercedes-Benz recommends that you use a Mercedes-Benz Service Centre.

! Only have work carried out on the engine electronics and its associated parts, such as control units, sensors, actuating components and connector leads, at a qualified specialist workshop. Vehicle components may otherwise wear more quickly and the vehicle's operating permit may be invalidated.

Registering your vehicle

Mercedes-Benz may ask its Service Centres to carry out technical inspections on certain vehicles. This is always the case if the quality or safety of the vehicle is improved as a result of the inspection. Mercedes-Benz can only inform you about vehicle checks if it has your registration data.

Your registration data is not stored if:

- you did not purchase your vehicle at an authorised specialist dealer.
- your vehicle has not been inspected at a Mercedes-Benz Service Centre.

It is advisable to register your vehicle with a Mercedes-Benz Service Centre. Inform Mercedes-Benz as soon as possible about any change of address or vehicle ownership.

BlueTec® exhaust gas aftertreatment

The BlueTec® exhaust gas aftertreatment system must be operated in conjunction with the reducing agent AdBlue® if it is to function correctly.

You will find information about AdBlue® in the "Service products" section (▷ page 365).

Topping up and operating the vehicle with AdBlue are necessary in order to comply with emissions laws and regulations, and are

https://truckmanualshub.com/

therefore a condition of the vehicle's operating permit. Operating the vehicle without AdBlue® will lead to the invalidation of its operating permit. The legal consequence of this is that the vehicle may no longer be operated on public roads.

This may be a criminal offence or breach road traffic regulations in certain countries. Special concessions granted either at the time of purchase or to reduce operating costs, e.g. reduced taxes or road charges, may also be rendered invalid retroactively. This may be the case in both the country of registration and in the country where the vehicle is operated.

Engine management monitors the BlueTEC® exhaust gas aftertreatment systems for compliance with emissions laws and regulations.

The on-board computer informs you, amongst other things, about the following:

- the status of the BlueTec® exhaust gas aftertreatment (▷ page 213)
- the AdBlue® level (▷ page 111)
- the saturation level of the diesel particle filter (▷ page 213)

If you attempt to operate the vehicle without AdBlue®, with diluted AdBlue® or with a different reducing agent, this will be detected by the engine management system. Other emissions-relevant malfunctions, e.g. dosage malfunctions or sensor errors, are also detected and logged.

The [ ] indicator lamp shows emissions-relevant malfunctions after the engine is started. For BlueTec®6 vehicles, the [ ] indicator lamp also shows the status of the BlueTec® exhaust gas aftertreatment for faster on-the-spot checks by the authorities.

The [ ] indicator lamp warns you if the saturation level of the diesel particle filter is critical and indicates any malfunction.

The on-board computer informs you in good time about any emissions-relevant malfunctions or operating errors and displays in order of priority:

- grey event windows (▷ page 129)
- yellow event windows (▷ page 130)
- red event windows (▷ page 138)

For BlueTec®6 vehicles, the on-board computer also displays the [ ] indicator lamp in the status area of the display for the duration of the malfunction detected.

If you do not observe these event windows and their instructions, it is possible that:

- the engine output is reduced
- for BlueTec®6 vehicles, the speed is then limited to approx. 20 km/h
- the diesel particle filter has to be replaced early

If there is a malfunction of the BlueTec® exhaust gas aftertreatment system, have it checked and repaired at a qualified specialist workshop.

Attachments, bodies, equipment and conversions

Notes on body/equipment mounting directives

! For safety reasons, have bodies manufactured and fitted in accordance with the applicable Mercedes-Benz body/equipment mounting directives. These body/equipment mounting directives ensure that the chassis and the body form one unit and that maximum operating and road safety is achieved.

For safety reasons, Mercedes-Benz recommends that:

- no other modifications should be made to the vehicle.
- approval should be obtained from Mercedes-Benz in the event of deviations

https://truckmanualshub.com/

from approved body/equipment mounting directives.

Approval from certified inspection agencies or official approvals cannot rule out risks to your safety.

Technical modifications to the vehicle can affect the function of the stability control. Observe the information in the body/equipment mounting directives.

Observe the information on genuine Mercedes-Benz parts (▷ page 32).

The Mercedes-Benz body/equipment mounting directives can be found on the Internet at **https://bb-portal.mercedes-benz.com**.

There you can also find information on PIN assignment and changing fuses.

You can obtain further information from any Mercedes-Benz Service Centre.

Notes on mounting equipment

The Unimog is an equipment carrier. It can be combined with a large number of attachments and equipment. For every combination of the basic vehicle with attachments or equipment, vehicle configurations are created which together can cause danger. If safety regulations, e.g. accident prevention regulations, are not observed, danger can arise with fitting equipment. Fitted equipment generally alters the centre of gravity and the dimensions of the vehicle, affecting the handling characteristics. Pay particular attention, especially when driving off-road. Do not exceed the permissible axle loads for the vehicle. If there is an unbalanced distribution of the axle loads, the vehicle must be ballasted.

⚠ **WARNING**

When the permissible wheel loads, axle loads and/or the maximum permissible gross vehicle weight are exceeded, driving safety is compromised. The handling as well as steering and braking characteristics may be significantly impaired. Overloaded tyres may overheat, causing them to burst. There is a risk of an accident.

When transporting a load, always observe the permissible wheel loads, axle loads and the maximum permissible gross vehicle weight for the vehicle (including occupants).

! Read the body and equipment manufacturer's operating instructions. You could otherwise fail to recognise dangers that could arise when working with your Unimog.

Always observe the information on the correct use of additional equipment.

! Make sure that the vehicle dimensions comply with the country's regulations for road use.

Notes on the radiator

Even seemingly small changes to the vehicle, such as attaching a radiator trim for winter driving, is not permitted. Do not cover up the radiator. Do not use thermal mats, insect protection covers or anything similar.

Otherwise, the values of the diagnostic system may be affected. In some countries, the recording of engine diagnostic data is a legal requirement, and must always be verifiable and accurate.

Genuine Mercedes-Benz parts

Environmental note

Daimler AG also supplies reconditioned assemblies and parts which are of the same quality as new parts. For these, the same warranty applies as for new parts.

If you use parts, tyres, wheels or safety-relevant equipment which has not been approved by Mercedes-Benz, the operational safety of the vehicle may be jeopardised. Safety-relevant systems, e.g. the brake system, may malfunction. Only use genuine Mercedes-Benz parts or parts of an equivalent quality

https://truckmanualshub.com/

standard. Only use tyres, wheels and accessory parts that are approved for your type of vehicle.

Genuine Mercedes-Benz parts and conversion parts and accessories that have been approved for your vehicle are tested by Mercedes-Benz for:

- reliability
- safety
- suitability

Despite ongoing market research, Mercedes-Benz is unable to assess other parts. Mercedes-Benz accepts no responsibility for the use of such parts in Mercedes-Benz vehicles, even if they have been independently or officially approved.

In Germany, certain parts are only officially approved for installation or modification if they comply with legal requirements. This also applies to some other countries. All genuine Mercedes-Benz parts meet the approval requirements. The use of non-approved parts may invalidate the vehicle's general operating permit.

This is the case if:

- it results in a change to the vehicle type from that for which the vehicle's general operating permit was granted
- they pose a possible risk for road users
- they adversely affect the emission or noise levels

Always specify the vehicle identification number (VIN) when ordering genuine Mercedes-Benz parts (▷ page 356).

Data stored in the vehicle

A wide range of electronic components in your vehicle contain data memories.

These data memories temporarily or permanently store technical information about:

- the vehicle's operating status
- events
- malfunctions

In general, this technical information documents the state of a component, a module, a system or the surroundings.

This includes, for example:

- operating conditions of system components, e.g. fluid levels.
- the vehicle's status messages and those of its individual components, e.g. number of wheel revolutions/speed, deceleration in movement, lateral acceleration, accelerator pedal position.
- malfunctions and defects in important system components, e.g. the brakes.
- the vehicle's reactions and operating statuses in special driving situations.
- ambient conditions, e.g. outside temperature.

This data is exclusively technical in nature and can be used to:

- assist in the detection and rectification of faults and defects
- analyse vehicle functions, e.g. after an accident
- optimise vehicle functions

The data cannot be used to trace the vehicle's movements.

When you use one of the available services, technical information may be read from the event data memory and fault data memory.

Services include, for example:

- repair services
- service processes
- warranty claims
- quality assurance

It is read by service network employees (including the manufacturer) using special diagnostic testers. Further information is available there if required.

https://truckmanualshub.com/

After a fault has been rectified, the information is deleted from the fault memory or is continually overwritten.

When operating the vehicle, situations are conceivable in which this technical data, in connection with other information - if necessary, under consultation with an authorised expert - could be traced to a person.

Examples include:

- accident reports
- damage to the vehicle
- witness statements

Further additional functions which are contractually agreed with the customer likewise allow specific vehicle data to be obtained from the vehicle. Such additional functions include vehicle locating in an emergency, for example.

If your vehicle has telematics equipment (e.g. FleetBoard), additional data can be stored. This data can be transferred to the central fleet office for additional analyses, for example.

https://truckmanualshub.com/

Cockpit 36
Overhead control panel 37
Instrument cluster 38
Centre console 40
Multifunction steering wheel 42
Combination switch 44
Cruise control lever 44
Multifunction lever 45

https://truckmanualshub.com/

Cockpit

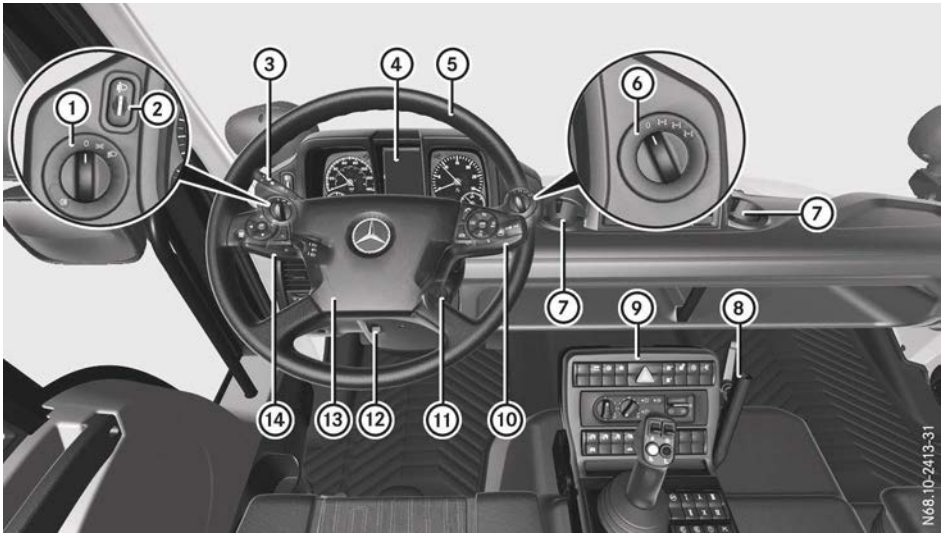

	Function	Page
①	Light switch	74
②	Headlamp range control	75
③	Cruise control lever	44
④	Instrument cluster	39
⑤	Multifunction steering wheel	42
⑥	Differential locks	190
⑦	Cup holder	93

	Function	Page
⑧	Universal carrier	94
⑨	Centre console	40
⑩	Multifunction lever	45
⑪	Ignition lock	159
⑫	To adjust the multifunction steering wheel	70
⑬	Horn	
⑭	Combination switch	44

https://truckmanualshub.com/

Overhead control panel

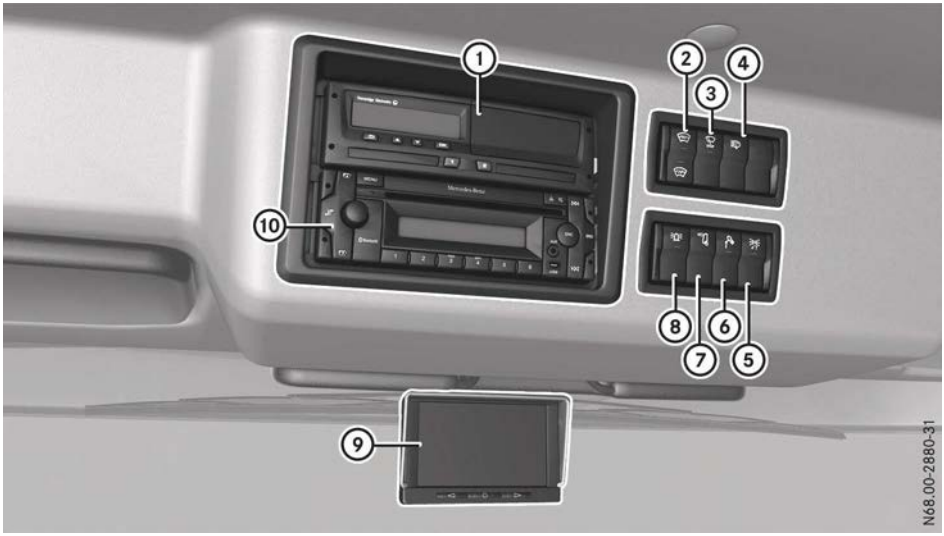

	Function	Page
①	Tachograph, see the manufacturer's operating instructions	
②	Switches the front windscreen heating on/off	90
③	Switches the lateral end position of windscreen wipers on/off	88
④	Switches on the headlamp cleaning system	89
⑤	Switches the external lighting control on/off	77

	Function	Page
⑥	Switches the working-area lamp on/off	77
⑦	Switches the auxiliary headlamps on/off	77
⑧	Switching the rotating beacons or strobe lights on/off	79
⑨	Monitor for front, rearview and equipment cameras	196
⑩	CD radio	148

https://truckmanualshub.com/

Instrument cluster

Displays

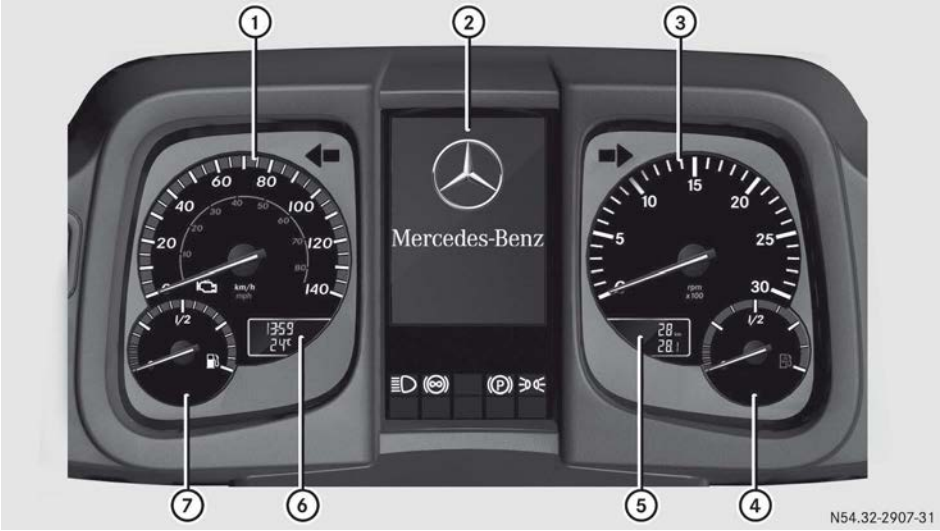

Example: instrument cluster

	Function	Page
①	Speedometer	
②	On-board computer	115
③	Rev counter	110
④	AdBlue® level	111
⑤	Total distance and trip distance	112
⑥	Clock and outside temperature display	112
⑦	Fuel level	111

ℹ On vehicles without display ⑤ and ⑥, scroll in the on-board computer to the Truck info menu window in the tour data menu (▷ page 118). The menu window displays the total distance recorder, trip meter, time and outside temperature.

https://truckmanualshub.com/

Warning and indicator lamps

Example: instrument cluster

	Function	Page
①	**Warning and indicator lamps in the speedometer**	
	Engine diagnostics	113
	Cab tilt lock	314
	Differential lock	190
	Instruction to brake at high engine speeds	110
②	Turn signals	75
③	**Warning and indicator lamps in the rev counter**	
	ABS (Anti-lock Braking System)	164
	Brake pressure	161
④	**Warning and indicator lamps in the AdBlue® display**	
	Diesel particle filter, automatic regeneration	213
	Diesel particle filter malfunction	213
⑤	**Warning and indicator lamps below the on-board computer**	
	Main-beam headlamps	75
	Continuous brake	167
	Parking brake	166
	Side lamps/dipped-beam headlamps	74

https://truckmanualshub.com/

Centre console

Front centre console

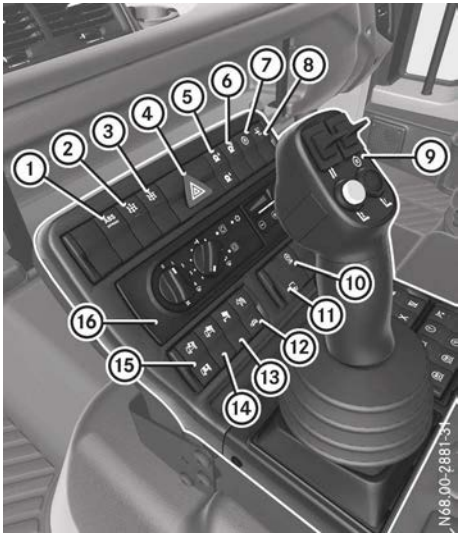

	Function	Page
①	ABS OFFROAD Activates/deactivates ABS Off-road program	164
②	Activates/deactivates transmission-driven power take-off 1	264
③	Activates/deactivates engine-driven power take-off 2	265
④	Switches the hazard warning lamps on/off	76
⑤	Tyre pressure control system: increases tyre pressure	186
	Tyre pressure control system: reduces tyre pressure	186

	Function	Page
⑥	Activates/deactivates the tyre pressure control system	186
⑦	Manually activates/deactivates engine speed mode	262
⑧	Activates/deactivates hydrostatic drive system	198
⑨	Operates the hydrostatic drive system	198
	Operates the hydraulic system	228
	Changes the installation position of the control lever and hydraulic system controls	95
⑩	LIM Front PTO shaft: activates/deactivates working speed control	267
⑪	Engages/disengages the front PTO shaft	267
⑫	Engages/disengages working gear	182
	Engages/disengages crawler gear	184
⑬	Vehicles with a trailer-mounted tipper platform:	
	Enables/disables tipper function	277
⑭	Vehicles with tipper platform:	
	Enables/disables tipper function	277

https://truckmanualshub.com/

	Function	Page
⑮	Vehicles with tipper platform, without hydraulic system:	
	Raises the tipper platform	277
	Lowers the tipper platform	277
⑯	Heating/air-conditioning system control panel	98

Rear centre console

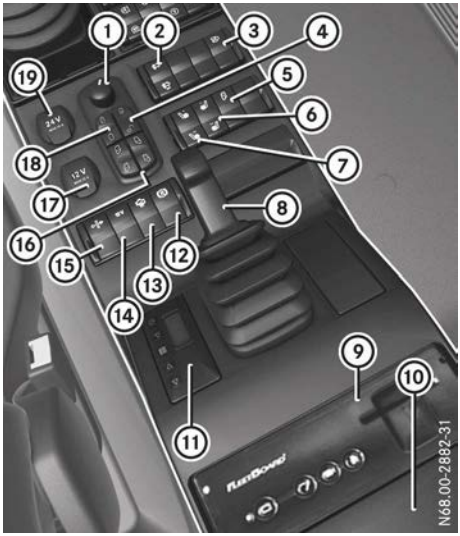

	Function	Page
①	Adjusts the exterior mirrors	71
②	Diesel particle filter, starts stationary manual regeneration	213
	Diesel particle filter, blocks regeneration	214
③	Switches the equipment camera on/off	196
④	Locks the doors	57
	Unlocks the doors	57
⑤	Vehicles with mowing door: wipes with washer fluid	90
⑥	Switches the right-hand seat heating on/off	69
⑦	Switches the seat heating on the left-hand side on/off	69

https://truckmanualshub.com/

	Function	Page
⑧	Parking brake	166
⑨	FleetBoard (see the manufacturer's operating instructions)	
⑩	Device mounting bracket	
⑪	Auxiliary heating timer	102
⑫	Applies/releases the four-wheel parking brake	166
⑬	Switches engine preheating on/off	106
⑭	12 V Switching the 12 V socket on/off	91
⑮	Switches radiator quick cleaning system on/off	191
⑯	Opens/closes the side windows	60
⑰	12 V socket	91
⑱	Switches on the mirror heating	72
	Switches off the mirror heating	72
⑲	24 V socket	91

Multifunction steering wheel

	Function	Page
	Operating the on-board computer:	115
▶	Selects the next main menu/next entry in the input window, increases or resets value	
◀	Selects the previous main menu/previous entry in the input window or decreases value	
▼	Next menu window/next menu bar down in the input window	
▲	Previous menu window/next menu bar up in the input window	
OK	Opens and closes input window/acknowledges event window	
M	Stores/displays the favourite menu window	
+	Increases the volume:	
	Audio	122
	Telephone	121
−	Reduces the volume:	
	Audio	122
	Telephone	121

https://truckmanualshub.com/

	Function	Page
	Operating the speed limiter:	191
	Operating cruise control:	193
	Selects cruise control	194
	Switches off the working mode limiter	204
SET	Activates and adjusts current speed/limit speed, increases the speed/limit speed	
	Speed limiter	191
	Cruise control	193
	Working mode cruise control	203
RES	Activates and calls up stored speed/limit speed, reduces set speed/limit speed	
	Speed limiter	191
	Cruise control	193
	Working mode cruise control	203
LIM	Selects the speed limiter	192
	Switches on the working mode limiter	204

	Function	Page
OFF	Deactivates the speed limiter	193
	Deactivates cruise control	196
	Switches off the working mode cruise control and working mode limiter	203
	Input window:	
	Cruise control, adjusts the speed tolerance	195
	Equipment operation, engine speed setting	263
	Operating the telephone:	121
	Makes or accepts a call/displays the Telephone menu window	
	Ends/rejects an incoming call	

https://truckmanualshub.com/

Combination switch

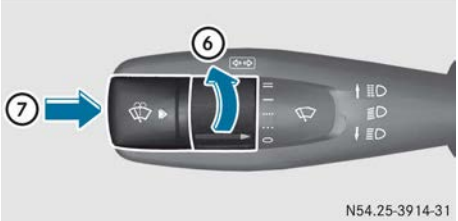

	Function	Page
①	Main-beam headlamps on (when dipped-beam headlamps are switched on)	75
②	Turn signal, right	75
③	Main-beam headlamps off (when dipped-beam headlamps are switched on)	75
④	Headlamp flasher	75
⑤	Turn signal, left	75
⑥	Windscreen wipers	88
⑦	To wipe with washer fluid/one wipe	89

Cruise control lever

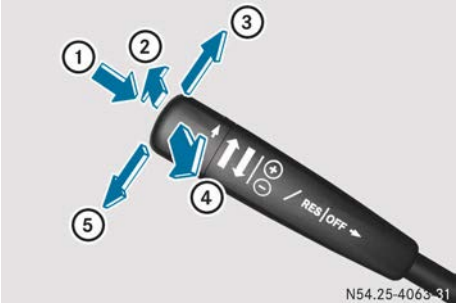

	Function	Page
①	**Speed limiter:** activating/deactivating the speed limiter	191
	Cruise control: activating/deactivating cruise control	193
②	**Telligent® gearshift:** gear preselection (shifting down)	169
	Telligent® automatic gearshift: shifting down manually	175
③	**Speed limiter:** increasing set limit speed	191
	Cruise control: increasing set speed	193
	Telligent® gearshift: selecting direction of travel (forward)	169
	Telligent® automatic gearshift: selecting direction of travel (forward)	175
④	**Telligent® gearshift:** gear preselection (shifting up)	169
	Telligent® automatic gearshift: shifting up manually	175

	Function	Page
⑤	**Speed Limiter:** reducing set limit speed	191
	Cruise control: decreasing set speed	193
	Telligent® gearshift: selecting direction of travel (backwards)	169
	Telligent® automatic gearshift: selecting direction of travel (backwards)	175

Multifunction lever

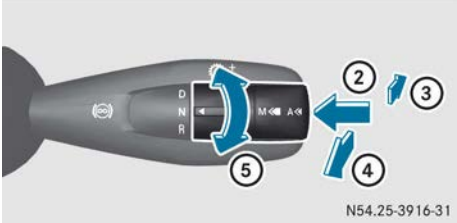

	Function	Page
①	Continuous brake	167
②	**Telligent® automatic gearshift:** automatic gearshift – drive program selection	177
	A Automatic drive program A	
	M Manual drive program M	
③	**Telligent® gearshift:** gear preselection (shifting down)	168
	Telligent® automatic gearshift: shifting down manually	174
④	**Telligent® gearshift:** gear preselection (shifting up)	168
	Telligent® automatic gearshift: shifting up manually	174

https://truckmanualshub.com/

	Function	Page
⑤	**Telligent® gearshift:** selecting direction of travel D Drive/forwards N Neutral R Reverse	168
	Telligent® automatic gearshift: selecting direction of travel D Drive/forwards N Neutral R Reverse	174

https://truckmanualshub.com/

Useful information 48
Occupant safety 48
Children in the vehicle 51
Pets in the vehicle 53

https://truckmanualshub.com/

Useful information

These Operating Instructions describe all the models and standard and optional equipment of your vehicle that were available at the time of going to print. Country-specific differences are possible. Bear in mind that your vehicle may not be equipped with all the functions described. This also applies to safety-relevant systems and functions.

Read the information on qualified specialist workshops (▷ page 30).

Occupant safety

Restraint system introduction

The restraint system can reduce the risk of vehicle occupants coming into contact with parts of the vehicle's interior in the event of an accident.

The restraint system can only offer protection if all vehicle occupants always:

- have the seat belt correctly fastened (▷ page 49)
- have the seat and head restraint adjusted properly (▷ page 64)

As the driver, you must also make sure that the steering wheel is also adjusted properly. Observe the information on the correct driver's seat position (▷ page 64).

See "Children in the vehicle" for further information on children travelling in the vehicle as well as on child restraint systems (▷ page 51).

Important safety notes

⚠ **WARNING**

If the restraint system is modified, it may no longer work as intended. The restraint system may then not perform its intended protective function by failing in an accident or triggering unexpectedly, for example. There is an increased risk of injury, possibly even fatal.

Never modify parts of the restraint system. Do not attempt to modify the wiring as well as electronic components or their software.

Seat belts

Introduction

A correctly worn seat belt is the most effective means of restraining the movement of vehicle occupants in the event of a collision. This reduces the risk of vehicle occupants coming into contact with parts of the vehicle interior or being ejected from it.

If the seat belt is pulled quickly or sharply by the belt sash guide, the inertia reel locks. The belt strap cannot be pulled out any further.

Important safety notes

⚠ **WARNING**

The seat belt cannot perform its intended protective function if it is not fastened correctly. Also, an improperly fastened seat belt can cause additional injuries in the event of an accident, sudden braking or abrupt changes of direction. There is an increased risk of injury, possibly even fatal.

Always make sure that all vehicle occupants are wearing their seat belt properly and are seated correctly.

⚠ **WARNING**

The seat belt does not offer the intended level of protection if you have not moved the backrest to an almost vertical position. When braking or in the event of an accident, you could slide underneath the seat belt and sustain abdomen or neck injuries, for example. This poses an increased risk of injury or even fatal injury.

Adjust the seat properly before beginning your journey. Always ensure that the backrest is in an almost vertical position and that the shoulder section of your seatbelt is routed across the centre of your shoulder.

https://truckmanualshub.com/

⚠ **WARNING**

Persons under 1.50 m tall cannot wear the seat belts correctly without a suitable, additional restraint system. The seat belt cannot perform its intended protective function if it is not fastened correctly. Also, an improperly fastened seat belt can cause additional injuries in the event of an accident, sudden braking or abrupt changes of direction. There is an increased risk of injury, possibly even fatal.

Secure persons less than 1.50 m tall in a suitable restraint system.

If a child younger than twelve years old and under 1.50 m in height is travelling in the vehicle:

- always secure the child in a child restraint system suitable for this Mercedes-Benz vehicle. The child restraint system must be appropriate to the age, weight and size of the child.
- be sure to observe the instructions and safety notes on "Children in the vehicle" in these Operating Instructions (▷ page 51) in addition to the child restraint system manufacturer's installation instructions

⚠ **WARNING**

Seat belts cannot provide protection as intended if:

- damaged, modified, extremely dirty, bleached or pigmented
- the belt buckle is damaged or extremely dirty
- the belt anchorage or inertia reel has been modified

Seat belts may sustain non-visible damage in an accident, e.g. due to glass splinters. Modifications or damage to the seat belts may lead to tearing or failing, for example, in an accident. There is an increased risk of injury, possibly even fatal.

Never modify seat belts, belt anchorages or inertia belt reels. Make sure that the seat belts are not damaged, do not show signs of wear and are clean. After an accident, have the seat belts checked immediately at a qualified specialist workshop.

Mercedes-Benz recommends that you only use seat belts which have been approved specifically for your vehicle by Mercedes-Benz. The general operating permit may otherwise be invalidated.

Correct seat belt use

Observe the safety notes on the seat belt (▷ page 48).

All vehicle occupants must be wearing the seat belt correctly before beginning the journey. Also make sure that all vehicle occupants are always wearing the seat belt correctly while the vehicle is in motion.

When fastening the seat belt, always make sure that:

- the seat belt tongue is only inserted into the belt buckle belonging to that seat
- the seat belt is tight across your body

  Avoid wearing bulky clothing, e.g. a winter coat.
- the seat belt is not twisted

  Only then can forces which occur be distributed across the surface of the seat belt.
- the shoulder section of the belt is always routed across the centre of your shoulder

  The shoulder section of the seat belt should not touch your neck nor be routed under your arm. If possible, adjust the seat belt to the appropriate height.
- the lap belt passes across your lap as tightly and as low down as possible

  The lap belt must always be routed across your hip joints and never across your abdomen. This applies particularly to pregnant women. If necessary, press the lap belt down into your hip joints and pull tight with the shoulder section of the belt.
- the seat belt is not routed across sharp, pointed or fragile objects

https://truckmanualshub.com/

If you have such items located on or in your clothing, e.g. pens, keys or spectacles, store these in a suitable place.

- only one person is using a seat belt

  Infants and children must never travel sitting on the lap of a vehicle occupant. In the event of an accident, they could be crushed between the vehicle occupant and seat belt.

- objects are never secured with a seat belt if the seat belt is also being used by one of the vehicle's occupants

  Also ensure that no objects are placed between a person and the seat. e.g. a cushion.

Seat belts are only intended to secure and restrain vehicle occupants. Always observe the instructions and safety notes "Before driving off" for securing objects, luggage or loads (▷ page 159).

Fastening and adjusting the seat belts

Observe the safety notes on the seat belt (▷ page 48) and the notes on how to use the seat belt properly (▷ page 49).

Vehicles with a swivel seat: also observe the information about the lap belt for the swivel seat (▷ page 51).

Basic illustration

▶ Adjust the seat (▷ page 64).
The seat backrest must be in an almost upright position.

▶ Pull the seat belt smoothly out of belt sash guide ③ and engage belt tongue ② into belt buckle ①.

▶ If necessary, pull upwards on the shoulder section of the seat belt to tighten the belt across your body.

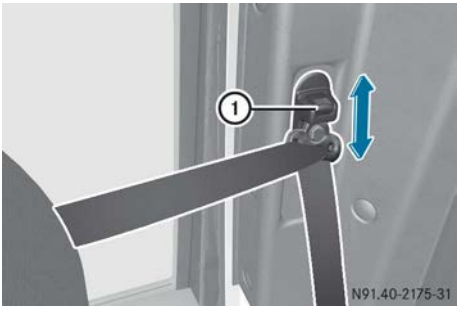

Vehicles with a swivel seat

The shoulder section of the seat belt must always be routed across the centre of the shoulder. Adjust the belt sash guide if necessary.

▶ **To raise:** slide the belt sash guide upwards. The belt sash guide engages in various positions.

▶ **To lower:** press release button ① and slide the belt sash guide downwards.

▶ Let go of release button ① in the desired position and make sure that the belt sash guide engages.

https://truckmanualshub.com/

Lap belt for the swivel seat

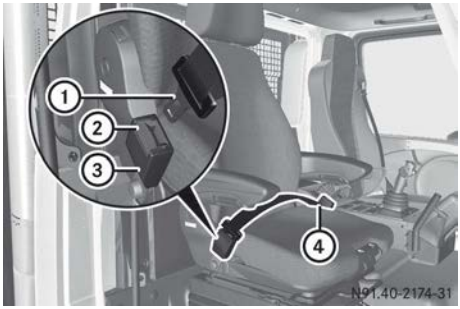

If you rotate the swivel seat 90° in the direction of the mowing door, you will need to fasten the lap belt when the vehicle is moving.

▶ **To fasten the lap belt:** pull the seat belt smoothly from belt sash guide ④ and engage belt tongue ① into belt buckle ③.

▶ If necessary, push the lap belt down to your hip joint.

Releasing the seat belt

! Make sure that the seat belt is fully rolled up. Otherwise, the seat belt or belt tongue will be trapped in the door or in the seat mechanism. This could damage the door, the door trim panel and the seat belt. Damaged seat belts can no longer fulfil their protective function and must be replaced. Visit a qualified specialist workshop.

Basic illustration

▶ **Three-point seat belt:** press release button ①, hold belt tongue ② firmly and guide back towards belt sash guide ③.

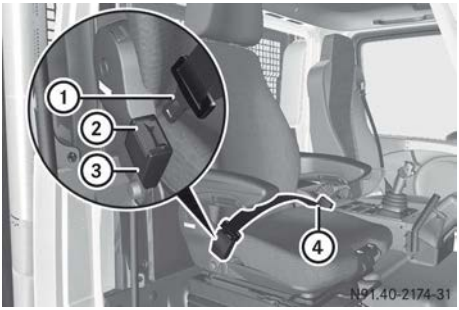

▶ **Lap belt for the swivel seat:** press release button ②, hold belt tongue ① firmly and guide back towards belt outlet ④.

Children in the vehicle

Important safety notes

If a child younger than twelve years old and under 1.50 m in height is travelling in the vehicle:

- always secure the child in a child restraint system suitable for Mercedes-Benz vehicles. The child restraint system must be

https://truckmanualshub.com/

appropriate to the age, weight and size of the child.

- be sure to observe the instructions and safety notes in this section in addition to the child restraint system manufacturer's installation instructions.

Vehicles with a swivel seat: the swivel seat is not suitable for installing a child restraint system. Children under twelve years of age and under 1.50 m in height are not allowed to travel on the swivel seat.

⚠ **WARNING**

If you leave children unattended in the vehicle, they could set the vehicle in motion by, for example:

- releasing the parking brake
- shifting the transmission into neutral
- starting the engine

They could also operate the vehicle's equipment and become trapped. There is a risk of an accident and injury.

When leaving the vehicle, always take the key with you and lock the vehicle. Never leave children unattended in the vehicle.

⚠ **WARNING**

If persons (particularly children) are exposed to heat or cold for a prolonged period, there is a risk of serious or even fatal injuries. Never leave persons (particularly children) unattended in the vehicle.

⚠ **WARNING**

If the child restraint system is placed in direct sunlight, the parts could become very hot. Children could be suffer burns by touching these parts, in particular on the metallic parts of the child restraint system. There is a risk of injury.

If you and your child leave the vehicle, always make sure that the child restraint system is not in direct sunlight. Cover it with a blanket, for example. If the child restraint system has been exposed to direct sunlight, leave it to cool down before securing the child in it.

Never leave children unattended in the vehicle.

Always ensure that all vehicle occupants have their seat belts fastened correctly and are sitting properly. Particular attention must be paid to children.

Observe the safety notes on the seat belt (▷ page 48) and the information on the correct use of the seat belt (▷ page 49).

Child restraint system

⚠ **WARNING**

If the child restraint system is incorrectly fitted on the seat position suitable for this purpose, it cannot perform its intended protective function. In the event of an accident, sharp braking or a sudden change in direction, the child may not be held securely. There is an increased risk of serious or even fatal injuries.

Observe the manufacturer's installation instructions and the correct use for the child restraint system. Make sure that the entire surface of the child restraint system is resting on the seat surface. Never place objects under or behind the child restraint system, e.g. cushions. Only use child restraint systems with the original cover designed for them. Only replace damaged covers with genuine covers.

⚠ **WARNING**

If the child restraint system is fitted incorrectly or is not secured, it can come loose in the event of an accident, heavy braking or a sudden change in direction. The child restraint system could be thrown about, striking vehicle occupants. There is an increased risk of injury, possibly even fatal.

Always fit child restraint systems properly, even if they are not being used. Make sure that you observe the child restraint system manufacturer's installation instructions.

https://truckmanualshub.com/

Always observe the instructions and safety notes "Before driving off" for securing objects, luggage or loads (▷ page 159).

⚠ **WARNING**

Child restraint systems or their securing systems that have been damaged or subjected to a load in an accident cannot perform their intended protective function. In the event of an accident, sharp braking or a sudden change in direction, the child may not be held securely. There is an increased risk of serious or even fatal injuries.

Immediately replace child restraint systems that have been damaged or subjected to a load in an accident. Have the child restraint securing systems checked in a qualified specialist workshop before fitting a child restraint system again.

Observe the warning labels on the child restraint system.

If children are travelling in the vehicle, be sure to observe the notes on "Children in the Vehicle" (▷ page 51).

"Universal" category child restraint systems can be recognised by their orange approval label.

Example: approval label on the child restraint system

The securing system of the child restraint system is the seat belt.

If you secure a child in a child restraint system on the front-passenger seat, always move the front-passenger seat as far back as possible. The entire base of the child restraint system must always rest on the seat cushion of the front-passenger seat. The backrest of the forward-facing child restraint system must, as far as possible, be resting on the backrest of the front-passenger seat. The child restraint system must not be put under strain by the head restraint. If possible, adjust the head restraint position accordingly. Always make sure that the shoulder belt strap is correctly routed from the belt sash guide to the shoulder belt guide on the child restraint system. The shoulder belt strap must be routed forwards and downwards from the vehicle belt sash guide. In addition, always observe the child restraint system manufacturer's installation instructions.

You can obtain child restraint systems and information about the correct child restraint system from any Mercedes-Benz Service Centre.

Pets in the vehicle

⚠ **WARNING**

If you leave animals unsupervised or unsecured in the vehicle, they may push a button or a switch, for example.

They could:

- activate vehicle equipment and become trapped, for example
- switch vehicle systems on or off, thus endangering other road users

In the event of an accident, sudden braking or abrupt changes of direction, unsecured animals could be flung around the vehicle, injuring the vehicle occupants. There is a risk of an accident and injury.

Never leave animals unattended in the vehicle. Always secure animals correctly during a journey, e.g. in an animal transport box.

https://truckmanualshub.com/

https://truckmanualshub.com/

Useful information 56
Locking system 56
Getting into and out of the vehicle 60
Side windows 60
Rear window 61

https://truckmanualshub.com/

Useful information

These Operating Instructions describe all the models and standard and optional equipment of your vehicle that were available at the time of going to print. Country-specific differences are possible. Bear in mind that your vehicle may not be equipped with all the functions described. This also applies to safety-relevant systems and functions.

Read the information on qualified specialist workshops (▷ page 30).

Locking system

Keys

Your vehicle is equipped with a special key system. The engine can only be started using the key coded to the vehicle.

If a vehicle key is lost, obtaining a replacement is a time-consuming process. This can only be done through a Mercedes-Benz Service Centre.

Mercedes-Benz recommends that you always keep an easily accessible spare key with you for emergencies.

⚠ **WARNING**

If you attach heavy or large objects to the key, the key could be unintentionally turned in the ignition lock. This could cause the engine to be switched off. There is a risk of an accident.

Do not attach any heavy or large objects to the key. Remove any bulky keyrings before inserting the key into the ignition lock.

Normal door lock

Important safety notes

! Only open the doors when traffic conditions permit. Make sure that there is sufficient clearance when opening the doors. Otherwise, you could damage your vehicle or other vehicles.

Exterior door lock

Unlocking/locking using the key

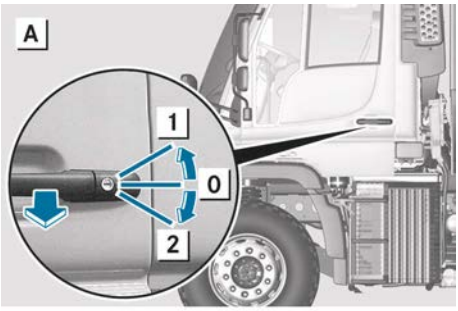

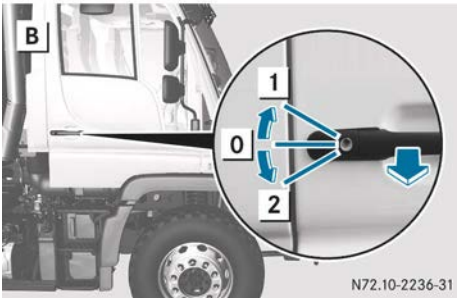

A Left-hand door

B Right-hand door

- ▶ Insert the key in position 0 into the respective door lock.
- ▶ **To lock:** turn the key down to position 2. Vehicles without central locking: the corresponding door is locked.

  Vehicles with central locking: both doors are locked
- ▶ **To unlock:** turn the key up to position 1. The corresponding door is unlocked.
- ▶ **To open:** remove the key and pull the door handle in the direction of the arrow.

https://truckmanualshub.com/

Unlocking/locking with the remote control

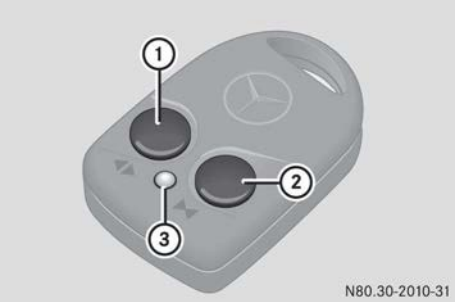

- **To unlock:** press and hold button ① for approximately one second.
  Indicator lamp ③ flashes. The driver's door is unlocked.
- Press and hold button ① for approximately one second once more.
  Indicator lamp ③ flashes. The co-driver's door is unlocked.

ℹ The vehicle locks again automatically if you do not open a door within 25 seconds of unlocking the vehicle normally.

- **To lock:** close the doors.
- Press and hold button ② for approximately one second.
  Indicator lamp ③ flashes. Both doors are locked.

Interior door lock

Locking/unlocking using the door handle

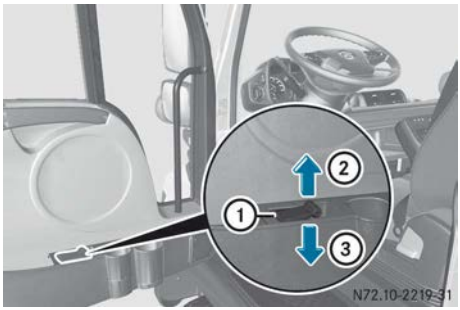

- Close both doors.
- **To lock:** push release lever ① downwards in the direction of arrow ③.
  Vehicles without central locking: the corresponding door is locked.

  Vehicles with central locking: both doors are locked.
- **To unlock:** pull release lever ① upwards in the direction of arrow ② until it is in the centre position.
  The corresponding door is unlocked.
- **To open:** pull release lever ① upwards in the direction of arrow ② as far as it will go.

Locking/unlocking centrally using the buttons

- Close both doors.
- **To lock centrally:** press button ①.
- **To unlock centrally:** press button ②.

You can open a door from inside the vehicle even if it has been locked.

Mowing door lock

Important safety notes

⚠ **WARNING**

If you are standing on the surface of the mowing door frame when opening it, the door could swing open, causing you to fall. There is a risk of injury.

Remove your foot from the surface of the mowing door frame before opening the door.

https://truckmanualshub.com/

! Only open the mowing door when traffic conditions allow you to do so. Ensure that there is enough clearance when opening the mowing door. You may otherwise damage your vehicle or other vehicles.

Exterior door lock

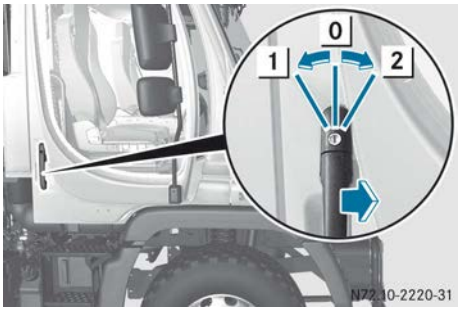

- Insert the key in position [0].
- **To unlock:** turn the key clockwise to position [2].
  The mowing door is unlocked.
- **To lock:** turn the key anti-clockwise to position [1].
  The mowing door is locked.
- **To open:** remove the key and pull the door handle in the direction of the arrow.

Interior door lock

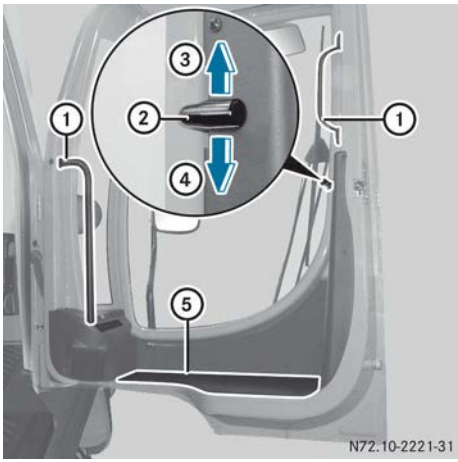

- Use grab handles ①, door frame surface ⑤ and the steps underneath the mowing door to enter or exit.
- **To lock:** push release lever ② downwards in the direction of arrow ④.
- **To unlock and open:** push release lever ② upwards in the direction of arrow ③.

Remote control batteries

Checking the batteries

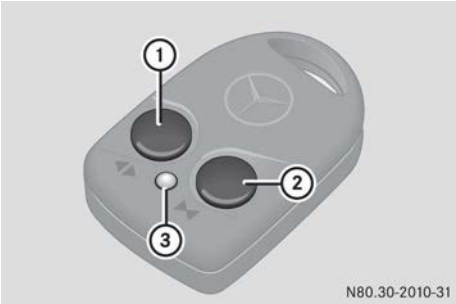

- Press button ① or ②.
  If indicator lamp ③ flashes, the batteries are functioning correctly. If the remote control is within the receiver range of the vehicle, the vehicle is unlocked or locked accordingly.
  If indicator lamp ③ lights up once only, the batteries are empty. The vehicle can then no longer be locked or unlocked with the remote control.
- Replace the batteries (▷ page 58).

Batteries may be obtained in any qualified specialist workshop.

Replacing the batteries

⚠ **WARNING**

Batteries contain toxic and corrosive substances. If batteries are swallowed, it can result in severe health problems. There is a risk of fatal injury.

https://truckmanualshub.com/

Keep batteries out of the reach of children. If a battery is swallowed, seek medical attention immediately.

Environmental note

Batteries and rechargeable batteries contain pollutants. It is illegal to dispose of them as household rubbish. They must be collected separately and recycled in an environmentally responsible manner.

Dispose of batteries and rechargeable batteries in an environmentally responsible manner. Take discharged batteries or faulty rechargeable batteries to a qualified specialist workshop or to a collection facility for used batteries.

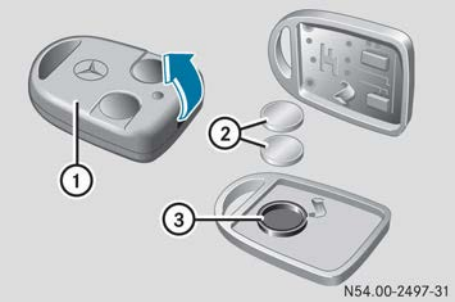

- Prise open remote control ①, e.g. by inserting a screwdriver in the direction of the arrow in the slot.
- Remove batteries ②.
- Use a lint-free cloth to clean new batteries ②.
- Push both batteries ② with the positive pole (+) facing downwards into battery carrier ③.
- Press both halves of the housing together until they engage.

Use two CR 1620 type batteries.

Teaching-in the remote control

If central locking no longer works after replacing the batteries, you must teach in the remote control again.

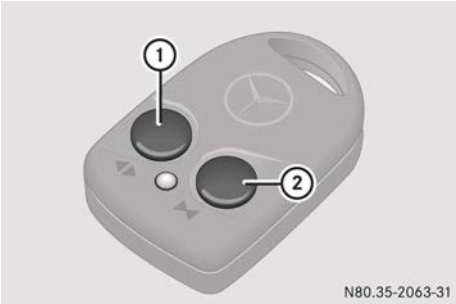

- Press and hold button ① or ② for five seconds.
- Briefly press button ① or ② again within three seconds..

  The remote control has been taught in and is ready for use.

Electronic immobiliser

Notes about the immobiliser

The engine can only be started using the keys coded to the vehicle.

Deactivating the immobiliser

- Apply the parking brake.
- Turn the key in the ignition lock to position **1** or **2**.

  The immobiliser is deactivated after approximately one second and the engine can be started.

ⓘ If you do not wait for one second, the immobiliser is not deactivated. The engine cannot be started. At the same time, the status indicator lights up yellow.

https://truckmanualshub.com/

Activating the immobiliser

- ▶ Apply the parking brake.
- ▶ Turn the key to position **0** in the ignition lock.
- ▶ Remove the key from the ignition lock. The immobiliser is now activated.

Getting into and out of the vehicle

⚠ **WARNING**

If you leave children unattended in the vehicle, they could set the vehicle in motion by, for example:

- releasing the parking brake
- shifting the transmission into neutral
- starting the engine

They could also operate the vehicle's equipment and become trapped. There is a risk of an accident and injury.

When leaving the vehicle, always take the key with you and lock the vehicle. Never leave children unattended in the vehicle.

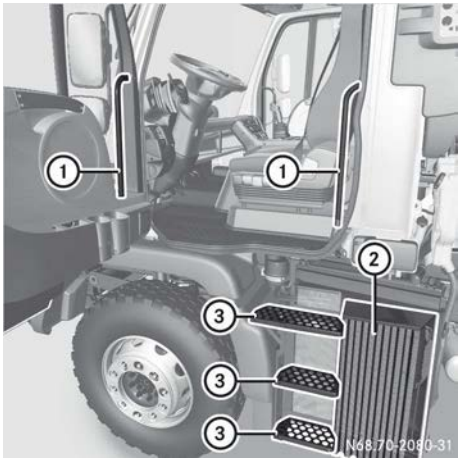

Getting into and out of the vehicle (example: left-hand door)

- ▶ Make sure that protective grid ② is closed (▷ page 301).
- ▶ Keep grab handles ①, steps ③ and your own footwear free of dirt (e.g. mud, snow and ice).
- ▶ **Vehicles with a suspension seat:** use the EASY-ENTRY/EXIT feature (▷ page 66).
- ▶ **All vehicles:** use grab handles ① and steps ③ when getting in and out of the vehicle.

Side windows

Important safety notes

⚠ **WARNING**

When opening a side window, parts of the body can drawn into or trapped between the side window and the window frame. There is a risk of injury.

Make sure that nobody is touching the side window before you open it. If someone becomes trapped, release the switch or press the upper section of the switch to close the side window again.

⚠ **WARNING**

While closing the side windows, body parts in the closing area could become trapped. There is a risk of injury.

When closing make sure that no parts of the body are in the closing area. If somebody becomes trapped, release the switch or press the switch to open the side window again.

https://truckmanualshub.com/

Opening/closing the side windows

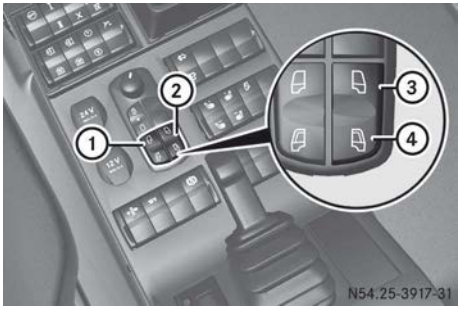

① Side window (left)
② Side window (right)

▶ Make sure that the key in the ignition lock is in position **1** or **2**.

▶ **To open:** press and hold button ④ until the side window is in the desired position.

▶ **To close:** press and hold button ③ until the side window is in the desired position.

Rear window

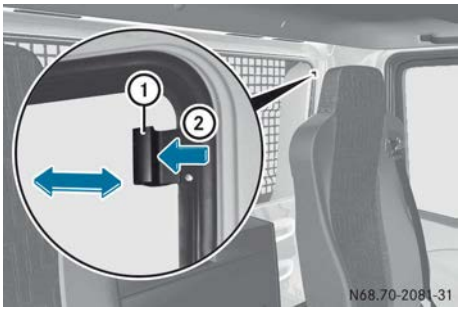

▶ **To open:** press locking button ② and using handle ① push the rear window into the desired position.

▶ **To close:** push the rear window closed using handle ① until the locking button engages.

https://truckmanualshub.com/

https://truckmanualshub.com/

Useful information 64
Seats 64
Adjusting the multifunction steering wheel 70
Dual-mode steering 70
Exterior mirrors 71
Lighting system 73
Good visibility 88
Power supply 90
Features 93

https://truckmanualshub.com/

Useful information

These Operating Instructions describe all the models and standard and optional equipment of your vehicle that were available at the time of going to print. Country-specific differences are possible. Bear in mind that your vehicle may not be equipped with all the functions described. This also applies to safety-relevant systems and functions.

Read the information on qualified specialist workshops (▷ page 30).

Seats

Important safety notes

Your vehicle may be equipped with different types of seats depending on the cab and the vehicle equipment:

- Standard seat
- Suspension seat
- Swivel seat
- Double co-driver's seat

Information on seat cleaning can be found in the "Cleaning and care" section (▷ page 286).

⚠ **WARNING**

You could lose control of the vehicle while driving if you:

- adjust the driver's seat, steering wheel or mirrors
- fasten the seat belt

There is a risk of an accident.

Adjust the driver's seat, head restraint, steering wheel and mirrors and fasten your seat belt before starting the engine.

⚠ **WARNING**

When adjusting a seat, you or another vehicle occupant could become trapped by the guide rail of the seat, for instance. There is a risk of injury.

Make sure that no one has any part of their body within the sweep of the seat when adjusting it.

⚠ **WARNING**

The seat belt does not offer the intended level of protection if you have not moved the backrest to an almost vertical position. When braking or in the event of an accident, you could slide underneath the seat belt and sustain abdomen or neck injuries, for example. This poses an increased risk of injury or even fatal injury.

Adjust the seat properly before beginning your journey. Always ensure that the backrest is in an almost vertical position and that the shoulder section of your seatbelt is routed across the centre of your shoulder.

⚠ **WARNING**

If the driver's seat is not correctly engaged, it could unexpectedly move while driving. This could cause you to lose control of the vehicle. There is a risk of an accident.

Always ensure that the driver's seat is engaged before starting the vehicle.

⚠ **WARNING**

The head restraints cannot provide the intended protection unless they are fitted and adjusted correctly. There is an increased risk of injury to the head and neck in the event of an accident or sudden braking, for example.

Always drive with the head restraints fitted. Ensure that the centre of the head restraints support the back of each vehicle occupant's head at eye level before driving off.

⚠ **WARNING**

If there is not enough clearance, the suspension seat could trap body parts between the steering wheel and the suspension seat. There is a risk of injury.

Ensure that there is enough clearance for the movements of the suspension seat. Before

https://truckmanualshub.com/

getting out, lower the suspension seat completely.

⚠ **WARNING**

If you push the suspension seat bellows inwards, your hand could become trapped. There is a risk of injury.

Do not push the bellows inwards.

! To prevent damage to the seats and the seat heating, observe the following notes:

- Do not pour any fluid on the seats. If fluid is poured on the seats, dry it as quickly as possible.
- If the seat covers are damp or wet, do not switch on the seat heating. Also, do not use the seat heating to dry the seats.
- Clean the seat covers as recommended; see the "Cleaning and care" section.
- Do not transport any heavy loads on the seats. Do not place any pointed objects on the seat cushions, such as e.g. knives, nails or tools. As far as possible, only use the seats for people.
- When operating the seat heating, do not cover the seats with insulating materials, e.g. blankets, coats, bags, protective covers, child seats or booster seats.

! Ensure that no objects in the cab are blocking the seats. The seats could otherwise be damaged.

Your seat must be adjusted in such a way that you can wear your seat belt correctly. Observe the following points:

- Set the seat backrest to a position as near to vertical as possible and sit as upright as possible. Never drive with the seat backrest reclined too far back.
- Your arms should be slightly bent when you are holding the steering wheel.
- Avoid seat positions which do not allow a seat belt to be routed correctly. The shoulder section of the belt must be routed across the centre of your shoulder and must be pulled tight against your upper body. The lap belt must always be routed across your lap as low as possible, i.e. across your hips.
- Maintain a distance to the pedals that allows you to depress them fully.

Also observe the safety notes in the "Children in the vehicle" section (▷ page 51).

Do not use the seat as a climbing aid.

Always have work on the seats performed at a qualified specialist workshop.

Operating the seats

Standard seat

Overview

▶ Make sure that the vehicle is at a complete standstill and cannot roll away.

Seat backrest

▶ Relieve pressure from the seat backrest.

▶ Pull lever ① up and hold it.

▶ Apply pressure to or relieve pressure from the seat backrest in order to move it to the desired position.

▶ Release lever ①.

https://truckmanualshub.com/

Seat height

- ▶ Pull lever ② up and hold it.
- ▶ Apply pressure to or relieve pressure from the seat in order to move it to the desired height.
- ▶ Release lever ②.

Seat angle

- ▶ Pull lever ③ up and hold it.
- ▶ Apply pressure to or relieve pressure from the seat cushion or backrest in order to move it to the desired position.
- ▶ Release lever ③.

Seat fore-and-aft adjustment

- ▶ Pull lever ④ up and hold it.
- ▶ Push the seat forwards or backwards in order to move it into the desired position.
- ▶ Release lever ④ and engage the seat audibly.

Suspension seat/luxury suspension seat

Overview

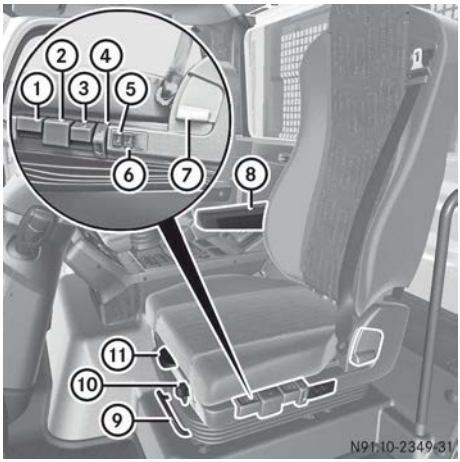

- ▶ Make sure that the warning lamp in the instrument cluster is not lit.
  The vehicle's compressed air system has sufficient reservoir pressure. It is possible to carry out all possible seat adjustments.
- ▶ Make sure that the vehicle is at a complete standstill and cannot roll away.

Seat backrest

- ▶ Relieve pressure from the seat backrest.
- ▶ Pull lever ⑦ up and hold it.
- ▶ Apply pressure to or relieve pressure from the seat backrest in order to move it to the desired position.
- ▶ Release lever ⑦.

Seat suspension

- ▶ Set lever ⑩ to the right.
  The seat suspension can move freely.
- ▶ Set lever ⑩ to the left.
  The seat suspension is locked.

Seat fore-and-aft adjustment

- ▶ Pull lever ⑨ up and hold it.
- ▶ Push the seat forwards or backwards in order to move it into the desired position.
- ▶ Release lever ⑨ and engage the seat audibly.

Seat cushion depth

- ▶ Pull lever ⑪ up and hold it.
- ▶ Push the seat cushion forwards or backwards in order to move it into the desired position.
- ▶ Release lever ⑪ and engage the seat cushion audibly.

Seat armrests

- ▶ If necessary, fold up seat armrests ⑧.
- ▶ Use the handwheel on the underside to set the angle of seat armrests ⑧.

Vibration damper

- ▶ Set the vibration damper using lever ① to prevent the seat from bottoming out.

https://truckmanualshub.com/

Seat angle

- ▶ Pull lever ② up and hold it.
- ▶ Apply pressure to or relieve pressure from the seat cushion or backrest in order to move it to the desired position.
- ▶ Release lever ②.

Seat height

- ▶ Pull lever ③ up or push it down to the desired level.
  The seat rises or lowers.

EASY-ENTRY/EXIT feature

Always use the EASY-ENTRY/EXIT feature when getting out of the vehicle.

- ▶ Push lever ④ downwards.
  The seat is lowered completely.
- ▶ Pull lever ④ upwards.
  The seat returns to the previously set height.

Lumbar support

- ▶ **Lower lumbar support:** press the upper or lower section of switch ⑤.
  The lower lumbar support is increased or decreased.
- ▶ **Upper lumbar support:** press the upper or lower section of switch ⑥.
  The upper lumbar support is increased or decreased.

Swivel seat

Overview

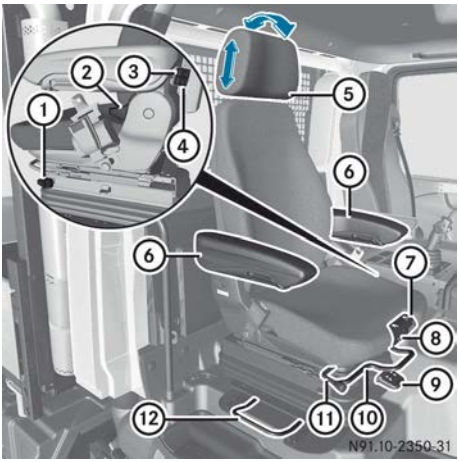

- ▶ Make sure that the key is in position **2** in the ignition lock.
  It is possible to carry out all possible seat adjustments.
- ▶ Make sure that the vehicle is at a complete standstill and cannot roll away.

Adjusting the head restraints

- ▶ Pull head restraint ⑤ up or push it down to the desired height.
- ▶ Push head restraint ⑤ back or pull it forwards to the desired angle.

Seat armrests

- ▶ If necessary, fold up seat armrests ⑥.
- ▶ Use the handwheel on the underside to set the angle of seat armrests ⑥.

Seat angle

- ▶ Pull lever ⑦ up and hold it.
- ▶ Apply pressure to or relieve pressure from the seat cushion in order to move it to the desired position.
- ▶ Release lever ⑦.

https://truckmanualshub.com/

Seat suspension

- ▶ Push lever ① back.
  The seat suspension is deactivated.
- ▶ Push lever ① forwards.
  The seat suspension is activated.

Seat cushion depth

- ▶ Pull lever ⑧ up and hold it.
- ▶ Push the seat cushion forwards or backwards in order to move it into the desired position.
- ▶ Release lever ⑧.

Seat height

- ▶ Pull lever ⑨ up or push it down.
  The seat rises or lowers.

Seat fore-and-aft adjustment

- ▶ Pull lever ⑩ up and hold it.
- ▶ Push the seat forwards or backwards in order to move it into the desired position.
- ▶ Release lever ⑩ and engage the seat audibly.

Swivelling the seat

- ▶ Pull lever ⑪ upwards.
- ▶ Swivel the seat until it is in the desired position.
- ▶ Release lever ⑪.
  The lever must engage audibly.

Seat fore-and-aft adjustment

- ▶ Pull lever ⑫ up and hold it.
- ▶ Push the seat forwards or backwards in order to move it into the desired position.
- ▶ Release lever ⑫ and engage the seat audibly.

Lumbar support

- ▶ **Lower lumbar support:** press the upper or lower section of switch ④.
  The lower lumbar support is increased or decreased.
- ▶ **Upper lumbar support:** press the upper or lower section of switch ③.
  The upper lumbar support is increased or decreased.

Seat backrest

- ▶ Relieve pressure from the seat backrest.
- ▶ Pull lever ② up and hold it.
- ▶ Apply pressure to or relieve pressure from the seat backrest in order to move it to the desired position.
- ▶ Release lever ②.

Removing the head restraints

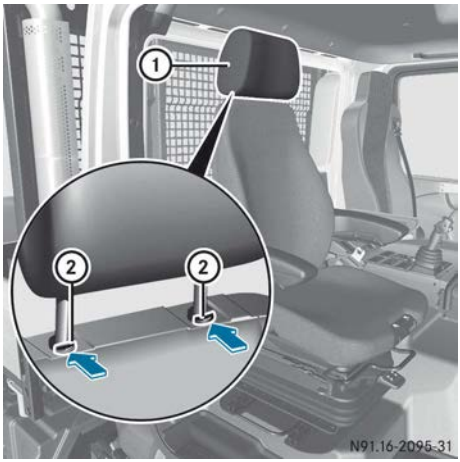

- ▶ Press and hold release catches ② in the direction of the arrow.
- ▶ Pull head restraint ① up and out with a single movement.

https://truckmanualshub.com/

Double co-driver's seat

Overview

Adjusting the head restraints

▶ Pull head restraint ① up or push it down to the desired height.

Seat fore-and-aft adjustment

▶ Pull lever ② up and hold it.

▶ Push the double co-driver's seat forwards or backwards into the desired position.

▶ Release lever ② and engage the double co-driver's seat audibly.

Removing the head restraints

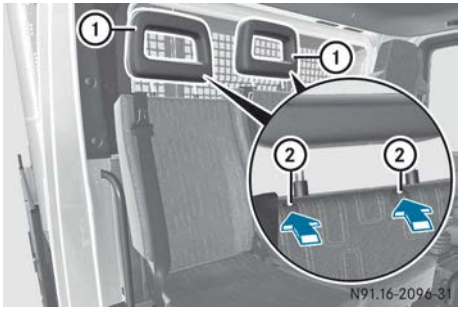

▶ Press and hold release catches ② under the upholstery.

▶ Pull head restraint ① up and out with a single movement.

Seat heating

General notes

! Observe the following instructions; you could otherwise damage the seat heating:

- do not leave any objects on the seat.
- do not cover the seat, e.g. with a towel or cushion.
- if the co-driver's seat is not occupied, switch the seat heating off on the co-driver's side.
- if the engine is not running, switch the seat heating off on the driver's and the co-driver's side.

① Seat heating (left seat)

② Seat heating (right seat)

The seat heating does not switch off automatically in the event of overheating.

▶ Make sure that the key is in position **2** in the ignition lock.

Normal heating mode

▶ **To switch on:** press switch ③.
Indicator lamp ④ lights up.

▶ **To switch off:** press switch ⑥ until switch ③ is in the centre position.
Indicator lamp ④ goes out.

Rapid heating mode

! When the engine is switched off, do not switch on the rapid heating function for any longer than necessary.

https://truckmanualshub.com/

Otherwise, the batteries could discharge.

▶ **To switch on:** press switch ⑥.
Indicator lamp ⑤ lights up.

▶ **To switch off:** press switch ③ until switch ⑥ is in the centre position.
Indicator lamp ⑤ goes out.

Adjusting the multifunction steering wheel

⚠ **WARNING**

The steering wheel may move unexpectedly if you adjust it while driving. This could cause you to lose control of the vehicle. There is a risk of an accident.

Make sure that the steering wheel is locked before driving off. Never unlock the steering wheel when the vehicle is in motion.

Adjustment for the multifunction steering wheel is only available in left-hand-drive vehicles without dual-mode steering.

▶ Make sure that the [(!)] warning lamp in the instrument cluster is not lit.
The vehicle's compressed air system has sufficient reservoir pressure. The multifunction steering wheel can be adjusted.

▶ Make sure that the vehicle is at a complete standstill and cannot roll away.

▶ Press button ②.
The steering wheel unlocks.

▶ Adjust the steering wheel height and angle.

▶ Press button ①.
The steering wheel locks.

ℹ The steering wheel locks automatically approximately ten seconds after it is unlocked.

Dual-mode steering

Important safety notes

⚠ **WARNING**

If the dual-mode steering is unlocked while the vehicle is in motion, it could move unexpectedly. This could cause you to lose control of the vehicle. There is a risk of an accident.

Before the journey, make sure that the dual-mode steering is locked. Never unlock the dual-mode steering when the vehicle is in motion.

Changing the steering position

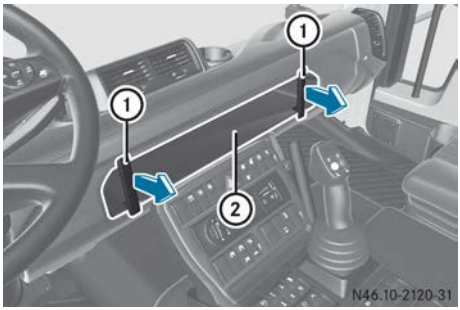

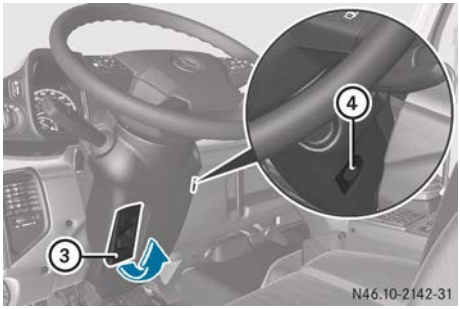

Example: dual-mode steering, vehicles with Telligent® automatic gearshift

- ▶ Set the wheels to the straight-ahead position.
- ▶ Make sure that the vehicle is at a complete standstill and cannot roll away.
- ▶ Make sure that the key is either removed or in position **0** in the ignition lock.
- ▶ Pull out and remove trim ② using handles ①.
- ▶ Press and hold button ④.
- ▶ Swing release lever ③ up as far as it will go. Vehicles with Telligent® automatic gearshift: the clutch pedal folds in upwards. Automatic drive program A is selected.
- ▶ Release button ④.
  The dual-mode steering is unlocked.
- ▶ Make sure that the steering wheel does not turn.

ⓘ If the dual-mode steering is unlocked, the steering wheel is lightly secured to prevent it from turning. However, if the steering wheel does turn, it needs to be turned back by the corresponding number of locking points. If the steering wheel turns by more than 1 rotation, the electrical functions in the steering wheel may fail.

- ▶ Position the dual-mode steering to the right-hand or left-hand steering position.
- ▶ Gently press release lever ③ downwards, whilst moving the steering wheel to and fro with short steering movements.
  The teeth must engage.
- ▶ Push release lever ③ until it engages.
- ▶ Align the bottom of trim ② with the guides, then push the upper section inwards until trim ② engages.

ⓘ If release lever ③ has engaged and trim ② is fitted, you can start the engine.

Exterior mirrors

Adjusting the exterior mirrors

Important safety notes

⚠ **WARNING**

The exterior mirrors reduce the size of the image. Objects visible in the mirrors are closer than they appear. You could misjudge the distance from road users driving behind you when changing lanes, for instance. There is a risk of an accident.

You should therefore always look over your shoulder to determine the actual distance from road users driving behind you.

An incorrectly adjusted exterior mirror may impair visibility. For this reason, always check the position of the exterior mirrors on the vehicle before starting a journey.

Adjusting

- ▶ **Ramp and wide-angle mirror**: adjust ramp and wide-angle mirrors by hand.

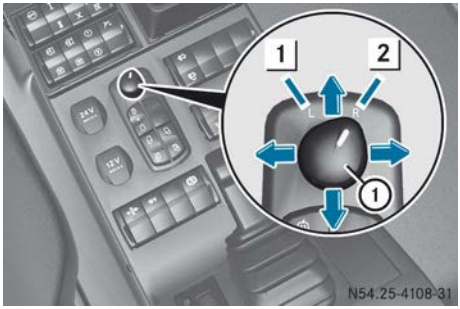

https://truckmanualshub.com/

- **Left and right exterior mirrors:** make sure that the key in the ignition lock is in position **1** or **2**.
- Turn switch ① to position 1 for the left-hand exterior mirror or to position 2 for the right-hand exterior mirror.
- Press switch ① forwards or backwards, right or left, until the exterior mirror is correctly set.

Adjusting the mirror arm on vehicles with dual-mode steering

Depending on the vehicle version, your vehicle either has no detent, or has a dual detent on the mirror arms. If the mirror arms do not have a dual detent, you can adjust the exterior mirrors electrically (▷ page 71).

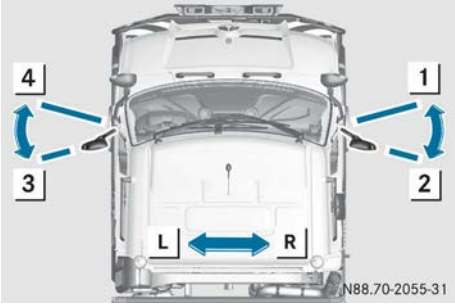

Mirror arms with dual detents

- **"Driver left" seat position L:** position the left-hand mirror arm in front detent 4.
- Position the right-hand mirror arm in rear detent 2.
- **"Driver right" seat position R:** position the right-hand mirror arm in front detent 1.
- Position the left-hand mirror arm in rear detent 3.

Exterior mirror heating

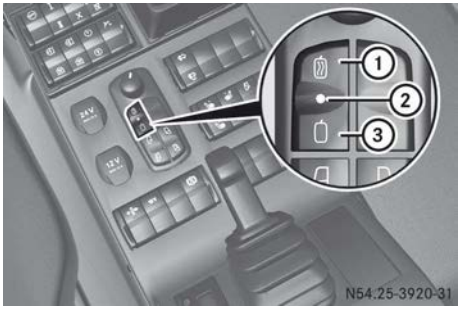

- **To switch on:** make sure that the engine is running.
- Press button ①.
  Indicator lamp ② lights up.
- **To switch off:** press button ③.
  Indicator lamp ② goes out.

In damp or cold weather, use the mirror heating to keep the exterior mirrors demisted and free of ice. The kerb mirror is not heated.

Vehicles with mowing door: when mirror heating is active, the panorama window in the mowing door is also heated. The additional mirror is not heated.

Additional mirror, vehicles with mowing door

General notes

There is an additional mirror for vehicles with a mowing door and swivel seat. The additional mirror can be attached to the right side of the front bumper for working at the side of the vehicle.

When working at the side of the vehicle, the additional mirror considerably improves the driver's rear view.

https://truckmanualshub.com/

Folding down the additional mirror

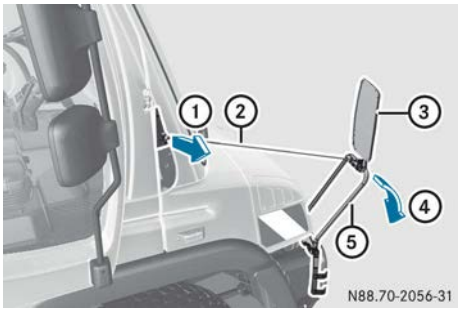

Additional mirror (example: vehicles without auxiliary headlamps)

If you need to open/close or fit/detach the front flap, you must fold down additional mirror ③.

- ▶ Pull out hand rail ② by ball coupling ①.
- ▶ Swing mirror holder ⑤ downwards ④.
- ▶ Carefully release handrail ②.

Lighting system

Driving abroad

Halogen headlamps

General notes

You must switch the halogen headlamps to symmetrical dipped beam when driving in countries where vehicles drive on the opposite side of the road to the country in which the vehicle is registered. This prevents oncoming traffic from being dazzled. Symmetrical dipped-beam headlamps do not illuminate as large an area of the edge of the carriageway. You should make the adjustment as close as possible to the border before crossing it.

Switching headlamp settings

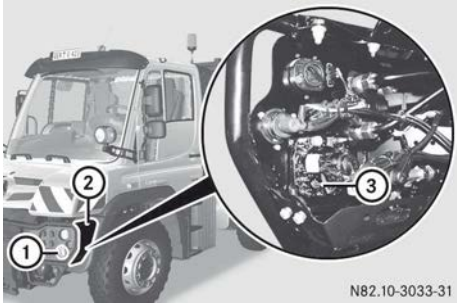

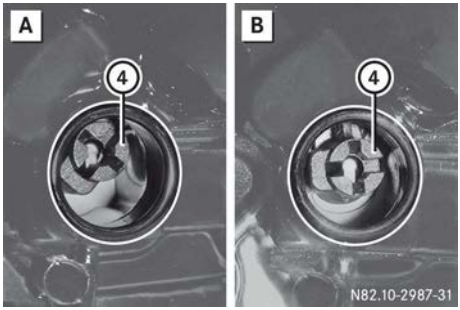

A Asymmetrical dipped-beam headlamps

B Symmetrical dipped-beam headlamps

- ▶ Unscrew cover ②.
- ▶ Remove covering cap ③ from dipped-beam/main-beam headlamp ①.
- ▶ Turn setting screw ④ a ¼ revolution clockwise.
- ▶ Insert covering cap ③.
- ▶ Screw on cover ②.

Convert the headlamps back to the asymmetrical dipped beam setting as soon as possible after returning across the border.

Bi-Xenon headlamps

If your vehicle is equipped with bi-xenon headlamps, the inscription "bi-xenon" is featured on the headlamp glass.

You must switch the bi-xenon headlamps to symmetrical dipped beam when driving in countries where vehicles drive on the opposite side of the road to the country in which the vehicle is registered. This prevents

https://truckmanualshub.com/

oncoming traffic from being dazzled. Symmetrical dipped-beam headlamps do not illuminate as large an area of the edge of the carriageway. You must have the conversion performed at a qualified specialist workshop and as close as possible to the border before crossing it.

Light switch

Important safety notes

⚠ **WARNING**

The rear exterior lighting is concealed when the tailgate is opened. This could cause other road users to fail to recognise the vehicle in time. There is a risk of an accident.

Make sure that the vehicle is safeguarded at the rear in accordance with national legal requirements, e.g. with a warning triangle.

Overview

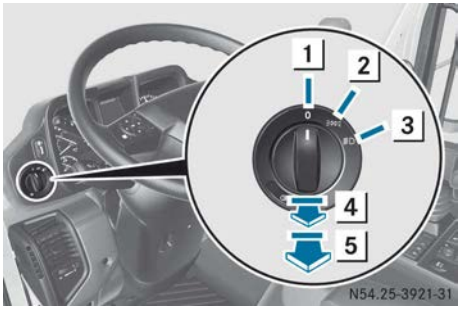

Light switch

1 0	Lights off/daytime driving lights
2	Side/tail lamps, licence plate lighting and perimeter/side marker lamps
3	Dipped-beam/main-beam headlamps
4	Foglamps
5	Rear foglamp

The light switch can be used to switch the vehicle lighting on or off. The main-beam headlamps and the headlamp flasher are operated using the combination switch (▷ page 75).

When parking lamps or dipped-beam headlamps are switched on, the warning buzzer sounds if you open the driver's door and:

- the key is in position **0** in the ignition lock.
- the key is removed from the ignition lock.

Dipped-beam headlamps

▶ Turn the light switch to the position. The dipped-beam headlamps and side lamps are switched on. The indicator lamp in the instrument cluster lights up.

The dipped-beam headlamps are asymmetrical. For this reason, in countries where vehicles drive on the other side of the road to the country where the vehicle is registered, there is a danger of oncoming traffic being dazzled. Switch headlamps when driving in these countries (▷ page 73).

Daytime driving lights

▶ Make sure that the key is in position **2** in the ignition lock.

▶ Turn the light switch to position 0. The daytime driving lights are switched on.

When you turn the light switch to the position, the daytime driving lights are switched off.

Foglamps and rear foglamps

▶ Turn the light switch to the or position.

▶ **To switch on the foglamps:** pull the light switch out to position 4.
The foglamps and the foglamp indicator lamp next to the light switch light up.

▶ **To switch on the front and rear foglamps:** pull the light switch out to position 5.
The front foglamps, rear foglamps and the foglamp and the rear foglamp

indicator lamps next to the light switch light up.

ℹ If the vehicle only has a rear foglamp, turn the light switch to the [≡D] position and pull the light switch out one level.

Headlamp range control

The headlamp range control is used to adapt the downward angle of the headlamp beams in accordance with the load on your vehicle. The angle of the headlamp beams changes if the seats are occupied or if the vehicle is loaded or unloaded. This can impair visibility and dazzle oncoming traffic.

- Switch on the dipped-beam headlamps (▷ page 74).
- Turn headlamp range control ① to the desired position. The road should be illuminated from 40 m to 100 m and the dipped-beam headlamps must not dazzle oncoming vehicles.

For an unladen vehicle, use position **0** or **1** depending on the vehicle body.

Combination switch

Main-beam headlamps/headlamp flasher

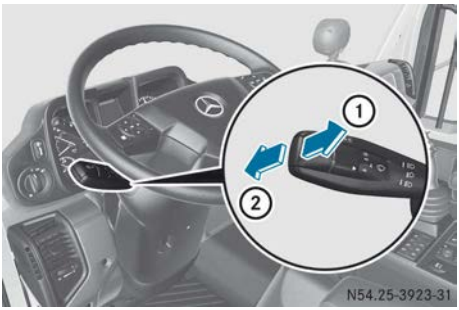

- Ensure that the key is in position **2** in the ignition lock.
- **To switch on the main-beam headlamps:** switch on the [≡D] dipped-beam headlamps (▷ page 74).
- Push the combination switch in the direction of arrow ② and engage.
  The [≡D] indicator lamp in the instrument cluster lights up.
- **To use the headlamp flasher:** briefly pull the combination switch in the direction of arrow ①.
  The [≡D] indicator lamp in the instrument cluster and the main-beam headlamps light up briefly.

Turn signals

https://truckmanualshub.com/

- Ensure that the key is in position **2** in the ignition lock.
- **To indicate right:** push the combination switch upwards ① and engage.
  The right-hand turn signal lamps and the ▷ indicator lamp in the instrument cluster flash.

  The combination switch returns to its original position automatically after large steering movements.

or

- **To indicate left:** push the combination switch downwards ② and engage.
  The left-hand turn signal lamps and the ◁ indicator lamp in the instrument cluster flash.

  The combination switch returns to its original position automatically after large steering movements.
- **To indicate briefly:** when overtaking or changing lane, press the combination switch briefly in the desired direction, indicate right ① or indicate left ②.
  The appropriate turn signal lamps and the ◁ or ▷ indicator lamp in the instrument cluster flash 5 times.
- **To cancel brief indicating:** press the combination switch briefly in the opposite direction, indicate right ① or indicate left ②.
  The appropriate turn signal lamps and the ◁ or ▷ indicator lamp in the instrument cluster flash.

Hazard warning lamps

- **To switch on hazard warning lights:** press switch ①.
  All turn signals flash. If you now switch on turn signal lamps using the combination switch (▷ page 75), the turn signals only flash on the corresponding side of the vehicle.
- **To switch off the hazard warning lamps:** press switch ① again.

Interior lighting

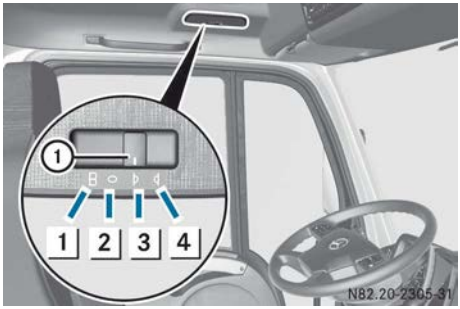

① Switch

1 To switch on the reading lamp

2 To switch the interior lighting off/reading lamp off

3 To switch the automatic control on/reading lamp off

4 To switch the interior lighting on/switch the automatic control off/switch reading lamp off

https://truckmanualshub.com/

▶ **To switch on automatic control of the interior lighting:** put switch ① into position [3].
When you open one of the front doors, the interior lighting switches on or off automatically.

Exterior lighting control

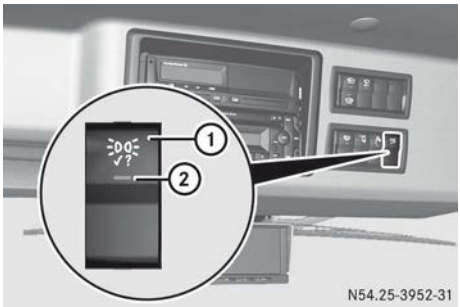

▶ Make sure that the vehicle is stationary and that the parking brake is applied.
▶ Make sure that the transmission is in neutral.
▶ **To switch on:** press button ①.
Indicator lamp ② in the button lights up.
The lights of the entire exterior lighting system are switched on and off consecutively.
The function switches off automatically after 30 cycles.
▶ Check the operation of the exterior lighting and replace bulbs where necessary (▷ page 79).
▶ **To switch off:** press button ① again.
Indicator lamp ② in the button goes out.

Working-area lamps

Switching the working-area lamp on/off

⚠ **WARNING**
If you use the working-area lamp on public roads, other road users may be dazzled. There is a risk of an accident.

Only use the working-area lamps when on public roads while working. Make sure that no other road users are dazzled.

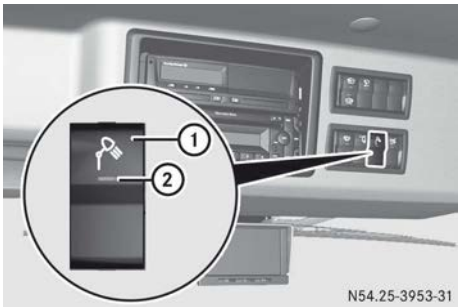

▶ **To switch on:** press button ①.
Indicator lamp ② in the button lights up.
▶ **To switch off:** press button ① again.
Indicator lamp ② in the button goes out.

The working-area lamps switch off once the vehicle reaches a certain speed.

Adjusting the working area lamps

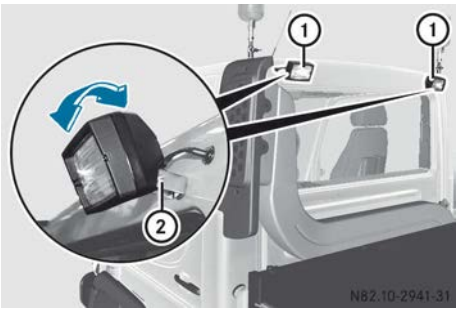

▶ Unscrew nut ②.
▶ Turn working-area lamps ① to the desired position.
▶ Tighten nut ②.

Auxiliary headlamps

General notes

The auxiliary headlamps may be used if the main headlamps are blocked by attached

https://truckmanualshub.com/

equipment. Observe the relevant legal requirements for each country.

Adjusting the auxiliary headlamps

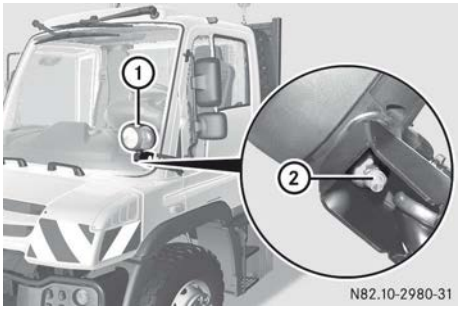

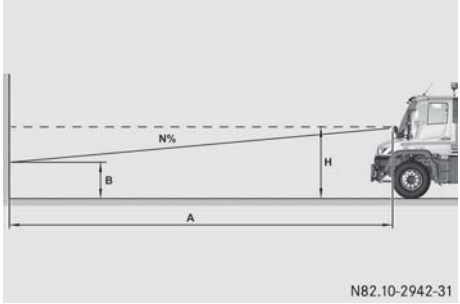

A Distance = 15 m
B Light/dark boundary
H Height of the auxiliary headlamp centre
N% Angle of the light/dark boundary

▶ Slightly loosen nut ② on auxiliary headlamp ①.

▶ Switch on the auxiliary headlamps ① (▷ page 78).

▶ Adjust auxiliary headlamp ①.

The light/dark boundary (B) at a distance (A) of 15 m in front of the auxiliary headlamps may only be half as high as the installation height (H) of the auxiliary headlamps. The installation height (H) is measured from the ground to the centre of the auxiliary headlamps (H).

Example of adjustment height:

Light/dark boundary (B) at 15 m = 1.00 m

Light/dark boundary (B) at 5 m = approx. 1.67 m

1/3 of the installation height, measured at 5 m, yields the light/dark boundary (B) with dipped-beam headlamps.

▶ Tighten nut ② on auxiliary headlamp ①.

Switching the auxiliary headlamps on/off

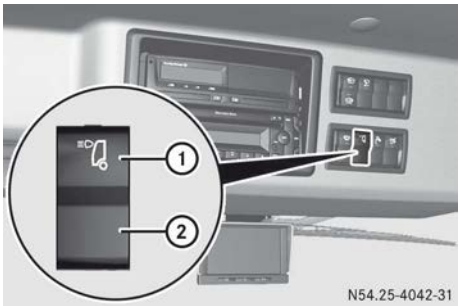

▶ Check the setting of the auxiliary headlamp before the start of a journey (▷ page 78).

▶ **To switch on:** make sure that the key is in position **2** in the ignition lock.

▶ Switch on the dipped-beam headlamps (▷ page 74).

▶ Press switch ①.

The [ ] indicator lamp in the status area of the on-board computer lights up. The side lamps, dipped-beam headlamps and main-beam headlamps are only available on the auxiliary headlamps. The daytime driving lights are switched off, but the dipped-beam headlamps in the auxiliary headlamps are switched on automatically instead.

▶ **To switch off:** press switch ②.

The [ ] indicator lamp in the status area of the on-board computer goes out.

Rotating beacons or strobe lights

Switching the rotating beacons or strobe lights on/off

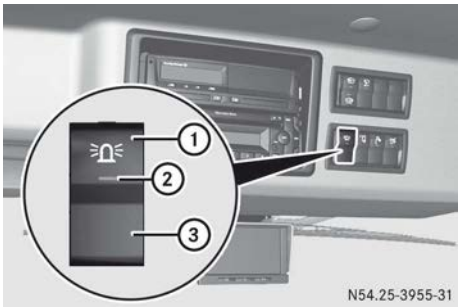

- **To switch on:** press button ①.
  Indicator lamp ② in the switch lights up.
  The [ ] indicator lamp in the status area of the on-board computer lights up.
- **To switch off:** press switch ③.
  Indicator lamp ② in the switch goes out.
  The [ ] indicator lamp in the status area of the on-board computer goes out.

When operating the vehicle with the rotating beacons or strobe lights, observe the applicable national regulations for the relevant country. If the required field of vision is obscured by trailers, special bodies or other attachments, make the vehicle safe by using additional lights.

Adjusting the stand height

! If you extend the stand, always observe the change in vehicle height, e.g. if you drive through an underpass or in a multistorey car park. The vehicle or building may be damaged. Lower the stand in good time.

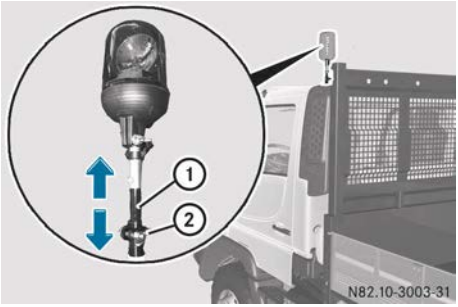

Example: rotating beacon

- Hold stand ①.
- Loosen wing nut ②.
- Move stand ① to the desired height.
- Tighten wing nut ②.

Notes on replacing bulbs

⚠ WARNING

Bulbs, lamps and plug connectors can become very hot during use. When replacing a bulb, you could burn yourself on these components. There is a risk of injury.

Allow these components to cool down before replacing the bulb.

⚠ DANGER

Xenon bulbs are under high voltage. You can get an electric shock if you remove the cover of the xenon bulb and touch the electrical contacts. There is a risk of fatal injury.

Never touch the parts or the electrical contacts of the xenon bulb. Always have work on the xenon bulbs carried out at a qualified specialist workshop.

! Make sure bulbs are positioned securely.

if your vehicle is equipped with bi-xenon headlamps, the inscription "bi-xenon" is featured on the headlamp glass.

Bulbs and lamps are an important aspect of vehicle safety. You must therefore ensure that all bulbs are functioning at all times. The

https://truckmanualshub.com/

exterior lighting control assists you while checking the bulbs (▷ page 77).

- In order to avoid a short circuit,
  - switch off the lights before changing a bulb and
  - turn the key to position **0** in the ignition lock
- Wear eye protection and gloves when removing defective bulbs.
- Dirt on the glass bulb reduces the operating life of the bulb. Do not hold the glass bulb with your bare hands. If necessary, clean the glass bulb with alcohol or spirit while it is cold and wipe with a lint-free cloth.
- Only hold bulbs with a clean, lint-free cloth or a similar item. Do not perform this work with wet or greasy fingers.
- Always replace defective bulbs with the specified new bulbs, i.e. those with the correct wattage and voltage.
- Do not use a bulb if it has been dropped or if its glass has been scratched. The bulb could explode. You could be injured by shards of glass from a broken bulb.
- Keep bulbs out of the reach of children.
- Test the contacts for corrosion and clean them if necessary.
- Check that all seals are positioned correctly, and replace damaged seals.
- If the new bulb does not light up, consult a qualified specialist workshop.
- Only use bulbs in closed lamps designed for the purpose.
- Protect bulbs from moisture when in use and do not allow them to come into contact with liquids.
- Have the headlamp setting checked regularly.
- Have the following bulbs replaced at a qualified specialist workshop:
  - bi-xenon bulbs
  - LED daytime running lamp
  - navigation lights in the LED daytime running lamp

https://truckmanualshub.com/

Overview of bulbs

Always carry bulbs in your vehicle for each type of lamp in case of an emergency.

Headlamps	Main-beam/dipped-beam headlamps	H7 24 V 70 W
Daytime driving lamps	Daytime driving lights	24 V 21 W
	Side lamps	LED
Turn signal lamps, brake lamps, reversing lamp, rear foglamp		24 V 21 W
Auxiliary headlamps	Main-beam/dipped-beam headlamps	H4 24 V 70/75 W
	Side lamps	24 V 4 W
	Turn signal lamps	24 V 21 W
Perimeter/side marker lamps	Perimeter lamps, on the upper sides of the cab	24 V 5 W
	Perimeter/side marker lamps, rear, in the tail lamp	24 V 10 W
Additional turn signal lamps	Side	24 V 21 W
Tail lamps, licence plate lamps		24 V 10 W
Working area lamps/front foglamps		H3 24 V 70 W
Rotating beacons		H1 24 V 70 W
Strobe lights		Flash tube BH0647KRA 6A
Interior lights, reading lamps		24 V 10 W
Courtesy lights		24 V 5 W

https://truckmanualshub.com/

Replacing bulbs

Headlamps, front turn signal lamp

Overview

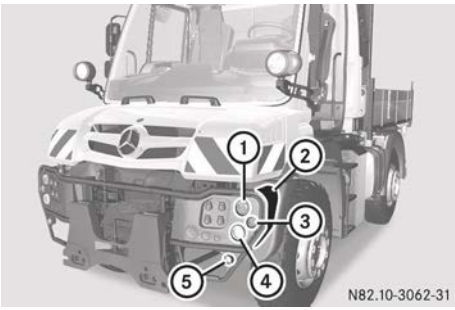

① Daytime driving lights
② Cover
③ Turn signal lamps
④ Dipped-beam/main-beam headlamps
⑤ Foglamps

Daytime driving lights, turn signal lamps, dipped-beam/main-beam headlamps:

- ▶ **Before changing bulbs:** unscrew cover ②.
- ▶ **After changing bulbs:** screw on cover ②.

Dipped-beam/main-beam headlamps

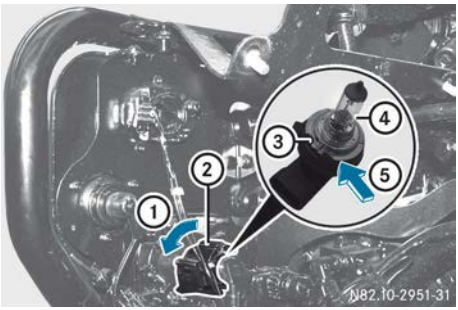

- ▶ Turn socket ② anti-clockwise in the direction of arrow ① as far as it will go.
- ▶ Pull out socket ②.
- ▶ Pull out bulb ④ from socket ②. If necessary, prise bulb ④ out of socket ② at the base using a suitable object (arrow ⑤).
- ▶ Insert new bulb ④ in such a way that the recess in the base fits into lug ③ of socket ②.
- ▶ Push new bulb ④ into socket ② as far as it will go.
- ▶ Insert socket ② into the housing and turn it clockwise, in the opposite direction to that indicated by arrow ①, as far as it will go.

Daytime driving lights

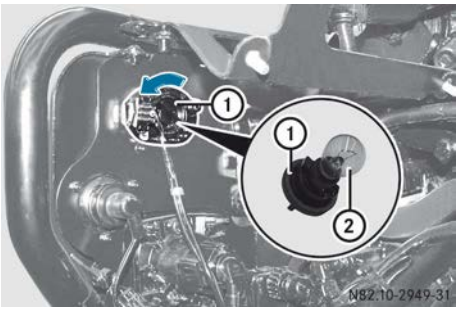

- ▶ Turn socket ① anti-clockwise in the direction of the arrow as far as it will go.
- ▶ Pull out socket ①.
- ▶ Applying light pressure, turn bulb ② anti-clockwise and remove it.
- ▶ Insert new bulb ② and turn clockwise, applying light pressure.
- ▶ Insert socket ① into the housing and turn it clockwise, in the opposite direction to that indicated by the arrow, as far as it will go.

Turn signal lamps

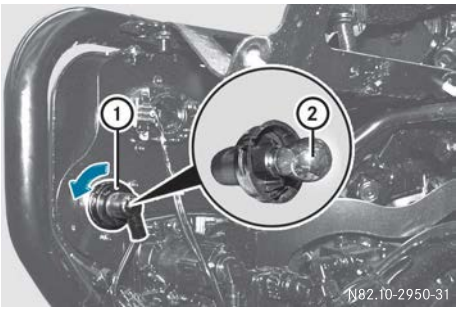

https://truckmanualshub.com/

- Turn socket ① anti-clockwise in the direction of the arrow as far as it will go.
- Pull out socket ①.
- Applying light pressure, turn bulb ② anti-clockwise and remove it.
- Insert new bulb ② and turn clockwise, applying light pressure.
- Insert socket ① into the housing and turn it clockwise, in the opposite direction to that indicated by the arrow, as far as it will go.

Front foglamps

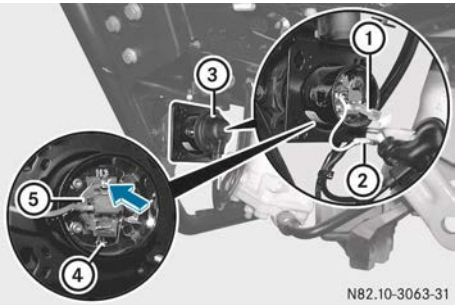

- Remove rubber grommet ③.
- Press locking spring ④ down, forwards and to the right.
  The locking spring is released.
- Fold locking spring ④ upwards.
- Remove bulb ⑤.
- Disconnect cable connector ①.
- Disconnect electrical connection ② of bulb ⑤.
- Connect electrical connection ② of new bulb ⑤.
- Attach it to cable connector ①.
- Insert new bulb ⑤. When doing this, the round recess of the socket (arrow) must be facing upwards.
- Fold locking spring ④ downwards and hook it in place.
- Slide rubber grommet ③ upwards.

Auxiliary headlamps

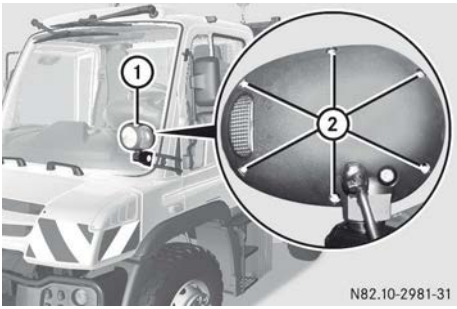

- **To remove:** remove screws ②.
- Remove front headlamp unit ①.

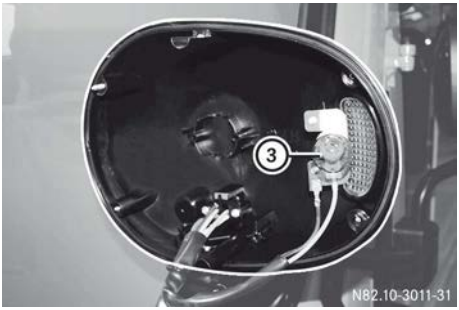

- **Turn signal lamp:** gently turn bulb ③ anti-clockwise and remove it.
- Insert new bulb ③ and turn clockwise, applying light pressure.

https://truckmanualshub.com/

- **Main-beam/dipped-beam headlamps:** remove cable connector ⑥ from bulb ④.
- Lift left and right locking springs ⑤ and fold them outwards.
- Remove bulb ④.
- Insert new bulb ④ in such a way that its base fits into the recess of the socket.
- Lift left and right locking springs ⑤ and fold them inwards onto the base of the bulb.
- Attach cable connector ⑥ to bulb ④.

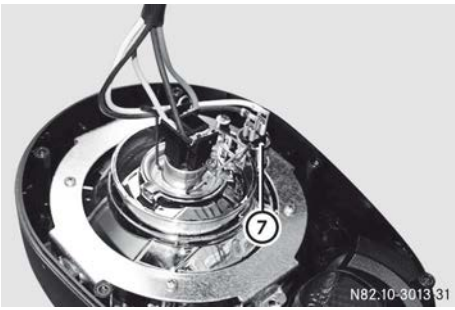

- **Side lamps:** remove base ⑦ with both cable connectors and, if necessary, turn the base slightly to do so.
- Turn the bulb anti-clockwise, applying light pressure, and remove it.
- Insert the new bulb and turn clockwise, applying light pressure.

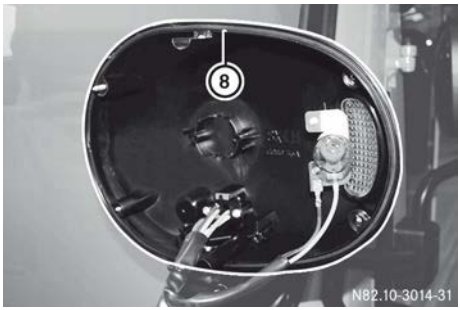

- **To fit:** check that seal ⑧ is positioned correctly.

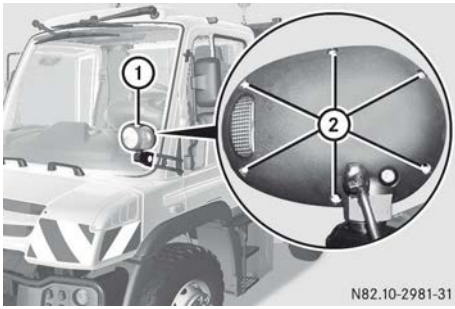

- Attach front headlamp unit ① and fasten screws ②.
- Adjust the auxiliary headlamp (▷ page 78).

Side-mounted turn signal lamps

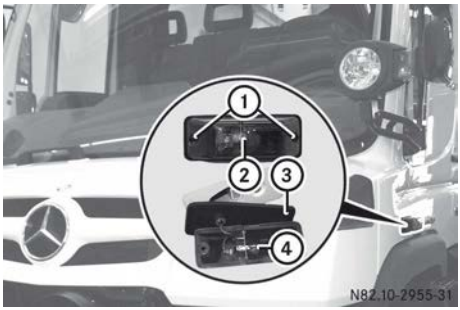

- Remove screws ①.
- Remove turn signal lamp ②.
- Remove seal ③ from the glass of the turn signal lamp.
- Applying light pressure, turn bulb ④ anti-clockwise and remove it.
- Insert new bulb ④ and turn clockwise, applying light pressure.
- Place seal ③ onto the glass of the turn signal lamp.
- Attach the turn signal lamp and tighten screws ①. Make sure that seal ③ is positioned correctly.

https://truckmanualshub.com/

Tail lamp

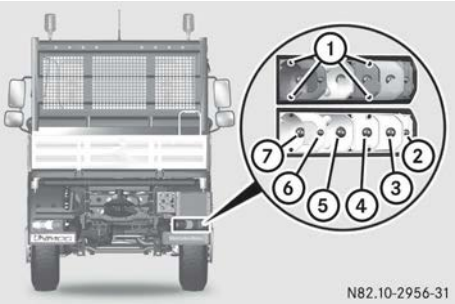

Tail lamp, right

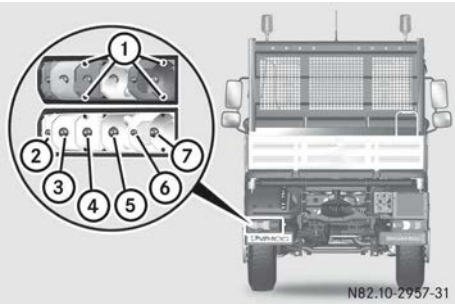

Tail lamp, left

① Screws
② Perimeter/side marker lamps
③ Turn signal lamps
④ Brake lamp
⑤ Reversing lamp
⑥ Rear lamps
⑦ Rear foglamp

You cannot change bulbs for turn signal lamps, tail lights, brake lights or perimeter lamps in vehicles with LED modules. If necessary, have these bulbs replaced at a qualified specialist workshop.

- ▶ Remove screws ①.
- ▶ Remove the lamp lens.
- ▶ Turn the bulb anti-clockwise, applying light pressure, and remove it.
- ▶ Insert the new bulb and turn clockwise, applying light pressure.
- ▶ Attach the lamp lens.
- ▶ Tighten screws ①.

Licence plate lamp

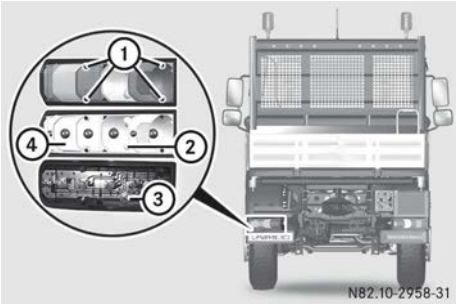

The licence plate lamp is behind the reflector unit.

- ▶ Remove screws ①.
- ▶ Remove the lamp lens.
- ▶ Remove reflector units ② and ④.
- ▶ Applying light pressure, turn bulb ③ anti-clockwise and remove it.
- ▶ Insert new bulb ③ and turn clockwise, applying light pressure.
- ▶ Insert reflector units ② and ④.
- ▶ Attach the lamp lens.
- ▶ Tighten screws ①.

Perimeter lamp

- ▶ Remove screw ②.
- ▶ Swing housing ① of the perimeter lamp outwards slightly and remove it.
- ▶ Applying light pressure, turn bulb ③ anti-clockwise and remove it.
- ▶ Insert new bulb ③ and turn clockwise, applying light pressure.

https://truckmanualshub.com/

- Position housing ① at the bottom using the lug and swing it upwards.
- Tighten screws ②.

Exit lamp

- Open the door.
- Press out lens ② from recess (arrow ①) with a suitable screwdriver.
- Press spring ③ on the cable connector downwards and remove the cable connector.
- Turn socket ④ in the direction of arrow ⑤ as far as it will go and remove it.
- Pull out the bulb from socket ④.
- Press a new bulb into socket ④.
- Insert socket ④.
- Insert socket ④ into the housing and turn it clockwise, in the opposite direction to that indicated by arrow ⑤, as far as it will go.
- Press spring ③ on the cable connector downwards and attach the cable connector.
- Align the bottom of lens ② and press inwards until it engages.

Working-area lamps

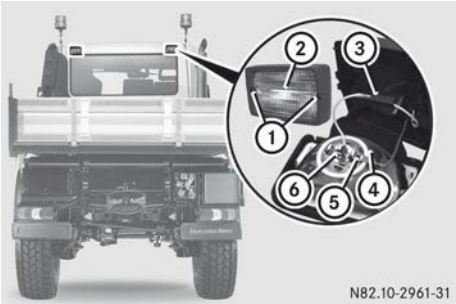

- Remove screws ①.
- Remove headlamp unit ② of the working-area lamp.
- Remove cable connectors ③ and ④.
- To release locking spring ⑤, push it to the left and swing it upwards.
- Remove bulb ⑥.
- Insert new bulb ⑥ in such a way that the recesses on the base fit into the socket.
- Fold locking spring ⑤ downwards and engage it.
- Attach both cable connectors ③ and ④.
- Insert headlamp unit ②.
- Tighten bolts ①.

Rotating beacon

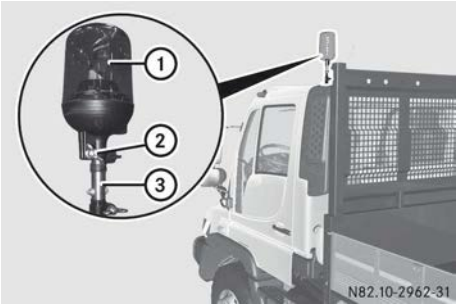

- Slide stand ③ with rotating beacon ① downwards (▷ page 79).
- Loosen wing nut ②.
- Remove rotating beacon ① upwards from stand ③.
- Turn glass ① of the rotating beacon anti-clockwise in the direction of the arrow and pull it upwards to remove.
- Press bracket ⑤ down and turn anti-clockwise.
- Pull out bulb ④ from the socket.
- Press new bulb ④ into the socket until it engages.
- Press bracket ⑤ down and turn clockwise as far as it will go.
- Attach glass ① of the rotating beacon and turn it clockwise, in the direction opposite to the arrow, as far as it goes.
- Place rotating beacon ① onto stand ③.
- Tighten wing nut ②.

Strobe light

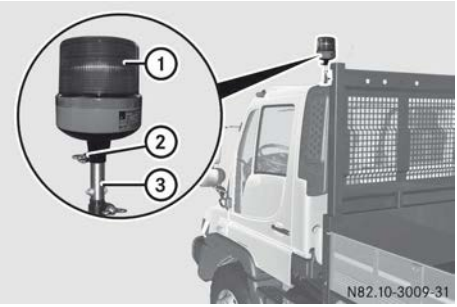

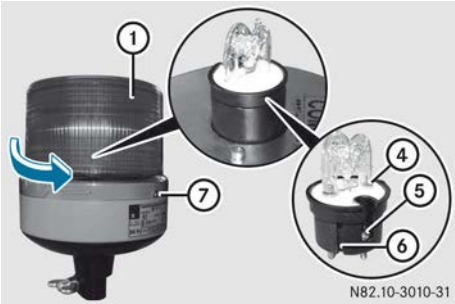

- Slide stand ③ with strobe light ① downwards (▷ page 79).
- Loosen wing nut ②.
- Pull strobe light ① upwards to remove from stand ③.
- Unscrew screw ⑦.
- Turn the glass of strobe light ① anti-clockwise in the direction of the arrow and pull it upwards to remove.
- Unscrew screw ⑤.
- Pull out bulb ④ from the socket.
- Insert new bulb ④ in such a way that groove ⑥ in its base fits into the spring on the socket.
- Push the base of bulb ④ into the socket as far as it will go.
- Position screw ⑤ and tighten.
- Attach the glass of strobe light ① and turn it clockwise, in the direction opposite to the arrow, as far as it will go.
- Position screw ⑦ and tighten.
- Place strobe light ① onto stand ③.
- Tighten wing nut ②.

https://truckmanualshub.com/

Interior lamp

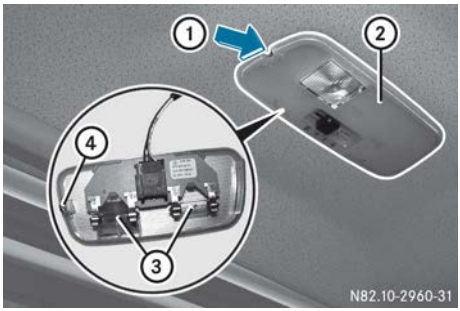

- Press retaining spring ④ inwards from the side with a suitable screwdriver (arrow ①).
- Prise lens ② downwards and out of the bracket.
- Remove bulbs ③ from the bulb holder.
- Press new bulbs ③ into the bulb holder.
- Align lamp lens ② sideways on the lugs and push it upwards until retaining spring ④ engages.

Good visibility

Windscreen wipers

Switching the windscreen wipers on/off

! Do not operate the windscreen wipers when the windscreen is dry, as this could damage the wiper blades. Moreover, dust that has collected on the windscreen can scratch the glass if wiping takes place when the windscreen is dry.

If it is necessary to switch on the windscreen wipers in dry weather conditions, always operate them using washer fluid.

! If the windscreen wipers leave smears on the windscreen after the vehicle has been washed in an automatic car wash, this may be due to wax or other residue. Clean the windscreen with washer fluid after an automatic car wash.

! Switch off the windscreen wipers before you stop the engine. Otherwise, undesired wiper sweeps could occur when starting the next journey. This may damage the wiper blades or windscreen, especially if the windscreen is dry or iced up.

The windscreen will no longer be wiped properly if the wiper blades are worn. This may prevent you from observing the traffic conditions.

0	Windscreen wipers off
•••	Slow intermittent wipe
••••	Rapid intermittent wipe
—	Slow wipe
=	Rapid wipe

- **To switch on:** make sure that the key is in position **1** in the ignition lock.
- Turn windscreen wiper switch ① to the appropriate setting depending on the intensity of the rain.

Lateral end position of the windscreen wipers

Depending on your requirements, you have the option of putting the windscreen wipers in a lateral position. This further improves your field of vision. You should also use this setting in cold weather conditions. This reduces the risk of the wiper blades freezing to the windscreen. This also makes it easier to move the wiper blades if they do freeze.

https://truckmanualshub.com/

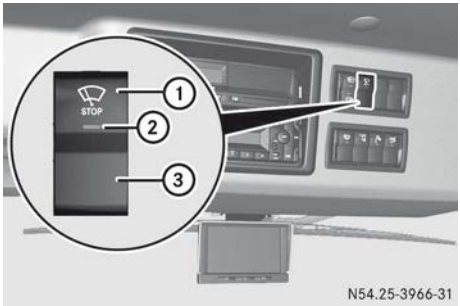

▶ Make sure that the key in the ignition lock is in position **1**.

▶ Press switch ①.
Indicator lamp ② in the switch lights up.
The windscreen wipers move to the lateral end position.

▶ Press switch ③.
Indicator lamp ② in the switch goes out.
The windscreen wipers move to the upper end position.

Windscreen washer system

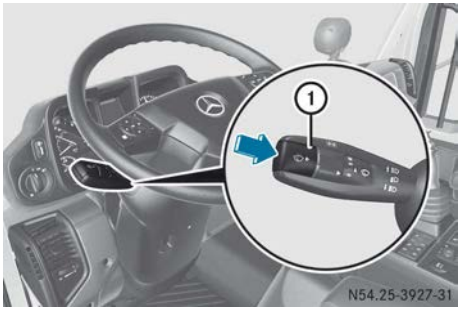

▶ Make sure that the key in the ignition lock is in position **1**.

▶ **Single wipe:** press switch ① briefly.

▶ **To wipe the windscreen using washer fluid:** press and hold down switch ①.

Headlamp cleaning system

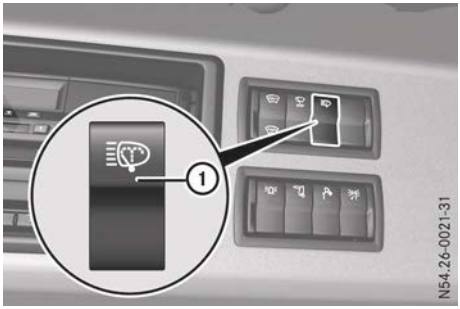

▶ **To switch on:** press and hold button ①.
The headlamp cleaning system cleans the relevant light projecting areas of the headlamp.

ⓘ If you wash the windscreen with washer fluid for the first time with the dipped-beam headlamps switched on (▷ page 89), the headlamps are also cleaned. If you wash the windscreen with washer fluid ten times with the dipped-beam headlamps switched on, the headlamps are also cleaned once.

Mowing door windscreen wiper and washer system

Windscreen wipers

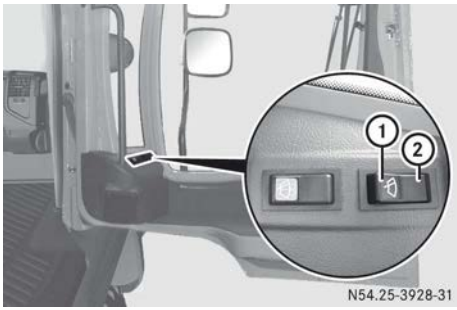

https://truckmanualshub.com/

- ▶ **To switch on intermittent wipe:** make sure that the key in the ignition lock is in position **2**.
- ▶ Press switch ①.
- ▶ **To switch off intermittent wipe:** press switch ②.

Windscreen washer system

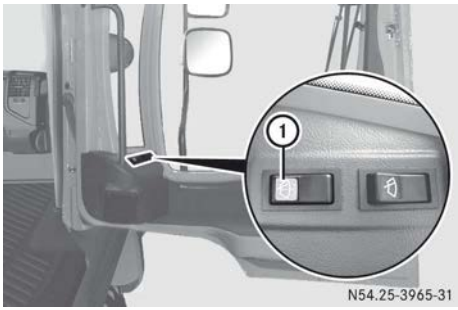

Mowing door

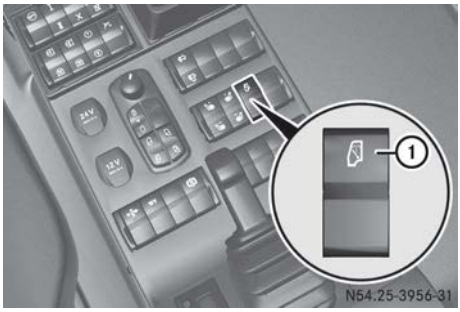

Centre console

- ▶ **To wipe the windscreen using washer fluid:** press and hold down the ① button.

Windscreen heating

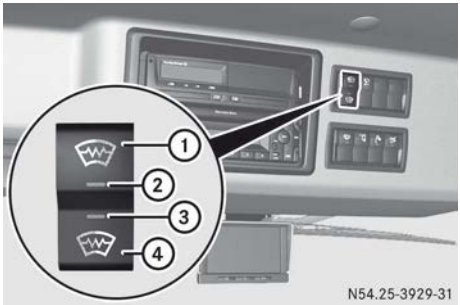

If you only activate windscreen heating on one side of the windscreen, that side will thaw out quicker than the other.

- ▶ Make sure the engine is running.
- ▶ **To switch on left-sided windscreen heating:** press button ①.
  Indicator lamp ② in the button lights up.
  After approx. 15 minutes the right side is activated automatically. Indicator lamp ③ in the button lights up.
- ▶ **To switch on right-sided windscreen heating:** press button ④.
  Indicator lamp ③ in the button lights up.
  After approx. 15 minutes the left side is activated automatically. Indicator lamp ② in the button lights up.
- ▶ **To switch off:** press corresponding button ① or ④ again.
  Corresponding indicator lamp ② or ③ in the button goes out.

Power supply

Battery isolator switch

General notes

! Vehicles with BlueTec® exhaust gas aftertreatment: do not disconnect the battery until the engine has been switched off for at least five minutes. This ensures that the exhaust gas aftertreatment functions after restarting.

https://truckmanualshub.com/

! Vehicles with auxiliary heating: during heat output and the cooling-off period, the power supply should only be disconnected, in the event of danger, using the battery isolator switch. If the power supply is disconnected during heat output, the cooling off period cannot be activated and this can damage the auxiliary heating. You will find further information in the "Auxiliary heating" section.

Interrupting the voltage supply

You can interrupt the voltage supply to all important electrical consumers with the battery isolator switch on the battery compartment. These are, for example, the vehicle lighting, anti-lock system, electric gearshift and CD radio.

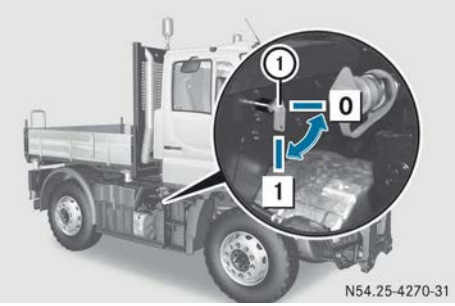

- Remove the key from the ignition lock and wait approximately five minutes.
- **Vehicles with auxiliary heating:** ensure that the auxiliary heating is switched off and the cooling off period is complete (▷ page 104).
- **All vehicles:** turn lever ① of the battery isolator switch to position [0].
  All consumers are disconnected from the batteries, apart from the digital tachograph.
- Pull out lever ① of the battery isolator switch and attach the protective cap.

Reconnecting the voltage supply

- Push in lever ① of the battery isolator switch.
- Turn lever ① of the battery isolator switch to position [1].
  All consumers may be switched on again.
- Deactivate the anti-theft protection of the CD radio (▷ page 148).

Sockets

12 V socket in the centre console

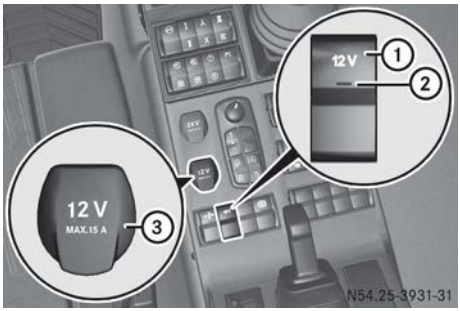

12 V socket ③ can be used for accessories, e.g. torches or cigarette lighters. The 12 V socket can carry a maximum load of 180 W.

- **To switch on the 12 V socket:** press switch ①.
  Indicator lamp ② in the switch lights up.
  The 12 V sockets on the centre console and on the rear wall of the cab are switched on (▷ page 92).
- **To switch off the 12 V socket:** press switch ① again.
  Indicator lamp ② in the switch goes out.

https://truckmanualshub.com/

24 V socket in the centre console

24 V socket ① can be used for accessories, e.g. torches or cigarette lighters. The 24 V socket can carry a maximum load of 360 W.

▶ Make sure that the key in the ignition lock is in position **1**.

Sockets on the cab rear wall

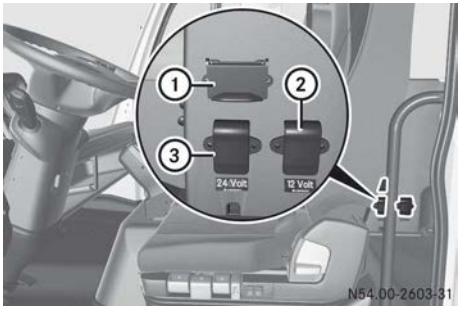

① Diagnostics connection
② 12 V, 15 A, 3-pin socket with speed signal
③ 24 V, 25 A, 3-pin socket with speed signal

The 3-pin sockets on the cab rear wall comply with DIN EN 15431.

Service personnel can connect the corresponding diagnostic testers to diagnostics connection ① (▷ page 29).

▶ Switch the 12 V socket on/off (▷ page 91).

Socket on the vehicle exterior

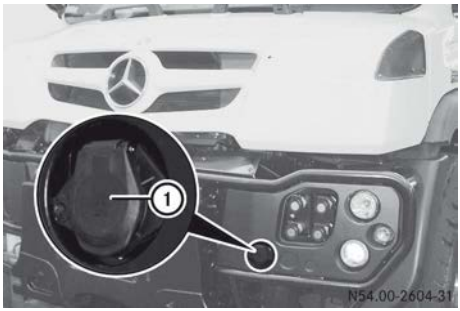

① 24 V, 7-pin power socket for equipment

The equipment socket complies with DIN EN 15431.

PIN	Function
1	Earth connection
2	Tail lamp, left
3	Turn signal, left
4	Unassigned
5	Turn signal, right
6	Tail lamp, right
7	Unassigned

Equipment socket, 32-pin

▶ Fold swivel bar ② to the left.
▶ Fold socket cap ① of the 32-pin equipment socket to the right.

Information on pin assignment and changing a fuse can be found in the body/equipment

mounting directives in the Mercedes-Benz body manufacturer portal: **http://bb-portal.mercedes-benz.com**

Jump-start socket

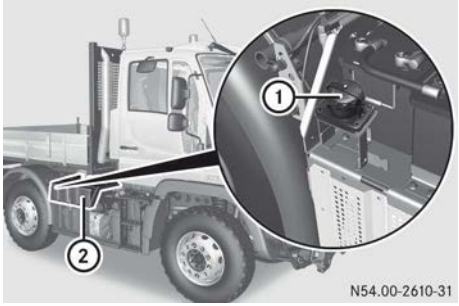

Jump-start socket ① is under battery cover ②.

Even if the power supply is interrupted using the battery isolator switch, jump-start socket ① is not disconnected from the batteries. You will find further information on jump-start socket ① in the section on jump-starting (▷ page 331).

Features

Sun visors

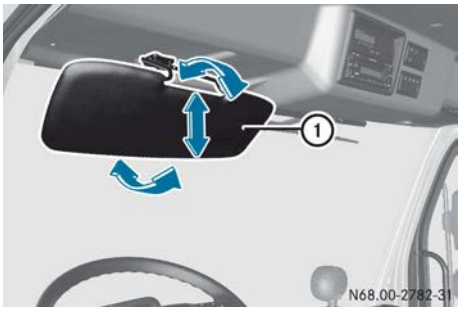

▶ Fold sun visor ① down in front.

▶ Move sun visor ① into the desired position.

Cup and bottle holder

⚠ **WARNING**

Cup and bottle holders cannot hold liquid containers securely in place while you drive. If you use cup or bottle holders while driving, containers could be flung around and liquids could be spilled. Vehicle occupants may come into contact with the liquid and, particularly, if it is hot, they could be scalded. You could be distracted from traffic conditions and you may lose control of the vehicle. There is a risk of an accident and injury.

Only use cup and bottle holders if the vehicle is stationary. Only place suitable liquid containers in cup or bottle holders. Always close containers, particularly if they contain hot liquid.

! Only place suitable and sealable containers in the cup and bottle holders. Otherwise the drinks could spill.

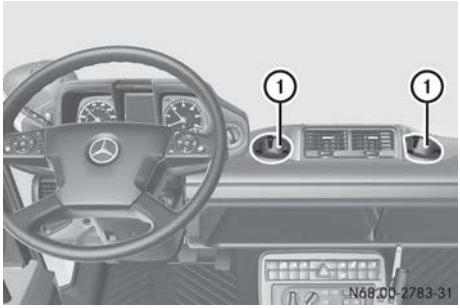

① Cup holder

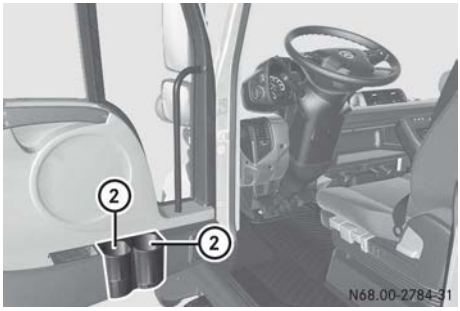

Door (example: left side of the vehicle)

② Bottle holder

https://truckmanualshub.com/

Universal carrier in the centre console

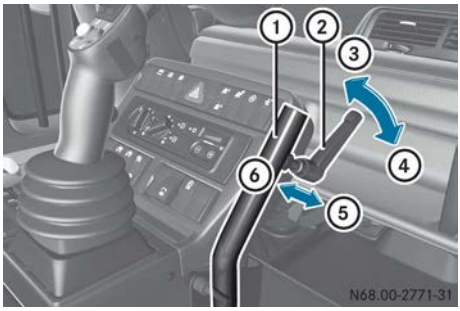

- Place a monitor or control unit in universal carrier ①.
- Pull lever ② in the direction of arrow ⑤ and then turn upwards in the direction of arrow ③.
- **If the monitor/control unit is still not fixed:** push lever ② in the direction of arrow ⑥ and then turn downwards in the direction of arrow ④.
- Pull lever ② in the direction of arrow ⑤ and then turn upwards in the direction of arrow ③.

Compressed air connection on the cab

⚠ **WARNING**

If you clean the cab with compressed air, particles are dispersed. These can enter or irritate the eyes, nose, mouth and ears. There is a risk of injury.

While cleaning the cab with compressed air, always wear a dust protection mask, protective eyewear and ear protectors.

⚠ **WARNING**

The compressed-air connection on the cab is under high pressure. If you aim the compressed-air pistol towards body parts or other people, eyes, ears or skin could be damaged. There is a risk of injury.

Always hold the compressed-air pistol away from your body. Never aim the compressed-air pistol towards other people.

! Do not clean the air filter with the compressed-air pistol. Replace soiled air filters.

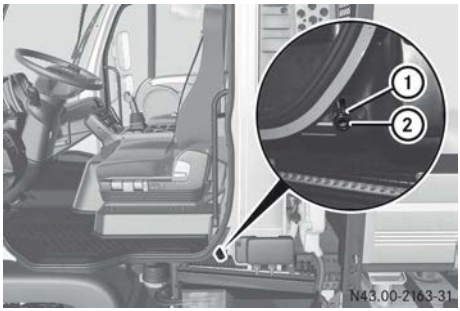

- Open the left-hand door.
- **To attach:** push the compressed-air hose into compressed-air connection ② until it engages.
- **To disconnect:** push the compressed-air hose into compressed-air connection ② and hold.
- Slide back circlip ① and hold.
- Remove the compressed-air hose from compressed-air connection ② and release circlip ①.

https://truckmanualshub.com/

Changes the installation position of the control lever and hydraulic system controls

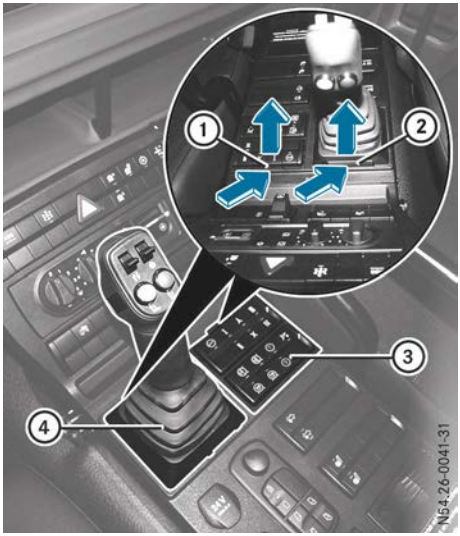

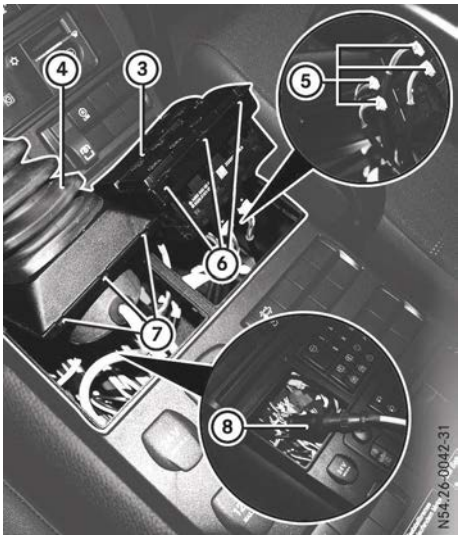

- Press release catch ② firmly and pull control lever ④ up and out in the direction of the arrow.
- Press release catch ① firmly and pull hydraulic system controls ③ up and out in the direction of the arrow.
- Unscrew electrical plug-type coupling ⑧ of control lever ④ and separate.
- Mark cable connector ⑤ at the corresponding sockets of hydraulic system controls ③ and remove.
- Place control lever ④ and hydraulic system controls ③ in front of the alternative opening.
- Connect plug-type coupling ⑧ of control lever ④ and tighten.
- Attach cable connector ⑤ to the marked sockets of hydraulic system controls ③.
- Position lugs ⑥ to the rear and press hydraulic system controls ③ forwards and downwards until it engages.
- Position lugs ⑦ to the rear and press control lever ④ forwards and downwards until it engages.

Cable guides

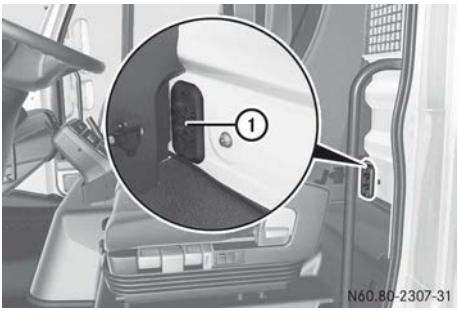

Cable ducts on the cab rear wall

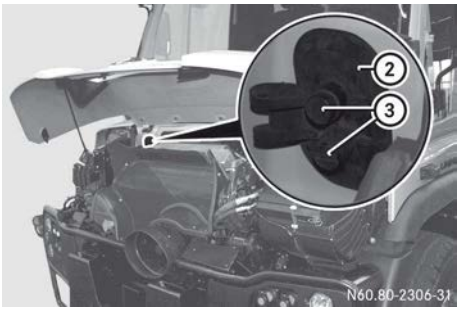

Cable guide in the engine compartment

https://truckmanualshub.com/

▶ Remove rubber cap ③ and guide the cable through.

▶ If necessary, cut open the rubber grommet of cable guide ① or ② and guide the cable through.

Communications

Important safety notes

⚠ **WARNING**

Operating mobile communications equipment while driving distracts you from paying attention to traffic conditions. This could also cause you to lose control of the vehicle. There is a risk of an accident.

Use this device only when the vehicle is stationary.

You must observe the legal requirements in the country in which you are driving when operating mobile communications equipment in the vehicle.

The Mercedes-Benz installation specifications must be observed if you subsequently install one of the following communication devices:

- mobile phone
- 2-way radio
- fax machine

Observe the legal requirements in all countries concerned.

https://truckmanualshub.com/

Useful information 98
General notes 98
Heating/air conditioning and ventilation 99
Auxiliary heating 102

https://truckmanualshub.com/

Useful information

These Operating Instructions describe all the models and standard and optional equipment of your vehicle that were available at the time of going to print. Country-specific differences are possible. Bear in mind that your vehicle may not be equipped with all the functions described. This also applies to safety-relevant systems and functions.

Read the information on qualified specialist workshops (▷ page 30).

General notes

The heating or the air-conditioning system can only be operated with the engine running. To ensure optimal function, close the windows.

The air-conditioning system regulates the temperature and humidity of the cab and removes undesirable substances from the air.

In air-recirculation mode, the fitted filter removes most dust particles and pollen from outside air or recirculated air. A blocked filter reduces the amount of air supplied to the cab. The interval for replacing the filter depends on environmental influences. It may be shorter than that indicated in the Service Booklet.

Ventilate the vehicle for a brief period during warm weather. In order to cool the vehicle more rapidly, briefly switch climate control to air-recirculation mode. This will speed up the cooling process and the desired interior temperature will be reached more quickly.

Condensation may appear on the underside of the vehicle in cooling mode.

! Turn on the air-conditioning system at least once a month for approximately ten minutes. The refrigerant compressor may otherwise be damaged.

Environmental note

Only switch on the air-conditioning system when necessary. Fuel consumption increases when the air-conditioning system is switched on.

https://truckmanualshub.com/

Heating/air conditioning and ventilation

Overview and control panel

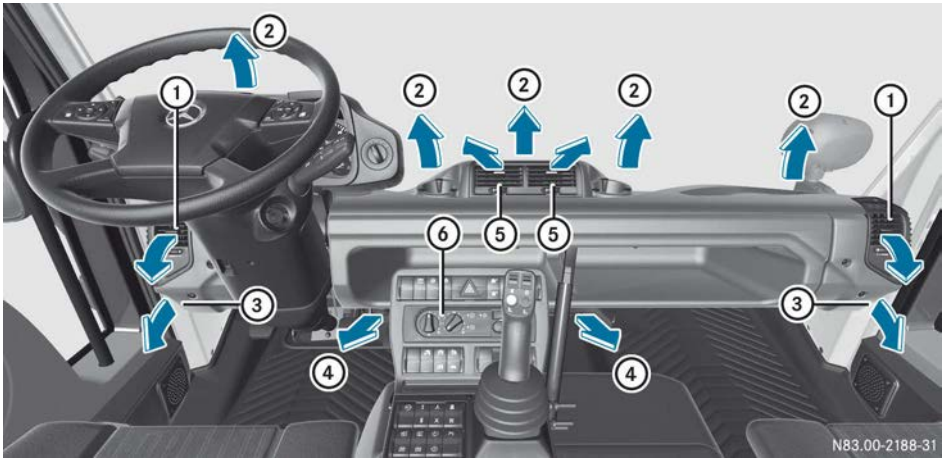

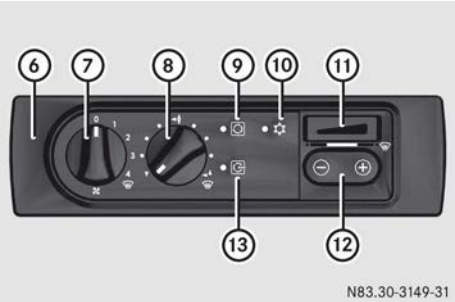

Functions

①	Side air vents: ventilation and heating vents for the vehicle interior
②	Front windscreen vents: ventilation/demister vent
③	Side window vents: ventilation/demister vent
④	Footwell vents: ventilation/heating vent
⑤	Centre air vents: ventilation-/heating vent for the vehicle interior

⑥	**Control panel**
⑦	Sets the airflow: [1] to [3] Heating/ventilating/cooling [4] Demisting/ventilating/cooling [0] Air supply switched off

https://truckmanualshub.com/

⑧	Sets the air distribution: Airflow to the footwell Airflow to the windscreen, side and centre air vents and to the footwells Airflow to the windscreen, side and centre air vents
⑨	Switches air recirculation mode on/off
⑩	Switches the cooling with air dehumidification function on/off
⑪	Temperature bar display
⑫	Sets the temperature: Temperature button ⊕ raises the temperature Temperature button ⊖ lowers the temperature
⑬	Switches mixed air operation on/off

▶ Ensure that the key is in position **2** in the ignition lock.

Setting the airflow

▶ Turn airflow control ⑦ to the desired position.

Setting the temperature

▶ Turn airflow control ⑦ to at least airflow level 1.

▶ Press temperature button ⑫ ⊕ or ⊖ repeatedly until the desired temperature is set.

or

▶ Press temperature button ⑫ ⊕ or ⊖ repeatedly until the desired temperature is set.

Setting the air distribution

▶ Turn air-distribution control ⑧ to the desired position.

Switching air recirculation mode on/off

When you switch on air-recirculation mode, the windows may mist up faster, particularly at low outside temperatures. Only switch air-recirculation mode on for a short time.

Switch on air-recirculation mode if unpleasant odours or dust enter the vehicle.

▶ **To switch on:** close the windows.

▶ Press button ⑨.
The indicator lamp next to button ⑨ lights up.

▶ **To switch off:** press button ⑨.
The indicator lamp next to button ⑨ goes out.

The air-circulation mode switches off automatically after approximately 15 minutes.

Switching mixed air operation on/off

If you switch on mixed air operation when performing dirt-intensive work:

- the operating life of the air filter is extended.
- the cab, in the case of vehicles with air conditioning, is cooled quicker and less energy is required in cooling mode.

A supply of fresh air is established in mixed air operation.

▶ **To switch on:** press button ⑬.
The indicator lamp next to button ⑬ lights up.

▶ **To switch off:** press button ⑬ again.
The indicator lamp next to button ⑬ goes out.

https://truckmanualshub.com/

Demisting (maximum heating output)

- Turn air-distribution control ⑧ to position [icon].
- Turn airflow control ⑦ to position 4 [icon].
- Press and hold temperature button ⑫ ⊕ until the maximum temperature is set. All bars light up in display ⑪.
- If required, switch on the windscreen heating (▷ page 90).
- Close the centre air vents (▷ page 101).
- Direct the side air and side window vents to the side windows (▷ page 101).

Residual heat

The vehicle interior can still be heated for a certain time after the engine is switched off. The heating time depends on the set temperature.

- Ensure that the key is in position **2** in the ignition lock.
- Press temperature button ⑫ ⊕ or ⊖ repeatedly until the desired temperature is set.
- Turn airflow control ⑦ to the desired position.
- Set the air vents as required.

Air-conditioning system

Switching the air-conditioning system on/off

- **To switch on:** make sure that the engine is running.
- Press button ⑩. The indicator lamp next to button ⑩ lights up.
- **To set the temperature:** press temperature button ⑫, ⊕ or ⊖ repeatedly until the desired temperature is set.
- **To switch off:** press button ⑩ again. The indicator lamp next to button ⑩ goes out.

Example settings

Cooling

- Make sure that the air-conditioning system is switched on.
- Set the airflow, air distribution and temperature as desired.

ⓘ Mercedes-Benz recommends cooling the temperature in the vehicle interior down to a maximum of 6 to 8 °C below the outside temperature.

- Close the windows.
- **At high outdoor temperatures:** direct the air distribution towards the windscreen.
- Switch on mixed-air operation (▷ page 100).

Dehumidifying

- Make sure that the air-conditioning system is switched on.
- Make sure that air-recirculation mode is switched off (▷ page 100).
- Set the airflow, air distribution and temperature as desired.
- Close the windows.

Adjusting the air vents

General notes

Either the entire cab can be ventilated via fixed air vents or just the windscreen or footwell can be targeted. The adjustable centre/side air vents can be used for independent, targeted ventilation of the driver's workstation and the co-driver seat. Keep all the air vents and the ventilation grille in the cab free

https://truckmanualshub.com/

from obstruction to ensure that the air can flow freely into the cab.

Centre air vents

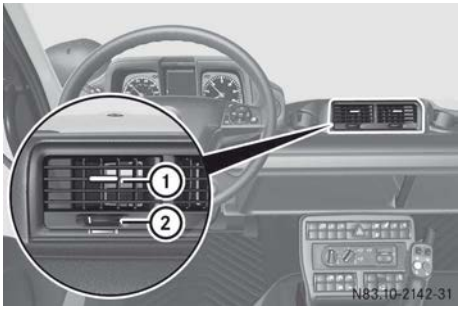

- ▶ **To open the centre air vent:** turn thumbwheel ② to position **I**.
- ▶ **To adjust the airflow direction:** use slider ① to set the fins in the desired position.
- ▶ **To close the centre air vent:** turn thumbwheel ② to position **0**.

Side air vents

- ▶ **To open the side air vent:** turn thumbwheel ② to the pressure point towards [ ].
- ▶ **Side air vent function for the side window:** turn thumbwheel ② beyond the pressure point towards [ ].
- ▶ **To adjust the airflow direction:** use slider ① to set the fins in the desired position.
- ▶ **To close the side air vent:** turn thumbwheel ② to position **0**.

Side window vents

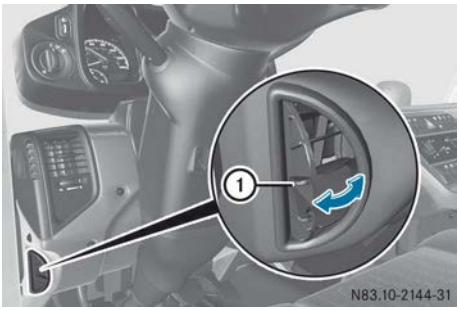

- ▶ **To open the side window vent:** fold out the side window vent using tab ①.
- ▶ **To close the side window vent:** fold in the side window vent using tab ①.

Auxiliary heating

Important safety notes

The auxiliary heating system operates independently of the engine and complements the vehicle heating.

The auxiliary heating heats the coolant and the vehicle interior, thereby reducing the load on the engine and saving fuel.

The auxiliary heating can be switched on and off using the timer.

You can use the auxiliary heating to:

- pre-heat the vehicle interior and demist the windows.
- better start the engine in cold conditions.
- heat up the coolant. This reduces engine wear and saves fuel.
- support the vehicle's heating system while the engine is running and outside temperatures are low.

https://truckmanualshub.com/

⚠ **WARNING**

Parts of the vehicle, e.g. the exhaust system, may become very hot when the auxiliary heating system is switched on.

Flammable material, such as leaves, grass or twigs, may ignite if it comes into contact with:

- hot parts of the exhaust system
- the exhaust gas itself

There is a risk of fire.

Make sure, when the auxiliary heating system is switched on, that:

- hot vehicle components do not come into contact with flammable material
- exhaust gases can emerge unobstructed from the exhaust pipe
- exhaust gases do not come into contact with flammable material

⚠ **DANGER**

If you have preselected a switch-on time, the auxiliary heating system switches on automatically.

- Toxic exhaust fumes may accumulate if there is insufficient ventilation, carbon monoxide in particular. This is the case in enclosed spaces, for example. There is a risk of fatal injuries.
- There is a risk of fire and explosion if there are highly flammable materials or flammable materials nearby!

If you park the vehicle in these or similar conditions, always deactivate the preselected switch-on times.

⚠ **DANGER**

If the exhaust pipe is blocked or sufficient ventilation is not possible, toxic exhaust fumes may enter the vehicle, especially carbon monoxide. This is the case, for example, if the vehicle gets stuck in snow. There is a risk of fatal injuries.

If you have to leave the engine or the auxiliary heating running, keep the exhaust pipe and the area around the vehicle free of snow. To guarantee a sufficient supply of fresh air, open the roof hatch or a door on the side of the vehicle away from the wind.

! If the auxiliary heating has not been used for an extended period, exposure to heat and condensation can lead to deposits forming in the auxiliary heating fuel system. These deposits can cause the auxiliary heating to malfunction. Have the auxiliary heating checked and repaired at a qualified specialist workshop before using it again.

! Turn on the auxiliary heating at least once a month for approximately ten minutes. Otherwise, the auxiliary heating could be damaged.

! The auxiliary heating may only be operated with conventional diesel fuel. Operating with 100% fatty acid methyl ester (FAME) fuel or diesel fuel with an admixture of more than 10% fatty acid methyl ester (FAME) fuel can lead to malfunctions and is therefore not permitted.

Mandatory switch-off

! When the auxiliary heating system is in heating mode and during its cooling off period, the power supply shall be disconnected using the battery isolator switch only in the event of danger. If the power supply is interrupted in heating mode, the cooling off period can not be initiated and the auxiliary heating system may sustain damage.

https://truckmanualshub.com/

Operation using the timer

Overview

Using the timer, you can:

- activate/deactivate immediate heating mode
- in immediate heating mode, set the remaining heating time between one and 120 minutes
- in preselected heating mode, set up to three programmed times
- in preselected heating mode, set the heating time between one and 120 minutes

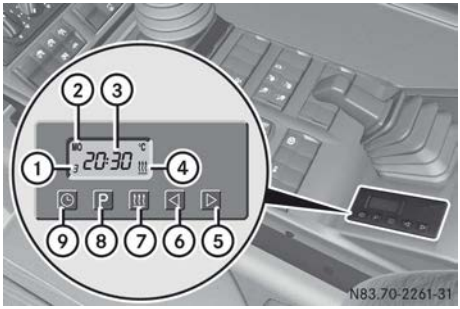

① Memory slot 1, 2 or 3
② Day of the week, switch-on day
③ Time, switch-on time, heating time or remaining heating time
④ Heater operation and malfunction (flashing)
⑤ ▷ Forwards
⑥ ◁ Backwards
⑦ Activates/deactivates immediate heating mode
⑧ P Selects the memory position or activates/deactivates the switch-on time
⑨ Sets the time and day

When the key is in the ignition lock in position **2** or a switch-on time is preselected, time and day of the week are constantly displayed.

When the key is in the ignition lock and turned to position **0**, the display turns off after 15 seconds.

Setting the time and day

▶ Make sure that the key is in position **2** in the ignition lock.

▶ Press and hold the button until the time flashes in the display.

▶ Set the time using the ◁ or ▷ button.

▶ Press the button.
The time is stored and the day of the week flashes in the display.

▶ Set the day using the ◁ or ▷ button.

▶ Press the button.
The day of the week is stored.

Setting the heating duration

▶ Press and hold the ◁ button until the current setting flashes.

▶ Set the heating duration using the ◁ or ▷ buttons to between one and 120 minutes.
The setting is stored when the display disappears.

The auxiliary heating automatically switches off after the heating time has elapsed.

Immediate heating mode

▶ **To switch on:** press the button.
The display shows the time and day of the week, as well as the symbol.

▶ Set the remaining heating time using the ◁ or ▷ buttons to between one and 120 minutes.

▶ **To switch off:** press the button again.
Cooling off period: the auxiliary heating system continues to run for approximately three minutes. Then the combustion air blower and the heating/ventilation blower turn off.

When the symbol goes out in the display, the auxiliary heating has switched off.

ⓘ If the key is turned to position **0** in the ignition lock while the auxiliary heating is

switched on, the auxiliary heating remains on for a further 15 minutes. The display shows remaining heating time ③.

Preselected heating mode

Three preselection times can be selected using the timer.

You can preselect the switch-on times either for the next 24 hours or for one week (maximum of seven days).

ℹ If identical preselection times (time and day of the week) are set in the preselection memory, only the last preselection time set is saved.

A preselected switch-on time is deactivated after the heating process and needs to be reactivated for subsequent heating processes.

If the power supply is interrupted using the battery isolator switch (▷ page 90), the auxiliary heating will not switch on at the set switch-on time.

⚠ **DANGER**

If you have preselected a switch-on time, the auxiliary heating system switches on automatically.

- Toxic exhaust fumes may accumulate if there is insufficient ventilation, carbon monoxide in particular. This is the case in enclosed spaces, for example. There is a risk of fatal injuries.
- There is a risk of fire and explosion if there are highly flammable materials or flammable materials nearby!

If you park the vehicle in these or similar conditions, always deactivate the preselected switch-on times.

▶ **To set the switch-on time:** press the [P] button repeatedly until desired memory position [1], [2] or [3] flashes in the display.

▶ Press the [◁] or [▷] button.
The switch-on time flashes in the display.

▶ Use the [◁] or [▷] button to set the time.
When the switch-on time no longer flashes, the switch-on time has been stored.

▶ **To preselect the switch-on time:** press the [P] button repeatedly until the desired memory position and the set time flash in the display.
After approximately five seconds, day of the week ② also begins to flash.

▶ If the desired switch-on time is within the next 24 hours, wait until the display stops flashing.
The switch-on time is then activated for the next 24 hours.

or

▶ While day of the week display ② is flashing, set the switch-on day using the [◁] or [▷] button.
When the switch-on time no longer flashes, the switch-on time has been activated. The current time and the activated memory position are displayed constantly and the [≋] symbol flashes in the display.

▶ **To check the switch-on time:** press the [P] button.
The set switch-on time (time and day of the week) is shown for approximately five seconds in the display.

▶ **To deactivate switch-on time:** press the [P] button repeatedly until no more memory positions are shown in the display.

Airflow, air distribution and temperature

If immediate or preselected heating mode is active, the blower selects airflow level [2] at least. Additionally, the minimum temperature default setting is selected. The heating system or the air conditioning control unit is activated automatically.

https://truckmanualshub.com/

- Press and hold the ⊕ temperature button until the maximum temperature is set (▷ page 99).
- Adjust the air-distribution switch and the air vents as desired (▷ page 99).
- Adjust the airflow control as required while driving (▷ page 99).

Switching engine preheating on/off

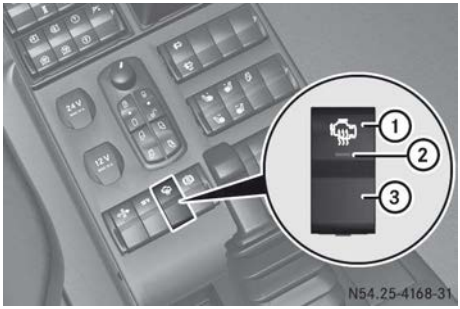

The engine can only be preheated if it is not running.

- **To switch on:** switch on the auxiliary heating system (▷ page 102).
- Press switch ①.
  Indicator lamp ② in the switch lights up.
  The engine is preheated.
- **To switch from engine preheating to vehicle interior preheating:** press switch ③.
  Indicator lamp ② in the switch goes out.
- **To switch off:** switch off auxiliary heating (▷ page 104).
  Indicator lamp ② in the switch goes out.

or

- Start the engine.
  Indicator lamp ② in the switch goes out.
  The vehicle interior is preheated.

Alarm function

- Press the [P] button repeatedly until the [🔔] alarm symbol flashes in the display.
- Press the [◁] or [▷] button.
  The switch-on time flashes in the display.
- Use the [◁] or [▷] button to set the time.
  When the switch-on time no longer flashes, the switch-on time of the alarm has been stored.

https://truckmanualshub.com/

Problems with the auxiliary heating	
Display messages	**Possible causes/consequences and ▶ Solutions**
F:01through F:09and F:11through F:17	▶ Have the auxiliary heating checked at a qualified specialist workshop.
F:10	**While the auxiliary heating was switched on, the voltage supply was interrupted:** ▶ Switch on the voltage supply with the battery isolator switch (▷ page 90). or ▶ Connect battery (▷ page 306). or ▶ Have the auxiliary heating checked at a qualified specialist workshop. **The protection against overheating on the auxiliary heating was triggered:** ▶ Have the auxiliary heating checked at a qualified specialist workshop.
All displays flash.	**All displays flash after an interruption in the voltage supply:** ▶ Reset the time, day, switch-on times and heating time (▷ page 104).
	Mechanical malfunction: heavy smoke, fuel odour, or unusual noises during auxiliary heating operation. ▶ Switch off the auxiliary heating (▷ page 102). ▶ Remove the auxiliary heating fuse (▷ page 327). ▶ Have the auxiliary heating checked as quickly as possible at a qualified specialist workshop.

https://truckmanualshub.com/

https://truckmanualshub.com/

Useful information 110
Instrument cluster 110
On-board computer 115
On-board computer event window .. 128
Warning/indicator lamps in the status area of the on-board computer 144

https://truckmanualshub.com/

Useful information

These Operating Instructions describe all the models and standard and optional equipment of your vehicle that were available at the time of going to print. Country-specific differences are possible. Bear in mind that your vehicle may not be equipped with all the functions described. This also applies to safety-relevant systems and functions.

Read the information on qualified specialist workshops (▷ page 30).

Instrument cluster

Important safety notes

⚠ **WARNING**

Operating the integrated information systems and communications equipment in the vehicle while driving will distract you from traffic conditions. You could then lose control of the vehicle. There is a risk of an accident.

Only operate these devices if road traffic conditions permit. If you are unsure about the surrounding conditions, pull over to a safe location and make entries only while the vehicle is stationary.

⚠ **WARNING**

If the instrument cluster has failed or malfunctioned, you may not recognise function restrictions relevant to safety. The operating safety of your vehicle may be impaired. There is a risk of an accident.

Drive on carefully. Have the vehicle checked at a qualified specialist workshop immediately.

You should therefore make sure your vehicle is operating safely at all times. Otherwise, a vehicle that is not operating safely may cause an accident. If your vehicle is not operating safely, stop and park safely as soon as possible.

Rev counter

! If you exceed the maximum permissible engine speed, the warning buzzer sounds.

You should not drive and change gear by the sound of the engine, but according to the engine speed shown in the rev counter.

Avoid driving in the red overrevving range. This could lead to engine damage.

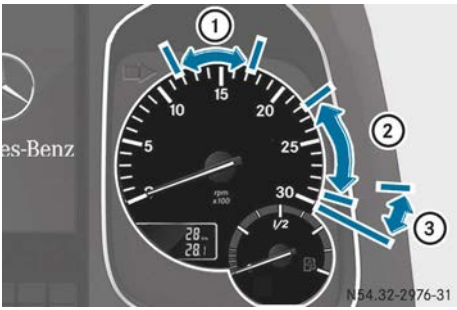

Example: instrument cluster

① Economical operating range (green)
② Engine brake operating range (yellow)
③ Overrevving range, danger of engine damage (red)

If the [-O-] indicator lamp in the instrument cluster lights up, the engine speed is too high, e.g. if you select a low gear when shifting down:

▶ Decelerate using the service brake.

or

▶ Shift up a gear.
The [-O-] indicator lamp in the instrument cluster goes out.

Observe further information in the event window of the on-board computer.

General notes on the rev counter:

- Observe the rev counter while driving and stay within economical speed range ①.
  In some situations, it may make sense to operate the engine outside economical

engine speed range ①, e.g. on uphill gradients or when overtaking.

- If you drive the vehicle within economical engine speed range ①, you achieve low fuel consumption and reduced wear.
- In engine braking mode, use yellow engine speed range ②. The highest engine braking effect will be achieved just before red overrevving range ③.
- When driving downhill, make sure that the engine speed does not rise into red overrevving range ③.
- Idling speed is set automatically depending on the coolant temperature.

AdBlue® gauge

Example: instrument cluster

The AdBlue® reducing agent is required for reduction of engine emissions.

The operating permit is invalidated if the vehicle is operated without AdBlue®. The legal consequence of this is that the vehicle may no longer be operated on public roads.

In the Range menu window of the trip data, you can display your vehicle's range together with the current fuel tank content (▷ page 119).

If the AdBlue® level has dropped to approximately 10% of the tank capacity, a corresponding event window appears with the symbol. Top up the AdBlue® tank in good time (▷ page 218).

If the yellow event window is ignored and the AdBlue® level drops further to approximately 2.5%, engine output may be reduced.

When the AdBlue® tank has run dry, the event is stored and is signalled by the indicator lamp when starting the engine as an emission-relevant fault (▷ page 113). Vehicle speed may also be limited to approximately 20 km/h.

Fuel gauge

Example: instrument cluster

If the fuel level has dropped to approximately 14% of the tank capacity, the needle enters the red reserve area. The on-board computer displays a corresponding event window with the symbol.

In the Range menu window of the trip data menu, you can display your vehicle's range based on the current fuel tank content (▷ page 119).

https://truckmanualshub.com/

Clock and outside temperature

Instrument cluster (example: display in speedometer)

You should pay particularly close attention to road conditions as soon as temperatures approach freezing.

There is a delay in displaying a change in outside temperature.

▶ Make sure that the key is in position **2** in the ignition lock.
Time ① and outside temperature ② appear in the display.
Displays vary according to country specifications:
- Time ① in 12 h or 24 h mode
- Outside temperature ② in Celsius (°C) or Fahrenheit (°F)

The time and outside temperature are also displayed by the Truck info menu in the trip data menu (▷ page 118). You can change the clock mode and the temperature unit in the Menumenu window within the settings menu (▷ page 126).

Odometer

Instrument cluster (example: display in rev counter)

▶ Ensure that the key is in position **2** in the ignition lock.
The display in the rev counter shows the total distance ① and the trip distance ②.
Depending on the country, total distance ① and trip distance ② are shown in kilometres (km) or miles (mi).

The total distance recorder and the trip odometer are also displayed by the Truck info menu in the trip data menu (▷ page 118). You can change the units of measurement in the Menu menu window in the settings menu (▷ page 126). You can reset trip odometer ② in the Truck info menu window in the trip data menu (▷ page 118).

Engine diagnostics indicator lamp

Indicator lamp

Problem	Possible causes/consequences and ▶ Solutions
The [ ] indicator lamp flashes.	After you have turned the key in the ignition lock to position **2**, the indicator lamp indicates the system's status by means of a sequence of flashes. If there are no malfunctions, the indicator lamp goes out after the engine is started.
The [ ] indicator lamp lights up. The on-board computer shows an event window and the [ ] indicator lamp in the display.	An emissions-related malfunction has been detected. ▶ Follow the instructions in the event window. ▶ Have the BlueTec® exhaust gas aftertreatment checked as soon as possible at a qualified specialist workshop. If you do not follow the instructions in the event window, a reduction in the engine power output may be imposed, as per the message displayed: • after ten hours, e.g. if a low-grade diluted reducing agent is being used or the dosage is incorrect • after 36 hours, e.g. if the exhaust gas recirculation or the monitoring system is faulty

https://truckmanualshub.com/

Problem	Possible causes/consequences and ▶ Solutions
The [ ] indicator lamp lights up. The engine power output is reduced. The on-board computer also shows an event window in the display.	You have not had a detected emissions-related malfunction rectified. ▶ Follow the instructions in the event window. ▶ Drive carefully to the nearest qualified specialist workshop and have the malfunction rectified as soon as possible. If you do not follow the instructions in the event window, a speed limitation may be imposed, as per the message displayed: • 20 hours after the first occurrence of a malfunction, e.g. if a low-grade diluted reducing agent is being used or if the dosage is incorrect • 100 hours after the first occurrence of a malfunction, e.g. if the exhaust gas recirculation or if the monitoring system is faulty
The [ ] indicator lamp lights up. Vehicle speed is limited to approx. 20 km/h. Simultaneously, the on-board computer shows the [ ] indicator lamp in the status area.	AdBlue® has been used up or a detected emissions-related malfunction has not been rectified. ▶ Follow the instructions in the event message. ▶ Drive carefully to the nearest filling station and refill AdBlue® (▷ page 218). or ▶ Drive carefully to the nearest qualified specialist workshop and have the malfunction rectified as soon as possible. The operating permit is invalidated if you continue to use the vehicle.

Once the AdBlue® tank has been refilled or the fault rectified, full engine output is restored. If the system check does not detect any other faults, the [ ] indicator lamp goes out after the system's status indicator. It may take several journeys to complete the system check.

BlueTec® exhaust gas aftertreatment status indicator

The status of the BlueTec exhaust gas aftertreatment is signalled for a quick on-site check by authorities.

There are three successive signalling phases shown by the [ ] indicator lamp. These commence when you have turned the key in the ignition lock to position **2**, and end when the engine is started.

The first phase is the instrument cluster display check. The indicator lamp lights up for approximately five seconds and then goes out for approximately ten seconds.

The second phase indicates the system check status. The indicator lamp either lights up again for five seconds or flashes for approximately five seconds. Subsequently, it goes out for five seconds.

In the third phase, the indicator lamp indicates whether any emissions-related malfunctions have been detected.

If no emissions-related malfunctions are detected, the indicator lamp lights up briefly and then goes out for approximately five seconds. This flashing sequence is repeated until the engine is started.

If an emissions-related malfunction is detected, the indicator lamp flashes three times and then goes out for approximately five seconds. This flashing sequence is repeated until the engine is started. The indicator lamp remains lit for approximately 15 seconds after the engine is started.

The indicator lamp lights up and remains lit after the engine is started if:

- a serious emissions-related malfunction is detected.
- an emissions-related malfunction is still present and more than 200 hours have elapsed since detection.

On-board computer

Operating the on-board computer

The on-board computer only shows messages or warnings from certain systems. You should therefore make sure your vehicle is operating safely at all times. Otherwise, a vehicle that is not operating safely may cause an accident. If your vehicle is not operating safely, stop and park safely as soon as possible.

⚠ WARNING

Operating the integrated information systems and communications equipment in the vehicle while driving will distract you from traffic conditions. You could then lose control of the vehicle. There is a risk of an accident.

Only operate these devices if road traffic conditions permit. If you are unsure about the surrounding conditions, pull over to a safe location and make entries only while the vehicle is stationary.

Observe the legal requirements for the country you are currently in while operating the on-board computer.

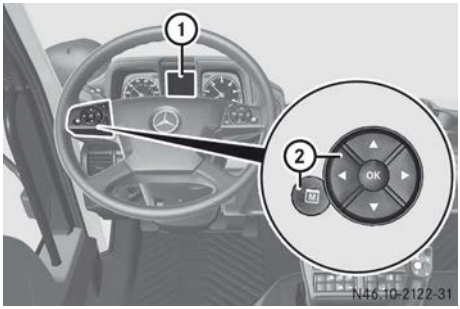

① On-board computer display

② Buttons

▶ Selects the next main menu/next entry in the input window, increases or resets value

◀ Selects the previous main menu/previous entry in the input window or decreases value

▼ Next menu window/next menu bar down in the input window

▲ Previous menu window/next menu bar up in the input window

OK Opens and closes input window/acknowledges event window

M Stores/displays the favourite menu window

Navigate through the on-board computer menus using the group of buttons on the left of the multifunction steering wheel.

Whilst you are driving, the on-board computer provides information about:

- fuel consumption
- trip time
- operating conditions
- malfunctions
- causes of malfunctions
- measures to be taken

▶ Turn the key to position **1** in the ignition lock.
The on-board computer shows the welcome display (Mercedes star). After a short

https://truckmanualshub.com/

time the display also shows the date and time.

▶ Turn the key to position **2** in the ignition lock.
The on-board computer shows the last active menu window, e.g. the Truck info menu window in the trip data menu.

If a malfunction is detected, the on-board computer will display the events in an event window first. In addition to the event window, an indicator lamp may light up in the instrument cluster or in the status area of the on-board computer. If there are several messages, the on-board computer shows them one by one according to priority level. If further information on the malfunction is available in the event window, the event window shows the symbol. You can display the information using the button.

▶ Clear the event window by pressing the OK button.

▶ **To scroll through the main menus:** press ▶ or ◀.

▶ **To display further menu windows in the main menu:** press ▼ or ▲.

▶ **To open and close the input window:** when a menu window displays the OK symbol, press OK.

▶ **To select menu bars in the input window:** press ▼ or ▲.

▶ **To change the value or select an entry in the input window:** press ▶ or ◀.

ℹ If you call up a particular menu window regularly, e.g. the engine oil level check, save it on the M button.

▶ **To save a favourite menu window:** call up the desired menu window and press the M button for approximately two seconds until a tone sounds.

▶ **To display the favourite menu window:** briefly press the M button.

Areas in the on-board computer display

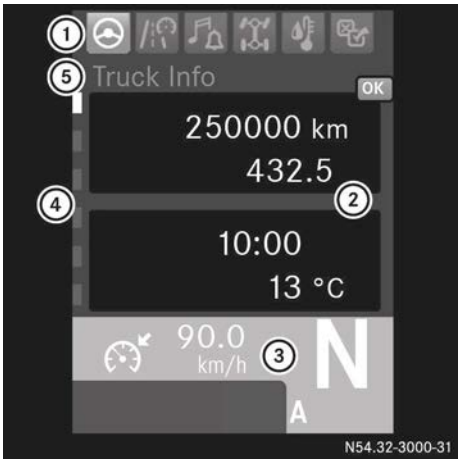

Example: menu window, Truck info

Register and title bar: register ① shows the main menu. The active main menu is represented in white. Register ④ shows you the number of menu windows (submenus) and which window is currently selected. Title bar ⑤ shows the name of the active menu window.

Display area: the on-board computer displays the menu window or event window in display area ②. An event window is displayed automatically and contains a message, e.g. Reset trip meter?, or information about malfunctions, e.g. Diesel particle filter full. In addition to the event window, an indicator lamp may light up in status area ③ of the on-board computer or in the instrument cluster. If you can confirm the event window using the OK button, the event window is hidden. An indicator lamp that lights up in status area ③ of the on-board computer or in the instrument cluster does not go out after the event window is confirmed.

https://truckmanualshub.com/

Status area: status area ③ shows:

- the gear indicator of the Telligent® gearshift/Telligent® automatic gearshift, e.g. N.
- when cruise control is selected, the symbol and the set speed, e.g. 85 km/h (▷ page 193).

The status of the driving system, e.g. on or off, is represented in colour.

In addition, status area ③ contains an indicator lamp panel. In the event of a malfunction, warning or operating information, an indicator lamp automatically lights up in status area ③ of the on-board computer. Depending on the priority of the malfunction, warning or operating information, the indicator lamp lights up in different colours. The indicator lamp may also light up in addition to the event window.

Menus at a glance

The number and order of the menus depends on your vehicle's equipment and the type of vehicle itself.

Trip data	**(▷ page 118)**
Truck info	Displaying the time and outside temperature, displaying/resetting the trip meter and total distance recorder
Tachograph	Displaying driving time and rest periods
Since start - all	Displaying/resetting trip data "From start"
Range	Displaying the range of fuel and AdBlue® levels
Since reset - all	Displaying/resetting trip data "From reset 1"
Since reset - drive	Displaying/resetting trip data "From reset 2"

Driving mode	**(▷ page 119)**
Speed	Displaying vehicle speed
Backup drive mode	Selecting shift position when experiencing problems with the transmission shift system

Audio and communications	**(▷ page 120)**
Alarm clock	• Displaying the alarm time • Setting the alarm clock • Switching off the alarm
Telephone	Displaying telephone book and call lists, calling numbers
Audio	• Controlling the volume • Displaying the audio source • Changing the audio source, track or frequency • Using the MP3 browser

Operation and maintenance	**(▷ page 123)**
Axles	Displaying power take-off, front PTO shaft, working gears, crawler gears and differential lock
Tyres	Adjusting the tyre pressure

https://truckmanualshub.com/

Operation and maintenance	(▷ page 123)
Hydraulics	Displaying operating conditions and changing settings
Trailer	Displaying trailer data • Information on braking • Axle loads • Tyre pressure • Supply pressure
Maintenance	Displaying/resetting the maintenance point and due date

Monitoring info	(▷ page 124)
Reserve pressure	Displaying the reservoir pressure in brake circuits (1) and (2)
Coolant	Displaying the coolant temperature
Engine	Displaying the engine oil level and operating hours of the engine
Events	Displaying events
Diagnosis	Displaying diagnostics data

Settings	(▷ page 126)
Menu	Setting the units of measurement (e.g. display of °C or °F)
Lighting	• Making the instrument cluster lighting and audio display lighting darker/brighter • Adjusting/deactivating delayed switch-off, exterior lighting
Language	Setting the display language
Service products	Displaying/setting service product values

Trip data menu

Truck info menu window

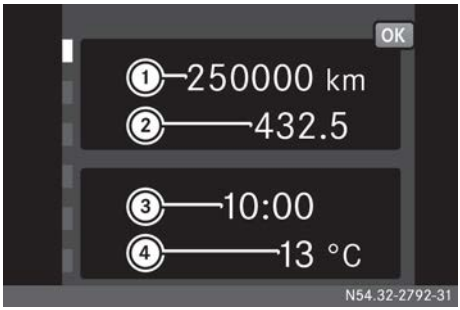

① Total distance recorder
② Trip meter
③ Time
④ Outside temperature

▶ **To display total distance, trip meter, clock or outside temperature:** using the ▸ or ◂ button, scroll to the trip data menu.

▶ **To reset the trip meter:** press OK.
The input window shows Reset trip meter? No/Yes.

▶ Using the ▼ button, select the Yes menu bar and press ▶ or OK to confirm.

Tachograph menu window

The Tachograph menu window is available on vehicles with a digital tachograph.

▶ Using the ▶ or ◀ button, scroll to trip data.

▶ **To display the driving and rest times:** use the ▼ or ▲ button to scroll to the Tachograph menu window.
The menu window shows:
- the driver's name
- the driving time
- the rest time

From start all/From reset all/From reset drive menu window

The Since start - all trip data contains performance data from the start of the journey. If you leave the vehicle parked for more than four hours, the values are reset automatically.

The Since reset - all or Since reset - drive trip data contains performance data from the last time the menu window was reset.

▶ Using the ▶ or ◀ button, scroll to trip data.

▶ **To display the trip data:** use the ▼ or ▲ button to scroll to the Since start - all, Since reset - all or Since reset - drive menu window.
The menu window shows:
- the distance covered
- the journey time
- the average vehicle speed
- the average fuel consumption

▶ **To reset the trip data:** press OK.
The input window shows, for example, Reset values for: Since start - all No/Yes.

▶ Using the ▼ button, select the Yes menu bar and press ▶ or OK to confirm.

Range menu window

The on-board computer calculates the approximate ranges of the vehicle based on current fuel levels and AdBlue®. The ranges depend largely on your driving style.

▶ Using the ▶ or ◀ button, scroll to the trip data.

▶ **To display the range:** use the ▼ or ▲ button to scroll to the Range menu window.
The menu window displays the approximate ranges of the fuel level and the AdBlue® level. In addition, the menu window also shows the current fuel consumption level as a bar display underneath the ranges. When the vehicle is stationary, the bar display changes and shows the stationary fuel consumption level (l/h). The mark above the bar display corresponds to the Since start - all average consumption.
The menu window displays the range up to 50 km. For lower values, the on-board computer displays <50 km.

Driving mode menu

Speed menu window

▶ **To display vehicle speed:** using the ▶ or ◀ buttons, scroll through to driving mode.

https://truckmanualshub.com/

Backup drive mode menu window

General notes

If the automated transmission shift system is malfunctioning, you may, under certain circumstances, be able to continue your journey in backup drive mode. It is not possible to change gear in backup drive mode when the vehicle is in motion.

The vehicle may respond abnormally in backup drive mode and therefore requires a high level of concentration on the part of the driver.

Backup drive mode remains switched on for as long as the ignition lock is in the drive position. When you take the key out of the ignition lock, backup drive mode is switched off. If backup drive mode is used when the transmission is cold, the on-board computer may not show the selected gear. Repeat the gear selection. If the on-board computer does not display the selected gear after you have tried to select a gear several times, switch off the engine. Start the engine again and select the gear.

Selecting shift position

- ▶ Apply the parking brake.
- ▶ Start the engine.
- ▶ Using the [▸] or [◂] button, scroll to driving mode.
- ▶ Using the [▾] or [▴] button, scroll to the Backup drive mode menu window.
  The menu window shows Activate with "OK"..
- ▶ Press the (OK) button.
  The menu window shows Is the parking brake applied?.
- ▶ Press the [▸] button
  The input window shows:
  - R for reverse gear
  - N for neutral
  - D1 for the slow gear, 2nd gear
  - D2 for the fast gear, 6th gear
  - for towing mode
- ▶ Select gear, neutral position or towing mode with the [▾] or [▴] button and confirm your selection with the [▸] button.
  The on-board computer displays the selected direction of travel in the status area.
- ▶ If the Ready to start for 10 seconds menu window appears, depress the accelerator pedal.

When driving the vehicle in backup drive mode, the event window shows the Shift to neutral? message. While the vehicle is in motion, you can only shift to transmission neutral position.

You can find information on towing in the section "Manoeuvring, tow-starting and towing away" (▷ page 333).

Audio and communications menu

Alarm clock menu window

If your vehicle is equipped with the Mercedes-Benz CD radio, you can set the CD radio as an alarm in alarm mode. If the alarm mode is set to Radio and the CD radio is switched on at the set alarm time, no further signalling takes place.

- ▶ **To display the alarm time:** using the [▸] or [◂] button, scroll through to audio and communications.
  The menu window shows:
  - the day of the week and the date
  - the alarm time for the [1] alarm clock
  - the alarm time for the [2] alarm clock
- ▶ **To set the alarm clock:** press the (OK) button.
  The input window shows:
  - the alarm clock Alarm clock 1/Alarm clock 2
  - the alarm clock mode Audio/Buzzer/Off
  - the hour of the alarm time, e.g. 09 h
  - the minute of the alarm time, e.g. 23 min

▶ Select the desired menu bar with the ▼ or ▲ button.

▶ Change the value with the ▶ or ◀ button.

ℹ If you press and hold ▶ or ◀, the hours/minutes scroll fast.

▶ **To stop the alarm:** press OK.

ℹ The alarm switches off automatically after two minutes.

Telephone menu window

Important safety notes

In the telephone menu window you can:

- display the telephone book, select and call an entry
- display the call list, select and call an entry
- update the phone book

⚠ **WARNING**

Operating the integrated information systems and communications equipment in the vehicle while driving will distract you from traffic conditions. You could then lose control of the vehicle. There is a risk of an accident.

Only operate these devices if road traffic conditions permit. If you are unsure about the surrounding conditions, pull over to a safe location and make entries only while the vehicle is stationary.

When making a call, observe the legal requirements for the country you are currently in.

Functions

The telephone menu window is available on vehicles with Bluetooth® CD radio.

ℹ Further information on suitable mobile phones and connecting Bluetooth®-capable mobile phones can be found in the "Audio system" section (▷ page 148).

ℹ Information on operating the CD radio can be found in the "Audio systems" (▷ page 148) chapter.

▶ Bluetooth® mobile phone: pair the mobile phone to the CD radio.

▶ Use the ▶ or ◀ button to scroll to ♫ audio and communications.

▶ Use the ▼ or ▲ button to scroll to the Telephone menu window.
The menu window shows the provider name and the name of the connected Bluetooth® mobile phone.

ℹ Briefly pressing the ☎ button calls up the Telephone menu directly.

▶ **To display the phone book/call list:** press OK.
The input window shows:
- Phone book
- Missed calls
- Received calls
- Numbers dialled
- Load phone book

▶ Select the desired menu bar with the ▼ or ▲ button.

▶ Display the phone book entries with the ▶ button.

▶ Select a name or number with the ▼ or ▲ button.

▶ **To scroll quickly through the phone book or call list:** press and hold ▼ or ▲.

▶ **To select a number from the phone book or call list:** press the ☎ button.
The menu window shows the details of the call.

▶ Press the ☎ button.
The phone number is dialled.

https://truckmanualshub.com/

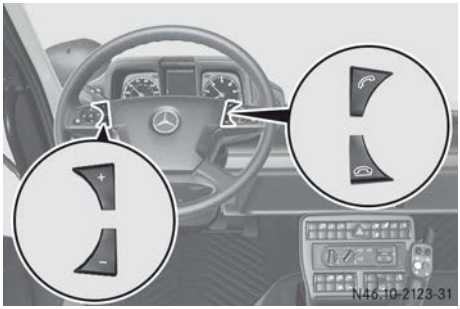

Makes or accepts a call/displays the Telephone menu window

Ends/rejects an incoming call

+ Increases volume

− Decreases volume

▶ **To accept a call:** press the button. The on-board computer shows the caller's number or Unknown number.

▶ **To adjust the call volume:** increase or decrease the volume during the call with the + or − button.

▶ **To reject or end a call:** press the button.

Audio menu window

Audio source, track/station/frequency, MP3 browser

The Audio menu window is available on vehicles with the Mercedes-Benz CD radio.

▶ Switch on the CD radio (▷ page 148).

▶ Use the ▸ or ◂ button to scroll to audio and communications.

▶ **To display the audio source and the title/station:** use the ▾ or ▴ button to scroll to the Audio menu window.

▶ **To change the audio source or track/station/frequency:** press OK.
Depending on the active audio source, the input window displays:

- the name of the audio source
- the station or frequency when in radio mode
- the track when in CD, USB or Bluetooth® mode
- the AUX source in Audio AUX mode
- the waveband in radio mode
- the MP3 browser in CD or USB mode

▶ Select the desired menu bar with the ▾ or ▴ button.

▶ Change the audio source, track or station with the ▸ or ◂ button.

When using MP3 files stored on audio CDs or a USB device, you can navigate through folders and select your MP3 files for playback.

To operate the MP3 browser

▶ Open the Audio menu window.

▶ Press the OK button.

▶ Select the MP3 browser menu bar with the ▾ or ▴ button.

▶ **To open the MP3 browser:** press ▸ or ◂.

▶ **To change the MP3 file/folder:** press ▾ or ▴.

▶ **To open an MP3 file or folder:** press ▸.

▶ **To close the current folder:** press ◂ briefly.

▶ **To close the MP3 browser:** press and hold ◂.

Setting the volume

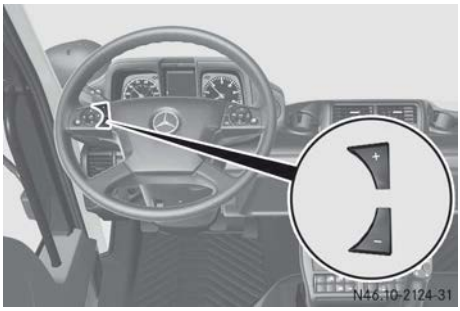

It is always possible to adjust the playback volume in audio mode.

▶ **To increase or decrease the volume:** press + or −.

Operation and maintenance menu

Axles menu window

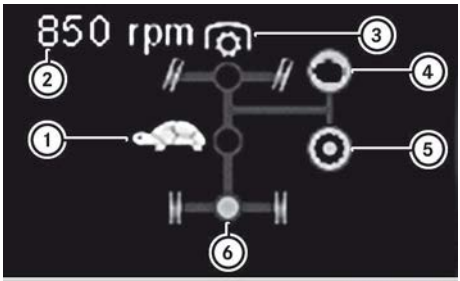

N54.32-2931-31

① Working gears/ crawler gears
② Working speed, front PTO shaft
③ Front PTO shaft
④ Engine-driven power take-off
⑤ Transmission-driven power take-off
⑥ Differential locks

▶ Using the ▸ or ◂ button, scroll to operation and maintenance.
▶ Use the ▾ or ▴ button to scroll to the Axles menu window.

Tyres menu window

▶ Using the ▸ or ◂ button, scroll to operation and maintenance.
▶ Use the ▾ or ▴ button to scroll to the Tyres menu window.

Further information can be found in the "Tyre pressure control system" section (▷ page 186).

Hydraulics menu window

▶ Using the ▸ or ◂ button, scroll to operation and maintenance.
▶ Use the ▾ or ▴ button to scroll to the Hydraulics menu window.

Refer to the "Menus and input windows in the on-board computer“ section (▷ page 234) for further information.

Trailer menu window

The Trailer menu window is available when a trailer is coupled up. The possible displays depend on your trailer's equipment. Observe the notes on equipment and their operation in the manufacturer's operating instructions for the trailer.

If the axle load is displayed in the Trailer menu window, park the vehicle on a level surface and apply the parking brake.

▶ Using the ▸ or ◂ button, scroll to operation and maintenance.
▶ Use the ▾ or ▴ button to scroll to the Trailer menu window.
▶ Press the OK button.
The display shows the first input window, e.g. Brake info.
▶ Display the next input window with the ▸ or ◂ button.
The following information/input windows may be displayed, depending on the equipment installed:
- Brake info displays the temperature and wear on the trailer brake
- Axle loads displays the overall axle load of the trailer.
- Tyres displays the tyre pressure of the trailer tyres
- Reserve pressure displays the reservoir pressure in the trailer compressed-air reservoir

Maintenance menu window

The maintenance system calculates maintenance due dates for the vehicle and its assemblies based on the vehicle's operating conditions. The event window automatically displays maintenance due dates 14 days in advance. When the maintenance due date has been reached or exceeded, the on-board computer shows additional event windows (▷ page 134).

If the maintenance work is carried out at a Mercedes-Benz Service Centre, the fact that

https://truckmanualshub.com/

the work has been carried out professionally will be confirmed in the on-board computer and the Maintenance Booklet.

⚠ **WARNING**

If you do not have the prescribed service/maintenance work or necessary repairs carried out, this could result in malfunctions or system failures. There is a risk of an accident.

Always have the prescribed service/maintenance work as well as necessary repairs carried out at a qualified specialist workshop.

! Only have work carried out on the engine electronics and its associated parts, such as control units, sensors, actuating components and connector leads, at a qualified specialist workshop. Vehicle components may otherwise wear more quickly and the vehicle's operating permit may be invalidated.

! If you confirm maintenance work, without having it performed according to schedule, you can damage the vehicle and the assemblies. Wear can increase.

If you inadvertently confirm maintenance work or confirm it too early, the maintenance system calculates the new maintenance due date. To prevent damage to the vehicle or assemblies, have the corresponding maintenance work performed immediately.

Only confirm the maintenance work when the maintenance work has been performed.

▶ Using the [▸] or [◂] button, scroll to [🔧] operation and maintenance.

▶ Use the [▾] or [▴] button to scroll to the Maintenance menu window.

▶ **To display the maintenance point and due date:** press the (OK) button.
The input window shows:

- the maintenance point, e.g. Diesel particle filter
- the maintenance due date, e.g. 23.09.2014
- the remaining distance, e.g. 2000 km

If no prediction for the maintenance due date is possible, the input window shows:

- the maintenance point, e.g. Diesel particle filter
- the maintenance due date, e.g. --.--.----
- the remaining distance, e.g. ---- km

▶ **To display the next maintenance point and due date:** use the [▾] or [▴] button to display the maintenance due date or the next maintenance point.
Depending on the vehicle's equipment, you can call up the maintenance due date or various maintenance points:

- Time-based maint.
- Diesel particle filter
- Air filter

▶ **To reset the maintenance due date:** press the [▾] or [▴] button to display the desired maintenance point.

▶ Press the [▸] button.
If a reset is possible, the input window shows, e.g. Reset?Reset? No/Yes.

▶ Using the [▾] button, select the Yes menu bar and press the [▸] or (OK) button to confirm.

Monitoring info menu

Reservoir pressure menu window

▶ **To display the reservoir pressure:** using the [▸] or [◂] button, scroll to the [⏲] monitoring info.

▶ Use the [▾] or [▴] button to scroll to the Reserve pressure menu window.
The menu window shows the reservoir pressure of the [①] brake circuit and [②] brake circuit as a bar display.

Coolant menu window

- Use the [▸] or [◂] button to scroll to the [monitoring info.] monitoring info.
- **To display the coolant temperature:** use the [▾] or [▲] button to scroll to the Coolant menu window.

ℹ When the coolant level is too low, the coolant temperature cannot be displayed.

Engine menu window

In the Engine menu window, you can check the engine oil level and display the engine's operating hours. Check the engine oil level before the start of every journey. The engine oil level is not displayed while driving.

- Park the vehicle on a level surface.
- Apply the parking brake.
- Switch off the engine.
- Turn the key to position **2** in the ignition lock.
- **If the engine is at normal operating temperature**: wait approximately five to seven minutes after switching off the engine.

or

- **If the engine is cold:** wait approximately five to ten minutes after switching off the engine.

ℹ If you call up the engine oil level too early or while the engine is running, Not available appears in the menu window.

- Using the [▸] or [◂] button, scroll to the [monitoring info.] monitoring info.
- **To display the engine oil level and operating hours:** using the [▾] or [▲] button scroll to the Engine menu window.
  The menu window shows:
  - the engine oil level [oil level], e.g. Low Top up oil:4 l
  - the [operating hours] operating hours of the engine, e.g. 10000 h 27 min.
    The service counter is not suitable for measuring the driving hours of the driver. Use suitable devices for this purpose.
- If Low or Too low is displayed in the menu window, refill the amount of engine oil displayed (▷ page 297) as soon as possible and call up the engine oil level again.
- Be sure not to start the engine when the Too low menu window appears.
- If the oil level display is not available, repeat the oil level check.
- If it is not possible to display the oil level after repeated attempts, have the oil level display checked at a qualified specialist workshop.

Events menu window

You can display stored malfunctions and messages in the Events menu. If you have rectified the cause of the malfunction/message, the on-board computer no longer displays the event.

- Use the [▸] or [◂] button to scroll to the [monitoring info.] monitoring info.
- Use the [▾] or [▲] button to scroll to the Events menu window.
  The menu window shows, for example, the number of events or No events.
- **To display events:** press [OK].
- **To display further events:** use the [▾] or [▲] button to show the next event window.

Diagnostics menu window

Diagnostics data contains information with which you can assist the maintenance personnel during fault diagnosis, e.g. by remote diagnosis. The Diagnosis menu window contains, for example, a list of all control units (systems) installed in the vehicle. Further information can be obtained from a Mercedes-Benz Service Centre.

- Use the [▸] or [◂] button to scroll to the [monitoring info.] monitoring info.
- Use the [▾] or [▲] button to scroll to the Diagnosis menu window.

https://truckmanualshub.com/

Displaying the operating hours

- ▶ Press the (OK) button.
- ▶ Press the [▼] or [▲] button to select ICM.
- ▶ Press the [▶] button.
- ▶ Press the [▼] or [▲] button to select Values.
- ▶ Press the [▶] button.
- ▶ Press the [▼] or [▲] button to select the desired system:
  - M3: X h Operating time: hydraulics circuit 1
  - M4: X h Operating time: hydraulics circuit 2
  - M7: X h Operating time: hydraulics circuit 3
  - M8: X h Operating time: hydraulics circuit 4
  - M12: X h Operating time: hydrostatic drive
  - M20: X h PTO shaft operating time

Showing the power hydraulics oil level

- ▶ Start the engine.
- ▶ Park the vehicle on a level surface.
- ▶ Apply the parking brake.
- ▶ Make sure that the engine-driven power take-off is disengaged (▷ page 265).
- ▶ Press the (OK) button.
- ▶ Press the [▼] or [▲] button to select ICM.
- ▶ Press the [▶] button.
- ▶ Press the [▼] or [▲] button to select Values.
- ▶ Press the [▶] button.
- ▶ Use the [▼] or [▲] button to select M6: X l Oil level: power hydraulics.
  The oil level display of the power hydraulics must show approximately 45 l.
- ▶ Top up the difference in quantity of the oil (▷ page 299).

Displaying diagnostics data

- ▶ Press the (OK) button.
  The input window shows a list of all control unit system abbreviations.
- ▶ Select the desired control unit using the [▼] or [▲] button.
- ▶ Display further details on the control unit by pressing [▶].

Settings menu

Menu window menu

If you change the settings in the Menu menu window, the changes affect the display of the menu window.

- ▶ Use the [▶] or [◀] button to scroll to settings.
- ▶ **To set the units of measurement:** press (OK).
  The input window displays a list of possible settings:
  - Clock mode in 24 h or 12 h
  - Speed in km/h or mph
  - Distance in km or mi
  - Liquid units in litres, UK gal or US gal
  - Temperature units in °C or °F
  - Average fuel consumption in l/100 km, km/l or mpg
  - Pressure units in bar, kpa or psi
  - Weight units in t, tn or l.tn
- ▶ Select the desired menu bar with the [▼] or [▲] button.
- ▶ Change the setting with the [▶] or [◀] button.

Lighting menu window

You can set the brightness of the instrument cluster, the switch and the audio display in the Lighting menu window.

You can only adjust the brightness of the instrument cluster and the switch if the light sensor of the instrument cluster has detected

night mode and the lights have been switched on. If the setting cannot be changed, the input window displays Day mode.

- ▶ Use the [▸] or [◂] button to scroll to settings.
- ▶ Use the [▾] or [▴] button to scroll to the Lighting menu window.
- ▶ Press the (OK) button.
  The input window shows the instrument cluster lighting as a bar display.
- ▶ Press the [▾] or [▴] button to select Instrument panel.
- ▶ Change the setting with the [▸] or [◂] button.

Language menu window

The languages available depend on the country specifications of the vehicle. All text displays are shown in the set language. You can install more languages. Further information can be obtained from a Mercedes-Benz Service Centre.

- ▶ Use the [▸] or [◂] button to scroll to settings.
- ▶ Use the [▾] or [▴] button to scroll to the Language menu window.
- ▶ **To set the language:** press (OK).
  The input window displays a selection of languages.
- ▶ Select the desired language with the [▾] or [▴] button.
- ▶ Change the setting with the [▸] button.

Service products menu window

General notes

! If you change the data of the service products, the maintenance system automatically adjusts the maintenance due dates accordingly.

Set the data of the filled service products. Otherwise, you could damage the vehicle assemblies.

See the "Service products" section (▷ page 360).

Engine fuel grade

! A higher fuel sulphur content accelerates the ageing process of the engine oil and can damage the engine and exhaust system.

The sulphur content in the fuel is set before the vehicle is delivered.

Observe the notes on diesel fuel and fuel quality in the "Diesel fuel" section (▷ page 364).

Engine oil grade

! If you mix engine oils with differing oil grades, the change interval for the engine oil is reduced in comparison to mixtures of engine oil of identical grade.

Therefore, only mix engine oils of differing grade in exceptional circumstances. To prevent damage to the engine, set the sheet number of the engine oil with the lower grade under Engine oil grade.

Observe the notes on engine oil in the "Engine oils" section (▷ page 361).

Under Engine Oil grade, set the engine oil grade used according to the Sheet Numbers of the Mercedes-Benz Specifications for Service Products.

ⓘ You can obtain information about service products which have been tested by Mercedes-Benz and approved for your vehicle on the Internet at: **http://bevo.mercedes-benz.com/**

Engine oil viscosity

Under Engine Oil viscosity, set the viscosity class (SAE classification) of the engine oil used.

Transmission oil grade

Under Transmission Oil grade, set the transmission oil grade used according to the Sheet Numbers of the Mercedes-Benz Specifications for Service Products.

https://truckmanualshub.com/

Rear axle oil grade

Under Rear axle Oil grade, set the transmission oil grade used according to the Sheet Numbers of the Mercedes-Benz Specifications for Service Products.

Setting the service products

▶ Use the [▸] or [◂] button to scroll to [⊠] settings.

▶ Use the [▾] or [▴] button to scroll to the Service products menu window.

▶ Press the (OK) button.
The input window displays the assembly and the service product characteristic, for example EngineOil grade, as well as the currently set value, e.g. 228.51.

▶ **To select an assembly:** using the [▸] or [◂] button, select an assembly with a corresponding service product characteristic, for example:
- Engine Fuel grade
- Engine Oil grade
- Engine Oil viscosity
- Transmission Oil grade
- Rear axle Oil grade

▶ **To set the service product value:** using the [▾] or [▴] button, select a service product value.

▶ Set the service product value of the service product added using the [▸] or [◂] button.

On-board computer event window

Notes on events

Messages include operating information, error messages or warnings that the on-board computer automatically displays in an event window. In addition to the event window, an indicator lamp may light up in the instrument cluster or in the status area of the on-board computer.

Depending on the priority of the message, the on-board computer displays the event window in different colours:

- **grey event window for a malfunction/notification of low priority**
  Observe the instructions in the event window. You can drive on.
- **yellow event window for a malfunction/notification of medium priority**
  Observe the instructions in the event window. If it is possible to continue the journey despite the malfunction, drive on carefully. Have the affected system checked at a qualified specialist workshop as soon as possible.
- **red event window for a malfunction of high priority**
  Observe the instructions in the event window. Stop the vehicle as soon as possible while paying attention to the traffic conditions and contact a qualified specialist workshop. If the qualified specialist workshop determines it is possible to continue driving, adapt your driving style accordingly. Drive with even greater care. Keep in mind that continuing the journey could damage the vehicle and contravene legal regulations. Immediately drive to a qualified specialist workshop and have the affected system checked and repaired.

If you can confirm the event window using the (OK) button, the event window is hidden. You can call up the event window again at a later point (▷ page 125). If, in addition to the event window, an (▷ page 144) indicator lamp has lit up in the instrument cluster or in the status area of the on-board computer, the indicator lamp remains on.

https://truckmanualshub.com/

Grey event window

Note

Important safety notes

If you ignore warning and indicator lamps and the event window, you will not be able to recognise failures and malfunctions in components or systems. Driving/braking characteristics may be affected and the operating and road safety of your vehicle may be limited. Have the affected system checked and repaired at a qualified specialist workshop. Always observe the warning lamps and event window and follow the corresponding measures.

Grey event window

With a malfunction/notification of low priority, the on-board computer displays a grey event window. If further information about the malfunction/notification is available, the event window displays the [▸≡] symbol. You can display the information using the [▸] button on the multifunction steering wheel. Observe the information and instructions in the event window. You can drive on.

BlueTec® exhaust gas aftertreatment

Display messages	Possible causes/consequences and ▶ Solutions
[icon] Regeneration disabled	Regeneration of the diesel particle filter is disabled and the fill level of the diesel particle filter is raised. ▶ In order to enable automatic regeneration of the diesel particle filter, deactivate the regeneration block as soon as possible (▷ page 214).
[icon] Manual regeneration not possible	Supplementary text [▸≡]: Requirements for manual regeneration have not been fulfilled. Please observe Operating Instructions. Regeneration of the diesel particle filter is not possible. One or more requirements have not been fulfilled. ▶ Observe the activation conditions and requirements for manual regeneration of the diesel particle filter (▷ page 214).

https://truckmanualshub.com/

Transmission and clutch

Display messages	Possible causes/consequences and ▶ Solutions
Clutch under heavy strain	The clutch is under a heavy load but not overloaded. You should only pull away in first gear. ▶ Keep the pulling away or manoeuvring procedure as brief as possible.
Fold down clutch pedal	Vehicles with Telligent® automatic gearshift: the automatic clutch operating mechanism is malfunctioning. The warning buzzer also sounds. ▶ Fold out the clutch pedal (▷ page 181). ▶ Depress the clutch pedal briefly. ▶ To drive, depress the clutch pedal and change gear manually. Observe the additional information in the "Telligent® gearshift" section (▷ page 168). ▶ Have the transmission checked at a qualified specialist workshop.

Service products

Display messages	Possible causes/consequences and ▶ Solutions
	The washer fluid level in the headlamp washer fluid reservoir has dropped to approximately 1 litre. ▶ Top up washer the fluid reservoir (▷ page 296).

Yellow event window

Note

Important safety notes

If you ignore warning and indicator lamps and the event window, you will not be able to recognise failures and malfunctions in components or systems. Driving/braking characteristics may be affected and the operating and road safety of your vehicle may be limited. Have the affected system checked and repaired at a qualified specialist workshop. Always observe the warning lamps and event window and follow the corresponding measures.

Yellow event window

With a malfunction/notification of medium priority, the on-board computer displays a yellow event window. The on-board computer displays a yellow event window, e.g. if you have not performed the service work due. The on-board computer also displays a yellow event window for special operating conditions, e.g. if the diesel particle filter is saturated or if the clutch is under heavy load. If further information about the malfunction/notification is available, the event window displays the symbol. You can display the information using the

https://truckmanualshub.com/

button on the multifunction steering wheel. Observe the information and instructions in the event window.

BlueTec® exhaust gas aftertreatment

Display messages	Possible causes/consequences and ▶ Solutions
AdBlue reserve	Supplementary text: Please top up AdBlue. The AdBlue® level has dropped to approximately 10%. ▶ Refill the AdBlue® tank as soon as possible (▷ page 218). Otherwise, engine output may be reduced.
AdBlue reserve	Supplementary text: Please top up with AdBlue. Risk of reduction in engine power Additionally, the on-board computer displays the indicator lamp in the status area. The AdBlue® level has dropped to approximately 7.5%. ▶ Refill the AdBlue® tank as soon as possible (▷ page 218). Otherwise, engine output may be reduced and, also, speed may be limited to approximately 20 km/h.
AdBlue very low	Supplementary text: Please top up with AdBlue. Reduction in engine power after stopping Additionally, the on-board computer displays the indicator lamp in the status area. The AdBlue® level has dropped to approximately 5%. ▶ Refill the AdBlue® tank as soon as possible (▷ page 218). Otherwise, engine output will be reduced the next time the engine is started.
AdBlue empty	Supplementary text: Please top up with AdBlue Risk of limit speed In addition, the on-board computer displays the indicator lamp in the status area. The AdBlue® level has dropped to approximately 2.5%. The engine power output is reduced. ▶ Adapt your driving style accordingly. ▶ Refill the AdBlue® tank as soon as possible (▷ page 218). Otherwise, speed may be limited to approximately 20 km/h.
AdBlue empty	Supplementary text: Please top up AdBlue. Additionally, the on-board computer displays the indicator lamp in the status area. The AdBlue® level has dropped to approximately 0%. The engine power output is reduced. ▶ Adapt your driving style accordingly. ▶ Refill the AdBlue® tank as soon as possible (▷ page 218).

https://truckmanualshub.com/

Display messages	Possible causes/consequences and ▶ Solutions
Engine power reduced	Supplementary text: Please top up with AdBlue Risk of limit speed Additionally, the on-board computer displays the indicator lamp in the status area. The AdBlue® level has dropped to approximately 2.5%. The engine power output is reduced. ▶ Adapt your driving style accordingly. ▶ Refill the AdBlue® tank as soon as possible (▷ page 218). Otherwise, speed may be limited to approximately 20 km/h.
Limit speed	Supplementary text: Please top up AdBlue. Additionally, the on-board computer displays the indicator lamp in the status area and the indicator lamp lights up in the instrument cluster. The AdBlue® level has dropped to approximately 0%. Vehicle speed is limited to approximately 20 km/h. ▶ Adapt your driving style accordingly. ▶ Refill the AdBlue® tank as soon as possible (▷ page 218).
Diesel particle filter: raised fill level	Supplementary text: Please start regeneration Please observe Operating Instructions The indicator lamp also lights up yellow in the instrument cluster. The diesel particle filter is in need of regeneration. Depending on your operation of the vehicle, within the next four hours: ▶ Deactivate the regeneration block (▷ page 214) and drive on a motorway or for a long distance until the indicator lamp goes out. or ▶ Start manual regeneration (▷ page 214).

https://truckmanualshub.com/

Display messages	Possible causes/consequences and ▶ Solutions
Diesel particle filter full	Supplementary text: Please start regeneration at once Press and hold regeneration switch for 3 s while vehicle is stationary Please observe Operating Instructions The indicator lamp also lights up yellow in the instrument cluster. The diesel particle filter is in need of regeneration. Depending on your operation of the vehicle, within the next 30 minutes: ▶ Deactivate the regeneration block (▷ page 214) and drive on a motorway or for a long distance until the indicator lamp goes out. or ▶ Start manual regeneration as soon as possible (▷ page 214). Otherwise, engine output may be reduced.
Diesel particle filter full Engine power reduced	Supplementary text: Please start regeneration at once Press and hold regeneration switch for 3 s while vehicle is stationary Please observe Operating Instructions The indicator lamp also flashes yellow in the instrument cluster. The diesel particle filter is in immediate need of regeneration and this is the last possibility for it to be started manually. ▶ Start manual regeneration as soon as possible (▷ page 214). Otherwise, the diesel particle filter can only be cleaned or exchanged at a qualified specialist workshop.

https://truckmanualshub.com/

Service products and maintenance

Display messages	Possible causes/consequences and ▶ Solutions
	The fuel has dropped to the reserve level. ▶ Refill the fuel tank (▷ page 216).
Steering fluid too low	The indicator lamp lights up yellow in the status area of the on-board computer as well as in the event window. The oil level in the reservoir has dropped to the minimum level (▷ page 297). ▶ Have the steering checked immediately at a qualified specialist workshop.
Example:Brakes Axle 1 Maintenance due immediately	The indicator lamp lights up yellow in the status area of the on-board computer as well as in the event window. The service work due has not been performed. The wear limit of the brake pads/linings and/or brake discs has been exceeded. ⚠ **WARNING** The vehicle's driving and braking characteristics may change. There is a risk of an accident. ▶ Have the brake pads/linings replaced as soon as possible at a qualified specialist workshop.

https://truckmanualshub.com/

Compressed-air system, engine and cooling system

Display messages	Possible causes/consequences and ▶ Solutions
Condensation in compressed-air reservoir	There is too much condensation in the compressed-air braking system and/or the compressed-air dryer is malfunctioning. ⚠ **WARNING** If the condensation level in the compressed-air reservoir is too high or the condensed water freezes, the braking effect may be reduced. The compressed-air brake system can also fail completely. There is a risk of an accident. ▶ Draining the compressed-air brake system (▷ page 304). ▶ If more than 4 cl of condensed water escapes or if the malfunction occurs regularly: have the compressed-air braking system and compressed-air dryer checked at a qualified specialist workshop.
Transmission/ clutch reserve pressure too low	The reservoir pressure in the transmission/clutch is too low. ⚠ **WARNING** The gears can no longer be changed properly. There is a risk of an accident. ▶ Stop the vehicle as quickly as possible, paying attention to traffic conditions. ▶ Apply the parking brake. ▶ Let the engine run until the event window goes out and the reservoir pressure has reached an adequate level. ▶ If the malfunction occurs regularly, have the compressed-air system checked at a qualified specialist workshop.
! Drive control faulty	Supplementary text [▸≡]: Visit workshop. The electronic drive control is malfunctioning. ▶ Observe the instructions in the event window.

https://truckmanualshub.com/

Display messages	Possible causes/consequences and ▶ Solutions
Engine faulty	One of the following systems is malfunctioning: • engine • engine cooling • engine management • diesel injection system ▶ Have the systems checked at a qualified specialist workshop.
Coolant temperature too high	The coolant temperature is too high. Engine power output is automatically reduced. ▶ Reduce the speed. ▶ Shift to a lower gear. ▶ Remove objects that could block the air supply to the engine radiator, e.g. paper which has flown onto the grille.

Transmission and clutch

Display messages	Possible causes/consequences and ▶ Solutions
Transmission faulty	Supplementary text: Visit workshop. ⚠ **WARNING** The transmission gearshift system is malfunctioning. The journey can be continued, but with restrictions. ▶ Have the transmission checked at a qualified specialist workshop.
Clutch faulty	Supplementary text: Visit workshop. ⚠ **WARNING** The clutch is malfunctioning. The journey can be continued, but with restrictions. ▶ Have the clutch checked at a qualified specialist workshop.
Clutch under heavy strain	The permissible operating temperature of the clutch has been reached. There is a risk of clutch damage if placed under further load. ▶ Engage a lower gear when manoeuvring or pulling away. ▶ Complete the pulling away or manoeuvring process as quickly as possible. Otherwise, the clutch will be overloaded.

https://truckmanualshub.com/

Lighting system and electrical system

Display messages	Possible causes/consequences and ▶ Solutions
Generator is not charging battery.	Supplementary text : Visit workshop. ⚠ **Risk of accident** The indicator lamp lights up yellow in the status area of the on-board computer as well as in the event window. The alternator is faulty or the poly-V-belt has torn. The vehicle's driving and braking characteristics may change. ▶ Stop the vehicle as quickly as possible, paying attention to traffic conditions. ▶ Consult a qualified specialist workshop.
Instrument cluster display and controls faulty	⚠ **Risk of accident** The CAN connection to the instrument cluster is interrupted. The display in the on-board computer can no longer show important information about the operating and road safety of the vehicle. ▶ Stop the vehicle as quickly as possible, paying attention to traffic conditions. ▶ Consult a qualified specialist workshop.
	A short circuit in the lighting system has been detected. ▶ Consult a qualified specialist workshop.

Tyres

Display messages	Possible causes/consequences and ▶ Solutions
Tyre pressure control system restricted	Supplementary text : Visit workshop. The tyre pressure control system is malfunctioning. It is possible that the tyre pressure has decreased in one or more of the tyres. ⚠ **WARNING** The driving and braking characteristics are affected. There is a risk of an accident. ▶ Stop the vehicle without steering or braking suddenly. Pay attention to the traffic conditions. ▶ Check the tyres for damage. ▶ Check the compressed-air line for leaks. ▶ If necessary, change the tyre (▷ page 323). ▶ Have faults in the tyre pressure control system repaired at a qualified specialist workshop immediately.

https://truckmanualshub.com/

Hydraulic system

Display messages	Possible causes/consequences and ▶ Solutions
Working hydraulics: oil level too low	Supplementary text: Working hydraulics: top up oil or switch off engine The working hydraulics oil level has fallen below the normal level. The operating safety of the working hydraulics is jeopardised. ▶ Stop the vehicle as quickly as possible, paying attention to traffic conditions. ▶ Switch off the engine. ▶ Apply the parking brake. ▶ Check the working hydraulics oil level and top up the oil (▷ page 298).
Power hydraulics: oil level too low	Supplementary text: Power hydraulics: top up oil The power hydraulics oil level has fallen below the normal level. The operating safety of the power hydraulics is jeopardised. ▶ Stop the vehicle as quickly as possible, paying attention to traffic conditions. ▶ Switch off the engine. ▶ Apply the parking brake. ▶ Check the power hydraulics oil level and top up the oil (▷ page 299).

Red event window

Note

Important safety notes

If you ignore warning and indicator lamps and the event window, you will not be able to recognise failures and malfunctions in components or systems. Driving/braking characteristics may be affected and the operating and road safety of your vehicle may be limited. Have the affected system checked and repaired at a qualified specialist workshop. Always observe the warning lamps and event window and follow the corresponding measures.

Red event window

For a malfunction of high priority, the on-board computer shows a red event window. The on-board computer shows a red event window, e.g. for low brake reservoir pressure. Stop the vehicle as soon as possible, while paying attention to the traffic conditions and contact a qualified specialist workshop. If further information about the malfunction is available, the event window displays the symbol. You can display the information using the button on the multifunction steering wheel. Observe the information and instructions in the event window.

https://truckmanualshub.com/

BlueTec® exhaust gas aftertreatment

Display messages	Possible causes/consequences and ▶ Solutions
Diesel particle filter full	Supplementary text : Stop vehicle. Consult service centre. Regeneration is no longer possible. The indicator lamp also lights up red in the instrument cluster. The diesel particle filter has reached its soot saturation limit. Engine performance is reduced and manual regeneration is no longer possible. ▶ Clean the diesel particle filter as soon as possible or have it replaced at a qualified specialist workshop.

Compressed-air system

Display messages	Possible causes/consequences and ▶ Solutions
Example:Brake supply pressure in circuit 1 too low	In addition, the warning lamp lights up red in the instrument cluster. The reservoir pressure in brake circuit 1 or 2 is too low. If the reservoir pressure in the spring actuator and the trailer's brake circuit is too low, the event window shows the symbol. Possible causes: • too much compressed air has been consumed. • there is a leak in the compressed-air system. ⚠ **WARNING** The operating and road safety of the vehicle are jeopardised. There is a risk of an accident. ▶ Stop the vehicle as quickly as possible, paying attention to traffic conditions. ▶ Apply the parking brake. ▶ Start the engine. The compressed-air system is charged. If the warning lamp in the instrument cluster goes out: ▶ Continue the journey. If the warning lamp in the instrument cluster does not go out: ▶ Check the compressed-air brake system for leaks (▷ page 163). ▶ If the compressed-air brake system is not leaking, but the warning lamp does not go out: have the compressed-air brake system checked at a qualified specialist workshop.

https://truckmanualshub.com/

Engine and cooling

Display messages	Possible causes/consequences and ▶ Solutions
Engine oil pressure too low	Supplementary text: Stop vehicle. Switch off engine. The indicator lamp lights up red in the status area of the on-board computer as well as in the event window. The engine oil pressure is too low. The operating safety of the engine is jeopardised. ▶ Stop the vehicle as quickly as possible, paying attention to traffic conditions. ▶ Switch off the engine. ▶ Apply the parking brake. ▶ Check the engine oil level (▷ page 125) and top up oil (▷ page 297). ▶ Consult a qualified specialist workshop.
Coolant level too low	Supplementary text: Top up coolant. The indicator lamp lights up in the status area of the on-board computer as well as in the event window. As long as the indicator lamp is lit, the coolant temperature cannot be displayed. The coolant level has dropped to approximately 1 litre below the normal filling level. The operating safety of the engine is jeopardised. ▶ Stop the vehicle as quickly as possible, paying attention to traffic conditions. ▶ Switch off the engine. ▶ Apply the parking brake. ▶ Top up the coolant (▷ page 293). ▶ Have the engine cooling system checked for leaks at a qualified specialist workshop.

https://truckmanualshub.com/

Transmission and clutch

Display messages	Possible causes/consequences and ▶ Solutions
Clutch faulty	Supplementary text : Stop vehicle. Contact service centre. ⚠ **WARNING** The transmission no longer changes gear. The reservoir pressure in the transmission/clutch may be too low. ▶ Stop the vehicle as quickly as possible, paying attention to traffic conditions. ▶ Apply the parking brake. ▶ **If the** Transmission/clutch reserve pressure too low **event window is displayed:** start the engine and let it run until there is adequate reservoir pressure in the transmission circuit/clutch circuit. The Transmission/clutch reserve pressure too low event window goes out. ▶ Switch off the engine. ▶ Start the engine again after approximately ten seconds. ▶ **If the** Clutch faulty Stop vehicle. Contact service centre. **event window is displayed again:** activate backup drive mode (▷ page 120). ▶ **If backup drive mode cannot be activated:** consult a qualified specialist workshop.
Transmission faulty	Supplementary text : Park vehicle safely. Gears can only be changed in backup drive mode. ⚠ **WARNING** The transmission gearshift system is malfunctioning. ▶ Activate backup drive mode (▷ page 120). ▶ Move the vehicle to a safe position. ▶ Stop the vehicle as quickly as possible, paying attention to traffic conditions. ▶ Apply the parking brake. ▶ Consult a qualified specialist workshop.
	The oil temperature of the torque converter clutch is too high. ▶ Shift to a lower gear. The oil temperature decreases, as soon as the torque converter clutch engages. The indicator lamp in the status area of the on-board computer goes out.

https://truckmanualshub.com/

Display messages	Possible causes/consequences and ▶ Solutions
	The oil temperature does not decrease: ▶ Stop the vehicle, paying attention to road and traffic conditions. ▶ Apply the parking brake. ▶ Check the oil level and top up the engine oil if necessary (▷ page 296). ▶ Shift into neutral. ▶ Let the engine run for around one minute at approximately 1200 rpm. The oil temperature still does not decrease: ▶ Consult a qualified specialist workshop.

Braking and driving systems

Display messages	Possible causes/consequences and ▶ Solutions
(P) Engage parking brake.	The parking brake is not applied. The vehicle was parked with a gear engaged and the parking brake released. A warning tone also sounds. ⚠ **WARNING** The parked vehicle could roll away. You could endanger yourself and others. There is a risk of an accident. ▶ Apply the parking brake.
(P) Engage parking brake.	Vehicles with a programmable special module: the parking brake is not applied. The parking brake has not been applied before engaging the power take-off. ⚠ **WARNING** The parked vehicle could roll away. You could endanger yourself and others. There is a risk of an accident. ▶ Apply the parking brake before engaging the power take-off.

https://truckmanualshub.com/

Display messages	Possible causes/consequences and ▶ Solutions
Increased brake force and pedal travel	Supplementary text : Stop vehicle. Contact service centre. In addition, the warning lamp lights up red in the instrument cluster. Full braking power may not be available. ⚠ **WARNING** Driving and braking characteristics are affected. The operating and road safety of the vehicle are jeopardised. There is a risk of an accident. ▶ Carefully bring the vehicle to a standstill and park it safely. ▶ Apply the parking brake. ▶ Consult a qualified specialist workshop.
Driving and braking characteristics changed	Supplementary text : Stop vehicle. Contact service centre. In addition, the warning lamp lights up red in the instrument cluster. The vehicle's brake system is malfunctioning. ⚠ **WARNING** Driving/braking characteristics may change. There is a risk of an accident. ▶ Carefully bring the vehicle to a standstill and park it safely. ▶ Apply the parking brake. ▶ Consult a qualified specialist workshop.

Tyres

Display messages	Possible causes/consequences and ▶ Solutions
Check tyre pressure	The tyre pressure has dropped in one or more tyres. ⚠ **WARNING** The driving and braking characteristics are affected. There is a risk of an accident. ▶ Stop the vehicle without steering or braking suddenly. Pay attention to the traffic conditions. ▶ Check the tyres for damage. ▶ Check the compressed-air line for leaks. ▶ Check the tyre pressure and correct it if necessary. ▶ If necessary, change the tyre (▷ page 323).

https://truckmanualshub.com/

Hydrostatic drive system

Display messages	Possible causes/consequences and ▶ Solutions
Hydrostatic drive malfunctioning Operate the brake	Supplementary text: Visit workshop. The hydrostatic drive system has been deactivated due to a malfunction (overheating, damage, short circuit) and no longer exerts any force. ▶ Stop the vehicle as quickly as possible, paying attention to traffic conditions. ▶ Switch off the engine. ▶ Apply the parking brake. ▶ Check the components of the hydrostatic drive system for external damage. ▶ Consult a qualified specialist workshop.

Warning/indicator lamps in the status area of the on-board computer

Important safety notes

If you ignore warning and indicator lamps, you will not be able to recognise failures and malfunctions in components or systems. Driving/braking characteristics may be affected and the operating and road safety of your vehicle may be limited. Have the affected system checked and repaired at a qualified specialist workshop. Always observe the warning and indicator lamps and follow the corresponding measures.

Overview

If there is a fault, warning or operating information, a warning lamp or indicator lamp lights up in status area ① of the on-board computer. The warning lamp/indicator lamp lights up in a different colour, depending on the priority of the fault, warning or the operating information. The warning lamp/indicator lamp may also light up in addition to an event window.

	Warning and indicator lamps
	An emissions-relevant malfunction in the BlueTec® exhaust gas aftertreatment system or low AdBlue® supply (▷ page 113)
	Engine oil pressure too low (▷ page 140)
	Engine oil level too low, top up engine oil (▷ page 297)
	Battery charge level too low
	Power supply malfunction (▷ page 137)
	Maintenance due date (▷ page 134)
	Oil level in the steering is too low (▷ page 134)

https://truckmanualshub.com/

	Warning and indicator lamps
	Transmission-driven power take-off engaged (▷ page 265) Engine-driven power take-off engaged (▷ page 265)
	Continuous brake malfunction (▷ page 167)
	ABS status message: shown with , or for tractor vehicle and/or trailer (▷ page 164)
	ABS malfunction, trailer (see manufacturer's operating instructions)
	Brake system malfunction, trailer (▷ page 146)
	Brake wear (tractor vehicle) (▷ page 134)
	Four-wheel parking brake applied (▷ page 166)
	Direction of travel selection, backwards, Telligent® gearshift (▷ page 169), Telligent® automatic gearshift (▷ page 175)
	Coolant level too low
	Auxiliary headlamp activated (▷ page 78)
	ABS off-road program activated (▷ page 165)
	Front PTO shaft activated (▷ page 268)
	Snow plough load relief activated (▷ page 248)
	Vehicle tipper platform raised (▷ page 277)
	The torque converter lock-up clutch is open (▷ page 185)

	Warning and indicator lamps
	The oil level in the torque converter clutch is too low (▷ page 296)
	On-board voltage too low (▷ page 225)
	Engine speed mode has been activated manually (▷ page 262)
	Rotating beacons or strobe lights activated (▷ page 79)
	Driving with the control lever in the hydrostatic drive system (▷ page 207)
	Raising/lowering the tipper platform with the control lever (▷ page 278)

https://truckmanualshub.com/

Yellow warning or indicator lamp

Problem	Possible causes/consequences and ▶ Solutions
The [ⓘ] indicator lamp in the status area of the on-board computer lights up yellow.	⚠ **Risk of accident** The trailer's brake system is malfunctioning. Driving/braking characteristics may change. Observe the notes on trailers (see the manufacturer's separate operating instructions). ▶ Drive on carefully. ▶ Have the brake system checked at a qualified specialist workshop.

Red warning or indicator lamp

Problem	Possible causes/consequences and ▶ Solutions
The [ⓘ] indicator lamp in the status area of the on-board computer lights up red.	⚠ **Risk of accident** The trailer's brake system is malfunctioning or the trailer is automatically braked. Driving/braking characteristics may change. Observe the notes on trailers (see the manufacturer's separate operating instructions). ▶ Brake carefully and stop the vehicle, paying attention to road and traffic conditions. ▶ Apply the parking brake. ▶ Consult a qualified specialist workshop.

https://truckmanualshub.com/

Important safety notes 148
General notes 148
Anti-theft protection 148
Operating system 150
Bluetooth® settings 153

https://truckmanualshub.com/

Important safety notes

⚠ **WARNING**

The CD/DVD drive is a class 1 laser product. If you open the housing of the CD/DVD drive, invisible laser beams may be released. These laser beams may damage your retina. There is a risk of injury.

Do not open the housing. Always have maintenance work and repairs carried out at a qualified specialist workshop.

⚠ **WARNING**

Handling discs while driving will distract you from traffic conditions. You could then lose control of the vehicle. There is a risk of an accident.

Handle discs only when the vehicle is stationary.

⚠ **WARNING**

Operating the integrated information systems and communications equipment in the vehicle while driving will distract you from traffic conditions. You could then lose control of the vehicle. There is a risk of an accident.

Only operate these devices if road traffic conditions permit. If you are unsure about the surrounding conditions, pull over to a safe location and make entries only while the vehicle is stationary.

You must observe the legal requirements for the country in which you are currently driving when operating the system.

⚠ **WARNING**

Operating mobile information systems and communications equipment while driving will distract you from traffic conditions. You could then lose control of the vehicle. There is a risk of an accident.

Only operate these devices when the vehicle is stationary.

⚠ **WARNING**

Operating or handling mobile audio/video sources while driving will distract you from traffic conditions. You could then lose control of the vehicle. There is a risk of an accident.

Operate or handle mobile audio/video sources only when the vehicle is stationary.

Only operate mobile audio/video sources via the communications equipment integrated in the vehicle, and if road traffic conditions permit. If this is not the case, pull over to a safe location and make entries only while the vehicle is stationary.

⚠ **WARNING**

If you operate RF transmitters incorrectly in the vehicle, the electromagnetic radiation could interfere with the vehicle electronics, e.g.:

- if the RF transmitter is not connected to an exterior aerial
- the exterior aerial has been fitted incorrectly or is not a low-reflection type

This could jeopardise the operating safety of the vehicle. There is a risk of an accident.

Have the low-reflection exterior aerial fitted at a qualified specialist workshop. When operating RF transmitters in the vehicle, always connect them to the low-reflection exterior aerial.

General notes

These brief instructions only describe the basic operation of your audio system.

All further information on the individual functions can be found on the Internet at www.mercedes-benz.de/betriebsanleitung-lkw.

Anti-theft protection

If the CD radio has been/is disconnected from the battery, the anti-theft protection is

https://truckmanualshub.com/

active. The display of the switched on CD radio shows BLOCKED.

▶ Switch on the ignition.
You can now use the CD radio.

https://truckmanualshub.com/

Operating system

CD radio overview

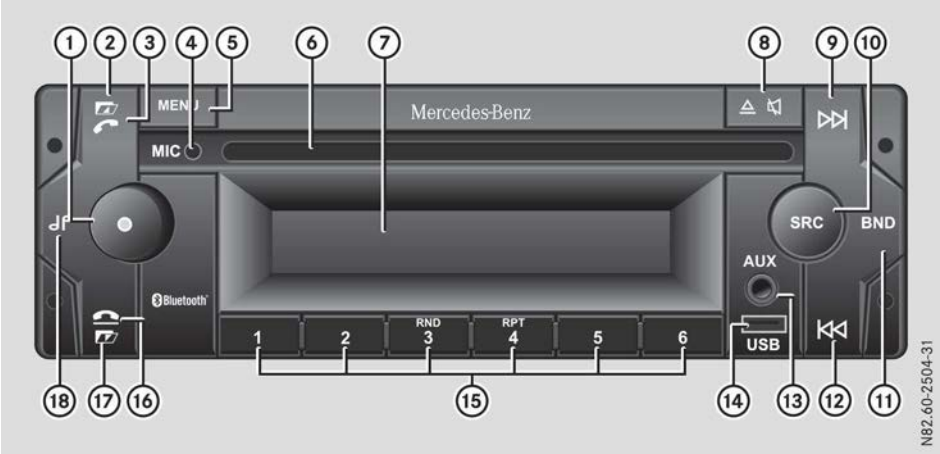

	Function
①	Control knob • Press: Switches on/off • Turn: Sets the volume Changes settings in menus
②	Switches folders in MP3 and USB mode
③	• Press briefly: Accepts a call • Press and hold: Activates Bluetooth® Starts Bluetooth® search Starts Bluetooth® pairing (pairing/external)
④	Microphone for making calls via Bluetooth®

	Function
⑤	MENU • Press briefly: Selects menu: Activates/deactivates the TP function Changes the track time display Activates/deactivates XMUT Switches RDS on/off Sets the type of Bluetooth® pairing • Press and hold: Displays connected mobile phone
⑥	CD drive
⑦	Display
⑧	🔇 ⏏ • Press briefly: Mutes the audio source • Press and hold: Ejects a CD
⑨	▷▷| • Radio: - Press briefly: Station search forwards - Press and hold: Manual station search • CD and USB audio mode: - Press briefly: Skips forward[1] - Press and hold: Fast forward • AUX mode Switches over to a rear AUX port

[1] Also possible in Bluetooth® audio mode.

https://truckmanualshub.com/

	Function
⑩	**SRC** • Press briefly: Selects an audio source: Radio CD playback USB AUX function BT audio (MP3 playback) Exits the menu • Press and hold: Ends the current traffic report
⑪	**BND** • Press briefly: Switches wavebands • Press and hold: Stores stations automatically
⑫	⏮ • Radio: - Press briefly: Station search backwards - Press and hold: Manual station search • CD and USB audio mode: - Press briefly: Skips back[1] - Press and hold: Fast rewind • AUX mode Switches over to a front AUX port
⑬	AUX socket
⑭	Mini USB port

[1] Also possible in Bluetooth® audio mode.

	Function
⑮	[1] to [6] • Radio: - Press briefly: Selects stations from the presets - Press and hold: Stores stations manually • CD and USB audio mode: [RND 3] Activates/deactivates random track [RPT 4] Activates/deactivates track repeat
⑯	[☎] • Press briefly: Ends/rejects an incoming call • Press and hold: Deactivates Bluetooth®
⑰	[◪] Switches folders in MP3 and USB mode
⑱	[♫] • Press briefly: Calls up the sound menu • Press and hold: Resets the sound settings

Function overview

You can use the CD radio to operate the following functions:

- radio, to receive FM and AM (SW, MW, LW) wavebands
- CD, to play WMA and MP3 formats
- play MP3 files, which are saved on USB devices
- make a call
- to play MP3 players which are connected via Bluetooth® (if supported by your device)
- play external devices, which are connected via the AUX jack

Bluetooth® settings

Notes on the Bluetooth® function

Information on compatible mobile phones

Bluetooth® mode via the CD radio is available in conjunction with a Bluetooth®-capable phone.

You can obtain more detailed information about suitable mobile phones and about connecting Bluetooth®-capable mobile phones to the audio system from your Mercedes-Benz Service Centre.

https://truckmanualshub.com/

Requirements for a Bluetooth® connection

The following requirements must be met for the CD radio to detect the mobile phone:

- the mobile phone is located inside the vehicle in the vicinity of the CD radio
- the Bluetooth® function of the CD radio is activated (▷ page 154)
- the mobile phone is prepared for pairing

Switching the Bluetooth® function on or off

Activating the Bluetooth® function

▶ Press and hold the [☎] button.
The display briefly shows BT ON. The ✱ Bluetooth® symbol flashes in the display, and the CD radio automatically searches for mobile phones that have already been paired with the CD radio.

ⓘ The Bluetooth® function will remain activated until you deactivate it again. If you switch off the CD radio, the Bluetooth® connection will be ended. If you switch it on, the CD radio re-establishes the connection.

Deactivating the Bluetooth® function

▶ Press and hold the [☎] button.
The display briefly shows BT OFF. The connection to the mobile phone is ended.

Pairing a mobile phone

Pairing the mobile phone via Bluetooth® pairing

▶ Press the [MENU] button repeatedly until the display shows BT PAIR or BT EXT.

▶ Turn the control knob anti-clockwise.
The display shows BT PAIR.

▶ **To exit the menu:** press the **SRC** button or wait 10 seconds.

▶ **To start a search for mobile phones:**
Press and hold the [☎] button.
The ✱ Bluetooth® symbol flashes in the display. The CD radio searches for mobile phones within range for a certain period of time. At the end of the search, a tone sounds.
If at least one mobile phone is found, the display briefly shows BT LIST and then the device name(s) of the mobile phone(s).

ⓘ If the CD radio does not find a mobile phone, the display briefly shows BT LIST EMPTY.

▶ Select the desired mobile phone using the [⏮] or [⏭] button.

▶ Press and hold the [☎] button.

- Using the number keys, enter an easily-remembered number consisting of one to six digits (e.g. 1111).
- Press and hold the mute button.
  The CD radio is ready to pair with the mobile phone.
- On the mobile phone, select the Bluetooth® device name **MB-Bluetooth**.
- On the mobile phone, enter the number you dialled previously.
  The CD radio connects to the mobile phone. When the connection is established, the display briefly shows PAIR OK.
- Confirm any possible query points via the mobile phone.
  Telephone data are transferred from the mobile phone to the CD radio. When the transfer is complete, the display continuously shows the current audio source and the Bluetooth® symbol.

Pairing the mobile phone via external Bluetooth®

- Press the MENU button repeatedly until the display shows BT PAIR or BT EXT.
- Turn the control knob clockwise.
  The display shows BT EXT.

- **To exit the menu:** press the **SRC** button or wait 10 seconds.
- **To prepare the CD radio for searching:**
  Press and hold the button.
  The Bluetooth® symbol flashes in the display.

- Using the number keys, enter an easily-remembered number consisting of one to six digits (e.g. 1111).
- Press and hold the button until a tone sounds.
  The CD radio is ready to pair with the mobile phone.
- On the mobile phone, start a search for Bluetooth® devices. See the manufacturer's operating instructions.
- On the mobile phone, select the Bluetooth® device name **MB-Bluetooth**.
- On the mobile phone, enter the number you dialled previously.
  The CD radio connects to the mobile phone. When the connection is established, the display briefly shows PAIR OK.
- Confirm any possible query points via the mobile phone.
  Telephone data are transferred from the mobile phone to the CD radio. When the transfer is complete, the display continuously shows the current audio source and the Bluetooth® symbol.

https://truckmanualshub.com/

https://truckmanualshub.com/

Useful information 158
Driving 158
Brakes 163
Telligent® gearshift 168
Telligent® automatic gearshift 174
Shifting gears 182
Driving mode 185
Driving systems 191
Hydrostatic drive system 198
Driving tips 208
Refuelling 216
Trailer 219
Winter operation 221

https://truckmanualshub.com/

Useful information

These Operating Instructions describe all the models and standard and optional equipment of your vehicle that were available at the time of going to print. Country-specific differences are possible. Bear in mind that your vehicle may not be equipped with all the functions described. This also applies to safety-relevant systems and functions.

Read the information on qualified specialist workshops (▷ page 30).

Driving

Preparing for a journey

Visual and function check outside the vehicle

Before you pull away, carry out the following checks on the towing vehicle and the trailer:

- ▶ Check the exterior lighting (▷ page 77).
- ▶ Replace faulty bulbs (▷ page 79).
- ▶ Check that the licence plate, vehicle lighting, turn signal and brake lamps are clean and free of damage.
- ▶ Check the tyre pressures, tyres and wheels for firm seating and general condition.
- ▶ Check the tyres for sufficient tread depth. When doing so, observe the country-specific regulations regarding minimum tyre tread depth.
- ▶ Check tyres and wheels for visible damage and tears.
- ▶ Make sure that the vehicle is loaded correctly.
- ▶ Make sure that the dropsides and exterior flaps are locked securely and not damaged.
- ▶ Check the condition of the contour markings at all attachments and bodies.
- ▶ In wintry conditions, remove snow and accumulations of ice from the tractor vehicle and trailer/semitrailer.
- ▶ Make sure that trailer cables and compressed-air lines are connected correctly (▷ page 220).
- ▶ Make sure that the trailer coupling is locked and secured correctly.

  Observe the operating instructions issued by the manufacturer for the operation, care and maintenance of the trailer coupling.

Have all faults and damage rectified. If necessary, have the causes determined and rectified at a qualified specialist workshop.

Visual and function check in the vehicle

General notes

Please note that all electronic systems in the vehicle only serve to assist you. They do not relieve you of the obligation to carry out a visual inspection of the vehicle and the trailer before starting a journey.

Emergency equipment/first-aid kit

You will find an overview of emergency equipment and first-aid kits in the "Breakdown assistance" section (▷ page 312).

- ▶ Check the emergency equipment to make sure that it is accessible, complete and ready for use.

  These are, for example:

  - first-aid kit
  - warning triangle
  - warning beacon
  - fire extinguisher
- ▶ At regular intervals, check that the first-aid kit is usable. Note the use-by dates of the contents.
- ▶ Have the fire extinguisher checked every one to two years.
- ▶ The fire extinguisher must be refilled after each use.

In some countries, it is a legal requirement to carry additional emergency equipment on board, e.g. a breathalyser. Observe the legal requirements regarding emergency equip-

ment in all countries concerned. Supplement your emergency equipment accordingly.

Checking the fuel/AdBlue® supply

- Check the fuel level/AdBlue® level shown on the fuel gauge (▷ page 111) and on the AdBlue® gauge (▷ page 111).
- If necessary, refuel (▷ page 216) and top up the AdBlue® (▷ page 218).

Checking the engine oil level

- Check the engine oil level before every journey and top up the engine oil if necessary (▷ page 297).

The engine oil level is not displayed while the engine is running.

Ignition lock

⚠ WARNING

If you attach heavy or large objects to the key, the key could be unintentionally turned in the ignition lock. This could cause the engine to be switched off. There is a risk of an accident.

Do not attach any heavy or large objects to the key. Remove any bulky keyrings before inserting the key into the ignition lock.

⚠ WARNING

If you switch off the ignition while driving, safety-relevant functions are only available with limitations, or not at all. This could affect, for example, the power steering and the brake boosting effect. You will require considerably more effort to steer and brake. There is a risk of an accident.

Do not switch off the ignition while driving.

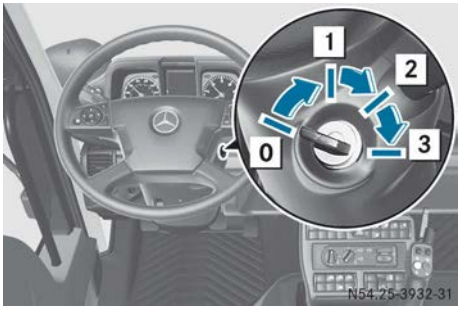

0 To insert/remove the vehicle key
1 Steering wheel unlocked/radio position
2 Drive position; ignition is switched on
3 Start position

Before driving off

Important safety notes

⚠ WARNING

If objects, luggage or loads are not secured or not secured sufficiently, they could slip, tip over or be flung around and thereby hit vehicle occupants. There is a risk of injury, especially when braking or abruptly changing directions.

Always store objects so that they cannot be flung around. Secure objects, luggage or loads against slipping or tipping before the journey.

⚠ WARNING

Objects in the driver's footwell can impede pedal travel or block a pedal which is depressed. This jeopardises safe operation of the vehicle. There is a risk of an accident.

Stow all objects in the vehicle safely, so that they cannot reach the driver's footwell. Make sure the floormats and carpets are properly secured so that they cannot slip and obstruct the pedals. Do not lay several floormats or carpets on top of one another.

https://truckmanualshub.com/

⚠ **WARNING**

Unsuitable footwear can hinder correct usage of the pedals, e.g.:

- shoes with thick soles
- shoes with high heels
- slippers

There is a risk of an accident.

Wear suitable footwear to ensure correct usage of the pedals.

⚠ **WARNING**

If you load the vehicle unevenly, driving characteristics such as steering and braking behaviour may be severely impaired. There is a risk of an accident.

Load the vehicle evenly. Secure the load so that it cannot slip.

Driving, braking and steering characteristics change depending on:

- type of load
- weight
- the centre of gravity of the load

▶ Close all doors.

▶ Make sure that the floormats and carpets are properly secured so that they cannot slip and obstruct the pedals

Starting the engine

⚠ **WARNING**

If children are left unsupervised in the vehicle, they could:

- open doors, thereby endangering other persons or road users
- get out and be struck by oncoming traffic
- operate vehicle equipment and become trapped, for example

In addition, the children could also set the vehicle in motion, for example, if they:

- release the parking brake
- shift the transmission to neutral
- start the engine

There is a risk of an accident and injury.

When leaving the vehicle, always take the key with you and lock the vehicle. Never leave children and animals unattended in the vehicle. Keep the keys out of the reach of children.

⚠ **WARNING**

Combustion engines emit poisonous exhaust gases such as carbon monoxide. Inhaling these exhaust gases leads to poisoning. There is a risk of fatal injury. Therefore never leave the engine running in enclosed spaces without sufficient ventilation.

⚠ **WARNING**

Flammable materials introduced through environmental influence or by animals can ignite if in contact with the exhaust system or parts of the engine that heat up. There is a risk of fire.

Carry out regular checks to make sure that there are no flammable foreign materials in the engine compartment or in the exhaust system.

! If the engine oil pressure is too low, the on-board computer will display the [ ] symbol in a red event window. Additionally, the warning buzzer will sound.

The operating safety of the engine is jeopardised. Switch off the engine immediately.

Observe the information and instructions on this event window in the "On-board computer and displays" section (▷ page 140).

▶ Depress the brake pedal or apply the parking brake.

▶ Turn the key to position **2** in the ignition lock.

The display check for the instrument cluster starts. The display check in the instrument cluster allows you to see what equipment is connected and if it has developed any faults.

The immobiliser is deactivated and the engine can be started. If you use an invalid

key, the on-board computer will show an event window. Use a valid spare key.

▶ Check the engine oil level (▷ page 125).

▶ Shift into neutral.

▶ Make sure that the engine-driven power take-off is disengaged (▷ page 265).

▶ Make sure that the front PTO shaft is disengaged (▷ page 268).

▶ Turn the key to start position **3** in the ignition lock. Do not depress the accelerator pedal whilst doing so.

▶ If the engine starts normally, release the key.
The idling speed is controlled automatically.

ℹ The engine idling speed is raised at very low outside temperatures or during regeneration of the diesel particle filter.

The starting procedure is automatically cancelled after approximately 60 seconds.

▶ If the engine fails to start: rectify the cause of the poor starting characteristics.

Possible causes of poor starting characteristics are, for example:

- a blocked fuel filter
- an empty fuel tank (▷ page 216)
- fuel system not bled (▷ page 322)

▶ Repeat the starting procedure.

▶ If the engine still fails to start, contact a qualified specialist workshop.

Safety inspection

Checking the reservoir pressure in the compressed-air brake system

⚠ **WARNING**

It is not possible to brake the vehicle if the compressed-air brake system has a leak or if there insufficient reservoir pressure. There is a risk of an accident.

Do not pull away until the required reservoir pressures have been reached.

In the event of loss of pressure while driving, immediately bring the vehicle to a halt in accordance with the traffic conditions. Secure the vehicle using the parking brake. Have the compressed-air system repaired at a qualified specialist workshop.

▶ Start the engine.

▶ Leave the engine running until the (!) warning lamp in the instrument cluster goes out.

▶ Call up the Reserve pressure menu window (▷ page 124) and check the current reservoir pressure.

Observe the event window in the on-board computer and the indicator lamps in the status area of the on-board computer/instrument cluster on the reservoir pressure and the compressed-air brake system.

Checking the reservoir pressure in the transmission/clutch circuit

⚠ **WARNING**

If there is a loss of pressure or insufficient reservoir pressure in the transmission/clutch circuit, you can no longer shift gears. There is a risk of an accident.

Do not pull away, or stop the vehicle as soon as possible, paying attention to road and traffic conditions. Secure the vehicle against rolling away, e.g. with the parking brake. Have the compressed-air system repaired at a qualified specialist workshop.

The reservoir pressure in the transmission/clutch circuit is supplied once brake circuits 1 and 2 have been charged.

If the reservoir pressure in the transmission/clutch circuit is too low, the on-board computer displays the yellow Transmission/clutch reserve pressure too lowevent window.

▶ Start the engine.

▶ Leave the engine running until the yellow Transmission/clutch

https://truckmanualshub.com/

reserve pressure too low event window in the on-board computer goes out.

Pulling away

! Do not pull away as soon as the engine starts. Let the engine run in neutral for a short time after starting, until there is sufficient engine oil pressure. Do not drive at high engine speeds when the engine is cold.

This will prevent excessive wear and possible engine failure.

You should pay particularly close attention to road conditions as soon as temperatures approach freezing.

There is a delay in displaying a change in outside temperature.

If the brake system is faulty, the braking characteristics can change or the brake system can fail. If you notice a reduction in braking power when testing the brakes, stop the vehicle as soon as possible in accordance with traffic conditions. Have the brake system checked and repaired in a qualified specialist workshop.

If you ignore warning lamps and messages on the instrument cluster, you will not be able to recognise failures and malfunctions affecting the brake system components and systems. Braking characteristics may change. The pedal travel and pedal force required to brake the vehicle may increase. Have the brake system checked and repaired at a qualified specialist workshop. Always pay attention to the warning lamps and messages in the instrument cluster.

- Engage a gear, Telligent® gearshift (▷ page 168)/Telligent automatic gearshift (▷ page 174).
- Release the brake pedal or parking brake and slowly depress the accelerator pedal.
- When starting a journey, carry out a brake test. Observe the road and traffic conditions when doing so.

Warm up the engine quickly by driving at moderate engine speeds. After approximately 10 to 20 minutes, the engine will reach its operating temperature between approximately 85 and 100 °C.

You can utilise the full engine power output once the engine has reached its normal operating temperature.

Stopping and switching off the engine

⚠ **WARNING**

Flammable material such as leaves, grass or twigs may ignite if they come into contact with hot parts of the exhaust system or exhaust gas flow. There is a risk of fire.

Park the vehicle so that no flammable material can come into contact with hot vehicle components. In particular, do not park on dry grassland or harvested grain fields.

⚠ **WARNING**

The parking brake may not be sufficient to ensure that the loaded vehicles does not roll away on uphill and downhill gradients. There is a risk of an accident.

In the test position, check whether the parking brake will hold the loaded vehicle. If the vehicle is not held, secure it using other methods, e.g. wheel chocks.

⚠ **WARNING**

If you switch off the ignition while the vehicle is in motion, safety-relevant functions are restricted or not available. This can affect the power steering function and the brake boosting effect, for example. You will then require considerably more force to steer and brake. There is a risk of an accident.

Do not switch off the ignition while the vehicle is in motion.

https://truckmanualshub.com/

⚠ **WARNING**

If you leave children unattended in the vehicle, they could set the vehicle in motion by, for example:

- releasing the parking brake
- shifting the transmission into neutral
- starting the engine

They could also operate the vehicle's equipment and become trapped. There is a risk of an accident and injury.

When leaving the vehicle, always take the key with you and lock the vehicle. Never leave children unattended in the vehicle.

Ensure that you observe the safety notes in the section "Children in the vehicle" (▷ page 51).

▶ Stop the vehicle.

▶ Apply the parking brake.

▶ Shift to neutral.

▶ Let the engine idle for approximately two minutes before switching it off if:
- the coolant temperature is above approximately 100 °C
- full engine power has been used, e.g. while driving in mountainous terrain or during combined operation. This is particularly important when the vehicle is stopped at elevations more than 1,000 m above sea level.

▶ **Vehicle with trailer:** check the parking brake (▷ page 166).

▶ **To switch off the engine:** turn the key to position **0** in the ignition lock and remove it.

▶ Safeguard the vehicle and trailer against rolling away; use chocks if necessary.

Brakes

Brake system

If the brake system is faulty, the braking characteristics can change or the brake system can fail. If you notice a reduction in braking power when testing the brakes, stop the vehicle as soon as possible in accordance with traffic conditions. Have the brake system checked and repaired in a qualified specialist workshop.

If you ignore warning lamps and messages on the instrument cluster, you will not be able to recognise failures and malfunctions affecting the brake system components and systems. Braking characteristics may change. The pedal travel and pedal force required to brake the vehicle may increase. Have the brake system checked and repaired at a qualified specialist workshop. Always pay attention to the warning lamps and messages in the instrument cluster.

If the brake system is malfunctioning, pay attention to the instructions in the yellow (▷ page 135) or red (▷ page 142) event window. In addition to the event window, an indicator lamp may light up in the instrument cluster or the status area of the on-board computer and the warning buzzer may sound.

The brake system is equipped at the factory with the following systems:

- ABS (Anti-lock Braking System)
- ALB (automatic load-dependent brake)

Checking the compressed-air system for leaks

⚠ **WARNING**

It is not possible to brake the vehicle if the compressed-air brake system has a leak or if there insufficient reservoir pressure. There is a risk of an accident.

Do not pull away until the required reservoir pressures have been reached.

In the event of loss of pressure while driving, immediately bring the vehicle to a halt in accordance with the traffic conditions. Secure the vehicle using the parking brake. Have the compressed-air system repaired at a qualified specialist workshop.

https://truckmanualshub.com/

Do not let anyone enter or exit the vehicle during the test. This will help to prevent you from mistaking pressure loss, due to air-sprung seats or the level control system, for leakage.

- ▶ Stop the vehicle on a level surface.
- ▶ Apply the parking brake.
- ▶ Use chocks to safeguard the vehicle against rolling away.
- ▶ Release the parking brake.
- ▶ Turn the key to position **2** in the ignition lock.
- ▶ Call up the Reserve pressure menu window in the monitoring information menu in the on-board computer (▷ page 124).
- ▶ Run the engine until the display shows a reservoir pressure of at least 16 bar.
- ▶ Switch off the engine.
- ▶ Turn the key to the drive position in the ignition lock.
- ▶ Call up the Reserve pressure menu window in the monitoring information menu in the on-board computer once again (▷ page 124).
- ▶ Depress the brake pedal and keep it in this position.
- ▶ Read off the reservoir pressure after approximately 1 minute.
- ▶ Read off the reservoir pressure again after another minute.
  If no significant loss of pressure can be detected in the Reserve pressure menu window in the on-board computer after this minute, the compressed-air brake system is free from leaks.
  If a significant loss of pressure is detected, the compressed-air brake system is leaking.
- ▶ If the compressed-air brake system is leaking, have it checked and repaired at a qualified specialist workshop.

ABS (Anti-lock Braking System)

Important safety notes

If you fail to adapt your driving style or if you are inattentive, the driving safety systems can neither reduce the risk of an accident nor override the laws of physics.

Driving safety systems are merely aids designed to assist driving. You are responsible for the distance to the vehicle in front, for vehicle speed and for braking in good time. Always adapt your driving style to the prevailing road and weather conditions and maintain a sufficient, safe distance from other road users. Drive carefully.

ABS regulates the brake pressure to prevent the wheels from locking when braking. This means that the vehicle can still be steered while braking.

ABS is operational from walking pace, regardless of road surface conditions. If the road is slippery, ABS intervenes even if you only brake gently.

⚠ **WARNING**

If ABS is malfunctioning, the wheels could lock when braking. The steerability and braking characteristics are thus severely impaired. There is an increased risk of skidding and an accident.

Drive on carefully. Have the ABS checked at a qualified specialist workshop as soon as possible.

ℹ The tyre pressure table can be found in the "Technical data" section (▷ page 342).

ABS only functions properly if you use wheels with the specified tyre size.

The full effect of the ABS system is only achieved when the tyre pressure is set correctly and adjusted to the load. In wintry driving conditions, always use winter tyres (M+S tyres), if necessary with snow chains.

When the front-axle differential lock is engaged, ABS is deactivated.

▶ **Vehicles with Telligent® gearshift:** on slippery road surfaces, also depress the clutch pedal.
The engine braking effect cannot affect the ABS control system.

Braking with anti-lock protection

⚠ **WARNING**

The wheels of the trailer/semitrailer may lock when braking and the vehicle combination may become unstable if:

- the trailer/semitrailer does not have ABS
- the ABS of the trailer/semitrailer has failed
- ABS has failed completely

As a result, you could lose control of the vehicle and cause an accident.

Always adapt your driving style to the prevailing road and weather conditions and maintain a sufficient, safe distance from other road users. Avoid full brake applications; except in emergency situations.

If ABS intervenes when braking, you will feel the steering wheel vibrate slightly.

▶ **If ABS intervenes:** keep the brake pedal firmly depressed until the braking situation has passed.

▶ **During full brake application:** depress the brake pedal with full force.

During ABS braking intervention, the continuous brake and the differential locks are disengaged automatically.

The following symbols can appear in the status area of the on-board computer:

- : anti-lock protection for the tractor vehicle is deactivated.
- : anti-lock protection for the tractor vehicle and trailer are deactivated.
- : there is a possibility of the trailer being overbraked. Observe the trailer in the exterior rear view mirror and avoid heavy braking. Thereby, the tractor/trailer combination remains stable.

ABS off-road program

The ABS off-road program can be activated for off-road driving. When braking at speeds of between approximately 40 and 15 km/h, the ABS off-road program allows the wheels to lock briefly. This reduces the braking distance on corresponding surfaces.

At speeds below approximately 15 km/h, ABS is deactivated and the wheels may lock. The steerability of the vehicle is impaired when the wheels are locked.

⚠ **WARNING**

If the ABS Off-road program is activated, the wheels may lock when braked. As a result, the vehicle can no longer be steered. There is an increased risk of skidding and an accident.

Deactivate the ABS Off-road program on public roads and firm surfaces.

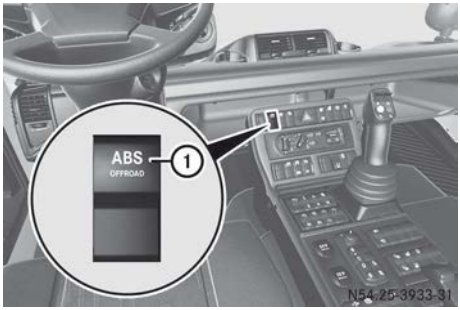

ABS on the trailer cannot be controlled using button ①.

▶ **To activate the ABS off-road program:** press button ①.
ABS is in the off-road program.

The indicator lamp in the status area of the on-board computer lights up.

▶ **To deactivate the ABS off-road program:** press button ① once more.
The ABS off-road program is switched off and ABS is activated.

The indicator lamp in the status area of the on-board computer goes out.

https://truckmanualshub.com/

Parking brake

⚠ **WARNING**

If the parking brake lever is not in the fully applied position, it automatically returns to the released position. The vehicle could roll away as a result. There is a risk of an accident.

Move the lever into the fully applied position when parking the vehicle.

⚠ **WARNING**

The parking brake may not be sufficient to ensure that the loaded vehicles does not roll away on uphill and downhill gradients. There is a risk of an accident.

In the test position, check whether the parking brake will hold the loaded vehicle. If the vehicle is not held, secure it using other methods, e.g. wheel chocks.

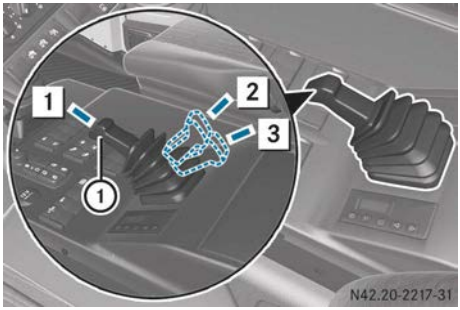

Secure the parked vehicle against rolling away by applying the parking brake. The parking brake actuates the spring-loaded parking brake cylinder.

You can find further information about the parking brake on the trailer in the manufacturer's operating instructions.

Applying the parking brake

▶ Move parking brake lever ① from released position [1] to fully applied position [2] and engage it.
The [Ⓟ] indicator lamp in the instrument cluster lights up.

Trailer with EC brake system: when a trailer is attached, the parking brake actuates the trailer's service brake.

Vehicle with trailer: check the parking brake when parking the vehicle

▶ Apply the parking brake.

▶ Press the top of parking brake lever ①. While doing so, move parking brake lever ① beyond fully applied position [2] into control position [3] and hold it.
During the test, the vehicle combination is only held by the force exerted by the spring-loaded brake of the tractor vehicle. The trailer brake is released.

The vehicle must not move.

▶ If the force exerted by the spring-loaded brake cannot hold the vehicle combination, secure the tractor vehicle and trailer using chocks.

▶ Move parking brake lever ① from control position [3] back to fully applied position [2] and engage it.

Releasing the parking brake

▶ Pull parking brake lever ① upwards from fully applied position [2] and swing it up into released position [1] as far as it will go.
The [Ⓟ] indicator lamp in the instrument cluster goes out.

If the reservoir pressure in both brake circuits is above 8 bar, the parking brake releases fully.

If the [Ⓟ] indicator lamp in the instrument cluster does not go out, the reservoir pressure in the spring-loaded brake circuit has dropped below 5.5 bar and is too low.

To tow the vehicle, you can also release the spring-loaded parking brake cylinder on the parking brake manually (▷ page 335).

Four-wheel parking brake

The four-wheel parking brake couples the service and parking brake electropneumatically. It is only active when the engine is running

and ensures sufficient support, e.g. when carrying out rescue operations using the winch.

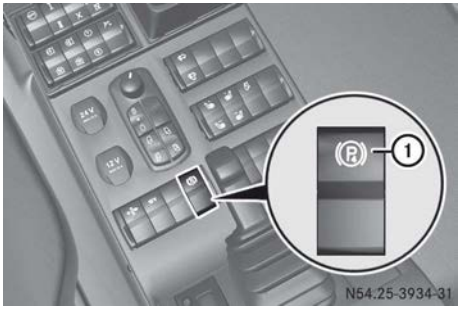

▶ **To apply:** secure the vehicle with wheel chocks.

▶ Start the engine.

▶ Shift to neutral.

▶ Apply the parking brake (▷ page 166).

▶ Press button ①.
The [(P)] indicator lamp in the status area of the on-board computer display lights up.

▶ **To release:** release the parking brake (▷ page 166).
The four-wheel parking brake and the parking brake are released at the same time.
The `4-wheel parking brake not assured` message appears in the on-board computer display.
When a gear is engaged and you pull away, the [(P)] indicator lamp in the status area of the on-board computer display goes out.

or

▶ Press button ① again.
The [(P)] indicator lamp in the status area of the on-board computer display goes out.
The four-wheel parking brake is released automatically and the parking brake remains applied.

or

▶ Turn the key to position **0** in the ignition lock.
The [(P)] indicator lamp in the status area of the on-board computer display goes out.
The four-wheel parking brake is released automatically and the parking brake remains applied.

Continuous brake

Important safety notes

The engine brake is used as the continuous brake.

The effectiveness of the engine brake depends on the engine speed. A high engine speed results in more effective engine braking.

Observe the effective engine braking range marked on the rev counter (▷ page 110).

At very low outside temperatures, the engine brake has limited or no effect after the engine has been started.

You can utilise the engine's braking effect, particularly on long downhill gradients, if you:

- activate the continuous brake
- shift to a lower gear in good time

The continuous brake is activated automatically if:

- the vehicle electronics detect that the vehicle is loaded after several brake applications and you depress the brake pedal
- cruise control or speed limiter intervene in overrun mode

⚠ **WARNING**

If you activate the continuous brake or shift to a lower gear on a slippery road surface in order to increase the engine's braking effect, the drive wheels may lose traction. There is an increased risk of skidding and an accident.

Do not activate the continuous brake and do not shift to a lower gear in order to increase the engine's braking effect on a slippery road surface.

https://truckmanualshub.com/

Activating and deactivating the continuous brake

! If the continuous brake is deactivated and the [ ] indicator lamp in the instrument cluster does not go out, have the continuous brake checked at a qualified specialist workshop.

▶ **To activate:** pull the multifunction lever to set to the desired brake level.
The [ ] indicator lamp in the instrument cluster lights up.
The braking effect of the continuous brake is lowest in position [1] and highest in position [2].

▶ **To deactivate:** push the multifunction lever into position [0].
The [ ] indicator lamp in the instrument cluster goes out.

If you turn the ignition lock to drive position **2** and the [ ] indicator lamp flashes in the instrument cluster, the multifunction lever is not in position [0].

When ABS intervenes, the continuous brake is switched off. The [ ] indicator lamp in the instrument cluster remains on.

Telligent® gearshift

Important safety notes

Telligent® gearshift is an electronic/pneumatic gearshift.

The driver initiates the gear change process by depressing the clutch pedal; Telligent® gearshift shifts the transmission automatically.

⚠ WARNING

If there is a loss of pressure or insufficient reservoir pressure in the transmission/clutch circuit, you can no longer shift gears. There is a risk of an accident.

Do not pull away, or stop the vehicle as soon as possible, paying attention to road and traffic conditions. Secure the vehicle against rolling away, e.g. with the parking brake. Have the compressed-air system repaired at a qualified specialist workshop.

Keep an eye on the rev counter while driving and stay within the economical operating range. Drive in the highest possible gear. Shift down in good time before an uphill or downhill gradient.

If possible, change several gears at once and avoid changing gear unless necessary.

Always depress the clutch pedal until the gear change process is complete. The on-board computer display shows the engaged gear.

If the clutch pedal is released before the gear change process is complete:

- Telligent® gearshift automatically shifts to the neutral position
- the on-board computer display will flash N
- a clacking noise will sound repeatedly in the instrument cluster

When the clutch is then depressed, an appropriate gear will be selected again.

Multifunction lever and gear indicator

General notes

The Telligent® gearshift has eight forward gears and six reverse gears.

When driving, the transmission control controls clutch and gear operation, e.g. when:

- pulling away
- manoeuvring

- changing gear
- stopping the vehicle

If the Telligent® gearshift malfunctions, it is possible to continue driving in backup drive mode (▷ page 120).

Do not let the engine speed drop below the minimum engine speed of 720 rpm.

Multifunction lever

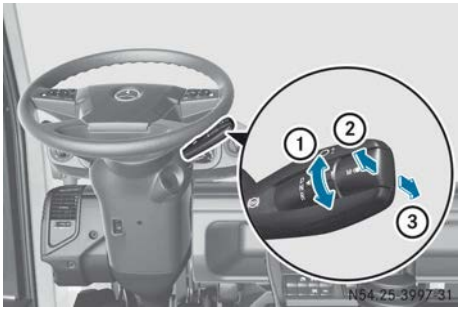

① To select the direction of travel:
 D Drive for driving forward (▷ page 171)
 N Neutral (▷ page 173)
 R Reverse (▷ page 173)
② + Gear preselection upshifting (▷ page 171)
③ – Gear preselection downshifting (▷ page 171)

Gear indicator

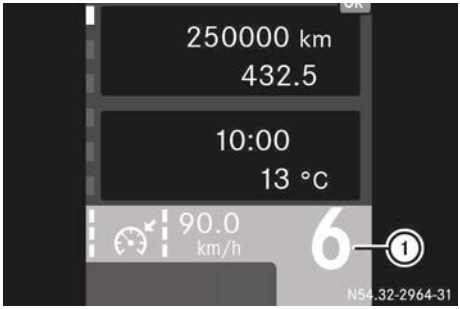

① Direction of travel and/or selected gear

Possible displays:

1 – 8	1st to 8th gear
N	Neutral position
R1 – R6	1st to 6th reverse gear

Cruise control lever

Overview

The cruise control lever has equal status with the multifunction lever and can be used alternately. This enables simplified equipment operation using the control lever, for example, since the right hand is not needed for drive functions.

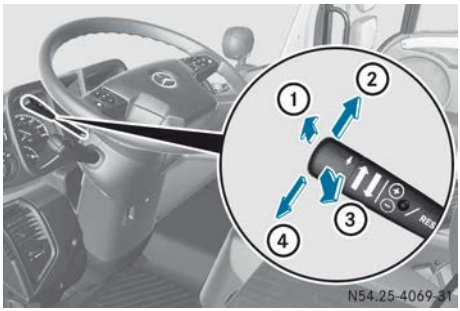

① Gear preselection downshift
② Direction of travel preselection forward
③ Gear preselection upshift
④ Direction of travel preselection reverse

Gear preselection

▶ Pull away with gear preselection (▷ page 171).

▶ **To downshift:** briefly push the cruise control lever away ① from the steering wheel. The transmission control shifts down one gear.

The preselected gear flashes in the on-board computer display. The gear prese-

https://truckmanualshub.com/

lection is stored for approximately 120 seconds.

or

▶ **To upshift:** briefly pull the cruise control lever towards ③ the steering wheel.
The transmission control shifts up one gear.

The preselected gear flashes in the on-board computer display. The gear preselection is stored for approximately 120 seconds.

Direction of travel preselection

▶ Make sure that the vehicle speed is below 30 km/h.

▶ Make sure that the speed limiter (▷ page 191) and cruise control (▷ page 193) are deactivated.

▶ Turn the direction of travel selection switch to the D (drive/driving forwards) position.

▶ **Direction of travel preselection, reverse:** briefly push the cruise control lever to the left ④.
A warning tone sounds.

or

▶ **Direction of travel preselection, forward:** briefly push the cruise control lever to the right ②.
A warning tone sounds.

▶ Reduce speed until the vehicle is almost stationary.

▶ Depress the clutch pedal.
A signal tone and a clacking noise in the instrument cluster sound; the preselected gear is selected. The ⇅ indicator lamp in the status area of the on-board computer display lights up. The on-board computer display shows the engaged gear.

▶ Slowly release the clutch pedal and depress the accelerator pedal.

Operating lever

Overview

The control lever has equal status with the multifunction lever and the cruise control lever. The control lever can be used alternately.

① ⇅ button, to change direction
② To drive forwards/to reduce speed when reversing
③ To reverse/to reduce speed when driving forwards

Direction of travel preselection

▶ Make sure that the vehicle speed is below 30 km/h.

▶ Make sure that the speed limiter (▷ page 191) and cruise control (▷ page 193) are deactivated.

▶ Turn the direction of travel selection switch to the D (drive/driving forwards) position.

▶ Move the operating lever in direction ② or ③.

or

▶ Press the ⇅ button ① forwards or backwards.
A warning tone sounds.

▶ Reduce speed until the vehicle is almost stationary.

▶ Depress the clutch pedal.
A signal tone and a clacking noise in the instrument cluster sound; the preselected gear is selected. The ⇅ indicator lamp in the status area of the on-board computer

display lights up. The on-board computer display shows the engaged gear.

▶ Slowly release the clutch pedal and depress the accelerator pedal.

Pulling away

Overview

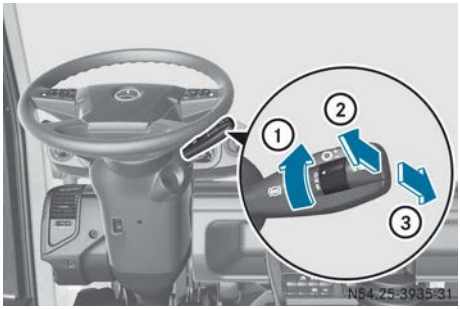

Gears 1 through 3 can be selected to pull away.

Pulling away with gear preselection

You can preselect a gear before depressing the clutch pedal. Telligent® gearshift will not shift to the preselected gear until you have depressed the clutch pedal.

▶ Start the engine.

▶ Turn the direction switch to the D (drive/driving forwards) position ①.
In all drive programs the gearbox control shifts into second gear, which can be changed manually.

▶ **To adapt gear preselection:** pull the multifunction lever up briefly (shift up) ② or push it down briefly (shift down) ③.
The preselected gear flashes in the on-board computer display. The gear preselection is stored for approximately 120 seconds.

▶ Depress the clutch pedal.
Telligent® gearshift shifts to the preselected gear.
A clacking noise in the instrument cluster confirms the gear change.
The on-board computer display shows the engaged gear.

▶ Release the brake pedal or parking brake, slowly release the clutch and depress the accelerator pedal.

The preselected gear can be erased by turning the direction switch to the N position.

Pulling away without gear preselection

▶ Start the engine.

▶ Depress the clutch pedal.

▶ Turn the direction switch to position D (drive/driving forwards) ①.
In all drive programs the gearbox control shifts into second gear, which can be changed manually.

▶ Release the brake pedal or parking brake, slowly release the clutch and depress the accelerator pedal.

Driving and changing gears

General notes

Changing gear while driving is only possible at suitable engine speeds or at suitable driving speeds. A warning tone will sound if the engine speed has not been achieved or if the driving speed is too high. The gear is not selected. The transmission control only selects permissible gears.

https://truckmanualshub.com/

Overview

Changing gear with the gear preselection

You can preselect a gear before you depress the clutch pedal. Only once you depress the clutch pedal does the Telligent® gearshift select the preselected gear.

You can select several gears at once.

▶ Pull the multifunction lever up briefly (to shift up) ① or push it down briefly (to shift down) ②.
The gearbox control shifts a gear up or down. The gear change is complete when the on-board computer display shows the selected gear.

or

▶ Briefly pull the multifunction lever up repeatedly (to shift up) ① or push it down briefly (to shift down) ②, a corresponding number of times.
The transmission control shifts several gears up or down. The gear change is complete when the on-board computer display shows the selected gear.

The preselected gear flashes on the on-board computer display. The gear preselection remains saved for approximately 15 seconds.

or

▶ **For non-engaged operation or crawler gear**: pull and hold the multifunction lever up (to shift up) ① or push and hold it down (to shift down) ②.
The transmission control determines the most suitable gear (target gear) for the desired gearshift direction, depending on the vehicle load. The transmission control shifts up or down at least one gear to a suitable gear. The gear change is complete when the on-board computer display shows the selected gear.

The preselected gear flashes on the on-board computer display. The gear preselection remains saved for approximately 15 seconds.

▶ **All vehicles:** completely depress the clutch pedal.
The Telligent® gearshift selects the preselected gear.

A clacking noise in the instrument cluster confirms the gear change.

The on-board computer display shows the engaged gear.

▶ Slowly release the clutch pedal and depress the accelerator pedal.

You can change the preselected gear during the preselection period by pressing/pulling the multifunction lever again. The new preselected gear flashes on the on-board computer display.

You can delete the preselected gear by turning the direction switch to position N.

Changing gear without gear preselection

You can always only shift up or down one gear.

▶ Completely depress the clutch pedal.

▶ Pull the multifunction lever up briefly (to shift up) ① or push it down briefly (to shift down) ②.
The Telligent® gearshift selects the preselected gear.

A clacking noise in the instrument cluster confirms the gear change.

The on-board computer display shows the engaged gear.

▶ Slowly release the clutch pedal and depress the accelerator pedal.

Stopping the vehicle

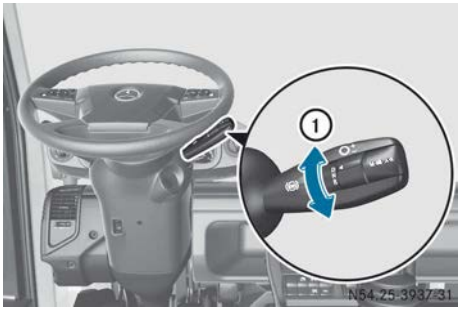

Shift the transmission to neutral when stopping for a longer time, e.g. at traffic lights or before stopping the engine.

▶ Brake the vehicle and, if necessary, shift down.

▶ Depress the clutch pedal.

▶ Turn the direction of travel selection switch to the N (neutral) position ①.
The gear change is complete when N is shown on the on-board computer display.

▶ Continue to depress the brake pedal or apply the parking brake.

▶ Release the clutch pedal.

Reverse gear and changing direction quickly

Engaging reverse gear

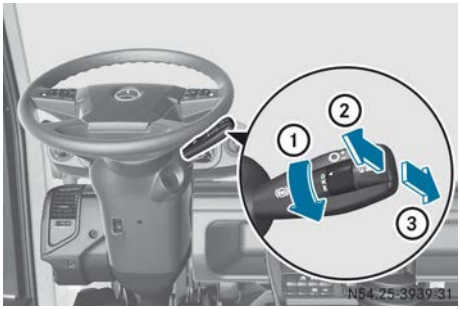

To pull away, you can only shift from neutral to the 1st to 4th reverse gear.

With the vehicle stationary and the transmission in neutral:

▶ Depress the brake pedal or apply the parking brake.

▶ Depress the clutch pedal.

▶ Turn the direction of travel selection switch to the R (reverse) position ①.
The gear change is complete when the on-board computer display shows the selected reverse gear.

▶ **To shift up in reverse gear if necessary:** pull the multifunction lever up briefly ②.
The gear change is complete when the on-board computer display shows the selected reverse gear.

or

▶ **To shift down in reverse gear if necessary:** push the multifunction lever down briefly ③.
The gear change is complete when the on-board computer display shows the selected reverse gear.

▶ Release the brake pedal or parking brake, slowly release the clutch and depress the accelerator pedal.

https://truckmanualshub.com/

You can shift up or down by single reverse gears in succession while reversing:

▶ Pull the multifunction lever up briefly (to shift up) ② or push it down briefly (to shift down) ③.
The gear change is complete when the next higher or next lower reverse gear appears in the on-board computer display.

Shifting to the reverse gears while the vehicle is in motion is only possible at suitable engine speeds or driving speeds. If the vehicle speed is too high, a warning tone will sound. The selected reverse gear is not engaged. The transmission control only selects permissible reverse gears.

Rapid changes of direction

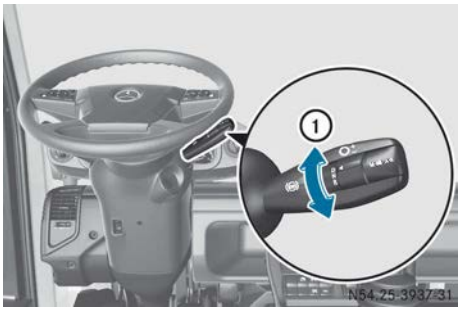

At speeds of up to approximately 30 km/h, you can preselect a reverse or forward gear while driving.

To change the direction of travel

▶ Turn the direction switch to the D (drive/forward gear) or R (reverse gear) position ①.
From the 1st forward gear, the 1st reverse gear is preselected, and vice versa.

From the 2nd forward gear, the 2nd reverse gear is preselected, and vice versa.

From the 3rd or higher forward gear, the 3rd reverse gear is selected.

From the 3rd or higher reverse gear, the 3rd forward gear is selected.

The gear is engaged as soon as the vehicle nears standstill and the clutch pedal is entirely depressed. The gear change is complete when the on-board computer display shows the gear.

Telligent® automatic gearshift

Important safety notes

⚠ **WARNING**

If there is a loss of pressure or insufficient reservoir pressure in the transmission/clutch circuit, you can no longer shift gears. There is a risk of an accident.

Do not pull away, or stop the vehicle as soon as possible, paying attention to road and traffic conditions. Secure the vehicle against rolling away, e.g. with the parking brake. Have the compressed-air system repaired at a qualified specialist workshop.

Multifunction lever and gear indicator

General notes

The Telligent® automatic gearshift transmission has eight forward gears and six reverse gears.

When driving, the transmission control controls clutch and gear operation, e.g. when:

- pulling away
- manoeuvring
- changing gear
- stopping the vehicle

If the Telligent® automatic gearshift malfunctions, it is possible to continue driving in backup drive mode (▷ page 120).

Do not let the engine speed drop below the minimum engine speed of 720 rpm.

https://truckmanualshub.com/

Multifunction lever

① To select the direction of travel:
- D Drive for driving forward (▷ page 177)
- N Neutral (▷ page 178)
- R Reverse (▷ page 180)

② + To upshift manually, automatic in drive program (▷ page 178)/manual (▷ page 179)

③ To select a drive program: (▷ page 177)
- A Automatic drive program
- M Manual drive program

④ – To downshift manually, automatic in drive program (▷ page 178)/manual (▷ page 179)

Gear indicator

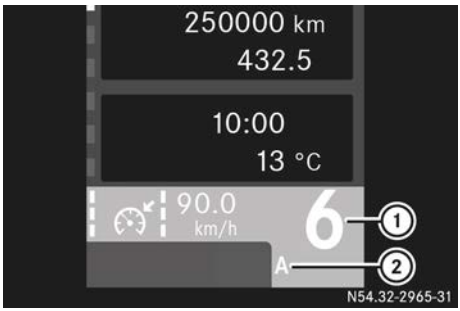

① Direction of travel and/or selected gear

② Drive program

Possible displays:

1 – 8	1st to 8th gear
N	Neutral position
R1 – R6	1st to 6th reverse gear
A	Automatic drive program
M	Manual drive program

Cruise control lever

Overview

The cruise control lever has equal status with the multifunction lever and can be used alternately. This enables simplified equipment operation using the control lever, for example, since the right hand is not needed for drive functions.

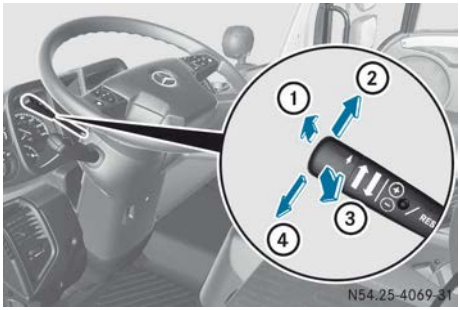

① To shift down manually

② Direction of travel preselection forward

③ To shift up manually

④ Direction of travel preselection reverse

Selecting a gear manually

▶ **To downshift:** briefly push the cruise control lever away ① from the steering wheel. The transmission control shifts down one gear.

or

▶ **To upshift:** briefly pull the cruise control lever towards ③ the steering wheel. The transmission control shifts up one gear.

https://truckmanualshub.com/

Direction of travel preselection

- Make sure that the vehicle speed is below 30 km/h.
- Make sure that cruise control and the speed limiter are deactivated.
- Turn the direction of travel selection switch to the D (drive/driving forwards) position.
- **Direction of travel preselection, reverse:** briefly push the cruise control lever to the left ④.
  A warning tone sounds.

or

- **Direction of travel preselection, forward:** briefly push the cruise control lever to the right ②.
  A warning tone sounds.
- Reduce speed until the vehicle is almost stationary.
  A signal tone sounds, the preselected gear is selected. The ⇅ indicator lamp in the status area of the on-board computer display lights up. The on-board computer display shows the engaged gear.
- Depress the accelerator pedal.

Operating lever

Overview

The control lever has equal status with the multifunction lever and the cruise control lever. The control lever can be used optionally.

① ⇅ button, to change direction
② To drive forwards/to reduce speed when reversing
③ To reverse/to reduce speed when driving forwards

Direction of travel preselection

- Make sure that the vehicle speed is below 30 km/h.
- Make sure that the speed limiter (▷ page 191) and cruise control (▷ page 193) are deactivated.
- Turn the direction of travel selection switch to the D (drive/driving forwards) position.
- Move the operating lever in direction ② or ③.

or

- Press the ⇅ button ① forwards or backwards.
  A warning tone sounds.
- Reduce speed until the vehicle is almost stationary.
  A signal tone and a clacking noise in the instrument cluster sound; the preselected gear is selected. The ⇅ indicator lamp in the status area of the on-board computer display lights up. The on-board computer display shows the engaged gear.
- Depress the accelerator pedal.

https://truckmanualshub.com/

Drive programs and drive functions

Automatic drive program

The transmission control shifts gears depending on a number of factors including:

- engine speed
- accelerator pedal position
- application of the continuous brake
- load status of the vehicle
- condition of the road surface

Manual drive program

In the manual drive program, you initiate gear changes yourself.

In particularly difficult driving conditions, switch to the manual driving program. This will enable you to avoid any undesired interruptions to the tractive power that may occur with automatic gearshifting.

In difficult terrain you must manually engage and release the clutch pedal. Fold out the clutch pedal (▷ page 181).

Drive program selection

You can switch between the drive programs at any time.

▶ **To activate the manual drive program:** press the A/M button and hold ①.
The on-board computer display shows the manual drive program M and the selected gear.

▶ **To activate automatic mode:** press the A/M button briefly ①.
The on-board computer display shows automatic drive program A and the selected and preselected gear.

Stopping the vehicle and pulling away

Pulling away

▶ Start the engine.

▶ Turn the direction switch to the D (drive/driving forwards) position ①.
In all drive programs, the transmission control selects a suitable pulling-away gear, which can be changed manually, depending on the vehicle load.

▶ Release the brake pedal or parking brake and depress the accelerator pedal.

Changing the starting gear

▶ Pull the multifunction lever up briefly (to shift up) ② or push it down briefly (to shift down) ③.
The transmission control shifts up or down one gear.

Gears 1 through 3 can be selected to pull away.

https://truckmanualshub.com/

The gear change is complete when the on-board computer display shows the selected gear.

Stopping the vehicle

▶ Depress the brake pedal.
The transmission control shifts back, depending on driving conditions, and into a suitable pulling-away gear shortly before the vehicle comes to a standstill.

Automatic neutral position

If the vehicle is stationary for approximately nine minutes with the engine running and a gear engaged, a warning tone will sound. The on-board computer display will flash N. After a further minute, the transmission control automatically shifts to the neutral position.

Shifting into neutral

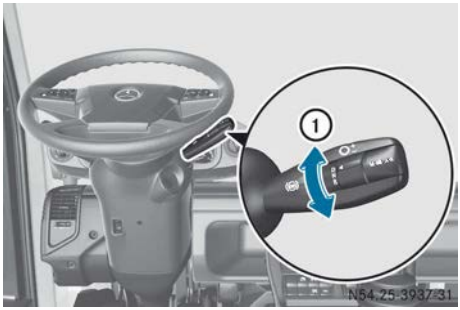

Shift the transmission to neutral when stopping for a longer time, e.g. at traffic lights or before stopping the engine.

▶ Depress the brake pedal or apply the parking brake.

▶ Turn the direction of travel selection switch to the N (neutral) position ①.
The gear change is complete when N is shown on the on-board computer display.

Driving using the automatic drive program

Accelerating

You can use the accelerator pedal position to actively influence the shift point:

- light throttle: early upshift
- heavy throttle: late upshift
- kickdown: maximum upshift delay and extremely early downshift

When the continuous brake is activated and you shift up on downhill gradients, the gear change is limited to one gear by the transmission control.

Kickdown gear shifting

Use kickdown for maximum acceleration of the vehicle.

You can increase performance when pulling away using the kickdown function if required, e.g. on steep uphill gradients. The engine speed is increased when pulling away in 1st or 2nd gear. Higher engine torque is thus available. If you pull away using kickdown, this will result in increased clutch load and higher wear.

▶ Depress the accelerator pedal past the pressure point to the stop.
The transmission control shifts to a lower gear as required.

▶ Ease off the accelerator pedal slightly once the desired speed is reached.
The transmission control shifts up again.

Decelerating

▶ Release the accelerator pedal.

▶ Depress the brake pedal.

or

▶ Activate the continuous brake (▷ page 167).
The transmission control shifts down automatically according to the driving situation.

https://truckmanualshub.com/

Selecting a gear manually

You can also select a different gear manually. The automatic control functions are not changed by doing this.

Changing gear while driving is only possible at suitable engine speeds or at suitable driving speeds. A warning tone will sound if the engine speed has not been achieved or if the driving speed is too high. The gear is not selected. The transmission control only selects permissible gears.

▶ Pull the multifunction lever up briefly (to shift up) ① or push it down briefly (to shift down) ②.
The transmission control shifts up or down one gear. The gear change is complete when the on-board computer display shows the selected gear.

or

▶ Depending on the number of gears to be shifted, briefly pull up the multifunction lever (to shift up) ① or briefly push it down (to shift down) ② a corresponding number of times.
The transmission control shifts several gears up or down. The gear change is complete when the on-board computer display shows the selected gear.

or

▶ Pull and hold the multifunction lever up (to shift up) ① or push and hold it down (to shift down) ②.
The transmission control determines the most suitable gear (target gear) for the desired gearshift direction, depending on the vehicle load. The transmission control shifts up or down at least one gear to a suitable gear. The gear change is complete when the on-board computer display shows the selected gear.

Driving using the manual drive program

General notes

In the manual drive program, the driver is responsible for selecting gears.

In particularly difficult driving conditions, switch to the manual driving program. This will enable you to avoid any undesired interruptions to the tractive power that may occur with automatic gearshifting.

Changing gear while driving is only possible at suitable engine speeds or at suitable driving speeds. A warning tone will sound if the engine speed has not been achieved or if the driving speed is too high. The gear is not selected. The transmission control only selects permissible gears.

Shifting gears

▶ Pull the multifunction lever up briefly (to shift up) ① or push it down briefly (to shift down) ②.
The transmission control shifts up or down one gear. The gear change is complete when the on-board computer display shows the selected gear.

or

https://truckmanualshub.com/

▶ Depending on the number of gears to be shifted, briefly pull up the multifunction lever (to shift up) ① or briefly push it down (to shift down) ② a corresponding number of times.
The transmission control shifts several gears up or down. The gear change is complete when the on-board computer display shows the selected gear.

or

▶ Pull and hold the multifunction lever up (to shift up) ① or push and hold it down (to shift down) ②.
The transmission control determines the most suitable gear (target gear) for the desired gearshift direction, depending on the vehicle load. The transmission control shifts up or down at least one gear to a suitable gear. The gear change is complete when the on-board computer display shows the selected gear.

Reverse gear and changing direction quickly

Engaging reverse gear

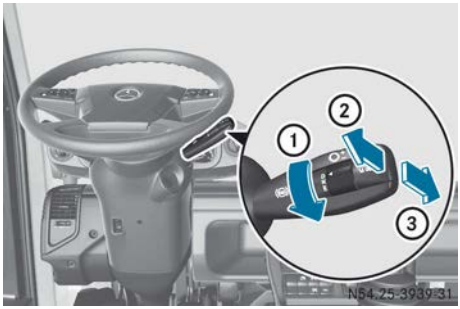

When you shift to a reverse gear, the manual drive program is activated.

To pull away, you can only shift from neutral to the 1st to 4th reverse gear.

With the vehicle stationary and the transmission in neutral:

▶ Depress the brake pedal or apply the parking brake.

▶ Turn the direction of travel selection switch to the R (reverse) position ①.
The gear change is complete when the on-board computer display shows the selected reverse gear.

Engaging reverse gear

▶ Pull the multifunction lever up briefly (to shift up) ② or push it down briefly (to shift down) ③.
The gear change is complete when the on-board computer display shows the selected reverse gear.

▶ Release the brake pedal or parking brake and slowly depress the accelerator.

You can shift up or down by single reverse gears in succession while reversing:

▶ Pull the multifunction lever up briefly (to shift up) ② or push it down briefly (to shift down) ③.
The gear change is complete when the next higher or next lower reverse gear appears in the on-board computer display.

or

▶ Depending on the number of gears to be shifted, briefly pull up the multifunction lever (to shift up) ② or briefly push it down (to shift down) ③ a corresponding number of times.
The transmission control shifts several gears up or down. The gear change is complete when the on-board computer display shows the selected gear.

Shifting to the reverse gears while the vehicle is in motion is only possible at suitable engine speeds or driving speeds. A warning tone will sound if the engine speed has not been achieved or if the driving speed is too high. The selected reverse gear is not engaged. The transmission control only selects permissible reverse gears.

https://truckmanualshub.com/

Rapid changes of direction

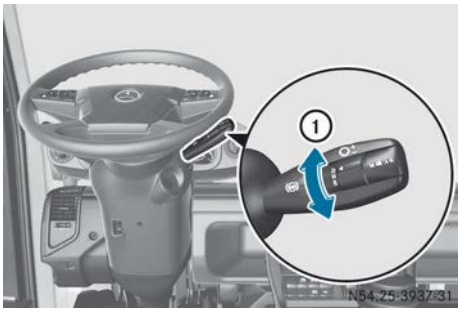

At speeds of up to approximately 30 km/h, you can preselect a reverse or forward gear while driving.

To change the direction of travel

▶ Turn the direction switch to the D (drive/forward gear) or R (reverse gear) position ①.
From the 1st forward gear, the 1st reverse gear is preselected, and vice versa.
From the 2nd forward gear, the 2nd reverse gear is preselected, and vice versa.
From the 3rd or higher forward gear, the 3rd reverse gear is selected.
From the 3rd or higher reverse gear, the 3rd forward gear is selected.
The gear is engaged as soon as the vehicle comes to a near standstill. The gear change is complete when the on-board computer display shows the gear.

Clutch pedal

General notes

! When the clutch pedal is depressed the first time after folding it out, pressure builds up in the clutch system. If a gear is selected, the vehicle pulls away as the clutch pedal is released. After folding out the clutch pedal, release it cautiously.

If the clutch pedal is folded out, you have to depress the clutch and change gears manually to drive. Further information can be found in the "Telligent® gearshift" section (▷ page 168).

Folding out the clutch pedal

Vehicles without dual-mode steering

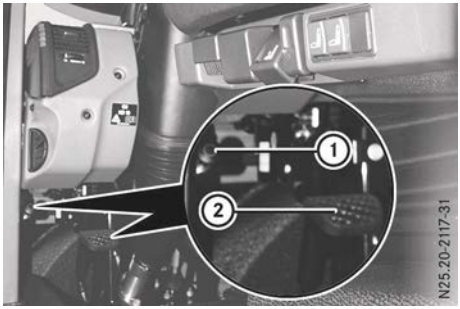

▶ Pull release catch ①.
Clutch pedal ② folds out.

▶ Depress clutch pedal ② fully.
Pressure builds up in the clutch actuation system.
The `Clutch pedal folded down` message appears in the on-board computer display.
Telligent® automatic gearshift switches to manual drive program `M`.

▶ Slowly release clutch pedal ②.

Vehicle with dual-mode steering

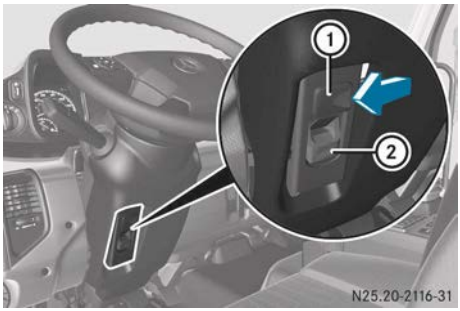

https://truckmanualshub.com/

- Slide release catch ① to the left.
  Lever ② folds upwards and the clutch pedal folds out.
- Depress the clutch pedal.
  The `Clutch pedal folded down` message appears in the on-board computer display.

  Telligent® automatic gearshift switches to manual drive program M.
- Slowly release the clutch pedal.

Folding in the clutch pedal

General notes

! Under no circumstances may the clutch pedal be folded in while the vehicle is in motion.

Vehicles without dual-mode steering

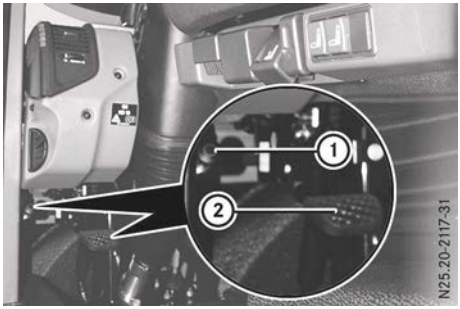

- Stop the vehicle.
- Apply the parking brake.
- Shift to neutral.
- Pull release catch ① and depress clutch pedal ② fully.
- Release catch ①.
- Release clutch pedal ②.
  Clutch pedal ② remains folded in.
- If necessary, select automatic drive program A (▷ page 177).

Vehicle with dual-mode steering

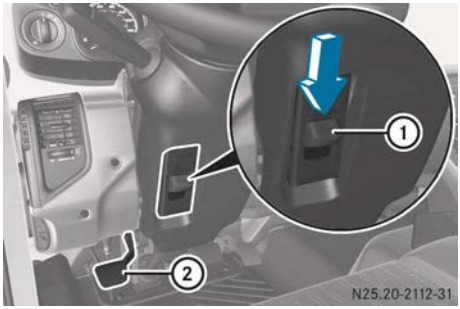

- Stop the vehicle.
- Apply the parking brake.
- Shift to neutral.
- Make sure that clutch pedal ② is not depressed.
- Press lever ① downwards until it engages.
  Clutch pedal ② folds in upwards.
- If necessary, select automatic drive program A (▷ page 177).

Shifting gears

Working gears

General notes

When you engage the working gears, you can drive at a lower speed at the same engine speed. You can then, for example, use specific attached equipment or increase the tractive power.

Even if the working gears are engaged, you can manually change all gears.

! Avoid changing gear on slopes. If you change gear on a downhill slope, you must depress the service brake to prevent the vehicle from speeding up. Otherwise, the gearshift may be noisy and the gearbox could be damaged.

Engaging working gears

- Make sure that the engine is running.
- Make sure that the vehicle is stationery and the parking brake is applied.
- **Vehicles with Telligent® gearshift:** completely depress clutch pedal.
- **Vehicles with Telligent® automatic gearshift:** shift to the desired pulling-away gear.
- **All vehicles:** press button ①.
  Indicator lamp ② in the button lights up.
  The working gears are engaged. When they are engaged, the [symbol] symbol will briefly appear in the on-board computer display.

  Vehicles with Telligent® automatic gearshift: the on-board computer display shows the manual drive program M.
- **When the [symbol] symbol does not briefly appear in the on-board computer display:** quickly pull away and stop once again.
  The gear change will automatically repeat. When the working gears are engaged, the [symbol] symbol will briefly appear in the on-board computer display.
- **Vehicles with Telligent® gearshift:** slowly release the clutch pedal.
- **All vehicles:** release the parking brake.
- Slowly depress the accelerator pedal.
  The vehicle starts moving.

Engaging working gears

- **Vehicles with hydrostatic drive system:** stop the vehicle and apply the parking brake.
- **Vehicles with Telligent® gearshift:** select the desired gears with the multifunction lever. Pull the multifunction lever up briefly (to shift up) or push it down briefly (to shift down) (▷ page 171).
- **Telligent® automatic gearshift:** select the desired gears with the multifunction lever (▷ page 179).
- **Vehicles with hydrostatic drive system:** release the parking brake.
- **All vehicles:** slowly depress the accelerator pedal.
  The vehicle starts moving.

Securing the vehicle against rolling away

- Applying the parking brake.

Disengaging working gears

- Make sure that the engine is running.
- Make sure that the vehicle is stationary.
- **Vehicles with Telligent® gearshift:** completely depress the clutch pedal.
- **All vehicles:** press button ① once again.
  Indicator lamp ② in the button goes out.

  The working gears are engaged. The status message will appear in the on-board computer display without the [symbol] symbol.
- **If the on-board computer display does not show the status message without the [symbol] symbol:** pull away briefly and stop again.
  The gear change will automatically repeat. If the working gears are disengaged, the status message briefly appears in the on-board computer display without the [symbol] symbol.
- **Vehicles with Telligent® gearshift:** slowly release the clutch pedal.

https://truckmanualshub.com/

Crawler gears

General notes

If you engage the working gears, you can drive at a slower speed with the same engine revs. You can engage the crawler gears in order to drive at an even slower speed with the same engine revs.

! Never use the crawler gears to increase the tractive power of the vehicle. The crawler gears are intended to permit the slowest speeds when using corresponding add-on equipment.

! Only engage/disengage the gears when the vehicle is stationary. Otherwise, the gearshift may be noisy and the gearbox could be damaged.

Engaging crawler gears

- Make sure the engine is running.
- Make sure that the vehicle is stationary and that the parking brake is applied.
- **Vehicles with Telligent® gearshift:** depress the clutch pedal.
- **Vehicles with Telligent® automatic gearshift:** shift into the desired pulling-away gear.
- **All vehicles:** push button ②.
  Indicator lamp ① in button lights up. The working gears are engaged first. When engaged, the symbol briefly appears on the on-board computer display. When engaged, the symbol lights up briefly in the on-board computer display.
  Vehicles with Telligent® automatic gearshift: the on-board computer display shows the manual drive program M.
- **If the symbol does not briefly appear in the on-board computer display:** briefly pull away and stop again.
  The gear change will be repeated automatically. When the crawler gears are engaged, the symbol briefly appears on the on-board computer display.
- **Vehicles with Telligent® gearshift:** slowly release the clutch pedal.
- **All vehicles:** release the parking brake.
- Slowly depress the accelerator pedal.
  The vehicle starts moving.

Shifting the crawler gears

- Stop the vehicle and apply the parking brake.
- **All vehicles:** shift to the desired gear with the multifunction lever; vehicles with Telligent® gearshift (▷ page 171), vehicles with Telligent® automatic gearshift (▷ page 179).
- Release the parking brake.
- Slowly depress the accelerator pedal.
  The vehicle starts moving.

When stationary, secure the vehicle against rolling away

- Apply the parking brake.

Deactivating crawler gears

- **Vehicles with Telligent® gearshift:** depress the clutch pedal.
- **All vehicles:** place transmission in neutral position.
- Press button ② again.
  Indicator lamp ① in the button goes out.
  The crawler gears and working gears are disengaged. The on-board computer display briefly shows a status message without the symbol.
- **If the on-board computer display does not show the status message without**

the symbol: briefly pull away and stop again.
The gear change will be repeated automatically. When the crawler gears are disengaged, the status message without the symbol is briefly displayed on the on-board computer display.

▶ **Vehicles with Telligent® gearshift:** slowly release the clutch pedal.

Driving mode

Torque converter clutch

General notes

The torque converter clutch allows you to pull away smoothly and without causing wear, without using the clutch pedal, in particular with large trailer loads. The torque converter clutch is controlled by the transmission control module. Load your vehicle up to the permissible gross weight in order to maximise tractive power.

If the torque converter lock-up clutch is open, the indicator lamp in the status area of the on-board computer lights up. When it is closed, the indicator lamp goes out.

Driving mode

The oil temperature rises during torque converter operation.

Depending on the load and gradient, you can pull away in 1st - 5th gear. Select the pulling-away gear according to the load. For loads exceeding 400 t, you must pull away in 1st gear. This will prevent the oil in the torque converter clutch heating up too much.

ℹ If the vehicle is stationary and a gear between 6th and 8th is selected, the throttle does not respond.

Depress the brake pedal during gear selection. If you do not depress the brake pedal, a warning tone sounds. The `Depress brake.` message appears in the on-board computer display.

The torque converter clutch is opened when changing gears. If you release the accelerator pedal slightly, you can determine when the torque converter lock-up clutch closes. Closing the torque converter lock-up clutch as soon as possible has a positive effect on the oil temperature of the torque converter clutch and fuel consumption. Waiting for a longer period before closing the torque converter lock-up clutch increases fuel consumption and the oil temperature of the torque converter clutch. Consider your driving style carefully.

You can temporarily increase the towing power at engine speeds below 1700 rpm by using the kickdown function.

⚠ **WARNING**

The parking brake may not be sufficient to secure the vehicle on uphill and downhill gradients. A loaded vehicle or a vehicle with trailer/semitrailer may roll away. There is a risk of an accident.

In the control position, check whether the parking brake alone can hold the entire vehicle. The tractor unit and trailer/semitrailer should normally be secured using the parking brake and wheel chocks.

ℹ The vehicle can be stopped with any gear engaged.

Driving mode with power take-off

The function of the transmission shift system is severely restricted with the speed governor switched on, even in power take-off mode. For this reason, switch off the speed governor before changing gears and driving in normal mode.

▶ Stop the vehicle.
▶ Leave the engine running at idling speed.
▶ Select a gear to pull away.
▶ Engage power take-off.

https://truckmanualshub.com/

Tyre pressure control system

Important safety notes

The tyre pressure control system serves to enhance off-road capability and traction on soft surfaces.

- The pressures of the tyres on the front and rear axles are shown in the on-board computer display.
- You can adjust the tyre pressure to suit the terrain while driving.
- A safety device limits the upper and lower tyre pressures that can be set.
- Pay attention to the tyre pressure table (▷ page 341), (▷ page 342).

⚠ **WARNING**

Underinflated or overinflated tyres pose the following risks:

- the tyres may burst, especially as the load and vehicle speed increase.
- the tyres may wear excessively and/or unevenly, which may greatly impair tyre traction.
- the driving characteristics, as well as steering and braking, may be greatly impaired.

There is a risk of an accident.

Observe the recommended tyre pressure and check the tyre pressure of all the tyres including the spare wheel:

- at least every two weeks
- when the load changes
- before embarking on a longer journey
- for changed operating conditions, e.g. off-road driving

If necessary, correct the tyre pressure.

Preparing for a journey

Every day, before starting a journey, check the tyres for external damage and check the tyre pressure in the on-board computer. The tyre pressures are displayed in the on-board computer display as soon as the key is turned to position **2** in the ignition lock.

Tyre pressure control system, automatic mode

Activating/deactivating automatic mode

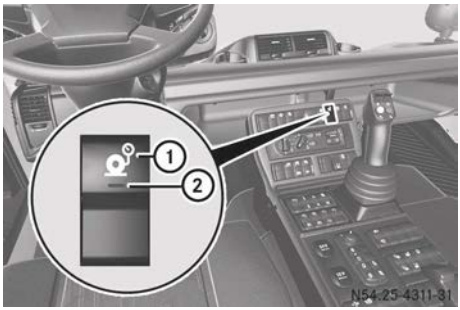

▶ **To activate:** make sure that the key is in position **2** in the ignition lock.

▶ Press button ①.
Indicator lamp ② in the button lights up. Automatic tyre pressure control mode is active.

▶ **To deactivate:** press button ①.
Indicator lamp ② in the button goes out.

If you have deactivated the tyre pressure control system, it is automatically reactivated if:

- you turn the key to position **2** in the ignition lock and
- the engine has cooled down to the outside temperature

Selecting the pressure level

In automatic mode, you can select the pressure levels and vehicle loads. Each pressure level has a pre-stored target tyre pressure with the corresponding vehicle load. You can select a pressure level based on road surface characteristics.

https://truckmanualshub.com/

Pressure level	Road surface conditions	Speed
Highway	Road with normal driving conditions	Up to maximum road speed
Cross Country	Unpaved road with loose surface	max. 50 km/h
Sand Mud Snow	Sand, mud and snow	max. 20 km/h
Emergency	To free a stuck vehicle	max. 10 km/h

⚠ **Warning**
If you exceed the specified speeds in the table, the tyres can be damaged or even explode. This will jeopardise the operating and road safety of the vehicle. There is a risk of an accident. Do not exceed the maximum speeds specified in the table.

! Only select Emergency pressure level in an emergency if the vehicle is stuck. An extremely low pressure level is set so that you can free the vehicle in an off-road situation. Avoid introducing lateral force, e.g. no steering input or angle. The tyres could otherwise be damaged.

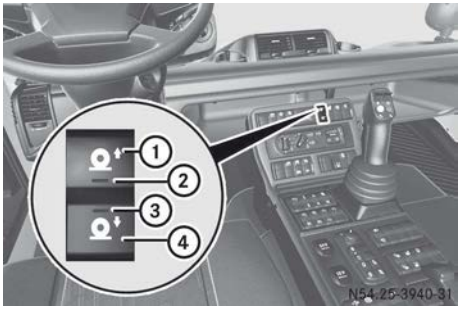

N54.32-2971-31

If you exceed the specified speeds, a warning tone sounds. In the event window of the on-board computer, the Speed too high for current tyre pressure message is displayed. The tyre pressure control system then shifts automatically to a pressure level with a higher tyre pressure.

- Make sure that the automatic tyre pressure control mode is activated (▷ page 186).
- **To select** Highway, Cross Country **or** Sand Mud Snow **pressure level:** press "increase pressure level" button ① or "reduce pressure level" button ④ repeatedly until the desired pressure level is selected.
  A warning tone sounds at each pressure level change. The selected pressure level is displayed in the on-board computer display for approximately five seconds. Indicator lamp ② or ③ remains lit as long as the tyre pressure is being set. If the tyre pressure control system display is called up in the on-board computer, the corresponding preset target and actual tyre pressures are displayed.
- **To select the** Emergency **pressure level:** press "reduce pressure level" button ④ repeatedly until the Sand Mud Snow pressure level is selected.
  A warning tone sounds. The target tyre pressure is displayed. The Sand Mud Snow pressure level flashes until the preset target tyre pressure has been reached.

https://truckmanualshub.com/

- Press "reduce pressure level" button ④. A tone sounds and Emergency pressure level is selected. The corresponding target tyre pressure is displayed. The Emergency pressure level flashes until the preset target tyre pressure has been reached.
- **To cancel pressure level selection:** press "increase pressure level" button ① or "reduce pressure level" button ④ again.

Selecting the vehicle load

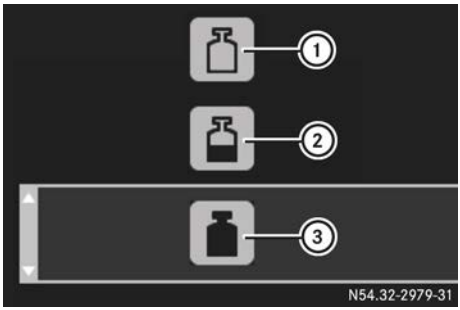

- Make sure that the automatic tyre pressure control mode is activated (▷ page 186).
- Using the ▸ or ◂ button on the multifunction steering wheel, scroll to operation and maintenance.
- Using the ▾ or ▴ button on the multifunction steering wheel, scroll to the Tyres menu window.
- Press the OK button on the multifunction steering wheel.
  Load appears in the menu window.
- Select the current vehicle load using the ▾ or ▴ button on the multifunction steering wheel:
  - ① empty
  - ② partially laden (half load)
  - ③ fully laden

  If the engine has cooled to the outside temperature and you start the engine, vehicle load fully laden ③ is automatically selected.
- Press the OK button on the multifunction steering wheel.
  The selected vehicle load is saved. The tyre pressures are only adjusted if different values for the axle load are specified in the tyre pressure table (▷ page 342).

Tyre pressure control manual mode

General notes

In manual mode, you can freely set the tyre pressure. When setting, always observe tyre size, axle load and speed. If you exceed the permissible speeds in manual mode, no warning tone sounds. Also, the tyre pressure control system does not automatically increase the tyre pressure.

Adjusting via the on-board computer

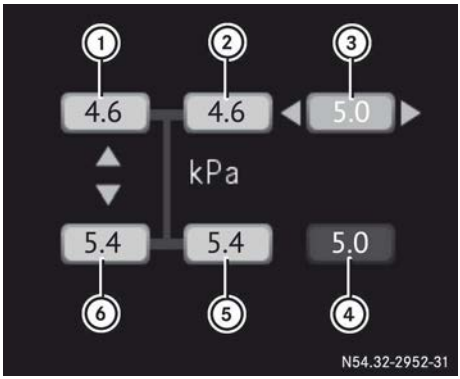

① Current tyre pressure, left front wheel
② Current tyre pressure, right front wheel
③ Preset target tyre pressure, front axle tyres
④ Preset target tyre pressure, rear axle tyres
⑤ Current tyre pressure, right rear wheel
⑥ Current tyre pressure, left rear wheel

- Make sure that the automatic tyre pressure control mode is deactivated (▷ page 186).
- Using the ▸ or ◂ button on the multifunction steering wheel, scroll to operation and maintenance.

https://truckmanualshub.com/

- Using the ▼ or ▲ button on the multifunction steering wheel, scroll to the Tyres menu window.
- Press the OK button on the multifunction steering wheel.
  Press. selection appears in the menu window.
- **To adjust the tyre pressure:** use the ▼ or ▲ button on the multifunction steering wheel to select the front ③ or rear axle tyres ④.
- Determine the tyre pressure to be set (▷ page 341).
- Using the buttons on the multifunction steering wheel, ▶ increase or ◀ decrease the tyre pressure.
- Press the OK button on the multifunction steering wheel.
  After about ten seconds, the tyre pressures are adjusted.
- **To cancel the procedure:** switch on the automatic tyre pressure control mode (▷ page 186).

Adjusting with the button

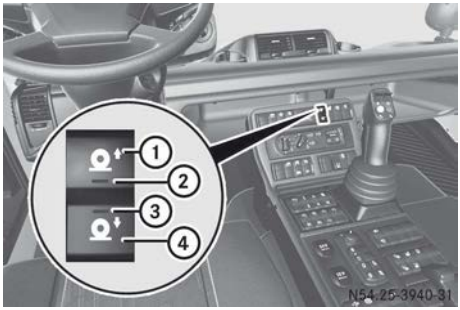

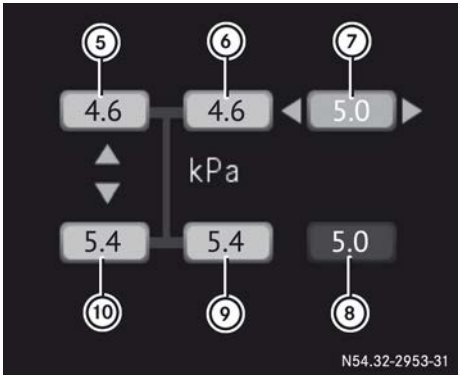

⑤ Current tyre pressure, left front wheel
⑥ Current tyre pressure, right front wheel
⑦ Preset target tyre pressure, front axle tyres
⑧ Preset target tyre pressure, rear axle tyres
⑨ Current tyre pressure, right rear wheel
⑩ Current tyre pressure, left rear wheel

- Make sure that the automatic tyre pressure control mode is deactivated (▷ page 186).
- Press "increase tyre pressure" button ① or "reduce tyre pressure" button ④.
  Press. selection appears in the menu window.
- **To adjust the tyre pressure:** use the ▼ or ▲ button on the multifunction steering wheel to select front ⑦ or rear axle tyres ⑧.
- Determine the tyre pressure to be set (▷ page 341).
- Press "increase tyre pressure" ① or "reduce tyre pressure" button ④ repeatedly until the current tyre pressure is displayed.
- Press the OK button on the multifunction steering wheel.
  While the tyre pressure is being set, indicator lamp ② or ③ remains on.
- **To cancel the procedure:** switch on the automatic tyre pressure control mode (▷ page 186).

https://truckmanualshub.com/

Differential lock

Important safety notes

Engage the differential lock when required, e.g. when driving off-road or on slippery road surfaces.

The differential locks can also be engaged/disengaged while driving, without disengaging the clutch, but only if the wheels are not spinning.

⚠ **WARNING**

If you activate the automatic operating mode while driving off-road or with the differential lock engaged, the electronic management system may perform unwanted gear changes. Due to the interruption in the tractive power, the vehicle can roll backwards on uphill slopes, for instance. There is a risk of an accident.

Always activate the manual operating mode when driving off-road or with the differential lock engaged.

⚠ **WARNING**

If you engage the differential locks when driving on a firm, high-traction surface, the steerability of the vehicle is severely impaired. You could lose control of the vehicle, especially when activating on a bend. There is a risk of an accident.

Disengage the differential locks immediately on a firm, high-traction surface.

Vehicles with Telligent® automatic gearshift: in particularly difficult driving conditions, switch to manual driving program M. This will enable you to avoid any undesired interruptions to the tractive power that may occur with automatic gearshifting. In difficult terrain you must manually engage and release the clutch pedal. In order to do this, the clutch pedal must be folded out (▷ page 181).

Engaging the differential lock

The individual differential locks can only be engaged in sequence.

▶ Turn the differential lock switch to position 1.
The transfer case inter-axle lock is engaged. A symbol appears in the on-board computer to indicate locking and the ⊢⊣ indicator lamp lights up in the instrument cluster.

▶ Turn the differential lock switch to position 2.
The rear-axle differential lock is also engaged. A symbol appears in the on-board computer to indicate locking and the ⊢⊣ indicator lamp lights up in the instrument cluster.

▶ Turn the differential lock switch to position 3.
The front-axle differential lock is also engaged. ABS is deactivated. A symbol appears in the on-board computer to indicate locking and the ⊢⊣ indicator lamp lights up in the instrument cluster.

Disengaging the differential lock

▶ Turn the differential lock switch to position 0.
The differential locks are disengaged. The differential lock indicator in the on-board computer display and the ⊢⊣ indicator lamp go out. ABS is reactivated.

If the indicator in the on-board computer display does not go out when the lock is disengaged:

▶ Change the load.

or

▶ Stop the vehicle and drive a short distance in the opposite direction.

Radiator quick cleaning system

Briefly switch on the radiator quick-cleaning system if the radiator core fins of the engine radiator/condenser are contaminated. During dirt-intensive work, e.g. mowing or mulching, the radiator quick-cleaning system can remain switched on. Intermittent cleaning will occur automatically.

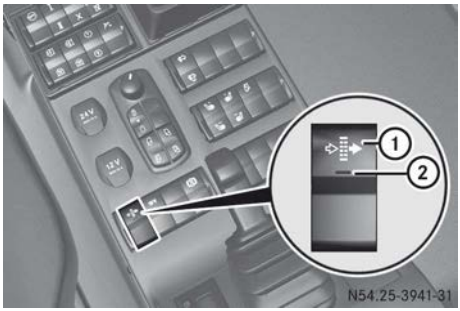

▶ **To switch on:** make sure the engine is running.

▶ Make sure there are no persons, animals or sensitive objects on the left side of the vehicle in front of the engine radiator/condenser of the air-conditioning system.

▶ Press button ①.
Indicator lamp ② in the button lights up continuously for approximately ten seconds. The fan blades are twisted. The radiator core fins of the engine radiator/condenser of the air-conditioning system are cleaned. Debris is exhausted next to the engine radiator/condenser of the air-conditioning system.

Indicator lamp ② will blink after the quick cleaning. The radiator quick-cleaning system is switched on automatically every ten minutes.

▶ **To switch off:** press button ① again.
Indicator lamp ② in switch goes out.

Driving systems

Speed limiter

Important safety notes

The speed limiter restricts the vehicle speed to the set limit speed. It is possible to accelerate the vehicle up to the set limit speed using the accelerator pedal. In order to keep to the set limit speed on downhill gradients, the speed limiter automatically brakes the vehicle with the continuous brake. If the set speed is exceeded, the LIM symbol in the on-board computer flashes.

If you fail to adapt your driving style or fail to pay attention to your surroundings, the speed limiter can neither reduce the risk of an accident nor override the laws of physics. The speed limiter cannot take the road and weather conditions into account, nor the prevailing traffic situation. The speed limiter is only an aid. You are responsible for the distance to the vehicle in front, for vehicle speed, braking in good time and remaining in lane. When changing drivers, make the next driver aware of the speed stored. You should always adapt your driving style to suit prevailing road and weather conditions.

Do not use the speed limiter:

- on slippery roads. Braking could cause the drive wheels to lose their grip and the vehicle could skid.
- when there is low visibility, e.g. due to fog, heavy rain or snow

https://truckmanualshub.com/

Overview

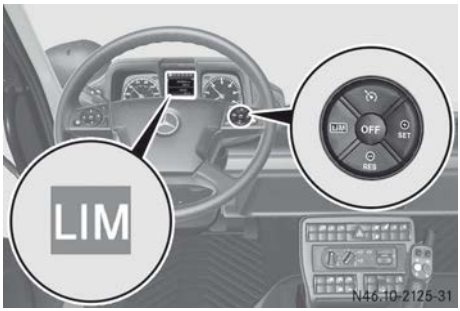

LIM Selects the speed limiter

SET Switches on and sets the current limit speed/increases the set limit speed

RES Switches on and calls up the stored limit speed/decreases the set limit speed

Selects cruise control (▷ page 194)

OFF Deactivates the speed limiter

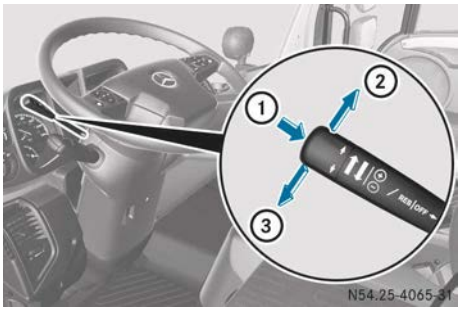

Cruise control lever

① To activate/deactivate cruise control or speed limiter

② To increase set limit speed

③ To reduce set limit speed

The LIM symbol in the on-board computer shows the status of the speed limiter in colour:

- Grey symbol: the speed limiter is selected, but not activated.
- White symbol: the speed limiter is active and is restricting the vehicle speed to the set limit speed.

Activating

Activation conditions

If you are driving slower than 15 km/h, the speed limiter cannot be activated.

If the speed limiter cannot be activated, the on-board computer will display - - - km/h in grey.

Selecting the speed limiter

▶ Press the LIM button.
The on-board computer shows the LIM symbol in grey.

Activating when driving

Multifunction steering wheel:

▶ Select the speed limiter (▷ page 192).

▶ Drive at the desired speed and briefly press the SET button.
The speed limiter is activated and the current vehicle speed is stored as the limit speed.

or

▶ Briefly press the RES button.
The speed limiter is activated and assumes the stored limit speed.
The on-board computer shows the LIM symbol and the set limit speed in white.

Cruise control lever

▶ Select the speed limiter (▷ page 192).

▶ Drive at the desired speed and push the cruise control lever in the direction of arrow ①.
The speed limiter is activated and the stored vehicle speed is set as the limit speed.

Increasing/decreasing the limit speed

You can change the settings of the limit speed while driving.

Multifunction steering wheel:

▶ Activate the speed limiter (▷ page 192).

▶ **To adjust in 1 km/h increments:** press the RES or SET button repeatedly until

the desired speed is shown in the on-board computer.

or

▶ **To adjust in 5 km/h increments:** press the [RES] or [SET] button repeatedly until the desired speed is shown in the on-board computer.

Cruise control lever:

▶ Activate the speed limiter (▷ page 192).

▶ Push the cruise control lever upwards ② for a higher speed or down ③ for a lower speed.

▶ Push and hold the cruise control lever until the desired speed is shown in the on-board computer.

Driving

It is possible to exceed the set limit speed, e.g. when overtaking:

▶ Briefly depress the accelerator pedal beyond the point of resistance (kickdown). The set limit speed is still shown and the [LIM] symbol flashes in the on-board computer.

▶ When overtaking is completed, briefly release the accelerator pedal and depress it again.
The speed limiter again restricts the vehicle speed to the set limit speed.

Deactivating

The limit speed remains stored if you deactivate the speed limiter.

▶ Press the (OFF) button.
The on-board computer shows the [LIM] symbol in grey.

or

▶ Using the [⊘] button, select cruise control.
The on-board computer shows the [⊘] symbol and the set speed in grey.

Cruise control

Important safety notes

Cruise control maintains the set speed of the vehicle for you. In order to keep the speed within the specified tolerance range of between 2 and 15 km/h on downhill gradients, cruise control brakes the vehicle using the continuous brake. When the continuous brake slows the vehicle, the [⊛] indicator lamp lights up in the instrument cluster.

⚠ **WARNING**

If you call up a stored speed and this is different from the current speed, the vehicle accelerates or brakes. If you do not know what the stored speed is, the vehicle may accelerate or brake unexpectedly. There is a risk of an accident.

Take the traffic conditions into account before calling up the stored speed. If you do not know what the stored speed is, store the desired speed again.

! Do not exceed the maximum speed of the individual gears. Keep an eye on the rev counter.

If you fail to adapt your driving style or fail to pay attention to your surroundings, cruise control can neither reduce the risk of an accident nor override the laws of physics. Cruise control cannot take the road and weather conditions into account, nor the prevailing traffic situation. Cruise control is only an aid. You are responsible for the distance to the vehicle in front, for vehicle speed, braking in good time and remaining in lane. You should always adapt your driving style to suit prevailing road and weather conditions.

Do not use cruise control:

- in traffic conditions that do not allow you to drive at a constant speed (e.g. heavy traffic

https://truckmanualshub.com/

or winding roads). You could otherwise cause an accident.

- on slippery roads. The drive wheels may lose their grip when braking or accelerating and the vehicle may skid.
- when there is low visibility, e.g. due to fog, heavy rain or snow

Overview

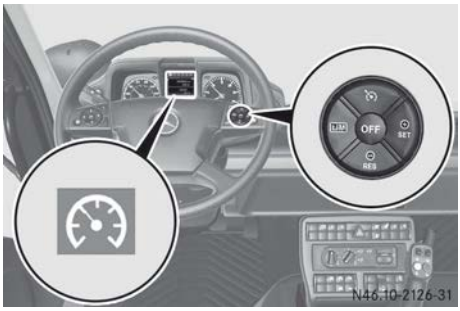

[ ] Selects cruise control

[SET] Activates and adjusts current speed/increases set speed

[RES] Activates and calls up stored speed/reduces set speed

[LIM] Selects the speed limiter (▷ page 192)

(OFF) Deactivates cruise control

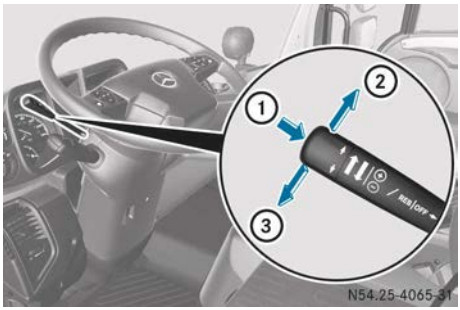

Cruise control lever

① To activate/deactivate cruise control or speed limiter

② To increase set speed

③ To decrease set speed

The [ ] symbol in the on-board computer shows the status of cruise control in colour:

- Grey symbol: cruise control is selected, but not activated.
- White symbol: cruise control is activated and maintains the set speed.

Activating

Activation conditions

If you are driving slower than 15 km/h, cruise control cannot be activated.

If cruise control cannot be activated, the on-board computer will display - - - km/h in grey.

Cruise control is deactivated automatically if:

- you are driving slower than 10 km/h
- you depress the clutch pedal for longer than five seconds
- the transmission is shifted into neutral for more than approximately five seconds

If cruise control automatically deactivates, a warning tone sounds.

Selecting cruise control

▶ Press the [ ] button repeatedly until the on-board computer shows the [ ] symbol in grey.

Activating when driving

Multifunction steering wheel:

▶ Select cruise control (▷ page 194).

▶ Drive at the desired speed and briefly press the [SET] button.
Cruise control is activated and the current speed is stored.

or

▶ Briefly press the [RES] button.
Cruise control is activated and assumes the stored speed.

The on-board computer shows the [ ] symbol and the set speed in white.

▶ Release the accelerator pedal.
In order to maintain the set speed, cruise control automatically brakes or accelerates the vehicle.

Cruise control lever:

▶ Select cruise control (▷ page 194).

▶ Drive at the desired speed and push the cruise control lever in the direction of arrow ①.
Cruise control is activated and the current speed is stored.

▶ Release the accelerator pedal.
In order to maintain the set speed, cruise control automatically brakes or accelerates the vehicle.

Setting the speed and speed tolerance

Increasing/reducing the speed

You can change the speed setting while driving.

Multifunction steering wheel:

▶ Activate cruise control (▷ page 194).

▶ **To adjust in 0.5 km/h increments:** press the [RES] or [SET] button repeatedly until the desired speed is shown in the on-board computer.

or

▶ **To adjust in 5 km/h increments:** press the [RES] or [SET] button repeatedly until the desired speed is shown in the on-board computer.

Cruise control lever:

▶ Activate cruise control (▷ page 194).

▶ Push the cruise control lever upwards ② for a higher speed or down ③ for a lower speed.

▶ Keep the cruise control lever pressed until the desired speed is reached.

Setting the road speed tolerance

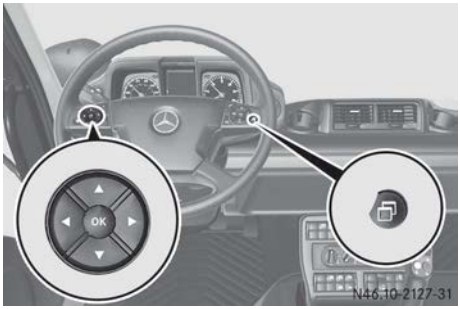

Set the [ ] upper speed tolerance to between 2 and 15 km/h. On mountainous roads, this allows you to make better use of the momentum gained on a downhill gradient and thus increase fuel economy. The on-board computer shows the upper speed tolerance next to the speed. Once the maximum vehicle speed has been reached, the upper speed tolerance is decreased to 2 km/h.

▶ Press the button repeatedly until the Eco-Drive input window appears in the on-board computer and the [ ] menu bar is selected.
In the [ ] menu bar, set the value by which the stored speed may be exceeded.

▶ Press the [◀] or [▶] button to increase/reduce speed tolerance in 1 km/h increments.

▶ Press the OK button to exit the input window.

or

▶ Wait for approximately three seconds.
The setting is stored automatically.

Driving

Driving tips

You can decelerate using the continuous brake. Cruise control remains activated.

If you reset the continuous brake lever, but do not deactivate it, the vehicle will accelerate on inclines up to the set speed.

https://truckmanualshub.com/

If the continuous brake is deactivated, the vehicle will accelerate to the last stored speed.

If cruise control is decelerating the vehicle using the continuous brake and you simultaneously depress the brake pedal, cruise control remains activated.

If the braking power from the continuous brake is insufficient:

▶ Shift down a gear and reduce your speed. If you shift down on a downhill gradient without adjusting the speed, cruise control sets an engine speed lower than the engine overspeed. The set speed remains set and is automatically re-established as soon as this is possible in a higher gear.

The vehicle is braked by the continuous brake automatically if:

- cruise control is activated and
- the vehicle speed exceeds the set speed by more than the speed tolerance

When the continuous brake is activated and you activate cruise control, the continuous brake regulates the set speed on downhill slopes.

Overtaking

It is possible to exceed the set speed, e.g. when overtaking:

▶ Depress the accelerator pedal.

▶ When the overtaking manoeuvre is finished, release the accelerator pedal again.

Cruise control adjusts the vehicle's speed to the set speed.

Deactivating

The speed remains stored if you deactivate cruise control.

▶ Press the OFF button.

or

▶ Select the speed limiter with the LIM button.
The on-board computer shows the LIM symbol in grey.

or

▶ **Only when the continuous brake is deactivated:** when cruise control causes the vehicle to accelerate, depress the brake pedal.
The on-board computer shows the symbol and the set speed in grey.

Camera

Important safety notes

The front camera, reversing camera and device camera are merely aids to assist driving. They may show a distorted view of obstacles, show them incorrectly or not at all. The cameras cannot replace your own awareness of the immediate surroundings.

You are responsible for safe manoeuvring and parking. When manoeuvring and parking, make sure that there are no persons, animals or objects in the manoeuvring area.

You are always responsible for safety and must always pay attention to your immediate surroundings when parking and manoeuvring. This applies to the areas behind, in front of and beside the vehicle. Otherwise, you endanger yourself and others.

The front camera, reversing camera and device camera do not function or only function to a limited degree:

- if it is raining hard, snowing or foggy
- at night or when the vehicle is in very dark places
- if the camera is exposed to very bright light
- if the area is lit by fluorescent light or LED lighting (the display may flicker)
- if the camera lens mists up, e.g. if you drive into a heated garage in the winter and the temperature changes very quickly
- if the camera lens is dirty or obstructed
- if the parts of the vehicle are damaged in which the camera is fitted. In this case, have the camera position and setting checked at a qualified specialist workshop.

Do not use the front camera, reversing camera or device camera under these circumstances. You may injure others or cause damage to objects and the vehicle while parking.

Front camera

The front camera is an optical parking and manoeuvring aid. It shows you the area in front of the vehicle on the monitor. It enables a simplified view of the pocket of the front mounting plate and provides an extended field of vision in front of the vehicle.

① Front camera

The monitor switches off automatically at a speed of approximately 15 km/h. At a speed of approximately 10 km/h, it switches back on. Change the speed; additional information on the monitor can be found in the manufacturer's operating instructions.

Reversing camera

The reversing camera is an optical parking and manoeuvring aid and shows the area behind the vehicle on its monitor.

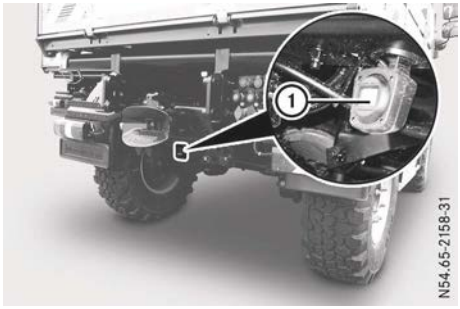

You see the reversing camera image on the monitor display ① if:

- the key is in position **2** in the ignition lock and
- you turn the direction of travel selection switch to the R (reverse) position

You see the previous display on the monitor display when the function is switched on, as soon as you:

- turn the direction of travel selection switch to the N (neutral) position
- drive forwards briefly

Additional information on the monitor is included in the manufacturer's operating instructions.

Device camera

General notes

The device camera is an optical aid for the purposes of device monitoring.

In order to be able to see the device camera image on the monitor display, you must switch on the device camera (▷ page 198). Additional information on the monitor is included in the manufacturer's operating instructions.

Connecting the device camera

The foot of the camera is magnetic. Therefore, the device camera can be attached to all metallic parts freely.

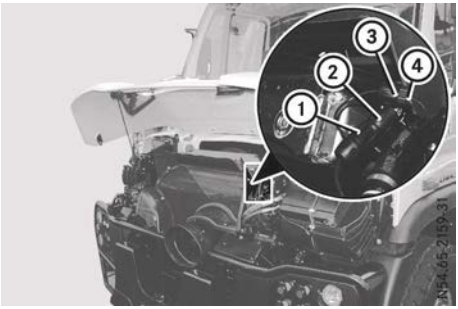

https://truckmanualshub.com/

- ▶ **Connection to the front end:** open the front flap (▷ page 291).
- ▶ Position the device camera in a suitable position on the attached equipment.
- ▶ Guide the cable of the device camera under the front flap. Make sure that the cable is laid without tension, kinking or friction.
- ▶ Unscrew electrical screw connector ①, ② and separate.
- ▶ Insert the cable of the device camera and twist the electrical screw connection tight.
- ▶ Unscrew protective cap ④ at the open end of wire ③.
- ▶ Reconnect electrical screw connection ②, ③ and close.
- ▶ Connect protective cap ④ to the open end of wire ① and screw closed.
- ▶ Secure the cable of the device camera with a cable connector.
- ▶ Close the front flap (▷ page 291).

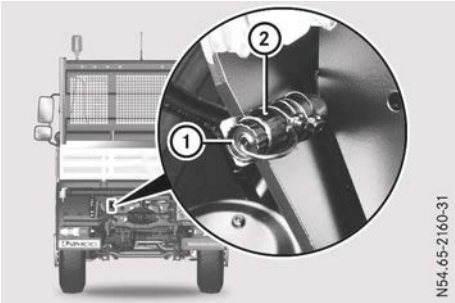

- ▶ **Rear area connection:** position the device camera in a suitable position on the attached equipment.
- ▶ Unscrew protective cap ① at the open end of wire ② and remove.
- ▶ Guide the cable of the device camera into the rear area and connect it. Make sure that the cable is laid without tension, kinking or friction.
- ▶ Insert the cable of the equipment camera to the open end of wire ② and tighten the electrical screw connection.
- ▶ Secure the cable of the device camera with a cable connector.

Switching the equipment camera on/off

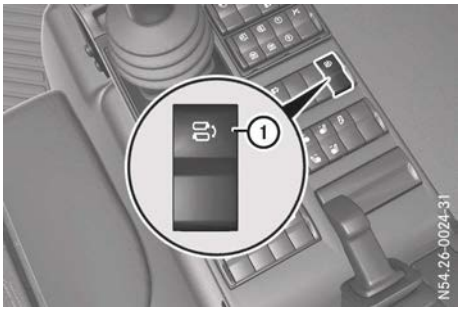

- ▶ Make sure that the key is in position **2** in the ignition lock.
- ▶ **To switch on:** press button ①.
- ▶ **To switch off:** press button ① again.

Hydrostatic drive system

General notes

The hydrostatic drive system supports you during working operation where vehicle speeds are low, e. g.:

- road works
- snow clearing
- trench digging

The hydrostatic drive system can separate the speed of the diesel engine from the vehicle speed. As such, the drive speed is determined at the PTO shaft and the working and power hydraulics are independent of the vehicle speed. You can accelerate your vehicle, starting from a standstill, up to the applicable maximum speed of the gear. This high gear ratio spread means you need to shift gears less often. If a gear change is necessary, the clutch does not need to be opened since no-force shifting is performed by the hydrostatic transmission. For this reason, in vehicles with

https://truckmanualshub.com/

Telligent gearshift, there is also no need to depress the clutch pedal when engaging a gear.

Using the hydrostatic drive system, you can drive on uphill or downhill slopes with a gradient of less than 25%.

⚠ WARNING

If a malfunction occurs when in hydrostatic drive mode, the power transmission to the driven wheels is interrupted and the vehicle coasts to a stop. On an uphill or downhill gradient, the vehicle could roll away. People in the vehicle's area of danger could be run over or could collide with equipment mounted on the vehicle. There is a risk of serious or even fatal injuries.

Before starting work, make sure that no persons are in the area of danger.

Depress the brake pedal immediately in the event of a malfunction and secure the vehicle with the parking brake. On an uphill or downhill gradient, a wheel chock may additionally be required. If fuel leaks out, set the vehicle in motion. Consult a qualified specialist workshop immediately.

Environmental note

The hydrostatic drive system is particularly suitable for slow work trips. Avoid using the hydrostatic drive system at high speeds. This reduces fuel consumption and therefore actively contributes to protection of the environment.

Working speeds

During operation, the maximum speed is 50 km/h. Working mode cruise control can be used up to a speed of 25 km/h.

Operation	Working speed of 0.1 km/h
Snow clearing machine for roads	up to 15 km/h
Rotating brushes, e .g. for washing roadside posts	up to 15 km/h
Street-sweeping machine	up to 15 km/h
Side-delivery snow blower, snow cutter	up to 10 km/h
Mower	up to 10 km/h
Ditch-cleaning machine	up to 5 km/h
Verge cutter	up to 5 km/h

Switching the hydrostatic drive system on/off

Activating

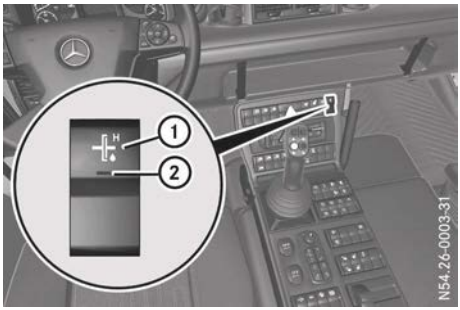

https://truckmanualshub.com/

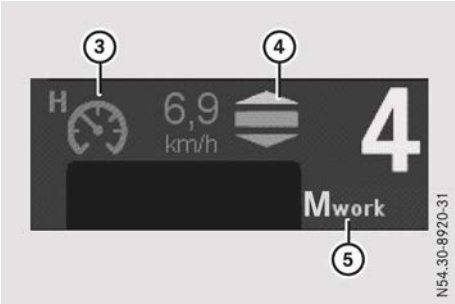

Hydrostatic drive system status indicator

③ Working mode cruise control display

④ Drive condition display

⑤ Work mode display M work or driving mode display A drive

▶ Ensure that:

- the engine is running
- the constant working speed mode is deactivated (▷ page 263)
- the vehicle is stationary

▶ Press button ①.
Indicator lamp ② in the button flashes.
Vehicles with Telligent automatic gearshift: in the status area of the on-board computer, after a brief period, the drive condition display lights up green and indicator lamp ② in the button lights up and stays lit. The hydrostatic drive system is activated.

The previously selected work mode M work ⑤ or driving mode A drive ⑤ also appears in the status area of the on-board computer.

▶ **Vehicles with Telligent® gearshift:** depress the clutch pedal.
In the status area of the on-board computer, after a brief period, the drive condition display lights up green and indicator lamp ② in the button lights up and stays lit. The hydrostatic drive system is activated.

The previously selected work mode M work ⑤ or driving mode A drive ⑤ also appears in the status area of the on-board computer.

▶ Release the clutch pedal.

▶ **All vehicles:** if necessary, select the alternate mode; work mode M work ⑤ or driving mode A drive ⑤ (▷ page 201).

▶ If necessary, turn the direction switch to the D (drive/driving forwards) or R (reversing) position.
The last gear used in the hydrostatic drive system is selected.

▶ If the parking brake has been applied, release the parking brake.

▶ Control the vehicle speed using the accelerator pedal.

or

▶ Activate working mode cruise control (▷ page 203).

▶ Shift gear; see "Driving with the hydrostatic drive system" (▷ page 201) and "Driving with the cruise control lever" (▷ page 205).

Deactivating

You can disengage the hydrostatic drive system at any time.

▶ **Vehicles with Telligent automatic gearshift:** press button ①.
Indicator lamp ② in the button goes out. The hydrostatic drive system status indicator in the on-board computer goes out. The hydrostatic drive system is deactivated.

▶ **Vehicles with Telligent gearshift:** press button ①.
The indicator lamp in button ② flashes.

▶ Completely depress the clutch pedal until a clacking noise sounds in the instrument cluster. If indicator lamp ② in the button is off, the hydrostatic drive is disengaged. The hydrostatic drive system status indicator in the on-board computer goes out.

If the hydrostatic drive system is disengaged while driving, a driving gear is automatically selected again if the clutch is open. If you want to engage the hydrostatic drive system again, the vehicle must be stationary.

https://truckmanualshub.com/

Activating/deactivating standby mode, vehicles with Telligent® automatic gearshift

You can switch the hydrostatic drive system to standby mode during a journey. In standby mode, gears three to seven are available and these are changed automatically. You cannot change gears manually. At low engine speeds, downshifting also takes place automatically. In order to drive at full speed, you must disengage the hydrostatic drive system (▷ page 200).

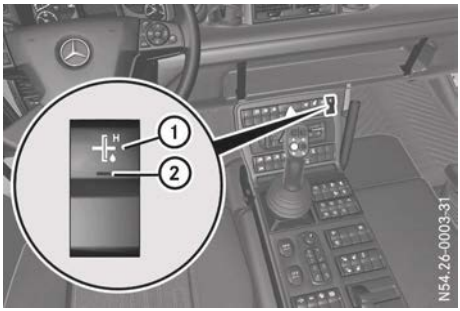

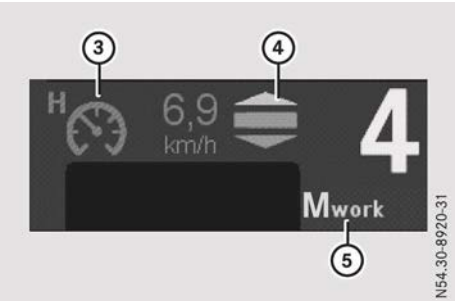

Hydrostatic drive system status indicator

③ Working mode cruise control display

④ Drive condition display

⑤ Work mode display M work or driving mode display A drive

▶ **To activate standby mode:** ensure that:

- the clutch pedal is folded in (▷ page 181)
- the hydrostatic drive system is activated (▷ page 199)

▶ Depress the accelerator pedal beyond the point of resistance (kickdown) for approximately one second.
A drive⑤ appears in the status area of the on-board computer. Drive condition display ④ and working mode cruise control display ③ go out.

Indicator lamp ② in the button flashes. The hydrostatic drive system is in standby mode.

▶ **To deactivate standby mode and activate the hydrostatic drive system:** reduce the vehicle speed to below 25 km/h.

▶ Briefly press the A/M button on the multifunction lever.
M work ⑤, drive condition display ④ and working mode cruise control display ③ appear in the status area of the on-board computer.

Indicator lamp ② in the button lights up. The hydrostatic drive system is activated.

When coasting to a stop, standby mode is automatically deactivated and the hydrostatic drive system is engaged. Therefore, pulling away takes place hydrostatically. The desired pulling-away gear, from 1 to 6, can be selected while stationary.

Driving with the hydrostatic drive system

General notes

When the hydrostatic drive system is activated, then either the "drive" or "work" mode is selected.

Handling characteristics

When driving with the hydrostatic drive system, the vehicle's driving and rolling-out char-

https://truckmanualshub.com/

acteristics are the same as when using the standard drive system. The brake response of the accelerator pedal can be adapted to suit the work to be performed by applying the continuous brake (▷ page 167). Even at higher speeds, a safe full brake application is possible in conjunction with ABS. It is possible to shift the transmission gears while driving, without having to open the clutch. Power output is limited to approximately 60 kW.

"Drive" mode

In "drive" mode, you can drive with automotive hydrostatic transmission; i.e., the vehicle speed is proportionate to the speed of the diesel engine. Only the first six gears are available and the speed is therefore limited to approximately 50 km/h.

If you call up "drive" mode while the vehicle is stationary, the previously selected pulling-away gear is chosen.

You can choose from two operating modes in driving mode "drive":

- M drive: you must change the gears manually. This operating mode is suitable for front loader use, for example, when you need to drive forwards and backwards repeatedly.
- A drive: gears are selected automatically. This operating mode is suitable for interval use, for example, including roadside post cleaning.

Environmental note

The hydrostatic drive system is particularly suitable for slow work trips. Avoid using the hydrostatic drive system at high speeds. This reduces fuel consumption and therefore actively contributes to protection of the environment.

Hydrostatic drive system status indicator

① Working mode cruise control display (not available in driving mode)

② Drive condition display

③ Driving mode display

To select an operating mode:

▶ Press and hold the A/M button on the multifunction lever, until desired operating mode A drive or M drive ③ is displayed.
A drive: gear changes occur automatically.
M drive: the gears must be shifted manually.

To switch between "drive" ③ and "work" modes:

▶ **To use the multifunction lever:** briefly press the A/M button on the multifunction lever.

▶ **To use the control lever:** make sure that the Work Drive function is selected in the on-board computer (▷ page 241).

▶ Press the blue button on the control lever.

"Work" mode

In "work" mode you can select the vehicle speed and the working speed independent of the speed of the diesel engine. The work mode is suitable for work with a snow blower, for example, when you wish to set the vehicle speed and the working speed separately.

You must change gears manually. Only the first six gears are available and the speed is therefore limited to approximately 50 km/h.

https://truckmanualshub.com/

If necessary, you can also activate working mode cruise control and the work limiter (▷ page 203).

Hydrostatic drive system status indicator

① Working mode cruise control display
② Drive condition display
③ Work mode display

When work mode ③ is activated:

- the previously selected gear is selected
- the previously selected working speed is set

To switch between "work" mode ③ and "drive" mode:

▶ **To use the multifunction lever:** briefly press the A/M button on the multifunction lever.

▶ **To use the control lever:** make sure that the Work Drive function is selected in the on-board computer (▷ page 241).

▶ Press the blue button on the control lever.

Working mode cruise control with work limiter

Working mode cruise control

Working mode cruise control is a special cruise control that can be used in "work" mode. Working mode cruise control can be activated within a speed range from 0.1 km/h up to 25 km/h. You can set the speed yourself in 0.1 km/h increments.

Working mode cruise control is suitable, for example, for mowing on a slope. It is possible to adjust the vehicle speed with the working mode cruise control and to set the working speed separately.

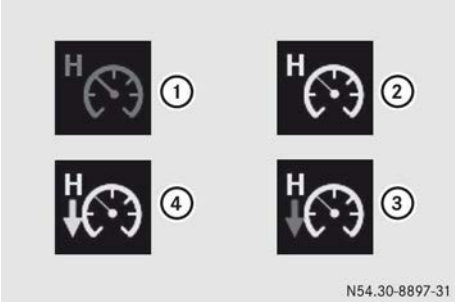

Working mode cruise control status indicator

① Working mode cruise control deactivated
② Working mode cruise control activated
③ Stored speed cannot be reached (red arrow)
④ Speed reduced by the driver (blue arrow)

Even if working cruise control is activated, you can reduce your speed by braking gently. When doing so, the stored speed will not be altered. A blue arrow appears in status indicator ④. If you then step down on the accelerator pedal, you will return to the stored speed. If you wish to drive faster than the stored speed, you must briefly release the accelerator pedal and then press down on it once more.

If a red arrow appears in status indicator ③, the vehicle speed is lower than the stored speed. The speed of the diesel engine remains the same, however.

The reason for the lower speed could be:

- uphill/downhill inclines
- the engine speed is too low
- an unsuitable gear is selected
- the operating temperature is too high

https://truckmanualshub.com/

SET To activate and adjust current speed/increase set speed

RES To activate and call up stored speed/reduce set speed

OFF To deactivate working mode cruise control

▶ **Activation requirements:** activate the hydrostatic drive system (▷ page 199).

▶ Make sure that "work" mode is selected (▷ page 202).

▶ **To activate working mode cruise control and store a speed:** drive at the desired speed and briefly press the SET button.
Status indicator ② appears in the on-board computer. Working mode cruise control is activated. The speed you are driving at is saved.

▶ Release the accelerator pedal.
In order to maintain the stored speed, working mode cruise control automatically brakes or accelerates the vehicle.

▶ Release the accelerator pedal.

▶ **To activate working mode cruise control at speeds faster or the same as the stored speed:** press the RES button briefly.

▶ Release the accelerator pedal.
Status indicator ② appears in the on-board computer. The vehicle is decelerated to the stored speed. In order to maintain the stored speed, working mode cruise control automatically brakes or accelerates the vehicle.

▶ **To activate working mode cruise control at speeds slower than the stored speed:** press the RES button briefly.
Status indicator ④ appears with a blue arrow in the on-board computer.

▶ Release the accelerator pedal.
This maintains all speeds ranging from 0 km/h up to the stored speed. The stored speed will not be exceeded.
In order to maintain the currently stored speed, working mode cruise control automatically brakes or accelerates the vehicle.

▶ **To activate working mode cruise control with the cruise control lever and to set speeds:** drive with the cruise control lever (▷ page 205).

▶ **To deactivate working mode cruise control:** press the OFF button briefly.
Status indicator ②, ③ or ④ goes out in the on-board computer.

Working mode cruise control is deactivated automatically if:

- you brake sharply
- a door is opened

Work limiter

The work limiter can be used in conjunction with working mode cruise control. When you have activated the work limiter, you have the possibility of entering a load value for the diesel engine. If, during working operation, this load value is reached while using attached equipment, a red arrow appears in the status indicator. The vehicle speed is then reduced below the stored speed of the working mode cruise control. The speed of the diesel engine remains the same, however. This serves to prevent the mechanical device protection on your attached equipment from being triggered. The stored speed of the working mode cruise control and the load value must be adapted to the corresponding working operation.

https://truckmanualshub.com/

[ ] Deactivates the work limiter
[LIM] Activates the work limiter
(OFF) Deactivates cruise control

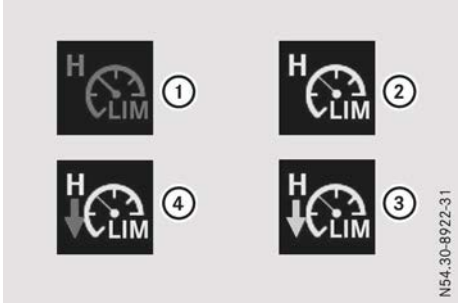

Status indicator for working mode cruise control with work limiter

① Work limiter deactivated
② Work limiter activated
③ Stored speed cannot be reached (red arrow)
④ Speed reduced by the driver (blue arrow)

▶ **To activate:** activate working mode cruise control (▷ page 203).

▶ Press the [LIM] button on the steering wheel.
The input window for the load value opens in the on-board computer.

▶ If necessary, increase the load value by pressing [▸] on the steering wheel.

or

▶ If necessary, decrease the load value by pressing the [◂] button on the steering wheel.

▶ Press the (OK) button on the steering wheel.
The input window for the load value closes.

▶ **To change the load value for the attached equipment:** press the [LIM] button on the steering wheel.
The input window for the load value opens in the on-board computer.

▶ Increase the load value by pressing the [▸] button on the steering wheel.

or

▶ Decrease the load value by pressing the [◂] button on the steering wheel.

▶ Press the (OK) button on the steering wheel.
The input window for the load value closes.

▶ **To deactivate:** press the [ ] button on the steering wheel.

Driving with the cruise control lever

Overview

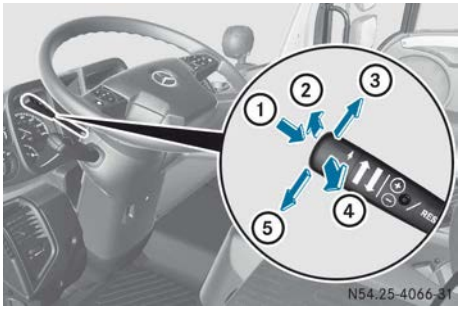

Depending on the vehicle's equipment, your vehicle may have a cruise control lever.

▶ Engage the hydrostatic drive system (▷ page 199).

Selecting a gear

▶ **To downshift:** briefly push the cruise control lever away ② from the steering wheel.
The transmission control shifts down one gear.

or

▶ **To upshift:** briefly pull the cruise control lever towards ④ the steering wheel.
The transmission control shifts up one gear.

https://truckmanualshub.com/

Changing direction

- Make sure that vehicle speed is below 30 km/h.
- Make sure that working mode cruise control is switched off.
- Turn the direction of travel selection switch to the D (drive/driving forwards) position.
- **To preselect reverse driving direction:** press the cruise control lever to the left for approximately one second ⑤.
  A warning tone sounds.

or

- **To preselect forward driving direction:** press the cruise control lever to the right for approximately one second ③.
  A warning tone sounds.
- Reduce speed until the vehicle is almost stationary.
  A signal tone sounds; the preselected gear is selected. The ⇅ indicator lamp in the status area of the on-board computer display lights up. The on-board computer display shows the engaged gear.
- Depress the accelerator pedal.

Switching working mode cruise control on/off

- **To activate working mode cruise control at speeds faster or the same as the stored speed:** push control lever in the direction of arrow ①.
- Release the accelerator pedal.
  The working mode cruise control status indicator appears in the on-board computer (▷ page 203). The vehicle is decelerated to the stored speed. In order to maintain the stored speed, working mode cruise control automatically brakes or accelerates the vehicle.
- **To activate working mode cruise control at speeds slower than the stored speed:** push the cruise control lever in the direction of arrow ①.
  The working mode cruise control status indicator appears in the on-board computer (▷ page 203).
- Release the accelerator pedal.
  This maintains all speeds ranging from 0 km/h up to the stored speed. The stored speed will not be exceeded.
  In order to maintain the currently stored speed, working mode cruise control automatically brakes or accelerates the vehicle.
- **To deactivate working mode cruise control:** push the cruise control lever in the direction of arrow ①.
  The working mode cruise control status indicator in the on-board computer goes out (▷ page 203).

Setting the speed of working mode cruise control

- Activate working mode cruise control.
- **To increase the speed:** push the cruise control lever in direction of travel ③/⑤.

or

- **To decrease the speed:** push the cruise control lever in the opposite direction to direction of travel ③/⑤.

Refer to the "Working mode cruise control" section for further information (▷ page 203).

https://truckmanualshub.com/

Driving with the control lever

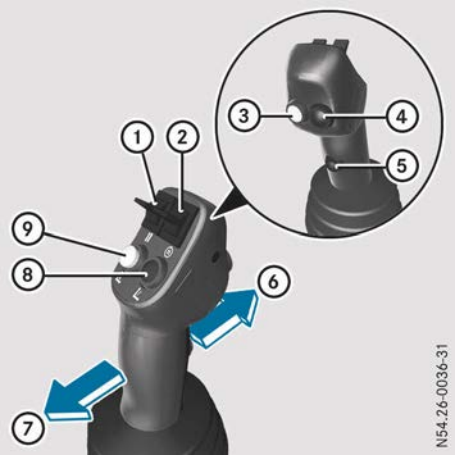

① button, changes direction
② button, sets engine speed
③ Yellow button, adjusts settings
④ Black button, calls up menus
⑤ Red button, calls up acceleration or deceleration functions
⑥ Drives forwards or reduces speed when reversing
⑦ Reverses or reduces speed when driving forwards
⑧ Blue button, in hydrostatic drive mode, activates operation of red hydraulic connections 1, 2 or green hydraulic connections 3, 4; see working hydraulics (▷ page 244)
⑨ White button, activates the operation of yellow hydraulic connections 5, 6 or blue hydraulic connections 7, 8; see working hydraulics (▷ page 244)

Depending on the selected vehicle equipment, your vehicle may be equipped with a control lever. If the hydrostatic drive system is activated, the following functions can be operated with the control lever:

To activate the control lever for driving mode:

▶ Select the Joystick function in the on-board computer (▷ page 241).
The following functions can now be carried out using the control lever.

▶ Engage the hydrostatic drive system (▷ page 199).
The indicator lamp in the status area of the on-board computer lights up.

To accelerate forwards:

▶ Press red button ⑤.

▶ Move the control lever in direction ⑥.

To decelerate in forward mode:

▶ Press red button ⑤.

▶ Move the control lever in direction ⑦.
The braking effect is limited, and, if necessary, the service brake must also be used.

To accelerate in reverse:

▶ Press red button ⑤.

▶ Move the control lever in direction ⑦.

To decelerate in reversing mode:

▶ Press red button ⑤.

▶ Move the control lever in direction ⑥.
The braking effect is limited, and, if necessary, the service brake must also be used.

Change of direction

▶ Press red button ⑤.

▶ Move the operating lever in direction ⑥ or ⑦.

or

▶ Press the button ① forwards or backwards.
Stationary vehicle: the direction of travel is changed immediately.
While driving: the vehicle decelerates.
When the vehicle is stationary, the control lever must be moved again.

https://truckmanualshub.com/

To activate working mode cruise control:

▶ Press red button ⑤ and yellow button ③ simultaneously.
Working mode cruise control is activated and the current speed is stored.

To activate working mode cruise control and call up the stored speed:

▶ Move the control lever to the maximum extent in the desired direction of travel and briefly press red button ⑤.
The vehicle is accelerated/decelerated to the stored speed.

To deactivate working mode cruise control:

▶ Move the control lever to the maximum extent in the direction of travel and briefly press red button ⑤.

For more information on "Working mode cruise control", see (▷ page 203).

Driving tips

General notes on driving

⚠ **WARNING**

If you switch off the ignition while the vehicle is in motion, safety-relevant functions are restricted or not available. This can affect, e.g. the power steering. To steer, you will require considerably more force. There is a risk of an accident.

Do not switch off the ignition while the vehicle is in motion.

⚠ **WARNING**

The parking brake may not be sufficient to secure the vehicle on uphill and downhill gradients. A loaded vehicle or a vehicle with trailer/semitrailer may roll away. There is a risk of an accident.

In the control position, check whether the parking brake alone can hold the entire vehicle. The tractor unit and trailer/semitrailer should normally be secured using the parking brake and wheel chocks.

⚠ **WARNING**

If you load the vehicle unevenly, driving characteristics such as steering and braking behaviour may be severely impaired. There is a risk of an accident.

Load the vehicle evenly. Secure the load so that it cannot slip.

The vehicle's driving, braking and steering characteristics vary with the type, weight and centre of gravity of the load.

Running-in

The running-in period of the engine has a significant effect on the vehicle, especially with regard to:

- service life
- operating safety
- economy

Please note the following instructions during the running-in period of 2,000 km:

- avoid subjecting the engine to full load.
- run in the engine with care, using differing speeds and engine revs.
- avoid high engine speeds. Do not drive at more than $^{2}/_{3}$ of the maximum road speed for each gear.
- change gear in good time.
- do not shift down to brake the vehicle.

After 2,000 km, you may gradually accelerate the vehicle to its full velocity and increase the engine speed.

https://truckmanualshub.com/

Driving with a high body centre of gravity

To prevent an accident, observe the following points:

- the vehicle load has a negative effect on all of the vehicle's handling characteristics. Critical conditions are reached sooner.
- box-type bodies and high loads increase the vehicle's susceptibility to crosswinds.
- good traction conditions, e.g. dry roads, could result in the vehicle tipping when it reaches the cornering speed limit before the rear axle slips away.
- the vehicle's braking distance increases.
- fluid tanks, e.g. fire extinguishers or fertiliser tanks, that are not empty or not completely full could have a negative effect on the vehicle's handling characteristics.
- the risk of tipping is increased if the vehicle is towed with the front axle raised.
- avoid periodic vehicle movements at high speeds, e.g. a sequence of several steering manoeuvres to the right and left.
- bear in mind that there is an increased danger of tipping when driving off-road.
- adapt the vehicle speed to the topographic conditions. Driving off-road in less demanding terrain increases your vehicle's likelihood of rolling.
- reduce speed in difficult off-road terrain, especially if your vehicle is turned in alternating directions.

Mercedes-Benz does not take responsibility for accidents resulting from driving that is not appropriate for the conditions.

Driving mode

Important safety notes

⚠ **WARNING**

If you load the vehicle unevenly, driving characteristics such as steering and braking behaviour may be severely impaired. There is a risk of an accident.

Load the vehicle evenly. Secure the load so that it cannot slip.

! Do not exceed the permissible axle loads, wheel loads (half of the axle load) and the maximum permissible gross vehicle weight.

The following parts of the vehicle may otherwise be damaged:

- wheels and tyres
- chassis
- suspension
- axles
- steering

The vehicle's driving, braking and steering characteristics vary with the type, weight and centre of gravity of the load.

During the journey, check the warning and indicator lamps on the instrument cluster.

Additional equipment

Sufficient steerability of the vehicle must be guaranteed. The front axle load, with corresponding attached equipment and bodies for all vehicle loads, must be at least 33% of the actual gross vehicle weight.

The rear axle load must always be at least 33% of the actual gross vehicle weight.

Pay attention to the minimum rear axle load:

- U 216 / U 218: 1,950 kg
- U 318: 2,200 kg
- U 423 / U 427 / U 430 / U 527 / U 530: 2,350 kg

This ensures sufficient braking performance and that directional stability is guaranteed during a full brake application.

For reasons of safety, only equipment and bodies that meet the currently valid body/equipment mounting directive may be used. It can be found on the Internet in the Mercedes-

https://truckmanualshub.com/

Benz body manufacturer portal: **http://bb-portal.mercedes-benz.com**.

Mercedes-Benz recommends the use of approved equipment and bodies with Daimler mounting certification. Equipment and body manufacturers may provide the Daimler certificate for devices with mounting certification.

Driving off-road

Important safety notes

⚠ **WARNING**

When driving off-road, your body is subject to forces from all directions due to the uneven surface. You could be thrown from your seat, for instance. There is a danger of injury.

Always wear a seat belt, even when driving off-road.

⚠ **WARNING**

Flammable material such as leaves, grass or twigs may ignite if they come into contact with hot parts of the exhaust system. There is a risk of fire.

When driving off road or on unpaved roads, check the vehicle's underside regularly. In particular, remove parts of plants or other flammable materials which have become trapped. In the case of damage, contact a qualified specialist workshop.

Driving off-road increases the possibility of vehicle damage which may cause assemblies or systems to fail. Adapt your driving style to off-road conditions. Drive carefully. Have vehicle damage rectified immediately at a qualified specialist workshop.

When driving off-road, dirt, sand, mud and water mixed with oil, for example, can soil the brakes. This can lead to reduced braking performance or to total failure of the brakes, also from increased wear. The braking characteristics change depending on the material that has penetrated. Clean the brakes after driving off-road. If you then notice grinding noises or a reduction in braking performance, have the brake system checked at a qualified specialist workshop as quickly as possible. Adapt your driving style to the altered braking conditions.

Driving off-road demands special driving skills and concentration. Furthermore, the driver must take special care when driving off-road and before driving on-road again.

Please make sure you read this section thoroughly before attempting to drive the vehicle off-road. You will then understand the particular advantages your vehicle offers to enable you to always reach your destination safely.

Mercedes-Benz recommends that you practice driving off-road in less demanding terrain. When driving on difficult terrain for the first time, ask an experienced off-road driver to accompany and advise you.

Check list before driving off-road

- **Engine:** check the engine oil level and top up the engine oil if necessary (▷ page 297). Before driving up or down extreme gradients, check that the engine oil is topped up to the maximum level.

ℹ If you drive up or down extremely steep gradients, the [symbol] symbol may appear in the status area of the on-board computer. If the engine oil has been topped up to the maximum level beforehand, this will not affect the operating safety of the engine.

- **Steering:** check the steering oil level and top up if necessary (▷ page 297).
- **Vehicle tools:** if necessary, take along an additional durable tow cable and folding spade.
- **Tyres:** check tread depth (▷ page 338) and tyre pressure (▷ page 340).
- **Driving on easily ignitable surfaces:** activate the regeneration block if necessary (▷ page 214).

Please be particularly careful that, if necessary, the regeneration block is activated in vehicles with low mounted exhaust pipes.

Rules for off-road driving

⚠ **WARNING**

If you drive over obstacles or in ruts, the steering wheel may jerk out of your grip, causing injury to your hands.

Always hold the steering wheel firmly with both hands. When driving over obstacles, you must expect steering forces to increase briefly and suddenly.

- Safely stow or secure any items of luggage or loads.
- Secure bulk material (e.g. sand or gravel) with baffle plates or covers to prevent it slipping.
- Close side and back windows (▷ page 60), (▷ page 61).
- Before driving off-road, stop the vehicle and engage a low gear.
- If necessary, activate the differential locks (▷ page 190).
- Activate the ABS off-road program (▷ page 164).

Vehicles with Telligent® automatic gearshift, when automatic drive program is selected:

⚠ **WARNING**

If the engine revs drop below the minimum engine speed, the electronics automatically disengage the clutch. This interrupts the transmission of power. The vehicle may, for example, roll backwards on gradients. There is a risk of an accident.

Never let the engine revs drop below the minimum engine speed.

All vehicles:

! Only engage the differential locks if there is equal traction on all wheels. You could otherwise damage the differential locks.

- **Challenging driving conditions, vehicles with Telligent® automatic gearshift:** activate manual drive program M (▷ page 177).
  Undesired interruptions to the tractive power that may occur with automatic gear shifting are avoided.
- **Difficult terrain, vehicles with Telligent® automatic gearshift:** manually shift between gears. Fold out the clutch pedal (▷ page 181).
- **All vehicles:** only drive off-road with the engine running and a gear engaged.
- Drive slowly and smoothly. Walking pace is necessary in many situations.
- Do not declutch or change gear on hills.
- Always ensure that the wheels remain in contact with the ground.
- Exercise the utmost caution when driving across unfamiliar, unpredictable terrain. For reasons of safety, first get out of the vehicle and inspect the terrain.
- Watch out for obstacles such as rocks, holes, tree stumps and ruts.
- Do not deviate from marked tracks or paths.

Do not shift into neutral while driving on mountainous terrain or declutch. You could lose control of the vehicle while trying to brake with the service brake only. If your vehicle is not able to cope with the gradient, drive backwards in reverse gear.

Driving on inclines

⚠ **WARNING**

If you drive up a steep incline at an angle or turn on a steep incline, the vehicle could slip sideways, tip and overturn. There is a risk of an accident.

When driving up an incline, drive into the line of fall (upwards or downwards in a straight line) and do not turn.

https://truckmanualshub.com/

- Engage a low gear. Select 1st or 2nd gear depending on the uphill or downhill gradient.
- Only drive over embankments and on slopes along the line of fall.
- Do not brake until the vehicle is in the line of fall.
- If the engine braking effect is not sufficient when driving downhill: depress the brake pedal carefully.

Fording

! Do not switch off the engine while fording. Otherwise, the exhaust system may be damaged by water.

! If you drive into water at speed, the bow wave may damage parts of the vehicle.

! Bear in mind that vehicles travelling in front or in the opposite direction create waves. This may cause the maximum permissible water depth to be exceeded.

These notes must be observed under all circumstances. You could otherwise damage the engine, the electronics or the transmission.

Fording is possible when the water level does not rise above the wheel hub centres.

- **Before fording:** switch on the regeneration block (▷ page 214).
- Turn the differential lock switch to position [1] (▷ page 190).
  The transfer case inter-axle lock is engaged. A symbol appears in the on-board computer to indicate locking and the [⊢⊣] indicator lamp lights up in the instrument cluster.
- **While fording:** exercise extreme caution to ensure that a bow wave does not form.
- Drive through the water slowly at a constant speed.
- Adapt your driving style to the unaccustomed environment.
- Avoid declutching, changing gear or stopping during the journey.
  Pulling away in water can be difficult due to the unknown surface conditions.
- **After fording:** clean any mud from the tyre treads.
- Dry out the brakes by repeated brief operation of the brakes.
- Deactivate the regeneration block (▷ page 214).
- Turn the differential lock switch to position [0] (▷ page 190).
  The transfer case inter-axle lock is deactivated. The differential lock indicator in the on-board computer display and the [⊢⊣] indicator lamp go out.

Driving on sand

Loose sand is a particularly treacherous surface for off-road driving. If you do not act correctly in such situations, you could quickly get stuck in the sand after just a few metres. In sandy areas, drive quickly but in a measured manner in order to overcome the roll resistance and thereby prevent the vehicle from digging in. Wheel tracks that other vehicles have made are also helpful. Make sure that the tyre ruts are not too deep and that the vehicle has sufficient ground clearance.

Check list after driving off-road

Driving off-road puts a greater strain on the vehicle than normal road operation.

- Disengage the differential locks (▷ page 190).
- Deactivate the ABS off-road program (▷ page 164).
- Test the brakes.
- Clean the headlamps and tail lamps and check them for damage.
- Clean the licence plate.
- Clean the wheels, tyres and wheel arches and remove any foreign objects. Check for damage to the tyres.

- ▶ Check the tyre pressure (▷ page 340).
- ▶ Replace missing valve caps.
- ▶ Replace dented or damaged rims.
- ▶ Remove trapped plant matter and twigs.
- ▶ Remove flammable materials from the exhaust system, e.g. leaves, plant matter and twigs.
- ▶ Check the entire vehicle underside, tyres, steering, chassis and exhaust system for signs of damage.
- ▶ After prolonged driving in mud, sand and water, clean and check the brake discs, brake pads/linings, wheels and axle joints.
- ▶ Deactivate the regeneration block (▷ page 214).
- ▶ Observe the additional notes on cleaning after driving off-road (▷ page 290).

Using cable winches

⚠ **WARNING**

The cable may break under excessively heavy loads. There is a risk of serious or even fatal injury.

- Always observe the maximum cable tension prescribed by the winch manufacturer.
- Ensure that no-one is in the area of danger when using the winch.
- Observe work safety and accident prevention regulations as well as the winch manufacturer's operating instructions.

- Make sure that there are no persons between the cable winch and the object to which the cable is attached.
- Only use the cable winch from the operating position prescribed by the manufacturer.
- Observe the manufacturer's specifications for the maximum permissible load for the cable winch and its accessories. The value for the weakest component is applicable.
- For self recovery of the vehicle, only secure the cable to secure and stable objects.

Apply the four-wheel parking brake when recovering other objects (▷ page 166).

Diesel particle filter

Important safety notes

⚠ **WARNING**

Flammable material such as leaves, grass or twigs may ignite if they come into contact with hot parts of the exhaust system or exhaust gas flow. There is a risk of fire.

Park the vehicle so that no flammable material can come into contact with hot vehicle components. In particular, do not park on dry grassland or harvested grain fields.

! During automatic and manual regeneration, extremely hot exhaust gases escape from the exhaust pipe. Maintain a distance of at least one metre to other objects, e.g. parked vehicles, in order to avoid damage to property.

If you drive the vehicle predominantly over short distances or with low loads, automatic regeneration may not be sufficient.

If too many particles collect in the diesel particle filter, the [ ] indicator lamp in the instrument cluster lights up. The on-board computer then instructs you with a yellow event window (▷ page 131) to start manual regeneration. Manual regeneration lasts approximately 30 minutes up to a maximum of 60 minutes (▷ page 214).

If you do not observe the yellow event windows and their instructions, you risk:

- a reduction in engine performance
- having to replace the diesel particle filter (▷ page 139)

Automatic regeneration

When the [ ] indicator lamp lights up in the instrument cluster, automatic regeneration of the diesel particle filter is in progress.

https://truckmanualshub.com/

Automatic regeneration can begin either while the vehicle is in motion or stationary.

Automatic regeneration only begins when all operating conditions have been fulfilled, such as sufficiently high engine oil and exhaust temperatures, for example. If an operating condition is no longer fulfilled while regeneration is in process, the [ ] indicator lamp goes out and the regeneration is interrupted. When all operating conditions are fulfilled again, the regeneration starts again automatically. Avoid interrupting the journey as long as the [ ] indicator lamp is lit. Breaks in your journey increase the required regeneration time, which leads to increased fuel consumption.

ℹ The engine noise and the engine idling speed may change while regeneration is in process.

During the first few regenerations in particular, smoke and noise generation can occur in the area of the exhaust system.

Regeneration block

If you need to prevent the raised exhaust temperatures which occur during regeneration, you can block regeneration, e.g.:

- when driving into a hazard area
- when working with intense pollution of the vehicle with dry or flammable materials

Automatic and manual regeneration can then no longer be started and any current regeneration will be interrupted.

▶ **To switch on/off:** press button ②.
If indicator lamp ① in the button lights up, regeneration is blocked.

Only switch on the regeneration block for the duration of the hazardous condition. If you have switched on the regeneration block, regeneration remains disabled even after starting the engine again. This can result in a large number of particles quickly collecting in the diesel particle filter. In this case, the on-board computer informs you that the regeneration block is still active by means of the [ ] Regeneration disabled message in a grey event window.

Starting stationary manual regeneration

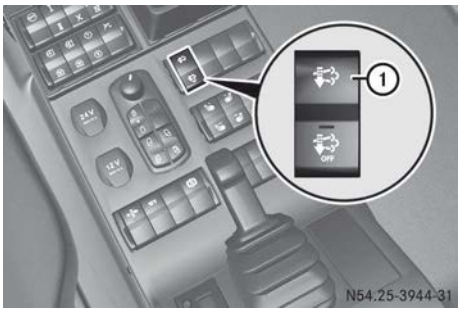

Start manual regeneration when the on-board computer has prompted you to do so with corresponding event windows (▷ page 131). In special cases and for official vehicles, manual regeneration can be initiated earlier for preventative particle filter regeneration. Manual regeneration lasts approximately 30 minutes up to a maximum of 60 minutes.

▶ Make sure the regeneration block is switched off (▷ page 214).

▶ Stop the vehicle, paying attention to road and traffic conditions, and keep the engine running.

While doing so, maintain a distance of at least one metre to other vehicles, other objects and all flammable materials.

▶ Apply the parking brake.

▶ Shift the transmission to neutral position **N**.

▶ Remove your foot from the accelerator.

▶ Press button ① for approximately three seconds.
Manual regeneration only begins if:

- the engine oil and exhaust temperatures are sufficiently high
- AdBlue® is not frozen
- the system is functioning without problems

The [ ] indicator lamp lights up in the instrument cluster and the engine speed is increased.

When regeneration is finished:

- the [ ] indicator lamp in the instrument cluster goes out
- the engine speed is reduced to idling speed

Regeneration is automatically interrupted if you:

- move the multifunction lever into position **D** or **R**
- release the parking brake
- switch on the regeneration block

The interruption reduces the engine speed to idling speed.

ℹ During regeneration, the engine noise may change.

ℹ If the on-board computer prompts you to carry out manual regeneration when the outside temperature is low, start regeneration before parking the vehicle.

If you park the vehicle without regenerating, you can only begin manual regeneration after the engine warming-up phase.

Start the manual regeneration after a thawing time of up to 60 minutes if:

- AdBlue® is frozen
- you have parked the vehicle without regenerating

Replacing the filter

⚠ **WARNING**

Direct contact or inhalation of soot particles is hazardous to health. There is a risk of injury.

Have the diesel particle filter replaced at a qualified specialist workshop.

Fuel consumption

Fuel consumption depends on:

- vehicle version
- operating conditions
- the fuel type in use
- maintenance
- driving resistance
- your driving style

For these reasons, exact figures about any individual vehicle's fuel consumption cannot be provided.

ℹ The on-board computer shows information on average fuel consumption in the trip data menu [ ] (▷ page 119).

AdBlue® consumption

AdBlue® consumption is between approximately 2 to 4 % of fuel consumption.

Engine oil consumption

After running-in the engine, oil consumption may reach 0.2 % of the vehicle's fuel consumption.

Increased distance covered and more arduous operating conditions could result in vehicles exceeding this value.

Limiting the speed

If the maximum speed of the vehicle is exceeded, there is a risk that tractor/trailer com-

https://truckmanualshub.com/

binations may snake. This may also overload the brakes and tyres.

⚠ **WARNING**

If the vehicle combination swerves, you could lose control of the vehicle combination. The vehicle combination may even overturn. There is a risk of an accident.

On no account should you attempt to straighten up the vehicle combination by increasing the speed. Reduce your speed and do not countersteer. Brake if necessary.

On vehicles with a speed limiter, the maximum speed of the vehicle is limited according to national legal requirements, e.g. to approximately 90 km/h.

The engine speed is automatically limited when the restricted top speed is reached. Take this into account when overtaking.

Warning buzzer

! If the warning buzzer sounds and the red event window with the [symbol] symbol appears in the on-board computer, the operating safety of the engine is jeopardised.

Do not pull away or, if the vehicle is already in motion, stop the vehicle as soon as possible, paying attention to road and traffic conditions. You could otherwise damage the engine.

The warning buzzer sounds if:

- the driver's door is opened with the parking light or dipped-beam headlamps switched on and with the key in the ignition lock in position **0**
- the driver's door is opened with the parking light or dipped-beam headlamps switched on and with the key removed from the ignition lock
- the immobiliser is activated
- the driver's door is opened while the parking brake is not applied
- the vehicle is stationary for approximately nine minutes with the engine running and a gear selected
- you select the reverse gear
- you exceed the maximum permissible engine speed
- the engine speed or vehicle speed is too high when changing gears

In addition to the event window in the display of the on-board computer, the warning buzzer sounds, if:

- the coolant level is too low or the maximum permissible coolant temperature (approximately 108 °C) is exceeded. The operating safety of the engine is jeopardised by this.
- there is the risk of overloading the clutch
- the instrument cluster and/or the on-board computer is malfunctioning. Important operating information, maintenance information or indicator and warning lamps can no longer be displayed.

Refuelling

Fuel

Important safety notes

⚠ **WARNING**

Fuel is highly flammable. When fuel is handled improperly, there is a risk of fire and explosion.

Avoid fire, naked flames, smoking and the creation of sparks. Make sure that fuels do not come into contact with a hot exhaust system. Before carrying out work on the fuel system, switch off the ignition and the auxiliary heater. Always wear protective gloves.

⚠ **WARNING**

Fuels are poisonous and hazardous to health. There is a danger of injury.

Do not swallow fuel or let it come into contact with skin, eyes or clothing. Do not inhale fuel

https://truckmanualshub.com/

vapours. Keep fuels out of the reach of children.

If you or others come into contact with fuel, observe the following:

- Wash the fuel off any affected areas of skin with water and soap immediately.
- If you get fuel in your eyes, rinse them thoroughly with clean water immediately. Seek immediate medical attention.
- If fuel is swallowed, seek immediate medical attention. Do not induce vomiting.
- Change any clothing that has come into contact with fuel immediately.

⚠ **WARNING**

Electrostatic charge can cause sparks and thereby ignite fuel vapours. There is a risk of fire and explosion.

Always touch the vehicle body before opening the fuel filler flap or touching the fuel pump nozzle. This discharges any electrostatic charge that may have built up.

⚠ **WARNING**

If you mix diesel fuel with petrol, the flash point of this fuel mixture is lower than that of pure diesel fuel. When the engine is running, components in the exhaust system may overheat unnoticed. There is a risk of fire.

Never refuel with petrol. Never add petrol to diesel fuel.

! Only refuel using commercially available, sulphur-free diesel fuel that conforms to the European standard EN 590 as of 2010, et seq. (max. 0.001% sulphur by weight).

The following fuel types are not permitted:

- sulphurous fuel with a sulphur content greater than 0.001% by weight
- marine diesel fuel
- aviation turbine fuel
- heating oils
- fatty acid methyl ester FAME (bio-diesel fuel)

These fuel types cause irreversible damage to the engine and BlueTec® exhaust gas aftertreatment, as well as also significantly reducing the expected service life.

! Do not use petrol to refuel vehicles with a diesel engine. Do not switch on the ignition if you accidentally refuel with the wrong fuel. Otherwise, fuel can enter the fuel system. Even small amounts of the wrong fuel could result in damage to the fuel system and the engine. The repair costs are high. Notify a qualified specialist workshop and have the fuel tank and fuel lines drained completely.

! Do not add any special fuel additives to the diesel fuel.

Special fuel additives may lead to:

- malfunctions
- damage to exhaust system/exhaust gas aftertreatment
- damage to engine

! Overfilling the fuel tank could damage the fuel system.

! Take care not to spill any fuel on painted surfaces. You could otherwise damage the paintwork.

! If you are using drums or canisters to refuel the vehicle, you should filter the fuel before adding it.

This will prevent malfunctions in the fuel system due to contaminated fuel.

! Use truck fuel pump nozzles to refuel. If you use a passenger vehicle fuel pump nozzle, the filler neck could be damaged. If you must use a passenger vehicle fuel pump nozzle, be careful of the latch when removing the nozzle. Do not pull the passenger vehicle fuel pump nozzle, but turn or tilt it downwards. You can then remove the nozzle.

Environmental note

If fuels are handled improperly, they pose a danger to persons and the environment. Do

https://truckmanualshub.com/

not allow fuels to run into the sewage system, the surface waters, the ground water or into the ground.

Do not get into the vehicle again during the refuelling process. Otherwise, electrostatic charge could build up again.

If you overfill the fuel tank, some fuel may spray out when you remove the fuel pump nozzle.

You will find further information on fuel in the "Service products" section (▷ page 364).

Refuelling

Example: U 318 fuel tank

- ▶ Switch off the engine.
- ▶ Remove the key from the ignition lock.
- ▶ Apply the parking brake.
- ▶ Switch off the auxiliary heating (▷ page 102).
- ▶ Raise lock cover ② slightly and move it to the side.
- ▶ Unlock fuel filler cap ③ with the key.
- ▶ Turn fuel filler cap ③ to the left and remove from fuel tank ①.
- ▶ Observe the fuel grade (▷ page 364).
- ▶ Completely insert the filler neck of the fuel pump nozzle into the tank, hook in place and refuel.
- ▶ Only fill the tank until the pump nozzle switches off.

ℹ Do not add any more fuel after the pump stops filling for the first time. Otherwise, fuel may leak out.

- ▶ Replace fuel filler cap ③ and screw it on.
- ▶ Lock fuel filler cap ③ with the key.
- ▶ **Vehicles with fuel prefilter with water separator:** drain the fuel prefilter regularly (▷ page 321).

AdBlue®

Important safety notes

! Do not allow diesel fuel to run into the AdBlue® tank. You could otherwise damage the exhaust gas aftertreatment system.

! Only use AdBlue®/DEF in accordance with DIN 70070/ISO 22241. Do not use any additives.

If AdBlue®/DEF comes into contact with painted or aluminium surfaces when filling the tank, rinse the affected area immediately with plenty of water.

! Do not mix additives to AdBlue®. Do not thin AdBlue® with tap water. This could destroy the exhaust gas aftertreatment system.

! Always close the AdBlue® tank properly. Otherwise impurities may get into the exhaust gas aftertreatment system and damage it.

! Make sure that you do not overfill the AdBlue®/DEF tank. Otherwise, the AdBlue®/DEF tank could be damaged at very low temperatures.

When opening the AdBlue® tank, small amounts of ammonia vapours could escape.

Ammonia vapours have a pungent smell and are particularly irritating to:

- skin
- mucous membranes
- eyes

The vapours may cause a burning sensation in the eyes, nose and throat as well as irritation of the throat and watering eyes.

Avoid inhaling ammonia vapours. Only fill the AdBlue® tank in well-ventilated areas.

AdBlue® should not come into contact with skin, eyes or clothing, and should not be swallowed. Keep AdBlue® out of the reach of children.

If you come into contact with AdBlue®, observe the following:

- immediately wash AdBlue® from your skin with water and soap.
- if AdBlue® comes into contact with your eyes, rinse your eyes with clean water immediately. Consult a doctor without delay.
- if you have swallowed AdBlue®, immediately rinse your mouth with water and drink plenty of water. Consult a doctor without delay.
- change clothing that is soiled with AdBlue® immediately.

AdBlue® is not refilled as part of the maintenance work. Top up the tank regularly during vehicle operation or at the latest when the first event message is displayed on the on-board computer.

Additional information on AdBlue® is included in the "Service products" section (▷ page 365).

Before filling the tank

Example: AdBlue® U 318 tank

Example: AdBlue® U 218 tank

If AdBlue® tank ③ still contains sufficient AdBlue®, pressure compensation may result when unscrewing cap ①. AdBlue® may spill out. For this reason, take care when unscrewing cap ① from AdBlue® tank ③. If AdBlue® spills out, immediately wash the affected area with plenty of water.

A special tank filler neck prevents AdBlue® tank ③ from mistakenly being filled with diesel fuel.

▶ Switch off the engine.
▶ Remove the key from the ignition lock.
▶ Apply the parking brake.
▶ Switch off the auxiliary heating (▷ page 102).
▶ **Lockable cap:** lift up lock cover ② on blue cap ①.
▶ Unlock blue cap ① with the separate key.
▶ **All vehicles:** slowly turn blue cap ① to the left and remove.

Trailer

Trailer tow hitch

The trailer coupling is one of the vehicle components with particular significance for road safety. Please comply precisely with the manufacturer's operating, care and maintenance instructions.

Only tow vehicles that do not have technical problems. The permitted weight and load values that must not be exceeded are to be

https://truckmanualshub.com/

found in the vehicle's registration papers. These values can also be found on the type plate of the trailer coupling, the trailer and the vehicle identification plate. Where the values differ, the lowest is valid.

Coupling up

⚠ WARNING

If the trailer coupling has too much longitudinal play, the trailer can tear away. You could lose the semitrailer as a result. There is a risk of an accident.

Check the trailer coupling daily for longitudinal play by moving the towbar body of the trailer coupling forwards and back firmly. Have any longitudinal play eliminated at a qualified specialist workshop as soon as possible.

⚠ WARNING

There is a risk of the drawbar swinging out when coupling up the trailer. In this case, the trailer drawbar swings uncontrollably from side to side. If a person is in the area of danger, there is a risk of injury.

Make sure that no persons are in the area of danger. Set the trailer drawbar to the correct height before coupling up, e.g. by using the height adjustment device.

Couple up the trailer by reversing the tractor vehicle. Never let the trailer run on.

⚠ WARNING

If you uncouple a trailer with an engaged overrun brake, you could trap your hand between the vehicle and the trailer drawbar. This poses a risk of injury.

Do not uncouple a trailer with an engaged overrun brake.

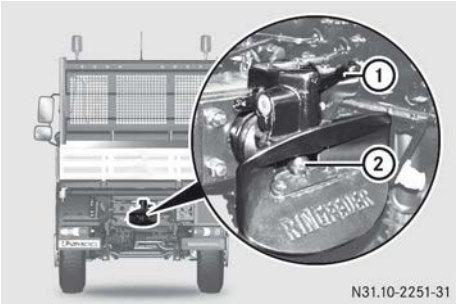

Example: trailer coupling

① Control lever

② Coupling pin

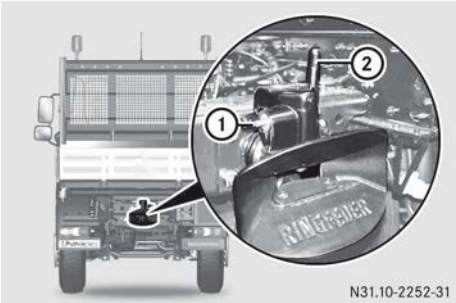

Example: open trailer coupling

① Locking pin

② Control lever

▶ Couple/decouple the trailer (see the manufacturer's operating instructions of the trailer coupling).

Connecting cables and compressed-air lines

Overview

! Arrange the cables and compressed-air lines in such a way that they easily yield to all movements without tension, kinking or friction when cornering, etc. Before connecting the cable, make sure the voltage rating of the consumer equipment on the trailer is correct.

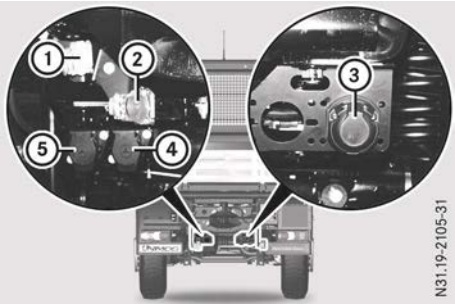

Example: connections for trailer

① Brake line hose coupling (yellow)
② Reservoir line hose coupling (red)
③ Power socket, 12 V
④ ABS socket, 7-pin
⑤ Socket, 24 V

Connecting cables and compressed-air lines

- ▶ Connect the power supply to 12 V ③ or 24 V ⑤ socket.
- ▶ Connect the control cable to ABS socket ④.
- ▶ Connect brake line coupling head ① (yellow).
- ▶ Connect supply line coupling head ② (red).
- ▶ After connecting the compressed-air lines to the vehicle, adjust the brake pressure regulator (if installed) on the trailer (see manufacturer's operating instructions).
- ▶ Check that the lighting system on the tractor vehicle and trailer is clean and working correctly.
- ▶ Check that the trailer brake system is working correctly.

Disconnecting cables and compressed-air lines

⚠ **WARNING**

If you disconnect the hose couplings in the wrong order, the trailer brake is released and the trailer could roll away. There is a risk of accident.

Make sure that you observe the correct order when disconnecting the hose couplings.

! After disconnecting the compressed-air lines, ensure that the covers of the coupling heads on the vehicle are closed. If the covers are not closed, the coupling heads may become contaminated, causing a malfunction.

- ▶ Disconnect the power supply from 12 V ③ or 24 V ⑤ socket.
- ▶ Disconnect the control cable from ABS socket ④.
- ▶ Apply the parking brake of the towing vehicle (▷ page 166).
- ▶ Chock the trailer wheels.
- ▶ Apply the trailer's parking brake, see the manufacturer's operating instructions.
- ▶ Detach reservoir line coupling head ② (red).
- ▶ Detach brake line coupling head ① (yellow).

Winter operation

Driving in winter

Important safety notes

⚠ **WARNING**

If you activate the continuous brake or shift to a lower gear on a slippery road surface in order to increase the engine's braking effect, the drive wheels may lose traction. There is an increased risk of skidding and an accident.

Do not activate the continuous brake and do not shift to a lower gear in order to increase the engine's braking effect on a slippery road surface.

https://truckmanualshub.com/

Before the journey

Before the onset of winter, make sure that:

- the coolant contains sufficient antifreeze protection (▷ page 362)
- the fuel used is suitable for winter use (▷ page 364)
- when using single-grade engine oils, replacement is completed in good time (▷ page 361)
- the windscreen washer system contains sufficient antifreeze (▷ page 296)
- tyres with a high-grip tread pattern are fitted; if possible, these should be M+S tyres (winter tyres)
- snow chains are carried in the vehicle

Have your vehicle winterproofed at a qualified specialist workshop at the onset of winter.

▶ When driving on snow, slush and on icy roads fit snow chains in good time (▷ page 223).

While the vehicle is in motion

You should drive particularly carefully on slippery road surfaces. Avoid sudden acceleration, steering and braking manoeuvres.

▶ Adapt your driving style to suit the road conditions.

If the vehicle threatens to skid or cannot be stopped when moving at low speed:

▶ Shift the transmission into neutral.

▶ Try to bring the vehicle under control by using corrective steering.

The outside temperature indicator is not designed to serve as an ice-warning device and is therefore unsuitable for that purpose. There is a delay in displaying a change in outside temperature.

Indicated temperatures just above the freezing point do not guarantee that the road surface is free of ice. The road may still be icy, especially in wooded areas or on bridges. The vehicle could start skidding if you fail to adapt your driving style. Always adapt your driving style and drive at a speed to suit the prevailing weather conditions.

You should pay particularly close attention to road conditions as soon as temperatures approach freezing.

Windscreen

At temperatures between approximately 5 °C to -5 °C and snowfall, direct the air to the windscreen using the air-distribution control (▷ page 101). Additionally, the windscreen heating can be switched on (▷ page 90).

Driving in extremely cold conditions

At outside temperatures below -20 °C:

▶ Make sure that there is adequate brake system reservoir pressure (▷ page 161) and that the operating temperature of the coolant (▷ page 125) has been reached.

▶ Avoid placing heavy loads on the engine when pulling away.

▶ Shift gear early and avoid high engine speeds.

▶ Warm the vehicle up for approximately 20 minutes before increasing the load.

Parking in extremely cold conditions

If the vehicle is parked at outside temperatures of below -30 °C, it cannot be guaranteed that the engine will start, even with the cold-climate package. Mercedes-Benz advises against parking the vehicle outdoors at outside temperatures of below -30 °C.

https://truckmanualshub.com/

Observe the following if the vehicle has to be parked outdoors at extremely low temperatures:

- ▶ Interrupt the voltage supply with the battery isolator switch (▷ page 90).
- ▶ If necessary, ensure adequate vehicle lighting by using an external lighting system (e.g. warning lamps).
- ▶ Make sure that the fuel tank and the AdBlue® reservoir are filled above the reserve level.

ℹ It may be necessary to ventilate the fuel system after long periods out of use if the fuel level is too low (▷ page 322).

- ▶ For longer periods out of use: charge the batteries every two days.

or

- ▶ Remove the batteries and store at a temperature above 0 °C.

Snow chains

Important safety notes

Snow chains increase traction in wintry conditions.

German law requires that snow chains be removed as soon as possible once the road is clear of snow. The vehicle's driving and braking characteristics will be adversely affected if you drive on roads that are clear of snow with snow chains fitted to the vehicle.

⚠ **WARNING**

If you drive too fast with snow chains fitted, they may snap. As a result, you could injure others and damage the vehicle. There is a risk of an accident.

Observe the maximum permissible speed for operation with snow chains.

! Only use snow chains that have been approved and recommended for Mercedes-Benz. This will prevent you from causing damage to the vehicle. If you have questions, consult a qualified specialist workshop.

! Mercedes-Benz recommends fitting snow chains on all wheels on the front and rear axles.

If, contrary to Mercedes-Benz recommendations, snow chains are not fitted on all axles, at least the interaxle lock must be engaged on vehicles with permanent all-wheel drive. There is otherwise a high risk of damaging the interaxle differential.

If, contrary to Mercedes-Benz recommendations, snow chains are fitted diagonally, there is a high risk of damaging the differential. Repeated and sustained spinning of the wheels may cause damage to the differentials.

There may be slight deviations from the descriptions in these Operating Instructions regarding the use of snow chains, due to legal requirements in individual countries. Observe the legal requirements in all countries concerned.

When fitting snow chains, observe the fitting instructions of the chain manufacturer.

Checking the tyre clearance

! If the clearance between the snow chain and steering linkage is less than 25 mm, the snow chain could damage the steering linkage. In this case, remove the snow chains again. Have the steering geometry checked at a qualified specialist workshop.

Observe the following when fitting snow chains to the front axle:

- ▶ Apply the parking brake.
- ▶ Fit snow chains in accordance with the fitting instructions of the snow chain manufacturer.
- ▶ Start the engine.

https://truckmanualshub.com/

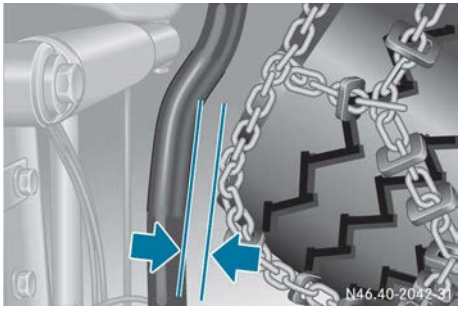

Clearance between snow chain and drag link

▶ Turn the steering wheel to the right as far as it will to go.
With the steering on full lock, there must be a clearance of at least 25 mm between the snow chains and the drag link.

Cold climate package

General notes

To ensure that the vehicle can be started in low outside temperatures, the following optional equipment is available:

- socket for jump-starting
- auxiliary heating
- fuel preheating system with water separator

You can also have coolant preheating retrofitted at a qualified specialist workshop. This is operated independently of the on-board voltage at 230 V.

ℹ If the vehicle is to be used in extreme cold on a frequent basis, Mercedes-Benz recommends fitting the vehicle with the following equipment:

- high-output alternator
- heated windscreen
- seat heating

Cold-start limits

Without optional equipment, your vehicle is capable of starting at temperatures as low as -15 °C. When fitted with the optional equipment and filled with cold-resistant service products, your vehicle can be started at temperatures as low as -26 °C.

ℹ Engine starting may be impaired despite taking appropriate measures if the vehicle is exposed to temperatures lower than the cold-start limits.

Cold-resistant service products

Service products	Notes
Diesel fuel	Winter diesel
Engine oil	Cold-resistant oil SAE 5W-30
Coolant	Mixing ratio of 50% by volume coolant/ 50% by volume water
Axles	001 989 53 03 12
Steering	001 989 24 03 12
Hydraulic system	Cold-resistant oil SAE 5W-40

Have the vehicle converted to cold-resistant service products at a qualified workshop.

Before attempting a cold start

Special measures must be taken before a cold start if the vehicle has been exposed to extremely low temperatures.

▶ Charge batteries in a low state of charge before starting.

▶ Thaw frozen batteries before charging them.

ℹ The fluid in discharged batteries may freeze at extremely cold temperatures.

▶ Do not rapid-charge cold batteries.

https://truckmanualshub.com/

▶ If the batteries are permanently subjected to temperatures below -25 °C: charge the batteries every two days.

or

▶ Remove batteries and store at a temperature above 0 °C.

ℹ The capacity of the batteries is adversely affected by increasingly cold temperatures.

▶ **Vehicles with Telligent® automatic gearshift:** fold out the clutch pedal (▷ page 181).

ℹ The folded-out clutch pedal makes starting the engine easier. When the engine has reached the operating temperature, you can fold the clutch pedal back in.

Starting the engine

! Do not start the engine if the on-board voltage is low. This is the case if, for example, the lights are weak or the indicator lamp in the status area of the on-board computer lights up. Starting attempts could damage the batteries if they are cold or not fully charged.

▶ Establish the voltage supply with the battery isolator switch (▷ page 90).

▶ Switch off all unnecessary electrical consumers (e.g. CD radio, blower etc.).

▶ **At temperatures below -25 °C and on vehicles with coolant preheating:** preheat the coolant with coolant preheating for at least 90 minutes.

▶ If required, switch on the auxiliary heating (▷ page 102) or engine preheating (▷ page 106).

▶ **All vehicles:** turn the key to position **2** in the ignition lock.

▶ Make sure that the on-board voltage is sufficient for starting the engine. When doing this, observe the temperature display in the instrument cluster and watch out for signs of low on-board voltage.

▶ **Vehicles with Telligent® gearshift:** depress the clutch pedal.

▶ **All vehicles:** start the engine.

▶ Warm up the engine at low engine speed with the vehicle stationary. Do this at outdoor temperatures of below -20 °C for approximately 20 minutes.

! The lubricity of the engine oil and transmission oil may be reduced at low temperatures. Driving a cold vehicle may result in damage to the drivetrain and assemblies.

Engine does not start

! Do not continuously operate the starter. Continuous operation can damage the starter and the electrical system. Starting attempts should last no more than 60 seconds and you must wait at least 60 seconds between attempts.

A break of at least five minutes is necessary if the engine has still not started after three starting attempts.

▶ **Before restarting:** turn the key to position **0** in the ignition lock.

▶ Let the starter motor cool down and then restart the engine.

or

▶ Jump-start the vehicle by means of an external 24 V jump-start (▷ page 331).

https://truckmanualshub.com/

https://truckmanualshub.com/

Useful information 228
Important safety notes 228
Overview 228
Hydraulic connections 230
Menus and input windows in the on-board computer 234
Working hydraulics circuit I 244
Working hydraulics circuit II 253
Power hydraulics circuit III/IV 258

https://truckmanualshub.com/

Useful information

These Operating Instructions describe all the models and standard and optional equipment of your vehicle that were available at the time of going to print. Country-specific differences are possible. Bear in mind that your vehicle may not be equipped with all the functions described. This also applies to safety-relevant systems and functions.

Read the information on qualified specialist workshops (▷ page 30).

Important safety notes

⚠ **WARNING**

The hydraulic system is under high pressure and the hydraulic fluid may be hot. If work on the hydraulic system is carried out incorrectly, high-pressure hydraulic fluid may spray out. There is a risk of injury.

Only have work on the hydraulic system carried out at a qualified specialist workshop.

Environmental note

Environmentally compatible hydraulic fluids must be separately stored, collected and disposed of in accordance with waste management laws.

! Only switch on the hydraulic system when it is connected to an item of attached equipment. There is otherwise a risk of damage to the hydraulic system.

Overview

Types of hydraulic system

The hydraulic system can consist of several independent circuits:

- working hydraulics circuit I, with or without snow plough load relief
- working hydraulics circuit II, vehicles with gear pump
- front working hydraulics circuit II, vehicles with positioning pump
- side and rear working hydraulics circuit II, vehicles with positioning pump
- power hydraulics circuit III/IV

Hydraulic system controls

Operating lever

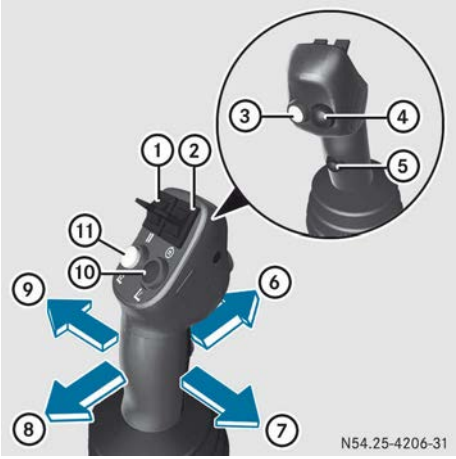

① button, to change direction
② button, to set engine speed
③ Yellow button, to adjust settings
④ Black button, to call up menus
⑤ Red button, to call up the float setting function (▷ page 246) or snow plough load relief (▷ page 248)
⑥ **To lower the control system:**
Red hydraulic connection 2 or, if simultaneously pressing white button ⑪, yellow hydraulic connection 6
⑦ **To move the control system to the right:**
Green hydraulic connection 4 or, if simultaneously pressing white button ⑪, blue hydraulic connection 8
⑧ **To raise the control system:**
Red hydraulic connection 1 or, if simultaneously pressing white button ⑪, yellow hydraulic connection 5

https://truckmanualshub.com/

⑨ **To move the control system to the left:** Green hydraulic connection 3 or, if simultaneously pressing white button ⑪, blue hydraulic connection 7

⑩ Blue button, can be assigned specific functions (▷ page 241)

⑪ White button, activates operation of yellow hydraulic connections 5, 6 or blue hydraulic connections 7, 8

Buttons, vehicles with gear pump

⑫ Switches off the entire hydraulics system

⑬ Activates/deactivates working hydraulics circuit I

⑭ Activates/deactivates working hydraulics system circuit II

⑮ Cumulation of flow rates to circuit I or circuit II

⑯ Switches the flow rate between circuit I and circuit II

⑰ Activates/deactivates power hydraulics circuit III/IV

⑱ Activates/deactivates power hydraulics circuit IV

⑲ Activates/deactivates snow plough load relief, red hydraulic connections 1 and 2

⑳ Activates/deactivates continuous consumers, green hydraulic connection 3

㉑ Activates/deactivates continuous consumers, red hydraulic connection 1

㉒ Activates/deactivates float setting, blue hydraulic connections 7 and 8

㉓ Activates/deactivates float setting, yellow hydraulic connections 5 and 6

㉔ Activates/deactivates float setting, green hydraulic connections 3 and 4

㉕ Activates/deactivates float setting, red hydraulic connections 1 and 2

Buttons, vehicles with positioning pump

⑫ Switches off the entire hydraulics system

⑬ Activates/deactivates working hydraulics circuit I

⑰ Activates/deactivates power hydraulics circuit III/IV

⑱ Activates/deactivates power hydraulics circuit IV

⑲ Activates/deactivates snow plough load relief, red hydraulic connections 1 and 2

⑳ Activates/deactivates continuous consumers, green hydraulic connection 3

㉑ Activates/deactivates continuous consumers, red hydraulic connection 1

㉒ Activates/deactivates float setting, blue hydraulic connections 7 and 8

https://truckmanualshub.com/

㉓ Activates/deactivates float setting, yellow hydraulic connections 5 and 6
㉔ Activates/deactivates float setting, green hydraulic connections 3 and 4
㉕ Activates/deactivates float setting, red hydraulic connections 1 and 2
㉖ Activates/deactivates front working hydraulics circuit II
㉗ Activates/deactivates side and rear working hydraulics system circuit II

Deactivating/activating the hydraulic system

▶ **To deactivate:** press button ⑫.
The indicator lamp in button ⑫ lights up.
The entire hydraulic system is deactivated. Operation of the hydraulic system using the buttons or the control lever is disabled.

▶ **To activate:** press button ⑫.
The indicator lamp in button ⑫ goes out.
Operation of the hydraulic system using the buttons or the control lever is enabled.

Hydraulic connections

Important safety notes

⚠ **WARNING**

When you switch off the hydraulic system, a residual pressure remains in the hydraulic system. This may cause attached equipment to move or continue to run. There is a risk of an accident and injury.

- After switching off the hydraulic system, always secure the attached equipment by closing the cutoff valve on the equipment.
- Insert the transport lock.
- Make sure that nobody is in the danger zone of the attached equipment.

! Only switch on the hydraulic system when it is connected to an item of attached equipment. There is otherwise a risk of damage to the hydraulic system.

Working hydraulics circuit I and circuit II

Hydraulic connections

⚠ **DANGER**

If hydraulic connections of the same colour are connected at the front and rear simultaneously, all hydraulic connections will be pressurised to the same pressure. The equipment fitted can then be set, uncontrolled, in motion. Persons in the area of danger can be seriously or even fatally injured.

Make sure that only one piece of equipment at a time is ever connected to hydraulic connections of the same colour.

The working hydraulics may be fitted with up to eight hydraulic connections at the front and up to four connections at the rear. The hydraulic connections are integrated into the front and rear bumpers. The hydraulic connections are colour-coded.

Hydraulic connections 1 to 8 can be proportionally controlled with the control lever. You can connect attached equipment with a constant flow rate either to hydraulic connection 1 or hydraulic connection 3; switching continuous consumers on/off (▷ page 252).

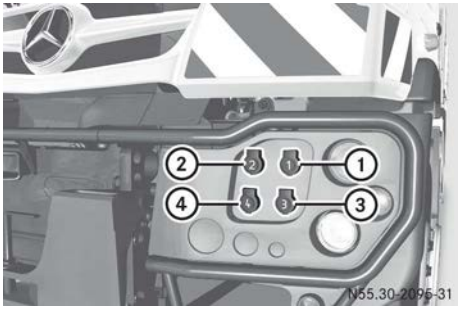

Vehicle front, left-hand side
① Red hydraulic connection 1, circuit I
② Red hydraulic connection 2, circuit I
③ Green hydraulic connection 3, circuit I
④ Green hydraulic connection 4, circuit I

https://truckmanualshub.com/

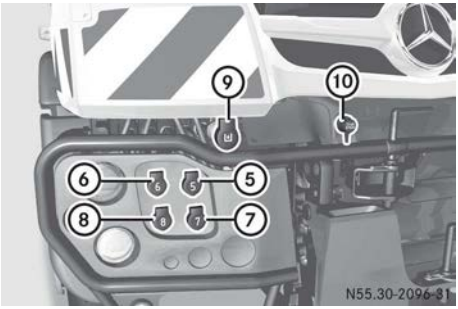

Front end, right

⑤ Yellow hydraulic connection 5, circuit I
⑥ Yellow hydraulic connection 6, circuit I
⑦ Blue hydraulic connection 7, circuit I
⑧ Blue hydraulic connection 8, circuit I
⑨ Hydraulic connection, separate return flow line for circuit I or circuit II
⑩ Hydraulic connection, circuit II

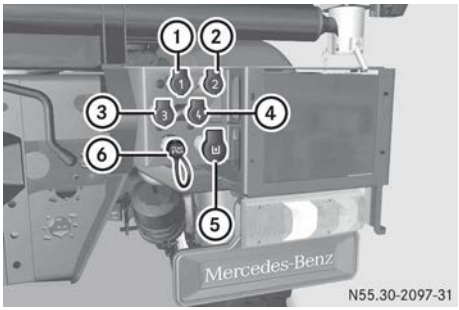

Rear area, right-hand side

① Red hydraulic connection 1, circuit I
② Red hydraulic connection 2, circuit I
③ Green hydraulic connection 3, circuit I
④ Green hydraulic connection 4, circuit I
⑤ Hydraulic connection, separate return flow line, circuit I or circuit II
⑥ Hydraulic connection, circuit II

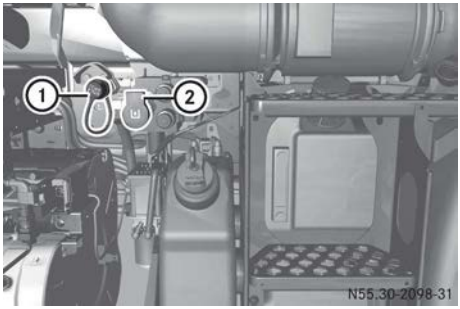

Chassis, right

① Hydraulic connection, circuit II
② Hydraulic connection, separate return flow line, circuit II

Load-sensing connections, vehicles with positioning pump

Overview of connections

Front end, right

① Load-sensing connection

Rear area, right-hand side

① Load-sensing connection

https://truckmanualshub.com/

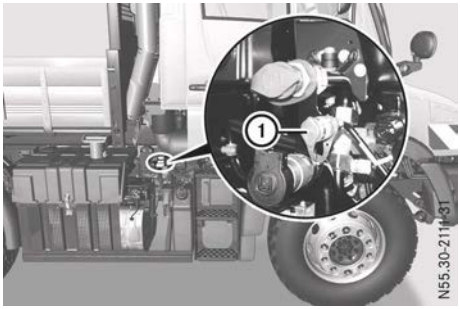

Chassis, right

① Load-sensing connection

Connecting attached equipment with load-sensing connection

If you connect attached equipment to the load-sensing connection, the required flow rate for this equipment is controlled automatically by the device. The attached equipment is then directly connected to the positioning pump, as soon as you have selected LS in the "Hydraulics" input window (▷ page 237).

- ▶ Make sure that the engine is switched off.
- ▶ Connect attached equipment that has a load-sensing connection with individual pressure compensation (see the manufacturer's operating instructions).
- ▶ Perform a safety and function check on the attached equipment (see the manufacturer's operating instructions).

https://truckmanualshub.com/

Problems connecting hydraulic lines to working hydraulics circuit II

Problem	Possible causes/consequences and ▶ Solutions
The hydraulic lines of the equipment fitted cannot be connected to the hydraulic connections of working hydraulics circuit II.	The pressure in the hydraulic lines of working hydraulics circuit II is too high. ▶ Switch off the engine. ▶ Turn the key to position **2** in the ignition lock. ▶ **Vehicles with gear pump:** briefly switch working hydraulics circuit II to standby mode (▷ page 253). The pressure is decreased in the hydraulic line of working hydraulics circuit II. or ▶ **Vehicles with positioning pump:** briefly switch front working hydraulics circuit II (▷ page 256) or side and rear working hydraulics circuit II (▷ page 257) into standby mode. The pressure is decreased in the hydraulic line of working hydraulics circuit II.

Power hydraulics

! Only switch on the power hydraulics when connected to an item of attached equipment. There is otherwise a risk of damage to the power hydraulics.

You must switch off the power hydraulics when you have finished using the equipment and when you are transporting it.

! If a cell is activated, the corresponding hydraulic connections at the front and rear of the vehicle will be pressurised. Therefore, do not simultaneously use equipment connected at the front and rear hydraulic connections for the same hydraulic circuit.

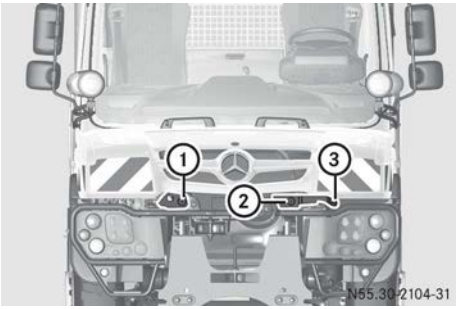

Vehicle front with circuit III

① Red hydraulic connection, pressure line, circuit III

② Red hydraulic connection, return line, circuit III

③ Black hydraulic connection, free return

https://truckmanualshub.com/

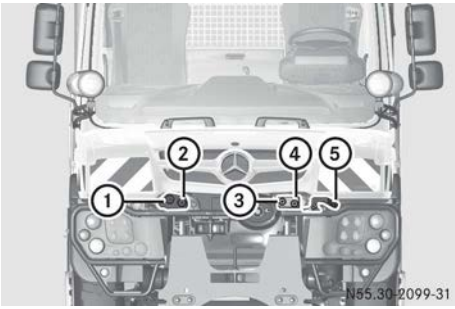

Vehicle front with circuit III and circuit IV

① Red hydraulic connection, pressure line, circuit III
② Green hydraulic connection, pressure line, circuit IV
③ Red hydraulic connection, return for circuit III
④ Green hydraulic connection, return for circuit IV
⑤ Black hydraulic connection, free return

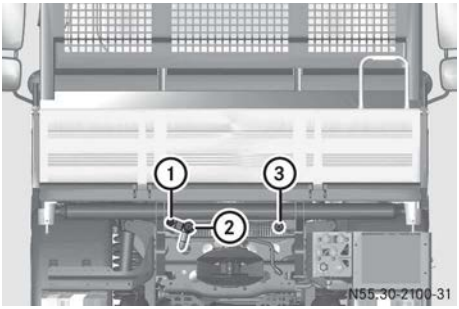

Rear area with circuit III

① Red hydraulic connection, pressure line, circuit III
② Red hydraulic connection, return line, circuit III
③ Black hydraulic connection, free return

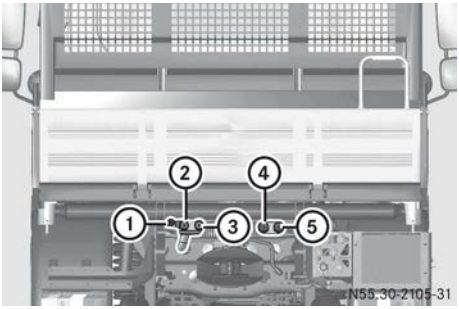

Rear area with circuit III and circuit IV

① Red hydraulic connection, pressure line, circuit III
② Green hydraulic connection, pressure line, circuit IV
③ Red hydraulic connection, return for circuit III
④ Green hydraulic connection, return for circuit IV
⑤ Black hydraulic connection, free return

Menus and input windows in the on-board computer

Brief instructions

General notes

You can call up the menus, submenus and input windows of the hydraulics with the buttons on the steering wheel and the control lever. Brief instructions follow. In all further descriptions, only the buttons on the steering wheel will be described.

Brief instructions for operation using the buttons on the steering wheel

▶ **To select an entry:** press the [▼] or [▲] button.

▶ **To change the value:** press the [▶] or [◀] button.

▶ **To call up a menu or function, to end an entry:** press the (OK) button.

https://truckmanualshub.com/

Brief instructions for operation using the control lever

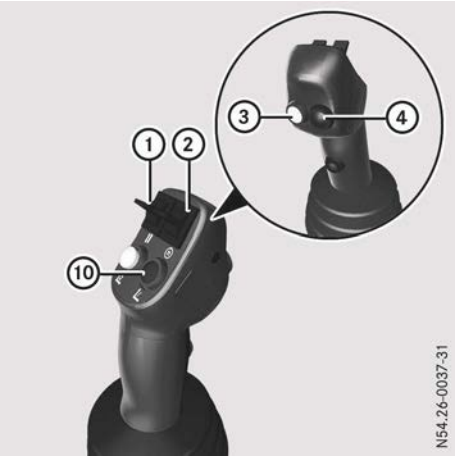

① button, to change direction
② button, to set engine speed
③ Yellow button, to adjust settings
④ Black button, to call up menus
⑩ Blue button, can be assigned specific functions (▷ page 241)

- **To select an entry:** press and hold yellow button ③ and press the button ① upwards or downwards until the desired entry has been selected
- **To change the value:** press and hold yellow button ③ and press the button ② upwards or downwards until the desired value is shown.
- **To call up a menu or function, to end entry:** press black button ④.

"Hydraulics" menu window

Below, the menus, submenus and input windows of the hydraulics are described.

Structural sequence in the on-board computer	Selection
Operation and maintenance	Axles
	Tyres
	Hydraulics
	Trailer
	Maintenance

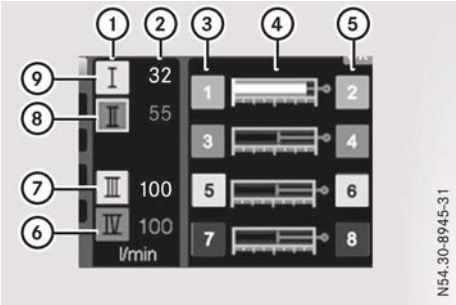

Hydraulics menu windows, vehicles with gear pump (example)

① Symbols for the working hydraulics circuit and power hydraulics circuit
② Flow rates
③ Hydraulic connections
④ Symbols for operating mode display: continuous consumers, proportional control or snow plough load relief
⑤ Hydraulic connections
⑥ Power hydraulics circuit IV deactivated
⑦ Power hydraulics circuit III activated
⑧ Working hydraulics circuit II in standby mode
⑨ Working hydraulics circuit I activated

https://truckmanualshub.com/

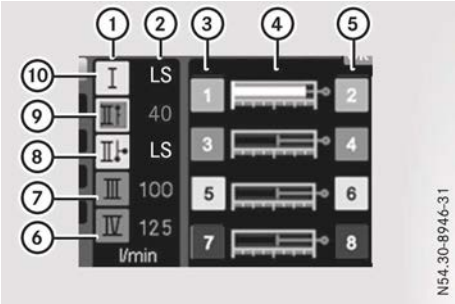

Hydraulics menu windows, vehicles with positioning pump (example)

① Symbols for the working hydraulics circuit and power hydraulics circuit

② Attached equipment with constant flow rate: flow rate

Equipment with load sensing: LS display

③ Hydraulic connections

④ Symbols for operating mode display: continuous consumers, proportional control or snow plough load relief

⑤ Hydraulic connections

⑥ Power hydraulics circuit IV deactivated

⑦ Power hydraulics circuit III deactivated

⑧ Side and rear working hydraulics system circuit II activated

⑨ Front working hydraulics circuit II in standby mode

⑩ Working hydraulics circuit activated

▶ Using the [▸] or [◂] button, scroll to [⚒] operation and maintenance (▷ page 117).

▶ Use the [▾] or [▴] button to scroll to the Hydraulics menu window.
The Hydraulics menu window appears. All operating conditions of the working and power hydraulics are displayed.

"Working functions" menu window

As a rule, it is simplest to operate the on-board computer using the buttons on the steering wheel. You can, however, also call up the Working functions menu window using the control lever and, if necessary, to change settings as well.

Structural sequence in the on-board computer	Selection
Operation and maintenance [⚒]	
Hydraulics	
Working functions	Hydraulics
	Load profile 1
	Load profile 2
	Settings
	Back

Operation using the buttons on the steering wheel

▶ Make sure the vehicle is stationary.

▶ Using the [▸] or [◂] button, scroll to [⚒] operation and maintenance.

▶ Press the [▾] or [▴] button to select the Hydraulics entry.
The Hydraulics menu window appears.

▶ Press the (OK) button.
The Working functions menu appears.

▶ Press the [▾] or [▴] button to select the desired entry.

▶ Press the (OK) button.
The desired input window appears.

https://truckmanualshub.com/

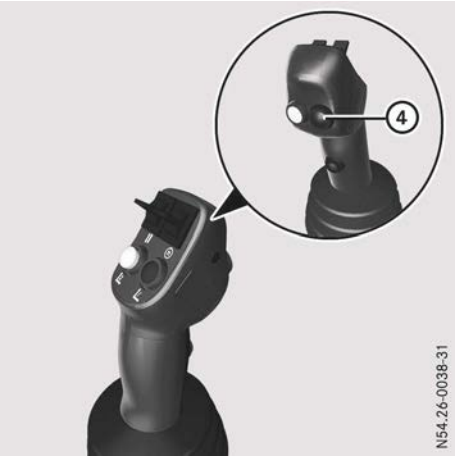

Operation using the control lever

- ▶ Make sure the vehicle is stationary.
- ▶ Press black button ④.
  The Working functions menu appears.
  The Hydraulics input window is selected.
- ▶ Press black button ④.
  The Hydraulics input window appears.
- ▶ Select the entry, change the value and confirm the function (▷ page 235).

"Hydraulics" input window

⚠ **DANGER**

A vehicle with positioning pump has equipment with a constant flow rate connected. If you then select LS in the "Hydraulics" input window, the attached equipment goes into float setting as soon as you activate the corresponding working circuit. The equipment fitted then lowers in an uncontrolled manner. Persons in the area of danger can be seriously or even fatally injured.

Keep the following in mind before activating the working hydraulics: in the case of attached equipment with a constant flow rate, a flow rate must always be shown in the "Hydraulics" input window, and not LS.

Structural sequence in the on-board computer	Display
Operation and maintenance	
Hydraulics	
Working functions	
Hydraulics	The hydraulics input window appears.

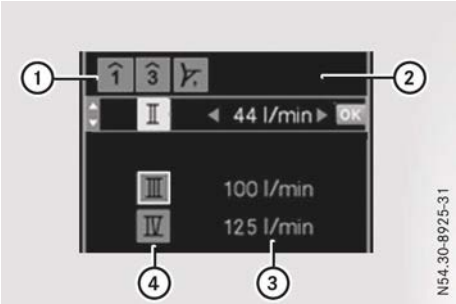

Hydraulics input window, vehicles with gear pump (example)

① Symbol for working hydraulics circuit I: continuous consumer on red hydraulic connection 1, continuous consumer on green hydraulic connection 3 or snow plough load relief

② Flow rate for continuous consumers or load relief function value for snow plough load relief

③ Flow rates

④ Symbols for the working hydraulics circuit and power hydraulics circuit

https://truckmanualshub.com/

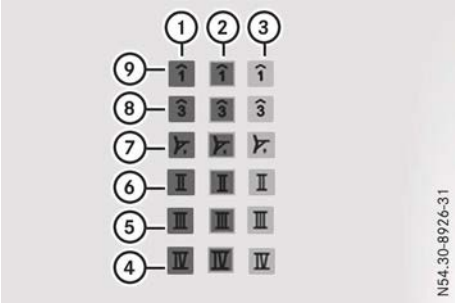

Symbols for hydraulics input window, vehicles with gear pump (example)

① Working and power hydraulics circuit deactivated
② Working and power hydraulics circuit in standby mode
③ Working and power hydraulics circuit activated
④ Power hydraulics circuit IV
⑤ Power hydraulics circuit III
⑥ Working hydraulics circuit II
⑦ Snow plough load relief
⑧ Continuous consumer on green hydraulic connection 3
⑨ Continuous consumer on red hydraulic connection 1

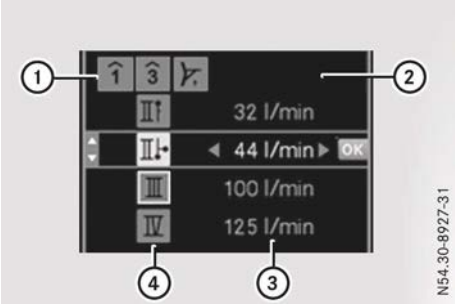

Hydraulics input window, vehicles with positioning pump (example)

① Symbol for working hydraulics circuit I: continuous consumer on red hydraulic connection 1, continuous consumer on green hydraulic connection 3 or snow plough load relief
② Load relief function value for snow plough load relief or
Attached equipment with constant flow rate: flow rate
Equipment with load sensing: LS display
③ Attached equipment with constant flow rate: flow rate
Equipment with load sensing: LS display
④ Symbols for the working hydraulics circuit and power hydraulics circuit

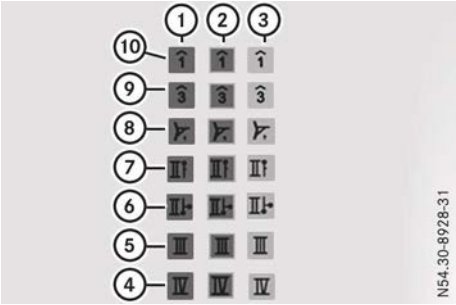

Symbols for hydraulics input window, vehicles with gear pump (example)

① Working and power hydraulics circuit deactivated
② Working and power hydraulics circuit in standby mode
③ Working and power hydraulics circuit activated
④ Power hydraulics circuit IV
⑤ Power hydraulics circuit III
⑥ Side and rear working hydraulics system circuit II
⑦ Front working hydraulics circuit II
⑧ Snow plough load relief
⑨ Continuous consumer on green hydraulic connection 3
⑩ Continuous consumer on red hydraulic connection 1

Calling up the "Hydraulics" input window

▶ Call up the Working functions menu window (▷ page 236).
▶ Press the ▼ or ▲ button to select the Hydraulics entry.
▶ Press the OK button.
The Hydraulics input window appears.

https://truckmanualshub.com/

Changing the value

▶ If necessary, switch the desired hydraulics circuit to standby mode:
- Snow plough load relief (▷ page 248)
- Continuous consumers (▷ page 252)
- Working hydraulics circuit (▷ page 244)
- Power hydraulics circuit (▷ page 258)

The corresponding symbol is marked with a coloured border. The indicator lamp in the corresponding button flashes.

▶ Press the [▼] or [▲] button to select the desired hydraulic circuit.

▶ **Attached equipment with constant flow rate:** change the value. To do so, press the [▶] or [◀] button.

or

▶ **Equipment with load sensing:** press and hold the [◀] button until LS is shown in the input window.

Activating a hydraulics circuit

▶ Press the (OK) button on the steering wheel or the black button on the control lever until the indicator lamp in the corresponding button lights up.
The corresponding symbol is coloured.

Switching the hydraulics circuit back to standby mode

▶ Press the [▼] or [▲] button to select an activated hydraulics circuit.

▶ Press the (OK) button on the steering wheel or the black button on the control lever until the indicator lamp in the corresponding button flashes.
The symbol has a coloured border.

Deactivating a hydraulics circuit

▶ Deactivate the desired hydraulics circuit using the corresponding button:
- Snow plough load relief (▷ page 248)
- Continuous consumers (▷ page 252)
- Working hydraulics circuit (▷ page 244)
- Power hydraulics circuit (▷ page 258)

The indicator lamp in the corresponding button goes out. The symbol is grey.

"Load profile 1" or "Load profile 2" function

If you have saved a profile for equipment fitted (▷ page 242), you can call up the saved settings again from this profile. The attached equipment is then immediately ready for use.

Structural sequence in the on-board computer	Selection
Operation and maintenance	
Hydraulics	
Working functions	
Load profile 1 or Load profile 2	

▶ Call up the Working functions menu window (▷ page 236).

▶ Press the [▼] or [▲] button to select the Load profile 1 or Load profile 2 entry.

▶ Press the (OK) button.
The saved profile is loaded and the setting values applied. The on-board computer briefly shows the Profile 1 loaded or Profile 2 loaded message in the display.

https://truckmanualshub.com/

"Settings" menu window

Settings

Structural sequence in the on-board computer	Selection
Operation and maintenance	
Hydraulics	
Working functions	
Settings	Limits
	Function button
	Automatic
	Save
	Reset
	Back

- Call up the Working functions menu window (▷ page 236).
- Press the ▼ or ▲ button to select the Settings entry.
- Press the OK button.
  The Settings menu window appears.
- Press the ▼ or ▲ button to select the desired entry.

"Settings", "Limits" menu windows

In the Limits input window, you can set limits for proportional positioning movements on hydraulic connections 1 to 8. With the limit, you determine if and how fast a positioning movement on the hydraulic connections should be made by the control lever. The smaller the value for the limit, the more finely you can carry out positioning movements. You can also set the limit while you are carrying out positioning movements with the control lever. In this way, you can check your setting directly.

The limit does not apply to continuous consumers.

Structural sequence in the on-board computer	Selection
Operation and maintenance	
Hydraulics	
Working functions	
Settings	
Limits	The Limits input window appears.

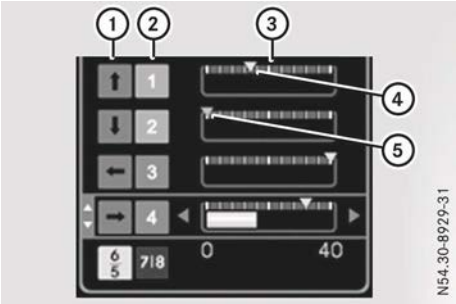

Limits input window for proportional valves (example)

① Control direction of the proportional valves
② Hydraulic connections
③ Symbols for proportional valves
④ Yellow mark
⑤ Red mark

https://truckmanualshub.com/

If hydraulic connections of the same colour have:

- one red mark, then only the hydraulic connection with a yellow mark can be controlled.
- two red marks, then both hydraulic connections are disabled. The symbols of the hydraulic connections are then grey.

▶ Call up the Settings menu window (▷ page 240).

▶ Press the ▼ or ▲ button to select the Limits entry.

▶ Press the OK button.
The Limits input window appears.

▶ Press the ▼ or ▲ button to select the desired hydraulic connection.

▶ **To set a limit:** press the ▶ or ◀ button until yellow mark ④ is at the desired position.

or

▶ **To disable a hydraulic connection:** press and hold the ◀ button until yellow mark ④ is at the smallest value.

▶ Release the ◀ button and press again until red mark ⑤ appears.

▶ **All:** press the OK button.
The Working functions menu window closes.

"Settings," "Function button" menu windows

You can assign a specific function to the blue button on the control lever. If you then move the control lever, the red and green hydraulic connections will be controlled. If no function has been assigned and you move the control lever with the blue button pressed, the hydraulic connections will not be controlled.

Structural sequence in the on-board computer	Selection
Operation and maintenance	
Hydraulics	
Working functions	
Settings	
Function button	Working speed
	Equipment function
	Joystick
	Work Drive

▶ Call up the Settings menu window (▷ page 240).

▶ Press the ▼ or ▲ button to select the Function button entry.

▶ Press the OK button.
The Function button selection window appears.

▶ Select the desired function with the ▼ or ▲ button.

- Working speed: constant working speed mode is activated/deactivated (▷ page 264).
- Equipment function: the equipment can be equipped with an electrical switching function for the hydraulic connections (see manufacturer's operating instructions). The electrical switching function for the hydraulic connections can be switched on and off. This way, additional hydraulic connections can be controlled.
- Joystick: if the hydrostatic drive system has been activated, the vehicle can

https://truckmanualshub.com/

be accelerated and decelerated using the control lever (▷ page 207)

- Work Drive: if the hydrostatic drive system has been activated, you can switch between "drive" mode and "work" mode (▷ page 202).

▶ **To switch on the desired function:** press the [▸] button.
The checkbox next to the desired function is marked.

or

▶ **To switch off the desired function:** press the [▸] button.
The checkbox next to the desired function is no longer marked.

▶ Press the (OK) button.
The Function button selection window closes.

"Settings", "Automatic" menu windows

Structural sequence in the on-board computer	Selection
Operation and maintenance	
Hydraulics	
Working functions	
Settings	
Automatic	Snow plough

▶ Call up the Settings menu window (▷ page 240).

▶ Press the [▾] or [▲] button to select the Automatic entry.

▶ Press the (OK) button.
The Automatic selection window appears.

▶ **To switch the function on:** press the [▸] button.
The checkbox next to the function is marked.

or

▶ **To switch the function off:** press the [▸] button.
The checkbox next to the function is no longer marked.

▶ Press the (OK) button.
The Automatic selection window closes.

"Settings", "Save" menu windows

If you are working with several pieces of equipment, you can save all the settings for two pieces of equipment in their own single profile. You can then load the profile for that equipment anytime (▷ page 239).

The following settings are saved in one profile:

- the limits of the hydraulic connections; see "Settings", "Limits" (▷ page 240)
- the function assignment of the blue button on the control lever; see "Settings", "Function button" (▷ page 241)
- the automatic function of the snow plough; see "Settings", "Automatic" (▷ page 242)
- the load relief function value for the snow plough load relief; see the "Hydraulics" input window (▷ page 237)
- the flow rates for continuous consumers, working hydraulics circuit and power hydraulics circuit; see the "Hydraulics" input window (▷ page 237)
- the working speed; see Constant working speed mode (▷ page 263)
- in hydrostatic operation, the pulling-away gear for driving modes "drive" and "work"; see Driving with the hydrostatic drive system (▷ page 201)
- the stored speed for working mode cruise control (▷ page 203)
- the load value; see Working limiter (▷ page 204)

https://truckmanualshub.com/

Structural sequence in the on-board computer	Selection
Operation and maintenance	
Hydraulics	
Working functions	
Settings	
Save	Profile 1
	Profile 2
	Back

- Call up the Settings menu window (▷ page 240).
- Press the ▼ or ▲ button to select the Save entry.
- Press the OK button.
  The Save selection window appears.
- **To save a profile:** using the ▼ or ▲ button, scroll to the desired function:
  - Profile 1: all settings adjustments can be saved.
  - Profile 2: all settings adjustments can be saved.
- Press the OK button.
  The function is saved. The on-board computer briefly shows the Profile 1 saved or Profile 2 saved message in the display. The Save selection window closes.
- **To cancel saving a profile:** using the ▼ or ▲ button, scroll to the Back function:
- Press the OK button.
  The Save selection window closes.

"Settings", "Resetting" menu windows

Structural sequence in the on-board computer	Selection
Operation and maintenance	
Hydraulics	
Working functions	
Settings	
Reset	

- Call up the Settings menu window (▷ page 240).
- Press the ▼ or ▲ button to select the Reset entry.
- Press the OK button.
  All hydraulics settings are reset to factory settings.
  The Reset selection closes.

"Settings", "Back" menu windows

Structural sequence in the on-board computer	Selection
Operation and maintenance	
Hydraulics	
Working functions	
Settings	
Back	

https://truckmanualshub.com/

- Call up the Settings menu window (▷ page 240).
- Press the ▼ or ▲ button to select the Back entry.
- Press the OK button.
  The Working functions menu window closes.

Working hydraulics circuit I

Activating/deactivating working hydraulics circuit I

Activating working hydraulics circuit I

! Only switch on the hydraulic system when it is connected to an item of attached equipment. There is otherwise a risk of damage to the hydraulic system.

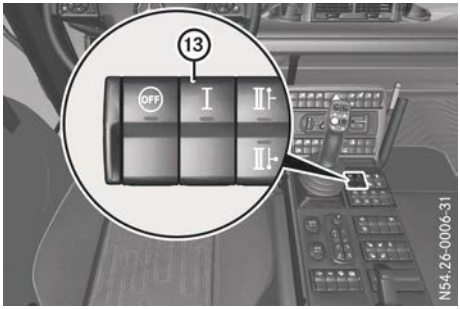

Vehicles with gear pump (example)

- Connect the equipment to the working hydraulics (see the manufacturer's separate operating instructions) (▷ page 230).
- Start the engine.
- Make sure that the hydraulic system is switched on (▷ page 230).
- Press button ⑬.
  The indicator lamp in button ⑬ lights up. Working hydraulics circuit I is activated.

Deactivating working hydraulics circuit I

- Press button ⑬.
  The indicator lamp in button ⑬ goes out. Working hydraulics circuit I is deactivated.

or

- Switch off the hydraulic system (▷ page 230).

or

- Turn the key to position **1** in the ignition lock.

Controlling hydraulic connections

Hydraulic connections, yellow, 5, 6 and hydraulic connections, blue, 7, 8

- Activate working hydraulics circuit I (▷ page 244).

Controlling yellow hydraulic connection 5, raising the control system

- Press and hold white button ⑪ and move the control lever in direction ⑧.

Controlling yellow hydraulic connection 6, lowering the control system

- Press and hold white button ⑪ and move the control lever in direction ⑥.

Controlling blue hydraulic connection 7, moving the control system to the left

- Press and hold white button ⑪ and move the control lever in direction ⑨.

https://truckmanualshub.com/

Controlling blue hydraulic connection 8, moving the control system to the right

▶ Press and hold white button ⑪ and move the control lever in direction ⑦.

Hydraulic connections, red, 1, 2 and hydraulic connections, green, 3, 4; "Driving joystick" function in the on-board computer is not selected

▶ Activate working hydraulics circuit I (▷ page 244).

▶ Ensure that the Driv. joystick active function is not selected (▷ page 241).

Controlling red hydraulic connection 1, raising the control system

▶ Move the control lever in direction ⑧.

Controlling red hydraulic connection 2, lowering the control system

▶ Move the control lever in direction ⑥.

Controlling green hydraulic connection 3, moving the control system to the left

▶ Move the control lever in direction ⑨.

Controlling green hydraulic connection 4, moving the control system to the right

▶ Move the control lever in direction ⑦.

Hydraulic connections, red, 1, 2 and hydraulic connections, green, 3, 4; "Driving joystick" function in the on-board computer is selected

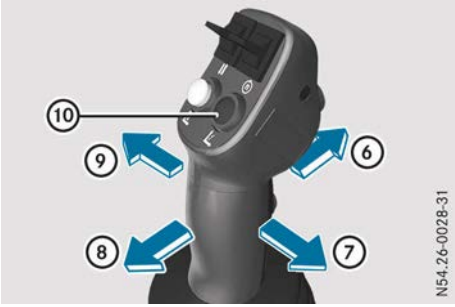

▶ Activate working hydraulics circuit I (▷ page 244).

▶ Ensure that the Driv. joystick active function is selected (▷ page 241).

Controlling red hydraulic connection 1, raising the control system

▶ Press and hold blue button ⑩ and move the control lever in direction ⑧.

Controlling red hydraulic connection 2, lowering the control system

▶ Press and hold blue button ⑩ and move the control lever in direction ⑥.

Controlling green hydraulic connection 3, moving the control system to the left

▶ Press and hold blue button ⑩ and move the control lever in direction ⑨.

Controlling green hydraulic connection 4, moving the control system to the right

▶ Press and hold blue button ⑩ and move the control lever in direction ⑦.

Lowering restrictor

Positioning movements made using the vehicle hydraulics are controlled with the lever. Hauling loads may lower quickly in an uncontrolled manner. Take this into account, in particular when activating the float setting. For

https://truckmanualshub.com/

attached equipment that requires a braked lowering function, a lowering restrictor adapted for the weight of the equipment must be fitted to the equipment. You can find further information on the lowering restrictor in the body/equipment mounting directives in the Mercedes-Benz body manufacturer portal: **http://bb-portal.mercedes-benz.com**

Float settings

Important safety notes

⚠ **WARNING**

If you activate the float setting, attached equipment could lower in an uncontrolled manner. There is a risk of an accident and injury.

- When activating the float setting, make sure that nobody is in the danger zone of the attached equipment.
- Make sure that heavy attached equipment is operated with a suitable lowering restrictor so that controlled lowering of the equipment is possible.

Activating/deactivating float settings using the keypad

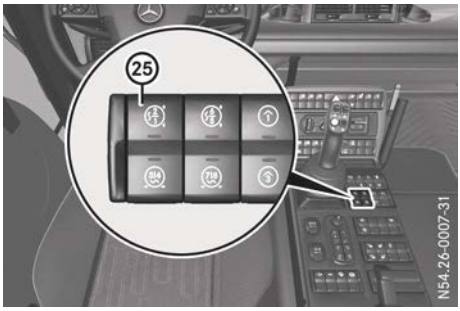

Float setting, red hydraulic connections 1 and 2

▶ **To activate the float setting:** press button ㉕.
The indicator lamp in button ㉕ lights up.

▶ **To deactivate the float setting:** press button ㉕.
The indicator lamp in button ㉕ goes out.

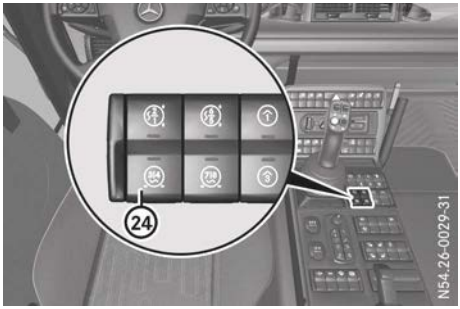

Float setting, green hydraulic connections 3 and 4

▶ **To activate the float setting:** press button ㉔.
The indicator lamp in button ㉔ lights up.

▶ **To deactivate the float setting:** press button ㉔.
The indicator lamp in button ㉔ goes out.

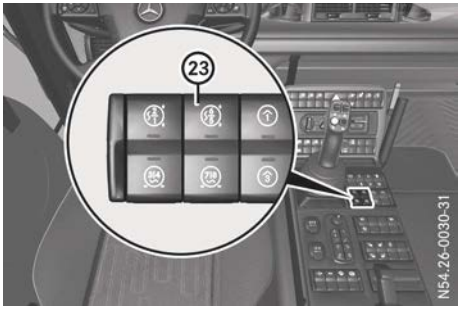

https://truckmanualshub.com/

Float setting, yellow hydraulic connections 5 and 6

- **To activate the float setting:** press button ㉓.
  The indicator lamp in button ㉓ lights up.
- **To deactivate the float setting:** press button ㉓.
  The indicator lamp in button ㉓ goes out.

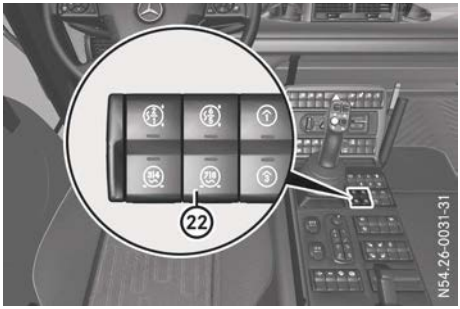

Float setting, yellow hydraulic connections 7 and 8

- **To activate the float setting:** press button ㉒.
  The indicator lamp in button ㉒ lights up.
- **To deactivate the float setting:** press button ㉒.
  The indicator lamp in button ㉒ goes out.

Activating/deactivating the float settings with the control lever

Float setting, red hydraulic connections 1 and 2

- **To activate the float setting:** press and hold red button ⑤.
- Move the control lever in direction ⑥.
- **To deactivate the float setting:** move the control lever in direction ⑥ or ⑧.

Float setting, green hydraulic connections 3 and 4

- **To activate the float setting:** press and hold red button ⑤.
- Move the control lever in direction ⑦.
- **To deactivate the float setting:** move the control lever in direction ⑦ or ⑨.

Float setting, yellow hydraulic connections 5 and 6

- **To activate the float setting:** press and hold white button ⑪ and red button ⑤.
- Move the control lever in direction ⑥.
- **To deactivate the float setting:** press white button ⑪ and move control lever in direction ⑥ or ⑧.

https://truckmanualshub.com/

Float setting, yellow hydraulic connections 7 and 8

- ▶ **To activate the float setting:** press and hold white button ⑪ and red button ⑤.
- ▶ Move the control lever in direction ⑦.
- ▶ **To deactivate the float setting:** press white button ⑪ and move control lever in direction ⑦ or ⑨.

Snow plough load relief

Important safety notes

⚠ **WARNING**

If you switch the snow plough load relief or the hydraulic system on or off while the snow plough attachment is raised, it may drop suddenly. You or others may become trapped. You could then lose control of the vehicle if it is moving. There is a risk of an accident and injury.

Snow plough load relief may only be switched on or off when the snow plough attachment is lowered.

Make sure that no other person:

- switches on the hydraulic system while the snow plough attachment is raised
- is located in the danger zone if the transport lock is detached

With the snow plough load relief, you have the option of partially transferring the weight of the attached equipment to the vehicle. Mercedes-Benz recommends that you only use the snow plough load relief for the purpose for which it was designed.

The weight shift:

- increases the traction on the front axle
- improves the driving characteristics through better steering and cornering characteristics
- reduces the wear on the bottom edges of snow ploughs
- reduces the noise level in clearing mode

Depending on the weight of the snow plough, Mercedes-Benz recommends a load relief function value for the snow plough between 5% and 20%.

The load relief function value set will be shown in the on-board computer in the hydraulics (▷ page 235) menu window and in the hydraulics (▷ page 237) input window as a percentage:

Load relief function value in %	Meaning
100%	Full pressure in the hydraulic cylinder. The snow plough is raised.
50%	Half pressure in the hydraulic cylinder. The snow plough is applying half its weight to the road.
1%	Low pressure in the hydraulic cylinder. The snow plough is applying full weight to the road.

Switching snow plough load relief on/off

Switching snow plough load relief to standby mode

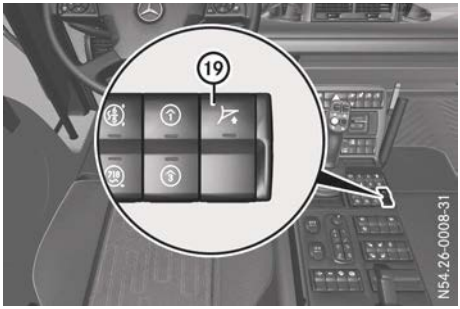

https://truckmanualshub.com/

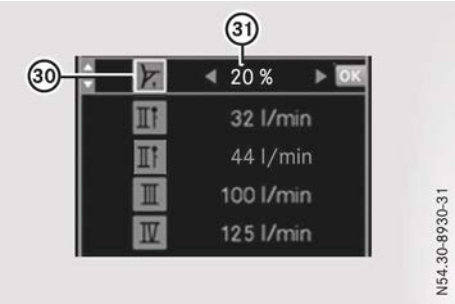

- Activate working hydraulics circuit I (▷ page 244).
- Press button ⑲.
  The indicator lamp in button ⑲ flashes. The Hydraulics input window opens in the on-board computer. The line for load relief function value ㉚ is selected. The symbol for the snow plough load relief has a coloured border. Snow plough load relief is in standby mode.
- **To change the load relief function value:** using the [▸] or [◂] button on the steering wheel, increase or decrease load relief function value ㉛.
- Press the [▾] or [▴] button on the steering wheel to select the Back entry.
- Press the (OK) button.
  The Hydraulics input window closes. It is now no longer possible to switch the value accidentally.

Switching on snow plough load relief

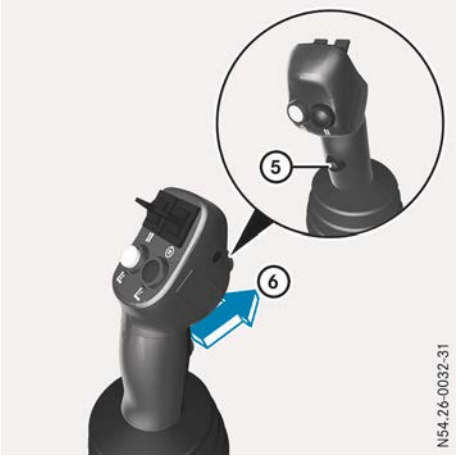

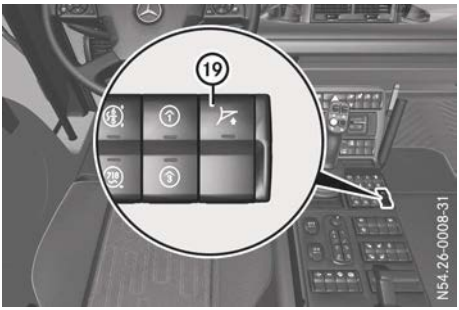

- **To switch on using the control lever:** press and hold red button ⑤.
- Move the control lever in direction ⑥.
  Red hydraulic connections 1 and 2 are in the float setting as long as red button ⑤ is pressed. The snow plough is applying full weight to the road.
- Release red button ⑤.
  The snow plough is raised until the load relief function value has been attained. The indicator lamp in button ⑲ lights up and the [⚒] indicator lamp in the status area of the on-board computer goes on. Snow plough load relief is switched on.
- **To switch on using the buttons on the steering wheel:** ensure that the Hydraulics input window is shown in the on-board computer and the line for the load relief

https://truckmanualshub.com/

function value of the snow plough is selected (▷ page 235).

▶ Press and hold the (OK) button on the steering wheel.
Red hydraulic connections 1 and 2 are in the float setting as long as the (OK) button is pressed. The snow plough is applying full weight to the road.

▶ Release the (OK) button on the steering wheel.
The snow plough is raised until the load relief function value has been attained. The indicator lamp in button (19) lights up and the [ ] indicator lamp in the status area of the on-board computer goes on. Snow plough load relief is switched on.

Changing the load relief function setting

▶ Call up the Hydraulics menu window (▷ page 237).

▶ Press the [▼] or [▲] button to select snow plough load relief (30).

▶ Using the [▶] or [◀] button, increase or decrease load relief function value (31).

▶ Using the [▼] or [▲] buttons, scroll to the Back selection.

▶ Press the (OK) button.
The Hydraulics input window closes. It is now no longer possible to switch the value accidentally.

Switching snow plough load relief back to standby mode using the control lever

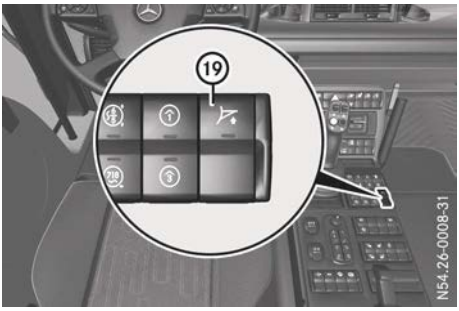

▶ Move the control lever in direction (8) until the snow plough has been fully raised.
The indicator lamp in button (19) flashes. Snow plough load relief is in standby mode.

▶ **To switch on snow plough load relief again:** press and hold red button (5).

▶ Move the control lever in direction (6).
Red hydraulic connections 1 and 2 are in the float setting as long as red button (5) is pressed. The snow plough is applying full weight to the road.

▶ Release red button (5).
The snow plough is raised until the load relief function value has been attained. The indicator lamp in button (19) lights up and the [ ] indicator lamp in the status area

https://truckmanualshub.com/

of the on-board computer goes on. Snow plough load relief is switched on.

Switching snow plough load relief back to standby mode using the buttons on the steering wheel

- ▶ Call up the Hydraulics menu window (▷ page 237).
- ▶ Press the [▼] or [▲] button to select snow plough load relief.
- ▶ Press the (OK) button until the snow plough has been fully raised.
  The indicator lamp in button (19) flashes. Snow plough load relief is in standby mode. The symbol for the snow plough load relief has a coloured border.
- ▶ **To switch on snow plough load relief again:** press and hold the (OK) button on the steering wheel.
  Red hydraulic connections 1 and 2 are in the float setting as long as the (OK) button is pressed. The snow plough is applying full weight to the road.
- ▶ Release the (OK) button on the steering wheel.
  The snow plough is raised until the load relief function value has been attained. The indicator lamp in button (19) lights up and the [⊥] indicator lamp in the status area of the on-board computer goes on. Snow plough load relief is switched on. The symbol for the snow plough load relief is coloured.

Switching off snow plough load relief

- ▶ Raise the snow plough.
- ▶ Press button (19).
  The indicator lamp in button (19) and the [⊥] indicator lamp in the status area of the on-board computer go out.

or

- ▶ Switch off the hydraulic system (▷ page 230).

or

- ▶ Turn the key to position **1** in the ignition lock.

Automatic snow plough system

If you have selected the automatic snow plough system, the snow plough is raised when you engage reverse gear.

Selecting the automatic snow plough system:

- ▶ Switch on snow plough load relief (▷ page 248)
- ▶ Select Automatic Snow plough; see Settings, automatic (▷ page 242).

Switching the snow plough to the float setting

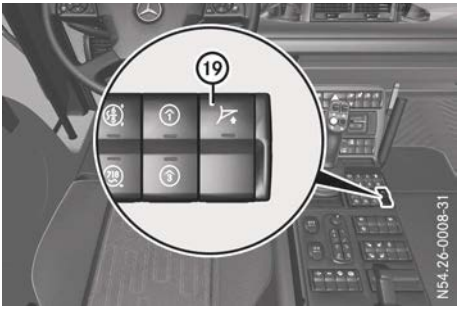

https://truckmanualshub.com/

- Press and hold red button ⑤.
- Move the control lever all the way in direction ⑥ for approximately one second.
  The snow plough is in the float setting and is applying its full weight to the road. The indicator lamp in button ⑲ flashes.

Pressing the snow plough briefly onto the road

- Make sure that snow plough load relief is switched on.
- Move the control lever in direction ⑥ until the snow plough pushes the road with the desired pressure.
  The indicator lamp in button ⑲ flashes. Snow plough load relief enters standby mode.
- **To switch on snow plough load relief again:** move the control lever into the neutral position.

Continuous consumers

General notes

! Only switch on the hydraulic system when it is connected to an item of attached equipment. There is otherwise a risk of damage to the hydraulic system.

You can connect equipment with a constant flow rate either to red hydraulic connection 1 or to green hydraulic connection 3. If you then switch on the continuous consumer, the attached equipment is supplied with a constant flow rate. The attached equipment then cannot be controlled with the control lever.

Switching the continuous consumers on/off

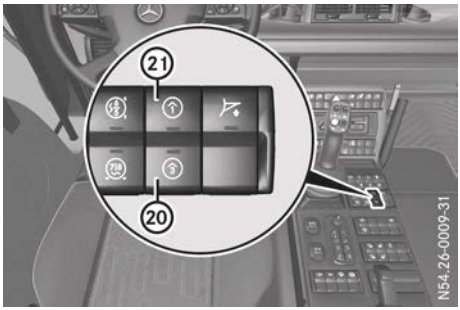

Switching the continuous consumers to standby mode

- Connect the attached equipment (see manufacturer's operating instructions) either to red hydraulic connection 1 or to green hydraulic connection 3 (▷ page 230).
- Start the engine.
- Make sure that the hydraulic system is switched on (▷ page 230).
- Ensure that unnecessary continuous consumers and snow plough load relief (▷ page 248) are switched off.
- **Continuous consumer to red hydraulic connection 1:** press button ㉑.
  The indicator lamp in button ㉑ flashes. The Hydraulics input window opens in the on-board computer. Red hydraulic connection 1 for continuous consumer ㉚ is selected. The symbol for the continuous con-

https://truckmanualshub.com/

sumer has a coloured border. The continuous consumer is in standby mode.

or

▶ **Continuous consumer to green hydraulic connection 3:** press button ⑳.
The indicator lamp in button ⑳ flashes. The Hydraulics input window opens in the on-board computer. Green hydraulic connection 3 for continuous consumer ㉚ is selected. The symbol for the continuous consumer has a coloured border. The continuous consumer is in standby mode.

▶ **To change the flow rate:** using the [▸] or [◂] button, increase or decrease flow rate ㉛.

Switching on continuous consumers

▶ Press the OK button on the steering wheel or the black button on the control lever until the indicator lamp in button ㉑ or ⑳ lights up.
The corresponding continuous consumer is switched on. The symbol for continuous consumer ㉚ is coloured.

Switching continuous consumers back to standby mode

▶ Call up the Hydraulics menu window (▷ page 237).

▶ Using the [▾] or [▲] button, select corresponding continuous consumer ㉚.

▶ Press the OK button on the steering wheel or the black button on the control lever until the indicator lamp in button ㉑ or ⑳ flashes.
The symbol for continuous consumer ㉚ has a coloured border. The continuous consumer is in standby mode.

Switching off continuous consumers

▶ Press button ㉑ or ⑳.
The indicator lamp in button ㉑ or ⑳ goes out.

or

▶ Switch off the hydraulic system (▷ page 230).

or

▶ Turn the key to position **1** in the ignition lock.

Working hydraulics circuit II

working hydraulics circuit II, vehicles with gear pump

Activating/deactivating working hydraulics circuit II

ℹ As described below, you can confirm your selection with the OK button on the steering wheel or with the black button on the control lever.

! Only switch on the hydraulic system when it is connected to an item of attached equipment. There is otherwise a risk of damage to the hydraulic system.

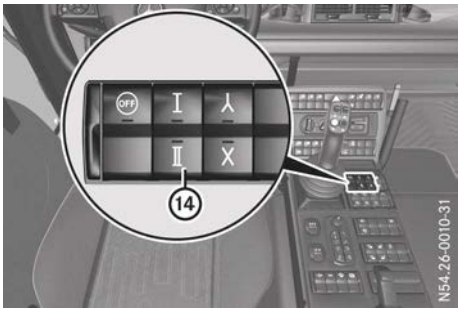

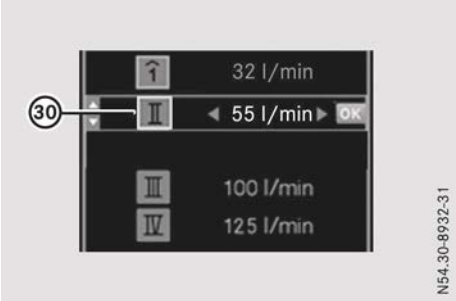

https://truckmanualshub.com/

Switching working hydraulics circuit II to standby mode

- ▶ Connect the equipment to the working hydraulics (see the manufacturer's separate operating instructions) (▷ page 230).
- ▶ Start the engine.
- ▶ Make sure that the hydraulic system is switched on (▷ page 230).
- ▶ Press button ⑭.
  The indicator lamp in button ⑭ flashes. The Hydraulics input window opens in the on-board computer. The line for working hydraulics circuit II ㉚ is selected. Working hydraulics circuit II is in standby mode.
- ▶ Check the flow rate and, if necessary, increase or decrease the flow rate. To do so, increase or decrease the working speed as appropriate (▷ page 262)

Activating working hydraulics circuit II

- ▶ Press the (OK) button on the steering wheel or the black button on the control lever until the indicator lamp in button ⑭ lights up. Working hydraulics circuit II is activated. The symbol for working hydraulics circuit II ㉚ is coloured.

Switching working hydraulics circuit II back to standby mode

- ▶ Call up the Hydraulics menu window (▷ page 237).
- ▶ Using the [▼] or [▲] button, select working hydraulics circuit II.
- ▶ Press the (OK) button on the steering wheel or the black button on the control lever until the indicator lamp in button ⑭ flashes. The symbol for working hydraulics circuit II ㉚ has a coloured border. Working hydraulics circuit II is in standby mode.

Deactivating working hydraulics circuit II

- ▶ Press button ⑭.
  The indicator lamp in button ⑭ goes out.

or

- ▶ Switch off the hydraulic system (▷ page 230).

or

- ▶ Turn the key to position **1** in the ignition lock.

Assignment of flow rate, vehicles with dual-circuit hydraulic system

General notes

The flow rate is created by two gear pumps. The flow rate for circuit I is 32 l/min and for circuit II, 55 l/min. The stated flow rates apply to a rated engine speed of 2200 rpm. You can change the flow rate amount for the individual circuits. To do so, however, all flow rates must be turned off beforehand.

Switching the flow rate

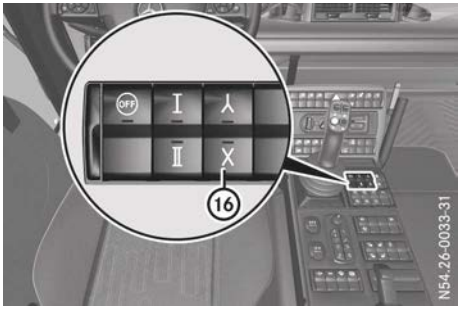

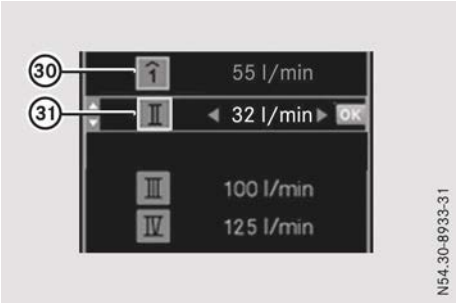

Using button ⑯, you can switch the flow rates between working hydraulics circuit I and circuit II.

Switching on flow rate selection

- ▶ Ensure that:

https://truckmanualshub.com/

- working hydraulics circuit I is deactivated (▷ page 244)
- working hydraulics circuit II is deactivated (▷ page 253)
- the continuous consumer has been switched off (▷ page 252)

▶ Press button ⑯.
The indicator lamp in button ⑯ lights up. The flow rate has been switched between circuit I ㉚ and circuit II ㉛.

▶ Activate working hydraulics circuit I (▷ page 244).

▶ Activate working hydraulics circuit II (▷ page 253).

Switching off flow rate selection

▶ Ensure that:
- working hydraulics circuit I is deactivated (▷ page 244)
- working hydraulics circuit II is deactivated (▷ page 253)
- the continuous consumer has been switched off (▷ page 252)

▶ Press button ⑯.
The indicator lamp in button ⑯ goes out. The flow rate has been switched between circuit I and circuit II.

Cumulation of flow rates

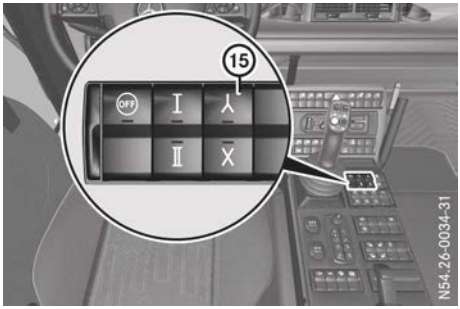

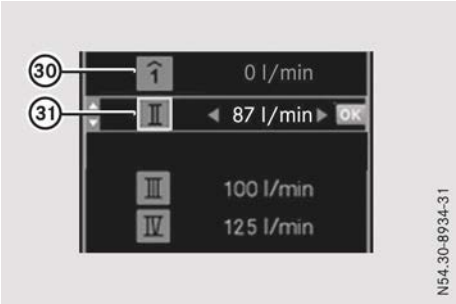

Sum of the flow rates in the working hydraulics circuit II (example)

Using button ⑮, you can interconnect the flow rates of working hydraulics circuit I and circuit II. The flow rate is, however, limited to 87 l/min. You can therefore use both circuits to drive a continuous consumer in circuit I or circuit II.

Switching on cumulation

▶ Ensure that:
- working hydraulics circuit I is deactivated (▷ page 244)
- working hydraulics circuit II is deactivated (▷ page 253)
- the continuous consumer has been switched off (▷ page 252)

▶ Press button ⑮.
The indicator lamp in button ⑮ lights up. The cumulation is preselected.

▶ Activate working hydraulics circuit I (▷ page 244).
The sum of the flow rates of circuit I and circuit II is now present in circuit I ㉚.

or

▶ Activate working hydraulics circuit II (▷ page 253).
The sum of the flow rates of circuit I and circuit II is now present in circuit II ㉛.

Switching off cumulation

▶ Ensure that:

https://truckmanualshub.com/

- working hydraulics circuit I is deactivated (▷ page 244)
- working hydraulics circuit II is deactivated (▷ page 253)
- the continuous consumer has been switched off (▷ page 252)

▶ Press button ⑮.
The indicator lamp in button ⑮ goes out. The flow rates are again distributed to circuit I ㉚ and circuit II ㉚.

Working hydraulics circuit II, vehicles with positioning pump

General notes

Working hydraulics flow rates, see "Technical data" (▷ page 374).

Activating/deactivating front working hydraulics circuit II

! Only switch on the hydraulic system when it is connected to an item of attached equipment. There is otherwise a risk of damage to the hydraulic system.

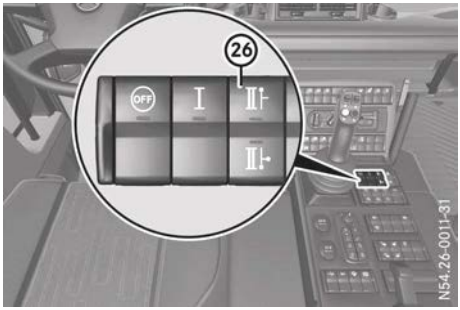

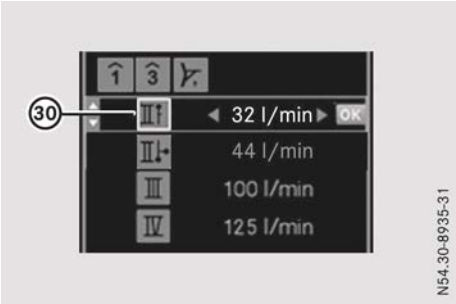

Switching front working hydraulics circuit II to standby mode

▶ Connect the equipment to the working hydraulics (see the manufacturer's separate operating instructions) (▷ page 230).

▶ Start the engine.

▶ Make sure that the hydraulic system is switched on (▷ page 230).

▶ Press button ㉖.
The indicator lamp in button ㉖ flashes. The Hydraulics input window opens in the on-board computer. Front working hydraulics circuit II line ㉚ is selected. Front working hydraulics circuit II is in standby mode.

Selecting an operating mode

▶ **Attached equipment with constant flow rate:** make sure that LS is not in the input window. If necessary, press and hold the [▸] button until a flow rate is shown.

or

▶ **Equipment with load sensing:** press and hold the [◂] button until LS is shown in the input window.

Attached equipment with constant flow rate, change the flow rate

▶ Using the [▸] and [◂] buttons, increase or decrease the flow rate.

https://truckmanualshub.com/

Activating working hydraulics circuit II

▶ Press the (OK) button on the steering wheel or the black button on the control lever until the indicator lamp in button (26) lights up. Front working hydraulics circuit II is activated. The symbol for front working hydraulics circuit II symbol (30) is coloured.

Switching front working hydraulics circuit II back to standby mode

▶ Call up the Hydraulics menu window (▷ page 237).

▶ Using the [▼] or [▲] button, select front working hydraulics circuit II.

▶ Press the (OK) button on the steering wheel or the black button on the control lever until the indicator lamp in button (26) flashes. The symbol for front working hydraulics circuit II (30) has a coloured border. Front working hydraulics circuit II is in standby mode.

Deactivating front working hydraulics circuit II

▶ Press button (26).
The indicator lamp in button (26) goes out.

or

▶ Switch off the hydraulic system (▷ page 230).

or

▶ Turn the key to position **1** in the ignition lock.

Activating/deactivating side and rear working hydraulics system circuit II

! Only switch on the hydraulic system when it is connected to an item of attached equipment. There is otherwise a risk of damage to the hydraulic system.

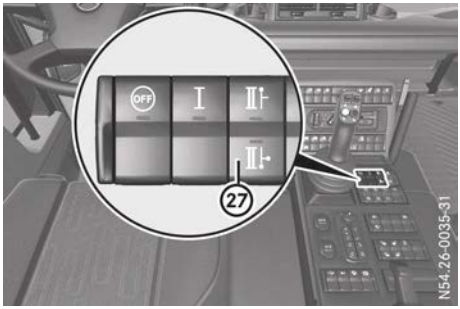

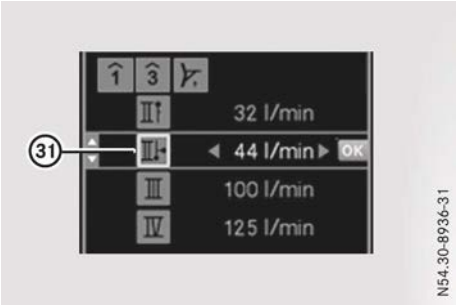

Switching side and rear working hydraulics circuit II to standby mode

▶ Connect the equipment to the working hydraulics (see the manufacturer's separate operating instructions) (▷ page 230).

▶ Start the engine.

▶ Make sure that the hydraulic system is switched on (▷ page 230).

▶ Press button (27).
The indicator lamp in button (27) flashes. The Hydraulics input window opens in the on-board computer. Side and rear working hydraulics circuit II line (31) is selected. Side and rear working hydraulics circuit II is in standby mode.

Selecting an operating mode

▶ **Attached equipment with constant flow rate:** make sure that LS is not in the

https://truckmanualshub.com/

input window. If necessary, press and hold the [▸] button until a flow rate is shown.

or

▶ **Equipment with load sensing:** press and hold the [◂] button until LS is shown in the input window.

Attached equipment with constant flow rate, change the flow rate

▶ Using the [▸] and [◂] buttons, increase or decrease the flow rate.

Activating side and rear working hydraulics system circuit II

▶ Press the (OK) button on the steering wheel or the black button on the control lever until the indicator lamp in button (14) lights up. Side and rear working hydraulics circuit II is activated. The symbol for side and rear working hydraulics circuit II (31) is coloured.

Switching side and rear working hydraulics circuit II back to standby mode

▶ Call up the Hydraulics menu window (▷ page 237).

▶ Using the [▾] or [▲] button, select side and rear working hydraulics circuit II.

▶ Press the (OK) button on the steering wheel or the black button on the control lever until the indicator lamp in button (27) flashes. The symbol for side and rear working hydraulics circuit II (31) has a coloured border. Side and rear working hydraulics circuit II is in standby mode.

Deactivating side and rear working hydraulics system circuit II

▶ Press button (27).
The indicator lamp in button (27) goes out.

or

▶ Switch off the hydraulic system (▷ page 230).

or

▶ Turn the key to position **1** in the ignition lock.

Power hydraulics circuit III/IV

General notes

The power hydraulics (VarioPower®) are located in a separate frame in the platform subframe. This has enormous pay load advantages, e.g. for snow-clearing and protecting the hydraulic components from corrosion. If the power hydraulics are not needed, they can be removed, including the frame, from the platform subframe. Further information can be obtained from a Mercedes-Benz Service Centre.

The following components of the power hydraulics are located in the platform subframe:

- Hydraulic oil reservoir
- Oil cooler
- Hydraulic pumps
- Oil filter

The hydraulic pumps are selectively driven via a propeller shaft from an engine-driven power take-off.

The power hydraulics consists of two open oil circuits. It operates continuous consumers or attached equipment that consume low quantities of oil.

Activating/deactivating the power hydraulics

General notes

! Only switch on the power hydraulics when connected to an item of attached equipment. There is otherwise a risk of damage to the power hydraulics.

You must switch off the power hydraulics when you have finished using the equipment and when you are transporting it.

Flow rates

- power hydraulics circuit III: 125 l/min
- power hydraulics circuit IV: 125 l/min

https://truckmanualshub.com/

The cumulative flow rate of the power hydraulics is, however, limited to 180 l/min. The stated flow rates apply to a rated engine speed of 2200 rpm.

Activating/deactivating power hydraulics circuit III/IV

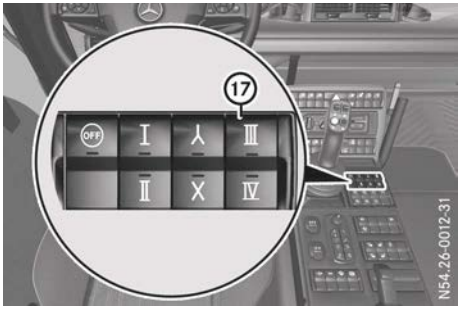

Vehicles with gear pump (example)

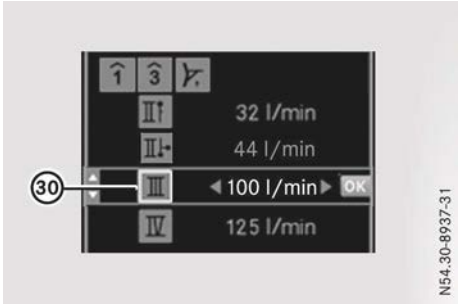

Vehicles with positioning pump (example)

Switching power hydraulics circuit III into standby mode

- ▶ Connect equipment to the power hydraulics (see the manufacturer's separate operating instructions) (▷ page 230).
- ▶ Engage the engine-driven power take-off (▷ page 265).
- ▶ Start the engine.
- ▶ Make sure that the hydraulic system is switched on (▷ page 230).
- ▶ Press button ⑰.
  The indicator lamp in button ⑰ flashes. The Hydraulics input window opens in the on-board computer. The line for power hydraulics circuit III ㉚ is selected. The power hydraulics for circuit III are in standby mode.

Changing the flow rate

- ▶ Using the [▸] or [◂] button, increase or decrease the flow rate.

Activating power hydraulics circuit III/IV

- ▶ Press the ⓞⓚ button on the steering wheel or the black button on the control lever until the indicator lamp in button ⑰ lights up. Power hydraulics circuit III is activated. The symbol for power hydraulics circuit III ㉚ is coloured.

Switching power hydraulics circuit III back into standby mode

- ▶ Call up the Hydraulics menu window (▷ page 237).
- ▶ Press the [▾] or [▴] button to select power hydraulics circuit III.
- ▶ Press the ⓞⓚ button on the steering wheel or the black button on the control lever until the indicator lamp in button ⑰ flashes. The symbol for power hydraulics circuit III ㉚ has a coloured border. Power hydraulics circuit III is in standby mode.

Deactivating power hydraulics circuit III/IV

- ▶ Press button ⑰.
  The indicator lamp in button ⑰ goes out.

or

- ▶ Switch off the hydraulic system (▷ page 230).

or

- ▶ Turn the key to position **1** in the ignition lock.

https://truckmanualshub.com/

Activating/deactivating power hydraulics circuit IV

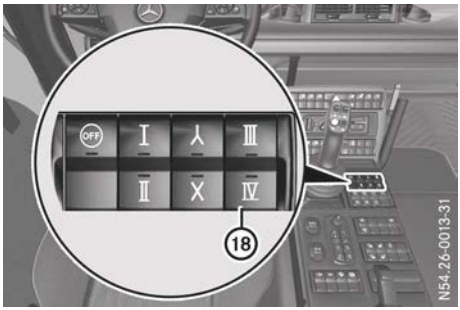

Vehicles with gear pump (example)

Vehicles with positioning pump (example)

Switching power hydraulics circuit IV into standby mode

- ▶ Connect equipment to the power hydraulics (see the manufacturer's separate operating instructions) (▷ page 230).
- ▶ Engage the engine-driven power take-off (▷ page 265).
- ▶ Start the engine.
- ▶ Make sure that the hydraulic system is switched on (▷ page 230).
- ▶ Press button ⑱.
  The indicator lamp in button ⑱ flashes. The Hydraulics input window opens in the on-board computer. The line for power hydraulics circuit IV ㉛ is selected. Power hydraulics circuit IV is in standby mode.

Changing the flow rate

- ▶ Using the [▸] or [◂] button, increase or decrease the flow rate.

Activating power hydraulics circuit IV

- ▶ Press the (OK) button on the steering wheel or the black button on the control lever until the indicator lamp in button ⑱ lights up. Power hydraulics circuit IV is switched on. The symbol for power hydraulics circuit IV ㉛ is coloured.

Switching power hydraulics circuit IV back into standby mode

- ▶ Call up the Hydraulics menu window (▷ page 237).
- ▶ Press the [▾] or [▴] button to select power hydraulics circuit IV.
- ▶ Press the (OK) button on the steering wheel or the black button on the control lever until the indicator lamp in button ⑱ flashes. The symbol for power hydraulics circuit IV ㉛ has a coloured border. Power hydraulics circuit IV is in standby mode.

Deactivating power hydraulics circuit IV

- ▶ Press button ⑱.
  The indicator lamp in button ⑱ goes out.

or

- ▶ Switch off the hydraulic system (▷ page 230).

or

- ▶ Turn the key to position **1** in the ignition lock.

https://truckmanualshub.com/

Useful information 262
Ballast/weights 262
Equipment operation 262
Tipper platform 272

https://truckmanualshub.com/

Useful information

These Operating Instructions describe all the models and standard and optional equipment of your vehicle that were available at the time of going to print. Country-specific differences are possible. Bear in mind that your vehicle may not be equipped with all the functions described. This also applies to safety-relevant systems and functions.

Read the information on qualified specialist workshops (▷ page 30).

Ballast/weights

! Observe the permissible axle and wheel loads. Do not exceed the maximum gross vehicle weight. During transportation, the difference between the left and right wheel loads should not exceed 10%.

The following parts of the vehicle may otherwise be damaged:

- tyres
- chassis
- axles

The driving, braking and steering characteristics of the vehicle change when equipment is coupled or attached as a result of the additional overhang and momentum of the equipment. Drive with even greater care.

The Unimog has a lightweight construction to enable it to carry the maximum possible equipment weights and payloads. Therefore, it is necessary to load it with ballast weights. The weight of the Unimog must be adapted to suit the work to be performed.

Equipment operation

Engine speed mode

General notes

If engine speed mode is activated, it is possible to drive at a constant engine speed above the idling speed in equipment operation.

Driving characteristics in engine speed mode differ considerably from driving in normal mode. The accelerator no longer controls the drive torque, but the engine speed. Engine speed mode should be disengaged for pulling away on uphill slopes in traffic.

The engine brake is unavailable in engine speed mode. Engine speed mode is automatically deactivated if you drive faster than approximately 25 km/h. The [ ] indicator lamp in the status area of the on-board computer goes out.

Automatically activating engine speed mode

If you activate one of the following systems, engine speed mode is automatically activated:

- hydrostatic drive system (▷ page 198)
- transmission-driven power take-off (▷ page 264)
- engine-driven power take-off (▷ page 264)
- Front PTO shaft (▷ page 267)

Working speed

▶ Activate constant working speed mode in the on-board computer (▷ page 263).

or

▶ Set the working engine speed using the accelerator.

Manually activates/deactivates engine speed mode

Only activate engine speed mode when you are operating equipment that requires this mode to be activated. This can be the case

when a device is connected to a working hydraulic circuit.

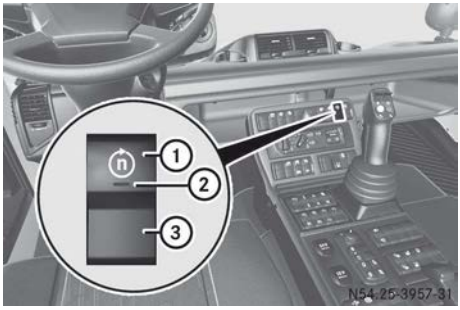

▶ **To switch on:** press switch ①.
Indicator lamp ② in the switch lights up.
The [ ] indicator lamp in the status area of the on-board computer lights up.
Vehicles with Telligent® automatic gearshift: the on-board computer display shows the manual drive program M.

▶ Activate constant working speed mode in the on-board computer (▷ page 263).

or

▶ Set the working engine speed using the accelerator.

▶ **To switch off:** press switch ③.
Indicator lamp ② in the switch goes out.
The [ ] indicator lamp in the status area of the on-board computer goes out.

Engine speed setting

General notes

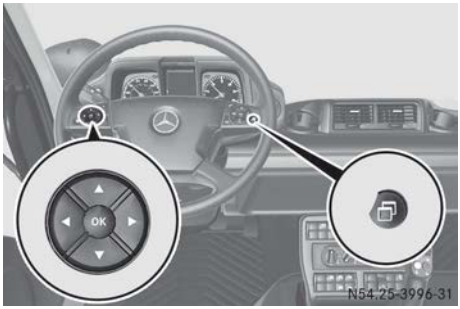

You can set the idling speed and switch on the constant working speed.

Idling speed setting

▶ **To set and activate:** press the button on the multifunction steering wheel repeatedly until the Rotational speed input window appears in the on-board computer.

▶ Press the [▲] or [▼] button to increase or decrease the engine speed in approximately 20 rpm increments.

▶ Press the OK button.
The input window closes.

or

▶ Wait for approximately three seconds.
The input window closes.

▶ **To switch off:** press the button repeatedly until the Rotational speed input window appears on the on-board computer.

▶ Press the [▶] Deactivate button.

The idling speed setting is automatically deactivated when you turn the key to position **1** in the ignition lock.

Constant working speed

Activating/deactivating with the buttons on the steering wheel

▶ **To activate and set:** make sure that engine speed mode is activated (▷ page 262).

▶ On the multifunction steering wheel, press the button until the Rotational speed input window appears on the on-board computer.

▶ Press the [▲] or [▼] button to increase or decrease the engine speed in approximately 20 rpm increments.

▶ Press the OK button.
The input window closes.

or

▶ Wait for approximately three seconds.
The input window closes.

https://truckmanualshub.com/

- **To deactivate:** press the button repeatedly until the Rotational speed input window appears on the on-board computer.
- Press the ▸ Deactivate button.
  The working speed can be reset with the gas pedal.

Activating/deactivating using the control lever without the blue button

- **To activate and set:** make sure that engine speed mode is activated (▷ page 262).
- Press the button upward or downward.
  The Rotational speed input window appears in the on-board computer. The engine speed is increased or decreased incrementally by approximately 20 rpm up to the setpoint.
- **To set the working speed using the setpoint:** press the button upwards or downwards until the setpoint has been reached.
- Release the button and press upward or downward again.
- **To change and save the setpoint:** press the button upward or downward until the desired working speed has been reached.
- Press the ◂ SET button on the steering wheel.
  The setpoint is saved.
- **To deactivate:** press the button upward or downward.
- Press the ▸ Deactivate button on the steering wheel.
  The working speed can be reset with the accelerator pedal.

Activating/deactivating using the control lever and with the blue button

- **To activate:** make sure that engine speed mode is activated (▷ page 262).
- To select the working speed function for the blue button on the control lever, see the "Settings", "Function button" menu window (▷ page 241).
- Press the blue button on the control lever.
  Constant working speed mode is activated. The working speed is set to the setpoint.
- **To deactivate:** press the blue button on the control lever.
  Constant working speed mode is deactivated. The working speed can be reset with the gas pedal.

Power take-offs

General notes

Power take-offs are intended for operating auxiliary equipment. The engine and power take-offs must be operated at a certain engine speed/working speed, depending on conditions of use. Depending on the vehicle equipment, the working speed can be set with the accelerator or constant working speed can be activated.

On vehicles with speed limitation, the preset engine speed cannot be exceeded when the PTO is engaged.

For vehicles with additional equipment fitted, read the equipment manufacturer's operating instructions before starting operation with the PTO.

Types of power take-off

There are two types of power take-off: transmission-driven power take-off and engine-driven power take-off.

Transmission-driven power take-off

General notes

The transmission driven power take-off can be operated:

- when the vehicle is stationary
- when the vehicle is driven forward in 1st to 4th gear
- when the vehicle is driven in reverse in 1st to 5th gear

The transmission driven power take-off can also be activated if the working gears (▷ page 182) or the crawler gears (▷ page 184) are engaged.

Engaging/disengaging the transmission-driven power take-off

! When power take-off is activated, you must only change gear when the vehicle is stationary. The transmission may otherwise be damaged.

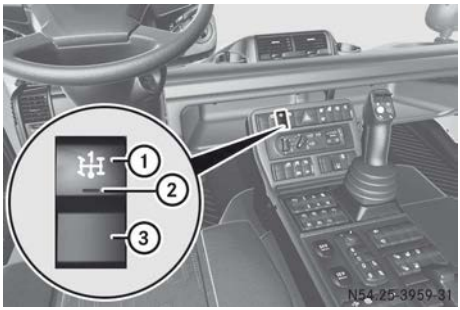

▶ **To engage:** ensure that the engine is running and the vehicle is stationary.

▶ **Vehicles with Telligent® gearshift:** depress the clutch pedal.

▶ **Vehicles with Telligent® automatic gearshift:** shift the transmission into neutral.

▶ **All vehicles:** press switch ①.
Indicator lamp ② in the switch flashes for several seconds. Engaging the transmission-driven power take-off occurs after a few seconds.

If power take-off is engaged, the corresponding display message appears in the event window of the on-board computer for approximately two seconds.

The [ ] indicator lamp in the status area of the on-board computer and indicator lamp ② in the switch light up.

Vehicles with Telligent® automatic gearshift: the transmission-driven power take-off turns. With a gear engaged, the transmission-driven power take-off only turns when the vehicle pulls away.

▶ **Vehicles with Telligent® gearshift:** slowly release the clutch pedal and pull away.
The transmission-driven power take-off turns.

▶ **All vehicles:** observe the general notes on engine speed mode (▷ page 262).

▶ Activate constant working speed (▷ page 263).

▶ **To disengage:** press switch ③.
The [ ] indicator lamp in the status area of the on-board computer and indicator lamp ② in the switch go out.

Engine-driven power take-off

! Engine-driven power take-off may only be activated when the engine is at a standstill.

Engine-driven power take-off is mostly used for power hydraulics. It can, however, be used for other attached equipment (e.g. pump drives).

When automatic regeneration of the diesel particle filter is carried out, the engine speed is increased.

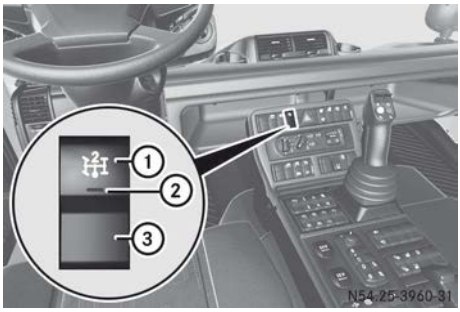

https://truckmanualshub.com/

- **To engage:** switch off the engine.
- Turn the key to position **2** in the ignition lock.
- Press switch ①.
  The [icon] indicator lamp in the status area of the on-board computer and indicator lamp ② in the switch light up. The engine-driven power take-off is engaged.

  In the event window of the on-board computer, the corresponding display message appears for approximately two seconds.
- Start the engine.
- Observe the general notes on engine speed mode (▷ page 262).
- Activate constant working speed (▷ page 263).
- **To disengage:** press switch ③.
  The [icon] indicator lamp in the status area of the on-board computer and indicator lamp ② in the switch go out.

Pulling away in equipment driving mode

Vehicles with Telligent® gearshift

- To pull away with the selected engine speed:
  - with the crawler gears engaged (▷ page 184), select a gear
  - with the working gears engaged (▷ page 182), select a gear (one to five)
  - for vehicles without working gears, select 1st gear
- Release the parking brake.
- Pull away.

Vehicles with Telligent® automatic gearshift

A gear can only be engaged by operating the multifunctional lever. The accelerator pedal must not be depressed during the gearshift. After engaging a gear, you must depress the accelerator pedal to pull away.

- To pull away with the selected engine speed:
  - with the crawler gears engaged (▷ page 184), select a gear
  - with the working gears engaged (▷ page 182), select a gear (one to five)
  - for vehicles without working gears, select 1st gear
- Release the parking brake.
- Pull away.
  If the accelerator pedal is depressed beyond 50%, the vehicle pulls away even if the accelerator pedal is released.

Shifting gears in equipment driving mode

Vehicles with Telligent® gearshift

Gear changes are only possible when the clutch pedal is depressed.

- Select a gear.
- Depress the clutch pedal. The accelerator pedal must not be depressed during the gearshift.
- Wait for the gear change.
- Release the clutch pedal.

Vehicles with Telligent® automatic gearshift

A gear can only be engaged by operating the multifunctional lever. The accelerator pedal must not be depressed during the gearshift.

The accelerator pedal must be depressed again after changing gear.

After the accelerator pedal has been depressed beyond 50% and the clutch has engaged, the vehicle will drive on even if the accelerator pedal is released.

Stopping in equipment driving mode

- Depress the brake pedal or shift to neutral. The power take-offs are disengaged.

  M is shown in the on-board computer for normal engine management.

Front PTO shaft

Important safety notes

⚠ **WARNING**

If you engage the PTO while driving, the engine speed may be reduced and cause a strong braking effect. There is a risk of an accident.

Only engage the PTO while the vehicle is stationary.

⚠ **WARNING**

When you engage the PTO shaft, there is a risk injury due to rotating components and attachments/mounted implements that have been switched on.

Observe the applicable safety regulations and the separate operating instructions for the attachments/mounted implements before engaging the PTO shaft. Make sure that no persons are in the area of danger before engaging the PTO shaft and during operation.

⚠ **WARNING**

After disengaging the PTO shaft, there is a risk of injury due to attachments/mounted implements running on.

After disengaging the PTO shaft, make sure that there are no persons in the area of danger.

⚠ **WARNING**

At very low temperatures, the front PTO shaft may also rotate initially when the engine is started. There is a risk of injury due to rotating components and running attachments/mounted implements.

When starting the engine, make sure that there are no persons in the area of danger.

⚠ **WARNING**

At the front of the PTO shaft gear, temperatures of up to 90 °C may develop. If you remove the lining under the front PTO shaft, you could sustain burns. There is a risk of injury.

Before removal, allow the engine to cool down and wear safety gloves.

! The front PTO shaft stub may get dirty if it is not protected.

After removing additional equipment, place the protective cap on the front PTO shaft stub.

Correct use

Front PTO shaft ① is a transmission unit. It is solely intended for the operation of attached equipment and mounted implements (▷ page 269) and must only be used for this purpose.

Method of operation

Front PTO shaft ①:

- is a single-stage transmission with a high rate of efficiency.
- is directly connected to the front of the engine's crankshaft. The power flow from the engine PTO shaft is not interrupted during the gear shift process.
- is fitted with a hydraulic multi-disc clutch with a stub brake and has a self-sustaining oil circuit. The PTO shaft gear oil is cooled by a heat exchanger that is integrated into the transmission.
- can be engaged under load whether the vehicle is stationary or in motion.

https://truckmanualshub.com/

Front PTO shaft cover

- **Before fitting equipment:** remove the cover from front PTO shaft ①.
- **After fitting equipment:** slide the cover onto front PTO shaft ①.
- Check that it is positioned correctly. Twist the cover in place.

Engaging/disengaging the front PTO shaft

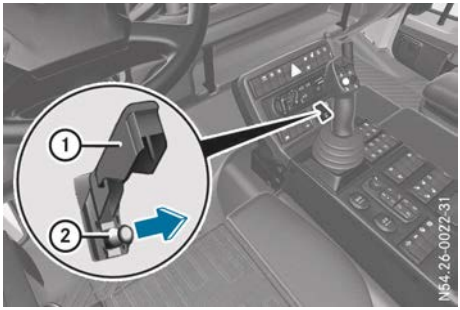

- **To engage:** make sure that the engine is running.
- Swing cover ① upwards.
- Pull out switch pin ②.
  In the on-board computer display, both a symbol and a rotational speed appear for the front PTO shaft.
  The [ ] indicator lamp in the status area of the on-board computer lights up.
- Observe the general notes on engine speed mode (▷ page 262).
- Activate constant working speed (▷ page 263).

ℹ The maximum permissible working speed at the front PTO shaft is approximately 1,000 rpm.

- If necessary, limit the working speed at the front of the PTO shaft to 620 rpm (▷ page 268).
- **To disengage:** press cover ① downwards until it engages audibly.
  Switch pin ② is pushed downwards.
  In the on-board computer display, the symbol and rotational speed for the front PTO shaft disappear.
  The [ ] indicator lamp in the status area of the on-board computer goes out.

Limiting the working speed of the front PTO shaft

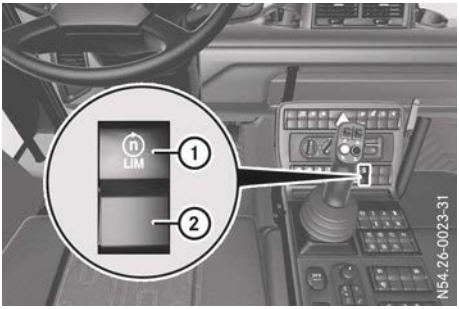

The engine speed can be limited to a maximum of 1,328 rpm. This corresponds to a maximum front PTO shaft working speed of 620 rpm.

- **To engage:** switch on the front PTO shaft (▷ page 268).
- Press switch ①.
- Observe the general notes on engine speed mode (▷ page 262).
- Activate constant working speed (▷ page 263).
- **To disengage:** press switch ②.

Front mounting plate

⚠ **WARNING**

While the vehicle is moving, if neither the front mounting plate nor the tubular cross member is fitted, the vehicle frame will become unstable. The vehicle could then start to skid when you steer or apply the brakes. There is a risk of an accident.

Before driving off, always make sure that either the front mounting plate or the tubular cross member is fitted.

① Front mounting plate

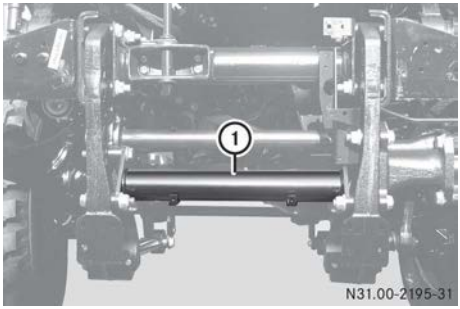

① Example: tubular cross member, vehicles without a front-mounted plate

Fitting additional equipment

Important safety notes

Observe the following notes:

- Instructions for fitting equipment can be found in the body/equipment mounting directives in the Mercedes-Benz body manufacturer portal: **http://bb-portal.mercedes-benz.com**
- Familiarise yourself with the applicable accident prevention regulations.
- Only use attached equipment for the intended applications as determined by the relevant manufacturer.
- Undergo training before using the equipment for the first time.
- Read the operating, maintenance and care instructions delivered with the vehicle carefully. Please consult the equipment manufacturer or a Mercedes-Benz Service Centre if you have any questions.

Note the following before installing equipment:

- park the vehicle on a firm and level surface
- switch off the engine
- apply the parking brake
- make sure that nobody is in the vehicle
- make sure that nobody is between the vehicle and the equipment

Notes on connecting/disconnecting equipment

! Dirt entering the hydraulic system could cause damage and malfunctions in the system.

▶ Activate the float setting (▷ page 246).

▶ Switch off the engine.

▶ Only connect and disconnect equipment when the engine is switched off. This prevents unintended movements.

▶ Make sure that the equipment is clean when connecting and disconnecting.

▶ Do not go between the vehicle and the equipment.

Only use hydraulic lines designed to withstand the hydraulic system's maximum pressure.

Transporting equipment

Important safety notes

! Observe the permissible axle and wheel loads. Do not exceed the maximum gross vehicle weight. During transportation, the difference between the left and right wheel loads should not exceed 10%.

The following parts of the vehicle may otherwise be damaged:

- tyres
- chassis
- axles

https://truckmanualshub.com/

The driving, braking and steering characteristics of the vehicle change when equipment is coupled or attached as a result of the additional overhang and momentum of the equipment.

Drive with even greater care.

General notes

Observe the following notes:

- Sufficient steerability of the vehicle must be guaranteed. The front axle load, with corresponding attached equipment and bodies for all vehicle loads, must be at least 33% of the actual gross vehicle weight.
- The rear axle load must always be at least 33% of the actual gross vehicle weight.
- Secure attached equipment using the restraining facilities provided with the equipment when travelling to or from the place of operation.
- Make sure that the power take-offs and hydraulic system are disengaged.
- Attaching equipment to the vehicle changes its weight and dimensions. This can have a considerable effect on the handling characteristics.
- Make sure that the permissible axle loads are observed and that the vehicle dimensions comply with the appropriate traffic regulations. Power assistance can be obtained from a Mercedes-Benz Service Centre.

Working with equipment

Important safety notes

⚠ **WARNING**

Without your being aware of it, there may be persons in the danger area of the vehicle who could collide with the vehicle or its add-on equipment. In addition, objects or dirt may be thrown off by the add-on equipment. There is a risk of serious or even fatal injuries.

Before engaging the PTO shaft and during operation, ensure that no one is in the danger area.

⚠ **WARNING**

When working with additional equipment you could touch or damage the supply lines, especially when moving earth. There is a risk of serious or even fatal injuries.

Always determine and mark where the supply lines for gas, water and electricity are located. Have the supply interrupted if necessary.

Observe a safe distance of at least 5 m from high-voltage transmission lines. If it is not possible to maintain a safe distance at all times, have the power supply interrupted.

When working with attached equipment, make sure that there are no people in the working area. The working area also includes the area into which the equipment could throw dirt or stones, for example.

Block the area off for pedestrians if necessary.

Warn other road users by securing the area of danger according to the relevant traffic regulations.

Ensure that persons do not reach into the moving parts of attached equipment.

Earth-moving equipment

Familiarise yourself with your surroundings before commencing work. This could help you to avoid collisions with objects that do not lie within the driver's field of vision.

The following could be overlooked:

- high-voltage transmission lines
- supply lines
- objects that are hidden by overgrown plants
- objects that are covered in snow

Remove objects from the working area. Mark the route of supply lines and interrupt the supply if necessary. Inform the relevant authorities.

Equipment with a wide working range

⚠ **WARNING**

The vehicle could overturn when working with attached equipment with a wide working range. There is a risk of an accident and injury.

- Only drive on ground with a firm surface.
- When driving on steep inclines, always follow the line of fall (straight up or down) and do not turn.
- Always ensure that the ground is solid enough when carrying out work with the vehicle stationary.
- Always use the supporting devices intended for the equipment.

Always make sure that the vehicle is on a firm surface for applications where there is a danger of tipping.

These include, for example, work with:

- a lifting work platform
- a crane
- an excavator implement

Always maintain a sufficient safe distance from:

- overhangs
- edges
- slopes
- unstable ground

If the surface is not secure, take appropriate safety precautions.

Only operate the mounted equipment from the operation areas prescribed by the manufacturer.

When working with mounted equipment, make sure that there are no people in the working area.

Equipment for maintenance of grassland and plant protection

⚠ **WARNING**

Flammable material such as leaves, grass or twigs may ignite if they come into contact with hot parts of the exhaust system. There is a risk of fire.

When driving off road or on unpaved roads, check the vehicle's underside regularly. In particular, remove parts of plants or other flammable materials which have become trapped. In the case of damage, contact a qualified specialist workshop.

Clean the vehicle if it has become dirty after off-road driving before driving on public roads again, see checklist after driving off-road (▷ page 212).

Front loader operation

⚠ **WARNING**

If you transport persons in the front loader without the safety devices and adjustments to the vehicle required, they could fall out. There is a risk of injury.

Before transporting persons in the front loader, always ensure that:

- a suitable and approved hydraulic valve for operation with a working cage is fitted.
- a special working cage has been mounted with all required safety devices.

Only install front loaders that fulfil the requirements of the Unimog equipment mounting directives. Tested front loaders have mounting certification from Daimler AG. You can obtain the equipment mounting directives on the Internet at: **http://bb-portal.mercedes-benz.com**.

If you install, remove, operate or maintain the front loader, observe the safety regulations for the front loader; see the manufacturer's operating instructions.

To handle certain goods, e.g. pallets or hay bales, you must attach the appropriate equipment to the front loader.

If the front loader is raised, it is essential that you observe the headroom clearance, for example in entrances and underpasses.

https://truckmanualshub.com/

If you park the vehicle, you must lower the front loader to the ground before you leave the vehicle. This prevents the front loader from being inadvertently lowered.

Transporting goods in the front loader is not permitted on public roads.

Working on equipment

⚠ **WARNING**

After disengaging the PTO shaft, there is a risk of injury due to attachments/mounted implements running on.

After disengaging the PTO shaft, make sure that there are no persons in the area of danger.

! Work on attached equipment must only be carried out by specialist staff. Attend training sessions by the equipment manufacturer and observe the equipment manufacturer's operating and maintenance instructions.

Do not carry out any work on attached equipment:

- if the engine is running
- if the parking brake is not applied
- if the vehicle is on an uneven surface
- if the hydraulics are under pressure, the float setting can be activated for the purposes of pressure reduction, if necessary (▷ page 246)
- if there are other people in the cab

Do not deactivate safety devices. Do not wear loose clothing.

Tipper platform

General notes

Correct use

Tipper platform ① is designed to transport bulk goods and general cargo and should only be used for this purpose.

Method of operation

The tipper platform is a loading area which is surrounded on all sides by platform dropsides. The tipper platform can be tilted on 3 sides or secured using socket pins.

The platform dropsides at the rear and sides can be opened using a catch lever. The posts can be removed.

Bulk goods and general cargo are secured on the loading area using either the lashing eyelets or the Mercedes-Benz fastening components.

Loading the tipper platform

! Body mounting (e.g. of gritters) using the lashing eyes is not permissible. To mount a gritter, use the fastening components on the platform. The lashing eyes are only to be used for securing a load.

https://truckmanualshub.com/

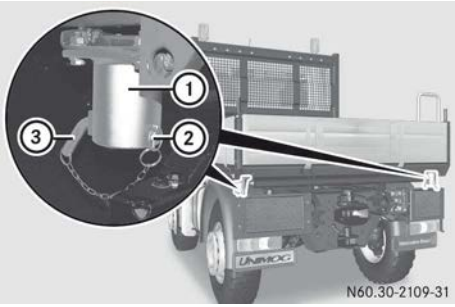

Before loading the tipper platform, secure ball sockets ① using designated pins ③. The handles of pins ③ must always point downwards and be secured using locking pins ②.

Each time before loading, lower the tipper platform with the button or control lever (▷ page 277). This will help prevent damage to the lifting cylinder and to the tipper platform.

- ▶ Place bulk goods on the tipper platform from the lowest height possible.
- ▶ Load the tipper platform so that the centre of gravity is as central as possible.
- ▶ Make sure that the platform dropside fasteners are folded down as far as they will go after closing the platform dropside (▷ page 274).

Securing loads

⚠ **WARNING**

If you load the vehicle unevenly, driving characteristics such as steering and braking behaviour may be severely impaired. There is a risk of an accident.

Load the vehicle evenly. Secure the load so that it cannot slip.

! Observe the information on the maximum loading capacity of the lashing points.

When you brake hard, for example, forces apply that can be far higher than the weight force of the transported load. Always use multiple lashing points to distribute these forces, and distribute the load equally among them.

The vehicle's driving, braking and steering characteristics vary with the type, weight and centre of gravity of the load.

As the vehicle driver, you are responsible for the load being properly secured to prevent it from slipping, tipping, rolling or falling down. Correct securing of loads must also be observed in normal driving situations, when swerving to avoid an obstacle, during full brake application and on poor road surfaces.

If the securing of the load does not fulfil applicable technical requirements and regulations, this may be punishable by law. This depends on the national laws and the resulting consequences.

Therefore, observe the respective country-specific laws.

Check that the load is secure before every journey, and at regular intervals during a long journey. If necessary, adjust an incorrectly or inadequately secured load.

ⓘ Information on lashing material conforming to current standards (e.g. DIN EN) can be obtained from a qualified workshop or Mercedes-Benz Service Centre.

Information on the correct securing of loads can be obtained from the manufacturers of load-securing equipment or lashing material for securing loads.

Primarily use the lashing eyes in the platform floor to secure the load, especially when securing heavy loads.

Load the lashing eyes evenly.

Loose loads, especially on the load surface of a tipper platform, should be secured using an approved cargo net or tarpaulin.

https://truckmanualshub.com/

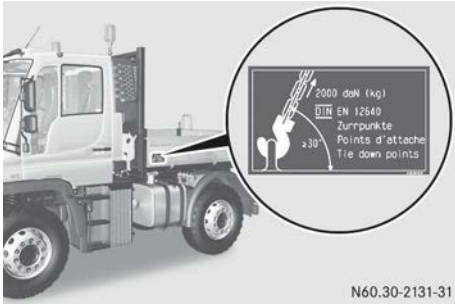

Example: maximum load sticker of the lashing point on the tipper

- Loads that need to be kept upright should be secured in all directions at the lashing points or lashing eyes in the platform floor, depending on the vehicle's equipment. Only use lashing material conforming to valid standards (e.g. DIN EN), for example cargo nets and lashing straps.

  When securing the load, always use lashing eyes that are nearby and pad sharp edges.
- Always secure the cargo net or a tarpaulin at all available lashing points. While doing so, ensure that the mounting hooks are secured so that they cannot be unintentionally released.

Fitting equipment on the tipper platform

⚠ WARNING

If you attach mounted implements incorrectly or do not secure them properly, this equipment may tip over. There is a risk of injury.

Never attach mounted implements, e.g. gritting equipment using the lashing eyes, instead use the mountings intended for the purpose.

! Body mounting (e.g. of gritters) using the lashing eyes is not permissible. To mount a gritter, use the fastening components on the platform. The lashing eyes are only to be used for securing a load.

Instructions for fitting equipment can be found in the body/equipment mounting directives in the Mercedes-Benz body manufacturer portal: **http://bb-portal.mercedes-benz.com**

Safety prop

⚠ DANGER

When working beneath the raised tipper platform/quick-change platform, it may lower if operated incorrectly or if there is a leak in the hydraulic system. You could be crushed as a result. There is a risk of fatal injuries.

Secure the raised tipper platform/quick-change platform with the safety prop before working beneath it. The tipper platform/quick-change platform should not be laden when doing so.

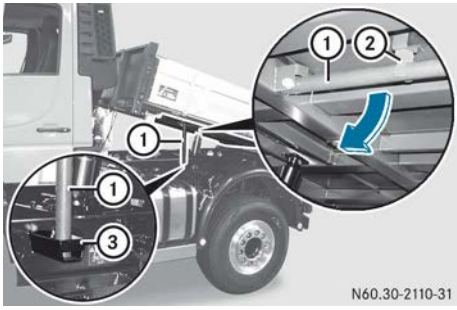

- **To secure the tipper platform:** raise the platform (▷ page 277).
- Pull safety prop ① out of bracket ② and swing it down as far as it will go in the direction of the arrow.
- Lower tipper platform (▷ page 277) until safety prop ① rests in bracket ③.

Platform dropsides

Important safety notes

⚠ WARNING

When opening the side panel lock, the dropside may drop downwards. This is particularly

the case when it is subjected to a load and is therefore under increased strain. There is a danger of injury.

Before opening, make sure that no persons are in the swinging range of the dropside. Always open the side panel lock laterally from the dropside to be opened. Be particularly careful if the side panel latches cannot be released using the normal amount of force.

⚠ **WARNING**

When the catch lever is pressed down, it automatically springs into the extreme position. As a result, you could trap your fingers, for example. There is a risk of injury.

Always press the catch lever down with the palm of your hand.

! Attached equipment must never be propped up against the aluminium platform dropsides or the posts.

To prevent this, gritters and similar attachments are not fitted with lateral supports when delivered from the factory.

Opening the platform dropside

Example: platform dropside

- ▶ Swing front catch lever ① and rear catch lever ③ up.
  The platform dropside is released.
- ▶ Swing the platform dropside down.
- ▶ Swing front catch lever ① and rear catch lever ③ down as far as they will go.

Releasing the platform dropsides

A second person is required when closing the catches and when releasing the platform dropside.

- ▶ Make sure that the tipper platform is unloaded.
- ▶ Swing front catch lever ① and rear catch lever ③ up.
  The platform dropside is released.
- ▶ Remove post ② (▷ page 276).
- ▶ Hold the platform dropside level with the platform and pull it from the mounting pins.
- ▶ Remove the platform dropside.
- ▶ Swing front catch levers ① down as far as they will go.

Rear platform dropside

Opening the rear platform dropside

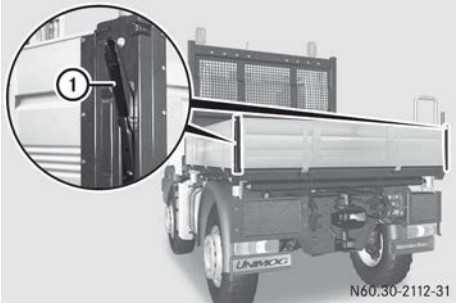

- ▶ Swing rear catch lever ① upwards to the left and right.
  The platform dropside is released.
- ▶ Swing down the platform dropside.
- ▶ Swing rear catch lever ① downwards to the left and right as far as it will go.

If the rear platform dropside is open, the platform dropside catch lever must not be unlocked.

Letting the rear platform dropside swing freely

! Do not open the rear platform dropside catch levers if the rear platform dropside is

https://truckmanualshub.com/

to swing freely. The rear platform dropside will otherwise drop down and be damaged.

- ▶ Ensure that rear catch levers ① on the left and right are closed.
- ▶ Pull platform dropside locking lever ② in the direction of the arrow.
  The platform dropside can now swing freely.

Releasing the rear platform dropside

⚠ **WARNING**

When the catch lever and the locking lever of the rear dropside are open, it is only loosely held in its mounting. The tailgate can fall down. There is a risk of injury.

Before opening, ensure that no-one is in the area behind the dropside.

A second person is required when closing the catches and when releasing the platform dropside.

- ▶ Make sure that the tipper platform is unloaded.
- ▶ Pull platform dropside locking lever ② in the direction of the arrow.
- ▶ Swing rear catch lever ① upwards to the left and right.
  The platform dropside is released.
- ▶ Remove the platform dropside.
- ▶ Swing rear catch lever ① downwards to the left and right as far as it will go.

Removing the post

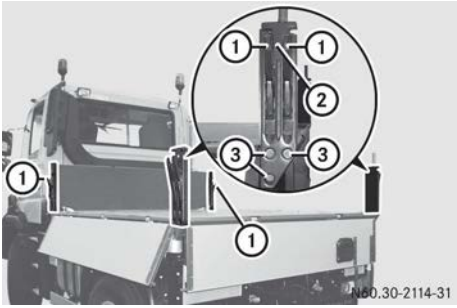

- ▶ Make sure that the tipper platform is unloaded.
- ▶ Swing all catch levers ① up and the platform dropside down.
- ▶ Swing all catch levers ① down as far as they will go.
- ▶ Unscrew screws ③ in post ②.
- ▶ Remove post ②.

Rear platform dropside access steps

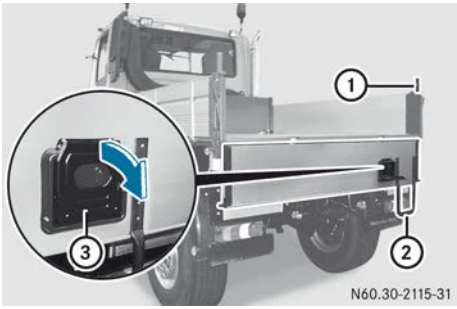

Use the platform dropside access steps to safely climb onto the platform.

- ▶ Open the tailgate (▷ page 275).
- ▶ Fold out step ③.
- ▶ Use grab handle ①, step ② and fold-out step ③.

https://truckmanualshub.com/

Tipper operation

Important safety notes

⚠ **WARNING**

If you drive off with the tipper platform raised, it could get caught on buildings, bridges or trees, for example. There is a risk of an accident.

Before driving off, always make sure that you have lowered the tipper platform and that it is correctly secured.

While tipping, the ball points can be loaded with 2.3 t. This value only applies to a stationary vehicle.

Before tipping

General notes

Please observe the following notes when raising and lowering the tipper platform:

- the vehicle must be on a firm and level surface.
- always insert pins on the platform side to which the load is to be tipped. The pins have different shapes to prevent confusion or diagonal insertion.
- the handle of the pins must always point downwards and be secured with the locking pin.
- make sure that a suitable safe distance is kept.
- make sure that the dropsides can be opened or are open.

Raising/lowering the tipper platform, vehicles without working hydraulics

Enabling/disabling the tipper function

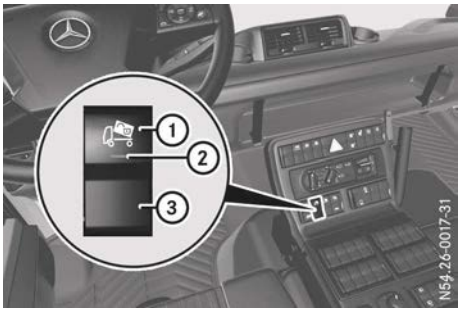

▶ **To enable the tipping function:** press switch ①.
Indicator lamp ② in the switch lights up.
The raise/lower tipper platform button is enabled.

▶ **To disable the tipping function:** press switch ③.
Indicator lamp ② in the switch goes out.
The raise/lower tipper platform button is disabled.

Raising/lowering the tipper platform vehicle

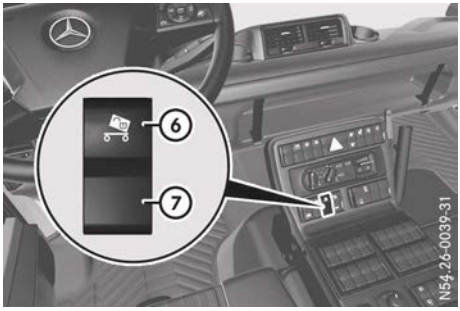

https://truckmanualshub.com/

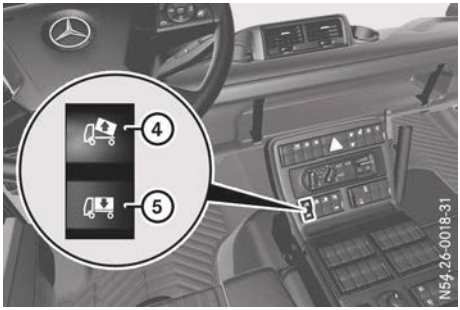

- Start the engine.
- Enable the tipping function (▷ page 277).
- Ensure that in vehicles with a tipper platform trailer, switch ⑦ is pressed.
- **To raise the tipper platform:** press and hold button ④ until the tipper platform has reached the desired position.
  The indicator lamp in the status area of the on-board computer lights up.
- **To lower the tipper platform:** make sure that the key is in position **2** in the ignition lock.
- Press and hold button ⑤ until the tipper platform has reached the desired position.
  When the tipper platform is fully lowered, the indicator lamp in the status area of the on-board computer goes out.
- Disable the tipper function (▷ page 277).

Raising/lowering the tipper platform trailer

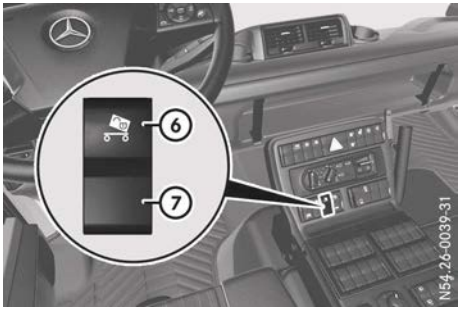

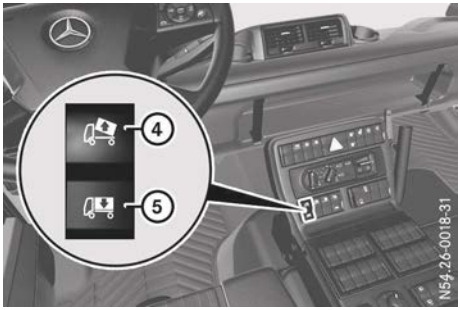

- Start the engine.
- Enable the tipping function (▷ page 277).
- Press switch ⑥.
  The tipper platform trailer can be raised or lowered.
- **To raise the tipper platform:** press and hold button ④ until the tipper platform has reached the desired position.
- **To lower the tipper platform:** make sure that the key is in position **2** in the ignition lock.
- Press and hold button ⑤ until the tipper platform has reached the desired position.
- Press switch ⑦.
  The tipper platform trailer is no longer selected.
- Disable the tipper function (▷ page 277).

Raising/lowering the tipper platform, vehicles with working hydraulics

Enabling/disabling tipper function

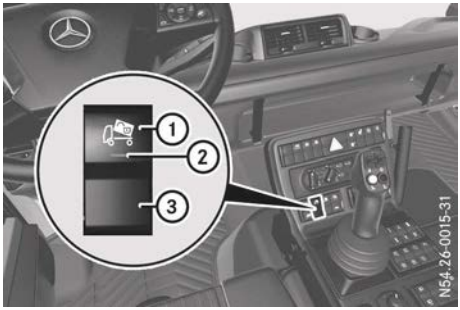

https://truckmanualshub.com/

▶ **To enable the tipping function:** press switch ①.
Indicator lamp ② in the switch lights up.
The [icon] Joystick aktiv (Joystick active) message appears in the on-board computer display. The [icon] indicator lamp in the status area of the on-board computer lights up.
The raise/lower tipper platform control lever function is enabled.

▶ **To disable the tipping function:** press switch ③.
Indicator lamp ② in the switch goes out.
The raise/lower tipper platform control lever function is disabled.

Raising/lowering the tipper platform vehicle

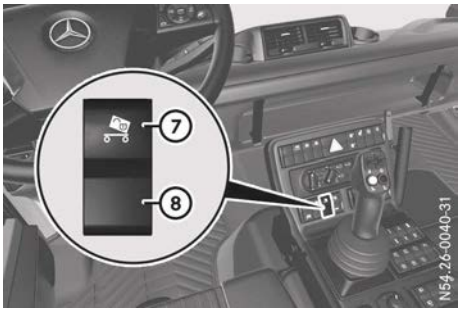

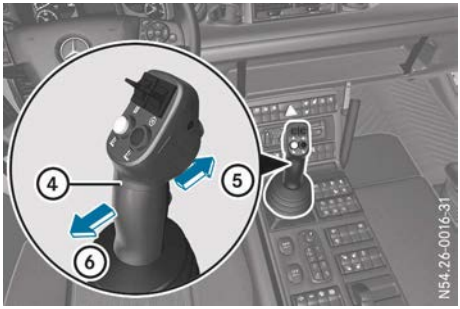

▶ Start the engine.

▶ Enable the tipping function (▷ page 278).

▶ Ensure that in vehicles with a tipper platform trailer, switch ⑧ is pressed.

▶ **To raise the tipper platform:** press control lever ④ in direction ⑥ and hold it in place until the tipper platform has reached the desired position.
The [icon] indicator lamp in the status area of the on-board computer lights up.

▶ **To lower the tipper platform:** make sure that the key is in position **2** in the ignition lock.

▶ Press control lever ④ in direction ⑤ and hold it in place until the tipper platform has reached the desired position.
When the tipper platform is fully lowered, the [icon] indicator lamp in the status area of the on-board computer goes out.

▶ Disable the tipper function (▷ page 278).

Raising/lowering the tipper platform trailer

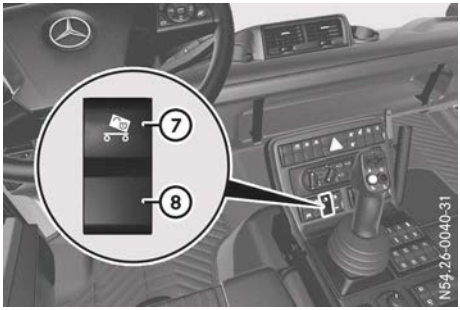

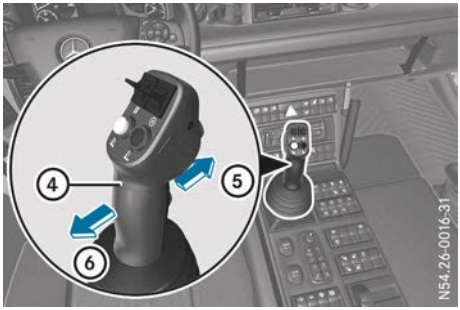

▶ Start the engine.

▶ Enable the tipping function (▷ page 278).

▶ Press switch ⑦.
The tipper platform trailer can be raised or lowered.

▶ **To raise the tipper platform:** press control lever ④ in direction ⑥ and hold it in

https://truckmanualshub.com/

place until the tipper platform has reached the desired position.

▶ **To lower the tipper platform:** make sure that the key is in position **2** in the ignition lock.

▶ Press control lever ④ in direction ⑤ and hold it in place until the tipper platform has reached the desired position.

▶ Press switch ⑧.
The tipper platform trailer is no longer selected.

▶ Disable the tipper function (▷ page 278).

Removing and fitting the tipper platform with a crane

Important safety notes

⚠ **DANGER**

If unsuitable lifting gear is used to fit/remove the tipper platform, it can come loose. The tipper platform could drop and you or others that are in the area of danger of the tipper platform could be seriously or even fatally injured. There is a risk of fatal injury.

Always use lifting gear that is suitable for the load.

⚠ **WARNING**

When raising or lowering a tipper platform with a crane, it could swing uncontrollably, for example, due to the changed centre of gravity. There is a risk of injury.

Make sure that when raising and lowering with a crane that nobody is in the area of danger.

▶ Make sure that the tipper platform is unloaded.

Removing the tipper platform

⚠ **WARNING**

The piston rod of the lifting cylinder could extend due to drop in pressure while lifting the tipper platform and trap you. There is a risk of injury.

Make sure that nobody is in the area of danger of the tipper platform.

When removing the tipper platform, you must get the assistance of a second person.

▶ Make sure that the pins on the rear ball sockets are installed (▷ page 272).

▶ Open the rear platform dropside (▷ page 274).

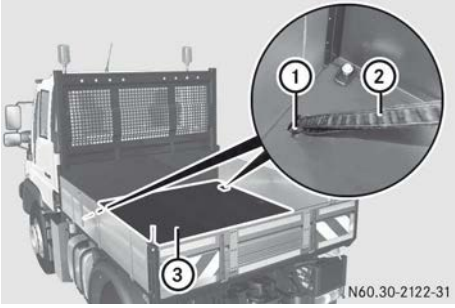

▶ Attach lifting gear ② to front lashing points ① on the platform floor.

▶ Close the rear platform dropside (▷ page 274).

▶ Start the engine.

▶ Raise the tipper platform with the control lever/switch (▷ page 277) and secure it with a safety prop (▷ page 274).

▶ Switch off the engine.

▶ Raise tipper platform ③ slightly with the crane.

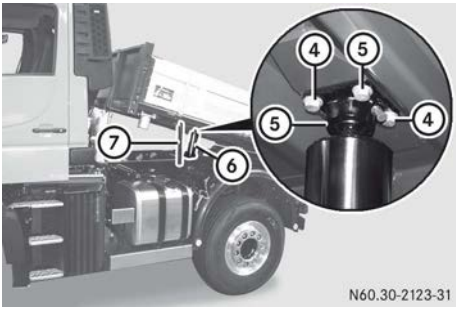

- ▶ Remove screws ④ from lifting cylinder ⑥ on the underside of the tipper platform.
- ▶ Replace screws ④ with two M12 x 50 mm set screws.
- ▶ Remove screws ⑤.
- ▶ Raise the tipper platform slightly with the crane and fold in safety prop ⑦.
- ▶ Turn the key to position **2** in the ignition lock.
- ▶ Simultaneously lower the tipper platform with the control lever/switch (▷ page 277) and with the crane, until the tipper platform is completely resting on the ball sockets.
- ▶ Open the rear platform dropside (▷ page 274).

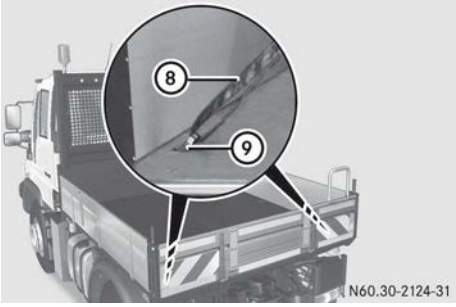

- ▶ Attach the ⑧ lifting gear to rear lashing points ⑨ on the platform floor.
- ▶ Close the rear platform dropside (▷ page 274).

- ▶ Remove left and right locking pins ⑫ from pins ⑩.
- ▶ Using the handle, turn left and right pins ⑩ upwards and remove them from rear ball sockets ⑪.
- ▶ Using the crane, carefully lift the tipper platform horizontally and remove it.

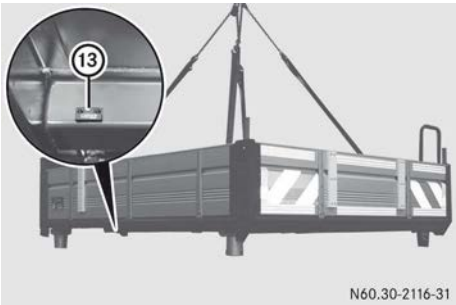

- ▶ Unscrew magnet ⑬ from the tipper platform.

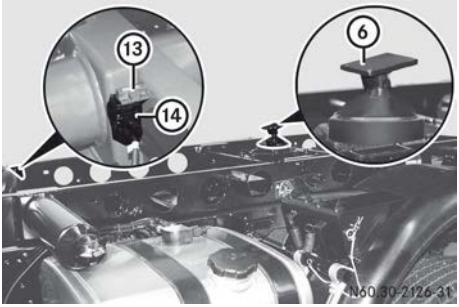

- ▶ Attach magnet ⑬ to switch ⑭, e.g. with adhesive tape.
  The [ ] indicator lamp in the status area of the on-board computer remains off when the tipper platform has been removed.
- ▶ Make sure that lifting cylinder ⑥ has been fully retracted.
- ▶ Lash lifting cylinder ⑥ to the frame.
  This helps to prevent damage to the fittings.

https://truckmanualshub.com/

Installing the tipper platform

When fitting the tipper platform, you must get the assistance of a second person.

- ▶ Remove both M12 x 50 mm screws on the underside of the platform floor.
- ▶ Remove magnet ⑬ on switch ⑭.
- ▶ Screw magnet ⑬ onto the tipper platform.
- ▶ Attach lifting gear ② to front lashing points ① on the platform floor.
- ▶ Attach the ⑧ lifting gear to rear lashing points ⑨ on the platform floor.
- ▶ Carefully position the tipper platform horizontally using the crane.
  All 4 ball sockets ⑪ of the tipper platform must rest completely on the balls.
- ▶ Insert pins ⑩ into the left and right sides of the rear ball sockets ⑪ and turn the handle downwards.
- ▶ Place locking pins ⑫ onto pins ⑩.
- ▶ Open the rear platform dropside (▷ page 274).
- ▶ Detach the ⑧ lifting gear from both rear lashing points ⑨ on the platform floor.
- ▶ Close the rear platform dropside (▷ page 274).
- ▶ Raise the tipper platform using the crane at front lashing points ① and secure it with safety props ⑦ (▷ page 274).
- ▶ Start the engine.
- ▶ Carefully extend lifting cylinder ⑥ of the tipper platform with the control lever/switch until it reaches the platform floor (▷ page 277).
- ▶ Attach lifting cylinder ⑥ using 4 screws ④, ⑤ to the platform floor.
- ▶ Lower the tipper platform and remove the lifting gear.
- ▶ Check that the tipper platform and the indicator lamp in the status area of the on-board computer are operating correctly.

Quick-change system for the tipper platform

Important safety notes

⚠ DANGER

If unsuitable lifting gear is used to fit/remove the tipper platform, it can come loose. The tipper platform could drop and you or others that are in the area of danger of the tipper platform could be seriously or even fatally injured. There is a risk of fatal injury.

Always use lifting gear that is suitable for the load.

⚠ WARNING

When raising or lowering a tipper platform with a crane, it could swing uncontrollably, for example, due to the changed centre of gravity. There is a risk of injury.

Make sure that when raising and lowering with a crane that nobody is in the area of danger.

⚠ WARNING

If you drive with the quick-change platform uncoupled, it may fall off if you brake suddenly or change direction. There is a risk of an accident and injury.

Always make sure the quick-change platform is locked and secured before driving.

- ▶ Make sure that the tipper platform is unloaded.

Do not shift the catch lever on the quick-change platform when the quick-change platform is raised.

Removing the quick-change platform

A second person is required to remove the quick-change platform.

- ▶ Park the vehicle on a level surface.
- ▶ Apply the parking brake.

- Make sure that the quick-change platform is lowered completely.
  The [ ] indicator lamp in the status area of the on-board computer must be not be lit and the ball sockets of the quick-change platform must rest completely on the balls.
- Switch off the engine.

- Remove left and right locking pins ③ from pins ①.
- Using the handle, turn left and right pins ① upwards and remove them from rear ball sockets ②.

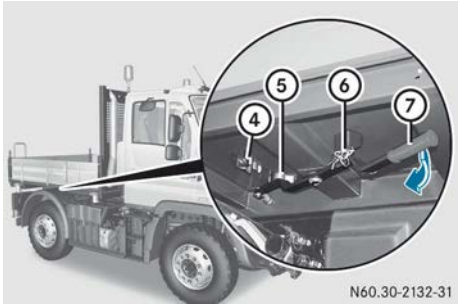

- Pull out locking pin ⑥ on catch lever ⑦.
- Push catch lever ⑦ inwards in the direction of the arrow until it engages in retainer spring ④.
  The lifting cylinder is mechanically decoupled from the quick-change platform. The quick-change platform only rests on the 4 balls of ball sockets ②.

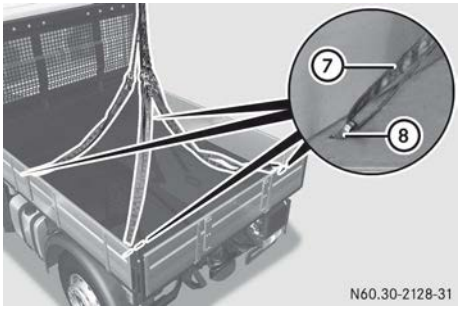

- Open the rear platform dropside (▷ page 274).
- Attach lifting gear ⑦ at the front and back to the ⑧ lashing points on the platform floor.
- Close the rear platform dropside (▷ page 274).
- Carefully raise the quick-change platform horizontally with the lifting gear.

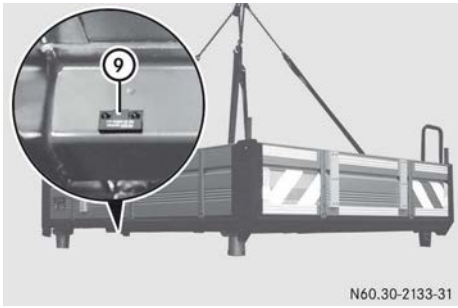

- Unscrew magnet ⑨ from the quick-change platform.

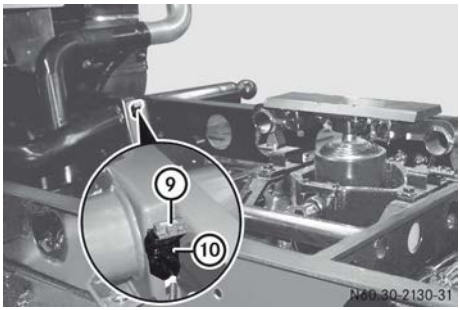

https://truckmanualshub.com/

- Attach magnet ⑨ to switch ⑩, e.g. with adhesive tape.
  The [ ] indicator lamp in the status area of the on-board computer remains off when the quick-change platform has been removed.

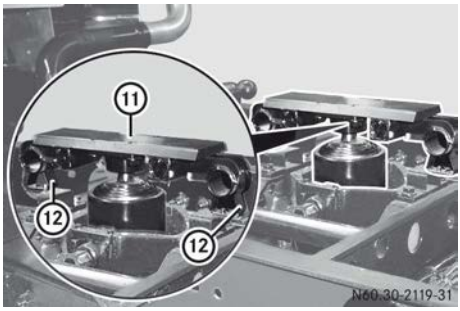

- Make sure that connection part ⑪ for the quick-change platform is engaged in retainer springs ⑫.
- Lash connection part ⑪ to the frame. This helps to prevent damage to the fittings.

Fitting the quick-change platform

A second person is required to fit the quick-change platform.

- If the quick-change platform has been removed, make sure that connection part ⑪ for the quick-change platform has engaged in spring catches ⑫.
- Remove magnet ⑨ on switch ⑩.
- Attach lifting gear ⑦ at the front and back to the ⑧ lashing points on the platform floor.
- Carefully lift the quick-change platform horizontally using the lifting gear.
  Ball sockets ② on the quick-change platform must rest completely on the balls.
- Press catch lever ⑦ outwards in the direction of the arrow until it engages in retainer spring ⑤.
- Secure catch lever ⑦ with locking pin ⑥.
- Insert pins ① into the left and right sides of the rear ball sockets ② and turn the handle downwards.
- Place locking pins ③ onto pins ①.
- Open the rear platform dropside (▷ page 274).
- Detach lifting gear ⑦ from the ⑧ lashing points on the platform floor.
- Close the rear platform dropside (▷ page 274).
- **Installation check:** raise the quick-change platform (▷ page 277).
- Screw magnet ⑨ onto the quick-change platform.
- Check that the [ ] indicator lamp in the status area of the on-board computer is functioning correctly.

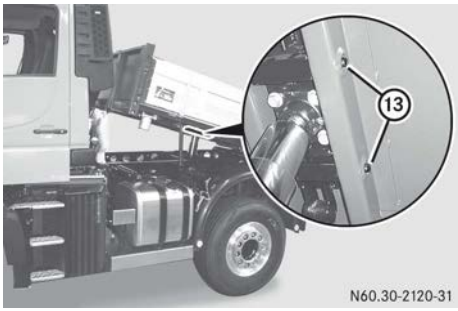

- Check that locking bolts ⑬ between the quick-change platform and connecting part are correctly fitted.
- Lower the quick-change platform (▷ page 277).

https://truckmanualshub.com/

Useful information 286
Cleaning and care 286
Maintenance 291

https://truckmanualshub.com/

Useful information

These Operating Instructions describe all the models and standard and optional equipment of your vehicle that were available at the time of going to print. Country-specific differences are possible. Bear in mind that your vehicle may not be equipped with all the functions described. This also applies to safety-relevant systems and functions.

Read the information on qualified specialist workshops (▷ page 30).

Cleaning and care

Notes on care

Environmental note

Only wash your vehicle at a wash bay designed for this purpose. Dispose of empty containers and used cleaning products in an environmentally responsible manner.

Regular care helps to maintain the value of the vehicle.

Other useful tips on vehicle care and maintenance, in particular when the vehicle is subject to arduous operation conditions, can be found in the "Tips on maintaining the value of your vehicle" supplement.

Mercedes-Benz recommends that you only use care products that have been approved for Mercedes-Benz. These care products can be obtained from a Mercedes-Benz Service Centre.

If you need to wash upper parts of the vehicle, always use a suitable ladder or another non-slip climbing aid.

Cleaning the interior

Wet-cleaning the passenger compartment

! Observe the following points when wet cleaning the vehicle interior:

- Never use a high-pressure cleaner.
- Make sure that no liquids enter or are left in gaps or cavities.
- Ensure that there is sufficient ventilation when cleaning.
- Make sure that the vehicle interior dries completely after cleaning.

Cleaning the seat covers

Clean covers made with fabric with a microfibre cloth moistened with a solution containing 1% detergent, e.g. washing-up liquid. Wipe entire seat sections carefully to avoid leaving visible lines. Allow the seat to dry subsequently. Cleaning results are dependent on the type and the age of the soiling.

Cleaning the seat belts

! Observe the following notes on cleaning the seat belts:

- remove any stains or dirt immediately. This will avoid residue or damage.
- do not bleach or dye the seat belts. This could impair the function of the seat belts.
- do not dry the seat belts in direct sunlight or at temperatures above 80 °C.

Clean the seat belts with a mild washing solution.

Cleaning the vehicle exterior

Important safety notes

⚠ WARNING

If the windscreen wipers are set in motion when cleaning the windscreen or wiper

https://truckmanualshub.com/

blades, you could become trapped. There is a danger of injury.

Always switch off the windscreen wipers and the ignition before cleaning the windscreen or wiper blades.

⚠ **WARNING**

If you use openings in the bodywork or detachable parts as steps, you could:

- slip and/or fall
- damage the vehicle and cause yourself to fall.

There is a danger of injury.

Always use secure climbing aids, e.g. a suitable ladder.

! Do not use parts of the vehicle or openings in the bodywork, such as battery compartment covers or fuel/AdBlue® tanks, as steps. Parts of the vehicle or openings in the bodywork can otherwise be damaged.

! In order to avoid consequential damage, repair damage caused by loose chippings and remove any dirt immediately, in particular:

- insect remains
- bird droppings
- flash rust
- tree resin
- oils and grease
- fuels
- tar stains
- salt residue

Wash your vehicle more frequently if it gets dirty more often.

! Vehicles with Mercedes-Benz protective chassis sealing:

- do not use high-pressure cleaners with round-spray jets for cleaning
- only clean with the water pressure up to a maximum of 30 bar
- clean the vehicle with a water temperature up to a maximum of 40 °C
- keep a distance of at least 30 cm between the nozzle and the vehicle
- only use neutral cleaning agents in the mixing ratio prescribed by the manufacturer and do not use alkaline or acidic products
- do not use any petrol-based substances, rape seed oil, diesel, petrol or other solvents
- whenever the vehicle is used, remove corrosive substances with water afterwards
- before and after each use during winter, check the anti-corrosion protection, and touch it up if necessary

When cleaning the vehicle, always use the vehicle's steps and grab handles or secure climbing aids, such as a suitable ladder.

Scratches, corrosive deposits, corrosion and damage caused by neglect or incorrect care cannot always be completely rectified. In such cases, contact a qualified specialist workshop.

Chassis and body

⚠ **WARNING**

Flammable material such as leaves, grass or twigs may ignite if they come into contact with hot parts of the exhaust system. There is a risk of fire.

When driving off road or on unpaved roads, check the vehicle's underside regularly. In particular, remove parts of plants or other flammable materials which have become trapped. In the case of damage, contact a qualified specialist workshop.

When used in dirt-intensive operating conditions, the vehicle and the body should be regularly cleaned and cared for. Parts and deposits of flammable materials must be removed from the chassis and the body. This reduces the risk of flammable materials igniting on hot vehicle or body parts.

https://truckmanualshub.com/

Examples of dirt-intensive operating conditions or environments:

- Pesticide and fertiliser spreading: plant matter which touches, brushes against or gathers in the chassis or vehicle body, such as cereal ears
- Harvesting green fodder or maintenance of road verges, such as mowing, mulching, pressing or loading: deposits of dust, grass, cuttings or hay in the chassis or body
- Harvesting or landscape maintenance, such as pressing, loading or wood chopping: deposits of dust, straw, corn or cuttings in the chassis or body
- Waste disposal vehicles: deposits of flammable waste in the chassis, such as paper
- Disaster relief work and fire-fighting in forests and on open plains: deposits such as grass, plant material and undergrowth

Access steps

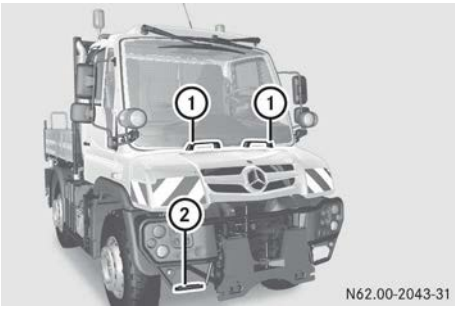

Keep steps ② and grab handles ① free from dirt such as:

- mud
- clay
- snow
- ice

This increases the safety of your footing.

High-pressure cleaning

⚠ WARNING

The water jet from a round-jet nozzle (dirt grinder) can cause damage to tyres, suspension components or air bellows that is not visible from the outside. Components that have been damaged in this way can unexpectedly fail. There is a risk of an accident.

Do not use a high-pressure cleaner with a round-jet nozzle to clean your vehicle. Have damaged tyres, suspension components or air bellows replaced immediately.

! Never use a high-pressure cleaner in the vehicle interior. The pressurised water created by the high-pressure cleaner and the associated spray could cause considerable damage to the vehicle.

! The BlueTec® exhaust gas aftertreatment system may only be cleaned when it is cool. The sensors could otherwise be damaged.

When cleaning, make sure never to point the water jet at the exhaust pipe. The exhaust gas aftertreatment could otherwise be damaged.

! When using a high-pressure cleaner, keep a minimum distance between the high-pressure nozzle and the vehicle parts. Parts of the vehicle or engine can otherwise be damaged.

Observe the following minimum distances:

- Round spray jet approximately 70 cm
- 25°flat-spray jet approximately 30 cm
- Dirt grinder approximately 30 cm

! Keep the water jet moving constantly while cleaning. In this way, you will avoid causing damage.

Do not point the water jet at:

- door joints
- air bellows
- brake hoses
- wheel balance weights
- electrical components

https://truckmanualshub.com/

- electrical connectors
- seals

! Vehicles with Mercedes-Benz protective chassis sealing:

- do not use high-pressure cleaners with round-spray jets for cleaning
- only clean with the water pressure up to a maximum of 30 bar
- clean the vehicle with a water temperature up to a maximum of 40 °C
- keep a distance of at least 30 cm between the nozzle and the vehicle

You could otherwise damage the Mercedes-Benz protective chassis sealing.

Environmental note

Only wash your vehicle at a wash bay designed for this purpose. Dispose of empty containers and used cleaning products in an environmentally responsible manner.

Please also observe the information provided for cleaning the radiator (▷ page 301).

Automatic car wash

WARNING

Braking efficiency is reduced after the vehicle has been washed. There is a risk of an accident.

After washing the vehicle, brake carefully while paying attention to the traffic conditions in order to restore full braking efficiency.

! Before washing the vehicle in an automatic car wash, fold in the exterior mirrors and switch off the windscreen wipers. Otherwise, the exterior mirrors and windscreen wipers could be damaged.

Make sure that the exterior mirrors are fully folded out again when you leave the automatic car wash.

Wash off excess dirt before cleaning the vehicle in an automatic car wash.

After the automatic car wash, remove the wax from the windscreen and the wiper blades. This prevents smearing and reduces wiper noise, which occur as a result of residue on the windscreen.

Cleaning the engine

! Observe the following notes when cleaning the engine. This avoids malfunctions and damage to the engine.

- When using high-pressure or steam cleaners, do not point the spray directly at electrical components and electric cables.
- Make sure that no water enters the air intake and ventilation openings.
- Treat the engine with preservative agents after it has been cleaned. When doing so, protect the belt drive system from the preservative agent.
- Only use wax-based protective agents for engines that comply with Sheet No. 385.4 of the Mercedes-Benz Specifications for Service Products.

! When using high-pressure or steam cleaners, do not point the spray directly at radiator core fins, electrical components or electric cable ends.

In addition, observe the notes in the "High-pressure cleaning" section (▷ page 288).

Cleaning light-alloy wheels

! When cleaning the light-alloy wheels, do not use any acidic or alkaline cleaning agent. They may corrode the wheel nuts or the locking springs of the wheel balance weight.

! Do not point the water jet of high pressure or steam cleaners directly at the balance weights of the light-alloy wheel. They may become detached and lead to imbalance and increased tyre wear.

https://truckmanualshub.com/

Clean the light-alloy wheels regularly.

In addition, observe the notes in the "High-pressure cleaning" section (▷ page 288).

After driving off-road or on a construction site

! Only direct the compressed-air, steam or water jet towards the radiator surface in a vertical direction. Ensure that the radiator fins are not damaged. Remove any dirt from the radiator fins. Damaged or dirty radiator fins can cause the engine to overheat. If there is a loss of coolant or damage to the cooling and heating system, have it checked at a qualified specialist workshop.

Foreign bodies that have become trapped can be expelled during the journey, e.g stones in the tyre tread.

Check the tyres for foreign bodies that have become trapped after every journey off-road or on a construction site and before journeys on public roads. Remove any trapped foreign bodies.

Dirt and mud on the tyres and on the road surface reduce road grip, particularly if the road surface is wet. This could cause your vehicle to skid.

Dirt and mud on steps and door sills make them less safe to tread on. This could cause you to slip from the steps and injure yourself.

Always clean your vehicle carefully after every journey off-road or on a construction site and before journeys on public roads.

When driving off-road, dirt, sand, mud and water mixed with oil, for example, can soil the brakes. This can lead to reduced braking performance or to total failure of the brakes, also from increased wear. The braking characteristics change depending on the material that has penetrated. Clean the brakes after driving off-road. If you then notice grinding noises or a reduction in braking performance, have the brake system checked at a qualified specialist workshop as quickly as possible. Adapt your driving style to the altered braking conditions.

The following vehicle parts in particular must be cleaned:

- lighting system
- windows
- exterior mirrors
- access steps and entrances
- grab handles
- tyres, wheels and wheel arches
- steering, axles and brakes
- suspension elements and chassis frame
- licence plate
- radiator, engine and transmission

▶ Remove any trapped foreign bodies, e.g. stones.

After operation in mud, sand, water or after exposure to similar dirty conditions:

▶ Clean brake discs, brake linings, wheels and axle joints and check them for damage.

▶ If necessary, lubricate the axle joints (observe the information in the Maintenance Booklet).

▶ Test the brakes.

Chassis and underbody protection

! To maintain a high level of anti-corrosion protection you must observe the following:

- do not wash the vehicle until the fourth week after delivery.
- when washing the chassis and underbody with a high-pressure cleaner, ensure that the water temperature is not set above 40 °C and the spray pressure does not exceed 30 bar.
- do not use rapeseed oil, petrol, diesel or other solvents for cleaning. They can cause the dual-layer protection to dissolve or peel off.
- only use a pH-neutral cleaner, not alkaline or acidic products.

https://truckmanualshub.com/

- do not use any additional anti-corrosion agents.
- whenever the vehicle is used in extreme conditions, such as winter road service operations using wet salt, remove all traces of corrosive substances with water afterwards.

The Unimog's chassis and underbody have been treated with a special dual-layer protective coating.

This dual-layer protection consists of a penetrating wax (Carlofon 3650) and an underbody protection wax (Carlofon 4941). The penetrating wax improves the anti-corrosion protection on moving parts and at gaps, joints and overlaps. The underbody protection wax permanently seals the chassis.

ⓘ Other useful tips on vehicle care can be found in the "Tips on maintaining the value of your vehicle" supplement.

Maintenance

Important safety notes

Environmental note

If circumstances require you to do some maintenance work yourself, you must observe the environmental protection requirements. When disposing of service products, e.g. engine oil, you must comply with the legal requirements. This also concerns all parts, e.g. filters, that have been in contact with service products.

Dispose of empty containers, cleaning cloths and care products in an environmentally responsible manner.

Observe the instructions for care products.

Do not let the engine run longer than necessary when stationary.

Like all technical equipment, the vehicle requires care and maintenance. The scope and frequency of maintenance work mainly depends on the operating conditions, which can differ widely.

You must secure the vehicle on axle stands of sufficient load-bearing capacity if work is being carried out underneath the vehicle. Never use the jack instead of stands. The jack could slip and the vehicle could drop. The jack is designed only to raise the vehicle for a short time, e.g. while a wheel is being changed.

When working on the vehicle, comply with all safety regulations, such as operating instructions, regulations concerning hazardous materials, environmental protection measures, work safety and accident prevention regulations.

The enclosed Maintenance Booklet contains information on the scope and frequency of maintenance work and notes on warranty, service products and maintenance work.

A qualified specialist workshop will confirm the work that has been carried out in the Maintenance Booklet.

Inspection and maintenance work requires special skills that cannot be acquired by reading these Operating Instructions. Always have this work and maintenance work carried out by a qualified specialist workshop.

Opening/closing the front flap

Overview

⚠ **WARNING**

If you open the front flap while the engine is overheating or while there is a fire in the engine compartment, you could come into contact with hot gases or other leaking service products. There is a risk of injury.

Allow an overheating engine to cool down before opening the front flap. If there is a fire in the engine compartment, leave the front flap closed and notify the fire brigade.

https://truckmanualshub.com/

Unlocking/locking the front flap

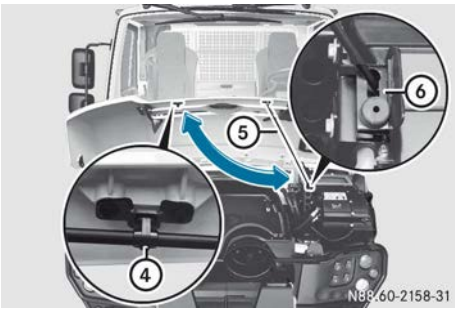

Opening/closing the front flap

Closing the front flap

Opening the front flap

- **Vehicles with a mowing door:** release the handrail and swing the additional mirror down (▷ page 72).
- **All vehicles:** make sure that, when opening the front flap, there are no foreign bodies on the lid, e.g. snow, dirt, foliage. This way, no foreign objects can enter the heating/air conditioning air inlet duct.
- Take the square spanner out of the tool bag (▷ page 312).
- Unlock fasteners ① with the square spanner in the direction of arrow ②.
- Swing up the front flap in the centre.
- Remove safety prop ⑤ from retainer ④ and swing it downwards.
- Insert safety prop ⑤ into bracket ⑥.

Closing the front flap

⚠ WARNING

An unlocked front flap may open up when the vehicle is in motion and block your view. There is a risk of an accident.

Before every trip, make sure that the front flap is locked.

- Raise the front flap.
- Swing safety prop ⑤ up and engage it in retainer ④.
- Swing down the front flap in the centre. Ensure that centring pins ⑦ on the front flap retract into brackets ⑧.
- Lock fasteners ① with the square spanner in the direction of arrow ③.
- **Vehicles with a mowing door:** swing the additional mirror up and secure the handrail (▷ page 72).

Removing/replacing the front flap

Overview

⚠ WARNING

If you open the front flap while the engine is overheating or while there is a fire in the engine compartment, you could come into contact with hot gases or other leaking service products. There is a risk of injury.

Allow an overheating engine to cool down before opening the front flap. If there is a fire in the engine compartment, leave the front flap closed and notify the fire brigade.

https://truckmanualshub.com/

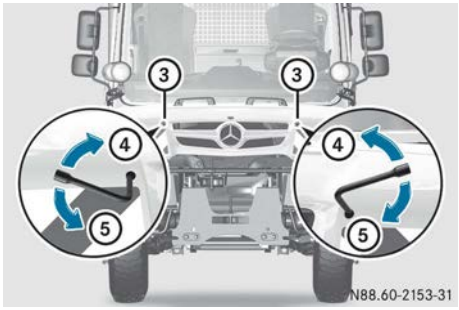

Unlocking/locking the front flap

Two people are required to remove/replace the front flap.

Removing the front flap

- **Vehicles with a mowing door:** release the handrail and swing the additional mirror down (▷ page 72).
- **All vehicles:** take the square spanner out of the tool bag (▷ page 312).
- Unscrew quick-release fasteners ② on grab handle ①.
- Unlock fasteners ③ with the square spanner in the direction of arrow ④.
- Pull front flap up and remove.

Replacing the front flap

- Attach the front flap.
- Position quick-release fasteners ② on grab handle ① and screw in slightly.
- Lock fasteners ③ with the square spanner in the direction of arrow ⑤.
- Tighten quick-release fasteners ② on grab handle ①.
- **Vehicles with a mowing door:** swing the additional mirror up and secure the handrail (▷ page 72).

Coolant level

⚠ **WARNING**

The cooling system is pressurised, particularly when the engine is warm. If you open the cap, you could be scalded if hot coolant sprays out. There is a risk of injury.

Let the engine cool down before you open the cap. Wear gloves and eye protection. Open the cap slowly to release the pressure.

⚠ **WARNING**

Service product can be poisonous and hazardous to health. There is a risk of injury.

Observe the instructions on the respective original container when using, storing and disposing off service products. Always store service products in the sealed original container. Always keep service products out of the reach of children.

! Do not operate the vehicle if the coolant level is too low. Otherwise, the engine may be damaged.

- Park the vehicle on a level surface.
- Apply the parking brake.
- Switch off the engine.
- Switch the ignition lock to position **0**.
- When checking/topping up the coolant make sure that you have a secure footing.

https://truckmanualshub.com/

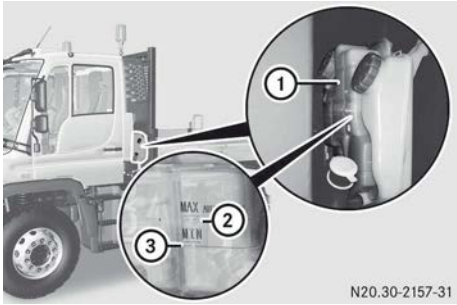

▶ **To check:** check the coolant temperature in the on-board computer (▷ page 125). In order to ensure the correct coolant level, the coolant temperature must be between 0 °C and 25 °C.

▶ Check coolant level.
The coolant in coolant expansion tank ① must be between "MIN" mark ③ and "MAX 6-Zylinder mit Allison" ②.

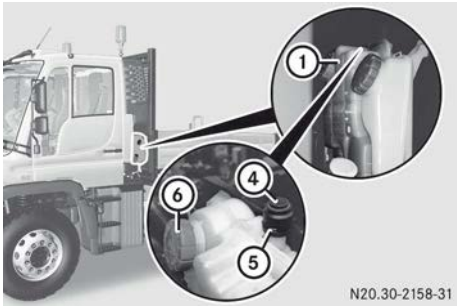

▶ **To top up:** make sure that the coolant temperature is below 50 °C.

▶ Turn green cap ⑥ slowly anti-clockwise and release the pressure.

▶ Unscrew and remove green cap ⑥.

or

▶ Remove spring ⑤ and detach cover ④ using an upward motion.

▶ Observe the information on coolant, coolant mixture ratio and water quality (▷ page 362).

▶ Top coolant up to "MAX 6-Zylinder mit Allison" mark ②.

▶ Replace green cap ⑥ and tighten it as far as it will go.

or

▶ Press on cover ④ and insert spring ⑤.

If the coolant level in coolant expansion tank ① is too low, the on-board computer displays the red event window with the symbol .

Hydraulic clutch actuation system

Important safety notes

⚠ **WARNING**

Service product can be poisonous and hazardous to health. There is a risk of injury.

Observe the instructions on the respective original container when using, storing and disposing off service products. Always store service products in the sealed original container. Always keep service products out of the reach of children.

! Brake fluid corrodes paint, plastic and rubber. If brake fluid comes into contact with paint, plastic or rubber, rinse with water immediately.

Have the brake fluid replaced regularly at a qualified specialist workshop. You can find the intervals for brake fluid change in the maintenance booklet.

https://truckmanualshub.com/

Checking the coolant level and topping up

Vehicles with Telligent® gearshift or Telligent® automatic gearshift:

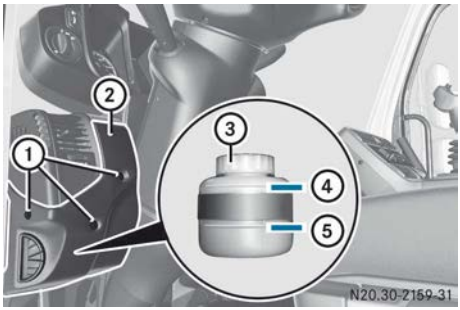

① Screws
② Cover
③ Cap
④ Max. mark
⑤ Min. mark

▶ Remove screws ①.
▶ Remove cover ②.
▶ **Check:** inspect the brake fluid level in the expansion tank.
The brake fluid level must be at maximum mark ④.
If the brake fluid level has dropped significantly below maximum mark ④, there may be a leak in the clutch actuation system. Have the clutch actuation system checked as soon as possible at a qualified specialist workshop.
▶ **To refill:** unscrew cap ③.
▶ Observe the information on brake fluid (▷ page 361).
▶ Make sure that the strainer is fitted.
▶ Top up the brake fluid.
Only fill the expansion tank to maximum mark ④.
▶ Replace cap ③ and screw it on.
▶ Replace cover ② and tighten screws ①.

Vehicles with Telligent® automatic gearshift

① Cap
② Max. mark
③ Min. mark

▶ Raise the tipper platform (▷ page 277).

or

▶ Tilt the cab forwards (▷ page 314).
▶ **Check:** inspect the brake fluid level in the expansion tank.
The brake fluid level must be at maximum mark ②.
If the brake fluid level has dropped significantly below maximum mark ②, there may be a leak in the clutch actuation system. Have the clutch actuation system checked as soon as possible at a qualified specialist workshop.
▶ **To top up:** unscrew cap ①.
▶ Observe the information on brake fluid (▷ page 361).
▶ Make sure that the strainer is fitted.
▶ Top up the brake fluid.
Only fill the expansion tank to maximum mark ②.
▶ Replace cap ① and screw it on.
▶ Lower the tipper platform (▷ page 277).

or

▶ Tilt the cab back into the driving position (▷ page 314).

https://truckmanualshub.com/

Torque converter clutch

General notes

If the oil level in the torque converter clutch is too low, the [ ] warning lamp in the status area of the on-board computer lights up.

Checking the fluid level

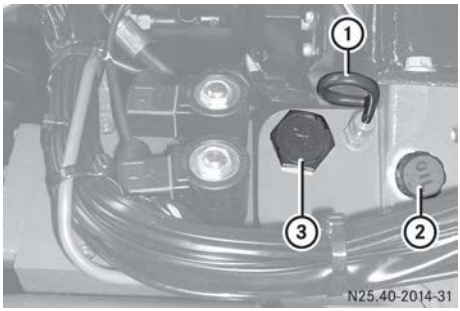

① Oil dipstick
② Bleed screw
③ Filler plug

If the oil level in the torque converter clutch is too low, the [ ] warning lamp in the status area of the on-board computer lights up.

- ▶ Park the vehicle on a level surface.
- ▶ Apply the parking brake.
- ▶ Shift into neutral.
- ▶ Start the engine.
- ▶ Pull out oil dipstick ①.
  The oil level must reach the FULL marking.

Topping up the oil

- ▶ Unscrew filter plug ③.
- ▶ Observe the information on oil (▷ page 367).
- ▶ Top up the oil.
- ▶ Check the engine oil level again.
- ▶ Tighten filler plug ③.

Windscreen washer system

Important safety notes

⚠ WARNING

If windscreen washer concentrate comes into contact with hot components of the engine or the exhaust system, it can ignite. There is a risk of fire and injury.

Make sure the windscreen washer concentrate does not come into contact with the filler neck.

Topping up the washer fluid

Add a washer fluid concentrate according to Mercedes-Benz Specifications for Service Products Sheet No. 371.0 throughout the entire year. Adjust the mixing ratio to suit the outside temperature.

In temperatures above freezing, use a washer concentrate for the summer to prevent smearing. If there is a risk of frost, use a washer fluid concentrate for winter to prevent the water from freezing on the windscreen.

- ▶ Mix the washer fluid to the appropriate mixing ratio in a container beforehand.
- ▶ Remove cap ① of washer fluid reservoir ② by pulling it upwards.
- ▶ Top up washer fluid reservoir ②, filling capacity (▷ page 367).
- ▶ Push on cap ① until it engages.

When the washer fluid level in the washer fluid reservoir is too low, the on-board computer displays a grey event window with the [ ] symbol (▷ page 130).

https://truckmanualshub.com/

Engine oil level

Checking the engine oil level

Check the engine oil level before the start of every journey.

- ▶ Check the engine oil level via the on-board computer (▷ page 125).
- ▶ Top up with the quantity of oil displayed in the on-board computer (▷ page 297).

Topping up the engine oil

! Only use oils which have been approved for the vehicle and with the prescribed SAE classification.

Do not add too much oil. If you add too much oil, the engine or the exhaust system could be damaged. Have excess oil siphoned off.

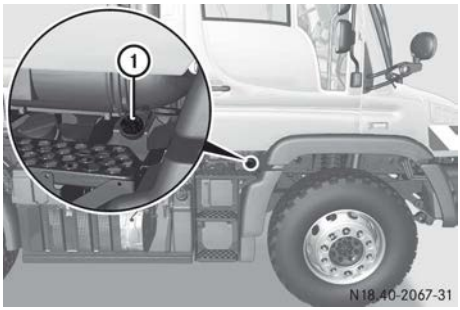

Do not add the topping-up quantity shown in the on-board computer until the symbol appears in the status area of the on-board computer (▷ page 144).

- ▶ Park the vehicle on a level surface.
- ▶ Apply the parking brake.
- ▶ Switch off the engine.
- ▶ Unscrew and remove cap ①.
- ▶ Observe the information on engine oil (▷ page 361).
- ▶ Top up the oil as shown in the on-board computer.
- ▶ Replace cap ① and screw it on.

Oil level of steering

Important safety notes

⚠ WARNING

Certain components in the engine compartment could be very hot, e.g. the engine, the radiator and parts of the exhaust system. There is a risk of injury when accessing the engine compartment.

As far as possible, allow the engine to cool down and only touch the components described in the following.

⚠ WARNING

There are moving components in the engine compartment. Certain components may continue to move or suddenly move again even after the ignition has been switched off, e.g. the radiator fan. There is a risk of injury.

If you have to carry out work in the engine compartment:

- switch off the ignition
- never touch the dangerous areas surrounding moving components, e.g. the rotation area of the fan
- remove jewellery and watches
- keep items of clothing and hair, for example, away from moving parts.

! If the oil does not reach the MIN mark, the vehicle's hydraulic system may be malfunctioning.

Have the system checked immediately at a qualified specialist workshop.

https://truckmanualshub.com/

Checking the oil level and topping up the oil

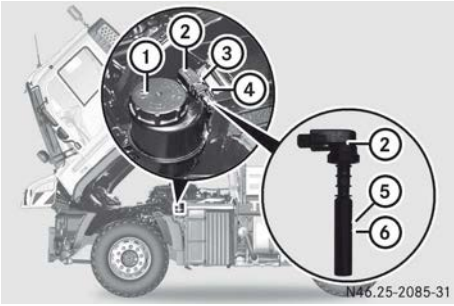

- ▶ Park the vehicle on a level surface.
- ▶ Start the engine.
- ▶ Tilt the cab (▷ page 314).
- ▶ Push locking spring ③ and remove plug connector ④.
- ▶ **To check:** pull out oil dipstick ②.
- ▶ Wipe oil dipstick ② with a lint-free cloth.
- ▶ Reinsert oil dipstick ② as far as it will go and pull it out again.
- ▶ Check the oil level of the steering. The oil level must be between MIN mark ⑥ and MAX mark ⑤.
- ▶ Insert oil dipstick ② as far as it will go.
- ▶ Remove plug ④.
- ▶ **To top up:** unscrew cap ①.
- ▶ Observe the information on oil (▷ page 367).
- ▶ Top up with the necessary amount of oil.
- ▶ Replace cap ① and screw it on.

Checking the oil level of the working hydraulics

General notes

The following systems are supplied with hydraulic oil via the hydraulic oil reservoir:

- working hydraulics
- fan hydraulics
- lifting cylinder of the tipper platform
- auxiliary steering on the rear axle

Important safety notes

⚠ WARNING

The hydraulic system is under high pressure and the hydraulic fluid may be hot. If work on the hydraulic system is carried out incorrectly, high-pressure hydraulic fluid may spray out. There is a risk of injury.

Only have work on the hydraulic system carried out at a qualified specialist workshop.

Checking the fluid level

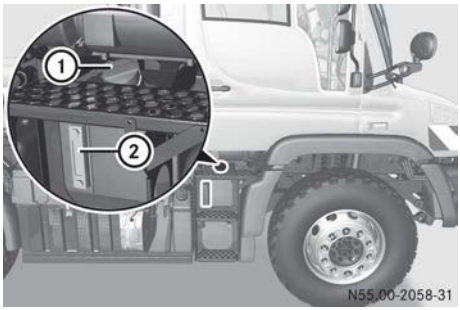

- ▶ Lower the tipper platform (▷ page 277).
- ▶ On the attached equipment, retract the working cylinder piston rods (see manufacturer's operating instructions).
- ▶ Switch off the engine.
- ▶ Check the fluid level with level gauge ②. The oil level must be within the visible area of level gauge ②.

Topping up the hydraulic fluid

- ▶ Open cap ①.
- ▶ Observe the information on hydraulic fluid (▷ page 363).
- ▶ Top up the hydraulic fluid until it is in the centre of the visible area of level gauge ②.
- ▶ Replace cap ① and screw it on.

https://truckmanualshub.com/

Oil level of power hydraulics

Important safety notes

⚠ **WARNING**

The hydraulic system is under high pressure and the hydraulic fluid may be hot. If work on the hydraulic system is carried out incorrectly, high-pressure hydraulic fluid may spray out. There is a risk of injury.

Only have work on the hydraulic system carried out at a qualified specialist workshop.

Checking the fluid level

Always check the oil level before starting operation of hydraulic equipment.

- Check the oil level using the on-board computer (▷ page 125).

Topping up the oil

! If any of the hydraulic cylinders have not been fully retracted, do not top up the oil to the maximum.

- Open cap ①.
- Observe the information on hydraulic fluid (▷ page 363).
- Slowly add hydraulic fluid.
- Replace cap ① and screw it on.

- Check the oil level of the power hydraulics (▷ page 125).
  The oil level display of the power hydraulics must show approximately 52 l.
- Activate and then deactivate the power hydraulics (▷ page 258).

Oil level, hydrostatic drive system

Checking the fluid level

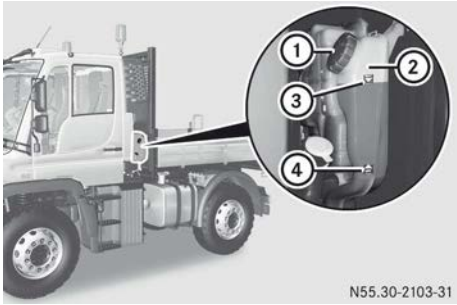

- The oil level must be between MIN mark ④ and MAX mark ③.

Topping up the oil

- Open red cap ①.
- Observe the information on hydraulic fluid (▷ page 363).
- Add the hydraulic fluid slowly into reservoir ② up to maximum mark ③.
- Replace red cap ① and screw it on.

Front PTO shaft

https://truckmanualshub.com/

After each period of use:

- ▶ Clean the stub of front PTO shaft ① with a soft cloth.
- ▶ Lightly grease the stub of front PTO shaft ①.
- ▶ Push the cover onto front PTO shaft ①.
- ▶ Check that it is positioned correctly. Twist the cover in place.

Have PTO shaft ① transmission checked and repaired at a qualified specialist workshop.

Replacing the wiper blades

Important safety notes

⚠ **WARNING**

If you use the steps and grab handles at the front of the cab when replacing the wiper blades, you could slip and/or fall. There is a risk of injury.

When replacing the wiper blades, always use secure climbing aids, e.g. a suitable ladder.

⚠ **WARNING**

If the windscreen wipers begin to move while you are changing the wiper blades, you can be trapped by the wiper arm. There is a risk of injury.

Always switch off the windscreen wipers and ignition before changing the wiper blades.

! Only touch the wiper blade on the wiper arm. Otherwise, you could damage the wiper blade.

The windscreen will no longer be wiped properly if the wiper blades are worn. This may prevent you from observing the traffic conditions.

Windscreen wiper blades

General notes

! **Vehicles with external sun visors:** do not fold up the wiper arm. Otherwise, you could damage the external sun visors.

! When installing the new wiper blades, pay careful attention to the different lengths:

- left wiper blade 900 mm
- right wiper blade 1000 mm

The wiper system can otherwise be damaged.

Removing

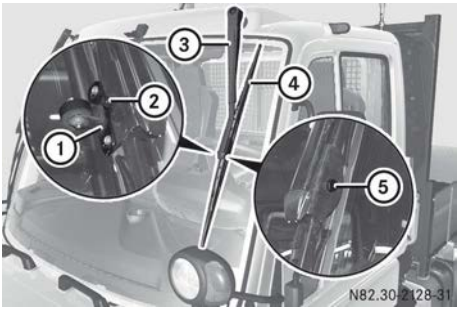

- ▶ Apply the parking brake.
- ▶ Shift into neutral.
- ▶ Move the windscreen wiper to the side, to its end position (▷ page 88).
- ▶ Switch off the engine.
- ▶ Remove the key from the ignition lock.
- ▶ Unscrew nut ② on wiper blade ④.
- ▶ Raise wiper arm ③.
- ▶ Pull out bolt ⑤.
- ▶ **Left windscreen wiper:** remove roller ①.
- ▶ **Both windscreen wipers:** remove wiper blade ④.
- ▶ Carefully lift wiper arm ③ off the windscreen.

Fitting

- ▶ Carefully lift wiper arm ③ off the windscreen.
- ▶ Insert new wiper blade ④.
- ▶ **Left windscreen wiper:** insert roller ①.
- ▶ **Both windscreen wipers:** insert bolt ⑤.
- ▶ Screw on new nut ②.
- ▶ Tighten nut ② so that wiper blade ④ can still move in wiper arm ③.
- ▶ Fold wiper blade ④ onto the windscreen.

https://truckmanualshub.com/

Mowing door wiper blade

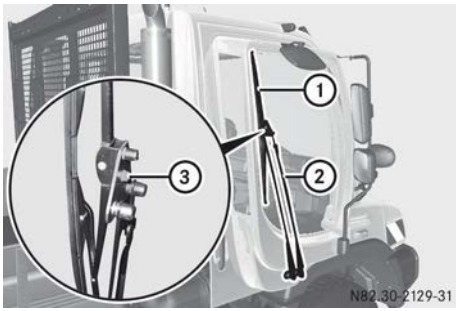

- ▶ Apply the parking brake.
- ▶ Shift into neutral.
- ▶ Switch off the engine.
- ▶ Remove the key from the ignition lock.
- ▶ **To remove:** unscrew nut ③ on wiper blade ①.
- ▶ Raise wiper arm ②.
- ▶ Remove wiper blade ①.
- ▶ Carefully lift wiper arm ② off the windscreen.
- ▶ **To fit:** carefully lift wiper arm ② off the windscreen.
- ▶ Insert new wiper blade ①.
- ▶ Screw on new nut ③ and tighten.
- ▶ Fold wiper blade ① onto the windscreen.

Cleaning the radiator

Important safety notes

⚠ **WARNING**

If you clean the radiator, the air conditioning condenser or the protective grid with the engine at normal operating temperature, you can burn yourself on the hot components. There is a risk of injury.

Allow the engine to cool down before cleaning the radiator, the air conditioning condenser or the protective grid. Always wear protective gloves while doing so.

! Only direct the compressed-air, steam or water jet towards the radiator surface in a vertical direction. Ensure that the radiator fins are not damaged. Remove any dirt from the radiator fins. Damaged or dirty radiator fins can cause the engine to overheat. If there is a loss of coolant or damage to the cooling and heating system, have it checked at a qualified specialist workshop.

Depending on the nature of the work performed by your vehicle, the engine radiator and the charge-air cooler may become heavily soiled.

Check the engine radiator and charge-air cooler for soiling on the exterior every time you refuel.

In extremely dirty conditions, e.g. mowing operations, check the engine radiator several times a day and clean it whenever necessary.

- ▶ Check the coolant temperature in the on-board computer (▷ page 125).
  Only clean the radiator at a coolant temperature below 50 °C.

ⓘ Further tips on cleaning the engine radiator and the charge-air cooler can be found in the "Tips on maintaining the value of your vehicle" supplement.

Cleaning the engine radiator and air conditioning condenser

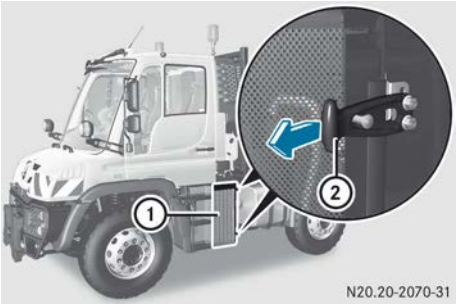

- ▶ Pull lever ② and swing it to the right.
- ▶ Open protective grid ①.

https://truckmanualshub.com/

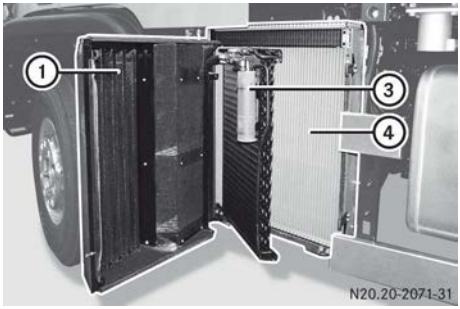

- Swing air conditioning condenser ③ forwards.
- Clean radiator core fin on air conditioning condenser ③ and on engine radiator ④.
- Swing air conditioning condenser ③ and protective grid ① back again.
- Pull lever ② and swing left to lock.

Cleaning the charge-air cooler and hydraulic oil cooling fan

Cleaning the protective grid of the charge-air cooler and the hydraulic oil cooling fan

- Clean protective grid ① through ventilation slot ② in the front flap.

Cleaning the charge-air cooler and hydraulic oil cooling fan

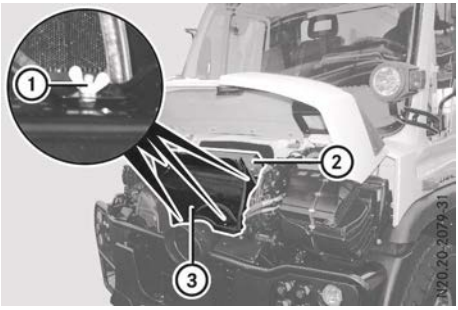

Protective grid ③ is designed so that the radiator core fin of charge-air cooler/oil cooler ② only has to be cleaned after very dirt-intensive work.

- Open the front flap (▷ page 291).
- Loosen wing nuts ① on protective grid ③.
- Remove protective grid ③.
- Clean radiator core fin of charge-air cooler/oil cooler fan hydraulics ②.

Power hydraulics oil cooler

- Raise the tipper platform and secure it with the safety prop (▷ page 277).
- Clean radiator core fin ① of the power hydraulics oil cooler.

https://truckmanualshub.com/

Cleaning the working hydraulics oil cooler

Rear right oil cooler

- Clean protective grid ① and radiator core fin ② of the working hydraulics oil cooler.

Cleaning the oil cooler, hydrostatic drive system/torque converter clutch

Rear left oil cooler

- Clean protective grid ① and radiator core fin ② of the oil cooler, hydrostatic drive system/torque converter clutch.

Cleaning the fine particle filter or the active charcoal filter

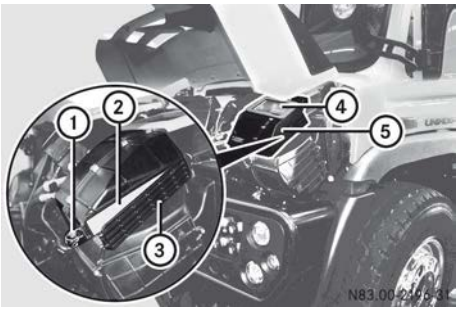

Example: fine particle filter

When operating in very dirty conditions, e.g. when mowing, check the fine particle filter or the active charcoal filter several times a day and clean if necessary.

- Open the front flap (▷ page 291).
- Clean dust filter screen ④.
- **To remove the fine particle filter or the active charcoal filter:** open clip ①.
- Lift up and remove cover ③.
- Pull out and clean fine particle filter or active charcoal filter ② or if it is heavily soiled, replace it.
- Clean housing ⑤ with a moist cloth.
- **To install the fine particle filter or the active charcoal filter:** insert fine particle filter or active charcoal filter ②.
- Insert cover ③ to the right into the guide and close it.
- Attach clip ① to flap ③ and close it.

https://truckmanualshub.com/

Cleaning the air filter

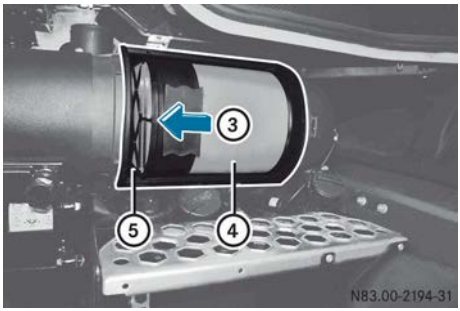

When operating in very dirty conditions, e.g. when mowing, check the air filter and clean it if necessary.

- **To remove the air filter:** open the right door.
- Open catches ②.
- Remove cover ①.
- Push air filter ④ to the left in the direction of arrow ③ and remove.
- **To clean:** knock air filter ④ out and replace if necessary if heavily soiled.
- Clean housing interior ⑤ with a moist cloth. Ensure that no foreign bodies enter the housing.
- **To replace the air filter:** insert air filter ④ and push to the right, in the opposite direction to arrow ③, as far as it will go.
- Insert cover ①.
- Close catches ②.
- Close the right door.

Cleaning the release valve on the air intake duct

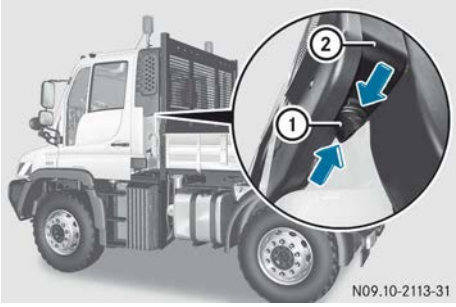

The release valve fills accordingly, depending on the nature of the work performed by your vehicle.

- Briefly press together release valve ① on air intake duct ②.
  The dust particles in the valve fall out.

Draining the compressed-air reservoir

Check whether condensed water has collected in the compressed-air reservoir every 14 days. If the condensation sensor in compressed-air reservoir circuit 1 detects too much condensation, the yellow Condensation in compressed-air reservoir event window is displayed in the on-board computer (▷ page 135).

- Check the reservoir pressure in the compressed-air brake system (▷ page 161).
- Switch off the engine.

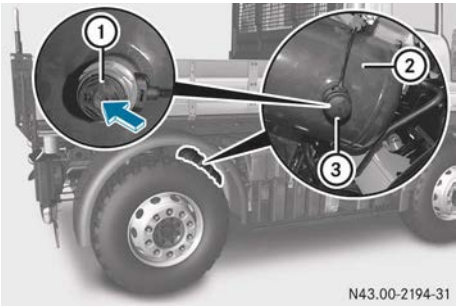

https://truckmanualshub.com/

▶ **Compressed-air brake system, circuit 1 compressed-air reservoir ②:** remove covering cap ③.

▶ Press release valve ① upwards and drain off the condensed water.

▶ Press on covering cap ③.

▶ **Compressed-air brake system, circuit 2 compressed-air reservoir ①:** open drain plug ② by a maximum of a ¼ revolution and drain off the condensed water.

▶ Tighten drain plug ②.

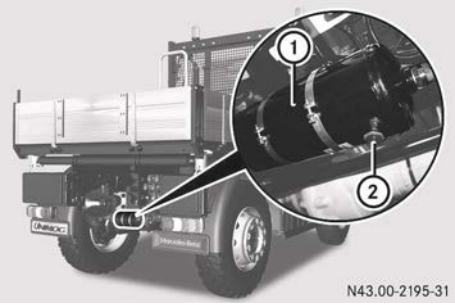

▶ **Compressed-air reservoir for tyre pressure control system ①:** open drain plug ② by a maximum of a ¼ revolution and drain off the condensed water.

▶ Tighten drain plug ②.

▶ **If more than 4 cl of condensed water leaks from a drain plug or a release valve, or the malfunction occurs regularly:** have the compressed-air brake system and the compressed-air dryer checked at a qualified specialist workshop.

Checking the vehicle assemblies

Environmental note

Improper handling of service products is hazardous to the environment.

Do not allow service products to enter the sewage system, surface waters, ground water or soil.

Check the vehicle assemblies for leaks regularly. If fluid loss is identified, e.g. by oil drops on the parking area, have the cause of the fluid loss rectified as quickly as possible at a qualified specialist workshop.

Checking the anti-corrosion protection

! Road salt has a corrosive effect. In winter, wash the vehicle more frequently in order to remove salt residue. Salt residues can otherwise damage the anti-corrosion protection.

The vehicle can be provided with Mercedes-Benz protective chassis sealing. The Mercedes-Benz protective chassis sealing is an anti-corrosion wax with outstanding protective qualities.

On vehicles without Mercedes-Benz protective chassis sealing, the cab is provided with body cavity protection and underbody protection.

▶ Check the vehicle regularly for corrosion damage, particularly the compressed-air and hydraulic lines.

▶ As a precautionary measure, spray the underside of the vehicle with a wax-based protective agent.

▶ Have any damage to the factory-fitted anti-corrosion protection rectified at a qualified specialist workshop.

▶ Vehicles without Mercedes-Benz protective chassis sealing: as a precautionary measure, spray the underside of the vehicle with a wax-based underbody protective agent according to Sheet No. 385.1 of the

https://truckmanualshub.com/

Mercedes-Benz Specification for Service Products.

ℹ Observe the notes in the "Tips on vehicle value retention" supplement.

Batteries

Important safety notes

⚠ **WARNING**

During the charging process, a battery produces hydrogen gas. If a short circuit occurs or sparks are created, the hydrogen gas can ignite. There is a risk of an explosion.

- Make sure that the positive terminal of a connected battery does not come into contact with vehicle parts.
- Never place metal objects or tools on a battery.
- It is important that you observe the described order of the battery terminals when connecting and disconnecting a battery.
- When jump-starting, make sure that the battery poles with identical polarity are connected.
- It is particularly important to observe the described order when connecting and disconnecting the jump leads.
- Never connect or disconnect the battery terminals while the engine is running.

⚠ **WARNING**

Battery acid is caustic. There is a risk of injury.

Avoid contact with skin, eyes or clothing. Do not inhale any gases released from the battery. When carrying out maintenance work on the battery, wear acid-resistant protective clothing, particularly protective eyewear, protective gloves and an apron. Do not lean over the battery. Keep the batteries out of the reach of children.

If you come into contact with battery acid, observe the following:

- immediately rinse battery acid off skin thoroughly with clean water and seek immediate medical attention.
- if you get battery acid in your eyes, rinse them thoroughly with clean water immediately. Consult a doctor without delay.

⚠ **WARNING**

Electrostatic build-up can lead to the creation of sparks, which could ignite the highly explosive gases of a battery. There is a risk of an explosion.

Before handling the battery, touch the vehicle body to remove any existing electrostatic build-up.

A highly explosive mixture of gases is generated while charging the battery and jump-starting.

Always make sure that neither you nor the battery are electrostatically charged. An electrostatic build-up may occur, for example:

- if synthetic clothing is worn
- if clothing is rubbed on the seat
- if you pull or push the battery over carpets or other synthetic materials
- if you wipe the battery with a cloth

Environmental note

Batteries contain pollutants. It is against the law to dispose of them along with household waste. They must be collected separately and recycled in an environmentally responsible manner.

Dispose of batteries appropriately. Hand over discharged batteries to a qualified specialist workshop.

Transport and store full batteries in an upright position. When transporting batteries,

https://truckmanualshub.com/

secure them so that they do not tip over. Note that battery acid could escape into the environment through the ventilation openings in the stoppers.

Observe the safety notes and protective measures when handling the battery.

Risk of explosion.

Fire, naked flames and smoking are prohibited when handling the battery. Avoid producing sparks.

Battery acid is caustic. Avoid contact with skin, eyes or clothing.

Wear appropriate protective clothing, in particular gloves, an apron and face protection.

Rinse acid splashes immediately with clean water. If necessary, consult a doctor.

Wear protective eyewear.

Keep out of the reach of children.

Observe these Operating Instructions.

For safety reasons, Mercedes-Benz recommends that you only use batteries which have been tested and approved by Mercedes-Benz for your vehicle. These batteries have an increased discharge protection so that occupants are not burned in the event of a battery being damaged in an accident.

The battery of the vehicle should always be sufficiently charged in order to reach its full service life.

If you do not use the vehicle for a while, the vehicle battery, like other batteries, can become discharged over time. In this case, have the battery removed at a qualified specialist workshop. In order to keep the battery charged, you can also connect a charger recommended by Mercedes-Benz. Please contact a qualified specialist workshop for further information.

Have the battery charge checked more frequently if you use the vehicle mainly for short trips or if you leave it standing idle for a lengthy period. If you wish to park up the vehicle for a long period, consult a qualified specialist workshop.

If one of the two batteries is faulty, both batteries should be replaced. This is the only way to ensure that the batteries can provide the required capacities.

Removing/fitting the battery cover

Observe the safety notes on handling batteries.

- ▶ **To remove:** fold catch lever ① upwards and release.
- ▶ Pull out and remove battery cover ② from guide ③.
- ▶ **To fit:** position battery cover ② and slide it into guide ③.
- ▶ Attach catch lever ① and fold down.

https://truckmanualshub.com/

Disconnecting and connecting batteries

Disconnecting the batteries

! Vehicles with BlueTec® exhaust gas aftertreatment: do not disconnect the battery until the engine has been switched off for at least five minutes. This ensures that the exhaust gas aftertreatment functions after restarting.

! Vehicles with auxiliary heating: during heat output and the cooling-off period, the power supply should only be disconnected, in the event of danger, using the battery isolator switch. If the power supply is disconnected during heat output, the cooling off period cannot be activated and this can damage the auxiliary heating. You will find further information in the "Auxiliary heating" section.

Observe the safety notes on handling batteries.

▶ Remove the key from the ignition lock and wait approximately five minutes.

▶ Switch off all electrical consumers.

▶ **Vehicles with auxiliary heating:** ensure that the auxiliary heating is switched off and the cooling off period is complete (▷ page 104).

▶ **All vehicles:** turn battery isolator switch to position [0] (▷ page 90).

▶ Remove the battery cover (▷ page 307).

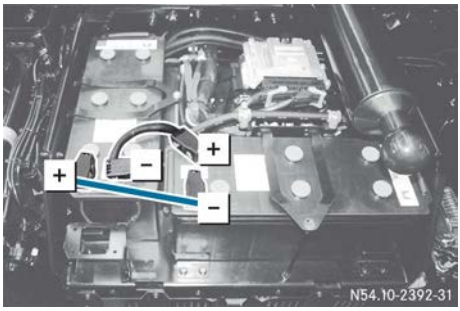

▶ Disconnect the negative terminals.

▶ Disconnect the positive terminals.

Reconnecting the batteries

Observe the safety notes on handling batteries.

▶ Ensure that:

- the key is removed from the ignition lock and
- all electrical consumers are switched off

▶ Connect the positive terminals.

▶ Connect the negative terminals.

▶ Connect the battery cover (▷ page 307).

After an interruption to the power supply, e.g. reconnecting the battery, perform the following tasks:

▶ Deactivate the anti-theft protection of the CD radio (▷ page 148).

▶ Set the time, day and preselected heating mode of the auxiliary heating system (▷ page 102).

Checking the battery fluid level

! Check the battery fluid every six months or at least after 600 operating hours. In certain operating conditions, e.g. mowing at high outside temperatures, the battery fluid level must be checked at significantly lesser intervals.

The fluid level in each battery cell must be approximately 15 mm above the top of the plate.

Tap water adversely affects the performance of the batteries. Add only distilled or de-ionised water. Do not use a metal funnel for refilling. There is a risk of a short circuit.

https://truckmanualshub.com/

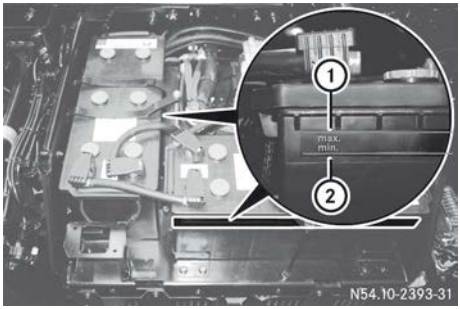

Battery fluid level
① Max. mark
② Min. mark

Observe the safety notes on handling batteries.

▶ Remove the battery cover (▷ page 307).
▶ Unscrew and remove the battery cell caps.
▶ Check the battery fluid level and correct it if necessary.
  The fluid level in each battery cell must be approximately 15 mm above the top of the plate. Observe the min. and max. markings on the side of the battery compartment.
▶ Screw in the battery cell caps.
▶ Connect the battery cover (▷ page 307).

Battery care

! Please observe the following points:

- Dirty battery terminals and battery surfaces cause leak currents, which lead to the batteries discharging. Always keep the battery terminals and battery surfaces clean and dry. Lightly grease the battery terminals, especially the undersides, with acid-resistant grease.
- Only clean batteries with the cell caps fitted. Otherwise, dirt can enter the battery cells.
- Cleaning agents containing fuel corrode the battery housing. Only clean the battery housing with commercially available cleaning agents.
- The vent holes of the cell caps must be open. Otherwise, gases cannot escape. Clean blocked vent holes with a suitable tool, e.g. a piece of wire. Unscrew the cell caps first. Otherwise, there is the risk of a short circuit.
- Recharge batteries that are not in use with a no-load voltage of less than 12.4 V.

Charging the batteries

⚠ WARNING

During charging and jump-starting, explosive gases can escape from the battery. There is a risk of an explosion.

Particularly avoid fire, naked flames, creating sparks and smoking. Ensure there is sufficient ventilation while charging and jump-starting. Do not lean over a battery.

⚠ WARNING

A discharged battery can freeze at temperatures below freezing point. When jump-starting the vehicle or charging the battery, gases can escape from the battery. There is a risk of an explosion.

Allow the frozen battery to thaw out before charging it or jump-starting.

! Use a commercially-available battery charger to charge the batteries. Make sure that the charging voltage is correct. Do not charge new batteries with rapid charging. The charge current of used batteries should be maximum 75 % of the battery capacity for rapid charging. Otherwise, you could damage the batteries.

The charging current must not exceed 10% (or a maximum of 75% when rapid-charging) of the battery capacity. Do not rapid-charge new batteries.

Observe the safety notes on handling batteries.

▶ Unscrew and remove the battery cell caps.
▶ Disconnect the battery terminals (▷ page 308).

https://truckmanualshub.com/

Do not detach the connecting cables between the batteries.

- ▶ Make sure that the charging voltage is correct, 12 V or 24 V.
- ▶ Observe the operating instructions for the battery charger.
- ▶ Connect the battery charger (see the manufacturer's operating instructions).

Parking up the vehicle

When parking up the vehicle, special measures according to Mercedes-Benz Specifications for Service Products Sheet No. 383.0 need to be taken. For example, on vehicles with Telligent® automatic gearshift, the clutch pedal must be folded out. Further information can be obtained from a Mercedes-Benz Service Centre.

https://truckmanualshub.com/

Useful information 312
Where will I find...? 312
Cab 314
Engine 318
Flat tyre 323
Electrical fuses 327
Compressed-air system 330
Jump-starting, tow-starting and towing away 331

https://truckmanualshub.com/

Useful information

These Operating Instructions describe all the models and standard and optional equipment of your vehicle that were available at the time of going to print. Country-specific differences are possible. Bear in mind that your vehicle may not be equipped with all the functions described. This also applies to safety-relevant systems and functions.

Read the information on qualified specialist workshops (▷ page 30).

Where will I find...?

Vehicle tool kit and emergency equipment

Important safety notes

When working on the vehicle, comply with all safety regulations, such as operating instructions, regulations concerning hazardous materials, environmental protection measures, work safety and accident prevention regulations.

Stowage space in the rear left of the cab

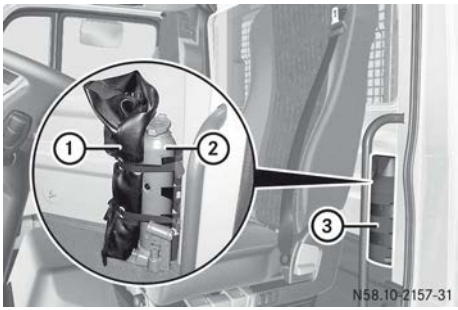

① Tool bag with vehicle tool kit, square spanner, wheel wrench, pump lever (two-part)

② Jack

③ Fire extinguisher

Stowage compartment in the rear of the cab

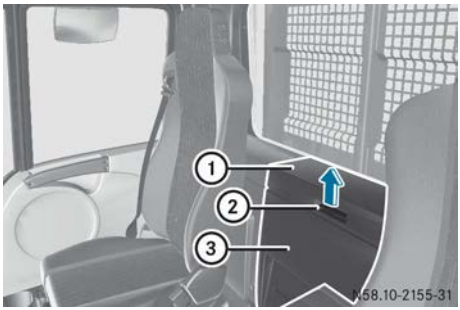

▶ Pull handle ② upwards and fold cover ① upwards.

Stowage compartment ③ contains:

- tyre inflator hose
- first-aid kit
- cab safety prop
- warning beacon
- warning triangle

Left-hand stowage compartment under the cab

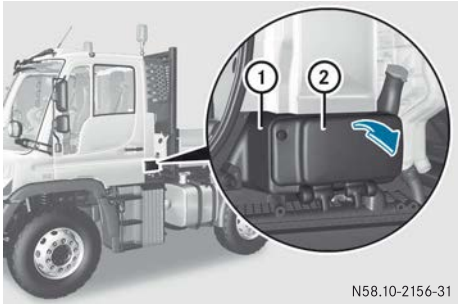

▶ Open the left-hand door.

▶ Fold cover ② downwards.

Stowage compartment ① contains a compressed-air pistol with a compressed-air hose and a window cleaner/scraper.

Window cleaner/scraper with telescopic pole

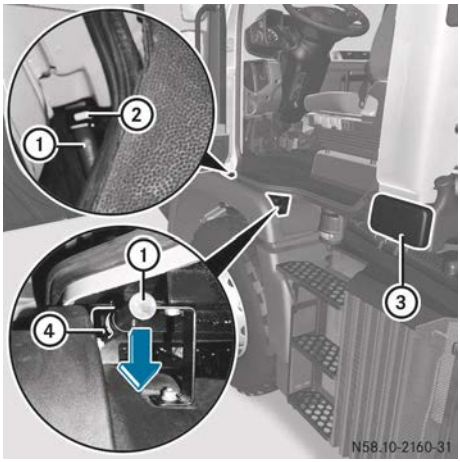

- ▶ Open stowage compartment ③ (▷ page 312) and remove the window cleaner/scraper.
- ▶ Press telescopic pole ① downwards (arrow) and pull it out to the rear.
- ▶ Screw the window cleaner/scraper onto telescopic pole ①.
- ▶ Loosen the screw connection of telescopic pole ①.
- ▶ Extend and tighten the moving part of telescopic pole ①.
- ▶ Clean the window, follow instructions (▷ page 286).
- ▶ Loosen the screw connection of telescopic pole ①.
- ▶ Retract and tighten the moving part of telescopic pole ①.
- ▶ Unscrew the window cleaner/scraper from telescopic pole ① and place it in stowage compartment ③.
- ▶ Slide telescopic pole ① into the front of guide ② and press upwards at the back until it engages in retaining clamp ④.

Assembling/disassembling the pump lever (2-part)

⚠ WARNING

If you do not assemble the pump lever as described, the handle can slip out of the guide while pumping. There is a risk of injury.

Make sure that the locking pin of the pump lever is engaged in the hole intended for the purpose.

Use the pump lever to operate:

- the jack
- the wheel wrench
- the cab tilt pump

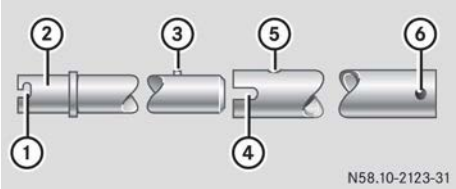

① Recess (jack)
② Jacking point (wheel wrench/cab tilt pump)
③ Locking pin
④ Recess (for operating the winch and jack)
⑤ Hole for the locking pin
⑥ Retaining sleeve

- ▶ Remove the pump lever from the tool bag located in the stowage space in the rear left of the cab (▷ page 312).
- ▶ **To assemble the pump lever:** insert pump lever locking pin ③ into recess ④.
- ▶ Turn the pump lever.
  Locking pin ③ engages in hole ⑤.
- ▶ **To disassemble the pump lever:** press locking pin ③ and pull apart the pump lever.

https://truckmanualshub.com/

Wheel chock

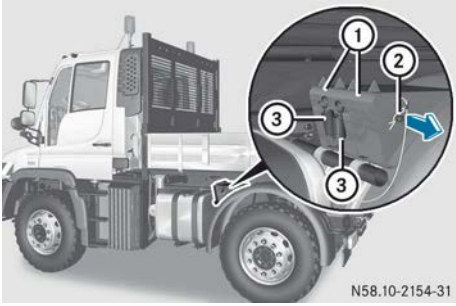

Wheel chocks (example)

▶ **To remove chocks:** pull out locking pin ②.

▶ Unclip retaining spring ③.

▶ Pull out wheel chock ① in the direction of the arrow.

Cab

Tilting the cab

Important safety notes

⚠ **WARNING**

If you tilt the cab when the engine has overheated or during a fire in the engine compartment, you could come into contact with hot gases or other escaping operating fluids. There is a risk of injury.

Allow an overheated engine to cool down before tipping the cab. In the event of a fire in the engine compartment, keep the cab in the drive position and call the fire service.

⚠ **WARNING**

Certain components in the engine compartment could be very hot, e.g. the engine, the radiator and parts of the exhaust system. There is a risk of injury when accessing the engine compartment.

As far as possible, allow the engine to cool down and only touch the components described in the following.

⚠ **WARNING**

There are moving components in the engine compartment. Certain components may continue to move or suddenly move again even after the ignition has been switched off, e.g. the radiator fan. There is a risk of injury.

If you have to carry out work in the engine compartment:

- switch off the ignition
- never touch the dangerous areas surrounding moving components, e.g. the rotation area of the fan
- remove jewellery and watches
- keep items of clothing and hair, for example, away from moving parts.

⚠ **WARNING**

When the cab is being tilted, it could suddenly fall forwards to its end position. There is a risk of injury for persons in the tipping range of the cab.

Only tilt the cab when there are no persons within the tilting range. Do not approach the area underneath the cab unless it has been tilted fully forwards.

! To avoid damage to the front flap when tilting the cab, it must be opened beforehand.

! If the vehicle is not fitted with tilting hydraulics, the cab can only be tilted at a qualified specialist workshop.

Notes on keeping the tilting area free

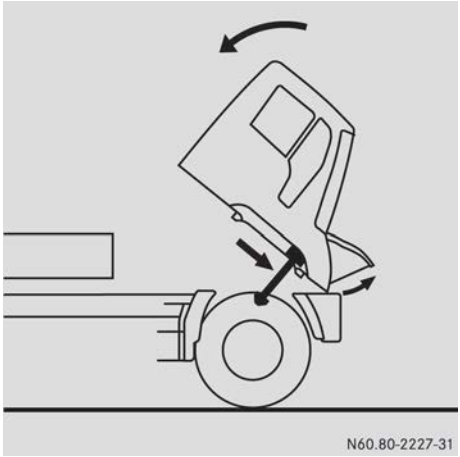

Notes on securing the cab

No persons are allowed within the tilting range of the cab while tilting.

Always tilt the cab fully forwards to the stop and secure it with the safety prop.

Tilting the cab forwards

- ▶ Stop the vehicle on level ground.
- ▶ Apply the parking brake.
- ▶ Shift into neutral.
- ▶ Switch off the engine.
- ▶ Switch off the auxiliary heating system (▷ page 104).
- ▶ **The engine starts after tipping:** turn the key to position **2** in the ignition lock.

or

- ▶ **The engine does not start after tipping:** turn the key to position **0** in the ignition lock. The steering lock must not engage.
- ▶ Remove all loose objects (e.g. bottles, tools, bags etc.) from the cab.
- ▶ For safety reasons, keep the area in front of the cab clear.
- ▶ Make sure that there is a sufficient safe distance around the tilting area.
- ▶ Close all the doors and stowage compartments in the cab.
- ▶ Chock the vehicle's wheels as an additional precaution to prevent it from rolling away.
- ▶ Open the front flap (▷ page 291).

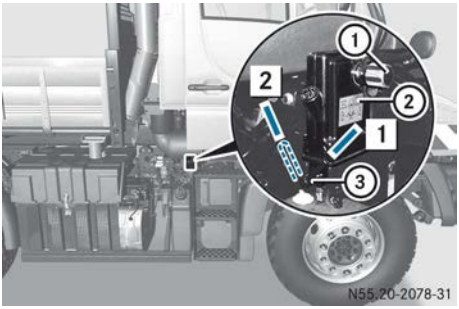

- ▶ Move valve lever ③ on hydraulic pump ② from position [2] to "Tip forward" position [1].

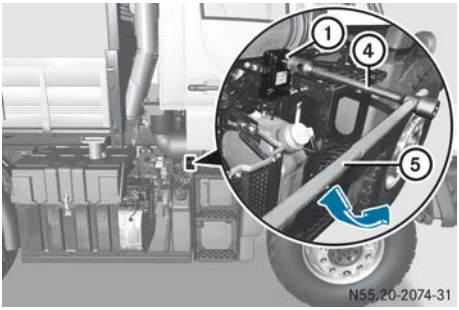

https://truckmanualshub.com/

- ▶ Slide pump lever ⑤ from the vehicle tool kit into wheel wrench ④ (▷ page 312).
- ▶ Attach wheel wrench ④ to bracket ① using pump lever ⑤.
- ▶ Keep moving pump lever ⑤ downwards and upwards until the cab has reached its end position.
  The cab lock is unlocked hydraulically by means of hydraulic pump ②.
- ▶ Remove wheel wrench ④ with pump lever ⑤.

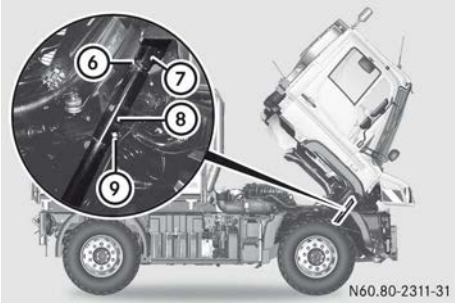

- ▶ Attach hook ⑥ of safety prop ⑧ to the top of piston rod ⑦.
- ▶ Swing safety prop ⑧ downwards.
- ▶ Secure safety prop ⑧. In addition, place screw ⑨ into the hole and screw a nut onto it.

Tilting back to the driving position

⚠ **WARNING**

If the cab is not locked, the following dangerous situations could arise when the vehicle decelerates:

- it could tilt forwards
- you could lose control of the vehicle
- persons in the cab could be thrown forwards
- persons or objects in the swinging range could be hit

There is a risk of an accident and injury.

Before every journey, make sure that:

- the cab is locked
- the cab is engaged in driving position and the valve lever is in driving position
- the indicator lamp goes out when the engine is started

- ▶ Remove safety prop ⑧ from piston rod ⑦.

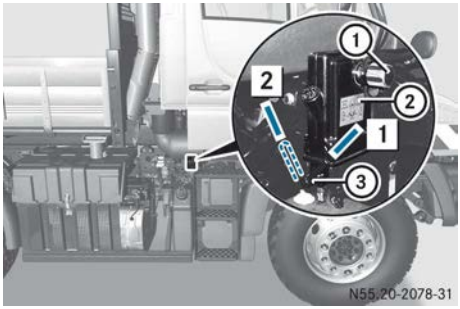

- ▶ Move valve lever ③ on hydraulic pump ② from position [1] to "Tilt back" to drive position [2].

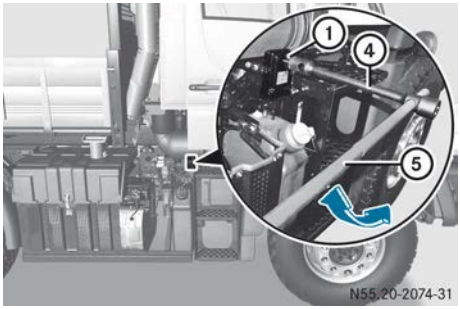

- ▶ Attach wheel wrench ④ to bracket ① using pump lever ⑤.
- ▶ Keep moving pump lever ⑤ downwards and upwards until the cab has reached its end position.
  The cab tilt lock is automatically locked.
- ▶ Remove wheel wrench ④ with pump lever ⑤.
- ▶ Close the front flap (▷ page 291).

https://truckmanualshub.com/

- Make sure during the journey that valve lever ③ is in "Tilt back" position [2].
- Make sure that the [ ] indicator lamp in the instrument cluster goes out after you start the engine.
  When the [ ] indicator lamp goes out, the cab is locked. If the [ ] indicator lamp does not go out, repeat the process and tip the cab back again.

https://truckmanualshub.com/

Problems when tilting the cab

Problem	Possible causes/consequences and ▶ Solutions
The cab cannot be tilted.	The hydraulic pump valve lever is in the "tilt back" position. ▶ Set valve lever on hydraulic pump to the "tilt forwards" position (▷ page 314).
	The tilting hydraulics are leaking or have failed. ▶ Have the tilting hydraulics repaired at a qualified specialist workshop.

Engine

Starting and stopping the engine with the cab tilted

⚠ **WARNING**

Certain components in the engine compartment could be very hot, e.g. the engine, the radiator and parts of the exhaust system. There is a risk of injury when accessing the engine compartment.

As far as possible, allow the engine to cool down and only touch the components described in the following.

⚠ **WARNING**

There are moving components in the engine compartment. Certain components may continue to move or suddenly move again even after the ignition has been switched off, e.g. the radiator fan. There is a risk of injury.

If you have to carry out work in the engine compartment:

- switch off the ignition
- never touch the dangerous areas surrounding moving components, e.g. the rotation area of the fan
- remove jewellery and watches
- keep items of clothing and hair, for example, away from moving parts.

Be aware of the road and traffic situation when working on public roads and secure the parking spot accordingly.

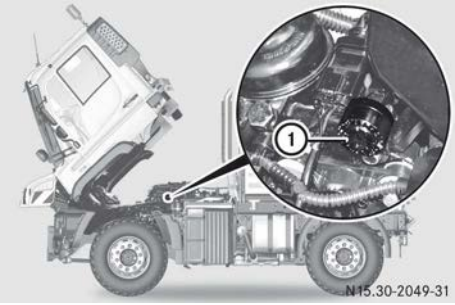

Before starting and stopping the engine

▶ Turn the key to position **2** in the ignition lock.

▶ Shift into neutral.

▶ Tilt the cab forwards (▷ page 314).

Starting the engine

▶ Press external engine start/engine stop ① until the engine starts.

Starting the engine and increasing the engine speed

▶ Hold down external engine start/engine stop ① until the desired engine speed is achieved.
After about three seconds, the engine speed increases. After external engine start/engine stop ① has been released, the engine continues to run at the speed currently set.
The engine speed can be increased up to the limiting speed.

Stopping the engine

▶ Press external engine start/engine stop ① again.

▶ Tilt the cab back to the driving position (▷ page 314).

Replacing the fuel prefilter

⚠ **WARNING**

Certain components in the engine compartment could be very hot, e.g. the engine, the radiator and parts of the exhaust system. There is a risk of injury when accessing the engine compartment.

As far as possible, allow the engine to cool down and only touch the components described in the following.

⚠ **WARNING**

There are moving components in the engine compartment. Certain components may continue to move or suddenly move again even after the ignition has been switched off, e.g. the radiator fan. There is a risk of injury.

If you have to carry out work in the engine compartment:

- switch off the ignition
- never touch the dangerous areas surrounding moving components, e.g. the rotation area of the fan
- remove jewellery and watches
- keep items of clothing and hair, for example, away from moving parts.

⚠ **WARNING**

Fuel is highly flammable. Improper handing of fuel creates a risk of fire and explosion.

Avoid fire, naked flames, smoking and creating sparks under all circumstances. Switch off the ignition and auxiliary heating before carrying out work to the fuel system. Always wear protective gloves.

Environmental note

Dispose of the water-fuel mixture in an environmentally responsible manner.

Environmental note

Dispose of used filter elements, seals and fuel residue in accordance with relevant local regulations.

▶ Tilt the cab forwards (▷ page 314).

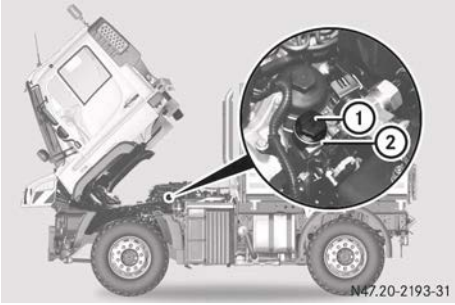

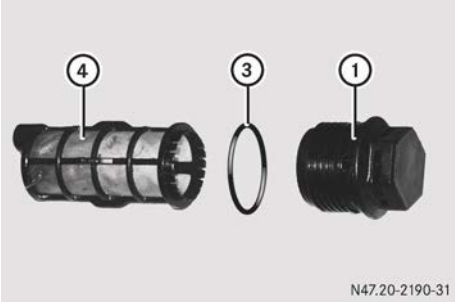

▶ Unscrew cap ① from filter housing ②.

▶ Remove cap ① with filter element ④.

▶ Unclip filter element ④ from cap ①.

▶ Clean filter housing ② and cap ①.

▶ Replace sealing ring ③.

▶ Clip new filter element ④ into cap ①.

▶ Insert cap ① with filter element ④ in filter housing ②.

▶ Tighten cap ①. Tightening torque approximately 25 Nm.

▶ Bleed the fuel system (▷ page 322).

▶ Tilt the cab back into the driving position (▷ page 314).

https://truckmanualshub.com/

Replacing the fuel filter

WARNING

Certain components in the engine compartment could be very hot, e.g. the engine, the radiator and parts of the exhaust system. There is a risk of injury when accessing the engine compartment.

As far as possible, allow the engine to cool down and only touch the components described in the following.

WARNING

There are moving components in the engine compartment. Certain components may continue to move or suddenly move again even after the ignition has been switched off, e.g. the radiator fan. There is a risk of injury.

If you have to carry out work in the engine compartment:

- switch off the ignition
- never touch the dangerous areas surrounding moving components, e.g. the rotation area of the fan
- remove jewellery and watches
- keep items of clothing and hair, for example, away from moving parts.

WARNING

Fuel is highly flammable. Improper handing of fuel creates a risk of fire and explosion.

Avoid fire, naked flames, smoking and creating sparks under all circumstances. Switch off the ignition and auxiliary heating before carrying out work to the fuel system. Always wear protective gloves.

Environmental note

Dispose of the water-fuel mixture in an environmentally responsible manner.

Environmental note

Dispose of used filter elements, seals and fuel residue in accordance with relevant local regulations.

▶ Tilt the cab forwards (▷ page 314).

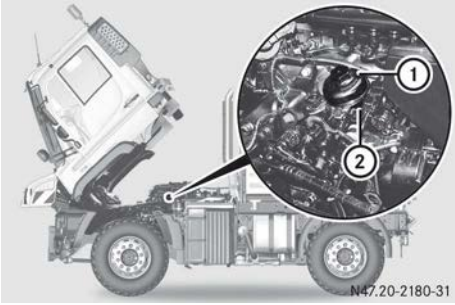

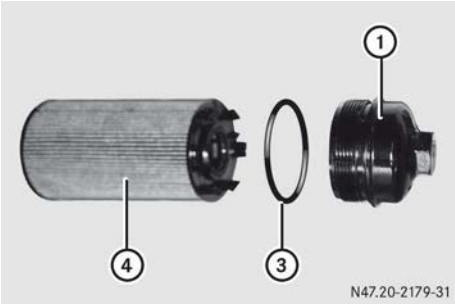

▶ Unscrew cap ① from filter housing ②.
▶ Remove cap ① with filter element ④.
▶ Unclip filter element ④ from cap ①.
▶ Clean filter housing ② and cap ①.
▶ Replace sealing ring ③.
▶ Clip new filter element ④ into cap ①.
▶ Insert cap ① with filter element ④ in filter housing ②.
▶ Tighten cap ①. Tightening torque approximately 25 Nm.
▶ Bleed the fuel system (▷ page 322).
▶ Tilt the cab back into the driving position (▷ page 314).

Draining and replacing the fuel prefilter with water separator

Important safety notes

WARNING

Fuel is highly flammable. Improper handing of fuel creates a risk of fire and explosion.

Avoid fire, naked flames, smoking and creating sparks under all circumstances. Switch off the ignition and auxiliary heating before carrying out work to the fuel system. Always wear protective gloves.

Environmental note

Dispose of the water-fuel mixture in an environmentally responsible manner.

Environmental note

Dispose of used filter elements, seals and fuel residue in accordance with relevant local regulations.

Draining the fuel prefilter

Drain fuel prefilter ① regularly.

▶ Remove bolts ② on cover plate ③.

▶ Remove cover plate ③.

Example

④ Hand pump

⑤ Shutoff valve

⑥ Inspection window

⑦ Drain plug

▶ Place a collector under drain plug ⑦.

▶ Open drain plug ⑦. To do so, turn the drain plug to the left.

▶ Press hand pump ④ several times in succession and collect the fuel/water mixture.

▶ Close drain plug ⑦. To do so, screw the drain plug tightly to the right.

▶ Bleed the fuel system (▷ page 322).

▶ Check the fuel system for leaks.

Replacing the fuel prefilter

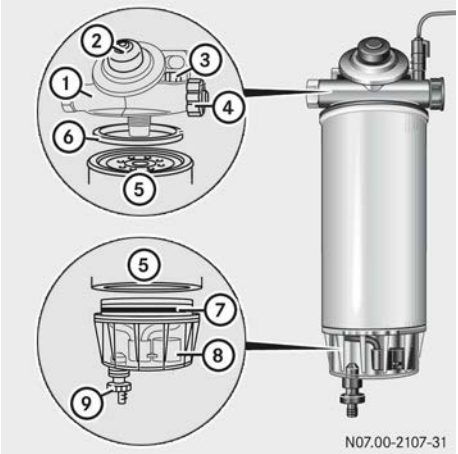

Example

① Filter head

② Hand pump

③ Bleed screw

④ Shutoff valve

⑤ Filter element

⑥ Sealing ring

⑦ Sealing ring

⑧ Water separator

⑨ Drain plug

▶ Place a collector under drain plug ⑨.

▶ Open drain plug ⑨ and bleed screw ③. Collect the draining water-fuel mixture.

https://truckmanualshub.com/

- Unscrew filter element ⑤ from filter head ①.
- Unscrew water separator ⑧ from filter element ⑤ and clean it or replace as necessary.
- Replace filter element ⑤.
- Coat new sealing ring ⑦ lightly with engine oil.
- Screw water separator ⑧ with sealing ring ⑦ onto filter element ⑤ hand-tight.
- Coat new sealing ring ⑥ lightly with engine oil.
- Screw on filter element ⑤ with new sealing ring ⑥ hand-tight on filter head ①.
- Close drain plug ⑨ and bleed screw ③.
- Bleed the fuel system (▷ page 322).
- Check the fuel system for leaks.

Bleeding the fuel system

Fuel system without fuel prefilter

! Do not bleed the fuel system by operating the starter motor for an extended period of time. You could otherwise damage the starter motor.

- Fill up the fuel tank to above the reserve range (▷ page 216).
- Start the engine (▷ page 318) or (▷ page 160).
  If the engine does not start: stop the starting procedure after a period of 20 seconds, wait for approximately one minute and then repeat the starting procedure. After three starting attempts, wait approximately three minutes before trying again.
  If the engine starts: let it idle for approximately one minute. The fuel system is self-bleeding.

Fuel system with fuel prefilter

! Do not bleed the fuel system by operating the starter motor for an extended period of time. You could otherwise damage the starter motor.

- Fill up the fuel tank to above the reserve range (▷ page 216).
- Press hand pump ① of fuel prefilter ② approximately fifty times in succession. The filter housing is then filled with fuel.
- Start the engine (▷ page 318) or (▷ page 160).
  If the engine does not start: stop the starting procedure after a period of 20 seconds, wait for approximately one minute and then repeat the starting procedure. After three starting attempts, wait approximately three minutes before trying again.
  If the engine starts: let it idle for approximately one minute. The fuel system is self-bleeding.

Engine does not start	
Problem	**Possible causes/consequences and ▶ Solutions**
The engine will not start.	At low outside temperatures: the flow properties of diesel fuel are inadequate due to paraffin separation. ▶ Malfunctions resulting from paraffin separation can only be corrected by heating the entire fuel system, e.g. by parking in a heated area. ▶ If the engine does not start after several attempts, have the cause traced and rectified at a qualified specialist workshop.
	The engine electronics are malfunctioning. The immobiliser may be activated. ▶ Turn the vehicle key back to the stop in the ignition lock. ▶ Restart the engine.

Flat tyre

Changing a wheel in the event of a flat tyre

Important safety notes

⚠ **WARNING**

On uphill and downhill slopes, the jack could tip over with the vehicle raised. There is a danger of injury.

Do not change wheels on uphill or downhill gradients. Contact a qualified specialist workshop.

⚠ **WARNING**

If you do not position the jack correctly at the appropriate jacking point of the vehicle, the jack could tip over with the vehicle raised. There is a risk of injury.

Only position the jack at the appropriate jacking point of the vehicle. The base of the jack must be positioned vertically, directly under the jacking point of the vehicle.

Observe the following when raising the vehicle:

- to raise the vehicle, only use the vehicle-specific jack that has been tested and approved by Mercedes-Benz. If the jack is used incorrectly, it could tip over while the vehicle is raised.
- the vehicle's jack is intended only to raise the vehicle for a short time when changing a wheel. It is not suited for performing maintenance work under the vehicle.
- only position the jack at the appropriate jacking point of the vehicle. Make sure that the jack is correctly positioned at the jacking point before raising the vehicle.
- before raising the vehicle, secure it against rolling away by applying the parking brake and using wheel chocks. Never release the parking brake while the vehicle is raised.
- the jack must be placed on a firm, flat and non-slip surface. On a loose surface, a large, load-bearing underlay must be used. On a slippery surface a non-slip underlay must be used; for example on tiles, use rubber mats.
- do not use blocks of wood or similar objects as a jacking support. Otherwise, the jack will not be able to achieve its load-bearing capacity due to the limited height.
- do not raise vehicles equipped with a loading crane or loading tailgate by using the

https://truckmanualshub.com/

hydraulic supports. This would cause damage to the chassis frame.

- make sure that the distance between the underside of the tyres and the ground does not exceed 3 cm.
- never place your hands or feet under the raised vehicle.
- never lie under the raised vehicle.
- never start the engine when the vehicle is raised.
- never open or close a door when the vehicle is raised.
- make sure that nobody is in the vehicle when it is raised.

▶ **Vehicles with tyre pressure control system:** deactivate the automatic mode of the tyre pressure control system (▷ page 186).

▶ Park the vehicle on a firm and level surface.

▶ Apply the parking brake.

▶ Use chocks to safeguard the vehicle against rolling away.

Positioning the jack

Front axle

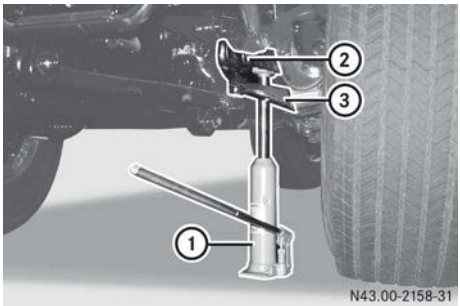

Example: left front wheel

▶ If the tyres are flat, drive onto a wooden underlay.

▶ **Left front wheel:** turn the front wheels slightly to the right, so that pitman arm ③ swings to the side.

Position jack ① under axle tube ② as close as possible to the hub drive.

▶ **Right front wheel:** set the front wheels to the straight-ahead position and position jack ① under axle tube ② as close as possible to the hub drive.

Rear axle

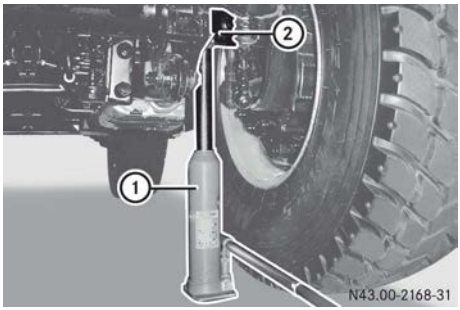

Example: right rear wheel

▶ If the tyres are flat, drive onto a wooden underlay.

▶ Position jack ① under axle tube ② as close as possible to the hub drive.

Removing a wheel

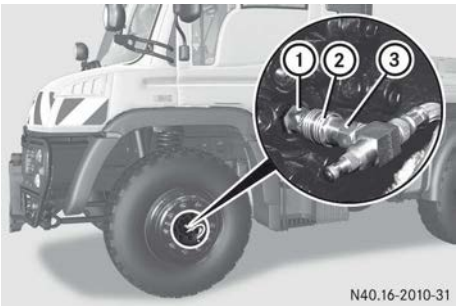

▶ Remove the wheel nut cover.

▶ **Vehicles with tyre pressure control system:** push connector ③ into compressed-air connection ① and hold.

▶ Slide back circlip ② and hold.

▶ Remove connector ③ from compressed-air connection ① and release circlip ②.

- ▶ **All vehicles:** loosen all wheel nuts and remove all but two opposing wheel nuts.
- ▶ Do not unscrew the last two wheel nuts until the wheel is resting on the wheel bolts and is not under load.
- ▶ Remove the wheel.

Fitting the compressed-air hose, vehicles with tyre pressure control system

⚠ **WARNING**

Vehicles with tyre pressure control system: when you unscrew the connection to the compressed-air hose on the wheel or the tyre valve cap on the spare wheel, air escapes under high pressure. This can disperse particles. These can get into or irritate the eyes, nose, mouth and ears. There is a risk of injury.

Wear protective eyewear when unscrewing.

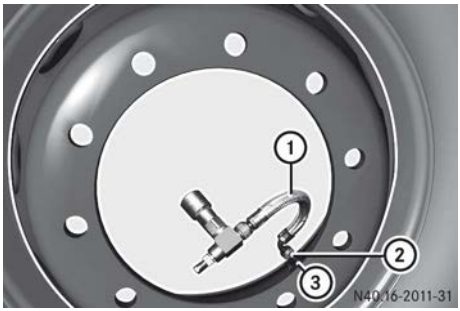

Example: wheel removed

Example: spare wheel

- ▶ Wear protective eyewear.
- ▶ Unscrew connector ② from tyre valve ③ and remove compressed-air hose ①.
- ▶ On the spare wheel, unscrew cap ⑤ from tyre valve ④ and screw on compressed-air hose ① with connection ② immediately and tighten.

Fitting a wheel

⚠ **WARNING**

Oiled, greased or damaged wheel nuts, wheel bolt threads or spherical spring washers can cause the wheel nuts to loosen. As a result, you could lose a wheel while driving. There is a risk of an accident.

Never oil or grease the threads or spherical spring washers. In the event of damage to the threads or the spherical spring washers, contact a qualified specialist workshop immediately. Have the damaged wheel nuts, wheel bolts or spherical spring washers replaced. Do not drive on.

! Check wheel nuts regularly for tightness. Retighten if necessary. Replace damaged wheel nut cover caps and wheel nut covers. Observe the wheel nut tightening torque.

! After changing a wheel, check the tyre pressure immediately.

Observe the notes on operating and road safety.

When fitting a wheel:

- ▶ Only use wheel nuts that are approved for your vehicle.
  Wheel nuts for steel wheels and light-alloy wheels are different and must not be mixed up.

Before fitting the wheel:

- ▶ Lightly oil the friction contact surfaces between the pressure plate and the wheel nut.
- ▶ Remove rust and dirt from the contact surfaces of the wheel hub, wheel rim and wheel nuts.

https://truckmanualshub.com/

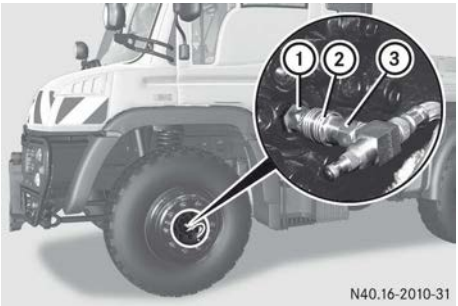

After fitting the wheel:

- ▶ Tighten the wheel nuts in a crosswise pattern. Observe the correct tightening torque (▷ page 357).
- ▶ **Vehicles with tyre pressure control system:** push connector ③ into compressed-air connection ① and hold until circlip ② engages.
- ▶ **All vehicles:** fit the wheel nut cover.
- ▶ **Vehicles without tyre pressure control system:** check the tyre pressure (▷ page 340).
- ▶ **Vehicles with tyre pressure control system:** activate the automatic mode of the tyre pressure control system (▷ page 186).
- ▶ **All vehicles:** the wheel nuts must be retightened after 50 km (▷ page 326).

Retightening the wheel nuts

⚠ **WARNING**

The wheels could work loose if the wheel nuts and bolts are not tightened to the specified tightening torque. There is a risk of accident.

Have the tightening torque immediately checked at a qualified specialist workshop after a wheel is changed.

! Check wheel nuts regularly for tightness. Retighten if necessary. Replace damaged wheel nut covers. Observe the wheel nut tightening torques.

Observe the wheel nut tightening torque (▷ page 357).

When using new or newly-painted wheel rims, check the tightening torque again after travelling approximately 1000 to 5000 km.

Tyre inflator connection

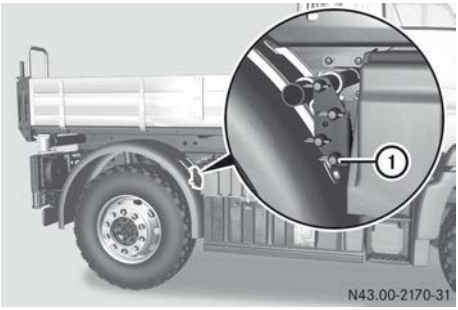

You may only fill the tyres using the compressed-air system if your vehicle has a tyre inflator connection. The reservoir pressure is too high for other connections. Pressure hoses and tyres may explode when filling using other connections.

- ▶ **To inflate the tyres:** remove cap on tyre inflator connection ①.
- ▶ Remove tyre inflator hose from the stowage compartment in the rear of the cab (▷ page 312).
- ▶ Deflate at tyre inflator connection ①.
- ▶ **If the vehicle is predominantly used on prepared road surfaces:** specified tyre pressures must be observed.
- ▶ **When driving off-road and on surfaces with minimal load-bearing capacity (e.g. sand):** lower the tyre pressure (▷ page 352).
  This improves the traction of the tyres.

ⓘ The self-cleaning effect of the tyres is improved at low tyre pressure, e.g. on greasy and wet surfaces.

https://truckmanualshub.com/

Electrical fuses

Auxiliary consumers

Retrofitting of additional consumers or electrical devices requires special skills.

Fuses

Important safety notes

Blown fuses must be replaced by fuses of the same type, identifiable by the colour and amperage, with the amperages specified in the fuse allocation chart. Further information can be obtained from a Mercedes-Benz Service Centre.

⚠ **WARNING**

If you manipulate, bridge or replace a faulty fuse with a fuse of a higher amperage, the electric cables could be overloaded. This may result in a fire. There is a risk of an accident and injury.

Always replace faulty fuses with specified new fuses of the correct amperage.

Before replacing a fuse

- ▶ Turn the key to position **0** in the ignition lock.
- ▶ Switch off all electrical consumers.

Opening/closing the fuse box

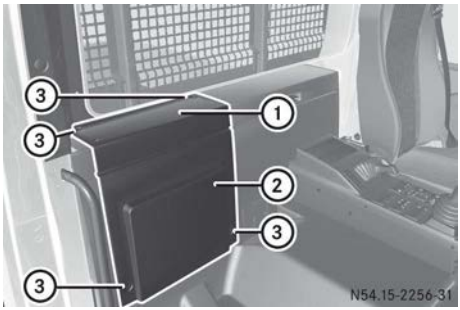

The fuse box is behind the right-hand seat.

- ▶ **To open:** slide the right-hand seat forward.
- ▶ Open quick-release fasteners ③.
- ▶ Remove fuse box lid ①.
- ▶ Pull fuse box panel ② upwards and out.
- ▶ **To close:** insert fuse box panel ②.
- ▶ Attach fuse box lid ①.
- ▶ Close quick-release fasteners ③.
- ▶ Slide the seat back to the desired position.

https://truckmanualshub.com/

Layout of fuses and relays

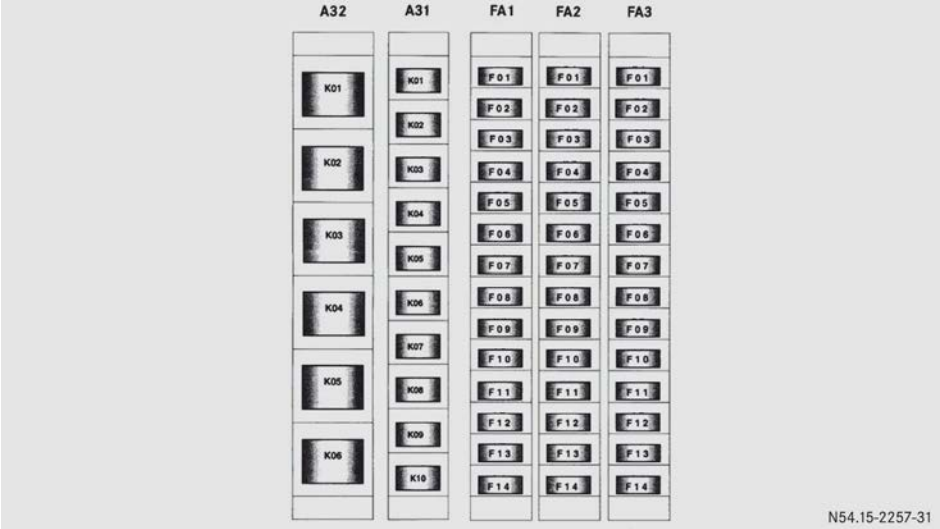

Fuses and relays

Fuse module FA1		
	Consumers	**A**
F01	Drive control system (OPC) / tachograph (DTCO) (terminal 30)	20
F02	Drive control system (OPC) / programmable special module (PSM) / Unimog transmission control module (TCMU) (terminal 15)	10
F03	Dual-mode steering / immobiliser (terminal 30)	7.5
F04	24 V power socket in centre console (terminal 15R)	10
F05	24 V power socket behind the driver's seat (terminal 15R)	25
F06	Radio terminal (TCC) 30	5
F07	Programmable special module (PSM) (terminal 30)	15

Fuse module FA1		
	Consumers	**A**
F08	Diagnostics connection 16-pin (OBDII) terminal 30	10
F09	Engine management (MCM) / exhaust gas after-treatment (ACM) AdBlue® supply unit (terminal 15)	10
F10	15-pin trailer power socket / 7-pin trailer power socket, front (terminal 30)	20
F11	7-pin ABS trailer power socket (terminal 30)	20
F12	7-pin ABS trailer power socket (terminal 15)	15

https://truckmanualshub.com/

Fuse module FA1		
	Consumers	**A**
F13	12-V power sockets; behind driver's seat / centre console / voltage transformer for headlamp range controller (voltage transformer input) terminal 30	15
F14	12-V power sockets, behind driver's seat / centre console (voltage transformer output), 12-V terminal	15

Fuse module FA2		
	Consumers	**A**
F01	Instrument cluster (ICUC) / tachograph (DTCO) / reservoir pressure sensor K1 & K2 / Camera Monitor System (KMS) (terminal 15)	5
F02	Instrument cluster (ICUC) / central gateway (CGW) / modular switch field (MSF) (terminal 30)	5
F03	Power windows control panel / central locking terminal 15R	15
F04	Power windows control panel / radio / dual-mode steering starter inhibitor relay (WL) (terminal 15R)	15
F05	Interior lighting (terminal 30)	10
F06	ABS (terminal 30)	20
F07	Auxiliary heating (terminal 30)	20
F08	Heating (terminal 15R)	20
F09	Windscreen heating (terminal 30)	25

Fuse module FA2		
	Consumers	**A**
F10	Unimog transmission control module (TCMU) (terminal 30)	20
F11	Unimog transmission control module (TCMU) (terminal 30)	20
F12	Seat heating / mower seat (terminal 15)	10
F13	Water separator / rotation chains basic wiring (terminal 15)	15
F14	Windscreen washer system (terminal 15R)	25

Fuse module FA3		
	Consumers	**A**
F01	Immobiliser (terminal 50)	5
F02	Mower seat windscreen washer system (terminal 15)	10
F03	Mowing door side window heating (terminal 30)	15
F04	Special Truck Control Unit (STCU) (terminal 15)	5
F05	Special Truck Control Unit (STCU) (terminal 30)	5
F06	Voltage supply (CAN) valve block (terminal 30)	20
F07	Hydrostatic transmission fan / torque converter clutch fan (terminal 30)	25
F08	Power hydraulics fan (terminal 30)	30
F09	Working hydraulics fan (terminal 30)	15
F10	Rotating beacon (RKL) (terminal 30)	10

https://truckmanualshub.com/

Fuse module FA3		
	Consumers	**A**
F11	32-pin and 11-pin power socket for equipment (terminal 15)	10
F12	Central locking terminal 30	15
F13	24-V selectable power supply in roof, terminal 15	15
F14	Lifting cylinder / temperature control for torque converter clutch fan (terminal 15)	5

Relay module A32	
	Description
K01	Power hydraulics fan
K02	Hydrostatic transmission fan / torque converter clutch fan
K03	Working hydraulics fan
K04	Auxiliary heating
K05	Windscreen heating, left
K06	Windscreen heating, right

Relay module A31	
	Description
K01	Dual-mode steering
K02	Rotating beacon (RKL)
K03	Immobiliser
K04	Mowing door side window heating
K05	Refrigerant compressor clutch
K06	Heating recirculation pump
K07	Auxiliary heating (overriding control blower)

Relay module A31	
	Description
K08	Voltage supply (CAN) valve block
K09	Auxiliary heating (engine preheating cut-off at D+)
K10	Central locking

Additional FleetBoard fuses

Fuse module FA302		
	Consumers	**A**
F01	FleetBoard terminal 30	7.5
F02	FleetBoard terminal 15	5

The additional FleetBoard fuses are located in the fuse box behind the fuse holder. Have blown fuses replaced at a qualified specialist workshop.

Compressed-air system

Charging the compressed-air system from an outside source

In the event of engine damage or lack of reservoir pressure, your vehicle can be refilled and supplied with compressed air using the filler connection. This allows the spring-loaded parking brake cylinders to be released.

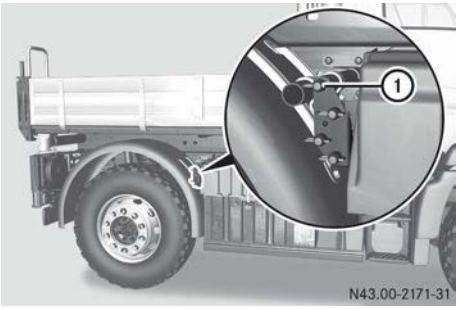

https://truckmanualshub.com/

▶ **To fill with compressed air:** remove cap on inflator connection ①.

▶ Refill at filler connection ①. When doing so, the filling pressure must correspond to the pressure of brake circuit 1 or brake circuit 2, see the compressed-air system operating data (▷ page 357).

Jump-starting, tow-starting and towing away

Jump-starting

Important safety notes

⚠ **WARNING**

During charging and jump-starting, explosive gases can escape from the battery. There is a risk of an explosion.

Particularly avoid fire, naked flames, creating sparks and smoking. Ensure there is sufficient ventilation while charging and jump-starting. Do not lean over a battery.

⚠ **WARNING**

A discharged battery can freeze at temperatures below freezing point. When jump-starting the vehicle or charging the battery, gases can escape from the battery. There is a risk of an explosion.

Allow the frozen battery to thaw out before charging it or jump-starting.

! Observe the following notes. You could otherwise damage the battery or electronic components in the vehicle:

- do not use a battery quick-charge unit for jump-starting.
- if you use a mobile battery charger (battery device with mains power stage), remove the mains plug before jump-starting.
- only have jump-starting provided by vehicles with a 24 V system.
- use jump leads which are protected against polarity reversal and with a wire cross section of approximately 35–50 mm^2 and insulated terminal clamps.
- if the outside temperature drops below -10 °C, a discharged battery could freeze. Do not start the engine under these circumstances. Let the battery thaw out first.

! When you remove the jump leads, let the engine of the vehicle being jump-started idle. This avoids damage being caused to the vehicle electronics.

! Do not connect the negative terminal clamp of the jump lead to the chassis frame. Otherwise, engine or transmission components can be damaged.

Environmental note

Batteries contain pollutants. It is against the law to dispose of them along with household waste. They must be collected separately and recycled in an environmentally responsible manner.

Dispose of batteries appropriately. Hand over discharged batteries to a qualified specialist workshop.

Transport and store full batteries in an upright position. When transporting batteries, secure them so that they do not tip over. Note that battery acid could escape into the environment through the ventilation openings in the stoppers.

General notes

Observe the safety notes and protective measures when handling the battery (▷ page 306).

After jump-starting, have the batteries checked at a qualified specialist workshop.

https://truckmanualshub.com/

If the batteries are discharged, jump-start the vehicle by connecting to another vehicle.

- ▶ Before jump-starting, disconnect any mobile communications systems, such as a telephone, 2-way radio, fax machine, from the electrical system.
- ▶ Make sure that the vehicles are not touching.
- ▶ Apply the parking brake.
- ▶ Switch off all electrical consumers.
- ▶ Turn the key to position **0** in the ignition lock.

Jump-starting with jump leads

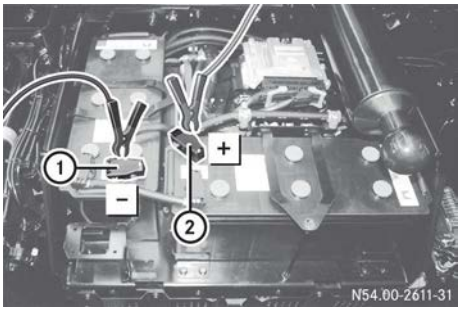

- ▶ **To connect the jump leads:** remove the battery compartment cover (▷ page 307).
- ▶ Remove positive terminal clamp cap ② and negative terminal clamp cap ①.
- ▶ First, connect the positive terminal clamp of the jump lead to the positive terminal of the other vehicle's battery and then to the [+] positive terminal of the starter battery.
- ▶ First, connect the negative terminal clamp of the jump lead to the negative terminal of the other vehicle's battery and then to the [–] negative terminal of the starter battery.
- ▶ Assisting vehicle: run the engine at a high speed.
- ▶ Start the engine and allow it to idle.
- ▶ **To disconnect the jump leads:** first, disconnect the negative terminal clamps of the jump leads from the negative terminals.
- ▶ Disconnect the positive terminal clamp of the jumps lead from the positive terminals.
- ▶ Attach positive terminal clamp cap ② and negative terminal clamp cap ①.
- ▶ Fit the battery compartment cover (▷ page 307).

Jump-starting using the jump-starting socket

⚠ Warning

If you jump-start a vehicle that requires too much current, the socket may become overloaded. There is a risk of fire in the electrical system.

Only jump-start vehicles of a similar vehicle type, e.g. lorries with an equal or lower power need. The vehicles must be equipped with a 24 V system or with two 12 V batteries connected in a series.

⚠ Warning

If you insert the plug connector into the power socket, sparks could be created. If you are in the vicinity of highly flammable materials, e.g. fuel, there is a risk of fire and explosion.

Do not insert the plug connector into the power socket if you are in the vicinity of highly flammable materials.

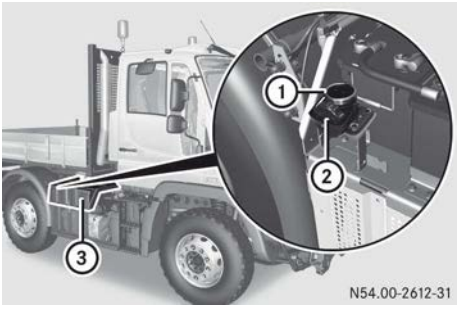

- ▶ Remove battery compartment cover ③ (▷ page 307).
- ▶ **Donor vehicle and vehicle being jump-started:** turn the key back fully in the ignition lock.

https://truckmanualshub.com/

- ▶ Unscrew cover ② from jump-starting socket ①.
- ▶ Connect a jump lead. Make sure that the lug fits in the recess.
- ▶ **Donor vehicle:** start the engine and run it at a high speed.
- ▶ **Vehicle being jump-started:** start the engine and leave it running at idling speed.
- ▶ **Donor vehicle:** switch off the engine and turn the key back fully in the ignition lock.
- ▶ **Both vehicles:** remove the jump lead.
- ▶ Screw cover ② onto jump-starting socket ①.
- ▶ Fit battery compartment cover ③ (▷ page 307).

Manoeuvring/tow-starting and towing away

Important safety notes

⚠ **WARNING**

If the engine is not running, the power steering and the compressed-air supply are inoperative. You then need to steer considerably more forcefully. The spring-loaded parking brake cylinder can be activated if there is a loss of compressed air and the vehicle may then brake uncontrollably. This could cause you to lose control of the vehicle. There is a risk of an accident.

Always use a tow bar. Always ensure the compressed-air supply using an external compressed-air source.

! If the engine is not running, observe the following when manoeuvring, tow-starting and towing away:

- If the engine is not running and the spring-loaded parking brake cylinder is activated as a result of a loss of compressed air, the brakes may overheat and be damaged. Charge the compressed-air system or release the spring-loaded parking brake cylinder manually.
- The brake system and gearshift are without compressed-air supply if the vehicle is being towed away. The transmission lubrication system does not function and there is a risk of transmission damage. Observe the "Towing vehicles with engine switched off" section.

! Route cables and compressed-air lines so that they can accommodate movements without strain, kinks or friction when turning corners, etc.

Note that steering movements require considerably more force at a standstill than when the vehicle is moving. Avoid steering movements when at a standstill, particularly when the front axle is under heavy load.

If you transport the vehicle on a low-loader, the permissible vehicle height may be exceeded. Pay attention to the headroom clearance of buildings, e.g. bridges.

Before towing, agree on a clear signal with the towing vehicle driver. Both you and the towing vehicle driver must adapt your driving styles to the more difficult conditions.

If the compressed-air brake system cannot be charged, the spring-loaded parking brake cylinders can be released manually (▷ page 335).

Notes on tow-starting and towing away

Specialist knowledge beyond the scope of these Operating Instructions is required for tow-starting and towing away. Only have your vehicle tow-started/towed away by a professional towing/recovery company. Further information can be obtained from a Mercedes-Benz Service Centre.

https://truckmanualshub.com/

Attaching the towbar

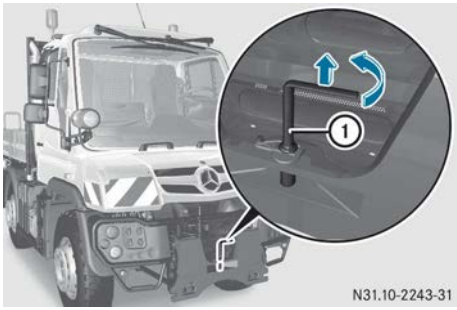

Example: coupling jaw

The front coupling jaw is designed for manoeuvring a trailer, towing away and tow-starting.

- **To unlock:** swing coupling pin ① approximately 90° backwards and pull it up and out.
- Attach the towbar.
- **To lock:** reinsert coupling pin ① and swing forwards 90°.

Tow-starting the vehicle

- Attach the towbar (▷ page 334).
- Turn the key to position **2** in the ignition lock.
- Call up the Reserve pressure menu window (▷ page 124) and check the current reservoir pressure.
- **If the reservoir pressure is low:** charge the compressed-air system from an outside source (▷ page 330).
- **Vehicles with Telligent® gearshift**: depress the clutch pedal.
- **All vehicles:** engage a gear.
  The gear engaged is shown in the on-board computer display.
- Tow-start the vehicle.
  Do not exceed a towing speed of 20 km/h.
- **Vehicles with Telligent® gearshift:** release the clutch pedal and depress the accelerator pedal.
- **Vehicles with Telligent® automatic gearshift:** depress the accelerator pedal.
- **Vehicles with Telligent® gearshift:** immediately after the engine has started, depress the clutch pedal and shift the transmission to the neutral position.
- **Vehicles with Telligent® automatic gearshift:** immediately after the engine has started, shift the transmission to the neutral position.

ℹ Vehicles with Telligent® automatic gearshift:

- depressing the accelerator pedal slowly = slow clutch engagement
- depressing the accelerator pedal rapidly = rapid clutch engagement

Towing away the vehicle

General

- Attach the towbar (▷ page 334).
- Turn the key to position **2** in the ignition lock.
- Ensure a supply of compressed air via the towing vehicle; see "Charging the compressed-air system from an outside source" (▷ page 330).

Towing away a vehicle while the engine is not running

Towing distance of up to 5 km, towing speed of up to a maximum of 20 km/h:

! When the engine is not running, the transmission oil pump is not operational. There is a risk of transmission damage.

- Shift to neutral.

Towing distances over 5 km:

- Remove the propeller shaft for the front and rear axles.

https://truckmanualshub.com/

Towing away vehicles with transmission, transfer case or axle damage

▶ Remove the propeller shafts leading to the driven axles.

or

▶ Load the vehicle onto the low-loader.

Towing away a vehicle while the engine is running

▶ Shift the transmission to neutral.

Towing away a vehicle with operational gearshift

Towing speed up to a maximum of 40 km/h.

▶ Start the engine.

▶ Shift the transmission to neutral.

Releasing the spring-loaded parking brake cylinders

General notes

In an emergency, the spring-loaded parking brake cylinders can be released manually for towing if there is insufficient reservoir pressure in the brake system. Before using the vehicle again, the spring-loaded cylinders for the parking brake must be made operational again.

U 216 / U 218 / U 318

Overview

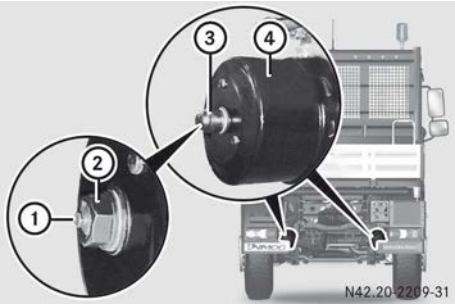

Releasing the spring-loaded parking brake cylinders manually

! Undo the release bolt with a maximum torque of 70 Nm. Do not use an impact wrench. You could otherwise damage the spring-loaded parking brake cylinder.

▶ Use chocks to safeguard the vehicle against rolling away.

▶ Remove cover ③ of left and right-hand side spring-loaded parking brake cylinder ④.

▶ Unscrew release screw ② on left and right-hand side spring-loaded parking brake cylinder ④ (release position), until control pin ① is fully extended.

Returning the spring-loaded parking brake cylinders to the operational condition

▶ Make sure that the [(!)] warning lamp in the instrument cluster is not lit.
The vehicle's compressed air system has sufficient reservoir pressure.

▶ Release the parking brake (▷ page 166).

▶ Screw in and tighten release screw ② of left and right-hand side spring-loaded parking brake cylinder ④ (brake position).
Tightening torque 40 to 50 Nm.
Control pin ① is fully retracted.

▶ Press cover ③ onto the left and right-hand side spring-loaded parking brake cylinders.

https://truckmanualshub.com/

U 423 / U 427 / U 430 / U 527 / U 530

Overview

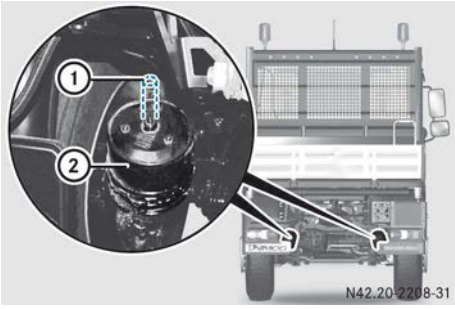

Spring-loaded parking brake cylinder for parking and service brake

Releasing the spring-loaded parking brake cylinders manually

! Undo the release bolt with a maximum torque of 70 Nm. Do not use an impact wrench. You could otherwise damage the spring-loaded parking brake cylinder.

- Use chocks to safeguard the vehicle against rolling away.
- Unscrew release screw ① of left and right-hand side spring-loaded parking brake cylinder ② as far as possible (release position).

Returning the spring-loaded parking brake cylinders to the operational condition

- Make sure that the [(!)] warning lamp in the instrument cluster is not lit.
  The vehicle's compressed air system has sufficient reservoir pressure.
- Release the parking brake (▷ page 166).
- Screw in and tighten release screw ① of left and right-hand side parking brake cylinder ② (brake position). Tightening torque 40 to 50 Nm.

https://truckmanualshub.com/

Useful information 338
Important safety notes 338
Tyre pressure 340

https://truckmanualshub.com/

Useful information

These Operating Instructions describe all the models and standard and optional equipment of your vehicle that were available at the time of going to print. Country-specific differences are possible. Bear in mind that your vehicle may not be equipped with all the functions described. This also applies to safety-relevant systems and functions.

Read the information on qualified specialist workshops (▷ page 30).

Important safety notes

Operating and road safety

General notes

Tyres are of particular importance to the operating and road safety of the vehicle. For this reason, check the tyre pressures, tyre tread and tyre condition on a regular basis.

A tyre dealer or a qualified specialist workshop will be able to provide further information on:

- tyre load-bearing capacity (LI **L**oad **I**ndex)
- tyre speed rating
- tyre age
- causes and consequences of tyre wear
- measures to be taken in the event of tyre damage
- types of tyre for specific regions, areas of operation or conditions of vehicle use
- interchangeability of tyres, etc.

Tyre pressure

⚠ **WARNING**

The tyre temperature and pressure increase when the vehicle is in motion. Reducing the pressure of warm tyres leads to a tyre pressure that is too low when the tyres have cooled. If the tyre pressure is too low, it may cause the tyre to burst, especially when the load or speed increases. There is a risk of an accident.

You should never reduce the pressure of warm tyres. Observe the specified tyre pressure.

Check the specified tyre pressures regularly when the tyres are cold, at least every two weeks and before long journeys. The tyre pressure in tyres on the same axle must always be the same.

- If the tyre pressures are too low, this leads to an excessive build up of heat in the tyres, increased tyre wear, a deterioration in driving stability and increased fuel consumption.
- If the tyre pressures are too high, this leads to an increased braking distance, a deterioration in tyre traction and increased tyre wear.
- Valve caps on the tyre valves protect the valve cores from moisture and dirt. For this reason, always screw the valve caps tightly onto the tyre valves.
- In the event of repeated pressure loss from the tyres, exterior damage or leaking tyre valves may be the cause. Check the tyre pressures regularly.
- Further important information on tyre pressures (▷ page 340).
- Observe the tyre pressure table (▷ page 342).

Tyre tread

⚠ **WARNING**

Insufficient tyre tread will reduce tyre traction. The tyre is no longer able to dissipate water. This means that on wet road surfaces, the risk of aquaplaning increases, in particular where speed is not adapted to suit the driving conditions. There is a risk of accident.

If the tyre pressure is too high or too low, tyres may exhibit different levels of wear at different locations on the tyre tread. Thus, you should regularly check the tread depth and

https://truckmanualshub.com/

the condition of the tread across the entire width of all tyres.

Minimum tyre tread depth for:

- summer tyres: 3 mm
- M+S tyres: 4 mm

For safety reasons, replace the tyres before the legally prescribed limit for the minimum tyre tread depth is reached.

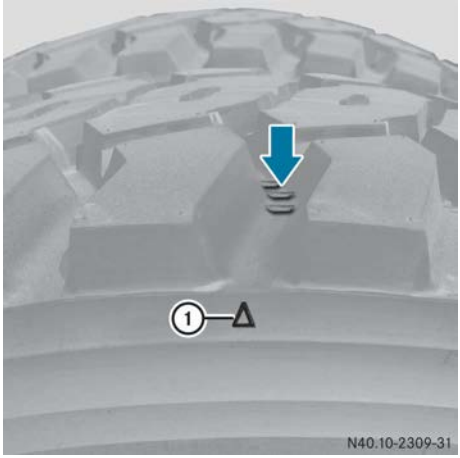

① Example: tread wear indicator

A specified minimum tread depth is a legal requirement for all tyres. Observe the relevant legal requirements for each country.

For safety reasons, have the tyres replaced before the legally specified minimum tread depth is reached.

A tyre has reached the minimum tread depth when the tread wear indicator (arrow) is flush with the tyre tread.

The less tyre tread depth remaining, the poorer the road grip and handling characteristics of the vehicle, especially if the road surface is wet or snow-covered.

Tyre condition

⚠ **WARNING**

Damaged tyres can cause tyre inflation pressure loss. As a result, you could lose control of your vehicle. There is a risk of accident.

Check the tyres regularly for signs of damage and replace any damaged tyres immediately.

Check the condition of the tyres regularly, at least every two weeks and before long journeys, e.g. for:

- external damage
- foreign bodies in the tyre tread
- cracks, bulges, punctures
- uneven tread wear or excessive wear on one side

Tyre age

Tyres age, even if they are used infrequently or not at all. Operating and road safety diminish with age. For this reason have tyres replaced which are more than six years old.

Tyre damage

Tyre damage can be caused by:

- the operating conditions of the vehicle
- tyre ageing
- kerbs
- foreign bodies
- insufficient or excessive tyre pressure
- weather conditions and environmental factors
- contact with oil, grease, fuel, etc.

Tyre load-bearing capacity, tyre speed rating and tyre types

⚠ **WARNING**

Exceeding the stated tyre load-bearing capacity and the approved maximum speed could lead to tyre damage or the tyre bursting. There is a risk of accident.

Therefore, only use tyre types and sizes approved for your vehicle model. Observe the tyre load rating and speed rating required for your vehicle.

In particular, observe the permissible tyre specifications in a country. These regulations

https://truckmanualshub.com/

may prescribe a certain type of tyre for your vehicle. In addition, the use of specific tyre types may be advisable for certain regions and areas of operation. A tyre dealer, a qualified specialist workshop or any Mercedes-Benz Service Centre will be able to provide further information.

Replacing tyres

If replacing the standard tyres of your vehicle, use only the tyre and wheel sizes approved for your vehicle type. A tyre dealer or a qualified specialist workshop will be able to provide further information.

After changing the tyres, always carry the operating permit for the new tyre and wheel size as well as the manufacturer's certification indicating that the wheel/tyres are permissible for use on the vehicle. The speedometer will also require adjustment. Observe the relevant legal requirements for each country. Any Mercedes-Benz Service Centre can provide information on obtaining a manufacturer's certificate.

Retreaded tyres

Mercedes-Benz recommends that you only use tyres and wheels which have been tested and approved by Mercedes-Benz specifically for your vehicle.

Tyre pressure

Important safety notes

⚠ **WARNING**

Tyres with insufficient or excessive tyre pressure harbour the following hazards:

- the tyres may burst, especially as the load and vehicle speed increase.
- the tyres may wear excessively or unevenly which can severely impair tyre traction.
- the handling as well as steering and braking characteristics may be severely affected.

There is a risk of an accident.

Observe the recommended tyre pressures and check the tyre pressure of all the tyres including the spare wheel:

- every day before starting a journey
- when the load changes
- prior to long journey
- for changed operating conditions, e.g. off-road driving

If necessary, correct the tyre pressure.

⚠ **WARNING**

The tyre temperature and pressure increase when the vehicle is in motion. Reducing the pressure of warm tyres leads to a tyre pressure that is too low when the tyres have cooled. If the tyre pressure is too low, it may cause the tyre to burst, especially when the load or speed increases. There is a risk of an accident.

You should never reduce the pressure of warm tyres. Observe the specified tyre pressure.

! An increase/decrease of 10 °C in air temperature increases/reduces tyre pressure by approximately 0.2 bar. Remember this pressure change - particularly in winter - when checking tyre pressures, e.g. in a garage.

Example:

The room temperature in the garage is approximately 20 °C.

The outside temperature is approximately 0 °C.

Adjust the tyre pressure so it is approximately 0.4 bar higher than indicated in the tyre pressure table.

When you leave the garage, the tyre pressure drops by approximately 0.4 bar.

https://truckmanualshub.com/

Determining tyre pressure

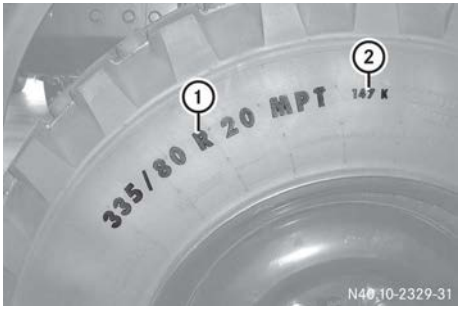

Example: tyre designation

▶ Read tyre size ① and tyre load-bearing capacity ② on the tyre.

▶ Determine the approved gross axle weight of the corresponding axle from the vehicle identification plate (▷ page 356).

▶ Look up the specified tyre pressure in the table (▷ page 342).

▶ Check and, if necessary, correct the pressure of all tyres.

ℹ Correct the tyre pressures for each axle on the vehicle.

- The tyre pressure values are given for a reference temperature of 20 °C.
- In the following tyre pressure table, the tyre pressures are listed for the permissible vehicle weight.
- Differing values for the front axle take account of the fact that the front axle is not normally fully laden. The maximum tyre pressures on the front axle are only required if the axle is loaded accordingly. The figures given are tyre pressure values for on-road driving. If in doubt, always set the tyre pressure to the next highest value. This is provided that the tyre load-bearing capacity is adequate. In the axle load data (▷ page 356), the higher value (on the right) for the front axle, in conjunction with the rear axle load, corresponds to the maximum permissible axle loads given in the vehicle documents.
- For off-road driving, the minimum tyre pressures must be set in accordance with the "Tyre pressure reductions for off-road driving" table (▷ page 352).

https://truckmanualshub.com/

Tyre pressure table

Tyre pressures for operation on firm surfaces

U 216 / U 218 / U 318, gross vehicle weight 7,500 kg[2]			
Tyres	**LI**	**Axle load in kg Tyre pressure in bar**	
		Front Up to / max.	**Rear**
335/80 R 20 MPT81 SP T9	 147K 149K	2900 / 4400 **2.3 / 4.0** **2.3 / 4.0**	4800 **4.8** **4.8**
365/80 R 20 XZL MPT81	 152K 152K	2900 / 4400 **2.1 / 3.5** **2.1 / 3.4**	4800 **4.1** **4.1**
405/70 R 20 XM47	 136G	3300 / 4400 **2.9 / 4.1**	4400 **4.1**
405/70 R 20 SP T9	 152J	2900 / 4400 **2.1 / 3.4**	4800 **4.1**
425/75 R 20 XM47	 148G	2900 / 4400 **1.6 / 2.7**	4800 **3.4**
405/70 R 24 SP T9 AC70G	 152J 149G	2900 / 4400 **1.7 / 2.9** **1.6 / 2.8**	4800 **3.2** **3.4**
295/60 R 22.5 Ultra Grip WTS	 150K	2900 / 4400 **3.0 / 5.4**	4800 **6.5**
315/80 R 22.5 Goodyear	 156K/L	2900 / 4400 **2.4 / 4.1**	4800 **4.9**

2 Observe the gross vehicle weight on the vehicle identification plate.

https://truckmanualshub.com/

U 216 / U 218 / U 318, gross vehicle weight 8,500 kg[2]			
Tyres	**LI**	**Axle load in kg Tyre pressure in bar**	
		Front Up to / max.	**Rear**
335/80 R 20 MPT81 SP T9	 147K 149K	3900 / 4800 **3.4 / 4.4** **3.4 / 4.4**	4800 **4.8** **4.8**
365/80 R 20 XZL MPT81	 152K 152K	3900 / 4800 **3.0 / 3.9** **2.9 / 3.7**	4800 **4.1** **4.1**
405/70 R 20 XM47	 136G	4300 / 4400 **4.0 / 4.1**	4400 **4.1**
405/70 R 20 SP T9	 152J	3900 / 4800 **3.0 / 3.8**	4800 **4.1**
425/75 R 20 XM47	 148G	3900 / 4800 **2.3 / 3.0**	4800 **3.4**
405/70 R 24 SP T9 AC70G	 152J 149G	3900 / 4800 **2.5 / 3.2** **2.4 / 3.2**	4800 **3.2** **3.4**
295/60 R 22.5 Ultra Grip WTS	 150K	3900 / 4800 **4.6 / 6.0**	4800 **6.5**
315/80 R 22.5 Goodyear	 156K/L	3900 / 4800 **3.5 / 4.5**	4800 **4.9**

2 Observe the gross vehicle weight on the vehicle identification plate.

https://truckmanualshub.com/

U 216 / U 218 / U 318, gross vehicle weight 10,000 kg[2]			
Tyres	**LI**	**Axle load in kg Tyre pressure in bar**	
		Front Up to / max.	**Rear**
335/80 R 20 MPT81 SP T9	 147K 149K	4700 / 5200 **4.3 / 5.0** **4.3 / 4.9**	5500 **5.9** **5.7**
365/80 R 20 XZL MPT81	 152K 152K	4700 / 5200 **3.8 / 4.2** **3.7 / 4.1**	5500 **4.8** **4.8**
405/70 R 20 SP T9	 152J	4700 / 5200 **3.7 / 4.2**	5500 **4.8**
425/75 R 20 XM47	 148G	4700 / 5200 **2.9 / 3.3**	5500 **4.0**
405/70 R 24 SP T9 AC70G	 152J 149G	4700 / 5200 **3.1 / 3.5** **3.1 / 3.5**	5500 **3.7** **4.0**
295/60 R 22.5 Ultra Grip WTS	 150K	4700 / 5200 **5.8 / 6.6**	5500 **7.6**
315/80 R 22.5 Goodyear	 156K/L	4700 / 5200 **4.4 / 5.0**	5500 **5.8**

U 318, gross vehicle weight 11,000 kg[2]			
Tyres	**LI**	**Axle load in kg Tyre pressure in bar**	
		Front Up to / max.	**Rear**
335/80 R 20 MPT81 SP T9	 147K 149K	5200 / 5500 **5.0 / 5.4** **4.9 / 5.3**	6000 **6.5** **6.4**
365/80 R 20 XZL MPT81	 152K 152K	5200 / 5500 **4.2 / 4.5** **4.2 / 4.4**	6000 **5.4** **5.3**

2 Observe the gross vehicle weight on the vehicle identification plate.

https://truckmanualshub.com/

U 318, gross vehicle weight 11,000 kg[2]			
Tyres	**LI**	**Axle load in kg Tyre pressure in bar**	
		Front Up to / max.	**Rear**
405/70 R 20 SP T9	152J	5200 / 5500 **4.2 / 4.4**	6000 **5.3**
425/75 R 20 XM47	148G	5200 / 5500 **3.3 / 3.5**	6000 **4.1**
405/70 R 24 SP T9 AC70G	152J 149G	5200 / 5500 **3.5 / 3.7** **3.5 / 3.7**	6000 **4.2** **4.4**
295/60 R 22.5 Ultra Grip WTS	150K	5200 / 5500 **6.6 / 7.1**	6000 **8.5**
315/80 R 22.5 Goodyear	156K/L	5200 / 5500 **5.0 / 5.4**	6000 **6.4**

U 423 / U 427 / U 430, gross vehicle weight 11,990 kg[2]			
Tyres	**LI**	**Axle load in kg Tyre pressure in bar**	
		Front Up to / max.	**Rear**
365/80 R 20 XZL MPT81	152K 152K	5200 / 6800 **4.2 / 5.8** **4.2 / 5.7**	7000 **6.1** **6.0**
405/70 R 20 SP T9	152J	5200 / 6800 **4.2 / 5.7**	7000 **6.0**
365/85 R 20 XZL	164G	5200 / 6800 **3.6 / 4.9**	7000 **5.6**
375/75 R 22.5 MPT 23	165G	5200 / 6800 **3.4 / 4.8**	7000 **5.2**
315/80 R 22.5 Goodyear	156K/L	5200 / 6800 **5.0 / 7.0**	7000 **7.8**

[2] Observe the gross vehicle weight on the vehicle identification plate.

https://truckmanualshub.com/

U 423 / U 427 / U 430, gross vehicle weight 11,990 kg[2]			
Tyres	**LI**	**Axle load in kg Tyre pressure in bar**	
		Front Up to / max.	**Rear**
385/65 R 22.5 HTC1 / HSW2 SCAN HDC	 160K 162K/ 164J	5200 / 6800 **4.6 / 6.4** **4.2 / 5.9**	7000 **7.0** **6.2**
445/65 R 22.5 AC70+ XZL	 160G 168G	5200 / 6800 **2.8 / 4.1** **3.4 / 4.6**	7000 **4.8** **5.1**
445/70 R 24 XM47	 151G	5300 / 5500 **3.0 / 3.2**	6900 **4.1**
275/90 R 22.5 SRT	 153J	5000 / 6100 **5.6 / 7.0**	6100 **7.4**
	 153J	5200 / 6800 **5.8 / 7.9**	7000 **8.5**

U 423 / U 427 / U 430, gross vehicle weight 12,700 kg[2]			
Tyres	**LI**	**Axle load in kg Tyre pressure in bar**	
		Front Up to / max.	**Rear**
445/70 R 24 XM47	 151G	5800 **3.4**	6900 **4.1**

[2] Observe the gross vehicle weight on the vehicle identification plate.

https://truckmanualshub.com/

U 423 / U 427 / U 430, gross vehicle weight 13,000 kg[2]			
Tyres	**LI**	**Axle load in kg Tyre pressure in bar**	
		Front Up to / max.	**Rear**
275/90 R 22.5 SRT	153J	6300 / 6900 **7.3 / 8.0**	6900 **8.5**
365/85 R 20 XZL	164G	5700 / 6800 **4.0 / 4.9**	7500 **6.0**
375/75 R 22.5 MPT 23	165G	5700 / 6800 **3.8 / 4.8**	7500 **5.7**
385/65 R 22.5 HTC1 / HSW2 SCAN HDC	160K 162K/ 164J	5700 / 6800 **5.1 / 6.4** **4.8 / 5.9**	7500 **7.7** **6.7**
445/65 R 22.5 AC70+ XZL	160G 168G	5700 / 6800 **3.2 / 4.1** **3.7 / 4.6**	7500 **5.3** **5.5**
315/80 R 22.5 Goodyear	156K/L	5700 / 6800 **5.6 / 7.0**	7500 **8.5**

U 423 / U 427 / U 430, gross vehicle weight 13,800 kg[2]			
Tyres	**LI**	**Axle load in kg Tyre pressure in bar**	
		Front Up to / max.	**Rear**
275/90 R 22.5 SRT	153J	6900 **8.0**	6900 **8.5**
365/85 R 20 XZL	164G	6200 / 6900 **4.4 / 5.0**	7800 **6.3**
375/75 R 22.5 MPT 23	165J	6200 / 6900 **4.2 / 4.8**	7800 **6.0**

[2] Observe the gross vehicle weight on the vehicle identification plate.

https://truckmanualshub.com/

U 423 / U 427 / U 430, gross vehicle weight 13,800 kg[2]			
Tyres	**LI**	**Axle load in kg Tyre pressure in bar**	
		Front Up to / max.	**Rear**
385/65 R 22.5 HTC1 / HSW2 SCAN HDC	 160K 162K/ 164J	6200 / 6900 **5.7 / 6.5** **5.3 / 6.0**	7800 **8.0** **7.0**
445/65 R 22.5 AC70+ XZL	 160G 168G	6000 / 6500 **3.4 / 3.8** **4.0 / 4.4**	7800 **5.6** **5.8**

U 423 / U 427 / U 430, gross vehicle weight 14,000 kg[2]			
Tyres	**LI**	**Axle load in kg Tyre pressure in bar**	
		Front Up to / max.	**Rear**
365/85 R 20 XZL	 164G	6200 / 7000 **4.4 / 5.1**	8000 **6.5**
375/75 R 22.5 MPT 23	 165J	6200 / 7000 **4.2 / 4.9**	8000 **6.2**
385/65 R 22.5 HTC1 / HSW2 SCAN HDC	 160K 162K/ 164J	6200 / 7000 **5.7 / 6.6** **5.3 / 6.2**	8000 **8.3** **7.3**

2 Observe the gross vehicle weight on the vehicle identification plate.

https://truckmanualshub.com/

U 527 / U 530, gross vehicle weight 11,990 kg[2]			
Tyres	**LI**	**Axle load in kg Tyre pressure in bar**	
		Front Up to / max.	**Rear**
365/85 R 20 XZL	164G	5200 / 6800 **3.6 / 4.9**	7000 **5.6**
395/85 R 20 XZL XML	168G 161G	5200 / 6800 **3.6 / 4.9** **3.6 / 5.0**	7000 **5.6** **5.7**
375/75 R 22.5 MPT 23	165J	5200 / 6800 **3.4 / 4.8**	7000 **5.2**
385/65 R 22.5 HTC / HSW Scan HDC	160K 162K/ 164J	5200 / 6800 **4.6 / 6.4** **4.2 / 5.9**	7000 **7.0** **6.2**
445/65 R 22.5 AC70+ XZL	160G 168G	5200 / 6800 **2.8 / 4.1** **3.4 / 4.6**	7000 **4.8** **5.1**
445/70 R 24 XM47	151G	5300 / 5500 **3.0 / 3.2**	6900 **4.1**
455/70 R 24 SP T9	154G	5300 / 5500 **2.6 / 2.8**	6900 **3.7**
495/70 R 24 XM47	155G	5600 **2.8**	6500 **3.4**

U 527 / U 530, gross vehicle weight 12,700 kg[2]			
Tyres	**LI**	**Axle load in kg Tyre pressure in bar**	
		Front Up to / max.	**Rear**
445/70 R 24 XM47	151G	5800 **3.4**	6900 **4.1**

[2] Observe the gross vehicle weight on the vehicle identification plate.

https://truckmanualshub.com/

U 527 / U 530, gross vehicle weight 13,000 kg[2]			
Tyres	**LI**	**Axle load in kg Tyre pressure in bar**	
		Front Up to / max.	**Rear**
455/70 R 24 SP T9	154G	5500 **2.8**	7500 **4.0**

U 527 / U 530, gross vehicle weight 13,200 kg[2]			
Tyres	**LI**	**Axle load in kg Tyre pressure in bar**	
		Front Up to / max.	**Rear**
495/70 R 24 XM47	155G	5500 **2.8**	7700 **4.1**

U 527 / U 530, gross vehicle weight 15,500 kg[2]			
Tyres	**LI**	**Axle load in kg Tyre pressure in bar**	
		Front Up to / max.	**Rear**
365/85 R 20 XZL	164G	6700 / 7200 **4.8 / 5.2**	9000 **7.5**
395/85 R 20 XZL XML	168G 161G	6700 / 7200 **4.8 / 5.2** **4.9 / 5.3**	9000 **7.4** **7.0**
375/75 R 22.5 MPT 23	165J	6700 / 7200 **4.7 / 5.1**	9000 **7.2**

2 Observe the gross vehicle weight on the vehicle identification plate.

https://truckmanualshub.com/

U 527 / U 530, gross vehicle weight 15,500 kg[2]			
Tyres	**LI**	**Axle load in kg Tyre pressure in bar**	
		Front Up to / max.	**Rear**
385/65 R 22.5 HTC / HSW Scan HDC	 160K 162K/ 164J	6700 / 7200 **6.3 / 6.9** **5.8 / 6.4**	9000 **9.0** **8.4**
445/65 R 22.5 AC70+ XZL	 160G 168G	6500 **3.8** **4.4**	9000 **6.7** **6.8**

U 527 / U 530, gross vehicle weight 16,500 kg[2]			
Tyres	**LI**	**Axle load in kg Tyre pressure in bar**	
		Front Up to / max.	**Rear**
365/85 R 20 XZL	 164G	7500 **5.5**	9000 **7.5**
365/85 R 20 XZL	 164G	7200 / 7500 **5.2 / 5.5**	9500 **7.5**
395/85 R 20 XZL XML	 168G 161G	7500 **5.5** **5.6**	9000 **7.4** **7.0**
395/85 R 20 XZL	 168G	7200 / 7500 **5.2 / 5.5**	9500 **7.5**
375/75 R 22.5 MPT 23	 165J	7500 **5.4**	9000 **7.2**
375/75 R 22.5 MPT 23	 165J	7200 / 7500 **5.1 / 5.4**	9500 **7.8**

2 Observe the gross vehicle weight on the vehicle identification plate.

https://truckmanualshub.com/

U 527 / U 530, gross vehicle weight 16,500 kg[2]			
Tyres	**LI**	**Axle load in kg Tyre pressure in bar**	
		Front Up to / max.	**Rear**
385/65 R 22.5 HTC / HSW Scan HDC	 160K 162K/ 164J	7500 **7.2** **6.7**	9000 **9.0** **8.4**
385/65 R 22.5 HDC	 162K/ 164J	7200 / 7500 **6.4 / 6.7**	9500 **9.0**
445/65 R 22.5 AC70+ XZL	 160G 168G	6500 / 7500 **3.8 / 4.7** **4.4 / 5.1**	9000 **6.7** **6.8**
445/65 R 22.5 XZL	 168G	7500 **5.1**	9500 **7.3**

Tyre pressures for off-road use, based on rated pressure

Tyres		**Operating conditions**		
		A = slightly yielding surface (farmland, grassland, unpaved road), v_{max} 50 km/h		
		B = highly yielding surface (sand, mud), v_{max} 20 km/h		
		C = only in an emergency, only for a brief period, 0 to 10 km/h		
		A	**B**	**C**
335/80 R 20	XZL	80%	45%	33%
	SP T9	75%		
	SPPG8			
	MPT 81			
12.5 R 20	MPT 80	75%		
365/80 R 20	XZL	75%	45%	33%

2 Observe the gross vehicle weight on the vehicle identification plate.

https://truckmanualshub.com/

Tyres		Operating conditions		
		A = slightly yielding surface (farmland, grassland, unpaved road), v_{max} 50 km/h		
		B = highly yielding surface (sand, mud), v_{max} 20 km/h		
		C = only in an emergency, only for a brief period, 0 to 10 km/h		
		A	B	C
	SP T9			
	MPT 81			
	SPPG8			
14.5 R 20	MPT 80			
365/85 R 20	XZL	80%	45%	33%
395/85 R 20	XZL	80%	45%	33%
	XML	66%	40%	33%
14.00 R 20	XZL	70%	40%	33%
405/70 R 20	SP T9	75%	55%	40%
	AC 70 G		45%	33%
	XM47		70%	50%
405/70 R 24	SP T9	75%	55%	40%
	AC 70 G			
445/70 R 24	XM47	75%	70%	55%
	AC 70 G		45%	33%
455/70 R 24	SP T9	75%	55%	40%
445/65 R 22.5	AC 70+	75%	45%	33%
	XZL			
495/70 R 24	XM47	80%	75%	55%

Explanatory notes for the table

- The values in % are relative to the nominal tyre pressures for on-road driving.
- The tyre pressures for freeing a stuck vehicle must not fall below the values given in the table. Do not apply any lateral forces, turn the steering wheel or position the vehicle on a slope at these tyre pressures. Only reduce the tyre pressures by as much as is necessary. The tyre pressure reduction values only apply to those tyres explicitly lis-

https://truckmanualshub.com/

ted in the table (size and tread). Applying these values to other designs/treads is not permitted.

- **Inflate underinflated tyres at normal operating temperature to a level appropriate for driving on the road:** set a higher tyre pressure than that given in the table for on-road driving.
- Guide value: tyres at normal operating temperature +10%. On vehicles with a tyre pressure control system, the tyre pressure set for conventional on-road driving is an indicative value. Correct the tyre pressures at the earliest opportunity. Only check the tyre pressure when the tyres have cooled and correct if necessary.

https://truckmanualshub.com/

Useful information 356
Vehicle identification plates 356
Operating data 357
Service products 360
Capacities 367
Hydraulic system 370
Vehicle dimensions 375
Information on the compressed-air reservoir 379
Compressed-air reservoir identification plates 380

https://truckmanualshub.com/

Useful information

These Operating Instructions describe all the models and standard and optional equipment of your vehicle that were available at the time of going to print. Country-specific differences are possible. Bear in mind that your vehicle may not be equipped with all the functions described. This also applies to safety-relevant systems and functions.

Read the information on qualified specialist workshops (▷ page 30).

Vehicle identification plates

Vehicle identification plate

Overview

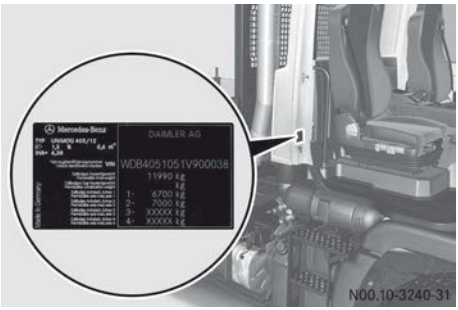

Information on the vehicle identification plate

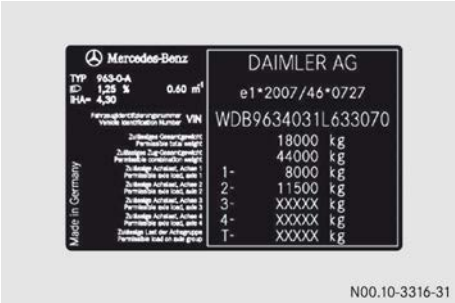

- Vehicle type
- Basic headlamp setting
- Rear axle ratio
- Absorption coefficient, diesel smoke
- Type approval number
- Vehicle identification number (VIN)
- Maximum permissible gross vehicle weight (kg)
- Maximum permissible vehicle combination gross weight (kg)
- Maximum permissible axle loads (kg)

Vehicle identification number (VIN)

① Vehicle identification number on the right-hand longitudinal member

Engine data plate

The engine data plate is affixed to the engine control unit.

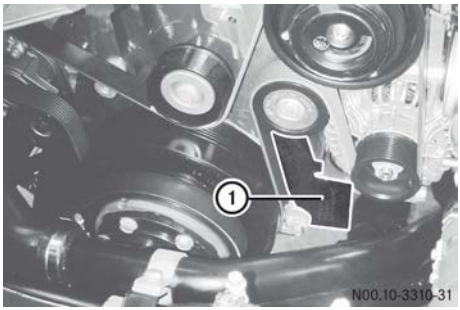

Engine number ① is engraved on the lower section of the crankcase front edge. Further information can be obtained from a Mercedes-Benz Service Centre.

https://truckmanualshub.com/

Operating data

Engine		
Type	**U 216**	**U 218 / U 318**
Engine model series	**934.971**	**934.971**
Engine power output according to DIN at rated engine speed	115 kW	130 kW
Cylinder arrangement	4-cylinder in-line	4-cylinder in-line
Emission class	Euro 6	Euro 6
Torque (max.) at engine speed	650 Nm at 1200 to 1600 rpm	750 Nm at 1200 to 1600 rpm
Idling speed	Approx. 720 rpm	Approx. 720 rpm
Engine brake (operating range)	Approx. 1000 to 3000 rpm	Approx. 1000 to 3000 rpm
Rated engine speed	2200 rpm	2200 rpm

Engine		
Type	**U 423**	**U 427 / U 527**
Engine model series	**934.972**	**936.971**
Engine power output according to DIN at rated engine speed	170 kW	200 kW
Cylinder arrangement	4-cylinder in-line	6-cylinder inline
Emission class	Euro 6	Euro 6
Torque (max.) at engine speed	900 Nm at 1200 to 1600 rpm	1100 Nm at 1200 to 1600 rpm
Idling speed	Approx. 720 rpm	Approx. 720 rpm
Engine brake (operating range)	Approx. 1000 to 3000 rpm	Approx. 1000 to 3000 rpm
Rated engine speed	2200 rpm	2200 rpm

https://truckmanualshub.com/

Engine	
Type	**U 430 / U 530**
Engine model series	**936.971**
Engine power output according to DIN at rated engine speed	220 kW
Cylinder arrangement	6-cylinder inline
Emission class	Euro 6
Torque (max.) at engine speed	1200 Nm at 1200 to 1600 rpm
Idling speed	Approx. 720 rpm
Engine brake (operating range)	Approx. 1000 to 3000 rpm
Rated engine speed	2200 rpm

Operating temperature (coolant temperature)	
Normal operation	Approx. 70 – 103 °C
Operation under arduous conditions (automatically reduced engine power output)	>103 °C
Maximum permissible coolant temperature	108 °C

PTO shaft	
Position of the front PTO shaft stub	In accordance with EN 15432 The height depends on the tyres.
Transmission ratio	i=2.139 (under drive)
Standard engine speed	1000 rpm/all other engine speeds (e.g. 540 rpm) can be set using the engine speed setting (▷ page 263).
Rotational speed of front PTO shaft at rated engine speed	1029 rpm
Engine speed at a front PTO shaft rotational speed of 540 rpm	1160 rpm

PTO shaft	
Engine speed at a front PTO shaft rotational speed of 1000 rpm	2140 rpm
Direction of rotation	Clockwise
Continuous operation output	160 kW
Profile of front PTO shaft in accordance with SAE J499a standard	1¾ inch splined shaft The front PTO shaft stub can be twisted to enable equipment to be coupled up easily

Tyre pressure	
Tyre pressure	(▷ page 342)
Permissible difference between tyres on an axle	0.2 bar
Maximum permissible pressure in the vehicle compressed-air system to inflate a tyre	10.0 bar

Wheel nut tightening torques (Nm)			
Pressure plate nut	U 216 / U 218 / U 318	M 20 x 1.5	450 ± 36 Nm
	U 423 / U 427 / U 430 / U 527 / U 530	M 22 x 1.5	600 ± 50 Nm

Spring-loaded parking brake cylinders	
Release torque of the spring-loaded parking brake cylinder release screw	Max. 70 Nm
Tightening torque of the spring-loaded parking brake cylinder release screw	40–50 Nm
Release pressure (reservoir pressure in compressed-air system)	Min. 6.5 bar
Auxiliary consumers circuit	Approx. 8.5 bar

Steering play	
Maximum permissible steering play (measured at the rim of the steering wheel with the engine running, wheels in straight-ahead position)	30 mm

https://truckmanualshub.com/

Compressed-air system	
Service brake	18.3 bar
Brake circuit 1	Min. 7.5 bar
Brake circuit 2	Min. 7.5 bar
Trailer brake circuit	Min. 5.5 bar
Pressure regulator (activation/deactivation pressure)	Approx. 15.8 / 18.3 bar
Spring-loaded brake release circuit	Min. 5.5 bar
Volume of compressed-air reservoir (brake circuits 1 and 2)	2x 20.0 l

Service products

Important safety notes

Service products include:

- windscreen washer concentrate
- fuels (e.g. diesel)
- lubricants (e.g. engine oil, transmission oil, grease)
- hydraulic fluids
- coolant
- brake fluid for the hydraulic clutch mechanism system
- AdBlue® (BlueTec® exhaust gas aftertreatment reduction agent)

⚠ **WARNING**

Service product can be poisonous and hazardous to health. There is a risk of injury.

Observe the instructions on the respective original container when using, storing and disposing off service products. Always store service products in the sealed original container. Always keep service products out of the reach of children.

! Special additives (except approved fuel additives) are neither required nor approved for use with approved service products. Additives may cause damage to major assemblies. Therefore, do not mix any additives with service products. You are responsible for the results of using fuel additives.

Environmental note

Dispose of service products in an environmentally-responsible manner.

Approved service products fulfil the highest quality standards and are documented in the Mercedes-Benz Specifications for Service Products. For this reason, only use approved service products for your vehicle. Information about approved service products is available from a Mercedes-Benz Service Centre.

You can recognise service products approved by Mercedes-Benz by the following inscription on the container:

- MB-Freigabe (e.g. MB-Freigabe 228.51)

  or
- MB Approval (e.g. MB Approval 228.51)

Other labels and recommendations relating to the quality or indicating that the product meets a certain specification are not necessarily approved by Mercedes-Benz. Further information can be obtained from a Mercedes-Benz Service Centre.

ⓘ Information about service products which have been tested by Mercedes-Benz and approved for your vehicle can be obtained on the Internet at: **http://bevo.mercedes-benz.com**

https://truckmanualshub.com/

The specification and availability of lubricants may vary. Some lubricants are no longer available, especially for older vehicles. Further information can be obtained from a Mercedes-Benz Service Centre.

Brake fluid

⚠ **WARNING**

Service product can be poisonous and hazardous to health. There is a risk of injury.

Observe the instructions on the respective original container when using, storing and disposing off service products. Always store service products in the sealed original container. Always keep service products out of the reach of children.

⚠ **WARNING**

The brake fluid continuously absorbs moisture from the air. This results in the boiling point of the brake fluid lowering. If the boiling point of the brake fluid is too low, vapour pockets may form in the hydraulic clutch actuation system when it is subjected to a heavy thermal load. In this case, the function of the hydraulic clutch actuation system is restricted. There is a risk of an accident.

Have the brake fluid renewed at the prescribed intervals.

! Brake fluid corrodes paint, plastic and rubber. If brake fluid comes into contact with paint, plastic or rubber, rinse with water immediately.

Have the brake fluid replaced regularly at a qualified specialist workshop. You can find the intervals for brake fluid change in the maintenance booklet.

Only use brake fluid approved by Mercedes-Benz, according to MB Approval 331.0. Information about approved brake fluid can be obtained from a qualified specialist workshop or at **http://bevo.mercedes-benz.com**.

Engine oils

Notes on engine oils

! Engine oils other than those of the quality specified in this Operator's Manual are not permitted.

Only use engine oils complying with Sheet No. 228.51 or 228.31 of the Mercedes-Benz Specifications for Service Products.

Engine oils according to Sheet No. 228.51 have a higher quality standard and have a favourable effect on:

- length of oil change intervals
- engine wear
- fuel consumption
- exhaust emissions

ⓘ You can find information on the quality grade, e.g. Sheet No. 228.51, and the viscosity, e.g. SAE class 5W-30, from the designation on the oil container.

Before delivery, an engine oil according to Sheet No. 228.51 and SAE class 5W-30 will be filled.

Scope of application

Multi-grade engine oils complying with Sheet No.228.51 or 228.31 can be used all year round. Depending on fuel quality (sulphur content in fuel), oil change intervals must be shortened.

Oil change

! If the SAE class (viscosity) of the engine oil used is not suitable for continually low outside temperatures below -20 °C, this could cause engine damage.

The specified temperatures of the SAE class always refer to freshly added oil. Engine oil ages during driving due to soot and fuel residue. This impairs the characteristics of the engine oil, particularly at low outside temperatures.

https://truckmanualshub.com/

If the outside temperature is under -20 °C, Mercedes-Benz strongly recommends using engine oils of SAE class 5W-30 or 0W-30.

Use only all-season oils.

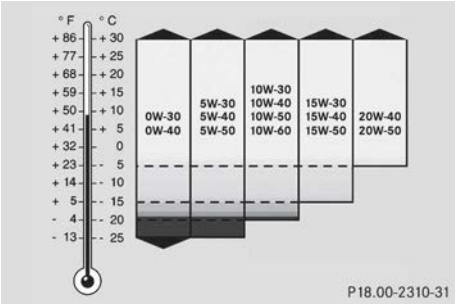

Engine oil SAE classes (viscosity)

Oil change intervals are dependent on the following:

- the operating conditions of the vehicle
- the grade of the engine oil used

▶ Select the SAE class of engine oil in accordance with outside temperatures.

The maximum oil change interval can only be achieved by using engine oils of particularly high quality in accordance with Sheet No. 228.51 of the Mercedes-Benz Specifications for Service Products.

Adding/topping up the engine oil

! There is a risk of damage to the catalytic converter or to the engine if too much oil is added. Have excess oil drained off.

When topping up, Mercedes-Benz recommends that you only use engine oils of the same grade and SAE class as the oil filled at the last oil change.

Check the engine oil level in the on-board computer (▷ page 125) before you top up the oil (▷ page 297).

Miscibility of engine oils

The benefits of high-quality engine oils diminish if you mix them.

Engine oils are differentiated according to:

- engine oil brand
- quality grade (Sheet No.)
- SAE viscosity class

If, in exceptional circumstances, the type of engine oil currently used is not available, another engine oil approved for Mercedes-Benz may be used.

Transmission oil

! When changing the oil, if you replace the synthetic oil with a mineral transmission oil, you may damage the assembly. Before the oil change, check whether the use of a mineral transmission oil is permitted. Information is available from any Mercedes-Benz Service Centre.

Drive axle and transmission

Depending on the vehicle version, the drive axles, transmission and PTO shaft transmission may be filled with a high-quality synthetic oil at the factory.

If, when changing the transmission oil, a mineral oil is to be used instead of synthetic oil, you must first make sure that this is permissible. Only use transmission oil approved by Mercedes-Benz. Information about approved transmission oil can be obtained from a qualified specialist workshop or on the Internet at **http://bevo.mercedes-benz.com**.

Observe the notes on intervals for oil change in the Service Booklet.

Further information can be obtained from a Mercedes-Benz Service Centre.

Coolant

⚠ WARNING

If antifreeze comes into contact with hot components in the engine compartment, it may ignite. There is a risk of fire and injury.

https://truckmanualshub.com/

Let the engine cool down before you top up the antifreeze. Make sure that antifreeze is not spilled next to the filler neck. Thoroughly clean the antifreeze from components before starting the engine.

A coolant that ensures anti-corrosion/anti-freeze protection and other important protective effects is filled at the factory.

The coolant is a mixture of water and corrosion inhibitor/antifreeze agent.

The corrosion inhibitor/antifreeze in the coolant has the following properties:

- heat transfer
- anti-corrosion protection
- cavitation protection (against pitting)
- antifreeze protection
- raising the boiling point

Leave the coolant in the engine cooling system all year round – even in countries with high outside temperatures.

Check the corrosion inhibitor/antifreeze concentration in the coolant every six months.

Have the coolant replaced regularly at a qualified specialist workshop. You can find the intervals for coolant change in the maintenance booklet.

Only use corrosion inhibitor/antifreeze approved by Mercedes-Benz, according to Sheet No. 325.5 or 326.5. This prevents damage to the engine cooling system and engine. Information about approved corrosion inhibitor/antifreeze additive can be obtained from a qualified specialist workshop or on the Internet at **http://bevo.mercedes-benz.com**.

When renewing the coolant, ensure that it contains 50% corrosion inhibitor/antifreeze by volume. This corresponds to antifreeze protection down to -37 °C.

Do not exceed 55% by volume (antifreeze down to approximately -45 °C). The heat dissipation and antifreeze may otherwise be negatively affected.

If there is a loss of coolant, do not top it up by using only water, but also add an approved corrosion inhibitor/antifreeze agent.

The water in the coolant must meet certain requirements, which are often fulfilled by the use of drinking water. The water must be treated if its quality does not meet the required standards.

Observe the Mercedes-Benz Specifications for Service Products, Sheet No. 310.1.

Further information can be obtained from a Mercedes-Benz Service Centre.

Hydraulic fluids

General notes

Environmental note

Mixing different oil types can affect operational effectiveness and biodegradability to an impermissible degree.

The hydraulic system is filled with SAE 10 W engine oil as standard at the factory.

At low outside temperatures down to -32 °C you can use SAE 5 W-40 engine oil.

Always use the same grade of hydraulic fluid for the hydraulic system and the attached equipment/assemblies.

If you change grades of hydraulic fluid, the entire hydraulic system must be fully emptied first. This includes hoses, valves, cylinders and oil filters. In addition, the attached equipment and assemblies must also be emptied. Otherwise, the hydraulic fluid may foam at a mixing ratio higher than 3%.

Have the hydraulic fluid replaced regularly at a qualified specialist workshop. You can find the intervals for hydraulic fluid change in the maintenance booklet.

Only use hydraulic fluids approved by Mercedes-Benz, according to MB Approval 228.0. Information about approved hydraulic fluid can be obtained from a qualified specialist workshop or on the Internet at **http://bevo.mercedes-benz.com**.

https://truckmanualshub.com/

Synthetic esters

An environmentally compatible hydraulic fluid is extremely important. Besides the operating conditions, service life factor (oil change interval) and the high price difference, the economic aspect must also be taken into account. Compare the price in relation to the downtime factor and disposal.

Observe that for synthetic esters there are differences in the basic structures of oleic acid ester products and carboxylic acid ester products:

- oleic acid-based synthetic esters age faster
- the operational effectiveness of carboxylic acid-based synthetic esters is virtually unlimited, provided the degree of contamination does not require a premature oil change to be performed

Brands of environmentally-compatible hydraulic fluids

Environmental note

Environmentally compatible hydraulic fluids must be separately stored, collected and disposed of in accordance with waste management laws.

Optional equipment code HB2: the hydraulic system is filled at the factory with RIVOLTA S.B.H. 23.

Optional equipment code H97: the hydraulic system is filled at the factory with carboxylic acid ester, Panolin HLP Synth 46.

Have the hydraulic fluid replaced regularly at a qualified specialist workshop. You can find the intervals for hydraulic fluid change and filter change in the maintenance booklet.

Mixing similar oil types can affect operational effectiveness and biodegradability to an impermissible degree. Mixing mineral oils and environmentally-friendly hydraulic fluids is not permissible.

The hydraulic system is filled with mineral oil as standard, unless the environmentally compatible hydraulic oil is expressly ordered as an option (code HB2 or code H97).

Diesel fuels

Important safety notes

WARNING

Fuel is highly flammable. Improper handing of fuel creates a risk of fire and explosion.

Avoid fire, naked flames, smoking and creating sparks under all circumstances. Switch off the engine and, if applicable, the auxiliary heating before refuelling.

! If you are using drums or canisters to refuel the vehicle, you should filter the fuel before adding it.

This will prevent malfunctions in the fuel system due to contaminated fuel.

! Only refuel using commercially available, sulphur-free diesel fuel that conforms to the European standard EN 590 as of 2010, et seq. (max. 0.001% sulphur by weight).

The following fuel types are not permitted:

- sulphurous fuel with a sulphur content greater than 0.001% by weight
- marine diesel fuel
- aviation turbine fuel
- heating oils
- fatty acid methyl ester FAME (bio-diesel fuel)

These fuel types cause irreversible damage to the engine and BlueTec® exhaust gas aftertreatment, as well as also significantly reducing the expected service life.

! A higher fuel sulphur content accelerates the ageing process of the engine oil and can damage the engine and exhaust system.

Fuel grade

Before delivery, the fuel sulphur content is set to <0.001% sulphur by weight (10 ppm).

https://truckmanualshub.com/

Certain countries have diesel fuel with varying sulphur content. Diesel fuel with low sulphur content is sold in certain countries under the name "Euro diesel".

Details about current country-specific fuel sulphur content can be obtained from the Mercedes-Benz Specification for Service Products according to Sheet No. 136.2. Further information can be obtained from a Mercedes-Benz Service Centre.

Diesel fuels at low temperatures

⚠ **WARNING**

If you heat fuel system components, e.g. with a hot-air gun or naked flame, these components could be damaged. This can cause fuel to escape and ignite. Depending on the type of damage, fuel may also not escape until the engine is running. There is a risk of fire and explosion.

Never heat fuel system components. Contact a qualified specialist workshop to rectify the malfunction.

In winter months, diesel fuel with an improved cold flow quality is available. In Europe, the EN 590 standard defines various climate-dependent temperature categories. Malfunctions can be avoided by refuelling with diesel fuel that corresponds to the climatic specifications outlined in EN 590. At unusually low outside temperatures, it is possible that the flow characteristics of the diesel fuel may be insufficient. Accordingly, diesel fuel from warmer areas may not be suitable for operation in colder climatic conditions.

ℹ Further information on country-specific fuel properties and fuel types with low-temperature resistance can be obtained from oil companies, e.g. at filling stations.

Fuel additives

! Do not add any petrol or kerosene to diesel fuel to improve its flow characteristics. Petrol or kerosene impairs the lubricity of the diesel fuel. This can cause damage to the injection system, for example.

The vehicle may be equipped with a fuel preheating system. The fuel preheating system can warm up the fuel by approximately 8 °C. This improves the flow characteristics of the fuel.

AdBlue®

AdBlue® notes

! Only use AdBlue®/DEF in accordance with DIN 70070/ISO 22241. Do not use any additives.

If AdBlue®/DEF comes into contact with painted or aluminium surfaces when filling the tank, rinse the affected area immediately with plenty of water.

If the AdBlue® tank still contains enough AdBlue®, pressure compensation may occur when the tank lid is unscrewed. AdBlue® may spill out. Therefore, open the AdBlue® tank lid carefully. If AdBlue® spills out, immediately wash the affected area with plenty of water.

AdBlue® is a non-flammable, non-toxic, colourless, odourless and water-soluble liquid.

When opening the AdBlue® tank, small amounts of ammonia vapours could escape.

Ammonia vapours have a pungent smell and are particularly irritating to:

- skin
- mucous membranes
- eyes

The vapours may cause a burning sensation in the eyes, nose and throat as well as irritation of the throat and watering eyes.

Avoid inhaling ammonia vapours. Only fill the AdBlue® tank in well-ventilated areas.

AdBlue® should not come into contact with skin, eyes or clothing, and should not be swallowed. Keep AdBlue® out of the reach of children.

https://truckmanualshub.com/

If you come into contact with AdBlue®, observe the following:

- immediately wash AdBlue® from your skin with water and soap.
- if AdBlue® comes into contact with your eyes, rinse your eyes with clean water immediately. Consult a doctor without delay.
- if you have swallowed AdBlue®, immediately rinse your mouth with water and drink plenty of water. Consult a doctor without delay.
- change clothing that is soiled with AdBlue® immediately.

High outside temperatures

The chemical composition of AdBlue® can break down if it heats up to 50 °C over a long period of time (e.g. as a result of direct sunlight on the tank). This creates ammonia vapour.

Low outside temperatures

AdBlue® freezes at a temperature of approximately -11 °C. As the vehicle's AdBlue® supply system is heated, operating in winter is guaranteed even at temperatures below -11 °C.

Additives, tap water

! Do not mix additives to AdBlue®. Do not thin AdBlue® with tap water. This could destroy the exhaust gas aftertreatment system.

Storage

! Containers made of the following materials are not suitable for the storage of AdBlue®/DEF:

- aluminium
- copper
- copper alloys
- unalloyed steel
- galvanised steel

If AdBlue® is stored in these types of container, constituents of these metals may dissolve and damage the exhaust gas aftertreatment beyond repair.

Only use containers made of the following materials to store AdBlue®:

- Cr-Ni steel in accordance with DIN EN 10 088-1/2/3
- Mo-Cr-Ni steel in accordance with DIN EN 10 088-1/2/3
- polypropylene
- polyethylene

Disposal

Environmental note

Dispose of AdBlue® in an environmentally responsible manner.

Observe laws and regulations on the disposal of AdBlue® in the country concerned.

Purity

! Impurities in AdBlue®, e.g. due to other service products, cleaning products or dust, may lead to:

- increased emission values
- damage to the catalytic converter
- engine damage
- malfunctions in the BlueTec® exhaust gas aftertreatment

Ensure that AdBlue® is always pure to avoid malfunctions in BlueTec® exhaust gas aftertreatment.

If AdBlue® is pumped from the AdBlue® tank, e.g. during repairs, do not use this fluid to refill the tank. The purity of the fluid is otherwise no longer guaranteed.

https://truckmanualshub.com/

Capacities

		Capacity approximately	Service product (Sheet Number)
Engine with oil filter	4-cylinder engine	17.0 l	SAE 5W-30 engine oil (228.51) (▷ page 361)
	6-cylinder engine	25.0 l	
Transmission	UG 100 (718.840)	11.0 l	SAE 75W-80 transmission oil (235.41)
	With working gears	13.0 l	
	With crawler gears	14.0 l	
	With hydrostatic drive system	13.0 l	
	With power take-off	11.5 l	
PTO shaft gear		4.0 l	
Hydrostatic transmission		9.5 l	SAE 10W engine oil (228.0)
Torque converter clutch		18.0 l	SAE 10W engine oil (228.0)
Axles	Intermediate transmission	0.7 l each	Synthetic hypoid oil (235.8)
	Differential front/rear	2.5 l each	
	Steering knuckle	As required	Multipurpose grease (267.0)
Steering		3.0 l	Steering gear oil (236.2, 236.3)
Hydrostatic fan, on vehicles without working hydraulics		55.0 l	HD SAE 10W (228.0) (▷ page 363)

https://truckmanualshub.com/

		Capacity approximately	Service product (Sheet Number)
Hydrostatic fan, on vehicles with working hydraulics[3]	Initial filling	75.0 l	
	Permissible amount to be removed	35.0 l	
Working hydraulics	Initial filling	75.0 l	
	Permissible amount to be removed	35.0 l	
Power hydraulics	Initial filling	52.0 l	
	Permissible amount to be removed	5.0 l	
Cooling system with heating	4-cylinder engine Total capacity	30.0 l	Fresh water with approximately 50% antifreeze (▷ page 362)
	6-cylinder engine Total capacity	35.0 l	
	4-cylinder engine Antifreeze to –37 °C	15.0 l	
	6-cylinder engine Antifreeze to –37 °C	17.5 l	
Hydraulic clutch actuation system	Expansion tanks	As required	MB brake fluid DOT 4 plus (331.0) (▷ page 361)
Lubricating nipple	Axle, propeller shaft, chassis, etc.	As required	Multipurpose grease (267.0)
Battery	Topping up	As required	Distilled water

3 Vehicles with working hydraulics receive an additional 20 l of hydraulic fluid, since the fan hydraulics and working hydraulics use the same oil reservoir.

https://truckmanualshub.com/

		Capacity approximately	Service product (Sheet Number)
	Battery cable terminals		Acid-proof grease (350.0)
Fuel tank	U 216 / U 218 / U 318 / U 423 K	145 l	Diesel fuel (131.0, 137.0) (▷ page 364)
	Optional equipment: U 318 / U 423	200 l	
	U 423 L / U 427 / U 430	200 l	
	Optional equipment: U 423 L / U 427 / U 430	250 l	
AdBlue® tank	U 216 / U 218	18.0 l	AdBlue® (352.1)
	U 318 / U 423 / U 427 / U 430	25.0 l	
Windscreen washer system		15.0 l	Windscreen washer concentrate (371.0)
Air-conditioning system	Refrigerant compressor	0.16 l	Compressor oil
	Refrigerant circuit	1400 g	Refrigerant R134a (361.0)

https://truckmanualshub.com/

Hydraulic system

Hydraulic system schematic: working hydraulics

Vehicle with gear pump

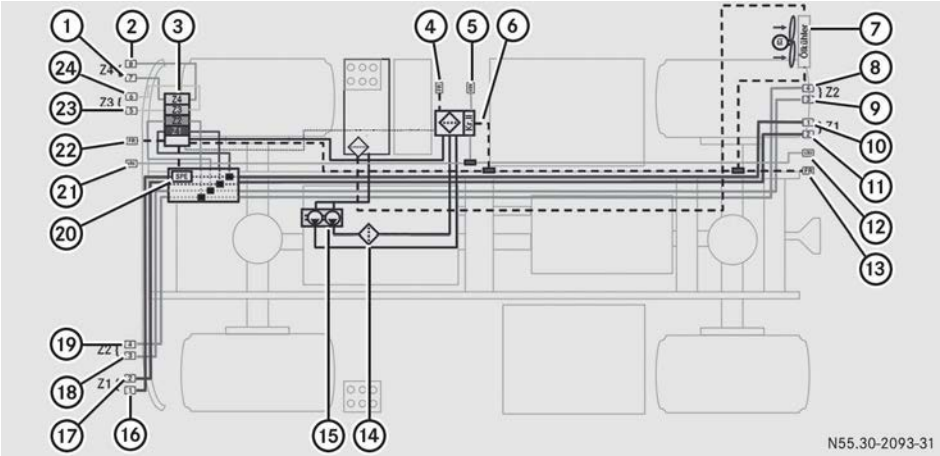

Schematic diagram of working hydraulics, circuit I and circuit II, 4-cell, with snow plough load relief

① Blue hydraulic connection 7, circuit I
② Blue hydraulic connection 8, circuit I
③ Proportional valve for hydraulic connection 1 to 8, circuit I
④ Hydraulic connection, separate return flow line, circuit II
⑤ Hydraulic connection, circuit II
⑥ Valve block for changing the oil circuit
⑦ Oil cooler
⑧ Green hydraulic connection 4, circuit I
⑨ Green hydraulic connection 3, circuit I
⑩ Red hydraulic connection 1, circuit I
⑪ Red hydraulic connection 2, circuit I
⑫ Hydraulic connection, circuit II
⑬ Hydraulic connection, separate return flow line, circuit I or circuit II
⑭ Oil filter
⑮ Gear pump for circuit I and circuit II
⑯ Red hydraulic connection 1, circuit I
⑰ Red hydraulic connection 2, circuit I
⑱ Green hydraulic connection 3, circuit I
⑲ Green hydraulic connection 4, circuit I
⑳ Snow plough load relief valve
㉑ Hydraulic connection, circuit II
㉒ Hydraulic connection, separate return flow line for circuit I or circuit II

https://truckmanualshub.com/

㉓ Yellow hydraulic connection 5, circuit I
㉔ Yellow hydraulic connection 6, circuit I

Vehicles with positioning pump

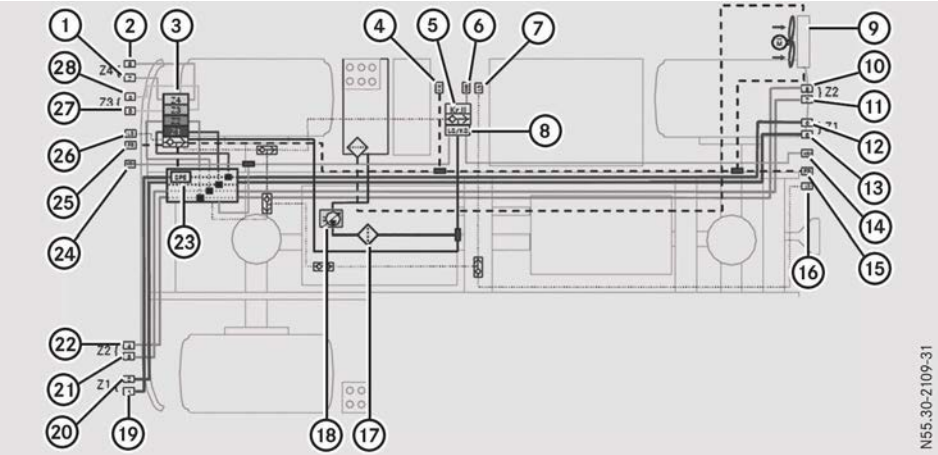

Schematic diagram of working hydraulics, circuit I and circuit II, 4-cell, with snow plough load relief

① Blue hydraulic connection 7, circuit I
② Blue hydraulic connection 8, circuit I
③ Proportional valve for hydraulic connection 1 to 8, circuit I
④ Hydraulic connection, separate return flow line, circuit II
⑤ Valve block for changing the oil circuit
⑥ Hydraulic connection, circuit II
⑦ Load-sensing connection
⑧ Switchover valve between constant current and load-sensing operation
⑨ Oil cooler
⑩ Green hydraulic connection 4, circuit I
⑪ Green hydraulic connection 3, circuit I
⑫ Red hydraulic connection 1, circuit I
⑬ Red hydraulic connection 2, circuit I
⑭ Hydraulic connection, circuit II
⑮ Hydraulic connection, separate return flow line, circuit I or circuit II
⑯ Load-sensing connection
⑰ Oil filter
⑱ Positioning pump for circuit I and circuit II
⑲ Red hydraulic connection 1, circuit I
⑳ Red hydraulic connection 2, circuit I
㉑ Green hydraulic connection 3, circuit I
㉒ Green hydraulic connection 4, circuit I
㉓ Snow plough load relief valve

https://truckmanualshub.com/

㉔ Hydraulic connection, circuit II
㉕ Hydraulic connection, separate return flow line for circuit I or circuit II
㉖ Load-sensing connection
㉗ Yellow hydraulic connection 5, circuit I
㉘ Yellow hydraulic connection 6, circuit I

Hydraulic system schematic: power hydraulics

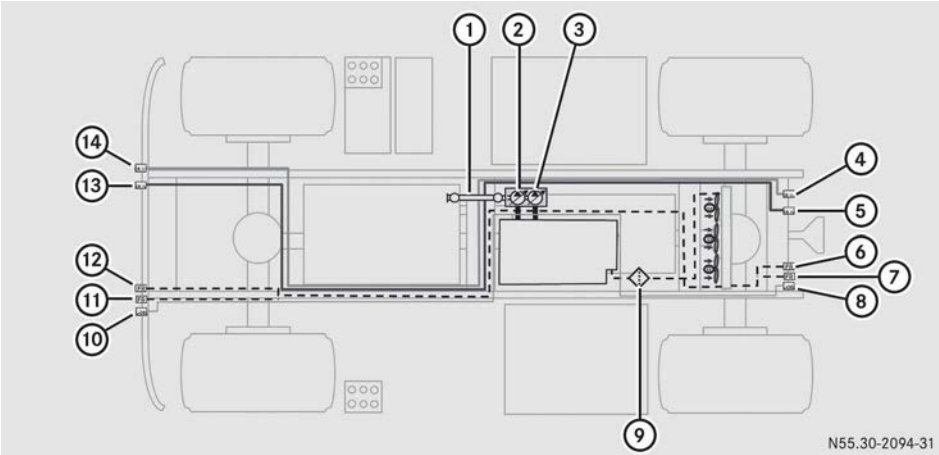

Schematic diagram of power hydraulics (circuit III and circuit IV)

① Propeller shaft
② Positioning pump, circuit III
③ Positioning pump, circuit IV
④ Hydraulic connection, circuit III
⑤ Hydraulic connection, circuit IV
⑥ Return flow line
⑦ Return flow line
⑧ Leak oil connection
⑨ Oil filter
⑩ Leak oil connection
⑪ Return flow line
⑫ Return flow line
⑬ Hydraulic connection, circuit IV
⑭ Hydraulic connection, circuit III

https://truckmanualshub.com/

Hydraulic connections

Working hydraulics, without code H86:

Circuit I	Plug-type coupling ISO 16028 - size 12.5 Red hydraulic connections 1, 2 Green hydraulic connections 3, 4 Yellow hydraulic connections 5, 6 Blue hydraulic connections 7, 8
Circuit II	red: pressure line: ISO 16028 - size 19, connector
	black: separate return flow line: ISO 16028 size 19, coupling

Working hydraulics, with code H86:

Circuit I	Plug-type coupling ISO 7241-1 size 12.5 Red hydraulic connections 1, 2 Green hydraulic connections 3, 4 Yellow hydraulic connections 5, 6 Blue hydraulic connections 7, 8
Circuit II	red: pressure line: ISO 7241-1 size 20, connector
	black: separate return flow line= ISO 7241-1 size 20, coupling

Power hydraulics

Circuit III	Pressure line, screw coupling (Voswinkel type HS 20), connector
	Return flow line, screw coupling (Voswinkel type HS 20), sleeve
Circuit IV	Pressure line, screw coupling (Voswinkel type HS 20), connector
	Return flow line, screw coupling (Voswinkel type HS 20), sleeve
Leak oil connection	Screw coupling (Voswinkel type HS 10), sleeve

https://truckmanualshub.com/

Hydraulic system flow rates

Flow rates, vehicles with a gear pump

Version	Rated engine speed rpm	Pressure in bar
Working hydraulics as single-circuit hydraulic system	2200	Approximately 240
Working hydraulics as dual-circuit hydraulic system	2200	Approximately 240
Power hydraulics	2200	Approximately 280

Version	Circuit I	Circuit II	Circuit I and circuit II, maximum
Working hydraulics as single-circuit hydraulic system	55 l/min	-	-
Working hydraulics as dual-circuit hydraulic system	32 l/min	55 l/min	87

Version	Circuit III	Circuit IV
Power hydraulics	125 l/min	125 l/min

ℹ The flow rates are calculated on a theoretical basis. Losses are therefore not taken into account (efficiency).

Flow rates, vehicles with a positioning pump

Version	Rated engine speed rpm	Pressure in bar
Working hydraulics with load-sensing connections	2200	Approximately 240
Power hydraulics	2200	Approximately 280

Version	Working hydraulics in constant current operation, maximum	Working hydraulics in load-sensing operation, maximum
Working hydraulics with load-sensing connections	80 l/min	110 l/min

Version	Circuit III	Circuit IV
Power hydraulics	125 l/min	125 l/min

ℹ The flow rates are calculated on a theoretical basis. Losses are therefore not taken into account (efficiency).

Vehicle dimensions

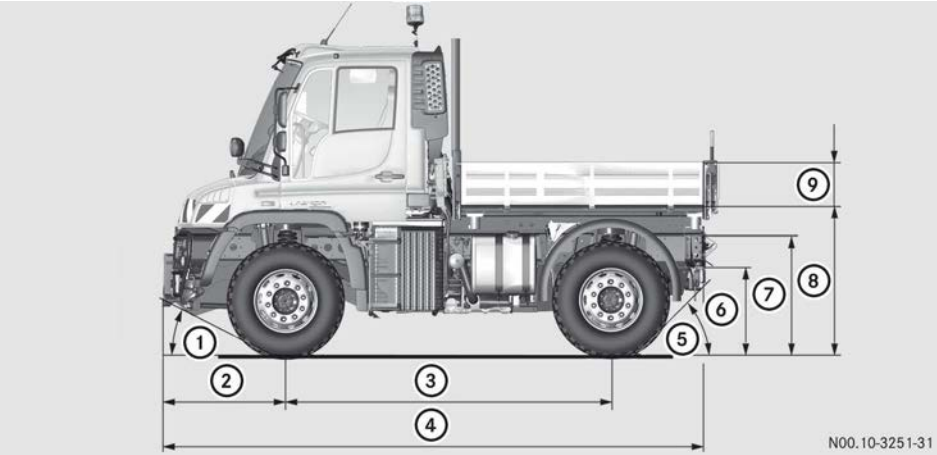

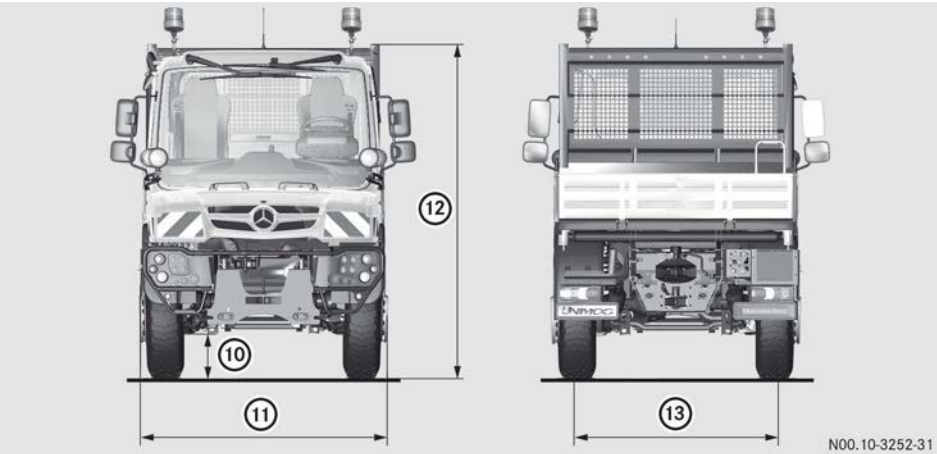

ℹ All height values refer to the tyres and vehicle loads listed in the table below.

https://truckmanualshub.com/

Vehicle type	U 216 / 218	U 318
Vehicle model designation number	405.090	405.104
Tyres	365/80 R 20	365/80 R 20
Vehicle load: Front axle Rear axle Gross weight	 3500 kg 5500 kg 9000 kg	 3500 kg 5500 kg 9000 kg
① Angle of approach, for large tyres	25°	27°
② Front overhang	1050-1150 mm	1050-1150 mm
③ Wheelbase	2800 mm	3000 mm
④ Overall length	4900 mm	5100 mm
⑤ Angle of departure	37°	37°
⑥ Trailer coupling height	825 mm	825 mm
⑦ Frame height at rear	1094 mm	1094 mm
⑧ Load platform height	1352 mm	1352 mm
⑨ Dropside height	400 mm	400 mm
⑩ Ground clearance	Approx. 340 mm	Approx. 340 mm
⑪ Overall width[4]	2150 mm	2150 mm
⑫ Overall height[5]	2855 mm	2855 mm
⑬ Track width	1794 mm	1794 mm
Diameter of turning circle	Approx. 12.6 m	Approx. 13.7 m
Platform internal dimensions	2200 x 2075 mm	2385 x 2075 mm

Vehicle type	U 423 K	U 427 K / U 430 K
Vehicle model designation number	405.105	405.110 / 405.110
Tyres	365/85 R 20	365/85 R 20

4 Depending on the equipment mounted, an overall width of 2550 mm is possible.
5 Without rotating beacon or strobe light.

https://truckmanualshub.com/

Vehicle type	U 423 K	U 427 K / U 430 K
Vehicle load: Front axle Rear axle Gross weight	 6100 kg 7700 kg 13800 kg	 6100 kg 7700 kg 13800 kg
① Angle of approach, for large tyres	33°	33°
② Front overhang	1050-1150 mm	1050-1150 mm
③ Wheelbase	3000 mm	3150 mm
④ Overall length	5100 mm	5150 mm
⑤ Angle of departure	42°	42°
⑥ Trailer coupling height	882 mm	882 mm
⑦ Frame height at rear	1153 mm	1153 mm
⑧ Load platform height	1415 mm	1415 mm
⑨ Dropside height	400 mm	400 mm
⑩ Ground clearance	Approx. 385 mm	Approx. 385 mm
⑪ Overall width[6]	2200 mm	2200 mm
⑫ Overall height[7]	2910 mm	2910 mm
⑬ Track width	1734 mm	1734 mm
Diameter of turning circle	Approx. 13.7 m	Approx. 14.3 m
Platform internal dimensions	2385 x 2075 mm	2385 x 2075 mm

Vehicle type	U 423 L / U 427 L / U 430 L
Vehicle model designation number	405.125 / 405.125 / 405.125
Tyres	365/85 R 20
Vehicle load: Front axle Rear axle Gross weight	 4200 kg 7800 kg 12000 kg
① Angle of approach, for large tyres	33°

6 Depending on the equipment mounted, an overall width of 2550 mm is possible.
7 Without rotating beacon or strobe light.

https://truckmanualshub.com/

Vehicle type	U 423 L / U 427 L / U 430 L
② Front overhang	1050-1150 mm
③ Wheelbase	3600 mm
④ Overall length	5600 mm
⑤ Angle of departure	42°
⑥ Trailer coupling height	873 mm
⑦ Frame height at rear	1144 mm
⑧ Load platform height	1407 mm
⑨ Dropside height	400 mm
⑩ Ground clearance	Approx. 385 mm
⑪ Overall width[8]	2200 mm
⑫ Overall height[9]	2910 mm
⑬ Track width	1734 mm
Diameter of turning circle	Approx. 16.5 m
Platform internal dimensions	2900 x 2075 mm

Vehicle type	U 527 K / U 530 K	U 527 L / U 530 L
Vehicle model designation number	405.202	405.222
Tyres	365/85 R 20	365/85 R 20
Vehicle load: Front axle Rear axle Gross weight	 5700 kg 9500 kg 15200 kg	 5700 kg 9500 kg 15200 kg
① Angle of approach, for large tyres	35°	35°
② Front overhang	1140 mm	1140 mm
③ Wheelbase	3350 mm	3900 mm
④ Overall length	5550 mm	6200 mm
⑤ Angle of departure	41°	35°

8 Depending on the equipment mounted, an overall width of 2550 mm is possible.
9 Without rotating beacon or strobe light.

https://truckmanualshub.com/

Vehicle type	U 527 K / U 530 K	U 527 L / U 530 L
⑥ Trailer coupling height	869 mm	869 mm
⑦ Frame height at rear	1141 mm	1141 mm
⑧ Load platform height	1435 mm	1435 mm
⑨ Dropside height	406 mm	406 mm
⑩ Ground clearance	Approx. 379 mm	Approx. 379 mm
⑪ Overall width[10]	2300 mm	2300 mm
⑫ Overall height[11]	2900 mm	2900 mm
⑬ Track width	1828 mm	1828 mm
Diameter of turning circle	Approx. 15.1 m	Approx. 16.9 m
Platform internal dimensions	2650 x 2200 mm	3430 x 2200 mm

Information on the compressed-air reservoir

For first-time buyers and other users

Accompanying documentation in accordance with directives 87/404/EEC and EN 286-2

The reservoir is:

a – only intended for use in compressed-air systems and auxiliary equipment on motor vehicles and their trailers, and is only to be used to hold compressed air.

b – to be marked for identification with a works number and the reservoir manufacturer's name, together with the principal operating data and the EC mark – see the identification plate or engravings directly on the reservoir wall.

c – manufactured under a "Declaration of conformity" in accordance with Article 12 of Directive 87/404/EEC.

d – to be secured to the vehicle by tensioning straps (clamps).

In the case of aluminium reservoirs, contact surface points must be designed to prevent corrosion or mechanical damage from occurring. Tensioning straps are to be positioned in such a way that they do not come in contact with the base connecting seams; the reservoir is not to be subjected to any stress that would jeopardise operating safety.

Coatings applied to aluminium reservoirs must not contain lead, and the top coat of paint must only be applied over a suitable primer coat. Steel threaded connections for aluminium reservoirs must have a corrosion-proof coating.

– only to be cleaned using non-alkaline cleaning agents (aluminium reservoir).

– to have the interior visible through the threaded connections.

– to be emptied at regular intervals to prevent the accumulation of condensation (drainage ring nut at the lowest point of the reservoir).

e – to require no maintenance if Item d is complied with.

f – no welding, heat treatment or other operation relevant to safety is to be per-

[10] Depending on the equipment mounted, an overall width of 2550 mm is possible.

[11] Without rotating beacon or strobe light.

https://truckmanualshub.com/

formed on the pressure-bearing walls of the reservoir (casing, base, ring nuts).

g – the internal supply pressure may exceed maximum operating pressure P_s by not more than 10% for a brief period.

Compressed-air reservoir identification plates

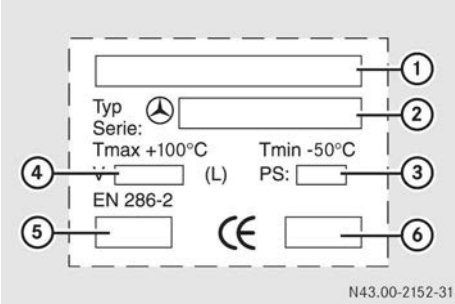

Example: identification plate on the steel reservoir

① Manufacturer
② MB part number
③ Maximum operating pressure (bar)
④ Volume (litres)
⑤ Year of manufacture
⑥ Testing establishment code number

https://truckmanualshub.com/

Publication details

Internet

Further information about Mercedes-Benz vehicles and about Daimler AG can be found on the following websites:

http://www.mercedes-benz.com

http://www.daimler.com

Editorial office

You are welcome to forward any queries or suggestions you may have regarding these Operating Instructions to:

Daimler AG, PC: CC, Customer Service, 70546 Stuttgart, Germany

© Daimler AG: not to be reprinted, translated or otherwise reproduced, in whole or in part, without the written permission of Daimler AG.

Vehicle manufacturer

Daimler AG

Mercedes-Benz 137

70327 Stuttgart

Germany

As at 18.11.2014

4055840516

Order no. 6518 5119 02 Part no. 405 584 05 16 Edition 04-15