https://truckmanualshub.com/

MINI EXCAVATORS

Concrete solutions. Always.

24SR

Operating weight 2.160 - 2.290 kg
Engine power 14,0 kW - 19,0 HP

25ZT

Operating weight 2.410 - 2.540 kg
Engine power 15,5 kW - 21,0 HP

EUROCOMACH®

https://truckmanualshub.com/

The extremely compact dimensions make the 24 SR (reduced rear rotation range) and 25 ZT (zero tail) your best allies to satisfy all your working needs.

https://truckmanualshub.com/

LIKE THE GREATEST, JUST SMALLER.

DIMENSIONS

The 25 ZT can rotate inside its own track width, even when the cab door is open. With the rear zero tail, the operator does not need to check the manoeuvring space during excavation operations.

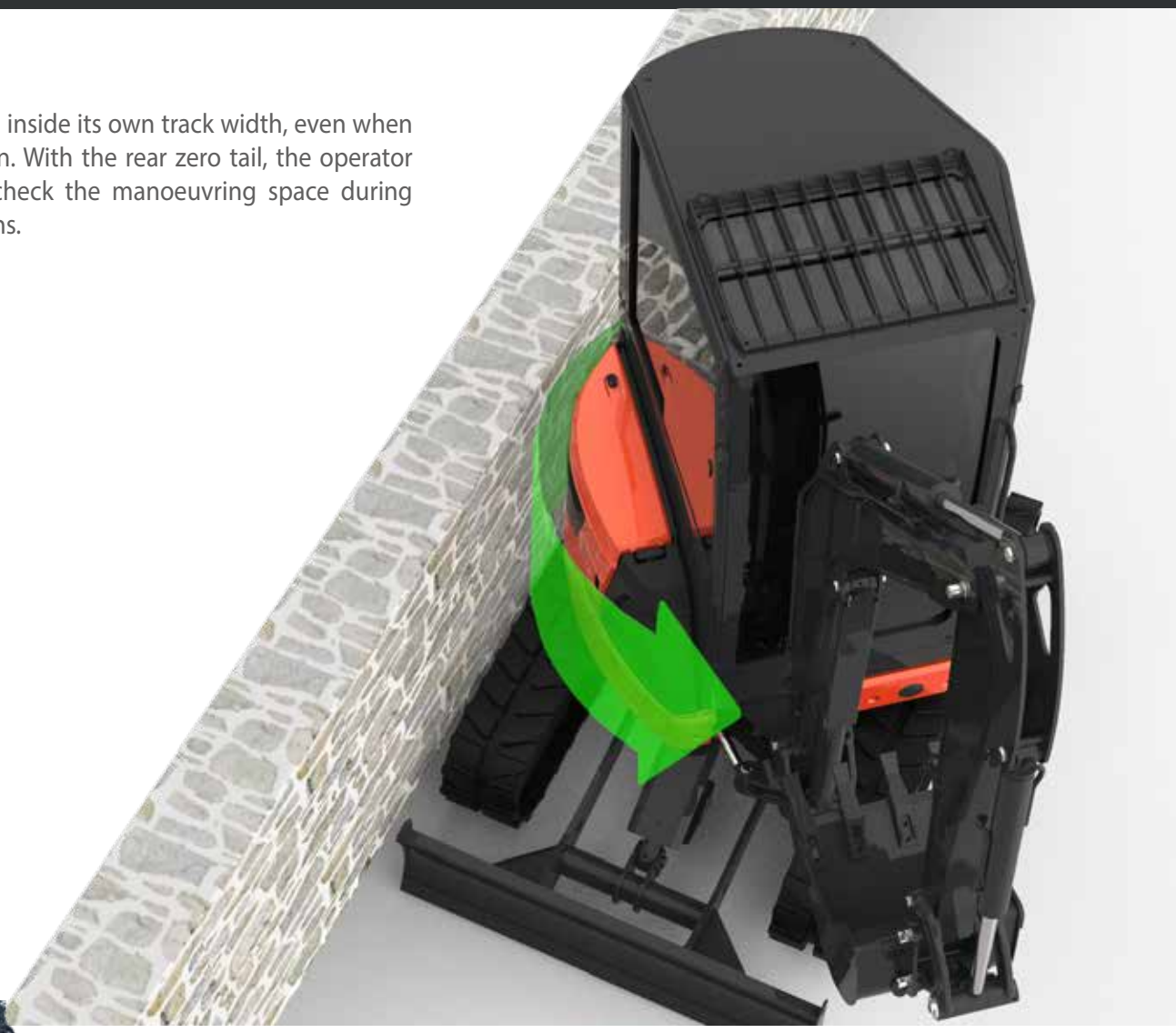

Both models can be equipped with four upright roll-bar protection or cab. The choice allows unmatched versatility: minimum footprint for maximum performance.

ZERO TAIL

https://truckmanualshub.com/

The ergonomic driver seat includes servo assisted controls, wrist rests and motion levers with closing pedals.
The foot rest pedals give the operator greater stability during the different work stages, especially when working on slopes.

https://truckmanualshub.com/

COMFORT, SAFETY AND FUNCTIONALITY. FINALLY TOGETHER

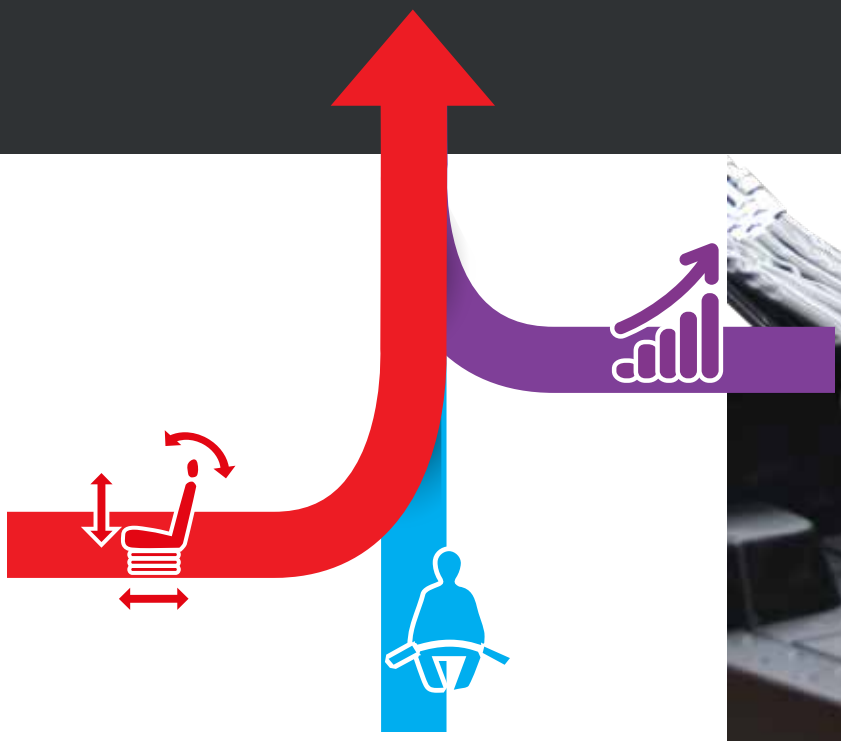

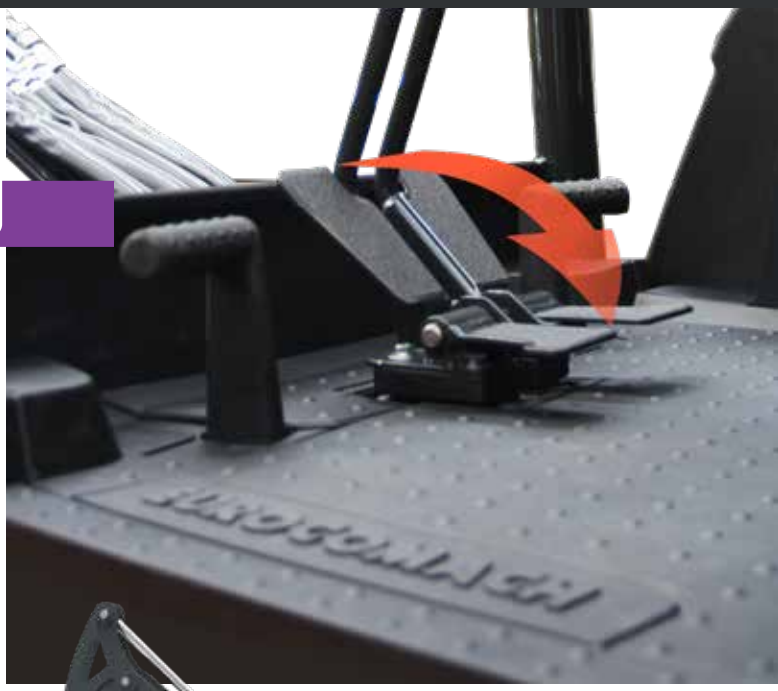

COMMANDS AND CONTROLS

Both models have two motion modes: first gear with reduced speed and high thrust force and second speed with greater transfer speed. Everything is controlled by a practical button above the backfill blade lever.
Motion can be controlled using the advancement lever and integrated folding pedals that, once closed, increase the space available to the operator and prevent accidental use.

The foot board flush with the door makes for stepless exit from the cab and facilitates floor cleaning operations. It was designed to be able to be removed easily to carry out any inspections or checks.

STRAIGHT TRAVEL

In case of simultaneous control of the services and motion, the hydraulic system with variable displacement pumps simultaneously ensures the fluidity of movements and straight driving of the machine.

AUTO TWO SPEED

When the excavator needs more thrust force, the automatic speed transmission intervenes, reducing the motion ratio.

https://truckmanualshub.com/

EVERY CONTROL IS IN YOUR HANDS.

The cabin, with its generous interior dimensions, offers some of the best interior space in its class.
The large width of the access door makes it easy to climb in and out.

The front windshield with assisted lift promotes maximum visibility due to its considerable width.
The adjustable suspension seat combined with the floating cabin, adequately dampens vibrations and bumps, maximizing operator comfort.

The cab version is also equipped with a glove compartment, a battery charger and a predisposition for the autoradio.

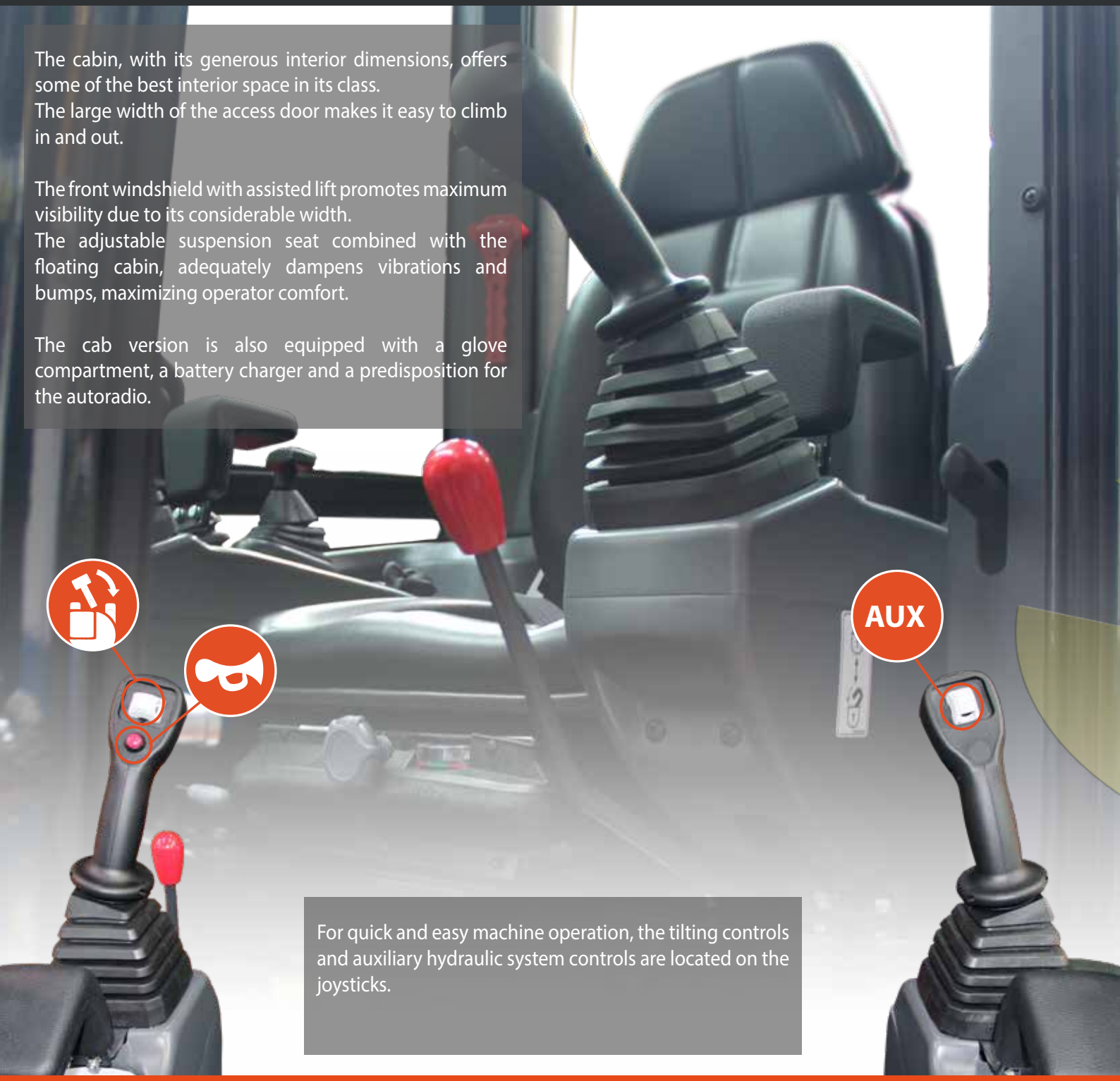

For quick and easy machine operation, the tilting controls and auxiliary hydraulic system controls are located on the joysticks.

https://truckmanualshub.com/

The special design of the body and protective structures give the operator a wide field of vision, allowing easy control of the front tracked part.

The large windshield along with the upper rear window lets the operator keep an eye on the entire work area while remaining comfortably seated.

WORK LIGHTS

A powerful light installed on the arm optimizes visibility even with low lighting.

https://truckmanualshub.com/

The position and design of the cab were designed to offer the operator the greatest possible visibility of all areas around the machine and the work area.

https://truckmanualshub.com/

FLEXIBILITY, COMPACTNESS, ERGONOMICS.

The practical additional external ballast (optional) can, when needed, further increase the excellent operating stability without compromising the overall size of the machine.

EFFICIENCY AND CONSUMPTION

The heart of the excavators is the efficient YANMAR 3TNV76 - Stage 5 engine designed and built to optimize performance and reduce fuel consumption.
The long intervals between programmed maintenance contribute to economic efficiency, reducing costs and machine downtime.

SAFETY

Machine safety means operator peace of mind. Sensors monitoring the manipulator position prevent accidental control of the machine. The excavator startup system does not allow ignition when control of the commands is active.
Safety belts, the cabin structure and rollbar with FOPS level I and TOPS certificate provide all of the safety needed in the cab in the event of an accident.

OPTIONAL COUNTERWEIGHT

https://truckmanualshub.com/

TRANSPORT ACCESSIBLE TO ALL.

The compact size and overall weight below 25 quintals make the machine suitable for loading on a trailer, making it possible to transport a complete range of equipment and accessories.

https://truckmanualshub.com/

MAINTENANCE HAS NEVER BEEN SO EASY.

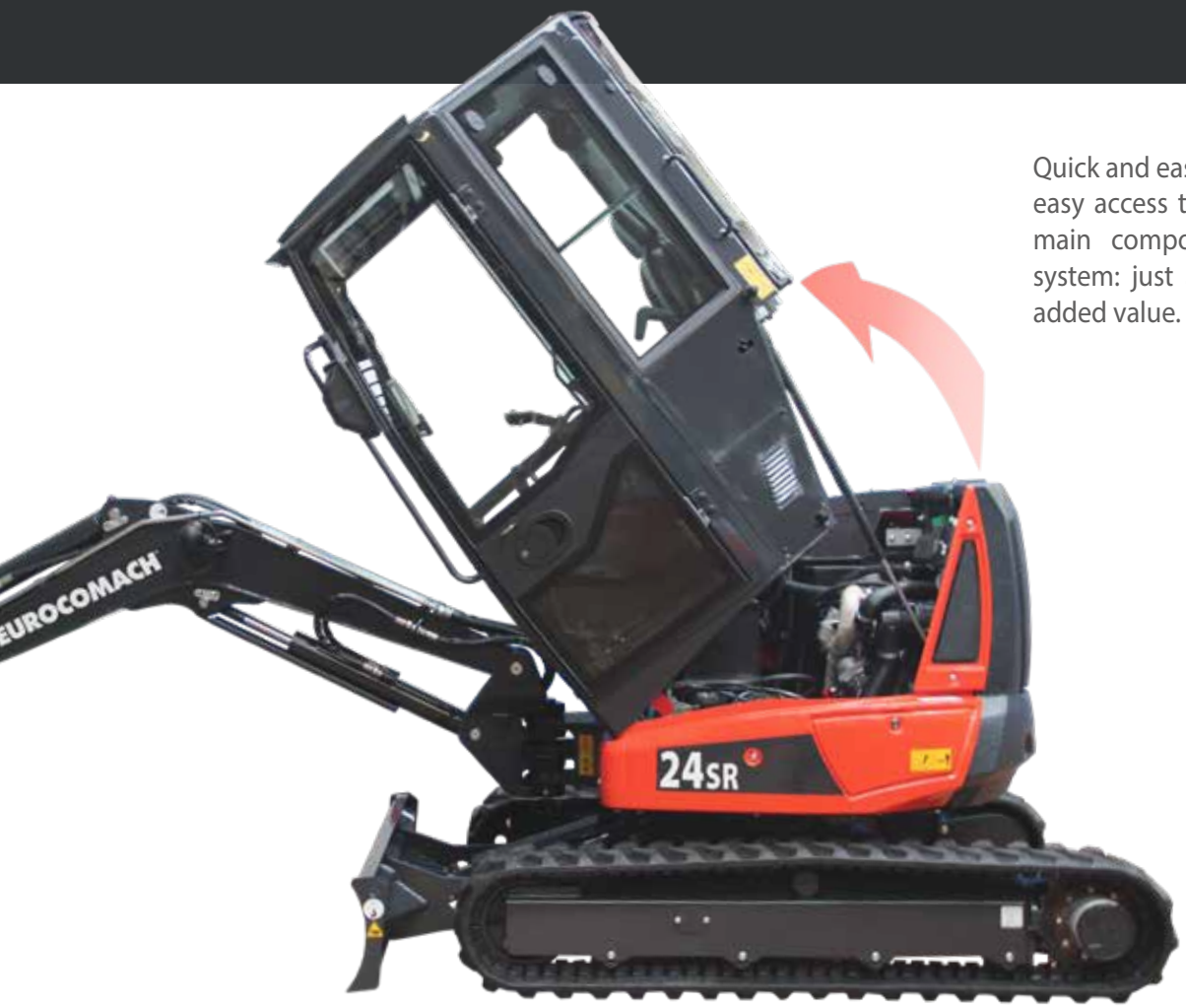

Quick and easy tipping of the cab gives easy access to the distributor and the main components of the hydraulic system: just a few gestures for major added value.

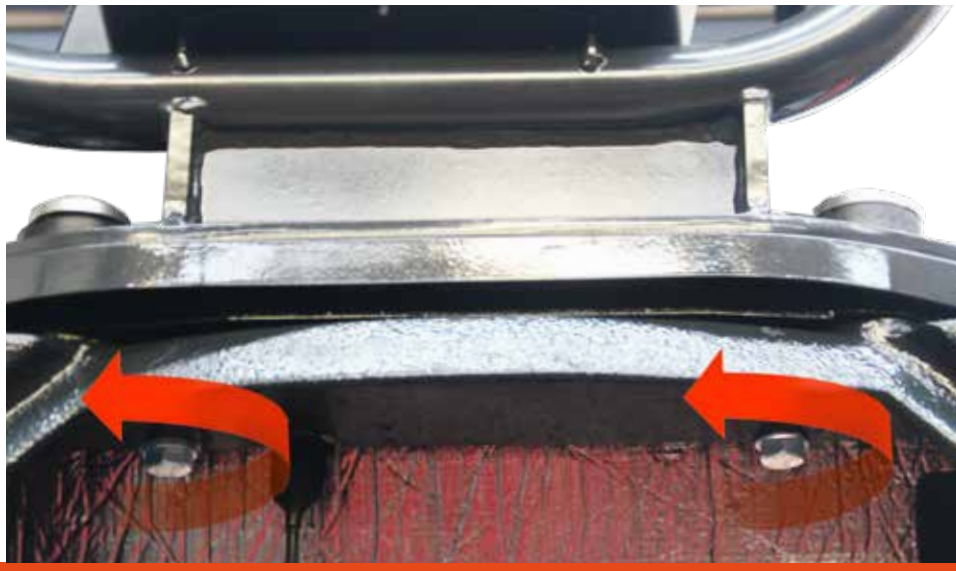

ACCESSIBILITY

The cab can be lifted by simply opening the rear compartment and removing the two mounting screws.

https://truckmanualshub.com/

The large gas tank built into the rear compartment allows accessibility and above ordinary routine maintenance.
The rear engine compartment offers quick access to all filters on the heat engine (fuel, oil and air) in addition to easy topping up of fuel and motor oil.

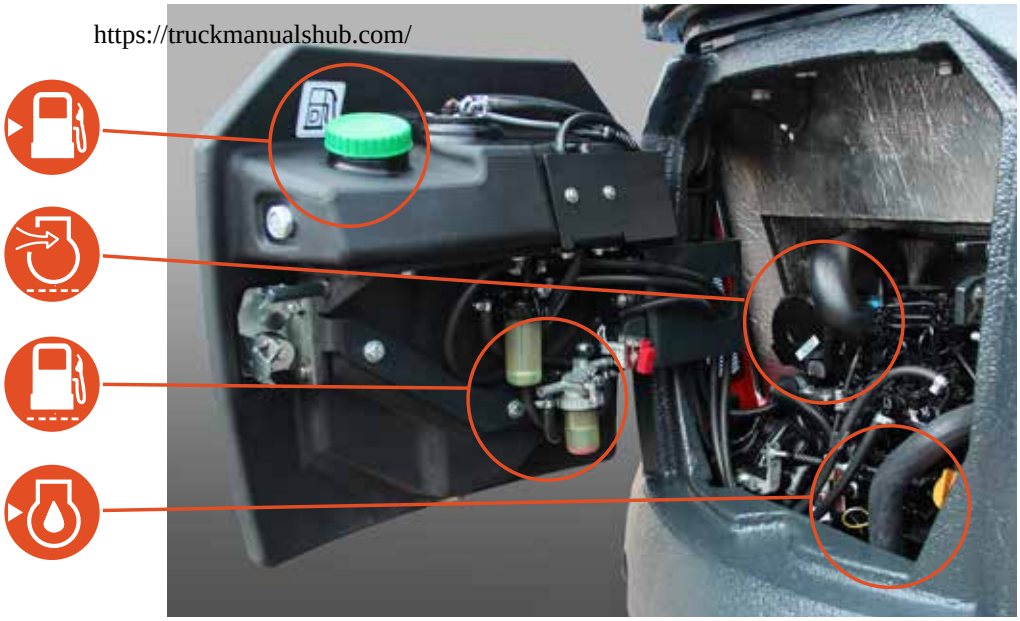

The side compartment opens to allow easy checks and cleaning of the heat exchanger and hydraulic oil filter.

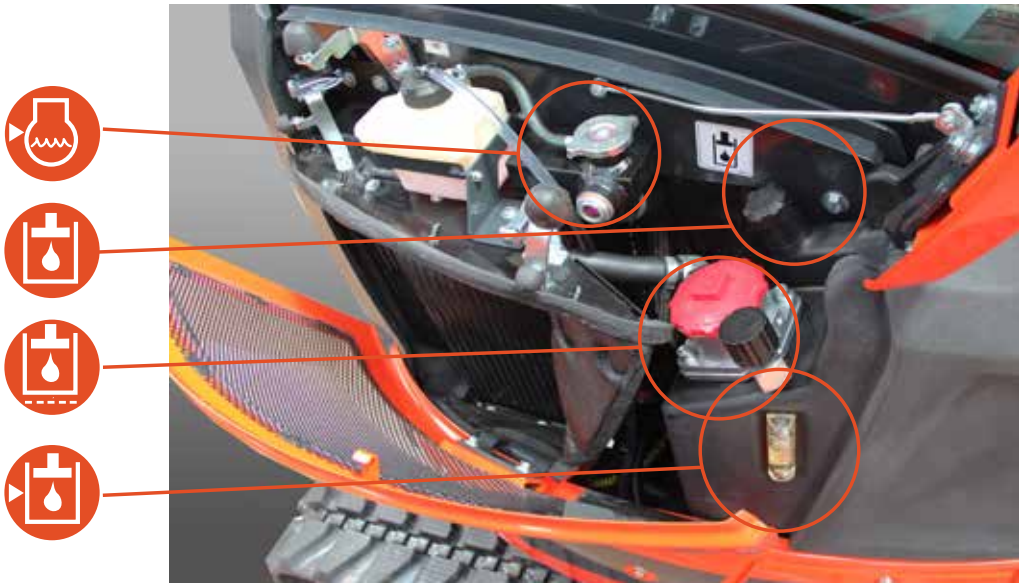

All access points for daily checks and for routine maintenance are concentrated in defined areas, optimizing machine downtime.
All elements are easily accessible and located in practical and functional positions.

The location of the cabin aeration filters allow them to be quickly checked and replaced if necessary.

ACCESSIBILITY

Common or dedicated access areas make every maintenance operation quick and easy.

https://truckmanualshub.com/

BUILT-IN TANK

The added value in the 24 SR and the 25 ZT is the presence of the fuel tank built into the rear ballast, which makes it unique in its class.

https://truckmanualshub.com/

THE IMPORTANCE OF BEING RELIABLE.

RELIABILITY

Designed and tested for high performance with continuous reliability.
The definition of the materials, the selection of components and design of the structures were created to exceed the most stressful and harsh work tests.
Standing out among these are the rotation column in fusion, the protections on the lifting cylinder and the steel blade and bonnets that increase efficiency and life of the product.

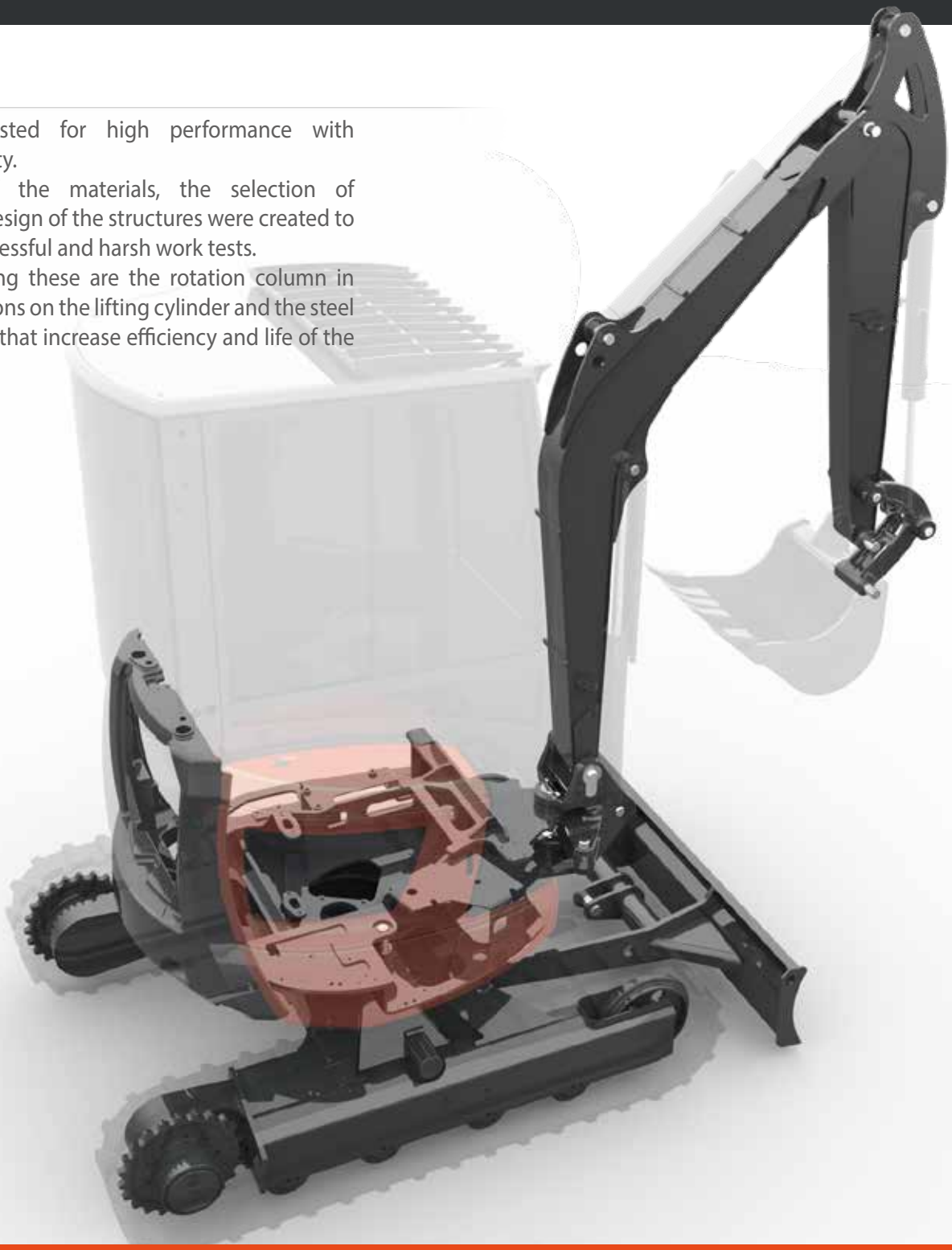

PERFORMANCE

https://truckmanualshub.com/

ECS: ONE CONCEPT, NUMEROUS POSSIBILITIES.

UTILITIES AND SERVICES

We listen to all your needs so we can propose the best possible machine solution.

We consider our products to be not only simple machines but the best opportunity for our clients.

Among the services provided, the following are available:

Customized paint
Various types of tracks
Auxiliary line hookups customized by type and quantity
Additional equipment

The many configurations available allow you to make the best choice in relation to the work to be performed.

https://truckmanualshub.com/

OPTIONALS.

The wide range of equipment especially designed for Eurocomach mini excavators ensures the most appropriate use of the machine, maximizing performance.
A complete offer of optional fittings ensures the best performances.

Certified and tested lifting hook and blocking valves with CE certification for material handling equipment

Hydraulic system for chopper with additional pump (22 lt/min)

Customized paint

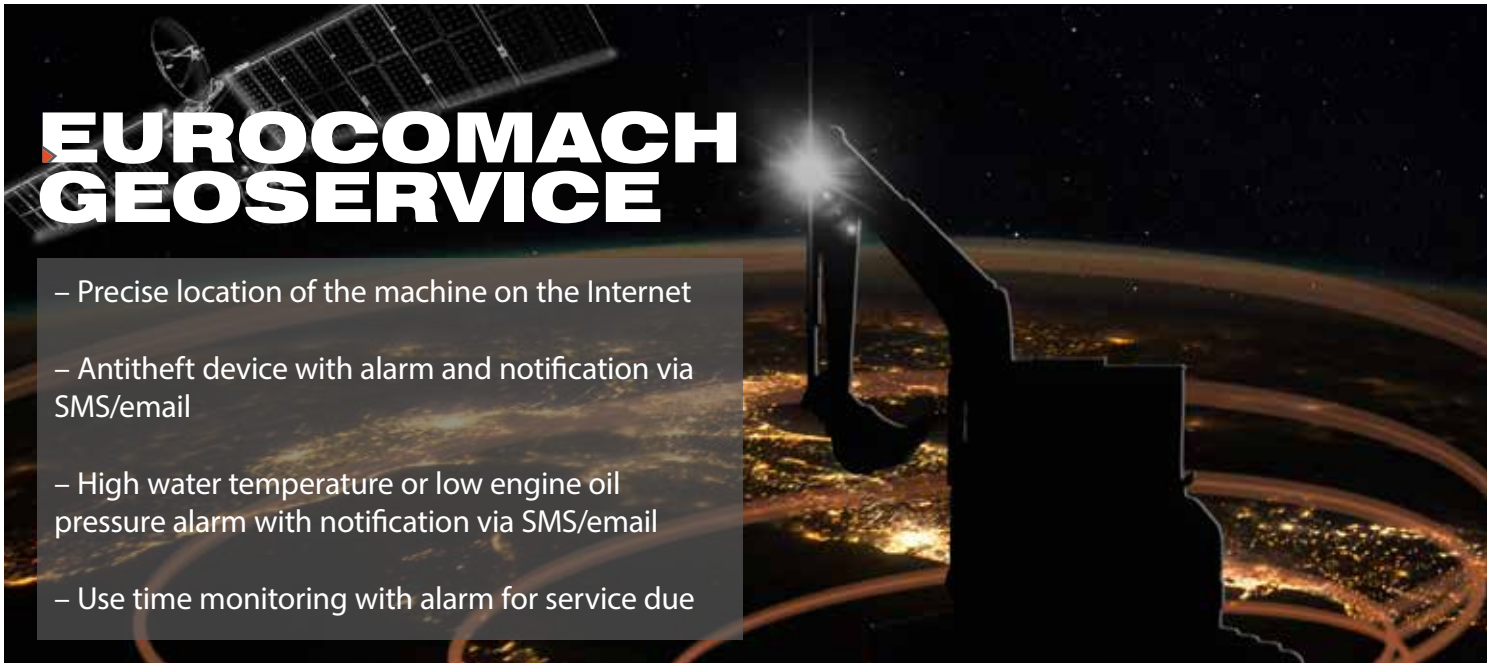

https://truckmanualshub.com/

	25 ZT	24 SR
ENGINE		
Diesel engine, 3 cylinders, displacement 1116 cc, watercooled	●	●
Electric preheater	●	●
Dry air filter with discharge valve and filter clogged indicator	●	●
Double cartridge air filter	●	●
Cartridge engine oil filter	●	●
Cartridge fuel filter	●	●
Fuel filter with transparent water separation container	●	●
Fuel tank discharge	●	●
Auxiliary liquid refrigerant expansion tank	●	●
CANOPY		
4 upright rollbar ROPS - TOPS - FOPS (Level I)	●	●
Adjustable mechanical suspension seat	●	●
Adjustable pneumatic suspension seat	○	○
Safety Belt	●	●
Wrist supports	●	●
Foot supports	●	●
Closable motion petals	●	●
Comfort rubber foot rest	●	●
Drivers seat platform assembled on 4 vibration damping elastic supports	●	●
Indicator light for hydraulic filter and engine air intake filter clog	●	●
Water temperature and fuel level indicators	●	●
Hour counter	●	●
High water temperature alarm	●	●
Warning buzzer	●	●
Single pole 12 volt power supply outlet	●	●
Glove compartment	●	●

	25 ZT	24 SR
CAB		
Cab ROPS - TOPS - FOPS (Level I)	○	○
Adjustable mechanical suspension seat	●	●
Adjustable pneumatic suspension seat	○	○
Safety Belt	●	●
Wrist supports	●	●
Foot supports	●	●
Closable motion petals	●	●
Comfort rubber foot rest	●	●
Drivers seat platform assembled on 4 vibration damping elastic supports	●	●
Heating system with speed adjustment	●	●
Sliding right side window	●	●
Sliding left side window	●	●
Windshield with assisted opening system (gas springs)	●	●
Rolling sun blind	●	●
Courtesy light	●	●
Indicator light for hydraulic filter and engine air intake filter clog	●	●
Water temperature and fuel level indicators	●	●
Hour counter	●	●
High water temperature alarm	●	●
Warning buzzer	●	●
Radio AM/FM USB	○	○
Single pole 12 volt power supply outlet	●	●
Glove compartment	●	●
Front windshield wipers with sprayer and speed control	●	●
SAFETY		
Machine blocking device during exit/access to the driver's seat	●	●
Engine ignition device only with the left console lowered	●	●
Anti-slip climbing plate	●	●
Climbing and descending handles	●	●
Emergency bar	●	●
Rearview mirror kit	●	●
Anti-drift safety valve on the first arm, second arm and backfill blade	○	○
Pressure accumulator that allows the arm to be lowered in the event of an engine failure	●	●

	25 ZT	24 SR
HYDRAULIC SYSTEM		
Open circuit hydraulic system with variable capacity pump	●	●
ISO hydraulic servo-control	●	●
Hydraulic oil intake filter	●	●
Rotation parking brake	●	●
Motion parking brake	●	●
Two speed motion system	●	●
Automatic movement speed change (Shift-down)	●	●
Single/double effect hydraulic system (e.g., hammer or drill) with electrical containment	●	●
Hydraulic setup for calliper rotor (with switches on bucket cylinder)	○	○
Hydraulic setup for chopper (with additional pump)	○	○
AUX 2: Double effect low capacity hydraulic set up with potentiometer control on the left joystick (excludes tilt operation)	○	○
ELECTRICAL SYSTEM		
Work lights on the lifting arm	●	●
Supplementary work lights on the lifting arm	○	○
Supplementary front canopy/cap lights	○	○
Supplementary rear canopy/cap lights	○	○
Rotating light	○	○
Battery disconnect switch	●	●
Watertight connectors (IP67)	●	●
UNDERCARRIAGE		
Backfill blade	●	●
Dozer blade cylinder protective casing	●	●
Motion engines casing	●	●
Rotating joint protective casing	●	●
Rubber tracks	●	●
Iron tracks	○	○
Rubber road pad for iron tracks	○	○
4 anchoring points for transport	●	●
UTILITY		
Antitheft system	○	○
Geo-service system for locating and remote diagnostics	○	○
Second excavating arm 1,150 mm	●	/
Second excavating arm 1,350 mm	○	●
Second excavating arm 1,550 mm	/	○
Additional external counterweight	○	○
Colour customizations (RAL specific)	○	○
4 anchoring points for lifting	●	●
On-board visual fuel level indicator	●	●
Lifting cylinder protective casing	●	●

STANDARD EQUIPMENT	●
OPTIONAL EQUIPMENT	○
NOT AVAILABLE	/

TECHNICALS SPECIFICATIONS

https://truckmanualshub.com/

Operating weight with cabin (with rubber tracks)		kg	2.360
Operating weight with canopy (with rubber tracks)		kg	2.230
Travelling speed		km/h	1ª: 0 ÷ 2,6 / 2ª: 0 ÷ 4,0
Slew speed		rpm	11
ENGINE			
Type			YANMAR 3TNV76 - Stage 5
Max Power (2.200 rpm)		kW - HP	14,0 - 19,0
Displacement		cc	1.116
Number of cylinders		n°	3
Cooling			water
Consumption		lt/h	2,8
Alternator		V (A)	12 (40)
Battery		V (Ah)	12 (65)
HYDRAULIC SYSTEM			
Pump type			variable flow
Pump displacement		cc	2 x 13+8,3
Pump capacity		lt/min	2 x 26,5+18
Max. circuit calibration pressure		bar	230
Auxiliary system:	Max capacity	lt/min	40
	Max pressure	bar	210
PERFORMANCES			
Max digging depth standard arm (optional arm)		mm	2.493 (2.693)
Max dumping height with canopy standard arm (optional arm)		mm	2.967 (3.106)
Max dumping height with cab standard arm (optional arm)		mm	2.836 (2.957)
Bucket breaking force (standard arm) ISO 6015		daN	2.200
Arm breaking force (standard arm) ISO 6015		daN	1.520
Traction force		daN	2.000
Ground bearing pressure with rubber tracks and canopy (with cabin)		kg/cm^2	0,26 (0,28)
Max slope			60% - 30°
DIMENSIONS			
Maximum width		mm	1.450
Total height		mm	2.395
Rear rotation radius		mm	750
Digging arm length std (optional)		mm	1.150 (1.350)
Tracks width		mm	250
Rollers number (for each side)		n°	4
FILLINGS			
Fuel tank		lt	26
Hydraulic oil tank		lt	29
Hydraulic circuit capacity		lt	40
Cooling system capacity		lt	5
Engine oil		lt	2,8
CONTROLS			
Boom, dipper stick, bucket and turret swing			2 pilot joysticks
Track movements (included counter rotation)			2 pilot levers
Dozer blade			pilot lever
Auxiliary circuit (simple or double effect)			electroproportional switch on right joystick
Boom swing			electroproportional switch on left joystick

TECHNICALS SPECIFICATIONS

https://truckmanualshub.com/

Operating weight with canopy (with rubber tracks)		kg	2.410
Operating weight with cabin (with rubber tracks)		kg	2.540
Travelling speed		km/h	1ª: 0 ÷ 2,6 / 2ª: 0 ÷ 4,3
Slew speed		rpm	11
ENGINE			
Type			YANMAR 3TNV76 - Stage 5
Max Power (2.200 rpm)		kW - HP	15,5 - 21,1
Displacement		cc	1.116
Number of cylinders		n°	3
Cooling			water
Consumption		lt/h	3,1
Alternator		V (A)	12 (40)
Battery		V (Ah)	12 (65)
HYDRAULIC SYSTEM			
Pump type			variable flow
Pump displacement		cc	2 x 13+8,3
Pump capacity		lt/min	2 x 28,5+18
Max. circuit calibration pressure		bar	230
Auxiliary system:	Max capacity	lt/min	45
	Max pressure	bar	210
PERFORMANCES			
Max digging depth standard arm (optional arm)		mm	2.725 (2.925)
Max dumping height with canopy standard arm (optional arm)		mm	3.354 (3.488)
Max dumping height with cab standard arm (optional arm)		mm	3.212 (3.330)
Bucket breaking force (standard arm) ISO 6015		daN	2.200
Arm breaking force (standard arm) ISO 6015		daN	1.450
Traction force		daN	2.200
Ground bearing pressure with rubber tracks and canopy (with cabin)		kg/cm^2	0,28 (0,29)
Max slope			60% - 30°
DIMENSIONS			
Maximum width		mm	1.500
Total height		mm	2.527
Rear rotation radius		mm	750
Digging arm length std (optional)		mm	1.350 (1.550)
Tracks width		mm	280
Rollers number (for each side)		n°	4
FILLINGS			
Fuel tank		lt	26
Hydraulic oil tank		lt	29
Hydraulic circuit capacity		lt	40
Cooling system capacity		lt	5
Engine oil		lt	2,8
CONTROLS			
Boom, dipper stick, bucket and turret swing			2 pilot joysticks
Track movements (included counter rotation)			2 pilot levers
Dozer blade			pilot lever
Auxiliary circuit (simple or double effect)			electroproportional switch on right joystick
Boom swing			electroproportional switch on left joystick

https://truckmanualshub.com/

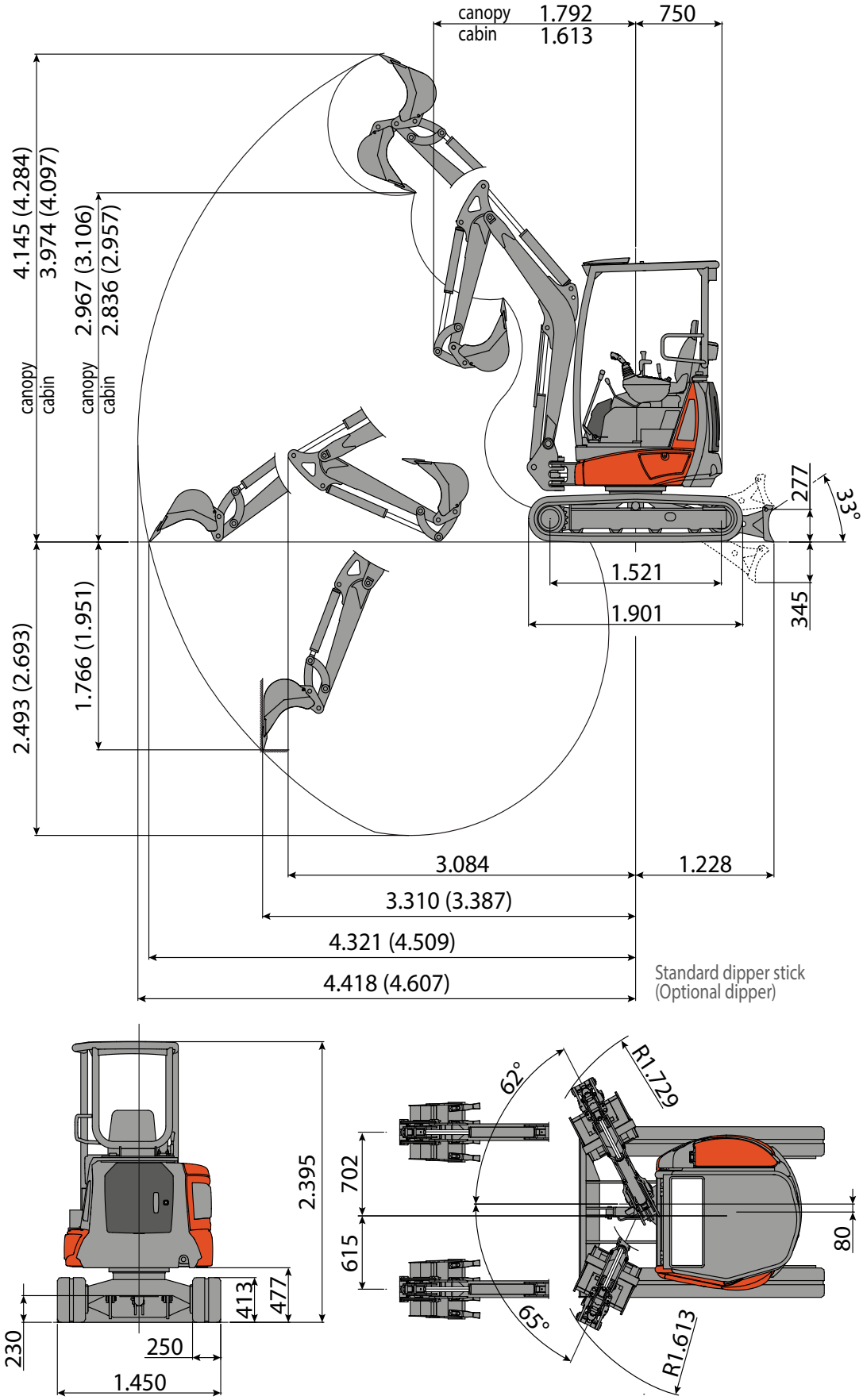

https://truckmanualshub.com/

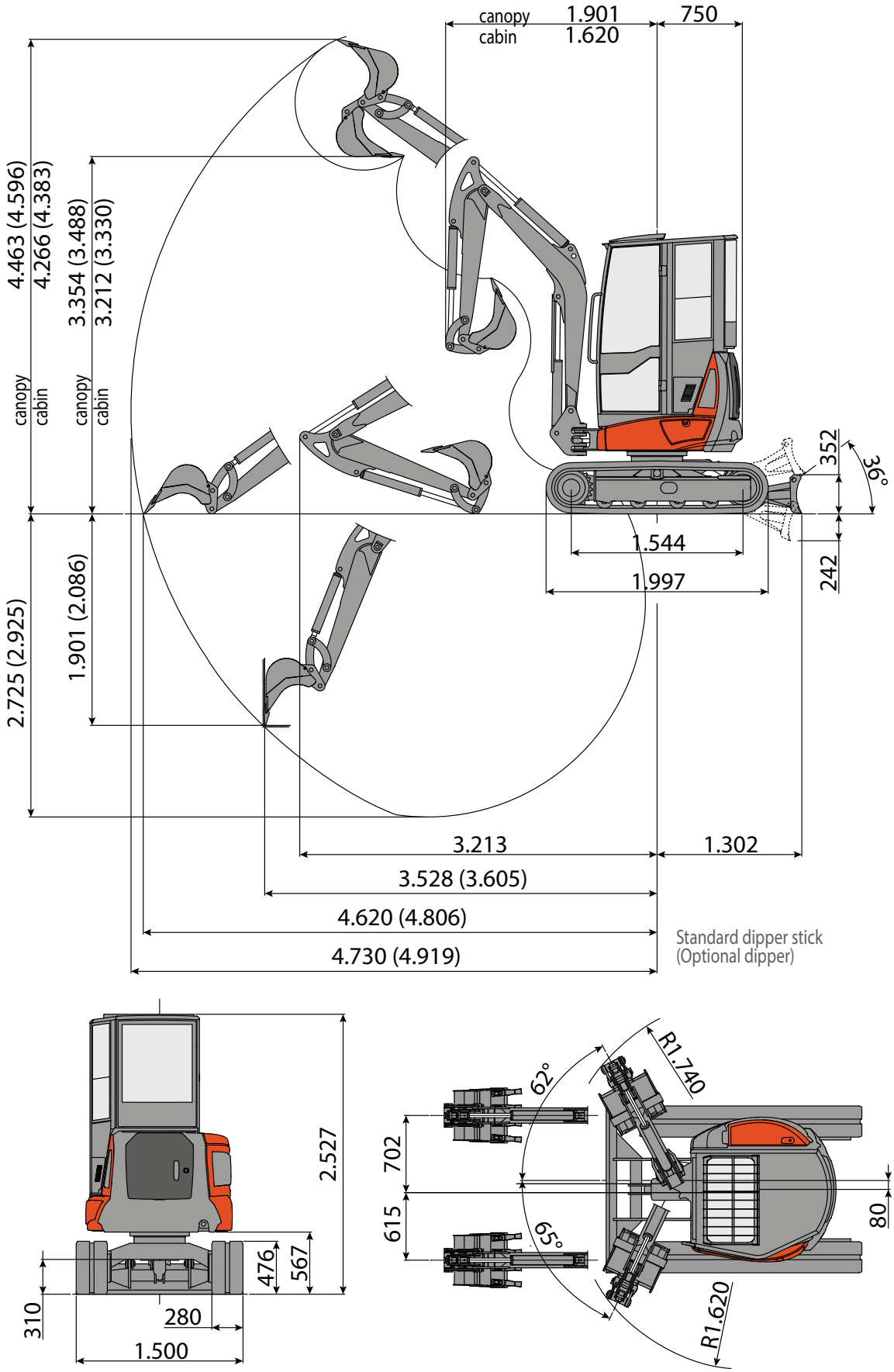

LIFTING CAPACITY

https://truckmanualshub.com/

The lifting capacity is based on ISO 10567 and does not exceed 75% of the static tipping load or 87% of the hydraulic lifting capacity of the machine.

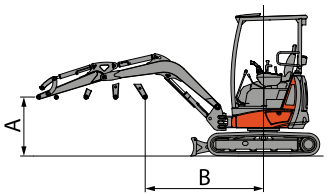

The straddle refers to the centre of rotation.
* Indicates the hydraulic load limit.
0 m refers to ground level.
The machine is understood to be equipped with a cab, rubber tracks, without a bucket and without a quick coupling.

Front Side Unit: ton

Raised Blade, Standard Arm (1150 mm)
( ) the values in parenthesis are with additional ballast: 0.12 ton

A (m)	B (m)								
	1.0		2.0		3.0		MAX		
	Front	Side	Front	Side	Front	Side	Front	Side	MAX
3.0					0,37 (0,43)	0,28 (0,34)	0,19 (0,25)	0,18 (0,24)	2,90 m
2.0					0,36 (0,42)	0,32 (0,38)	0,2 (0,24)	0,2 (0,24)	3,58 m
1.0			*0,76 (*0,76)	0,6 (0,42)	0,36 (0,41)	0,36 (0,42)	0,21 (0,25)	0,22 (0,26)	3,80 m
0			*0,69 (*0,69)	0,55 (0,36)	0,34 (0,4)	0,29 (0,35)	0,23 (0,27)	0,23 (0,27)	3,69 m
-1.0	*0,78 (*0,78)	*0,78 (*0,78)	*0,64 (*0,64)	0,49 (0,3)	0,33 (0,39)	0,28 (0,34)	0,24 (0,29)	0,24 (0,29)	3,19 m

Lowered Blade, Standard Arm (1150 mm)
( ) the values in parenthesis are with additional ballast: 0.12 ton

A (m)	B (m)								
	1.0		2.0		3.0		MAX		
	Front	Side	Front	Side	Front	Side	Front	Side	MAX
3.0					*0,58 (*0,58)	0,28 (0,34)	*0,38 (*0,38)	0,18 (0,24)	2,90 m
2.0					*0,57 (*0,57)	0,32 (0,34)	*0,4 (*0,4)	0,2 (0,24)	3,58 m
1.0			*0,97 (*0,97)	0,6 (0,71)	*0,56 (*0,56)	0,36 (0,38)	*0,41 (*0,41)	0,22 (0,26)	3,80 m
0			*1,00 (*1,00)	0,55 (0,65)	*0,53 (*0,53)	0,29 (0,42)	*0,43 (*0,43)	0,23 (0,27)	3,69 m
-1.0	*1,16 (*1,16)	*0,78 (*0,78)	*0,95 (*0,95)	0,49 (0,59)	*0,53 (*0,53)	0,28 (0,35)	*0,44 (*0,44)	0,24 (0,29)	3,19 m

Raised Blade, Optional Arm (1350 mm)
( ) the values in parenthesis are with additional ballast: 0.12 ton

A (m)	B (m)								
	1.0		2.0		3.0		MAX		
	Front	Side	Front	Side	Front	Side	Front	Side	MAX
3.0					0,36 (0,42)	0,27 (0,33)	0,13 (0,19)	0,12 (0,18)	3,18 m
2.0					0,35 (0,41)	0,31 (0,36)	0,14 (0,18)	0,14 (0,18)	3,79 m
1.0			0,75 (0,75)	0,59 (0,41)	0,34 (0,4)	0,35 (0,41)	0,15 (0,19)	0,16 (0,2)	4,00 m
0			0,68 (0,68)	0,54 (0,35)	0,33 (0,39)	0,28 (0,33)	0,17 (0,21)	0,17 (0,21)	3,90 m
-1.0	0,77 (0,77)	0,77 (0,77)	*0,63 (*0,63)	0,48 (0,29)	0,32 (0,38)	0,27 (0,33)	0,18 (0,23)	0,17 (0,23)	3,44 m

Lowered Blade, Optional Arm (1350 mm)
( ) the values in parenthesis are with additional ballast: 0.12 ton

A (m)	B (m)								
	1.0		2.0		3.0		MAX		
	Front	Side	Front	Side	Front	Side	Front	Side	MAX
3.0					*0,57 (*0,57)	0,27 (0,33)	*0,32 (*0,32)	0,12 (0,18)	3,18 m
2.0					*0,56 (*0,56)	0,31 (0,33)	*0,33 (*0,33)	0,14 (0,18)	3,79 m
1.0			0,96 (0,96)	0,59 (0,69)	*0,55 (*0,55)	0,35 (0,36)	*0,35 (*0,35)	0,16 (0,2)	4,00 m
0			0,99 (0,99)	0,54 (0,64)	*0,52 (*0,52)	0,28 (0,41)	*0,37 (*0,37)	0,17 (0,21)	3,90 m
-1.0	1,15 (1,15)	0,77 (0,77)	*0,94 (*0,94)	0,48 (0,58)	*0,51 (*0,51)	0,27 (0,33)	*0,38 (*0,38)	0,17 (0,23)	3,44 m

LIFTING CAPACITY

https://truckmanualshub.com/

The lifting capacity is based on ISO 10567 and does not exceed 75% of the static tipping load or 87% of the hydraulic lifting capacity of the machine.

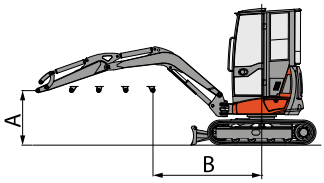

The straddle refers to the centre of rotation.
* Indicates the hydraulic load limit.
0 m refers to ground level.
The machine is understood to be equipped with a cab, rubber tracks, without a bucket and without a quick coupling.

Front Side Unit: ton

Raised Blade, Standard Arm (1350 mm)
( ) the values in parenthesis are with additional ballast: 0.12 ton

A (m)	B (m)								
	1.0		2.0		3.0		MAX		
	Front	Side	Front	Side	Front	Side	Front	Side	MAX
3.0					0,39 (0,44)	0,3 (0,35)	0,21 (0,26)	0,2 (0,25)	3,40 m
2.0					0,38 (0,44)	0,33 (0,39)	0,22 (0,26)	0,21 (0,25)	3,94 m
1.0			*0,76 (*0,76)	0,63 (0,45)	0,37 (0,43)	0,38 (0,44)	0,24 (*0,32)	0,24 (0,27)	4,12 m
0			*0,69 (*0,69)	0,58 (0,39)	0,36 (0,41)	0,3 (0,36)	0,25 (0,29)	0,24 (0,28)	3,99 m
-1.0	*0,78 (*0,78)	*0,78 (*0,78)	*0,64 (*0,64)	0,53 (0,34)	0,35 (0,41)	0,3 (0,35)	0,27 (0,31)	0,25 (0,3)	3,51 m

Lowered Blade, Standard Arm (1350 mm)
( ) the values in parenthesis are with additional ballast: 0.12 ton

A (m)	B (m)								
	1.0		2.0		3.0		MAX		
	Front	Side	Front	Side	Front	Side	Front	Side	MAX
3.0					*0,58 (*0,58)	0,3 (0,44)	*0,38 (*0,38)	0,2 (0,25)	3,40 m
2.0					*0,57 (*0,57)	0,33 (0,35)	*0,4 (*0,4)	0,21 (0,25)	3,94 m
1.0			*0,97 (*0,97)	0,63 (0,74)	*0,56 (*0,56)	0,38 (0,39)	*0,41 (*0,41)	0,24 (0,27)	4,12 m
0			*1,00 (*1,00)	0,58 (0,68)	*0,53 (*0,53)	0,3 (0,44)	*0,43 (*0,43)	0,24 (0,28)	3,99 m
-1.0	*1,16 (*1,16)	*0,78 (*0,78)	*0,95 (*0,95)	0,53 (0,63)	*0,53 (*0,53)	0,3 (0,36)	*0,44 (*0,44)	0,25 (0,3)	3,51 m

Raised Blade, Optional Arm (1550 mm)
( ) the values in parenthesis are with additional ballast: 0.12 ton

A (m)	B (m)								
	1.0		2.0		3.0		MAX		
	Front	Side	Front	Side	Front	Side	Front	Side	MAX
3.0					0,38 (0,44)	0,29 (0,35)	0,05 (0,1)	0,04 (0,09)	3,65 m
2.0					0,37 (0,43)	0,32 (0,38)	0,06 (0,1)	0,05 (0,1)	4,15 m
1.0			*0,75 (*0,75)	0,62 (0,44)	0,36 (0,42)	0,37 (0,43)	0,08 (0,16)	0,08 (0,12)	4,32 m
0			*0,68 (*0,68)	0,57 (0,38)	0,35 (0,41)	0,29 (0,35)	0,09 (0,13)	0,08 (0,12)	4,20 m
-1.0	*0,77 (*0,77)	*0,77 (*0,77)	*0,63 (*0,63)	0,52 (0,33)	0,34 (0,4)	0,29 (0,35)	0,11 (0,15)	0,09 (0,14)	3,75 m

Lowered Blade, Optional Arm (1550 mm)
( ) the values in parenthesis are with additional ballast: 0.12 ton

A (m)	B (m)								
	1.0		2.0		3.0		MAX		
	Front	Side	Front	Side	Front	Side	Front	Side	MAX
3.0					*0,57 (*0,57)	0,29 (0,43)	*0,22 (*0,22)	0,04 (0,09)	3,65 m
2.0					*0,56 (*0,56)	0,32 (0,35)	*0,24 (*0,24)	0,05 (0,1)	4,15 m
1.0			*0,96 (*0,96)	0,62 (0,73)	*0,55 (*0,55)	0,37 (0,38)	*0,25 (*0,25)	0,08 (0,12)	4,32 m
0			*1,00 (*1,00)	0,57 (0,68)	*0,53 (*0,53)	0,29 (0,43)	*0,27 (*0,27)	0,08 (0,12)	4,20 m
-1.0	*1,15 (*1,15)	*0,77 (*0,77)	*0,94 (*0,94)	0,52 (0,62)	*0,52 (*0,52)	0,29 (0,35)	*0,28 (*0,28)	0,09 (0,14)	3,75 m

https://truckmanualshub.com/

EUROCOMACH®

Sampierana S.p.A.
Via Leonardo da Vinci, 40 47021
S. Piero in Bagno (FC) - ITALY
Tel +39 0543.904211

www.eurocomach.com

COMPANY WITH
QUALITY SYSTEM
CERTIFIED BY DNV GL
= ISO 9001 =

The information contained in this brochure is of a general nature. Sampierana S.p.A. reserves the right to change the product technical data and characteristics at any time without prior notice. The photographs are for illustrative purposes only and do not necessarily refer to products in standard conditions. For instructions on the correct use of the products, please consult the use and maintenance manual. Sampierana S.p.A. shall not be liable for damages or injuries resulting from failure to follow the instructions contained in the use and maintenance manual.