https://truckmanualshub.com/

WEAM007700

Operation & Maintenance Manual

GALEO

PC14R-2

HYDRAULIC EXCAVATOR

SERIAL NUMBER

PC14R-2 F00003 and up

WARNING

Unsafe use of this machine may cause serious injury or death. Operators and maintenance personnel must read this manual before operating or maintaining this machine.
This manual should be kept inside the cab for reference and periodically reviewed by all personnel who will come into contact with the machine.

KOMATSU

Utility

https://truckmanualshub.com/

https://truckmanualshub.com/

1.1 FOREWORD

- This manual has been compiled by Komatsu Utility S.p.A. in order to supply customers with all the necessary information on the machine and on safety regulations, as well as the use and maintenance instructions that enable the operator to exploit the capacity of the machine with optimal results and to keep the machine efficient over time.
- The operation manual, together with the spare parts catalogue, is an integral part of the machine and must accompany it, even when it is resold, until its final disposal.
- The manual must be handled with the greatest care and always kept on board the machine, so that it can be consulted at any moment; it must be placed in the appropriate compartment inside the seat support, where the registration documents and the logbook are usually kept.
- This manual must be given to the staff who have to use the machine and carry out the routine maintenance operations; they must read the contents carefully more than once, in such a way as to clearly understand what are the correct operating conditions and the dangerous conditions that must be avoided.
  In case of loss or damage, request a new copy to Komatsu or your Komatsu Dealer.
- The illustrations contained in this manual may represent machine configurations available on request.
  Komatsu machines are constantly improved in order to increase their efficiency and reliability; this manual sums up all the information regarding the most recent technology applied at the moment in which the machine is launched.
  For any further and/or updated information, contact your Komatsu Dealer.
- Punctual periodic annotations regarding the maintenance operations that have been carried out are important, since they provide a clear report on the situation and say exactly what has been done and what has to be done after the next maintenance interval. Therefore, it is advisable to consult both the hour meter and the maintenance plan frequently.
- Over the years Komatsu Dealers have gathered considerable experience in customer service.
  If more information is needed, do not hesitate to contact your Komatsu Dealer: he always knows how to get the best performance from the machine, he can recommend the equipment that is most suitable for specific needs and can provide the technical assistance necessary for any change that may be required to conform the machine to the safety standards and traffic rules.
  Furthermore, Komatsu Dealers also offer assistance for the supply of Komatsu genuine spare parts, which guarantee safety and interchangeability.
- The table included in this manual must be filled in with the machine data, which are also the data that must be communicated to the Dealer when requiring assistance and ordering spare parts.

⚠ CAUTION

- **The incorrect use of the machine and inappropriate maintenance operations may cause serious injury and even death.**
- **Operators and maintenance personnel must carefully read this manual before using the machine or performing maintenance operations.**
- **Any serious accident that may occur during the use of the machine or during maintenance operations is due to failure to comply with the instructions given herein.**
- **The application of the procedures and precautions described in this manual will ensure safety only provided that the machine is used correctly.**
  If the machine is used for any purpose or in any way other than those described herein, the operator shall be responsible for his own safety and for the safety of any other person involved.

https://truckmanualshub.com/

1.2 INFORMATION ON SAFETY

Many accidents are caused by insufficient knowledge of and failure to comply with the safety regulations prescribed for the maintenance operations that must be performed on the machine.
In order to avoid accidents, before starting work and before carrying out any maintenance operation, carefully read and be sure to understand all the information and warnings contained in this manual and given on the plates applied onto the machine. To enable the operator to use this machine safely, safety precautions are explained in this manual and labels and warning plates are affixed to the machine to highlight situations involving potential hazards and suggest how to avoid them.

Terminology used in the signs

The following words are used in the signs to inform the user that there is a potential hazard that may lead to personal injury or damage to property.
In this manual, on the labels and on the plates, the following words are used to express the potential level of the hazard.

⚠ DANGER

- **Indicates a situation of imminent danger that, if not avoided, may cause serious injury and even death. The use of this term must be limited to situations of extreme danger.**

⚠ WARNING

- **Indicates a situation of potential danger that, if not avoided, may cause serious injury and even death.**

⚠ CAUTION

- **Indicates a situation of potential danger that, if not avoided, may cause moderate injury. This term can also be used as a warning against dangerous interventions.**

Other terms used in the signs

In addition to those indicated above, the following warning terms are used to recommend the precautions to be taken to protect the machine or to supply useful information.

IMPORTANT

- **This term is used to indicate precautions that must be taken in order to avoid actions that may shorten the life of the machine.**

NOTE

- This word is used to indicate a useful piece of information.

Komatsu cannot reasonably predict every circumstance that might involve a potential hazard during the operation or maintenance of the machine; for this reason, the safety warnings included in this manual and applied onto the machine may not include all possible safety precautions.
If all the instructions given in relation to this machine are kept to, the operators and anyone in the vicinity can work in total safety, and do not run the risk of damaging the machine. In case of doubt regarding the safety measures necessary for some procedures, contact Komatsu or your local Komatsu Dealer.

https://truckmanualshub.com/

DANGER

- **Before starting any maintenance operation, position the machine on a firm and level surface, lower the equipment to the ground, engage the safety locks of the equipment and the controls, and stop the engine.**

DANGER

- **To make the information clearer, some illustrations in this manual represent the machine without safety guards. Do not use the machine without guards and do not start the engine when the hood is open, unless this is expressly prescribed for certain maintenance operations.**

WARNING

- **It is strictly forbidden to modify the setting of the hydraulic system safety valves; Komatsu cannot be held liable for any damage to persons, property or the machine, if this has been tampered with by modifying the standard settings of the hydraulic system.**

WARNING

- **Before carrying out any electric welding, disconnect the battery and the alternator. (See "2.8.13 PRECAUTIONS TO BE TAKEN WHEN HANDLING THE BATTERY AND THE ALTERNATOR").**

WARNING

- **Install only authorized optional equipment (see "6.1 AUTHORIZED OPTIONAL EQUIPMENT".**

DANGER

- **It is absolutely forbidden to operate the machine while standing on the ground.**
  Every single manoeuvre must be carried out by the operator, correctly seated in driving position.

https://truckmanualshub.com/

1.3 INTRODUCTION

1.3.1 INTENDED USE OF THE MACHINE

The Komatsu machines described in this manual have been designed and constructed to be used mainly for EXCAVATION and EARTH-MOVING OPERATIONS.

If provided with suitable safety devices, they can be used with authorized optional equipment having the characteristics illustrated in paragraph "6.1 AUTHORIZED OPTIONAL EQUIPMENT".

1.3.2 IMPROPER OR UNAUTHORIZED USES

⚠ CAUTION

- **This paragraph describes some of the improper or unauthorized uses of the machine; since it is impossible to predict all the possible improper uses, if it is necessary to use the machine for particular applications, contact your Komatsu Dealer before carrying out the work.**

IMPORTANT

- **The instructions regarding the authorized optional equipment are given in the relevant operation and maintenance manuals; if the equipment is supplied by Komatsu, these publications are enclosed to this manual.**
- **The instructions regarding the assembly of the authorized equipment, the controls requiring special arrangements on the machine and the hydraulic couplings necessary for the operation of such equipment are grouped in the final section of this manual.**

Komatsu machines are constructed exclusively for the handling, excavation and treatment of inert materials; therefore, the following uses are absolutely forbidden:

- USE OF THE MACHINE BY MINORS OR INEXPERIENCED PERSONS.
- USE OF THE MACHINE FOR LIFTING PERSONS OR OBJECTS.
- TRANSPORT OF CONTAINERS WITH FLAMMABLE OR DANGEROUS FLUIDS.
- USE OF THE BUCKET FOR DRIVING OR EXTRACTING PILES.
- USE OF THE MACHINE FOR TOWING DAMAGED VEHICLES.

1.3.3 MAIN CHARACTERISTICS

- Simple and easy operation.
- Hydrostatic transmission obtained through two axial piston motors that operate epicyclic reduction gears.
- Rotation of the turret achieved by means of an axial piston hydraulic motor acting on an epicyclic reduction gear.
- Main equipment controlled through servo levers ensuring also combined movements that can be modulated proportionally and continually.
- Boom swing and optional equipment operated through foot pedal controls.
- Travel and blade operated through levers.
- Travel speed selection push button (optional).
- Hydraulic track gauge adjustment (optional).
- Complete series of instruments visible from the operating position.
- Lever accelerator.
- Easy maintenance with simplified intervals.

https://truckmanualshub.com/

1.3.4 RUNNING-IN

Every machine is scrupulously adjusted and tested before delivery.
A new machine, however, must be used carefully for the first 100 hours, in order to ensure proper running-in of the various components.
If the machine is subjected to excessive work load at the beginning of operation, its potential productivity and its functionality will be shortly and untimely reduced.
Every new machine must be used carefully, paying special attention to the following instructions:

- After the start, let the engine idle for 5 minutes, in such a way as to warm it up gradually before actual operation.
- Avoid operating the machine with the limit loads allowed or at high speed.
- Avoid abrupt starts or accelerations, useless sudden decelerations and abrupt reversals.

SYNTHETIC BIODEGRADABLE OIL TYPE HEES

For machines in which synthetic biodegradable oil type HEES is used, perform the following operations in addition to the standard maintenance operations:

- After the first 50 hours of operation, change the hydraulic circuit drain filter.
- After the first 500 hours of operation, change the hydraulic circuit oil.

IMPORTANT

- **When changing the oil filters (cartridges), check their inner part to make sure that there are no deposits. If considerable deposits are observed, find out what may have caused them before starting the machine.**
- **The number of operating hours is indicated by the hour meter.**

1.3.5 POSITIONS AND DIRECTIONS OF THE MACHINE

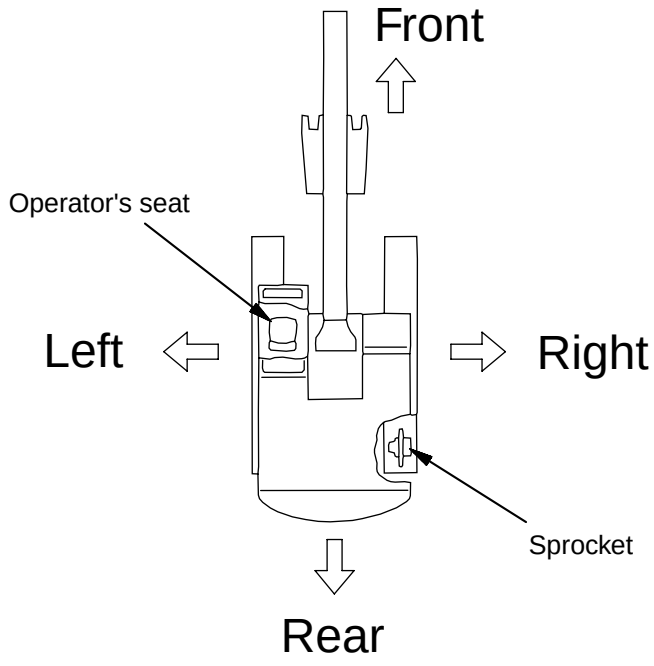

In this manual, the terms front/forward, rear/backward, left, and right refer to the travel direction as seen from the operator seat when it is facing the front and the sprocket is at the rear of the machine.

https://truckmanualshub.com/

1.4 PRODUCT IDENTIFICATION

The Komatsu excavator and its main components are identified by serial numbers stamped on the identification plates.
The serial number and the identification numbers of the components are the only numbers that must be communicated to the Dealer when requiring assistance and ordering spare parts.

1.4.1 MACHINE SERIAL NUMBER

The machine serial number is stamped on the front upper part of the main frame, on the left side.

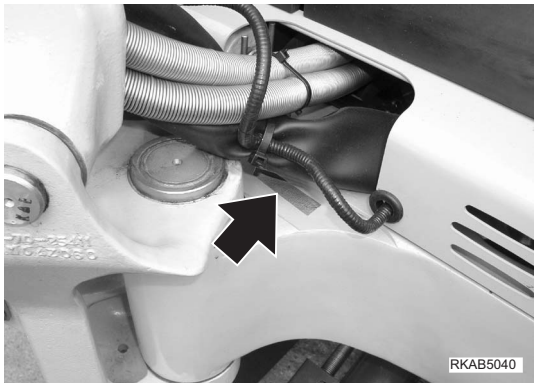

1.4.2 MACHINE IDENTIFICATION PLATE AND PRODUCT IDENTIFICATION NUMBER (PIN)

The Komatsu excavators described in this manual are CE marked, in fact they are in compliance with the EU harmonised standards.
The plate with the CE marking is applied to the front wall of the main frame, on the right side.

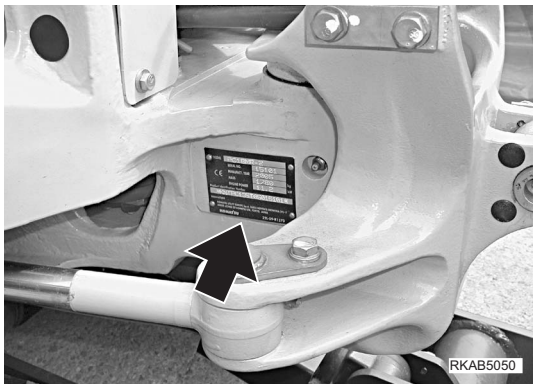

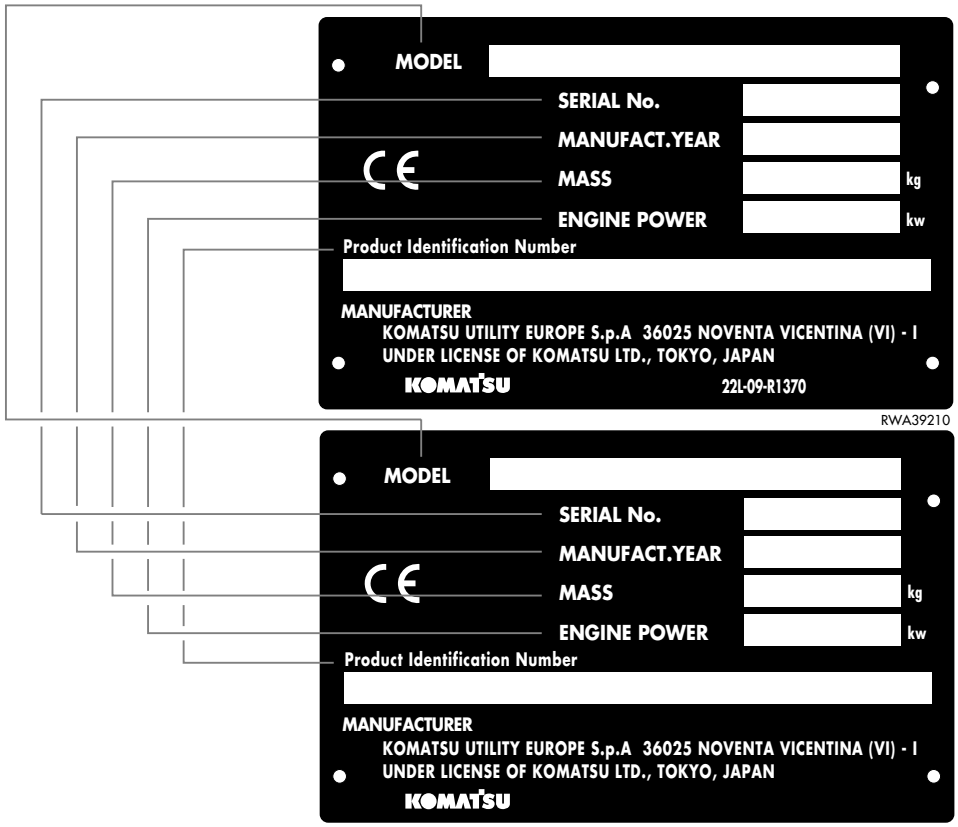

https://truckmanualshub.com/

1.4.3 ENGINE SERIAL NUMBER AND EXHAUST GAS EMISSION PLATE

The engine serial number is stamped on the plate positioned on the engine itself.

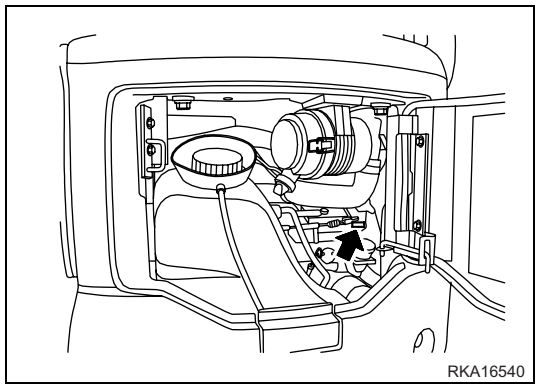

The exhaust gas emission plate is applied to the counterweight.

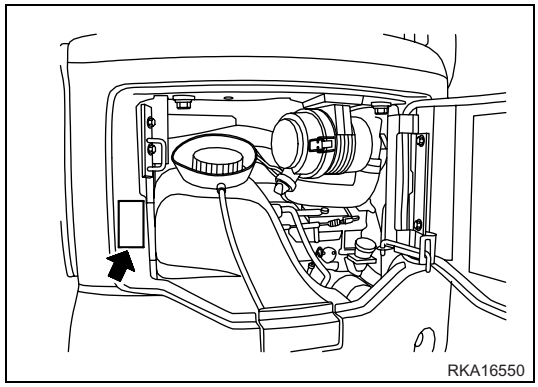

1.4.4 TRAVEL REDUCTION GEAR SERIAL NUMBER

The serial number is stamped on the plate positioned inside the travel reduction gear and can be seen after removing the cover (1).

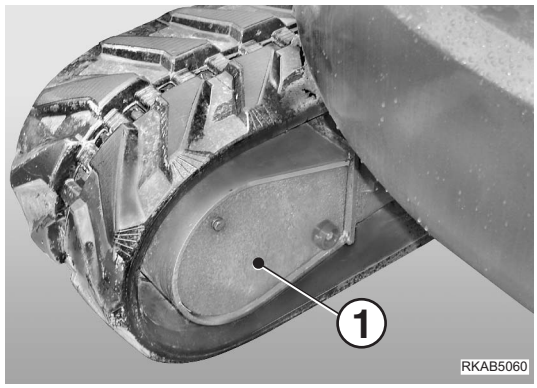

https://truckmanualshub.com/

1.4.5 SWING REDUCTION GEAR SERIAL NUMBER

The serial number is stamped on the plate positioned on the upper side of the swing motor.

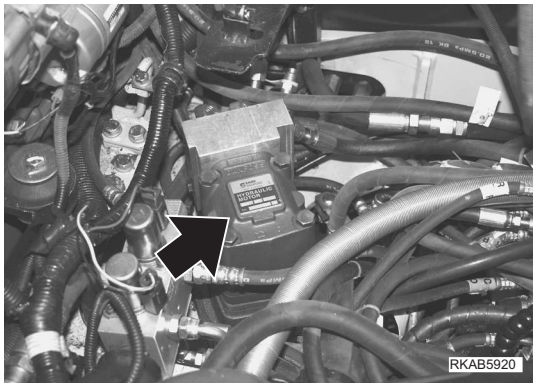

https://truckmanualshub.com/

1.4.6 SERIAL NUMBERS AND DEALER'S ADDRESS

Machine no.° _____ Model _____

Product identification number (PIN) _____

Engine no.° _____

Travel reduction gear no.° _____

Swing reduction gear no.° _____

Dealer:

_____

_____

_____

_____

Address: _____

_____

_____ Tel. _____

Contact person: _____

NOTES: _____

https://truckmanualshub.com/

TABLE OF CONTENTS

FOREWORD

1.1 FOREWORD **1**
1.2 INFORMATION ON SAFETY **2**
1.3 INTRODUCTION **4**
1.3.1 INTENDED USE OF THE MACHINE 4
1.3.2 IMPROPER OR UNAUTHORIZED USES 4
1.3.3 MAIN CHARACTERISTICS 4
1.3.4 RUNNING-IN 5
1.3.5 POSITIONS AND DIRECTIONS OF THE MACHINE 5
1.4 PRODUCT IDENTIFICATION **6**
1.4.1 MACHINE SERIAL NUMBER 6
1.4.2 MACHINE IDENTIFICATION PLATE AND PRODUCT IDENTIFICATION NUMBER (PIN) 6
1.4.3 ENGINE SERIAL NUMBER AND EXHAUST GAS EMISSION PLATE 7
1.4.4 TRAVEL REDUCTION GEAR SERIAL NUMBER 7
1.4.5 SWING REDUCTION GEAR SERIAL NUMBER 8
1.4.6 SERIAL NUMBERS AND DEALER'S ADDRESS 9
TABLE OF CONTENTS **10**

SAFETY AND ACCIDENT PREVENTION

2.1 SAFETY, NOISE AND VIBRATION PLATES **18**
2.1.1 POSITION OF THE SAFETY PLATES 18
2.1.2 PICTOGRAMS AND RELEVANT MEANINGS 19
2.1.3 POSITION OF THE NOISE PLATES 24
2.1.4 VIBRATIONS TO WHICH THE OPERATOR IS SUBJECTED 24
2.2 GENERAL PRECAUTIONS **25**
2.2.1 GENERAL SAFETY RULES 25
2.2.2 SAFETY DEVICES AND GUARDS 25
2.2.3 CLOTHING AND PERSONAL PROTECTION ITEMS 25
2.2.4 UNAUTHORIZED MODIFICATIONS 26
2.2.5 LEAVING THE OPERATOR SEAT 26
2.2.6 GETTING ON AND OFF THE MACHINE 27
2.2.7 PREVENTING FIRES DUE TO FUEL AND OIL 28
2.2.8 PREVENTING BURNS 28
2.2.9 PREVENTING DAMAGE DUE TO ASBESTOS POWDER 29
2.2.10 PREVENTING DAMAGE CAUSED BY THE WORK EQUIPMENT 29
2.2.11 FIRE EXTINGUISHERS AND FIRST AID KIT 30
2.2.12 PRECAUTIONS CONCERNING THE ROPS STRUCTURE 30
2.2.13 PRECAUTIONS CONCERNING THE EQUIPMENT 30
2.3 PRECAUTIONS TO BE TAKEN BEFORE STARTING THE ENGINE **31**
2.3.1 SAFETY AT THE WORK SITE 31
2.3.2 FIRE PREVENTION 31
2.3.3 PRECAUTIONS CONCERNING THE OPERATOR SEAT 31
2.3.4 ROOM VENTILATION 32
2.3.5 PRECAUTIONS TO BE TAKEN FOR THE LIGHTS 32

https://truckmanualshub.com/

2.4 PRECAUTIONS TO BE TAKEN WHEN WORKING 33
2.4.1 STARTING THE ENGINE 33
2.4.2 CHECK THE DIRECTION BEFORE STARTING THE MACHINE 33
2.4.3 HAND SIGNALS 34
2.4.4 CHECKS FOR TRAVELLING IN REVERSE 39
2.4.5 MOVING THE MACHINE 39
2.4.6 MOVING ON SLOPES 40
2.4.7 WORKING ON SLOPES 41
2.4.8 UNAUTHORIZED OPERATIONS 41
2.4.9 PREVENTING ELECTROCUTION 43
2.4.10 VISIBILITY 43
2.4.11 WORKING ON ICY OR SNOW-COVERED SURFACES 43
2.4.12 PREVENTING DAMAGE CAUSED BY THE WORK EQUIPMENT 44
2.4.13 WORKING ON LOOSE GROUND 44
2.4.14 PARKING THE MACHINE 44
2.5 TRANSPORTING THE MACHINE ON MOTOR VEHICLES 45
2.5.1 LOADING AND UNLOADING THE MACHINE 45
2.5.2 TRANSPORTING THE MACHINE 45
2.6 BATTERY 46
2.6.1 PREVENTING RISKS THAT MAY BE DUE TO THE BATTERY 46
2.6.2 STARTING WITH BOOSTER CABLES 46
2.7 PRECAUTIONS FOR THE REMOVAL OF THE MACHINE 47
2.8 PRECAUTIONS FOR MAINTENANCE 48
2.8.1 WARNING PLATES 48
2.8.2 TOOLS 48
2.8.3 MAINTENANCE STAFF 48
2.8.4 EQUIPMENT 49
2.8.5 WORKING UNDER THE MACHINE 49
2.8.6 CLEANING THE MACHINE 49
2.8.7 USE OF THE ENGINE DURING MAINTENANCE 50
2.8.8 PERIODICAL CHANGE OF THE PARTS THAT ARE CRITICAL FOR SAFETY 50
2.8.9 STOP THE ENGINE BEFORE CARRYING OUT ANY MAINTENANCE OPERATION OR INSPECTION 50
2.8.10 RULES TO BE FOLLOWED WHEN REFUELLING OR ADDING OIL 51
2.8.11 CHECKING THE COOLANT LEVEL IN THE RADIATOR 51
2.8.12 USING LAMPS 51
2.8.13 PRECAUTIONS TO BE TAKEN WHEN HANDLING THE BATTERY AND THE ALTERNATOR 52
2.8.14 PRECAUTIONS CONCERNING THE STARTER 52
2.8.15 HANDLING HIGH-PRESSURE HOSES 52
2.8.16 PRECAUTIONS TO BE TAKEN WHEN HANDLING HIGH-PRESSURE OIL 53
2.8.17 PRECAUTIONS FOR MAINTENANCE OPERATIONS AT HIGH TEMPERATURES AND HIGH PRESSURE 53
2.8.18 PRECAUTIONS TO BE TAKEN WHEN USING HIGH-PRESSURE GREASE TO ADJUST THE TRACK TENSION 54
2.8.19 DO NOT REMOVE THE SHOCK ABSORBING SPRING FROM THE SHOCK ABSORBER UNIT 54
2.8.20 HYDRAULIC ACCUMULATOR 54
2.8.21 COOLING FAN AND BELT 55
2.8.22 WASTE MATERIALS 55
2.8.23 COMPRESSED AIR 55

https://truckmanualshub.com/

2.8.24 PRECAUTIONS TO BE TAKEN WHEN HANDLING TECHNOPOLYMERS AND ELASTOMERS 56
2.8.25 PRECAUTIONS TO BE TAKEN WHEN USING SYNTHETIC BIODEGRADABLE OIL TYPE HEES 56

THE MACHINE AND ITS OPERATIONS

3.1 MACHINE ILLUSTRATIONS 58
3.1.1 OVERALL VIEW OF THE MACHINE 58
3.1.2 CONTROLS AND GAUGES 59
3.2 INSTRUMENTS AND CONTROLS 60
3.2.1 WARNING LIGHTS AND GAUGES 60
3.2.1.1 EMERGENCY WARNING LIGHTS 61
3.2.1.2 GAUGES 62
3.2.1.3 WARNING LIGHTS 63
3.2.2 SWITCHES AND PUSH BUTTONS 65
3.2.3 CONTROL LEVERS AND PEDALS 68
3.2.4 COVERSWITH LOCK 75
3.2.5 ENGINE HOOD 76
3.2.6 RADIATOR COVER 77
3.2.7 BATTERY COVER 78
3.2.8 TILTING THE CAB FLOOR 79
3.2.9 FUSES 82
3.2.10 MAIN FUSE 83
3.2.11 TECHNICAL DOCUMENTATION COMPARTMENT 83
3.2.12 TOOL BOX 83
3.3 USE OF THE MACHINE AND RELATED CONTROLS 84
3.3.1 BEFORE STARTING THE ENGINE 84
3.3.1.1 VISUAL CHECKS 84
3.3.1.2 CHECKS TO BE CARRIED OUT BEFORE STARTING THE ENGINE 85
3.3.1.3 ADJUSTMENTS 92
3.3.1.4 OPERATIONS TO BE CARRIED OUT BEFORE STARTING THE ENGINE 94
3.3.2 STARTING THE ENGINE 96
3.3.2.1 STARTING WITH WARM ENGINE OR IN WARM CLIMATES 96
3.3.2.2 STARTING WITH COLD ENGINE OR IN COLD CLIMATES 98
3.3.3 AFTER STARTING THE ENGINE 100
3.3.3.1 RUNNING IN A NEW MACHINE 100
3.3.3.2 WARMING-UP OPERATIONS 101
3.3.4 STOPPING THE ENGINE 103
3.3.5 HOW TO MOVE THE MACHINE 104
3.3.5.1 PRELIMINARY OPERATIONS TO BE CARRIED OUT BEFORE MOVING THE MACHINE 104
3.3.5.2 MOVING THE MACHINE FORWARD 104
3.3.5.3 MOVING THE MACHINE IN REVERSE 106
3.3.5.4 STOPPING THE MACHINE 107
3.3.6 STEERING THE MACHINE 108
3.3.6.1 STEERING (CHANGING DIRECTION) 108
3.3.7 SWINGING THE TURRET 110
3.3.8 WORK EQUIPMENT CONTROLS AND FUNCTIONS 111
3.3.9 UNAUTHORIZED OPERATIONS 114
3.3.10 PRECAUTIONS FOR USE 116
3.3.11 PRECAUTIONS TO BE TAKEN WHEN TRAVELLING ON SLOPES 118
3.3.12 GETTING THE MACHINE OUT OF MUD 120
3.3.13 OPERATIONS THAT CAN BE PERFORMED WITH THE HYDRAULIC EXCAVATOR 121

https://truckmanualshub.com/

3.3.14 CHANGING THE BUCKET 123
3.3.15 PARKING THE MACHINE 124
3.3.16 CHECKING THE MACHINE EVERY DAY AFTER WORK 126
3.3.16.1 BEFORE STOPPING THE ENGINE 126
3.3.16.2 AFTER STOPPING THE ENGINE 126
3.3.17 LOCKING THE MACHINE 126
3.3.18 RUBBER TRACKS (Machines equipped with rubber tracks only) 127
3.3.18.1 OPTIMAL USE OF THE RUBBER TRACKS 127
3.3.18.2 WARRANTY ON RUBBER TRACKS 127
3.3.18.3 USE OF THE RUBBER TRACKS 128
3.3.18.4 HOW TO PRESERVE THE RUBBER TRACKS OVER TIME 128

3.4 TRANSPORTING THE MACHINE 132
3.4.1 TRANSPORT PROCEDURE 132
3.4.2 LOADING AND UNLOADING THE MACHINE 132
3.4.3 LIFTING THE MACHINE 138

3.5 USING THE MACHINE IN THE COLD SEASON 140
3.5.1 PRECAUTIONS TO BE TAKEN WHEN USING THE MACHINE IN THE COLD SEASON 140
3.5.1.1 FUEL AND LUBRICANTS 140
3.5.1.2 COOLANT 140
3.5.1.3 BATTERY 141
3.5.2 PRECAUTIONS TO BE TAKEN EVERY DAY AT THE END OF WORK 142
3.5.3 HOW TO PROCEED AT THE END OF THE COLD SEASON 142

3.6 LONG PERIODS OF INACTIVITY 143
3.6.1 BEFORE A PERIOD OF INACTIVITY 143
3.6.2 DURING A PERIOD OF INACTIVITY 143
3.6.3 AFTER A PERIOD OF INACTIVITY 143

3.7 TROUBLESHOOTING 144
3.7.1 IF FUEL RUNS OUT COMPLETELY 144
3.7.2 OCCURRENCES THAT ARE NOT FAILURES 144
3.7.3 REMOVING THE MACHINE 144
3.7.4 PRECAUTIONS TO BE TAKEN WHEN WORKING IN PARTICULAR CONDITIONS 145
3.7.5 IF THE BATTERY IS DOWN 145
3.7.5.1 REMOVING AND INSTALLING THE BATTERY 146
3.7.5.2 CHARGING THE BATTERY 146
3.7.5.3 STARTING WITH BOOSTER CABLES 147
3.7.6 OTHER TROUBLES 149
3.7.6.1 ELECTRICAL CIRCUIT 149
3.7.6.2 FRAME 150
3.7.6.3 ENGINE 150

MAINTENANCE

4.1 GUIDE TO MAINTENANCE 154

4.2 MAINTENANCE NOTES 156
4.2.1 OIL, FUEL AND COOLANT 156
4.2.1.1 OIL 156
4.2.1.2 FUEL 157
4.2.1.3 COOLANT 157
4.2.1.4 KOWA (KOMATSU OIL WEAR ANALYSIS) 158
4.2.1.5 STORING OIL AND FUEL 159
4.2.1.6 FILTERS 159
4.2.2 NOTES ON THE MAINTENANCE OF THE ELECTRICAL SYSTEM 160
4.2.3 NOTES ON THE MAINTENANCE OF THE HYDRAULIC SYSTEM 160
4.2.4 MAINTENANCE NOTES REGARDING LUBRICATION 160

https://truckmanualshub.com/

4.3 PARTS SUBJECT TO WEAR 161
4.3.1 LIST OF THE PARTS SUBJECT TO WEAR 161
4.4 FUEL, COOLANT AND LUBRICANTS 162
4.4.1 APPROVED SYNTHETIC BIODEGRADABLE LUBRICANTS TYPE HEES 164
4.5 TIGHTENING TORQUES 165
4.5.1 STANDARD TIGHTENING TORQUES FOR SCREWS AND NUTS 165
4.5.2 STANDARD TIGHTENING TORQUES FOR HOSES WITH ORFS 166
4.6 LUBRICATION 167
4.6.1 LUBRICATION DIAGRAM 167
4.7 PERIODICAL CHANGE OF SAFETY-RELATED COMPONENTS 168
4.7.1 SAFETY-RELATED PARTS 169
4.8 MAINTENANCE PLAN 170
4.8.1 MAINTENANCE PLAN 170
4.8.2 MAINTENANCE INTERVALS IN CASE OF USE OF THE HYDRAULIC BREAKER 171
4.8.2.a CHANGING THE HYDRAULIC OIL FILTER 171
4.8.2.b CHANGING THE HYDRAULIC OIL 171
4.9 MAINTENANCE PROCEDURES 172
4.9.1 WHEN REQUIRED 172
4.9.1.a CHECKING, CLEANING OR CHANGING THE AIR FILTER CARTRIDGE 172
4.9.1.b CHECKING THE BATTERY CHARGE LEVEL 174
4.9.1.c CLEANING THE WATER SEPARATOR FILTER 175
4.9.1.d DRAINING THE FUEL TANK 176
4.9.1.e CHECKING AND ADJUSTING THE STEEL TRACK TENSION 176
4.9.1.f CHECKING THE RUBBER TRACKS 178
4.9.1.g CHECKING AND ADJUSTING THE RUBBER TRACK TENSION 180
4.9.1.h CHANGING THE RUBBER TRACKS 182
4.9.1.i BLEEDING THE HYDRAULIC SYSTEM 185
4.9.2 CHECKS TO BE CARRIED OUT BEFORE STARTING THE ENGINE 186
4.9.3 MAINTENANCE AFTER THE FIRST 50 HOURS OF OPERATION (Only for machines in which synthetic biodegradable oil type HEES is used) 186
4.9.4 MAINTENANCE AFTER THE FIRST 500 HOURS OF OPERATION (Only for machines in which synthetic biodegradable oil type HEES is used) 186
4.9.5 MAINTENANCE EVERY 500 HOURS OF OPERATION 187
4.9.5.a LUBRICATION 187
4.9.5.b CHANGING THE ENGINE OIL AND THE ENGINE OIL FILTER CARTRIDGE 189
4.9.5.c CHANGING THE FUEL FILTER CARTRIDGE 190
4.9.5.d CHECKING THE OIL LEVEL IN THE FINAL REDUCTION GEARS 191
4.9.5.e CHECKING AND CLEANING THE FINS OF THE RADIATOR AND OF THE EXCHANGER 191
4.9.5.f CHECKING AND ADJUSTING THE FAN BELT TENSION 192
4.9.5.g DRAINING THE HYDRAULIC OIL TANK (Only for machines in which synthetic biodegradable oil type HEES is used) 193
4.9.6 MAINTENANCE EVERY 1000 HOURS OF OPERATION 194
4.9.6.a CHANGING THE HYDRAULIC OIL FILTER 194
4.9.6.b CHANGING THE OIL IN THE FINAL REDUCTION GEARS 196
4.9.6.c CHECKING AND ADJUSTING THE ENGINE VALVE CLEARANCE 196
4.9.7 MAINTENANCE EVERY 2000 HOURS OF OPERATION 197
4.9.7.a CHANGING THE OIL IN THE HYDRAULIC TANK AND CLEANING THE FILTER 197
4.9.7.b CHANGING THE COOLANT 199
4.9.7.c CHECKING THE ALTERNATOR AND THE STARTER 200

https://truckmanualshub.com/

TECHNICAL SPECIFICATIONS

5.1 TECHNICAL DATA 202

5.2 LIFTING CAPACITIES 204

5.2.1 LIFTING CAPACITIES 204

AUTHORIZED OPTIONAL EQUIPMENT

6.1 AUTHORIZED OPTIONAL EQUIPMENT 208

6.1.1 PRECAUTIONS REGARDING SAFETY 208

6.1.2 PRECAUTIONS REGARDING THE INSTALLATION OF EQUIPMENT 209

6.1.3 CHARACTERISTICS OF THE OPTIONAL EQUIPMENT 210

6.1.3.1 CHARACTERISTICS OF THE OPTIONAL EQUIPMENT 210

6.2 MACHINE CONFIGURATION FOR THE INSTALLATION OF ATTACHMENTS 211

6.2.1 POSITION OF THE DEVICES 211

6.2.2 HYDRAULIC CIRCUIT 213

6.2.2.1 INSTALLING AND CONNECTING THE EQUIPMENT 213

6.2.2.2 MAINTENANCE 213

6.2.2.3 BLEEDING 214

6.3 OPERATING THE EQUIPMENT 215

6.3.1 LONG PERIODS OF INACTIVITY 216

6.4 PRECAUTIONS TO BE TAKEN WHEN USING OPTIONAL EQUIPMENT 217

6.4.1 HYDRAULIC BREAKER 217

https://truckmanualshub.com/

PAGE INTENTIONALLY LEFT BLANK

https://truckmanualshub.com/

SAFETY AND ACCIDENT PREVENTION

https://truckmanualshub.com/

2.1 SAFETY, NOISE AND VIBRATION PLATES

2.1.1 POSITION OF THE SAFETY PLATES

- The safety plates must always be legible and in good conditions; for this reason, if they are dirty with dust, oil or grease, it is necessary to clean them with a solution made of water and detergent.
  Do not use fuel, petrol or solvents.
- If the plates are damaged, ask for new ones to Komatsu or to your Komatsu Dealer.
- In case of replacement of a component provided with a safety plate, make sure that such a plate is applied also to the new part.
- The machine can be provided with other plates in addition to those indicated below; keep also to the instructions given in the additional plates, in any case.

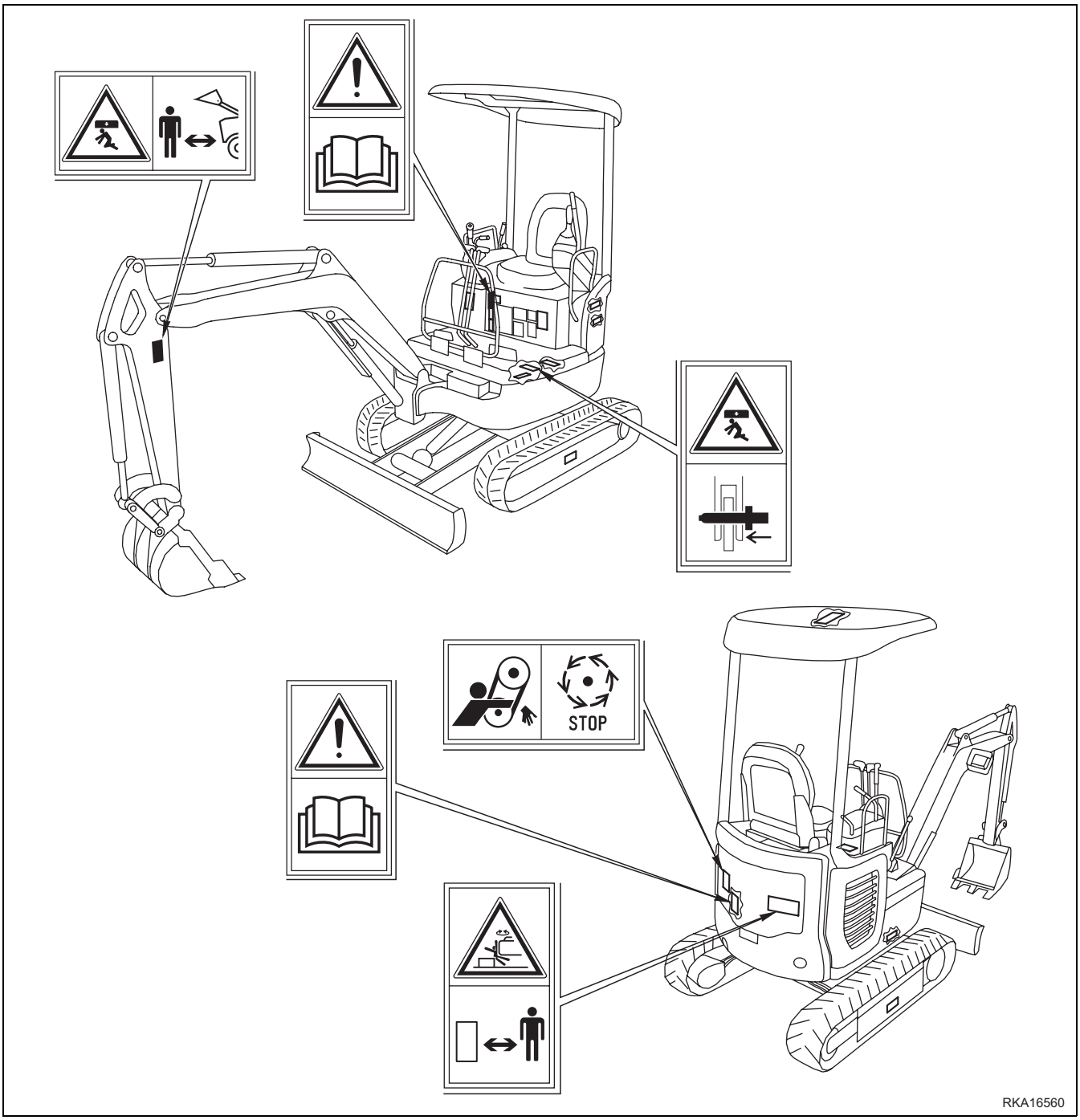

https://truckmanualshub.com/

2.1.2 PICTOGRAMS AND RELEVANT MEANINGS

The warning and danger plates applied onto the machine include or are accompanied by pictograms.
The staff in charge with the operation and maintenance of the machine must be perfectly familiar with the symbols contained in the pictograms; the following list illustrates what they look like and their respective meanings.

WORK IN PROGRESS

- Do not approach or stand within the equipment operating range when the boom and the bucket are raised.

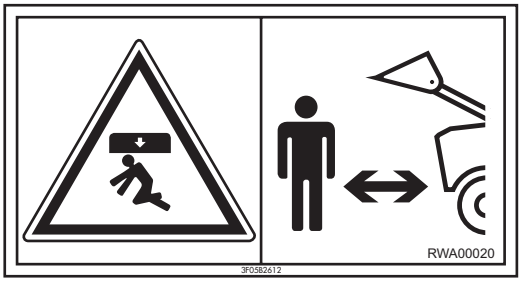

DO NOT OPEN THE ENGINE HOOD

- Do not open or remove the hood when the engine is running.

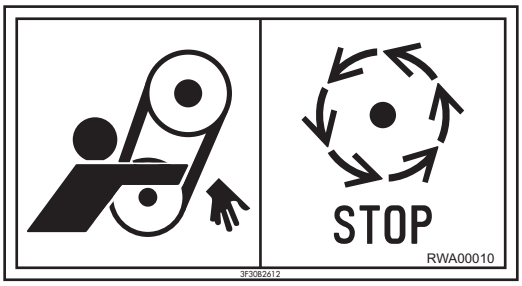

CONSULT THE MANUAL

- Carefully read the contents of the manual before using the machine or performing maintenance operations.

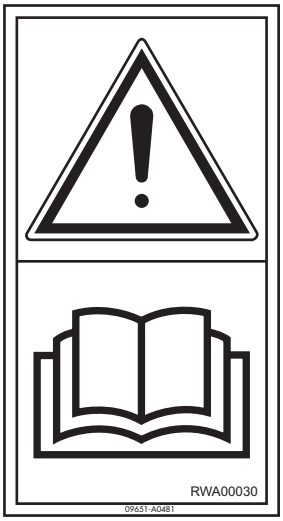

SAFETY DISTANCE

- Do not get too near the machine and do not stand within its operating range.

RKA01350

https://truckmanualshub.com/

PLATFORM LIFTING SAFETY PLATE

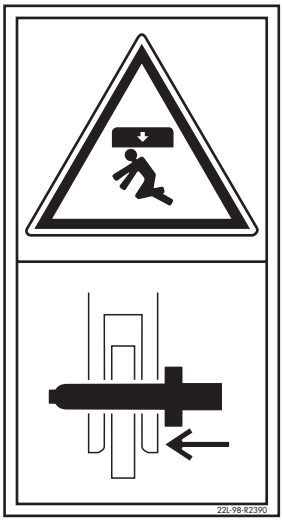

RKA01380

HYDRAULIC OIL TOPPING UP

- (Only for machines in which synthetic biodegradable oil type HEES is used)

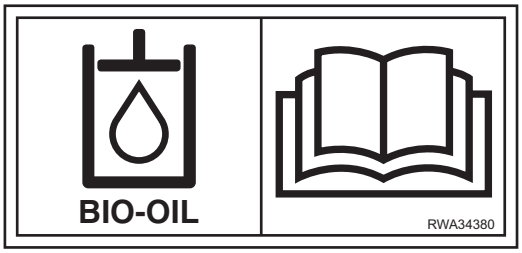

HYDRAULIC OIL TOPPING UP

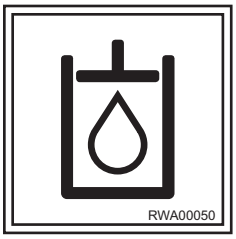

REFUELLING

ENGINE OIL FILTER

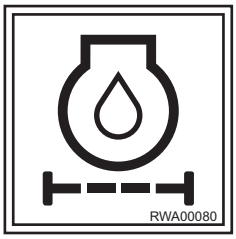

https://truckmanualshub.com/

FUEL FILTER

ENGINE AIR INTAKE FILTER

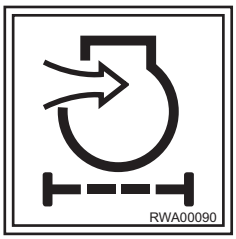

ENGINE COOLANT

ENGINE COOLANT PRESSURE

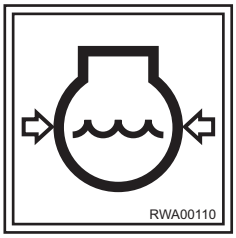

HYDRAULIC OIL LEVEL

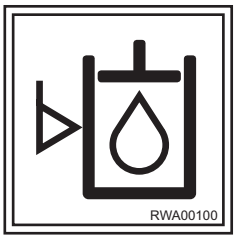

HYDRAULIC OIL FILTER

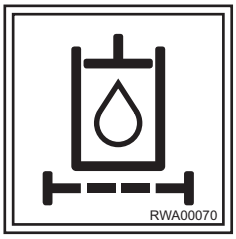

https://truckmanualshub.com/

POWER OUTLET

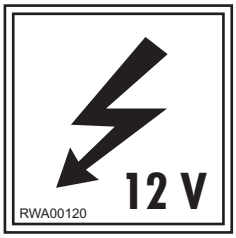

ANCHORAGE POINT

LIFTING POINT

https://truckmanualshub.com/

LIFTING CAPACITIES

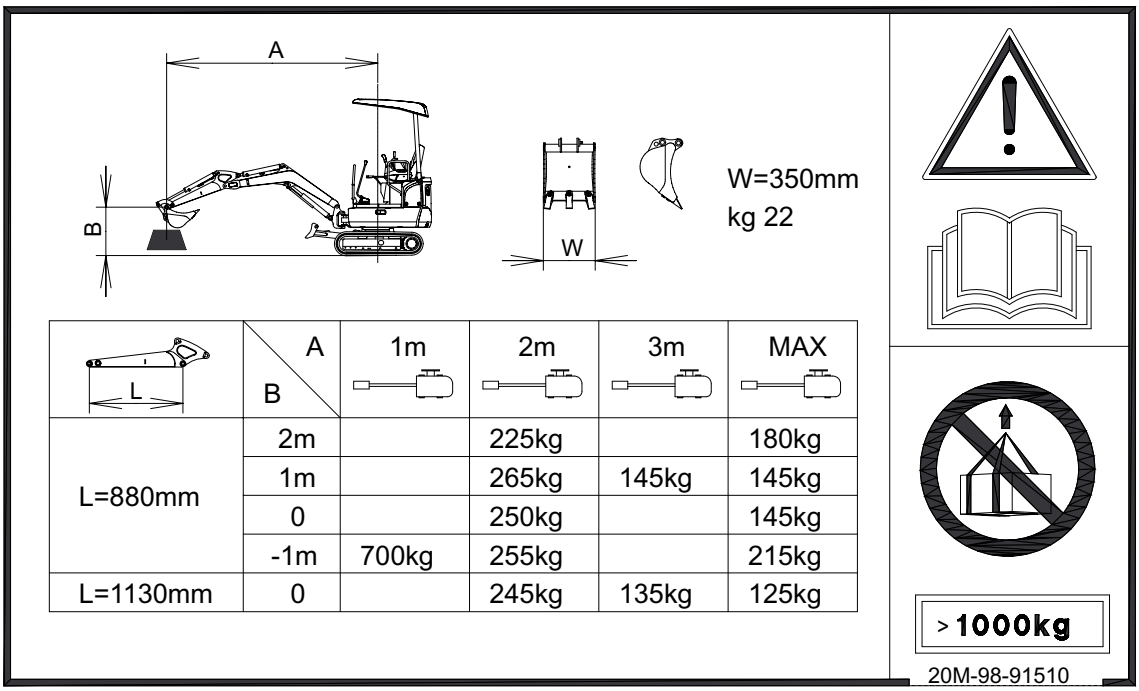

L	B \ A	1m	2m	3m	MAX
L=880mm	2m		225kg		180kg
	1m		265kg	145kg	145kg
	0		250kg		145kg
	-1m	700kg	255kg		215kg
L=1130mm	0		245kg	135kg	125kg

RKA16530

https://truckmanualshub.com/

2.1.3 POSITION OF THE NOISE PLATES

- The noise plates must always be legible and in good conditions; for this reason, if they are dirty with dust, oil or grease, it is necessary to clean them with a solution made of water and detergent.
  Do not use fuel, petrol or solvents.
- If the plates are damaged, ask for new ones to Komatsu or to your Komatsu Dealer.
- In case of replacement of a component provided with a noise plate, make sure that such a plate is applied also to the new part.

EXTERNAL NOISE

- This value indicates the noise level outside the machine and refers to the noise perceived by persons in the vicinity of the work area.

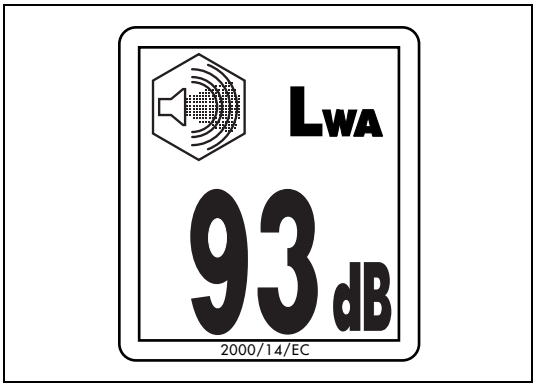

NOISE PERCEIVED BY THE OPERATOR

- This value indicates the noise level perceived by the operator when seated in driving position.

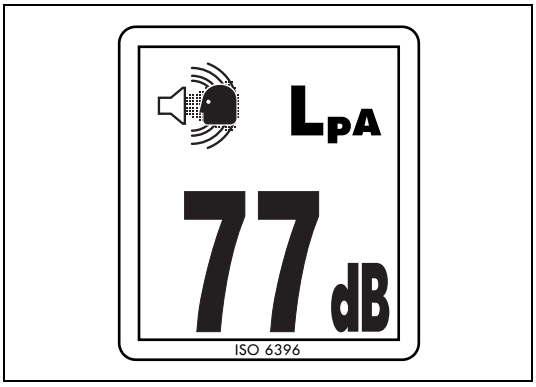

2.1.4 VIBRATIONS TO WHICH THE OPERATOR IS SUBJECTED

- According to the results of the tests carried out to determine the vibrations transmitted to the operator by the machine, the upper limbs are subjected to vibrations lower than 2.5 m/sq.sec., while the seated part of the body is subjected to vibrations lower than 0.5 m/sq.sec.

https://truckmanualshub.com/

2.2 GENERAL PRECAUTIONS

2.2.1 GENERAL SAFETY RULES

- Only trained and authorized staff can use the machine and perform maintenance operations.
- Follow all the safety rules, precautions and instructions when using the machine or performing maintenance operations.
- When working with other operators or when the work site is often occupied by other operators, make sure that everyone knows and understands all the agreed signals and, in any case, that everyone works in such a way as to be able to see the machine and to be visible to the operator.

2.2.2 SAFETY DEVICES AND GUARDS

- Make sure that all the guards and covers are in the correct position. Have guards and covers changed or repaired if damaged. Neither use the machine without guards, nor remove the guards when the engine is running.
- Always use the proper safety devices to lock the machine when parking; always fasten the seat belt.
- Do not remove the safety devices and always keep them in good operating conditions.
- Any improper use of the safety devices may result in serious injury or even death.

2.2.3 CLOTHING AND PERSONAL PROTECTION ITEMS

- Do not wear large or loose clothes, rings and watches, and do not approach the machine with loose long hair, since they can get entagled in the moving parts of the machine and cause serious injury or damage.
  Avoid also wearing clothes dirty with oil or fuel, since they are flammable.
- Wear a hard hat, goggles, safety shoes, mask, gloves and ear muffs when operating the machine or performing maintenance operations.
- Always wear safety goggles, a hard hat and heavy gloves if your job involves scattering metal chips or minute materials; these precautions are particularly useful when hammering the equipment connection pins and when blowing compressed air into the air filter and the radiator.
  During these operations, make also sure that no one is standing or working near the machine without the necessary protection items.
- When working for 8 hours with a noise level exceeding 90 dBA, it is necessary to use headphones or ear plugs and be particularly careful, especially at the end of the work shift.

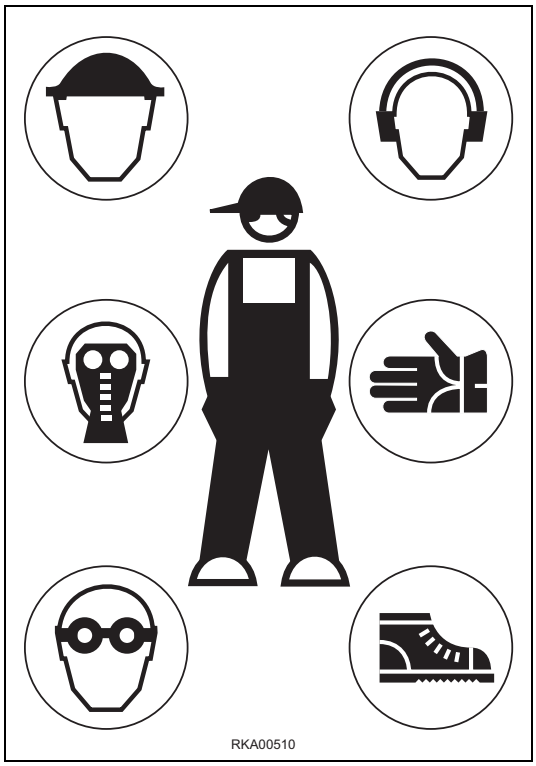

https://truckmanualshub.com/

2.2.4 UNAUTHORIZED MODIFICATIONS

- Any modification made without the authorization of Komatsu can involve hazards.
- Before making a modification, consult your Komatsu Dealer. Komatsu declines any responsibility for injury or damage caused by unauthorized modifications.

2.2.5 LEAVING THE OPERATOR SEAT

- When leaving the operator seat, even if temporarily, make sure that the machine is in a safe position. (See "2.4.14 PARKING THE MACHINE").
- Before leaving the operator seat, carry out the following operations in the sequence indicated below:

1 - Lower the equipment to the ground.

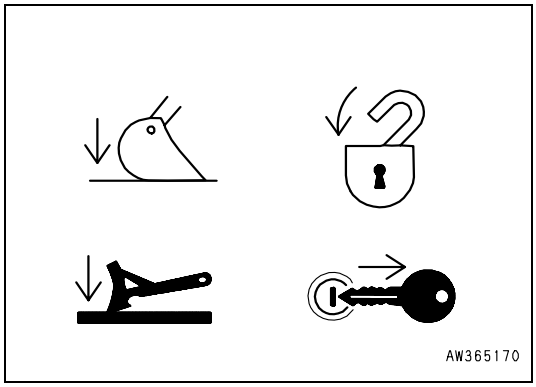

2 - Engage the safety locks of the boom swing, optional equipment and turret swing controls.

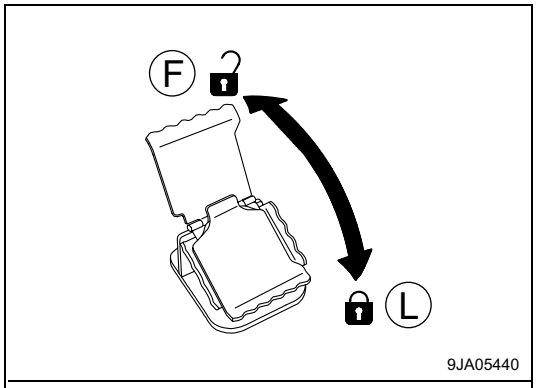

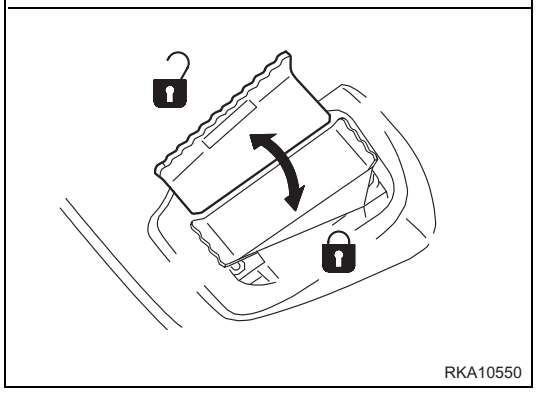

3 - Lock the equipment control by shifting the safety lever (1) to the “locked” position (L).

4 - Stop the engine. (See "3.3.4 STOPPING THE ENGINE").

5 - If you have to go so far away that you will not be able to see the machine, extract the ignition key.

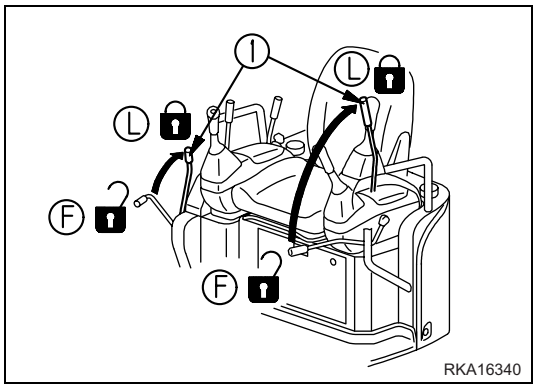

https://truckmanualshub.com/

2.2.6 GETTING ON AND OFF THE MACHINE

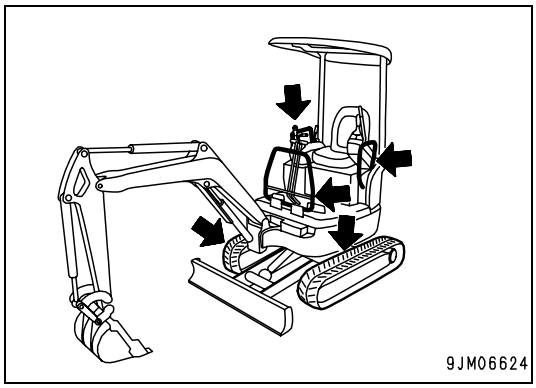

- Do not jump on or off the machine, neither when it is at rest nor when it is moving.
- When getting on or off the machine, always use the handles and the tracks; get on and off the machine very carefully.
- Do not hold or rest on the control levers.
- Both when getting on and when getting off the machine, always maintain three points of contact (holding or resting points), in order to avoid losing your balance and falling down.
- Tighten the handle screws if they are loose, and clean the handles and tracks if they are dirty with oil or grease.
  Carefully clean the cab floor if it is dirty with oil, grease, mud or rubble.

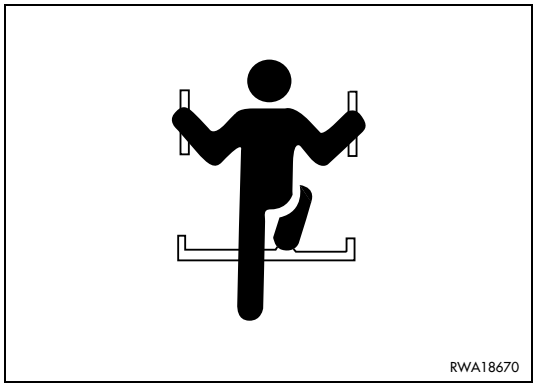

https://truckmanualshub.com/

2.2.7 PREVENTING FIRES DUE TO FUEL AND OIL

Fuel, oil and some types of antifreeze can easily ignite if they get in contact with a flame. Fuel is flammable and therefore very dangerous.

- Keep any naked flame away from flammable fluids.
- Stop the engine and do not smoke when refuelling.
- Refuel and add oil only after stopping the engine and in well ventilated places.
- Refuel and add oil in a well delimited area and do not allow unauthorized persons to approach.
- When refuelling, hold the fuel gun firmly and keep it constantly in contact with the filler until you have finished, in order to avoid sparks due to static electricity.
- After refuelling or adding oil, tighten the fuel or oil cap securely.
- Do not fill the tank completely, in order to leave room for the fuel to expand.
- In case some fuel is spilled, wipe it up immediately.

2.2.8 PREVENTING BURNS

- If the engine coolant, the engine oil and the hydraulic oil are hot, use heavy cloths and wear gloves, heavy clothing and safety goggles before carrying out any check or touching the hot parts.
- Before checking the coolant level, stop the engine and let the fluid cool down.
  If a check is necessary due to the overheating of the engine, slowly loosen the radiator cap to release any residual pressure before removing it. The hot fluid that spurts out may cause serious burns.
- Before checking the engine oil and hydraulic circuit oil levels, stop the engine and let the oil cool down. The hot oil that can be sprayed out of the tank may cause serious burns.

https://truckmanualshub.com/

2.2.9 PREVENTING DAMAGE DUE TO ASBESTOS POWDER

- Inhaling asbestos powder is very dangerous.
- If it is necessary to handle materials containing asbestos fibers, keep to the instructions given below:

1 - **Do not use** compressed air, but **only aspirators** to clean the machine and make sure that this operation is performed in a properly ventilated place.

2 - Use low-pressure water to abate dust when cleaning.

3 - If there is danger due to the possible presence of asbestos powder in the air, operate the machine with the wind to your back whenever possible.

4 - Even if the cab provides suitable protection, use an approved and homologated respirator.

5 - The powder gathered during the cleaning operations must be dampened and put in a sealed and marked container, so that it can be safely disposed of according to the regulations in force.

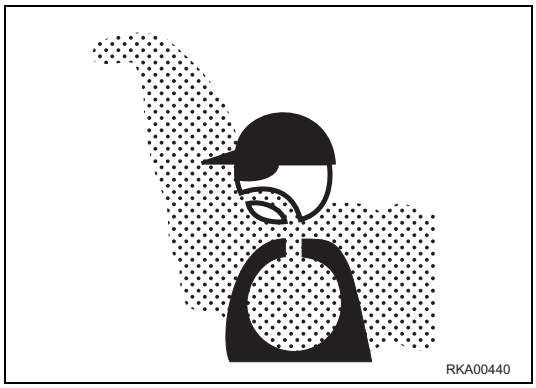

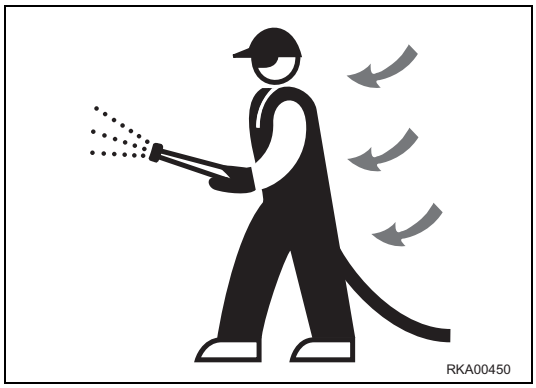

2.2.10 PREVENTING DAMAGE CAUSED BY THE WORK EQUIPMENT

- Do not stand within or approach the operating range of the work equipment, even when the operator is on board the machine and the engine is running.
- Do not stand or work under the arms or the articulations when the arms are lifted, if you are not sure that the safety locks have been duly engaged.
- Do not carry out any operation requiring the arms to be lifted, if you are not sure that the locks are correctly positioned and connected to the arms.

https://truckmanualshub.com/

2.2.11 FIRE EXTINGUISHERS AND FIRST AID KIT

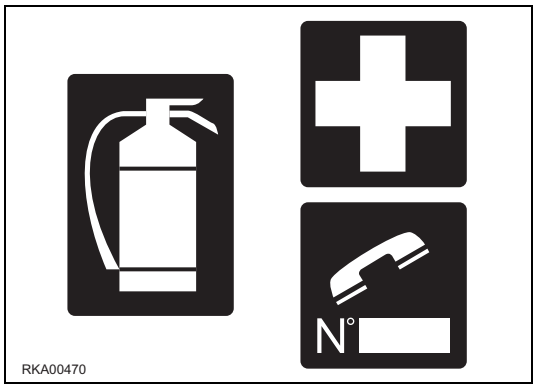

- Make sure that fire extinguishers have been provided and check their position.
- Periodically make sure that the fire extinguishers are loaded and that you know how to use them.
- Find out where the first aid kit has been placed.
- Periodically make sure that the first aid kit contains the necessary disinfectants, bandages, medicins, etc.
- It is necessary to know what to do in case of fire.
- Make sure that you have the phone numbers of the persons or structures you may need to contact in case of an emergency at hand (both at the worksite and where maintenance operations are performed).

2.2.12 PRECAUTIONS CONCERNING THE ROPS STRUCTURE

- If the canopy is inadvertently hit or the machine overturns during work, the ROPS structure may be damaged, which consequently reduces its stiffness and the operator’s safety.
  In case of impact or damage, contact Komatsu or a Komatsu Dealer to have the canopy structure and resistance checked
- Do not remove the ROPS canopy for any reason whatsoever and avoid using the machine without canopy.
- If it is absolutely necessary to remove the ROPS canopy, always contact your Komatsu Dealer before carrying out this operation.

2.2.13 PRECAUTIONS CONCERNING THE EQUIPMENT

- When installing and using optional equipment, carefully read the relevant manual and keep to the instructions given therein.
- Do not use optional or special equipment without the authorization of Komatsu or one of its Dealers.
  The installation and use of unauthorized equipment may create safety problems and adversely affect the efficiency and life of the machine.
- Komatsu cannot be held liable for any injury, accident, product failure resulting from the installation and use of unauthorized equipment.

https://truckmanualshub.com/

2.3 PRECAUTIONS TO BE TAKEN BEFORE STARTING THE ENGINE

2.3.1 SAFETY AT THE WORK SITE

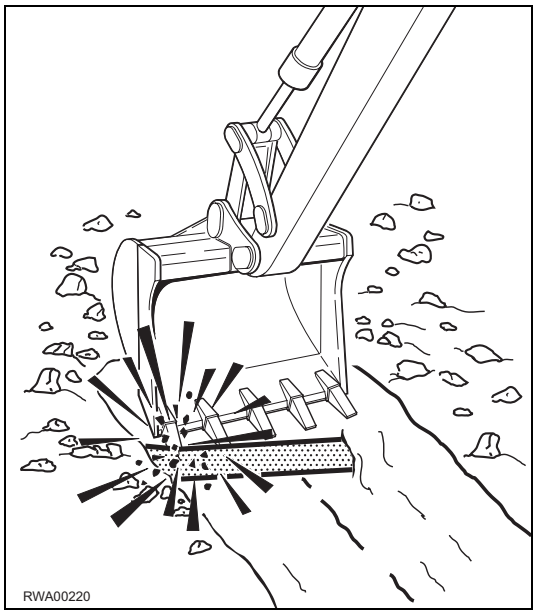

- Before starting the engine, thoroughly check the area for any unusual condition of the ground due to which work may be dangerous.
- Check the conditions of the ground at the work site and before starting the engine define the work plan and the best and safest operating procedure.
- Make the ground surface as level as possible before carrying out any operation.
- In case of work on the road, protect pedestrians and cars by designating a person for work site traffic duty and install fences around the work site.
- If water lines, gas lines, and telephone or high-voltage electric lines are located under the work site, contact the relevant utility company in order to find out their exact positions or to make them ineffective until the end of the operations. Be careful not to sever or damage any of these lines.
- Check the depth and flow of water before operating in water or on river banks.

2.3.2 FIRE PREVENTION

- Completely remove any wood chips, rubbish, paper and other flammable materials that may have accumulated inside the engine compartment, since they may cause fires.
- Check the fuel and hydraulic system pipes for leaks and if necessary repair them. Wipe up any excess oil, fuel or flammable fluids.
- Make sure that fire extinguishers are available in the work area.

2.3.3 PRECAUTIONS CONCERNING THE OPERATOR SEAT

- Do not leave objects or tools lying around inside the cab. They may hinder the operation of the controls and cause serious accidents.
- Keep the cab floor and the controls (pedals and levers) clean, by removing any trace of oil and grease and, as far as the floor is concerned, remove any excess dirt (earth, stones, etc.).
- Check the seat belt and change it if it is broken or damaged.
  Replace any component only with homologated parts available at Komatsu or its Dealers.

https://truckmanualshub.com/

2.3.4 ROOM VENTILATION

- Before starting the machine in confined or poorly ventilated places, provide for proper ventilation or connect the engine exhaust pipe to a suction duct. The engine exhaust gases can be deadly.

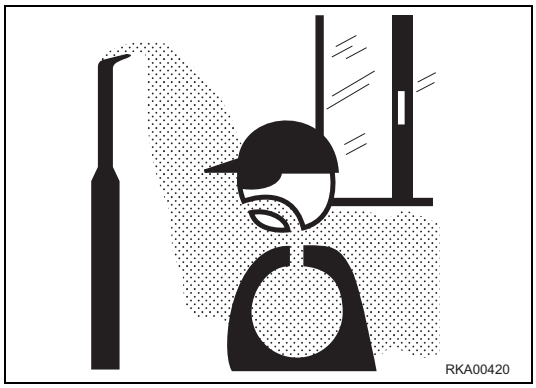

2.3.5 PRECAUTIONS TO BE TAKEN FOR THE LIGHTS

- Remove any trace of dirt from the lights, in such a way as to ensure perfect visibility on the work area.
- Make sure that the work lights have been correctly installed. Make also sure that they come on correctly.

https://truckmanualshub.com/

2.4 PRECAUTIONS TO BE TAKEN WHEN WORKING

2.4.1 STARTING THE ENGINE

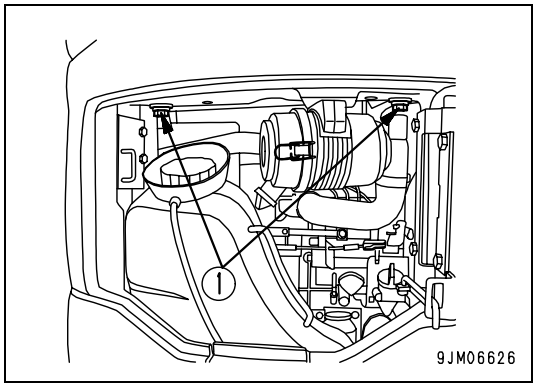

- Before getting on the machine, walk around it and check for people and objects that might be in the way.
- Do not start the engine if warning plates have been attached to the control levers.
- Before starting the engine, make sure that the controls are locked.
- When starting the engine, sound the horn as an alert signal.
- Start the engine only while seated with fastened seat belt.
- Do not allow anyone to get on the machine.
- Make sure that the platform fastening screws (1) are well tightened. Incorrect tightening of the cab floor may lead to serious injury.

If any anomaly is found, provide for the necessary repairs.

2.4.2 CHECK THE DIRECTION BEFORE STARTING THE MACHINE

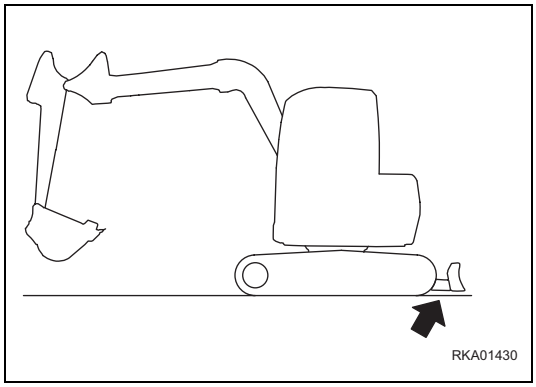

- Before operating the travel levers, check the position of the blade.
  If the blade is positioned on the rear part of the machine, the operation of the travel levers is inverted.
  In this condition, take care not to mistake the travel movements during the use of the machine.
  (See "3.3.5 HOW TO MOVE THE MACHINE").

https://truckmanualshub.com/

2.4.3 HAND SIGNALS

WARNING

- **When it is necessary to position loads, make excavations or move the machine with reduced field of vision, the operator must be helped by another person standing on the ground and making signals to indicate the manoeuvres to be carried out, according to the specific signals defined by the relevant regulations.**
- **No movement or operation should be carried out if the signals have not been clearly understood by the operator and the signalman.**
- **When additional instructions different from those defined by the manual signalling system are necessary, these must be agreed upon by the operator and the signalman before starting the job.**
- **Only one person must be entrusted with making signals.**
- **The operator must make sure that the signalman is always within his field of vision and follow all his signals.**

The use of hand signals serves to direct the lifting, handling and positioning of the loads lifted by the work equipment. Hand signals can also be used during digging operations or when the machine travels, if the field of vision of the operator is reduced. The direction of movement of the hands and arms in relation to the machine must define the signal, independently of the position of the signalman. Hand signals must be performed following the indications given below.

1 - LIFT THE LOAD VERTICALLY
With a forearm in vertical position and the forefinger pointing upwards, rotate the hand making small circles.

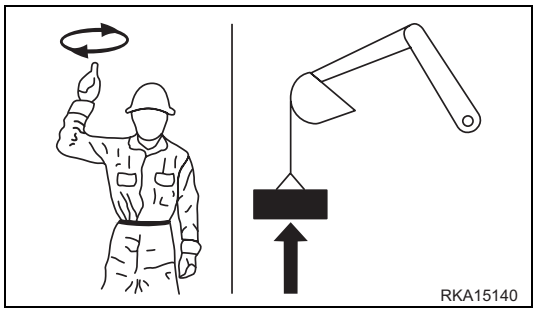

2 - LOWER THE LOAD VERTICALLY
With an arm extended and the forefinger pointing downwards, rotate the hand making small circles.

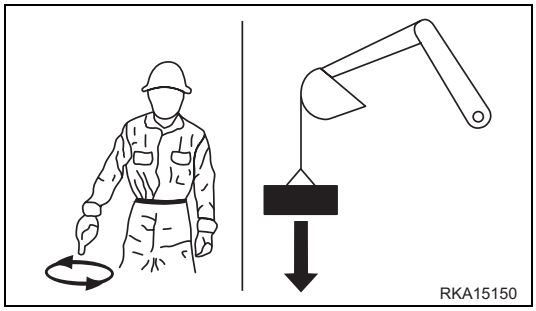

https://truckmanualshub.com/

3 - MOVE THE LOAD AWAY IN HORIZONTAL DIRECTION
With an arm extended forwards and the hand in vertical position directed towards the load to be moved away, move the hand in the direction of the movement to be carried out.

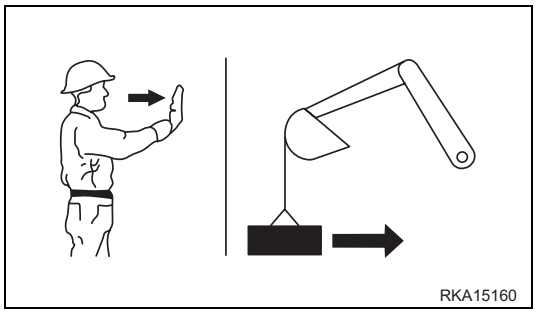

4 - BRING THE LOAD NEARER IN HORIZONTAL DIRECTION
With an arm extended forwards and the hand in vertical position directed towards the signalman, move the hand in the direction of the movement to be carried out.

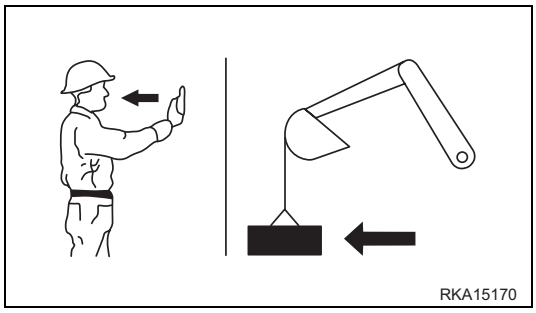

5 - LIFT THE BOOM
With an arm extended in horizontal position and closed fingers, point the thumb upwards.

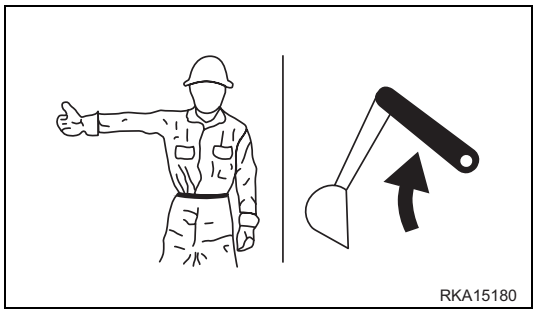

6 - LOWER THE BOOM
With an arm extended in horizontal position and closed fingers, point the thumb downwards.

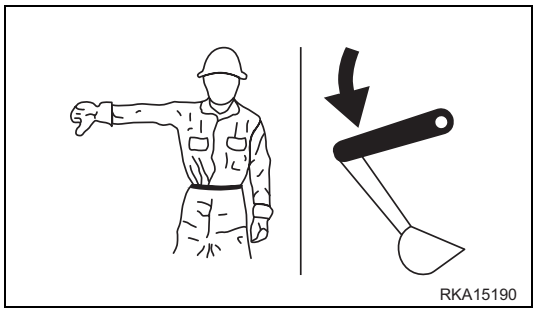

7 - SWING THE BOOM
With an arm extended in horizontal position, point the forefinger in the desired swing direction.

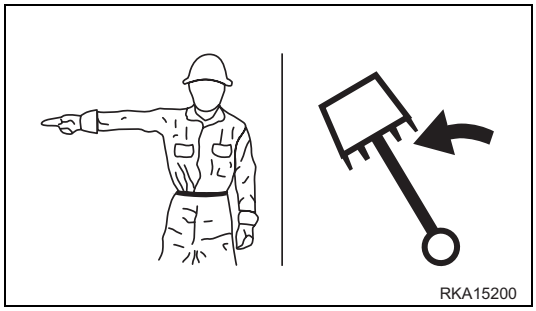

8 - SWING THE BOOM
With an arm extended in horizontal position, point the forefinger in the desired swing direction.

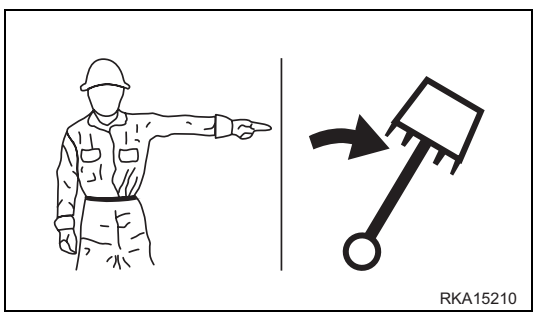

https://truckmanualshub.com/

9 - FOLD THE ARM
With both hands clasped, point the thumbs inwards.

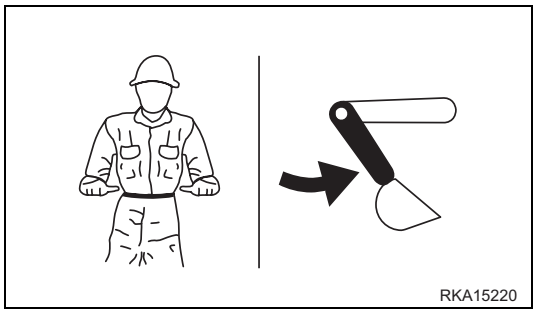

10 - EXTEND THE ARM
With both hands clasped, point the thumbs outwards.

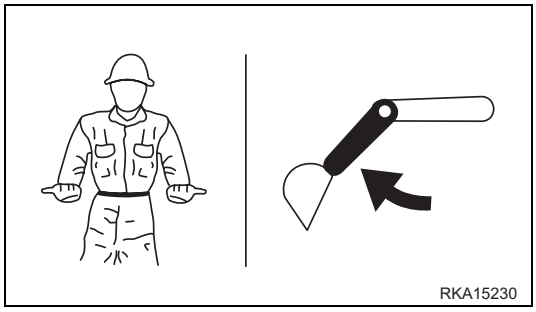

11 - FOLD THE BUCKET
Keep one hand still and closed. Rotate the other hand vertically with the thumb pointed towards the clasped hand.

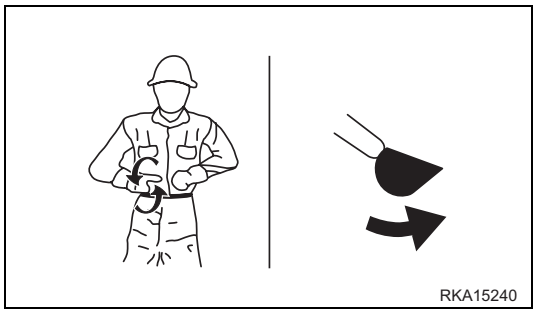

12 - OPEN THE BUCKET
Keep one hand still and open. Rotate the other hand vertically with the thumb pointed towards the open hand.

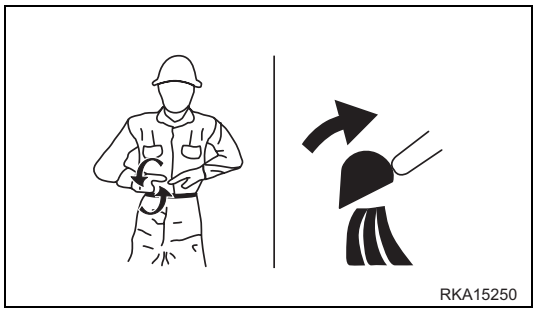

13 - TRAVEL WHILE STEERING
Lift the forearm corresponding to the inner steering side with clenched fist. Rotate the other fist vertically indicating the wheel's turning direction.

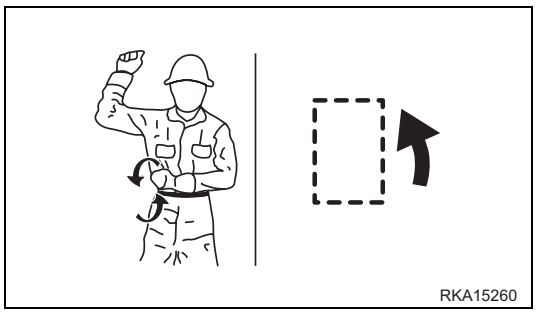

14 - TRAVEL WHILE STEERING
Lift the forearm corresponding to the inner steering side with clenched fist. Rotate the other fist vertically indicating the wheel's turning direction.

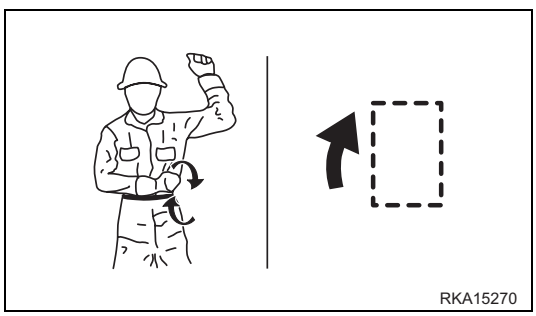

https://truckmanualshub.com/

15 - TRAVEL STRAIGHT AHEAD
Rotate the fists vertically indicating the turning direction of the wheels.

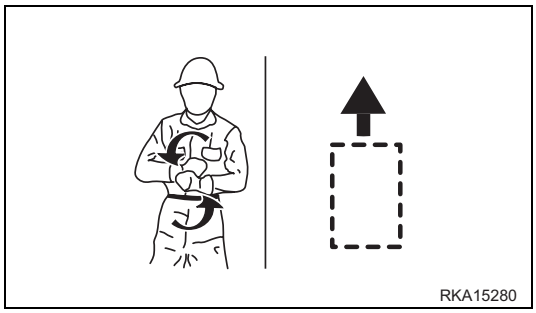

16 - TRAVEL STRAIGHT AHEAD
Rotate the fists vertically indicating the turning direction of the wheels.

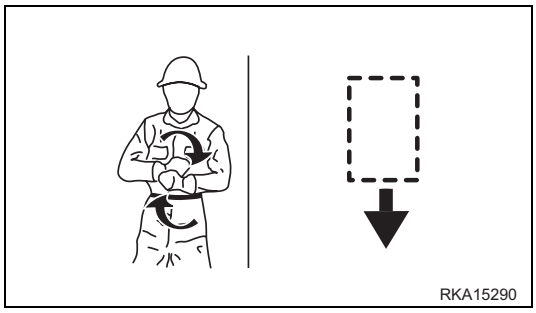

17 - DISTANCE TO BE COVERED
With the hands raised and facing inwards, move the hands laterally indicating the distance to be covered.

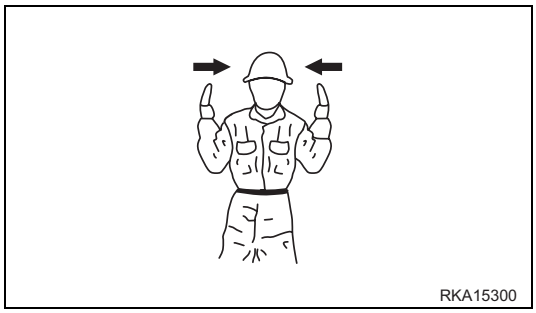

18 - CARRY OUT THE MOVEMENTS SLOWLY
One hand still in front of the hand that indicates the movement to be carried out. (The figure represents the “lift slowly” control).

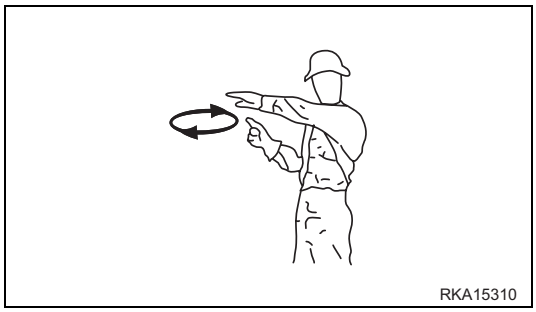

19 - STOP
With one arm extended laterally, open the hand facing downwards and move the arm forwards and backwards.

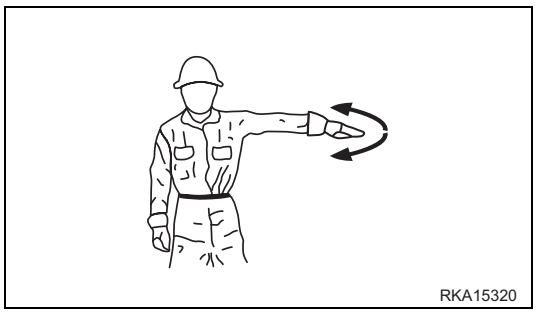

20 - EMERGENCY STOP
With both arms extended in horizontal position, open the hands downwards and move both arms forwards and backwards.

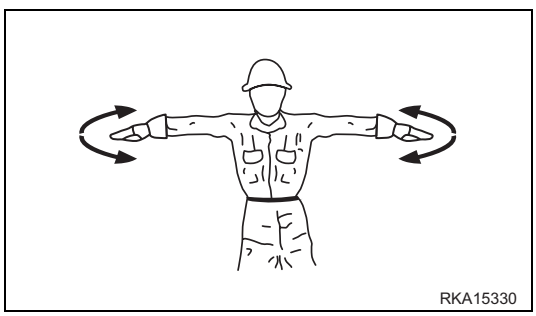

https://truckmanualshub.com/

21 - STOP THE ENGINE
Pass thumb or forefinger across the throat.

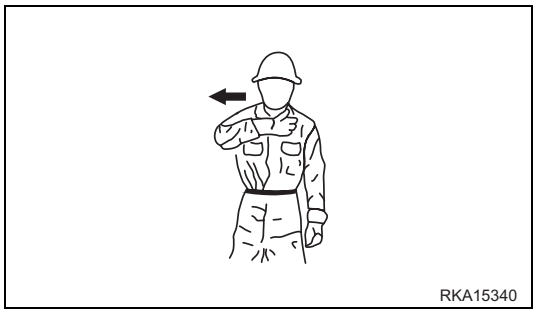

https://truckmanualshub.com/

2.4.4 CHECKS FOR TRAVELLING IN REVERSE

- When operating in areas that may be hazardous or have poor visibility, designate a person to direct the movements of the machine and traffic on the work site.
- Make sure that no unauthorized person is within the machine operating range or in its travel direction.
  If necessary, put up appropriate fences.
- Before moving the machine, sound the horn in order to warn everyone close to the work area.
- There are blind spots behind the machine, which cannot be seen and where someone may be standing: therefore, it is necessary to make sure that there is no one behind the machine before travelling in reverse.

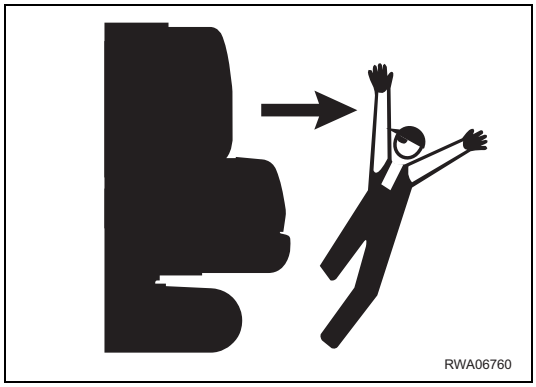

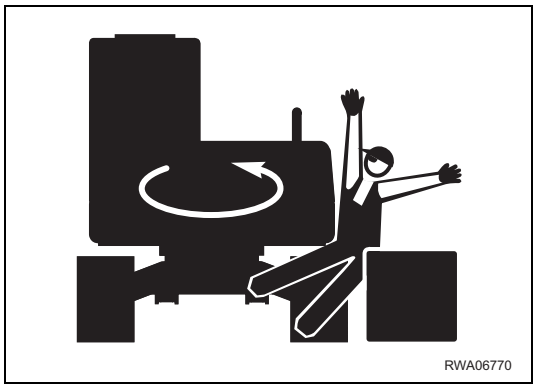

2.4.5 MOVING THE MACHINE

- When moving the machine, position the bucket at about 40÷50 cm from the ground; this position makes it possible to evaluate more precisely the space required for the movements and at the same time ensures the stability of the machine.
- Make sure that the driver seat is directed towards the blade.
  Otherwise, pay attention to the steering and advance manoeuvres, since they are inverted.
- If the equipment control levers must be used during travel, avoid moving them abruptly; sudden manoeuvres change the attitude of the machine and make driving difficult.
- When travelling on rough ground, keep the speed low and avoid sudden movements of the bucket arm.
- If possible, avoid moving on obstacles.
  If the machine has to travel over an obstacle, keep the equipment as close to the ground as possible and travel at low speed.
  Never move on obstacles that may incline the machine considerably (over 10°).
- If one of the rubber tracks moves on an obstacle or gets into a hole, the machine may overturn.
  In these cases, reduce the speed to minimum and be very careful to the balance of the machine.

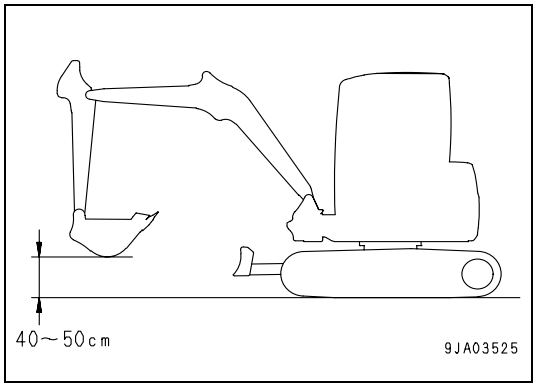

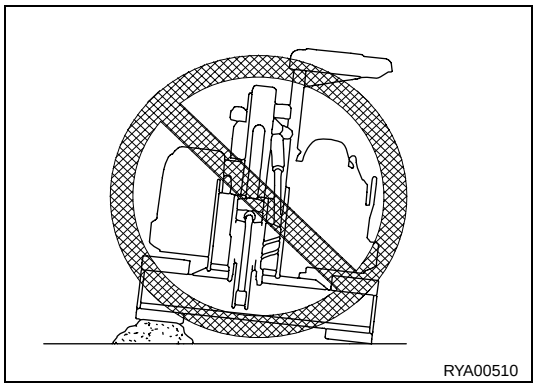

https://truckmanualshub.com/

2.4.6 MOVING ON SLOPES

- Operations on slopes and on river or lake banks with damp ground may cause the machine to tip over or slip.
- On hills, banks or slopes, keep the bucket very close to the ground (20-30 cm from the ground), and in case of emergency quickly lower it to the ground to help the machine stop.
- When travelling up a steep slope, extend the work equipment forward to improve the balance of the machine, keep the work equipment approximately 20-30 cm above the ground, and travel at low speed.
- When travelling downhill, lower the engine speed, keep the travel lever close to the neutral position, and travel at low speed.
  When traveling down a slope whose inclination exceeds 15°, set the machine with the turret rotated by 180°, so that the sprocket (1) and the arm are in travel direction, as shown in the figure, and proceed at low speed.
- Do not change direction and avoid travelling obliquely when working on slopes. It is advisable to go down or up to a flat place to perform these operations.
- Do not travel on wet grass or thick layers of leaves: if the machine moves obliquely in these conditions, it may slip.
- Do not move on slopes whose inclination exceeds 15°, since the machine may overturn.
- When the fuel level indicator reaches the red reserve area during work on a slope, immediately provide for refuelling; due to the inclination of the machine, the engine may suck in air and stop suddenly, which represents a grave risk for the safety of the operator and of the persons standing before the machine.
- If the engine stops suddenly, immediately lower the bucket to the ground.

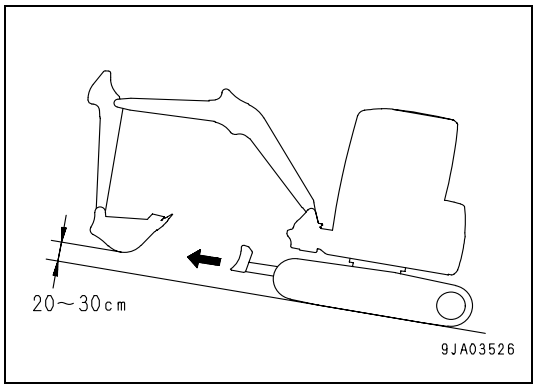

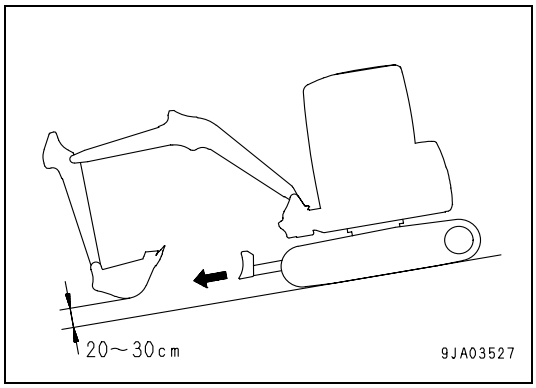

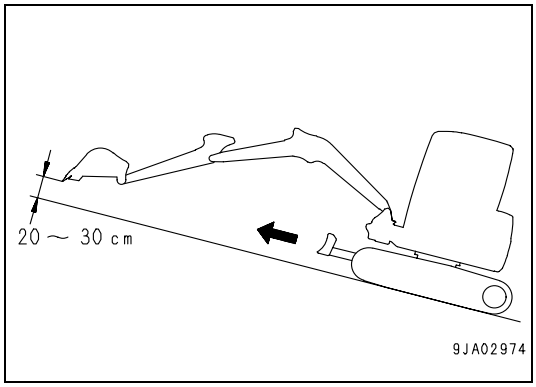

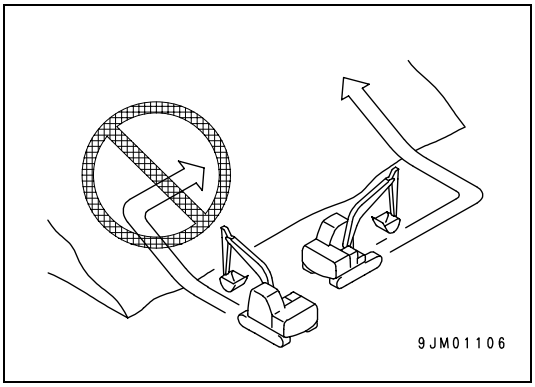

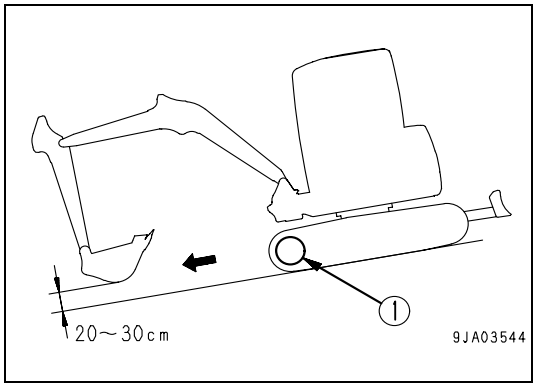

https://truckmanualshub.com/

2.4.7 WORKING ON SLOPES

- When working on slopes, if possible avoid rotating the turret, since the machine may lose its balance and overturn.
  It is particularly dangerous to swing the equipment on slopes when the bucket is full.
  If these operations are going to last long, accumulate soil in such a way as to create a horizontal platform on which the machine can be positioned.

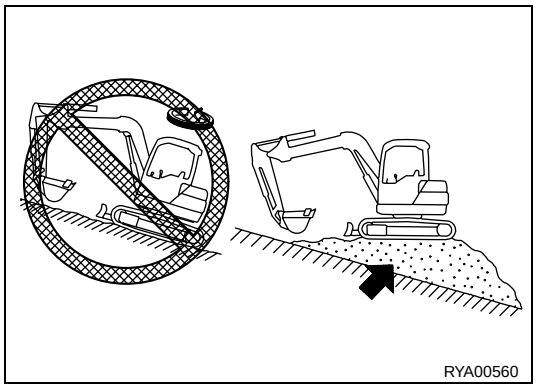

2.4.8 UNAUTHORIZED OPERATIONS

- Do not carry out excavations under overhangs.
  The overhang may collapse and fall on the machine.

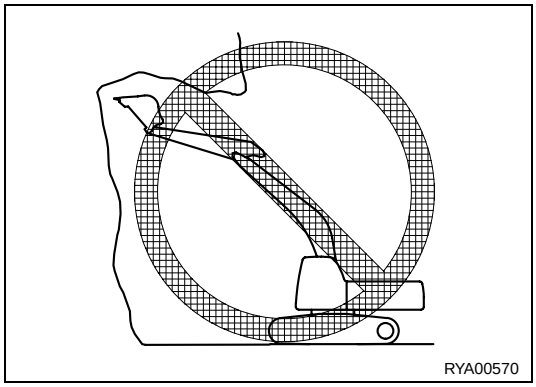

- Do not excavate too deeply under the front of the machine.
  The ground under the machine may collapse and cause the machine to fall.

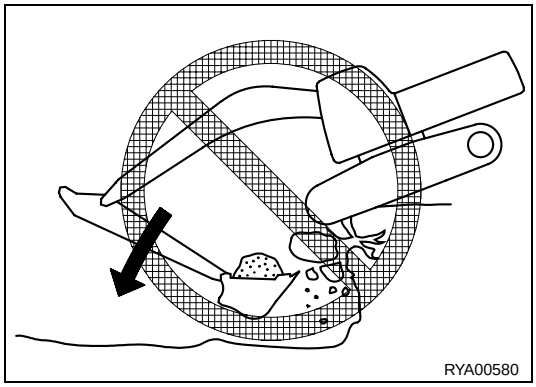

- To make it easier to escape from the machine in case of emergency, set the tracks at right angles to the road shoulder or coast, with the sprocket at the rear, when carrying out digging operations.

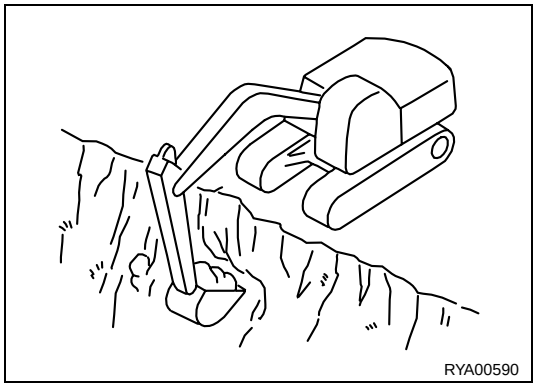

https://truckmanualshub.com/

- Do not carry out demolition work under the machine, since it may become unstable and tip over.
- When working on the top of buildings or other structures, check these structures and their strength before starting work. In fact, the buildings may collapse and cause serious injury or damages.

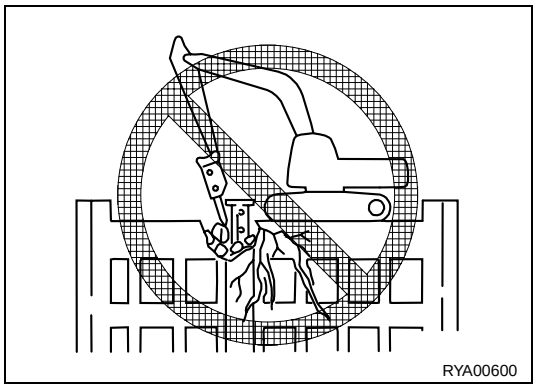

- When carrying out demolition work, do not position the machine under the structure being demolished, since broken parts may fall down or the building may collapse causing serious injury or property damage.

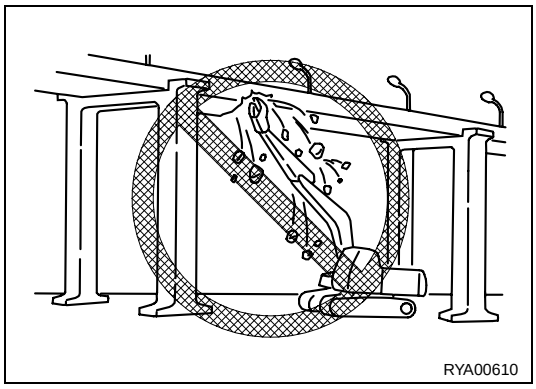

- Do not use the impact force of the work equipment for breaking work. Flying pieces of broken materials may damage the work equipment or even cause serious personal injury.
- As a general rule, the machine is more liable to overturn when the work equipment is swung to one side than when it is at the front or rear.

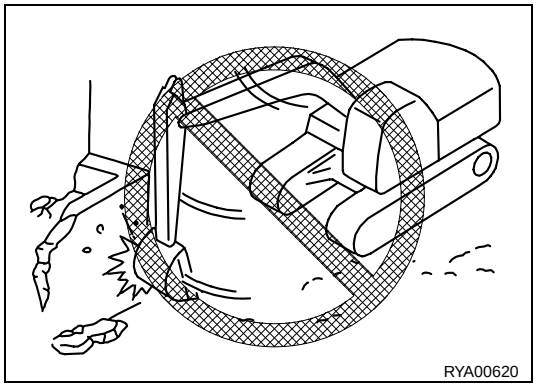

- When using a breaker or other heavy-duty equipment, the machine may lose its balance and overturn. Both when operating on flat ground and when operating on slopes, keep to the following instructions:
  - Do not lower, swing, or stop the work equipment suddenly.
  - Do not extend or retract the boom cylinder suddenly, since the impact may cause the machine to overturn.
- Do not move the bucket over the head of other workers or over the operator seat of dump trucks or other transport equipment. The load may be spilled or the bucket may hit the dump truck and cause serious injury or property damage.

https://truckmanualshub.com/

2.4.9 PREVENTING ELECTROCUTION

- Digging operations near overhead electric lines are extremely dangerous and they may also cause death due to electrocution; for this reason, when working near overhead electric lines always respect the minimum safety distances prescribed by the competent authorities and by the accident-prevention rules in force.
- As far as underground long-distance lines are concerned, the minimum distance depends on the covering of the ducts in which the cables are laid.
- The basic safety precautions to be taken to prevent this risk are the following:

1 - Wear shoes with thick rubber or leather soles.
2 - Request the aid of another person who can warn you if the machine gets too close to the electric line.
3 - Operate at low speed.
4 - Get acquainted with the behaviour rules to be followed in case of electrocution.
5 - Keep the phone number of the electricity company and of the nearest first aid station at hand.

- If the work equipment gets accidentally entangled in the cables, the operator must not leave the cab until the electricity company has insulated the line.
- When carrying out this kind of operations, warn everyone standing in the work area to keep a safety distance from the machine and the work equipment.
- Ask the electricity company in advance the voltage of the cables and the minimum safety distance.

⚠ DANGER

- **The minimum distances from overhead lines can vary in the different countries, according to the climate and to the humidity percentage in the air.**
  Indicatively, the distances indicated in the following table should be respected.

Cable voltage	Min. safety distance
1.0 kV (distribution line)	5 m
6.6 kV (2–3 insulators)	5,2 m
33 kV (min. 3 insulators)	5,5 m
66 kV (min. 6 insulators)	6 m
154 kV (min. 10 insulators)	8 m
275 kV (min. 19 insulators)	10 m

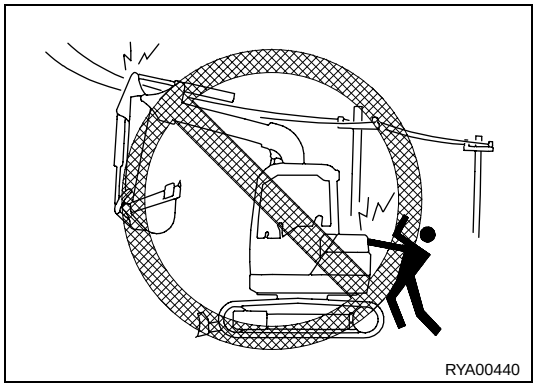

2.4.10 VISIBILITY

- Switch on the work lights as soon as visibility decreases.
- If visibility is reduced due to mist, smoke or heavy rain, stop the machine in a safe position and wait for the weather to improve until visibility becomes acceptable.

2.4.11 WORKING ON ICY OR SNOW-COVERED SURFACES

- If the ground is icy or covered with snow, even a slight slope may cause the machine to slip sidewards, therefore it is advisable to move at low speed and to avoid abrupt starts, stops or turns.
- When it has snowed heavily, the road shoulders and any obstacle are buried in the snow and are not visible, therefore proceed with care when clearing the snow.

https://truckmanualshub.com/

2.4.12 PREVENTING DAMAGE CAUSED BY THE WORK EQUIPMENT

- When working in tunnels, galleries, under electric cables or other ducts (air, telephone lines) and wherever the height is limited, proceed with the greatest care to prevent the bucket or the arms from causing any damage.

2.4.13 WORKING ON LOOSE GROUND

- Avoid operating the machine too close to the edge of cliffs, overhangs and deep ditches.
  These areas may collapse, making the machine fall down or tip over and this could result in serious injury or even death.
  Remember that after heavy rain or earthquakes these dangerous conditions usually get worse.
- The earth laid near ditches is loose and is likely to collapse due to the weight or vibrations of the machine.
  Pay the utmost attention and always fasten the seat belt.
- In case of work in areas where stones or other material may fall on the machine, install the FOPS protection device.

2.4.14 PARKING THE MACHINE

- Park the machine on firm and level ground. If this is not possible and it is necessary to park on a slope, position the machine with the bucket directed downwards and carry out the following operations:

1 - Rotate the bucket to the dumping position and lower the arms until thrusting the teeth into the ground.
2 - Stop the engine.
3 - Put wedges or safety blocks under the tracks.

- Always lower the work equipment to the ground; if it is necessary to park with raised arms, make sure that the safety locks are engaged.
- Always lock the equipment control by shifting the safety lever (1) to the “locked” position (L).
- When leaving the machine, remove the ignition key.
- If it is necessary to park on public roads, provide for signalling the presence of the machine according to the local regulations in force (signalling fires, fences, road works ahead, two-way traffic, guide signs, etc.).

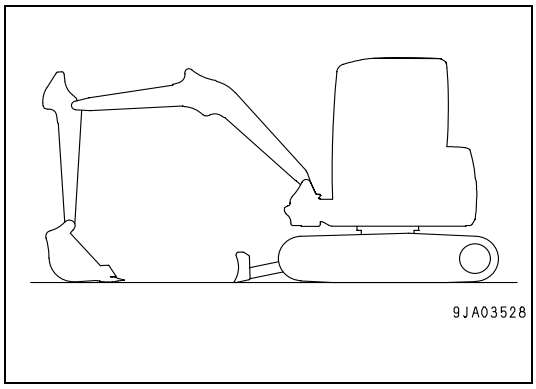

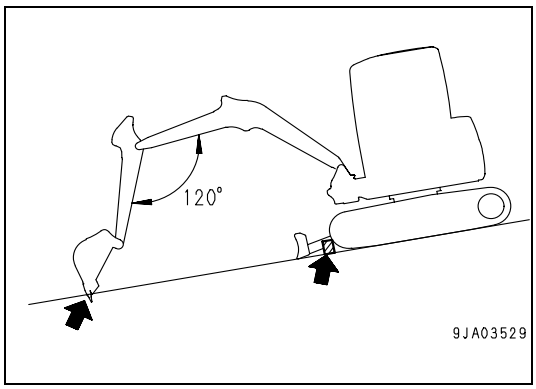

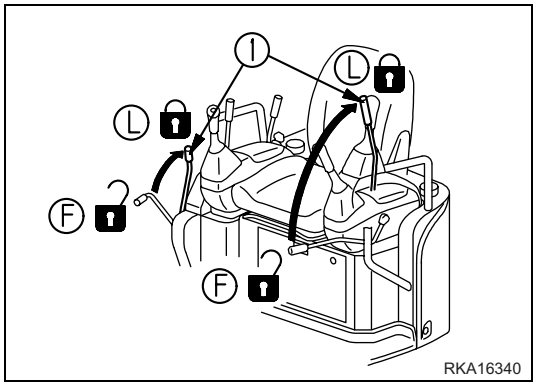

https://truckmanualshub.com/

2.5 TRANSPORTING THE MACHINE ON MOTOR VEHICLES

2.5.1 LOADING AND UNLOADING THE MACHINE

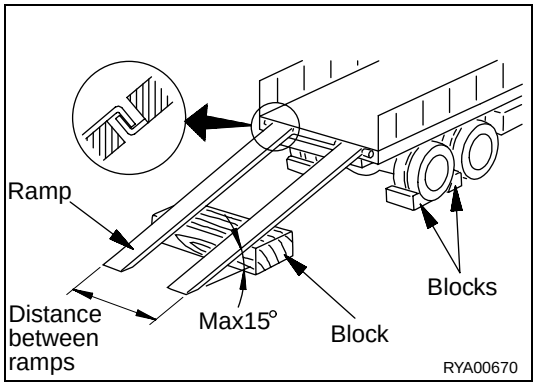

- Loading and unloading the machine on/from a motor vehicle always involves potential hazards. Proceed with extreme care.
- Perform loading and unloading operations on firm, level ground. Maintain a safety distance from the edges of ditches or from road sides.
- If the vehicles used are not specially equipped for this purpose, put support blocks under the ramps, in order to prevent them from bending.
- Always lock the wheels of the transport vehicle with wedges.
- Always use ramps that are sufficiently wide and can support the weight of the machine. The longitudinal axes of the ramps must be parallel to each other and perpendicular to the loading board, and their distance must be suitable for the tread of the machine.
- Make sure that the ramps are securely positioned and fastened to the loading board, and that they have the same length.
- Position the ramps with a maximum inclination of 15°.
- Make sure that the surface of the ramps is clean and there is no trace of grease, oil, soil or ice; remove dirt from the tracks before loading the machine on the vehicle.
- The machine must be loaded on the vehicle with the bucket directed forwards, that is, in the driving direction of the vehicle.
- Do not correct the trajectory of the machine on the ramps. If necessary, get down the ramps and start the operation again.
- After loading the machine, block the tracks with wedges and secure it with tie-downs or chains to prevent any sideward movement (see "3.4 TRANSPORTING THE MACHINE").

2.5.2 TRANSPORTING THE MACHINE

⚠ CAUTION

- **During transport, the machine must be secured to the vehicle.**

- Define the route to be followed, taking in consideration the width, height and weight of the transport means and of the machine.
  Make sure that the dimensions of the machine are compatible with the road and any gallery, subway, bridge, electric and telephone lines, etc.
- Keep to the regulations in force regarding the permissible width, height, weight of the machine and the transport speed.

https://truckmanualshub.com/

2.6 BATTERY

2.6.1 PREVENTING RISKS THAT MAY BE DUE TO THE BATTERY

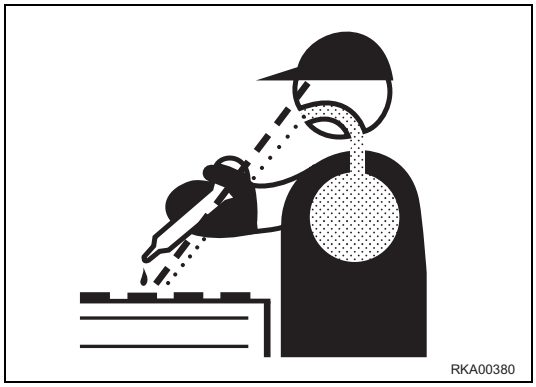

- Electrolytic batteries contain sulphuric acid, which can cause burns. It can also corrode clothing and make holes in it. In case of contact with battery acid, immediately wash the affected part with plenty of water.
- Battery acid may cause blindness if sprayed into the eyes.
  If acid gets accidentally into your eyes, flush them immediately with plenty of water and consult a doctor without delay.
- If you accidentally swallow battery acid, drink a large quantity of water or milk, beaten egg white or vegetable oil and in any case antiacid substances like magnesia, bicarbonate, etc., and call a doctor or a poison treatment center immediately.
- When handling batteries, always wear safety goggles.
- Batteries produce hydrogen, which is highly explosive and can easily ignite with small sparks or naked flames.
- Before working on the battery, stop the engine and remove the ignition key.
- Avoid short-circuiting the battery terminals through any contact, even if accidental, with metal objects or tools or by inverting them.
- Tighten the battery terminals securely. Loose terminals may generate sparks and may cause the battery to explode.

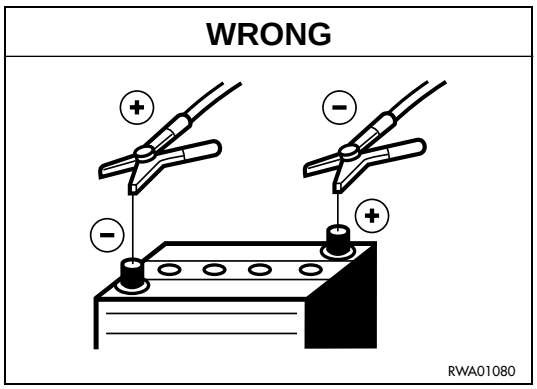

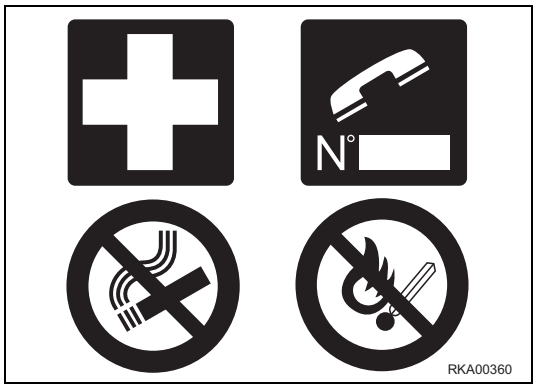

2.6.2 STARTING WITH BOOSTER CABLES

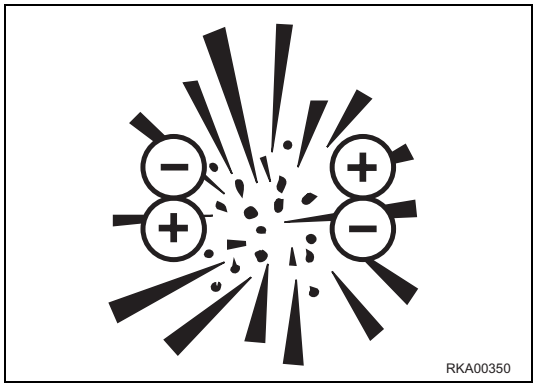

- When starting the machine with booster cables, always wear safety goggles.
- When starting the engine by means of another machine, avoid any contact between the two machines.
- When connecting the booster cables, make sure to connect the positive cable (+) first and then the negative or earth cable (–). After the start, disconnect first the negative or earth cable (–) and then the positive cable (+).
- Connect the batteries in parallel: positive to positive and negative to negative.
- When connecting the earth cable to the body of the machine to be started, operate as far as possible from the battery. (See "3.7.5 IF THE BATTERY IS DOWN").
- Do not attempt to start the engine by short-circuiting the starter terminals (see "2.8.14 PRECAUTIONS CONCERNING THE STARTER").

https://truckmanualshub.com/

2.7 PRECAUTIONS FOR THE REMOVAL OF THE MACHINE

- Before removing the machine, make sure that all the controls are in neutral.
- Incorrect manoeuvres may cause serious damage, personal injury and even death.
- To move the machine, use properly dimensioned steel cables; do not use worn cables or cables with broken strands (A), deformed cables (B), twisted cables (C).
- During the removal, no one can be allowed to get near the machines or the cable.
- Do not stand astride the cable.
- Move the machine only as far as necessary to allow the required repairs to be carried out.
- Put wooden blocks between the towing cable and the machine body, in order to avoid wear or damage.
- Do not remove the machine in any way other than that indicated in paragraph "3.7.3 REMOVING THE MACHINE".

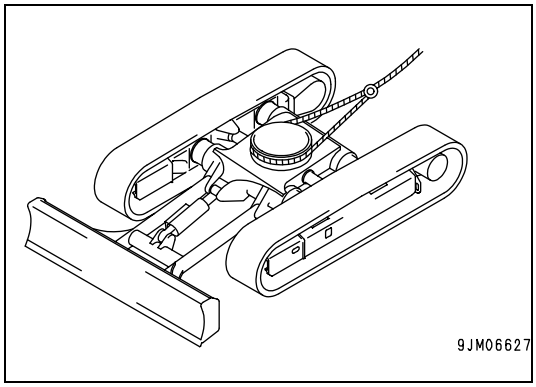

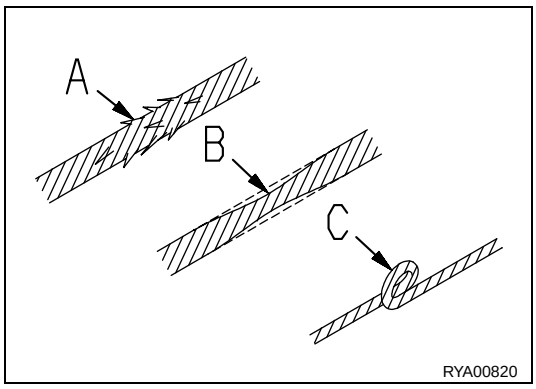

CAUTION

- **The maximum applicable force for the removal is F= 1050 kg.**
- **Use cables having the same length and draw continuosly and constantly, without jerks.**
- **Position and connect the machine to be removed taking care that it is on the same axis as the towing vehicle; the traction force exerted must be parallel to the axis of movement of the machine.**

https://truckmanualshub.com/

2.8 PRECAUTIONS FOR MAINTENANCE

2.8.1 WARNING PLATES

- Before starting any maintenance operation, position the machine on a firm and level surface, lower the equipment to the ground, engage the safety locks of the equipment and the controls, and stop the engine.
- If another person starts the engine and operates the control levers while the operator is servicing the machine, this may result in serious injury or even death.
- To avoid these risks, always attach warning plates to the control levers and to the ignition key before performing any maintenance operation; if necessary, attach additional warning tags also around the machine and in particular to the cab door handles.

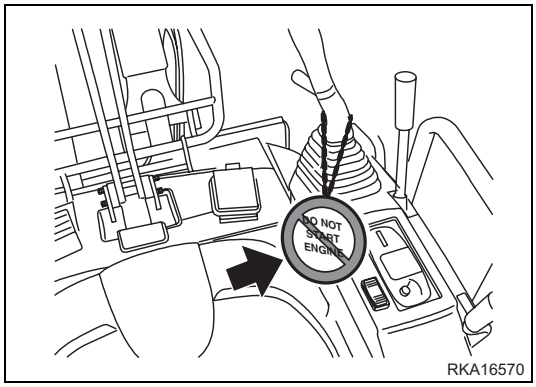

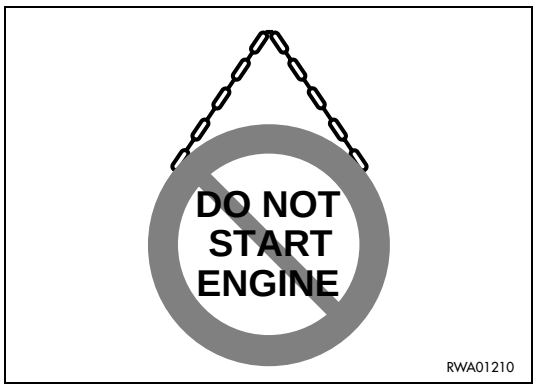

2.8.2 TOOLS

- Use only the tools supplied together with the machine and high-quality tools suitable for the tasks to be performed.
- Do not use worn, damaged, low-quality tools or tools that are not suitable for the tasks to be performed, in order to avoid any personal injury.

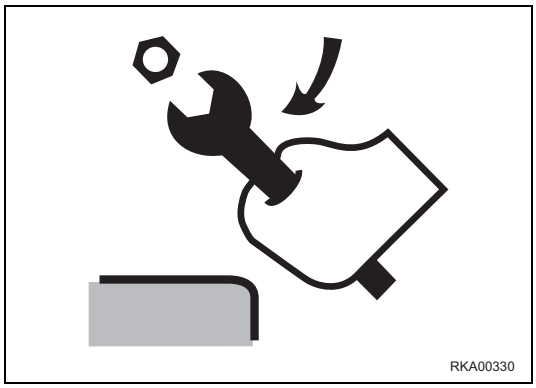

2.8.3 MAINTENANCE STAFF

- Any maintenance operation must be carried out exclusively by authorized and duly trained staff; specific and personal protection measures must be adopted when grinding, welding and when using sledges or heavy hammers.
- When assembling the equipment or cylinder connection pins, use wooden, plastic or in any case not excessively hard tools to check the centering of the holes.
  Avoid using your fingers, since the may be injured or even cut off.

https://truckmanualshub.com/

2.8.4 EQUIPMENT

- The normal or special equipment that must be installed on the machine or that have been removed must be stored in a safe place and positioned in such a way as to prevent them from falling down. If they fall on someone, they may cause serious injury.
- When assembling or removing any equipment, make sure that the ropes and the lifting hook are in good conditions and properly dimensioned for the load to be lifted.

2.8.5 WORKING UNDER THE MACHINE

- Before performing service or repairs under the machine, always lower the work equipment to the ground or in any case lower it as much as possible.
- Always secure the tracks so that they cannot move.
- Do not work under the machine, if this is not sufficiently supported.

2.8.6 CLEANING THE MACHINE

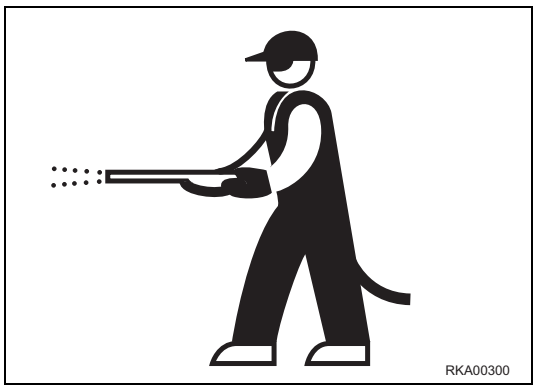

- Spilled oil or grease, scattered tools or broken pieces are dangerous, because they may cause someone to slip or trip. Always keep the machine and the work site clean and tidy.
- To clean the machine, use a pressurized jet of warm water or steam and the specific detergents available on the market. Do not use diesel oil, oil or solvents, since the former leave an oily coat that favours the sticking of dust, while the latter (even if weak) damage the painted surfaces and therefore facilitate rusting.
- While cleaning the machine, keep the pressurized jet at a minimum distance of approx. 60 cm, in order not to damage the warning plates and the pictograms.
  If the plates are damaged, request Komatsu or your Komatsu Dealer to send you spare plates and change them.
- Water into the electrical system provokes the oxidation of the contacts and may hinder the start of the machine or even make it start suddenly and abruptly. For this reason, avoid using water or steam jets to clean sensors, connectors or the inside of the cab.

https://truckmanualshub.com/

2.8.7 USE OF THE ENGINE DURING MAINTENANCE

- During maintenance operations, make the engine run only when indispensable. If it is necessary to have the engine running (for example, to wash the cooling circuit or to check the functionality of the alternator), an operator should constantly remain in the cab, in order to be able to stop the engine whenever necessary.
- During maintenance operations with running engine, do not release the control locking devices from the “locked” position or change the position of the travel levers.
  Maintenance staff must not move any control lever.
- When carrying out maintenance operations, do not touch the moving parts of the machine and avoid wearing large and loose clothes.

2.8.8 PERIODICAL CHANGE OF THE PARTS THAT ARE CRITICAL FOR SAFETY

- Periodically change the following parts, which are important to prevent fires.
  Fuel system: fuel delivery and return pipes.
  Hydraulic system: main delivery pipes of the hydraulic pump.
- Even if they seem to be in good conditions, these components must be periodically changed with new ones. In fact, these components tend to deteriorate over time.
- If one of these parts is defective, change or repair it even if the prescribed change interval has not elapsed yet. (See "4.7 PERIODICAL CHANGE OF SAFETY-RELATED COMPONENTS").

2.8.9 STOP THE ENGINE BEFORE CARRYING OUT ANY MAINTENANCE OPERATION OR INSPECTION

- Stop the machine only on firm and level ground and stop the engine before carrying out any maintenance operation or inspection.
- If it is necessary to have the engine running during maintenance, shift the safety lever (1) to the “locked” position (L) and carry out any maintenance operation with the help of another person; one operator must remain on board and the words to be used during the operation must be agreed upon in advance.
- The person who carries out the maintenance operation must be very careful not to touch any moving part of the engine.

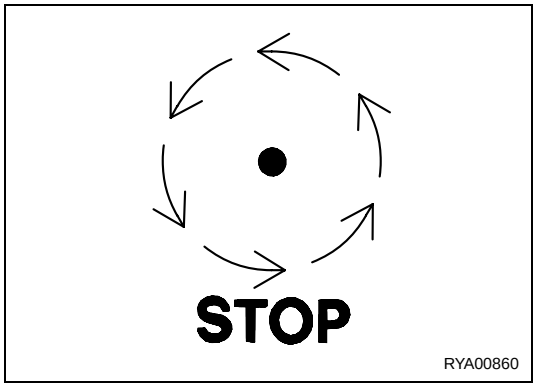

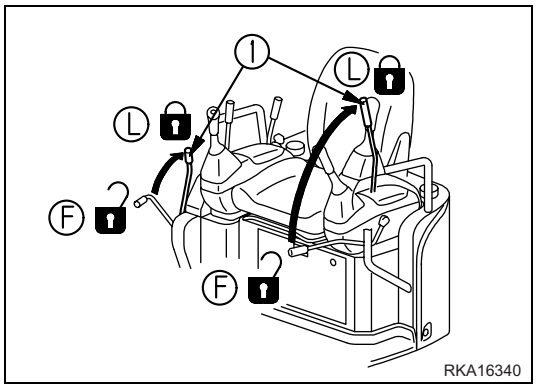

https://truckmanualshub.com/

2.8.10 RULES TO BE FOLLOWED WHEN REFUELLING OR ADDING OIL

- Keep away from naked flames while refuelling or adding oil.
- Spilled fuel or oil make the ground slippery and may cause accidents; clean any dirty area immediately and carefully.
- Always tighten the safety caps of the fuel tank and of the hydraulic oil tank securely.
- Do not use fuel to clean any part of the machine that is dirty with oil or dust.
- Always top up the fuel and oil tanks in properly ventilated areas and refrain from smoking.
- When refuelling, hold the fuel gun firmly and keep it constantly in contact with the filler until you have finished, in order to avoid sparks due to static electricity.
- Do not fill the tank completely, in order to leave room for the fuel to expand.

2.8.11 CHECKING THE COOLANT LEVEL IN THE RADIATOR

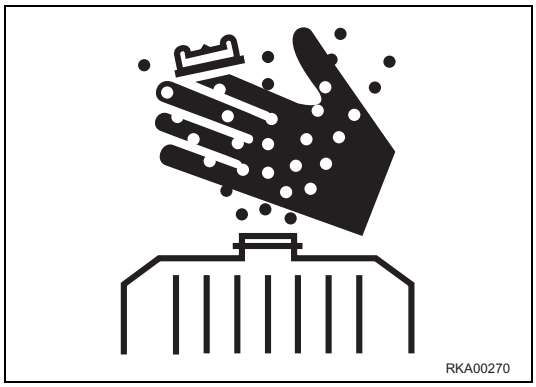

- Let the engine and the radiator cool down before checking the coolant level.
- If it is necessary to remove the cap with hot engine, wear suitable clothes and protections and loosen the cap slowly, in order to release the pressure gradually.

2.8.12 USING LAMPS

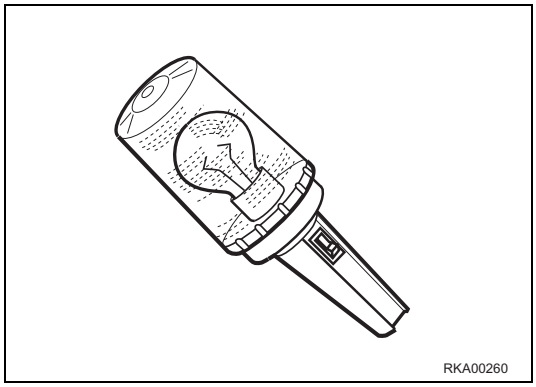

- When checking the fuel, oil, coolant or battery electrolyte level, always use homologated explosion-proof lamps.
  If such lamps are not used, there is danger of fire or explosion.

https://truckmanualshub.com/

2.8.13 PRECAUTIONS TO BE TAKEN WHEN HANDLING THE BATTERY AND THE ALTERNATOR

- When repairing the electrical system, disconnet the battery in order to stop the flow of current.

IMPORTANT

- **Disconnect first the negative earth cable (–) and then the positive cable (+).**
  At the end of the operation, reconnect first the positive cable (+) and then the negative cable (–).
- If electric welding operations are to be carried out on the machine, it is necessary to disconnect the battery and also the alternator.

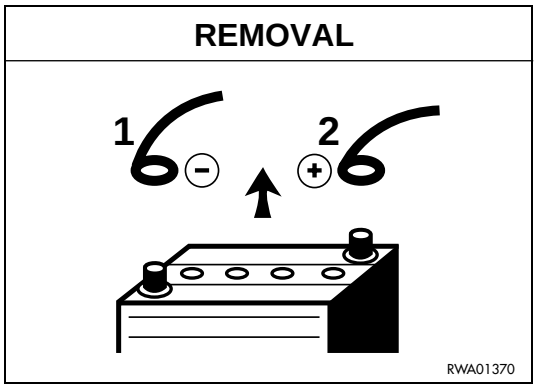

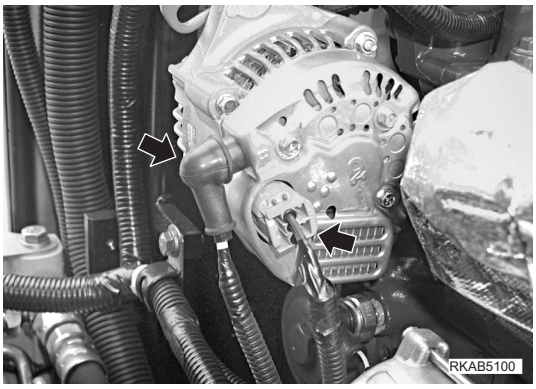

2.8.14 PRECAUTIONS CONCERNING THE STARTER

- Start the engine only when correctly seated in the driving position.
- Do not start the engine by tampering with the terminals of the starter, since the machine may move.
- Sudden or accidental movements of the machine may cause serious injury or even death.

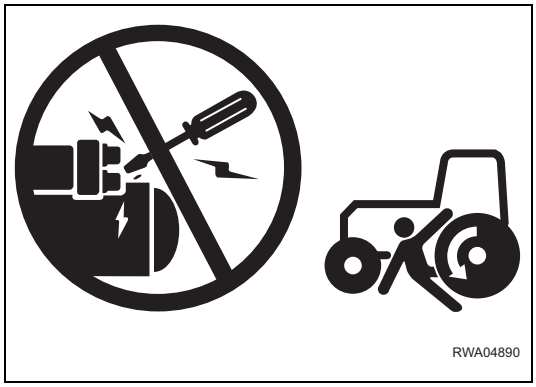

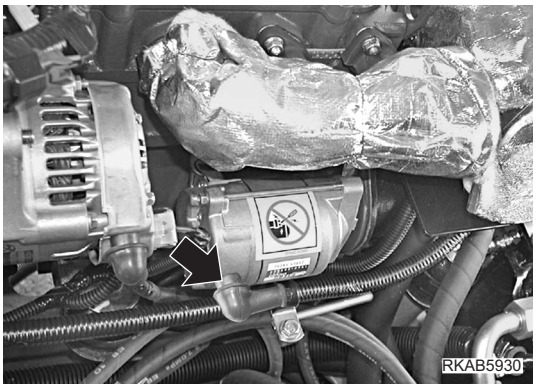

2.8.15 HANDLING HIGH-PRESSURE HOSES

- Do not bend high-pressure hoses or rub them with abrasive or cutting objects.
  Do not use any bent or cracked pipes or hoses that were previously rejected because of leaks or fastening defects, since they may burst during use.
- Always repair or replace any loose or faulty fuel or oil pipe. Any leakage of fuel or oil may cause fires.

https://truckmanualshub.com/

2.8.16 PRECAUTIONS TO BE TAKEN WHEN HANDLING HIGH-PRESSURE OIL

- Do not forget that the work equipment circuits are always under pressure; for this reason, when it is necessary to add or drain hydraulic oil or to perform maintenance operations or inspections on the hydraulic circuit, it is advisable to lower the equipment to the ground and completely release the pressures and the residual pressure present in the tank.
  Small leakages from pipes under pressure and the resulting jets are extremely dangerous, since they can perforate the skin and penetrate in the blood circulation or injure the eyes.
  For this reason, always wear goggles and thick gloves during the inspections and use a piece of cardboard or a sheet of plywood to check for oil leakages.
  If you are hit by a jet of high-pressure oil or are injured, even if slightly, immediately consult a doctor.

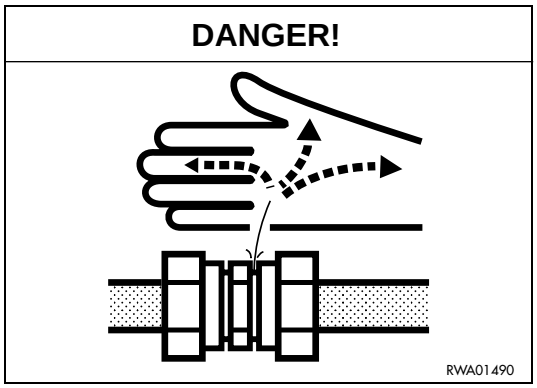

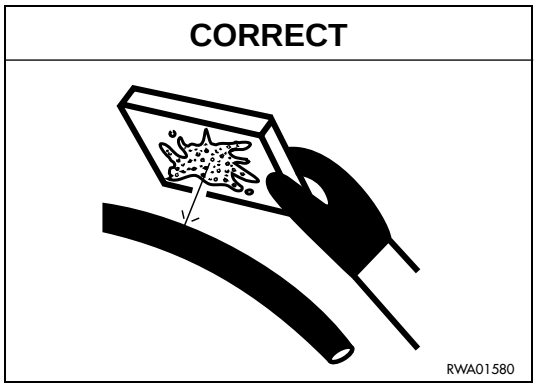

2.8.17 PRECAUTIONS FOR MAINTENANCE OPERATIONS AT HIGH TEMPERATURES AND HIGH PRESSURE

- When the machine is stopped at the end of work, the engine coolant, the oil and all the components are hot and the hydralic circuits are under pressure.
  In these conditions, if the coolant, the hydraulic oil and the engine oil are to be drained in order to change them or the filters, there are serious risks of damage and burns.
  Wait for the temperature to lower within the normal operating range (40–45°C) before carrying out any maintenance operation.

https://truckmanualshub.com/

2.8.18 PRECAUTIONS TO BE TAKEN WHEN USING HIGH-PRESSURE GREASE TO ADJUST THE TRACK TENSION

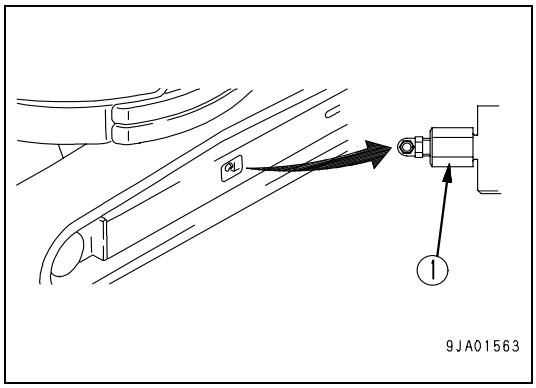

- The grease contained in the track tension adjustment device is pressurized. If the adjustment is not carried out according to the instructions given in the maintenance section, the grease valve (1) may be ejected due to the high pressure and this may be dangerous for the operator.
- When loosening the valve (1) to reduce the track tension, do not give it more than one turn.
- Keep your face, hands and other body parts away from the valve (1).

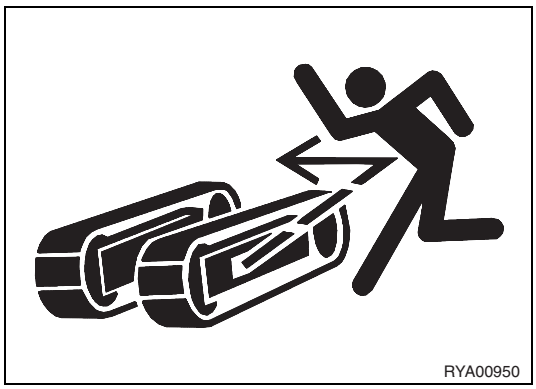

2.8.19 DO NOT REMOVE THE SHOCK ABSORBING SPRING FROM THE SHOCK ABSORBER UNIT

- The shock absorber unit is provided with a shock absorbing spring with high preload, in order to absorb the impacts of the front idler roller.
  Do not attempt to remove the spring, since this may lead to serious accidents and even death.
  For any operation on the shock absorber unit, contact your Komatsu Dealer.

2.8.20 HYDRAULIC ACCUMULATOR

The hydraulic accumulator contains pressurized nitrogen.
When carrying out any operation on the accumulator, do not proceed carelessly, since this may cause an explosion and consequently serious injury and even death. For this reason, keep to the following instructions:

- do not remove the accumulator;
- do not bring the accumulator near sparks or naked flames;
- do not make holes in the accumulator, do not weld or use oxyhydrogen flames;
- do not hit or press the accumulator;
- when disposing of the accumulator, take care to release the gas it contains. Have this operation carried out only by a Komatsu Dealer.

https://truckmanualshub.com/

2.8.21 COOLING FAN AND BELT

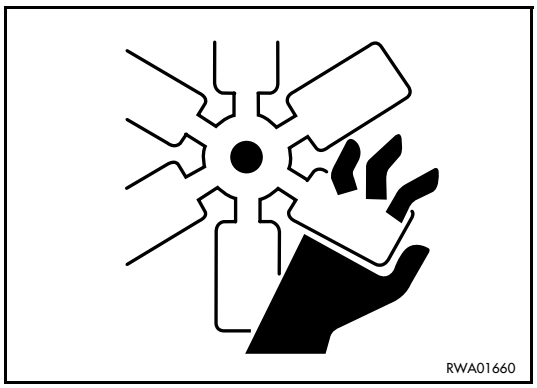

- Be careful to the revolving parts and do not allow anyone to get too close to them, since clothes or limbs may get caught into them.
- If hands, clothes, or tools become entangled in the fan blades or the fan belt, they may be cut, torn or seriously injured/ damaged; for this reason, avoid touching any revolving parts.

2.8.22 WASTE MATERIALS

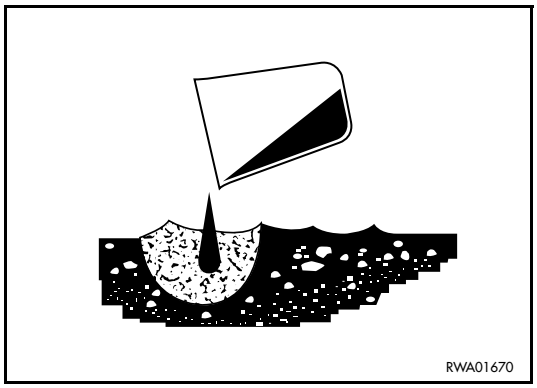

- Do not dispose of used oil in the sewer system, rivers, etc.
- Always put used oil in containers. Do not drain exhausted oil directly on the ground.
- Keep to the laws and regulations in force when disposing of harmful substances such as oil, fuel, solvents, used filters and batteries.

2.8.23 COMPRESSED AIR

- When cleaning the machine or its parts with compressed air, flying particles may cause serious injury or property damage.
- When using compressed air to clean the machine components or the radiator, always wear safety goggles, mask, gloves, and other protection items.

https://truckmanualshub.com/

2.8.24 PRECAUTIONS TO BE TAKEN WHEN HANDLING TECHNOPOLYMERS AND ELASTOMERS

⚠ DANGER

- **Some components of the machine contain polymeric and elastomeric materials (Viton sealing rings, Teflon rings, piston rings made of fluoroelastomers, electric cable insulating materials, etc.).**
  At ambient temperature and up to approximately 200°C these materials can be handled without taking special precautions, since they are completely inert.
  If these materials are burnt, they send out gas and become highly toxic.
  Once they have cooled down, these materials must be collected in tight bags using heavy, waterproof gloves; then, gloves and materials must be disposed of according to the current regulations in force.
  The contaminated parts of the machine must be washed with highly alkaline detergents and then with a solution of water and detergent.

- Avoid burning gaskets, eletric cables, sealing rings.
- Dispose of elastomeric and polymeric waste according to the regulations in force.
- Do not touch any burnt elastomeric or polymeric waste and in case of accidental burning avoid inhaling the toxic gases produced.
- In case of contact with the skin, immediately rinse with a solution made of water and an alkaline detergent for about 30 minutes and then contact a poisoning treatment center without delay.

2.8.25 PRECAUTIONS TO BE TAKEN WHEN USING SYNTHETIC BIODEGRADABLE OIL TYPE HEES

- It is not possible to mix synthetic biodegradable oil type HEES with ordinary hydraulic oils, since when the temperature increases insoluble compounds are generated, which are deposited on the filters and clog them (the maximum concentration of ordinary oil cannot exceed 1% of the total quantity of oil).
- Biodegradable oil can be used only in the hydraulic system; it cannot be used in the engine, the transmissions, the braking system, etc.
- Before introducing the biodegradable oil in the hydraulic system, empty the system completely, disconnecting the cylinders and all the parts that may contain ordinary oil, and replace the drain filter with a new one.
  Start the engine and let it idle without using the work equipment, wait until the oil reaches a temperature of at least 40°C, then start moving the equipment, so that all the parts of the system are filled with oil. Stop the engine and check the oil level (see "3.3.1.2 CHECKS TO BE CARRIED OUT BEFORE STARTING THE ENGINE" - " CHECKING THE OIL LEVEL IN THE HYDRAULIC TANK AND TOPPING UP").

https://truckmanualshub.com/

THE MACHINE AND ITS OPERATIONS

https://truckmanualshub.com/

3.1 MACHINE ILLUSTRATIONS

3.1.1 OVERALL VIEW OF THE MACHINE

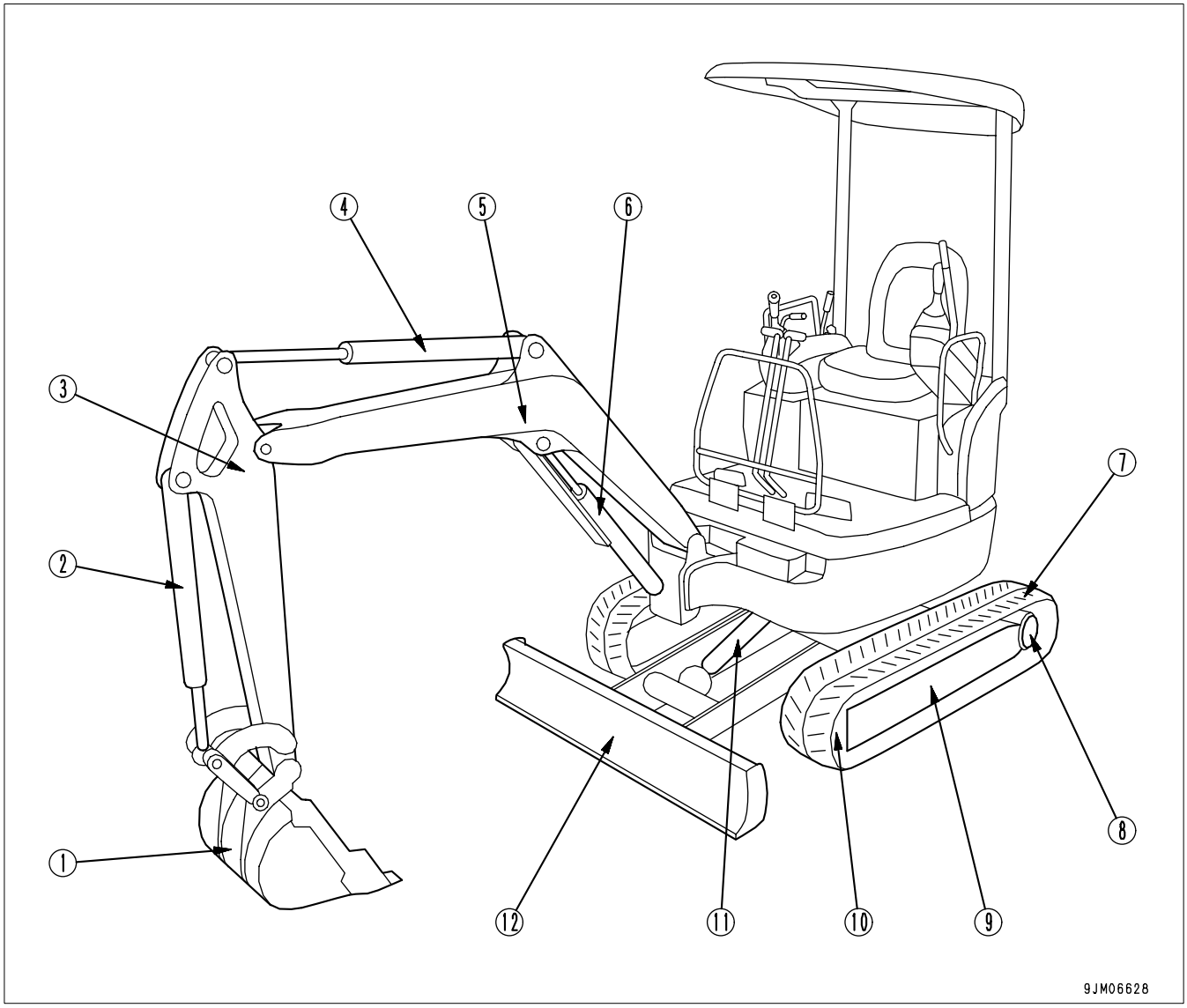

(1) Bucket
(2) Bucket cylinder
(3) Arm
(4) Arm cylinder
(5) Boom
(6) Boom cylinder
(7) Track
(8) Sprocket
(9) Undercarriage
(10) Idler roller
(11) Cylinder blade
(12) Blade

https://truckmanualshub.com/

3.1.2 CONTROLS AND GAUGES

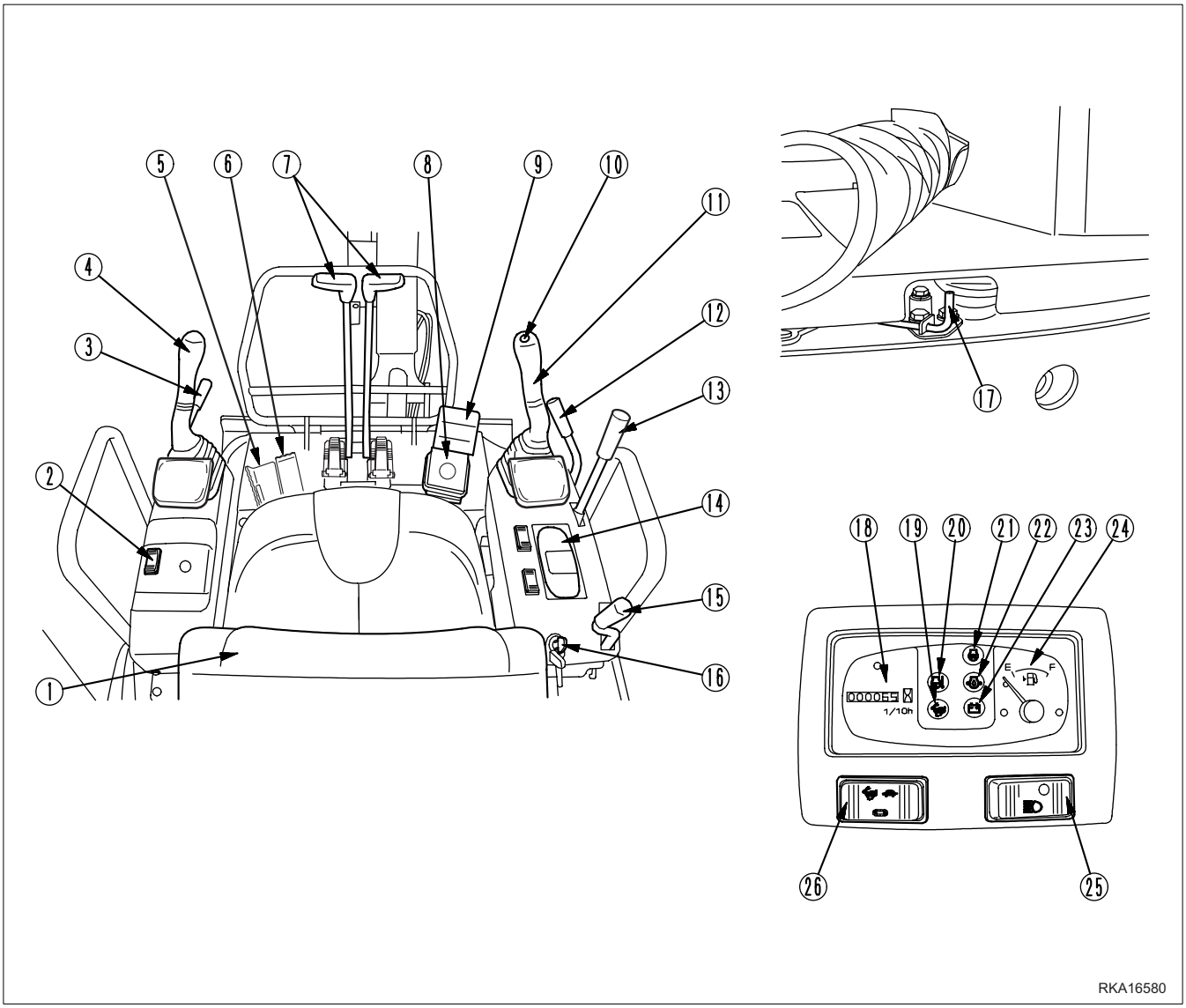

(1) Operator seat
(2) Blade/adjustable track gauge selection switch (if provided)
(3) Control locking lever (left)
(4) Left work equipment control lever
(5) Pedal locking device
(6) Optional equipment control pedal
(7) Travel levers
(8) Boom swing control pedal
(9) Pedal locking device
(10) Horn switch
(11) Right work equipment control lever
(12) Control locking lever (right)
(13) Blade/adjustable track gauge control lever
(14) Warning lights and gauges display
(15) Accelerator lever
(16) Ignition switch
(17) Cab floor locking lever
(18) Hour meter
(19) Travel speed increase warning light
(20) Engine coolant temperature warning light
(21) Engine preheating warning light
(22) Engine oil pressure warning light
(23) Battery charge level warning light
(24) Fuel gauge
(25) Light switch
(26) Travel speed selection switch (if provided)

https://truckmanualshub.com/

3.2 INSTRUMENTS AND CONTROLS

The following paragraphs describe the devices that are necessary for correct operation of the machine.

To perform the required operations correctly and safely, it is important to understand the equipment operating methods and the meaning of the information displayed.

3.2.1 WARNING LIGHTS AND GAUGES

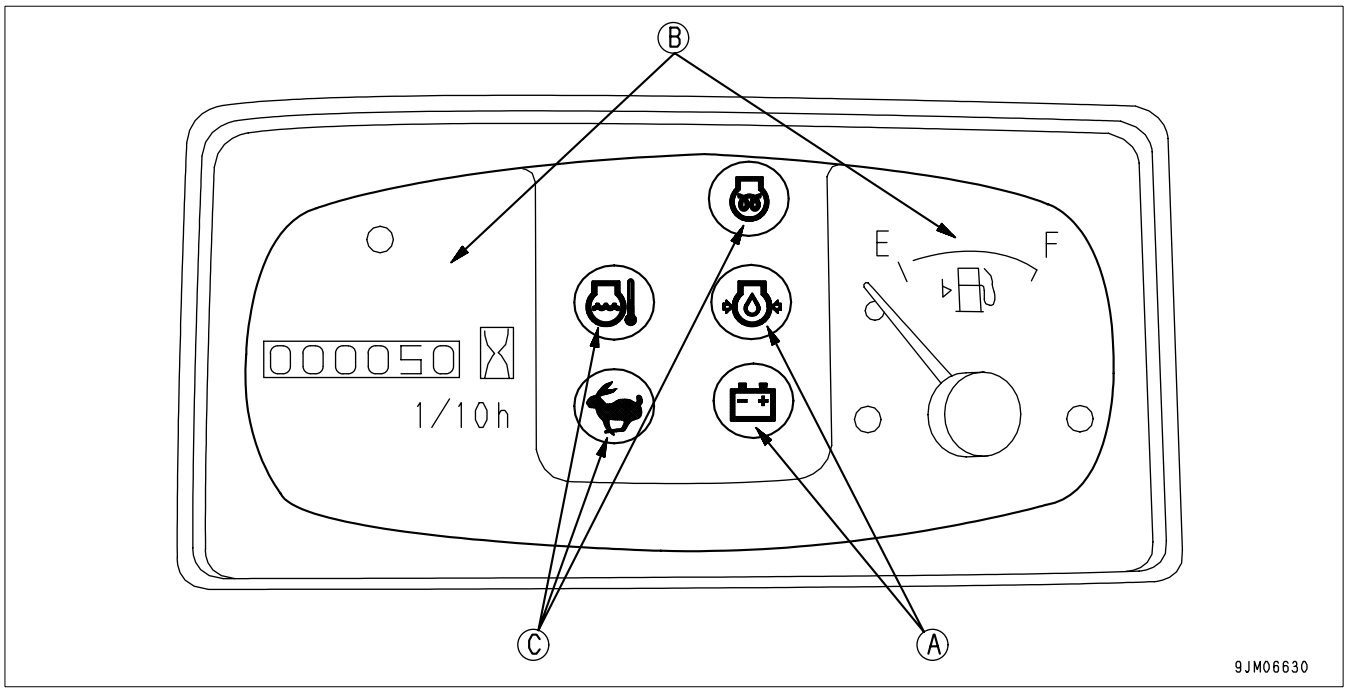

(A): Emergency warning lights
(B) Gauges
(C) Warning lights

https://truckmanualshub.com/

3.2.1.1 EMERGENCY WARNING LIGHTS

CAUTION

- **If a warning light does not go out or comes on when the engine is running, stop the machine immediately and try to find the cause of the failure.**

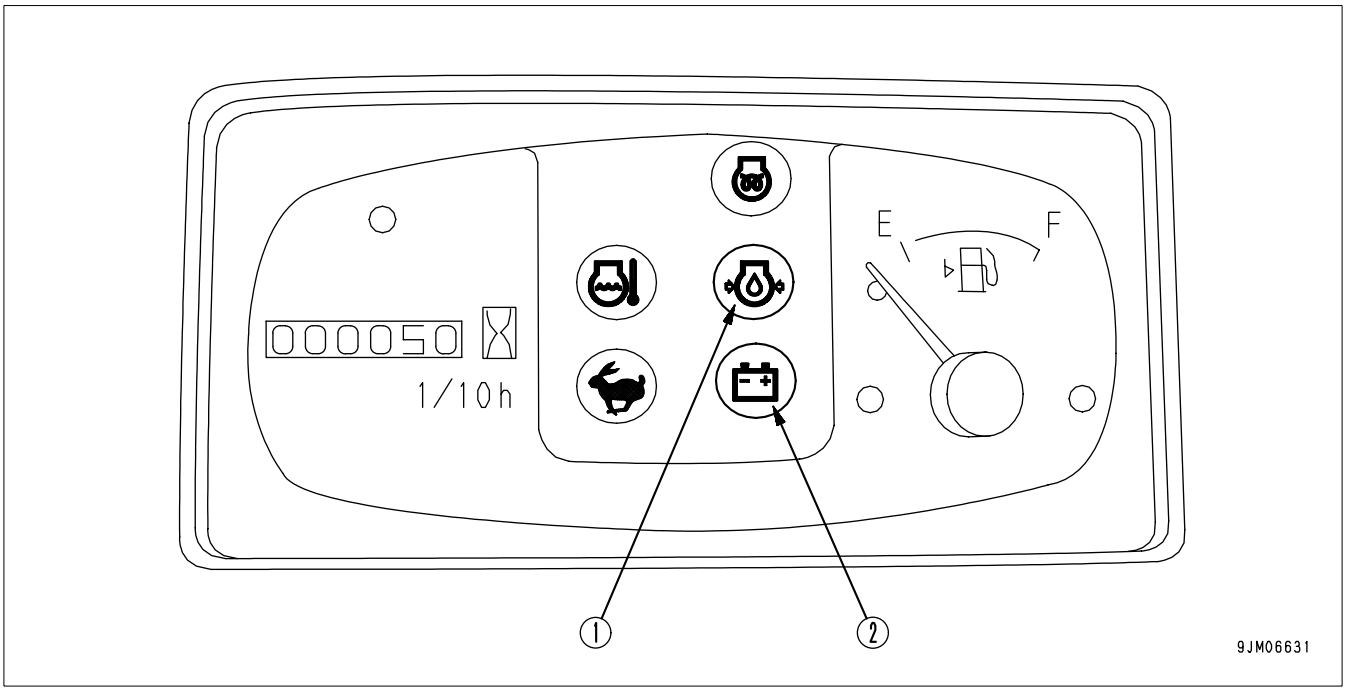

(1) Engine oil pressure warning light

(2) Battery charge level warning light

1. Engine oil pressure warning light

This warning light comes on, together with the acoustic alarm, when the engine is not running and the starting circuit is operated, and goes out as soon as the engine lubrication circuit is pressurized.
If it does not go out or comes on when the engine is running, stop the machine immediately and try to find the cause of the failure, see ("3.7.6 OTHER TROUBLES").

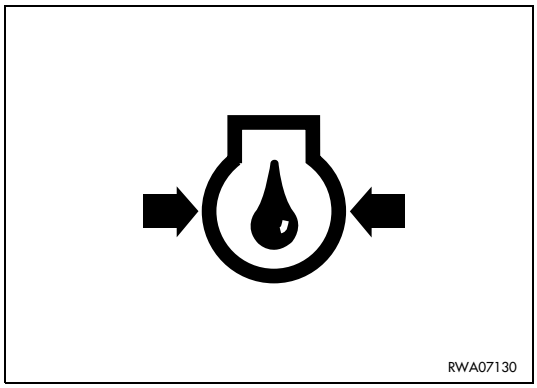

2. Charge level warning light

This warning light comes on, together with the acoustic alarm, when the starting circuit is energized and goes out when the engine exceeds the idling speed; if this warning light remains on even when the engine is running at the normal operating speed, this means that the alternator is not working and the battery is not charged correctly.

IMPORTANT

- **If the warning light remains off when the ignition key is turned to position ON, this means that the alternator is faulty or broken.**

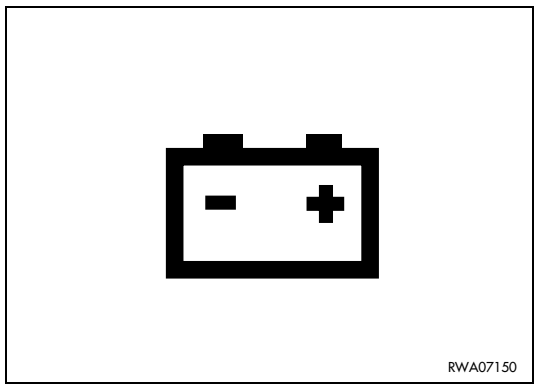

https://truckmanualshub.com/

3.2.1.2 GAUGES

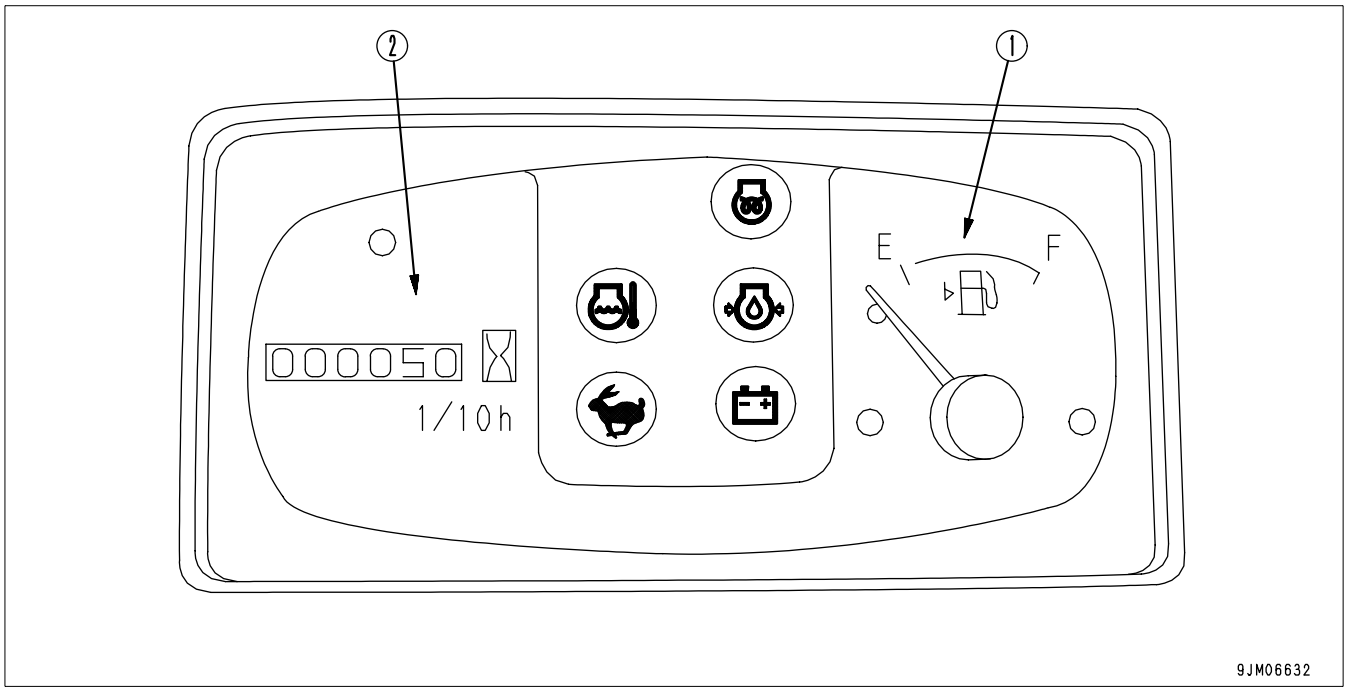

(1) Fuel gauge

(2) Hour meter

1. Fuel gauge

It indicates the fuel level in the tank and functions only when the ignition key is in position ON (see "3.2.2 pos: 1. Ignition switch").
F: maximum level.
E: minimum level.
If the quantity of fuel in the tank is less than 3.3 litres, the indicator reaches the red reserve area (A).

NOTE

- If the indicator reaches the red reserve area (A) during use, stop the machine and provide for refuelling.

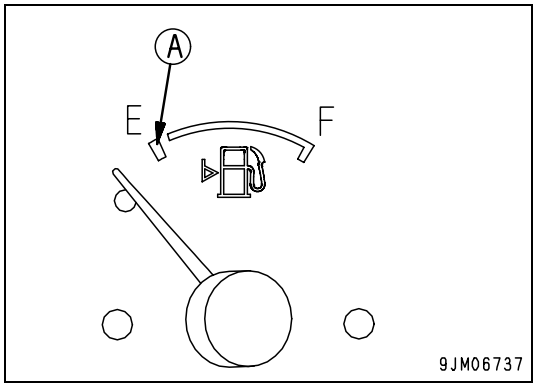

2. Hour meter

This instrument indicates the total number of operating hours of the engine. The count is continuous and the hour number is increased by 0.1 when the engine has worked for 0.1 hour (6 minutes), independently of the engine speed. When the engine is running, the LED positioned on the hour meter comes on, indicating that the count is proceeding.
If the engine is on, the hour meter keeps counting even if the machine is not working. The reading of the hour meter must be used as reference for the machine maintenance intervals.

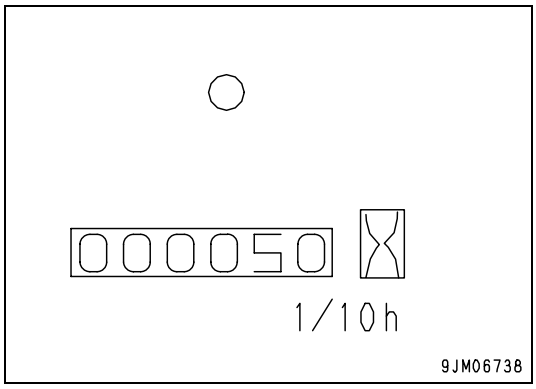

https://truckmanualshub.com/

3.2.1.3 WARNING LIGHTS

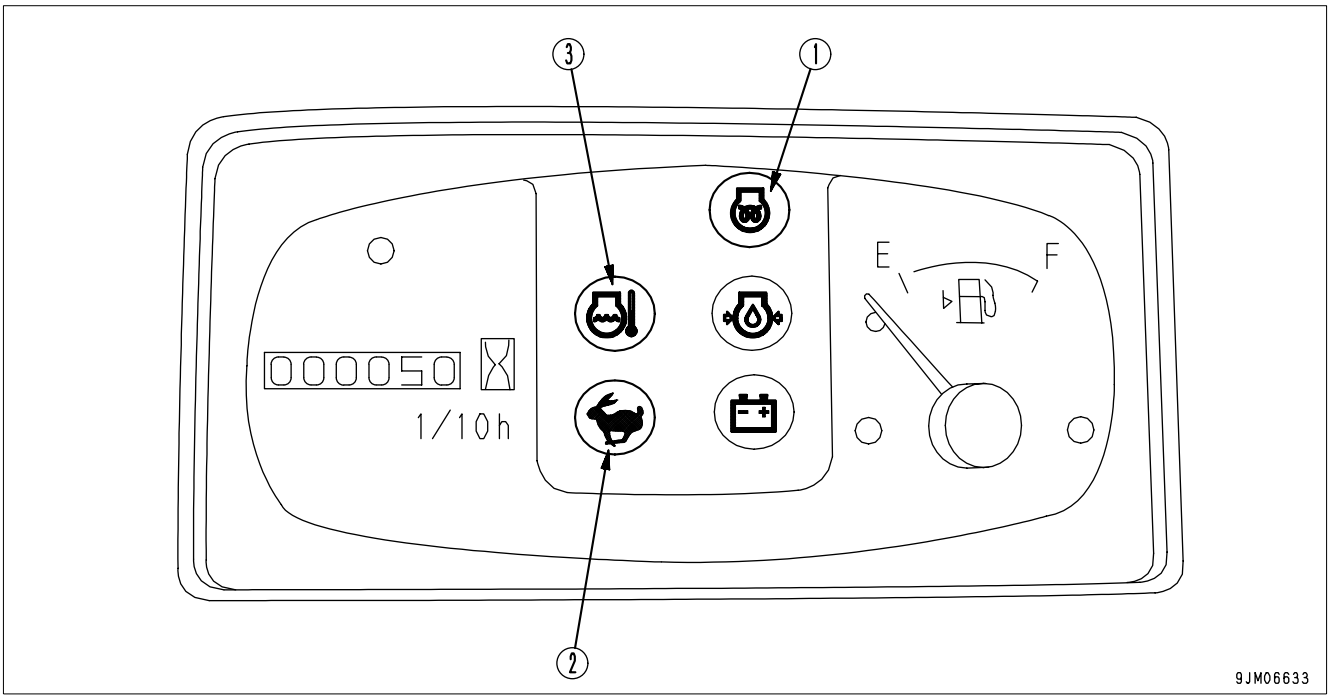

(1) Engine preheating warning light

(2) Travel speed increase warning light

(3) Engine coolant temperature warning light

1. Engine preheating warning light

This warning light comes on when the ignition key is turned to the preheating position (HEAT) to start the engine at low temperatures. It goes out automatically after approximately 10 seconds, when the preheating process has been completed.

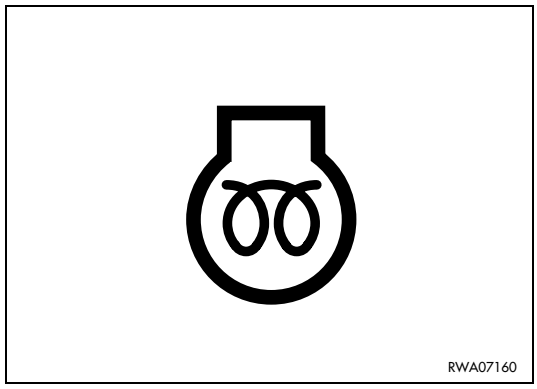

2. Travel speed increase warning light

This warning light comes on when the travel speed selection switch is in high speed position (see "3.2.2 pos: 4. Travel speed selection switch (if provided)"). When the speed selection switch in low speed position, the warning light is off.

NOTE

- When the machine travels at high speed on soft ground or up a slope and the load increases, the low speed is automatically selected, but the travel speed increase warning light remains on.

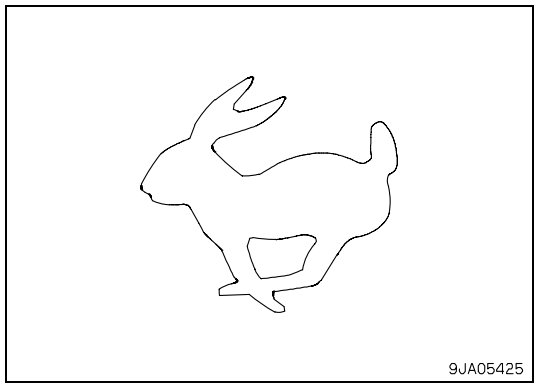

https://truckmanualshub.com/

3. Engine coolant temperature warning light

This warning light comes on when the engine coolant exceeds the maximum temperature allowed; in this case, reduce the engine speed until the warning light goes out. If this inconvenience occurs again, make sure that the radiator is clean.

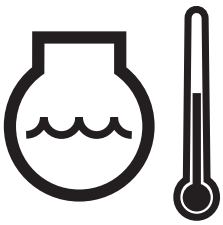

RKA13940

https://truckmanualshub.com/

3.2.2 SWITCHES AND PUSH BUTTONS

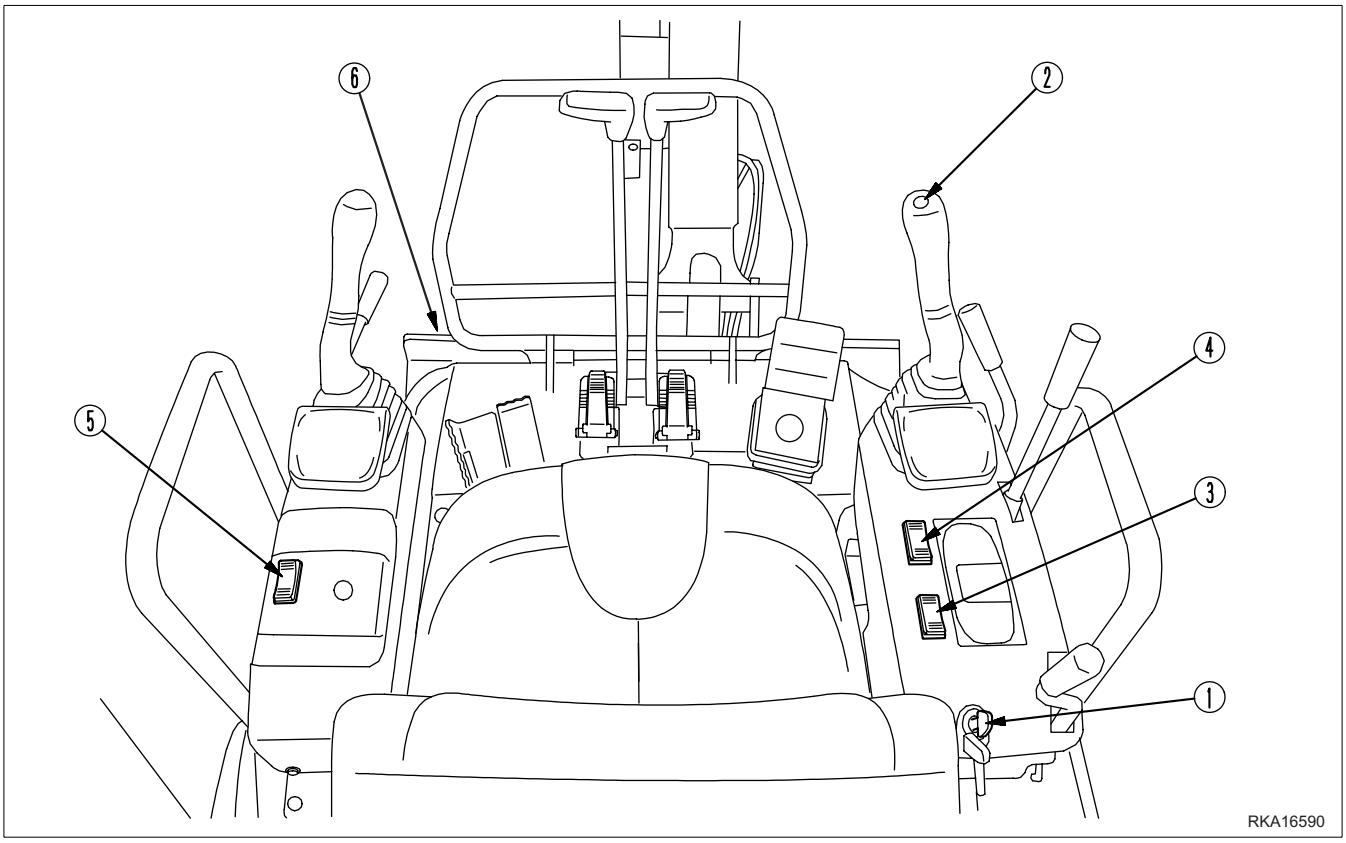

(1) Ignition switch
(2) Horn
(3) Light switch
(4) Travel speed selection switch (if provided)
(5) Blade/adjustable track gauge selection switch (if provided)
(6) Power outlet

1. Ignition switch

This is a four-position rotary switch and is used to switch the engine on and off.

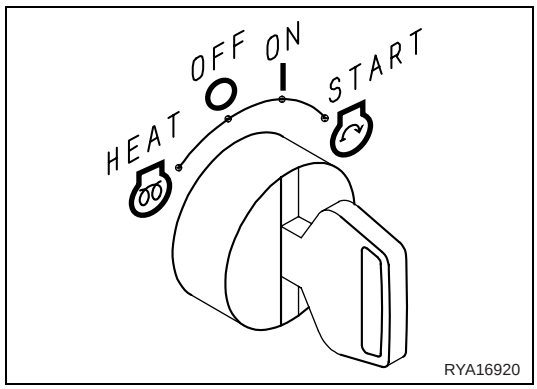

- Position OFF
  When the switch is in this position, the ignition key can be inserted and removed. When the key is turned to this position, the power supply to the electric circuit is interrupted and the engine stops.
- Position ON
  The load and light circuits are under voltage. Keep the key in this position when the engine is on.
- Position START
  This is the ignition position. Keep the key in this position to make the starter run. As soon as the engine starts, release the key, which will automatically return to position ON.
- Position HEAT (preheating)
  When starting the engine in cold weather, turn the key to position HEAT for approximately 10 seconds, until the corresponding warning light goes out. Release the key, which will automatically return to position OFF. Start the engine by rotating the key to position START.

IMPORTANT

- **If the engine has stopped due to lack of fuel, start it by proceeding as follows: turn the ignition switch to position ON, wait for 15 seconds and then turn the key to position START.**

https://truckmanualshub.com/

2. Horn

This button is positioned at the centre of the right lever knob and serves to send out a warning signal at the beginning of work and in case of danger.

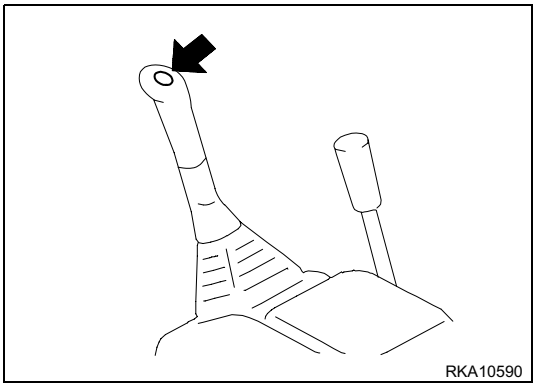

3. Light switch

This is a two-position (ON-OFF) switch and is used to turn the lights on and to light up the warning lights and gauges display.

Position ON (A):Lights on and warning lights and gauges display lit up

Position OFF (B):Lights and display off.

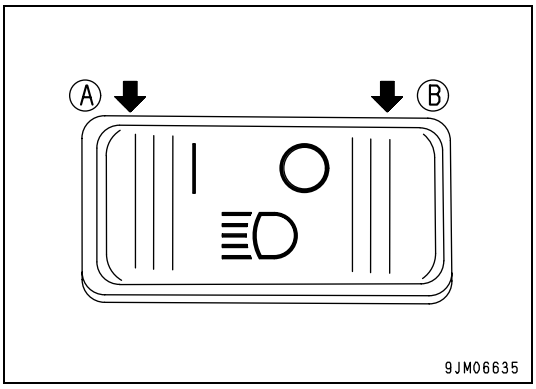

4. Travel speed selection switch (if provided)

⚠ WARNING

- **When loading or unloading the machine on/from a motor vehicle, always travel at low speed. Never operate the travel speed selection switch during the loading or unloading operation.**
- **If the travel speed is switched over from high to low when the machine is travelling, the machine may deviate to one side, even if it is travelling straight.**
  Stop the machine before changing speed.

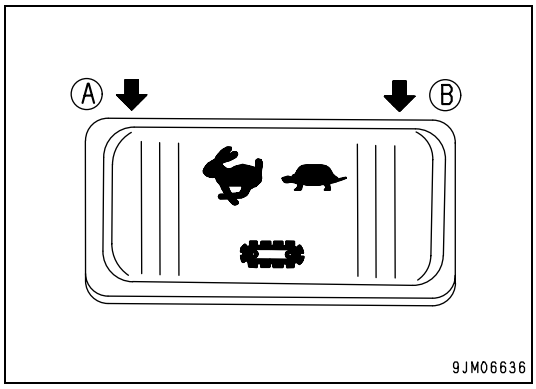

This is a two-position switch and is used to change over from high to low speed or vice versa.

High travel speed (A): When the switch is in this position, the high speed is selected and the speed increase warning light on the display comes on .

Low travel speed (B): When the switch is in this position, the low speed is selected and the warning light goes out.

NOTE

- When the engine is started, the low speed is automatically selected.
  When the machine travels on soft ground or up a slope at high speed and the load increases, the low speed is automatically selected, but the speed increase warning light remains on. When the load is reduced, the travel system automatically changes over to high speed.

https://truckmanualshub.com/

5. Blade/adjustable track gauge selection switch (if provided)

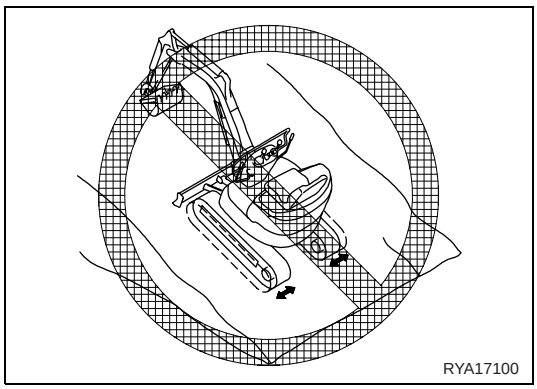

WARNING

- **Use the narrow track gauge only when it is necessary to go through narrow passages or when there is no other choice. For normal applications and digging operations, always select the wide track gauge.**
- **Avoid adjusting the track gauge when the machine is working on a slope: the machine may lose stability and overturn. Always adjust the track gauge on level surfaces.**
- **When the track gauge is narrowed completely, also the lateral stability of the machine is reduced. In work sites where the machine runs the risk of overturning, always widen the track gauge and pay the utmost attention during travel.**
- **Before using the blade/adjustable track gauge lever, check the position of the switch.**

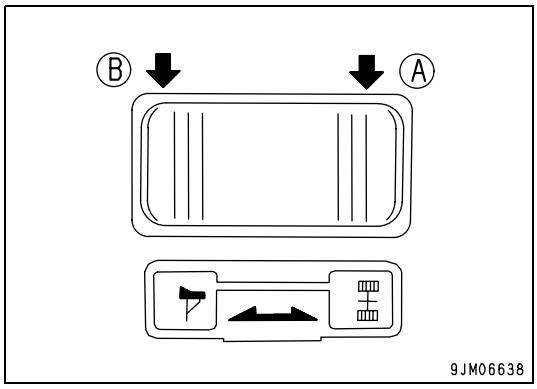

This is a two-position switch and allows the operator to choose between using the blade and adjusting the track gauge.

Adjustable track gauge (A): when the switch is in this position, it is possible to adjust the track gauge.

Blade (B): When the switch is in this position, it is possible to use the blade.

For further details on how to use the blade and adjust the track gauge, (see "3.2.3 pos: 5. Blade/adjustable track gauge selection switch (if provided)").

6. Power outlet (12V)

A power outlet is positioned on the front part of the machine for the connection of a lamp for routine and maintenance operations. It is a two-pole outlet and is in compliance with the ISO 4165-1979 standard.
Power supply 12 V.

https://truckmanualshub.com/

3.2.3 CONTROL LEVERS AND PEDALS

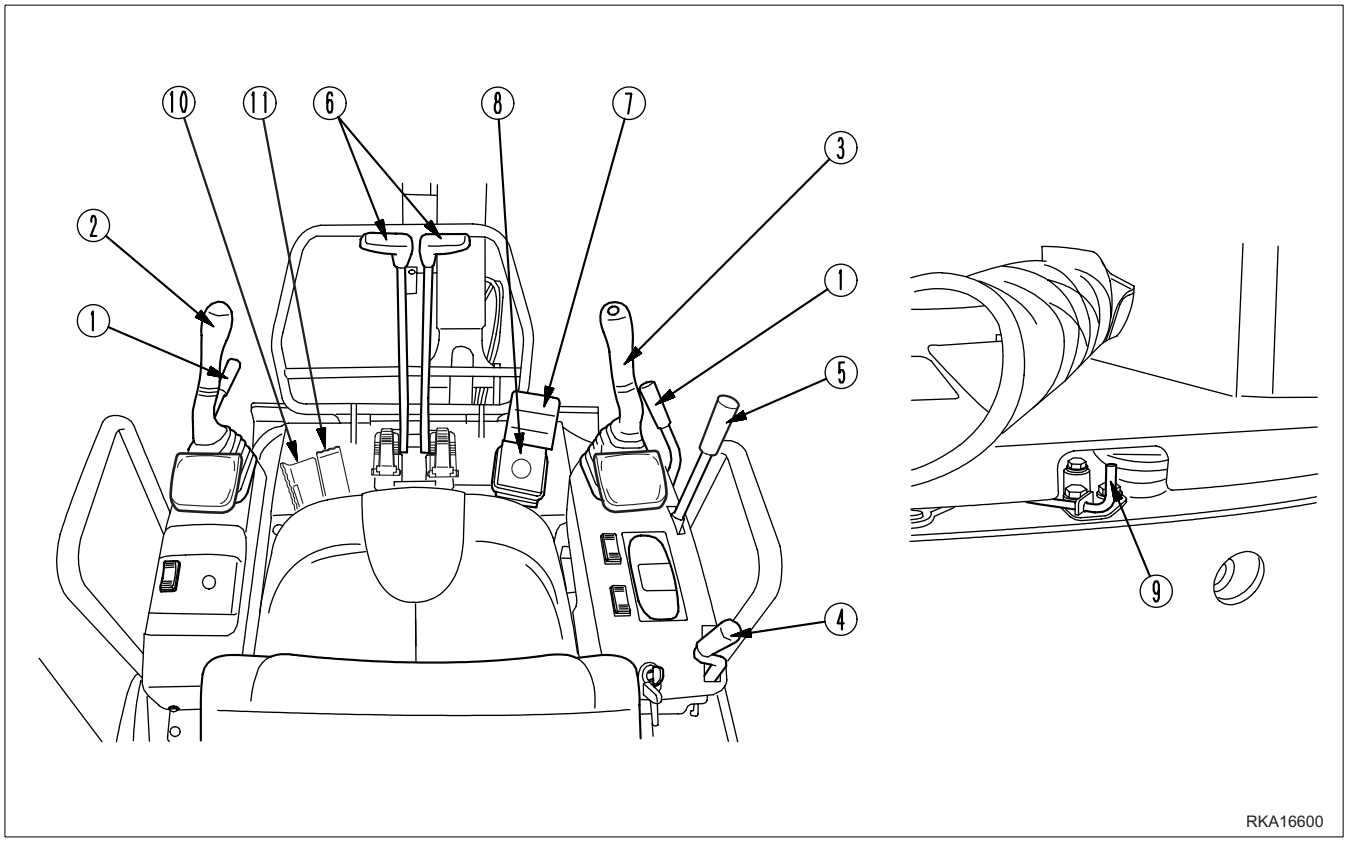

(1) Safety lever (control locking lever)
(2) Left work equipment control lever
(3) Right work equipment control lever
(4) Accelerator lever
(5) Blade/adjustable track gauge lever (if provided)
(6) Travel levers (with pedal)
(7) Boom swing control pedal locking device
(8) Boom swing control pedal
(9) Cab floor locking lever
(10) Pedal locking device (for the optional equipment control pedal)
(11) Optional equipment control pedal

https://truckmanualshub.com/

1. Safety lever (control locking lever)

WARNING

- **Before leaving the driver seat, lower the equipment to the ground and shift the safety lever to the "locked" position (L). If the safety lever is not in the "locked" position and the control levers are touched by mistake, this may lead to serious injury.**
- **If the safety lever is not in the "locked" position, the control levers may move, causing accidents or serious injury. Always make sure that the lever is in the "locked" position, as shown in the figure.**
- **When shifting the safety lever, take care to avoid touching the equipment control levers.**

This lever operates the safety device that locks the work equipment, the swing and travel functions and the attachments. When pulled upwards, it is in "locked" position (L).
The safety device is hydraulic, therefore even if the control levers and the pedals move, the work equipment and the machine cannot be operated.

NOTE

- If the safety lever on the right or left side is not in the "locked" position (L), the engine cannot be started. Before operating the ignition switch, always make sure that the safety lever is in the "locked" position. If the engine stops while the safety lever is in "free" position (F), shift the lever back to the "locked" position before operating the ignition switch.

(F): free

(L): locked

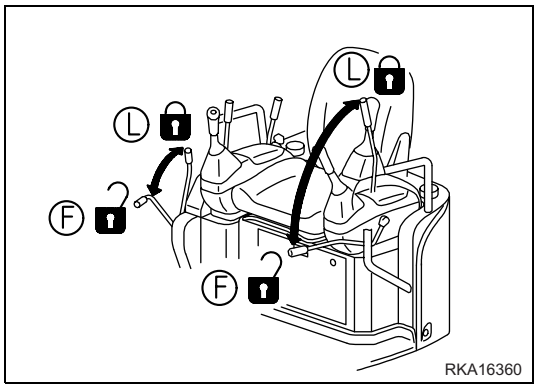

https://truckmanualshub.com/

2. - 3. Work equipment control levers

WARNING

- **Before carrying out any manoeuvre with these levers, the operator must seat in the work position and fasten the seat belt.**
- **Before leaving the driver seat, lower the equipment to the ground, lock the controls with the safety lever and stop the engine.**

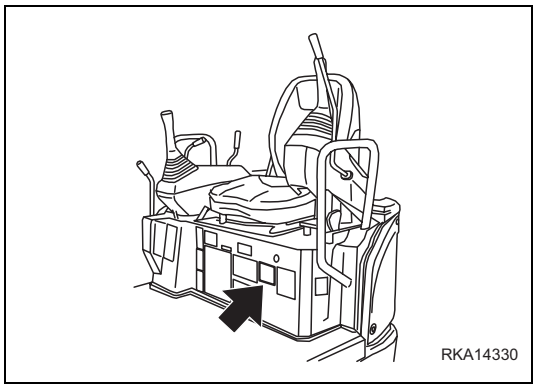

IMPORTANT

- **The horn push button is positioned on the right lever grip and must be used to warn all the people in the vicinity before starting work and in case of danger.**
- **When the safety lever is in the “locked” position, all the movements are inhibited (see "3.2.3 pos: 1. Safety lever (control locking lever)").**

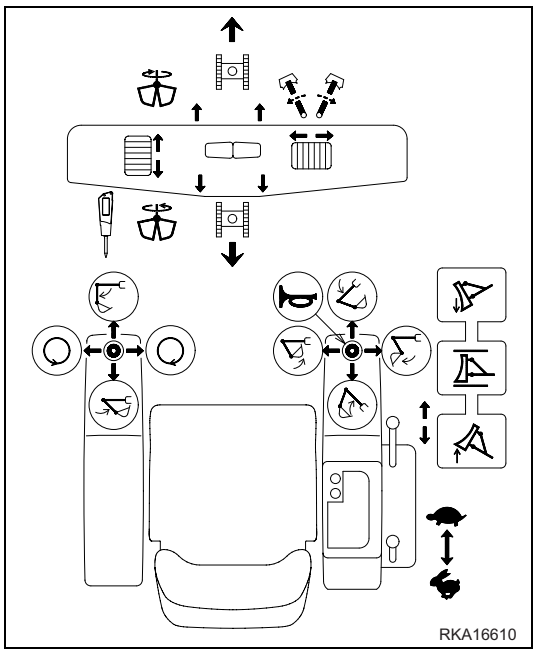

The control lever (2) is positioned on the operator’s left and controls the arm and the turret swing.

- Swing function
  (a) Swing to the right
  (b) Swing to the left
- Arm
  (c) Fold
  (d) Extend

N (Neutral): the turret and the arm are held in the position where they stopped.

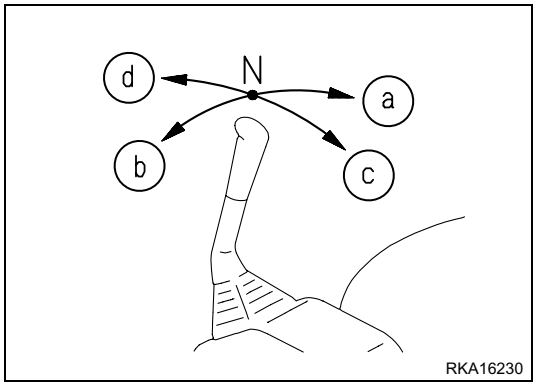

The control lever (3) is positioned on the operator’s right and controls the boom and the bucket.

- Boom
  (e) Lift
  (f) Lower
- Bucket
  (g) Open
  (h) Fold

N (Neutral): the boom and the bucket are held in the position where they stopped.

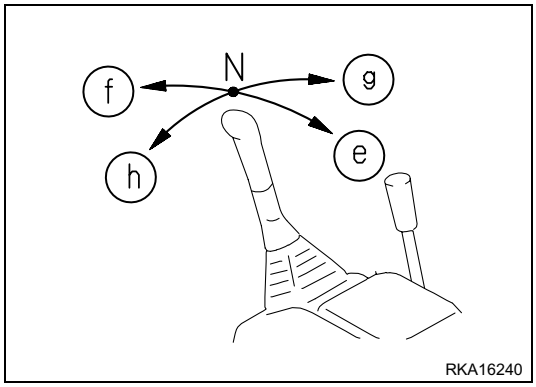

https://truckmanualshub.com/

4. Accelerator lever

This lever is used to control the engine speed and power.

(a) Minimum: push the lever completely forward.

(b) Maximum: pull the lever completely backward.

Use the accelerator with care, especially when the machine is under strain or is working in difficult conditions. Avoiding useless accelerations means reducing consumption and extending the service life of both the engine and the machine.

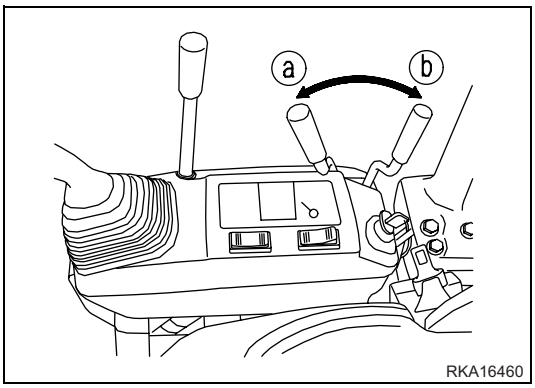

5. Blade/adjustable track gauge lever (if provided)

WARNING

- **Narrow the track gauge only when it is necessary to travel or to carry out digging operations in small spaces. In any other condition, always select the wide track gauge.**
- **Avoid adjusting the track gauge when the machine is working on a slope. This may affect the lateral stability of the machine.**
- **Widen or narrow the track gauge with the machine resting on a firm and level surface and the tracks slightly raised from the ground, in order to avoid damaging the tracks and the hydraulic motors.**

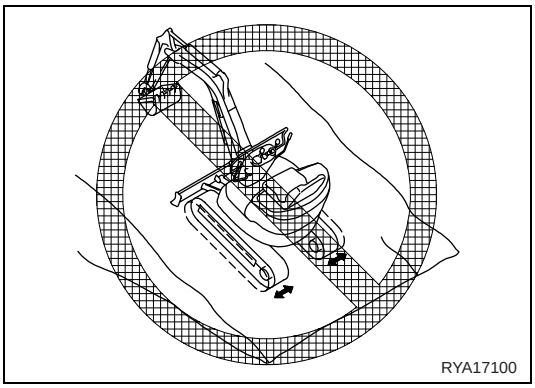

This lever is used to control the movements of the blade or to adjust the track gauge, depending on the position of the switch (see "3.2.2 pos: 5. Blade/adjustable track gauge selection switch (if provided)").

Blade

(a) Lower

(b) Lift

Adjustable track gauge

(a) Narrow track gauge

(b) Wide track gauge

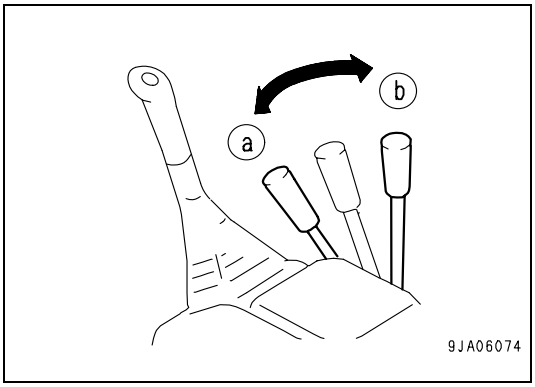

NOTE

- When carrying out digging operations that require the blade to be used for more than one hour without interruption, pay attention to the coolant temperature, since this may increase excessively.
- Before using the lever, check the position of the blade/ adjustable track gauge switch.

https://truckmanualshub.com/

6. Travel levers

WARNING

- **Before carrying out any manoeuvre with these levers, the operator must seat in the work position and fasten the seat belt.**
- **Before moving the machine, make sure that the sprocket (A) is positioned at the rear of the machine and that the safety locks are engaged; if the turret is rotated by 180°, the controls are inverted (see "3.3.5 HOW TO MOVE THE MACHINE" e "3.3.6 STEERING THE MACHINE").**
- **Use the travel control pedals only when the machine is moving. If a pedal is inadvertently pressed when the machine is not moving or steering, this may move suddenly and cause serious accidents.**
- **When travelling or carrying out steering manoeuvres, use the pedals with the maximum care.**
- **When leaving the operator seat, always rotate the pedals to the rest position, in order to avoid pressing them by mistake.**

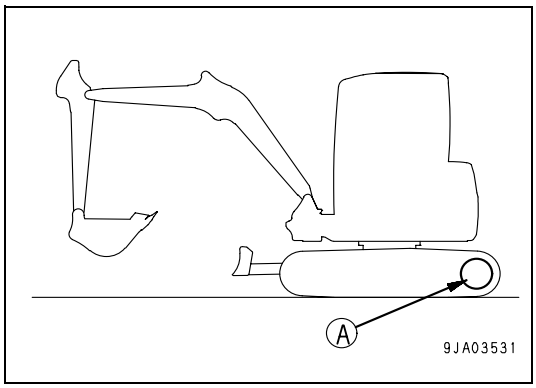

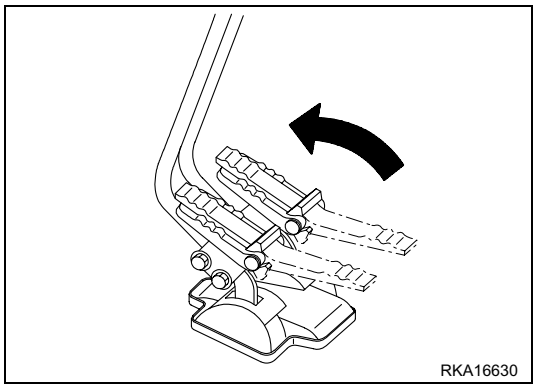

These levers are used to operate the travel motors (right and left) and control the forward and reverse travel according to the movements indicated.

(a) FORWARD: levers pushed forward

(b) REVERSE: levers pulled towards the operator

N (Neutral): machine at rest.

NOTE

- When it is necessary to use the travel pedals, the opening operation must be carried out by the operator while correctly seated in driving position. After use, always rotate the pedals to the rest position (closed).

IMPORTANT

- **When the safety lever is in the “locked” position, all the movements are inhibited (see "3.2.3 pos: 1. Safety lever (control locking lever)").**

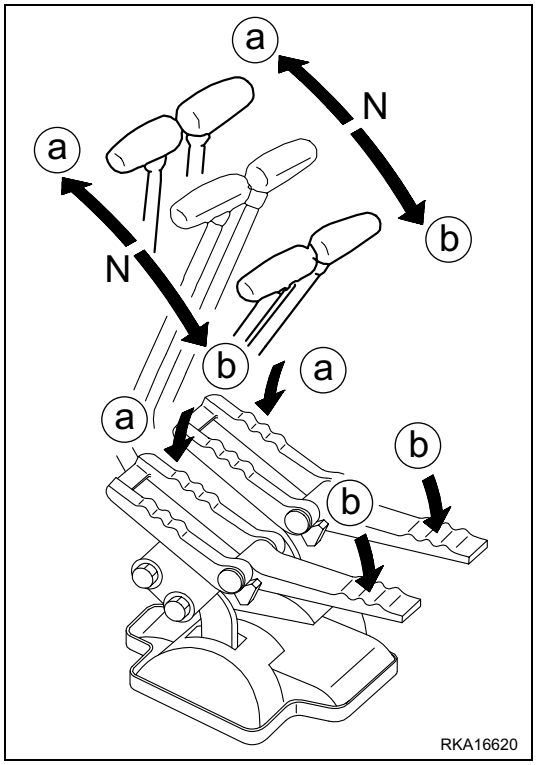

https://truckmanualshub.com/

7. Boom swing control pedal locking device

WARNING

- **Always shift the safety lever to position (L) when the boom swing is not required, during travel and when parking the machine. If the control pedal is inadvertently pressed, this may cause serious accidents.**

This device is used to lock the movements of the boom swing control pedal and has two positions.

(F): free

(L): locked

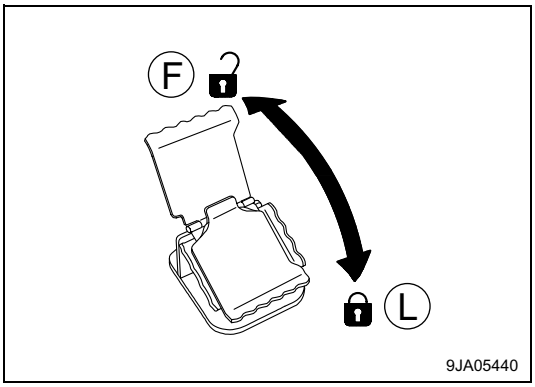

8. Boom swing control pedal

This pedal controls the boom swing to the right and to the left, according to the movements indicated below.

(a): swing to the right

(b): swing to the left

N (Neutral): boom at rest.

IMPORTANT

- **When the safety lever is in the “locked” position, all the movements are inhibited (see "3.2.3 pos: 1. Safety lever (control locking lever)").**
- **The boom swing is useful to displace the digging line beyond the track outline; do not use this function during the work cycle.**

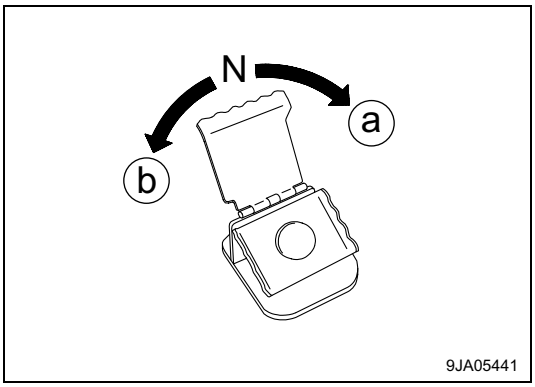

9. Cab floor locking lever

WARNING

- **Always keep to the warnings when tilting or closing the cab floor. Any operation carried out incorrectly may cause serious injury. Do not tilt or close the cab floor on slopes or if there is a strong wind.**

To tilt or close the cab floor, pull the lever to the “free” position (F). After tilting or closing the cab floor, release the lever, which will automatically return to the “locked” position (L).

(F): free

(L): locked

For further details on how to tilt the cab floor, see "3.2.8 TILTING THE CAB FLOOR".

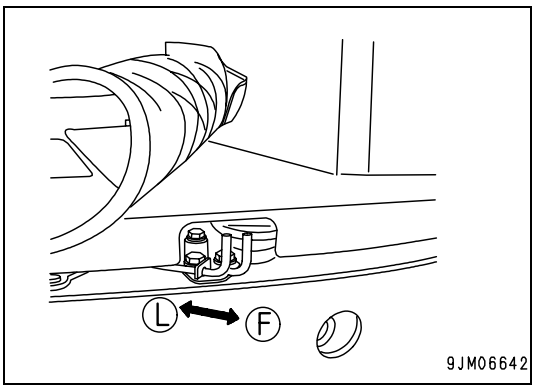

https://truckmanualshub.com/

10. Pedal locking device
(for the optional equipment control pedal)

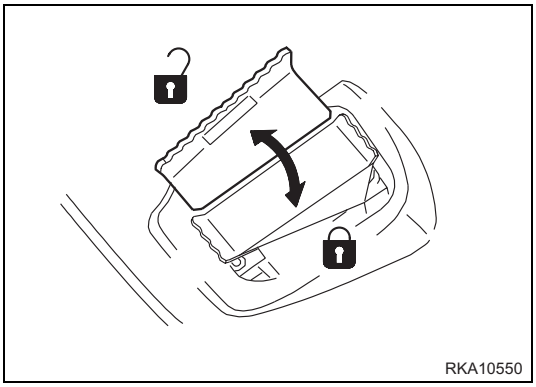

WARNING

- **Always lock the optional equipment control pedal when the use of this control is not required, during travel and when parking the machine. If the control pedal is inadvertently pressed, this may cause serious accidents.**

The safety device is used to lock the optional equipment control pedal.

11. Optional equipment control pedal

The pedal controls oil delivery to and return from the optional equipment.

- Upper part of the pedal (A) pressed:
  The oil flows to the right side of the arm (hydraulic tank side).
- Lower part of the pedal pressed (B):
  The oil flows to the left side of the arm (operator seat side).

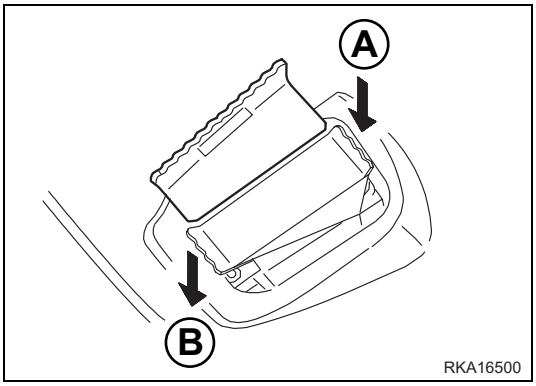

https://truckmanualshub.com/

3.2.4 COVERSWITH LOCK

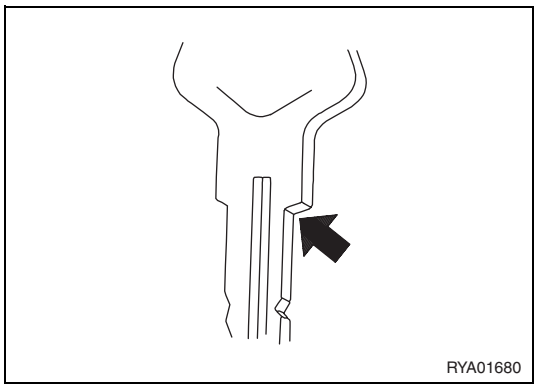

Use the ignition key to open and close the covers with lock.
For details on the position of the covers with lock, see "3.3.17 LOCKING THE MACHINE".

Introduce the key completely (6 mm from the point where the key narrows), then turn it. If the key is turned when it is inserted only partially into the lock, it may break.

OPENING AND CLOSING THE COVERS WITH LOCK

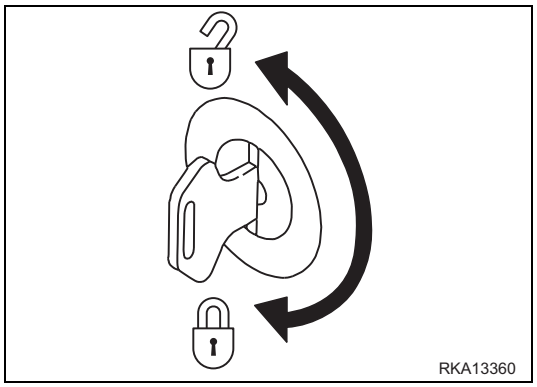

Opening

1 - Insert the key into the lock.

2 - Turn the key counterclockwise and open the cover.

Closing

1 - Close the cover and insert the key into the lock.

2 - Turn the key clockwise and extract it.

https://truckmanualshub.com/

3.2.5 ENGINE HOOD

WARNING

- **Do not open the engine hood when the engine is running.**
- **Do not use the machine without engine hood and do not start the engine when the hood is open, unless this is expressly prescribed for certain maintenance operations.**
- **When carrying out an inspection or maintenance operation inside the engine hood, always open it completely and make sure that it is kept open by the apposite rod.**
- **Non-compliance with these rules may lead to serious accidents.**

IMPORTANT

- **If it is not necessary to open the cover, always keep it locked.**
- **When the hood is locked, the handle (2) cannot move.**

OPENING THE BATTERY COVER

1. Release the engine hood lock (1) (see "3.2.4 COVERSWITH LOCK").
2. Pull the handle (2) of the engine hood (3) and open it completely. The cover (2) is kept open by the apposite rod (3).

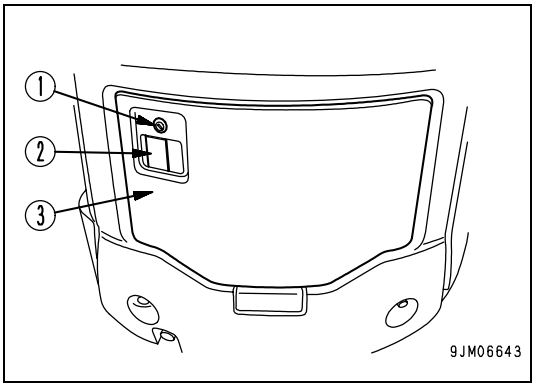

CLOSING THE COVER

1. Lift the rod (4) and partially close the hood (3) until the rod comes out of the groove.
2. Close the hood completely and lock it.

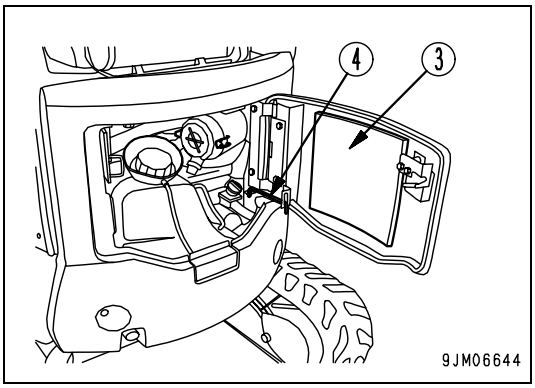

https://truckmanualshub.com/

3.2.6 RADIATOR COVER

WARNING

- **When carrying out an inspection or maintenance operation inside the radiator cover, always open it completely and make sure that it is kept open by the apposite rod.**

OPENING THE BATTERY COVER

1. Release the radiator cover lock (1) (see "3.2.4 COVERSWITH LOCK").

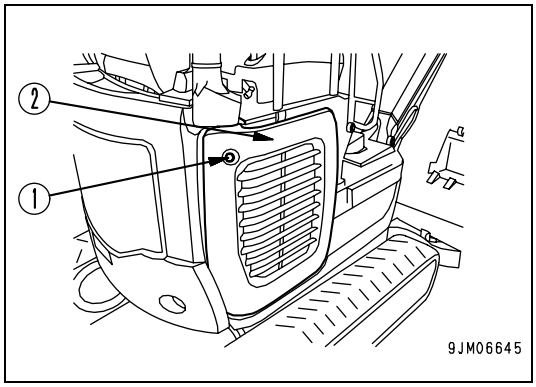

2. Pull the radiator cover (2) and open it completely. The cover (2) is kept open by the apposite rod (3).

CLOSING THE COVER

1. Lift the rod (3) and close the cover (2) without exerting too much pressure. When the rod comes out of the groove, close the cover completely and lock it.

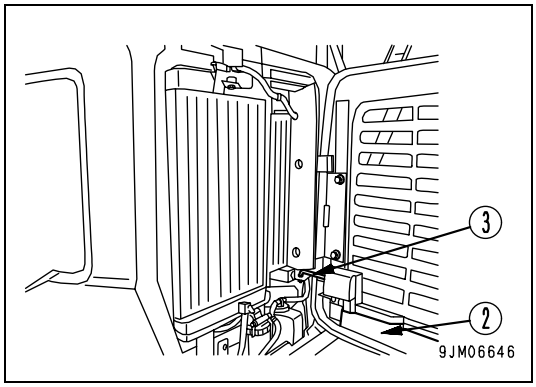

https://truckmanualshub.com/

3.2.7 BATTERY COVER

WARNING

- **When carrying out an inspection or maintenance operation inside the battery cover, always open it completely and make sure that it is kept open by the apposite rod.**

OPENING THE BATTERY COVER

1. Release the battery cover lock (1) (see "3.2.4 COVERSWITH LOCK").
2. Pull the battery cover (2) and open it completely. The cover (2) is kept open by the apposite rod (3).

CLOSING THE COVER

1. Pull the rod (3) and close the cover (2) without exerting too much pressure. Remove the rod (3) from the groove and close the cover completely.
2. Lock the cover.

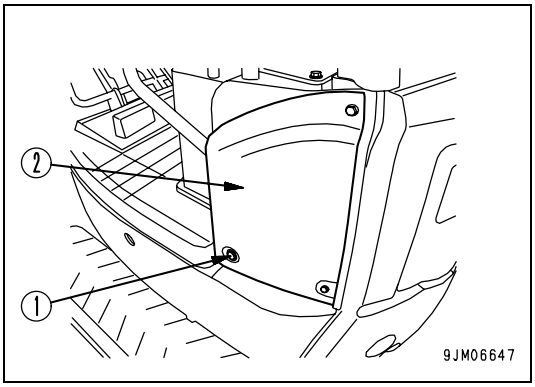

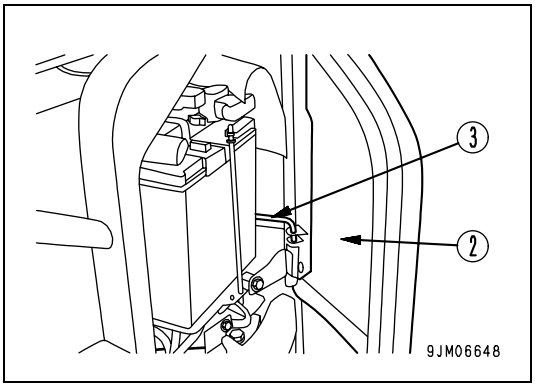

https://truckmanualshub.com/

3.2.8 TILTING THE CAB FLOOR

WARNING

- **Always keep to the warnings when tilting or closing the cab floor. Any operation carried out incorrectly may cause serious injury.**
- **Do not tilt or close the cab floor on slopes or if there is a strong wind.**
- **Do not get too near the cab floor tilting or closing area and do not enter the cab when the cab floor is tilted.**
- **Do not start the engine when the cab floor is tilted.**
- **If there is something wrong in the locking function when the cab floor is tilted, interrupt work and have the necessary repairs carried out by your Komatsu Dealer.**

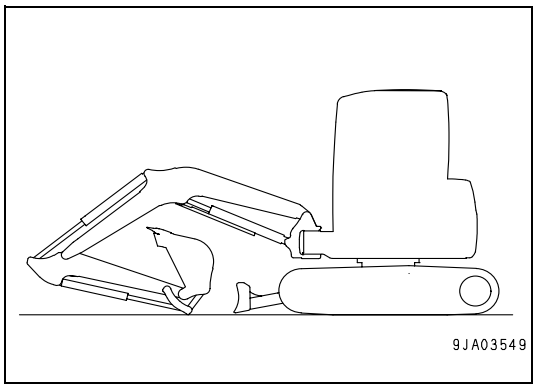

Tilting the cab floor

1. Lower the blade.
2. Extend the bucket and arm cylinders completely, then lower the boom slowly.
3. Shift the safety lever (1) to the “locked” position (L), then stop the engine.
4. Position blocks under the tracks in order to prevent the machine from moving.

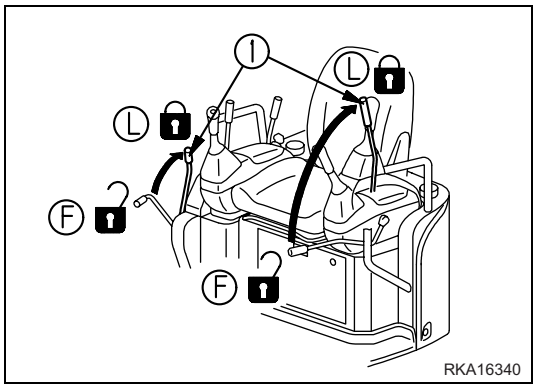

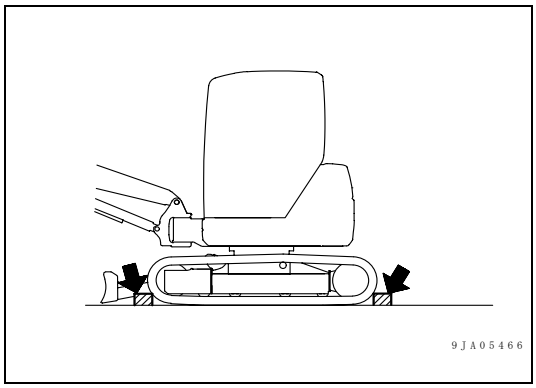

5. Open the engine hood (2) completely and make sure that it is kept open by the apposite rod (for further details, see "3.2.5 ENGINE HOOD").
6. Loosen the fastening screws of the cab floor (3).

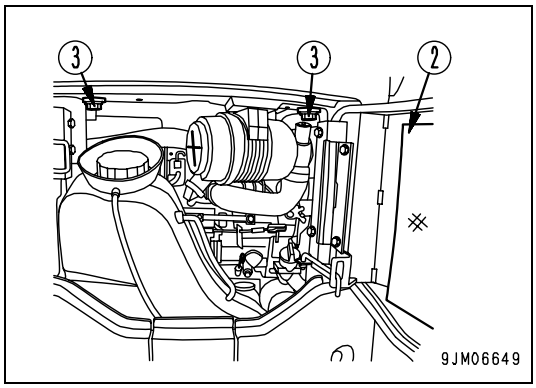

https://truckmanualshub.com/

7. Raise the mat (4), pull the cab floor release lever (5) in the direction indicated by the arrow and at the same time push the handle (6) upwards in the direction indicated by the arrow (approx. 45°).

IMPORTANT

- **If the cab floor does not tilt, pull the handle (6) downwards and repeat the procedure described above.**
- **When tilting or closing the cab floor, be extremely careful, and keep away from the area under the cab floor.**

NOTE

- The cab floor tilts thanks to the operation of a gas cylinder, so when the ambient temperature is low, the operating effort increases.

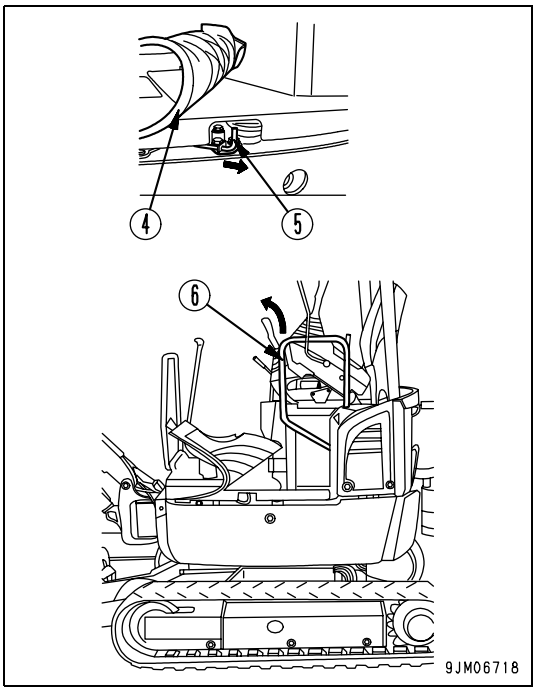

8. After tilting the floor open, make sure that the locking pin (7) is inserted in the groove (9) of the locking plate (8).
9. Insert the safety pin (10) into the hole (11) from the outside.
10. Turn until the coupling at the end of the safety pin (10) is completely engaged with the pin (12).

NOTE

- Make sure that the safety pin (10) is correctly engaged with the pin (12).

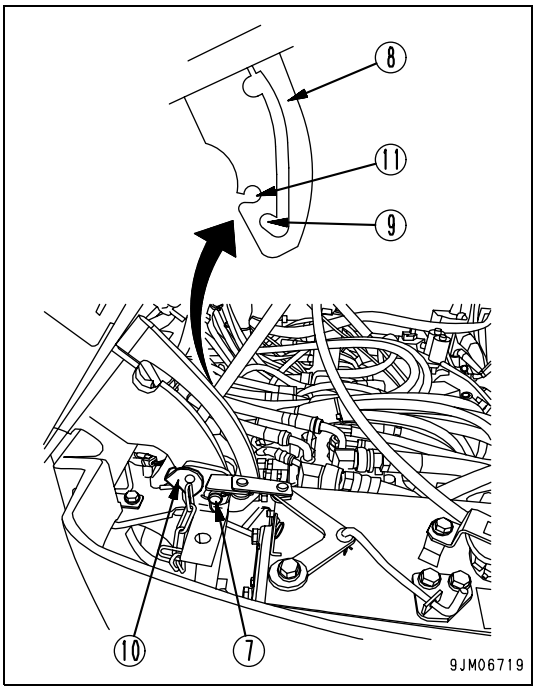

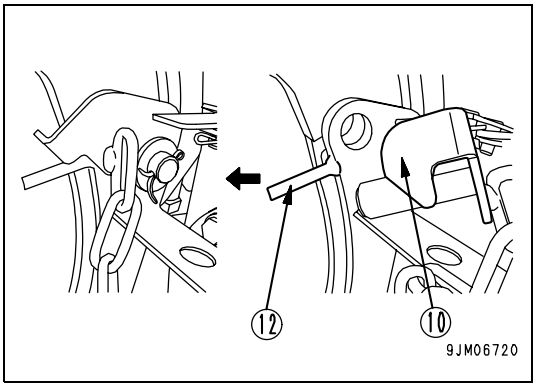

https://truckmanualshub.com/

Closing the cab floor

IMPORTANT

- **Before closing the cab floor, check that there is no damage or anomaly in the wiring or piping located in the compartment under the floor. If any damage or anomaly is observed, have the necessary repairs carried out by your Komatsu Dealer.**

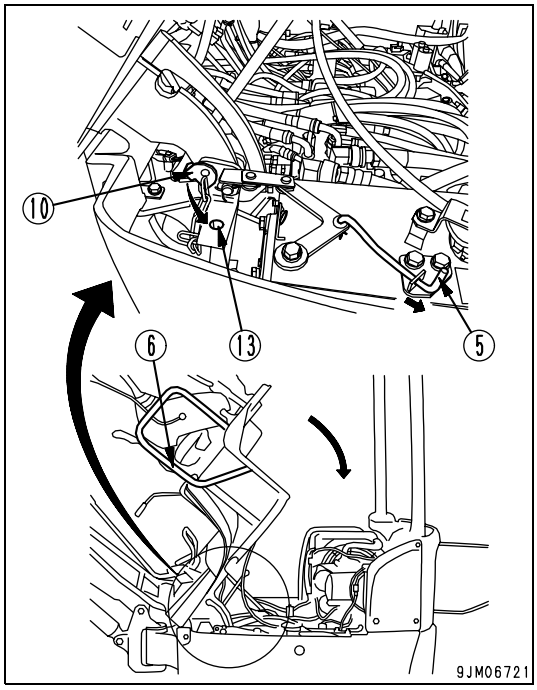

1. Remove the safety pin (10) and store it into the apposite hole (13).

NOTE

- If the safety pin (10) does not come out, try again by pushing the handle (6) at the same time.

2. Pull the cab floor release lever (5) in the direction shown by the arrow and at the same time pull the handle (6) downwards in the direction indicated by the arrow (approximately 45°).

IMPORTANT

- **Lower the cab floor slowly and make sure that the wires and pipes located under it are neither damaged nor twisted.**
- **When tilting or closing the cab floor, be extremely careful, and keep away from the area under the cab floor.**

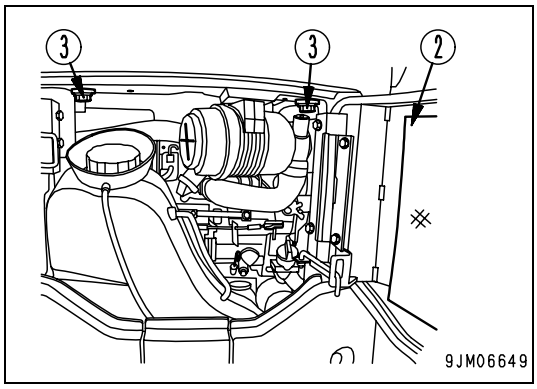

3. Tighten the cab floor fastening screws (3) applying the required torque.
   Tightening torque: 156.8 to 196 Nm

NOTE

- If any screw is damaged, replace it with an original Komatsu part having the same size.

4. Close the engine hood (2).

https://truckmanualshub.com/

3.2.9 FUSES

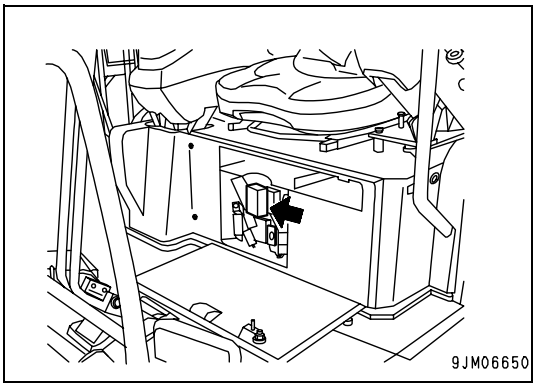

IMPORTANT

- **When changing a fuse, make sure that the ignition key is in position OFF.**
- **If the fuses are oxidized, corroded or do not fit perfectly in their seat, replace them only with new fuses having the same capacity.**

The fuses protect the electrical equipment and wiring from burning out.
If a fuse is corroded, covered with white powder, or loose in the fuse holder, change it.
Replace the fuse with a new one having the same capacity.

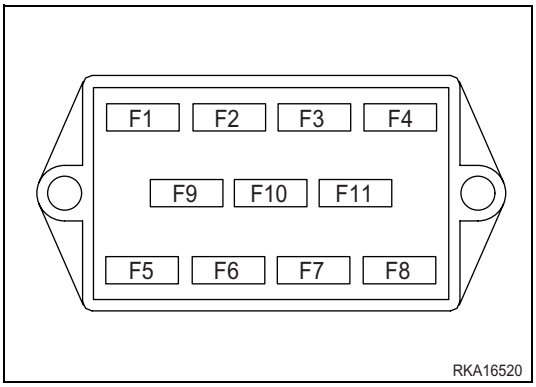

Fuse capacity and circuits involved.

POSITION	COLOUR	CAPACITY (A)	CIRCUIT INVOLVED
F1	Red	10	Radio power supply
F2	Green	30	Engine stop solenoid valve power supply, engine stop timer, safety relay, alternator excitation
F3	Red	10	Fuel pump, work light
F4	Yellow	20	High-low speed switch, PPC solenoid valve, display power supply
F5	Light blue	15	Horn
F6	Light blue	15	Windshield wiper, overhead light, heating (for machine with cab)
F7	Red	10	Optional equipment
F8	Red	10	Revolving light
F9	-	-	Free
F10	-	-	Free
F11	-	-	Free

https://truckmanualshub.com/

3.2.10 MAIN FUSE

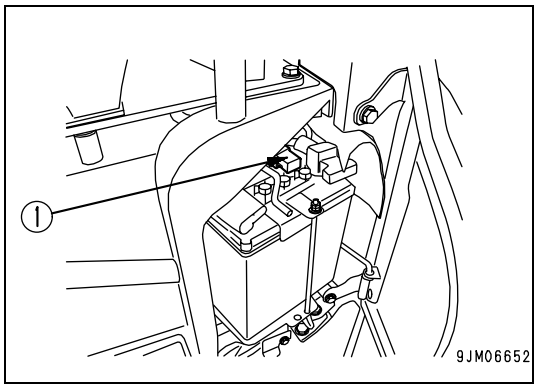

IMPORTANT

- **When changing a fuse, make sure that the ignition key is in position OFF.**

If the starter does not run when the ignition switch is turned to position ON, the fuse (1) may have blown. Open the cover on the left side of the machine to check the fuse and change it if necessary. The main fuse is positioned on the battery.
For further details on how to open and close the cover on the left side of the machine, see "3.2.7 BATTERY COVER".

NOTE

- The main fuse is the high-capacity fuse installed to protect the electric components and the wiring.

3.2.11 TECHNICAL DOCUMENTATION COMPARTMENT

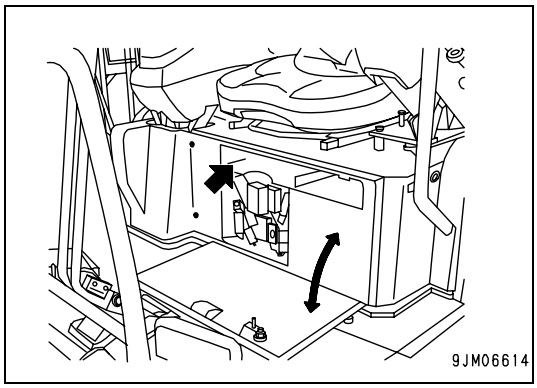

⚠ CAUTION

- **The use and maintenance manual is an integral part of the machine and must accompany it even in case of resale.**

The use and maintenance manual must be stored with care and always kept on board the machine, so that it can be consulted at any moment; it must be placed in the technical documentation compartment inside the seat support.

3.2.12 TOOL BOX

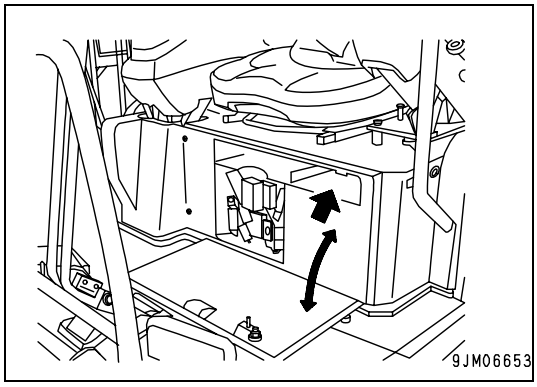

The tool box is positioned inside the seat support and can be reached by opening the front panel.

https://truckmanualshub.com/

3.3 USE OF THE MACHINE AND RELATED CONTROLS

3.3.1 BEFORE STARTING THE ENGINE

3.3.1.1 VISUAL CHECKS

Before starting the engine, look around the machine and under the machine to check for loose nuts or bolts, oil, fuel or coolant leakages, and check the conditions of the work equipment and the hydraulic system. Check also for loose wires, excessive gaps, and accumulation of dust in places that reach high temperatures.

⚠ WARNING

- **When opening the engine hood, the radiator cover and the battery cover to carry out inspection or maintenance operations, always open them completely and secure them in the correct position with the apposite retainer.**
- **Immediately remove any flammable materials that may have accumulated around the battery, the exhaust silencer or other hot parts of the engine. Any oil or fuel leakages may cause fires and damage the machine. Always perform thorough checks and carry out the necessary repairs; if any fault occurs repeatedly, contact your Komatsu Dealer.**

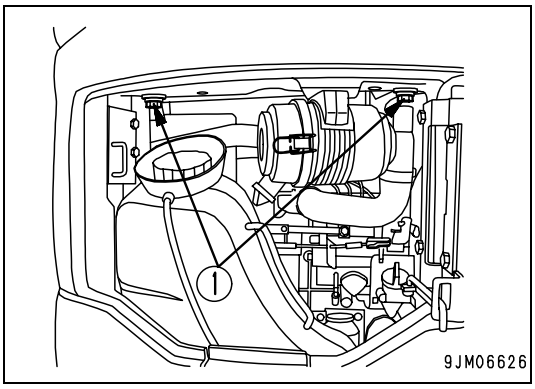

- **Make sure that the cab floor is properly fastened with the screws (1). If it is not secured properly, it may cause serious injury.**
  Carry out this check with the machine parked on level ground. If the machine is inclined, position it horizontally before carrying out the check.

Carry out the following inspection and cleaning operations every day before starting the engine.

1. Check the work equipment, the cylinders, the articulations and the pipes for damage, wear, excessive play. If any anomaly is observed, provide for the necessary repairs.
2. Remove dirt and dust from around the engine, the battery, and the radiator.
   Check that there is no dirt or dust accumulated around the engine or the radiator. Check also that there is no flammable material (dry leaves, twigs, etc.) accumulated around the exhaust silencer, the hot parts of the engine or around the battery. Remove all dirt, dust, and flammable materials.
3. Make sure that there are no water or oil leakages around the engine.
   Make sure that there are no oil leakages from the engine or coolant leakages from the cooling system. If any anomaly is observed, provide for the necessary repairs.
4. Make sure that there are no oil leakages from the hydraulic system, the hydraulic tank, pipes, and joints. Make sure that there are no oil leakages. If any anomaly is observed, provide for the necessary repairs.
5. Check the components of the undercarriage.
   Check the tracks, the sprocket, the idler roller, and the guards for damage, wear, loose bolts, and make sure that there are no oil leakages from the rollers, etc.
   If any anomaly is observed, provide for the necessary repairs.
6. Check the handles that are used to reach the driver seat.
   Make sure that there are no damaged or loose bolts, repair the damaged parts and tighten any loose bolts.
7. Make sure that there are no faults in the gauges and the warning lights.
   If any anomaly is observed, provide for the necessary repairs. Clean any dirty surface.

https://truckmanualshub.com/

8. Check the seat belt and the relevant couplings.
   If there is any damage or anomaly, change them with new ones.
9. Check the cab floor fastening screws.
   - Open the engine hood and make sure that the two fastening screws of the cab floor (1) are correctly tightened. If there are loose screws, tighten them.

   If any anomaly is observed, carry out the necessary repairs or have them carried out by your Komatsu Dealer.

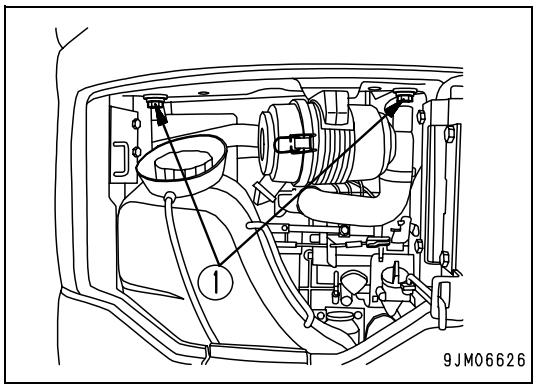

3.3.1.2 CHECKS TO BE CARRIED OUT BEFORE STARTING THE ENGINE

Carry out the checks listed below every day before starting the engine.

CHECKING THE COOLANT LEVEL AND TOPPING UP

⚠ WARNING

- **Do not remove the radiator cap, unless such operation is absolutely necessary. Before checking the coolant level, wait for the engine to cool down and check the expansion tank.**
- **Immediately after the engine has stopped, the coolant is very hot and under pressure. Removing the cap in these conditions to check the coolant level may cause a burn hazard. Wait for the temperature to lower, then turn the cap slowly to release the pressure before removing it.**

1. Open the radiator cover. For further details, see "3.2.6 RADIATOR COVER".
2. Make sure that the coolant level is included between the MIN. and MAX. marks on the expansion tank (1). If the level is low, top up through the filler neck of the tank (1), until reaching the MAX. mark.
3. Put back the cap after topping up.
4. If the expansion tank is empty, make sure that there are no leakages and check the coolant level in the radiator. If necessary, add coolant in the radiator and also in the expansion tank.

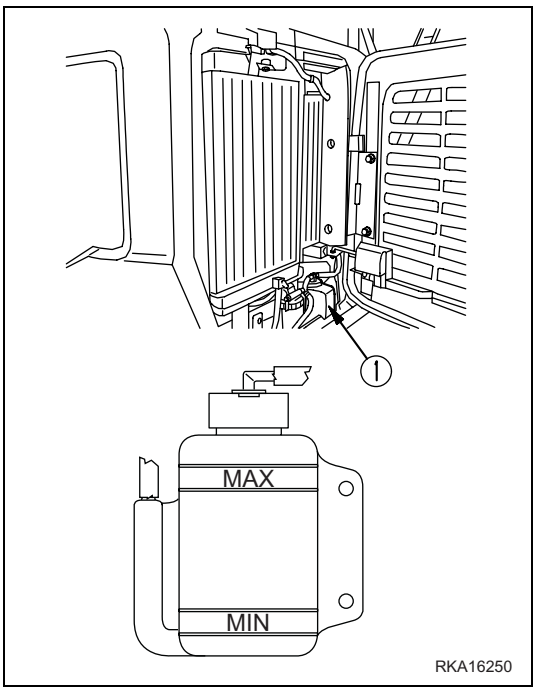

https://truckmanualshub.com/

CHECKING THE ENGINE OIL LEVEL AND TOPPING UP

WARNING

- **Soon after the machine has been stopped the engine is very hot and may cause burns; let the engine cool down to 40-45°C before carrying out any check.**

CAUTION

- **When carrying out an inspection or maintenance operation inside the engine hood, always open it completely and make sure that it is kept open by the apposite rod.**

NOTE

- If the machine is inclined, position it horizontally before carrying out the check.
- If the engine has just been stopped, before checking the engine oil level wait approximately 15 minutes, in order to allow the engine to cool down.

1. Open the engine hood. For details, see paragraph "3.2.5 ENGINE HOOD"
2. Remove the dipstick (G) and wipe it with a cloth.
3. Insert the dipstick (G) completely into the oil filler pipe, then remove it and check the oil level.

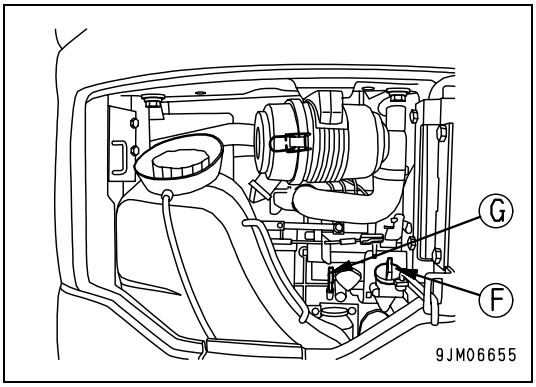

4. The oil level must be included between the H and L marks; if the level is near the L mark, top up through the filler neck (F), using oil suitable for the ambient temperature, as indicated in the lubricant chart
(see "4.4 FUEL, COOLANT AND LUBRICANTS").

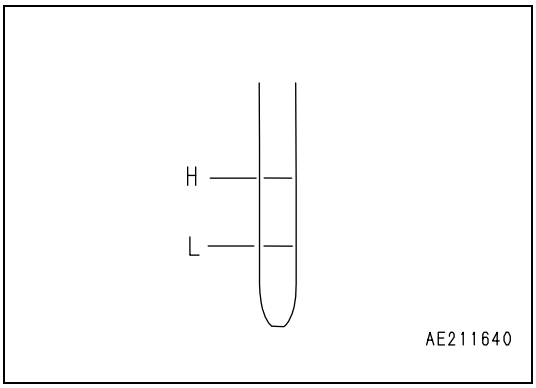

5. If the oil level is above the H mark, drain the excess oil through the drain plug (P), and check the oil level again.
6. If the oil level is correct, tighten the oil filler, then close the engine hood.

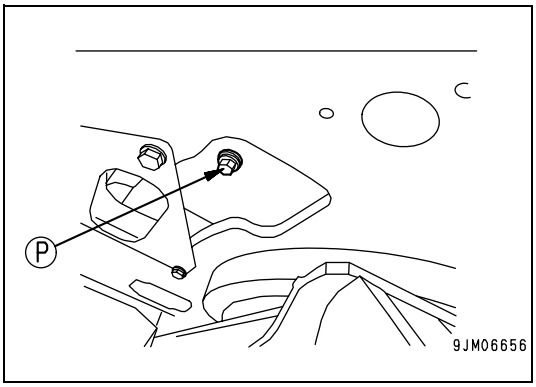

https://truckmanualshub.com/

CHECKING THE FUEL LEVEL AND REFUELLING

WARNING

- **When refuelling, avoid spilling fuel, since this may cause a fire hazard. If fuel is spilled, wipe it up immediately.**
- **Fuel is highly flammable; do not use naked flames and do not smoke when refuelling. Hold the fuel gun constantly in contact with the filler.**

1. Insert the key in the ignition switch (1) and turn it to position ON.
2. Check the fuel level on the fuel gauge (2). If the fuel level is low, open the engine hood (3) (for details, see "3.2.5 ENGINE HOOD"), remove the cap and refuel through the filler (F). While refuelling, check the fuel level on the sight gauge (G).
   Tank capacity: 19 l
3. Avoid filling the tank completely and leave enough space for the fuel to expand.
4. After refuelling, tighten the cap thoroughly and close the engine hood.

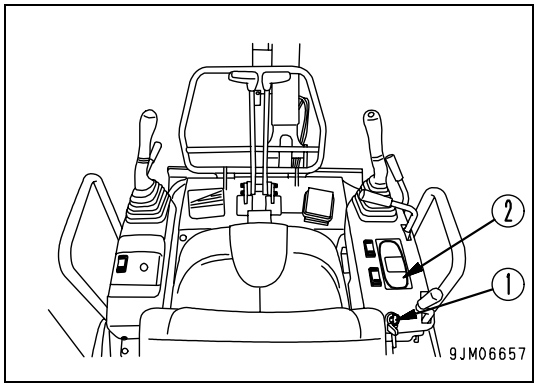

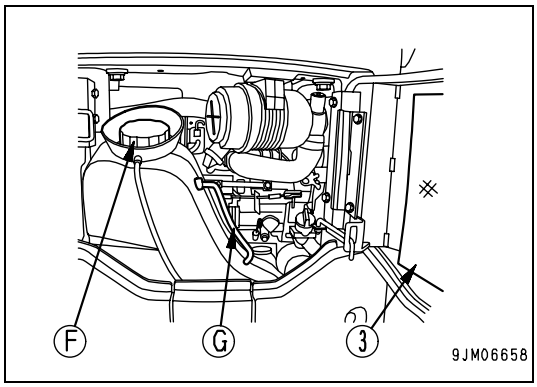

IMPORTANT

- **It is advisable to refuel after work, in order to avoid the formation of water condensate.**
- **If the breather hole (4) is clogged, the pressure in the tank will drop and the fuel may not flow smoothly. Clean the breather hole (4) frequently and make sure that it is not clogged.**

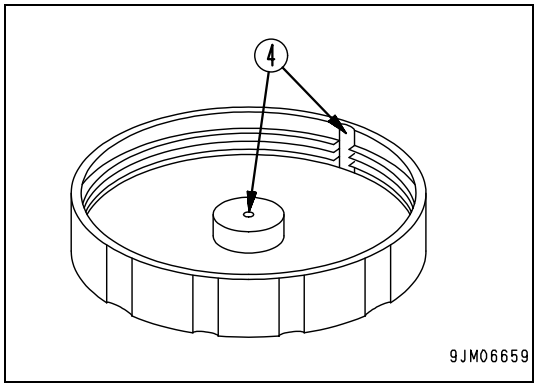

https://truckmanualshub.com/

CHECKING THE OIL LEVEL IN THE HYDRAULIC TANK AND TOPPING UP

⚠ WARNING

- **Carry out this check when the oil is cold, with the machine positioned on level ground, bucket and arm cylinders retracted and bucket teeth resting on the ground.**
- **Before topping up, stop the engine and eliminate the residual pressure from the equipment circuits (by shifting the controls more than once) and from the tank by slowly loosening the filling cap.**

1. If the work equipment is not in the conditions shown in the diagram on the right, start the engine and run it at high idling speed, retract the arm and bucket cylinders completely and lower the boom until the bucket teeth touch the ground. Stop the engine.

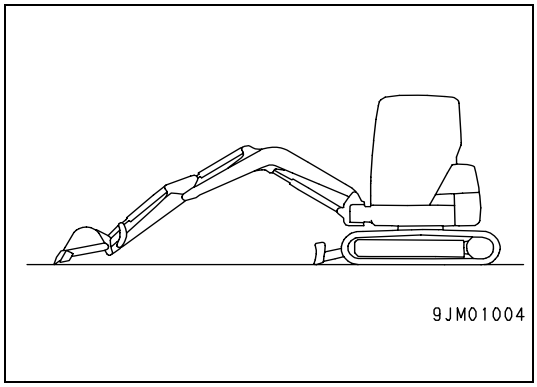

2. Make sure that the oil level is included between the H and L marks on the sight gauge (G).

IMPORTANT

- **Do not exceed the max. level mark (H). This would damage the hydraulic circuit and cause the oil to overflow.**
- **If too much oil is added and this exceeds the level (H) on the gauge, turn the turret so that the drain plug (P) is positioned between the tracks, stop the engine, wait for the hydraulic oil to cool down and drain the excess oil through the drain plug (P).**

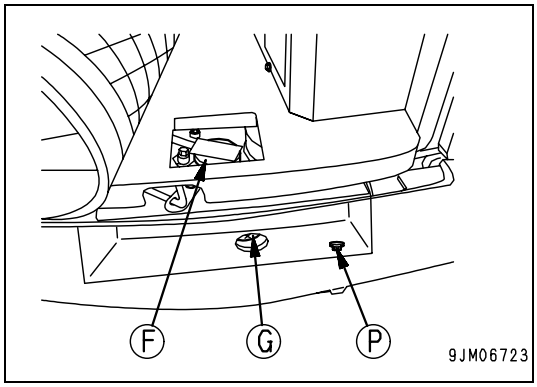

3. If the oil does not reach the level (L), lift the mat (1), remove the cover (2) and the cover on the filler neck (F), then top up through the filler neck (F) using the oil recommended in the lubricant chart (see "4.4 FUEL, COOLANT AND LUBRICANTS").

NOTE

- The oil level varies according to its temperature. It is therefore advisable to keep to the following indications:
  Before operation: near level (L)
  (Oil temperature ranging from 10°C to 30°C)
  Normal operation: near level (H)
  (Oil temperature ranging from 50°C to 80°C)

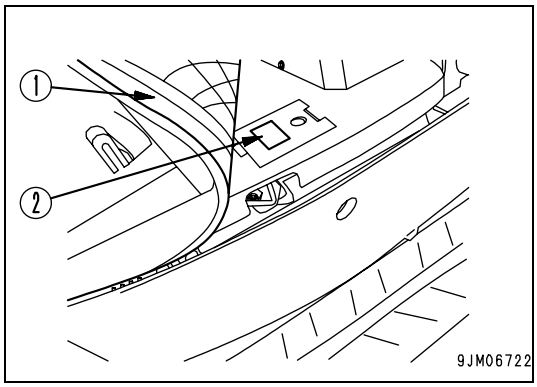

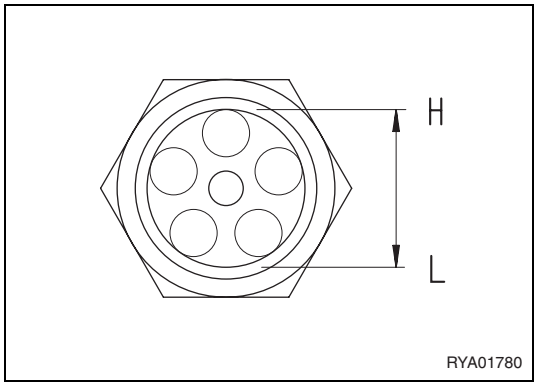

https://truckmanualshub.com/

4. Extend the boom, arm and bucket cylinders completely, as shown in the diagram on the right, and remove the filler cap. Put back the cap and pressurize the tank, lowering the equipment to the ground.

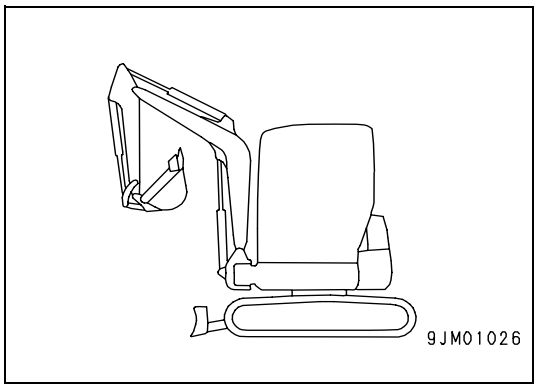

IMPORTANT

- **If a constant or abnormal decrease in the oil level is observed, thoroughly check the hydraulic circuit, the pistons and the pump for leaks.**

CHECKING THE AIR FILTER CLOGGING INDICATOR

1. Open the engine hood. For further details, see paragraph "3.2.5 ENGINE HOOD".
2. Check if the red piston is visible in the transparent portion of the filter clogging indicator (1).
3. If the red piston is visible, clean or replace the filtering element immediately.
   For further details on how to clean the filtering element, see "4.9.1.a CHECKING, CLEANING OR CHANGING THE AIR FILTER CARTRIDGE".

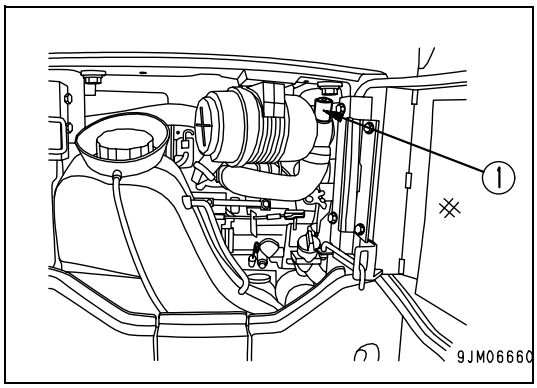

4. After checking, cleaning or replacing the filtering element, press the knob on the indicator (1), so that the red piston returns to its original position.

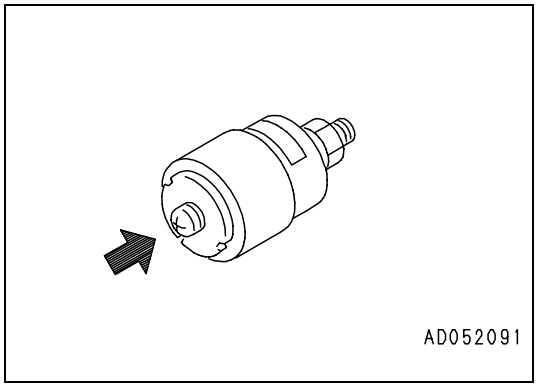

https://truckmanualshub.com/

CHECKING AND CLEANING THE WATER SEPARATOR

WARNING

- **Fuel is flammable; do not use naked flames and do not smoke while draining the water separator.**
- **If fuel is spilled, wipe it up immediately.**

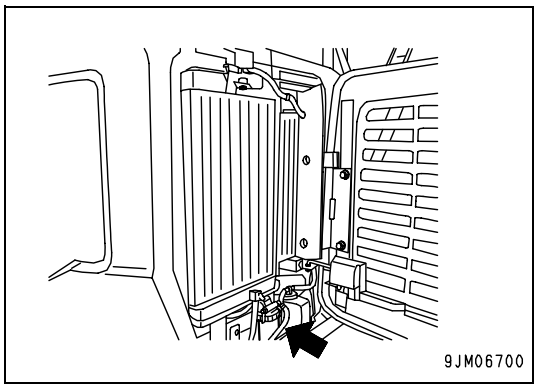

If the red ring (1) of the water separator is on the bottom of the casing (2), this means that there is no water.
If the ring (1) is floating, this means that there is water up to its lower surface, therefore drain the water by proceeding as follows.

1 - Open the radiator cover and turn the lever (3) to the “locked” position (A). (For details, see "3.2.6 RADIATOR COVER").
2 - With a filter wrench, loosen the metal ring (4), remove the casing (2) and eliminate the water contained inside it.
3 - Put back the casing (2) and tighten the metal ring (4).
4 - Turn the lever (3) to the “open” position (B).
5 - Drain any water or sediment from the fuel tank. For further details, see "4.9.1.d DRAINING THE FUEL TANK".

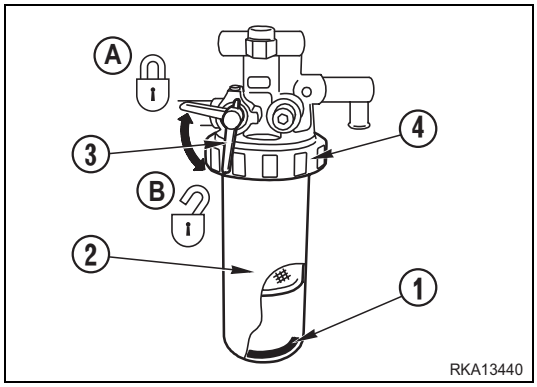

CHECKING THE WIRING SYSTEM

WARNING

- **If the fuses are corroded, oxidized or not perfectly held in their seat, replace them only with fuses having the same capacity; before changing a fuse, make sure that the ignition key is in position OFF.**
- **If the wirings show traces of short circuits, contact your Komatsu Dealer, who will locate the fault and carry out any necessary repairs.**
- **Before checking the wiring, take all the necessary safety precautions.**
- **Always keep the battery surface clean and make sure that the charge level warning light is always visible.**

Make sure that the fuses are not damaged, that fuses with the required capacity are used, that there are no disconnected, broken, or short-circuited wires; furthermore, check the terminals, and tighten any loose ones.

Check the wiring of the battery, the starter and the alternator carefully.
In addition, remove any flammable material that may have accumulated around the battery.
For troubleshooting and repairs, contact your Komatsu Dealer.

https://truckmanualshub.com/

CHECKING THE HORN

1. Turn the ignition switch to position ON.
2. Press the button positioned on the right lever and make sure that the horn functions correctly.
   If the horn does not sound, contact your Komatsu Dealer, who will carry out the necessary repairs.

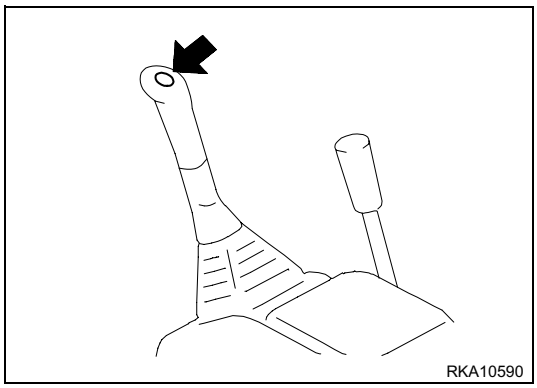

https://truckmanualshub.com/

3.3.1.3 ADJUSTMENTS

WARNING

- **Adjust the position of the seat before starting work or when taking the place of another operator.**
- **Adjust the seat so that the control levers and the switches can be easily used by the operator seated with his back against the backrest.**

ADJUSTING THE SEAT

(A) Longitudinal adjustment

Shift the lever (1) to the right and make the seat slide on the guides; once the desired position has been found, release the lever and make small movements with the seat to make sure that the retainer pin is correctly engaged in its seat.

Adjust the position of the seat according to the type of job to be performed. For example, when carrying out deep digging operations, make the seat slide forward to improve visibility on the lower area in front of the machine.

(B) Inclination

Turn the handwheel (2) positioned behind the seat and adjust the backrest, choosing a comfortable position for the job at hand.
To incline the backrest forward, turn the handwheel (2) clockwise, to incline it backward, turn the handwheel counterclockwise.

During the adjustment operations, remain seated with the back against the backrest.

(C) Suspension

The suspension can be adjusted by turning the handwheel (3) positioned on the right side of the backrest until finding the ideal degree of suspension for the operator.
Turn the handwheel clockwise to obtain a softer suspension (sign – on the handwheel plate), turn the handwheel counterclockwise to stiffen the suspension (sign + on the handwheel plate).

When working on uneven surfaces, adjust the seat to a harder setting.

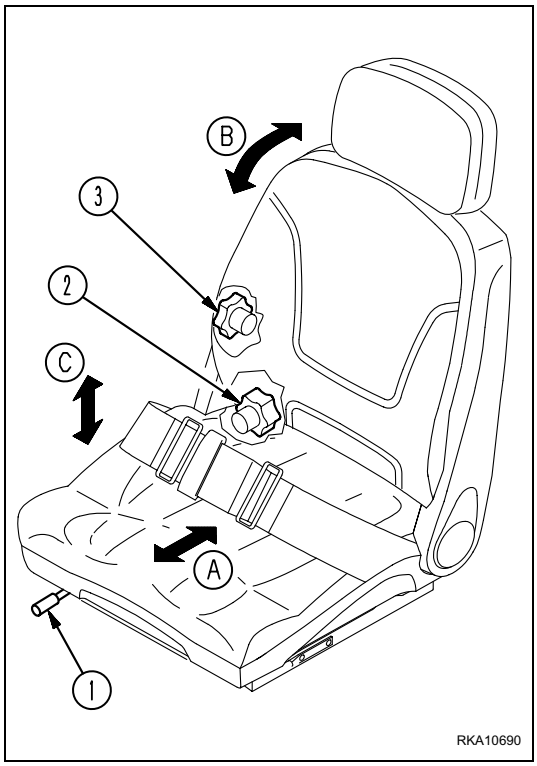

https://truckmanualshub.com/

SEAT BELT

WARNING

- **Before fastening the seat belt, make sure that the fastening brackets or the belt itself do not show any anomaly. If there are damaged or worn parts, change the belt.**
- **In any case, change the seat belt every 3 years, even if it seems to be in good conditions. The date of manufacture is indicated on the reverse side of the belt.**
- **Adjust and fasten the seat belt before operating the machine.**
- **Always fasten the seat belt when working with the machine.**
- **Make sure that none of the two parts of the belt is twisted.**

Make sure that the screws that fasten the belt to the frame are not loose. If necessary, apply a tightening torque of 24,5 ± 4,9 Nm (2,5 ± 0,5 kgfm).
If the surface of the belt is damaged or if the couplings are broken or deformed, change the belt assembly.

Fastening and unfastening the seat belt

1. Adjust the seat in such a way as to ensure that there is sufficient knee room when pressing the pedal thoroughly while seated, with the back resting against the backrest.
2. After adjusting the seat, seat correctly and insert the tang (2) in the buckle (1). Pull the belt to make sure that the tang is securely locked in the buckle.
3. To unfasten the belt, lift the upper part of the buckle (1) and release it.

Fasten the belt without twisting it. Adjust the belt length by proceeding as indicated below.

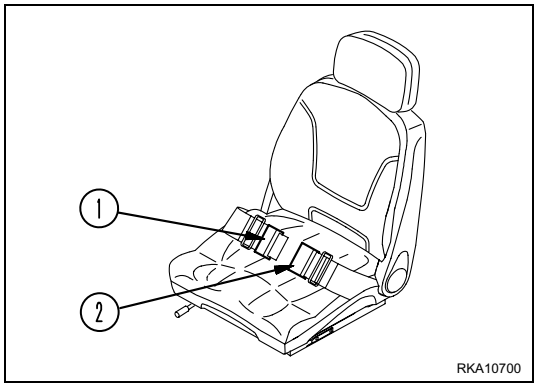

ADJUSTING THE SEAT BELT

How to shorten the belt

Pull the free end of the belt on the tang side.

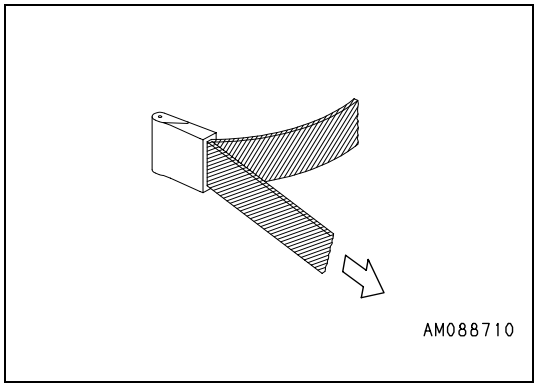

How to lengthen the belt

Pull the belt, keeping it perpendicular to the tang.

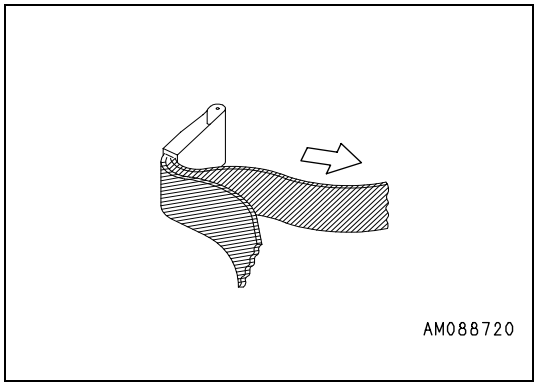

https://truckmanualshub.com/

3.3.1.4 OPERATIONS TO BE CARRIED OUT BEFORE STARTING THE ENGINE

WARNING

- **When starting the engine, make sure that the safety lever is in the “locked” position.**
- **If the control levers are not locked and are inadvertently touched when the engine is started, the work equipment may move suddenly and cause serious accidents.**

1. Make sure that the safety lever (1) is in the “locked” position (L).

NOTE

- If the safety lever is not in position (L), the engine cannot be started.

2. Check the position of each lever.
3. Turn the ignition key (2) to position ON and carry out the following checks.
   1) Make sure that the following warning lights come on regularly:
      - Battery charge level warning light (3)
      - Engine oil pressure warning light (4)
      - Engine coolant temperature warning light (5)

      If a warning light or a gauge does not come on, this may be due to a faulty fuse or bulb, or to an interruption in the wirings, therefore it is advisable to contact a Komatsu Dealer, who will provide for the necessary repairs.

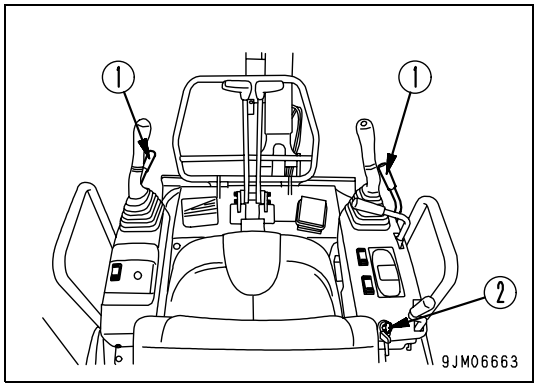

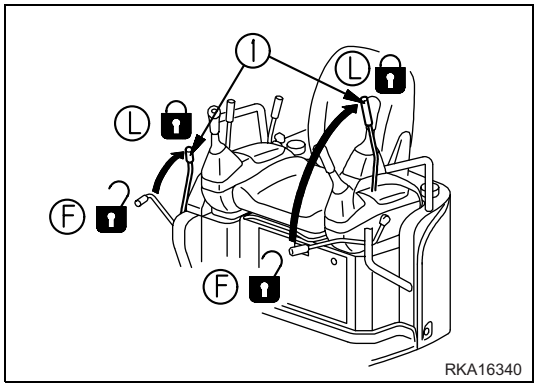

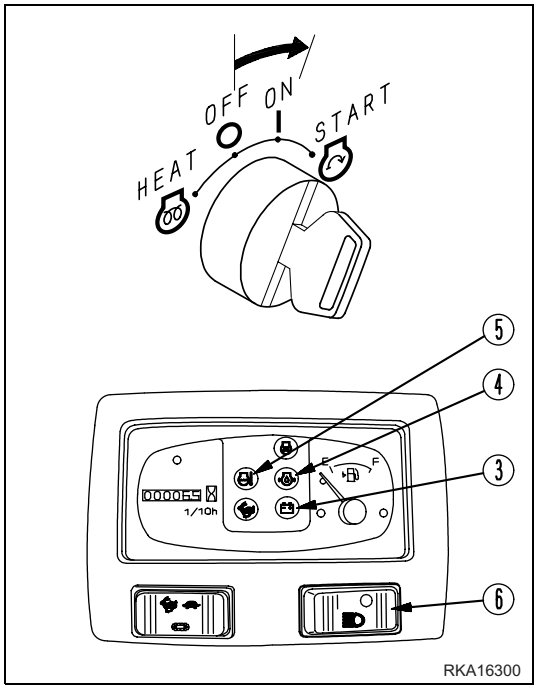

https://truckmanualshub.com/

2) Press the light switch (6) and make sure that the work light functions correctly. If it does not function, this may be due to a faulty bulb, or to an interruption in the wirings, therefore it is advisable to contact a Komatsu Dealer, who will provide for the necessary repairs.

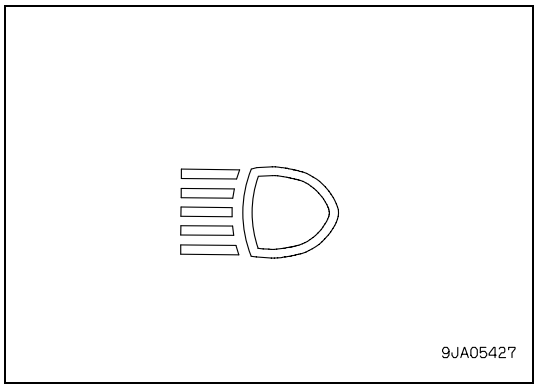

3) Press the horn button (7) to make sure that the horn functions correctly.

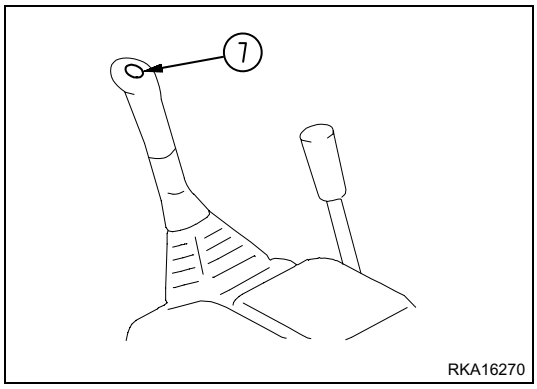

https://truckmanualshub.com/

3.3.2 STARTING THE ENGINE

3.3.2.1 STARTING WITH WARM ENGINE OR IN WARM CLIMATES

⚠ WARNING

- **Before starting the engine, carefully read the instructions and information regarding safety contained in this manual and make sure that you know the controls. From the moment at which the engine is started, the operator is directly responsible for any damage that may be caused by wrong manoeuvres and non-compliance with the safety regulations and the rule of the road..**
- **Do not attempt to start the engine by causing a short-circuit with the terminals of the starter. This may cause serious injury or even fires.**
- **Start the engine only while seated with fastened seat belt.**
- **Before starting the engine, make sure that there is no one within the operating range of the machine and sound the horn.**
- **Exhaust gas is toxic. When starting the engine in closed places, make sure that there is sufficient ventilation.**

IMPORTANT

- **Do not make the starter run for more than 20 seconds without interruption. If the engine does not start, wait at least 2 minutes before trying again.**

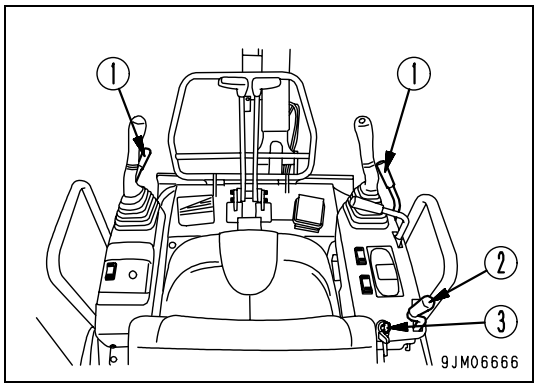

1. Make sure that the safety lever (1) is in the “locked” position (L). If the safety lever is in the “free” position (F), the engine cannot be started.

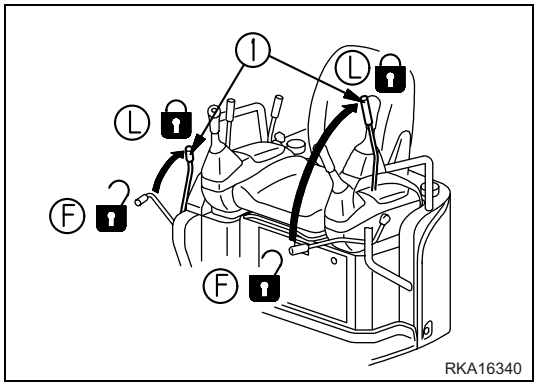

2. Pull the accelerator lever (2) midway between the idling position (A) and the maximum speed position (B).

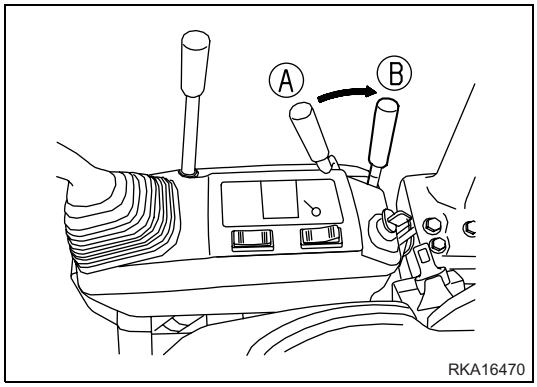

https://truckmanualshub.com/

3. Turn the ignition key (3) to position START to start the engine.

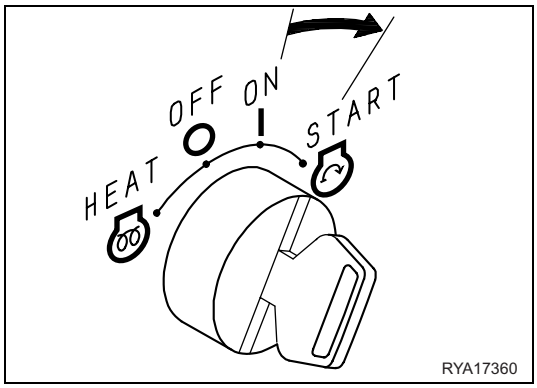

4. As soon as the engine starts, release the key (3), which will automatically return to position ON.

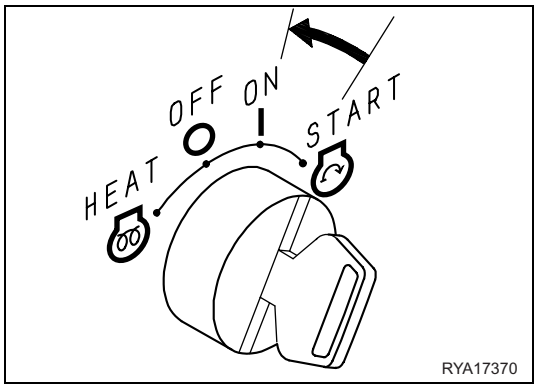

https://truckmanualshub.com/

3.3.2.2 STARTING WITH COLD ENGINE OR IN COLD CLIMATES

WARNING

- **Before starting the engine, carefully read the instructions and information regarding safety contained in this manual and make sure that you know the controls. From the moment at which the engine is started, the operator is directly responsible for any damage that may be caused by wrong manoeuvres and non-compliance with the safety regulations and the rule of the road..**
- **Do not attempt to start the engine by causing a short-circuit with the terminals of the starter. This may cause serious injury or even fires.**
- **Start the engine only while seated with fastened seat belt.**
- **Before starting the engine, make sure that there is no one within the operating range of the machine and sound the horn.**
- **Never use starting aid fluids, as they may cause explosions.**
- **Exhaust gas is toxic. When starting the engine in closed places, make sure that there is sufficient ventilation.**

IMPORTANT

- **Do not make the starter run for more than 20 seconds without interruption. If the engine does not start, wait at least 2 minutes before trying again.**

When starting the engine in cold climates, proceed as indicated below.

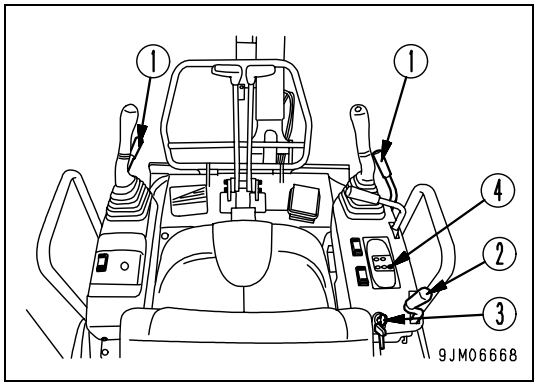

1. Make sure that the safety lever (1) is in the “locked” position (L). If the safety lever is in the “free” position (F), the engine cannot be started.

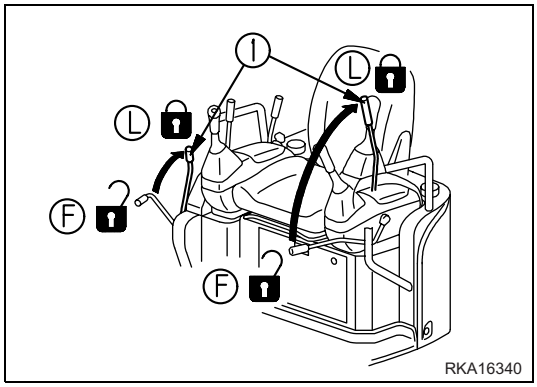

2. Pull the accelerator lever (2) completely, from the idling position (A) to the maximum speed position (B).

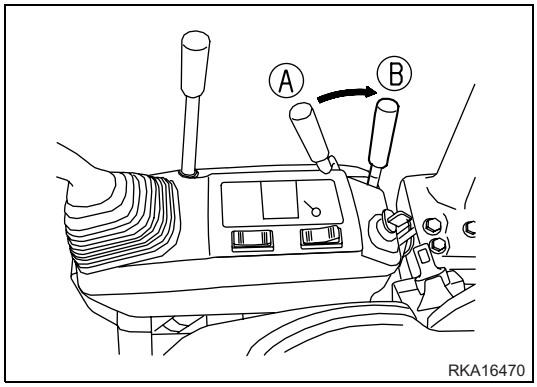

https://truckmanualshub.com/

3. Turn the ignition key (3) to the preheating position (HEAT) and make sure that the preheating warning light (4) comes on.
   After approximately 10 seconds, the warning light (4) goes out, indicating that the preheating phase has been completed.

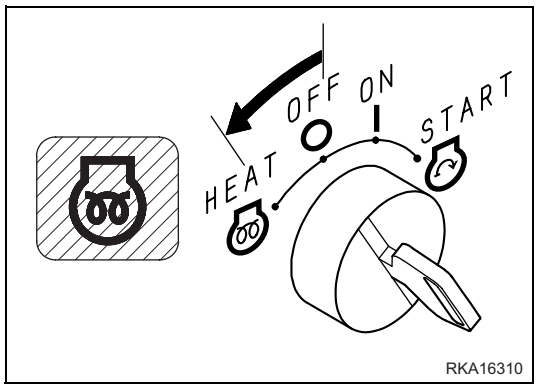

4. When the preheating warning light (4) goes out, turn the ignition key (3) directly to position START to start the engine.

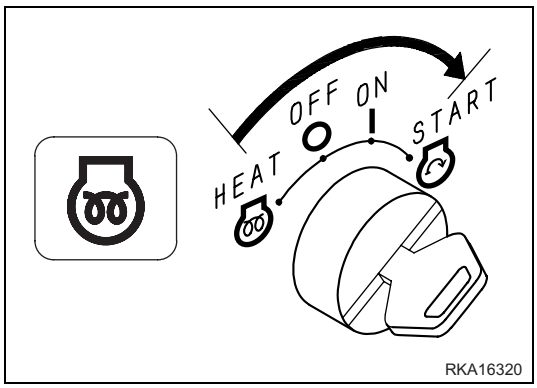

5. As soon as the engine starts, release the key (3), which will automatically return to position ON.

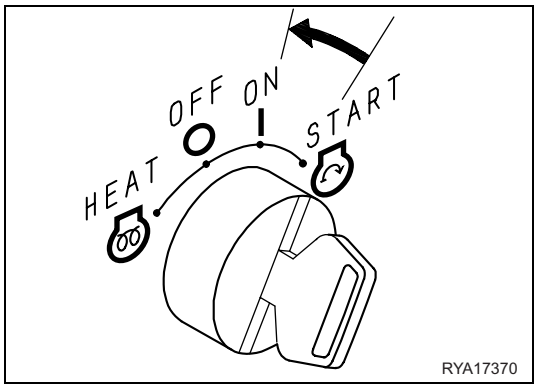

https://truckmanualshub.com/

3.3.3 AFTER STARTING THE ENGINE

WARNING

- **Emergency stop**
  If a failure has occurred or an anomaly has been observed, turn the ignition key to position OFF.
- **If the work equipment is operated without warming up the engine sufficiently, the response of the work equipment to the movements of the control lever will be slow, and the work equipment may not move as desired by the operator, so always carry out the warming up procedure. Particularly in cold areas, be sure to carry out the warming up procedure correctly.**

3.3.3.1 RUNNING IN A NEW MACHINE

CAUTION

- **Komatsu machines are adjusted and tested completely before shipment. However, operating the machine under severe conditions at the beginning can adversely affect the performance of the machine and shorten its life.**
  It is advisable to run in the machine for the first 100 hours of operation (as indicated by the hour meter). During the running-in period, follow the precautions indicated in this manual.

- After starting the engine, let it idle for 5 minutes.
- Avoid using the machine with excessive loads and avoid high speeds.
- Immediately after starting the engine, avoid sudden starts, sudden accelerations, unnecessary sudden stops, and sudden changes in direction.

https://truckmanualshub.com/

3.3.3.2 WARMING-UP OPERATIONS

IMPORTANT

- **Do not carry out any operation and do not shift the levers suddenly when the hydraulic oil temperature is too low. Always carry out the warming up operations. This will lengthen the life of the machine.**
- **Do not accelerate abruptly before completing the warming-up operations. Do not let the engine run at low idling or high idling speed for more than 20 minutes without interruption. If it is necessary to let the engine idle, accelerate every now and then or increase the speed up to an intermediate value.**

After starting the engine, let it warm up before starting work. Carry out the operations and checks indicated below.

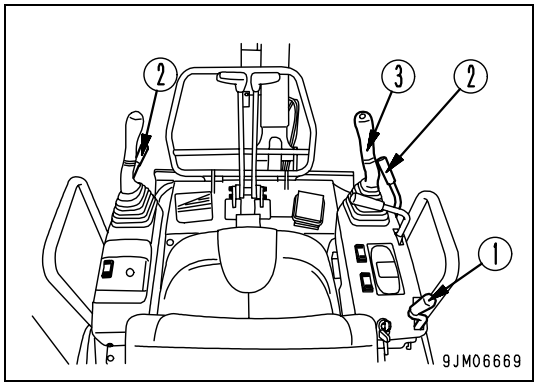

1. Shift the accelerator lever (1) from the idling (A) to the intermediate speed position (B), and let the engine idle at medium speed for at least 5 minutes.

NOTE

- When the ambient temperature is below 0°C, let the engine run at low idling speed during the warming-up operations.
- Do not accelerate completely or abruptly until the coolant temperature has reached at least 60°C.

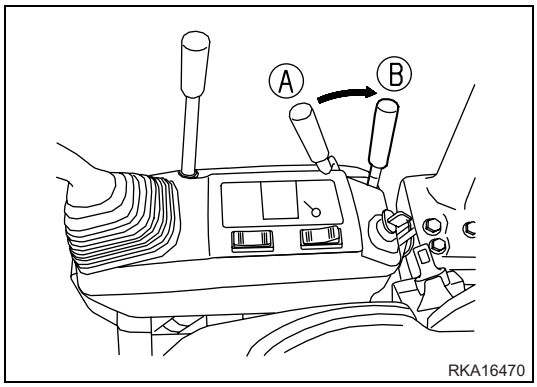

2. Set the safety lever (2) to the “free” position and raise the bucket from the ground.

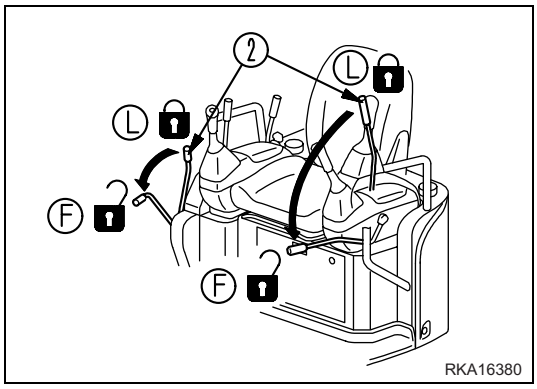

https://truckmanualshub.com/

3. Operate the right work equipment control lever (3) slowly, stop the bucket, and hold it in the stop position for 5 minutes.

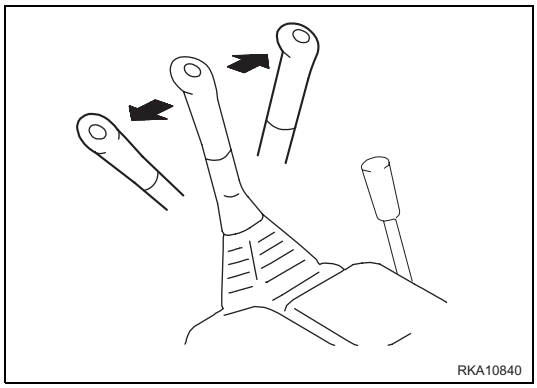

4. After carrying out the warming-up operations, make sure that the warning lights and gauges are in the conditions described below. If any anomaly is observed, carry out the necessary maintenance operations and repairs.
   - Engine coolant temperature warning light (4): warning light off
   - Fuel gauge (5): indicator in the correct position
   - Engine oil pressure warning light (6): warning light off
   - Battery charge level warning light (7): warning light off

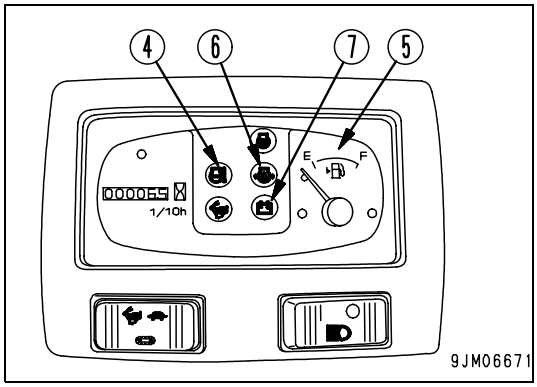

5. Make sure that the colour of the exhaust gases is normal and that there are no strange noises or vibrations. If any anomaly is observed, contact your Komatsu Dealer.

6. Shift the safety lever (2) to the “locked” position (L), then make sure that the machine does not move even when the levers and pedals are operated.
   1) The work equipment and the swing must be inhibited even when the left and right control levers are operated.
   2) The machine must not move even if the travel levers are operated.
   3) In this condition it should not be possible to use the blade or to adjust the track gauge, not even by operating the blade/adjustable track gauge lever.
   4) The boom swing must be inhibited even when the boom swing control pedal is operated.

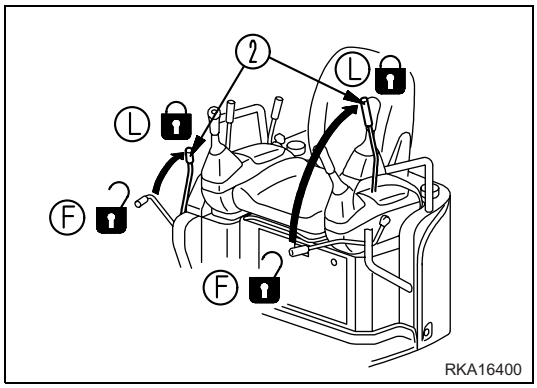

https://truckmanualshub.com/

3.3.4 STOPPING THE ENGINE

IMPORTANT

- **The sudden stop of the engine while it is running shortens its life.**
- **Do not stop the engine suddenly, except in case of emergency. It is likewise recommended not to stop the engine suddenly if it has been running for a long period and is still hot; in this case, let the engine run at low idling speed for about 5 minutes, in order to allow it to cool down gradually before stopping it.**

1. Run the engine at low idling speed for about 5 minutes, in order to allow it to cool down gradually.

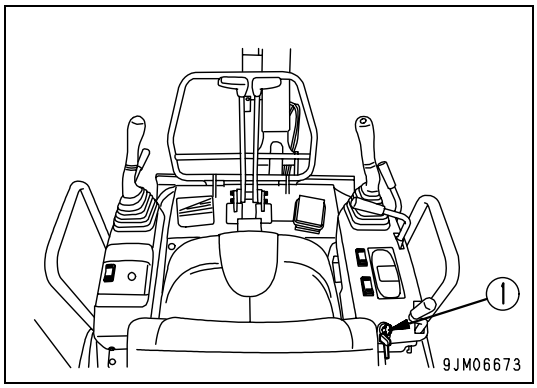

2. Turn the ignition key (1) to position OFF to stop the engine.
3. Remove the key (1).

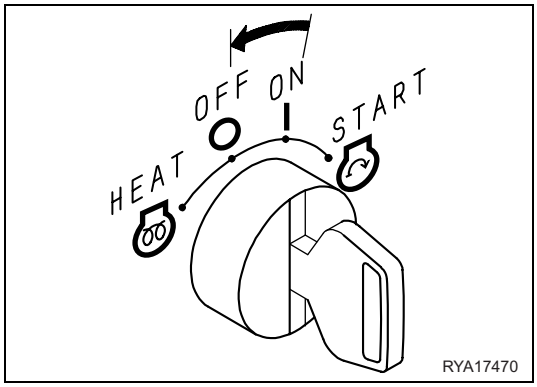

https://truckmanualshub.com/

3.3.5 HOW TO MOVE THE MACHINE

WARNING

- **Before moving the machine, make sure that you perfectly know the control functions and all the relevant safety regulations.**
- **The operator must be seated in the driving position with fastened seat belt.**
- **Before operating the travel levers, check the direction of the undercarriage. If the sprocket is at the front, the operation of the travel levers is inverted.**
- **Before moving the machine, make sure that there is no one within its operating range and that there are no obstacles in the surrounding area.**
- **Be extremely careful when reversing, and make sure that there are no persons, other equipment or obstacles in the way.**
- **Avoid any travel manoeuvre or change of direction with the accelerator at maximum speed, since manoeuvres carried out in these conditions may cause abrupt and dangerous movements.**
- **Do not use the speed increase function when changing direction or carrying out a counter-rotation.**

3.3.5.1 PRELIMINARY OPERATIONS TO BE CARRIED OUT BEFORE MOVING THE MACHINE

1. Pull the accelerator lever (1) towards the max. speed position to increase the engine speed.
   (A): idling
   (b): max. speed

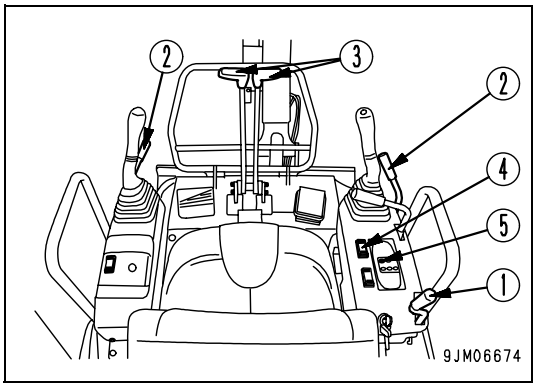

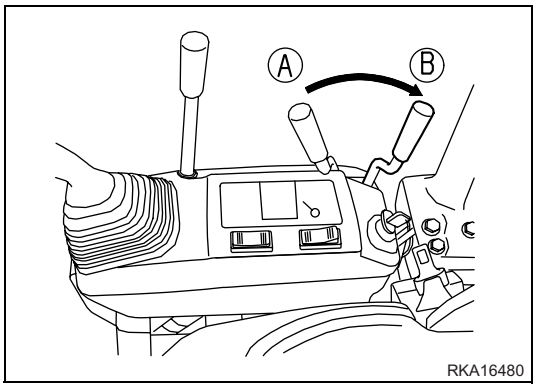

3.3.5.2 MOVING THE MACHINE FORWARD

1. Shift the safety lever (2) to the “free” position (F), then raise the work equipment 40-50 cm from the ground.
2. Lift the blade.
3. Opearate both travel levers (3) as explained below.

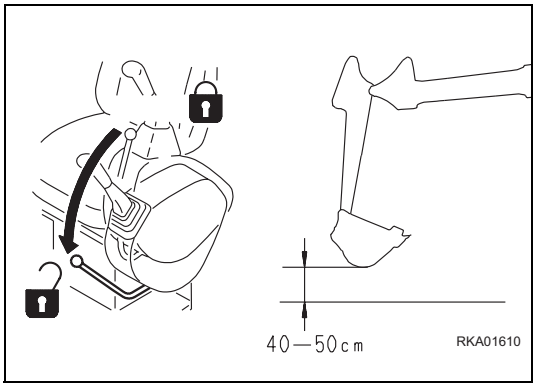

https://truckmanualshub.com/

- When the sprocket (A) is at the rear of the machine, push the levers (3) slowly forward to move the machine off.

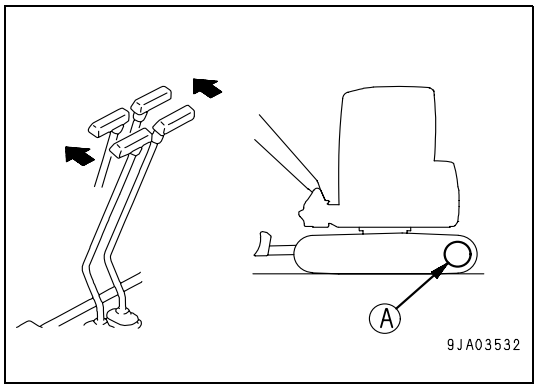

- When the sprocket (A) is at the front of the machine, pull the levers (3) slowly backward to move the machine off.

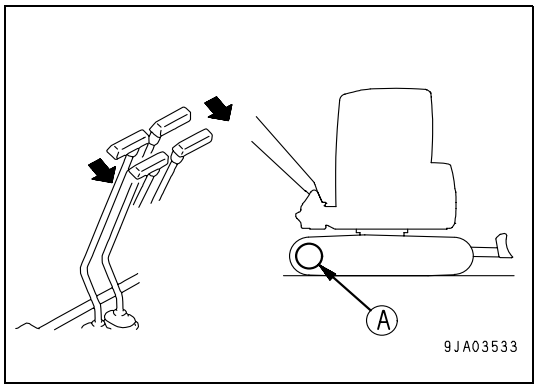

Machine with speed increase function

4. Switch over the travel speed by proceeding as follows.
   - Press the travel speed selection switch (4) to change over from high (A) to low (B) speed and vice versa. The changeover from high to low speed or vice versa takes place whenever the switch is pressed.

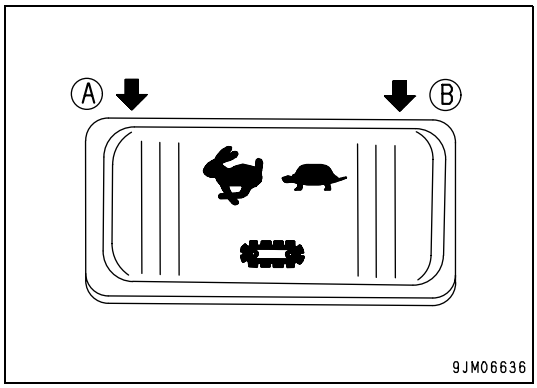

   - When the machine is travelling at high speed, the travel speed increase warning light (5) comes on.
     For details on the travel speed, see paragraph "5.1 TECHNICAL DATA".

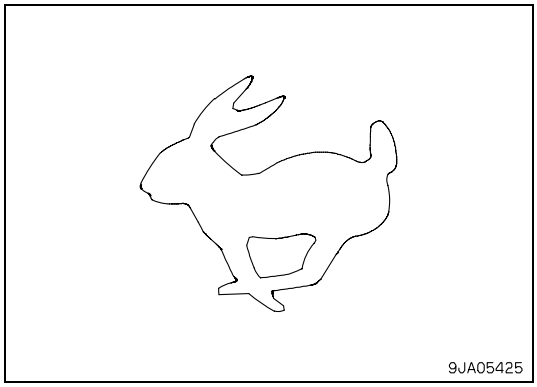

NOTE

- When the engine is started, the low speed is automatically selected. When the machine travels at high speed on soft ground or up a slope and the load increases, the low speed is automatically selected, but the travel speed increase warning light remains on. When the load is reduced, the travel system automatically changes over to high speed.

https://truckmanualshub.com/

3.3.5.3 MOVING THE MACHINE IN REVERSE

1. Shift the safety lever (2) to the “free” position (F), then raise the work equipment 40-50 cm from the ground.
2. Lift the blade.
3. Opearate both travel levers (3) as explained below.

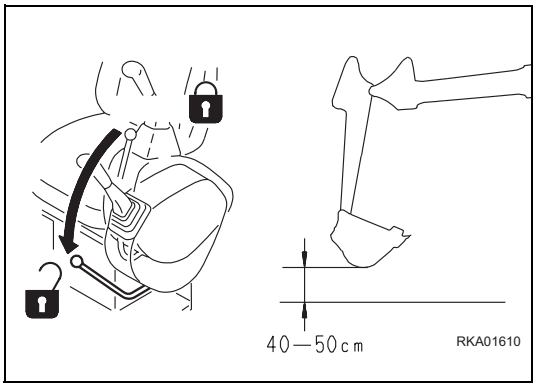

- When the sprocket (A) is at the rear of the machine, pull the levers (3) slowly backward to start moving in reverse.

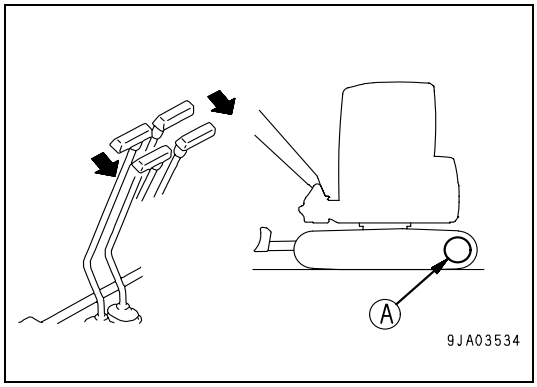

- When the sprocket (A) is at the front of the machine, push the levers (3) slowly forward to start moving in reverse.

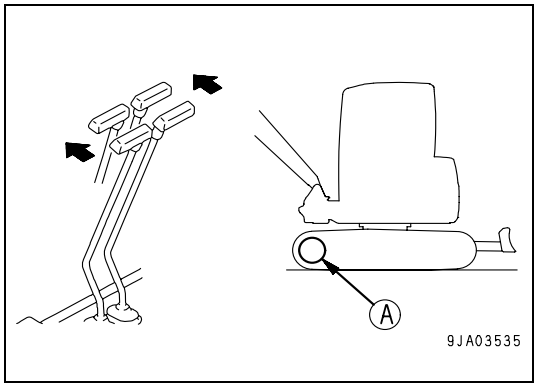

Machine with speed increase function

4. Change the travel speed by proceeding as follows.
   - Press the travel speed selection switch (4) to change over from high (A) to low (B) speed and vice versa. The changeover from high to low speed or vice versa takes place whenever the switch is pressed.

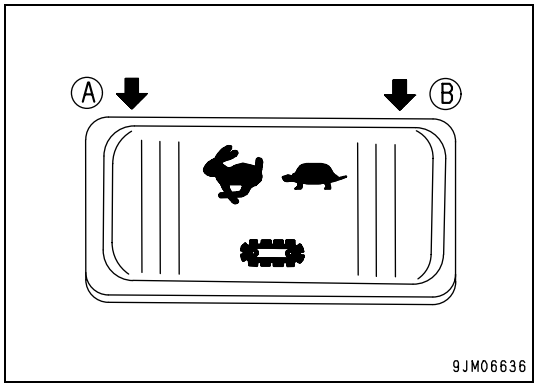

https://truckmanualshub.com/

- When the machine is travelling at high speed, the travel speed increase warning light (5) comes on.
  For details on the travel speed, see paragraph ."5.1 TECHNICAL DATA"

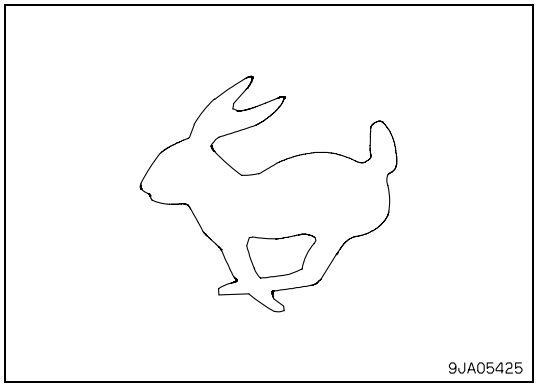

NOTE

- When the engine is started, the low speed is automatically selected. When the machine travels at high speed on soft ground or up a slope and the load increases, the low speed is automatically selected, but the travel speed increase warning light remains on. When the load is reduced, the travel system automatically changes over to high speed.

3.3.5.4 STOPPING THE MACHINE

⚠ WARNING

- **Avoid stopping the machine abruptly. Always calculate a sufficient safety distance when stopping.**

1. Shift the left and right travel levers (1) to the NEUTRAL position, then stop the machine.

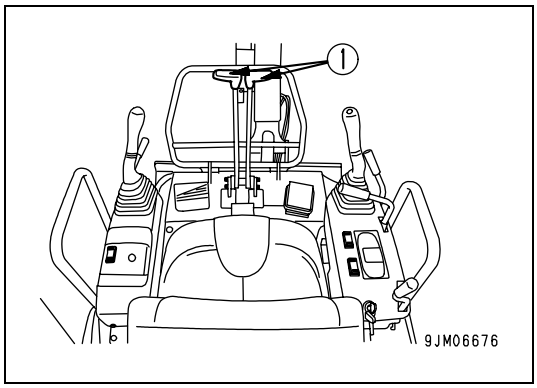

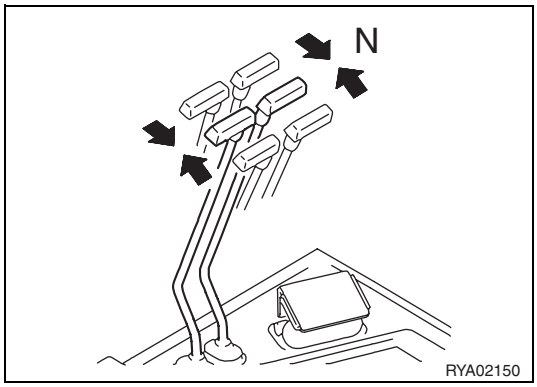

https://truckmanualshub.com/

3.3.6 STEERING THE MACHINE

3.3.6.1 STEERING (CHANGING DIRECTION)

WARNING

- **Before operating the travel control levers, check the position of the sprocket. If the sprocket is at the front, the operation of the travel levers is inverted.**
- **Avoid abrupt changes of direction as much as possible. Carry out counter rotations with the machine at rest.**
- **Due to the strong friction generated by changes of direction, do not use the travel speed increase control.**

NOTE

- When the machine travels at high speed and the load increases, the low speed is automatically selected, and the machine slows down. When the load is reduced, the travel system automatically changes over to high speed.

Use the travel levers to change direction.

Avoid abrupt changes of direction as much as possible. In particular, when carrying out a counter-rotation, stop the machine before steering.

Operate the two travel levers (1) as follows.

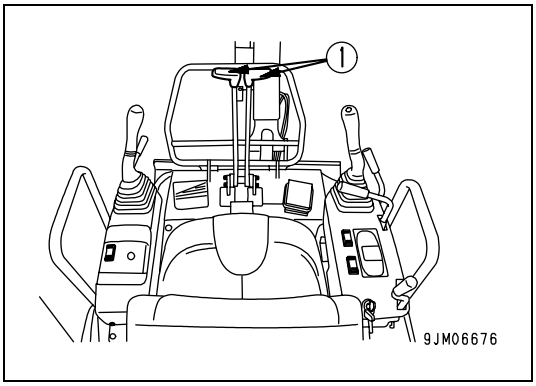

CHANGING DIRECTION WITH THE MACHINE AT REST

When steering to the left:

Push the right travel lever forward to steer to the left if the machine must travel forward; pull the lever backward to steer to the left if the machine must travel in reverse.

NOTE

- To steer to the right, operate the left travel lever in the same way.

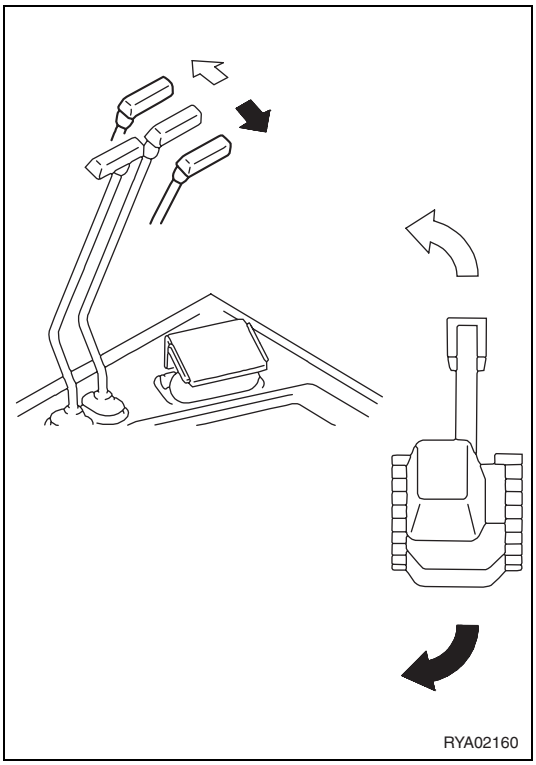

https://truckmanualshub.com/

STEERING (CHANGING DIRECTION)

When steering to the left:

If the left travel lever is shifted back to the neutral position, the machine will steer to the left.

NOTE

- To steer to the right, operate the right travel lever in the same way.

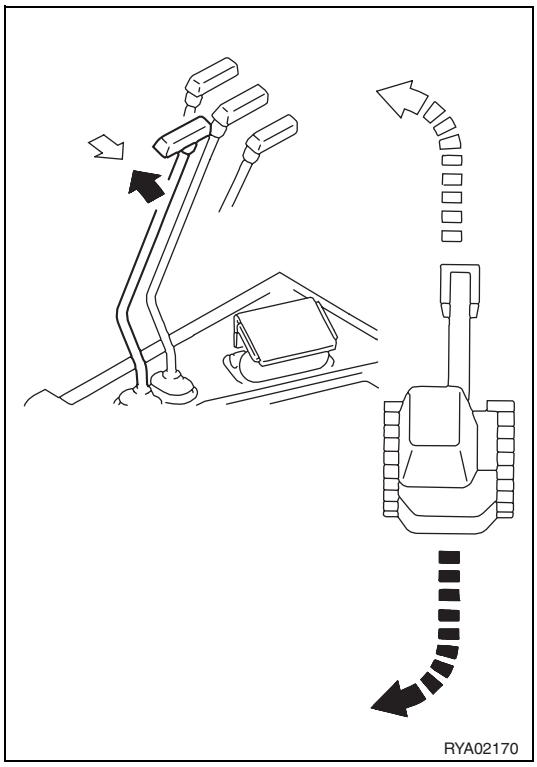

HOW TO CARRY OUT COUNTER-ROTATIONS (SPIN TURN)

To carry out a counter-rotation to the left, pull the left travel lever backward and push the right travel lever forward.

NOTE

- To carry out a counter-rotation to the right, pull the right travel lever backward and push the left travel lever forward.

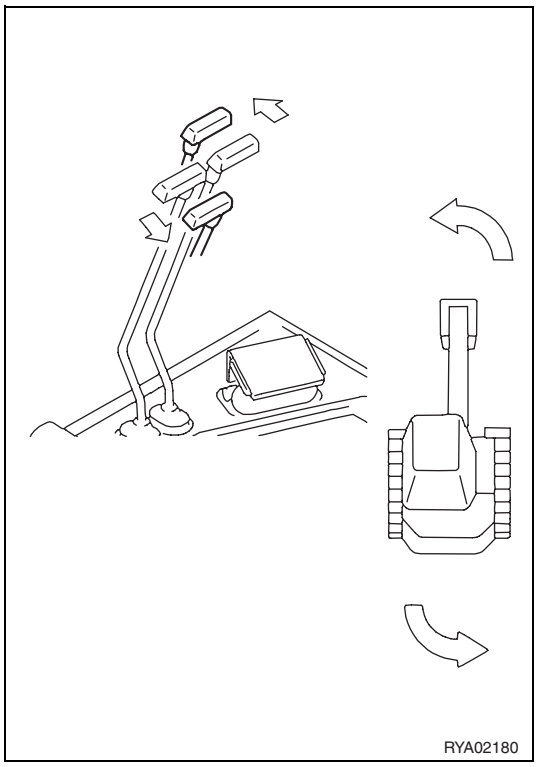

https://truckmanualshub.com/

3.3.7 SWINGING THE TURRET

WARNING

- **Before swinging the turret, make sure that the area around the machine is safe.**

1. To swing the turret, use the left work equipment control lever (1).
2. When the swing function is not used, shift the left lever (1) to the neutral position (N). With the lever in this position, the swing lock is automatically engaged.

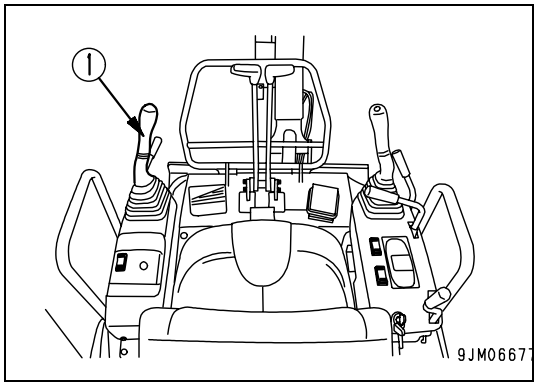

NOTE

- When the turret swing function is used on a slope, let the engine idle and operate the swing control lever very slowly. When the bucket is full, pay the utmost attention and avoid abrupt movements.

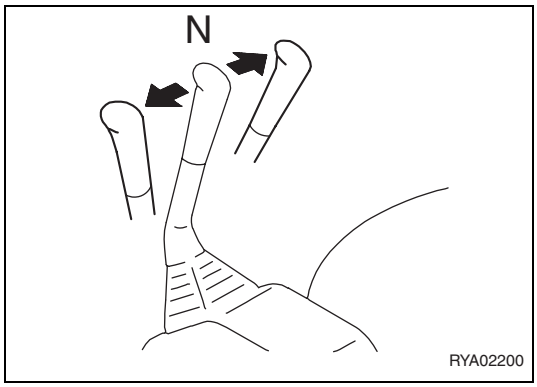

https://truckmanualshub.com/

3.3.8 WORK EQUIPMENT CONTROLS AND FUNCTIONS

The work equipment is controlled by means of the right and left work equipment control levers. The left lever controls the arm and the turret swing, while the right lever controls the boom and the bucket. When the levers are released, they automatically return to the neutral position and the work equipment remain in the position where they stopped.
The movements of the levers and the corresponding movements of the equipment are shown in the diagrams below.

- **Arm control**
  To operate the arm, shift the left control lever forward or backward.

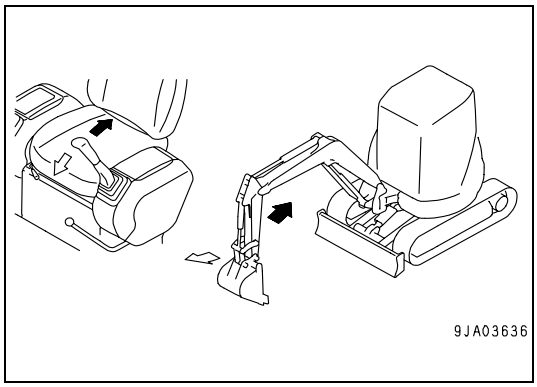

- **Swing control**
  To swing the turret, shift the left control lever to the left or to the right.

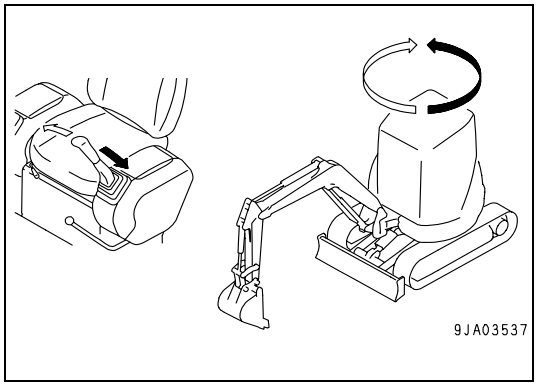

- **Boom control**
  To operate the boom, shift the right control lever forward or backward.

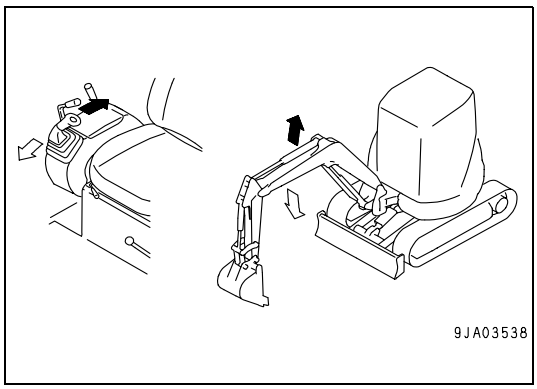

- **Bucket control**
  To operate the bucket, shift the right control lever to the left or to the right.

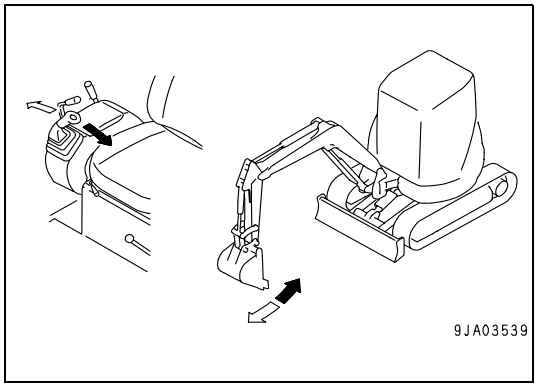

https://truckmanualshub.com/

- **Boom swing control**
  To swing the boom, use the boom swing control pedal.

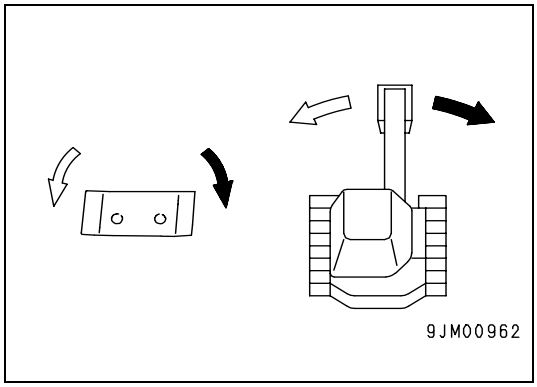

- **Blade control**
  Select the use of the blade with the blade/adjustable track gauge selection switch.
  To operate the blade, shift the lever positioned to the right of the operator seat forward or backward.

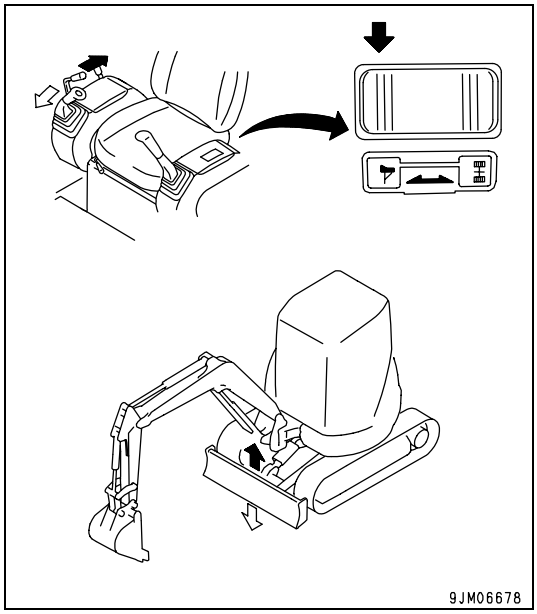

https://truckmanualshub.com/

- **Track gauge adjustment control (version with adjustable track gauge)**

WARNING

- **Select the narrow track gauge only when the machine must travel in small spaces. For normal applications and digging operations, always select the wide track gauge.**
- **Adjusting the track gauge on slopes is dangerous, since this may affect the lateral stability of the machine. Therefore, it is advisable to adjust the track gauge on level surfaces.**
- **When the track gauge is narrowed completely, also the lateral stability of the machine is reduced. In work sites where the machine runs the risk of overturning, widen the track gauge and pay the utmost attention during travel.**
- **Before using the blade/adjustable track gauge lever, check the position of the switch.**

- Set the blade/adjustable track gauge switch to the track gauge adjustment position.
  To adjust the track gauge, shift the lever positioned to the right of the operator seat forward or backward.

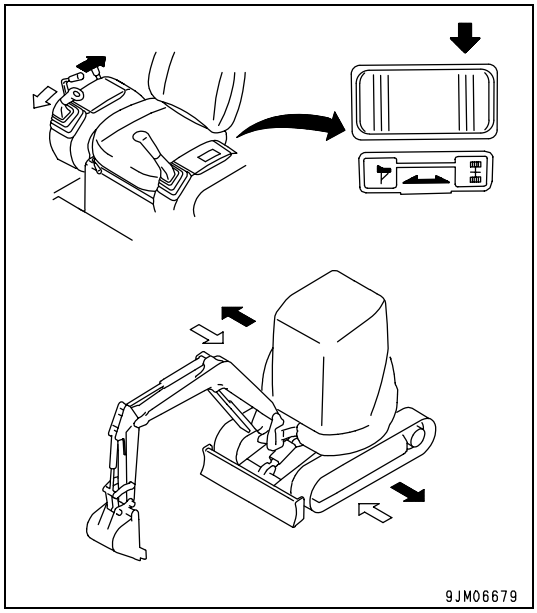

IMPORTANT

- **If there are obstacles that prevent the adjustment of the track gauge, remove them or place the machine on a level surface, in order to be able to find the correct position for the adjustment.**
- **If the tracks are dirty with mud, clean them thoroughly before adjusting the track gauge.**

- On machines with adjustable track gauge it is possible to modify the blade width to adapt it to the track gauge; two blade configurations are available.

  A – Narrow blade

  B – Wide blade

  This operation must be carried out on a level surface, with the equipment resting on the ground and after stopping the engine.
  To modify the blade width, remove the pins (1) and the extensions (2).
  Put back the extensions, inverting their position (the right one on the left side and the left one on the right side, as shown in the figure).

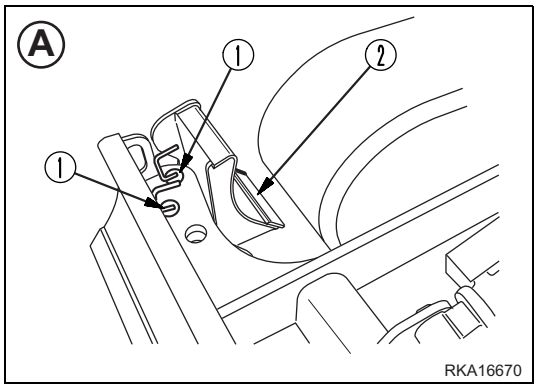

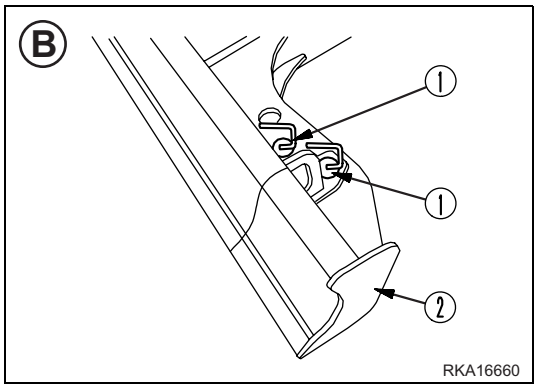

https://truckmanualshub.com/

3.3.9 UNAUTHORIZED OPERATIONS

WARNING

- **If it is necessary to operate the work equipment control levers while the machine is moving, carry out this operation with the maximum care.**

- **PERATIONS FOR WHICH IT IS NOT ALLOWED TO EXPLOIT THE TURRET SWING**
  Do not use the turret swing force to compact soil or break earth mounds or walls.
  When swinging the turret, do not dig the bucket teeth into the ground.
  These operations will damage the work equipment.

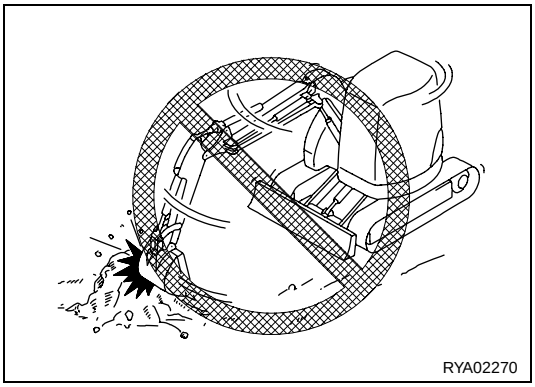

- **OPERATIONS FOR WHICH IT IS NOT ALLOWED TO EXPLOIT THE TRAVEL FORCE OF THE MACHINE**
  Do not dig the bucket into the ground and do not use the travel force to carry out digging operations. This may damage the machine or the work equipment.

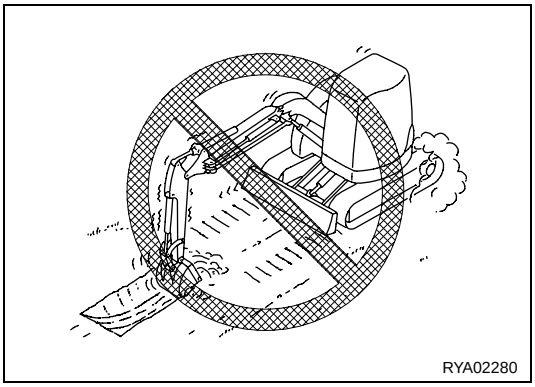

- **PRECAUTIONS TO BE TAKEN WHEN USING THE HYDRAULIC CYLINDERS**
  When using the machine, do not reach the end of stroke with the cylinders, but always leave a safety margin.
  If the cylinders reach the end of stroke, excessive force may be applied to the cylinders and this may damage the pins, the boom, the arm and the frame.

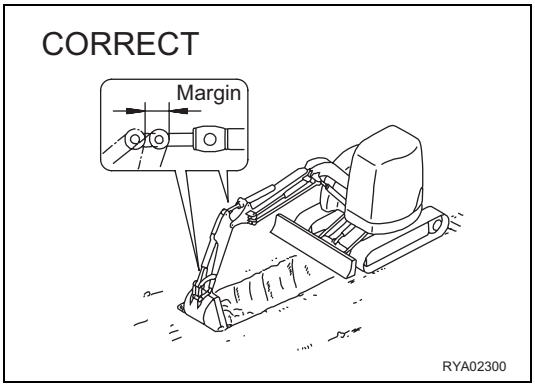

- **EXCAVATION ON HARD ROCKY GROUND**
  It is advisable to carry out excavations on hard rocky ground after breaking it up with some other means, in order to avoid damaging the machine and to ensure a more economic use of the same.

https://truckmanualshub.com/

- **OPERATIONS FOR WHICH IT IS NOT ALLOWED TO EXPLOIT THE DROPPING FORCE OF THE BUCKET**
  Do not exploit the dropping force of the bucket to use it as a pickaxe, breaker, or pile driver.
  This may considerably reduce the life of the machine.

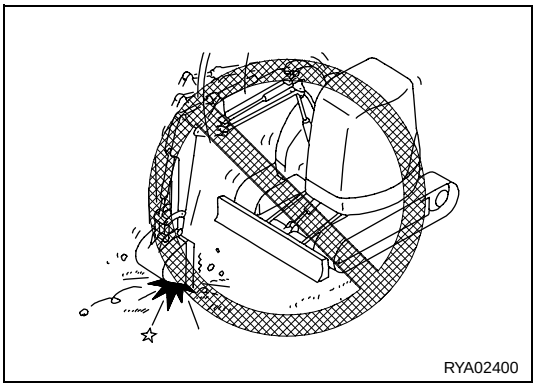

- **OPERATIONS FOR WHICH IT IS NOT ALLOWED TO EXPLOIT THE FORCE OF GRAVITY OF THE MACHINE**
  Do not use the force of gravity of the machine to carry out digging operations.
  When working on hard rocky surfaces, use some other method to break the rock into small pieces before excavating. This avoids any damage to the machine and is also more economical.

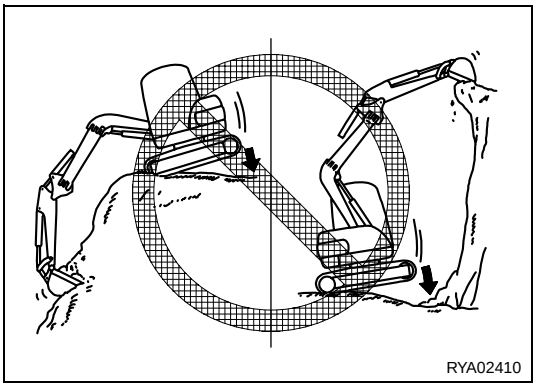

- **SUPPORT THE MACHINE WITH BOTH SIDES OF THE BLADE**
  When using the blade as a stabilizer, avoid loading all the weight of the machine on one side of the blade only.

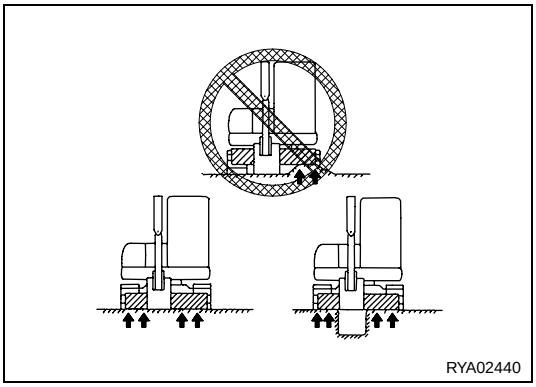

https://truckmanualshub.com/

3.3.10 PRECAUTIONS FOR USE

- **TRAVELLING**
  Travelling on big stones, logs or other obstacles subjects the frame and in particular the tracks to considerable strain, which damages the machine. For this reason, it is always advisable to remove any obstacles or to avoid them, if possible.
  If an obstacle cannot be avoided, reduce the travel speed, keep the work equipment as close to the ground as possible and try to move the machine keeping the obstacle equidistant from the tracks.
  When the track gauge has been narrowed completely, the machine runs the risk of overturning to the right or to the left if one of the rubber tracks passes over obstacles such as big stones or logs, or gets into a ditch or a hole. In these cases, lower the speed and take care to keep the machine balanced during travel.

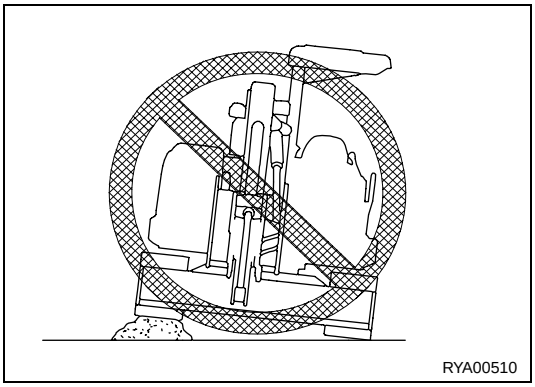
RYA00510

- **FOLDING THE WORK EQUIPMENT**
  When folding the work equipment to the travel or transport position, be careful to prevent the bucket from hitting the blade.

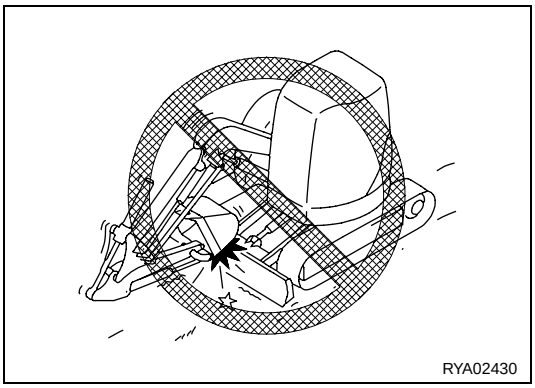
RYA02430

- **AVOID HITTING THE BLADE**
  Take care to prevent the blade from hitting rocks or stones, in order to avoid any damage to the blade itself or the cylinders.

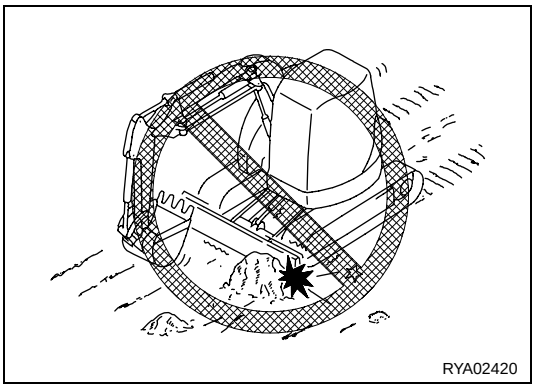
RYA02420

- **POSITION OF THE BLADE DURING DIGGING OPERATIONS WITH THE EXCAVATOR**
  When carrying out deep digging operations with the blade at the front, be careful to prevent the boom cylinder from hitting the blade. If possible, always position the blade at the rear of the machine.

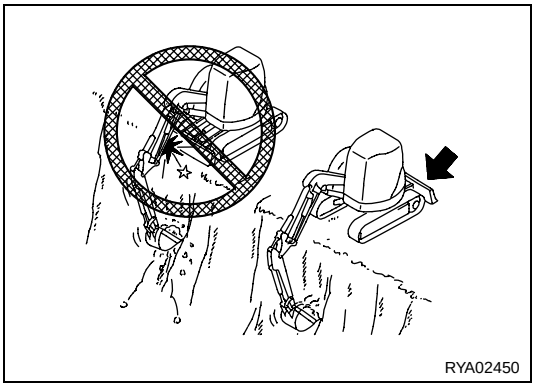
RYA02450

https://truckmanualshub.com/

- **MAXIMUM WATER DEPTH**

CAUTION

- **When driving the machine out of water, if the inclination of the machine exceeds 15°, the rear of the turret will be submerged, and this may cause the cooling fan to break. Be extremely careful when driving the machine out of water.**

Do not immerse the machine in water beyond the permissible depth (under the carrier roller (1)).
Furthermore, when a component has been immersed in water for a long time, pump in grease until the old grease comes out of the bearings (around the bucket pins).

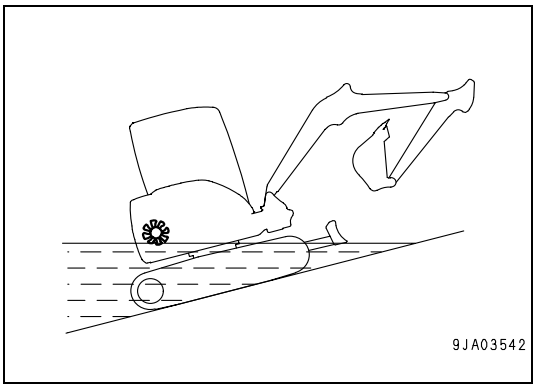

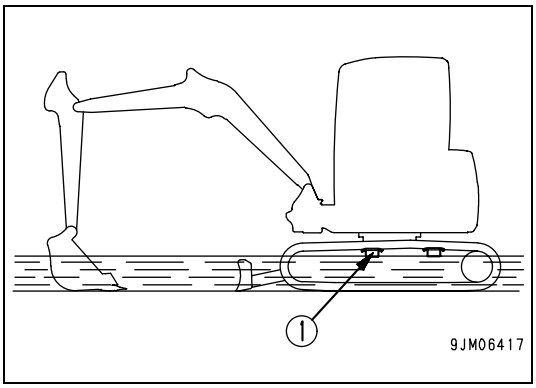

https://truckmanualshub.com/

3.3.11 PRECAUTIONS TO BE TAKEN WHEN TRAVELLING ON SLOPES

⚠ WARNING

- **Swinging or using the work equipment on slopes may cause the machine to lose stability and overturn, therefore it is advisable to avoid these operations. It is particularly dangerous to swing the turret when the machine is travelling downhill with full bucket. If these operations cannot be avoided, create a sort of platform by heaping some ground, so that the machine can work in horizontal position.**
- **Do not travel up or down steep slopes, since the machine may overturn.**
- **During travel, lift the machine at about 20-30 cm from the ground. Do not travel downhill in reverse.**
- **Do not steer or move transversally on slopes. Always position the machine on a level surface before changing direction. This may take longer, but is certainly safer.**
- **Always operate the machine or travel in such a way as to be able to stop it safely at any time if it slips or becomes unstable.**
- **When travelling uphill, if the tracks slip or it is impossible to move the machine using only the force of the tracks, do not use the pulling force of the arm to help the machine move forward. The machine runs the risk of overturning.**
- **Avoid adjusting the track gauge when the machine is working on a slope: the machine may lose stability and overturn.**

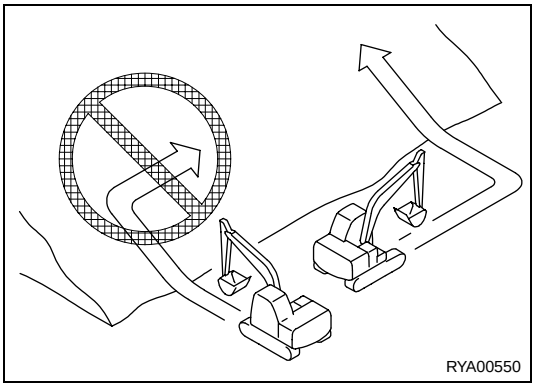

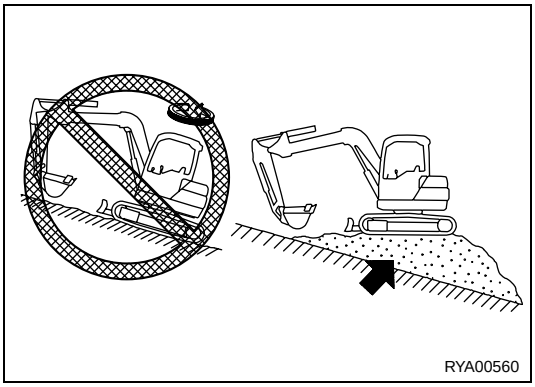

1. When travelling downhill on steep slopes, lower the speed using the travel levers and the hand accelerator.
   When moving downwards on a slope whose inclination exceeds 15°, position the work equipment as indicated in the diagram on the right and reduce the engine speed.

NOTE

- When the machine travels downhill, the sprocket (1) must be facing downhill.
  If the machine travels downhill with the sprocket (1) positioned uphill, the tracks tend to slacken and this may cause the machine to slip.

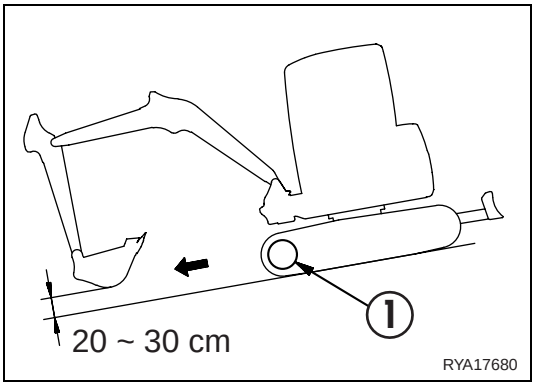

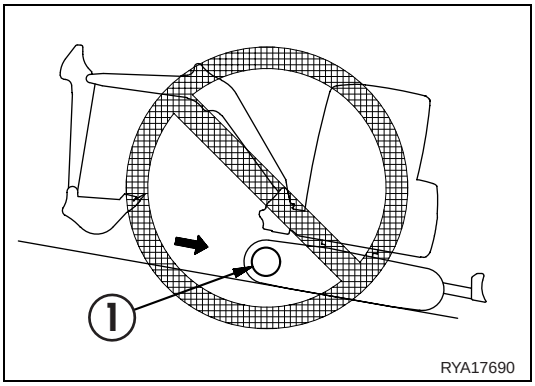

https://truckmanualshub.com/

2. When travelling uphill on a slope whose inclination exceeds 15°, position the work equipment as shown in the diagram on the right.

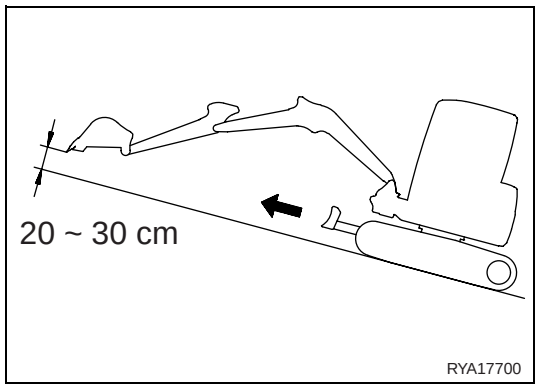

BRAKING WHEN TRAVELLING DOWNHILL

To brake when travelling downhill, shift the travel levers to the neutral position. This will automatically engage the brakes.

WHEN THE ENGINE STOPS ON A SLOPE

If the engine stops when the machine is travelling uphill, shift the travel levers to the neutral position, lower the bucket to the ground, stop the machine, then start the engine again.

PRECAUTIONS TO BE TAKEN ON SLOPES

If the engine stops when the machine is on a slope, do not use the left work equipment control lever to swing the turret. The turret will swing due to its own weight.

https://truckmanualshub.com/

3.3.12 GETTING THE MACHINE OUT OF MUD

Always proceed carefully to avoid getting stuck in mud. However, if the machine gets stuck in mud, proceed as indicated below.

WHEN ONE SIDE ONLY GETS STUCK

IMPORTANT

- **When using the boom or arm to raise the machine, always place the bottom of the bucket in contact with the ground. (Never push with the bucket teeth.) The angle between the boom and the arm should be included between 90° and 110°.**

When only one side gets stuck in mud, use the bucket to raise the track, then lay boards or logs under the track and drive the machine out.

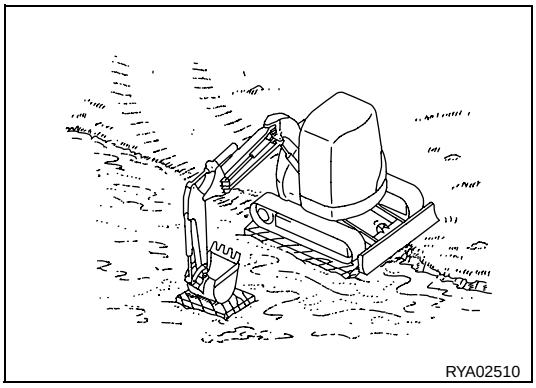

BOTH TRACKS STUCK IN MUD

When both tracks get stuck in mud and the machine slips but cannot move, put some boards or logs under the tracks, proceeding as indicated above. Thrust the bucket into the ground in front of the machine, operate the arm as for normal digging operations and shift the travel levers to position FORWARD to drive the machine out of mud.

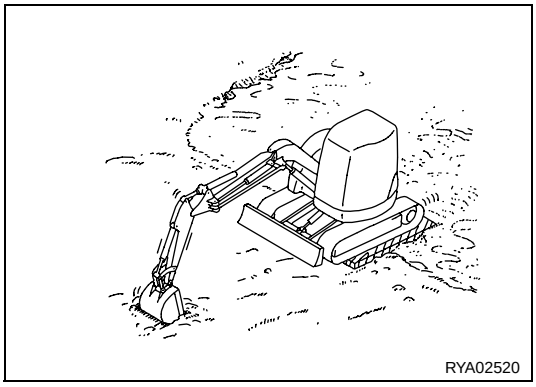

https://truckmanualshub.com/

3.3.13 OPERATIONS THAT CAN BE PERFORMED WITH THE HYDRAULIC EXCAVATOR

In addition to those indicated below, many other applications are possible, thanks to the use of various attachments.

EXCAVATION

When the machine is in the position shown in the diagram on the right, the maximum digging force and thrusting force of the single cylinders is obtained when the bucket cylinder and the relevant articulation, the arm cylinder and the arm are at 90° with respect to each other.
During digging operations, keep this amplitude to increase the efficiency of the machine.

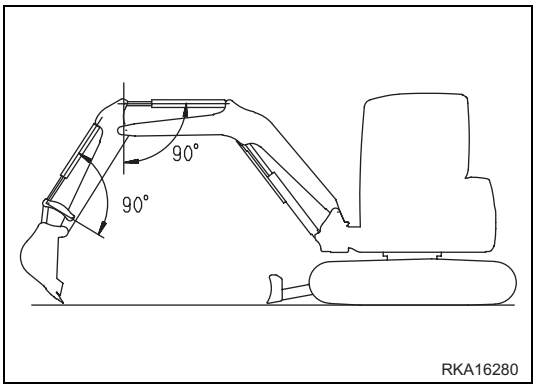

The positions available for digging with the arm range from a 45° angle away from the machine to a 30° angle towards the machine.
There may be some differences depending on the digging depth, but it is advisable to try to keep within the above range rather than operate with the cylinders reaching the end of stroke.

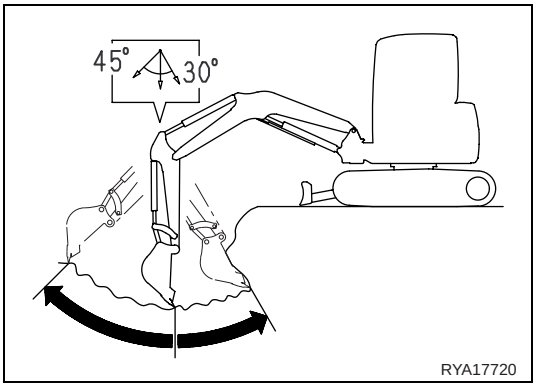

SIDE DITCHING

Ditch digging operations can be performed effectively by installing a bucket suitable for digging ditches and positioning the tracks parallel to the line that delimits the edge of the ditch.
o dig wide ditches, excavate the sides first and successively the central part.

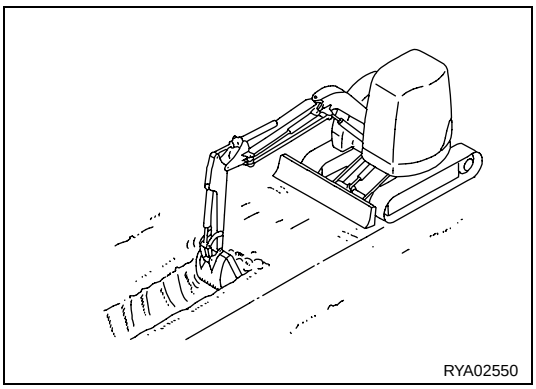

LOADING THE MACHINE

In places where the rotation angle is reduced, the effectiveness of the operation can be increased by positioning the truck so that the operator can comfortably see it.
The loading operation is easier and the loading capacity greater if the hydraulic excavator works from the back and not from the sides of the truck.

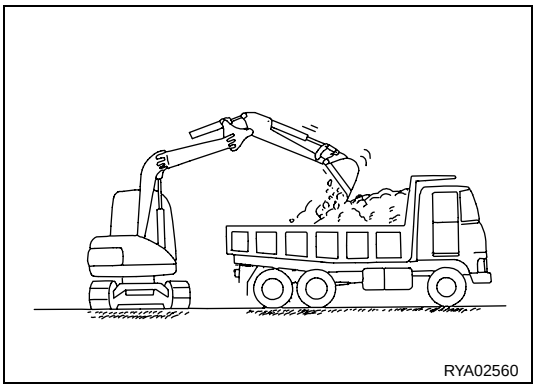

https://truckmanualshub.com/

LEVELLING OPERATIONS

Use the blade to fill excavations and level the ground surface. For refilling operations, widen the track gauge and the blade.

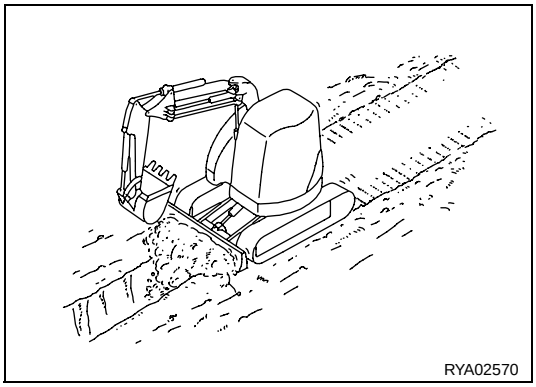

SIDE DITCHING WORK

It is possible to use the machine for side ditching work in limited spaces, by combining the turret and the boom swing.

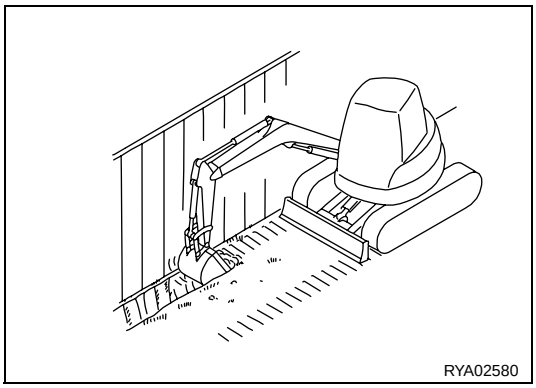

https://truckmanualshub.com/

3.3.14 CHANGING THE BUCKET

WARNING

- **When the coupling pins are removed or installed, chips may come off; always use gloves, goggles and helmet.**
- **The change of the equipment must be carried out by two operators, who must decide together the words and signals to be used during work.**
- **Avoid using your fingers to align the holes, since they may be cut off in case of sudden or uncontrolled movements.**
- **The described procedures are valid also for the coupling of the mechanical connections of the optional equipment.**

1. Position the bucket on level ground, directing it so that the flat part of its back rests on the ground.
2. Remove first the tie-rod pin (1) and then the arm connection pin (2).
3. Change the bucket, taking care to clean the pins, the bushings and the seals perfectly and to grease the pins slightly before reinstalling them.

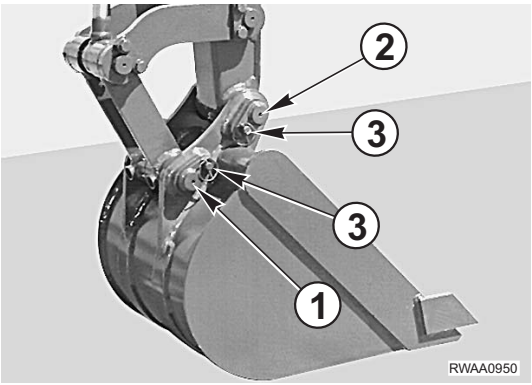

IMPORTANT

- **Install first the arm connection pin, making sure that the seals are in good conditions.**

4. Put back all the safety pins (3) and lubricate by means of the appropriate grease nipple.

https://truckmanualshub.com/

3.3.15 PARKING THE MACHINE

WARNING

- **Avoid stopping the machine abruptly. Always calculate a sufficient safety distance when stopping.**
- **Park the machine on firm and level ground. Avoid parking the machine on slopes. If it is absolutely necessary to park the machine on a slope, put blocks under the tracks and thrust the work equipment into the ground to prevent the machine from moving.**
- **If the control levers are inadvertently touched, the work equipment or the machine may move suddenly and cause serious accidents. Before leaving the operator seat, shift the safety lever to the "locked" position.**
- **Position the blade facing downhill and lower it to the ground.**

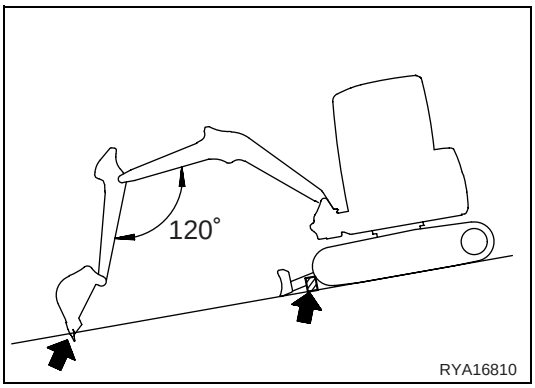

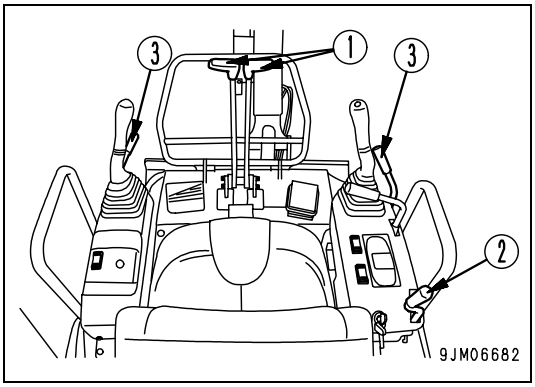

1. Shift the right and left travel levers (1) to neutral, then stop the machine.

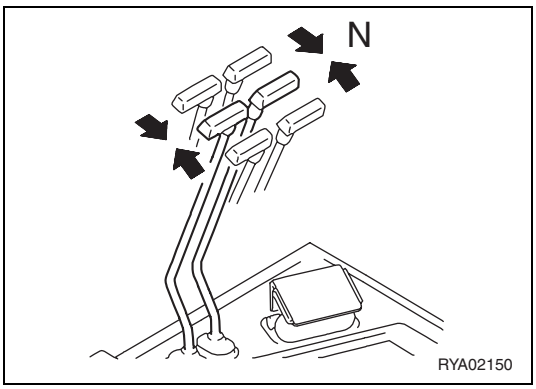

2. Reduce the engine speed to idling, shifting the accelerator lever (2) to position (A).

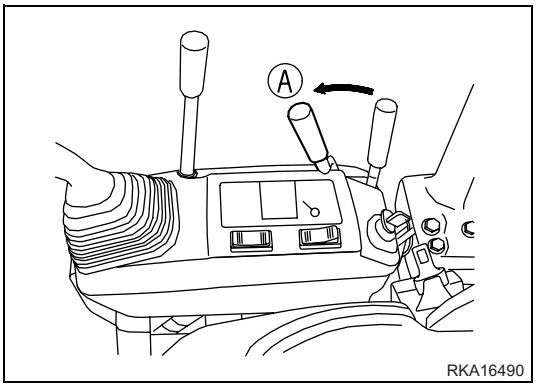

https://truckmanualshub.com/

3. Lower the bucket keeping it in horizontal position, until its bottom touches the ground.
4. Lower the blade to the ground.

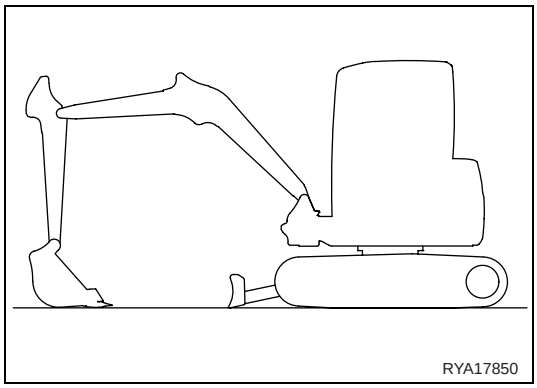

5. Shift the safety lever (3) to the “locked” position (L).

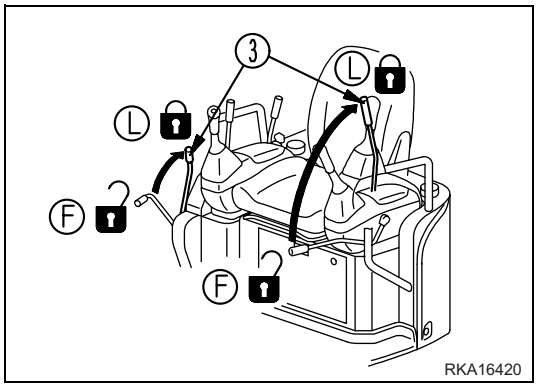

https://truckmanualshub.com/

3.3.16 CHECKING THE MACHINE EVERY DAY AFTER WORK

3.3.16.1 BEFORE STOPPING THE ENGINE

At the end of work, before stopping the engine, check the engine coolant temperature warning light (1), the engine oil pressure warning light (2) and the fuel level on the gauge (3).

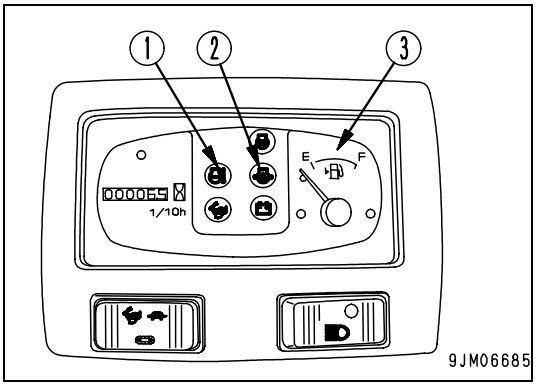

3.3.16.2 AFTER STOPPING THE ENGINE

1. Walk around the machine, check the work equipment, the outside of the machine and the undercarriage, and make sure that there are no oil or coolant leakages. If any anomaly is observed, provide for the necessary repairs.
2. Fill the fuel tank.
3. Check the engine compartment for paper and debris. Remove any paper and debris to avoid a fire hazard.
4. Remove any mud that may be attached to the undercarriage.

3.3.17 LOCKING THE MACHINE

Always lock the following parts:

(1) Engine hood

(2) Radiator cover

(3) Battery cover

(4) Document and tool compartment cover.

For further details, see paragraph "3.2.4 COVERSWITH LOCK".

NOTE

- Use the ignition key to open and lock these covers.

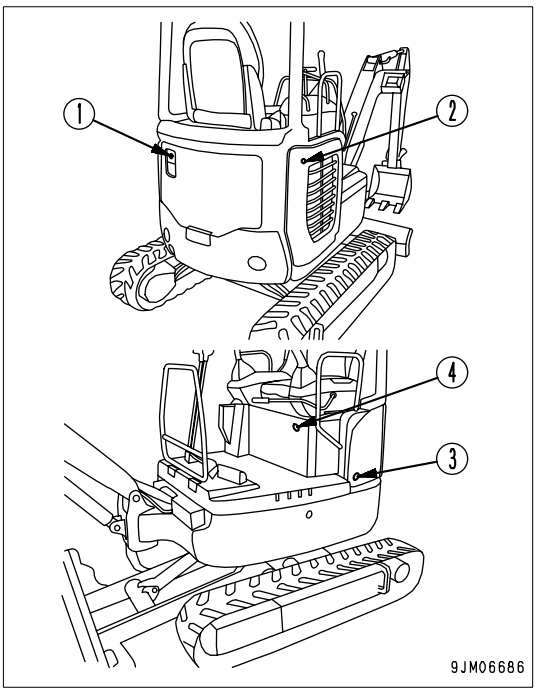

https://truckmanualshub.com/

3.3.18 RUBBER TRACKS (Machines equipped with rubber tracks only)

3.3.18.1 OPTIMAL USE OF THE RUBBER TRACKS

Rubber tracks have exceptional characteristics that cannot be found in steel tracks. However, if they are used in the same way as steel tracks, the advantages they offer cannot be fully exploited.
Operate without subjecting the rubber tracks to excessive stress, trying to adapt to the conditions of the job site and to the work being carried out.

COMPARISON BETWEEN RUBBER TRACKS AND STEEL TRACKS

	Rubber track	teel track
Reduction of vibrations	Excellent	Average
Smooth travel	Excellent	Good
Noiselessness	Excellent	Average
Reduction of damages to paved surfaces	Excellent	Average
Manoeuvrability	Excellent	Average
Resistance to damage	Average	Excellent
Traction force	Excellent	Excellent

Considering the properties of the material used, rubber tracks offer various advantages. However, their weak point is limited resistance. Consequently, it is important to understand what advantages are offered by the rubber tracks, to take the necessary precautions for use, and to avoid performing operations that are not allowed. This will increase the life of the rubber tracks and will allow their characteristics to be fully exploited. Before using the rubber tracks, read paragraph "3.3.18.3 USE OF THE RUBBER TRACKS".

3.3.18.2 WARRANTY ON RUBBER TRACKS

It is important to carry out inspections and maintenance operations and to ensure that the track tension is always correct. Furthermore, these tracks should not be used near objects that may damage them, such as sharp steel plates, U-grooves, broken or pointed rocks, steel bars or scraps.
The warranty does not cover any damage due to the incorrect use of the machine.

https://truckmanualshub.com/

3.3.18.3 USE OF THE RUBBER TRACKS

UNAUTHORIZED USES

Keep to the following instructions.

- Avoid performing rotations or other operations on broken rocks, very hard rocks, steel bars, scraps, or near the edges of steel plates, since this may damage the rubber tracks.
- In places like river beds, where there is a great quantity of large and small stones, these may get stuck in the tracks, and damage them or cause them to come off. Carrying out levelling operations if the tracks slip reduces their duration.
- Do not dirty the rubber tracks with oil, fuel or chemical solvents. If one of these substances gets on the tracks, clean them immediately. Furthermore, do not travel on road surfaces that are dirty with oil.
- When the machine is going to remain unused for a long period (3 months or more), keep it indoors, away from direct sunlight and protected from rain.
- Do not use the machine in areas where the temperature is particularly high, for example in the presence of burning wood, hot steel plates or on roads that have just been asphalted.
- Do not use the machine lifting one track only by means of the work equipment. This damages the rubber tracks and may also cause them to come off.

3.3.18.4 HOW TO PRESERVE THE RUBBER TRACKS OVER TIME

To avoid damaging the rubber tracks, keep to the following instructions during work.

- Avoid carrying out counter-rotations on concrete surfaces.
- Avoid sudden changes of direction that may damage the rubber tracks and wear them out.
- Avoid steering when moving on surfaces with considerable differences in height. When moving on obstacles or surfaces with considerable differences in height, position the machine perpendicular to the obstacle to prevent the tracks from coming off.
- If the machine has been raised using the bucket, lower it slowly.
- Avoid using the machine to handle materials that once crushed produce oil (like soy, maize or other vegetable parts from which oil is derived); otherwise, wash the machine soon after use.
- Avoid any contact with materials that may affect the adhesion of the steel core, like salt, ammonium sulphate, potassium chloride, potassium sulphate or calcium superphosphate, or wash the machine after use.
- Since salt affects the adhesion of the steel core, avoid using the machine in coastal areas.
- When handling materials like salt, sugar, flour or soy seeds, the presence of deep cuts in the rubber tracks may cause the infiltration of these products in the tracks or the dispersion of rubber pieces in the products. Always repair the tracks before use.
- Do not rub the tracks against concrete walls or blocks.
- Rubber tracks slip very easily on snow or icy surfaces. Take care not to slip while travelling or working on slopes.
- The characteristics of the rubber tracks change when they are used in extremely cold areas, in particular their duration is reduced.
- In consideration of the properties of rubber, it is advisable to use the rubber tracks at temperatures included between –25° C and +55° C (between -13°F and +131°F).
- When performing operations with the bucket, take care not to damage the rubber tracks with the bucket itself.

To prevent the rubber tracks from coming off, pay the utmost attention to the following. Even when the track tension is correct, carry out every operation with the maximum care.

https://truckmanualshub.com/

1. Avoid steering when moving on kerbs, rocks or areas with considerable differences in height (more than 20 cm). When the machine moves in these conditions, always position it perpendicular to the obstacles.

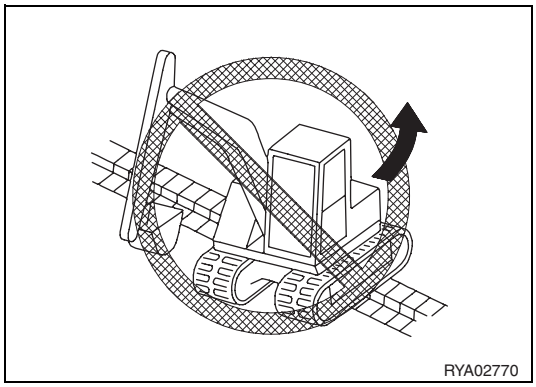

2. When travelling up slopes in reverse, avoid steering at the beginning of the slope. If it is necessary to steer on a slope, carry out this manoeuvre gradually.

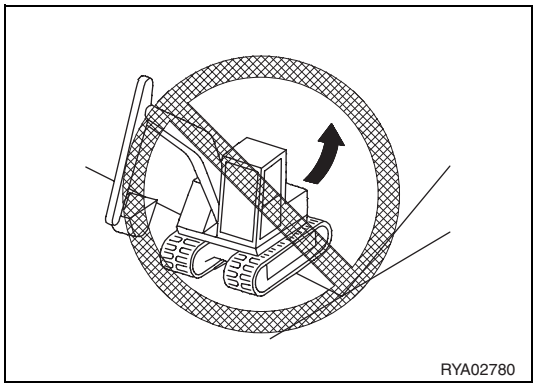

3. Do not proceed along the edges of a slope or on uneven ground keeping one track in horizontal position and the other inclined or partially raised (with machine inclination exceeding 10°C). To avoid damaging the rubber tracks, always proceed with both tracks resting on the same horizontal plane.

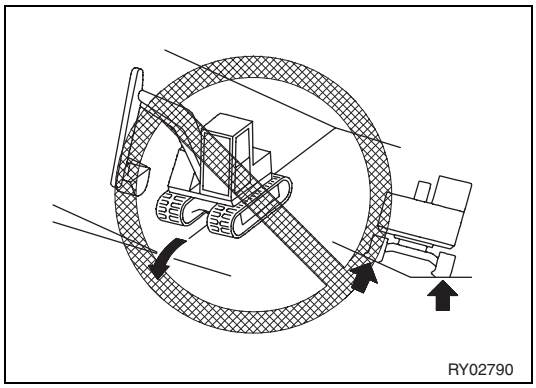

4. If the machine is operated in the conditions described in points from 1 to 3 above, do not change direction if the tracks do not adhere perfectly to the ground, see figure.

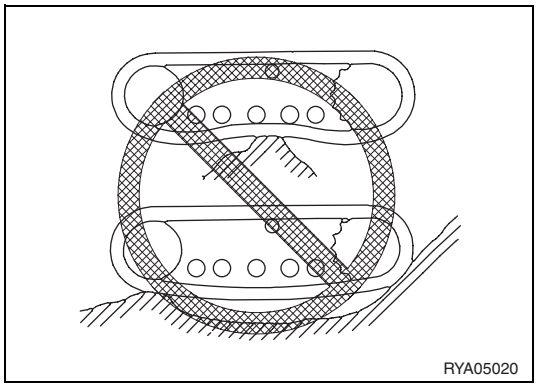

https://truckmanualshub.com/

Detachment of the rubber track from the track frame

5. When the machine moves over an obstacle, a gap forms between the carrier roller and the rubber track. In these conditions, the rubber track may come off.

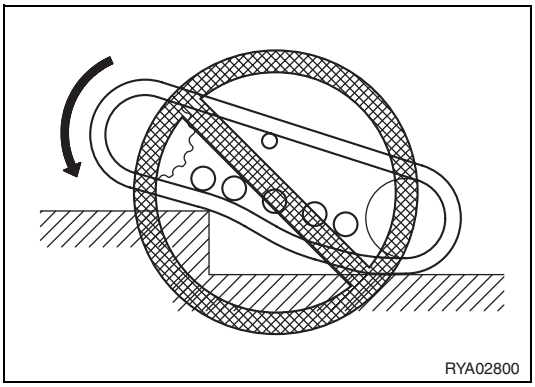

6. Furthermore, if the machine travels in reverse, a gap forms between the carrier roller, the idler roller, and the rubber track.

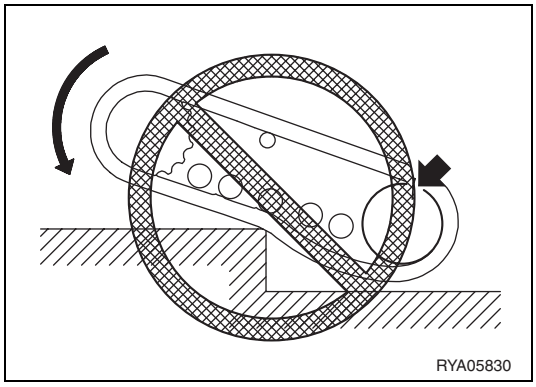

The rubber track may come off also in the following conditions:

- When the machine steers, but the rubber track cannot move laterally due to the obstacle over which the machine is moving or due to any other obstacle.
- When the rubber track is not aligned and the idler roller or the carrier roller are not aligned with the centre.

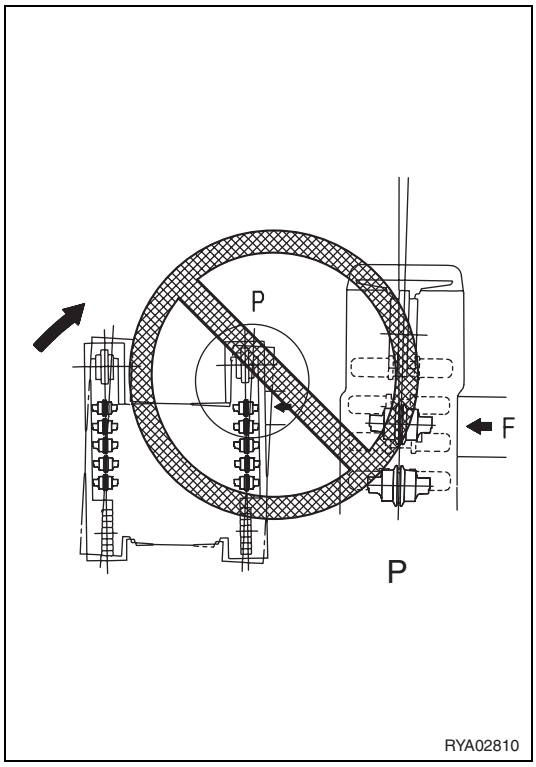

https://truckmanualshub.com/

- If the machine travels in reverse in these conditions, the rubber track will come off.

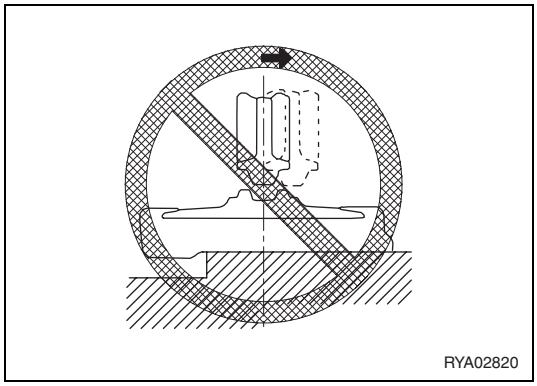

- If the machine steers in these conditions, the rubber track will come off.

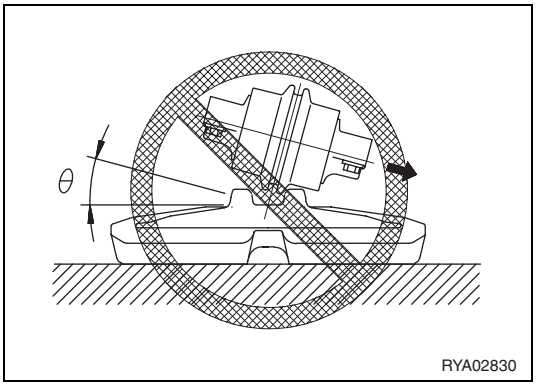

https://truckmanualshub.com/

3.4 TRANSPORTING THE MACHINE

When transporting the machine, observe all the laws and regulations in force, paying special attention to safety.

3.4.1 TRANSPORT PROCEDURE

As a general rule, the machine must be transported on a trailer.
Choose the trailer according to the weight and size of the machine, as indicated in paragraph "5.1 TECHNICAL DATA"It is important to remember that the weight and transport size indicated in the technical data may vary according to the type of track, to the type of boom or to the other attachments installed on the machine.

3.4.2 LOADING AND UNLOADING THE MACHINE

⚠ WARNING

- **During loading and unloading operations, make sure that the travel speed increase warning light (1) is off and always travel at low speed.**
- **During loading and unloading operations, let the engine idle, reduce speed and operate the machine slowly.**
- **The machine must be loaded and unloaded on/from the trailer on firm and level ground. Keep a safety distance from the edge of the road.**
- **Use sufficiently wide, long, thick and strong ramps, and position them with a maximum inclination of 15°C. When using piled soil, compact it to prevent the inclined surface from collapsing.**
- **Before loading the machine, remove any trace of mud and dirt from the tracks, in such a way as to prevent the machine from slipping when it is on the ramps. Make sure that the surface of the ramps is clean and that there are no traces of water, snow, ice, grease or oil.**
- **Do not change direction when the machine is already on the ramps, since it may overturn. If necessary, move the machine down the ramps, find the correct direction and go up again.**
- **It is dangerous to use the work equipment for the loading and unloading operations, therefore avoid this type of manoeuvre.**
- **When the machine is on the ramps do not operate any lever apart from the travel levers.**
- **When the machine goes up the ramps and when it passes from the ramps to the trailer, its centre of gravity changes suddenly and it may lose stability. Therefore, proceed slowly.**
- **If the turret swing is operated when the machine is on the trailer, this becomes unstable, therefore it is advisable to fold the work equipment and to swing the turret slowly.**
- **Widen the track gauge before the loading and unloading operations.**

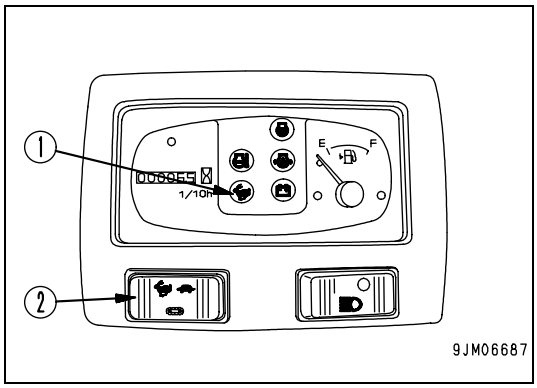

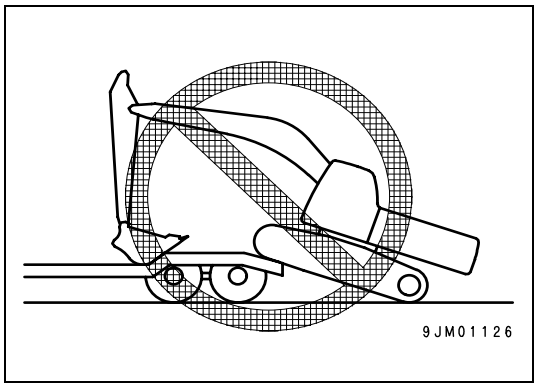

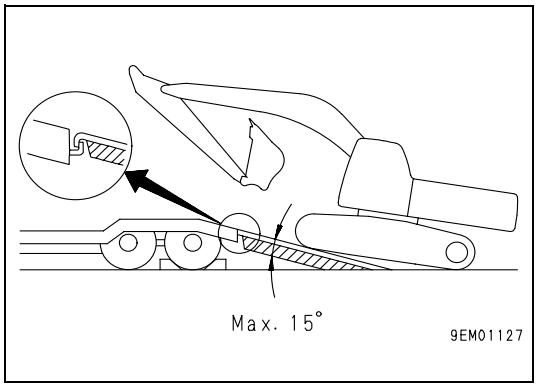

https://truckmanualshub.com/

During the loading and unloading operations, always use ramps or a platform and proceed as indicated below.

LOADING THE MACHINE

NOTE

- Load and unload the machine on/from the trailer on firm and level ground only, and widen the track gauge.
  Keep a safety distance from the edge of the road.

1. Engage the trailer brakes and place safety blocks under the trailer wheels to prevent it from moving. The distance between the ramps and their alignment must be adapted to the wheelbase of the trailer and the track gauge. Make sure that the two sides are at the same distance.
   The inclination of the ramps must not exceed 15°.

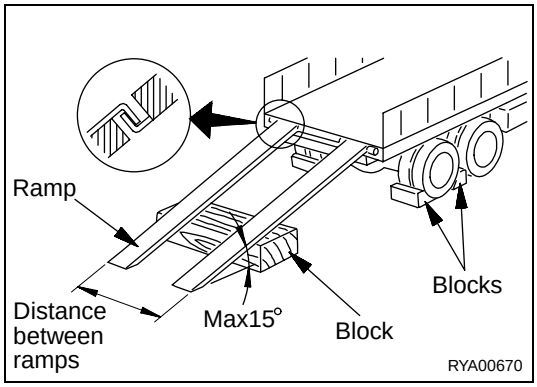

2. Run the engine at low speed.
   (A): Idling

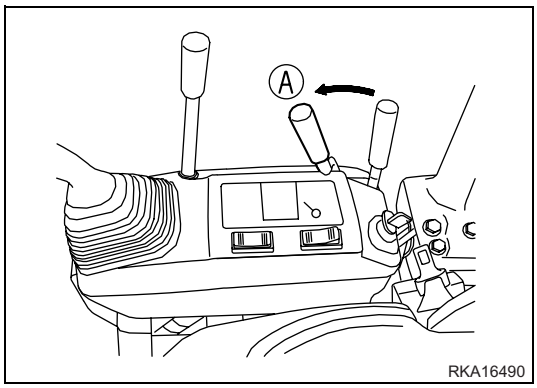

Machine with speed increase function

3. Make sure that the travel speed increase warning light is off.

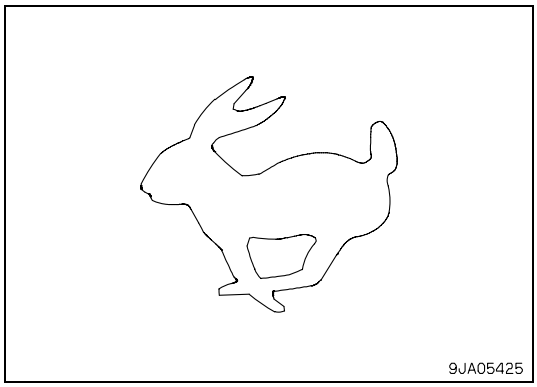

NOTE

- If the warning light is on, press the speed selection switch to the low speed position (B).

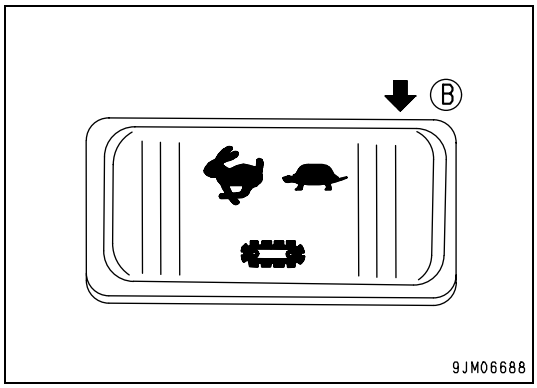

https://truckmanualshub.com/

4. Position the work equipment at the front and the blade at the rear, with the turret and the undercarriage parallel to each other.
5. Move the machine towards the ramps and lower the work equipment as much as possible, taking care to prevent them from touching the trailer.
6. Make sure that the machine is in line with the ramps and that the centerline of the machine corresponds to the centerline of the trailer.
7. Load the machine on the trailer or on the truck in the specified position, operating the travel levers slowly.
   When the machine is on the ramps, do not operate any lever apart from the travel levers.
8. Stop the machine at the specified point, then swing the turret by 180°.

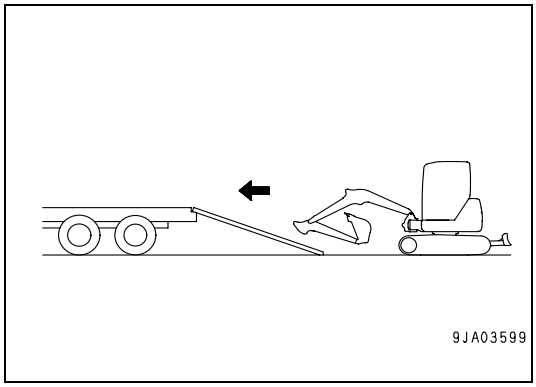

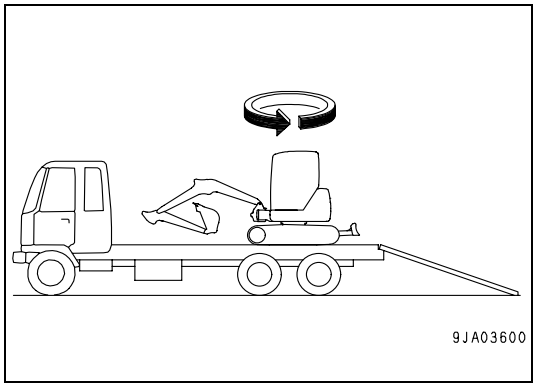

https://truckmanualshub.com/

SECURING THE MACHINE ON THE MEANS OF TRANSPORT

After positioning the machine on the trailer, it is necessary to secure it by proceeding as indicated below.

IMPORTANT

- **To avoid damaging the machine during transport, place wooden blocks under the end of the bucket cylinder, in such a way as to prevent it from touching the ground.**

1. Lower the blade.
2. Extend the bucket cylinder and the arm cylinder completely, and lower the boom slowly.
3. Stop the engine and remove the ignition key.

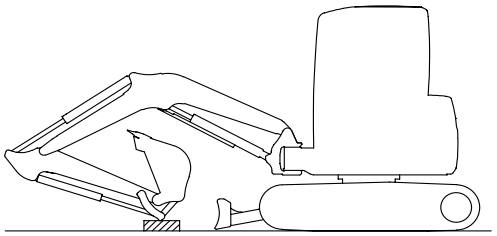

4. Shift the safety lever to the “locked” position (L).

5. Lock the covers.
   See paragraph "3.2.4 COVERSWITH LOCK".

IMPORTANT

- **Do not use the hole in the back of the undercarriage to tow or lift the machine.**

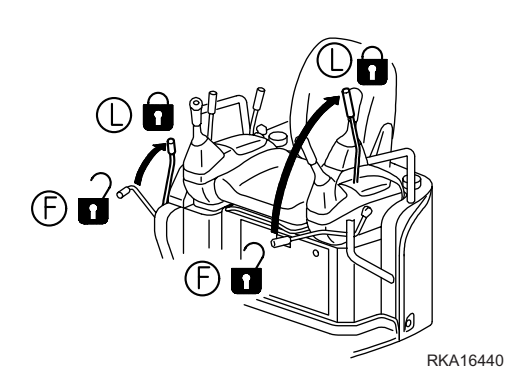

6. Place blocks under both ends of the tracks to prevent the machine from moving during transport and secure the machine with sufficiently strong chains or metal cables.
   Pay special attention when securing the machine, to prevent it from sliding laterally.
   When securing the machine with a chain or metal cable, use the hole in the rear part of the undercarriage and the hole in the blade side plate.

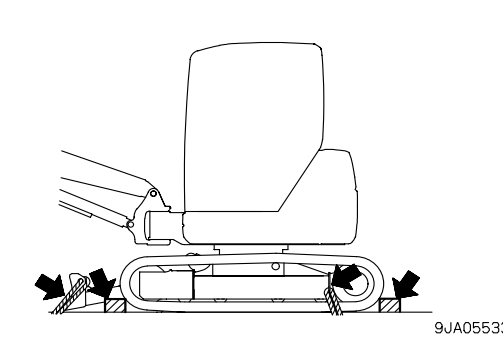

https://truckmanualshub.com/

UNLOADING THE MACHINE

NOTE

- Load and unload the machine on/from the trailer on firm and level ground only, and widen the track gauge. Keep a safety distance from the edge of the road.

1. Engage the trailer brakes and place safety blocks under the trailer wheels to prevent it from moving. The distance between the ramps and their alignment must be adapted to the wheelbase of the trailer and the track gauge. Make sure that the two sides are at the same distance.
   The inclination of the ramps must not exceed 15°.
2. Remove the chains and the metal cables with which the machine has been secured.
3. Start the engine and let it warm up completely.

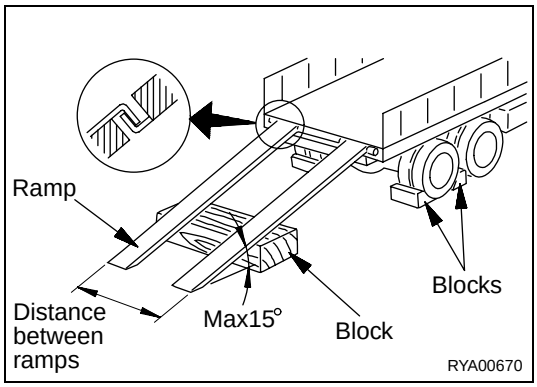

Machine with speed increase function

4. Make sure that the travel speed increase warning light is off.

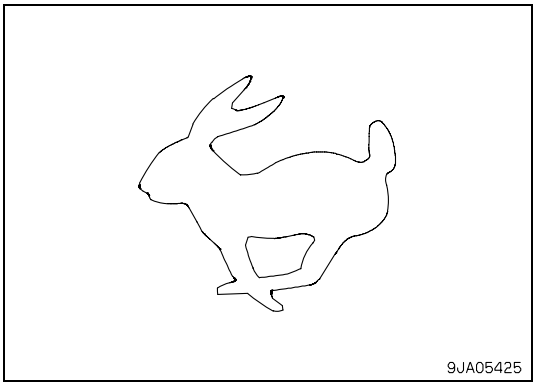

NOTE

- If the warning light is on, press the speed selection switch to the low speed position (B).

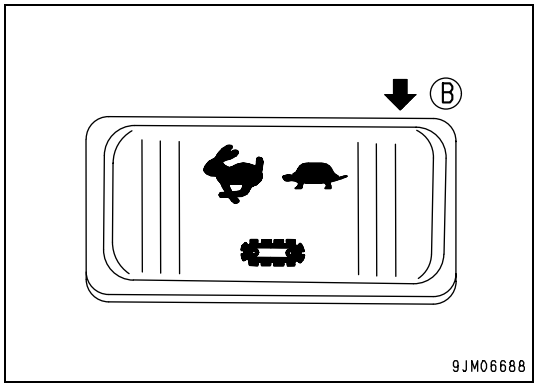

5. Shift the safety lever to the “free” position (F).

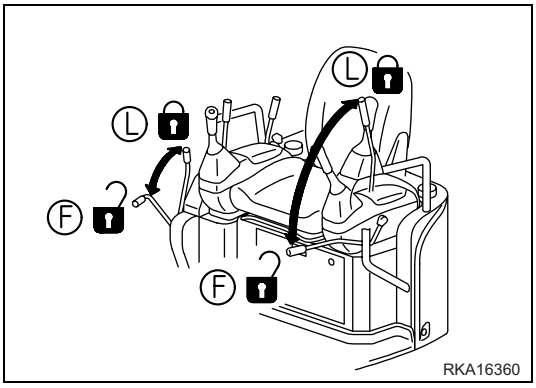

https://truckmanualshub.com/

6. Run the engine at low speed.
   (A): Idling
7. Lift the blade.

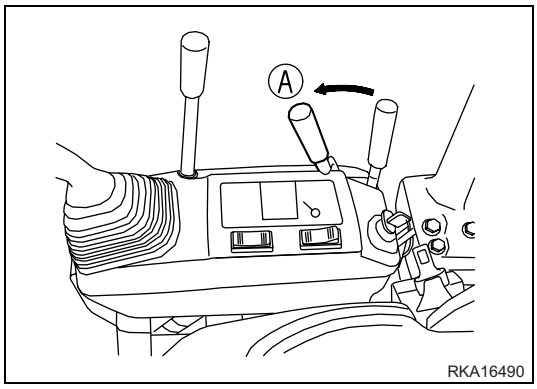

8. Lift the work equipment, make sure that the travel direction is in line with the ramps and start travelling slowly.
   Lower the work equipment as much as possible, without causing interferences.
   When the machine is on the ramps, do not use any control lever apart from the travel levers.

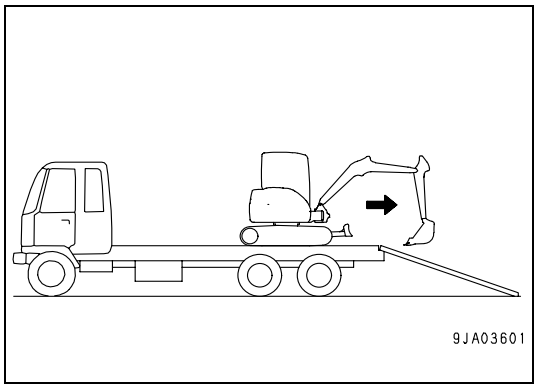

https://truckmanualshub.com/

3.4.3 LIFTING THE MACHINE

WARNING

- **Do not lift the machine if the operator is still on board.**
- **Always make sure that the metal cable used to lift the machine is sufficiently strong for the weight being lifted.**
- **Do not lift the machine with the turret swung laterally. Before lifting the machine, swing the work equipment to the sprocket side, then position the undercarriage and the turret parallel to each other.**
- **Always keep the machine in horizontal position during the lifting operations.**
- **Do not stand under the machine when this is suspended.**
- **Do not attempt to lift the machine in any position different from that illustrated below, since it may lose stability.**

CAUTION

- **It is prohibited to lift the machine using the holes provided in the undercarriage, since these must be used only for transporting the machine. This would damage the undercarriage.**

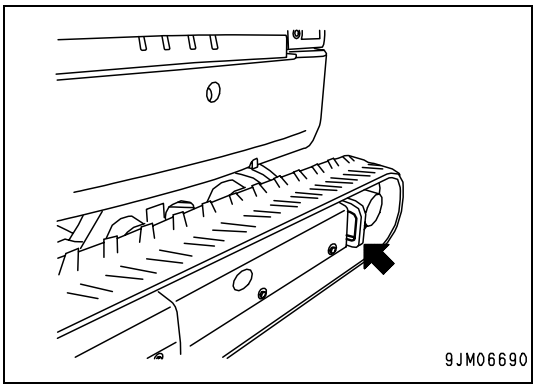

IMPORTANT

- **For details on the weight of the machine, see paragraph "5.1 TECHNICAL DATA".**
- **The lifting procedure described must be considered valid only for machines with standard specifications.**
  The lifting method varies according to the equipment and attachments installed. In these cases, contact your Komatsu Dealer, who can supply you with more precise information.

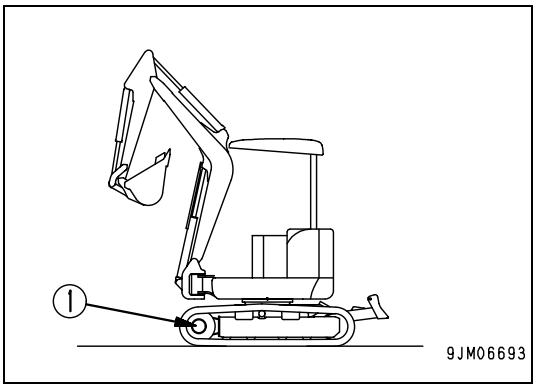

The lifting operation must be carried out on a level surface, by proceeding as indicated below.

1. Start the engine, then swing the turret so that the work equipment is above the sprockets (1) with the undercarriage and the turret parallel to each other.
2. Lift the blade completely.
3. Extend the bucket cylinder, the arm cylinder and the boom cylinder completely.
4. If the boom is swung to the left or to the right, operate the boom swing pedal to position the boom parallel to the undercarriage, then lock the pedal safety device.
5. Shift the safety lever to the “locked” position (L).
6. Stop the engine, make sure that the space around the operator seat is clear, then get off the machine.

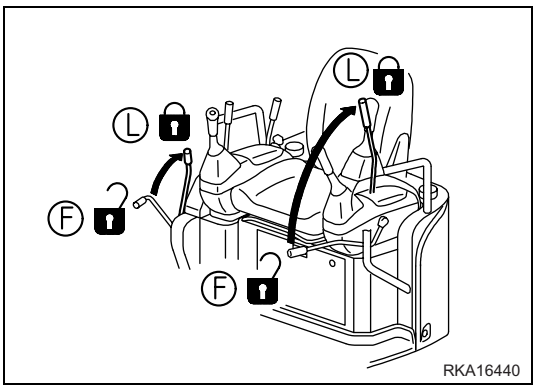

https://truckmanualshub.com/

7. Install shackles in the lifting holes on both ends of the blade (2 points), then pass the metal cables through them.

NOTE

- On machines with adjustable track gauge, set the blade in the narrow configuration.

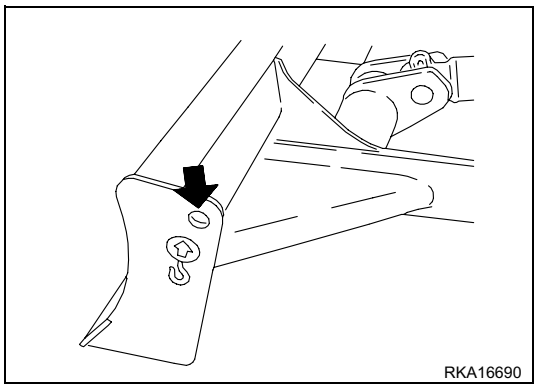

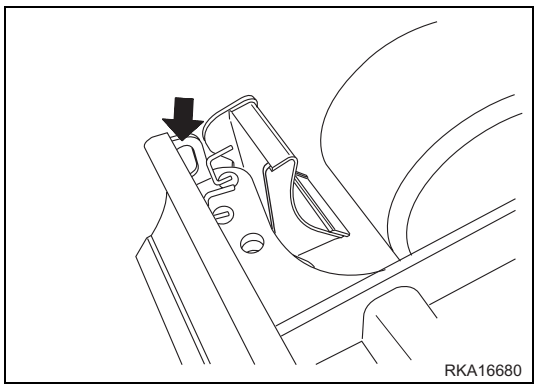

8. Install one shackle in the lifting hole provided in the boom, then pass the metal cable through it.

IMPORTANT

- **Always use the three coupling points provided for lifting the machine. Do not lift the machine with swung boom or turret.**
- **Pay attention to the pipes and take care that they do not get caught.**

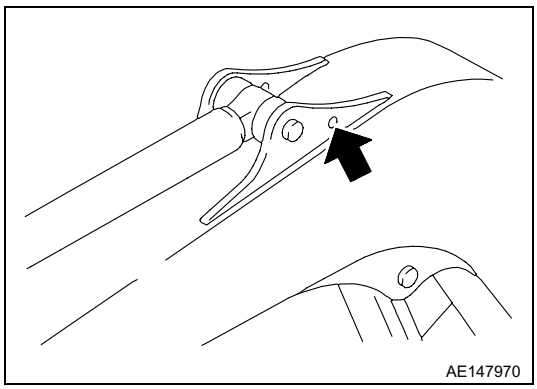

9. During the lifting operations the angle between the metal cables must be included between 30° and 40°.
10. When the machine is not in contact with the ground any longer, check the conditions of the hooks and the lifting position, then proceed slowly.

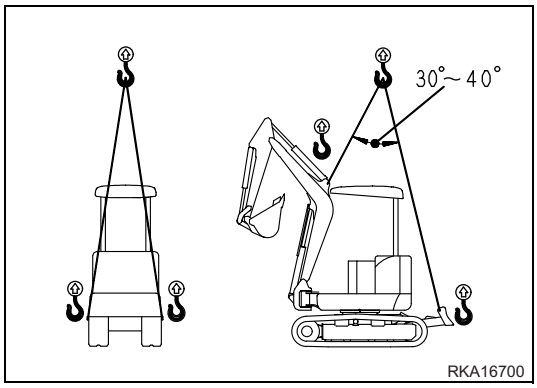

https://truckmanualshub.com/

3.5 USING THE MACHINE IN THE COLD SEASON

3.5.1 PRECAUTIONS TO BE TAKEN WHEN USING THE MACHINE IN THE COLD SEASON

During the cold season or in areas where temperatures are particularly low, especially during the night, it is necessary to take some countermeasures meant to limit any damage deriving from low temperatures.

3.5.1.1 FUEL AND LUBRICANTS

Change fuel and oil with low viscosity products for all components. For details on the required viscosity, see "4.2 MAINTENANCE NOTES".

3.5.1.2 COOLANT

⚠ WARNING

- **Antifreeze is toxic. Avoid any contact with the eyes or the skin. In case of contact with the eyes or the skin, wash with plenty of running water and consult a doctor without delay.**
- **The coolant containing antifreeze is flammable; do not smoke and do not use naked flames during the checks and when preparing the mixture.**

1 - Use only red permanent antifreeze suitable for aluminium radiators. Pure antifreeze must be diluted with water (50%) to ensure protection down to -36°C.

2 - Do not mix different brands of antifreeze.

3 - The use of red permanent antifreeze requires only the check of the level and the periodical change of the fluid. It is not necessary to wash the cooling circuit.

4 - In case of doubt regarding the applicable standards for the use of permanent antifreeze, contact your Komatsu Dealer, who will supply you with exhaustive and precise information.

https://truckmanualshub.com/

3.5.1.3 BATTERY

⚠ WARNING

- **The battery produces flammable gas, therefore keep flames and sparks away from it.**
- **The battery electrolyte is dangerous. In case of contact with the eyes or the skin, wash with plenty of running water and consult a doctor without delay.**
- **The battery electrolyte melts paint. In case of contact with the machine body, wash immediately with water.**
- **If the battery electrolyte freezes, do not charge the battery or start the engine with a different power source, since the battery may explode.**
- **The battery electrolyte is toxic, therefore it is important to avoid draining it in sewage systems or contaminating the ground.**

When the ambient temperature drops, the capacity of the battery decreases accordingly. If the battery charge is low, the electrolyte may freeze. Keep the battery charge level as high as possible and insulate the battery against excessively low temperatures, in such a way as to be able to start the machine easily when starting work in the morning.

NOTE

- Measure the specific weight of the fluid and calculate the charge percentage according to the following conversion table.

CHARGE PERCENTAGE	FLUID TEMPERATURE			
	20°C	0°C	-10°C	-20°C
100%	1,28	1,29	1,30	1,31
90%	1,26	1,27	1,28	1,29
80%	1,24	1,25	1,26	1,27
75%	1,23	1,24	1,25	1,26

- Since the capacity of the battery decreases considerably at low temperatures, cover the battery or remove it from the machine, store it in a warm place and install it again the following morning.
- If the electrolyte level is low, add distilled water in the morning before starting work. Do not add electrolyte in the evening at the end of work, since it may freeze during the night.

https://truckmanualshub.com/

3.5.2 PRECAUTIONS TO BE TAKEN EVERY DAY AT THE END OF WORK

WARNING

- **Making the tracks turn idly is dangerous, therefore it is advisable to keep away from the tracks when carrying out this operation.**

To prevent the mud and water present on the undercarriage from freezing, thus making it impossible to move the machine the following morning, always take the following precautions.

- Remove any mud and water that may be present on the machine body. In particular, clean the hydraulic cylinder rod to avoid any damage to the gasket due to the penetration of the mud or dirt present on the rod surface together with water drops.
- Park the machine on firm and dry ground.
  If this is not possible, position it on wooden boards to prevent the tracks from freezing on the ground, which would make it extremely difficult to start the machine the following morning.
- Open the drain valve and drain the water accumulated in the fuel system to prevent it from freezing.
- After working in water or mud, remove the water from the undercarriage by proceeding as indicated below, in order to extend the life of the undercarriage.

1. Swing the turret 90° with the engine at low idling and bring the work equipment to the track side.
2. Lift the machine using a jack until the track is slightly raised from the ground. Make the track rotate idly. Repeat this procedure on both the left and the right side of the machine.

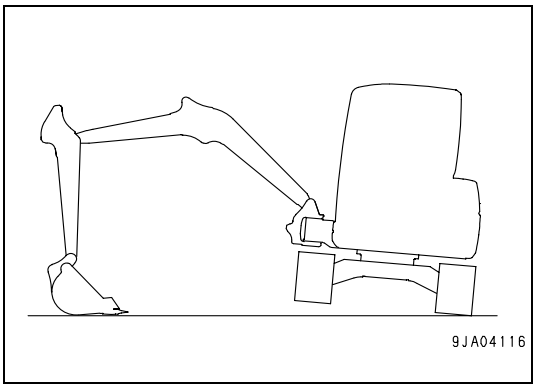

3.5.3 HOW TO PROCEED AT THE END OF THE COLD SEASON

At the end of the cold season, when the climate becomes warmer, proceed as follows.

- Change fuel and oil with products having suitable viscosity. For further details, see "4.2 MAINTENANCE NOTES".

https://truckmanualshub.com/

3.6 LONG PERIODS OF INACTIVITY

3.6.1 BEFORE A PERIOD OF INACTIVITY

IMPORTANT

- **To protect the hydraulic cylinder rods while the machine is not used, position the work equipment as shown in the figure on the right.**
  (This prevents the cylinder rods from rusting).

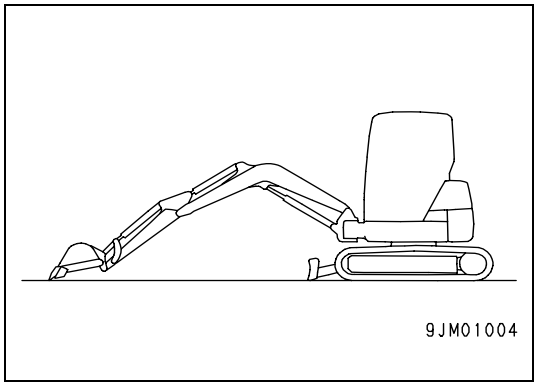

If the machine is going to remain unused for a long period (more than one month), proceed as indicated below.

- Clean and wash all the machine components, then store the machine indoors. If the machine is going to be stored outdoors, choose a level surface and cover the machine with a cloth.
- Fill the fuel tank completely, to prevent the accumulation of condensate.
- Lubricate where necessary and change the oil.
- Apply a thin film of grease on the metal surface of the hydraulic cylinder rods.
- Disconnect the negative terminals of the battery and cover it, or alternatively remove it from the machine and store it separately.
- Lock all the control levers and pedals with the safety lever and the pedal locking device.
- If the machine is equipped with attachments, shift the selection lever to position “Breaker or other attachments“.

3.6.2 DURING A PERIOD OF INACTIVITY

⚠ WARNING

- **If it is necessary to carry out a rust-prevention treatment while the machine is kept indoors, open doors and windows to increase ventilation and avoid poisoning by gas.**

- During the period of inactivity, start the machine once a month, so that a new oil film covers all the moving parts and the component surfaces. Charge the battery.
- When operating the work equipment, remove all the grease from the hydraulic cylinder rods.

3.6.3 AFTER A PERIOD OF INACTIVITY

IMPORTANT

- **If the machine has been stored without carrying out the monthly rust-prevention treatment, have maintenance performed by your Komatsu Dealer.**

Before using the machine after a long period of inactivity, carry out the operations listed below.

- Remove the grease from the hydraulic cylinder rods.
- Add oil and lubricate all the lubrication points.
- When the machine is not used for a long period, the air humidity may contaminate the oil. Check the oil before and after starting the engine. If necessary, change the oil.
- The fuel tank is made of plastic, therefore do not clean it using trichloroethylene-based solvents. The use of trichloroethylene may damage the tank.

https://truckmanualshub.com/

3.7 TROUBLESHOOTING

3.7.1 IF FUEL RUNS OUT COMPLETELY

Before starting the engine after running out of fuel, refuel and bleed the fuel system.
For details on the bleeding procedure, see "4.9.5.c CHANGING THE FUEL FILTER CARTRIDGE" - " BLEEDING THE FUEL CIRCUIT".

3.7.2 OCCURRENCES THAT ARE NOT FAILURES

Pay attention to the following occurrences, that are not considered failures:

- When the arm is retracted and the work equipment is lowered with no load, the arm speed drops momentarily according to the more or less vertical position of the arm itself.

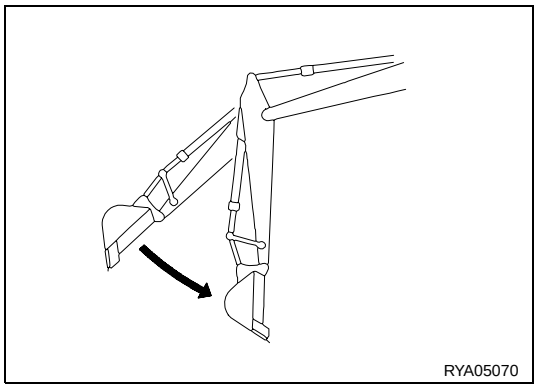

- When the bucket is folded and the work equipment is lowered with no load, the bucket speed drops momentarily according to the more or less horizontal position of the bucket teeth.
- When the swing is operated or locked, the brake valve emits a noise.
- When the machine travels down a steep slope at low speed, the travel motor brake valve emits a noise.

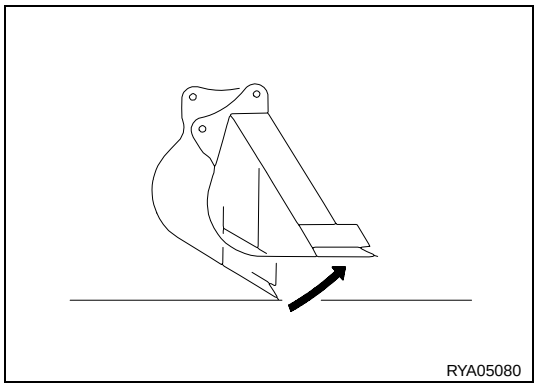

3.7.3 REMOVING THE MACHINE

⚠ WARNING

- **When removing the machine, use a metal cable suitable for the weight of the machine to be removed.**
- **Do not apply sudden loads to the cable.**

When the machine is stuck in mud and cannot get out with its own power, or in case of failure, before removing it pass a metal cable around the central part of the undercarriage, as shown in the diagram on the right.
Position wooden blocks between the metal cable and the machine body, in order to prevent the cable from damaging the body itself.

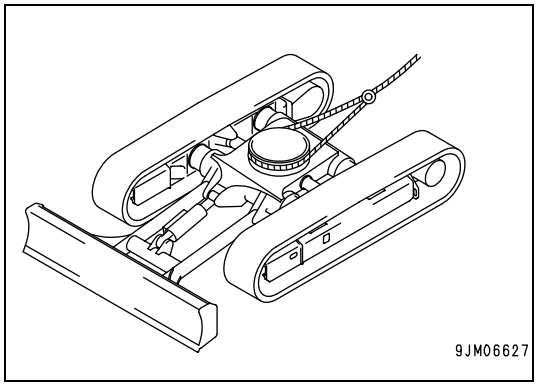

https://truckmanualshub.com/

3.7.4 PRECAUTIONS TO BE TAKEN WHEN WORKING IN PARTICULAR CONDITIONS

- When carrying out digging operations in water, if water gets on the pins of the work equipment, always add grease to the bucket articulations (1), (2), (3), (4) and (5) before work.

- When carrying out heavy duty digging and deep digging operations, always add grease to the bucket articulations (1), (2), (3), (4) and (5) (total: 5 points) before work.
  After greasing, operate the bucket more than once, then add grease again.

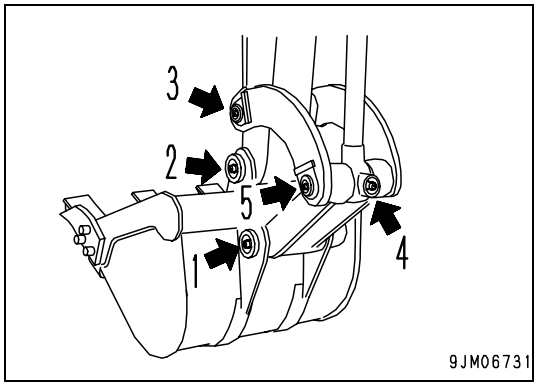

3.7.5 IF THE BATTERY IS DOWN

⚠ WARNING

- **It is dangerous to charge the battery when it is installed in the machine. Always remove it before recharge.**
- **Before carrying out any work on the battery, stop the engine and turn the ignition key to position OFF.**
- **The battery produces hydrogen, which may explode. Do not smoke and avoid producing sparks near the battery.**
- **The battery electrolyte is made of diluted sulphuric acid that may corrode clothes and even the skin; in case of contact with this fluid, immediately rinse the involved part with plenty of water. If the acid gets into the eyes, immediately rinse with plenty of water and consult a doctor without delay.**
- **When working on the battery, always wear goggles and rubber gloves.**
- **When removing the battery, disconnect the earth cable (-) first. When installing the battery, connect the positive terminal (+) first.**
  If a tool touches the positive terminal and the frame of the machine at the same time, sparks may be generated, thus causing an explosion hazard.
- **Carefully tighten the connection terminals, since false contacts may generate sparks with consequent risk of explosion.**
- **The accumulation of oxide around the terminals causes the battery to discharge. Clean the terminals carefully and cover them with a thin film of grease before installation.**

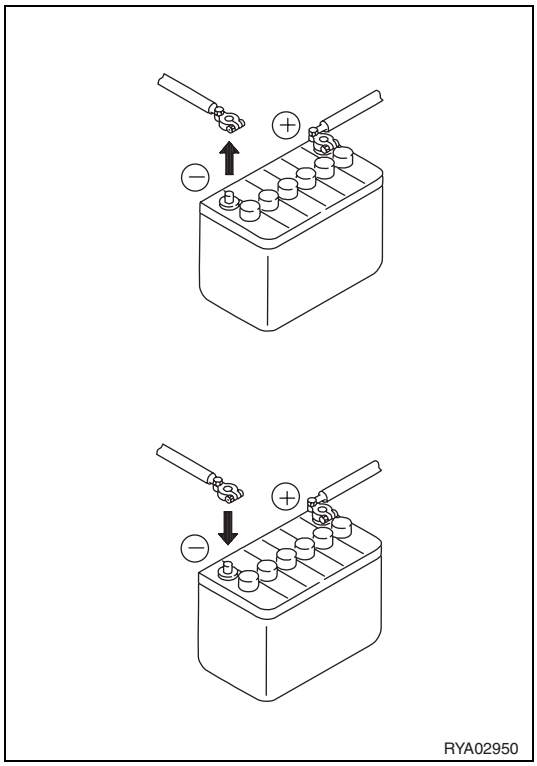

https://truckmanualshub.com/

3.7.5.1 REMOVING AND INSTALLING THE BATTERY

- Before removing the battery, disconnect the earth cable (-).
  If a tool touches the positive terminal and the frame of the machine at the same time, sparks may be generated.
- When installing the battery, connect the earth cable (-) last.
- Install the battery correctly. During this operation, take care to prevent the clamps from touching the terminals.
- When changing the battery, secure it with the clamp (1) and tighten the fastening screw (2) with the required torque.
- Make sure that the cover is correctly positioned. If the cover is damaged, change it immediately.
- If the battery terminals are oxidized, clean them carefully using a metal brush.

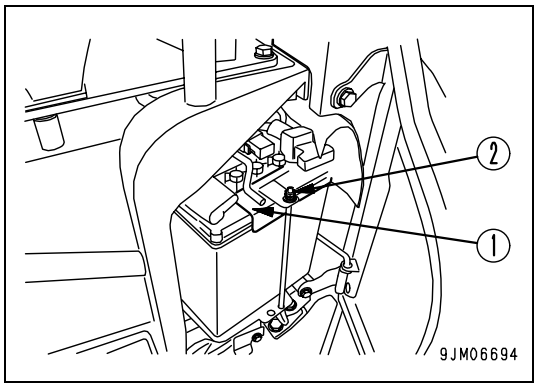

3.7.5.2 CHARGING THE BATTERY

When charging the battery, always follow the instructions given in paragraph "3.7.5 IF THE BATTERY IS DOWN" and in the user's manual of the battery charger, and proceed as indicated below.

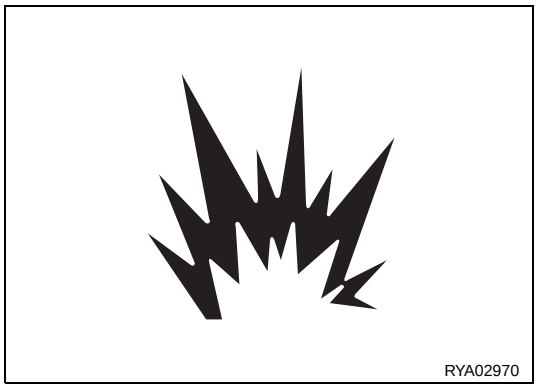

- During recharge the battery produces hydrogen, which is flammable and may explode, therefore for this operation it is necessary to remove the battery from the machine, position it in a well ventilated place and remove the caps before proceeding.
- Immediately change any damaged caps.
- Set the voltage of the battery charger so that it corresponds to the voltage of the battery to be charged. If the voltage is not set correctly, the battery charger may overheat and cause an explosion.
- Connect the positive clamp (+) of the battery charger to the positive terminal (+) of the battery, then connect the negative clamp (-) of the battery charger to the negative terminal (-) of the battery.
- Set the recharge current to 1/10 of the rated capacity of the battery; when carrying out a quick recharge, set it to a lower value than the rated capacity of the battery.
  If the recharge current is too high, there may be an electrolyte leakage or the electrolyte may dry up and the battery may consequently catch fire and explode.
- If the battery electrolyte is frozen, do not charge the battery or start the engine with a different power source. The battery may catch fire and explode.
- Do not use or charge the battery if the electrolyte level is below the MIN. reference mark, since this may cause an explosion. Check the electrolyte level periodically and top up with distilled water until reaching the MAX. reference mark.

https://truckmanualshub.com/

3.7.5.3 STARTING WITH BOOSTER CABLES

When starting the engine with booster cables, proceed as indicated below.

CONNECTING AND DISCONNECTING THE BOOSTER CABLES

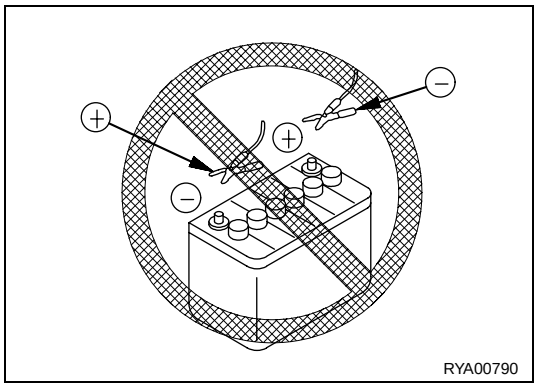

WARNING

- **When connecting the cables, avoid any contact between the positive cable (+) and the negative cable (–).**
- **When starting the engine with booster cables, always wear safety goggles.**
- **Take care to avoid any contact between the machine to be started and the machine used as starting aid, in order to avoid sparks and therefore the explosion of the hydrogen produced by the batteries. The explosion of hydrogen causes serious damage and injury.**
- **Take care not to make any mistake when connecting the booster cables. In the last connection (to the turret frame) a spark is generated, therefore it is advisable to connect the cable as far from the battery as possible. (In any case, avoid the attachments, since they are poor conductors).**
- **When removing the booster cables, take care to avoid any contact of the clamps with each other or with the machine frame.**

IMPORTANT

- **The booster cables and the clamps must be sized according to the dimensions of the battery.**
- **The battery to be used to start the engine must have greater capacity or at least the same capacity as the battery of the machine to be started.**
- **Make sure that cables and clamps are neither corroded, nor damaged.**
- **Make sure that cables and clamps are secured firmly.**
- **Make sure that the safety levers of both machines are in the “locked” position.**
- **Make sure that all the levers are in neutral.**

CONNECTING THE BOOSTER CABLES

1. Make sure that the ignition key of both machines is in position OFF.
2. Connect one clamp of booster cable (A) to the positive (+) terminal of the machine to be started.
3. Connect the other clamp of booster cable (A) to the positive (+) terminal of the machine to be used as starting aid.
4. Connect one clamp of booster cable (B) to the negative (-) terminal of the machine to be used as starting aid.
5. Connect the other clamp of booster cable (B) to the engine block of the machine to be started.

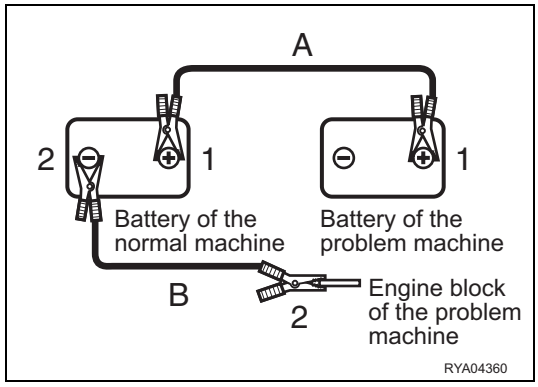

https://truckmanualshub.com/

STARTING THE ENGINE

CAUTION

- **Make sure that the safety levers of both machines are in the “locked” position. Also make sure that all the control levers are in NEUTRAL.**

1. Make sure that the clamps hold the battery terminals firmly.
2. Start the engine of the machine used as starting aid and run it at high rpm.
3. Start the engine of the machine to be started (see "3.3.2 STARTING THE ENGINE").

REMOVING THE BOOSTER CABLES

When the engine has started, remove the cables in the reverse order with respect to their connection.

1. Remove the clamp of booster cable (B) from the engine block of the machine to be started.
2. Remove the other clamp of booster cable (B) from the negative (-) terminal of the machine used as starting aid.
3. Remove the clamp of booster cable (A) from the positive (+) terminal of the machine used as starting aid.
4. Remove the other clamp of booster cable (A) from the positive (+) terminal of the machine to be started.

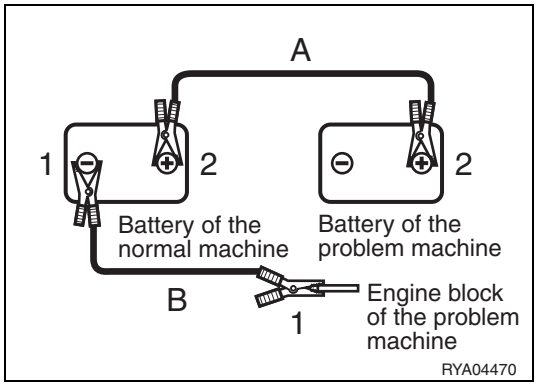

https://truckmanualshub.com/

3.7.6 OTHER TROUBLES

- Always contact your Komatsu Dealer when you have to carry out this operation.
- If the anomaly or its cause is not included in the table below, contact your Komatsu Dealer for the necessary repair.

3.7.6.1 ELECTRICAL CIRCUIT

TROUBLE	CAUSE	SOLUTION
Lights do not work satisfactorily even with engine running at high speed.	(•) Faulty cables (•) Faulty fan belt tension.	(•) Check and repair any loose terminals and connections. • Adjust fan belt tension. For details, see “EVERY 500 HOURS OF OPERATION”
Lights come on intermittently with engine running.	(•) Blown fuse	• Change.
Battery charge warning light does not go out even with engine running.	• Faulty alternator. • Faulty cables.	(•) Change. (•) Check and repair.
Alternator emits abnormal noise.	• Faulty alternator.	(•) Change.
Starter does not turn with ignition switch in position ON.	• Faulty cables. • Battery charge insufficient. • Faulty fuse.	(•) Check and repair. • Charge battery. • Change.
Starter pinion engages and disengages repeatedly.	• Battery charge insufficient.	• Charge battery.
Starter makes engine run slowly.	• Battery charge insufficient. • Faulty starter.	• Charge battery. (•) Change.
Starter disengages before engine start.	• Faulty cables. • Battery charge insufficient.	(•) Check and repair. • Charge battery.
Preheating warning light does not come on.	• Faulty cables. • Faulty bulb.	(•) Check and repair. (•) Change.
Engine oil pressure warning light does not come on when engine stops (ignition key in position ON).	• Faulty bulb. • Faulty oil pressure switch.	(•) Change. (•) Change.

https://truckmanualshub.com/

3.7.6.2 FRAME

TROUBLE	CAUSE	SOLUTION
Travel speed, swing, boom, arm, bucket slow.	• No hydraulic oil.	• Restore level. See "CHECKS TO BE CARRIED OUT BEFORE STARTING THE ENGINE".
Pump does not work correctly.	• Foreign body in the hydraulic tank filter.	• Clean. See "Every 2000 hours OF OPERATION".
Hydraulic oil temperature increases excessively.	• No hydraulic oil. • • Fan belt slack. • Radiator or exchanger fins clogged.	• Restore level. See"CHECKS TO BE CARRIED OUT BEFORE STARTING THE ENGINE". • Adjust fan belt tension. See "EVERY 500 HOURS OF OPERATION". • Clean or repair. See “EVERY 500 HOURS OF OPERATION”.
Tracks come off.	• Slack tracks.	• Adjust track tension. See “WHEN REQUIRED”.
Sprocket excessively worn.		

3.7.6.3 ENGINE

TROUBLE	CAUSE	SOLUTION
Engine oil pressure warning light comes on.	• Oil level in oil pan too low (air sucked in). • Oil filter clogged. • Oil leakage due to damage or incorrect tightening of oil pipes or joints. • Engine oil pressure sensor faulty.	• Restore level. See "CHECKS TO BE CARRIED OUT BEFORE STARTING THE ENGINE". • Replace cartridge. See "Every 500 hours OF OPERATION". (•) Check and repair. (•) Change.
Steam comes out of radiator top (pressure valve).	• Fluid level low, fluid leakages. • Fan belt slack. • Mud or limestone accumulated in cooling system. • Radiator fins damaged or closed.	• Add fluid, repair. See "CHECKS TO BE CARRIED OUT BEFORE STARTING THE ENGINE". • Adjust fan belt tension. See "EVERY 500 HOURS OF OPERATION". • Change fluid and clean cooling system. See "WHEN REQUIRED" • Clean or repair. See "EVERY 500 HOURS OF OPERATION".
Engine coolant temperature warning light comes on.	• Faulty thermostat. • Radiator cap loose (work at considerable heights). • Fluid level sensor faulty.	(•) Change. • Tighten cap or change unit. (•) Change.

https://truckmanualshub.com/

TROUBLE	CAUSE	SOLUTION
Engine does not start with starter running.	• No fuel. • Air in fuel system. • Water in fuel system. • Pump or fuel injection nozzle faulty. • Starter makes engine run slowly. • Preheating warning light does not come on. • Faulty compression. • Excessive valve clearance.	• Restore level. See"CHECKS TO BE CARRIED OUT BEFORE STARTING THE ENGINE". • Repair point where air is sucked in. See "EVERY 500 HOURS OF OPERATION". • Drain water from fuel system. See "WHEN REQUIRED" and "CHECKS TO BE CARRIED OUT BEFORE STARTING THE EINGINE". (•) Change pump or nozzle. • See "ELECTRICAL SYSTEM". • See "ELECTRICAL SYSTEM". (•) Adjust valve clearance.
Exhaust gases white or light blue.	• Too much oil in oil pan. • Unsuitable fuel.	• Restore level. See "CHECKS TO BE CARRIED OUT BEFORE STARTING THE ENGINE". • Change with fuel in compliance with standards.
Exhaust gases occasionally tend to be black.	• Air filter clogged. • Faulty nozzle. • Faulty compression.	• Clean or repair. See "WHEN REQUIRED" (•) Change. (•) See above: faulty compression.
Combustion noise occasionally resembles a blow.	• Faulty nozzle.	(•) Change.
Abnormal noises (during combustion or in mechanical parts).	• Fuel with low cetane rating. • Overheating. • Inside of exhaust silencer damaged. • Excessive valve clearance.	• Change with fuel in compliance with standards. • See above: Engine coolant temperature indicator reaches red overheating range. • Change. (•) Adjust valve clearance.

https://truckmanualshub.com/

THIS PAGE WAS INTENTIONALLY LEFT EMPTY

https://truckmanualshub.com/

MAINTENANCE

https://truckmanualshub.com/

4.1 GUIDE TO MAINTENANCE

⚠ WARNING

- **Oils, filters, coolant, gaskets, electric cables, and batteries are considered special waste and must be collected and disposed of according to the anti-pollution regulations in force.**
- **The combustible material of some components may become extremely dangerous if it burns. For this reason, avoid any contact of burnt material with your skin or eyes and do not inhale its fumes.**

- Do not carry out any inspection or maintenance operation not prescribed in this manual.
- Check the hour meter every day to verify if it is necessary to carry out any maintenance operation.
- Before opening the engine hood, engage all the safety locks and stop the engine.
- If it is necessary to check the hydraulic oil level, retract the bucket and arm cylinders completely and lower the bucket teeth to the ground.
- Carry out these operations on firm and level ground.
- Use Komatsu genuine oils and greases; choose oils suitable for the ambient temperature.
- Use clean oils and greases. Keep the oil and grease containers clean and prevent any foreign matter from getting into them.
- Keep the machine thoroughly clean; this facilitates troubleshooting. In particular, grease nozzles, breather holes, and the areas where fluid levels are checked should be kept clean to prevent the infiltration of impurities.
- Draining water or oil, and changing filters soon after work is dangerous; wait for the engine to cool down to a safe temperature of 40÷45°C.
  If it is necessary to drain the oil when it is cold, warm it up to a suitable temperature (approximately 20÷40°C) before draining it.
- When changing oils or filters, check if metal particles are present. If there are large quantities of metal particles, contact your Komatsu Dealer.
- If the machine is provided with a fuel filter in the filler neck, do not remove it while refuelling.
- Check and change the oil in a clean place and prevent any impurity from getting into the tank.
- Before carrying out any maintenance operation, hang a warning plate to the ignition switch and the control levers to prevent anyone from starting the engine.
- When performing maintenance operations, always take the precautions indicated in the safety plates applied to the machine.
- Instructions for arc welding:
  1 - Turn the ignition key to position OFF.
  2 - Disconnect the battery (first the negative pole and then the positive pole).
  3 - Disconnect the alternator.
  4 - Do not apply more than 200V continuously.
  5 - Connect the earth cable within 1 m from the point where the welding operation must be carried out.
  6 - Avoid placing gaskets and bearings between the welding area and the earth cable. If the earth cable is connected near instruments, connectors, etc., these may not function correctly.
  7 - Do not use the area around the work equipment pins or the hydraulic cylinders as earth.
- Do not use flammable fluids to clean any parts of the machine.
- Keep naked flames away from these fluids and avoid smoking. When O rings and gaskets are removed, clean the sealing surfaces thoroughly and replace the O rings and gaskets with new ones.
  Fit the O rings and gaskets correctly when reassembling.

https://truckmanualshub.com/

- Avoid keeping loose objects or tools in your pockets: they may fall out and drop into the machine, especially when you open covers and work on the machine while bending over it.
- When working on rocky areas, make sure that the undercarriage is not damaged and that there are no breakages, damages, worn parts, or loose or damaged nuts or bolts.
- When washing the machine, do not direct the high-pressure water jet onto the radiator.
- When washing the machine, protect the electric system connectors and avoid wetting the ignition switch.
- The fuel tank is made of plastic, therefore avoid using trichloroethylene to clean it. Trichloroethylene reduces the resistance and duration of the tank.
- Before starting work on muddy ground, under rain or snow, on seashores or river banks,, check the tightening of valves and caps. Wash the machine immediately after work, in order to prevent its components from rusting Make sure that there are no damages, missing or loose nuts or pins.
  Lubricate the components more frequently than usual. Lubricate the pins of the work equipment carefully every day, if during work they are immersed in water.
- When the work site is particularly dusty, proceed as follows:
  1 - Check the air filter for clogging and clean it more frequently than usual.
  2 - Clean the radiator frequently in order to prevent the fins from clogging.
  3 - Change the diesel oil filter more frequently than usual.
  4 - Clean the electrical components, especially the starter and the alternator, to avoid any accumulation of dust.
- Do not mix oils of different brands. Do not top up with oils different from those being used. If you cannot use the same oil, drain the tank and change the oil completely.

https://truckmanualshub.com/

4.2 MAINTENANCE NOTES

- Use only Komatsu genuine spare parts.
- Do not mix different types of oil.
- Unless specified otherwise, the oils and the coolant used by Komatsu to fill the tanks before the delivery of the machine are the following:

ITEM / TANK / SYSTEM	SPECIFICATIONS
• Engine oil	SAE 10W-30 Specifications: API CF - CF2 - CD
• Hydraulic system oil	SAE 10W Specifications: API CD
• Biodegradable hydraulic system oil ((Only for machines in which synthetic biodegradable oil type HEES not of plant origin is used)	SHELL NATURELLE HFX-32
• Travel reduction gears oil	SAE 30 Specifications: API CD
• Fuel	With ambient temperature over -10° C, use: Diesel oil ASTM D975 N°2
	With ambient temperature below -10°C, use: Diesel oil ASTM D975 N°1
• Radiator	Special permanent antifreeze, biodegradable, ethylene glycol based with corrosion inhibitor and with no silicates, borates, nitrates, phosphates and amines. Red antifreeze suitable for aluminium radiators, diluted with water (50%) to ensure protection down to -36°C.

4.2.1 OIL, FUEL AND COOLANT

4.2.1.1 OIL

- The oil used for the engine and the work equipment is subjected to demanding conditions (high temperature, high pressure) and deteriorates with use. Always use oil suitable for the characteristics and temperatures indicated in the use and maintenance manual. Change the oil after the prescribed interval, even if it is not dirty.
- The engine oil must be selected very carefully, since it lubricates the engine, which is the machine’s heart; the main maintenance operations required for the engine oil are the following:
  1. daily check of the oil level;
  2. check of the degree of pollution of the oil;
  3. periodical change.
- When changing the oil, change also the filters.
- It is advisable to have the oil periodically analysed in order to check the conditions of the machine. The analysis must be carried out by specialized personnel at Komatsu Dealers.

https://truckmanualshub.com/

4.2.1.2 FUEL

- Always use fuel suitable for the engine. Other fuels with different specifications may damage the engine or reduce its power.
- Always refuel at the end of the workday.
- When refuelling, make sure that there is no water on the fuel drum cover and take care not to draw condensate from the drum bottom.
- If fuel runs out, or if the fuel filter has been replaced, it is necessary to bleed the circuit.

4.2.1.3 COOLANT

- The coolant serves to keep the engine at the correct temperature and therefore to ensure optimal operating conditions; check the coolant level in the expansion tank daily and top up when necessary.
- The coolant containing antifreeze is flammable; do not use naked flames near the coolant and do not smoke while topping up.
- Use only red permanent ethylene glycol based antifreeze, with corrosion inhibitors and antifoam products, suitable for aluminium radiators. If pure, dilute with water (50%).
- The use of permanent antifreeze requires only the check of the level and the periodical change of the fluid. It is not necessary to wash the cooling circuit.
- Use drinkable water and in any case soft water.
- Do not use corrosion inhibitors containing soluble oil, since they damage the rubber couplings.
- In case of doubt regarding the applicable standards for the use of coolant, contact your Komatsu Dealer, who will supply you with exhaustive and precise information.

https://truckmanualshub.com/

4.2.1.4 KOWA (KOMATSU OIL WEAR ANALYSIS)

This system requires that oil samples be periodically collected and analysed. This is a preventive maintenance service, which makes it possible to identify faulty parts or worn machine components timely. It also allows many failures to be prevented and machine downtime to be reduced.

Many years of experience and the availability of countless data and information allow Komatsu to accurately determine the conditions of the machine. This also allows us to locate troubles and suggest the most suitable and fast repair solutions.

The customer immediately receives a report containing the results of the analysis and suggestions for the operations to be carried out. This low-cost service is very useful and allows customers to save money and avoid many problems.

KOWA ANALYSIS STAGES

- Analysis of metal particles
  In this stage a ICP (Inductively Coupled Plasma) analyser is used to measure the density of the metal particles present in the oil.

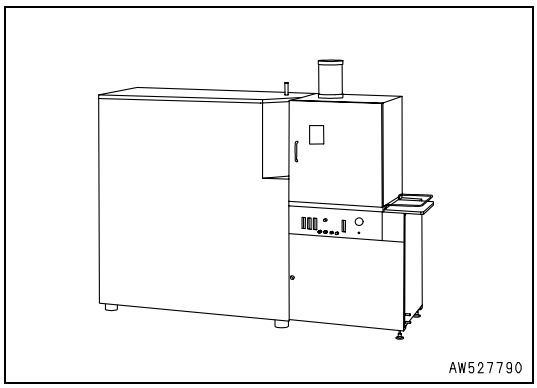

- Measurement of particle quantity
  In this stage a PQI (Particle Quantifier Index) machine is used to measure the quantity of large iron particles present in the oil.

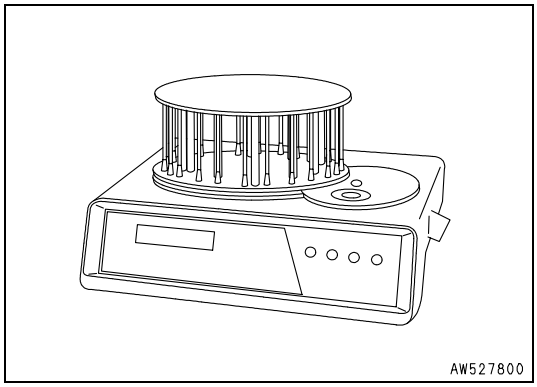

- Other analyses and measurements
  In this stage other aspects, such as the percentage of water or fuel in the oil and the dynamic viscosity, are analysed.

OIL SAMPLING

- Collection interval
  Every 500 hours: engine and other components
- Precautions to be taken when sampling the oil
  - Make sure that the oil is well mixed before sampling.
  - Carry out sampling regularly, at fixed intervals.
  - Do not carry out sampling on rainy or windy days, when water or dust can get into the oil.

For further details on KOWA, please contact your Komatsu Dealer.

https://truckmanualshub.com/

4.2.1.5 STORING OIL AND FUEL

- Keep oil and fuel indoors to prevent any water, dirt, or other impurities from getting into them.
- When storing drums for a long period, position them on one side, so that the opening is lateral. This prevents moisture from being sucked in through the drum filling opening.
  If drums have to be stored outside, cover them with a waterproof sheet or take other measures to protect them.
- To prevent any change in quality during long-term storage, be sure to use the fluids following the first in - first out (use the oldest oil or fuel first) method.

4.2.1.6 FILTERS

- Filters are very important components for safety. They prevent any impurities from getting into the oil, fuel, or in the air circuits, thus avoiding problems to important components of the machine.
  Periodically change all the filters. For further information, see the relevant Use and Maintenance manual.
  However, when working in extreme conditions, it is necessary to change the filters more frequently, depending on the type of oil and fuel used (sulphur content).
- Do not attempt to clean the filters (type with cartridge) and reuse them. Always change them with new filters.
- When changing the oil filters, check if metal particles are present. If you find large quantities of metal particles, contact your Komatsu Dealer.
- Do not open the spare filter packages before using them.
- Always use Komatsu original spare parts.

https://truckmanualshub.com/

4.2.2 NOTES ON THE MAINTENANCE OF THE ELECTRICAL SYSTEM

- If the cables are wet or their insulating material is damaged, the electrical system leaks and this may result in malfunctions of the machine.
- The maintenance operations required for the electrical system are the following:
  1 - Check of the alternator belt tension.
  2 - Check of the alternator belt for damage or breakages.
  3 - Check of the battery charge level.
- Do not remove or eliminate any electric component installed on the machine and do not install any electric component with characteristics different from those specified and approved by Komatsu.
- Keep the electric system dry.
- When working on the seashore or on river or lake banks, protect the jack plugs from corrosion.
- Do not connect any optional device to the fuses, ignition switch, battery, relays, etc.; for the installation of any optional equipment, contact your Komatsu Dealer.
- If any electric welding operation has to be carried out, disconnect the battery and the alternator.

4.2.3 NOTES ON THE MAINTENANCE OF THE HYDRAULIC SYSTEM

- Be extremely careful when performing maintenance operations on the hydraulic system, since soon after work the oil is very hot. The circuit is pressurized not only during work, but also at the end of work.
- The maintenance operations required for the hydraulic system are the following:
  1 - Daily check of the oil level in the tank.
  2 - Periodical change of the oil filter.
  3 - Periodical change of the oil and cleaning of the intake filter.
- Always bleed the circuit after changing the oil filter or the oil.
- When a component is removed from the circuit, check the gaskets and O rings and change them if they are damaged.
- When a cylinder or a component of the hydraulic circuit is removed, after reassembly bleed the circuit by proceeding as follows:
  1 - Start the engine and let it idle.
  2 - Extend all the cylinders 4-5 times, stopping them at approx. 100 mm from the end of stroke.
  3 - Slowly make all the cylinders reach the end of stroke for 3-4 times.

4.2.4 MAINTENANCE NOTES REGARDING LUBRICATION

- Lubrication makes the operations carried out with the machine and work equipment smoother, while preventing wear and the noise that may be produced if the joints are dry.
  Lubricate with grease or oil.
- The maintenance operations required for the components that need lubricating are the following:
  1 - Check of the levels.
  2 - Oil change.
  3 - Injection of grease through the grease nipples.
- Use only the specified lubricants, according to the ambient temperature.
- Always clean the grease nipples before injecting grease and remove any excess grease after lubrication; this cleaning operation must be performed with extreme care on the revolving parts.
- Maintain correct lubricant levels, avoiding excessive or insufficient quantities.

https://truckmanualshub.com/

4.3 PARTS SUBJECT TO WEAR

The parts subject to wear like filters, bucket teeth, etc. must be changed when periodical maintenance is carried out or when they reach the wear limits.
The timely change of these parts ensures an economic use of the machine.
Use only Komatsu genuine parts, which alone can guarantee excellent quality and interchangeability.

Due to our constant efforts aimed at improving product quality, the spare parts codes may be changed, therefore when ordering spare parts it is advisable to indicate also the machine serial number to the Komatsu Dealer, in order to receive the most updated version of the component required.

4.3.1 LIST OF THE PARTS SUBJECT TO WEAR

The parts between parenthesis must be replaced at the same time.

Part	Code	Description	Qty	Change interval
Engine oil filter	KT1G386-3209-0	Cartridge	1	EVERY 500 HOURS OF OPERATION
Fuel filter	KT16271-4356-0 (KT16271-4357-0)	Filtering element (O ring)	1 (1)	EVERY 500 HOURS OF OPERATION
Water separator	KT16271-5128-0 (KT16271-4357-0)	Filtering element (O ring)	1 (1)	—
Hydraulic filter	22L-60-22120	Filtering element	1	EVERY 1000 HOURS OF OPERATION
Air filter	KT1G347-1118-0 (KT1G347-1175-0)	Filtering element (O ring)	1 (1)	WHEN REQUIRED
Bucket	825011090 801015574 801920106	Tooth Screw Nut	OR OR OR	— — —

https://truckmanualshub.com/

4.4 FUEL, COOLANT AND LUBRICANTS

ITEM / TANK / SYSTEM	FLUID	AMBIENT TEMPERATURE -30 -20 -10 0 10 20 30 40 50°C -22 -4 14 32 50 68 86 104 122°F	CAPACITY (l)	
			1st filling	Change
Engine oil pan	OIL API CD	SAE 30 SAE 10W SAE 10W-30 SAE 15W-40	3,6	3,3
Travel reduction gears		SAE 30	0,3	0,3
Hydraulic system		SAE 10W SAE 10W-30 SAE 15W-40	23,8	15,2
Hydraulic system with biodegradable oil	• See par. “4.4.1”		23,8	15,2
Fuel tank	DIESEL OIL	★✗ ASTM D975 N. 2	19	—
Engine cooling system	PERMANENT COOLANT (★★)		3,1	—
Greasing	GREASE	Lithium EP+MoS2 (NLGI 2)		

★ **ASTM D975 N. 1**

★★ **Special permanent antifreeze, biodegradable, ethylene glycol based with corrosion inhibitor and with no silicates, borates, nitrates, phosphates and amines.**
Red antifreeze suitable for aluminium radiators, diluted with water (50%) to ensure protection down to -36°C.

https://truckmanualshub.com/

IMPORTANT

- **When the diesel sulphur content is less than 0,5%, change the engine oil according to the periodic maintenance intervals indicated in the operation and maintenance manual. If the sulphur content exceeds 0.5%, change the engine oil according to the following table:**

Sulphur content	Engine oil change interval
from 0.5 to 1.0%	1/2 of regular interval
over 1.0%	1/4 of regular interval

- It is advisable to use only engine oil with API CF - CF2 - CD classification in order to ensure the correct operation and constant reliability of the engine.
- Use Komatsu genuine products whose characteristics have been specifically formulated and approved for use in the engine, in the work equipment hydraulic circuit, and in the reduction gears.

First filling quantity: total quantity of oil, including the oil for the components and pipes.

Oil change quantity: quantity of oil necessary to fill the system or unit during the normal inspection and maintenance operations.

ASTM: American Society of Testing and Materials
SAE: Society of Automotive Engineers
API: American Petroleum Institute
UTTO: Universal Tractor Transmission Oil
NLGI: National Lubricant Grease Institute

https://truckmanualshub.com/

4.4.1 APPROVED SYNTHETIC BIODEGRADABLE LUBRICANTS TYPE HEES

Our machines can be filled with synthetic biodegradable hydraulic oil type HEES not of plant origin and therefore the use of the oils indicated in the following table is authorized and recommended:

SUPPLIER	SYNTHETIC BIODEGRADABLE OIL TYPE “HEES”
KOMATSU	BO 46 G4 (KES 07.872)
AGIP	—
ARAL	—
AVIA	—
BP	—
CONDAT	CONDAT D 46 K
ELF	—
ESSO	—
FINA	BIOHYDRAN SE 46
FUCHS	—
KENDALL	—
KUWAIT PETROLEUM K8	—
MOBIL	EAL SYNDRAULIC
MOBIL (USA)	—
PAKELO	—
PANOLIN	HLP SYNTH 46
SHELL	NATURELLE HFX-32
TAMOIL	—
TEXACO	—
TOTAL	HYDROBIO 46
VALVOLINE	—

⚠ CAUTION

- **It is not possible to mix the synthetic biodegradable oil type HEES with ordinary hydraulic oils, since when the temperature increases insoluble compounds are generated, which deposit on the filters and clog them (the maximum concentration of ordinary oil must not exceed 1% of the total quantity of oil).**
- **Biodegradable oil can be used only in the hydraulic system; it cannot be used for the engine, the transmissions, the braking system, etc.**
- **Before introducing biodegradable oil in the hydraulic system, drain the system completely, disconnecting the cylinders and all the parts that may contain traditional oil, then change the drain filter with a new one.**
  Start the engine and let it idle before using the equipment, wait for the engine temperature to reach at least 40°C, then start moving the equipment to fill all the circuits with oil. Stop the engine and check the oil level (see "3.3.1.2 CHECKS TO BE CARRIED OUT BEFORE STARTING THE ENGINE" - " CHECKING THE OIL LEVEL IN THE HYDRAULIC TANK AND TOPPING UP").

https://truckmanualshub.com/

4.5 TIGHTENING TORQUES

4.5.1 STANDARD TIGHTENING TORQUES FOR SCREWS AND NUTS

⚠ CAUTION

- **If screws, nuts or other parts are not tightened with the required torque, they may become loose or damage the components with which they cooperate, and this may cause machine failures or operation problems. Always pay the utmost attention when carrying out tightening operations.**

If not specified otherwise, tighten the screws and nuts applying the torques specified in the table.
If it is necessary to replace a screw or a nut, always use Komatsu original spare parts having the same size of the part to be replaced.

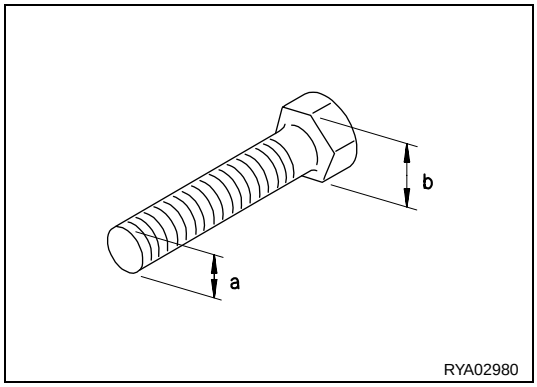

★ Nm (Newton metre): 1 Nm = 0.102 kgm

Thread diameter (a) (mm)	Pitch (mm)	Wrench size (b) (mm)	8.8		10.9	
			kgm	Nm	kgm	Nm
6	1	10	0,96 ± 0,1	9,5 ± 1	1,3 ± 0,15	13,5 ± 1,5
8	1,25	13	2,3 ± 0,2	23 ± 2	3,2 ± 0,3	32,2 ± 3,5
10	1,5	17	4,6 ± 0,5	45 ± 4,9	6,5 ± 0,6	63 ± 6,5
12	1,75	19	7,8 ± 0,8	77 ± 8	11 ± 1	108 ± 11
14	2	22	12,5 ± 1	122 ± 13	17,5 ± 2	172 ± 18
16	2	24	19,5 ± 2	191 ± 21	27 ± 3	268 ± 29
18	2,5	27	27 ± 3	262 ± 28	37 ± 4	366 ± 36
20	2,5	30	38 ± 4	372 ± 40	53 ± 6	524 ± 57
22	2,5	32	52 ± 6	511 ± 57	73 ± 8	719 ± 80
24	3	36	66 ± 7	644 ± 70	92 ± 10	905 ± 98
27	3	41	96 ± 10	945 ± 100	135 ± 15	1329 ± 140
30	3,5	46	131 ± 14	1287 ± 140	184 ± 20	1810 ± 190
33	3,5	50	177 ± 20	1740 ± 200	250 ± 27	2455 ± 270
36	4	55	230 ± 25	2250 ± 250	320 ± 35	3150 ± 350
39	4	60	295 ± 33	2900 ± 330	410 ± 45	4050 ± 450

IMPORTANT

- **This tightening torque table is not valid for screws or nuts that must fasten parts made of nylon or similar materials onto washers or components made of nylon or nonferrous metals or requiring specific tightening torques.**

https://truckmanualshub.com/

4.5.2 STANDARD TIGHTENING TORQUES FOR HOSES WITH ORFS

If not specified otherwise, tighten the nuts of the hoses applying the torque specified in the table.
If it is necessary to replace a hose, always use Komatsu original spare parts having the same size of the part to be replaced.

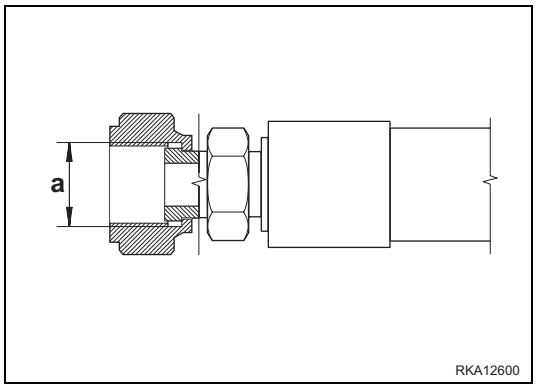

★ Nm (Newton metre): 1 Nm = 0.102 kgm

Thread diameter (a)	Wrench size (mm)	TIGHTENING TORQUE	
		kgm	Nm
9/16” - 18	17	2,3 - 2,5	23 - 25
11/16” - 16	22	3,4 - 3,9	33 - 38
13/16” - 16	24	5,2 - 5,8	51 - 57
1” - 14	30	8,2 - 9,2	80 - 90
1.3/16” - 12	36	12,2 - 13,3	120 - 130
1.7/16” - 12	41	15,3 - 17,3	150 - 170
1.11/16” - 12	50	18,4 - 20,4	180 - 200
2” - 12	57	20,4 - 24,4	200 - 240

https://truckmanualshub.com/

4.6 LUBRICATION

4.6.1 LUBRICATION DIAGRAM

IMPORTANT

- **For details on how to lubricate specific parts, see "4.8 MAINTENANCE PLAN".**
- **The type of lubricant to be used is indicated in the lubricant table (see "4.4 FUEL, COOLANT AND LUBRICANTS").**

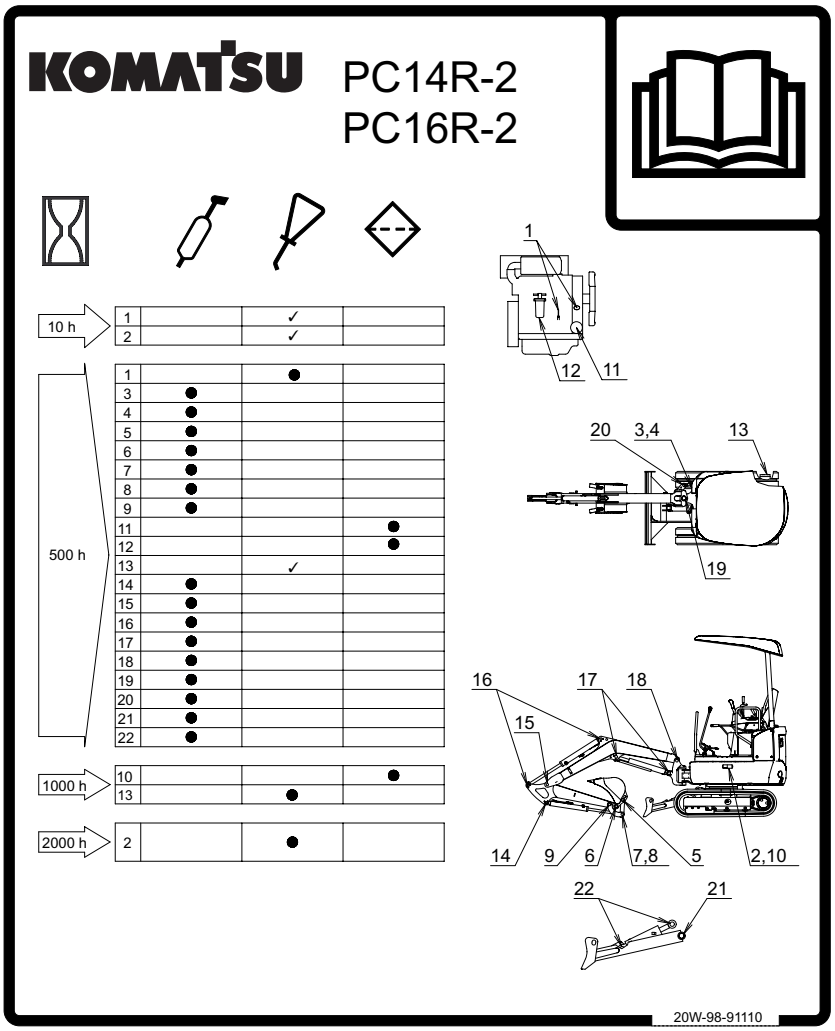

RKA16330

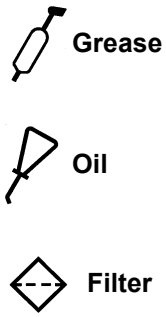

BALL-BEARING RING GREASING POINT

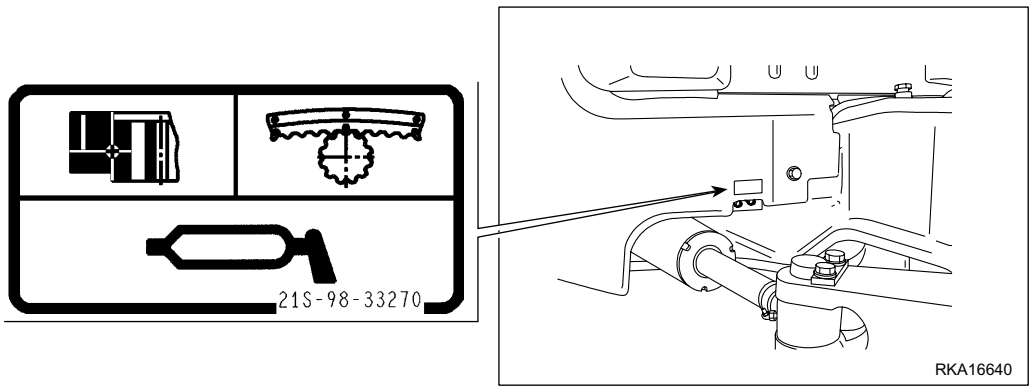

https://truckmanualshub.com/

4.7 PERIODICAL CHANGE OF SAFETY-RELATED COMPONENTS

To ensure safety at any moment while driving and using the machine, the operator must carry out all the routine maintenance operations prescribed. Furthermore, the operator must periodically change the components indicated in the table in the following page, which are especially related to safety and fire-prevention rules. These components are subject to wear and since it is particularly difficult to evaluate their conditions through simple routine maintenance, after a certain time interval it is advisable to change them independently of their state, in order to keep them efficient over time. Repair or replace these components immediately in case of failures or anomalies, even if the time interval prescribed for their change has not elapsed yet.

If the pipe clamps show signs of deterioration, like deformations or cracks, provide for changing them together with the pipes.

In addition to the periodical change of the components listed in the following page, the inspections described below are to be carried out on the hydraulic pipes. If any anomaly is observed,

For the quantities and codes of the safety-related components to be changed, see the spare parts catalogue. When changing pipes, always change O rings, gaskets and analogous components.

Type of check	Items to be checked
Before starting the engine	Leakages from joints, hydraulic pipes or fuel pipes.
Periodically (monthly)	Leakages from joints, hydraulic pipes or fuel pipes. Damaged hydraulic or fuel pipes (cracks, wear and tear).
Periodically (yearly)	Leakages from joints, hydraulic pipes or fuel pipes. Deteriorated, twisted, damaged hydraulic or fuel pipes (cracks, wear and tear) or pipes in contact with other parts of the machine.

https://truckmanualshub.com/

4.7.1 SAFETY-RELATED PARTS

No.	Safety-related components that periodically need changing	Q.ty	Change interval
1	Fuel pipe (fuel tank - water separator)	1	Every 2 years or 4000 hours, whichever occurs first.
2	Fuel pipe (water separator – fuel pump)	1	
3	Fuel pipe (fuel pump - fuel filter)	1	
4	Fuel pipe (fuel filter - injection pump)	1	
5	Fuel pipe (fuel filter – fuel tank)	1	
6	Fuel return pipe (fuel filter - injection pump)	1	
7	Fuel return pipe (between the nozzles)	2	
8	Fuel return pipe (nozzles – injection pump)	1	
9	Fuel return cap	1	
10	Hydraulic pipe (main pump suction)	2	
11	Hydraulic pipe (main pump delivery)	4	
12	Hydraulic pipe (boom cylinder)	4	
13	Hydraulic pipe (boom cylinder)	4	
14	Hydraulic pipe (bucket cylinder)	4	
15	Hydraulic pipe (swing cylinder)	2	
16	Seat belts	1	Every 3 years

https://truckmanualshub.com/

4.8 MAINTENANCE PLAN

If the machine is equipped with hydraulic breaker, the maintenance schedule for some components will be different. For further details, see "4.8.2 MAINTENANCE INTERVALS IN CASE OF USE OF THE HYDRAULIC BREAKER".

4.8.1 MAINTENANCE PLAN

WHEN REQUIRED

a. CHECKING, CLEANING OR CHANGING THE AIR FILTER CARTRIDGE 172
b. CHECKING THE BATTERY CHARGE LEVEL 174
c. CLEANING THE WATER SEPARATOR FILTER 175
d. DRAINING THE FUEL TANK 176
e. CHECKING AND ADJUSTING THE STEEL TRACK TENSION 176
f. CHECKING THE RUBBER TRACKS 178
g. CHECKING AND ADJUSTING THE RUBBER TRACK TENSION 180
h. CHANGING THE RUBBER TRACKS 182
i. BLEEDING THE HYDRAULIC SYSTEM 185

CHECKS TO BE CARRIED OUT BEFORE STARTING THE ENGINE

..... 186

MAINTENANCE AFTER THE FIRST 50 HOURS OF OPERATION (Only for machines in which synthetic biodegradable oil type HEES is used)

a. CHANGING THE HYDRAULIC OIL FILTER 194

MAINTENANCE AFTER THE FIRST 500 HOURS OF OPERATION (Only for machines in which synthetic biodegradable oil type HEES is used)

(Operations to be carried out together with those prescribed in paragraph "4.9 MAINTENANCE PROCEDURES")

a. CHANGING THE OIL IN THE HYDRAULIC TANK AND CLEANING THE FILTER 197

MAINTENANCE EVERY 500 HOURS OF OPERATION

a. LUBRICATION 187
b. CHANGING THE ENGINE OIL AND THE ENGINE OIL FILTER CARTRIDGE 189
c. CHANGING THE FUEL FILTER CARTRIDGE 190
d. CHECKING THE OIL LEVEL IN THE FINAL REDUCTION GEARS 191
e. CHECKING AND CLEANING THE FINS OF THE RADIATOR AND OF THE EXCHANGER 191
f. CHECKING AND ADJUSTING THE FAN BELT TENSION 192
g. DRAINING THE HYDRAULIC OIL TANK (Only for machines in which synthetic biodegradable oil type HEES is used) 193

MAINTENANCE EVERY 1000 HOURS OF OPERATION

a. CHANGING THE HYDRAULIC OIL FILTER 194
b. CHANGING THE OIL IN THE FINAL REDUCTION GEARS 196
c. CHECKING AND ADJUSTING THE ENGINE VALVE CLEARANCE 196

MAINTENANCE EVERY 2000 HOURS OF OPERATION

a. CHANGING THE OIL IN THE HYDRAULIC TANK AND CLEANING THE FILTER 197
b. CHANGING THE COOLANT 199
c. CHECKING THE ALTERNATOR AND THE STARTER 200

https://truckmanualshub.com/

4.8.2 MAINTENANCE INTERVALS IN CASE OF USE OF THE HYDRAULIC BREAKER

In machines equipped with breaker hydraulic oil deteriorates more rapidly than in machines equipped with standard equipment. When using the breaker, always keep to the following maintenance plan.

4.8.2.a CHANGING THE HYDRAULIC OIL FILTER

In new machines, change the filter after the first 100÷150 hours of operation and for the successive changes keep to the indications given in the table on the right.
If the machine contains synthetic biodegradable oil type HEES, the filter must be changed after the first 50 hours of operation.

4.8.2.b CHANGING THE HYDRAULIC OIL

Change the hydraulic oil in the tank according to the intervals indicated in the table on the right.
On machines containing synthetic biodegradable oil type HEES, change the oil after the first 500 hours of operation and for the successive changes keep to the indications given in the table on the right.

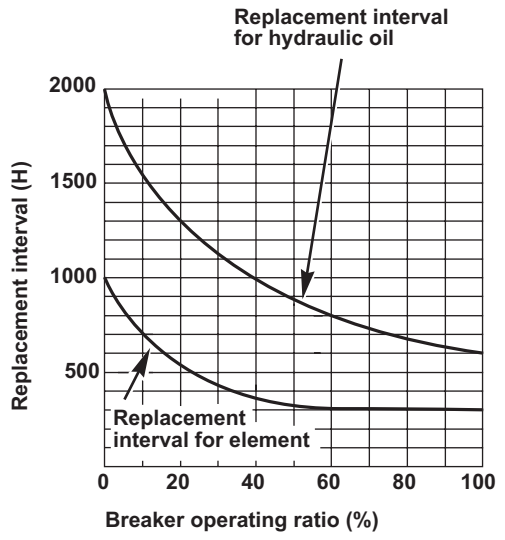

https://truckmanualshub.com/

4.9 MAINTENANCE PROCEDURES

4.9.1 WHEN REQUIRED

4.9.1.a CHECKING, CLEANING OR CHANGING THE AIR FILTER CARTRIDGE

WARNING

- **Remove the air filter only after stopping the engine and do not start the engine if the air filter is open.**
- **When compressed air is used to clean the filter, dust may get into the eyes. Wear safety goggles and a dust mask during the cleaning operations.**

Checking the cartridge

1. Open the engine hood. For further details, see paragraph"3.2.5 ENGINE HOOD".
2. If the red piston of the filter clogging indicator (1) is visible, clean the air filter cartridge.

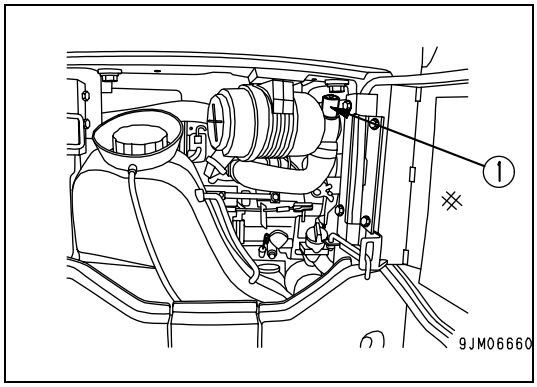

IMPORTANT

- **Do not clean the cartridge if the red piston of the filter clogging indicator (1) is not visible.**
- **In any case, check the cartridge for clogging every 50 hours of operation.**

Cleaning or changing the cartridge

1. Open the engine hood. For further details, see paragraph"3.2.5 ENGINE HOOD".
2. Release the couplings (2) and remove the cap (3).

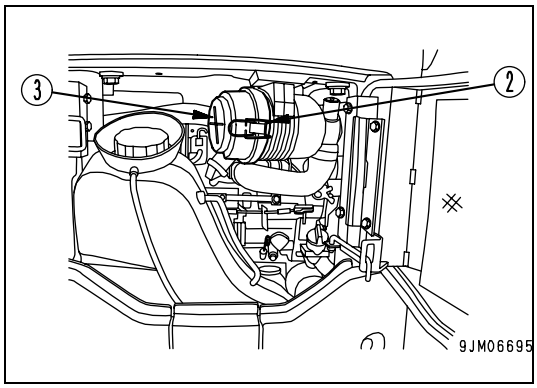

3. Remove the cartridge (4) and cover the air connector at the end of the air filter body with a clean cloth or adhesive tape.
4. Clean the inside of the filter body, the cap (3) and the drain valve (5).

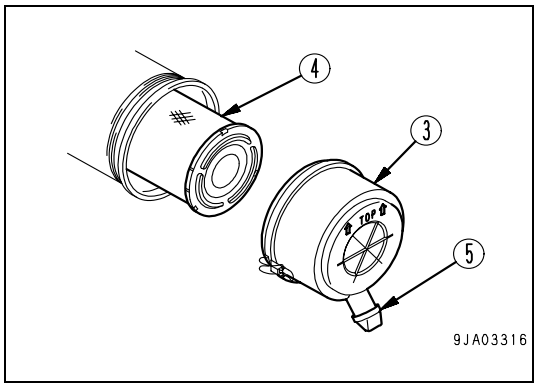

https://truckmanualshub.com/

5. Slightly strike the filtering element (4) on the palm of your hand, in such a way as to remove the dust, and blow compressed air on the inner surface, keeping the air jet at a distance of approximately 15 cm and the pressure below 4-5 bars.

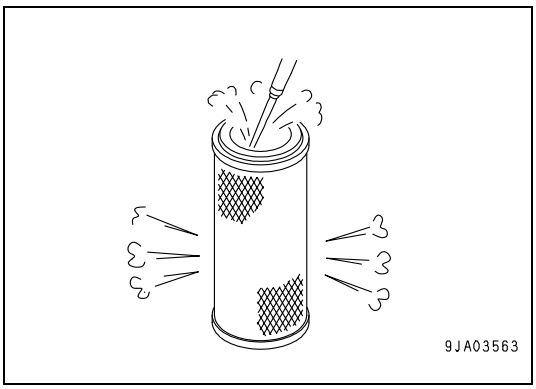

6. After the cleaning operations, inspect the filtering surface for damage by introducing a lamp into it and carefully check the front gaskets. If the cartridge is damaged, change it.

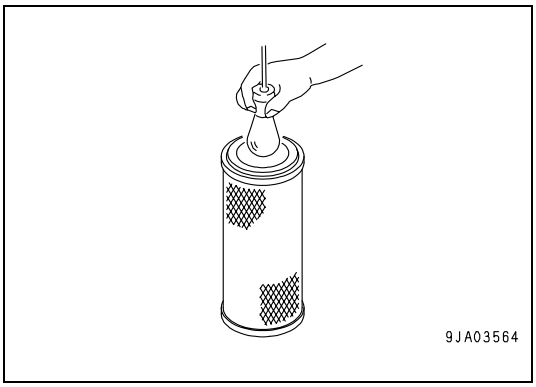

7. Remove the cloth or adhesive tape used to cover the air connector inside the filter body.
8. Install the cleaned cartridge (4) or a new cartridge.
9. Position the cap (3) with the drain valve (5) facing downwards and secure it with the couplings (2).

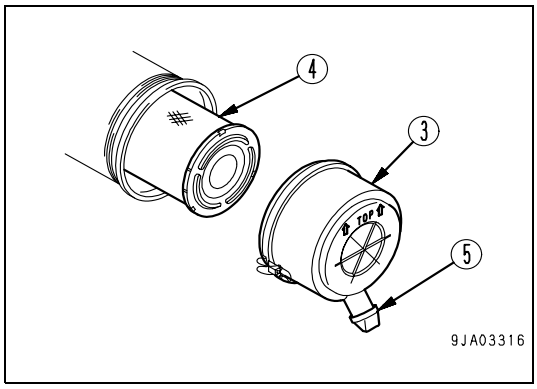

10. Press the button on the filter clogging indicator (1) so that the red piston returns to its original position.

IMPORTANT

- **If shortly after installing the cleaned cartridge the red piston of the clogging indicator is visible again, it is necessary to change the cartridge.**
- **Change the filtering element if it has been cleaned for 5 times or used for one year.**

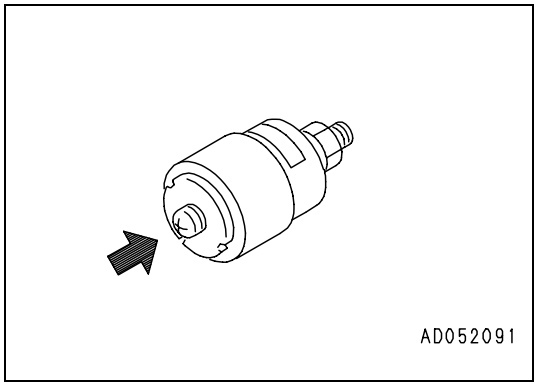

https://truckmanualshub.com/

4.9.1.b CHECKING THE BATTERY CHARGE LEVEL

WARNING

- **Check the charge level only with the engine at rest.**
- **To prevent gas explosions, do not use naked flames, do not smoke and avoid producing sparks due to short circuits.**
- **The battery electrolyte is dangerous; in case of contact with the eyes or skin, rinse with plenty of water and consult a doctor without delay. The battery is maintenance-free.**

IMPORTANT

- **Make sure that the connection terminals are not oxidized; if necessary, clean them and cover them with anti-oxidation grease.**

The battery (1) can be reached after opening the battery cover (see "3.2.7 BATTERY COVER").
A sight gauge (2) shows, with different colours, the battery charge level according to the table positioned beside the gauge itself:

- Green: optimal charge
- Gray: the battery needs recharging
- White: the battery must be replaced.

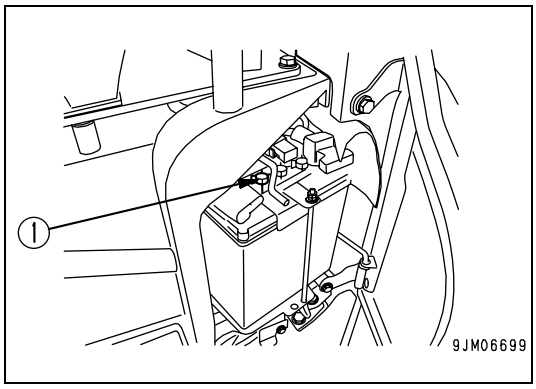

WARNING

- **If a dry battery is used, check that the electrolyte level is approximately 6 mm above the plate edge; if necessary, top up using distilled water only.**
  If, on the contrary, the level is low because some fluid has been spilled, add sulphuric acid, after diluting it to reach the concentration suitable for the ambient temperature (see "3.5.1.3 BATTERY").
- **It is advisable to add distilled water just before starting work, in order to prevent if from freezing.**
- **Before putting back the cell caps, make sure that the breather holes are not clogged.**

https://truckmanualshub.com/

4.9.1.c CLEANING THE WATER SEPARATOR FILTER

WARNING

- **Change the filter after work, when the engine has cooled down to 40÷45°C.**
- **During these operations some fuel may be spilled; clean the dirty areas immediately, in order to prevent any risk of slipping or fire.**

1. Open the radiator cover. For further details, see "3.2.6 RADIATOR COVER".
2. Turn the valve (1) of the water separator to the closed position (A).
3. Loosen the metal ring (2) with a filter wrench and remove the casing (3) and the filtering element (5).
   Take care not to lose the red ring (4) that is positioned inside the casing.
4. Wash the inside of the casing (3) and the filtering element (5) with diesel or flushing oil.
5. After washing, install the filtering element (5).
6. Place the red ring (4) in the casing (3) and fill it with fuel, then put back the casing and tighten the metal ring (2).
7. Turn the valve (1) of the water separator to the open position (B) and bleed the air by proceeding as indicated below.

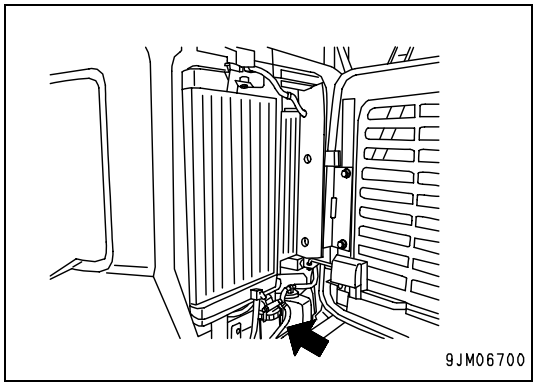

IMPORTANT

- **When removing the water separator, take care not to lose the red ring contained in the casing.**
- **If the filtering element is excessively clogged or damaged, change it.**

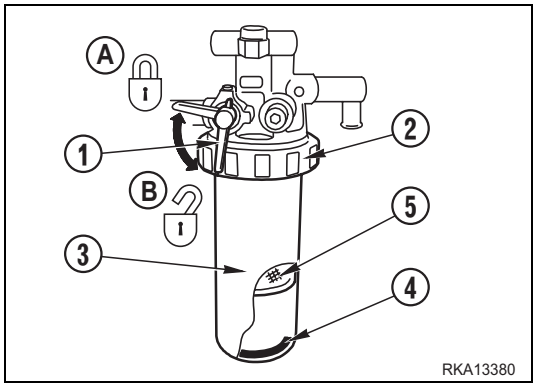

BLEEDING THE FUEL CIRCUIT

1. After filling the fuel tank, make sure that the valve (1) of the water separator is in open position (B).
2. Turn the ignition key to position ON and wait approximately 15-20 seconds, in such a way as to allow the fuel system to be automatically bled.
3. Turn the ignition key to position START and start the engine.

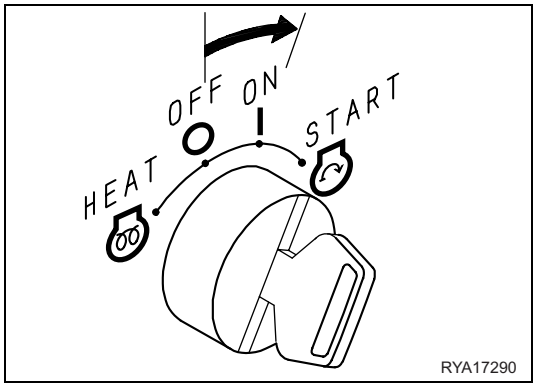

IMPORTANT

- **If the engine starts regularly and then stops or functions irregularly, check if there is air in the circuit; in this case, check the tightness of the fuel filter and of the fuel pump prefilter.**
- **When all the fuel in the tank has run out, bleed the circuit by proceeding as described above and repeat the operation at least twice.**

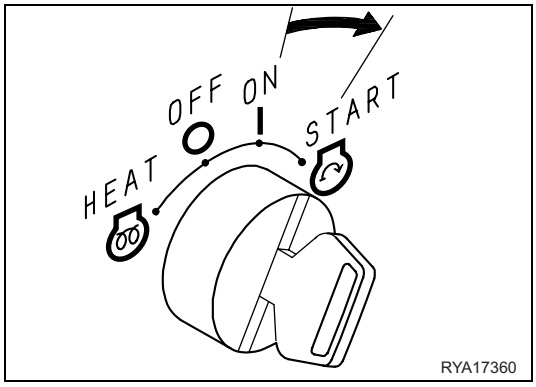

https://truckmanualshub.com/

4.9.1.d DRAINING THE FUEL TANK

WARNING

- **When draining the fuel tank, avoid spilling fuel, since this may cause fires.**
- **If some fuel is accidentally spilled, clean the dirty area immediately, in order to prevent it from getting slippery and to avoid fires.**

1. Swing the turret so that the drain valve (1) is positioned between the tracks.
2. Open the radiator cover. For details, see paragraph "3.2.6 RADIATOR COVER".
3. Open the drain valve (1) and drain the sediments and water collected at the bottom together with the fuel.
   Collect fuel and sediments into a container with suitable capacity.
4. When clean fuel flows out, close the drain valve (1).

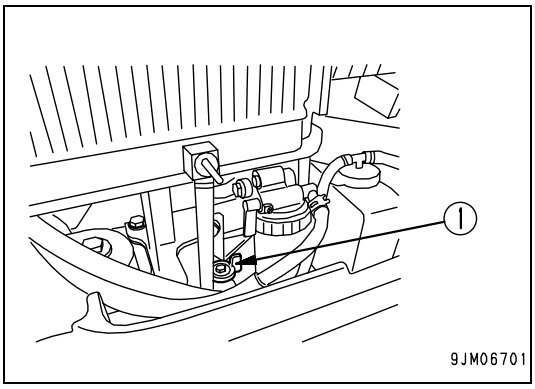

IMPORTANT

- **The tank must be drained before starting the engine, with temperatures exceeding 0°C; when the temperature is below 0°C, the tank must be drained at the end of work or in any case with the machine at operating temperature, in order to prevent the condensate from freezing.**
- **The condensate and the impurities that may have accumulated inside the tank must be drained before refuelling.**
- **Never use trichloroethylene to wash the inside of the tank. Use exclusively diesel oil.**

4.9.1.e CHECKING AND ADJUSTING THE STEEL TRACK TENSION

The pins and bushings of the undercarriage wear out to different degrees, depending on the work conditions and on the characteristics of the surface on which the machine works. Therefore it is necessary to check the track tension frequently and to adjust it when necessary.

IMPORTANT

- **To carry out the check and the corresponding maintenance operation, stop the machine on firm and level ground. Check both tracks.**

CHECK

1. With the engine idling, move the machine forward of a distance corresponding to the length of the track on the ground, then lower the equipment to the ground and stop the engine.
2. Choose a perfectly flat rod (3) long enough to cover the distance between the idler roller (1) and the track sliding plate (2), then position it on the track.
3. Measure the maximum deflection between the upper surface of the track and the lower surface of the rod.
   - Standard deflection
     The deflection value “a“ should be included between 5 and 15 mm.

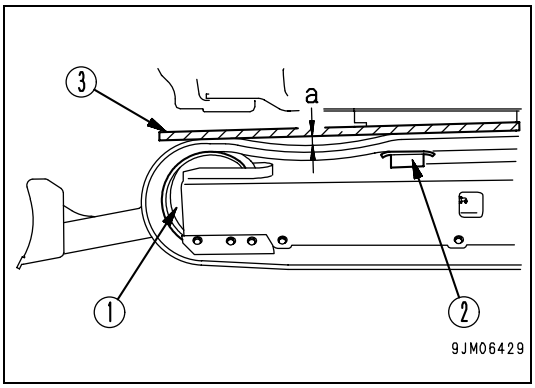

If the track tension does not correspond to the standard value, adjust it by proceeding as indicated below.

https://truckmanualshub.com/

ADJUSTMENT

DANGER

- **The grease contained in the hydraulic cylinder is pressurized. For this reason, do not give the grease valve (1) more than one turn when loosening it; in fact, if the valve is loosened excessively it may be pushed out due to the grease pressure and this is very dangerous for the operator..**
  Do not loose any component apart from the valve (1). If the track tension does not decrease after this operation, contact your Komatsu Dealer.

WARNING

- **If the resistance met when injecting the grease is excessive, move the machine forward and backward covering a short distance.**

To increase the track tension, proceed as follows:

1. Carefully clean the grease valve (1) and inject grease through the grease nipple (2) until reaching the desired tension.

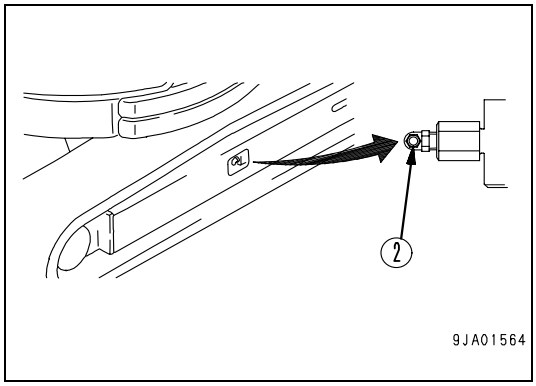

2. When after the injection of grease the idler roller sliding plate reaches the measure «S» of 0 mm and the track is not sufficiently stretched, this means that the pins and bushings are excessively worn. Therefore, it is necessary to exchange or replace the pins and bushings.
   For any replacement or repair, contact your Komatsu Dealer.

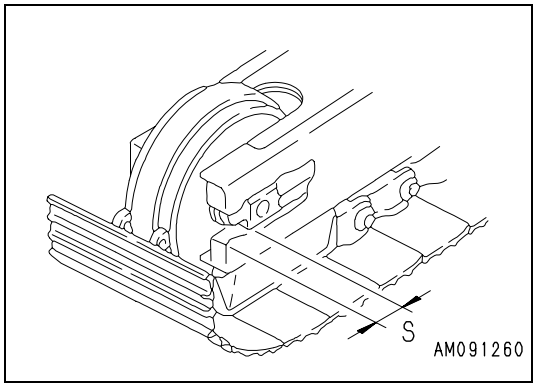

https://truckmanualshub.com/

To reduce the track tension, proceed as follows:

DANGER

- **It is extremely dangerous to let the grease out following any procedure different from those illustrated below.**
- **If the track tension cannot be reduced with this operation, contact your Komatsu Dealer, who will provide for the necessary repairs.**

1. Gradually loosen the grease valve (1) to let the grease out; do not give the valve more than one turn.
2. If the grease does not come out smoothly, move the machine slowly forward and backward covering a short distance.
3. Tighten the valve and remove any trace of grease.
4. Move the machine forward and backward, then stop it and make sure that the track tension is correct.

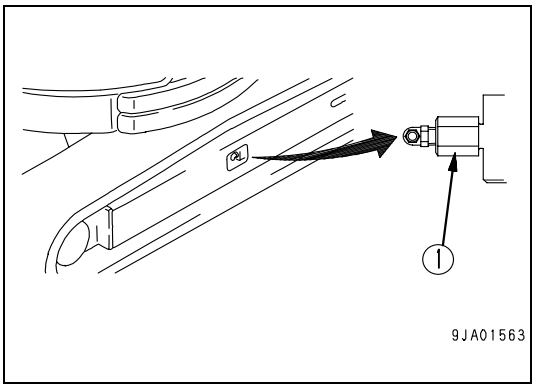

IMPORTANT

- **The degree of wear of pins and bushings varies depending on the work conditions and on the characteristics of the ground.**
  It is therefore necessary to check the track tension frequently, in order to ensure that it is always correct.
- **When working on rocky or very irregular surfaces, increase the track tension in order to prevent stones or debris to get stuck between the tracks and the sprocket; on the other hand, reduce the track tension when working on soft or muddy ground, since the soil penetrates between rollers and tracks and tends to increase the tension.**

4.9.1.f CHECKING THE RUBBER TRACKS

Change the rubber tracks when they reach the indicated wear limits.

1. When the height “A” of the rubber claw is less than 5 mm: in this case, in fact, the track may slip and its traction force be reduced..
   1- Roller
   2- Rubber track

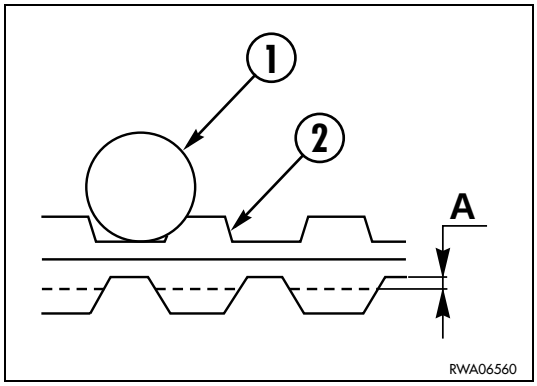

2. When the steel core is visible in two or more points of the track.

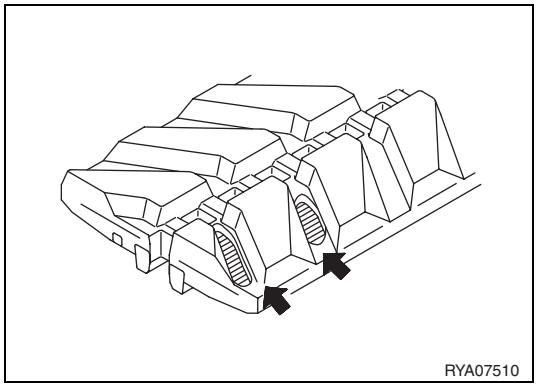

https://truckmanualshub.com/

3. When more than half of the steel core cords at the centre of the track are cut.

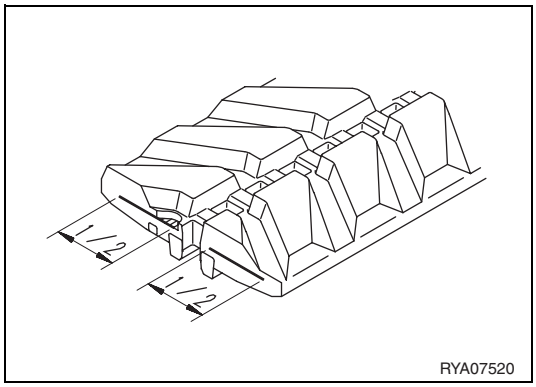

4. When one or more steel cores have come off the track or are pushed out due to excessive tension.

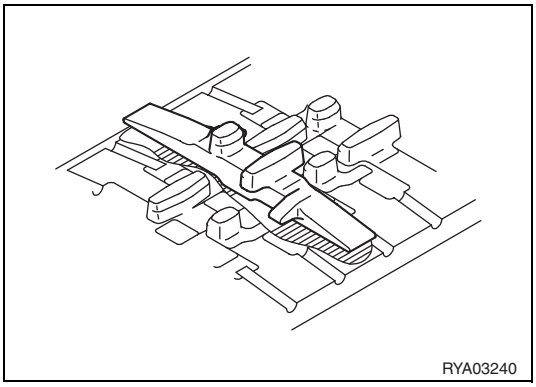

5. If the rubber track cannot be tensioned correctly through the injection of grease, check the track tensioner gaskets and if necessary change them or even the track.
   (See "4.9.1.g CHECKING AND ADJUSTING THE RUBBER TRACK TENSION").

IMPORTANT
- **If the track tension is such that the track may come off its seat, the track may be lengthened and the track tensioner cylinder damaged.**

6. If the broken area between the rubber track claws reaches a length of approximately 60 mm, the track must be repaired.
   It must be immediately repaired also when the steel cores are visible, even if the broken area is very small.

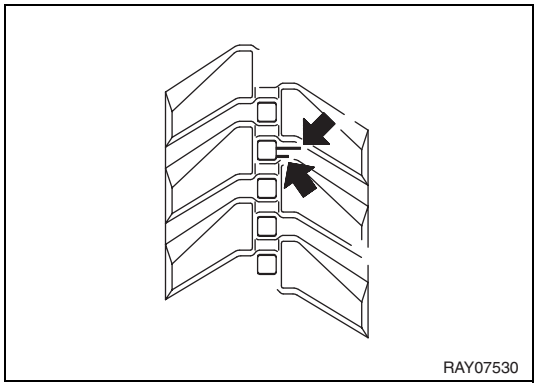

IMPORTANT
- **If the length of the broken area is less then 30 mm or its depth is less than 10 mm, it is not necessary to repair the track.**
- **For any repair or replacement, contact your Komatsu Dealer.**

https://truckmanualshub.com/

4.9.1.g CHECKING AND ADJUSTING THE RUBBER TRACK TENSION

The rubber tracks wear out to different degrees, depending on the work conditions and on the characteristics of the surface on which the machine is working. Therefore, it is necessary to check the track wear and tension frequently, in order to keep the tracks correctly tensioned.

IMPORTANT

- **To carry out the check and the corresponding maintenance operation, stop the machine on firm and level ground. Check both tracks.**
- **In particular, on new machines or after the installation of new tracks, it is advisable to carry out a first check after 10 hours of operation.**
- **Adjusting the track tension frequently until the initial slackening does not occur any longer will prevent the tracks from coming off due to insufficient tension.**
- **If the machine works with loose rubber tracks, they may come off and cause the steel cores to wear out too early.**

CHECK

1. With the engine idling, move the machine forward of a distance corresponding to the length of the track on the ground, then lower the equipment to the ground and stop the engine.
2. Choose a perfectly flat rod (3) long enough to cover the distance between the idler roller (1) and the track sliding plate (2), then position it on the track.
3. Measure the maximum deflection between the upper surface of the track and the lower surface of the rod.

Standard deflection

The deflection “a“ should be included between 1 and 3 mm.

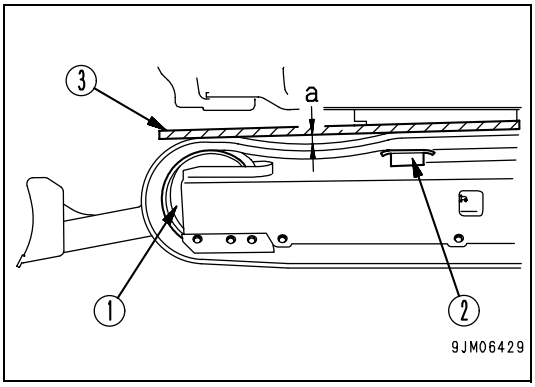

If the track tension does not correspond to the standard value, adjust it by proceeding as indicated below.

ADJUSTMENT

DANGER

- **The grease contained in the hydraulic cylinder is pressurized. For this reason, do not give the grease valve (1) more than one turn when loosening it; in fact, if the valve is loosened excessively it may be pushed out due to the grease pressure and this is very dangerous for the operator..**
  Do not loose any component apart from the valve (1). If the track tension does not decrease after this operation, contact your Komatsu Dealer.

WARNING

- **If the resistance met when injecting the grease is excessive, move the machine forward and backward covering a short distance.**

https://truckmanualshub.com/

To increase the track tension, proceed as follows:

IMPORTANT

- **The standard adjustment value is low, therefore take care to avoid increasing the rubber track tension excessively.**

1. Carefully clean the grease valve (1) and inject grease through the grease nipple (2) until reaching the desired tension.
2. If the rubber track cannot be tensioned enough by injecting grease, it is necessary to change the track or the track tensioner gaskets. For any repair or replacement, contact your Komatsu Dealer.

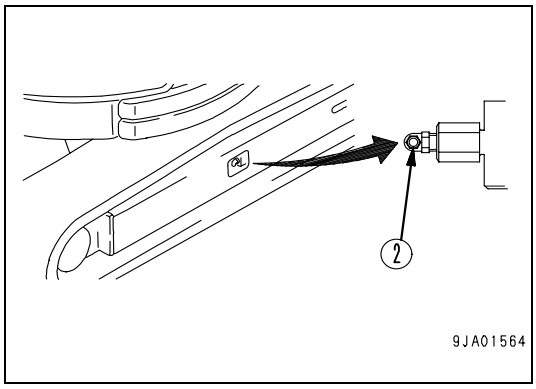

To reduce the track tension, proceed as follows:

⚠ DANGER

- **It is extremely dangerous to let the grease out following any procedure different from those illustrated below.**
- **If the track tension cannot be reduced with this operation, contact your Komatsu Dealer, who will provide for the necessary repairs.**

1. Gradually loosen the grease valve (1) to let the grease out; do not give the valve more than one turn.
2. If the grease does not come out smoothly, move the machine slowly forward and backward covering a short distance.
3. Tighten the valve and remove any trace of grease.
4. Move the machine forward and backward, then stop it and make sure that the track tension is correct.

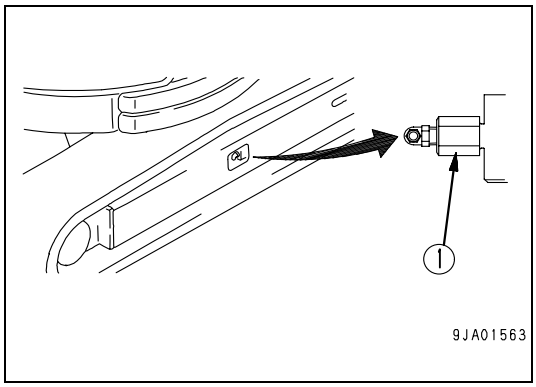

IMPORTANT

- **The rubber tracks wear out to different degrees, depending on the work conditions and on the characteristics of the surface on which the machine is working. It is therefore necessary to check the track tension frequently, in order to ensure that it is always correct.**
- **When working on soft or muddy ground, reduce the track tension to extend the service life of the components.**
- **After the installation of new tracks, it is advisable to carry out a first check after 10 hours of operation.**

https://truckmanualshub.com/

4.9.1.h CHANGING THE RUBBER TRACKS

WARNING

- **This operation must be carried out by two persons. One operator must be seated in the cab and manoeuvre the machine following the signals of the other operator who carries out the change and the adjustment.**
- **The track must be changed with the frame raised from the ground; be careful not to shift any control lever while the operator is working.**
- **During the change do not remove any component apart from the track.**
- **If the track tension cannot be reduced by means of the procedure described above, contact your Komatsu Dealer for the necessary repairs.**

IMPORTANT

- **It is possible to switch over from rubber to steel tracks. In any case, it is necessary to remove and adjust the shock absorber of the idler roller. This operation can be performed only by specialized personnel at any Komatsu Dealer.**

REMOVING THE RUBBER TRACK

DANGER

- **The grease contained in the hydraulic cylinder is pressurized. For this reason, do not give the grease valve (1) more than one turn when loosening it; in fact, if the valve is loosened excessively it may be pushed out due to the grease pressure and this is very dangerous for the operator..**
  Do not loose any component apart from the valve (1). If the track tension does not decrease after this operation, contact your Komatsu Dealer.
- **It is extremely dangerous to let the grease out following any procedure different from the one indicated below.**
- **When installing or removing the tracks, before turning the sprocket make sure that the grease contained in the cylinder has been removed.**

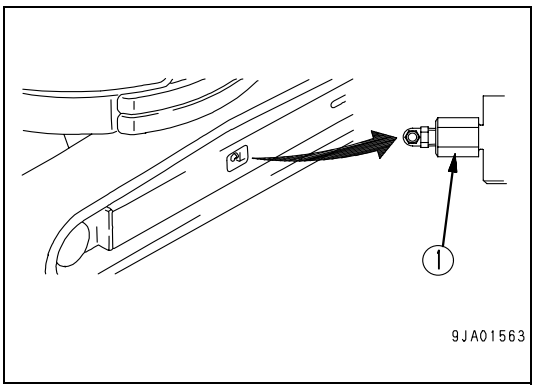

WARNING

- **If the resistance met when injecting the grease is excessive, move the machine forward and backward covering a short distance.**

https://truckmanualshub.com/

Stop the machine on a firm and level surface and lower the equipment to the ground.

1. Raise the undercarriage using boom and arm.
   Carry out this operation shifting the control levers very slowly.

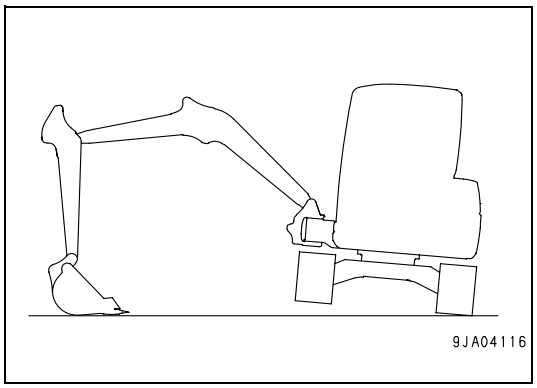

2. Gradually loosen the grease valve (1) to let the grease out; do not give the valve more than one turn.
3. If the grease does not come out smoothly, move the machine slowly forward and backward covering a short distance.

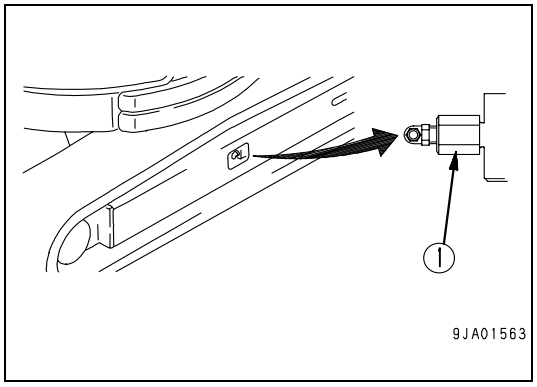

4. Introduce the steel tubes (2) in the track, turn the sprocket as if in reverse (3), so that the steel tubes move with the track and get engaged with the idler roller; make the track (4) slide sidewards and remove it.

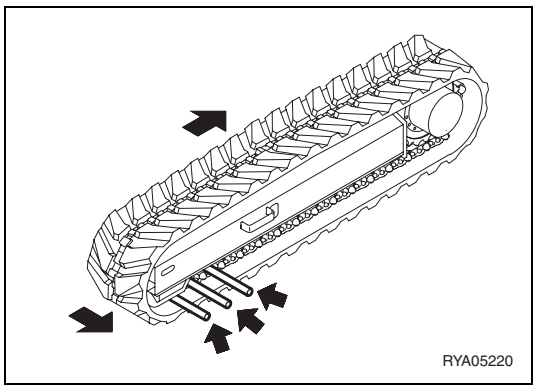

https://truckmanualshub.com/

INSTALLING THE RUBBER TRACKS

1. Raise the undercarriage using boom and arm and make sure that the grease contained in the cylinder has been eliminated.
   Carry out this operation shifting the control levers very slowly.

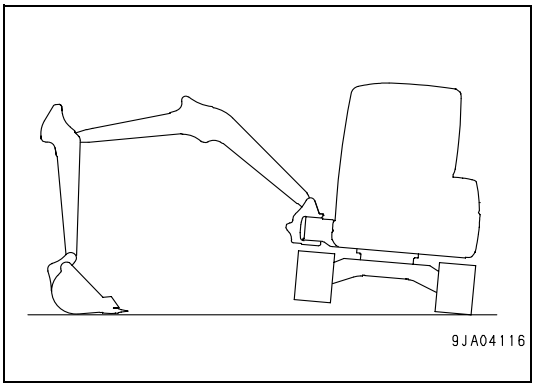

2. Install the rubber tracks on the sprocket by fitting the driving blocks.
3. Turn the sprocket (1) as if in reverse, then push the track towards the turret.

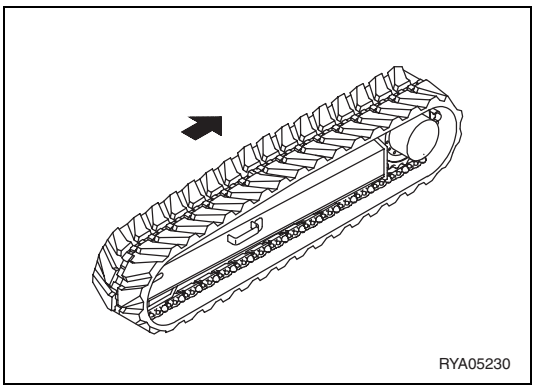

4. Using a steel tube (2), position the track and turn the sprocket again.
5. Make sure that the track is correctly installed on the sprocket and the idler roller.
6. Adjust the track tension. For details, see "4.9.1.g CHECKING AND ADJUSTING THE RUBBER TRACK TENSION").

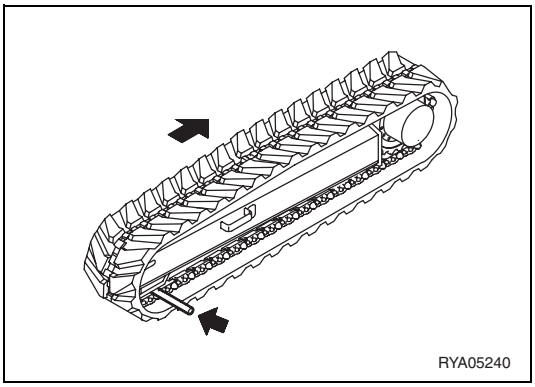

7. Make sure that the track tension is correct, that the track is correctly fitted in the sprocket and the idler roller, then rest the machine on the ground.

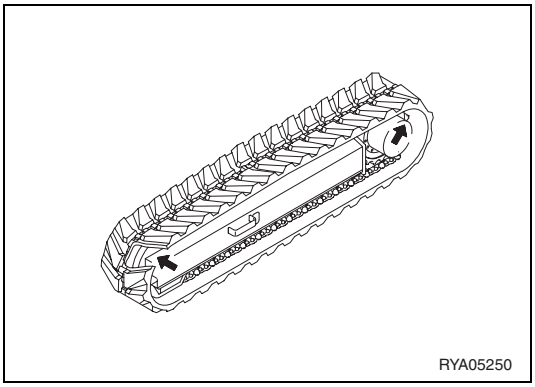

https://truckmanualshub.com/

4.9.1.i BLEEDING THE HYDRAULIC SYSTEM

1. Start the engine and let it idle for approximately 10 minutes (see "3.3.2 STARTING THE ENGINE").
2. Extend all cylinders 4-5 times, stopping them at approx. 100 mm from the end of stroke.

IMPORTANT

- **If the engine runs at maximum rpm or if the cylinders are brought to the end of stroke soon after starting, the air sucked in by the cylinders may damage the piston gaskets.**

3. Slowly make all the cylinders reach the end of stroke for 3-4 times.

https://truckmanualshub.com/

4.9.2 CHECKS TO BE CARRIED OUT BEFORE STARTING THE ENGINE

⚠ WARNING

- **Dirt, oil and fuel in the engine compartment near hot parts may damage the machine and even cause fires.**
  Check frequently and repair any leakage immediately; if they occur repeatedly, contact your Komatsu Dealer.

For details on the following items, see "3.3.1.2 CHECKS TO BE CARRIED OUT BEFORE STARTING THE ENGINE".

- Check the coolant level and top up
- Check the oil level in the oil pan and top up
- Check the fuel level and top up
- Check the oil level in the hydraulic tank and top up
- Check the air filter clogging indicator
- Check the water separator
- Check the wiring systems
- Check the functionality of the horn

4.9.3 MAINTENANCE AFTER THE FIRST 50 HOURS OF OPERATION (Only for machines in which synthetic biodegradable oil type HEES is used)

The following maintenance operation should be carried out after the first 50 hours of use.

a - CHANGE THE HYDRAULIC OIL DRAIN FILTER

For further details, see paragraph “EVERY 1000 HOURS”.

4.9.4 MAINTENANCE AFTER THE FIRST 500 HOURS OF OPERATION (Only for machines in which synthetic biodegradable oil type HEES is used)

The following maintenance operation must be carried out after the first 500 hours of operation, together with the maintenance operations to be carried out “EVERY 500 HOURS”.

a - CHANGE THE HYDRAULIC OIL AND CLEAN THE INTAKE FILTER

For further details, see paragraph “EVERY 2000 HOURS”.

https://truckmanualshub.com/

4.9.5 MAINTENANCE EVERY 500 HOURS OF OPERATION

4.9.5.a LUBRICATION

IMPORTANT

- **Clean the grease nipples before applying the greasing pump.**
- **After lubrication, remove all the contaminated grease that may have spread out of the nipples.**
- **If the machine is used in difficult conditions, carry out this operation more frequently than usual.**
- **As a general rule, it is important to consider that each cylinder is provided with two grease nipples positioned on the couplings and that each pin serving as fulcrum point for a movement is provided with at least one grease nipple.**
- **When running in a new machine, lubricate every 10 hours for the first 100 hours of operation.**

LUBRICATING THE COMPONENTS OF THE SWING SYSTEM

NOTE

- When injecting grease to lubricate the swing pinion and the ball-bearing ring, swing the turret slowly and grease every 90°

1. Carefully clean the grease nipples (1) and (2), and inject the grease indicated in the lubricant chart using a grease pump (see "4.4 FUEL, COOLANT AND LUBRICANTS").
2. After the operation, remove any trace of grease.

   (1) Swing pinion (1 point)
   (2) Ball-bearing ring (1 point)

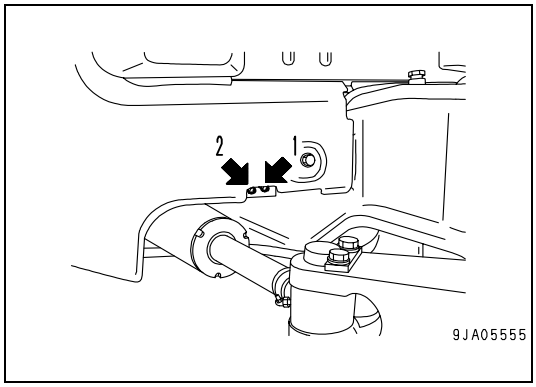

LUBRICATING THE WORK EQUIPMENT

IMPORTANT

- **After carrying out digging operations with the equipment immersed in water, always lubricate the pins that have been in contact with water..**

1. Position the machine as shown in the figure, lower the work equipment to the ground and stop the engine.
2. Carefully clean the grease nipples listed below, and inject the grease indicated in the lubricant chart using a grease pump (see"4.4 FUEL, COOLANT AND LUBRICANTS").
3. After greasing, remove any trace of grease.

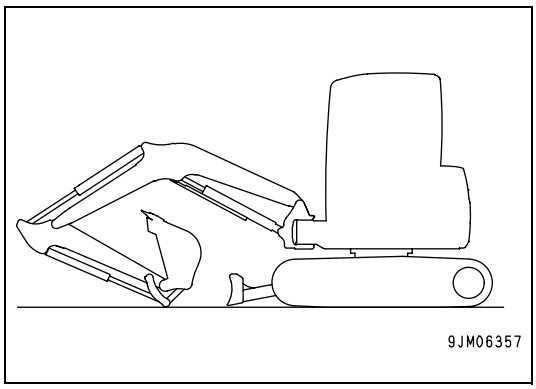

https://truckmanualshub.com/

(1) Bucket-link connection pins (1 point)
(2) Arm–bucket connection pin (1 point)
(3) Arm–link connection pin (1 point)
(4) Bucket cylinder rod end (1 point)
(5) Link connection pin (1 point)

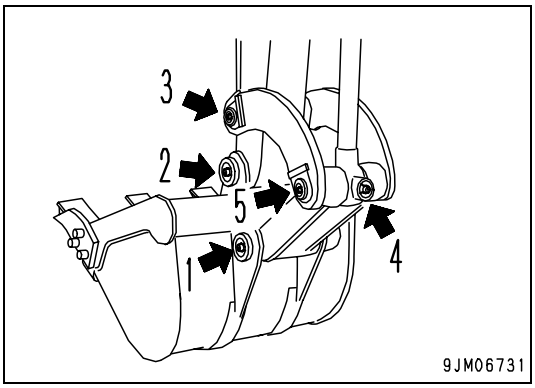

(6) Boom swing bracket pin (1 point)
(7) Boom base pin (1 point)
(8) Boom cylinder base pin (1 point)

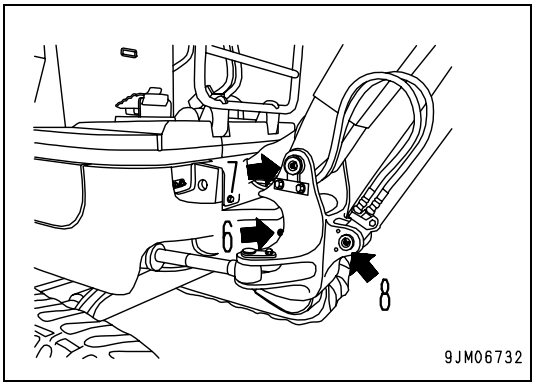

(9) Boom cylinder rod end (1 point)
(10) Boom cylinder base pin (1 point)

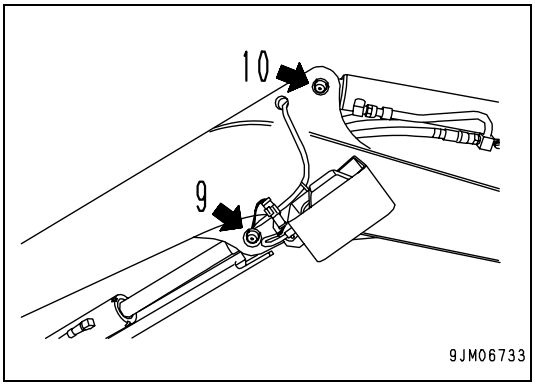

(11) Boom cylinder rod end (1 point)
(12) Boom–arm connection pins (1 point)
(13) Bucket cylinder base pin (1 point)

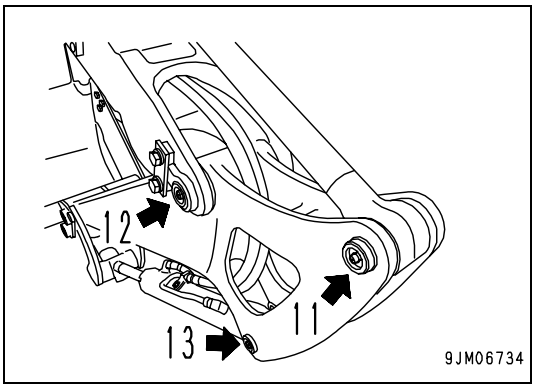

https://truckmanualshub.com/

4.9.5.b CHANGING THE ENGINE OIL AND THE ENGINE OIL FILTER CARTRIDGE

WARNING

- **Change the oil with the machine parked on a level surface and the work equipment resting on the ground.**
- **Soon after the machine has been stopped the engine oil is very hot and may cause burns; let the engine cool down until it reaches a temperature of 40÷45°C before draining the oil.**
- **The oil that may be spilled during the oil change will make the ground slippery: use anti-slip shoes and immediately remove any trace of oil from the floor.**
- **Oils, filters, the coolant and the battery are considered special waste and must be collected and disposed of according to the regulations in force.**

Proceed as follows:

1. Open the engine hood (see "3.2.5 ENGINE HOOD").
2. Remove the drain plug (P) of the engine oil pan, gathering the used oil that flows out of it into a container with suitable capacity.
   While the oil flows out, remove the filler cap (F), so that the oil can flow out freely.
3. Screw the plug (P) onto the engine oil pan.
4. Using a filter wrench, unscrew the old filter (1) and reject it.
5. Clean the contact surface between the seal and the filter support (2).
6. Lubricate the seal of the new filter and tighten until it rests against the gasket.
7. Give another half turn by hand.
8. Fill the engine with the prescribed quantity of new oil, using the dipstick (G) to check that the level reaches the MAX. reference mark.
   Use oil suitable for the ambient temperature (see "4.4 FUEL, COOLANT AND LUBRICANTS").
9. Put back the filler cap (F), start the engine and stop it after 5 minutes.
   Check the level again and top up, if necessary.
10. Close the engine hood.

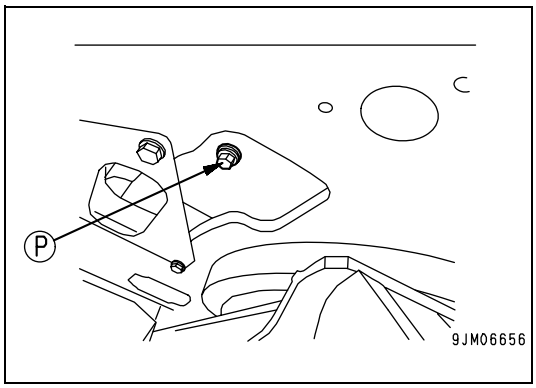

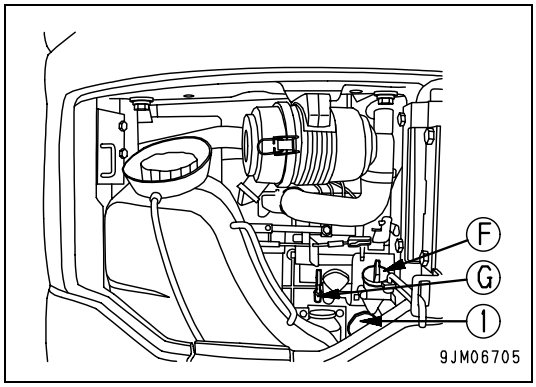

Start the engine, make sure that there are no leakages and that the engine oil pressure warning light goes out.

IMPORTANT

- **Do not use the wrench to lock the filter, in order to avoid damaging the filter itself and causing oil leakages.**

https://truckmanualshub.com/

4.9.5.c CHANGING THE FUEL FILTER CARTRIDGE

WARNING

- **Change the filtering element after work, when the engine has cooled down to 40÷45°C.**
- **During these operations some fuel may be spilled; clean the dirty areas immediately, in order to prevent any risk of slipping or fire.**
- **Oils, filters, the coolant and the battery are considered special waste and must be collected and disposed of according to the regulations in force.**

FUEL FILTER

1. Open the engine hood.
   (For details, see "3.2.5 ENGINE HOOD").
2. Turn the valve (1) of the filter to the closed position (A).
3. Using a filter wrench, loosen the metal ring of the filter and remove the casing (2).
4. Clean the head of the filter holder and the inside of the casing, install a new filter and fill the casing with fuel.
5. Lubricate the casing seal, install it on the filter holder and tighten the metal ring until it touches the seal.
6. Give the metal ring a further 2/3 turn.

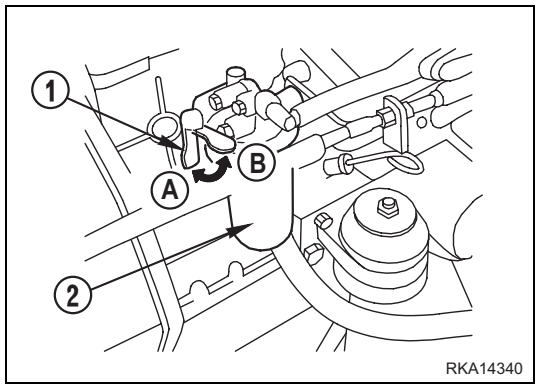

IMPORTANT

- **If the casing is tightened excessively, the seal may be damaged and cause fuel leakages. Fuel leakages may also be due to insufficient tightening. Therefore, it is advisable to fix the casing by tightening the metal ring correctly.**

BLEEDING THE FUEL CIRCUIT

WARNING

- **The engine may start during the bleeding operations; make sure that there is no one near the machine.**

1. After filling the fuel tank, make sure that the valve (1) of the filter is in open position (B).
3. Turn the ignition key to position ON and wait approximately 15-20 seconds, in such a way as to allow the fuel system to be automatically bled.
3. Turn the ignition key to position START and start the engine.

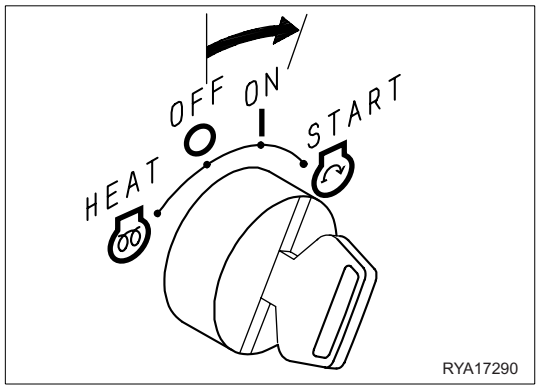

IMPORTANT

- **If the engine starts regularly and then stops or functions irregularly, check if there is air in the circuit; in this case, check the tightness of the fuel filter and of the fuel pump prefilter.**
- **When all the fuel in the tank has run out, bleed the circuit by proceeding as described above and repeat the operation at least twice.**

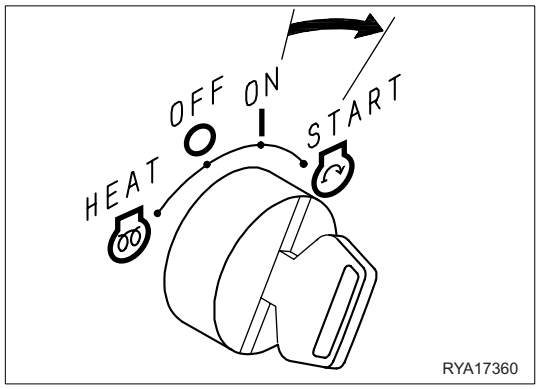

https://truckmanualshub.com/

4.9.5.d CHECKING THE OIL LEVEL IN THE FINAL REDUCTION GEARS

⚠ WARNING

- **Soon after the machine has been stopped, the engine oil is very hot and may cause burns; let the oil cool down to 40÷45° C before carrying out any check.**
- **Loosen the cap slowly to release any residual pressure.**

1. The check must be carried out on each reduction gear, with the drain plug (P) in low position and perpendicular to the ground. If necessary, move the machine slightly until reaching the specified position, which is indispensable for an accurate check.
2. This is a visual check and serves to make sure that the lubricant reaches the height of the hole (G); if this is not the case, top up by proceeding as explained in paragraph "4.9.6.b CHANGING THE OIL IN THE FINAL REDUCTION GEARS" and using the oil prescribed in the lubricant chart (see "4.4 FUEL, COOLANT AND LUBRICANTS").

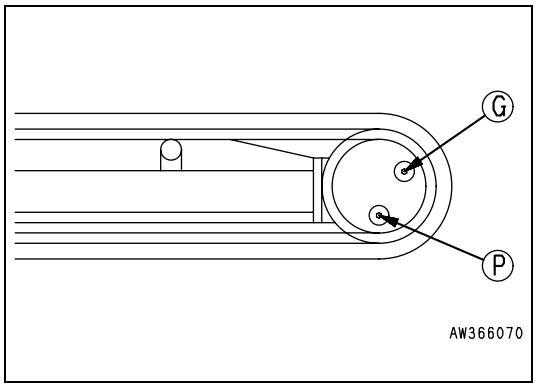

4.9.5.e CHECKING AND CLEANING THE FINS OF THE RADIATOR AND OF THE EXCHANGER

⚠ WARNING

- **If compressed air, steam or water hit someone, they may cause serious injury. Always wear a visor and safety shoes.**

1. Open the radiator cover. For details, see paragraph "3.2.6 RADIATOR COVER".
2. The radiator-exchanger assembly (1) must be cleaned with a jet of compressed air and, if necessary, with a low-pressure water or steam washing cycle; the specific products available on the market can be used, provided that the instructions given on the package are followed and that the washed parts are carefully dried.

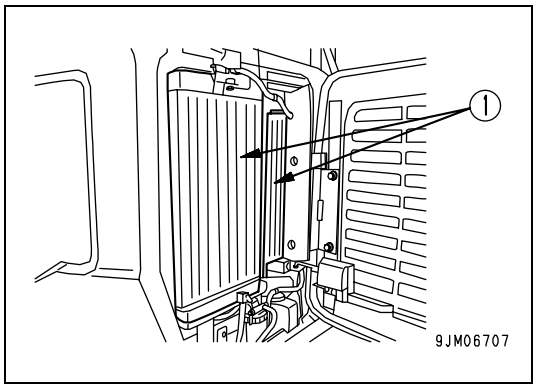

IMPORTANT

- **Do not use products containing even a slight quantity of oily substances, since these facilitate the adhesion of dust, which affects the heat exchange adversely.**
- **Carry out this cleaning operation whenever the radiator or the heat exchanger are accidentally dirtied with oil, diesel oil or greasy or oily substances.**
- **If the machine is used in dusty places, clean the radiator and the heat exchanger more frequently, in order to prevent the fins from clogging.**

https://truckmanualshub.com/

4.9.5.f CHECKING AND ADJUSTING THE FAN BELT TENSION

WARNING

- **Soon after the machine has been stopped, the engine is very hot and may cause burns; let the engine cool down before carrying out any check.**
- **To carry out this maintenance operation it is necessary to tilt the cab floor. Carefully follow the instructions given in paragraph "3.2.8 TILTING THE CAB FLOOR" or have this operation carried out by your Komatsu Dealer.**

CHECK

The fan belt can be reached after tilting the cab floor (see "3.2.8 TILTING THE CAB FLOOR").

1. The check is manual: press the belt with a thumb on the intermediate point between the drive shaft pulley and the fan pulley with a force equal to 98 Nm (10 kg); the resulting deflection must be approximately 9-13 mm..
2. If the deflection exceeds this value, adjust by proceeding as indicated below.

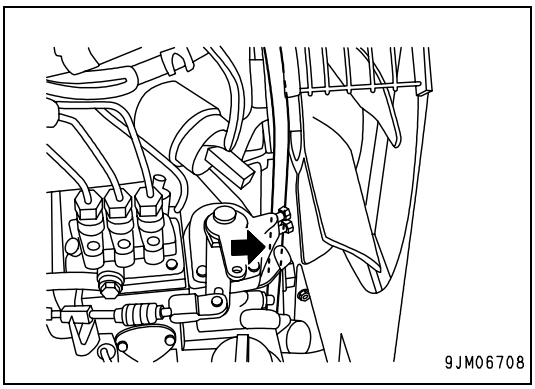

ADJUSTMENT

1. Loosen the adjusting screw (2) and the alternator fastening screws (3).
2. With a lever inserted between the alternator (1) and the engine block, make the alternator slide.
3. Lock the adjusting screws and the alternator fastening screws, then check again.

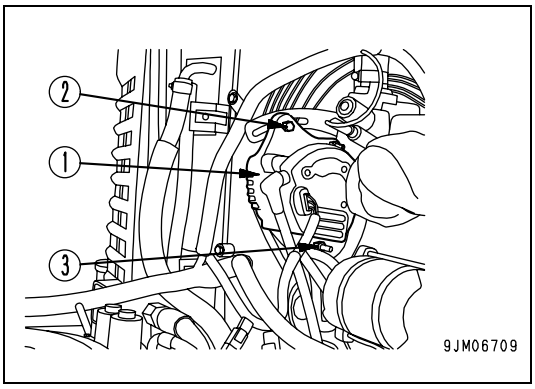

IMPORTANT

- **If the belt is worn, change it and check the tension again after a few hours of operation.**

https://truckmanualshub.com/

4.9.5.g DRAINING THE HYDRAULIC OIL TANK (Only for machines in which synthetic biodegradable oil type HEES is used)

⚠ WARNING

- **To carry out this maintenance operation it is necessary to tilt the cab floor. Carefully follow the instructions given in paragraph "3.2.8 TILTING THE CAB FLOOR" or have this operation carried out by your Komatsu Dealer.**
- **Retract the arm and bucket cylinders completely, rest the bucket teeth on the ground and, after stopping the engine, eliminate the residual pressures from the equipment (by shifting the controls more than once) and from the tank (by slowly loosening the filler cap).**
- **Let the oil cool down until it reaches 40÷45°C before carrying out this maintenance operation.**
- **Immediately clean any area dirty with oil.**
- **Oils, filters, the coolant and the battery are considered special waste and must be collected and disposed of according to the regulations in force.**

1. Turn the turret so that the lower part of the hydraulic oil tank is not covered by the tracks.
2. Retract the arm and bucket cylinders completely and lower the boom until the bucket teeth rest on the ground.
3. Lower the blade to the ground.
4. Stop the engine and eliminate the residual pressure from the work equipment (by shifting the controls more than once).
5. Tilt the cab floor (see "3.2.8 TILTING THE CAB FLOOR").
6. Loosen the screws (1), remove the plate (2) and slowly loosen the filler cap (F) to release the residual pressure from the tank.
7. Remove the drain plug (P) and let all the condensate flow out of the tank. Collect the condensate in a container with suitable capacity.
8. Put back the filler cap (F).
9. Close the cab floor.

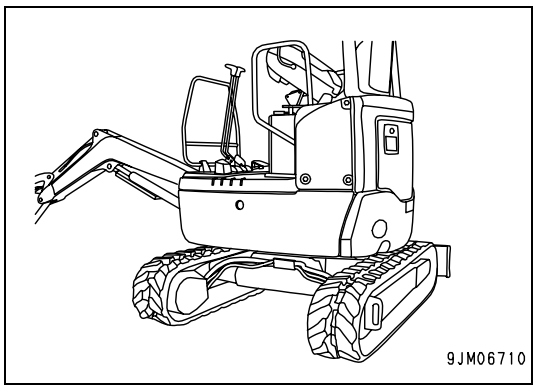

IMPORTANT

- **The tank must be drained before starting the engine, with temperatures exceeding 0°C; when the temperature is below 0°C, the tank must be drained at the end of work or in any case with the machine at operating temperature, to prevent the condensate from freezing.**

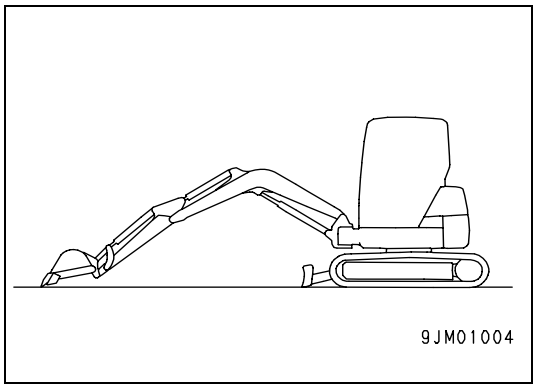

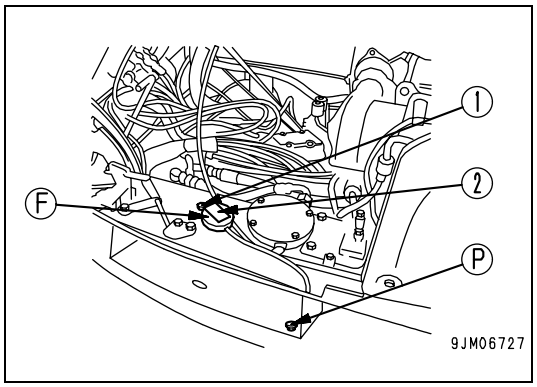

https://truckmanualshub.com/

4.9.6 MAINTENANCE EVERY 1000 HOURS OF OPERATION

Carry out these operations together with those to be performed every 500 HOURS.

4.9.6.a CHANGING THE HYDRAULIC OIL FILTER

WARNING

- **To carry out this maintenance operation it is necessary to tilt the cab floor. Carefully follow the instructions given in paragraph "3.2.8 TILTING THE CAB FLOOR" or have this operation carried out by your Komatsu Dealer.**
- **Soon after the machine has been stopped, the hydraulic oil is very hot and may cause burns; let it cool down to 40÷45° C before changing the filter.**
- **The hydraulic system is under pressure; slowly loosen the filler cap to release any residual pressure.**
- **Oils, filters, the coolant and the battery are considered special waste and must be collected and disposed of according to the regulations in force.**

CAUTION

- **On machines containing synthetic biodegradable oil type HEES , this must be changed for the first time after the first 50 hours of operation and successively every 1000 hours.**

The filter is positioned on the hydraulic system drain outlet and it holds the metal particles that come off the various components due to wear. The filter can be reached after tilting the cab floor (see "3.2.8 TILTING THE CAB FLOOR").
To change it, proceed as indicated below:

1. Loosen the screws (1) and remove the plate (2).
2. Slowly loosen the filler cap (F) to release any residual pressure from the tank.
3. Remove the screws (3) that hold the filter cover (4).
4. Remove the spring (5), the valve (6) and extract the cartridge (7).
5. Carefully clean the filter casing and change the cartridge (7).
6. Reassemble the whole by proceeding in the reverse order and make sure that the gasket (7) of the cover (4) is not damaged and is correctly housed in its seat.
7. Close the engine hood.

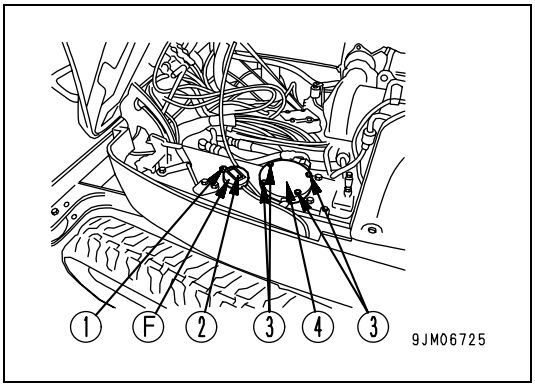

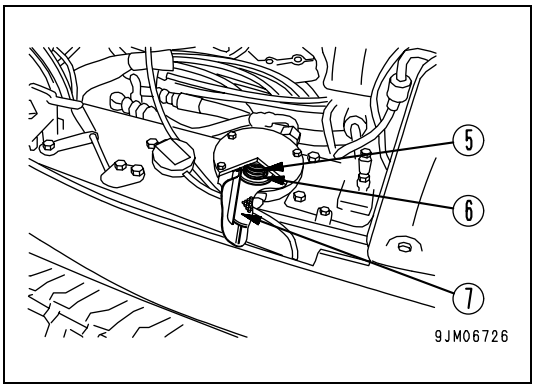

https://truckmanualshub.com/

8. Extend the boom, arm and bucket cylinders completely, as shown in the figure, and remove the filler cap (F).
   Put back the cap and pressurize the tank by lowering the equipment to the ground.

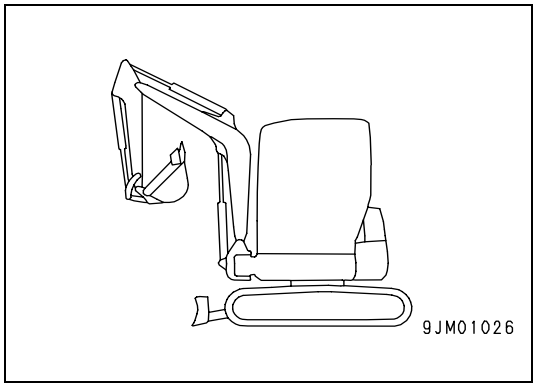

IMPORTANT

- **In machines equipped with breaker hydraulic oil deteriorates more rapidly than in machines used for simple digging operations.**
  On new machines, change the filter after the first 100-150 hours of operation and for the successive changes keep to the instructions given in the table on the right.

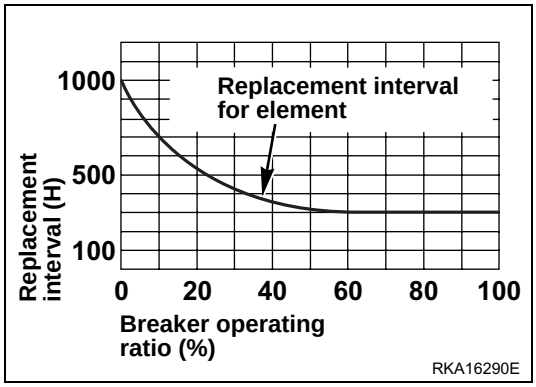

https://truckmanualshub.com/

4.9.6.b CHANGING THE OIL IN THE FINAL REDUCTION GEARS

WARNING

- **As soon as the machine has been stopped the oil is very hot and may cause burns; let the oil cool down until reaching 40÷45°C before changing it.**
- **Loosen the cap slowly to release any residual pressure.**
- **Oils, filters, the coolant and the battery are considered special waste and must be collected and disposed of according to the regulations in force.**

This operation must be carried out on each reduction gear with the machine parked on level ground and at a temperature of 40-45°C, so that the oil becomes fluid and can be drained easily, which facilitates the elimination of any suspended solid particles.

1. Move the machine until the drain plug (P) is in low position and perpendicular to the ground.
2. Remove the drain plug (P) and let the used oil flow out completely, gathering it into a container with suitable capacity.
   While the oil flows out, remove the level plug (G).
3. Once the oil has been drained, put back the plug (2) and pour oil of the prescribed type through the hole (G), until reaching the lower edge of the hole itself.
4. Put back the plug (G).

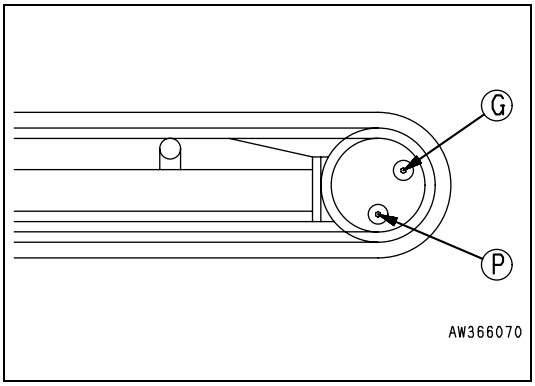

Carry out some forward and backward movements, stop the machine and check the levels again. Always use oil of the prescribed type (see "4.4 FUEL, COOLANT AND LUBRICANTS").

4.9.6.c CHECKING AND ADJUSTING THE ENGINE VALVE CLEARANCE

Since these checks and adjustments require the use of special tools, have them carried out by qualified personnel supplied by your Komatsu Dealer.

https://truckmanualshub.com/

4.9.7 MAINTENANCE EVERY 2000 HOURS OF OPERATION

Carry out these operations together with those to be performed every 500 HOURS and every 1000 HOURS.

4.9.7.a CHANGING THE OIL IN THE HYDRAULIC TANK AND CLEANING THE FILTER

WARNING

- **To carry out this maintenance operation it is necessary to tilt the cab floor. Carefully follow the instructions given in paragraph "3.2.8 TILTING THE CAB FLOOR" or have this operation carried out by your Komatsu Dealer.**
- **Retract the arm and bucket cylinders completely, rest the bucket teeth on the ground and, after stopping the engine, eliminate the residual pressures from the equipment (by shifting the controls more than once) and from the tank (by slowly loosening the filler cap).**
- **Soon after the machine has been stopped, the hydraulic oil is very hot and may cause burns; let it cool down to 40÷45° C before carrying out this maintenance operation.**
- **Immediately clean any area dirty with oil.**
- **Oils, filters, the coolant and the battery are considered special waste and must be collected and disposed of according to the regulations in force.**

CAUTION

- **On machines containing synthetic biodegradable hydraulic oil type HEES, this must be changed after the first 500 hours of operation and successively every 2000 hours, and in any case at least once a year.**

1. Turn the turret so that the lower part of the hydraulic oil tank is not covered by the tracks.

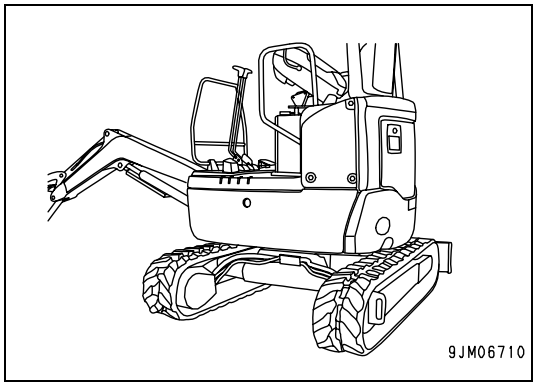

Retract the arm and bucket cylinders completely and lower the boom until the bucket teeth rest on the ground.

3. Lower the blade to the ground.
4. Stop the engine and eliminate the residual pressure from the work equipment (by shifting the controls more than once).

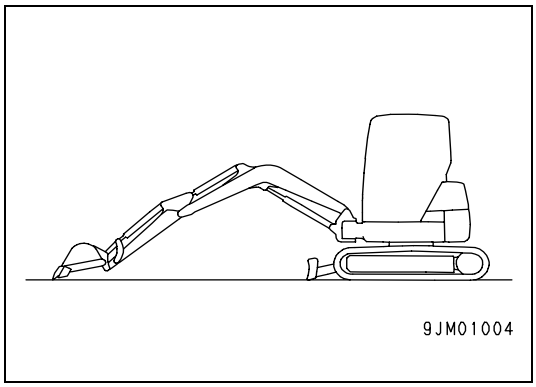

5. Shift the safety lever to the “locked” position (L).
6. Tilt the cab floor (see "3.2.8 TILTING THE CAB FLOOR").

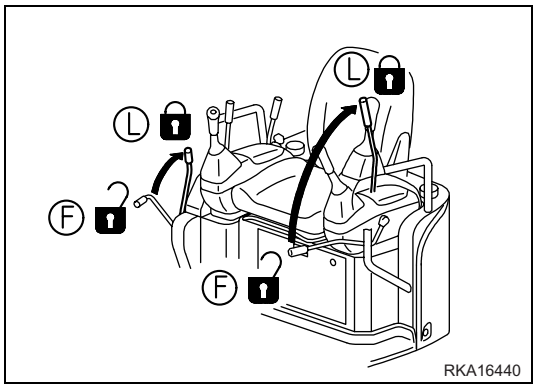

https://truckmanualshub.com/

7. Loosen the screws (1), remove the plate (2) and slowly loosen the filler cap (F) to release the residual pressure from the tank.
8. Remove the drain plug (2) and let the oil flow out, gathering it into a container with suitable capacity.

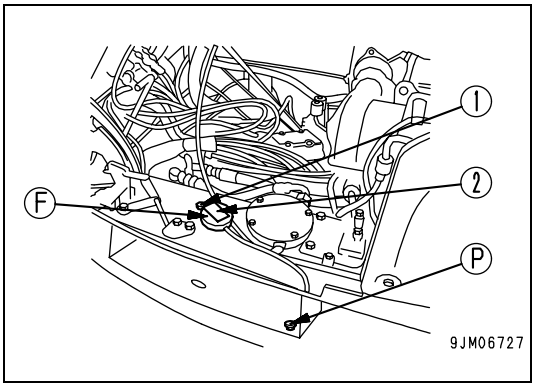

9. Loosen the clamps (3), remove the suction pipe (4) and let the oil that is still in the tank flow out.
10. Remove the screws (5), remove the flange (6) and clean the air intake filter (7).

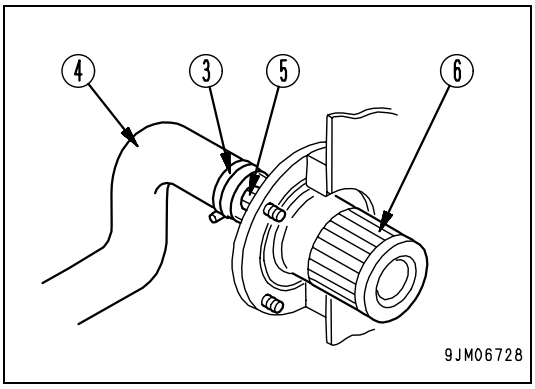

IMPORTANT

- **Carefully check the filtering element grid and if it is not in perfect conditions, change it.**

11. Put back the drain plug (P), the lower flange (6) with the filter (7), checking the soundness of the gasket, and the suction pipe (4) with the clamps (3).

12. Fill with prescribed oil until reaching the level (G).
    Use only oil of the prescribed type (see «4.4 FUEL, COOLANT AND LUBRICANTS »).
13. Close the cab floor.

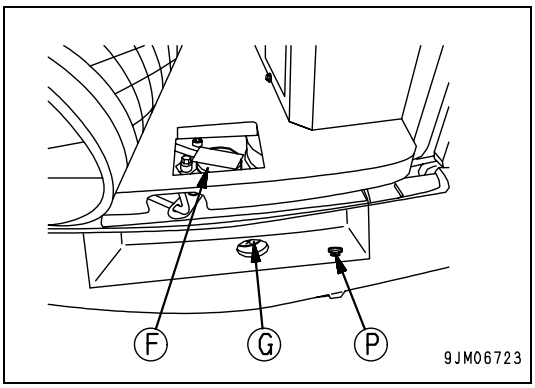

14. Extend the boom, arm and bucket cylinders completely, as shown in the figure, and remove the filler cap (F).
    Put back the cap and pressurize the tank by lowering the equipment to the ground.
15. Make sure that all the control levers are in neutral position and let the engine idle for at least 2÷3 minutes before operating the work equipment.
    Move each piston more than once to deaerate the system; check and top up if necessary.

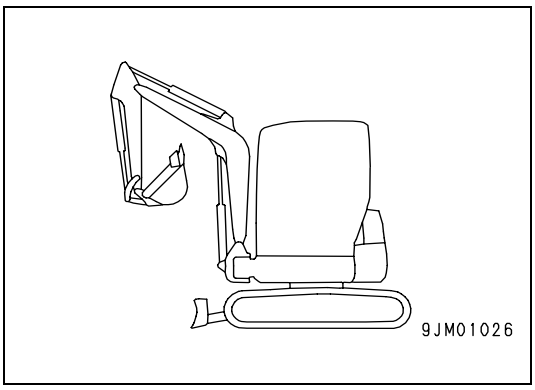

⚠ CAUTION

- **Do not start the engine with empty tank, since this would certainly damage the pump.**

https://truckmanualshub.com/

IMPORTANT

- **In machines equipped with breaker hydraulic oil deteriorates more rapidly than in machines used for simple digging operations.**
  Change the oil following the instructions given in the table.

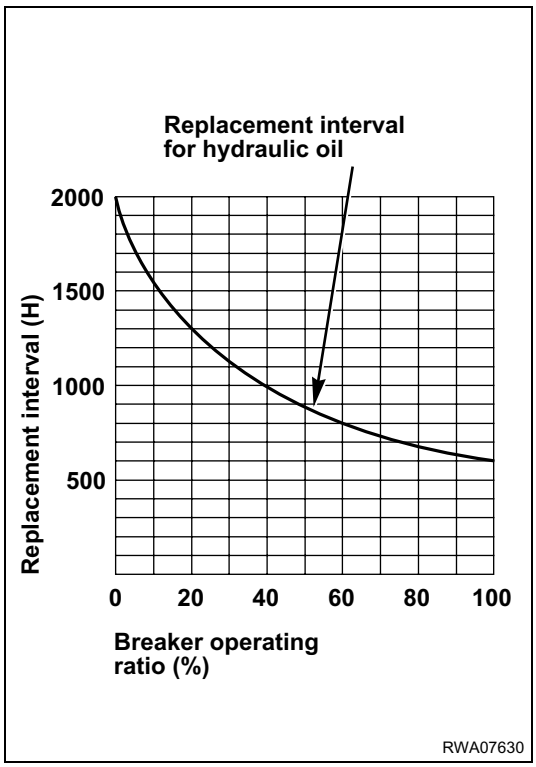

4.9.7.b CHANGING THE COOLANT

CAUTION

- **The coolant must be changed every 2000 hours of operation or every 2 years, whichever occurs first.**

WARNING

- **Soon after the machine has been stopped the coolant is very hot and under pressure and it may cause serious burns; let the engine cool down until it reaches approximately 40÷45°C before changing the coolant.**
- **Slowly loosen the radiator cap, in order to release any residual pressure.**
- **Oils, filters, the coolant and the battery are considered special waste and must be collected and disposed of according to the regulations in force.**

IMPORTANT

- **The change of the permanent coolant does not require any washing cycle for descaling the circuit.**

1. Open the engine hood and the radiator cover. For further details, see paragraphs "3.2.5 ENGINE HOOD" and "3.2.6 RADIATOR COVER".
2. Remove the screws (1) and remove the radiator cap panel on the right side of the machine.

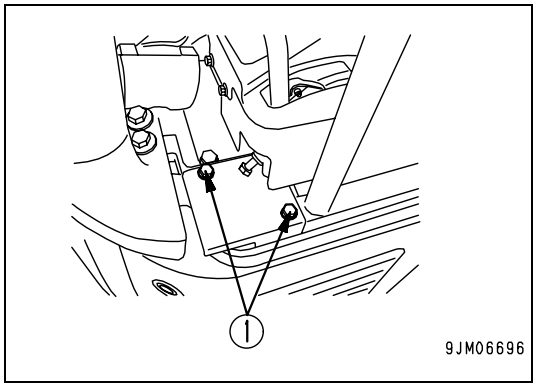

https://truckmanualshub.com/

3. Loosen and remove the upper cap (2) of the radiator.
4. Open the radiator drain valve (3), remove the drain plug (4) on the engine block and let the fluid flow out, gathering it in a container with suitable capacity. Drain the coolant tank (5) while the fluid flows out.
5. Close the drain valve (3), put back the plug (4) on the engine block and fill the radiator with new fluid (see "4.4 FUEL, COOLANT AND LUBRICANTS").
6. Start the engine and let it run at high idling speed for a few minutes; check the level again and top up before putting back the upper cap (2).
7. Fill the tank (5) until reaching the maximum level.
8. Put back the upper panel and close the covers.

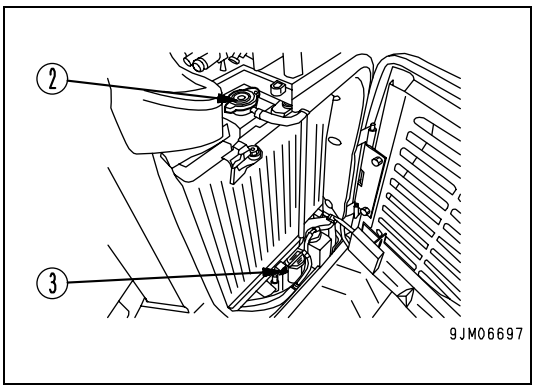

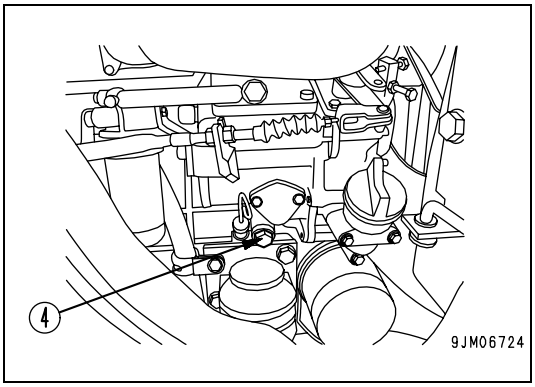

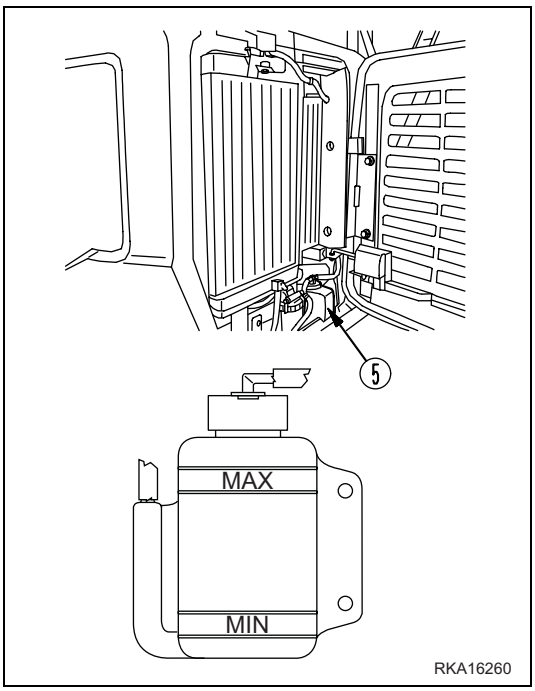

4.9.7.c CHECKING THE ALTERNATOR AND THE STARTER

The brush may be worn or the bearing may be without grease. Contact your Komatsu Dealer for the necessary inspection or repair. If the engine is started frequently, carry out this check every 1000 hours.

https://truckmanualshub.com/

TECHNICAL SPECIFICATIONS

https://truckmanualshub.com/

5.1 TECHNICAL DATA

		Unit of measurement	PC14R-2
	Operating weight (Operator included: 80 kg)	(kg)	1480
	Bucket capacity	(m3)	0,044
	Engine	-	Komatsu 3D67E-1A diesel engine
	Engine power	KW (HP)/rpm	11,2(15)/2600
A	Total length	mm	3380
B	Total height	mm	2310
C	Total width	mm	1000
D	Track width	mm	230
E	Swing radius	mm	825
F	Total length of the tracks	mm	1370
G	Tumbler distance	mm	1015
	Min. ground clearance	mm	205
	Travel speed	km/h (MPH)	2,0 (1,2)
	Swing speed	rpm	8,9

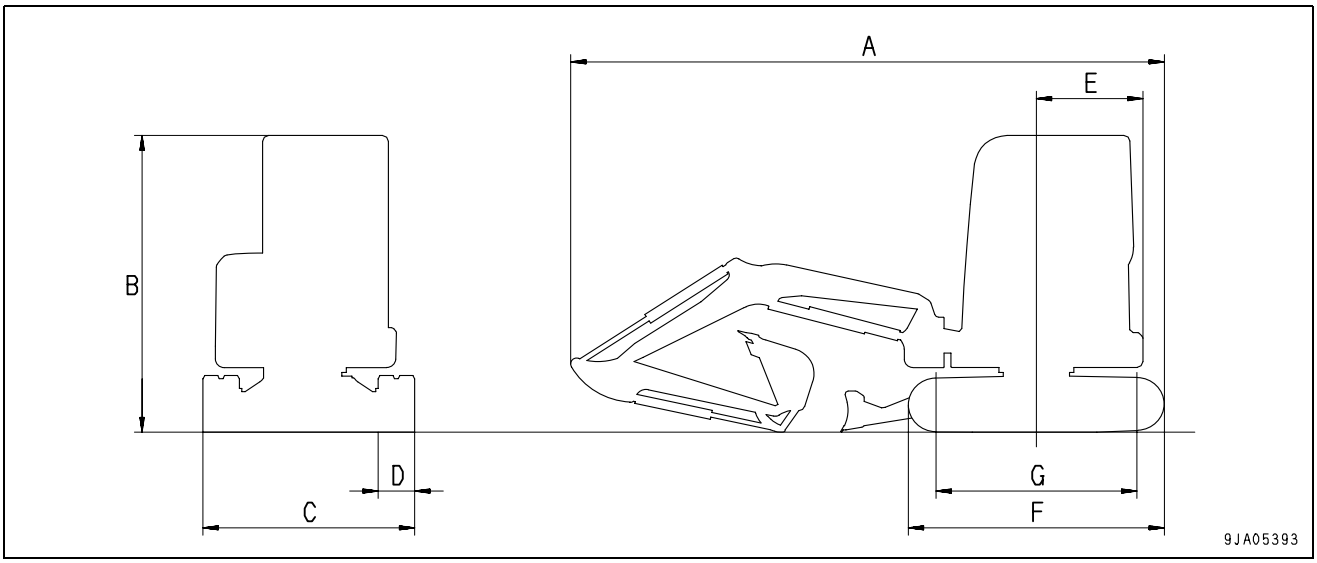

https://truckmanualshub.com/

	Operating characteristics	Unit of measurement	PC14R-2
A	Max. digging outreach	mm	3635
B	Max. digging depth	mm	2000
C	Max. digging height	mm	3285
D	Max. vertical wall digging depth	mm	1450
E	Max. dumping height	mm	2295
F	Work equipment min. swing radius	mm	1485
	Work equipment min. swing radius (with boom swing)	mm	1085
G	Max. outreach at ground level	mm	3545
H	Max. blade lifting height	mm	280
I	Max. blade working depth	mm	155

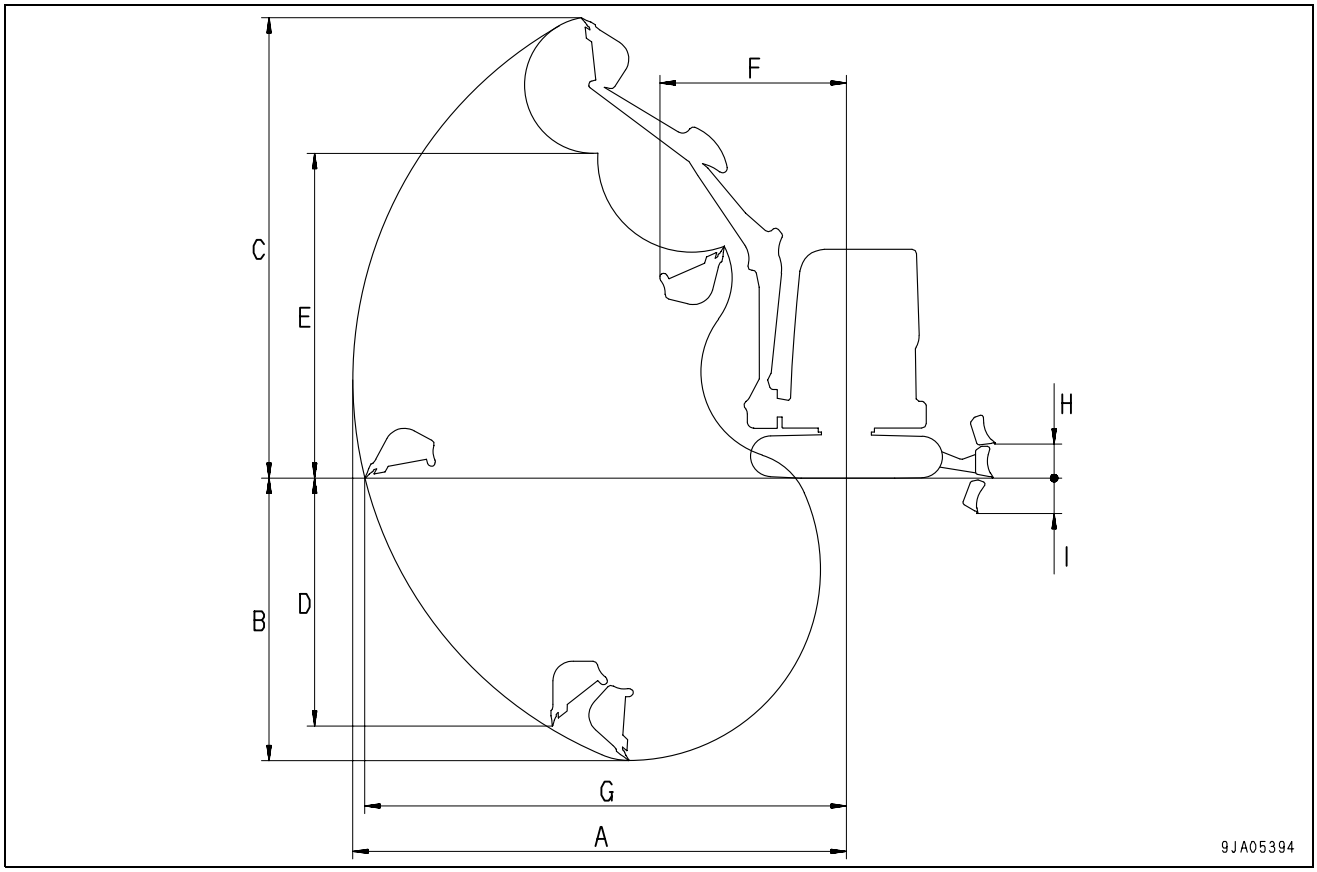

https://truckmanualshub.com/

5.2 LIFTING CAPACITIES

5.2.1 LIFTING CAPACITIES

DANGER

- **According to the harmonized standard EN474-5 (§ 4.1.7.5), the machine cannot lift weights exceeding 1000 kg, unless it is provided with appropriate equipment.**
- **Carry out lifting operations only with the machine positioned on firm and flat ground.**

NOTE

- The load does not exceed 87% of the hydraulic lifting capacity or 78% of the tipping limit.

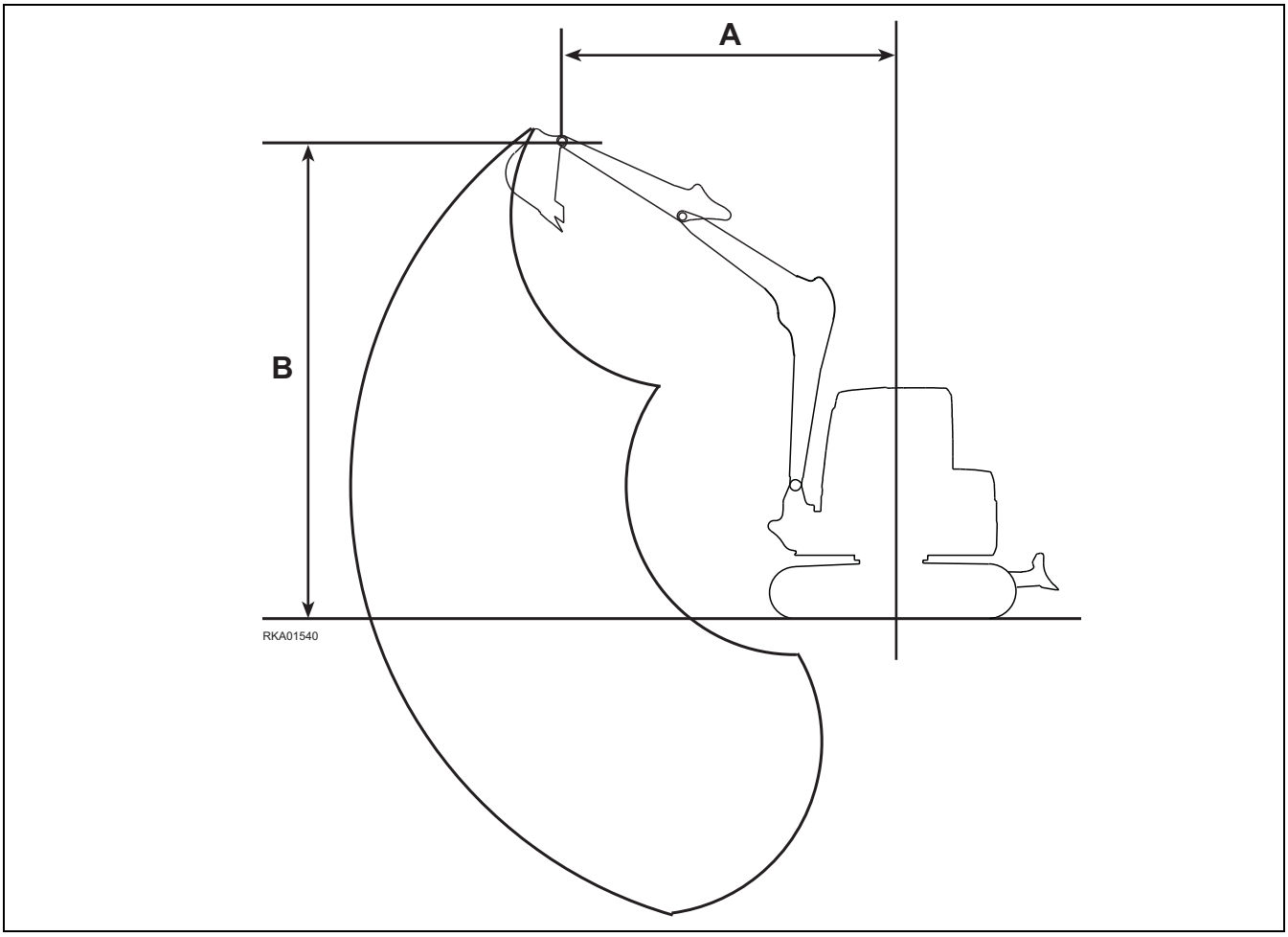

* Load limited by the hydraulic lifting capacity and not by the tipping limit.

ROPS CANOPY + STANDARD ARM + STANDARD COUNTERWEIGHT + LOWERED BLADE Unit: kg

A - / B-	1 m		1.5 m		2 m		2.5 m		3 m		3.5 m		Max.	
3.0 m					-	-	-	-	-	-	-	-	-	-
2.5 m					*220	*220	-	-	-	-	-	-	*229	*229
2.0 m					*225	*225	*218	200	-	-	-	-	*220	179
1.5 m					*276	*276	*235	198	-	-	-	-	*219	154
1.0 m					*353	267	*266	192	*222	143	-	-	*221	143
0.5 m					*411	255	*292	186	*227	141	-	-	*226	140
0 m			*661	374	*424	249	*299	182	-	-	-	-	*231	147
- 0.5 m	*970	728	*579	377	*389	248	*270	182	-	-	-	-	*234	167
- 1.0 m	*698	*698	*434	385	*293	253	-	-	-	-	-	-	*227	215
- 1.5 m					-	-	-	-	-	-	-	-	-	-

https://truckmanualshub.com/

ROPS CANOPY + STANDARD ARM + STANDARD COUNTERWEIGHT + RAISED BLADE Unit: kg

A / B	1 m		1.5 m		2 m		2.5 m		3 m		3.5 m		Max.	
3.0 m					-	-	-	-	-	-	-	-	-	-
2.5 m					*220	*220	-	-	-	-	-	-	*229	*229
2.0 m					*225	*225	*218	200	-	-	-	-	*220	179
1.5 m					*276	*276	*235	198	-	-	-	-	198	154
1.0 m					344	267	246	192	185	143	-	-	184	143
0.5 m					331	255	240	186	182	141	-	-	182	140
0 m			499	374	325	249	236	182	-	-	-	-	191	147
- 0.5 m	*970	728	503	377	325	248	236	182	-	-	-	-	216	167
- 1.0 m	*698	*698	*434	385	*293	253	-	-	-	-	-	-	*227	215
- 1.5 m					-	-	-	-	-	-	-	-	-	-

ROPS CANOPY + STANDARD ARM + ADDITIONAL COUNTERWEIGHT + LOWERED BLADE Unit: kg

A / B	1 m		1.5 m		2 m		2.5 m		3 m		3.5 m		Max.	
3.0 m					-	-	-	-	-	-	-	-	-	-
2.5 m					*220	*220	-	-	-	-	-	-	*229	*229
2.0 m					*225	*225	*218	*218	-	-	-	-	*220	215
1.5 m					*276	*276	*235	*235	-	-	-	-	*219	187
1.0 m					*353	318	*266	231	*222	175	-	-	*221	174
0.5 m					*411	306	*292	225	*227	173	-	-	*226	172
0 m			*661	448	*424	300	*299	221	-	-	-	-	*231	180
- 0.5 m	*970	864	*579	452	*389	300	*270	221	-	-	-	-	*234	203
- 1.0 m	*698	*698	*434	*434	*293	*293	-	-	-	-	-	-	*227	227
- 1.5 m					-	-	-	-	-	-	-	-	-	-

ROPS CANOPY + STANDARD ARM + ADDITIONAL COUNTERWEIGHT + RAISED BLADE Unit: kg

A / B	1 m		1.5 m		2 m		2.5 m		3 m		3.5 m		Max.	
3.0 m					-	-	-	-	-	-	-	-	-	-
2.5 m					*220	*220	-	-	-	-	-	-	*229	*229
2.0 m					*225	*225	*218	*218	-	-	-	-	*220	215
1.5 m					*276	*276	*235	*235	-	-	-	-	*219	187
1.0 m					*353	318	*266	231	221	175	-	-	*221	174
0.5 m					392	306	285	225	219	173	-	-	218	172
0 m			589	448	385	300	281	221	-	-	-	-	229	180
- 0.5 m	*970	864	*579	452	385	300	*270	221	-	-	-	-	*234	203
- 1.0 m	*698	*698	*434	*434	*293	*293	-	-	-	-	-	-	*227	227
- 1.5 m					-	-	-	-	-	-	-	-	-	-

ROPS CANOPY + LONG ARM + STANDARD COUNTERWEIGHT + LOWERED BLADE Unit: kg

A / B	1 m		1.5 m		2 m		2.5 m		3 m		3.5 m		Max.	
3.0 m					-	-	-	-	-	-	-	-	-	-
2.5 m					-	-	*182	*182	-	-	-	-	*187	*187
2.0 m					-	-	*178	*178	-	-	-	-	*184	151
1.5 m					*220	*220	*199	197	*187	144	-	-	*185	132
1.0 m					*302	268	*235	190	*201	141	-	-	*189	123
0.5 m					*377	253	*270	182	*214	137	-	-	*194	121
0 m			*679	365	*413	243	*290	177	*218	135	-	-	*200	125
- 0.5 m	*1252	703	*630	365	*403	240	*281	175	-	-	-	-	*205	139
- 1.0 m	*977	715	*518	371	*341	242	*226	177	-	-	-	-	*208	170
- 1.5 m			*310	*310	-	-	-	-	-	-	-	-	*191	*191

https://truckmanualshub.com/

ROPS CANOPY + LONG ARM + STANDARD COUNTERWEIGHT + RAISED BLADE Unit: kg

A / B	1 m		1.5 m		2 m		2.5 m		3 m		3.5 m		Max.	
3.0 m					-	-	-	-	-	-	-	-	-	-
2.5 m					-	-	*182	*182	-	-	-	-	*187	*187
2.0 m					-	-	*178	*178	-	-	-	-	*184	151
1.5 m					*220	*220	*199	197	186	144	-	-	171	132
1.0 m					*302	268	*235	190	183	141	-	-	161	123
0.5 m					330	253	237	182	179	137	-	-	158	121
0 m			491	365	319	243	231	177	176	135	-	-	164	125
- 0.5 m	1015	703	491	365	316	240	228	175	-	-	-	-	182	139
- 1.0 m	*977	715	497	371	318	242	*226	177	-	-	-	-	*208	170
- 1.5 m			*310	*310	-	-	-	-	-	-	-	-	*191	*191

ROPS CANOPY + LONG ARM + ADDITIONAL COUNTERWEIGHT + LOWERED BLADE Unit: kg

A / B	1 m		1.5 m		2 m		2.5 m		3 m		3.5 m		Max.	
3.0 m					-	-	-	-	-	-	-	-	-	-
2.5 m					-	-	*182	*182	-	-	-	-	*187	*187
2.0 m					-	-	*178	*178	-	-	-	-	*184	183
1.5 m					*220	*220	*199	*199	*187	176	-	-	*185	162
1.0 m					*302	*302	*235	229	*201	173	-	-	*189	152
0.5 m					*377	304	*270	222	*214	169	-	-	*194	150
0 m			*679	440	*413	295	*290	216	*218	166	-	-	*200	156
- 0.5 m	*1252	839	*630	440	*403	292	*281	214	-	-	-	-	*205	171
- 1.0 m	*977	850	*518	445	*341	294	*226	216	-	-	-	-	*208	*208
- 1.5 m			*310	*310	-	-	-	-	-	-	-	-	*191	*191

ROPS CANOPY + LONG ARM + ADDITIONAL COUNTERWEIGHT + RAISED BLADE Unit: kg

A / B	1 m		1.5 m		2 m		2.5 m		3 m		3.5 m		Max.	
3.0 m					-	-	-	-	-	-	-	-	-	-
2.5 m					-	-	*182	*182	-	-	-	-	*187	*187
2.0 m					-	-	*178	*178	-	-	-	-	*184	183
1.5 m					*220	*220	*199	*199	*187	176	-	-	*185	162
1.0 m					*302	*302	*235	229	*201	173	-	-	*189	152
0.5 m					*377	304	*270	222	*214	169	-	-	191	150
0 m			581	440	380	295	276	216	213	166	-	-	199	156
- 0.5 m	1193	839	581	440	377	292	274	214	-	-	-	-	*205	171
- 1.0 m	*977	850	*518	445	*341	294	*226	216	-	-	-	-	*208	*208
- 1.5 m			*310	*310	-	-	-	-	-	-	-	-	*191	*191

https://truckmanualshub.com/

AUTHORISED OPTIONAL EQUIPMENT

https://truckmanualshub.com/

6.1 AUTHORIZED OPTIONAL EQUIPMENT

CAUTION

- **When installing and using optional equipment, carefully read the relevant manual and keep to the instructions given therein.**
- **Use only optional or special equipment recommended and approved by Komatsu and in compliance with the requirements indicated (see "6.1.3 CHARACTERISTICS OF THE OPTIONAL EQUIPMENT").**
- **Komatsu cannot be held liable for any injury, damage or product failure resulting from the installation and use of unauthorized equipment.**

6.1.1 PRECAUTIONS REGARDING SAFETY

If attachments or optional equipment other than those authorized by Komatsu are installed, this will not only affect the life of the machine, but will also cause safety problems.
Before installing attachments not listed in this manual, contact your Komatsu Dealer.
Komatsu declines any responsibility for accidents or failures due to the use of unauthorized equipment.

WARNING

- **When removing or installing any equipment, take the following precautions and be careful to ensure that operations are carried out in total safety.**
- **Carry out installation and removal on a firm and flat surface.**
- **When the operations are carried out by two or more operators, decide the communication signals in advance and respect them during work.**
- **Use a crane to handle objects weighing more than 25 kg.**
- **Always support any heavy part of the machine before removing it. When lifting heavy parts, be always careful to the position of their centre of gravity.**
- **It is dangerous to carry out any operation with suspended loads. Always position the load on a suitable support and make sure that it is stable.**
- **When installing or removing any equipment, make sure that it is stable and cannot fall down.**
- **Never stand under loads being lifted by a crane.**
  Take care to choose a safe position, in such a way as to avoid any risk in case the load should fall down.

IMPORTANT
- **Cranes must be operated by specialized personnel. Do not allow untrained personnel to use cranes.**

For further details regarding installation and removal operations, contact your Komatsu Dealer.

https://truckmanualshub.com/

6.1.2 PRECAUTIONS REGARDING THE INSTALLATION OF EQUIPMENT

⚠ WARNING

- **The installation of long or heavy work equipment may affect the stability of the machine. Therefore, be particularly careful when moving down a steep slope or when swinging the equipment on a slope, since the machine may lose its balance and overturn.**
- **Avoid carrying out the following operations, since they are particularly dangerous.**

1. **Travelling downhill with lifted equipment.**

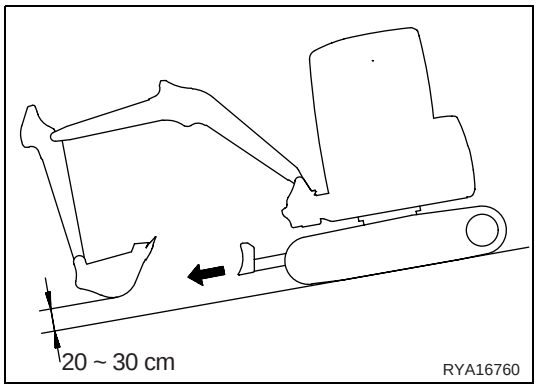

2. **Crossing slopes transversally.**

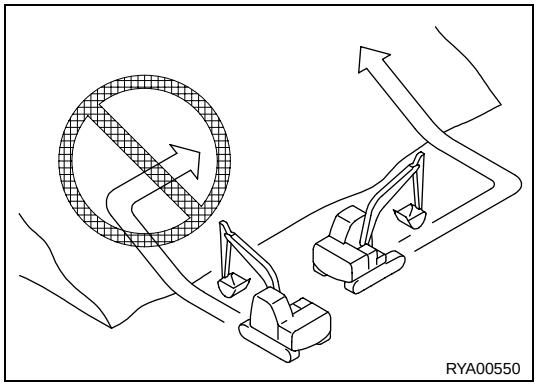

3. **Swinging the turret on slopes.**

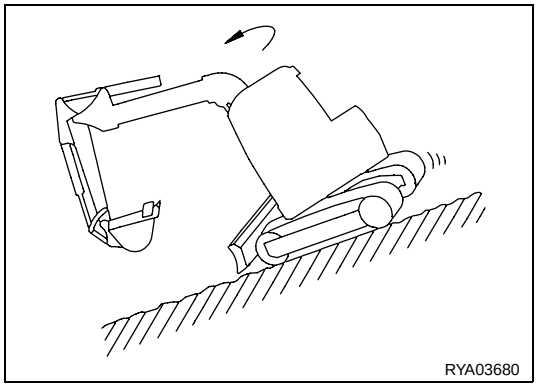

- **When work equipment with overall dimensions exceeding those of the standard equipment is installed, be particularly careful, since more space is necessary for manoeuvring the equipment and for swinging the turret.**
- **Always follow the correct procedure when installing the boom and the arm.**
  Any incorrect procedure may lead to serious risks; contact your Komatsu Dealer before installation.

https://truckmanualshub.com/

6.1.3 CHARACTERISTICS OF THE OPTIONAL EQUIPMENT

6.1.3.1 CHARACTERISTICS OF THE OPTIONAL EQUIPMENT

(Specific weight of the handled material = 1.8 t/cu m)

EQUIPMENT	MAX. WEIGHT (kg)	MAX. DIMENSIONS		MAX. CAPACITY SAE (m^3)	MAX. OPERATING PRESSURE (bar)	MAX. FLOW RATE (l/min.)
		Width (mm)	**Height** (mm)			
Backhoe bucket	26	400	–	0,055	–	–
Ditch-cleaning bucket	24	1000	–	0,040	–	–
Ditch-digging bucket	24	800	–	0,045	–	–
Clamshell bucket	60	250	900	0,020	150	20
Hydraulic breaker	90	–	815	–	110	25
Drill	75	★ 200	● 1000	–	150	25

★ Measure referred to the tool diameter

● Measure referred to the tool length

https://truckmanualshub.com/

6.2 MACHINE CONFIGURATION FOR THE INSTALLATION OF ATTACHMENTS

6.2.1 POSITION OF THE DEVICES

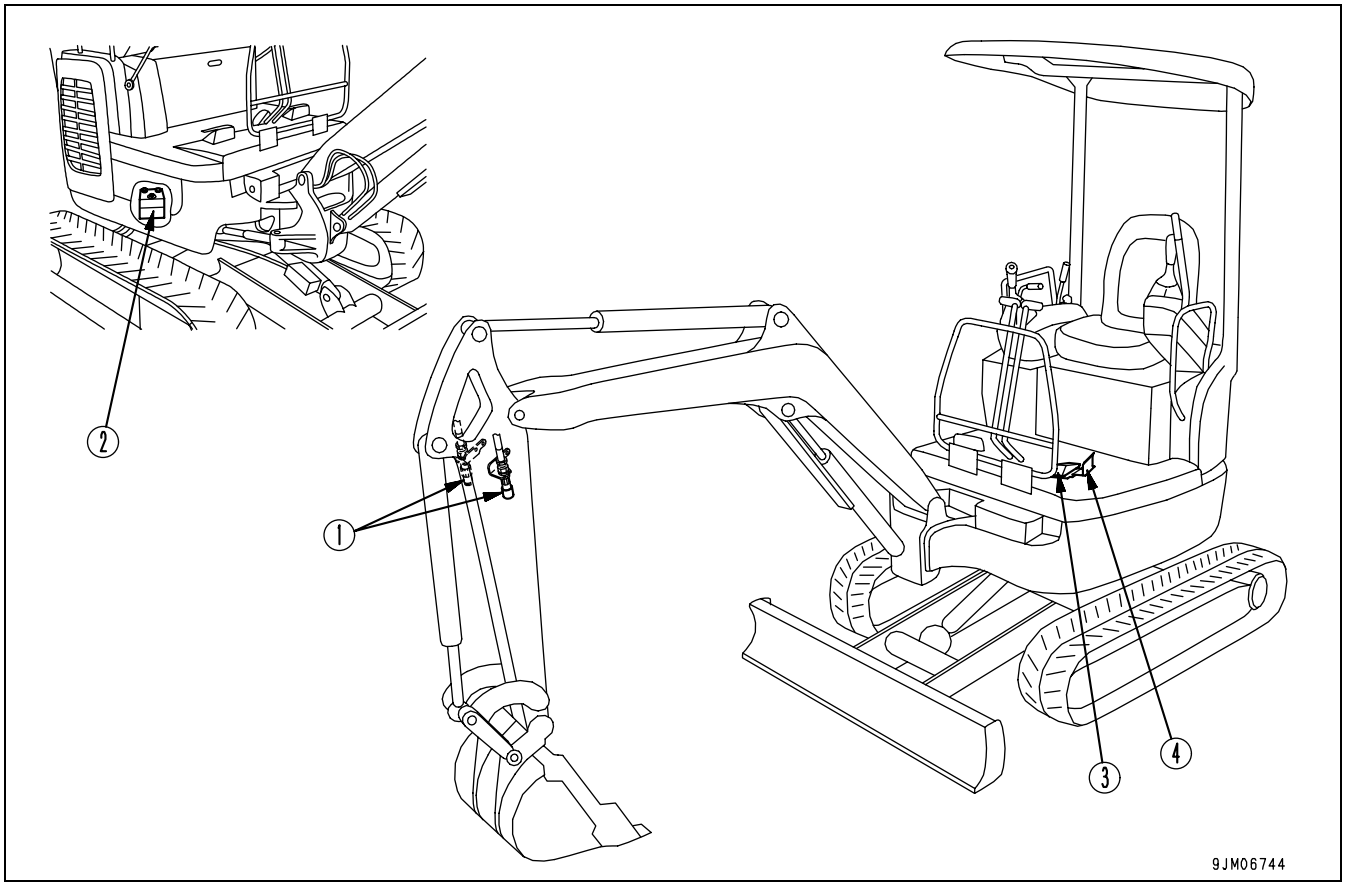

(1) Quick couplers
(2) Selection valve
(3) Optional equipment control pedal
(4) Pedal locking device (for the optional equipment control pedal)

1. Quick couplers

The quick couplers (1) are used to connect the pipes to the ends of the equipment.
When removing the equipment, protect the quick couplers with the plugs (A).
When installing the equipment, remove the plugs (A) and carefully clean the quick couplers before connecting them to the pipes.

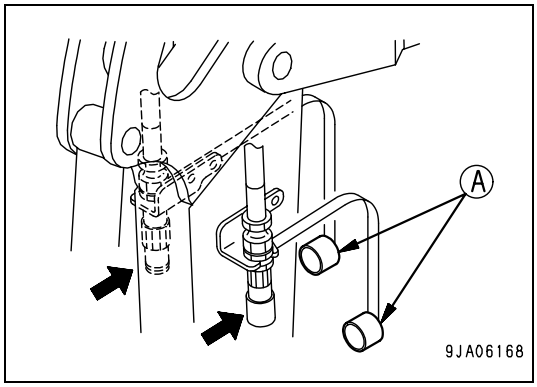

https://truckmanualshub.com/

2. Selection valve

The selection valve (2) regulates the flow of the hydraulic oil and has two positions.

- Position (a): for applications requiring the use of the generic equipment. Spool (A) completely rotated counterclockwise.
- Position (b): for applications requiring the use of the hydraulic breaker. Spool (A) completely rotated clockwise.

Width across face of square portion of spool (A):
9 mm

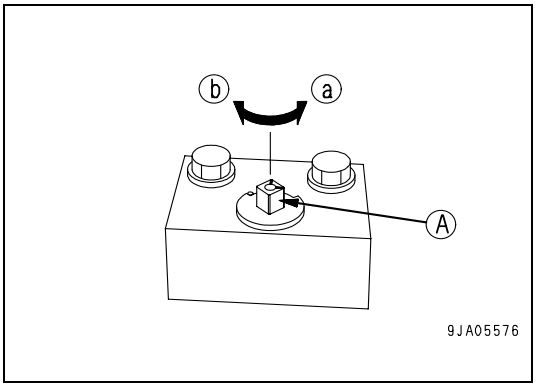

3. Optional equipment control pedal

The pedal (3) controls oil delivery to and return from the optional equipment.

- Upper part of the pedal (A) pressed:
  The oil flows to the right side of the arm (hydraulic tank side).
- Lower part of the pedal pressed (B):
  The oil flows to the left side of the arm (operator seat side).

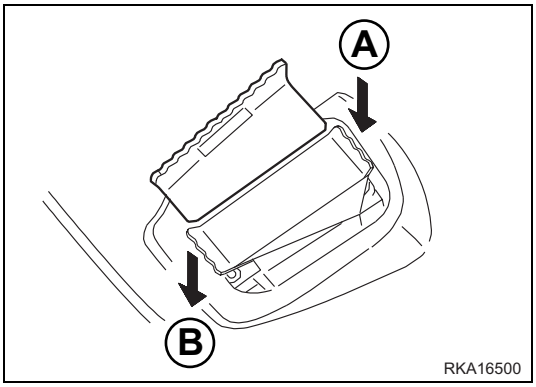

4. Pedal locking device
(for the optional equipment control pedal)

⚠ WARNING

- **Always lock the optional equipment control pedal when the use of this control is not required, during travel and when parking the machine. If the control pedal is inadvertently pressed, this may cause serious accidents.**

The safety device (4) is used to lock the optional equipment control pedal.

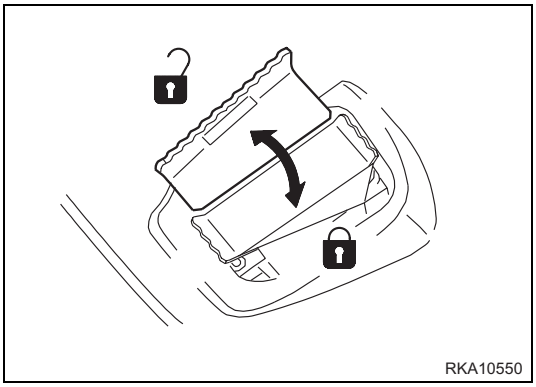

https://truckmanualshub.com/

6.2.2 HYDRAULIC CIRCUIT

6.2.2.1 INSTALLING AND CONNECTING THE EQUIPMENT

WARNING

- **The machine must be parked on a level surface, with the equipment resting on the ground.**
- **When the connecting pins are removed or installed, chips may come off; always wear gloves, safety goggles and helmet.**
- **The change of the equipment must be carried out by two operators, who must decide together the words and signals to be used during work.**
- **Avoid using your fingers to align the holes, since the may be injured or even cut off.**
- **Before carrying out any operation on the hydraulic circuit, stop the engine and completely drain the residual pressure from the pipes.**

For the installation of the equipment it is necessary to connect the mechanical constraints of the bucket as described in "3.3.14 CHANGING THE BUCKET" and to carry out the hydraulic connections using the pipes provided.
After connecting the mechanical constraints, carry out the hydraulic connections by proceeding as follows:

1. Stop the engine and move the hydraulic controls in all directions, in order to release the residual pressures present in the circuits of the machine.
2. Press the optional equipment control pedal to release the residual pressure from the delivery pipe.
3. Slowly loosen the hydraulic oil filling cap, in such a way as to release the residual pressure from the tank.
4. Remove the plugs of the quick couplers of both the machine and the equipment.
5. Connect the right (1) and left (2) pipes.

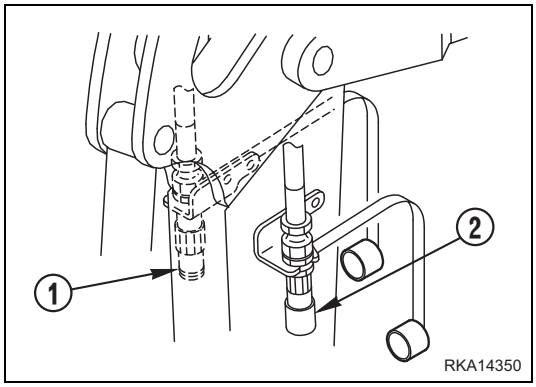

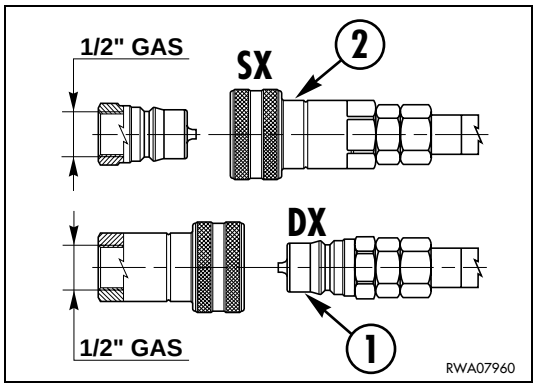

CAUTION

- **When connecting the pipes, pay the utmost attention, in order to prevent any impurities from getting into them, then extend the bucket completely to avoid any interference with the lever (A).**

6. Start the machine and perform several manoeuvres with the equipment control pedal, in order to check the seals.

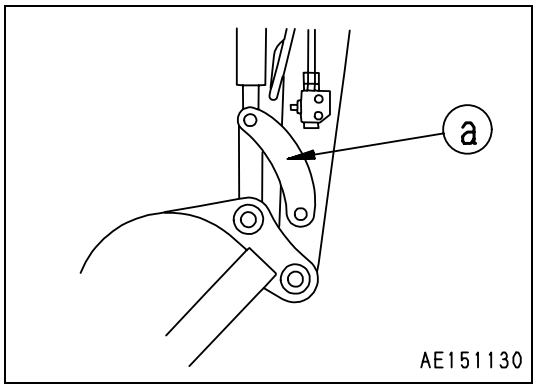

WARNING

- **Wear thick gloves and safety goggles during this check.**
- **To check the system for leakages, use a piece of cardboard or a wooden board.**

6.2.2.2 MAINTENANCE

The hydraulic system does not require any operation and inspection other than those prescribed for the routine maintenance of the machine. Regarding the maintenance operations required for the equipment, see the specific operation manuals.

https://truckmanualshub.com/

6.2.2.3 BLEEDING

1. After connecting the pipes, start the engine and let it idle for approximately 10 minutes (see "3.3.2 STARTING THE ENGINE").
2. Extend all cylinders 4-5 times, stopping them at approx. 100 mm from the end of stroke.

IMPORTANT

- **If the engine runs at maximum rpm or if the cylinders are brought to the end of stroke soon after starting, the air sucked in by the cylinders may damage the piston gaskets.**

3. Slowly make all cylinders reach the end of stroke for 3-4 times.
4. Press the optional equipment control pedal a dozen times to bleed the equipment circuit completely.

IMPORTANT

- **If the equipment bleeding procedure is explained in the specific manual of the equipment supplied by its manufacturer, follow the instructions contained therein.**

5. Once the bleeding operation has been completed, stop the engine and wait at least 5 minutes before starting work.
6. Make sure that there are no oil leakages and clean any dirty surface.

https://truckmanualshub.com/

6.3 OPERATING THE EQUIPMENT

WARNING

- **Always lock the optional equipment control pedal when the use of this control is not required, during travel and when parking the machine. If the control pedal is inadvertently pressed, this may cause serious accidents.**

USING THE HYDRAULIC BREAKER

The breaker is operated by pressing the lower part of the equipment control pedal (B).

NOTE

- If it is necessary to adjust the oil flow, have this operation carried out by your Komatsu Dealer.

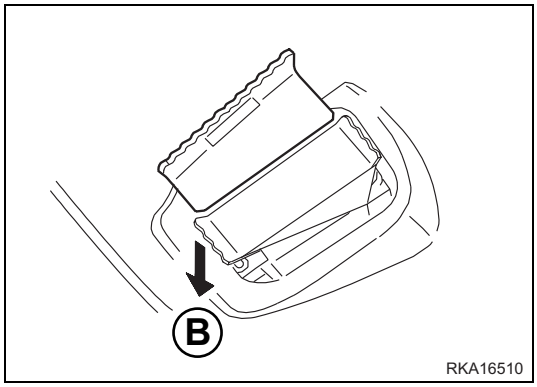

Precautions for use

- Before using the breaker, make sure that the spool of the selection valve (1) is completely rotated clockwise and resting against its retainer, position (b).
- When using the breaker, shift the accelerator almost to max. idling and keep it in this position during work (position corresponding approximately to 80% of the engine maximum power).
- When the hydraulic breaker is used, the hydraulic oil deteriorates more quickly and therefore it is necessary to change the filtering element more frequently. For details, see paragraph "4.8.2 MAINTENANCE INTERVALS IN CASE OF USE OF THE HYDRAULIC BREAKER".
- For further details and other precautions to be taken when handling the hydraulic breaker, carefully read the instruction manual provided by its manufacturer.

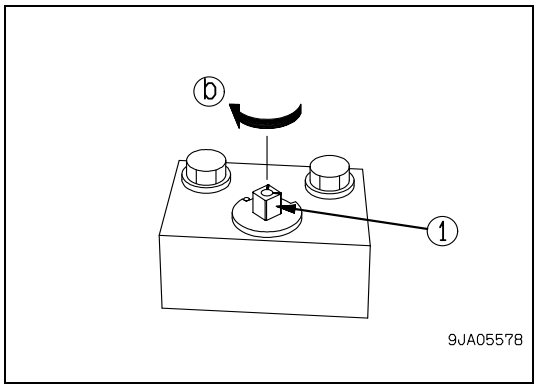

https://truckmanualshub.com/

USE OF GENERIC EQUIPMENT SUCH AS THE CRUSHER

Generic equipment is operated by pressing the equipment control pedal as indicated below.

Upper part (A) pressed: the oil flows to right side of the arm (hydraulic tank side).

Lower part (B) pressed: the oil flows to the left side of the arm (operator seat side).

NOTE

- If it is necessary to adjust the oil flow, have this operation carried out by your Komatsu Dealer.

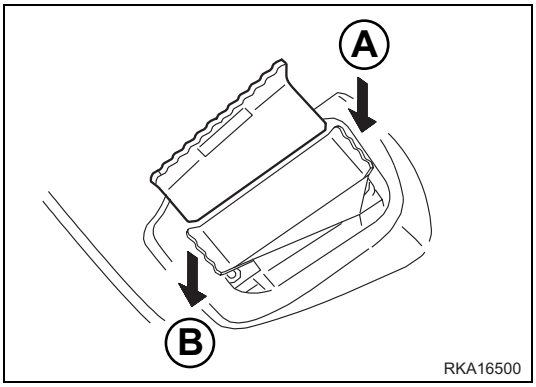

Precautions for use

- Before using a crusher or other generic equipment, make sure that the spool of the selection valve (1) is completely rotated counterclockwise and resting against its retainer, position (a).
- For further details and other precautions to be taken when handling the equipment, carefully read the instruction manual provided by its manufacturer.

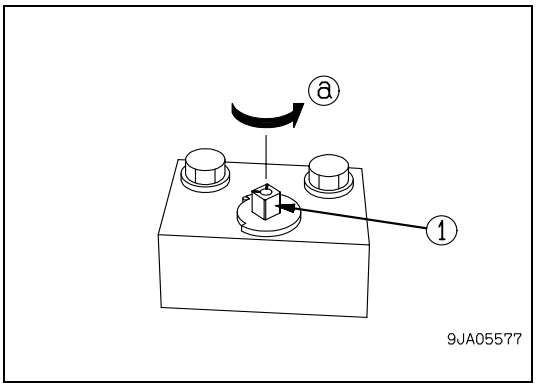

6.3.1 LONG PERIODS OF INACTIVITY

If the machine is going to remain unused for a long period, proceed as indicated below.

- Put the plug on the quick couplers.
- Set the selection valve to the position indicated for generic equipment such as the crusher.
- Lock the equipment control pedal with the apposite locking device.

Operating the pedal when neither the breaker, nor generic equipment are installed on the machine may cause overheating or other problems.

https://truckmanualshub.com/

6.4 PRECAUTIONS TO BE TAKEN WHEN USING OPTIONAL EQUIPMENT

The instructions given below must be strictly followed when the hydraulic excavator is fitted with a piece of equipment.

IMPORTANT

- **Choose the type of equipment that is most suitable to the hydraulic excavator on which it must be installed.**
- **Use only optional or special equipment recommended and approved by Komatsu and in compliance with the requirements indicated (see "6.1.3 CHARACTERISTICS OF THE OPTIONAL EQUIPMENT").**

6.4.1 HYDRAULIC BREAKER

⚠ WARNING

- **The hydraulic breaker is very noisy, therefore always wear ear muffs when using it.**

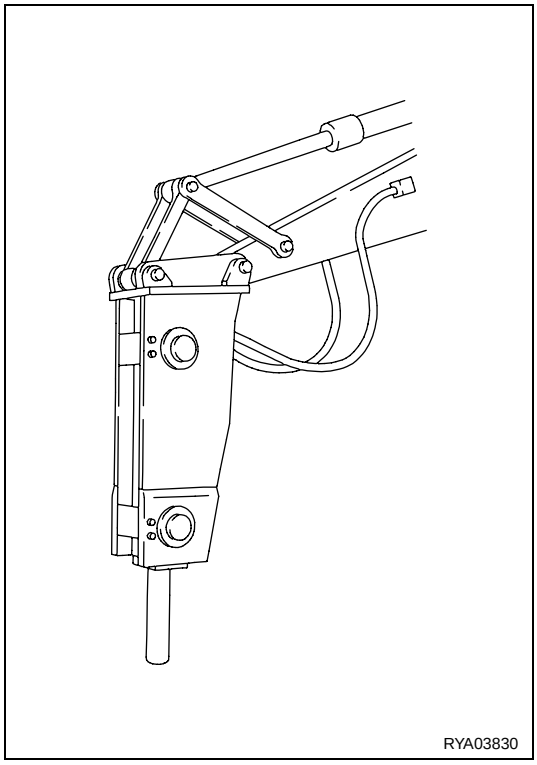

MAIN APPLICATIONS

- Crushing rocks
- Demolition work
- Road construction

This attachment can be used for a wide range of applications, including demolition of buildings, breaking up of road surfaces or debris, tunnel work, rock crushing and breaking operations in quarries.

HOW TO USE THE BREAKER CORRECTLY

1. Make sure that the position of the breaker with respect to the material to be broken is as perpendicular as possible and that the arm thrust is sufficient, so that all the power of the breaker can be exploited.

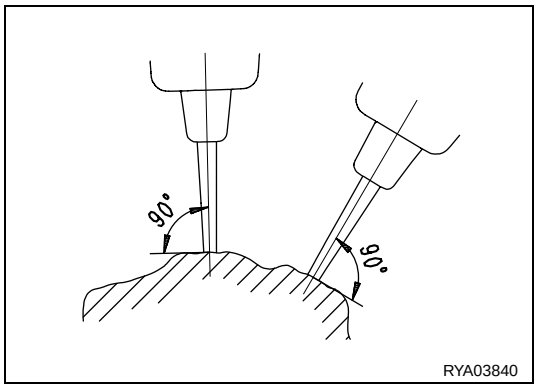

https://truckmanualshub.com/

2. It is absolutely necessary to keep the pressure of the excavator on the breaker constant as the bit penetrates the ground.
   Always accompany the breaker as it penetrates and use the excavator arms to obtain such a pressure as to keep the undercarriage lifted approx. 5 cm from the ground.
   Avoid lifting the undercarriage more than necessary.

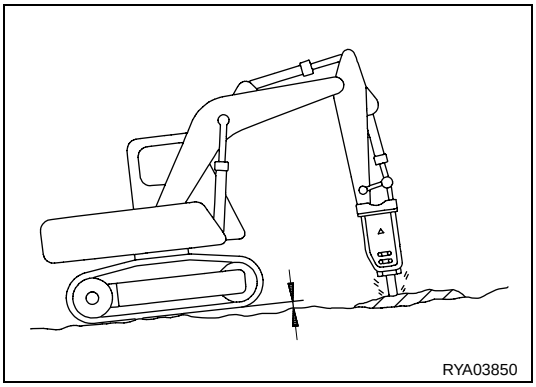

3. When working on very hard materials it is important to avoid hitting the same point for more than 30 seconds.
   Hit the same point for a few seconds and change position continuously: in this way the material breaks more easily.

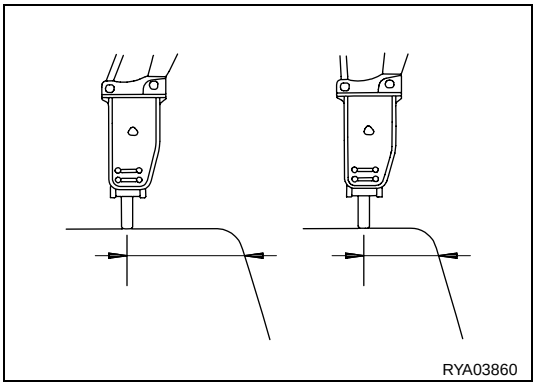

4. To facilitate the sliding of the tool on its seat, check the thrust direction and always correct the hitting position of the breaker using the bucket and arm control.

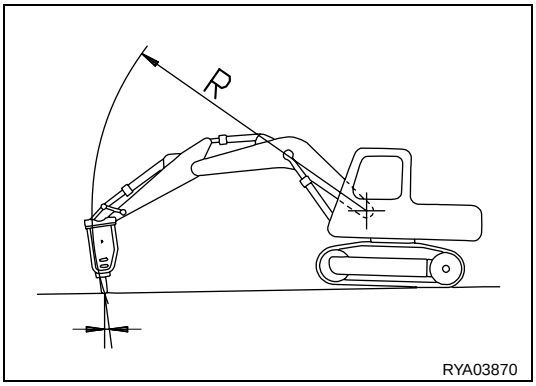

5. Always make sure that the thrust is optimal, in order to avoid dangerous and useless strokes.

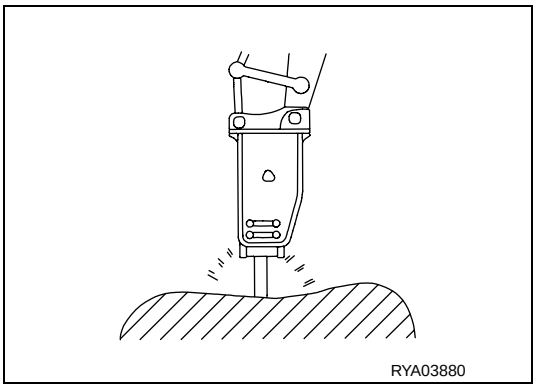

https://truckmanualshub.com/

ALWAYS AVOID THE FOLLOWING INCORRECT USES:

To ensure long machine life and safe work, the following operations should be avoided.

IMPORTANT

- **During work, do not use the hydraulic breaker with the bucket cylinder at the end of stroke, but always leave a minimum space of 5 cm.**

1. Gathering or moving stones with the hydraulic breaker.

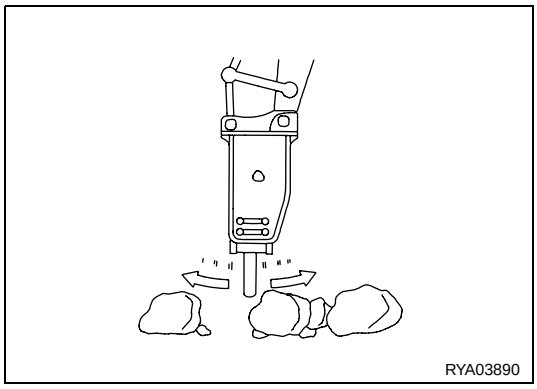

2. Swinging the turret while using the breaker.

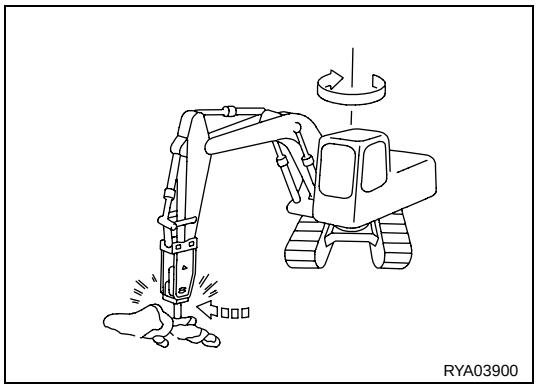

3. Moving the tool while it is hitting the material to be broken.

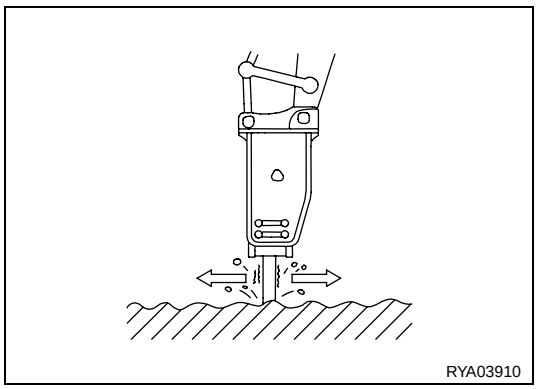

4. Working with the breaker in horizontal position or even more inclined.

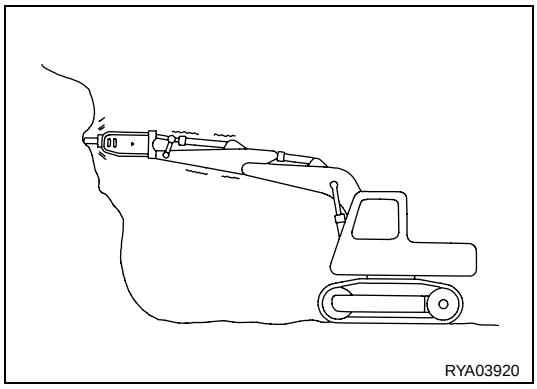

https://truckmanualshub.com/

5. Levering with the tool after driving it into the material to be broken.

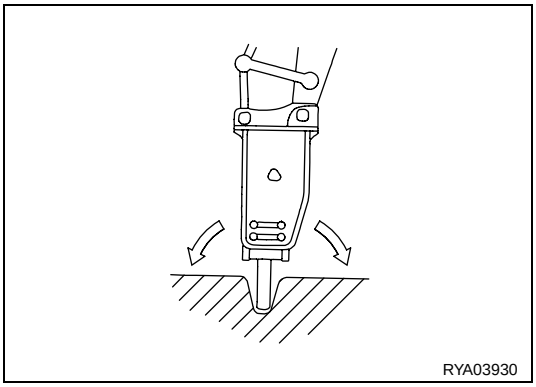

6. Hitting the ground with the breaker bit.

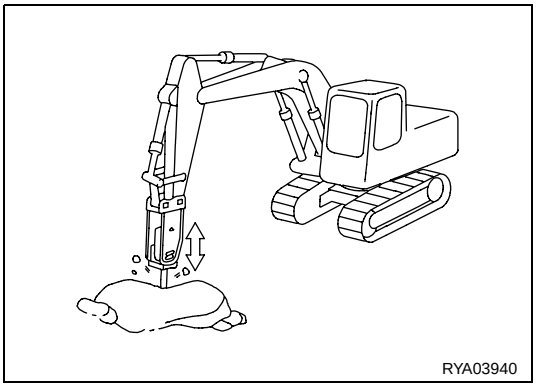

7. Lifting the machine by levering on the breaker bit with the bucket cylinder completely extended.

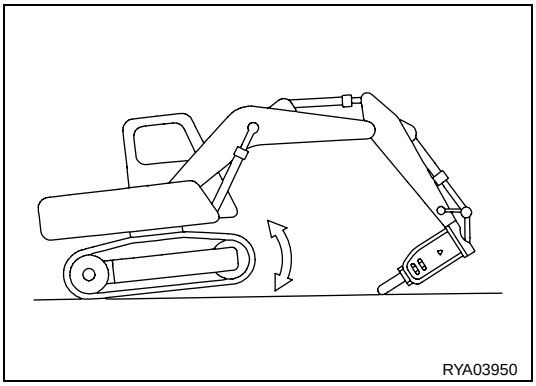

https://truckmanualshub.com/

GREASING

Supply grease in the correct position.

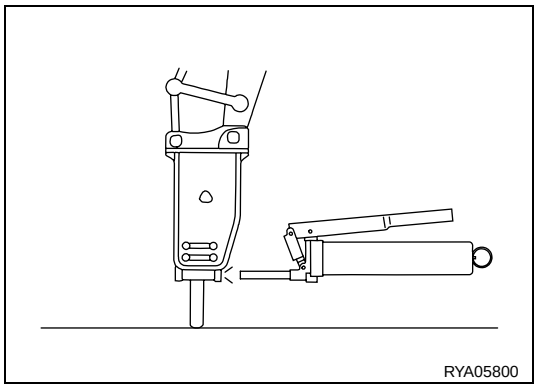

IMPORTANT

- **If grease is injected with the breaker in the wrong position, the breaker circuit will receive more grease than necessary. As a result, soil and sand may get into the hydraulic circuit and damage the hydraulic components while the breaker is being used.**
  Therefore, make sure to carry out the greasing operation with the breaker in the correct position.

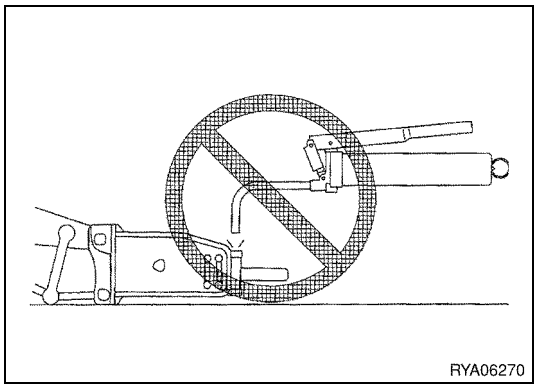

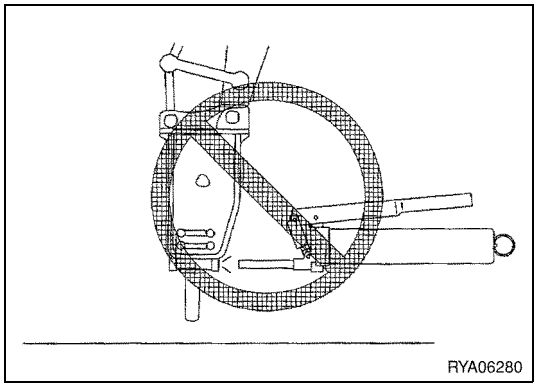

https://truckmanualshub.com/

THIS PAGE WAS INTENTIONALLY LEFT EMPTY

https://truckmanualshub.com/

https://truckmanualshub.com/

© 2005 KOMATSU UTILITY EUROPE S.p.A.
All Rights Reserved
Printed in Europe