300X4

SAE Net Horsepower: 207 HP (154 kW)
Operating Weight: 67,000 lbs. (30 400 kg)
Digging Depth: 23 ft 4 in (7.10 m)

SPECIFICATIONS

Link-Belt
EXCAVATORS

https://truckmanualshub.com/

Performance, Productivity and Reliabilty Come Standard

Link-Belt X4 Series excavators are built to exceed your expectations. We redesigned the control spools and incorporated spool stroke control (SSC) functions into the hydraulic system to reduce pressure loss and distribute hydraulic oil more smoothly, decreasing cycle times by up to 12%. Expect more power and fuel efficiency, thanks to an innovative Final Tier 4 engine that delivers up to 4% improved fuel consumption, **without a Diesel Particulate Filter (DPF) to maintain or replace!** Settle in to the roomiest, most accommodating cab in its class, with more legroom and a new high-back, heated seat for shift-long comfort. Daily maintenance is a snap, with ground-level access to all service points, easily opened by hand.

https://truckmanualshub.com/

Innovation and Attention to Details at Every Level

- Three power modes (Speed Priority, Heavy and Applied Power) let you **choose the best blend of power, precision and fuel savings** for the work you're doing

- EPA Final Tier 4 engine is **fuel efficient without sacrificing power**

- **No DPF** to ever worry about!
- 2-3% DEF (Diesel Exhaust Fluid) consumption rate relative to fuel consumption, combined with one of the largest DEF tank capacities lets you work long hours between refills

- Ground level access to routine service points lets you **cut daily maintenance down to just minutes**

- Quiet, pressurized cab offers **excellent visibility and comfortable, best-in-class seating**
- Enough floor space to **accommodate the largest of work boots**, with cup holders and roomy storage compartments for cell phones, snacks and other personal items

- Dual cab working lights are standard, or choose optional LEDs for **added visibility**

- Ergonomic joysticks **fit your hand perfectly**

- 7" high-definition LCD monitor **keeps you connected to your machine and work environment**
- RemoteCARE® telematics **keeps a watchful eye** on performance, maintenance intervals and theft deterrence

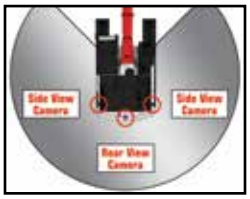

- Full-time, rear-view camera display is standard; add the WAVES™ option for a **seamless 270° view around the machine**
- Structural improvements to the boom and arm **reduce stress and provide greater durability**

- Robust undercarriage features **larger track rollers and thicker plating for longer life**
- Unique side-frame design **reduces dirt accumulation** and is **easier to clean**

**All improvements and percentage increases are in reference to Link-Belt X3 Series excavators, unless otherwise stated*

https://truckmanualshub.com/

Quick and Responsive to Take On Tough Challenges

https://truckmanualshub.com/

Greater digging power and increased lift capacities are the result of our innovative Spool Stroke Control (SSC) system, which reduces pressure loss and distributes hydraulic oil more smoothly. Pilot pressure sensors detect the type of work being done-such as digging or leveling-and then relays that data to proportional solenoid valves that quickly determine where optimal hydraulic pressures should be directed for that operation.

Two electronically-controlled Kawasaki variable-displacement axial-piston pumps and one Kawasaki gear pump assure that hydraulic power is delivered precisely when and where it's needed. At the same time, hydraulic flows in noncritical areas of the system are reduced.

The result is better breakout force, more lifting strength and faster machine response. You'll dig, swing and dump quicker than ever before... with up to 12% faster cycle times and improved fuel efficiency!

- Proprietary hydraulic system
- New control valve with larger ports; less restriction means improved hydraulic flow for increased performance
- Electronically-controlled pumps for improved cycle times, quicker response and more efficient machine operation
- Move more dirt per gallon of fuel

https://truckmanualshub.com/

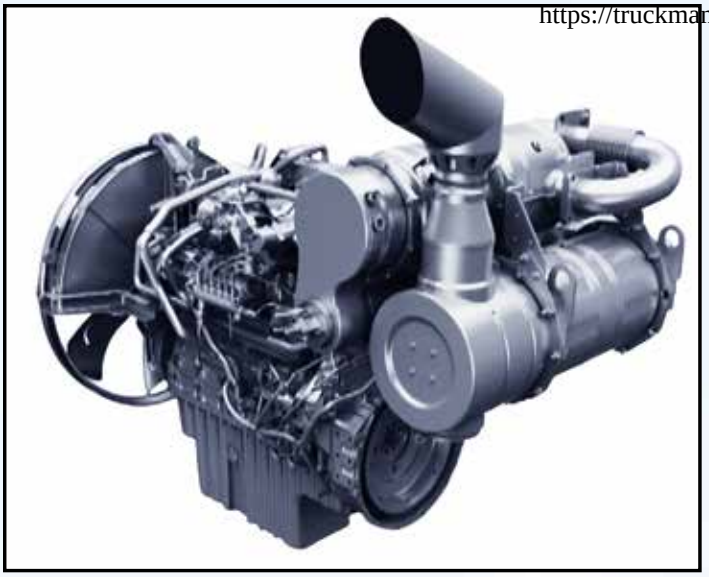

The X4 Series features innovative EPA-certified Final Tier 4 engines from Isuzu that strike the ultimate balance between power, productivity and fuel efficiency. You'll experience up to 4% improved fuel efficiency, without having to worry about costly diesel particulate filters (DPF) to maintain or replace. Three engine modes provide reliable power and control for any machine application. Choose Speed Priority (SP mode) to get jobs done quickly, Heavy (H mode) for the best blend of power and fuel savings or Applied Power (A mode), with 13 different RPM settings for precise control of heavy lifting, fine grading or leveling work.

- EPA-certified Tier 4 Final
- No DPF to maintain
- Up to 4% improved fuel economy
- 500-hr. fuel filters service intervals
- 13 diesel tank refills per 1 diesel exhaust fluid (DEF) refill
- 2-3% DEF consumption rate relative to fuel consumption
- Two-stage DEF anti-freeze system for protection in harsh operating conditions
- 30 hrs. between SCR regenerations, only takes 5-8 minutes to complete!
- VGT (Variable Geometry Turbocharger)
- Air pre-cleaner - improved filtration

https://truckmanualshub.com/

Power and Efficiency Without Compromise

https://truckmanualshub.com/

The X4 Series offers one of the most advanced and roomiest cabs in its class. Comfortable, automotive-grade high-back seat with head rest provides superior lumbar back support. With a longer and wider seating surface, it reclines to a 155° maximum reclining angle to create a relaxed environment during breaks. Air-suspension seat is standard with tilting adjustment and seat heaters available as options.

The cab layout also includes ergonomically-designed arm rests that move with console, maintaining a constant distance between joysticks and arm rests no matter how the seat is adjusted.

- Quiet, pressurized cab
- Joysticks with easy-to-hold grip and switches
- Convenient 'radio mute' and one touch wiper switch
- Optional proportional joysticks w/auxiliary hydraulics control
- Cup holder and storage areas for cell phones and other small items
- Dual halogen cab lights standard
- Full time rear camera display
- Optional RH & LH side cameras
- ROPS and FOPS Level 1 certified, optional FOPS Level 2 head guard available
- Optional LED lights use less energy and are 3X brighter!
- Optional retractable rear window shade
- Optional front sun visor
- Improved radio with USB port and Bluetooth for hands-free communication.
- Free swing standard

https://truckmanualshub.com/

High-Definition LCD monitor has a full-color 7" display that rivals the resolution found in luxury automobiles. Controls are easy to read and easy to use. The rear-view camera activates automatically whenever the machine is started, and sight guidelines have been added for increased safety.

- Anti-glare coating on screen
- Track up to 14 service maintenance reminders
- System/machine warning messages
- Monitor SCR auto regeneration
- Select and set up attachments: 5 presets for breakers; 5 presets for crushers
- In-cab flow and pressure controls for auxiliary hydraulics
- Anti-theft system
- Auto-adjusts for time and calendar
- 24 languages available
- Ability to view fuel consumption

270° WAVES™

WIDE-ANGLE VISUAL ENHANCEMENT SYSTEM

For the ultimate in visibility, X4 machines can be fitted with the Wide Angle Visual Enhancement System - or WAVES for short. Using three closed-circuit cameras, this optional viewing system provides an unbelievable 270° visual coverage around the machine, eliminating any potential blind spots from the operator's line of sight. WAVES images can be displayed on the standard X4 monitor.

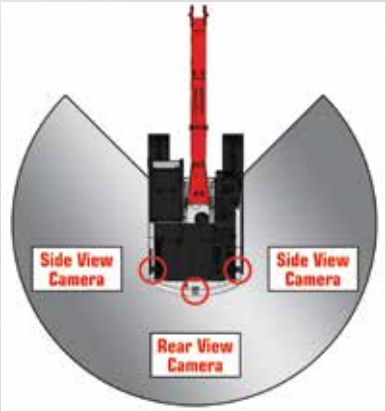

https://truckmanualshub.com/

Get Working Fast With Easy Access to Service Points

Maintenance is a snap, with ground level access to all routine service points, including batteries, fuel filters, engine oil filter, dual-element air filter and cab fresh air filter.

- Radiator screens are easy to remove and clean from ground level...no tools needed!
- A/C Condenser tilts for easy cleaning and maintenance
- Easy battery compartment access; 2 hand-turn knobs
- Improved battery disconnect switch with no keys needed
- Convenient ground-level sample ports in pump compartment
- Green drain plug and hose
- More data collection points
- Automatic door locking mechanism on side door
- Quick and easy access to grease all attachment pivot points
- Grease cylinder track adjusters make adjusting track tension a breeze
- New undercarriage side frame design enables easier cleaning
- In-cab reminders track 14 different maintenance procedures

https://truckmanualshub.com/

TELEMATICS WITH NO SUBSCRIPTION FEE

RemoteCARE® lets you remotely monitor and track machine location, operational performance, working status and periodic maintenance requirements - now at no cost to you. It tracks and records both routine and major service intervals for your machines, giving you more flexibility and control when scheduling maintenance procedures. It also lets you be more proactive if potential failure conditions arise; whenever a diagnostic trouble code (DTC) is detected, a warning message appears on the machine display, and an e-mail alert is automatically sent to you. RemoteCARE also assists in theft prevention by offering 24/7 surveillance and geofencing capabilities.

FREE Subscription Includes:

- ✓ 24/7 Remote Monitoring and Security
- ✓ Machine Location
- ✓ Geo-fence & Curfew Range
- ✓ Actual Fuel Consumption
- ✓ Fuel Levels
- ✓ Hour Meter Reading
- ✓ Radiator Water Temperature
- ✓ Machine Working Time/Idle Time
- ✓ Attachment Working Hours
- ✓ Working Modes
- ✓ Service Maintenance Reminders
- ✓ Service Warnings

REMOTECARE® APP

Manage your Link-Belt equipment with this user friendly telematics management tool with GPS technology. The RemoteCARE App provides timely and reliable machine utilization – as well as assisting in DTC notifications. With RemoteCARE you will be able to remotely monitor and track your machine's location, operational performance, and working status. Contact your local Link-Belt dealer for questions.

App features include...

- Machine location
- Fuel consumption
- Utilization report
- Fuel efficiency
- Analytical snapshots
- Idle rate
- DTC notification history
- Favorite list

Download Apple or Android app at **lbxco.com/apps** for phone and tablet.

https://truckmanualshub.com/

Built Strong to Handle Anything

X4 machines are more rugged and durable, with robust structural improvements to the boom & arm structures, along with improvements to lower frame and travel components.

Boom & Arm

- Improved boss shapes reduce stress on boom and arm pin
- Cast boom tip for increased reliability

Lowers

- Thicker travel motor case - 28% increase
- 15% more stroke recoil spring
- Unique side-frame design reduces dirt accumulation and is easier to clean.

Customer Support is Just a Call Away

A network of Link-Belt Excavator dealers across the U.S. and Canada is waiting to serve you. Expect fast and dependable service, backed by 24/7 access to parts.

Exceptional Warranty Coverage

All X4 excavators purchased after July 1, 2020 are backed by a 5-year/5,000- hour Full Machine Warranty, 5-year/10,000- hour Structural Warranty, along with participation in the X4 Fluid Analysis Program for the duration of the warranty (free with all X4 machines). Extended warranty coverage packages are also available.

Contact your dealer for complete details.

https://truckmanualshub.com/

SPECIFICATIONS

Engine

Isuzu AQ-6HK1X Final Tier 4 turbocharged diesel engine with electronic control (ECM) and high pressure common-rail fuel injection, 6-cylinder, water-cooled, Cooled Exhaust Gas Recirculation (CEGR), Intercooler, Variable-Geometry Turbocharger (VGT), Diesel Oxidation Catalyst (DOC) and Selective Catalytic Reduction (SCR) system with Dosing Control Module and heated DEF lines and tank. Electronic fuel pump and priming, Fuel cooler, Auto-idle start, Auto warm-up, EPF engine protection, dual-stage fuel filtration, remote oil filter, engine oil sample port, green plug oil drain, double element air filter.

SAE J 1349 net horsepower	207 hp (154 kW) @ 1,800 rpm
Displacement	475 cu in (7.8 L)
Maximum Torque	626 lbf-ft (849 Nm) @ 1,500 rpm
Starter	24V-5.0kW
Alternator	50 amp
Battery	(2) 12-volt 128 amp hours

Cab and Controls

ROPS and FOPS Level 1 certified with automatic climate control A/C and heat with defroster, 7" LCD Hi-Definition color monitor with full time rear view camera display, fuel efficiency gauge, low-effort joysticks, dual cab lights, control pattern changer, safety glass windows, sunroof with sunshade, shockless cab suspension with four fluid cab mounts, SCM High-Back reclining air-suspension seat, sliding 4-position tilting control consoles, Bluetooth technology, AM/FM sound system with USB and MP3 auxiliary input jack, digital clock, dome light, seat belt, coat hook, cup holder, storage compartments, floor mat, footrests, ashtray, 24V cigarette lighter, 12V outlet, travel alarm, handrails, mirrors, side-entry cab filter, spare parts kit.

Three selectable work modes, RemoteCARE Telematics GPS system, anti-theft password protection system, onboard self-diagnostic system with memory and service interval reminders, auto idling system, one-touch decelerator, auto-idle engine shutdown, auto-power boost, neutral safety start, gate-lock safety shutoff.

Hydraulic System

Open-center system, two variable-displacement electronically controlled axial-piston pumps and one gear pump for pilot controls, main control valve with one 4-spool section and one 5-spool section with auxiliary spool: stackable, Auxiliary Control System, oil cooler, Auto-Power boost, anti-drift valves, 6 micron return filter, firewall, hydraulic oil sample port.

Hydraulic Pumps

Pump Output	2 x 64.2 gpm (243 L/min)
Pilot Pump Maximum Flow	7.1 gpm (27 L/min)

Relief Valve Settings

Boom/Arm/Bucket	4,970 psi (34.3 MPa)
in Power Boost	5,410 psi (37.3 MPa)
Swing Circuit	4,410 psi (30.4 MPa)
Travel Circuit	4,970 psi (34.3 MPa)

Hydraulic Cylinders

	number of cylinders - bore x rod x stroke
Boom	2 - 5.5" x 3.7" x 53.9" (140 mm x 95 mm x 1,369 mm)
Arm	1 - 5.9" x 4.1" x 65" (150 mm x 105 mm x 1,650 mm)
Bucket	5.3" x 3.5" x 42.4" (135 mm x 90 mm x 1,078 mm)

Swing

Planetary reduction powered by axial-piston motor, Internal ring gear with grease cavity for swing pinion, Swing bearing is single-row, shear type ball bearing, Mechanical disc swing brake, Auto-power swing.

Swing Speed	10.0 rpm
Tail Swing	10' 4" (3.15 m)
Swing Torque	68,200 lbf-ft (92.4 kNm)

Undercarriage

X Pattern carbody with 15' 11" (4.85 m) LC long undercarriage by 8' 6" (2.60 m) track gauge, Sealed and strutted track chain with track guide, Sealed rollers and idlers, Two-speed independent hydrostatic travel with compact planetary final drive, Disc type brakes, Adjustable track tension, Carbody belly pan.

Carrier Rollers	2 per Side
Track Rollers	9 per Side
Track Link Pitch	7.99" (203 mm)
Shoes	50 per Side
Shoe Width	31.5" (800 mm)
Ground Pressure	6.38 psi (0.044 MPa)

Travel System

Two-speed independent hydrostatic travel with compact axial-piston motors, Hydraulic motor powered output shaft coupled to a planetary reduction drive and track sprocket, All hydraulic components mounted within the width of side frame, Automatic downshift for high torque to overcome obstacles, Spring-applied hydraulic release parking brake built into each motor, Travel motors equipped with counterbalance valve to prevent over-speeding down an incline, Single-pedal straight line travel.

Travel Speeds	2.0 - 3.4 mph (3.2 - 5.4 km/h)
Drawbar Pull	52,400 lbf (233 kN)
Gradeability	70% (35°)

Attachment

Boom	20' 2" (6.15 m)
Available Arms	**Digging Force**
• 10' 5" (3.18 m)	28,870 lbf (128 kN)
with Auto Power Boost	31,380 lbf (140 kN)
• 8' 8" (2.65 m)	33,050 lbf (147 kN)
with Auto Power Boost	35,950 lbf (160 kN)
• 12' 0" (3.66 m)	25,700 lbf (114 kN)
with Auto Power Boost	27,940 lbf (124 kN)
• Bucket Digging Force	39,340 lbf (175 kN)
with Auto Power Boost	42,780 lbf (190 kN)

Lubricant & Coolant Capacity

Fuel Tank	121 Gallons (457.0 Liters)
Hydraulic System	79 Gallons (300.0 Liters)
Hydraulic Tank	39 Gallons (147.0 Liters)
Final Drive (per side)	2.5 Gallons (9.5 Liters)
Swing Drive	1.3 Gallons (5.0 Liters)
Engine Oil	10.8 Gallons (40.9 Liters)
DEF Tank	31.7 Gallons (120.0 Liters)
Coolant System	9.5 Gallons (35.9 Liters)

Operating Weight

Working weight with 31.5" (800 mm) shoes, 20' 2" (6.15 m) boom, 10' 5" (3.18 m) arm, 1,940 lb. (880 kg) bucket, 11,200 lb. (5 100 kg) counterweight ..... 67,000 lbs. (30 400 kg)

https://truckmanualshub.com/

Working Range & Travel Dimensions

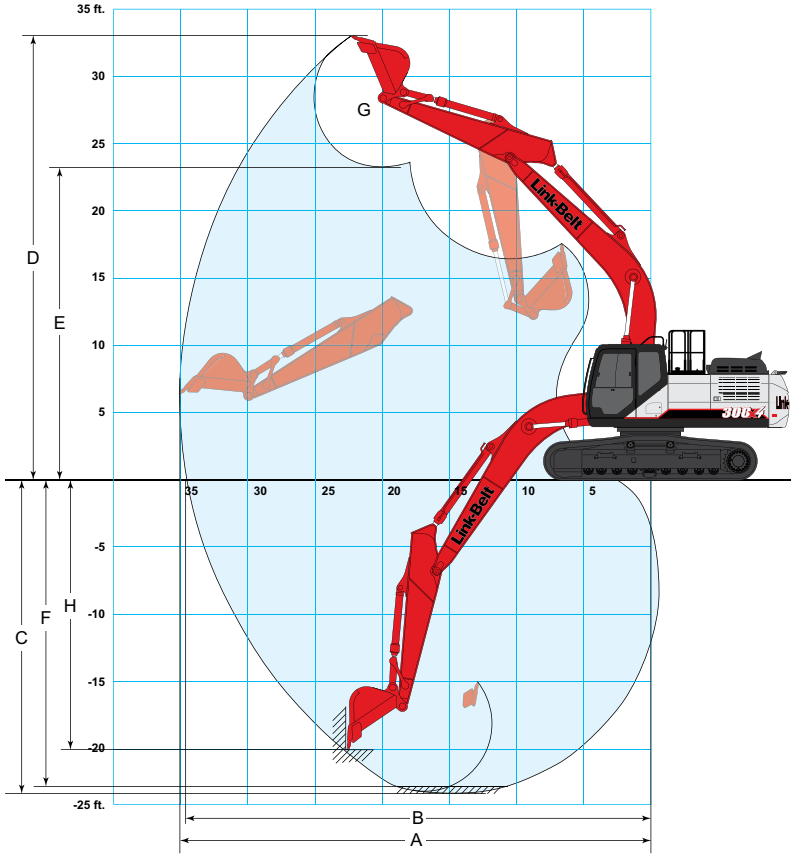

Machine Equipped with 20′ 2″ (6.15 m) Boom	Arm 10′ 5″ (3.18 m)	Arm 8′ 8″ (2.65 m)	Arm 12′ 0″ (3.66 m)
A. Maximum reach	35' 0" (10.67 m)	33' 6" (10.22 m)	36' 7" (11.16 m)
B. Maximum reach @ ground level	34' 5" (10.49 m)	32' 11" (10.03 m)	36' 0" (10.98 m)
C. Maximum dig depth	23' 4" (7.10 m)	21' 7" (6.57 m)	24' 10" (7.58 m)
D. Maximum dig height	32' 11" (10.05 m)	32' 7" (9.93 m)	34' 1" (10.39 m)
E. Maximum dump height	23' 3" (7.08 m)	22' 9" (6.93 m)	24' 3" (7.39 m)
F. Digging depth 8' (2.44 m) level bottom	22' 9" (6.94 m)	20' 11" (6.39 m)	24' 5" (7.44 m)
G. Bucket rotation	176°	176°	176°
H. Maximum vertical wall depth	20' 0" (6.10 m)	18' 10" (5.75 m)	22' 0" (6.71 m)

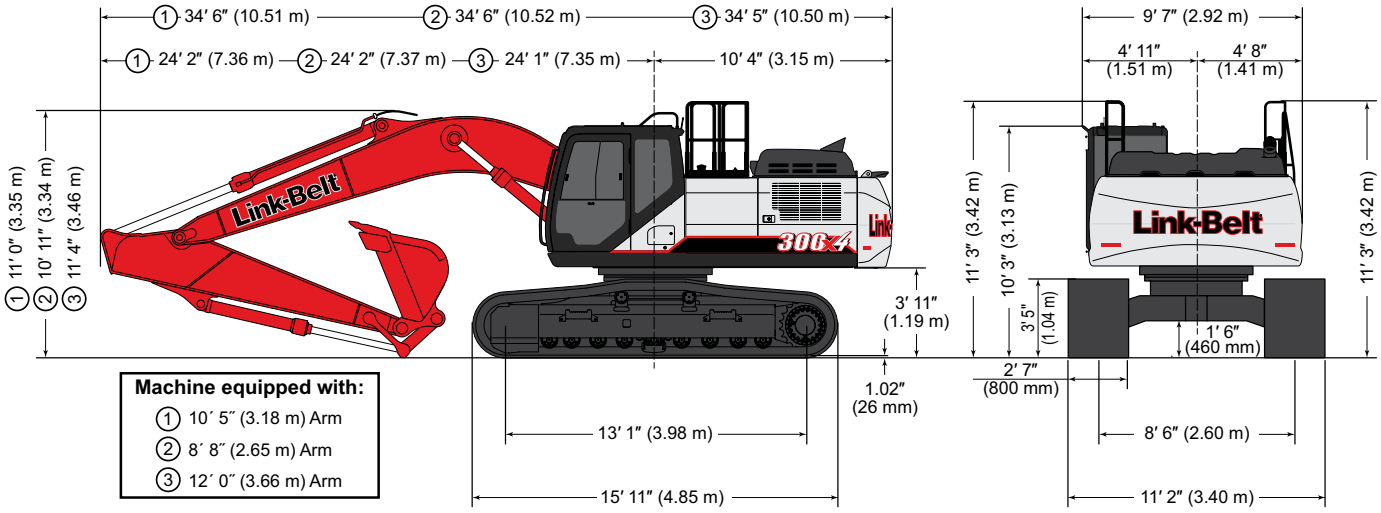

https://truckmanualshub.com/

LIFT CAPACITIES

Radius of Load
10′ 5″ (3.18 m) Arm with 20′ 2″ (6.15 m) Boom and 1,800 lb. (810 kg) Bucket with Power-Boost Applied

End / Side		5' 0" (1.5 m)		10' 0" (3.0 m)		15' 0" (4.5 m)		20' 0" (6.0 m)		25' 0" (7.5 m)		30' 0" (9.0 m)		Cap at Max. Reach	
		End	Side	End	Side	End	Side	End	Side	End	Side	End	Side	End	Side
+25' 0" (7.5 m)	lbs									11,750*	11,750*			7,850*	7,850*
	kg									5 270*	5 270*			3 540*	3 540*
+20' 0" (6.0 m)	lbs									13,250*	12,750	10,250*	9,150	7,600*	7,600*
	kg									6 190*	5 940	5 030*	4 270	3 460*	3 460*
+15' 0" (4.5 m)	lbs							17,500*	17,350	15,800*	12,350	13,100*	8,950	7,700*	7,450
	kg							8 060*	8 040*	7 240*	5 740	6 190*	4 180	3 490*	3 370
+10' 0" (3.0 m)	lbs			39,400*	39,400*	27,700*	26,400	21,000*	16,900	17,500*	11,800	13,300	8,700	8,000*	7,000
	kg			18 420*	18 420*	12 880*	12 250	9 710*	7 850	8 060*	5 490	6 190	4 050	3 630*	3 160
+5' 0" (1.5 m)	lbs			18,450*	18,450*	33,400*	24,650	23,950*	15,950	17,400	11,300	13,000	8,400	8,500*	6,850
	kg			7 840*	7 840*	15 480*	11 440	11 060*	7 400	8 100	5 240	6 040	3 910	3 860*	3 110
Ground Line	lbs			19,900*	19,900*	35,750*	23,300	24,150	15,150	16,950	10,850	12,700	8,150	9,350*	7,000
	kg			8 790*	8 790*	16 420*	10 830	11 230	7 040	7 870	5 040	5 920	3 790	4 240*	3 190
-5' 0" (1.5 m)	lbs	19,700*	19,700*	25,950*	25,950*	35,750*	22,850	23,650	14,750	16,650	10,600	12,600	8,050	10,750*	7,550
	kg	8 810*	8 810*	11 510*	11 510*	16 490*	10 640	11 010	6 850	7 740	4 910	5 860	3 740	4 850*	3 430
-10' 0" (3.0 m)	lbs	25,000*	25,000*	34,750*	34,750*	34,150*	23,000	23,650	14,800	16,700	10,650			13,200*	8,650
	kg	11 200*	11 200*	15 380*	15 380*	15 770*	10 710	11 010	6 870	7 760	4 950			5 920*	3 910
-15' 0" (4.5 m)	lbs	33,800*	33,800*	42,200*	42,200*	29,900*	23,500	22,150*	15,200					15,250*	10,850
	kg	15 060*	15 060*	19 590*	19 590*	13 890*	10 930	10 330*	7 040					6 930*	4 860
-20' 0" (6.0 m)	lbs			29,350*	29,350*	21,250*	21,250*							14,200*	14,200*
	kg			13 930*	13 930*	10 140*	10 140*							6 510*	6 510*

Radius of Load
8′ 8″ (2.65 m) Arm with 20′ 2″ (6.15 m) Boom and 1,900 lb. (870 kg) Bucket with Power-Boost Applied

End / Side		5' 0" (1.5 m)		10' 0" (3.0 m)		15' 0" (4.5 m)		20' 0" (6.0 m)		25' 0" (7.5 m)		30' 0" (9.0 m)		Cap at Max. Reach	
		End	Side	End	Side	End	Side	End	Side	End	Side	End	Side	End	Side
+25' 0" (7.5 m)	lbs									12,800*	12,650			9,750*	9,750*
	kg									6 150*	5 920			4 400*	4 400*
+20' 0" (6.0 m)	lbs									14,950*	12,550			9,450*	9,200
	kg									6 950*	5 830			4 280*	4 120
+15' 0" (4.5 m)	lbs					21,100*	21,100*	19,150*	17,550	16,850*	12,150	13,450	8,850	9,500*	8,050
	kg					10 040*	10 040*	8 840*	8 150	7 720*	5 650	6 270	4 120	4 310*	3 640
+10' 0" (3.0 m)	lbs					29,200*	26,100	22,200*	16,650	17,800	11,650	13,200	8,600	9,850*	7,500
	kg					13 450*	12 100	10 270*	7 730	8 260	5 420	6 150	4 010	4 470*	3 410
+5' 0" (1.5 m)	lbs					33,900*	24,200	24,600	15,750	17,300	11,200	12,950	8,350	10,450*	7,400
	kg					15 640*	11 240	11 430*	7 310	8 050	5 200	6 020	3 890	4 740*	3 350
Ground Line	lbs			18,600*	18,600*	35,900*	23,150	24,050	15,100	16,900	10,850	12,750	8,150	11,450*	7,600
	kg			8 210*	8 210*	16 540*	10 770	11 190	7 010	7 860	5 030	5 920	3 800	5 190*	3 460
-5' 0" (1.5 m)	lbs	20,600*	20,600*	26,500*	26,500*	35,550*	23,050	23,700	14,850	16,700	10,650			12,950	8,300
	kg	9 190*	9 190*	11 750*	11 750*	16 400*	10 720	11 040	6 890	7 770	4 950			5 850	3 750
-10' 0" (3.0 m)	lbs	27,450*	27,450*	37,650*	37,650*	33,100*	23,300	23,750	15,000	16,900	10,900			15,050	9,650
	kg	12 310*	12 310*	16 620*	16 620*	15 280*	10 840*	11 050	6 950	7 840	5 040			6 780	4 350
-15' 0" (4.5 m)	lbs			37,900*	37,900*	27,650*	23,800	20,300*	15,500					15,400*	12,550
	kg			17 630*	17 630*	12 890*	11 070	9 550*	7 200					6 980*	5 590

Radius of Load
12′ 0″ (3.66 m) Arm with 20′ 2″ (6.15 m) Boom and 1,750 lb. (790 kg) Bucket with Power-Boost Applied

End / Side		5' 0" (1.5 m)		10' 0" (3.0 m)		15' 0" (4.5 m)		20' 0" (6.0 m)		25' 0" (7.5 m)		30' 0" (9.0 m)		35' 0" (10.5 m)		Cap at Max. Reach	
		End	Side	End	Side	End	Side	End	Side	End	Side	End	Side	End	Side	End	Side
+30' 0" (9.0 m)	lbs															6,850*	6,850*
	kg															3 070*	3 070*
+25' 0" (7.5 m)	lbs									9,850*	9,850*	6,850*	6,850*			6,300*	6,300*
	kg									4 600*	4 600*	3 650*	3 650*			2 850*	2 850*
+20' 0" (6.0 m)	lbs									12,150*	12,150*	10,100*	9,250			6,100*	6,100*
	kg									5 710*	5 710*	4 760*	4 320			2 770*	2 770*
+15' 0" (4.5 m)	lbs									14,750*	12,450	11,900*	9,000			6,150*	6,150*
	kg									6 750*	5 800	5 550*	4 210			2 790*	2 790*
+10' 0" (3.0 m)	lbs			20,550*	20,550*	25,450*	25,450*	19,750*	17,150	16,650*	11,900	13,350	8,700	7,450*	6,500	6,350*	6,350*
	kg			10 710*	10 710*	11 810*	11 810*	9 130*	7 950	7 660*	5 530	6 210	4 060	3 990*	3 050	2 890*	2 880
+5' 0" (1.5 m)	lbs			24,650*	24,650*	31,550*	25,050	22,900*	16,050	17,450	11,300	12,950	8,350	7,850*	6,350	6,750*	6,250
	kg			10 420*	10 420*	14 640*	11 620	10 590*	7 460	8 120	5 260	6 040	3 900	4 250*	2 970	3 060*	2 830
Ground Line	lbs	8,900*	8,900*	20,300*	20,300*	35,050*	23,400	24,150	15,150	16,900	10,800	12,650	8,050			7,350*	6,400
	kg	3 990*	3 990*	8 930*	8 930*	16 210*	10 870	11 250	7 050	7 870	5 020	5 890	3 760			3 340*	2 890
-5' 0" (1.5 m)	lbs	17,200*	17,200*	24,550*	24,550*	35,600*	22,650	23,550	14,600	16,550	10,450	12,450	7,900			8,350*	6,850
	kg	7 710*	7 710*	10 880*	10 880*	16 440*	10 540	10 960	6 790	7 690	4 860	5 800	3 670			3 790*	3 090
-10' 0" (3.0 m)	lbs	22,350*	22,350*	31,650*	31,650*	34,650*	22,700	23,450	14,550	16,500	10,450	12,500	8,000			10,100*	7,700
	kg	10 020*	10 020*	14 020*	14 020*	16 000*	10 550	10 900	6 760	7 660	4 840	5 830	3 710			4 540*	3 480
-15' 0" (4.5 m)	lbs	29,800*	29,800*	42,650*	42,650*	31,350*	23,100	23,200*	14,850*	16,600*	10,800					13,250*	9,400
	kg	13 250*	13 250*	19 030*	19 030*	14 550*	10 730	10 790*	6 880	7 710	5 000					5 920*	4 220
-20' 0" (6.0 m)	lbs			34,350*	34,350*	24,450*	23,350	17,300*	15,200							14,000*	13,150
	kg			16 170*	16 170*	11 540*	10 870	8 310*	7 070							6 390*	5 790

Notes: Excavator lifting capacities

1. Lifting capacities shown should not be exceeded. Weight of all lifting accessories must be deducted from the above lifting capacities.
2. Lifting capacities are based on machine standing on firm, uniform supporting surface. User must make allowances for job conditions such as soft or uneven ground.
3. Lifting capacities shown do not exceed 75% of minimum tipping loads or 87% of hydraulic capacities. **Capacities marked with an asterisk (*) are limited by hydraulic capacities.**
4. Least stable position is over the side.
5. Operator should be fully acquainted with the Operator's Manual & Operating Safety Booklet, furnished by LBX before operating the machine.
6. Capacities apply only to the machine as originally manufactured and normally equipped by LBX Company, LLC.
7. Lift capacity ratings are based on ISO 10567, "Earthmoving Machinery - Hydraulic Excavators - Lift Capacity."

https://truckmanualshub.com/

Standard & Optional Equipment

Standard Equipment

CAB
- 12V Power Outlet
- AM/FM Sound System
- Anti-Theft Device
- Auxiliary Switches on Control Lever
- Bluetooth
- Cab Filter - External
- Cab Handrails
- Cab Interior Light
- Cab ISO-Mounts
- Cab Light (2)
- Clear Roof Window
- Climate Control A/C and Heater
- Cup Holder
- Defroster
- Digital Clock
- Emergency Exit and Hammer
- Face Vent
- Floor Mat
- FOPS Level 1 Certified
- Front Window One-Touch Lock
- Gate Lock Hydraulic Activation
- Horn
- Hour Meter (Digital)
- LCD Color Monitor
- Magazine Storage Rack
- Maintenance Interval Reminders
- MP3 Auxiliary Input Jack
- On-Board Diagnostic System
- One-Piece Right Window
- Radio Mute Switch
- Rear View Camera
- ISO Mirrors (3)
- RemoteCARE Support System (GPS)
- Roof Sun Shade
- ROPS Certified Structure
- Safety Glass Windows
- SCM Suspension Seat
- Seat Recline
- Selectable Monitor Languages
- Small Storage
- Travel Alarm with Cancel Switch
- Trip Meter (Digital)
- USB Input
- Wiper & Washer
- Wiper Switch on RH Joystick

ENGINE
- 50A Alternator
- Air Filter (Double Element)
- Air Filter Restriction Indicator
- Air Pre-Cleaner (Cyclone type)
- Auto Warm-Up System
- Auto-Idle
- Auto-Idle Engine Shutdown
- Battery Disconnect Switch w/ LED Light
- CEGR (Cooled Exhaust Gas Recirculation)
- Cooling Fan
- Diesel Oxidation Catalyst (DOC)
- Drain for Fuel Tank
- Dual Remote Fuel Filters with Water Separators
- EGR Coolers
- Emergency Engine Stop
- Engine Idle System
- Engine Oil Sample Port
- Engine Protection Feature
- External Fuel Gauge
- External DEF Gauge
- Fan Housing
- Fuel Cooler
- Fuel Filter Restriction Indicator
- Fuel Management System
- Fuel Shut-Off Valve
- Fuel Usage History
- Fuel Usage Monitor
- Glow Plug Pre-Heat
- Idle-Start
- Intercooler
- Neutral Start
- One-Touch Idle
- Passive Emissions Regeneration
- Radiator / Oil Cooler / Intercooler Protective Screen
- Remote Engine Oil Drain
- Remote Oil Filter
- Selective Catalytic Reduction (SCR)
- DEF Gauge on Monitor
- VGT Turbocharger

HYDRAULICS
- Arm Regeneration
- Arm Speed Assistance (2 Pump Flow)
- Attachment Cushion Valve
- Auto Swing Priority
- Auxiliary Flow Control
- Auxiliary Tool Settings (Memory)
- Auxiliary Valve
- Boom Regeneration
- Boom Speed Assistance (2 Pump Flow)
- Bucket Curl Assist
- Control Levers Pre-Wired for Auxiliary Hyd.
- Control Pattern Changer (2 way)
- Electronically Controlled Hydraulic Pumps
- Fire Wall
- Free Swing
- Holding Valve (Arm & Boom)
- Hydraulic Filter Restriction Indicator
- Hydraulic Oil Sample Port
- Long Life Hydraulic Oil (5,000 Hour)
- Neutral Pump De-Stroke
- Oil Cooler
- Power Boost
- Power Save
- Pressure Reading on Monitor
- Pump Stand-By Pressure
- Single Pedal Travel
- Straight Travel Circuit

UNDERCARRIAGE
- 800 mm (31.5" in) 3-Bar Steel Grousers
- Carbody Belly Pan (Swivel Guarding)
- Center Track Guide (single)
- Lashing Points (Tie-Downs)
- Long Undercarriage
- Sealed Link Chain
- Steps
- Strutted Track Chain
- X-Pattern Carbody

UPPERSTRUCTURE
- Belly Pans
- Center Cover (Over Main CV)
- Fuel Tank Belly Pan
- Hand Rail (RH access)
- ISO Guard Rails
- Lifting Eyes for Counterweight
- Lockable Fuel Cap and Service Doors
- Lockable Tool Box
- Turntable Tub
- Work Lights (Boom and Tool Box)

ATTACHMENT
- 20' 2" (6.15 m) Main Boom Section
- Auxiliary Pipe Brackets
- Boom Work Light
- Bucket Anti-Clatter Device
- Chrome Pins
- Easy Maintenance System (EMS)
- Remote Lube Bank
- Teardrop Pin Retention Keepers

PARTS KIT
- Bucket Anti-Clatter Device
- Engine Manual
- Engine Oil Filter
- Filter Wrench
- Fuel Filters
- Grease Gun
- Green Plug Drain Hose for Engine Oil Drain
- Hydraulic Return Filter
- Ignition Keys
- Pilot Circuit Hydraulic Filter
- Rearview Mirrors
- Work Light for Boom

Optional Equipment

CAB
- 270° WAVES™ Camera System
- Cab Light (2 LED)
- Cab Sun Screen (rear)
- FOPS Head Guard (Level 2)
- Front Guard (Mesh)
- Front Guard (OPG 1,2)
- LED Light Kit for Side Camera (1)
- LED Lights for Rear Camera (2)
- Rain Deflector
- SCM Air-Suspension Seat with Tilt & Heater

ENGINE
- 90A Alternator
- Refuel Pump
- Reversible Cooling Fan
- Tropical Package

HYDRAULICS
- Hose Burst Check Valve
- Proportional Hydraulic Controls

AUXILIARY HYDRAULIC OPTIONS
- Single-Acting Aux. w/ Proportional Joysticks
- Multi-Function Aux. w/ in-cab pressure setting control
- Thumb Aux. w/ Proportional Joysticks
- Combination Aux. w/ in-cab pressure setting control

UNDERCARRIAGE
- 600 mm (23.5" in) 3-Bar Steel Grousers
- 700 mm (27.5" in) 3-Bar Steel Grousers
- Center Track Guide (triple)

UPPERSTRUCTURE
- Rubber Bumper Guards
- Side Guards (Full-length, welded, triangulated steel)

ATTACHMENT
- 8' 8" (2.65 m) Short Arm
- 10' 5" (3.18 m) Arm
- 12' 0" (3.66 m) Arm
- HD Bucket Linkage
- Quick Couplers
- Thumbs

Bucket Sizes

Bucket Type	SAE Heaped Capacity (yd³)	SAE Heaped Capacity (m³)	Width Outside Lip (in)	Width Outside Lip (mm)	Bucket Weight (lbs)	Bucket Weight (kg)	Number of Teeth	Arm Length 8' 8" 2.65 m	Arm Length 10' 5" 3.18 m	Arm Length 12' 0" 3.66 m
STDP Standard duty plate	0.80	0.61	24	610	1285	583	3	H	H	H
	1.06	0.81	30	762	1458	661	4	H	H	H
	1.33	1.02	36	914	1630	739	5	H	H	H
	1.61	1.23	42	1067	1774	805	5	H	H	H
	1.89	1.45	48	1219	1918	870	5	H	H	M
	2.16	1.65	54	1372	2091	948	6	M	M	L
	2.43	1.86	60	1524	2239	1016	6	M	L	L
HDP Heavy duty plate	0.80	0.61	24	610	1498	679	3	H	H	H
	1.06	0.81	30	762	1705	773	4	H	H	H
	1.33	1.02	36	914	1873	850	4	H	H	H
	1.61	1.23	42	1067	2080	943	5	H	H	H
	1.89	1.45	48	1219	2247	1019	5	H	M	M
	2.16	1.65	54	1372	2454	1113	6	M	M	L
	2.43	1.86	60	1524	2621	1189	6	M	L	L
XDP Extreme duty plate	0.79	0.60	24	610	2230	1012	3	H	H	H
	1.05	0.80	30	762	2528	1147	4	H	H	H
	1.32	1.01	36	914	2749	1247	4	H	H	H
	1.59	1.22	42	1067	3047	1382	5	H	H	M
	1.87	1.43	48	1219	3267	1482	5	H	M	L
	2.15	1.64	54	1372	3565	1617	6	M	L	L
	2.43	1.86	60	1524	3786	1717	6	L	L	N/A
POWER HDP for use with ESCO multi-pin grabber only	0.76	0.58	24	610	3025	1372	3	H	H	H
	0.98	0.75	30	762	3183	1444	4	H	H	H
	1.21	0.93	36	914	3392	1539	4	H	H	H
	1.44	1.10	42	1067	3552	1611	5	H	H	M
	1.68	1.28	48	1219	3709	1682	5	H	M	M
	1.91	1.46	54	1372	3920	1778	6	M	L	L
DITCH	1.30	0.99	60	1524	1767	802	0	H	H	H
	1.45	1.11	66	1676	1928	875	0	H	H	H
	1.59	1.22	72	1829	2034	923	0	H	H	H

Approval Code For Arm/Bucket Combinations

H.....Heavy material (up to 3,370 lbs./yd³)
M .....Medium material (up to 2,700 lbs./yd³)
L ..... Light material (up to 2,020 lbs./yd³)
N/A .....Not applicable

Litho in USA 08/20 #LBX2432 supersedes #LBX2307

LBX® and Link-Belt® are registered trademarks. Copyright 2020. All rights reserved. We are constantly improving our products and therefore reserve the right to change designs and specifications.