https://truckmanualshub.com/

Drive Axle

Supplemental Repair Manual

Models 3507, 3508, 3509, 3512, 3513, 4007, 4008, 4009, 4012, 4013, 4017, G6-42A, 642, TF6-42, TL642, & TL642C

JLG - 31200162

Component Manufacturer
ASM-0025E

Revised
May 6, 2015

An Oshkosh Corporation Company

https://truckmanualshub.com/

DISCLAIMER: Information provided within is supplied directly from the component manufacturer. The information has not been altered in any way and is the sole property of the component manufacturer. Due to continuous improvements, the component manufacturer reserves the right to make changes without prior notification. Contact the component manufacturer for the latest information.

https://truckmanualshub.com/

DANA SPICER®
Off-Highway Products

Service Manual

Axle 212

ASM-0025E
October 2013

https://truckmanualshub.com/

https://truckmanualshub.com/

CONTENTS

INTRODUCTION **7**

SPECIFICATIONS **9**
- DEFINITION OF VIEWPOINTS 9
- DATA PLATE 9
- CONVERSION TABLES 10
- TORQUE SPECIFICATIONS 11
  - COARSE PITCH 11
  - FINE PITCH 11
  - WHEEL NUT TIGHTENING TORQUES 12
- MAINTENANCE 13
  - MAINTENANCE POINTS 13
  - MAINTENANCE INTERVALS 14
  - ADJUSTMENT AND CHECKS 14
  - LUBRICANT & SEALANT SPECIFICATIONS 15

SAFETY PRECAUTIONS **17**

CHECKING WEAR AND REPLACING THE BRAKING DISCS **19**
- EXPLODED VIEW 19
- DISASSEMBLY 20
- ASSEMBLY 22
- SPECIAL TOOLS 24
  - T1 24
  - T2 24

COMPLETE STEERING CASE **25**
- EXPLODED VIEW 25
- DISASSEMBLY 26
- ASSEMBLY 27

DOUBLE U-JOINT **29**
- EXPLODED VIEW 29
- DISASSEMBLY 30
- ASSEMBLY 31
- SPECIAL TOOLS 33
  - T1 33
  - T2 33

PLANETARY REDUCTION GEAR **35**
- EXPLODED VIEW 35
- DISASSEMBLY 36
- ASSEMBLY 40
- SPECIAL TOOLS 44
  - T1 44
  - T2 44
  - T3 45
  - T4 46
  - T5 46

STEERING CYLINDER **47**
- EXPLODED VIEW 47
- OPTICAL SENSOR AND MAGNETIC SENSOR 48
- DISASSEMBLY 49
- ASSEMBLY 52
- SPECIAL TOOLS 58
  - T1 58
  - T2 59

https://truckmanualshub.com/

DIFFERENTIAL UNIT 61
EXPLODED VIEW 61
DISASSEMBLY 62
ASSEMBLY 64
SPECIAL TOOLS 66
T1 66
T2 66
BEVEL PINION 67
EXPLODED VIEW 67
DISASSEMBLY 68
ASSEMBLY 71
SPECIAL TOOLS 77
T1 77
T2 78
T3 78
T4 79
T5 79
T6 80
T7 81
T8 82
T9 82
MANUAL EMERGENCY RELASE 83
EXPLODED VIEW 83
RELEASE 84
ADJUST 85
MECHANICAL PARKING BRAKE 87
EXPLODED VIEW 87
DISASSEMBLY 88
ASSEMBLY 90
EXTERNAL HYDRAULIC NEGATIVE BRAKE 93
EXPLODED VIEW 93
DISASSEMBLY 94
ASSEMBLY 95
EXTERNAL HYDRAULIC NEGATIVE BRAKE WITH QUICK RELEASE 97
EXPLODED VIEW 97
DISASSEMBLY 98
ASSEMBLY 100
INCOMING DRUM BRAKE 103
EXPLODED VIEW 103
DISASSEMBLY 104
ASSEMBLY 106
SPECIAL TOOLS 108
T1 108
T2 109
4" INCOMING BRAKE (2 AND 3 FUNCTION VERSIONS) 111
EXPLODED VIEW 111
DISASSEMBLY 112
ASSEMBLY 116
SPECIAL TOOLS 122
T1 122
T2 122
T3 123

https://truckmanualshub.com/

NORMAL DIFFERENTIAL UNIT 125
EXPLODED VIEW 125
DISASSEMBLY 126
ASSEMBLY 128
SPECIAL TOOLS 131
T1 131
T2 131
T3 132
T4 132
LIMITED SLIP DIFFERENTIAL UNIT (25% AND 45%) 133
EXPLODED VIEW 133
DISASSEMBLY 134
ASSEMBLY 137
SPECIAL TOOLS 140
T1 140
T2 140
T3 141
T4 141
HYDRAULIC DIFFERENTIAL LOCK 143
EXPLODED VIEW 143
DISASSEMBLY 144
ASSEMBLY 147
SPECIAL TOOLS 149
T1 149
T2 149
HYDRAULIC NEGATIVE BRAKE 151
EXPLODED VIEW 151
DISASSEMBLY 152
ASSEMBLY 155
INCORPORATED REDUCTION GEAR AND PINION 602 161
EXPLODED VIEW 161
DISASSEMBLY 162
ASSEMBLY 166
SPECIAL TOOLS 169
T1 169
T2 170
T3 171
T4 172
T5 173
T6 174

https://truckmanualshub.com/

https://truckmanualshub.com/

INTRODUCTION

The efficiency and continued operation of mechanical units depend on constant, correct maintenance and also on efficient repair work, should there be a break-down or malfunction. The instructions contained in this manual have been based on a complete overhaul of the unit. However, it is up to the mechanic to decide whether or not it is necessary to assemble only individual components, when partial repair work is needed. The manual provides a quick and sure guide which, with the use of photographs and diagrams illustrating the various phases of the operations, allows accurate work to be performed.All the information needed for correct disassembly, checks and assembly of each individual component is set out below. In order to remove the differential unit from the vehicle, the manuals provided by the vehicle manufacturer should be consulted. In describing the following operations it is presumed that the unit has already been removed from the vehicle.

IMPORTANT: In order to facilitate work and protect both working surfaces and operators, it is advisable to use proper equipment such as: trestles or supporting benches, plastic or copper hammers, appropriate levers, pullers and specific spanners or wrenches. Before going on to disassemble the parts and drain the oil, it is best to thoroughly clean the unit, removing any encrusted or accumulated grease.

INTRODUCTORY REMARKS: All the disassembled mechanical units should be thoroughly cleaned with appropriate products and restored or replaced if damage, wear, cracking or seizing have occurred. In particular, thoroughly check the condition of all moving parts (bearings, gears, ring gear and pinion, shafts) and sealing parts (o-rings, oil shields) which are subject to major stress and wear. In any case, it is advisable to replace the seals every time a component is overhauled or repaired. During assembly, the sealing rings must be lubricated on the sealing edge. In the case of the ring gear and pinion, replacement of one component requires the replacement of the other one. During assembly, the prescribed pre-loading, backlash and torque of parts must be maintained.

CLASSIFICATION: This manual classifies units according to part numbers. For a correct interpretation, classification is indicated as follows:

▶▶ ☐ = up to the part number

☐ ▶▶ = from the part number on

When no classification is given, disassembly and assembly operations are the same for all versions.

SPECIFIC EQUIPMENT AND SPARE PARTS: The drawings of all specific tools required for maintenance and repair work can be found at the end of this manual ; spare parts may be ordered either from the vehicle manufacturer or directly from the Service Centers or Authorized Distributors of SPICER.

https://truckmanualshub.com/

https://truckmanualshub.com/

SPECIFICATIONS

DEFINITION OF VIEWPOINTS

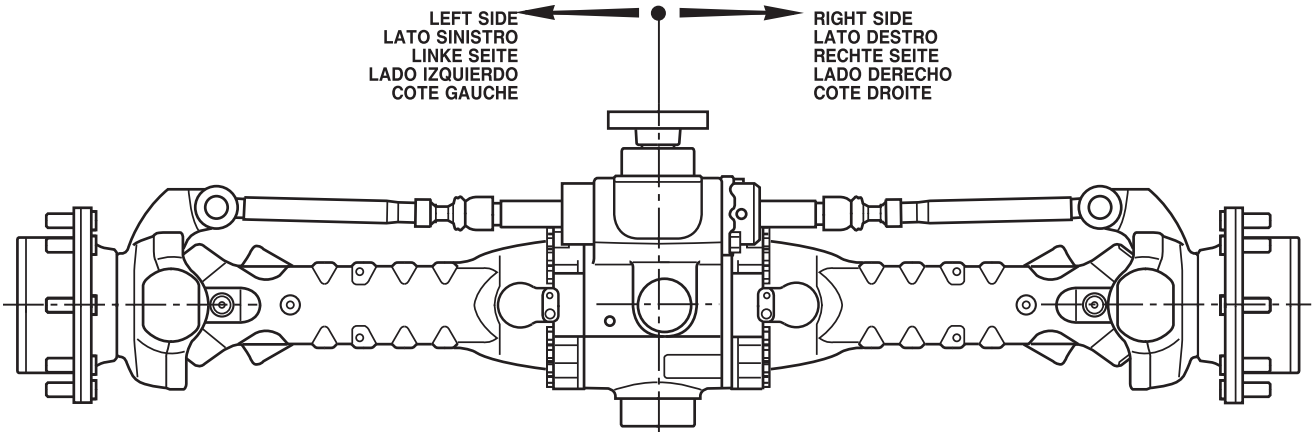

DATA PLATE

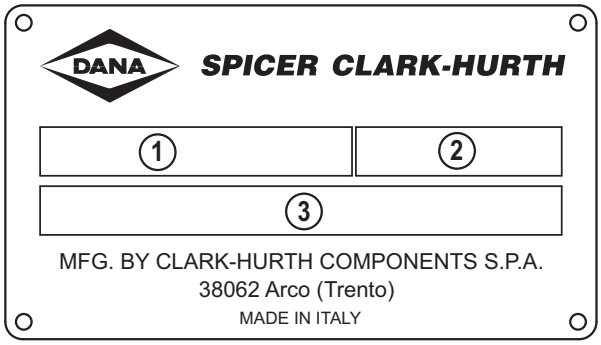

1 - Model number

2 - Serial number

3 - Lubricant

https://truckmanualshub.com/

CONVERSION TABLES

UNITS OF PRESSURE

1 ATM=1 BAR=105 PA=14.4 PSI

UNIT OF WEIGHT

	N	daN	kN	kg	lbs
1N	1	0,1	0,001	0,102	0,225
1daN	10	1	0,01	1,02	2,25
1kN	1000	100	1	102	225
1kg	9,81	0,981	0,00981	1	2,205

UNITS OF TORQUE

	N·m	daN·m	kN·m	kg·m	lb·in
1N·m	1	0,1	0,001	0,102	8,854
1daN·m	10	1	0,01	1,02	88,54
1kN·m	1000	100	1	102	8854
1kg·m	9,81	0,981	0,00981	1	86,8
1 lb·in	0,1129	0,01129	0,0001129	0,01152	1

https://truckmanualshub.com/

TORQUE SPECIFICATIONS

COARSE PITCH

SIZE OF BOLT	TYPE OF BOLT					
	8.8	**8.8 + Loctite 270**	**10.9**	**10.9 + Loctite 270**	**12.9**	**12.9 + Loctite 270**
M6 x 1 mm	9,5 – 10,5 N·m	10,5 – 11,5 N·m	14,3 – 15,7 N·m	15,2 – 16,8 N·m	16,2 – 17,8 N·m	18,1 – 20 N·m
M8 x 1,25 mm	23,8 – 26,2 N·m	25,6 – 28,4 N·m	34,2 – 37,8 N·m	36,7 – 40,5 N·m	39 – 43 N·m	43,7 – 48,3 N·m
M10 x 1,5 mm	48 – 53 N·m	52 – 58 N·m	68 – 75 N·m	73 – 81 N·m	80 – 88 N·m	88 – 97 N·m
M12 x 1,75 mm	82 – 91 N·m	90 – 100 N·m	116 – 128 N·m	126 – 139 N·m	139 – 153 N·m	152 – 168 N·m
M14 x 2 mm	129 – 143 N·m	143 – 158 N·m	182 – 202 N·m	200 – 221 N·m	221 – 244 N·m	238 – 263 N·m
M16 x 2 mm	200 – 221 N·m	219 – 242 N·m	283 – 312 N·m	309 – 341 N·m	337 – 373 N·m	371 – 410 N·m
M18 x 2,5 mm	276 – 305 N·m	299 – 331 N·m	390 – 431 N·m	428 – 473 N·m	466 – 515 N·m	509 – 562 N·m
M20 x 2,5 mm	390 – 431 N·m	428 – 473 N·m	553 – 611 N·m	603 – 667 N·m	660 – 730 N·m	722 – 798 N·m
M22 x 2,5 mm	523 – 578 N·m	575 – 635 N·m	746 – 824 N·m	817 – 903 N·m	893 – 987 N·m	974 – 1076 N·m
M24 x 3 mm	675 – 746 N·m	732 – 809 N·m	950 – 1050 N·m	1040 – 1150 N·m	1140 – 1260 N·m	1240 – 1370 N·m
M27 x 3 mm	998 – 1103 N·m	1088 – 1202 N·m	1411 – 1559 N·m	1539 – 1701 N·m	1710 – 1890 N·m	1838 – 2032 N·m
M30 x 3,5 mm	1378 – 1523 N·m	1473 – 1628 N·m	1914 – 2115 N·m	2085 – 2305 N·m	2280 – 2520 N·m	2494 – 2757 N·m

FINE PITCH

SIZE OF BOLT	TYPE OF BOLT					
	8.8	**8.8 + Loctite 270**	**10.9**	**10.9 + Loctite 270**	**12.9**	**12.9 + Loctite 270**
M8 x 1 mm	25,7 – 28,3 N·m	27,5 – 30,5 N·m	36,2 – 39,8 N·m	40 – 44 N·m	42,8 – 47,2 N·m	47,5 – 52,5 N·m
M10 x 1,25 mm	49,4 – 54,6 N·m	55,2 – 61 N·m	71,5 – 78,5 N·m	78 – 86 N·m	86 – 94 N·m	93 – 103 N·m
M12 x 1,25 mm	90 – 100 N·m	98 – 109 N·m	128 – 142 N·m	139 – 154 N·m	152 – 168 N·m	166 – 184 N·m
M12 x 1,5 mm	86 – 95 N·m	94 – 104 N·m	120 – 132 N·m	133 – 147 N·m	143 – 158 N·m	159 – 175 N·m
M14 x 1,5 mm	143 – 158 N·m	157 – 173 N·m	200 – 222 N·m	219 – 242 N·m	238 – 263 N·m	261 – 289 N·m
M16 x 1,5 mm	214 – 236 N·m	233 – 257 N·m	302 – 334 N·m	333 – 368 N·m	361 – 399 N·m	394 – 436 N·m
M18 x 1,5 mm	312 – 345 N·m	342 – 378 N·m	442 – 489 N·m	485 – 536 N·m	527 – 583 N·m	580 – 641 N·m
M20 x 1,5 mm	437 – 483 N·m	475 – 525 N·m	613 – 677 N·m	674 – 745 N·m	736 – 814 N·m	808 – 893 N·m
M22 x 1,5 mm	581 – 642 N·m	637 – 704 N·m	822 – 908 N·m	903 – 998 N·m	998 – 1103 N·m	1078 – 1191 N·m
M24 x 2 mm	741 – 819 N·m	808 – 893 N·m	1045 – 1155 N·m	1140 – 1260 N·m	1235 – 1365 N·m	1363 – 1507 N·m
M27 x 2 mm	1083 – 1197 N·m	1178 – 1302 N·m	1520 – 1680 N·m	1672 – 1848 N·m	1834 – 2027 N·m	2000 – 2210 N·m
M30 x 2 mm	1511 – 1670 N·m	1648 – 1822 N·m	2138 – 2363 N·m	2332 – 2577 N·m	2565 – 2835 N·m	2788 – 3082 N·m

https://truckmanualshub.com/

TORQUE SPECIFICATIONS

WHEEL NUT TIGHTENING TORQUES

Wheel nut tightening torques recommended from rim's O.E.M. with reference the the quality of the rim's material.

WHEEL NUT TIGHTENING TORQUES				
CHARACTERISTICS	ILLUSTRATION	WHEEL STUD THREAD	RECOMMENDED WHEEL NUTS TORQUE	
			RIM MATERIAL QUALITY	
			ST 37	**ST 52
WHEEL NUTS WITH INTEGRATED SPHERICAL COLLAR	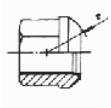	M18X1,5 mm	330 N·m	460 N·m
		M20X1,5 mm	490 N·m	630 N·m
		M22X1,5 mm	630 N·m	740 N·m
FLAT COLLAR WHEEL NUTS WITH SEPARATE SPHERICAL LOCK WASHER	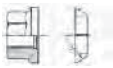	M18X1,5 mm	270 N·m	360 N·m
		M20X1,5 mm	360 N·m	450 N·m
		M22X1,5 mm	460 N·m	550 N·m
WHEEL NUTS WITH INTEGRATE SEAT CAPTIVE WASHER		M18X1,5 mm	260 N·m	360 N·m
		M20X1,5 mm	350 N·m	500 N·m
		M22X1,5 mm	450 N·m	650 N·m

****RIM'S MATERIAL ST 52 IS RECOMMENDED BY DANA ON AXLE APPLICATION. IT IS THE OPTIMUM MATERIAL FOR TIGHTENING THE RIM TO THE HUB.**

NOTE:

The wheel nut tightening torque is related only on nut thread and stud thread dry. (Without oil or any lubricant).

NOTE:

The wheel nut tightening torque takes into consideration not only the nut + stud characteristics, but also the quality of the rim material.

THE DANA OFFICIAL TIGHTENING TORQUE TABLE, INCLUDED IN EACH SERVICE MANUAL, SHOWS THE TORQUE FIGURE RELATED TO THE BOLT CHARACTERISTIC ONLY .		
DANA OFFICIAL TIGHTENING TORQUE TABLE		
NUT MATERIAL QUALITY 8.8 & 10.9	STUD MATERIAL QUALITY 10.9	*ALLOW TIGHT TORQUE
M18 x 1,5 mm	M18 x 1,5 N·m	442 - 489 N·m
M20 x 1,5 mm	M20 x 1,5 N·m	613 - 677 N·m
M22 x 1,5 mm	M22 x 1,5 N·m	822 - 908 N·m

***THE TORQUE FIGURE ON NUT AND STUD COUPLING MUST BE RELATED ON STUD MATERIAL QUALITY (DANA AXLE ARE 10.9 ONLY).**

https://truckmanualshub.com/

MAINTENANCE

MAINTENANCE POINTS

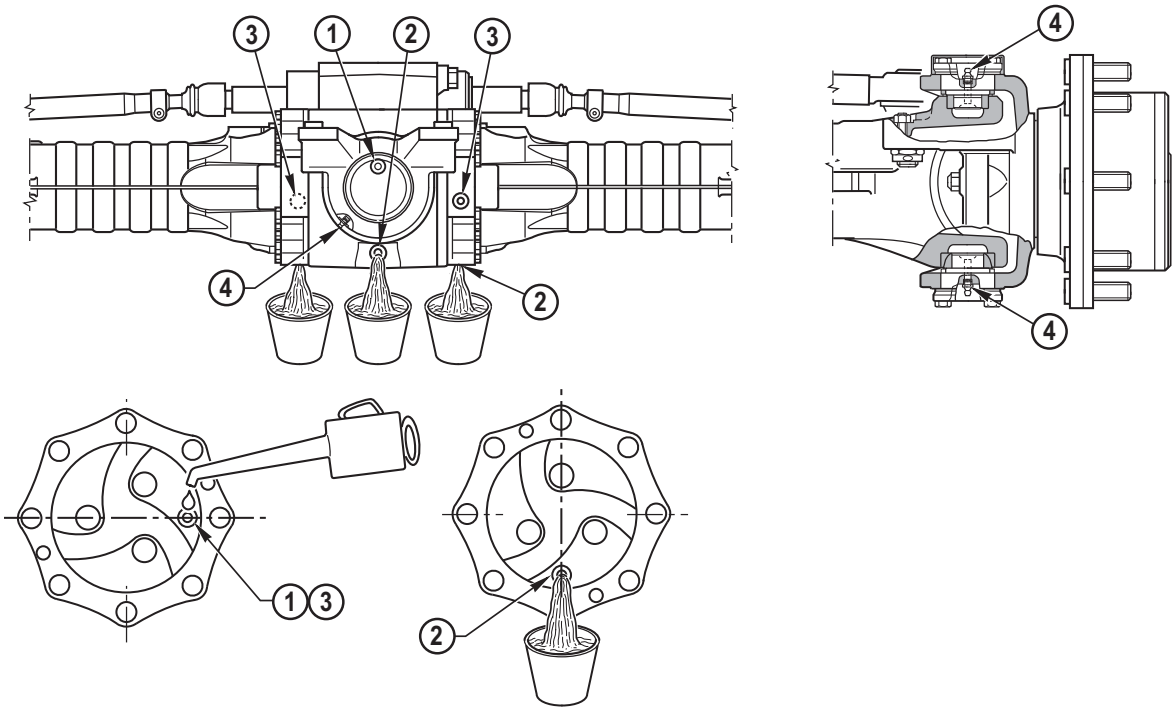

1 - Oil fill plug

2 - Oil drain plug

3 - Check level plug

https://truckmanualshub.com/

MAINTENANCE INTERVALS

OPERATION	MEMBER	FREQUENCY	LUBRICANTS
Check levels	Differential	Monthly	SAE85W90 (API GL4 - MIL L-2105) With additives for oil-bath brakes SAE85W90 (API GL5 - MIL 2105-B) With additives for oil-bath brakes, for units presenting hypoid crown wheel and pinion and/or self-locking differential gear
	Planetary reduction	Every 200 hours	
Oil change	Differential	Every 800 hrs *	
	Planetary reduction	Every 1000 hrs *	
	L.S. Differential	Every 700 hrs */***	
Adjustment	Negative brake	Every 1000 hrs *	Only for mineral oil use e.g. ATF Dexron II. Make sure that master cylinder seals are suitable for mineral oil.
	Service brake	Every 500 hours	
Tightening	Wheel nuts	Every 200 hours **	
Greasing	King Pin Tapered Bearings	Normal work - Weekly	NLGI 2 EP or NLGI 3 EP****
	Seals		
	King Pin Bushings	Severe duty - Daily	NLGI 2 EP or NLGI 3 EP**** w/Moly Additive
	Trunnion Bushings		

If working in severe duty conditions half intervals should be used

* Initially after 100 working hours

** Initially after 10 working hours

*** When it starts sounding noisy

**** According to DIN 51825 level KP2K-30 (NLGI #2) or KP3K-20 (NLGI #3); ASTM D4950 NLGI #2 GC-LB

https://truckmanualshub.com/

LUBRICANT & SEALANT SPECIFICATIONS

1 - Locking, sealing and lubricating materials referred to in this manual are the same used in the shop-floor.

2 - The table below gives an account of the typical applications of each single material, in order to facilitate replacement with similar products marketed by different brand names with different trade marks.

LOCTITE 242

Anaerobic product apt to prevent the loosening of screws, nuts and plugs. Used for medium-strength locking. Before using it, completely remove any lubricant by using the specific activator.

LOCTITE 243

The oleocompatible alternative to 242. Does not require the activation of lubricated surfaces.

LOCTITE 270

Anaerobic product for very-high strength locking of screws and nuts. Before using it, completely remove any lubricant by using the specific activator.

To remove parts, it may be necessary to heat them at 80° C approximately

LOCTITE 275

Anaerobic product suitable for high-strength locking and sealing of large threaded parts, bolts and stud bolts, for pipe sealing and for protecting parts against tampering; suitable for sealing coupling surfaces with a maximum diametrical clearance of 0.25 mm.

LOCTITE 510

Anaerobic product for the hermetic sealing of flanged units and screw holes communicating with fluids. Can seal clearances between flanges up to 0.2 mm.

LOCTITE 577

Quick anaerobic sealant for sealing threaded portions of conical or cylindrical unions up to M80. Before using it, remove any lubricant with the specific activator. After polymerisation, disassembly may result rather difficult, so heating may be necessary for larger diameters.

LOCTITE 638

Anaerobic adhesive for fast and high-strength gluing of cylindrical metal joints (hub on shaft). Can glue together parts with clearance ranging between 0.1 and 0.25 mm.

LOCTITE 648

Anaerobic adhesive for fast and medium-strength gluing of cylindrical metal joints (hub on shaft). Can glue together parts with radial clearance below 0.1 mm.

AREXONS (REPOSITIONABLE JOINTING COMPOUND FOR SEALS)

Solvent-based sealing compound for elastic seals, drying through evaporation. Used for sealing the outer diameter of sealing rings for rotating shafts with outer metal reinforcement.

SILICONE

Semi-fluid adhesive material used for sealing and filling and to protect components from environmental and physical elements. Polymerises with non-corrosive dampness.

TECNO LUBE/101 (SILICONE-BASED GREASE)

Highly adhesive synthetic grease, with silicone compounds added.

Applied to adjustment screws with hole communicating with oil-type fluids.

Used when frequent adjusting is required.

MOLIKOTE (DOW CORNING)

Lubricating compound containing molybdenum disulphide, used to lubricate articulation pins and to prevent sticking and oxidation of parts that are not lubricated on a regular basis.

(LITHIUM-BASED) GREASE

Applied to bearings, sliding parts and used to lubricate seals or parts during assembly.

https://truckmanualshub.com/

https://truckmanualshub.com/

SAFETY PRECAUTIONS

1 - During all operations described in this manual, the axle should be fastened onto a trestle, while the other parts mentioned should rest on supporting benches.

2 - When removing one of the arms, an anti-tilting safety trestle should be placed under the other arm.

3 - When working on an arm that is fitted on the machine, make sure that the supporting trestles are correctly positioned and that the machine is locked lengthways.

4 - Do not admit any other person inside the work area; mark off the area, hang warning signs and remove the ignition key from the machine.

5 - Use only clean, quality tools; discard all worn, damaged, lowquality or improvised wrenches and tools. Ensure that all torque wrenches have been checked and calibrated.

6 - Always wear gloves and non-slip rubber shoes when performing repair work.

7 - Should you stain a surface with oil, remove marks straight away.

8 - Dispose of all lubricants, seals, rags and solvents once work has been completed. Treat them as special waste and dispose of them according to the relative law provisions obtaining in the country where the axles are being overhauled.

9 - Make sure that only weak solvents are used for cleaning purposes; avoid using turpentine, dilutants and toluol, xylolbased or similar solvents; use light solvents such as Kerosene, mineral spirits or water-based, environment friendly solvents.

10 - For the sake of clarity, the parts that do not normally need to be removed have not been reproduced in some of the diagrams.

11 - For agricultural axles, the terms RIGHT and LEFT refer to the position from operator's seat. For construcition axle, the terms RIGHT and LEFT refer to the position outside facing the machine (with the input drive facing forward).

12 - After repair work has been completed, accurately touch up any coated part that may have been damaged.

13 - Follow all safety instructions in the Original Equipment Manufacturer (OEM) manual that came with the vehicle.

DANGER	Indicates an imminently hazardous situation which, if not avoided, will result in death or serious injury.
WARNING	Indicates an imminently hazardous situation which, if not avoided, will result in death or serious injury.
CAUTION	Indicates a potentially hazardous situation which, if not avoided, may result in moderate or minor injury.
NOTICE	Indicates a situation which, if not avoided, may result in if not avoided, may result in damage to components.

https://truckmanualshub.com/

https://truckmanualshub.com/

CHECKING WEAR AND REPLACING THE BRAKING DISCS

EXPLODED VIEW

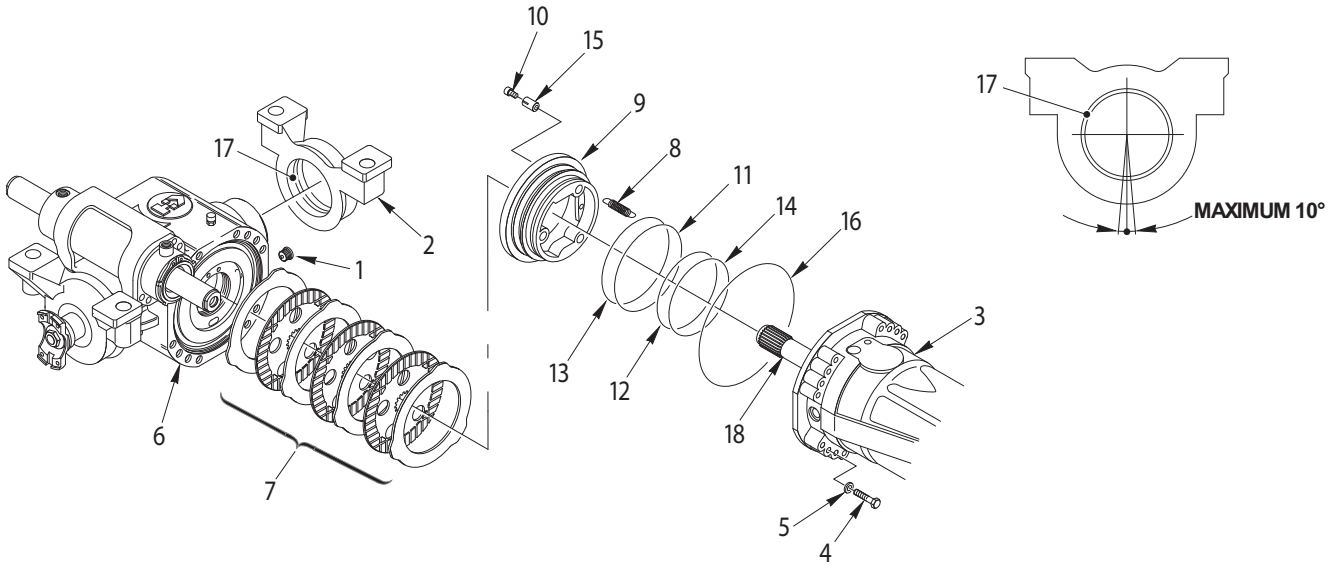

https://truckmanualshub.com/

DISASSEMBLY

⚠CAUTION

Perform all operations on both arms.

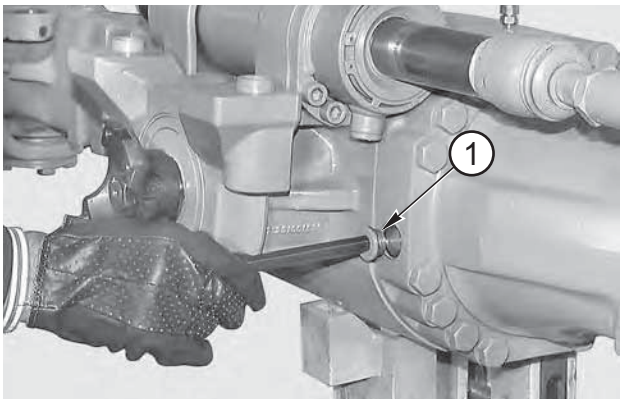

FIGURE 1:
Remove the oil-level plug (1).

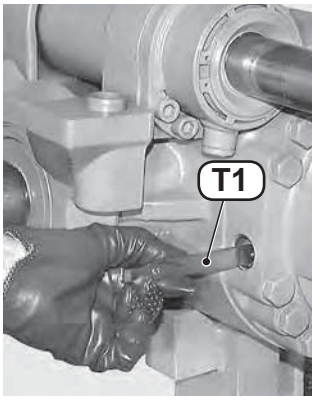

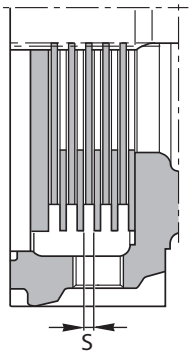

FIGURE 2: Apply the brakes and, keeping them under pressure, check the linings "S" between the disks using tool T1 (See drawing T1 p. 24).
Minimum "S": 4.5 mm.

⚠CAUTION

Replace the braking disks and the intermediate disks on both sides if necessary.

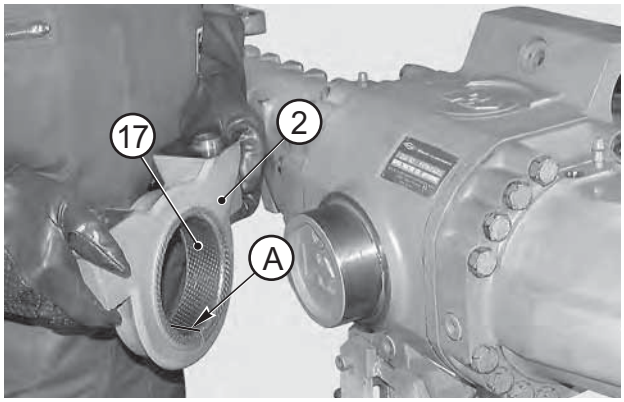

FIGURE 3: Remove the swinging support (2) on the side opposite the drive.

NOTE:

If the bushing (17) is worn and needs replacing, write down the assembly side of the connection notch "A".

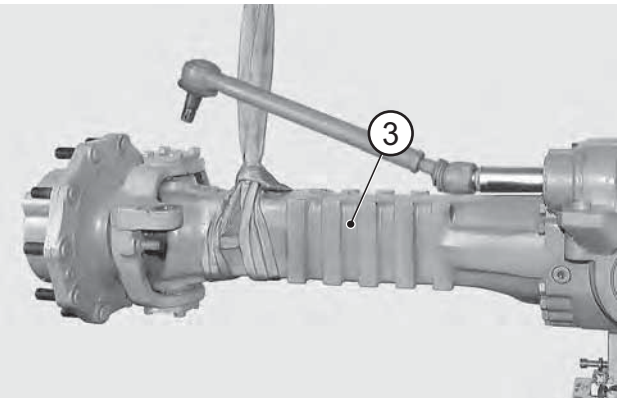

FIGURE 4: Disconnect the pins of the steering bars from the steering case (See STEERING CYLINDER p. 47).
Sling the arm (3) to be removed and put the rod under slight tension.

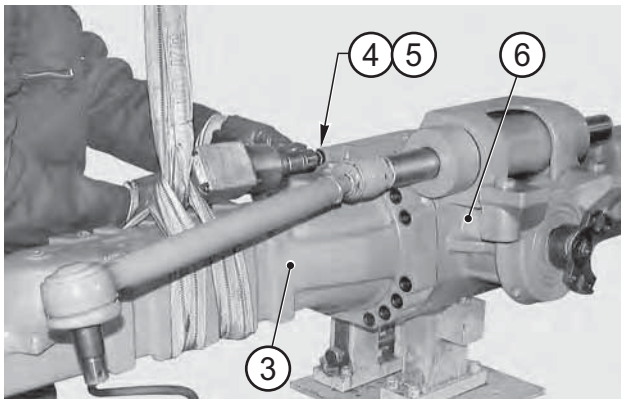

FIGURE 5: Loosen and remove the screws (4) and the washers (5) that fix the arm (3) to the central body (6).

https://truckmanualshub.com/

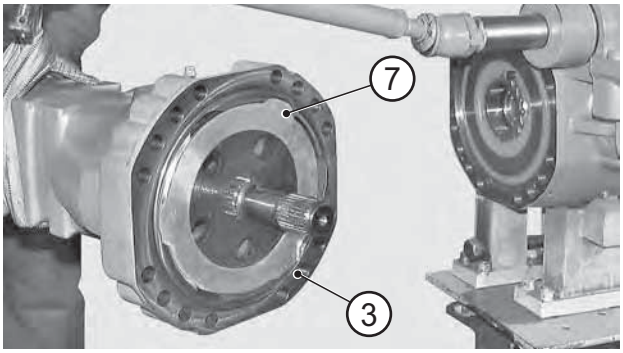

FIGURE 6: Remove the arm (3) together with the pack of the braking disks (7).
Place the arm on a bench.

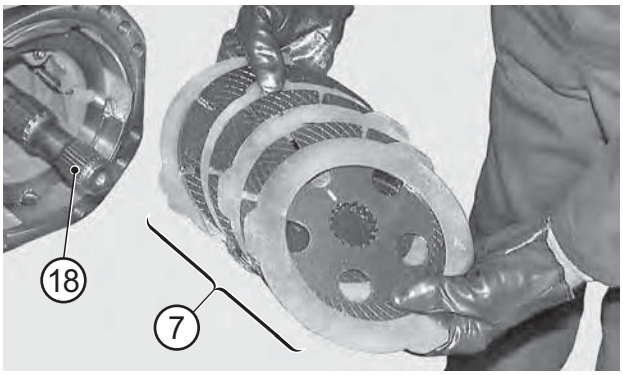

FIGURE 7: Remove the braking disks (7) and write down their order of assembly.

NOTE:

1 - If the disks do not need replacing, avoid switching their position.

2 - Extract the u-joint (18).

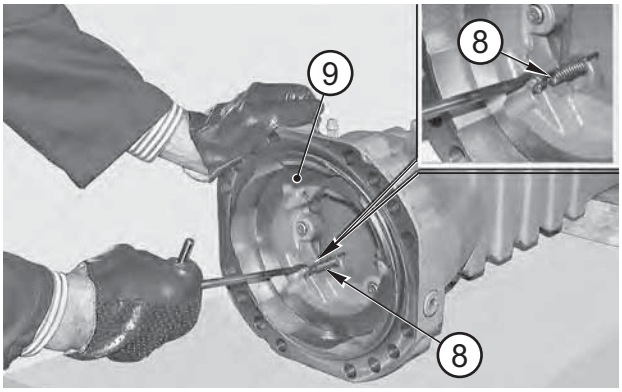

FIGURE 8: Remove the reversal springs (8) from the piston (9).

NOTE:

If the springs (8) are weak or deformed they must be replaced.

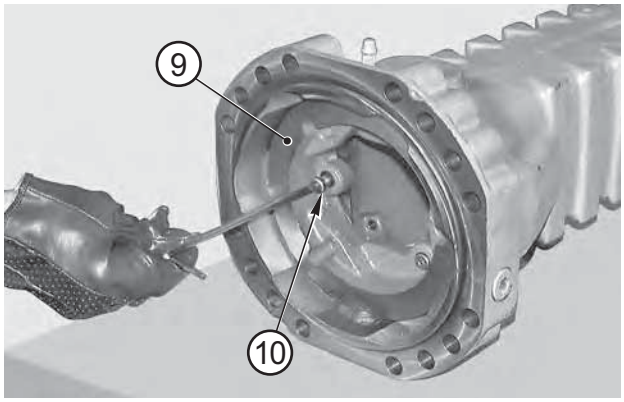

FIGURE 9: Remove the pin screws (10) guiding the piston (9).

⚠CAUTION

If the screws are to be replaced, write down the different colors for the different brake gap.

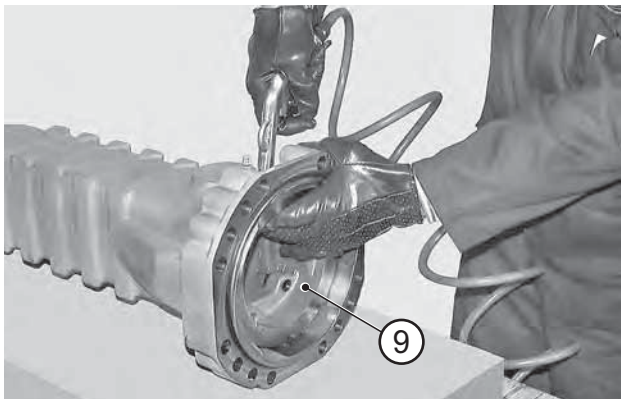

FIGURE 10: Slowly introduce compressed air through the connection of the braking circuit in order to extract the entire piston.

⚠CAUTION

Hold on to the piston as it may be suddenly ejected and damaged.

https://truckmanualshub.com/

ASSEMBLY

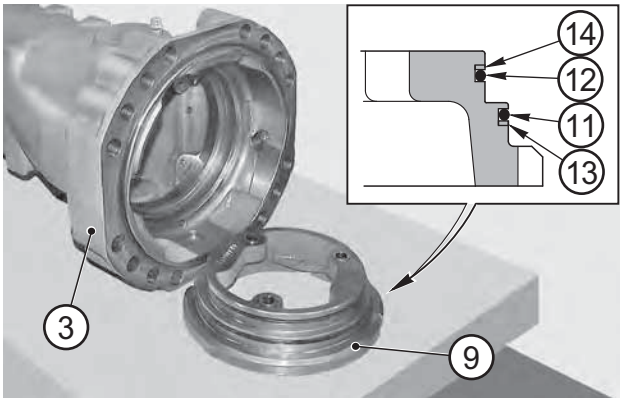

FIGURE 11: Accurately clean the piston (9) and the seats of slide and seal.
Replace the o-rings (11) and (12) and the anti-extrusion rings (13) and (14); make sure that the assembly side is correct.

⚠CAUTION

Accurately check the positioning of the anti-extrusion rings (13) and (14).

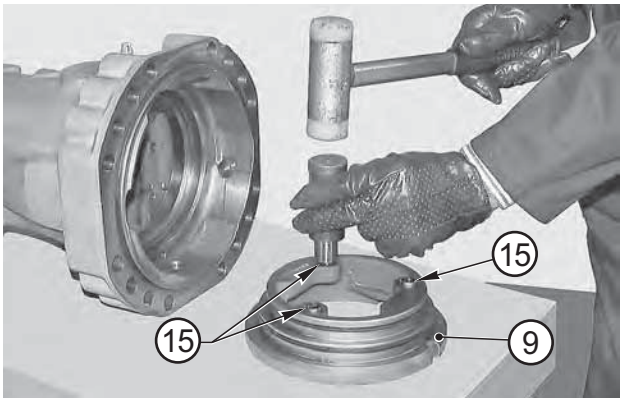

FIGURE 12: Insert the stroke automatic regulation springs (15); place them in line with the piston (9).

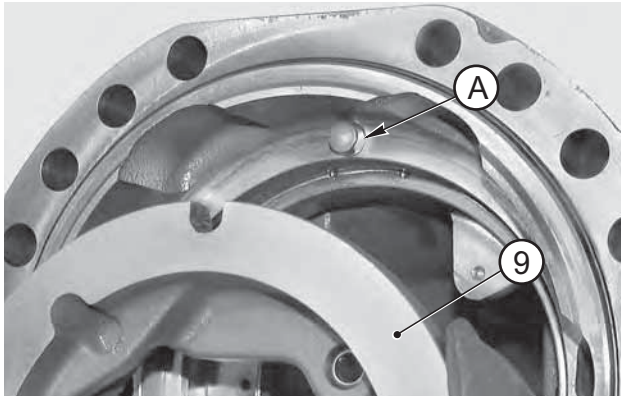

FIGURE 13: Lubricate the seals (11) and (12) and fit the piston (9) into the arm (3).

⚠CAUTION

Make sure that the piston seat fits into the stop pin (A) inside the arm.

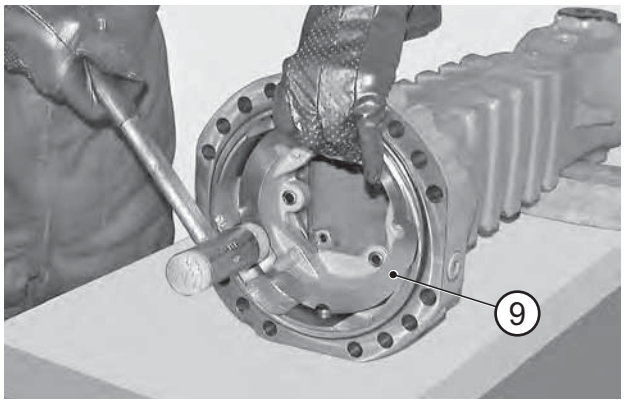

FIGURE 14: Assist the insertion of the piston (9) by lightly hammering around the edge with a plastic hammer.

https://truckmanualshub.com/

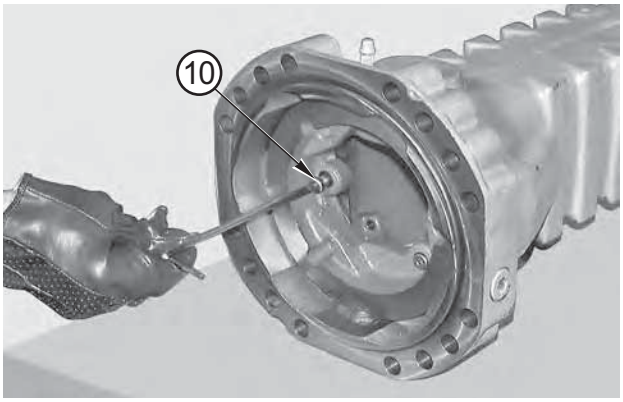

FIGURE 15: Fit the pin screws (10) making sure that they are all of the same color.
See Service Part List “Brake” section for bolt color detail.
Apply Loctite 270 to the thread.
Torque wrench setting: 5 - 7 N·m.

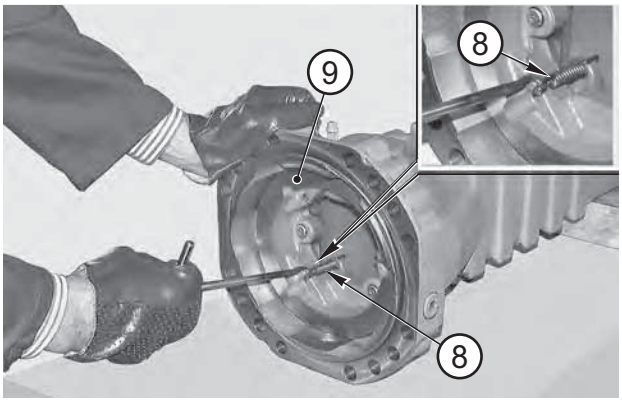

FIGURE 16: Fit the reversal springs (8) on the piston (9).

⚠CAUTION

Pay attention not to deform the connections of the springs.

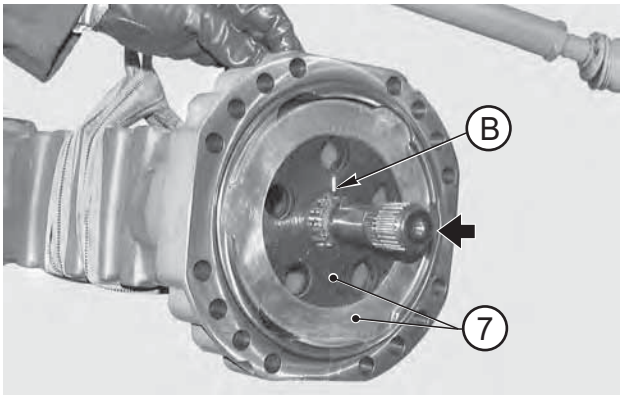

FIGURE 17: Slightly lubricate the braking disks (7) and fit them in the arm following the correct sequence; orient them so that the oil circulation holes and the marks "B" are perfectly lined up.

NOTE:

When installing the steel discs, the slot corresponding to the oil level cap should always be kept free.

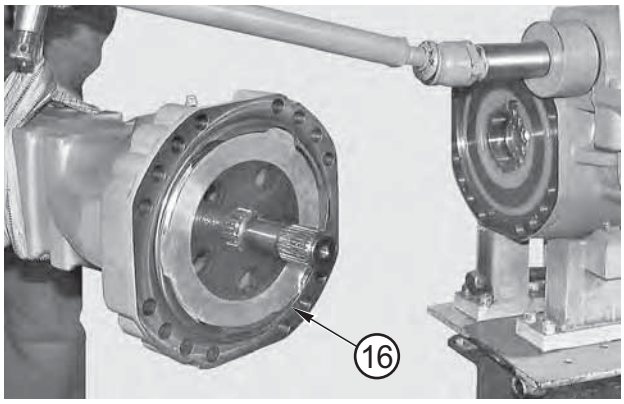

FIGURE 18: Check that the positioning of the sealing ring (16) on the arm is intact; install the complete arm.
Lock it into position using two screws (4) and washers (5).

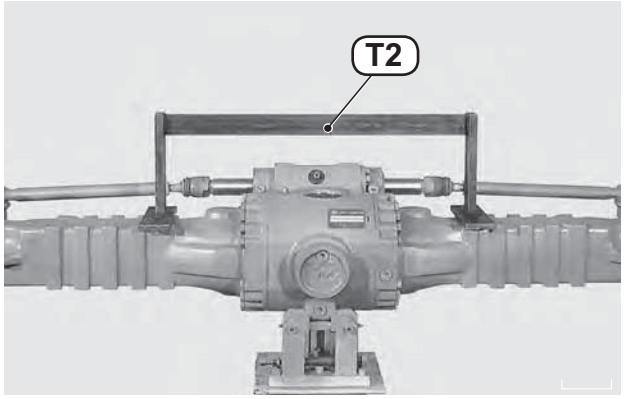

FIGURE 19: Check the flatness of the arms using tool T2 (See drawing T2 p. 24) and finally lock the arms with the screws (4) and the washer (5) using the criss-cross method.
Torque wrench setting: 298 N·m

https://truckmanualshub.com/

SPECIAL TOOLS

T1

P/N: 2313

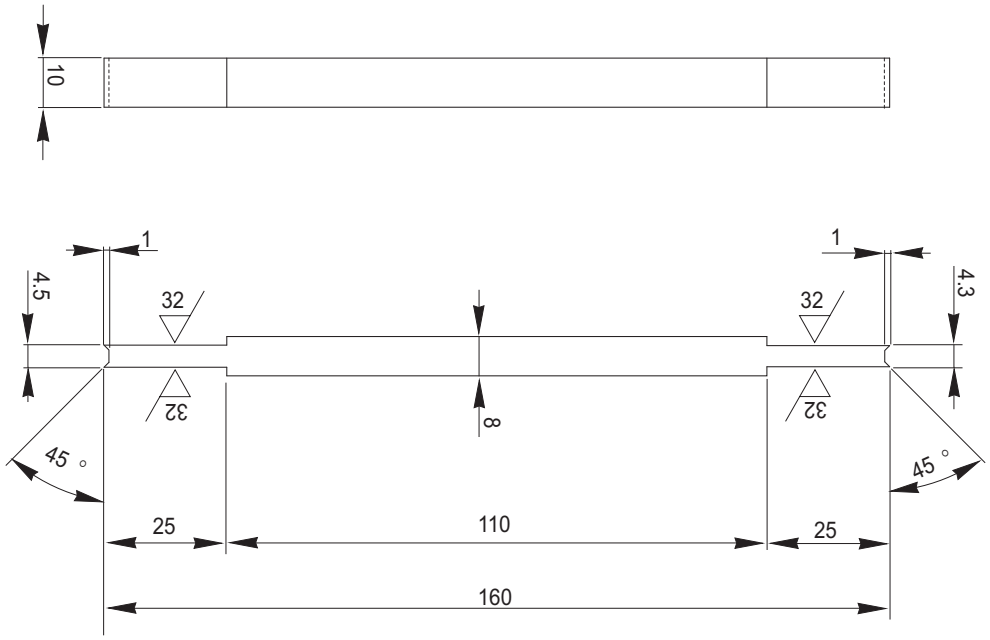

T2

P/N: 2305

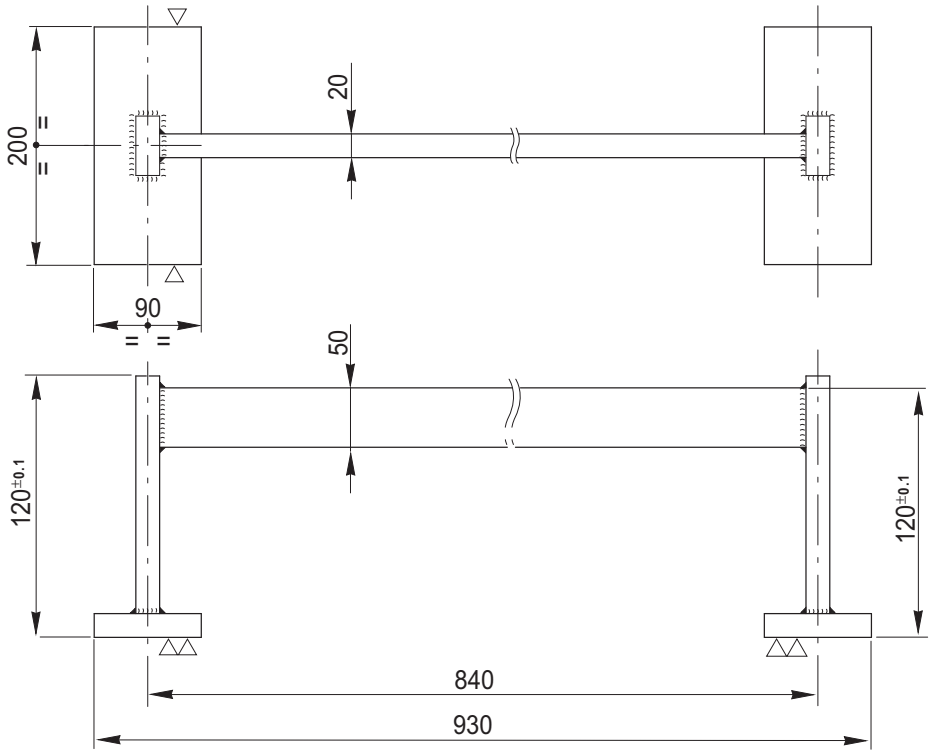

https://truckmanualshub.com/

COMPLETE STEERING CASE

EXPLODED VIEW

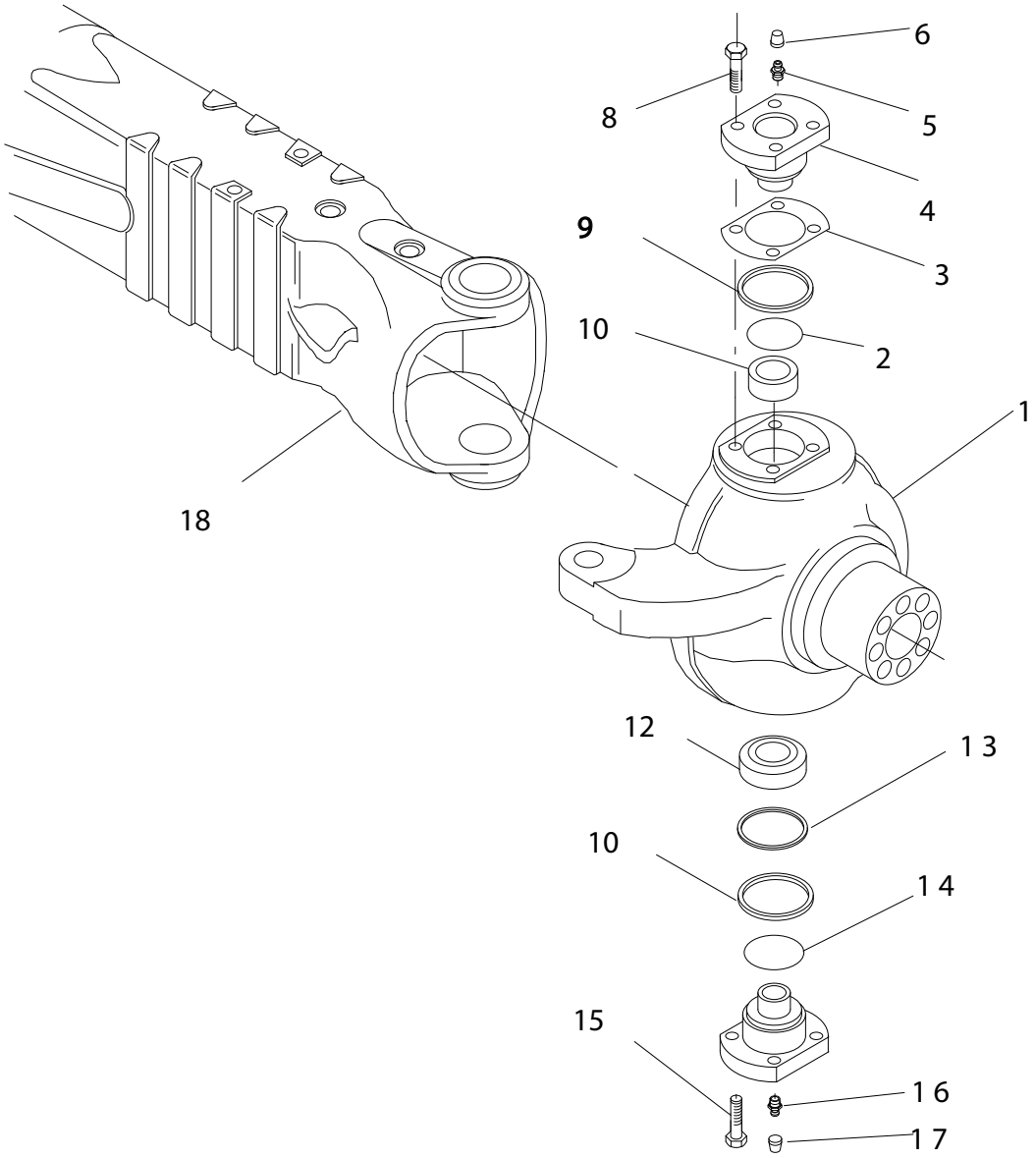

https://truckmanualshub.com/

DISASSEMBLY

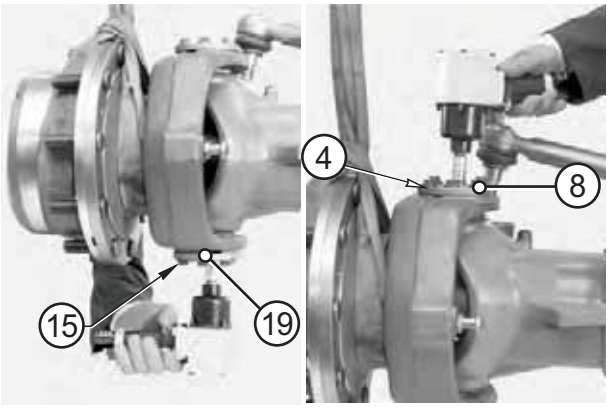

FIGURE 1: Loosen and remove the capscrews (15)(8) from the articulation pin (19)(4).

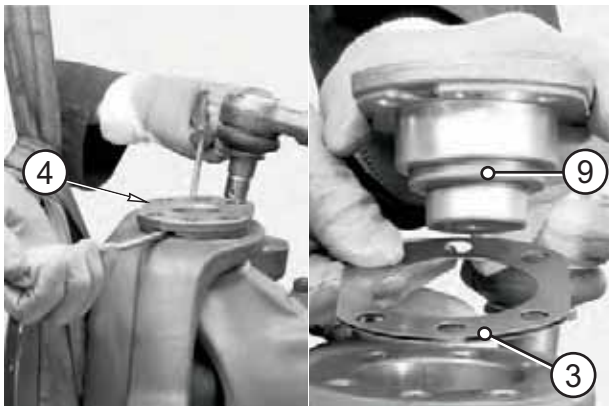

FIGURE 2: Using two levers, remove the top articulation pin (4) complete with front seal (9) and shims (3).

⚠CAUTION

Pay attention not to damage the surfaces.

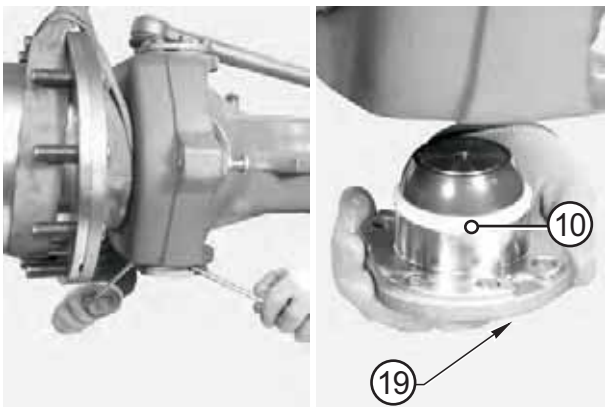

FIGURE 3: Remove the bottom articulation (19) pin complete with front sealing ring (10).

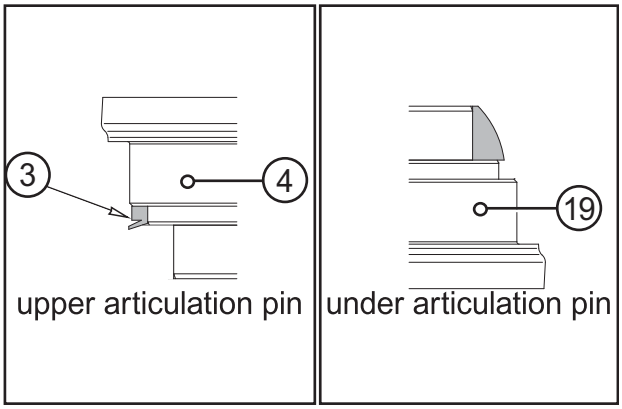

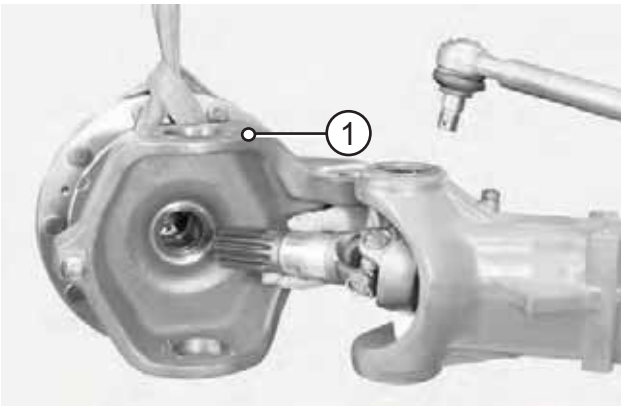

FIGURE 4: Remove the complete steering case (1).

https://truckmanualshub.com/

ASSEMBLY

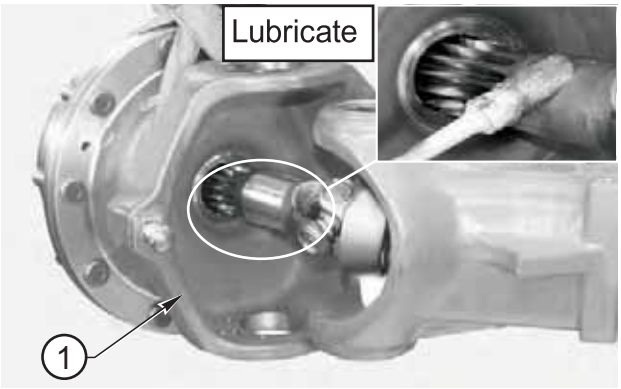

FIGURE 5: Lubricate the terminal of the u-joint and install the steering case (1).

⚠CAUTION

Pay due attention not to damage the dust cover rings and the sealing rings.

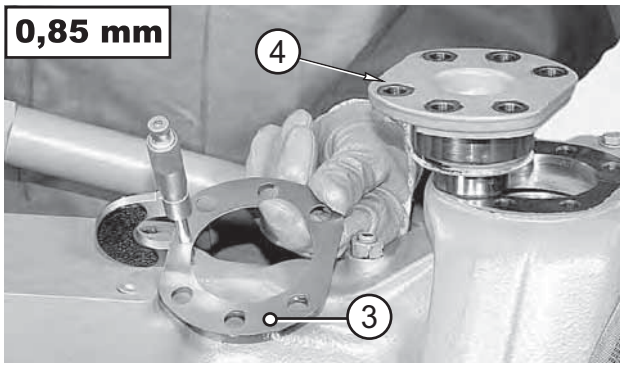

FIGURE 6: Prepare a series of shims (3) of 0,85 mm. To be assembled under the upper pin (4).

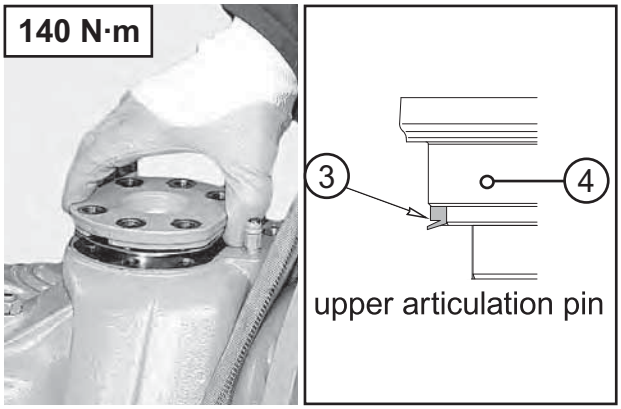

FIGURE 7: Fit a new seal (3) onto the top articulation pin (4). Lubricate and install the unit in the steering case.
Position the screws (8) and tighten with torque wrench 140N·m.
Check the correct assembly side of the seal (3).

FIGURE 8: Lubricate steering case.

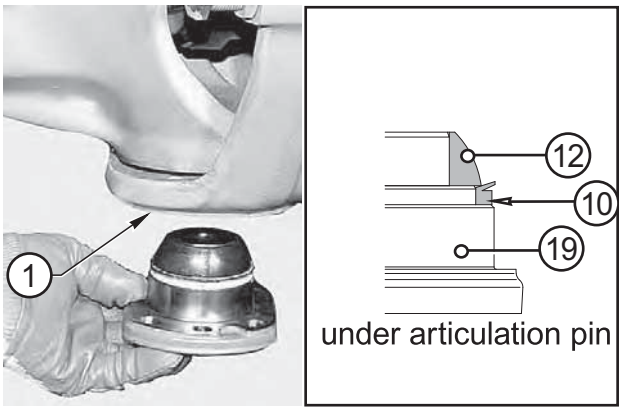

FIGURE 9: Fit the unit (19) in the steering case (1). Position the screws (15) and tighten.
Check for the correct assembly side of the seal (10).

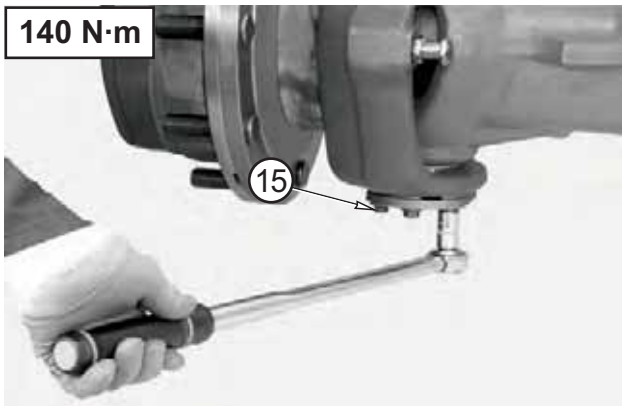

FIGURE 10: Tighten the new capscrews (15) of top and bottom articulation pins in sequence using the criss-cross method.
Torque wrench setting: 140 N·m

https://truckmanualshub.com/

FIGURE 11: Check with a lever that there is no vertical gap. In case there is any gap, determine the width and reduce it by removing shims.

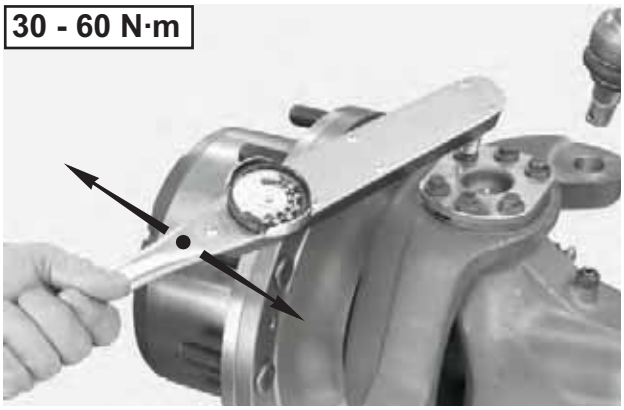

FIGURE 12: Check the torque of the pins, which has to be between 30 and 60 N·m.
If the preliminary measured value is too high, the shims have to be increased.

https://truckmanualshub.com/

DOUBLE U-JOINT

EXPLODED VIEW

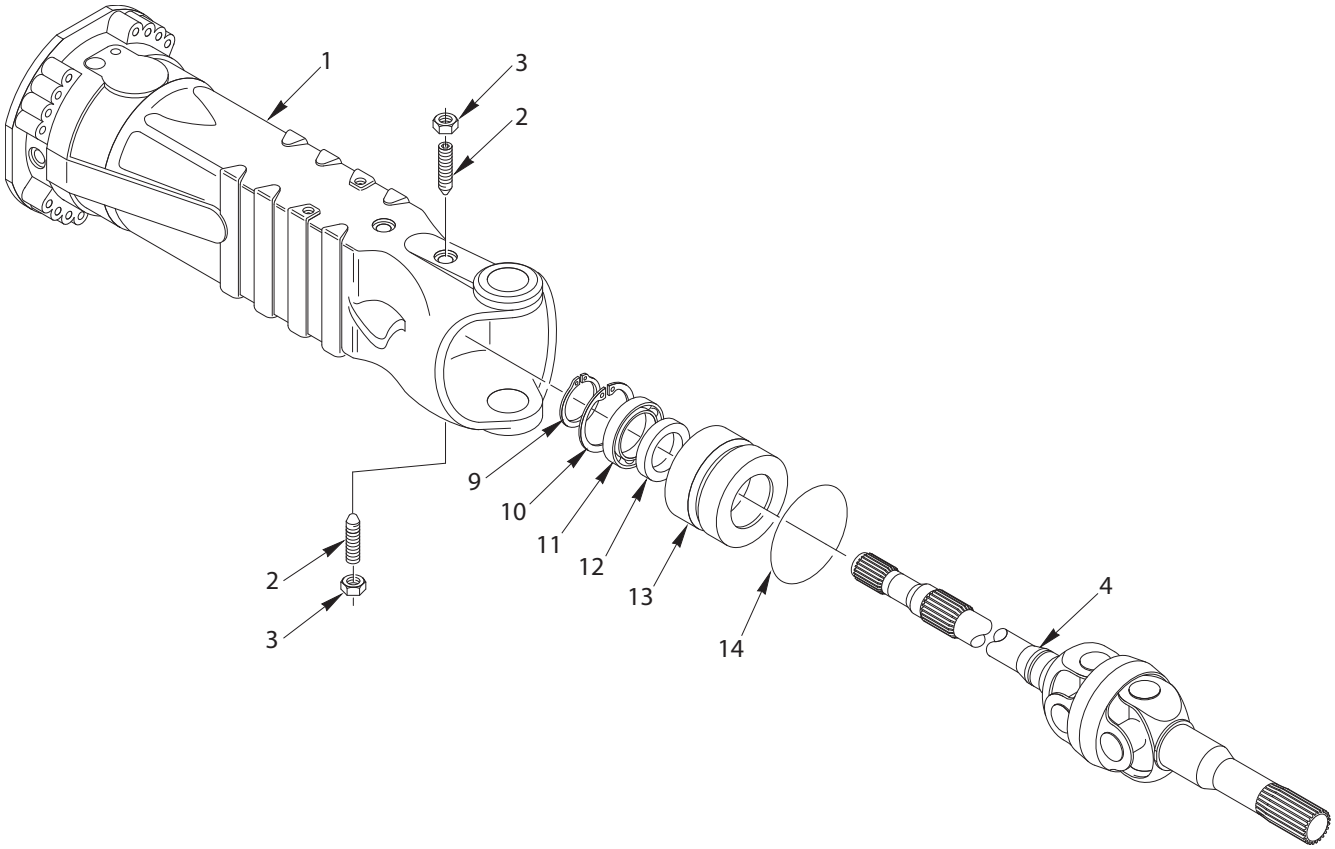

https://truckmanualshub.com/

DISASSEMBLY

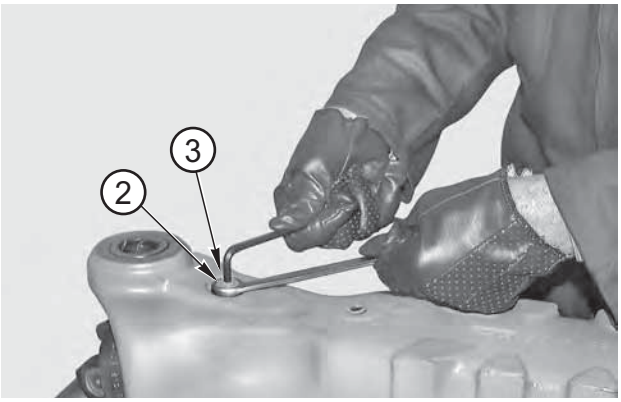

FIGURE 1: Loosen and remove the top and bottom check nuts (2) from the studs (3).

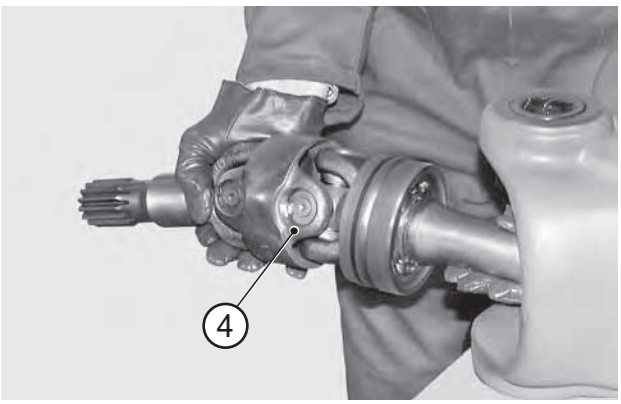

FIGURE 2: Remove the entire u-joint (4).

NOTE:

If necessary, for the extraction of the double U-joint use a plastic mallet or a lever.

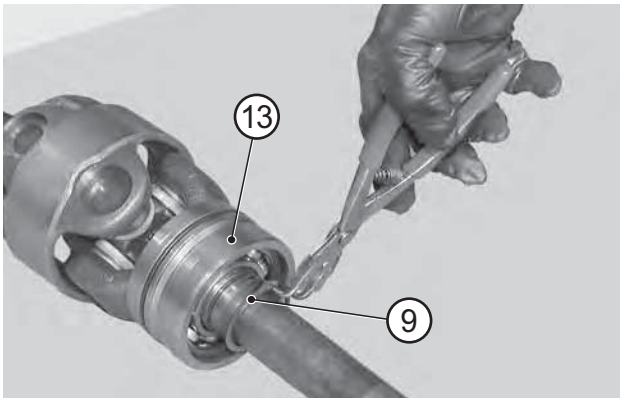

FIGURE 3: Remove the snap ring (9) from the bushing unit (13).

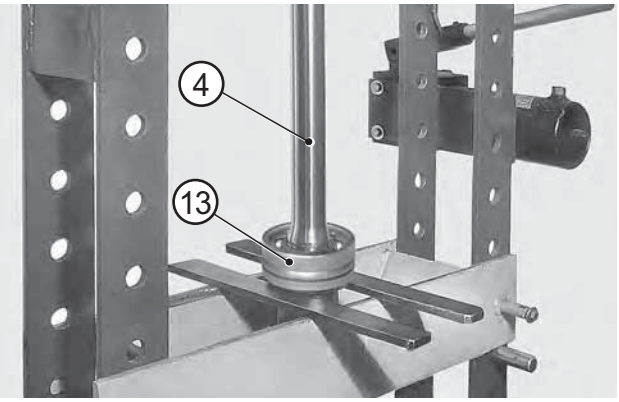

FIGURE 4: Position the entire u-joint (4) under a press and remove the complete bushing (13).

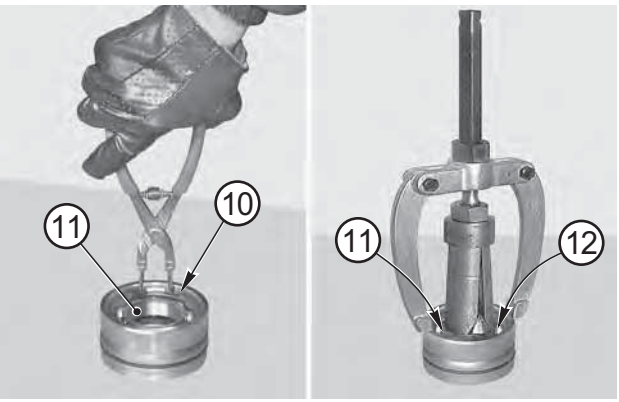

FIGURE 5: Remove the snap ring (10) from the bearing (11). Use a puller to remove the bearing (11), the sealing ring (12) and the o-ring (14).

NOTE:

Write the assembly side of the ring (12).

https://truckmanualshub.com/

ASSEMBLY

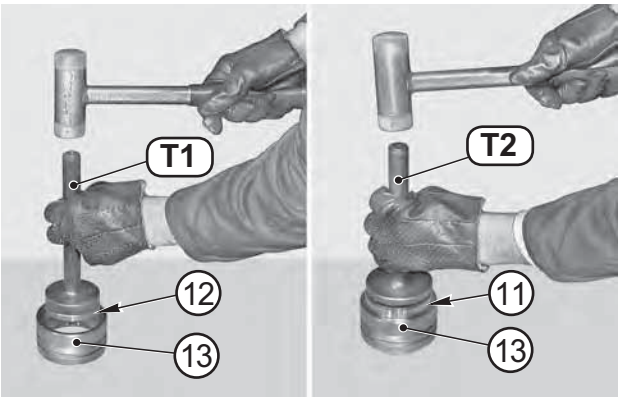

FIGURE 6: Using tools T1 (See drawing T1 p. 33) and T2 (See drawing T2 p. 33), insert the sealing ring (12) and the bearing (11) in the bushing (13).

NOTE:

Carefully check the assembly side of the seal (12).

FIGURE 7: Fit the snap ring (10) on the bearing (11).

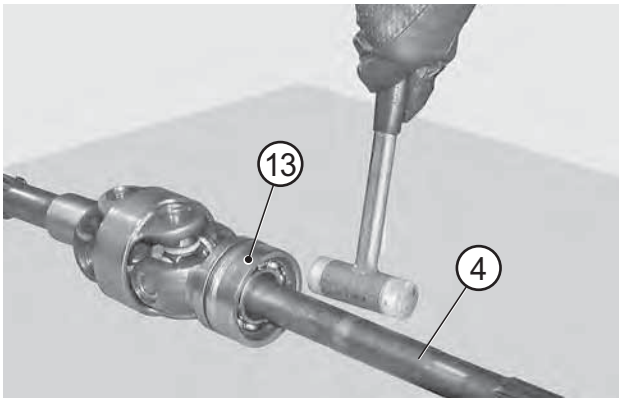

FIGURE 8: Heat the bearing in oil at an approximate temperature of 100°C and fit the entire bushing (13) on the u-joint (4).

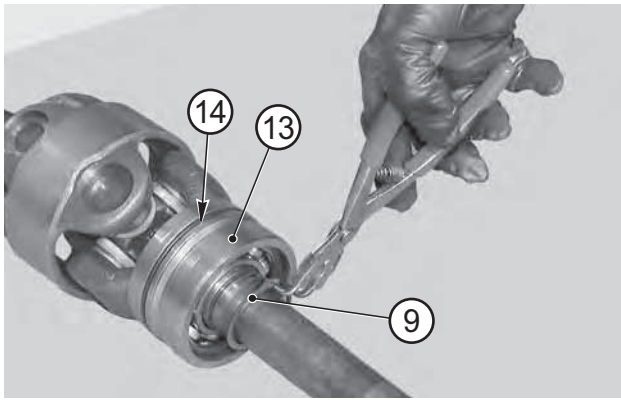

FIGURE 9: Fit the check ring (9) on the bushing unit (13); also put the o-ring (14) into position.

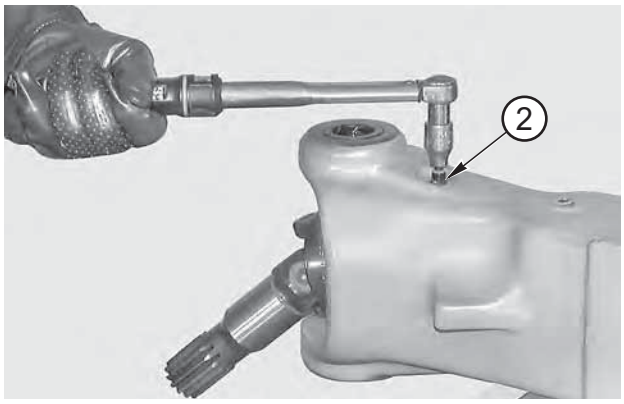

FIGURE 10: Insert the u-joint and tighten the top and bottom studs (2).
Torque wrench setting: maximum 15 N·m.

NOTE:

For u-joint coming with a bushing, center the point of the check studs in the slot.

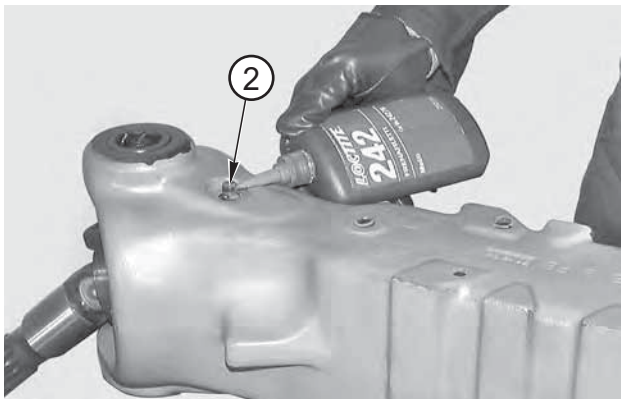

FIGURE 11: Apply Loctite 242 to the jutting parts of the studs (2).

https://truckmanualshub.com/

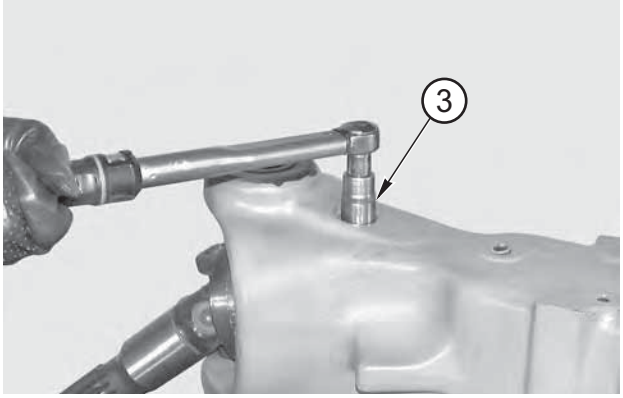

FIGURE 12: Install the nuts (3) on the studs (2) and tighten them using a torque wrench.
Torque wrench setting: 122 N·m

https://truckmanualshub.com/

SPECIAL TOOLS

T1

P/N: 3342

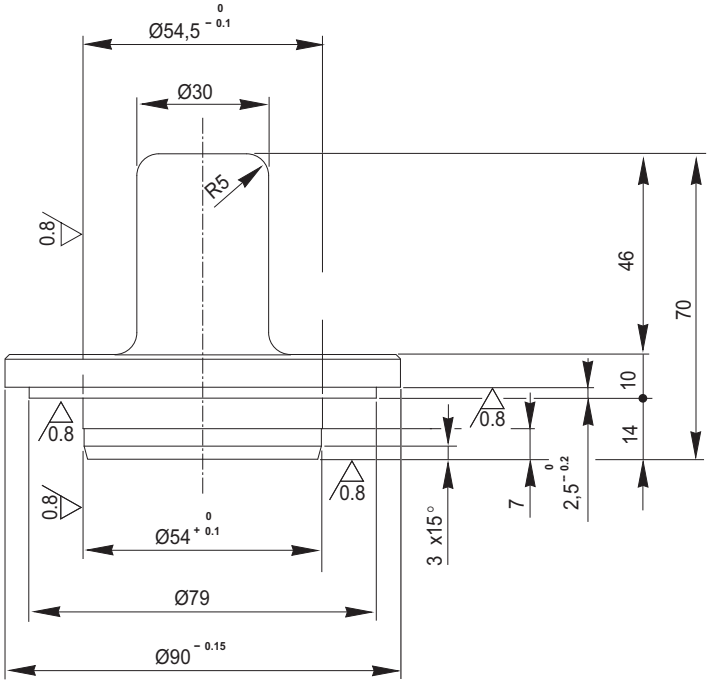

T2

P/N: 2301

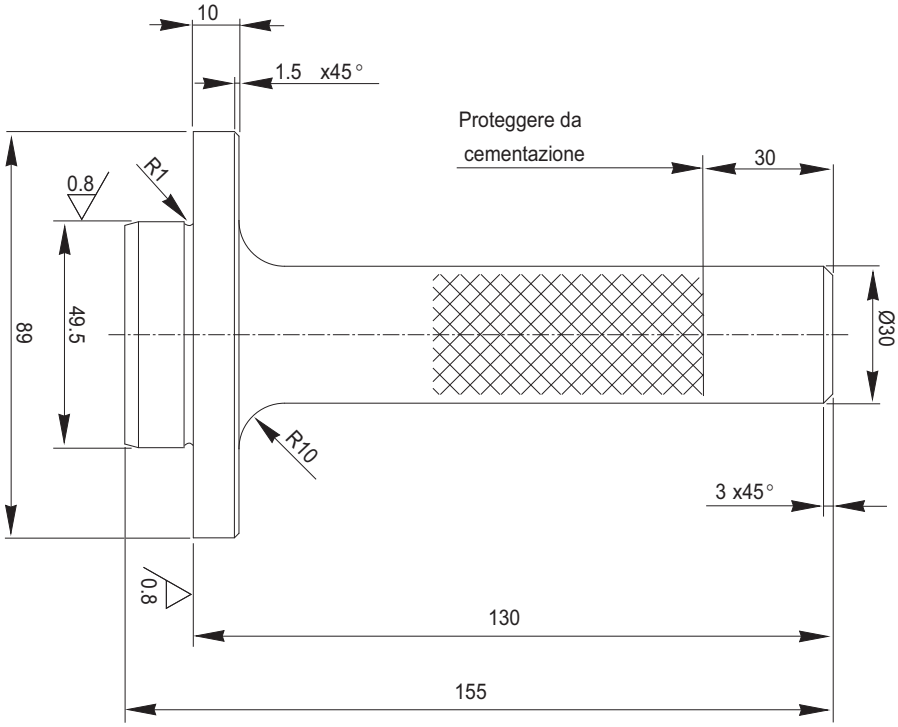

https://truckmanualshub.com/

https://truckmanualshub.com/

PLANETARY REDUCTION GEAR

EXPLODED VIEW

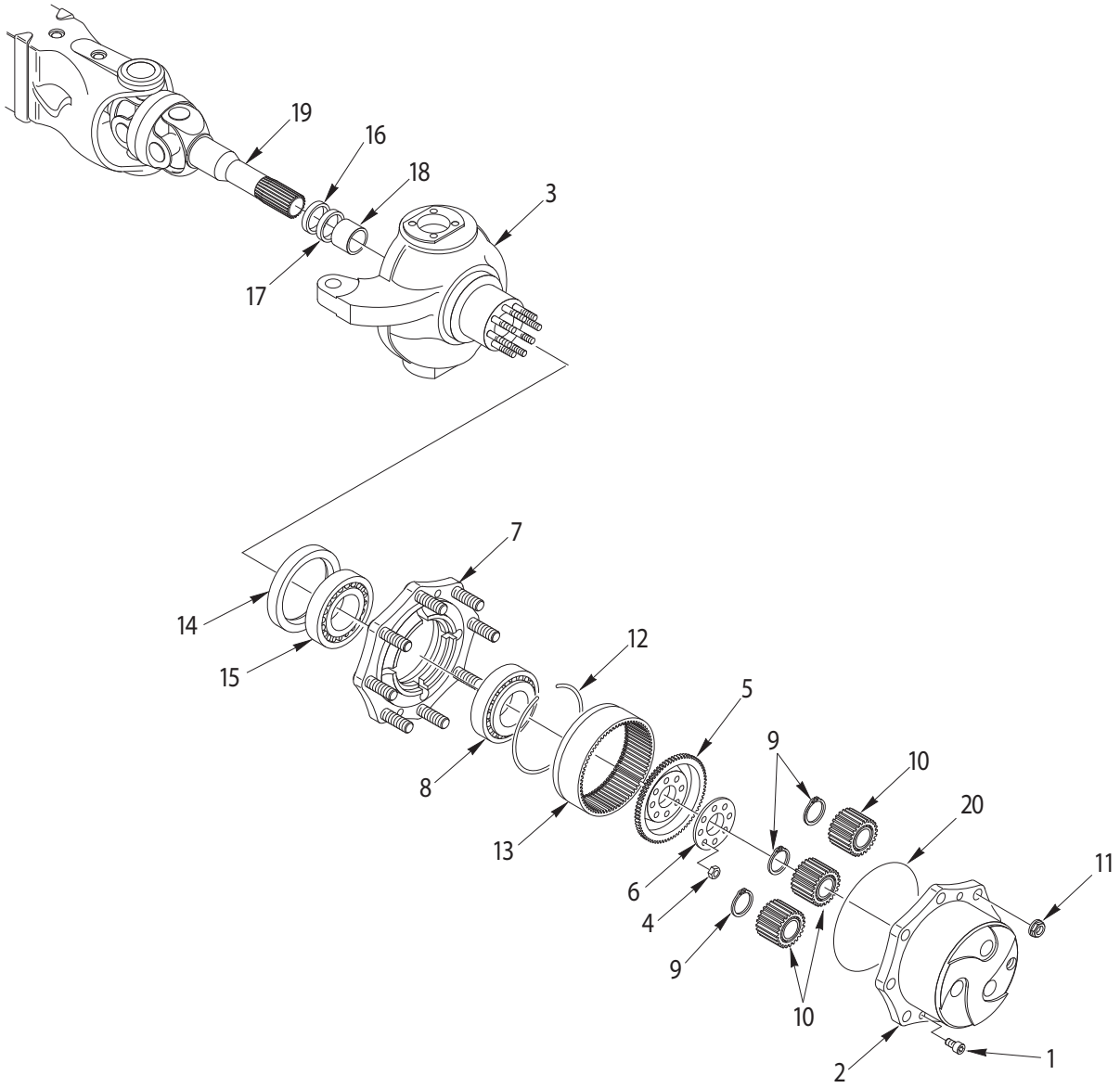

https://truckmanualshub.com/

DISASSEMBLY

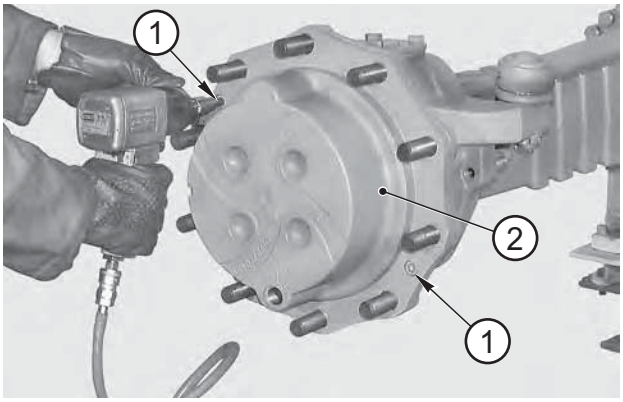

FIGURE 1: Disconnect the steering bars from the steering case (3).
For details, see COMPLETE STEERING CASE p. 25.
Remove the securing screws (1) from the planetary carrier cover (2).

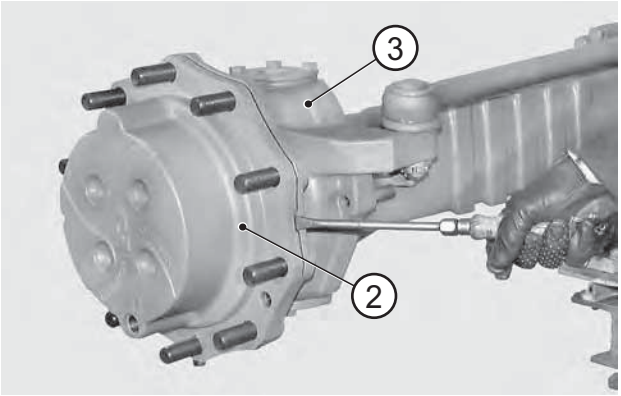

FIGURE 2: Disjoint the planetary carrier cover (2) from the steering case (3) by alternatively forcing a screwdriver into the appropriate slots.

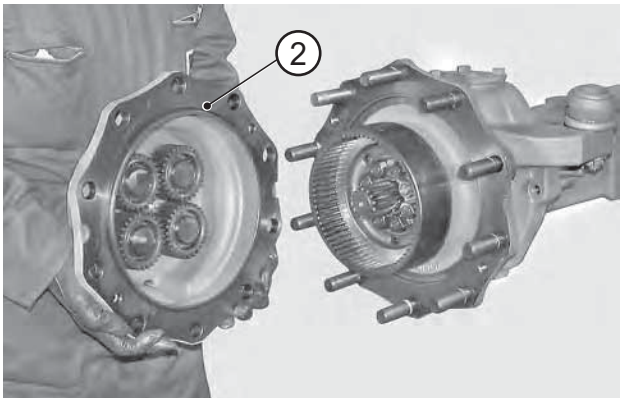

FIGURE 3: Remove the complete planetary carrier cover (2).

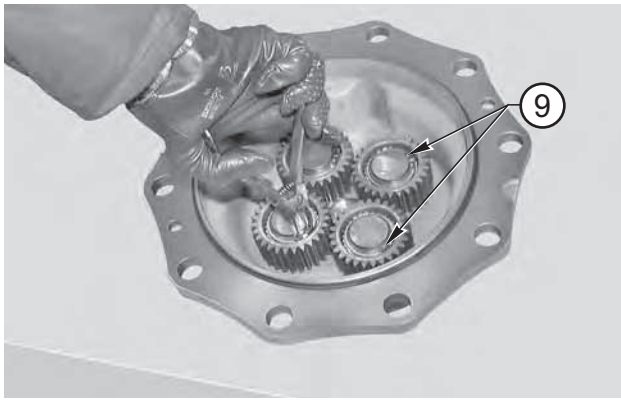

FIGURE 4: Remove the snap rings (9).

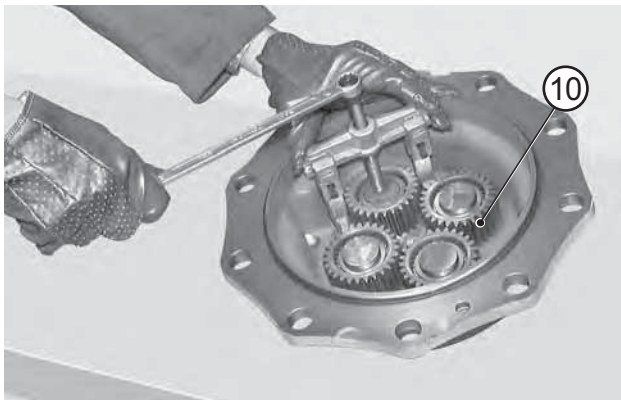

FIGURE 5: With the help of a puller, remove the planetary wheel gears (10).

NOTE:

Write down the assembly side of planetary wheels.

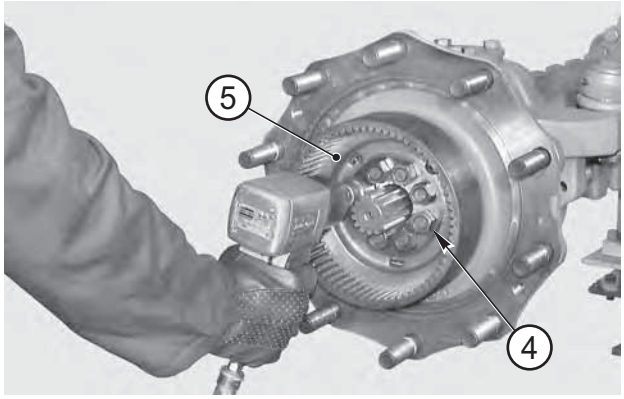

FIGURE 6: Loosen and remove the tightening nuts (4) from the crown flange (5).

https://truckmanualshub.com/

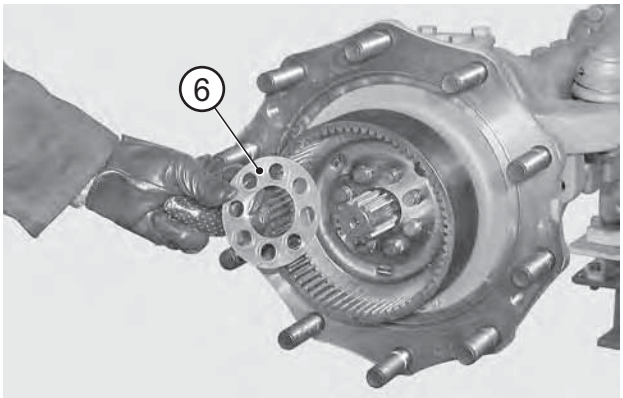

FIGURE 7: Remove the safety flange (6).

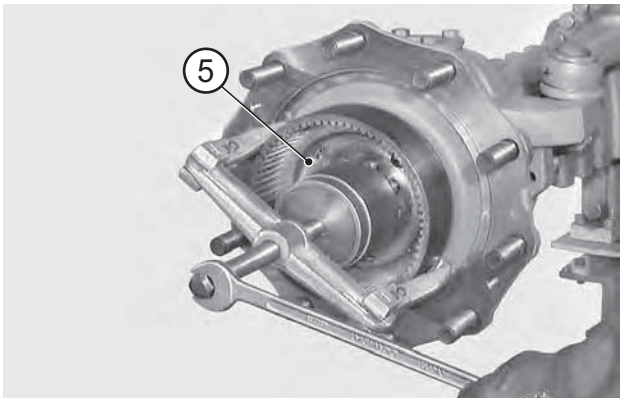

FIGURE 8: Using a puller, remove the complete crown flange (5) by acting on the stud bolts.

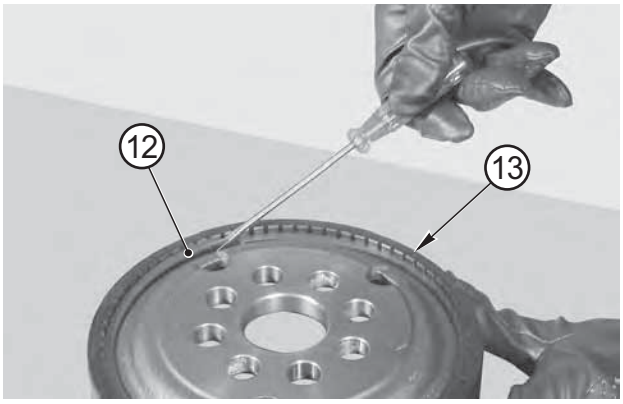

FIGURE 9: Remove the snap ring (12) from the crown (13).

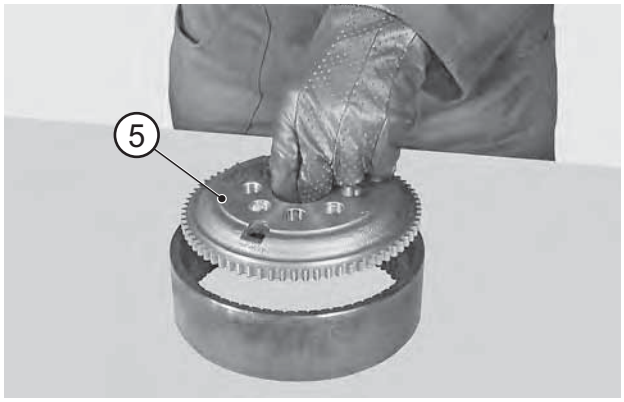

FIGURE 10: Remove the crown flange (5).

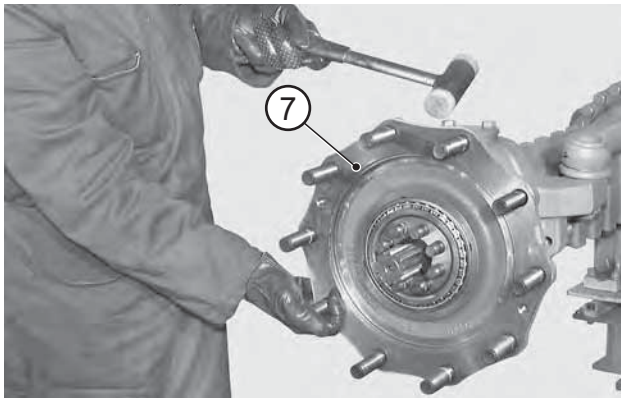

FIGURE 11: Partially extract the hub (7) using a plastic hammer.

NOTE:

Alternately hammer on several equidistant points.

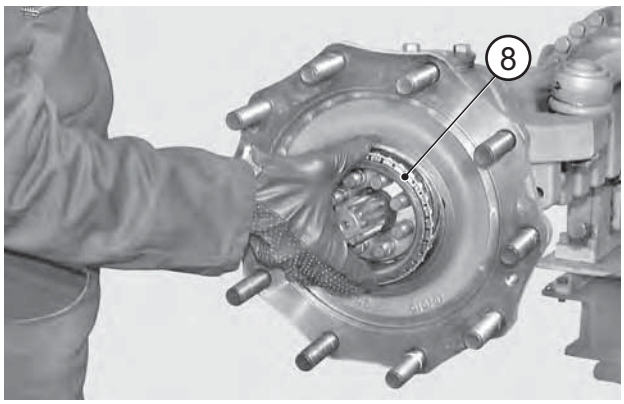

FIGURE 12: Remove the external bearing (8).

https://truckmanualshub.com/

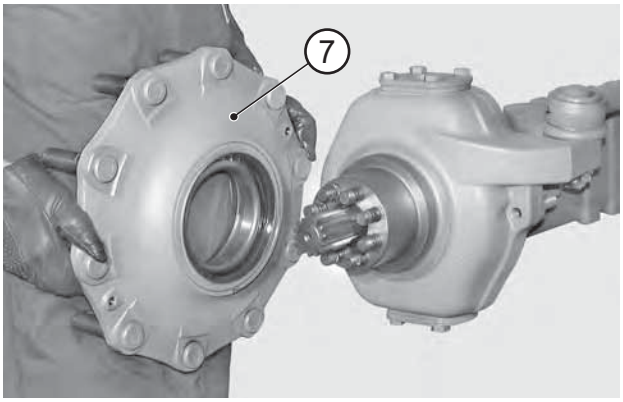

FIGURE 13: Remove the complete hub (7).

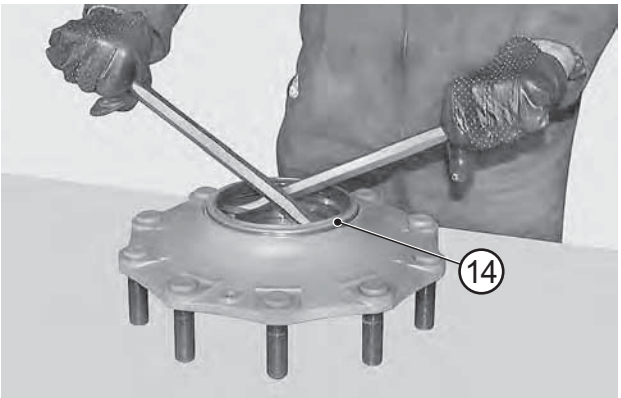

FIGURE 14: Remove the sealing ring from the hub (14).

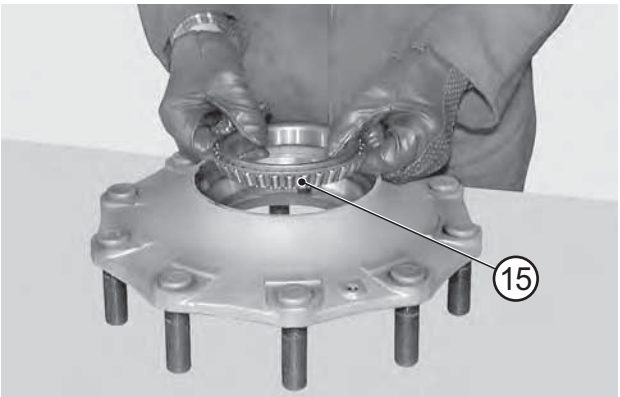

FIGURE 15: Remove the internal bearing (15).

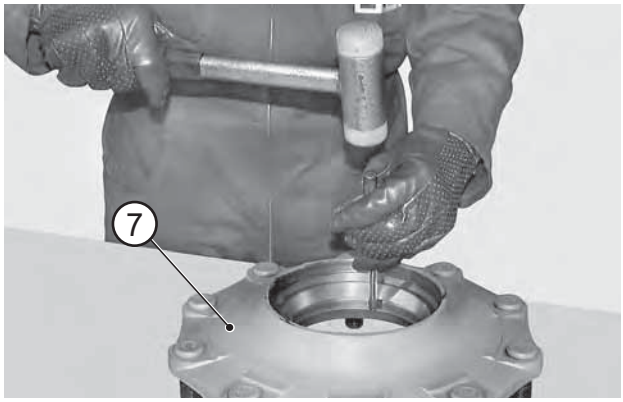

FIGURE 16: Remove the external thrust blocks from the bearings (8) and (15) force a pin-driver into the appropriate slots on the hub (7).

NOTE:

Hammer in an alternate way so as to avoid clamping or deformation of the thrust blocks.

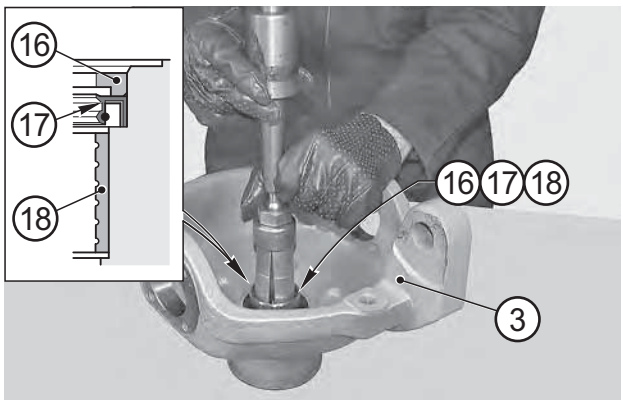

FIGURE 17: Use a puller to remove the centering ring (16), the sealing ring (17) and the bearing (18) from the steering case (3).

NOTE:

Write down the orientation of both centering ring (16) and sealing ring (17).

https://truckmanualshub.com/

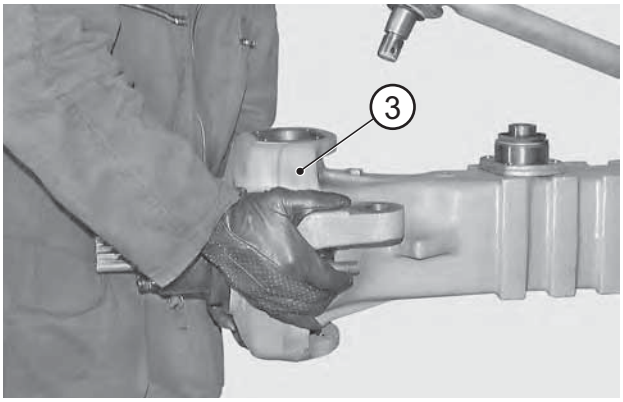

FIGURE 18: Remove the pins and remove the steering case (3).
For details, see COMPLETE STEERING CASE p. 25.

https://truckmanualshub.com/

ASSEMBLY

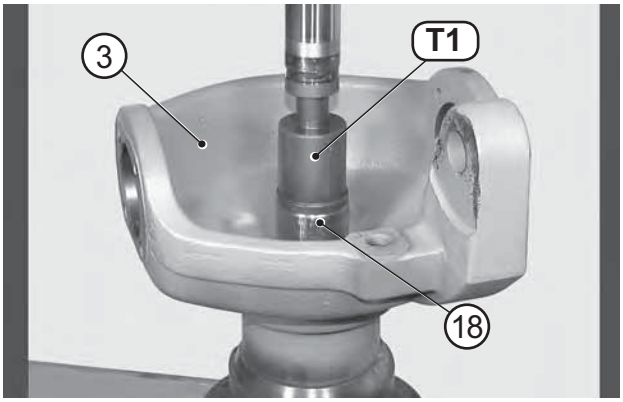

FIGURE 19: Lubricate the bushing (18) and the seat of the steering case (3).
Install the bushing (18), using tool T1 (See drawing T1 p. 44).

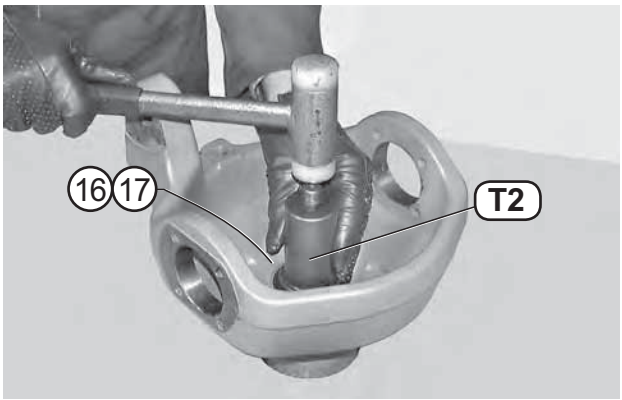

FIGURE 20: Lubricate the outer surface of the sealing ring (17) and centering ring (16); fit them into their seat using tool T2 (See drawing T2 p. 44).

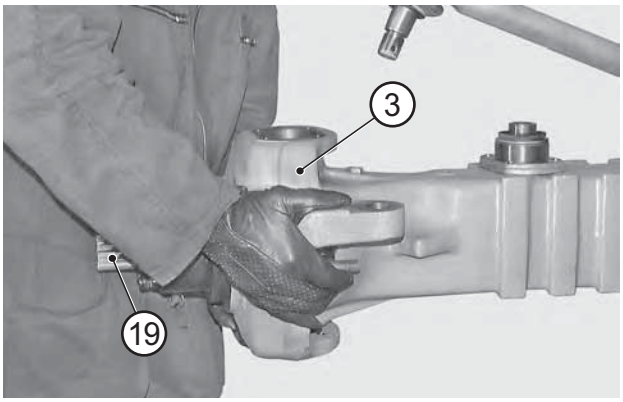

FIGURE 21: Fit the steering case (3) onto the U-joint (19) and install the articulation pins.
For pin assembly details, see COMPLETE STEERING CASE p. 25.

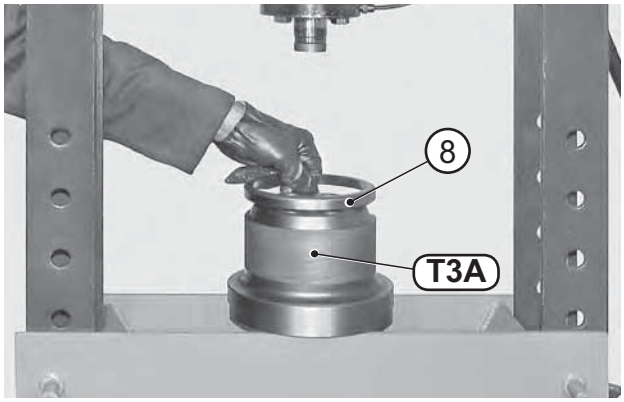

FIGURE 22: Position the lower part of tool T3A (See drawing T3 p. 45) and the thrust block of the external bearing (8) under the press.

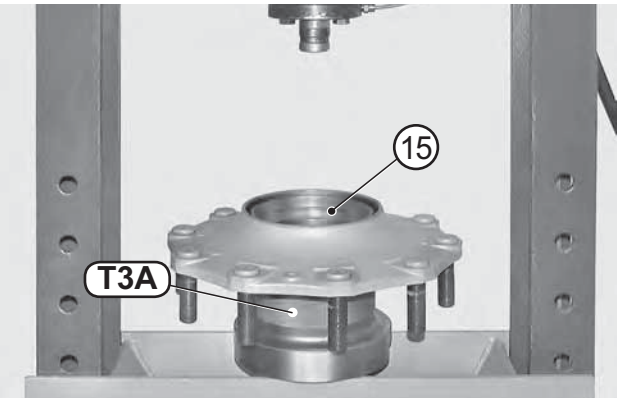

FIGURE 23: Lubricate the seats of the bearings and position the hub (7) on tool T3A (See drawing T3 p. 45); position the thrust block of the internal bearing (15).

NOTE:

Check that the thrust block is correctly oriented.

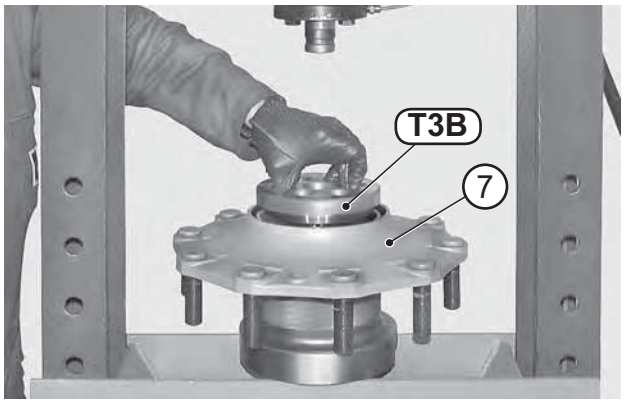

FIGURE 24: Position the upper part of tool T3B (See drawing T3 p. 45) and press the thrust blocks into the hub (7) all the way down.

https://truckmanualshub.com/

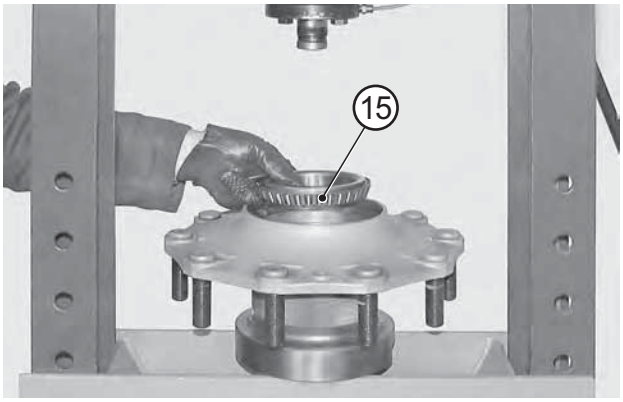

FIGURE 25: Fit the bearing (15) into the internal thrust block.

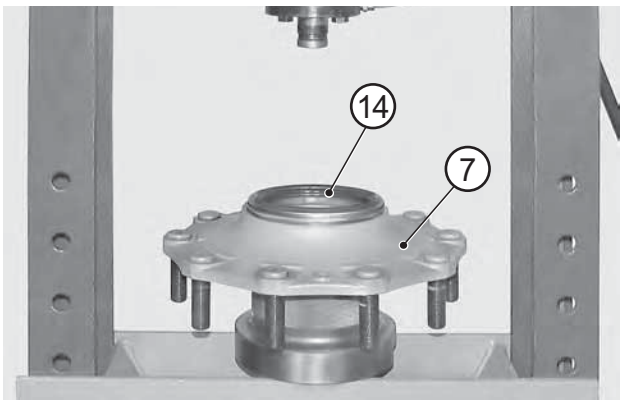

FIGURE 26: Apply a repositionable jointing compound for seals to the outer surface of the sealing ring (14).
Position the sealing ring (14) in the hub (7).

NOTE:

Check that the ring (14) is correctly oriented.

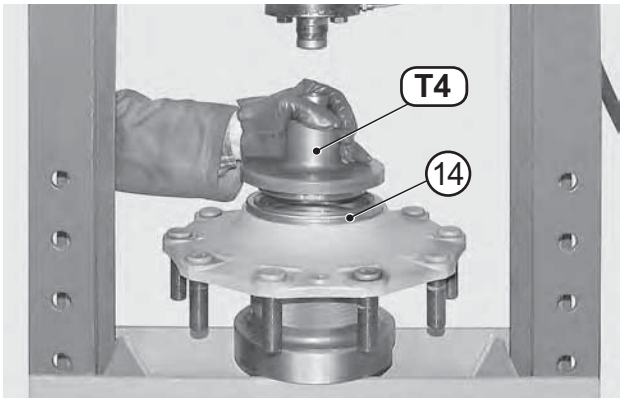

FIGURE 27: Position tool T4 (See drawing T4 p. 46) and press the sealing ring (14) into its seat.

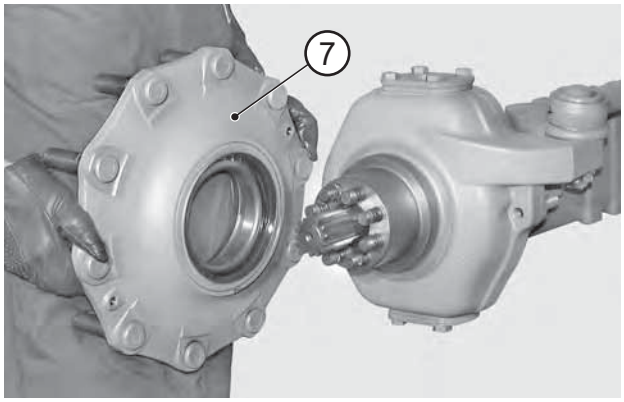

FIGURE 28: Install the hub (7).

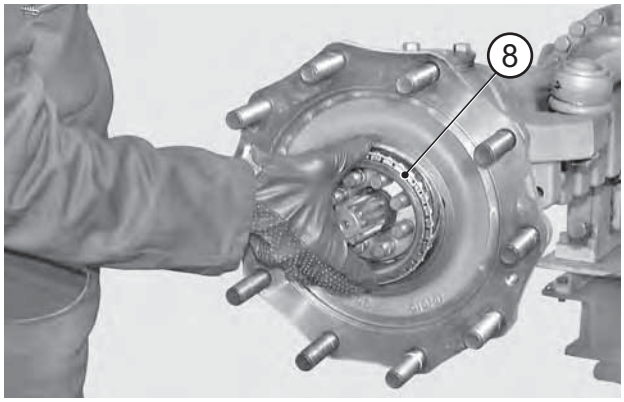

FIGURE 29: Install the external bearing (8).

NOTE:

Using a plastic hammer, drive the bearing to the limit stop by lightly hammering around the edge.

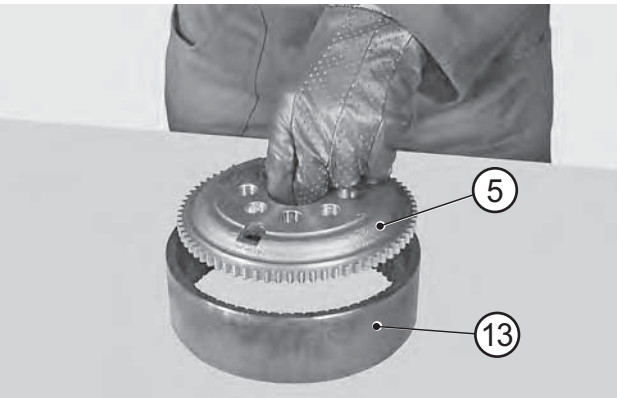

FIGURE 30: Insert the flange (5) in the crown (13).

https://truckmanualshub.com/

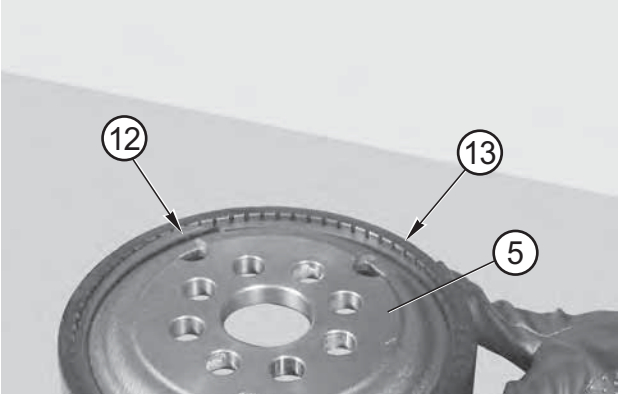

FIGURE 31: Insert the snap ring (12) in order to fix the flange (5) in the crown (13).

NOTE:

Carefully check that ring (12) is properly inserted in the slot of the crown (13)

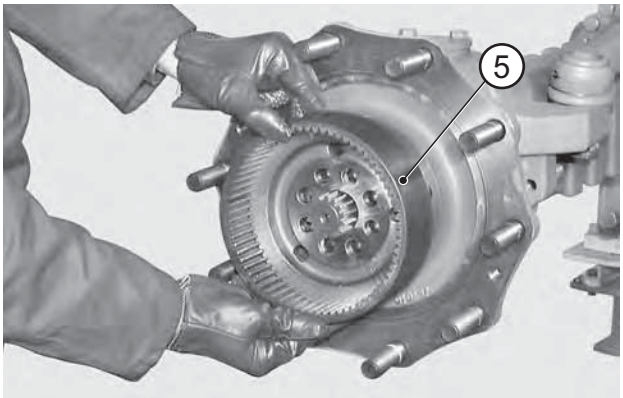

FIGURE 32: Fit the complete crown flange (5).

NOTE:

In order to fasten the flange (5), use a plastic hammer and alternately hammer on several equidistant points.

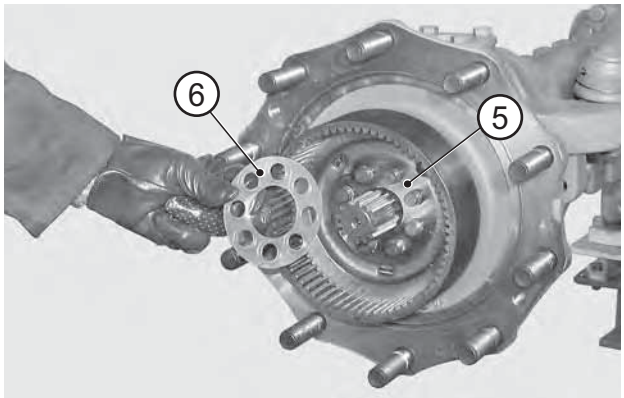

FIGURE 33: Apply Tecnolube Seal 101 grease to the surface of the safety flange (6) which touches the crown flange (5). Fit the safety flange (6).

FIGURE 34: Apply Loctite 242 to the studs and fit on the nuts (4).

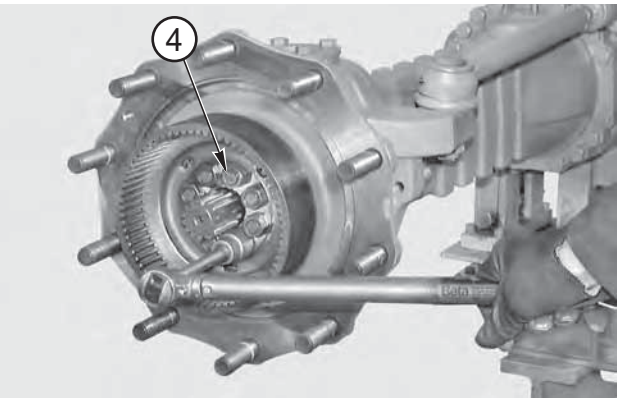

FIGURE 35: Tighten the nuts (4) using criss-cross method in two stages.
Initial torque wrench setting: 120 N·m
Final torque wrench setting: 255 - 285 N·m

https://truckmanualshub.com/

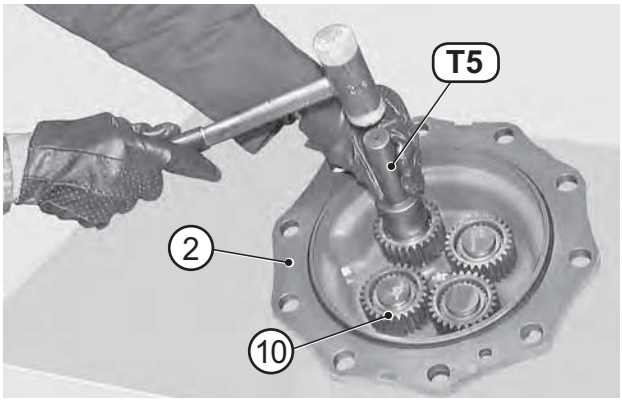

FIGURE 36: With the help of tool T5 (See drawing T5 p. 46) insert the planetary wheel gears (10) into the cover (2). Accurately check the orientation.

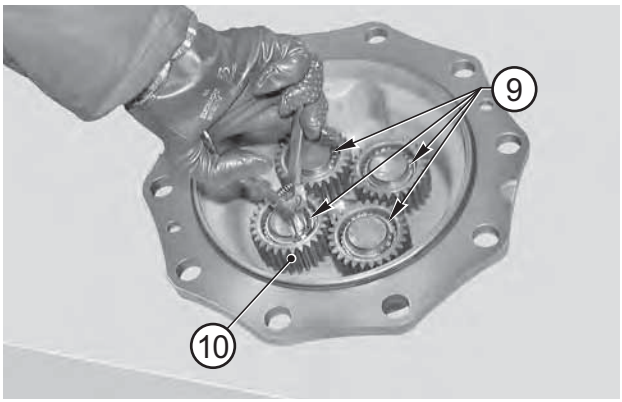

FIGURE 37: Lock the gears (10) into position by fitting the snap rings (9).

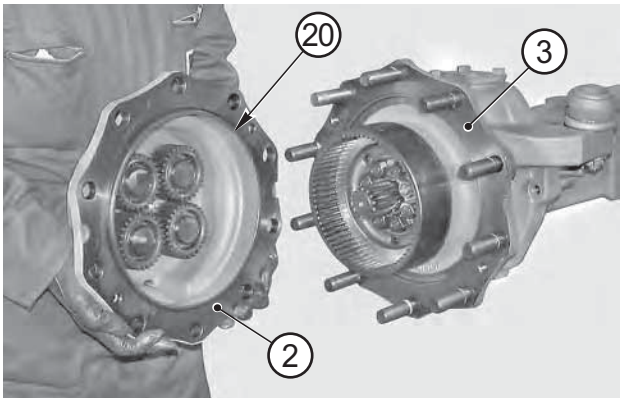

FIGURE 38: Fit the planetary carrier cover (2) onto the hub (3).

⚠CAUTION

Check that the o-ring (20) is in good condition and in position.

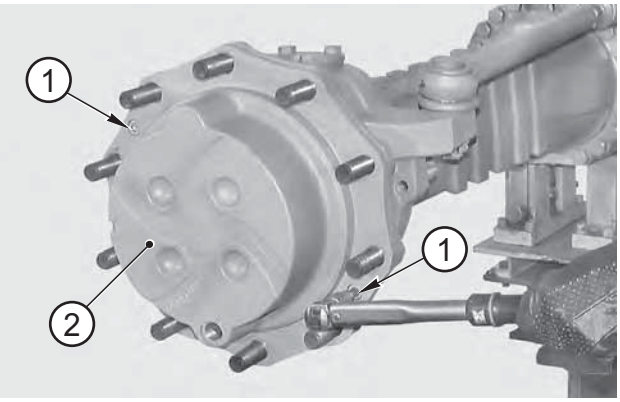

FIGURE 39: Lock the planetary carrier cover (2) by tightening the screws (1).
Torque wrench setting for screws: 40 - 50 N·m

FIGURE 40: Connect the steering bars.
For details, see COMPLETE STEERING CASE p. 25.

https://truckmanualshub.com/

SPECIAL TOOLS

T1

P/N: 2303

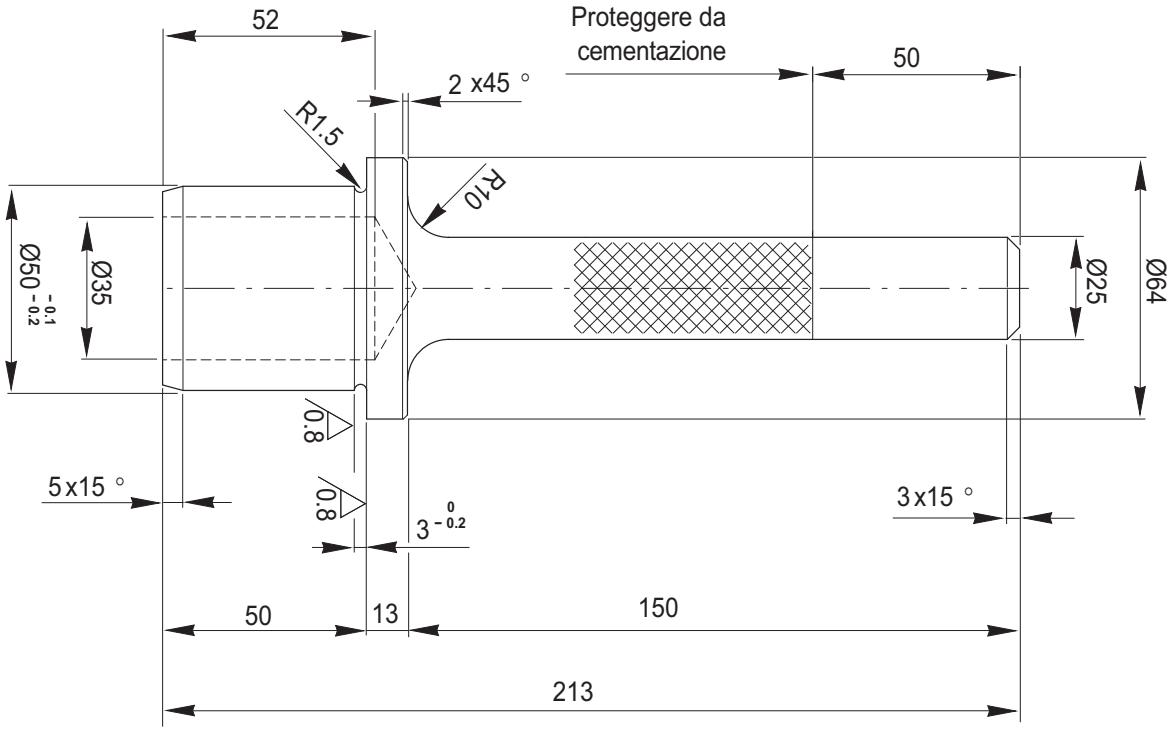

T2

P/N: 3363

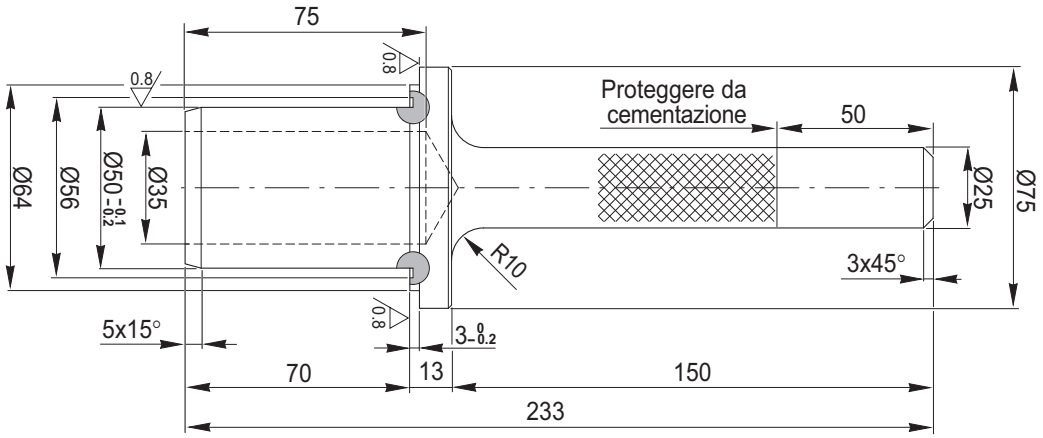

https://truckmanualshub.com/

T3

P/N: 3354

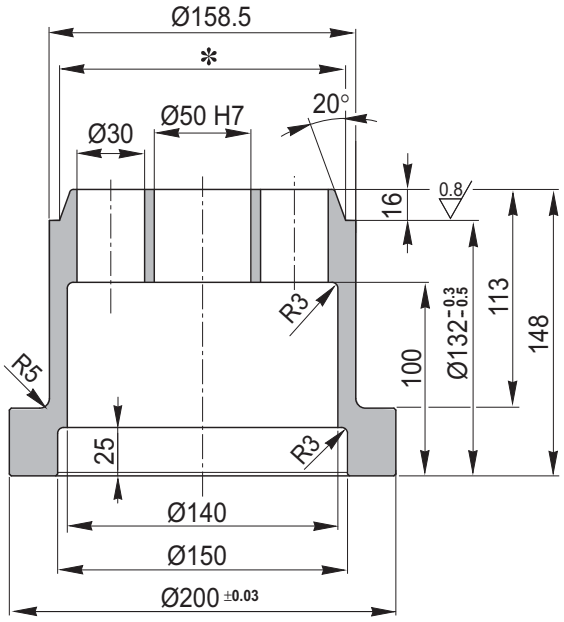

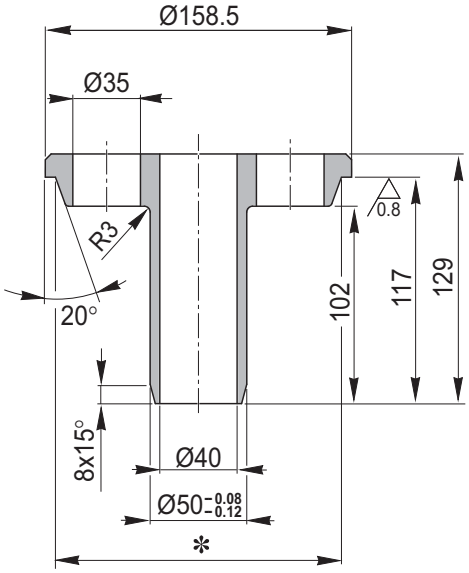

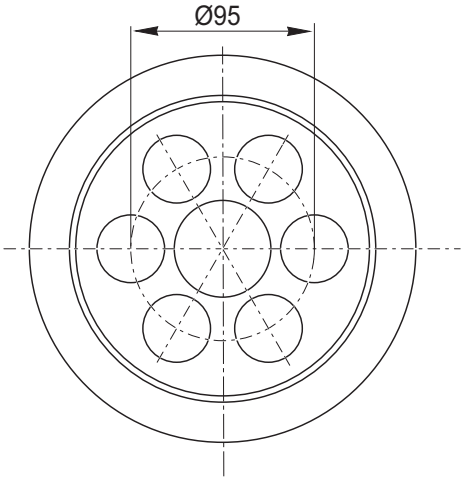

*Ø148 TIMKEN
Ø150 KOYO

https://truckmanualshub.com/

T4

P/N: 3502

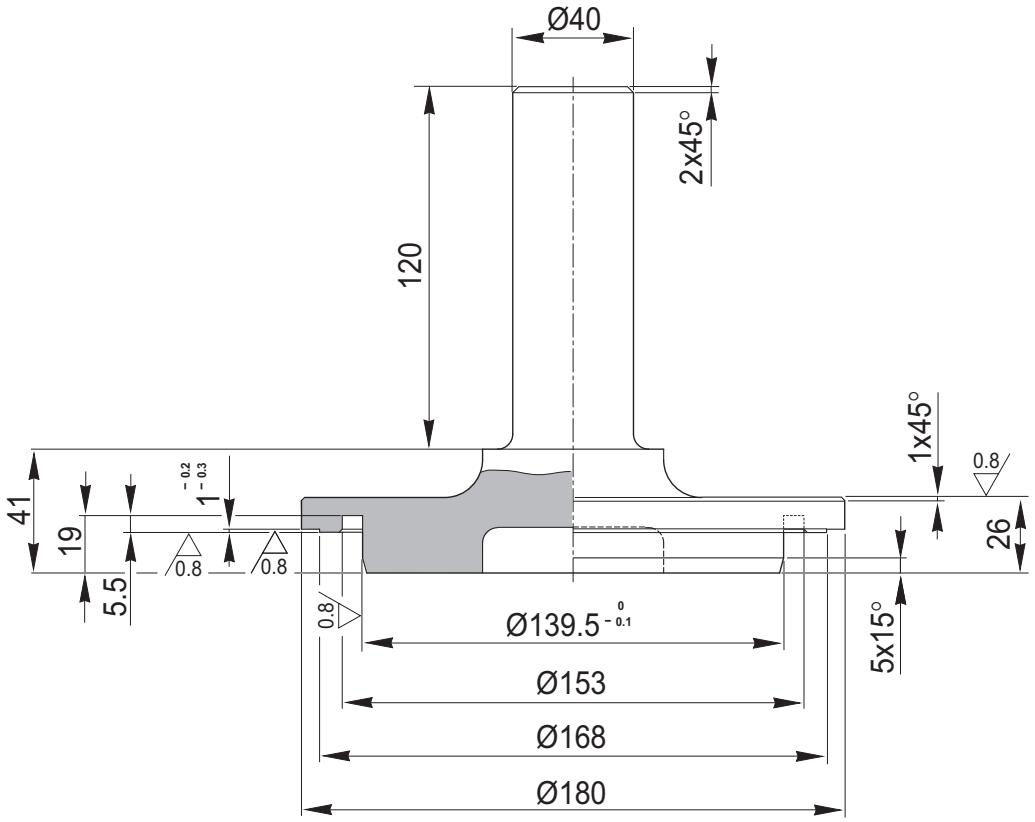

T5

P/N: 2304

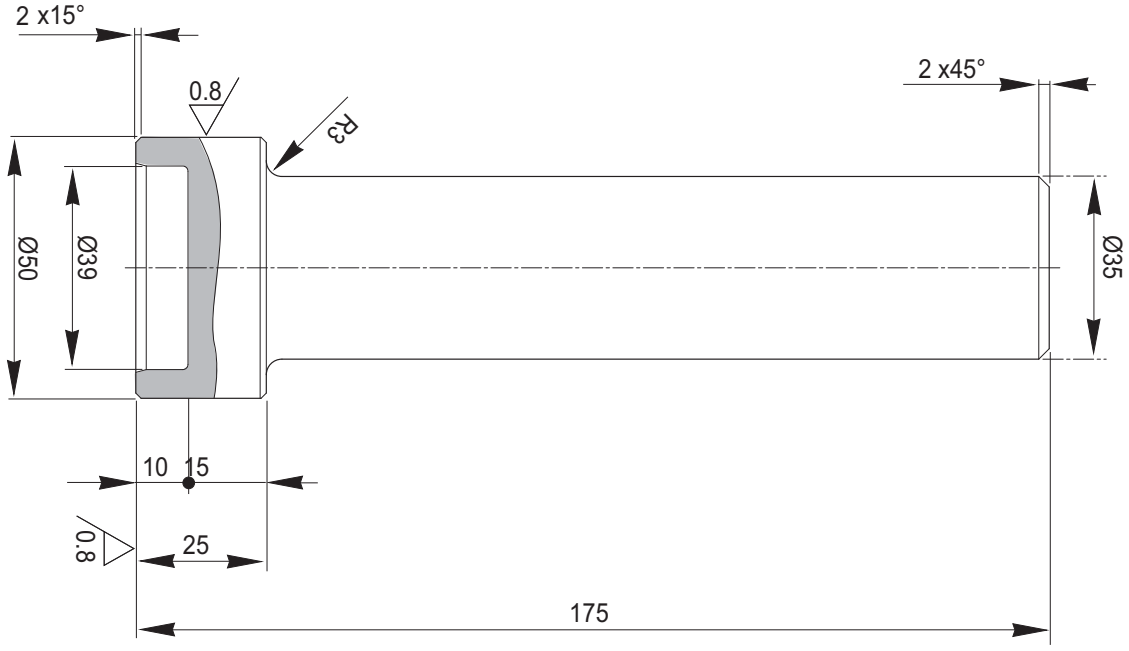

https://truckmanualshub.com/

STEERING CYLINDER

EXPLODED VIEW

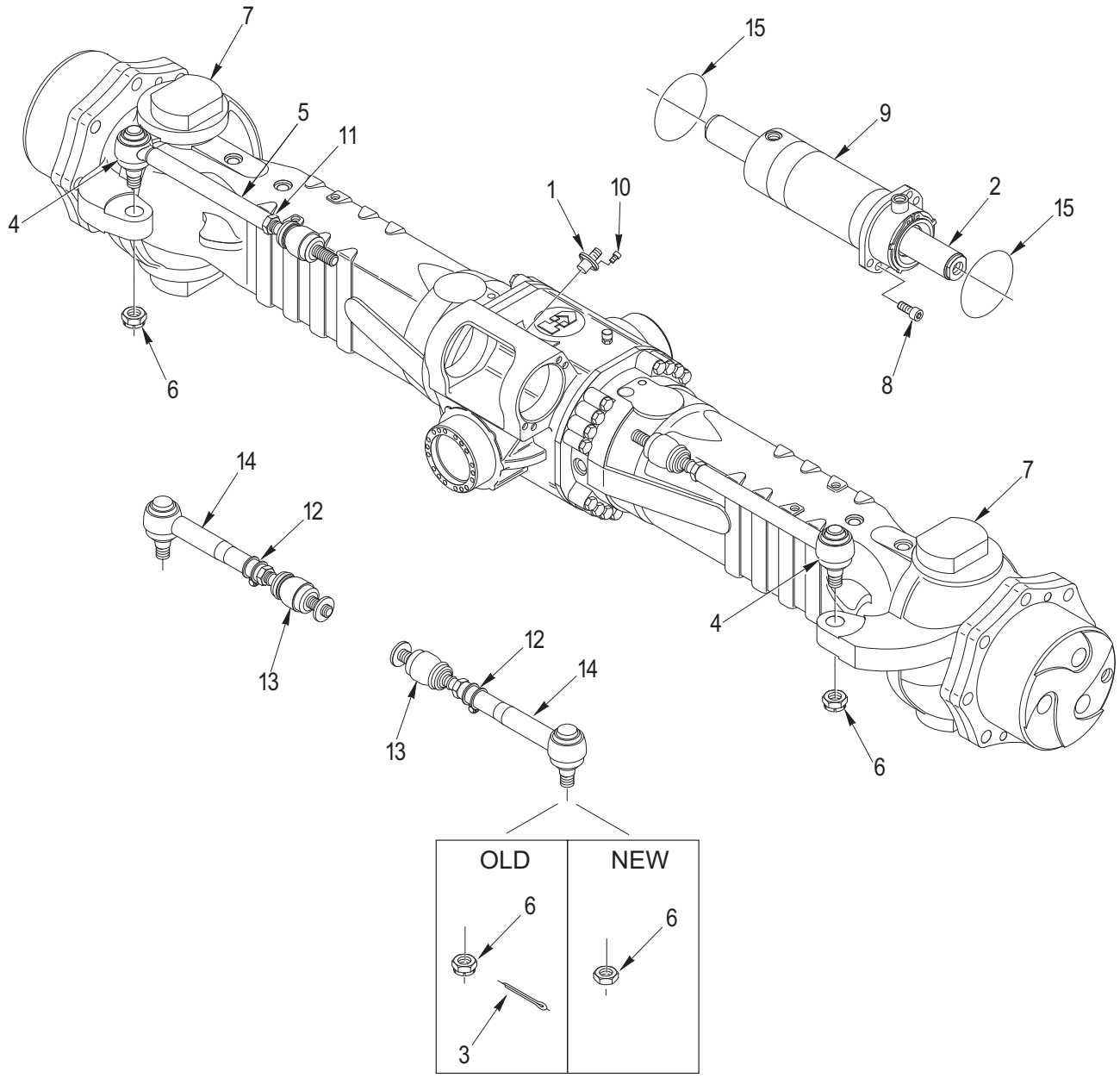

https://truckmanualshub.com/

OPTICAL SENSOR AND MAGNETIC SENSOR

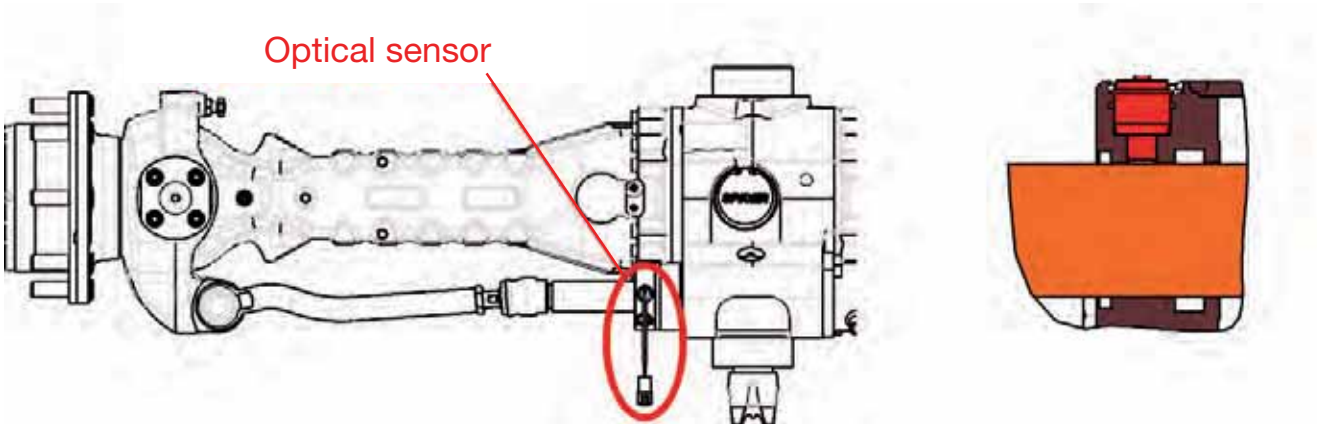

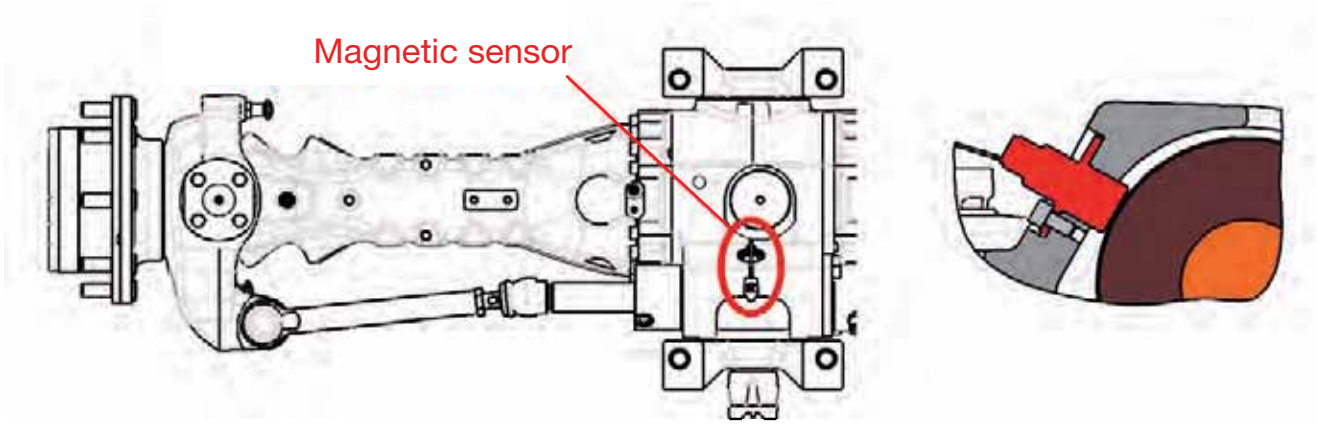

https://truckmanualshub.com/

DISASSEMBLY

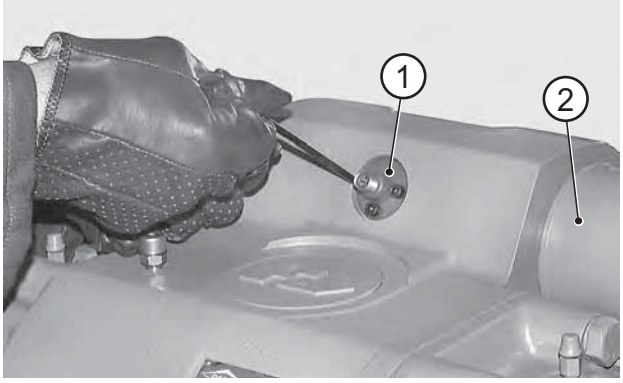

FIGURE 1: Remove the centering sensor (1) of the steering piston (2), if supplied.

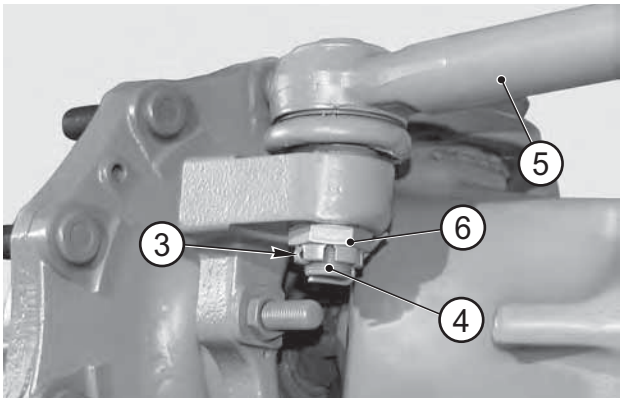

FIGURE 2: OLD VERSION
Remove the safety cotter pins (3) from the articulation pins (4) of the steering bars (5). Remove the castellated nuts (6) that lock the articulation pins (4).

⚠CAUTION

Dispose of used cotter pins.

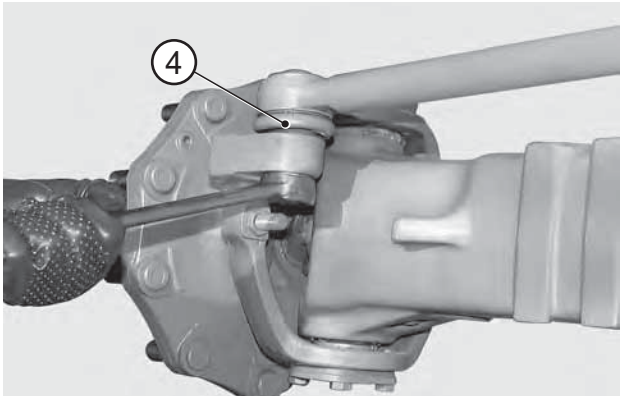

FIGURE 3: NEW VERSION
Remove the nuts (6) that lock the articulation pins (4).

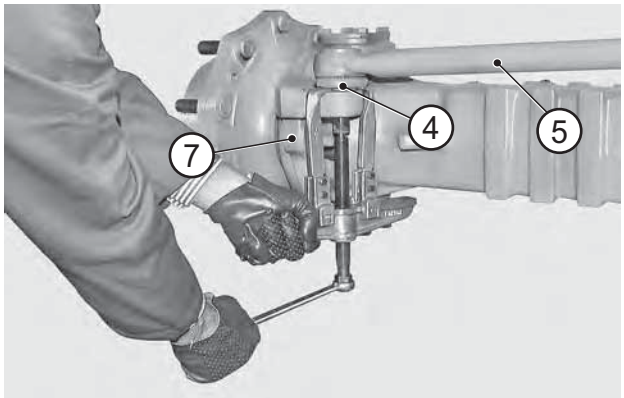

FIGURE 4: Disconnect the tapered pins of the articulation (4) from the steering case (7) by means of a puller.

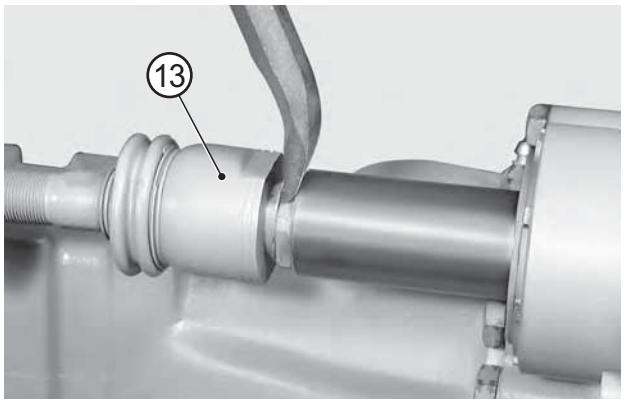

FIGURE 5: If the connection of the steering bars includes a safety collar (13), raise the border.

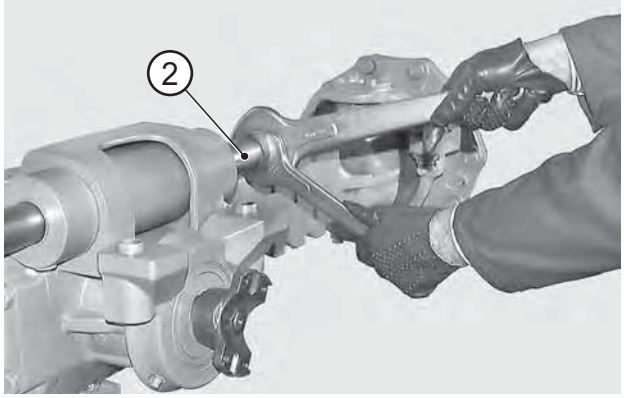

FIGURE 6: Disconnect left and right steering bars (5) from the piston (2).

https://truckmanualshub.com/

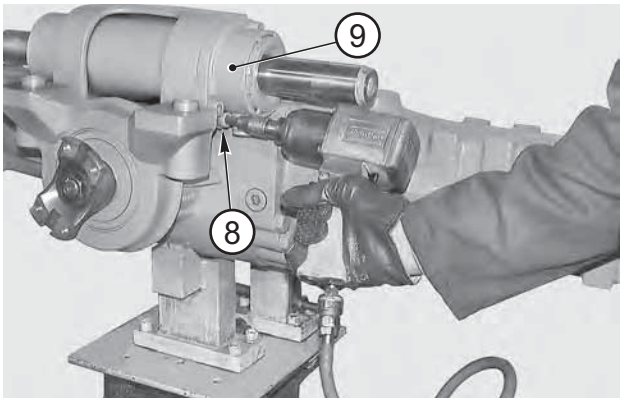

FIGURE 7: Remove the securing screws (8) from the steering cylinder (9).

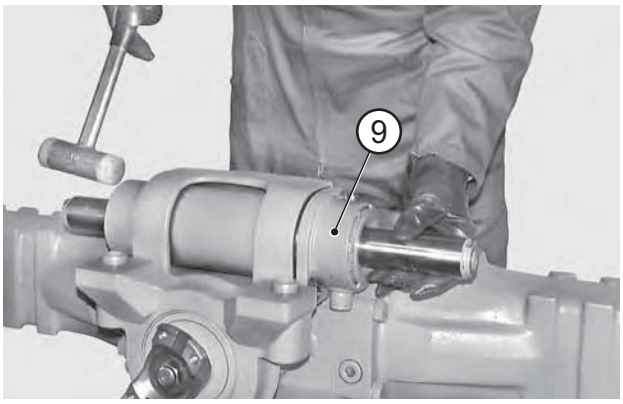

FIGURE 8: Extract the cylinder (9) using a plastic hammer.

NOTE:

For cylinder disassembly, refer to STEERING CYLINDER p. 47.

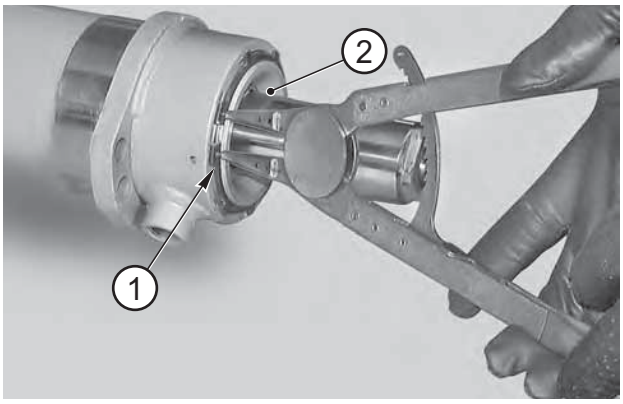

FIGURE 9: Remove the snap ring (1) from the cylinder head (2).

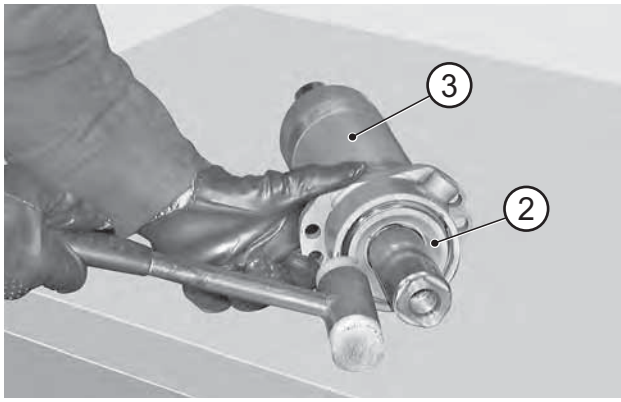

FIGURE 10: With the help of a plastic hammer, push the head (2) inside the cylinder (3).

NOTE:

The head should line up with the edge of the cylinder.

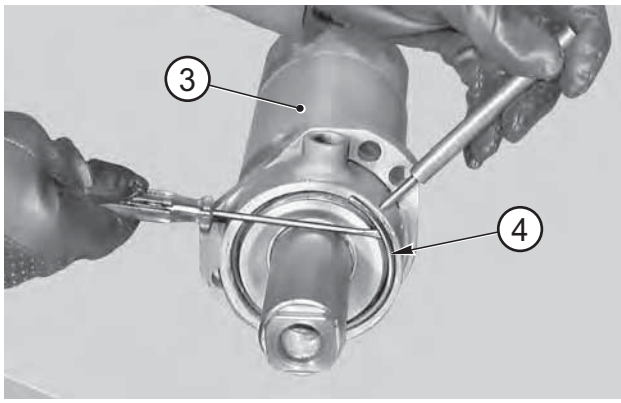

FIGURE 11: With the help of a drift, apply pressure to the stop ring (4) that is placed inside the cylinder (3) and extract the ring using a screwdriver.

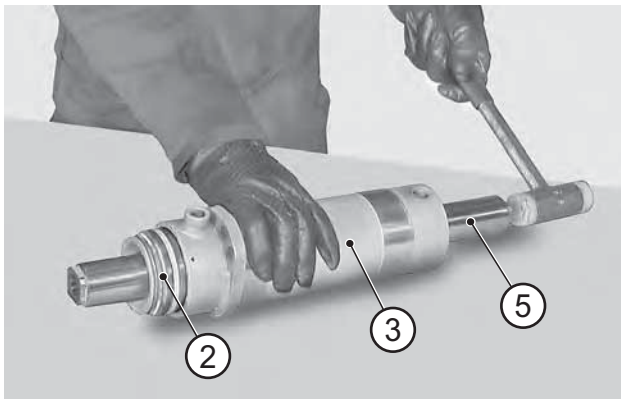

FIGURE 12: Hammer the piston (5) on the rear of the head (2) using a plastic hammer.
Continue hammering until the head (2) is ejected from the cylinder (3).

https://truckmanualshub.com/

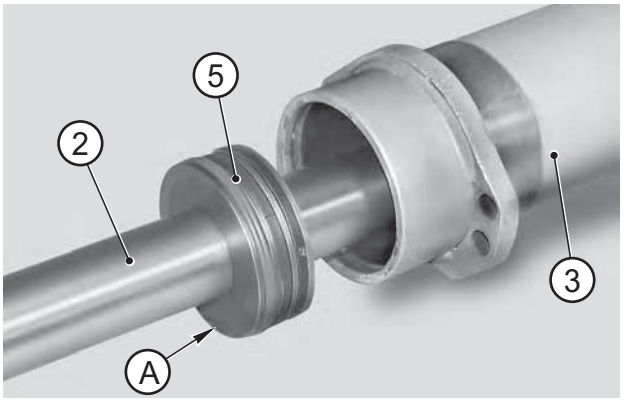

FIGURE 13: Disassemble the cylinder unit (3) by extracting first the head (2), then the piston (5).

⚠CAUTION

Write the assembly side of the piston (5). The beveled part "A" of the piston is oriented towards the head (2).

FIGURE 14: Remove all seals, anti-extrusion rings and scraper rings from head (2), cylinder (3) and piston (5).

NOTE:

1 - All seals must be replaced every time the unit is disassembled.

2 - Particular attention must be paid not to damage the seats of both seals and piston slide.

https://truckmanualshub.com/

ASSEMBLY

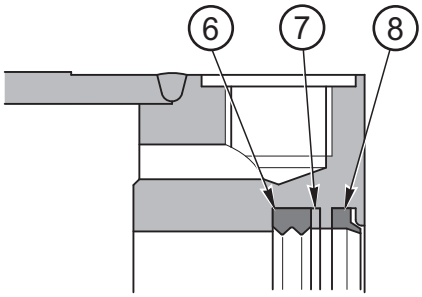

FIGURE 15: After applying grease, install the sealing ring (6) of the shaft, the anti-extrusion ring (7) and the scraper ring (8) inside the cylinder (3).

⚠CAUTION

Thoroughly check that positioning of the anti-extrusion ring (7) is correct.

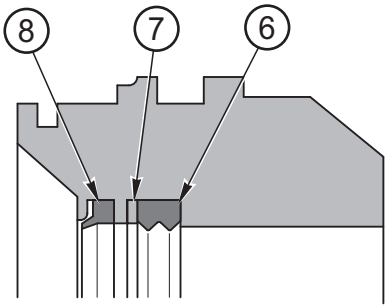

FIGURE 16: After applying grease, install the sealing ring (6) of the shaft, the anti-extrusion ring (7) and the scraper ring (8) in the head (2).

⚠CAUTION

Thoroughly check that positioning of the anti-extrusion (7) ring is correct.

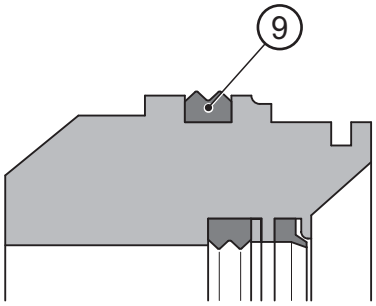

FIGURE 17: Fit the seal (9) onto the outside of the head (2).

⚠CAUTION

1 - In order to facilitate assembly, apply grease to the outer surface of the piston.

2 - Do not roll the seal (9) up.

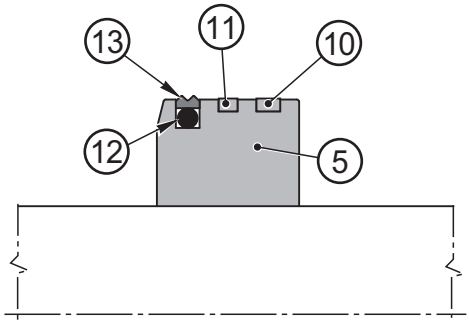

FIGURE 18: Prepare the piston (5) by fitting it with the guide ring (10), the magnetic ring (11), the o-ring (12) and the seal (13).

⚠CAUTION

1 - In order to facilitate assembly, apply grease.

2 - If a centering sensor is not fitted, then the magnetic ring (11) should be replaced by another guide ring (10).

https://truckmanualshub.com/

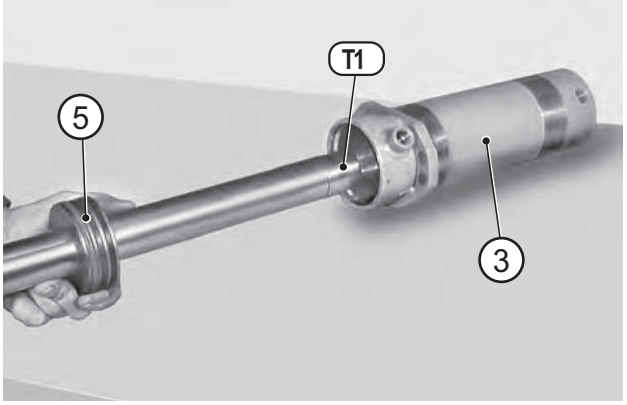

FIGURE 19: Apply tool T1 (See drawing T1 p. 58) to the shaft on the opposite side of the head (2) and center it on the cylinder (3) so that it fits into the piston (5).

NOTE:

Apply a little grease to seals and cylinder.

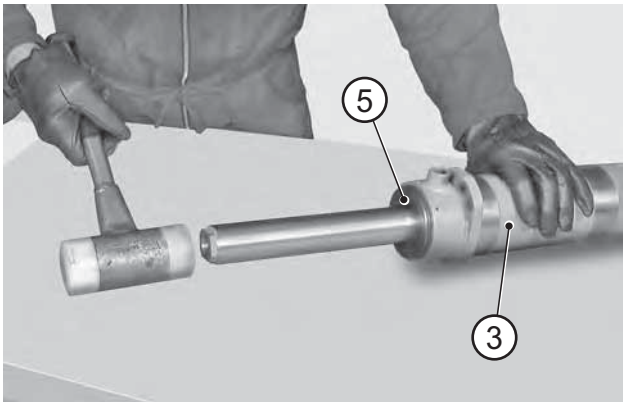

FIGURE 20: Push the piston (5) into the cylinder for 100 mm using a plastic hammer.

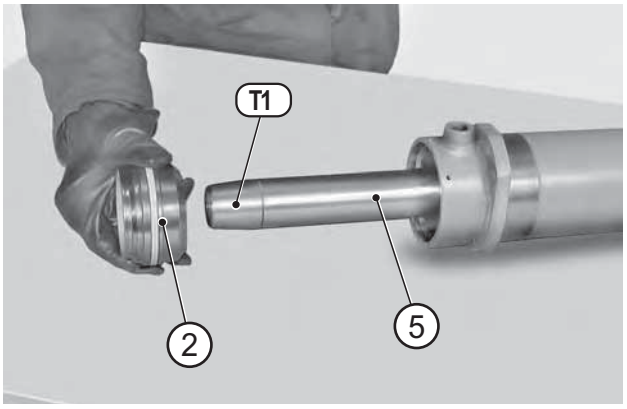

FIGURE 21: Remove tool T1 (See drawing T1 p. 58) and apply it to the opposite side of the piston (5).

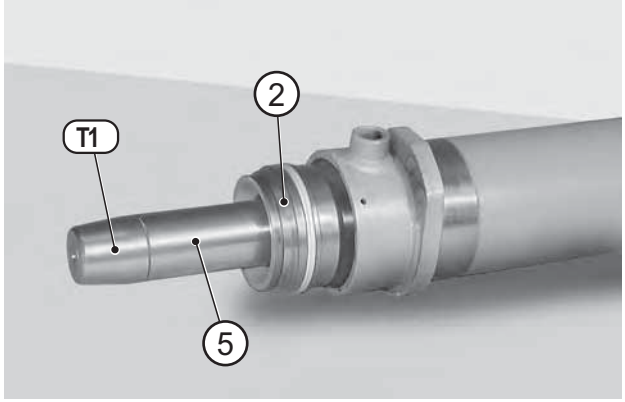

FIGURE 22: Apply grease to head (2) seals, fit the head onto the piston and push it into the cylinder (3) using a plastic hammer.

NOTE:

Insert the head as to line it up with the edge of the cylinder.

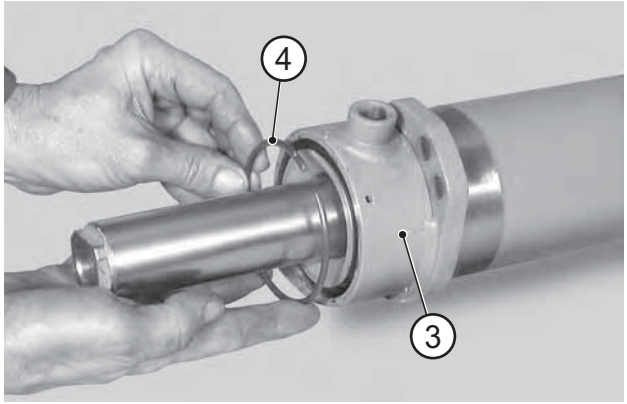

FIGURE 23: Insert the stop ring (4) ensuring that it fits into the seat of the cylinder (3).

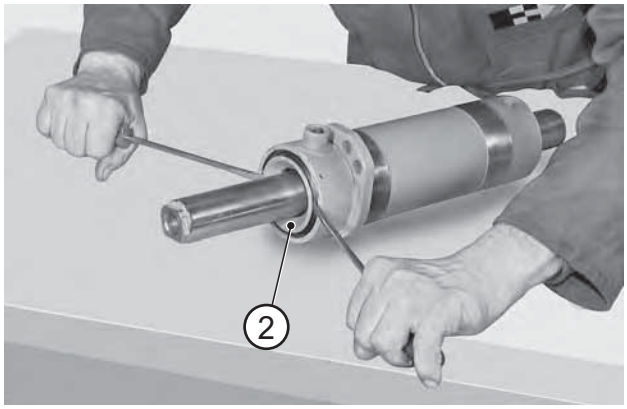

FIGURE 24: Apply pressure to the head using two screwdrivers or levers until the head is fastened onto the stop ring (4).

https://truckmanualshub.com/

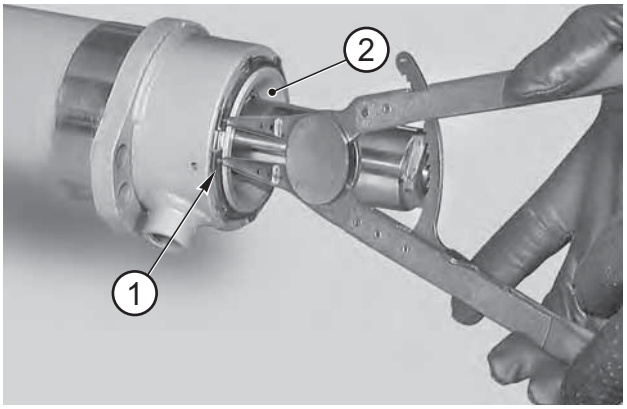

FIGURE 25: Fit the snap ring (1) on the head (2).

⚠CAUTION

Make sure that the snap ring (1) is securely fastened in its seat.

If necessary, force it into its seat using a drift and a hammer.

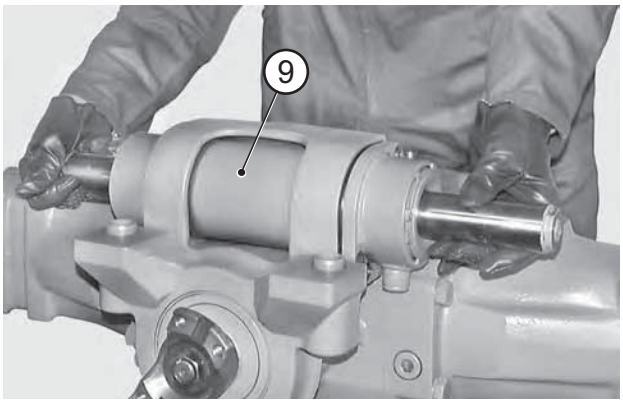

FIGURE 26: Check that the o-rings (15) of the axle unit are in good condition; lubricate the seats of the seals (15) and fit the steering cylinder (9) into its seat.

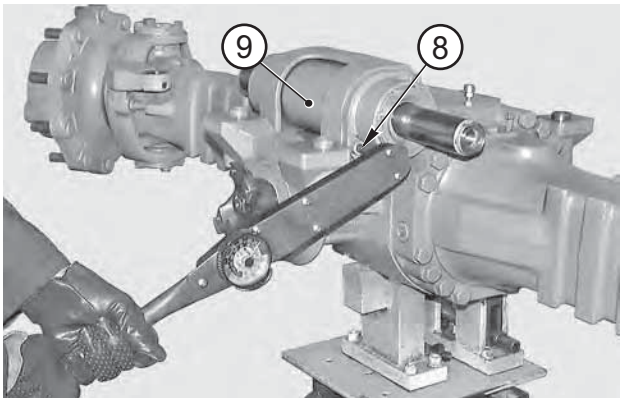

FIGURE 27: Lock the cylinder by criss-cross method the screws (8).
Torque wrench setting: 116 - 128 N·m

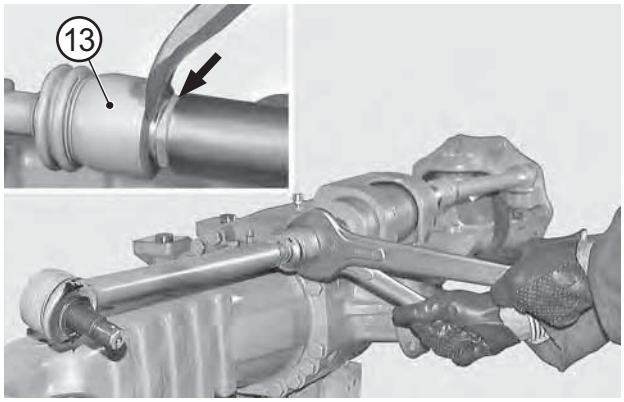

FIGURE 28: Apply Loctite 242 to the thread and connect the steering bars by screwing the terminals onto the piston stem.
Torque wrench setting: 240 - 270 N·m

NOTE:

Versions with coupling require that the rim of the articulation (13) is riveted onto the surfaces of the piston stem.

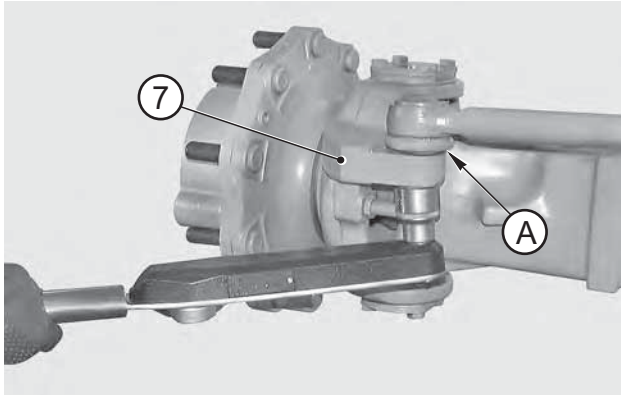

FIGURE 29: OLD VERSION
Insert the pins (4) in the steering case (7) and lock into position using a torque wrench setting of 260 - 290 N·m.
Find the position of the notching in relation to the hole of the cotter pins and tighten the nut (6) further.

⚠CAUTION

Check that rubber guards (A) are intact.

https://truckmanualshub.com/

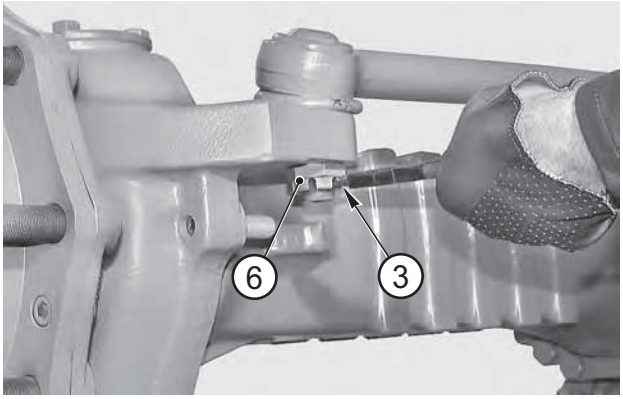

FIGURE 30: OLD VERSION
Insert the cotter pins (3) and bend the safety stems.

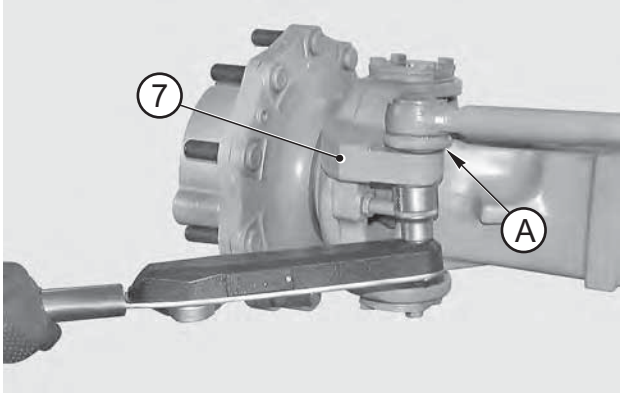

FIGURE 31: NEW VERSION
Insert the pins (4) in the steering case (7) and lock into position using a torque wrench setting of 260 - 290 N·m.

⚠CAUTION

Use new cotter pins.

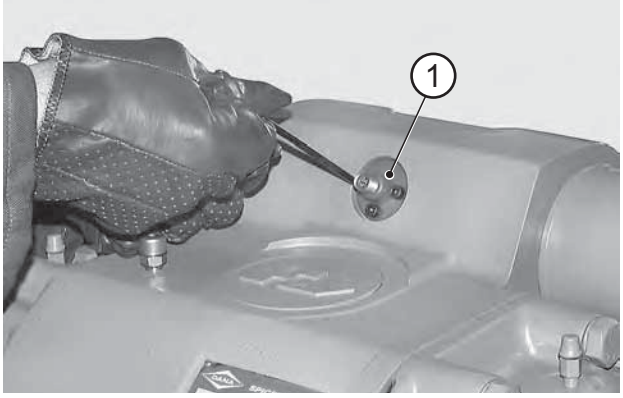

FIGURE 32: Install the centering sensor (1) for checking piston centering - if applicable - and tighten the screws (10).
Torque wrench setting: 5 - 6 N·m

⚠CAUTION

Eliminate the action of the negative brake, if fitted.

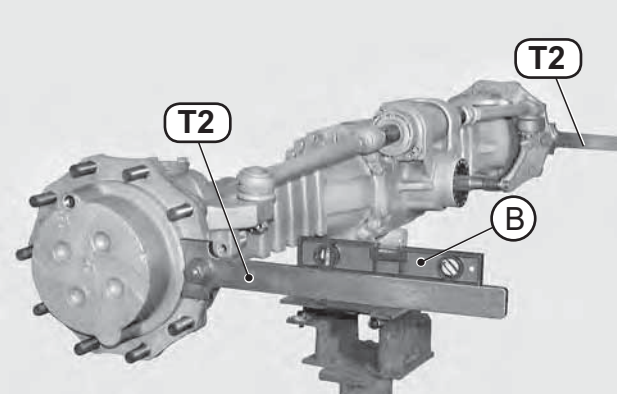

FIGURE 33: Apply tools T2 (See drawing T2 p. 59) to the hubs and lock them.
Using a level "B", check that tools are perfectly flat and parallel to each other.

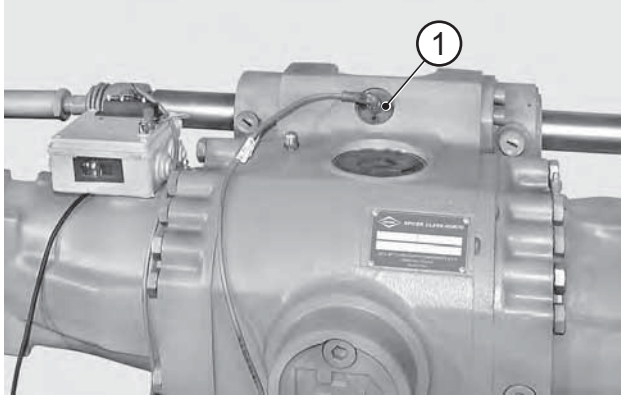

FIGURE 34: Connect the sensor (1) to the inspection device according to either diagram.

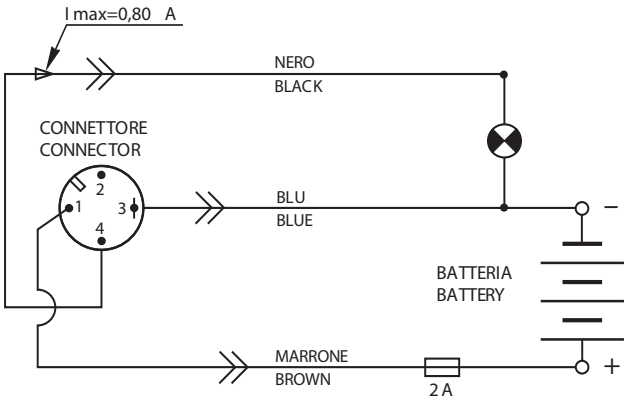

FIGURE 35: Sensor connection card, STANDARD version.

https://truckmanualshub.com/

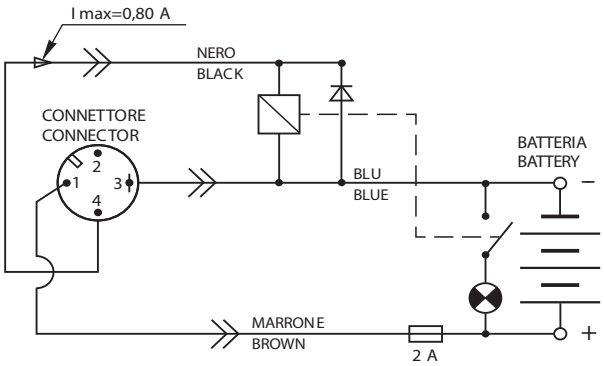

FIGURE 36: Sensor connection card, OPTIONAL version.

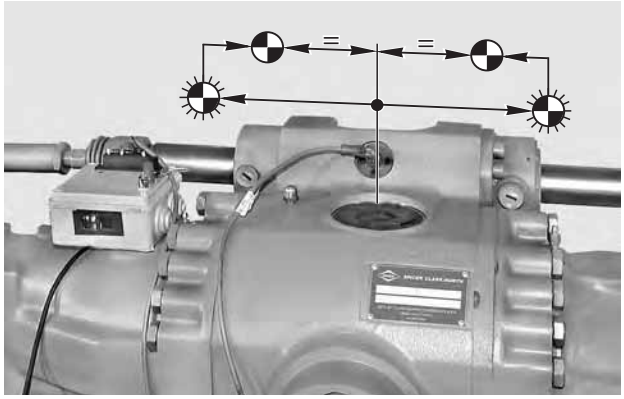

FIGURE 37: Center the piston by slowly moving it first in one direction then in the other. Position it half way on the stroke, which is determined by the switching on and off of the signal lamp of the inspection device in the reversal stage.

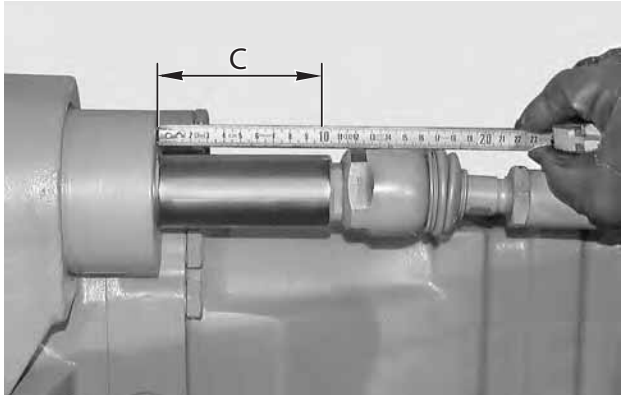

FIGURE 38: Inspect distance "C" on one side of the piston and write down the size for checking later adjustments.

NOTE:

If cylinders come without a sensor, the centering of the piston must be carried out on the basis of the maximum stroke.

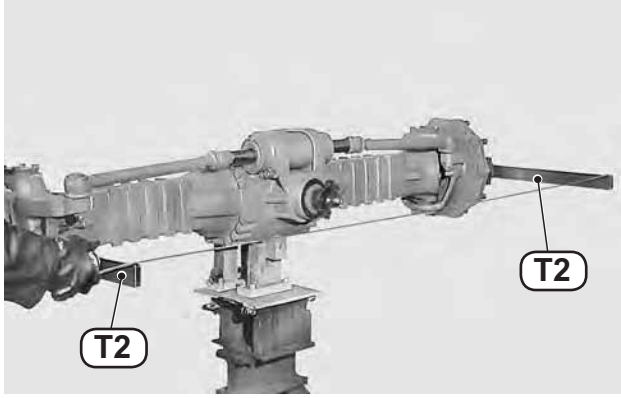

FIGURE 39: Without moving the piston, check front and rear size at the edge of tools T2 (See drawing T2 p. 59). Maximum difference: 0.6 - 0.7 mm

NOTE:

In order to check the rear size, rotate the bevel pinion and check that tools T2 (See drawing T2 p. 59) are flat.

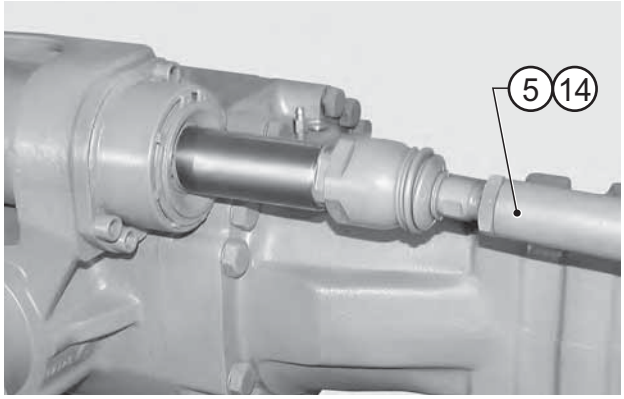

FIGURE 40: If necessary, adjust convergency without moving the centering of the piston and adjust the length of the steering bars (5) or (14).

NOTE:

With a half turn of screw, the front size is reduced by about 3 mm, whereas the rear one is increased by about 3 mm.

https://truckmanualshub.com/

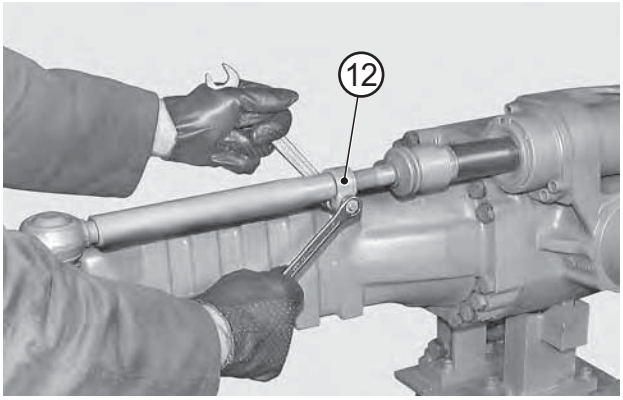

FIGURE 41: CONVERGENCY ADJUSTMENT ON UNITS WITH COLLAR
Loosen the nuts on the collars (12).

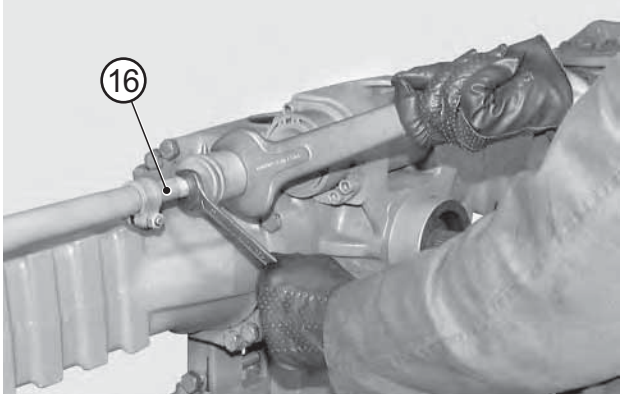

FIGURE 42: Rotate the ball-and-socket joints (16) until convergency has been obtained.
Check that articulations move easily and lock the collars (12).
Torque wrench setting for nuts: 42 - 52 N·m

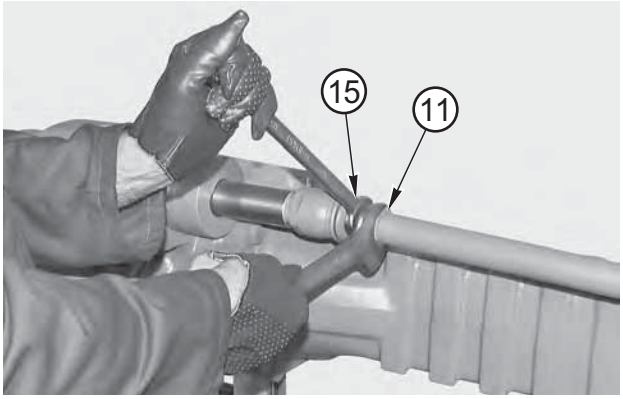

FIGURE 43: CONVERGENCY ADJUSTMENT ON ALTERNATIVE VERSIONS
Loosen the nuts (11) and screw them onto the ball-and-socket joints (15).

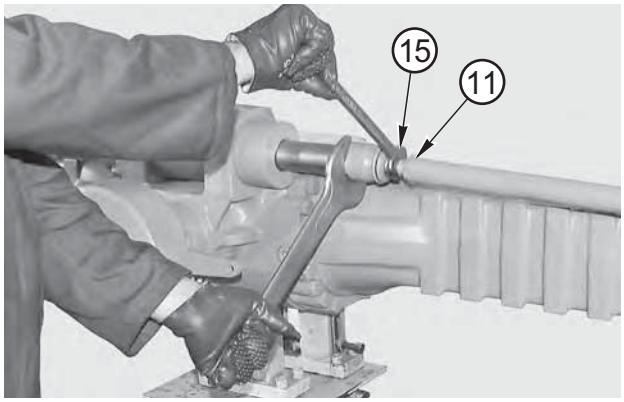

FIGURE 44: Hold the articulations still and rotate the ball-and-socket joints (15).
Once the convergency has been adjusted, lock the nuts (11).
Torque wrench setting for nuts: 298 - 328 N·m

https://truckmanualshub.com/

SPECIAL TOOLS

T1

P/N: 2724

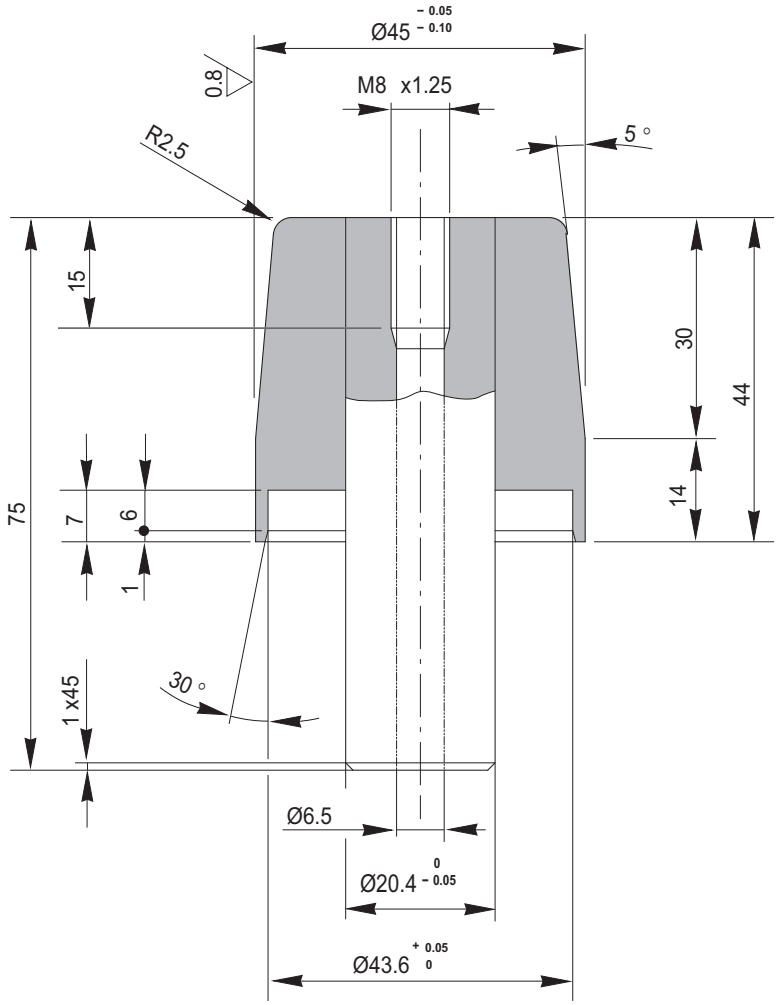

https://truckmanualshub.com/

T2

P/N: 1867

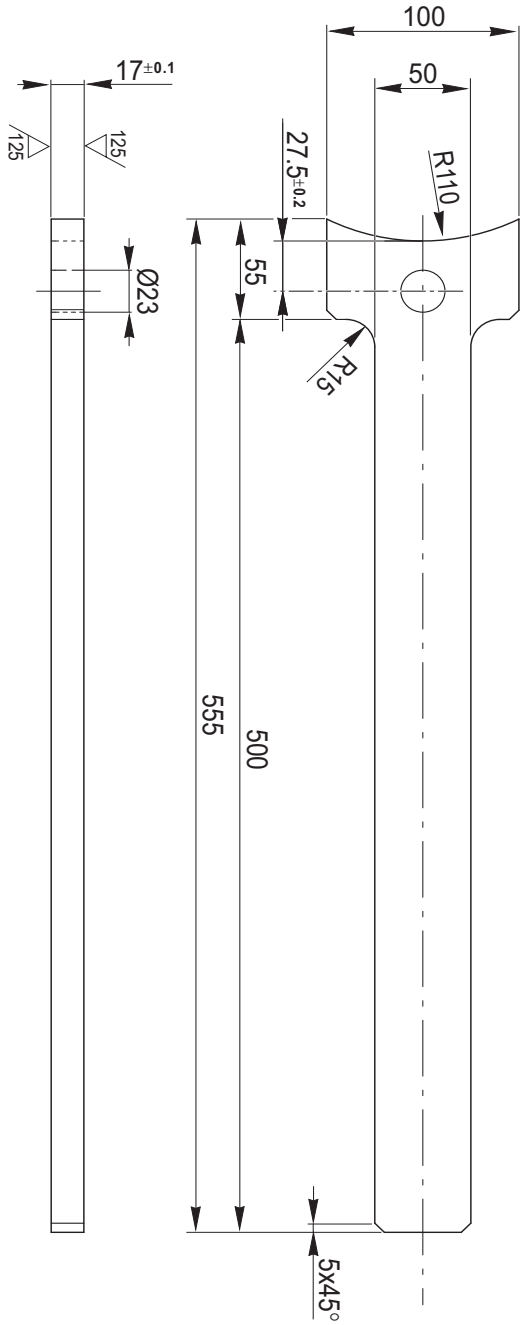

https://truckmanualshub.com/

https://truckmanualshub.com/

DIFFERENTIAL UNIT

EXPLODED VIEW

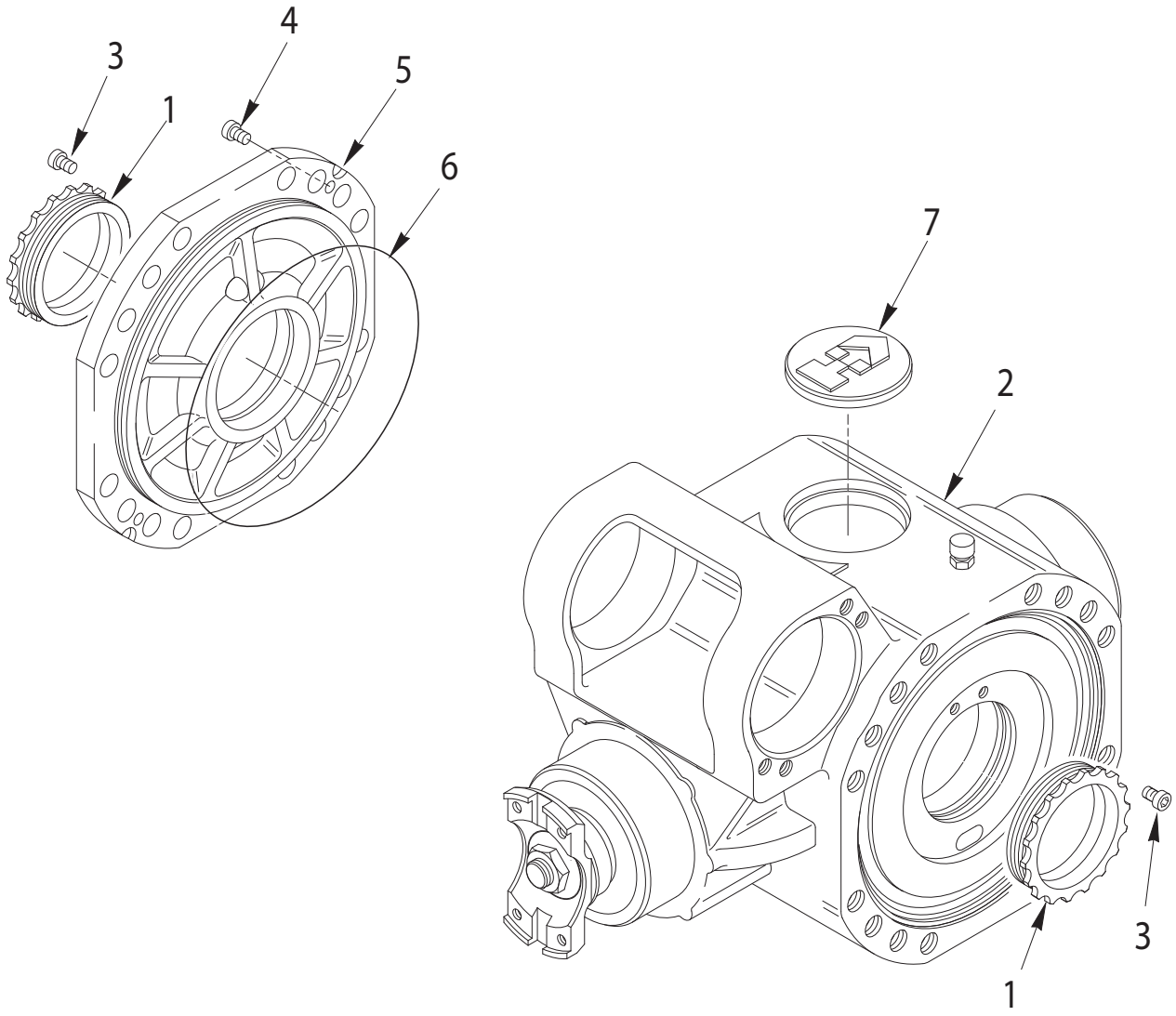

https://truckmanualshub.com/

DISASSEMBLY

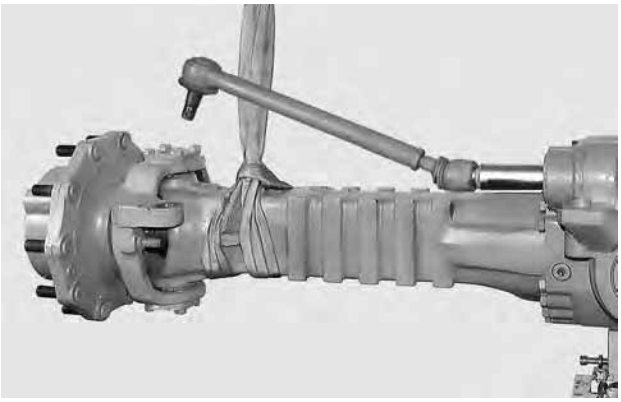

FIGURE 1: Remove the complete arms.
For details, see CHECKING WEAR AND REPLACING THE BRAKING DISCS p. 19.

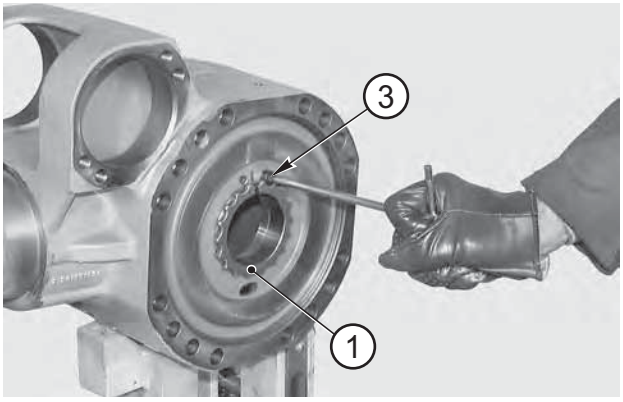

FIGURE 2: Mark the position of the ring nuts (1). Remove the capscrews (3) from the ring nuts (1).

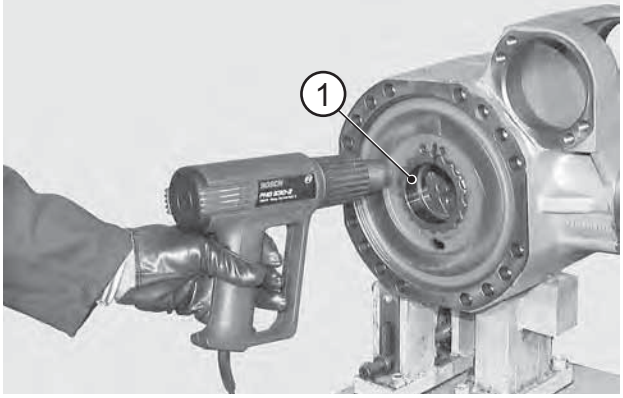

FIGURE 3: Uniformly heat the ring nuts (1) up to a temperature of 80° C.

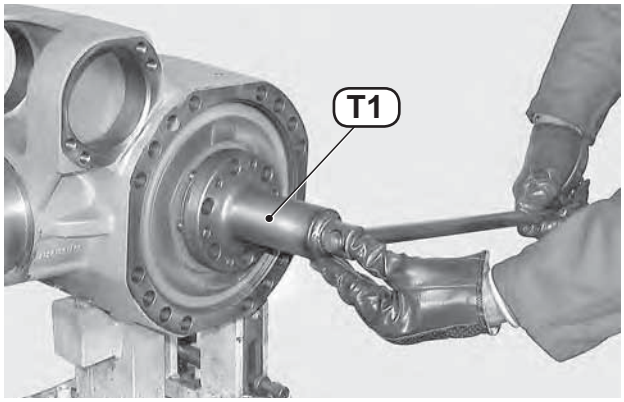

FIGURE 4: Apply tool T1 (See drawing T1 p. 66) and remove the ring nuts.

NOTE:

Accurately clean the threaded portions on ring nuts of body and cover.

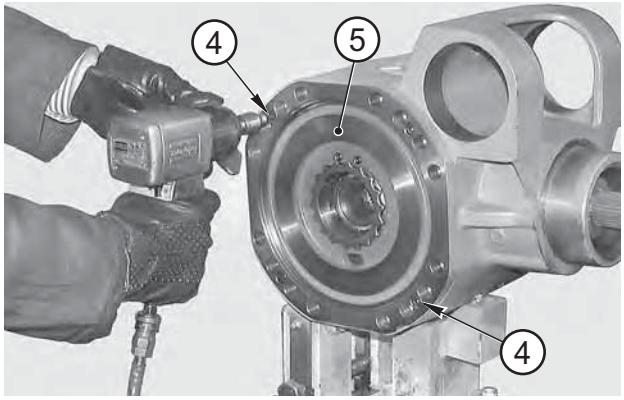

FIGURE 5: Remove the capscrews (4) from the middle cover (5).

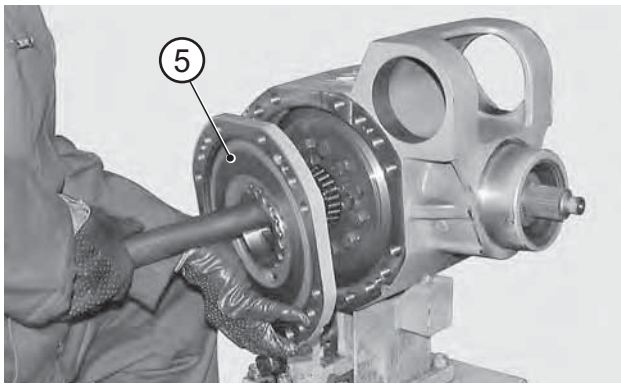

FIGURE 6: Insert a screwdriver in the opposing slots then force and remove the middle cover (5) and the complete differential unit.

NOTE:

Support the pieces using a rod.

https://truckmanualshub.com/

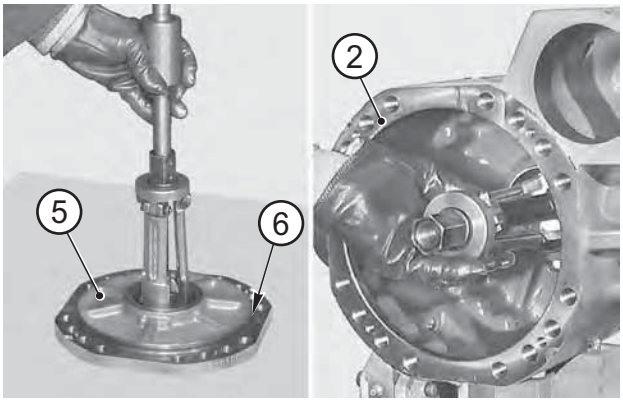

FIGURE 7: If the bearings need replacing, extract the external thrust blocks of the bearings (7) and (8) from middle cover and central body.

NOTE:

Accurately check the o-ring (6).

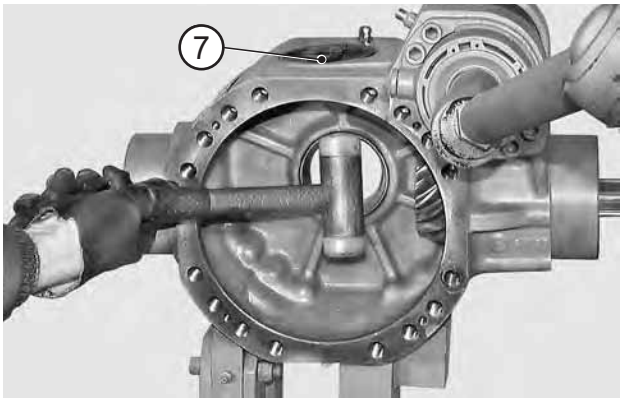

FIGURE 8: Remove the top plug (7).

NOTE:

The cap must be replaced each time the unit is disassembled.

https://truckmanualshub.com/

ASSEMBLY

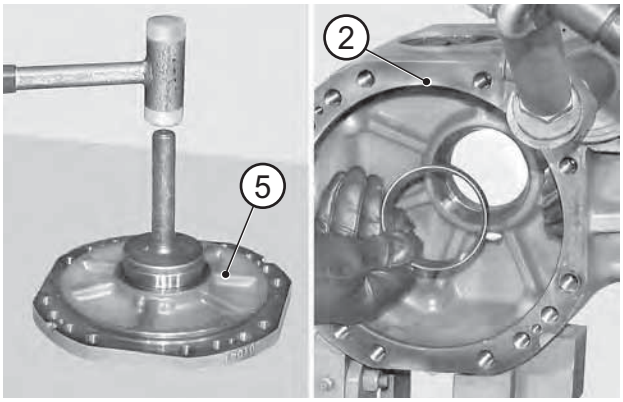

FIGURE 9: If the bearings are replaced, insert the external thrust blocks in the middle cover (5) and in the central body (2).

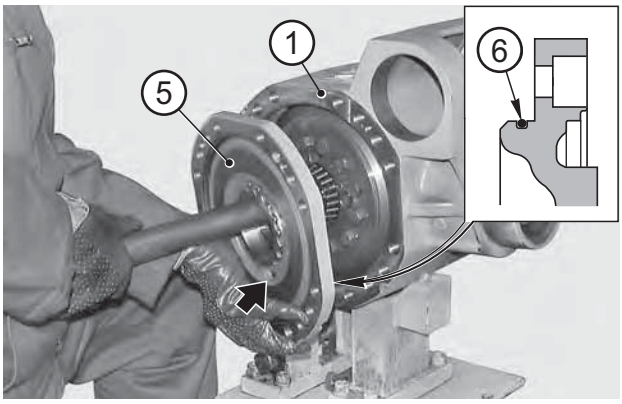

FIGURE 10: Position the differential unit in the central body (2) with the help of a bar and fit the middle cover (5).

NOTE:

Thoroughly check the state of the o-ring (6) and make sure that the cover is fitted with the oil discharge in the lower position.

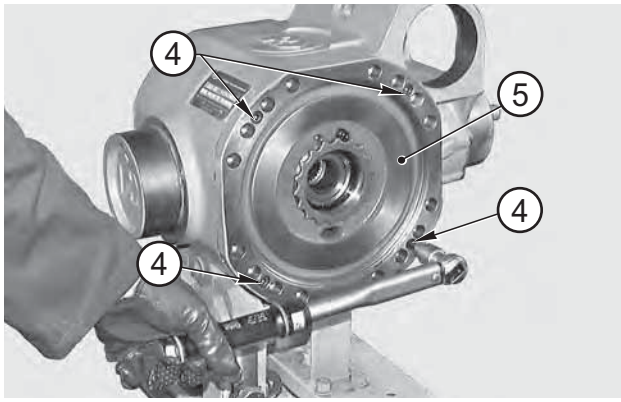

FIGURE 11: Lock the middle cover (5) with screws (4). Torque wrench setting for screw: 23.8 - 26.2 N·m

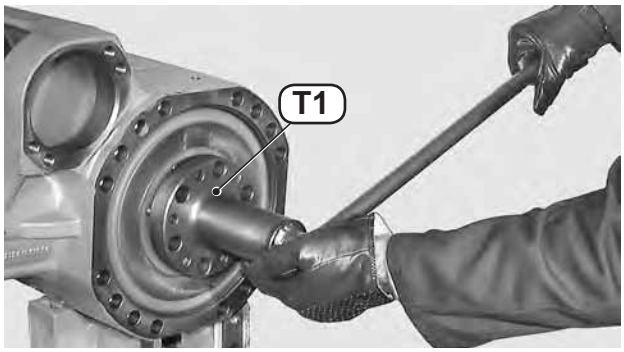

FIGURE 12: Tighten ring nuts on the crown side until clearance between pinion and crown is zero, then lock the crown; go back 1/4 - 1/2 turn.

NOTE:

If the ring nuts (1) are removed, coat them with Loctite 242.

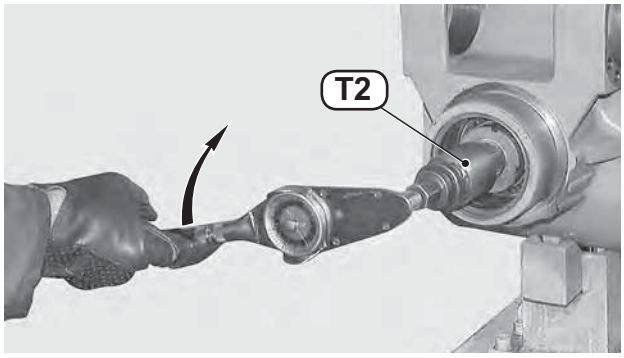

FIGURE 13: Pre-set the bearings by means of the ring nut situated on the opposite side of the crown, so as to increase pinion torque up to 140 - 210 N·cm.

⚠CAUTION

If bearings are not new, check the static torque; if bearings are new, check the continuous torque.

https://truckmanualshub.com/

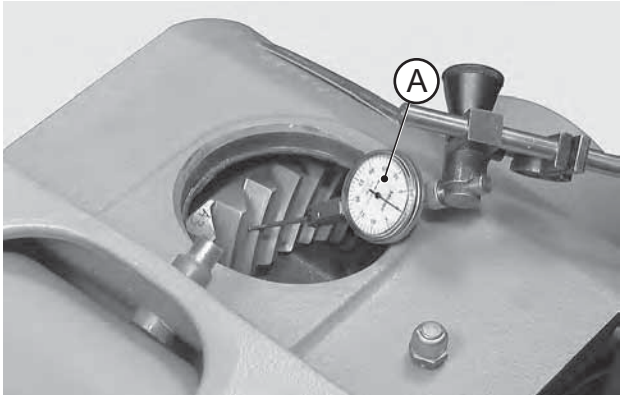

FIGURE 14: Introduce a dial indicator with rotary key "A" through the top plug hole (7).
Position the dial indicator on the center of one of the teeth of the crown, pre-set it to 1mm and reset it.

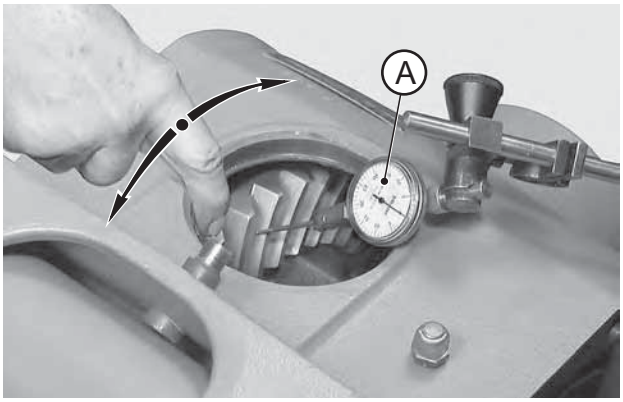

FIGURE 15: Manually move the crown in both directions in order to check the existing backlash between the pinion and the crown.

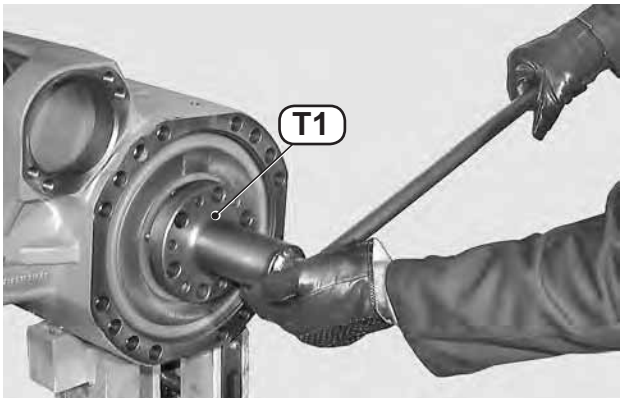

FIGURE 16: Adjust the backlash between the pinion and the crown by loosening one of the ring nuts (1) and tightening the opposite to compensate.
Normal backlash: see table.

RATIO - RAPPORTO VERHÄLTNIS RAPORTE - RAPPORT	CLEARANCE - GIOCO - SPIEL JUEGO - JEU	
	MIN.	MAX.
9÷34	0,18	0,23
9÷35	0,13	0,18
11÷31	0,20	0,28
11÷35	0,13	0,18
12÷35	0,13	0,18
12÷41	0,15	0,20
14÷32	0,18	0,23
14÷36	0,15	0,20
14÷41	0,15	0,20
15÷32	0,18	0,23
15÷47	0,13	0,18

FIGURE 17: Difference between MIN and MAX clearance for whole circumference should not exceed 0.09 mm.

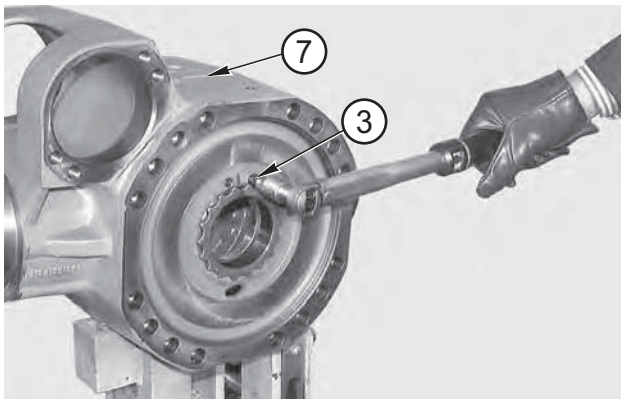

FIGURE 18: Apply Loctite 242 to the screws (3), fit them into one of the two holes and tighten.
Torque wrench setting: 23.8 - 26.2 N·m
Fit the top plug (7) after applying repositionable jointing compound for seals to the rims.

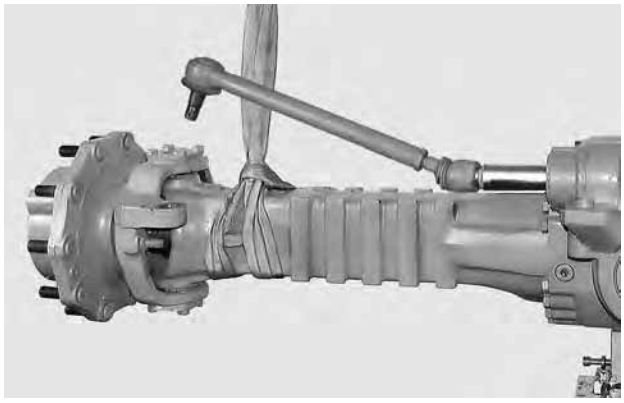

FIGURE 19: Re-install the complete arms.
For details, see CHECKING WEAR AND REPLACING THE BRAKING DISCS p. 19.

https://truckmanualshub.com/

SPECIAL TOOLS

T1

P/N: 3333

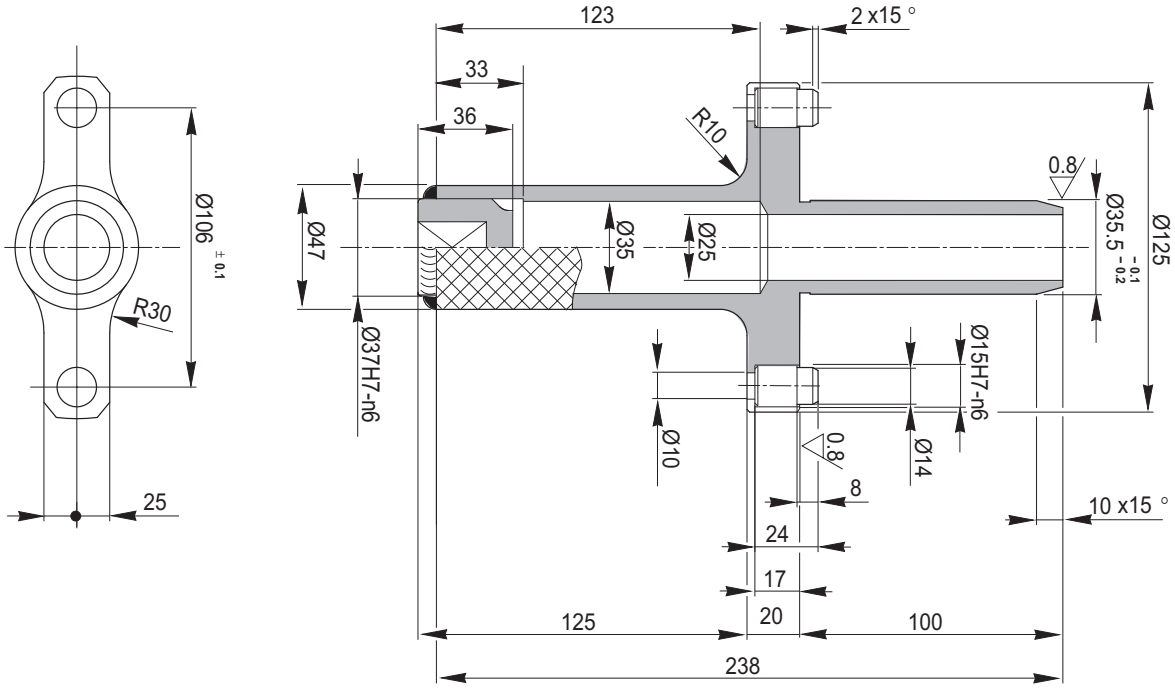

T2

P/N: 3317/4

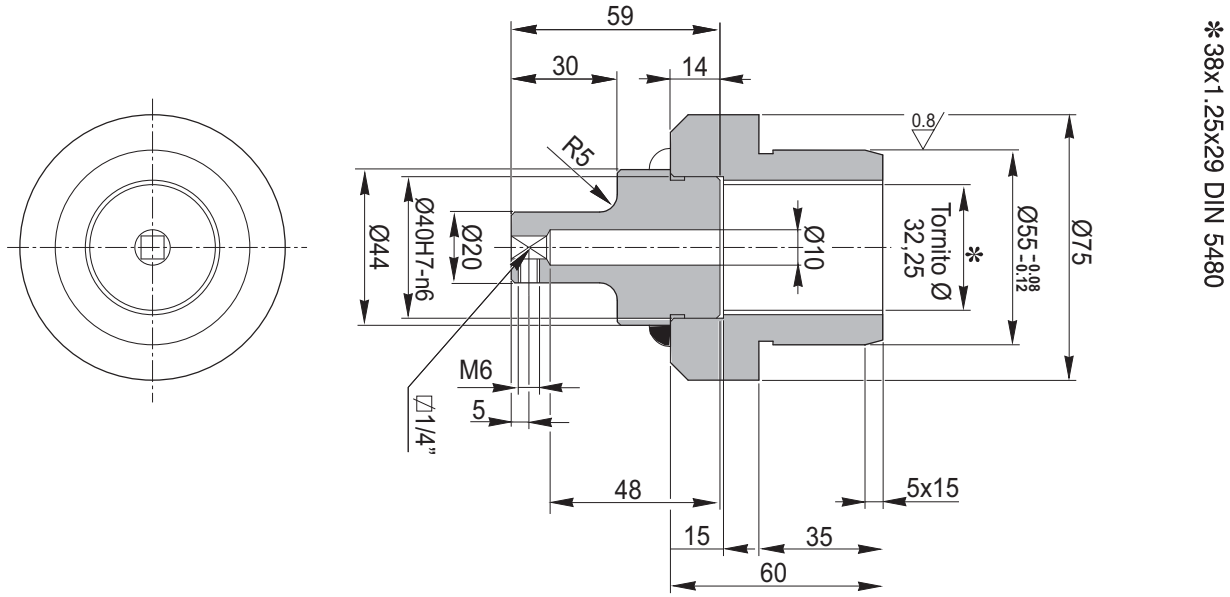

https://truckmanualshub.com/

BEVEL PINION

EXPLODED VIEW

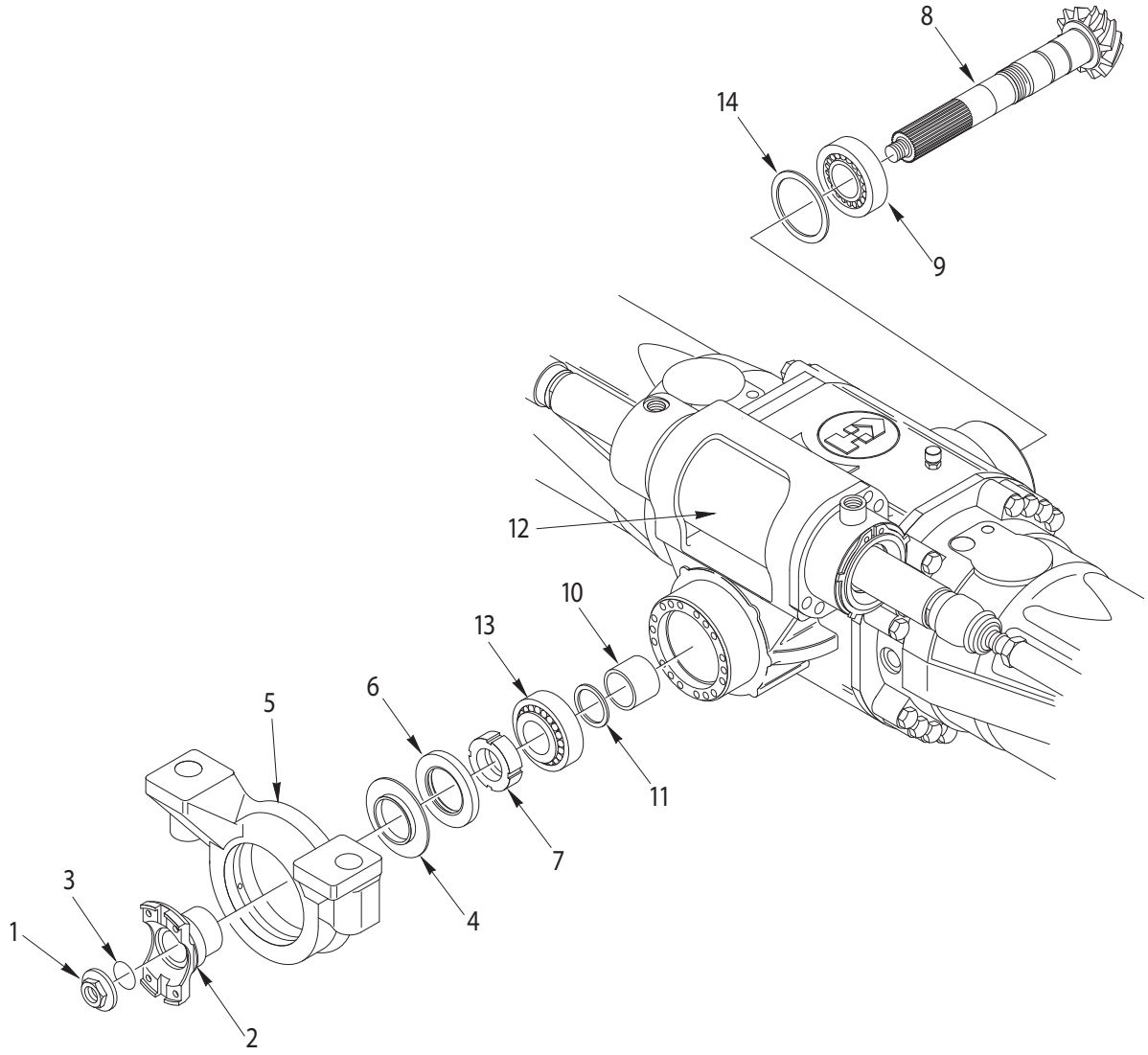

https://truckmanualshub.com/

DISASSEMBLY

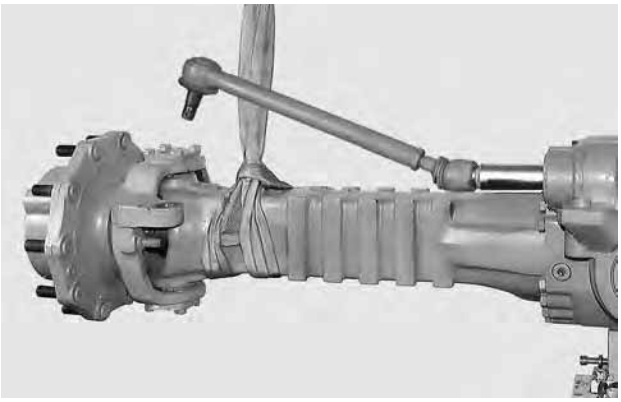

FIGURE 1: Remove the complete arms and the differential unit.
For details, see CHECKING WEAR AND REPLACING THE BRAKING DISCS p. 19 and DIFFERENTIAL UNIT p. 61.

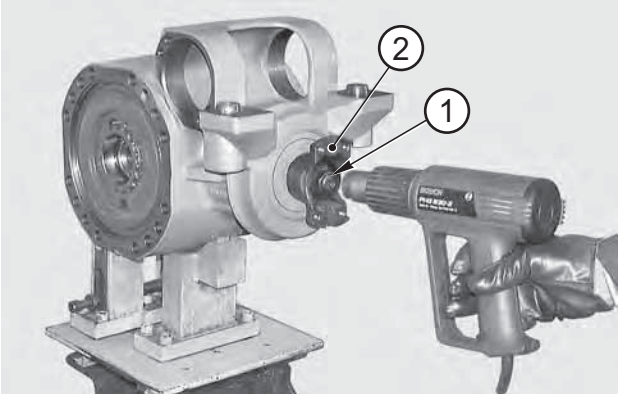

FIGURE 2: If disassembly is awkward, heat the check nut (1) of the flange (2) at 80°C.

NOTE:

Heating is meant to loosen the setting of Loctite on the nut (1).

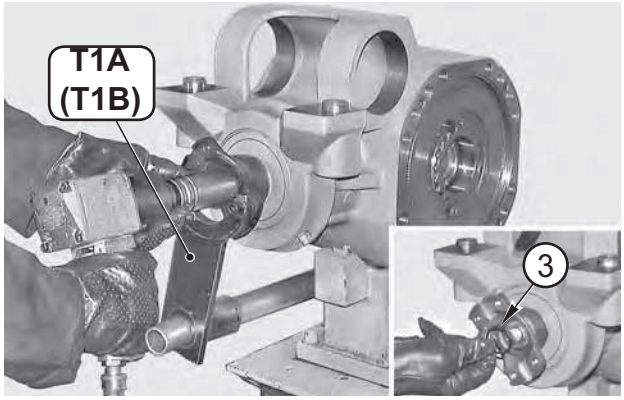

FIGURE 3: Position tool T1A (See drawing T1 p. 77) (or T1B), so as to avoid pinion rotation.
Loosen and remove the nut (1); also remove the o-ring (3).

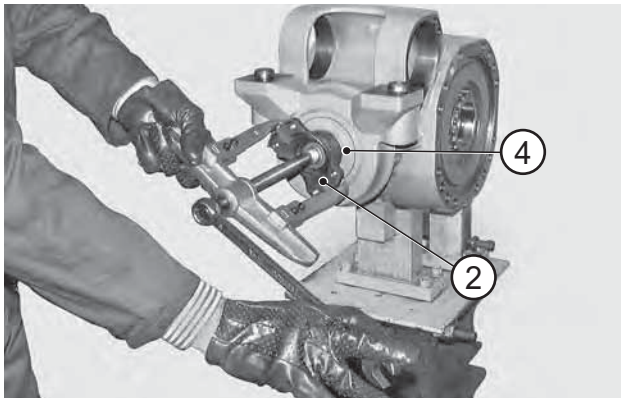

FIGURE 4: Remove the flange (2) complete with guard (4) by means of a puller.

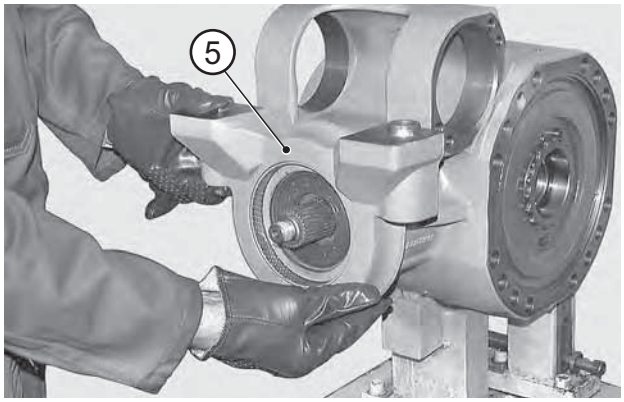

FIGURE 5: Remove the swinging support (5).

https://truckmanualshub.com/

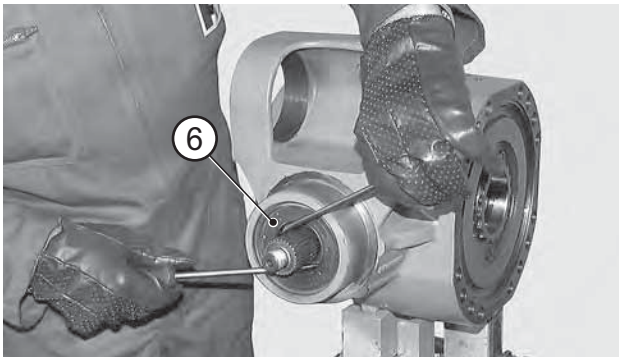

FIGURE 6: Remove the sealing ring (6).

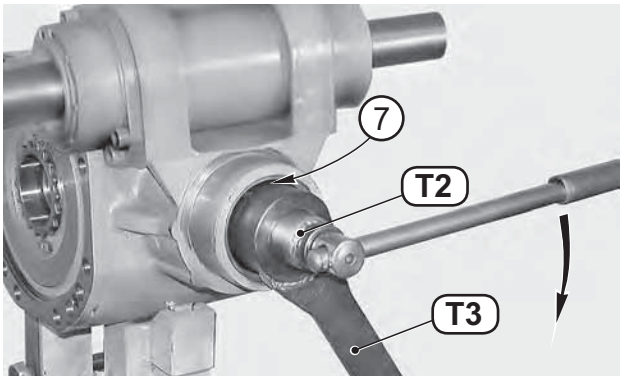

FIGURE 7: Position wrench T3 (See drawing T3 p. 78) onto the ring nut (7) and apply bar hold T2 (See drawing T2 p. 78). to the pinion (8). Stop wrench T3 (See drawing T3 p. 78) and rotate the pinion so as to release and remove the ring nut (7).

NOTE:

If disassembly proves awkward, heat the ring nut to approximately 80°C.

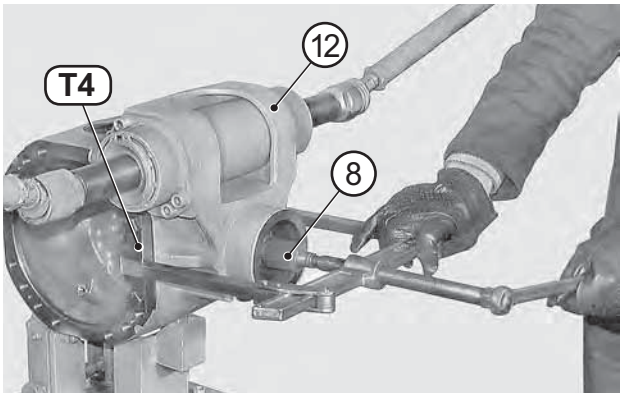

FIGURE 8: Apply blocks T4 (See drawing T4 p. 79) and, with the help of a puller, extract the pinion (8) complete with the internal bearing (9), the spacer (10) and shims (11).

NOTE:

The thrust blocks of the bearings remain in the central body (12).

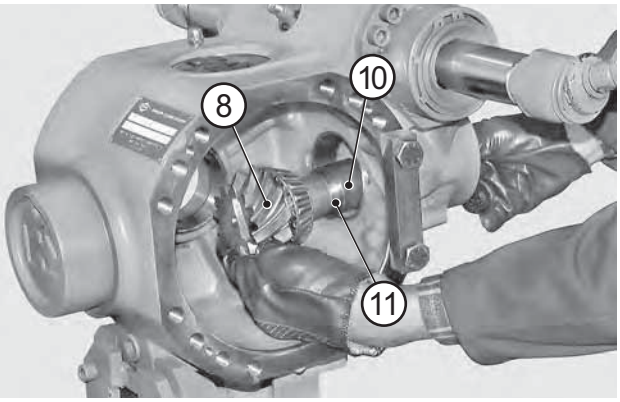

FIGURE 9: Remove the pinion (8), shims (11) and spacer (10).

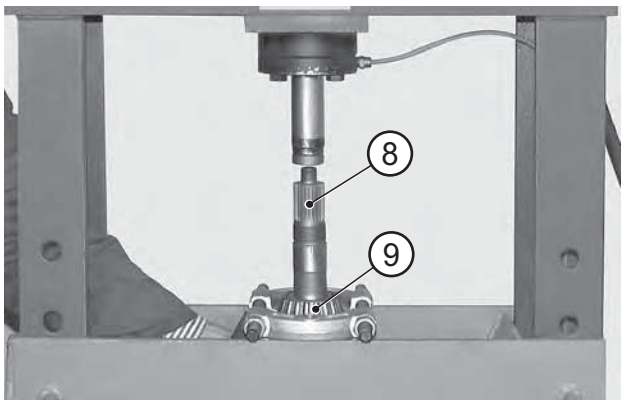

FIGURE 10: Using a puller and a press, remove the inner bearing (9) from the pinion (8).

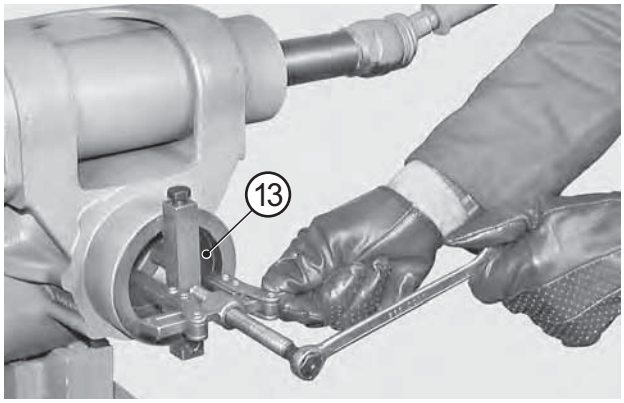

FIGURE 11: Remove the thrust block of the external bearing (13).

https://truckmanualshub.com/

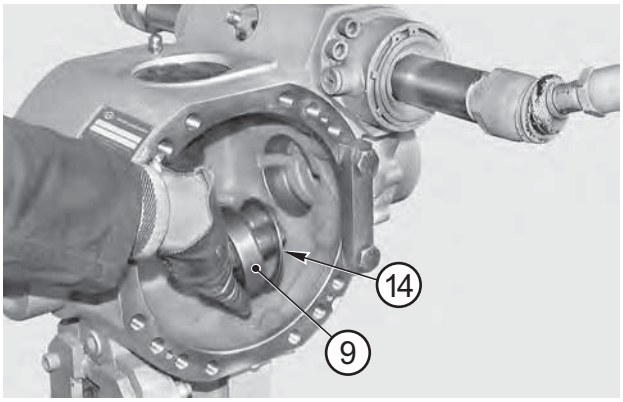

FIGURE 12: Insert a drift in the appropriate holes and remove the thrust block of the internal bearing (9) as well as the shim washers (14).

https://truckmanualshub.com/

ASSEMBLY

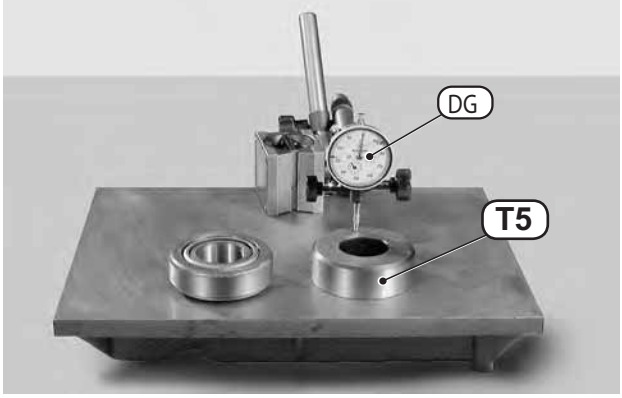

FIGURE 13: Using a surface plate, reset a dial indicator "DG" and place it on the measurement ring T5 (See drawing T5 p. 79) (with a thickness of 30.2 mm).
Preset the depth gauge to approximately 2 mm.

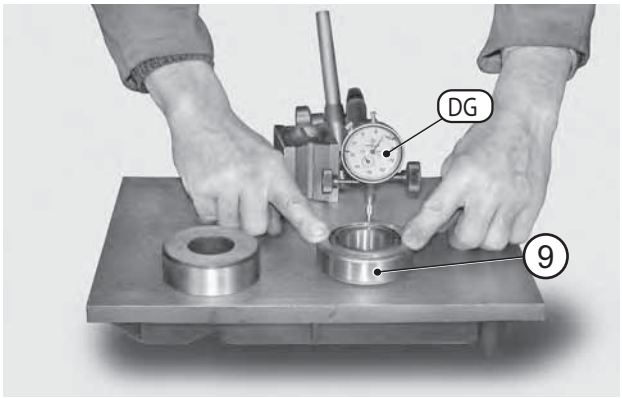

FIGURE 14: Bring the internal bearing (9), complete with its thrust block, under dial indicator.
Determine overall thickness "D" of the bearing checking the discrepancy between this size and the size of the measurement ring.

⚠CAUTION

Press the thrust block in the center and take several measurements while rotating the thrust block.

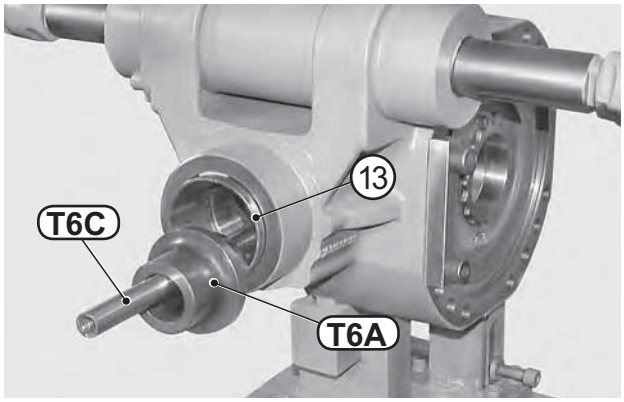

FIGURE 15: Partially insert the thrust block of the external bearing (13).

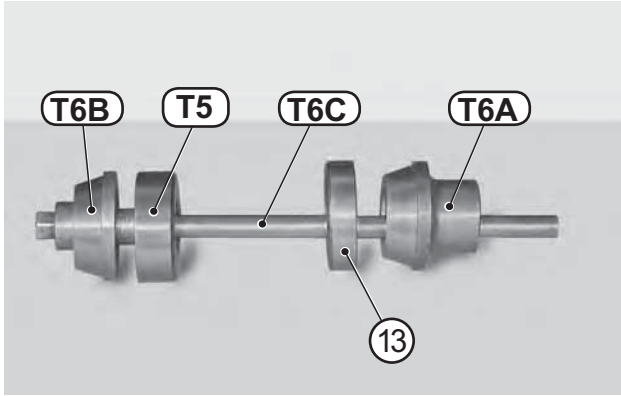

FIGURE 16: Install tension rod T6C (See drawing T6 p. 80), measurement ring T5 (See drawing T5 p. 79) and front guide tool T6A (See drawing T6 p. 80) on the thrust block of the external bearing (13).

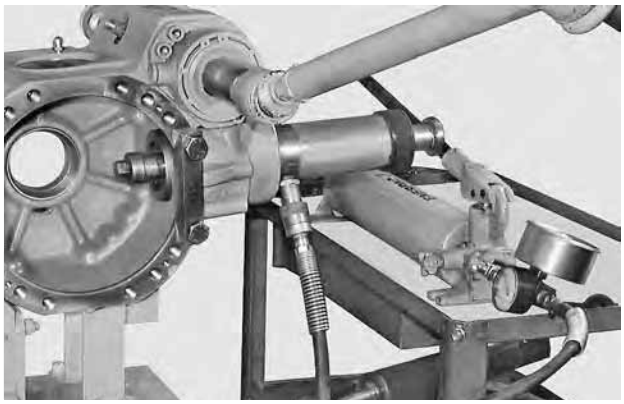

FIGURE 17: Connect the tension rod to the press and move the thrust block of the external bearing (13) into its seat. Disconnect the press and remove the tension rod.

NOTE:

Before starting the next stage, make sure that the thrust block has been completely inserted into its seat.

https://truckmanualshub.com/

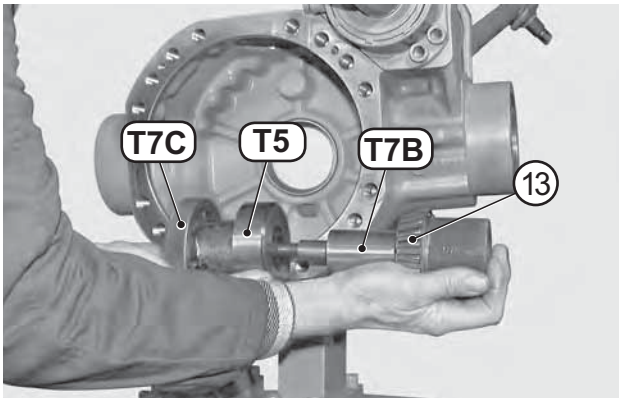

FIGURE 18: Insert tool T7B (See drawing T7 p. 81) complete with external bearing (13), measurement ring T5 (See drawing T5 p. 79) and gauged ring nut T7C (See drawing T7 p. 81). Manually tighten.

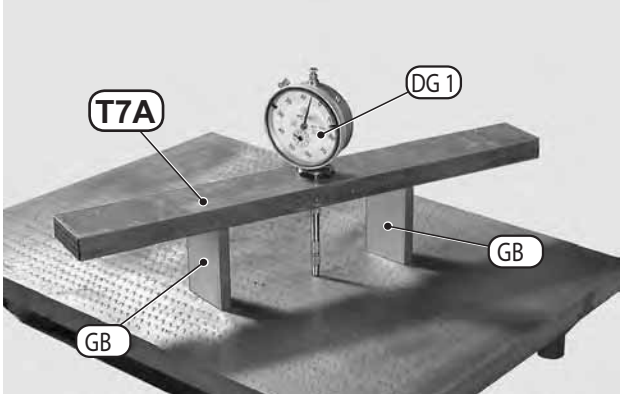

FIGURE 19: Fit a dial indicator "DG1" with long stem into bar T7A (See drawing T7 p. 81); when the bar rests on two size-blocks "GB" of 57 mm, reset the gauge.
Preset the gauge to approximately 2 mm and reset.

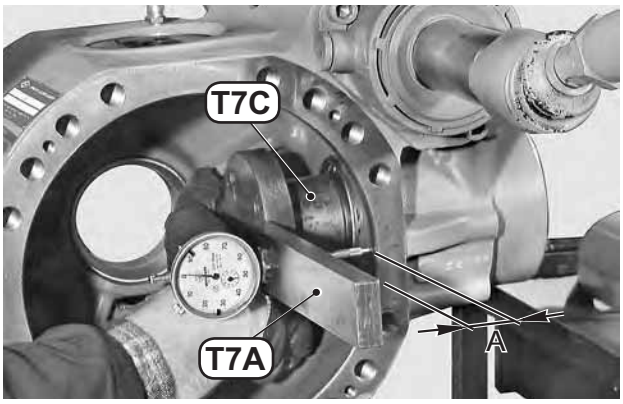

FIGURE 20: Lay bar T7A (See drawing T7 p. 81) on gauged nut T7C (See drawing T7 p. 81) and take the measurement "A" at about 57 mm corresponding to the maximum diameter of arms centering.

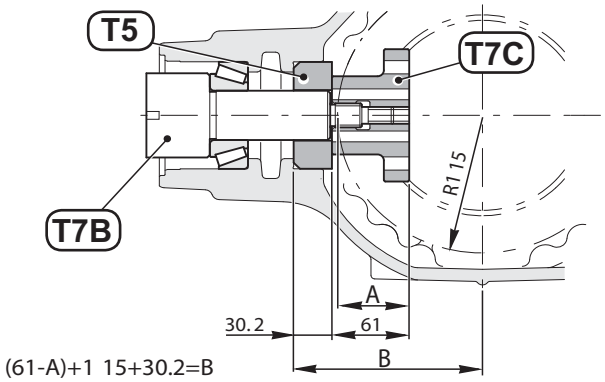

FIGURE 21: Calculate size "B" which will be the first useful value for calculating the size of the shims (14) that are to be inserted under the thrust block of the internal bearing (9).

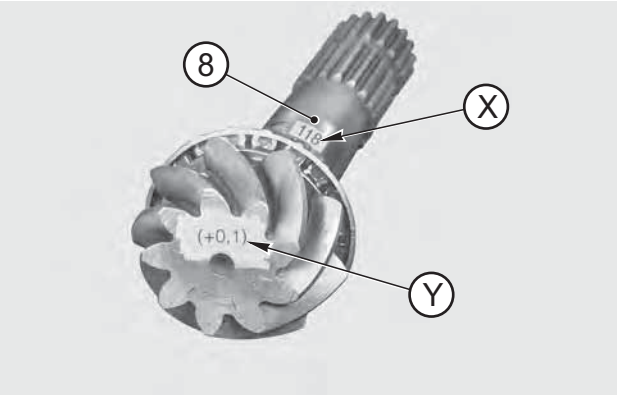

FIGURE 22: Check the nominal size (X) marked on the pinion and add or subtract the indicated variation (Y) so as to obtain size "Z".
e.g.: Z= 118 + 0.1 = 118.1
Z= 118 ± 0.2 = 117.8

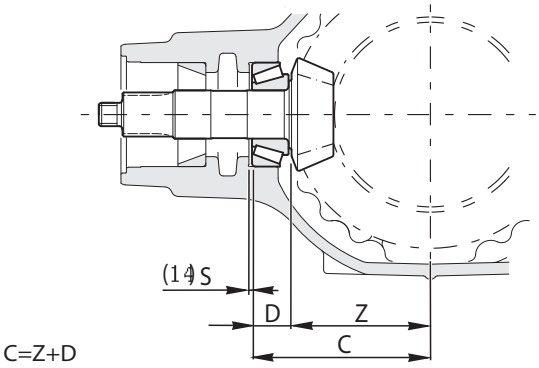

FIGURE 23: Calculate size "C" which represents the second value for calculating the size of the shims "S" that are to be placed under the thrust block of the internal bearing (9).

https://truckmanualshub.com/

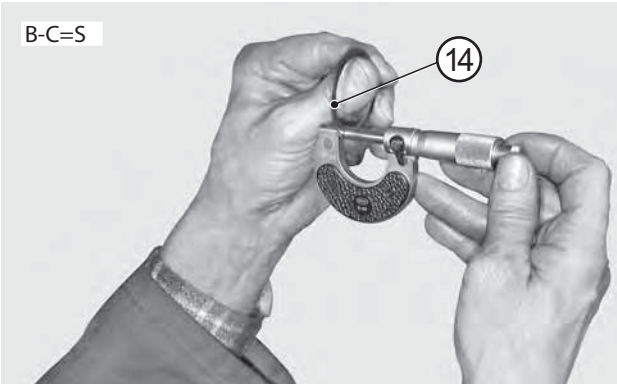

FIGURE 24: Calculate the difference between sizes "B" and "C" so as to obtain the size "S" of the shim (14) that will go under the thrust block of the internal bearing (9).

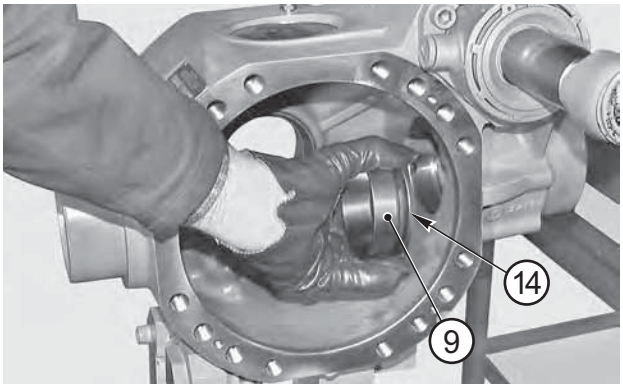

FIGURE 25: Insert shim "S" (14) and the thrust block of the internal bearing (9) in the central body.

NOTE:

To hold shim "S" (14) in position, apply grease.

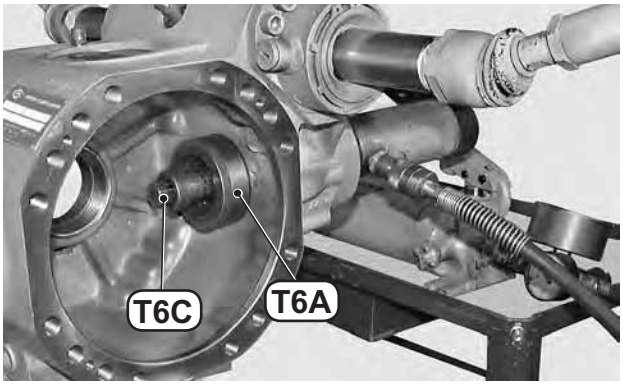

FIGURE 26: Position tool T6A (See drawing T6 p. 80) and tension rod T6C (See drawing T6 p. 80). Connect the tension rod to the press, fasten the thrust block and then remove the tools.

NOTE:

Before going on to the next stage, make sure that the thrust block has been completely inserted.

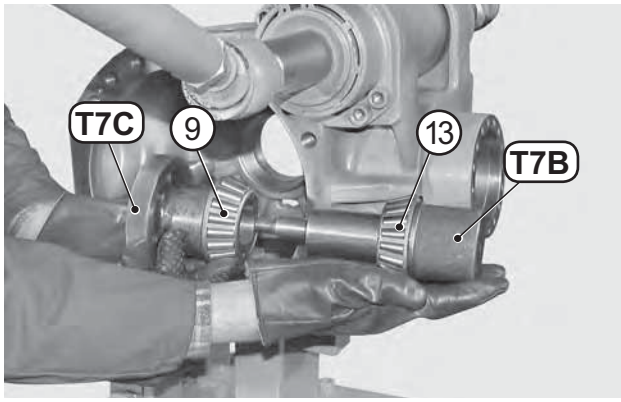

FIGURE 27: Position tools T7C (See drawing T7 p. 81) and T7B (See drawing T7 p. 81) complete with tapered bearings (9) and (13); manually tighten until a rolling torque has been obtained.

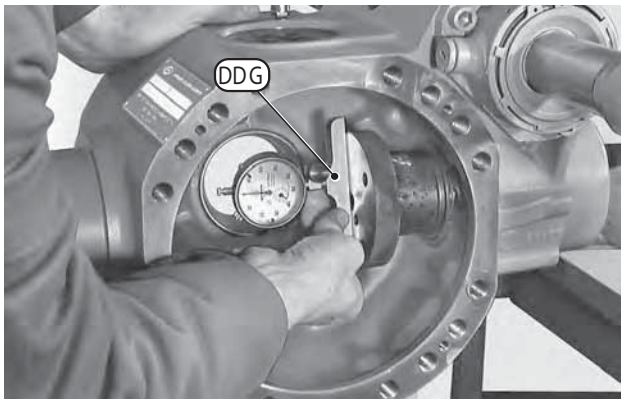

FIGURE 28: Insert the stem of a depth gauge "DDG" in either side hole of tool T7C (See drawing T7 p. 81); reset the gauge with a presetting of approximately 3 mm.

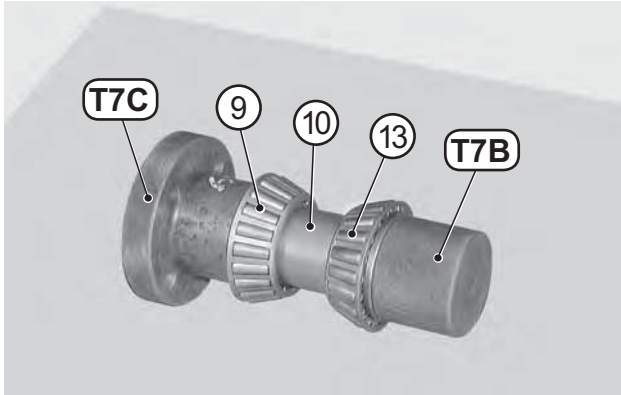

FIGURE 29: Remove the depth gauge and release tools and bearings from the central body.
Re-install all and insert the spacer (10) between bearings (9) and (13); manually tighten the whole pack.

https://truckmanualshub.com/

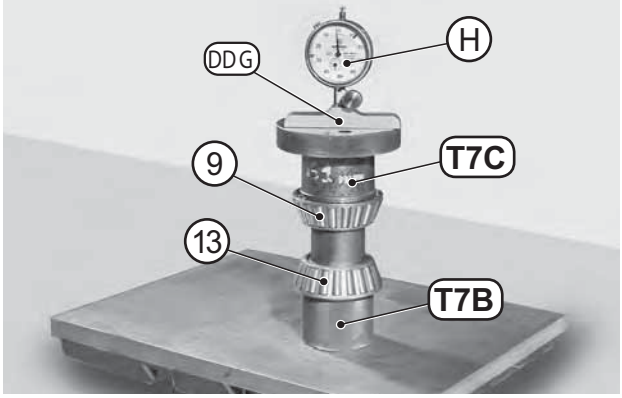

FIGURE 30: Insert depth gauge "DDG" into tool T7B (See drawing T7 p. 81) T7C (See drawing T7 p. 81) and measure variation "H" in relation to the zero setting performed back at Figure 28.

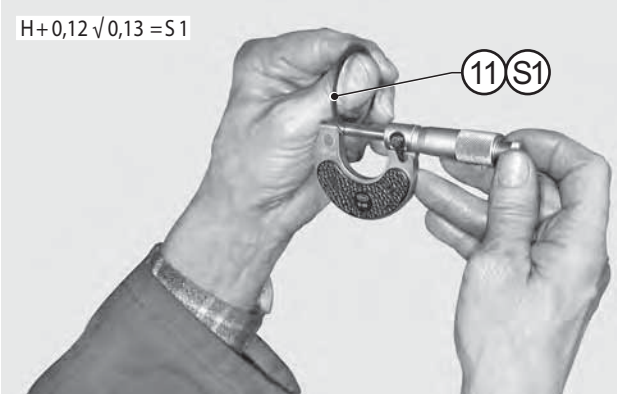

FIGURE 31: The variation is to be added to a set value of 0.12 - 0.13 mm., so as to obtain the size of shim "S1" (11) which will be inserted between the external bearing (13) and the spacer (10) and subsequently, to determine the preload for the bearings.

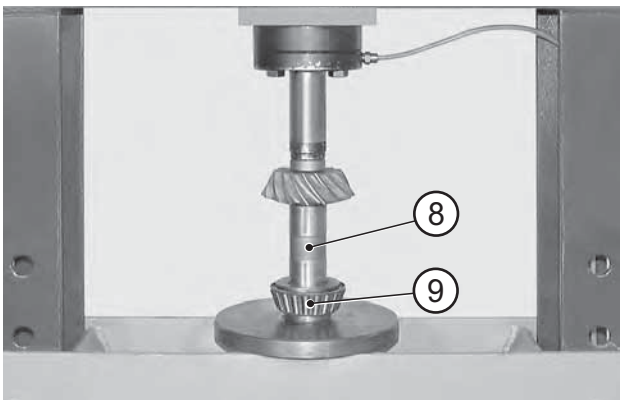

FIGURE 32: Position the internal bearing (9) and the pinion (8) under a press; force the bearing onto the pinion.

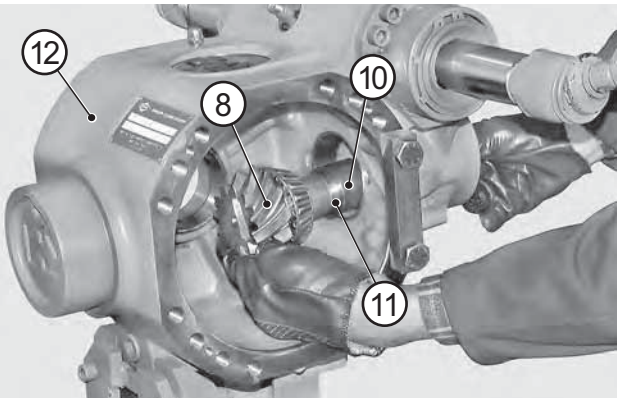

FIGURE 33: Fit the pinion (8), shim "S1" (11) and spacer (10) in the main body (12).

NOTE:

The thinner shims must be placed in-between the thicker ones.

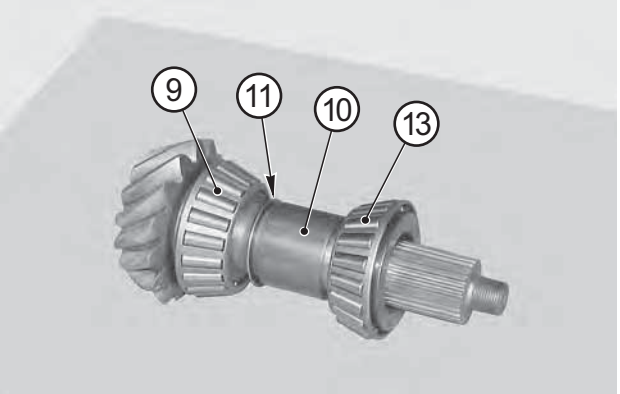

FIGURE 34: Insert the external bearing (13) in the central body in order to complete the pack arranged as in the figure.

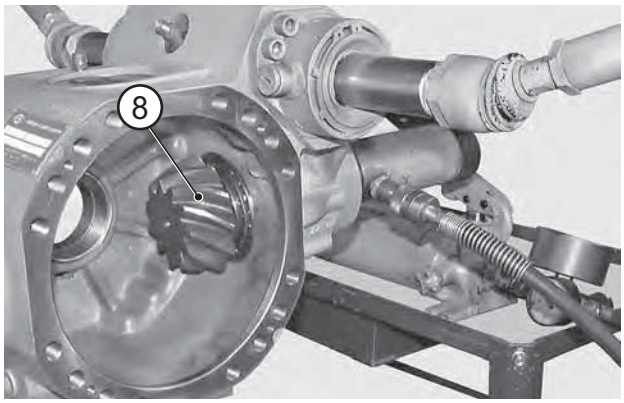

FIGURE 35: Connect the pinion (8) to the tie rod T8A (See drawing T8 p. 82) and T8B (See drawing T8 p. 82); connect the tie rod T8C (See drawing T8 p. 82) (see special tools) to the press and block.

https://truckmanualshub.com/

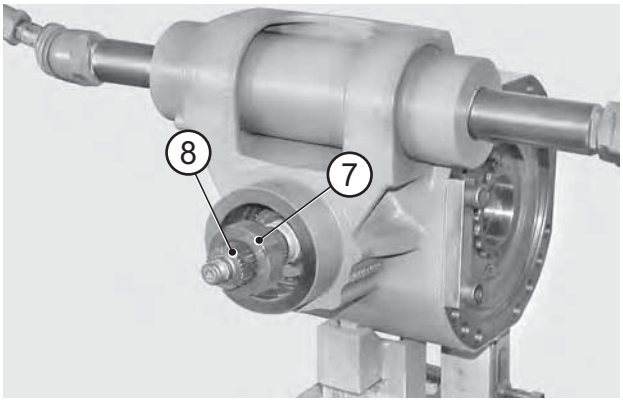

FIGURE 36: STANDARD INPUT FLANGE VERSION
Apply Loctite 242 to the thread of the ring nut (7) and screw the nut onto the pinion (8).

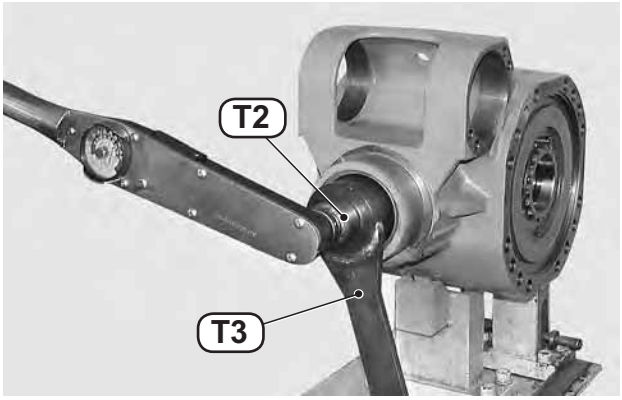

FIGURE 37: STANDARD INPUT FLANGE VERSION
Apply special wrench T3 (See drawing T3 p. 78) to the ring nut (7) and bar-hold T2 (See drawing T2 p. 78) to the pinion (8). Lock the wrench T3 (See drawing T3 p. 78) and rotate the pinion using a torque wrench, up to a minimum required torque setting of 500 N·m.

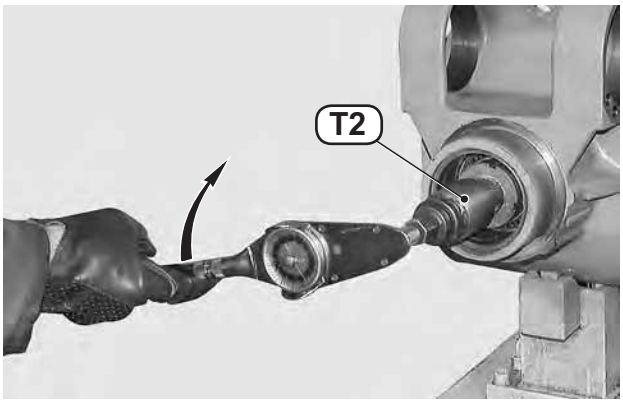

FIGURE 38: STANDARD INPUT FLANGE VERSION
Apply onto the pinion (8) the bar-hold and with the help of a torque wrench, check the torque of the pinion (8).
Torque: 120 - 200 N·cm

⚠CAUTION

STANDARD INPUT FLANGE VERSION
If torque exceeds the maximum value, then the size of shim "S1" (11) between the bearing (13) and the spacer (10) needs to be increased.

If torque does not reach the set value, increase the torque setting of the ring nut (7) in different stages to obtain a maximum value of 570 N·m.

If torque does not reach the minimum value, then the size of shim "S1" (11) needs to be reduced.

When calculating the increase or decrease in size of shim "S1", bear in mind that a variation of shim (11) of 0.01 mm corresponds to a variation of 60 N·cm in the torque of the pinion (8).

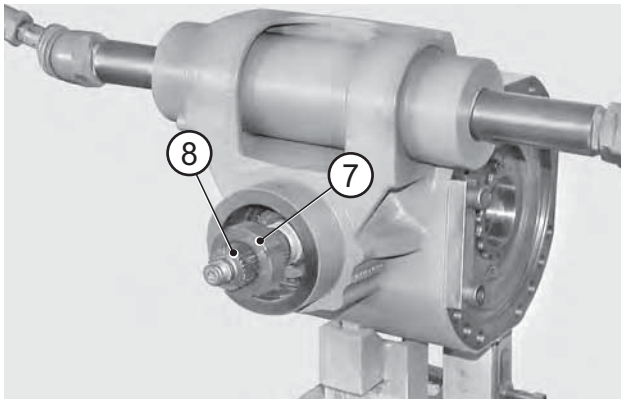

FIGURE 39: FLANGED GEARBOX VERSION
Apply Loctite 270 to the thread of the ring nut (7) and screw the nut onto the pinion (8).

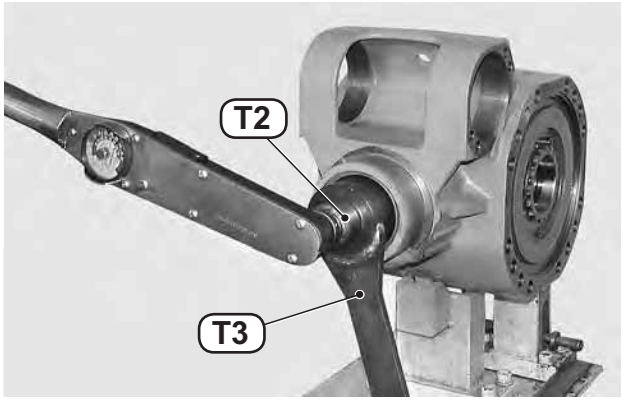

FIGURE 40: FLANGED GEARBOX VERSION
Apply special wrench T3 (See drawing T3 p. 78) to the ring nut (7) and bar-hold T2 (See drawing T2 p. 78) to the pinion (8). Lock the wrench T3 (See drawing T3 p. 78) and rotate the pinion using a torque wrench, up to a minimum required torque setting of 900 N·m.

https://truckmanualshub.com/

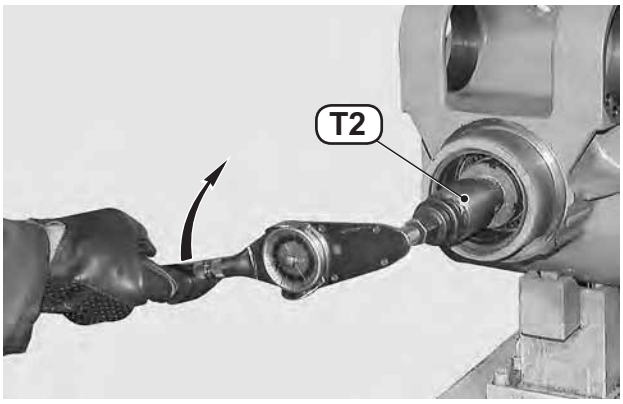

FIGURE 41: FLANGED GEARBOX VERSION
Apply onto the pinion (8) the bar-hold and with the help of a torque wrench, check the torque of the pinion (8).
Torque: 120 - 200 N·cm

⚠CAUTION

FLANGED GEARBOX VERSION
If torque exceeds the maximum value, then the size of shim "S1" (11) between the bearing (13) and the spacer (10) needs to be increased.

If torque does not reach the set value, increase the torque setting of the ring nut (7) in different stages to obtain a maximum value of 1000 N·m.

If torque does not reach the minimum value, then the size of shim "S1" (11) needs to be reduced.

When calculating the increase or decrease in size of shim "S1", bear in mind that a variation of shim (11) of 0.01 mm corresponds to a variation of 60 N·cm in the torque of the pinion (8).

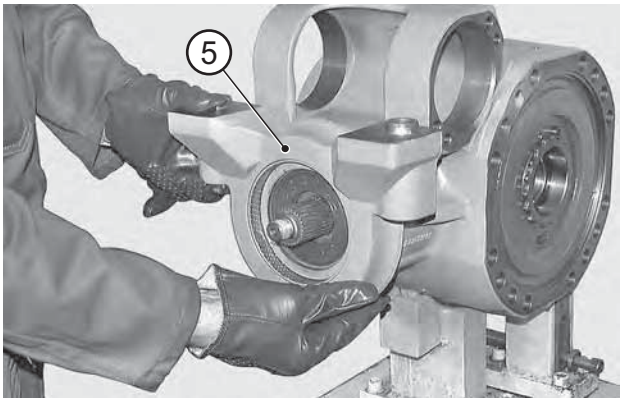

FIGURE 42: Install the swinging support (5).

NOTE:

Check that it is properly oriented.

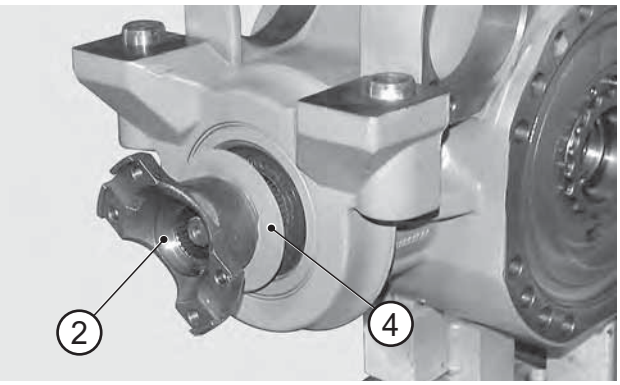

FIGURE 43: Fit the flange (2) complete with the guard (4) and fasten it.
For seating the flange (2), use a plastic hammer if necessary.

NOTE:

Make sure that the guard (4) is securely fastened onto the flange and that it is not deformed.

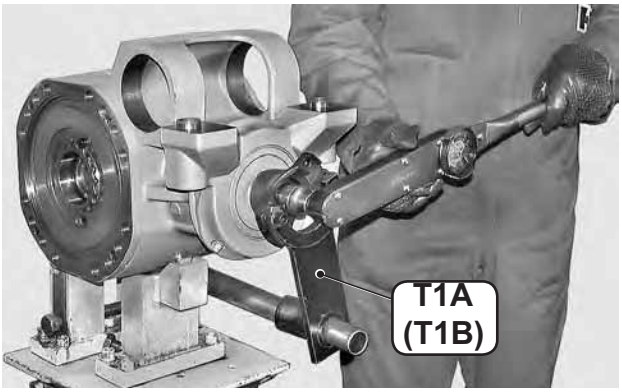

FIGURE 44: Apply Loctite 242 to the threaded part of the pinion (8). Position tool T1A (See drawing T1 p. 77) (or T1B) and fasten it in order to avoid rotation. Insert o-ring (3) the nut (1) and tighten it using a torque wrench.
Torque wrench setting: 280 - 310 N·m

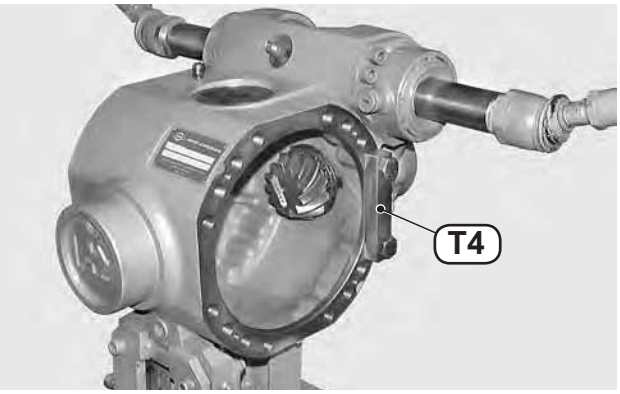

FIGURE 45: Remove blocks T4 (See drawing T4 p. 79) (used for extracting the pinion) and re-install the arms.
For details, see CHECKING WEAR AND REPLACING THE BRAKING DISCS p. 19.

https://truckmanualshub.com/

SPECIAL TOOLS

T1

P/N: 2308

T1A

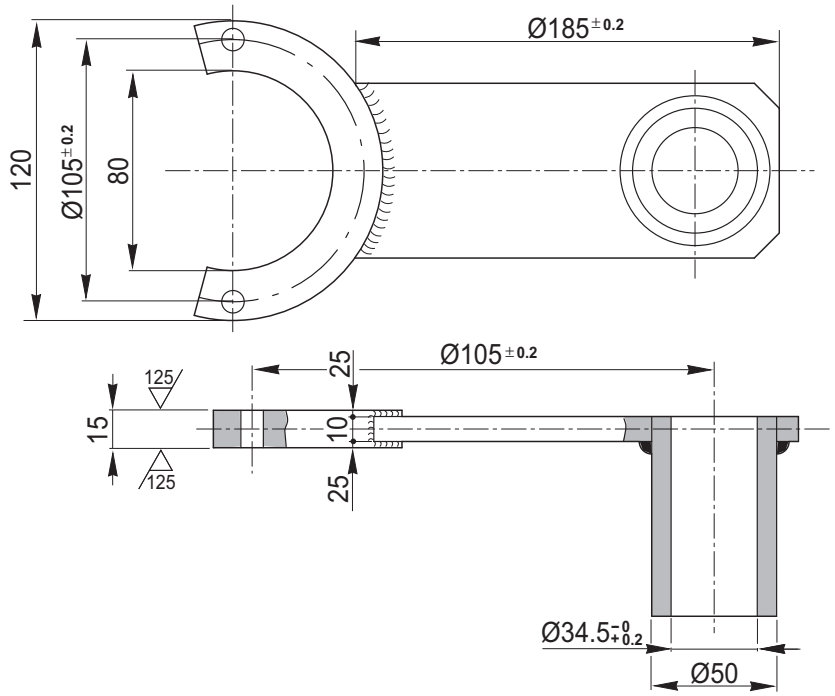

T1B

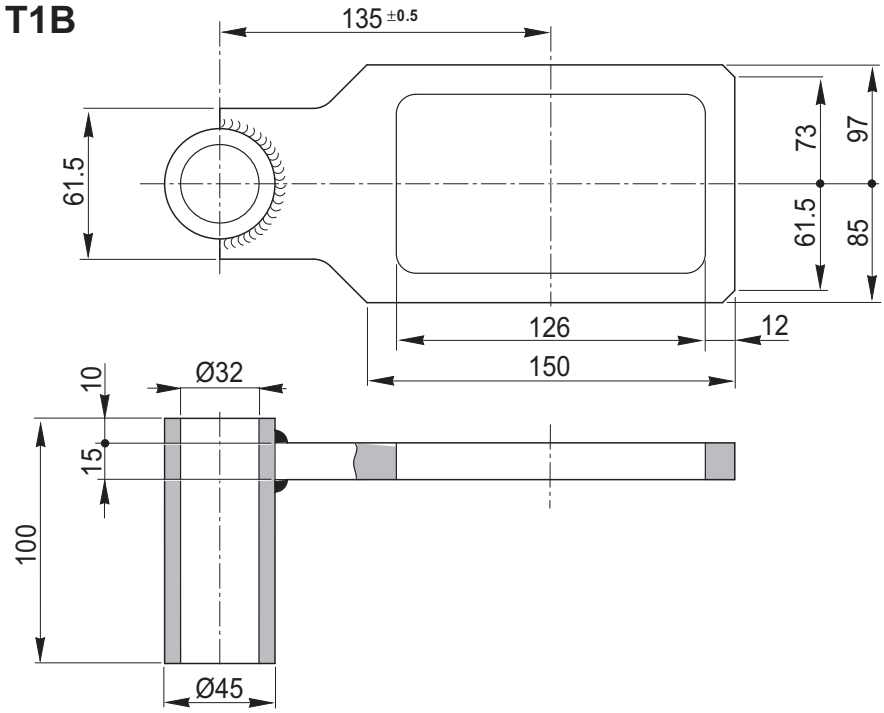

https://truckmanualshub.com/

T2

P/N: 3317/3

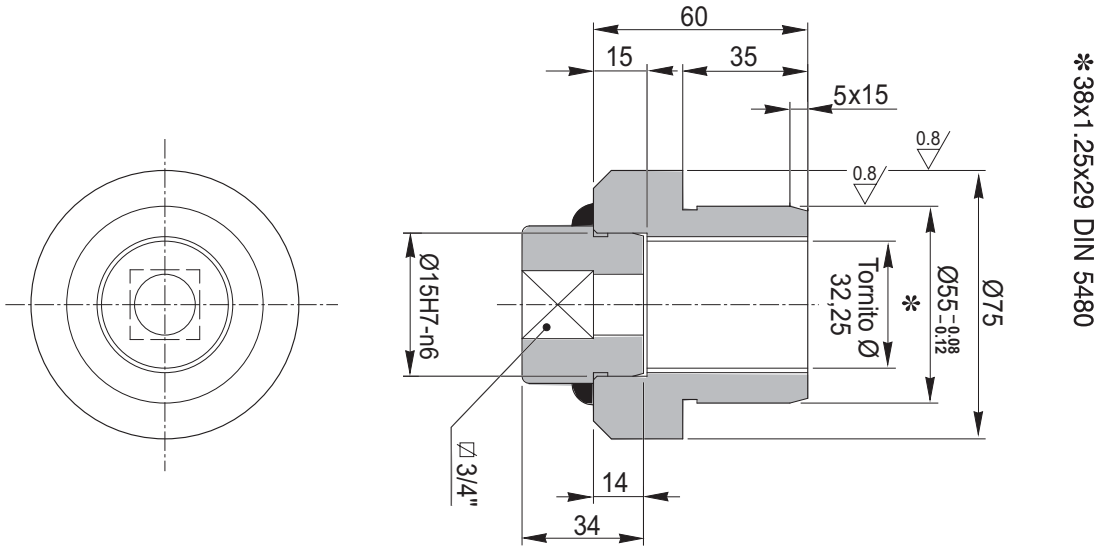

T3

P/N: 3317/A

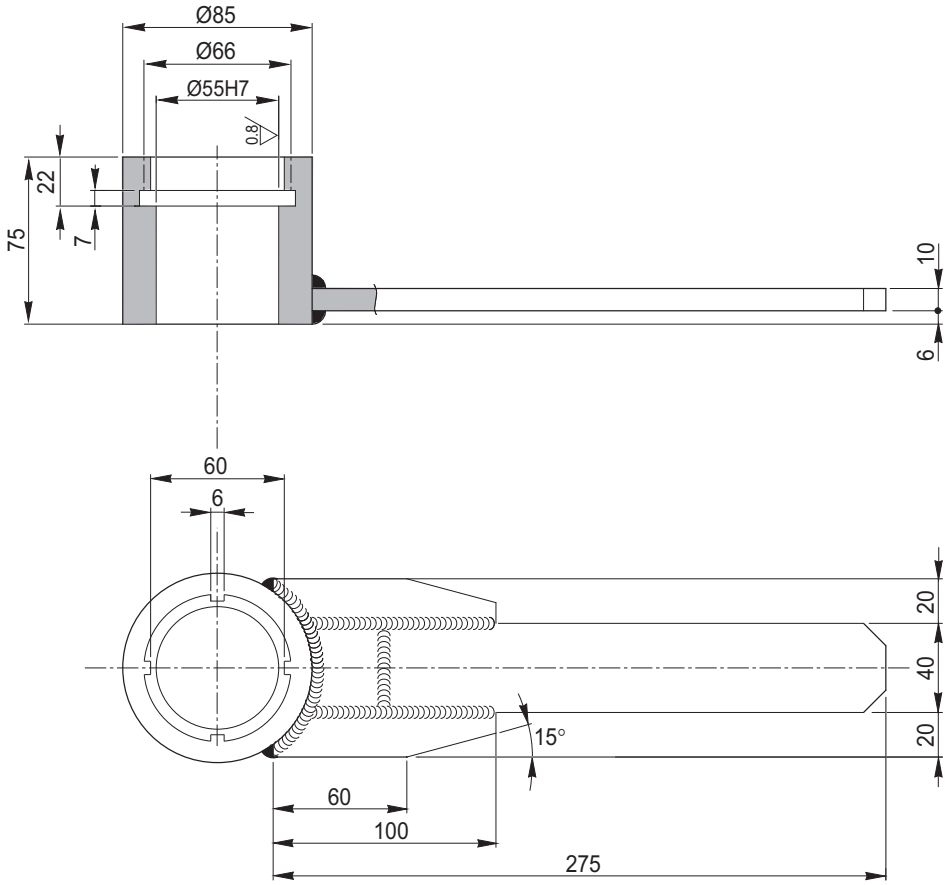

https://truckmanualshub.com/

T4

P/N: 2309

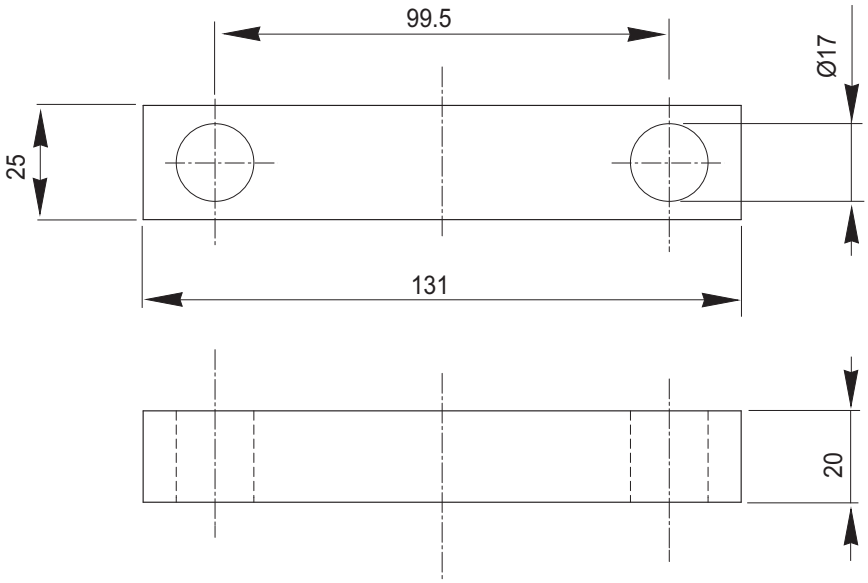

T5

P/N: 2310

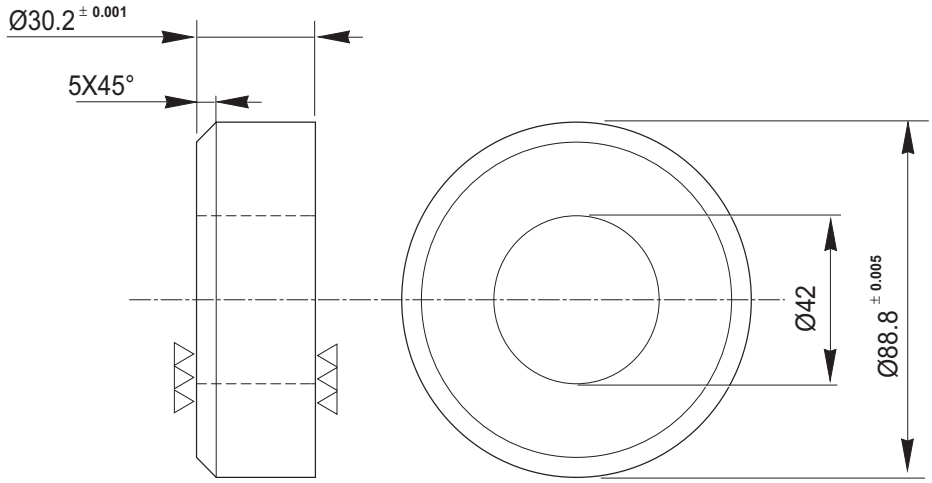

https://truckmanualshub.com/

T6

P/N: 3329/3

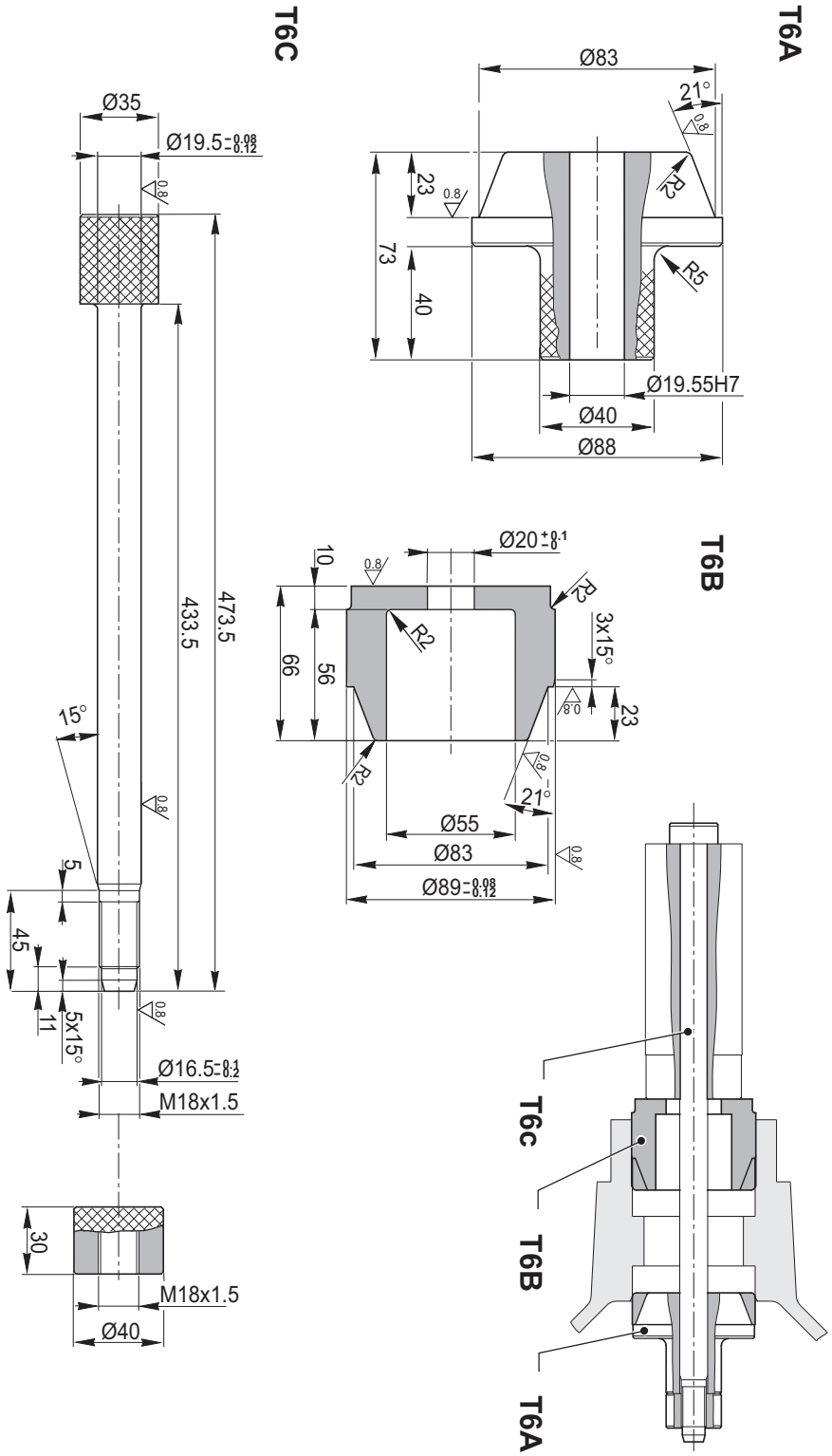

https://truckmanualshub.com/

T7

P/N: 2312

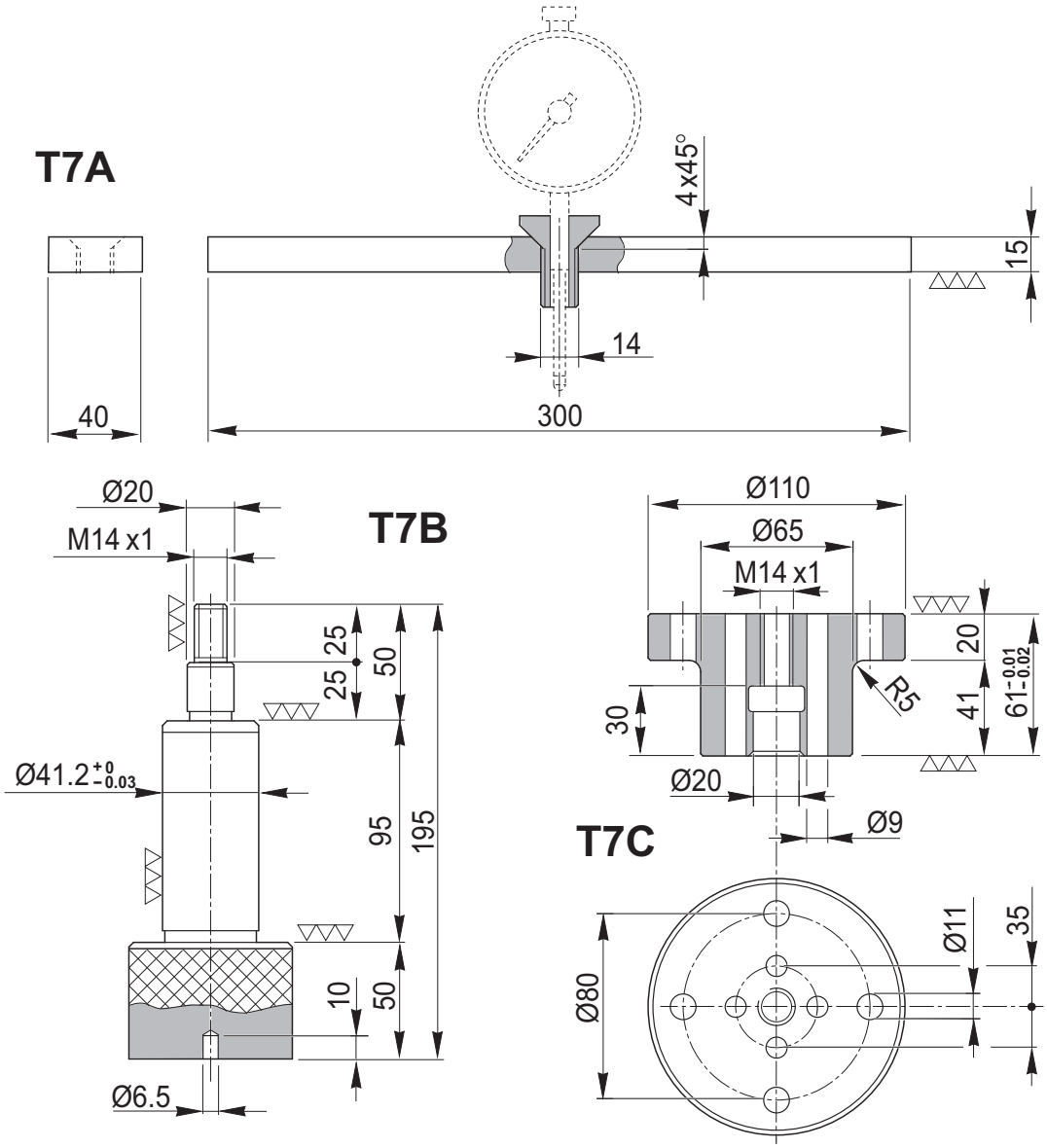

https://truckmanualshub.com/

T8

P/N: 3354

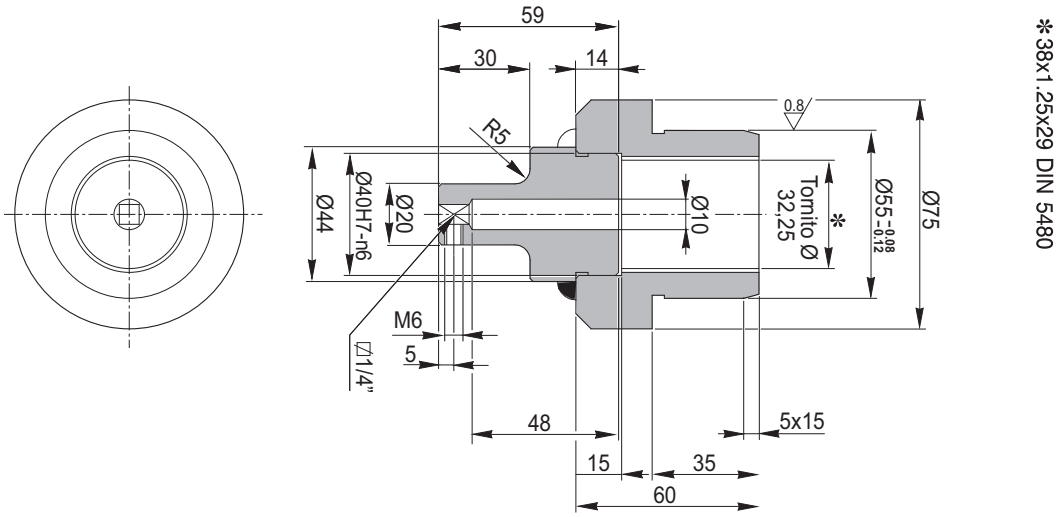

T9

P/N: 3327

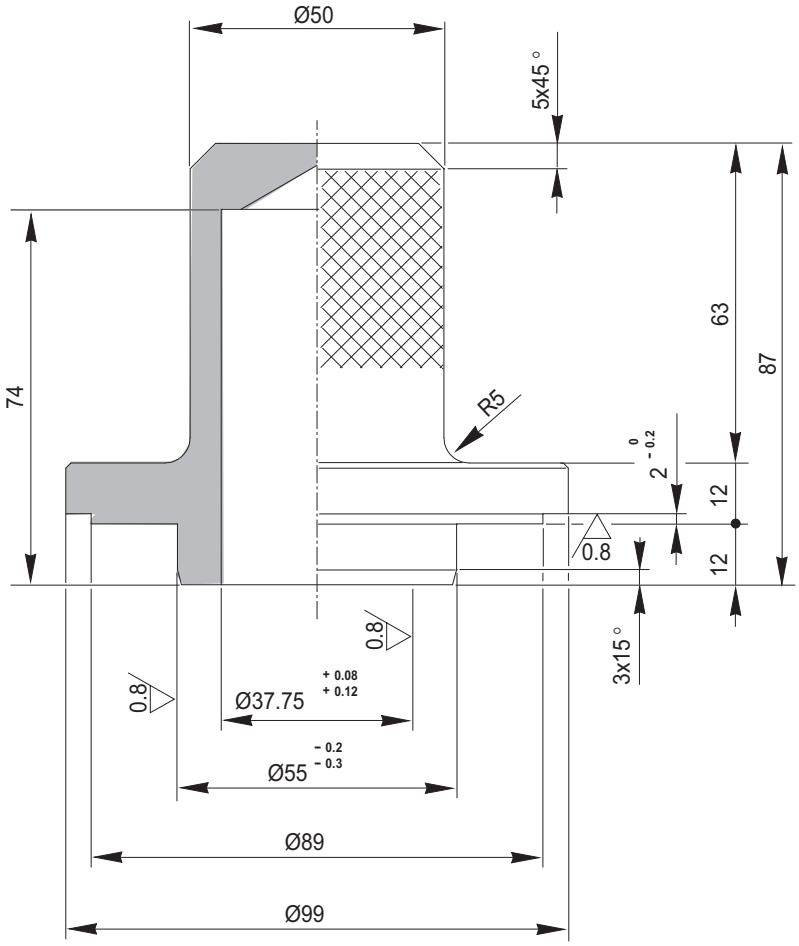

https://truckmanualshub.com/

MANUAL EMERGENCY RELASE

EXPLODED VIEW

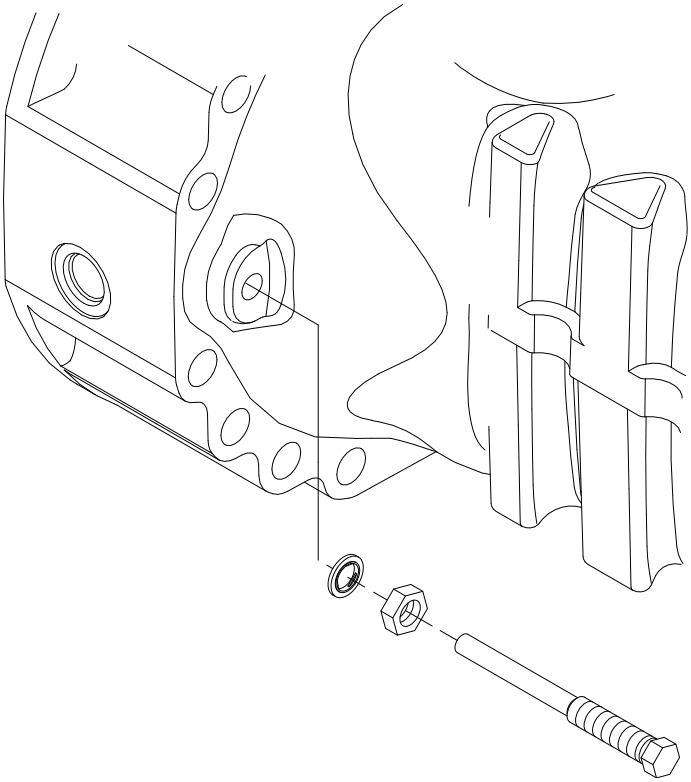

https://truckmanualshub.com/

RELEASE

⚠ DANGER

Before maintaining brakes, when the axle is installed on the vehicle, follow all safety instructions in the Original Equipment Manufacturer (OEM) manual that came with the vehicle.

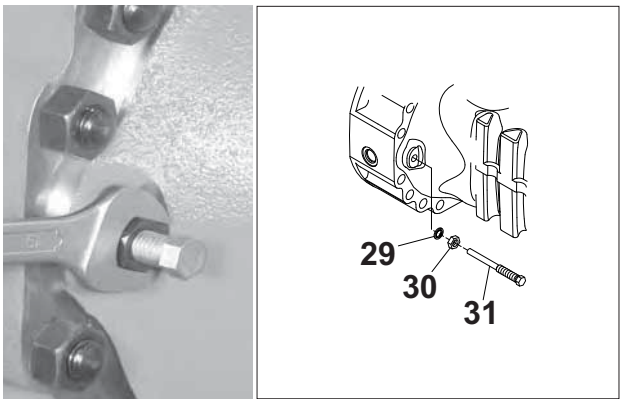

FIGURE 1: Loosen nuts (30) of screws (31) provided for the mechanical and manual release of the braking units, then move the nuts backwards by approximately 8 mm.

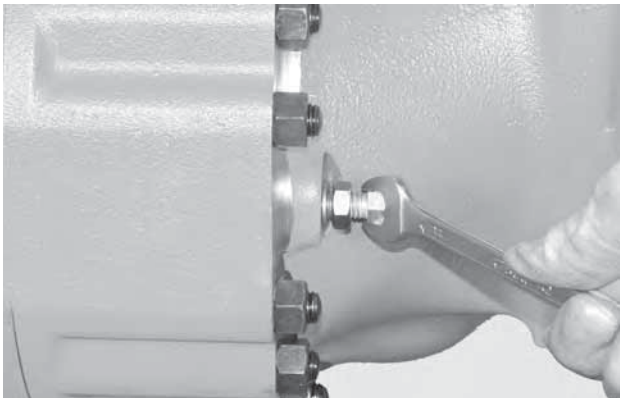

FIGURE 2: Tighten screws (31) so as to fasten them onto the pressure plate (23).

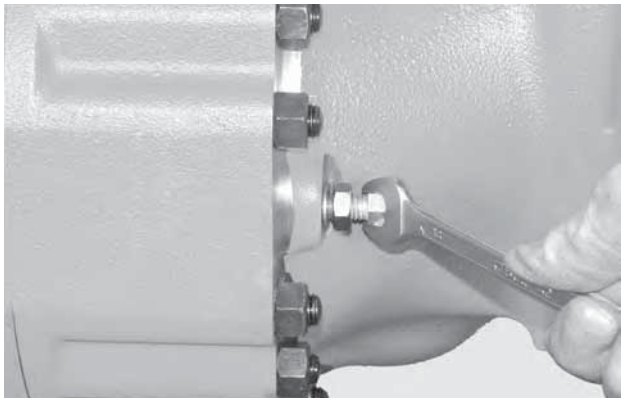

FIGURE 3: Using a wrench, tighten the screws (31) in an alternate sequence by 1/4 turn at a time so as to compress the Belleville washers (1) and disengage the braking disks.

⚠ CAUTION

Tighten maximum by one turn.

https://truckmanualshub.com/

ADJUST

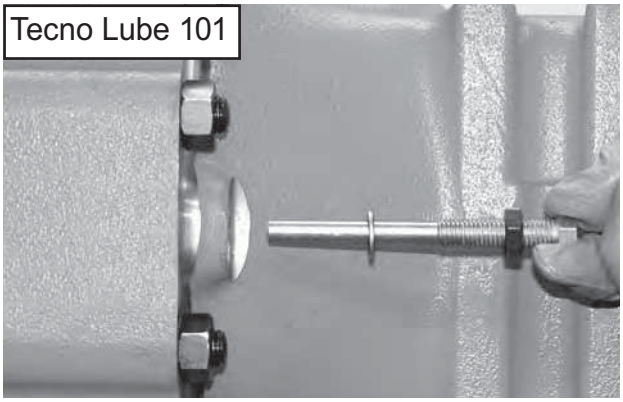

FIGURE 4: Remove screws complete with nuts and seals. Replace seals, apply silicone-based Tecno Lube /101 grease to the screws and install all parts into the arm.

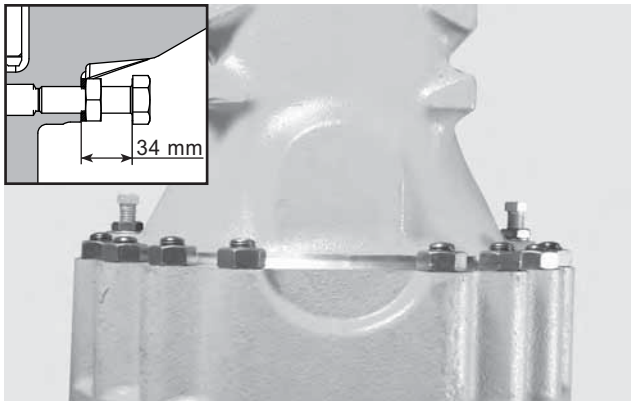

FIGURE 5: Adjust screws (31) to obtain a distance of 34 ± 0.5 mm between axle machined surface and screw underhead.

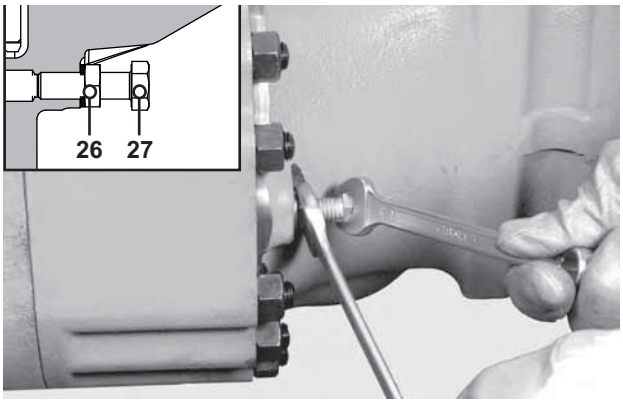

FIGURE 6: Lock into position with nuts (30).

⚠CAUTION

Hold screws (31) into position while locking the nuts (30); after locking, check the distance of screws (31) once more.

https://truckmanualshub.com/

https://truckmanualshub.com/

MECHANICAL PARKING BRAKE

EXPLODED VIEW

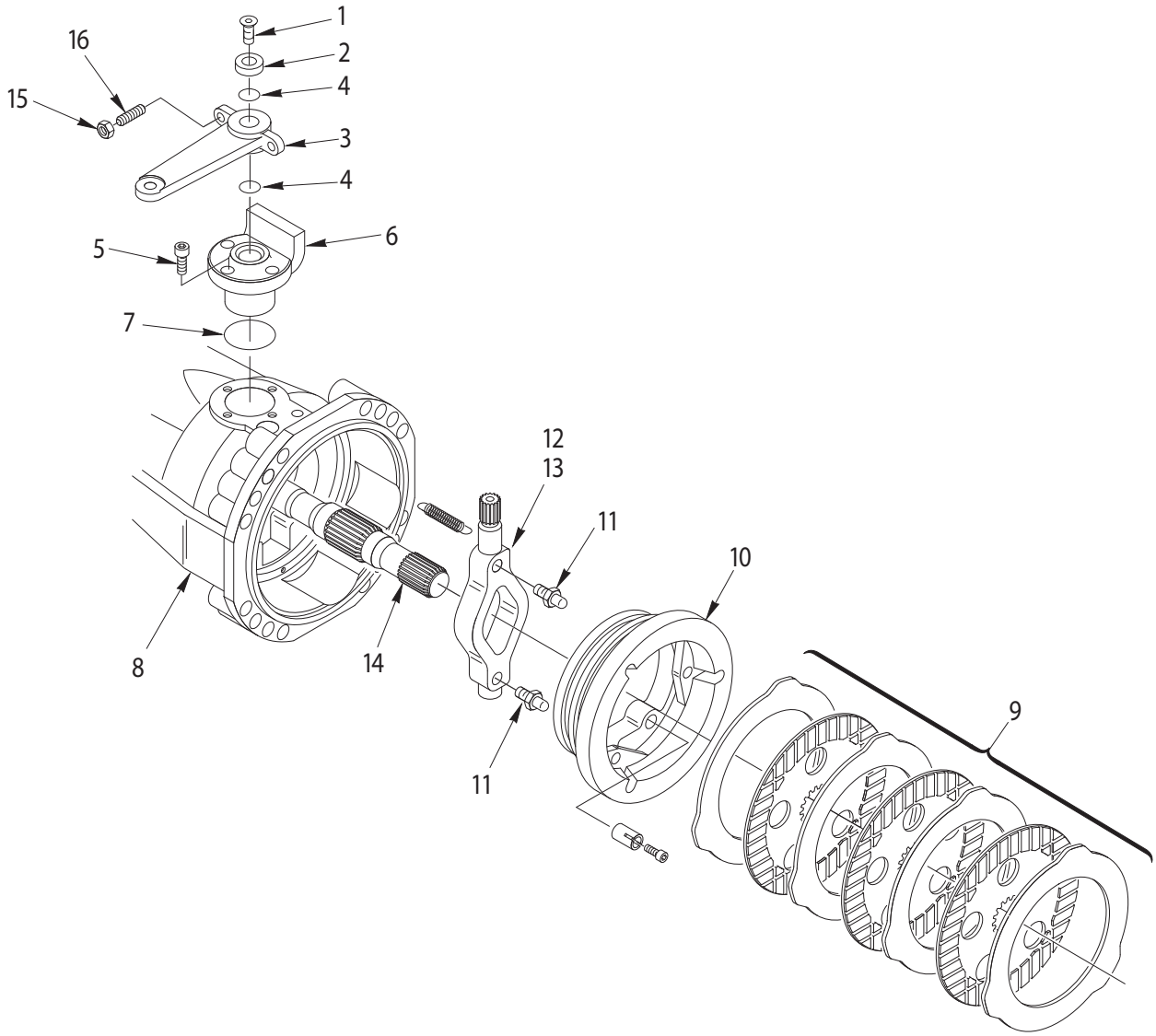

https://truckmanualshub.com/

DISASSEMBLY

⚠ DANGER

Before maintaining brakes, when the axle is installed on the vehicle, follow all safety instructions in the Original Equipment Manufacturer (OEM) manual that came with the vehicle.

NOTE:

Though the photos in this manual refer to a steering and oscillating axle, the operations described apply anyway.

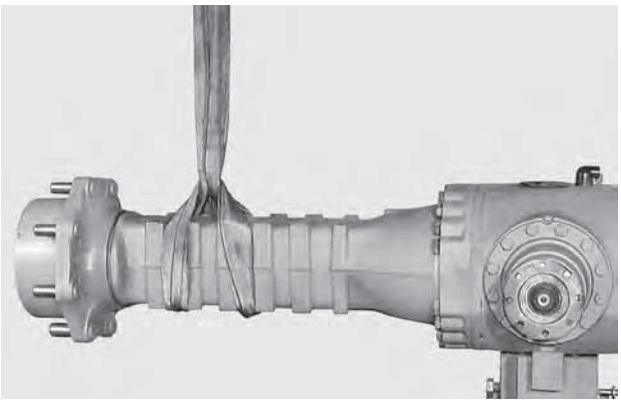

FIGURE 1: Disconnect the steering bars from the steering case. For details, see STEERING CYLINDER p. 47.

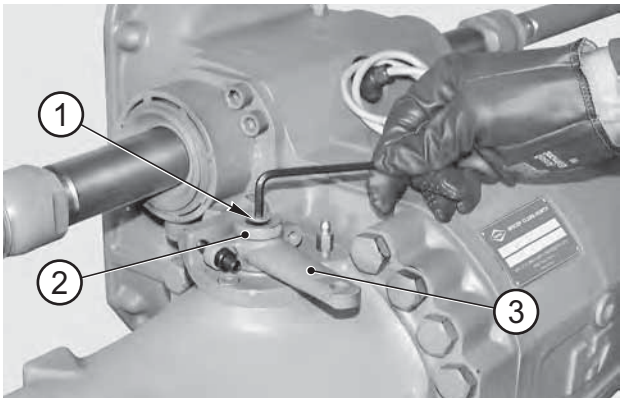

FIGURE 2: Draw out the screw (1) locking the washer (2) that stops the lever (3).

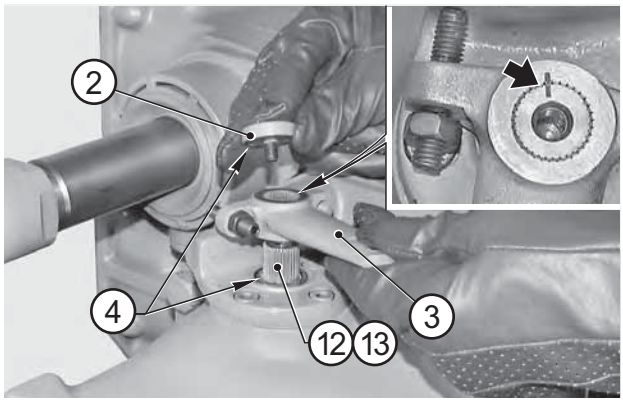

FIGURE 3: Remove washer (2), lever (3) and o-rings (4). Mark the positions of levers (3) in relation to the thrust levers (12) and (13).

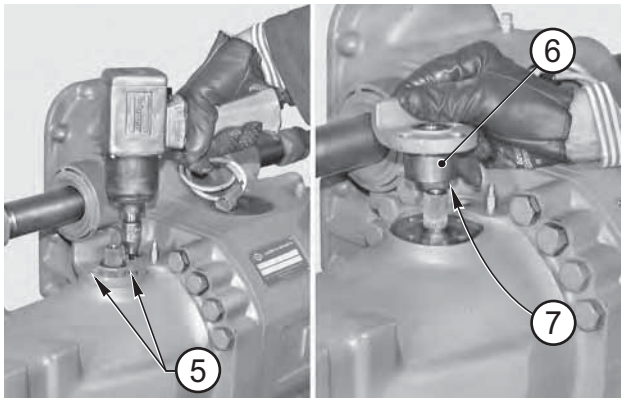

FIGURE 4: Draw out the screws (5) and remove bushing (6) along with o-ring (7).

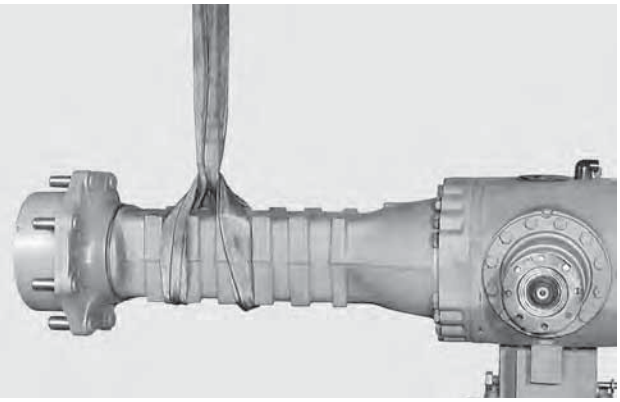

FIGURE 5: Connect the whole arm (8) to the hoist and put the rod under light tension.
Remove the whole arm; for details, see CHECKING WEAR AND REPLACING THE BRAKING DISCS p. 19.

https://truckmanualshub.com/

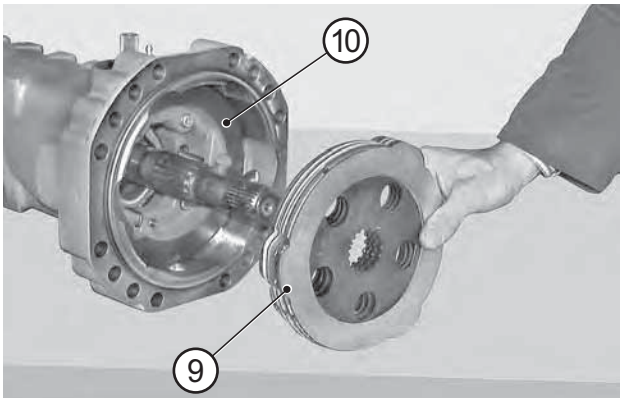

FIGURE 6: Remove the braking disks (9) and the whole piston (10).
For details, see CHECKING WEAR AND REPLACING THE BRAKING DISCS p. 19.

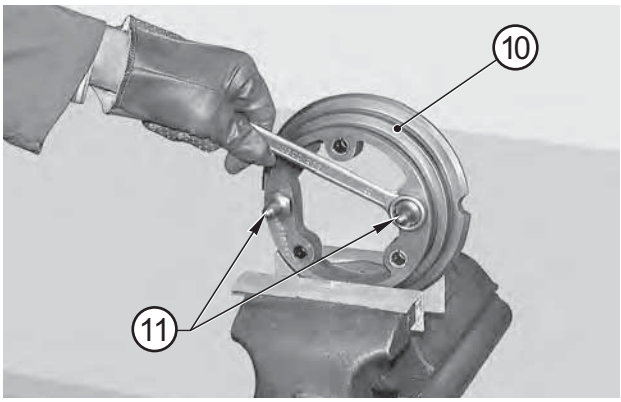

FIGURE 7: If pins (11) need replacing, block the piston (10) into a vice whose jaws are covered in smooth material and remove the pins.

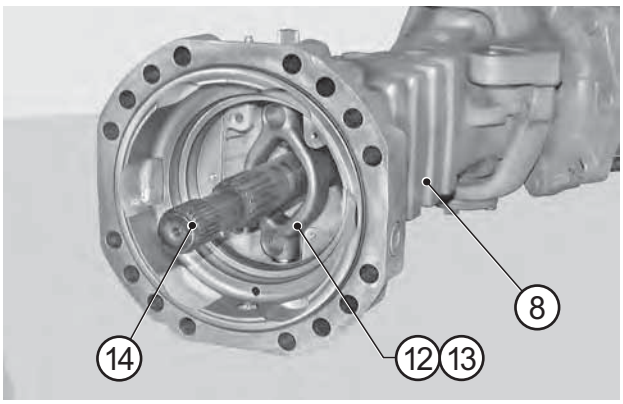

FIGURE 8: If thrust levers (12) and (13) need replacing, remove the U-joint (14) before removing the arms (8).
For details, see DOUBLE U-JOINT p. 29.

https://truckmanualshub.com/

ASSEMBLY

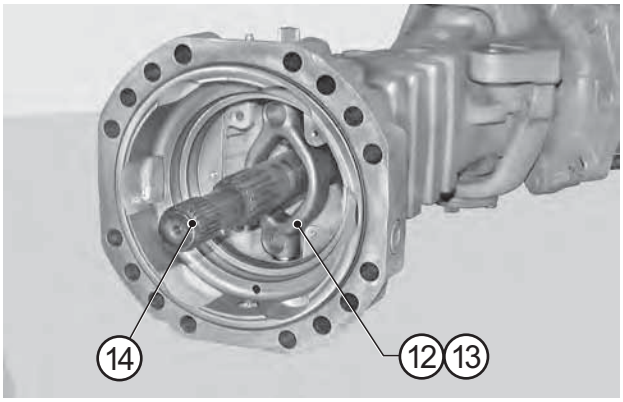

FIGURE 9: Install thrust levers (12) and (13), then install the U-joint (14).
For details, see DOUBLE U-JOINT p. 29.

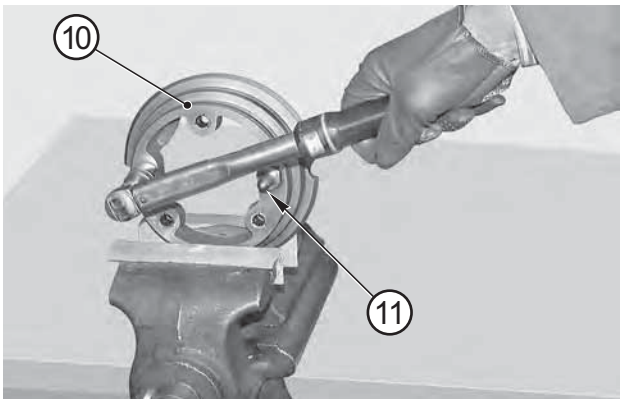

FIGURE 10: Apply Loctite 270 to the threaded portion of the pins (11) and fit them onto the piston (10).
Block them: torque wrench setting 30 - 35 N·m.

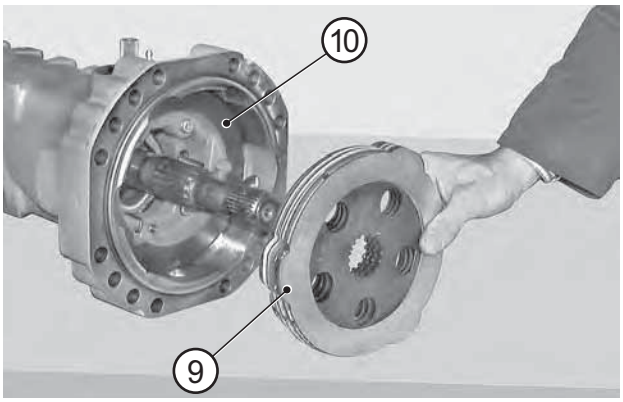

FIGURE 11: Re-install the piston (10) and the braking disks (9).
For details, see CHECKING WEAR AND REPLACING THE BRAKING DISCS p. 19.

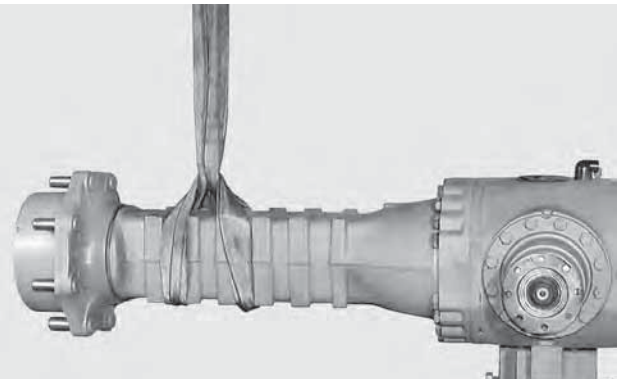

FIGURE 12: Install the arms (8) into the main body; check flatness and block arms following the appropriate procedures illustrated in section MECHANICAL PARKING BRAKE p. 87 and HYDRAULIC NEGATIVE BRAKE p. 151.

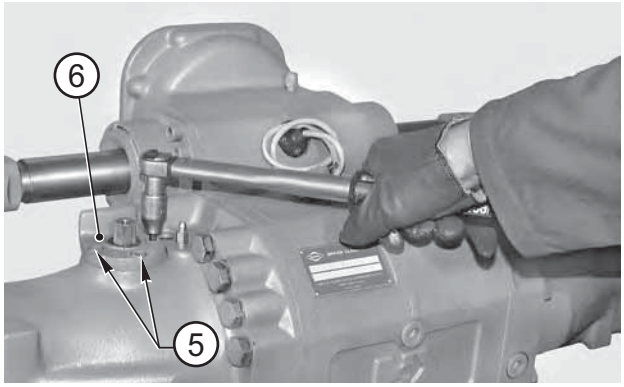

FIGURE 13: Install the bushing (6) complete with o-ring (7) and block it with screws (5). Tighten screws with a torque wrench setting of 23.8 - 26.2 N·m.

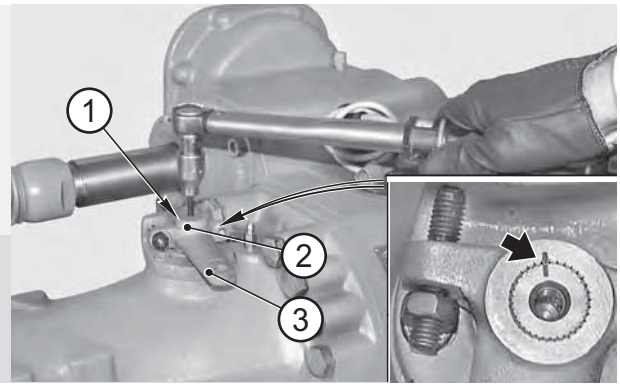

FIGURE 14: Install in sequence the lower o-ring (4), the lever (3) and the washer (2) with the relative o-ring (4).
Block with screw (1) and tighten using a torque wrench setting of 23.8 - 26.2 N·m.

⚠CAUTION

Refer and keep to the positions marked during disassembly.

https://truckmanualshub.com/

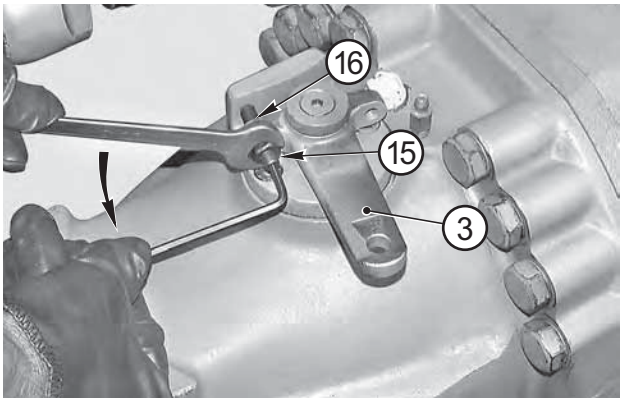

FIGURE 15: Connect the braking circuit and apply maximum working pressure to set the disks.
Release the pressure, loosen nut (15) and unscrew stud (16) by a few turns.

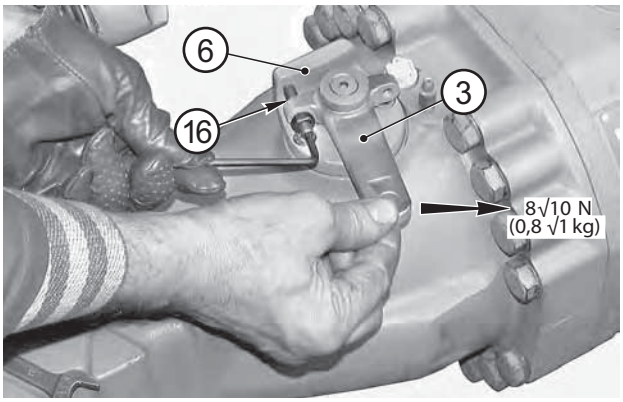

FIGURE 16: Apply a force of 8 - 10 N (0.8 - 1 kg) to lever (3). Direct the force towards the braking direction in order to eliminate the idle stroke.
While the force is being applied, tighten stud (16) until it is caused to rest onto bushing (6).

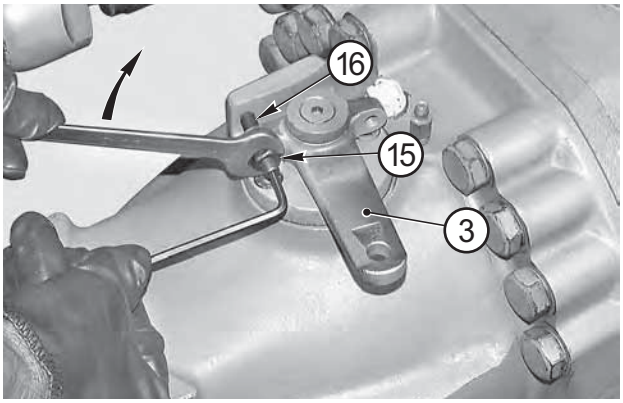

FIGURE 17: Lock stud (16) in this position with nut (15).
Torque wrench setting: 20 - 25 N·m.

⚠CAUTION

The idle stroke should be eliminated without preloading thrust levers (12) and (13).

FIGURE 18: After connecting the control cable, check that when brakes are released both studs (16) do lean against bushing (6).

https://truckmanualshub.com/

https://truckmanualshub.com/

EXTERNAL HYDRAULIC NEGATIVE BRAKE

EXPLODED VIEW

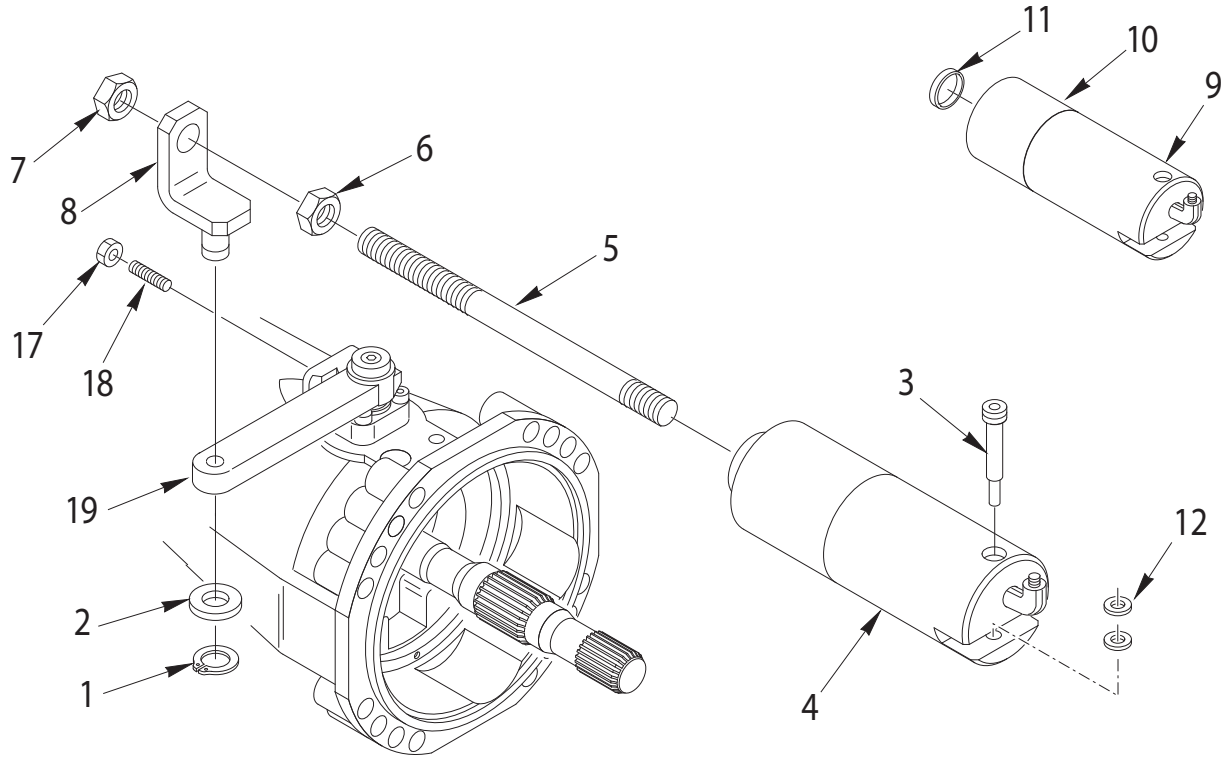

https://truckmanualshub.com/

DISASSEMBLY

⚠ DANGER

Before maintaining brakes, when the axle is installed on the vehicle, follow all safety instructions in the Original Equipment Manufacturer (OEM) manual that came with the vehicle.

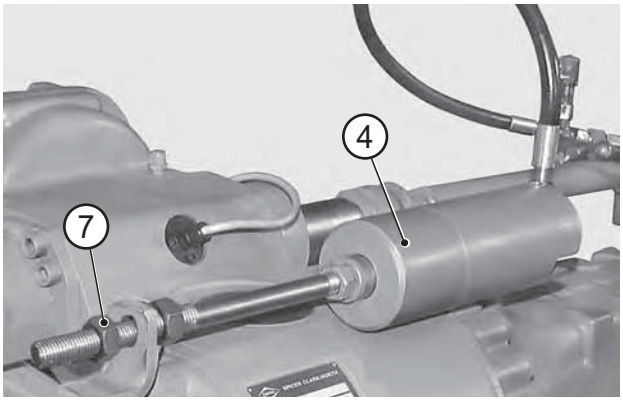

FIGURE 1: Insert pressure into cylinder (4) in order to release the brakes.

NOTE:

If the machine hydraulic system cannot be used, use an external manual pump.

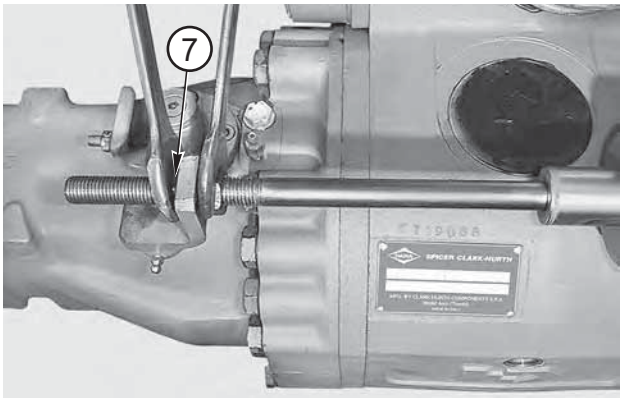

FIGURE 2: Loosen and remove the external nut (7).

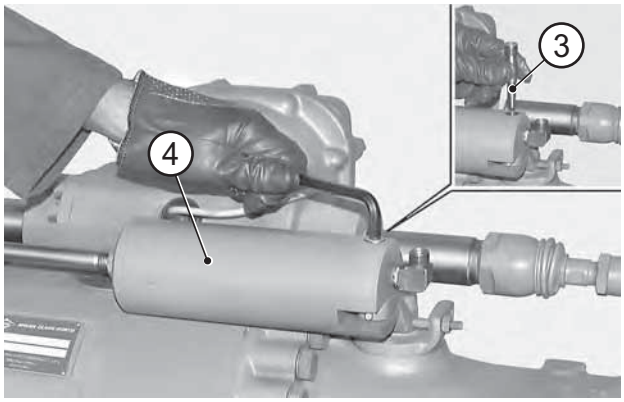

FIGURE 3: Release the pressure in the cylinder and disconnect the pressure delivery tube.
Remove the fulcrum pin (3) from the cylinder (4) complete with washers (12).

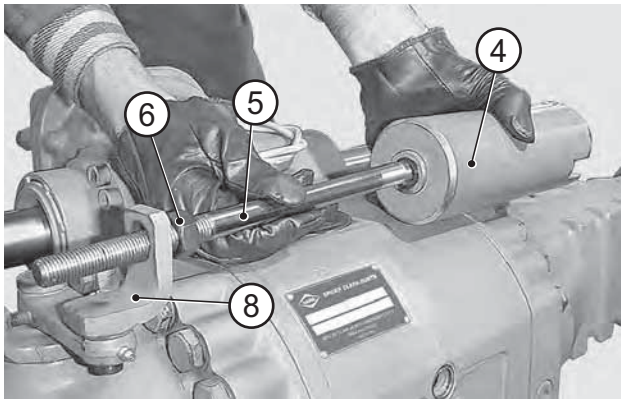

FIGURE 4: Remove the cylinder assembly (4) complete with rod (5), internal nut (6) and support (8).

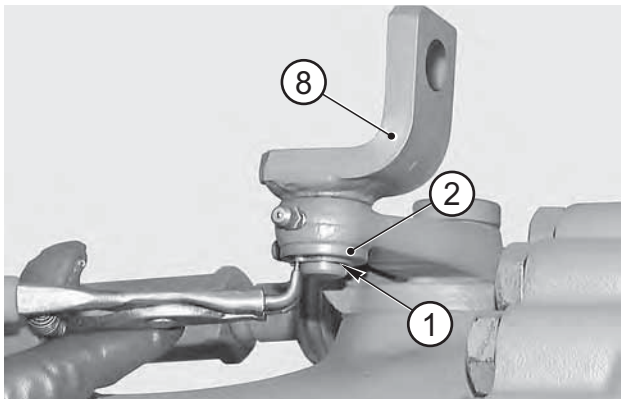

FIGURE 5: Remove the snap ring (1) that checks the support (8) and remove the spacer (2).

https://truckmanualshub.com/

ASSEMBLY

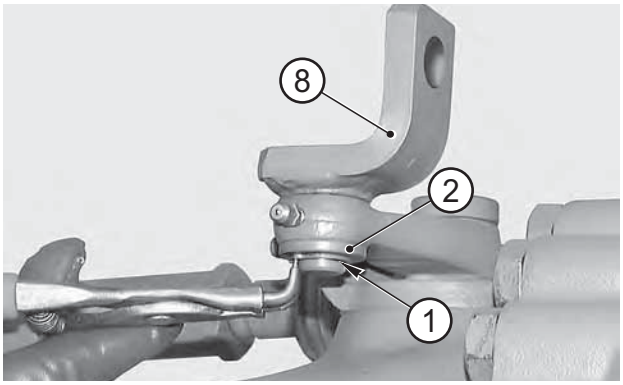

FIGURE 6: Install spacer (2) and insert the pin of support (8) into the right-hand braking lever. Fit the second spacer (2) and snap ring (1).

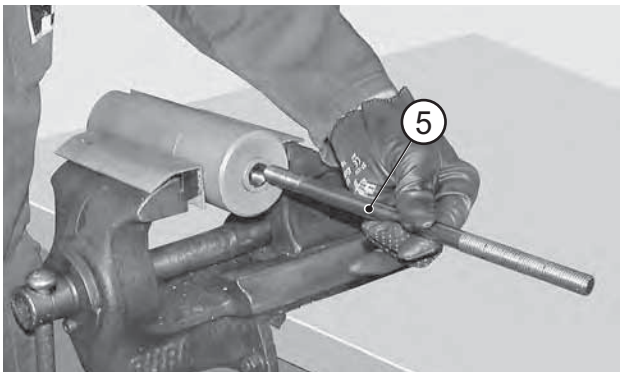

FIGURE 7: Apply Loctite 270 to the rod (5) and screw it in the piston (13) as far as it will go.

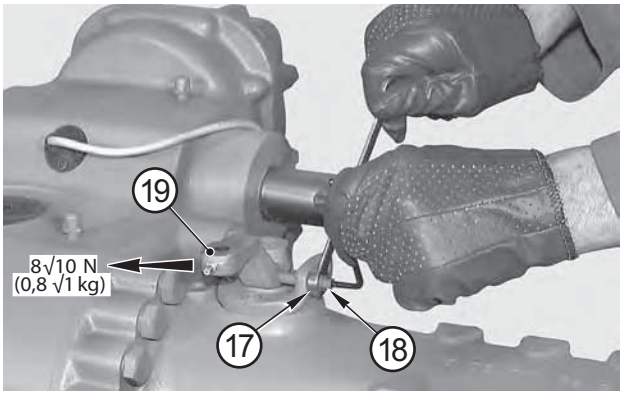

FIGURE 8: Loosen nuts (17) and set braking levers (19) clearances to zero by turning studs (18); lock nuts (17) with a torque wrench setting of 20 - 25 N·m.

⚠CAUTION

Clearances should be set to zero without causing any preloading.

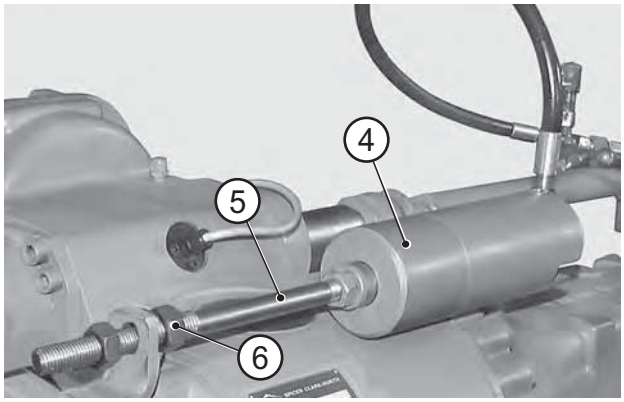

FIGURE 9: Install cylinder (4) complete with rod (5) and internal nut (6).

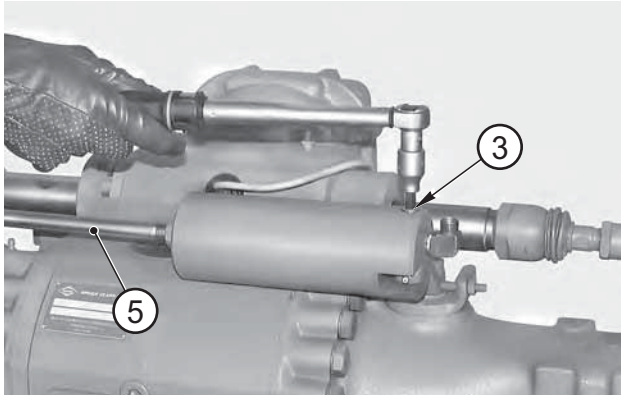

FIGURE 10: Center the hole of fulcrum pin (3) and washers (12).
Apply Loctite 242 to the pin thread, screw and tighten pin with a torque wrench set at 25 - 30 N·m.

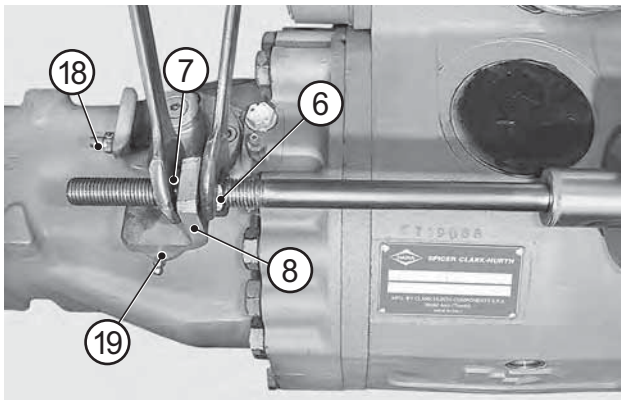

FIGURE 11: Introduce pressure into the cylinder (4) and while holding both levers (19) back against the adjusting screws (18), move nuts (6) and (7) so that they are made to rest against support (8); lock the nuts with a torque wrench setting of 50 - 60 N·m.

https://truckmanualshub.com/

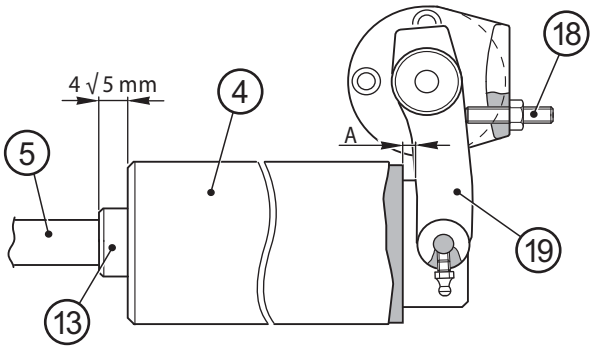

FIGURE 12: Check that, when the brakes are released (pressure inserted), levers (19) lean against the screws (18) without pre-stressing them and make sure that a clearance "A" is left between cylinder (4) and lever (19).
Also check that when pressure is released, piston (13) projects out by 4 - 5 mm.

https://truckmanualshub.com/

EXTERNAL HYDRAULIC NEGATIVE BRAKE WITH QUICK RELEASE

EXPLODED VIEW

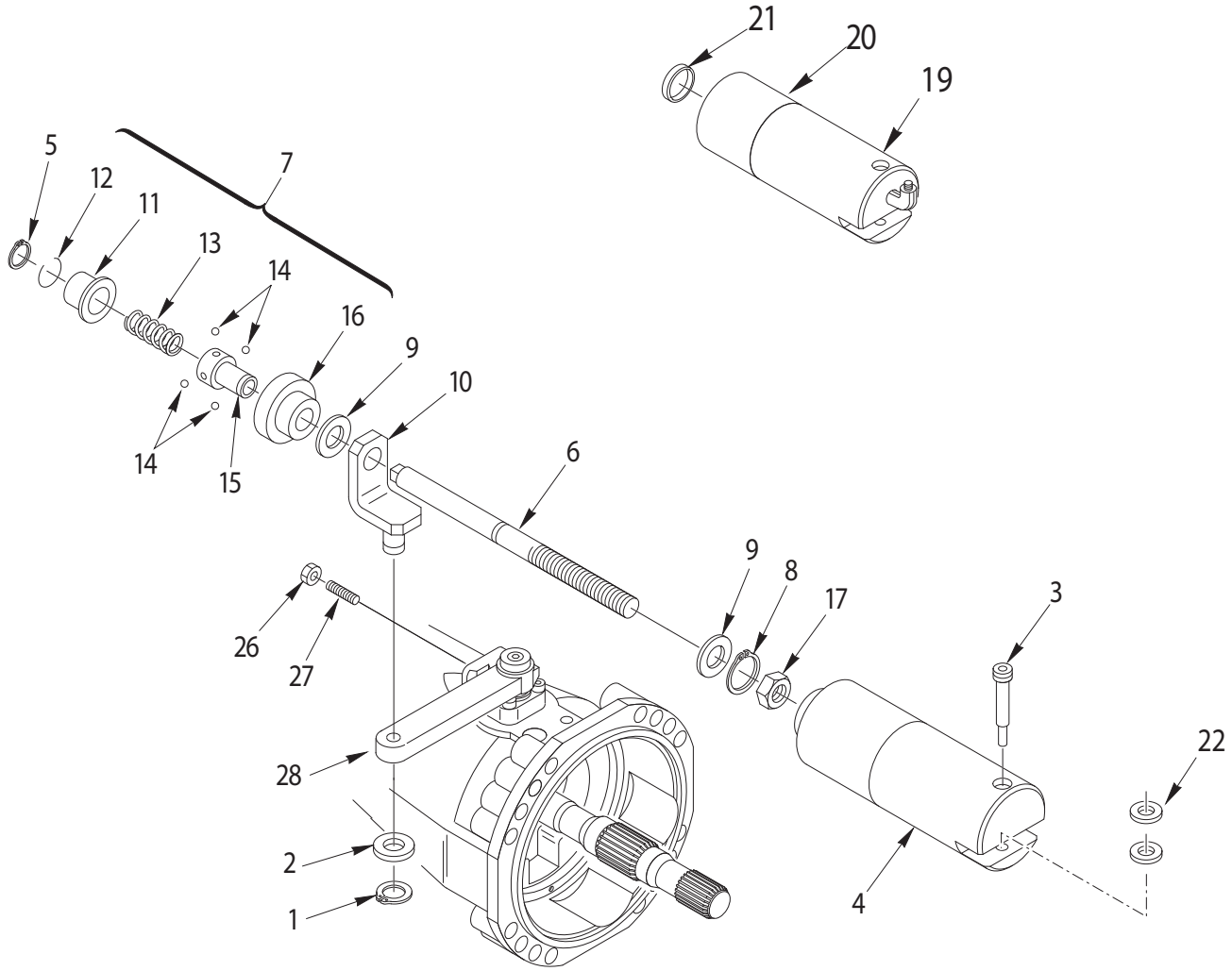

https://truckmanualshub.com/

DISASSEMBLY

⚠ DANGER

Before maintaining brakes, when the axle is installed on the vehicle, follow all safety instructions in the Original Equipment Manufacturer (OEM) manual that came with the vehicle.

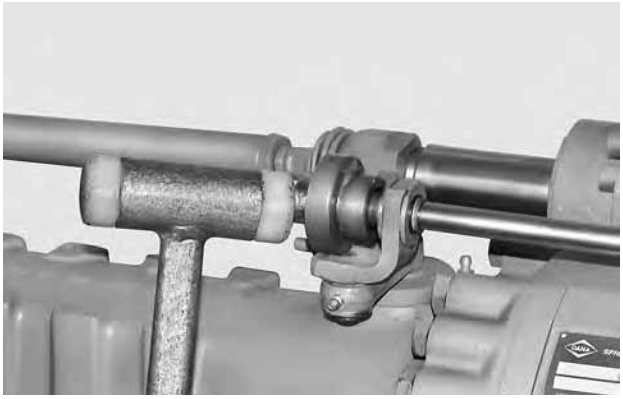

FIGURE 1: Before starting any operation on the assembly, disable the cylinder by giving a light hammer blow to the external ring of the check unit.

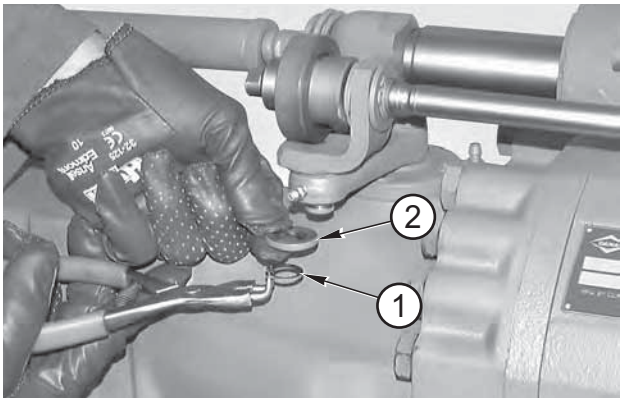

FIGURE 2: Remove snap ring (1) and extract spacer (2).

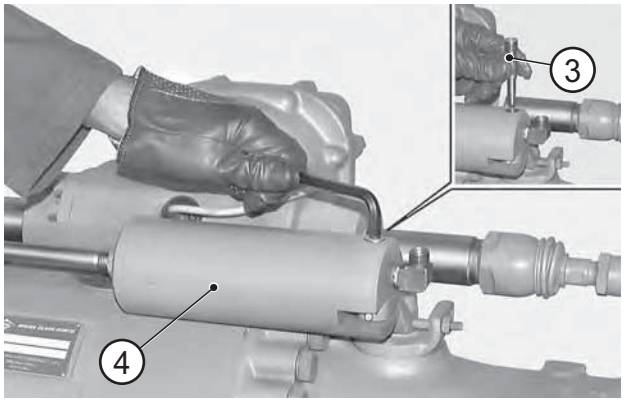

FIGURE 3: Remove the fulcrum pin (3) from the cylinder (4) complete with washers (22).

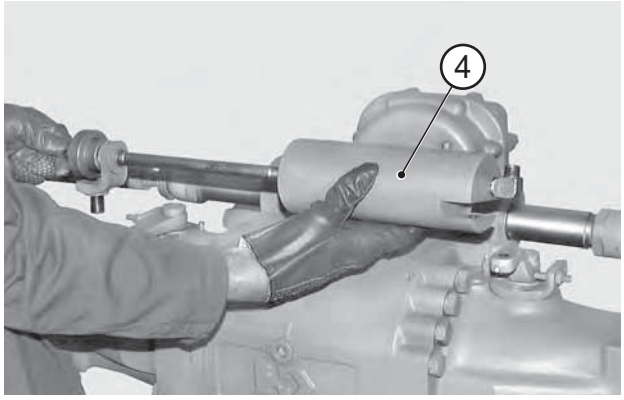

FIGURE 4: Remove the complete cylinder set (4).

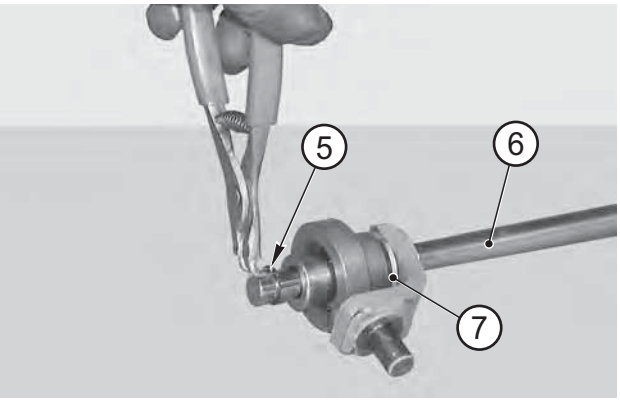

FIGURE 5: Remove snap ring (5) from stem (6) and extract the check unit (7).

https://truckmanualshub.com/

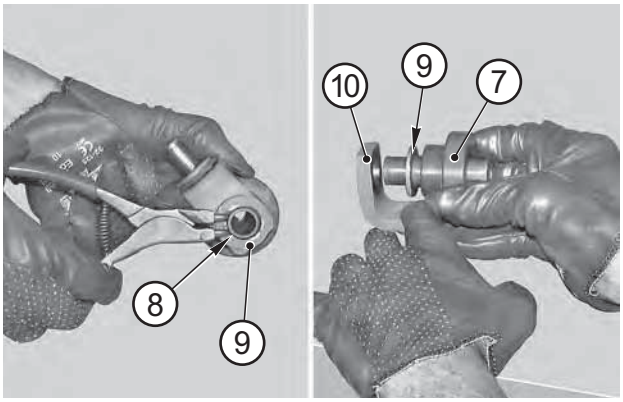

FIGURE 6: Remove snap ring (8) and washer (9) and separate support (10) and second washer (9) from the check unit (7).

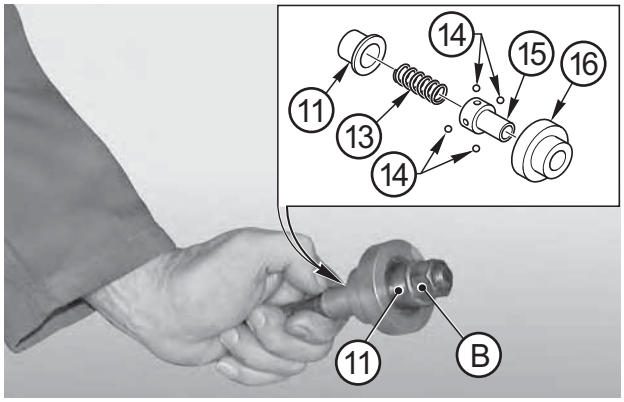

FIGURE 9: Slowly release nut "B" and disassemble the check unit.

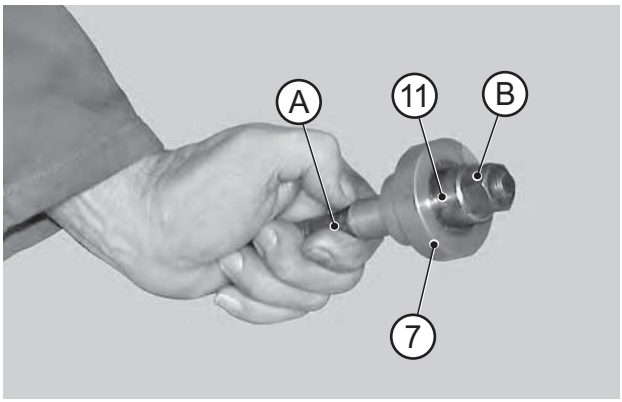

FIGURE 7: Introduce an M14x100 screw "A" into the hole of the check unit (7) and screw a nut "B" until the spring seat (11) is moved to the end of stroke.

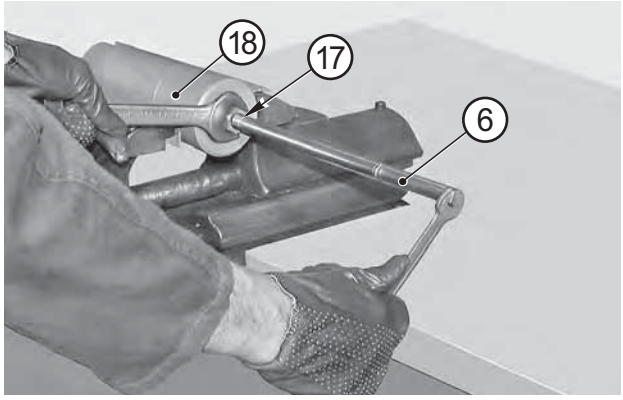

FIGURE 10: Loosen nut (17) and remove stem (6) from the cylinder (18).

NOTE:

Use a hex bolt.

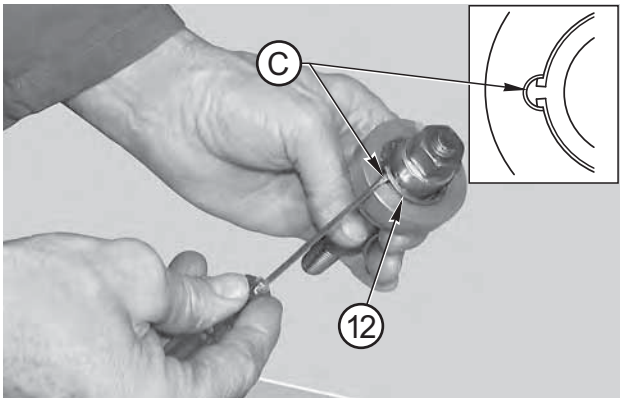

FIGURE 8: Rotate snap ring (12) until ring ends match slot "C".
Remove snap ring (12).

https://truckmanualshub.com/

ASSEMBLY

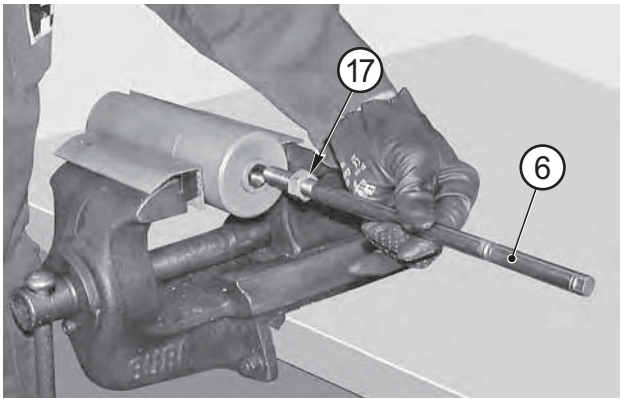

FIGURE 11: Screw stem (6) into the piston without locking the nut (17).

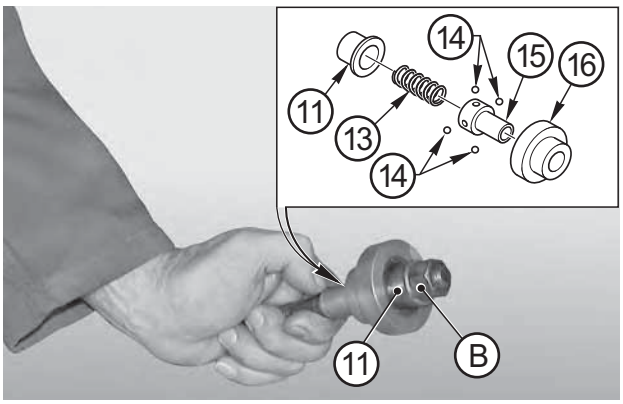

FIGURE 12: Assemble the check unit (7) by inverting the steps followed in the disassembly procedure.

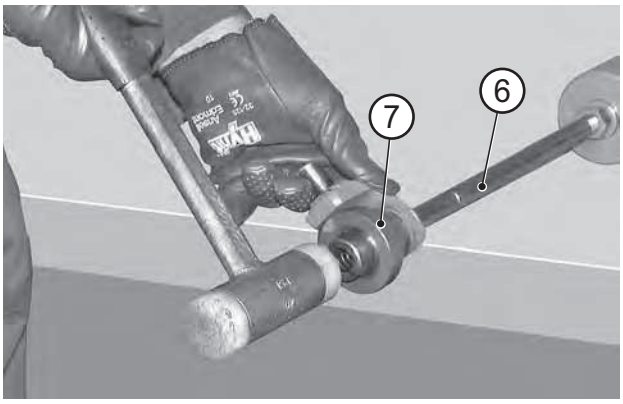

FIGURE 13: Using a plastic hammer, install the check unit (7) onto the stem (6).

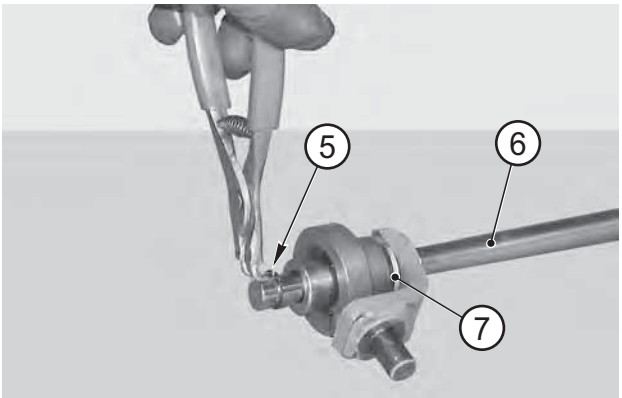

FIGURE 14: Fit the safety snap ring (5) onto the stem (6).

⚠CAUTION

In case the braking disks have been replaced or if brake pistons have been removed: before adjusting the negative braking unit, apply the brakes several times at maximum pressure in order to set clearances.

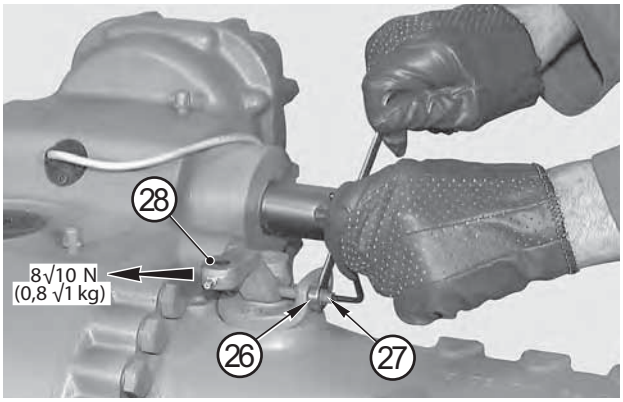

FIGURE 15: Loosen nuts (26) and apply a force of 8 - 10 N (0.8 - 1 kg) to levers (28). Direct the force towards the braking direction to eliminate the clearances by using studs (27); lock nuts (26) to a torque wrench setting of 20 - 25 N·m.

⚠CAUTION

The idle stroke should be eliminated without causing any preloading.

https://truckmanualshub.com/

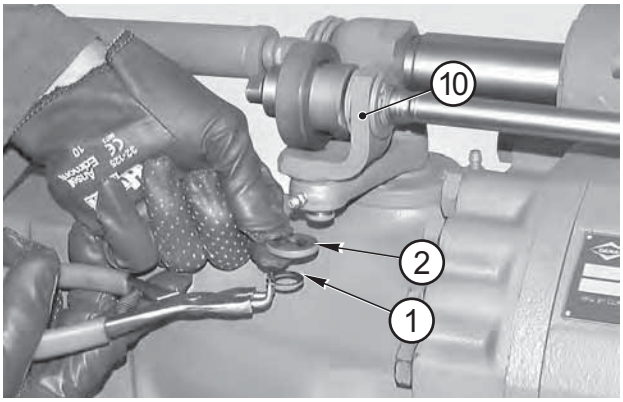

FIGURE 16: Fit the spacer (2) and insert the pin of support (10) in the right-hand braking lever. Fit the snap ring (1).

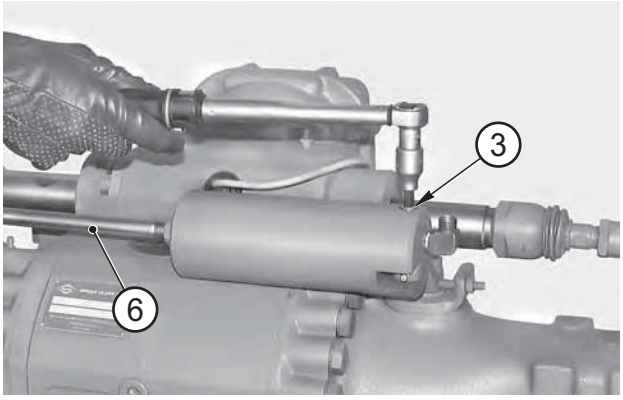

FIGURE 17: Rotate stem (6) to center the hole of the fulcrum pin (3).
Apply Loctite 242 to the thread of the fulcrum pin (3), screw and tighten pin with a torque wrench set to 25 - 30 N·m.

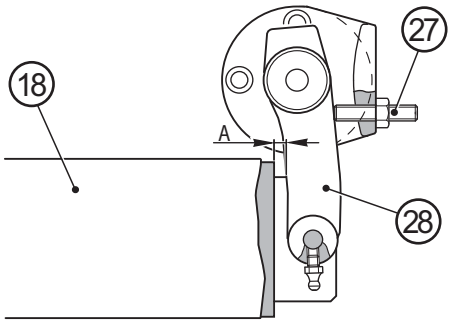

FIGURE 18: Check that a clearance "A" is left between the lever (28) on the cylinder side (resting against the adjustment stud) and cylinder (18).
If necessary, remove the lever, turn it by one tooth in relation to the spline and repeat idle stroke elimination procedure.

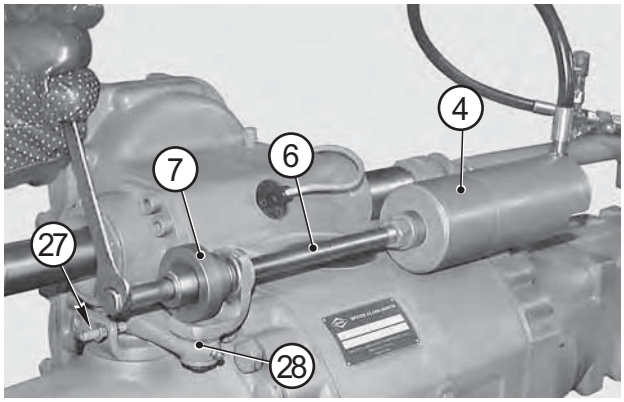

FIGURE 19: Introduce pressure into the cylinder (4) and, with the levers (28) resting against the adjustment studs (27), screw rod (6) to engage the quick release (7) in the slot.

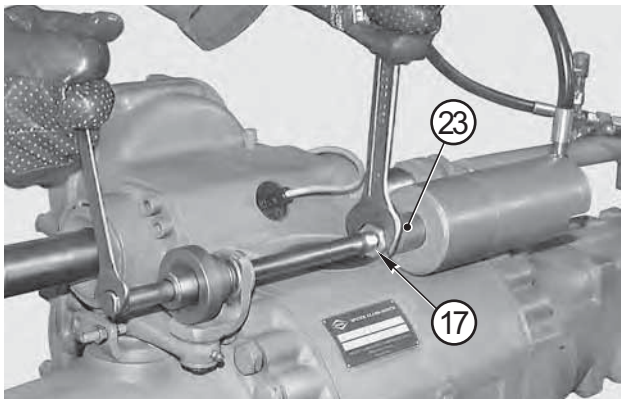

FIGURE 20: Lock nut (17) in position against the stem of the piston (23).
Torque wrench setting for the nut: maximum 40 N·m.

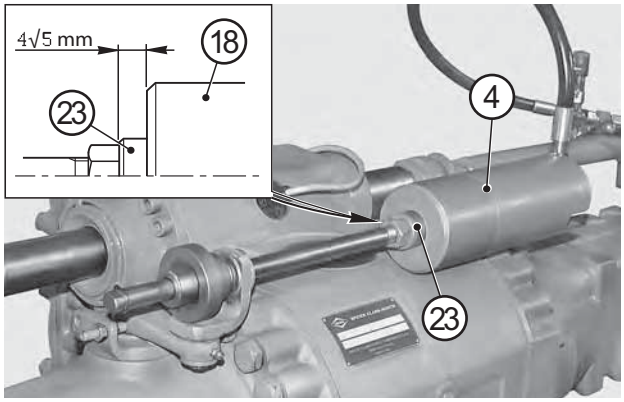

FIGURE 21: Release the pressure and check that piston (23) returns and stops in a position where it projects out from the cylinder head (4) by 4 - 5 mm.

https://truckmanualshub.com/

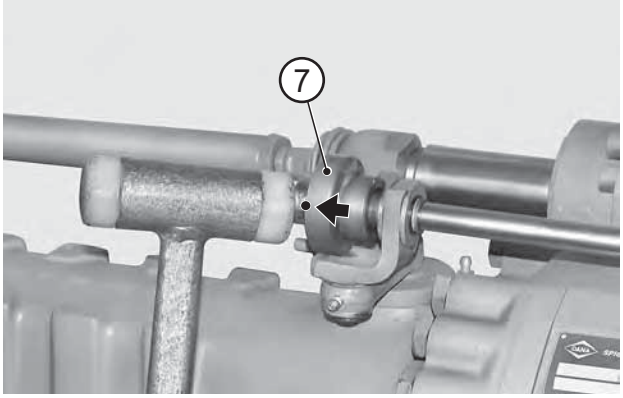

FIGURE 22: Release the check unit (7) by giving a hammer blow to the external ring.
Introduce pressure again and check that at the end of piston stroke, the check unit (7) is actually engaged onto the rod (6).

https://truckmanualshub.com/

INCOMING DRUM BRAKE

EXPLODED VIEW

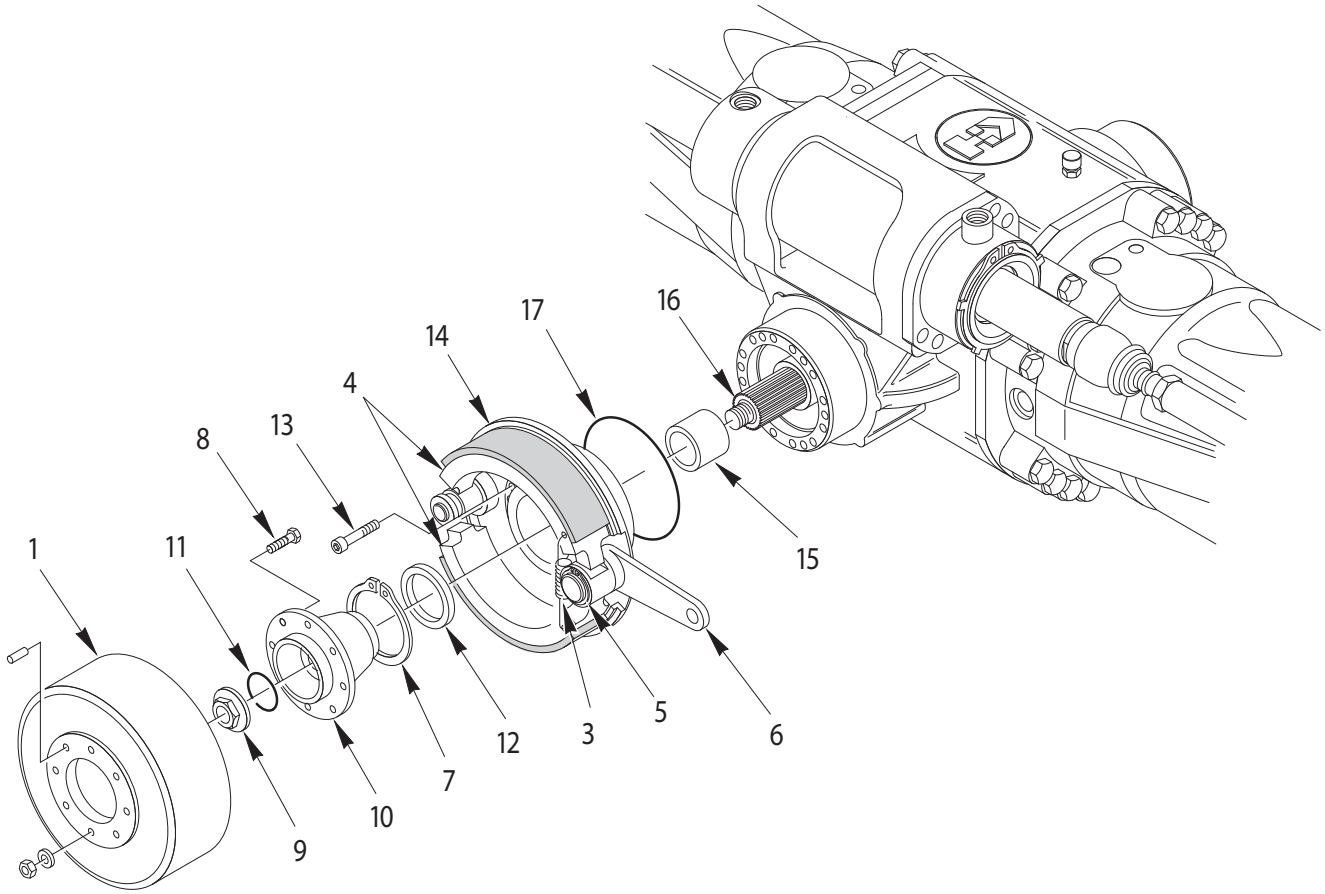

https://truckmanualshub.com/

DISASSEMBLY

⚠ DANGER

Before maintaining brakes, when the axle is installed on the vehicle, follow all safety instructions in the Original Equipment Manufacturer (OEM) manual that came with the vehicle.

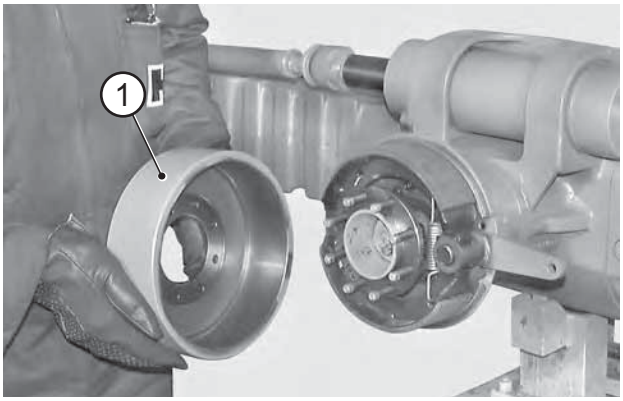

FIGURE 1: Pull out the drum (1) and remove dust from friction surfaces.

⚠CAUTION

Use only brush-type vacuum cleaners.

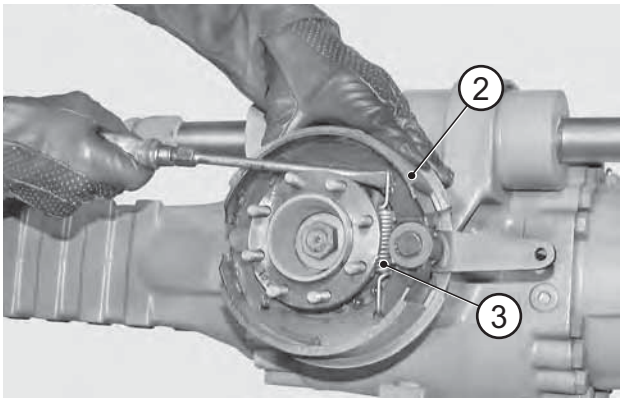

FIGURE 2: Hold the upper shoe into position (2) and release the spring (3).

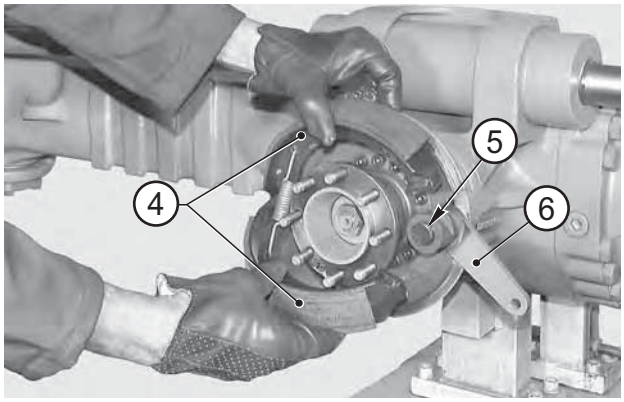

FIGURE 3: Remove the shoe assembly (4).
If necessary, remove the snap ring (5) and pull out the lever (6).

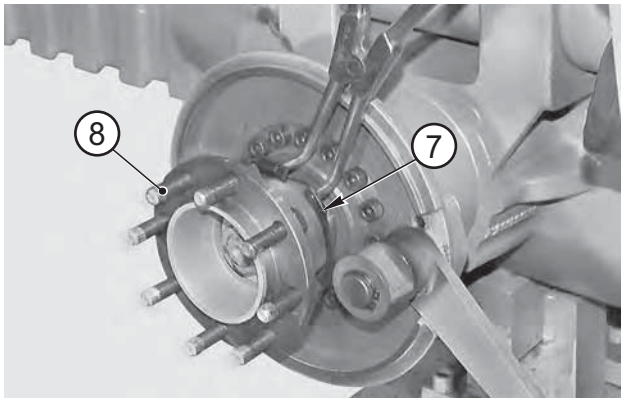

FIGURE 4: Remove the snap ring (7) from its seat around the screws (8).
Remove the screws (8).

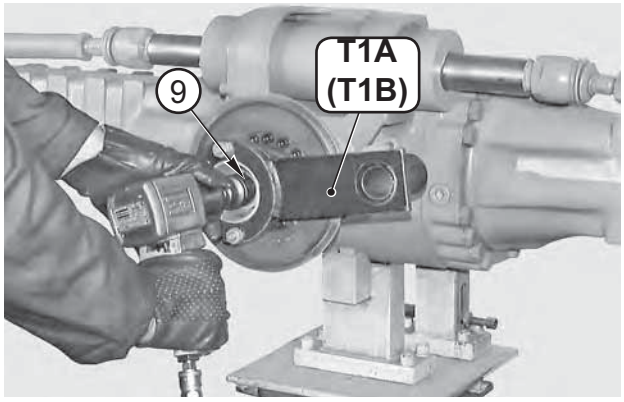

FIGURE 5: Fit tool T1A (See drawing T1 p. 108) (or T1B), engage the stop rod and loosen the check nut (9) of the flange (10).

https://truckmanualshub.com/

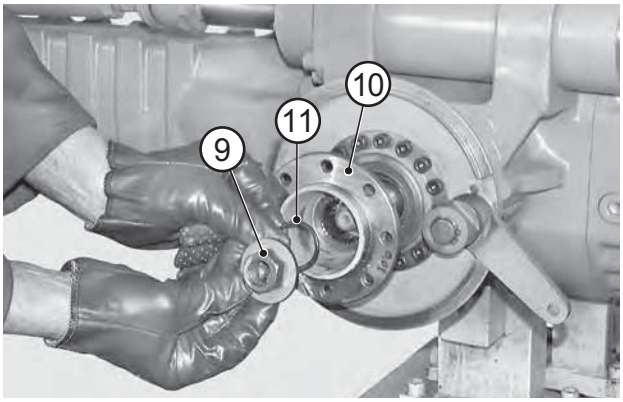

FIGURE 6: Remove parts in the following sequence: nut (9), o-ring (11), flange (10) and stop ring (7).

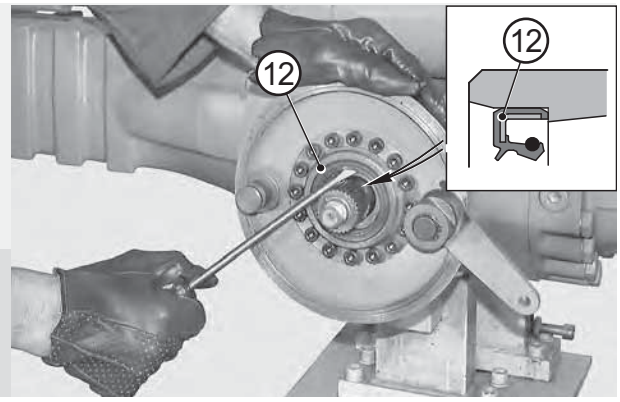

FIGURE 7: Remove the seal (12) and discard it.

NOTE:

Write down assembly direction.

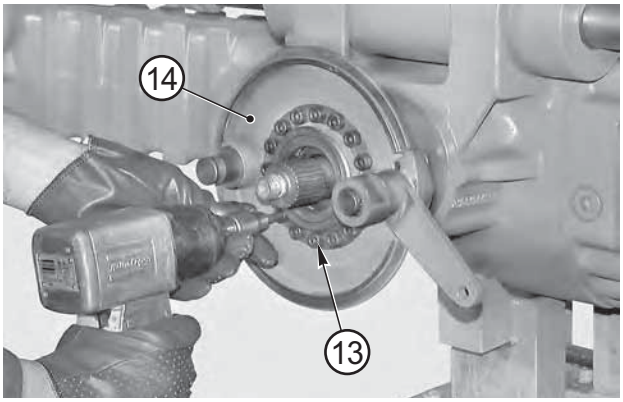

FIGURE 8: Remove the securing screws (13) from brake support (14).

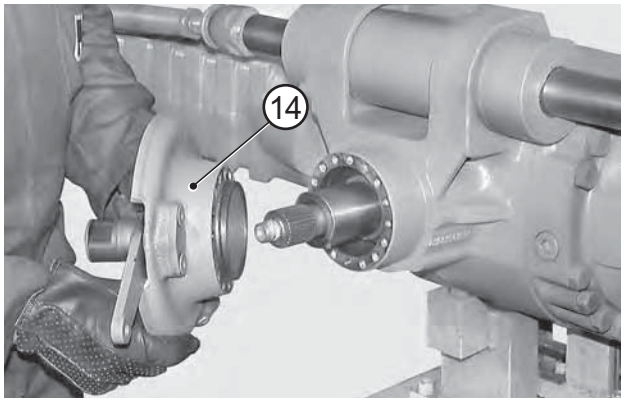

FIGURE 9: Remove brake support (14).

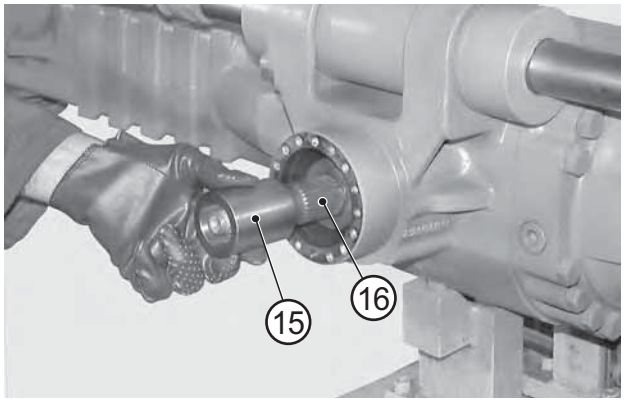

FIGURE 10: Remove the spacer (15).

NOTE:

If operations are to be carried out the bevel pinion, see the specific axle section.

https://truckmanualshub.com/

ASSEMBLY

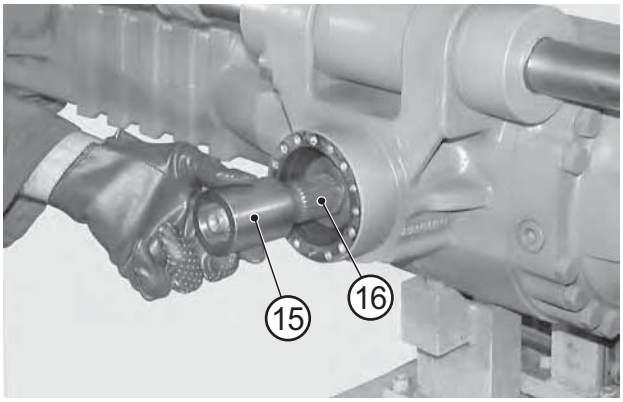

FIGURE 11: Fit the spacer (15) onto the pinion (16).

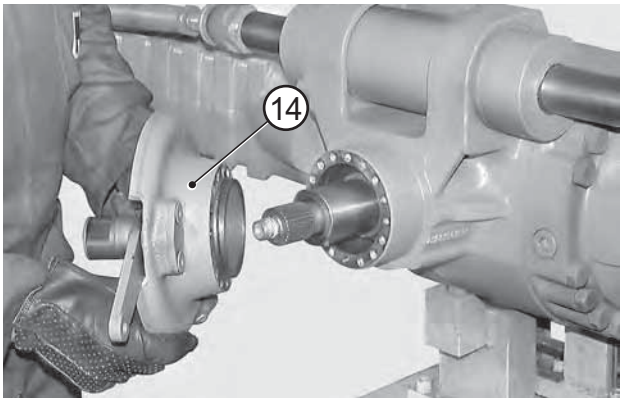

FIGURE 12: Lubricate the coupling surfaces and position brake support (14).
Check that the o-ring (17) is intact.

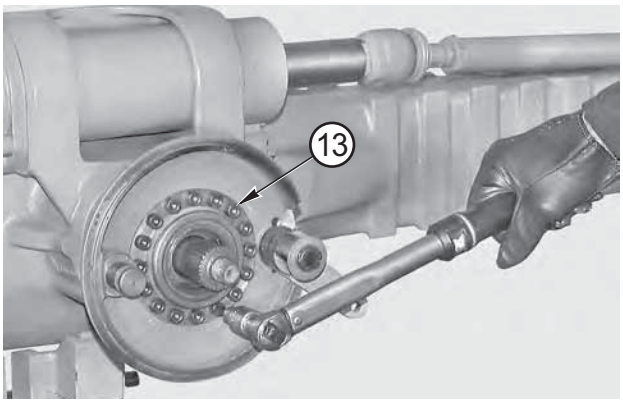

FIGURE 13: Apply Loctite 242 to the screws (13) and tighten using the criss-cross method. Torque wrench setting: 34.2 - 37.8 N·m

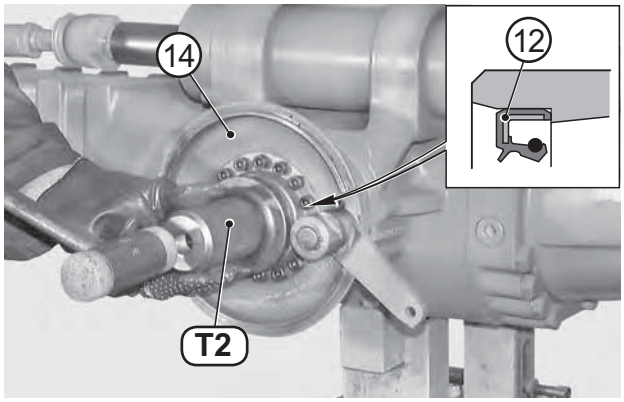

FIGURE 14: Lubricate the outer part of the seal (12) and insert it into the brake support (14) using tool T2 (See drawing T2 p. 109).

NOTE:

Carefully check assembly direction.

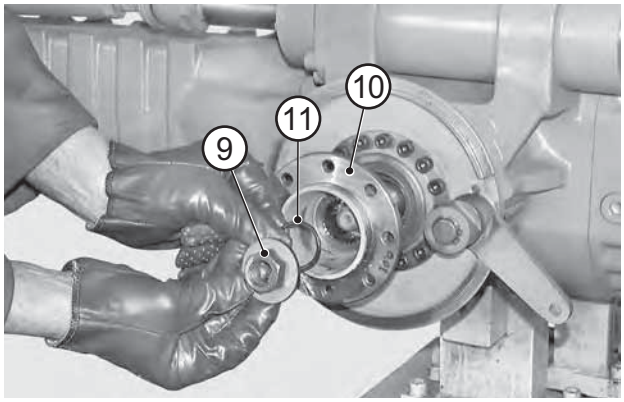

FIGURE 15: Install parts in the following sequence: flange (10), o-ring (11) and nut (9).
Spread Loctite 242 on the threaded portion of the pinion (16)

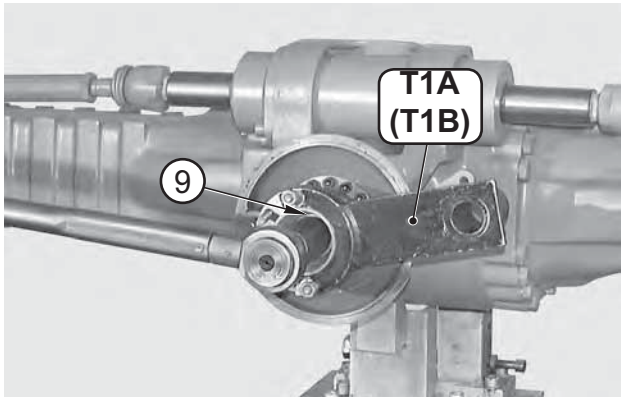

FIGURE 16: Fit tools T1A (See drawing T1 p. 108) (or T1B), engage the stop rod and tighten the nut (9).
Torque wrench setting: 280 - 310 N·m

https://truckmanualshub.com/

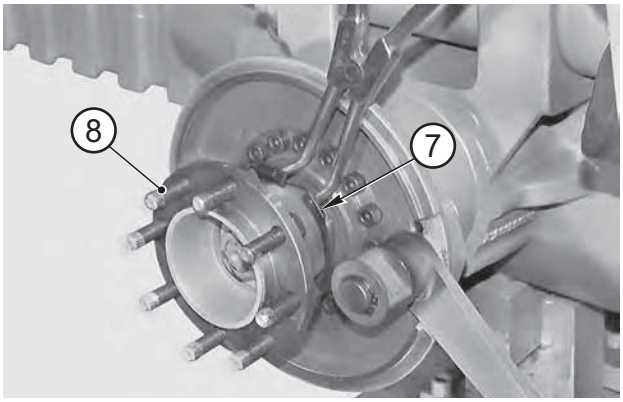

FIGURE 17: Insert the screws (8) and hold them in position with the snap ring (7).

NOTE:

Make sure that the ring is properly set in its seat.

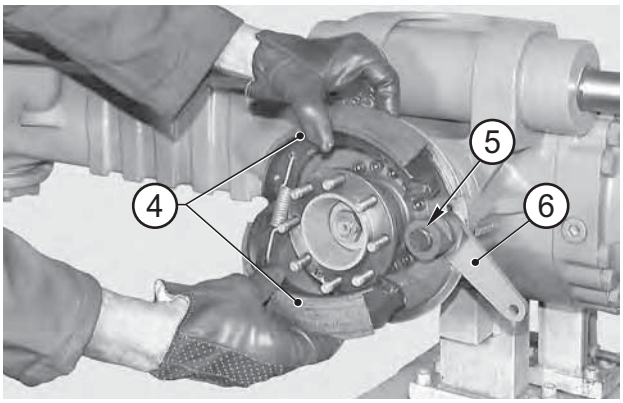

FIGURE 18: If the lever (6) has been removed, install it and hold it in position with the snap ring (5).
Fit the shoes assembly (4).

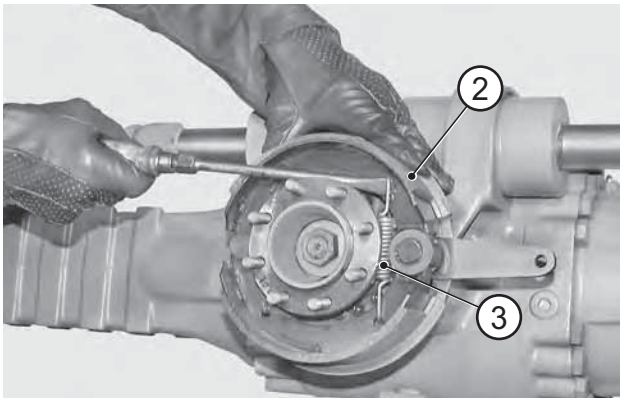

FIGURE 19: Make sure that the shoes (4) center the slot of the fulcrum pin and rest on the surface of the lever (6).

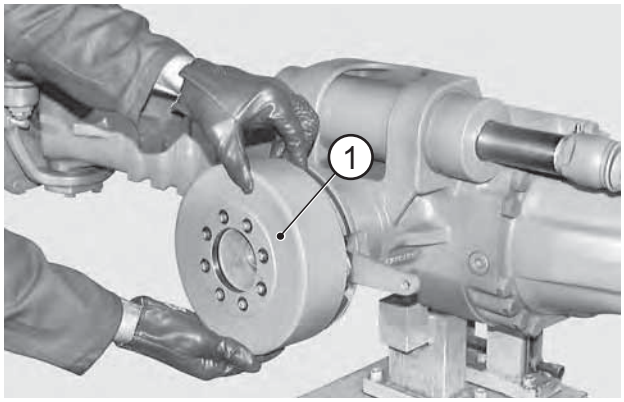

FIGURE 20: Fit the drum (1).

NOTE:

Make sure that the friction surface of the drum carries no trace of grease and is perfectly clean.

https://truckmanualshub.com/

SPECIAL TOOLS

T1

P/N: 2308

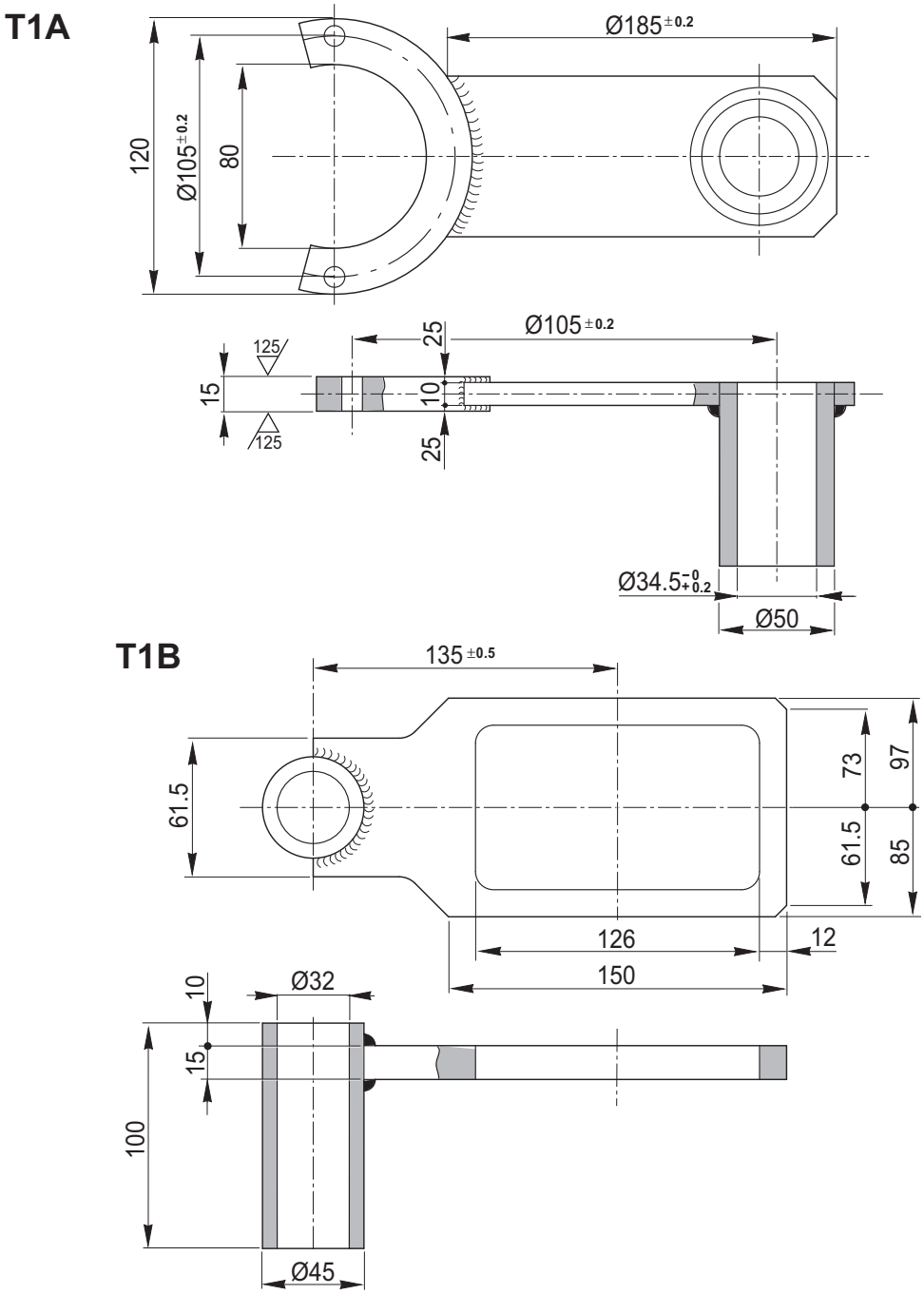

https://truckmanualshub.com/

T2

P/N: 3327

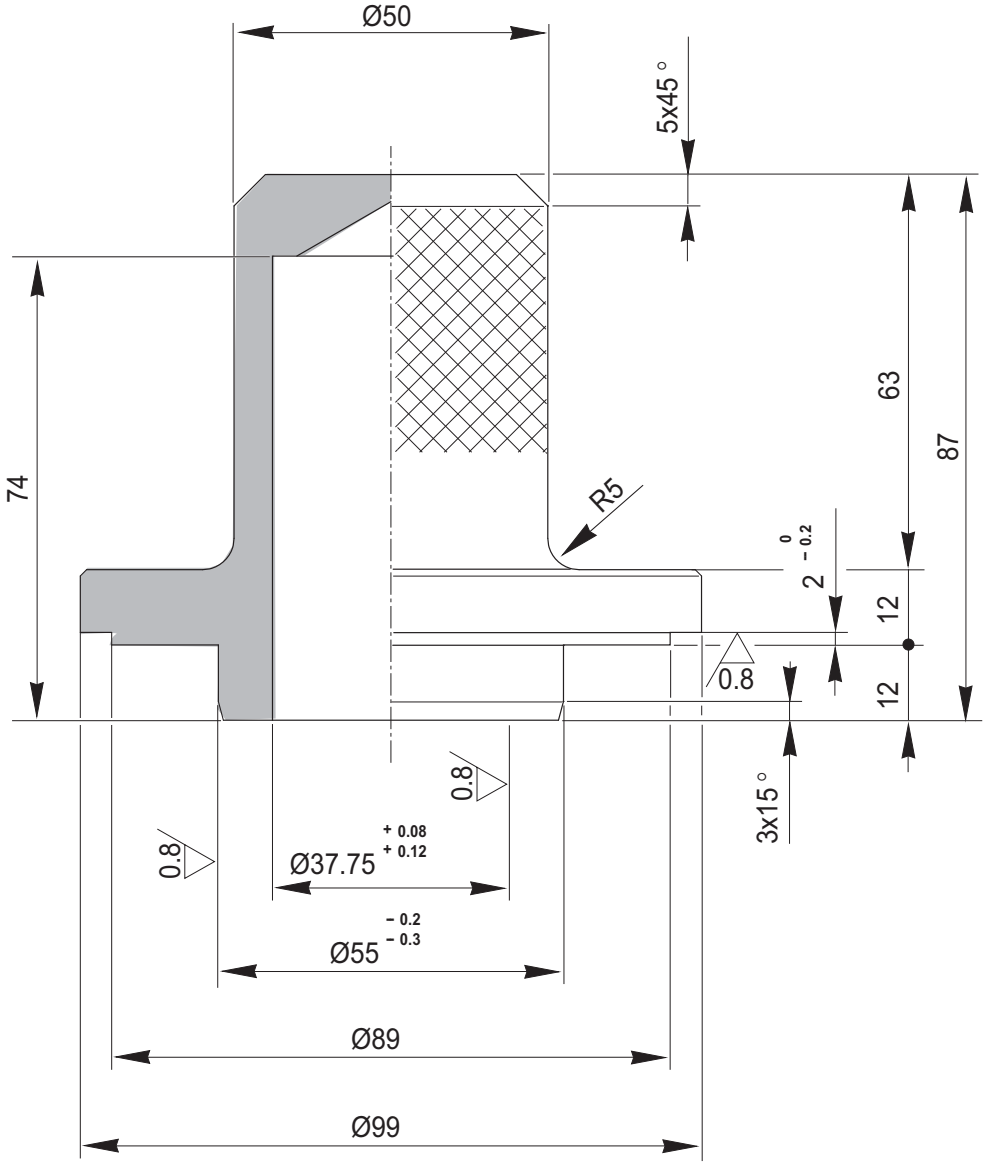

https://truckmanualshub.com/

https://truckmanualshub.com/

4" INCOMING BRAKE (2 AND 3 FUNCTION VERSIONS)

EXPLODED VIEW

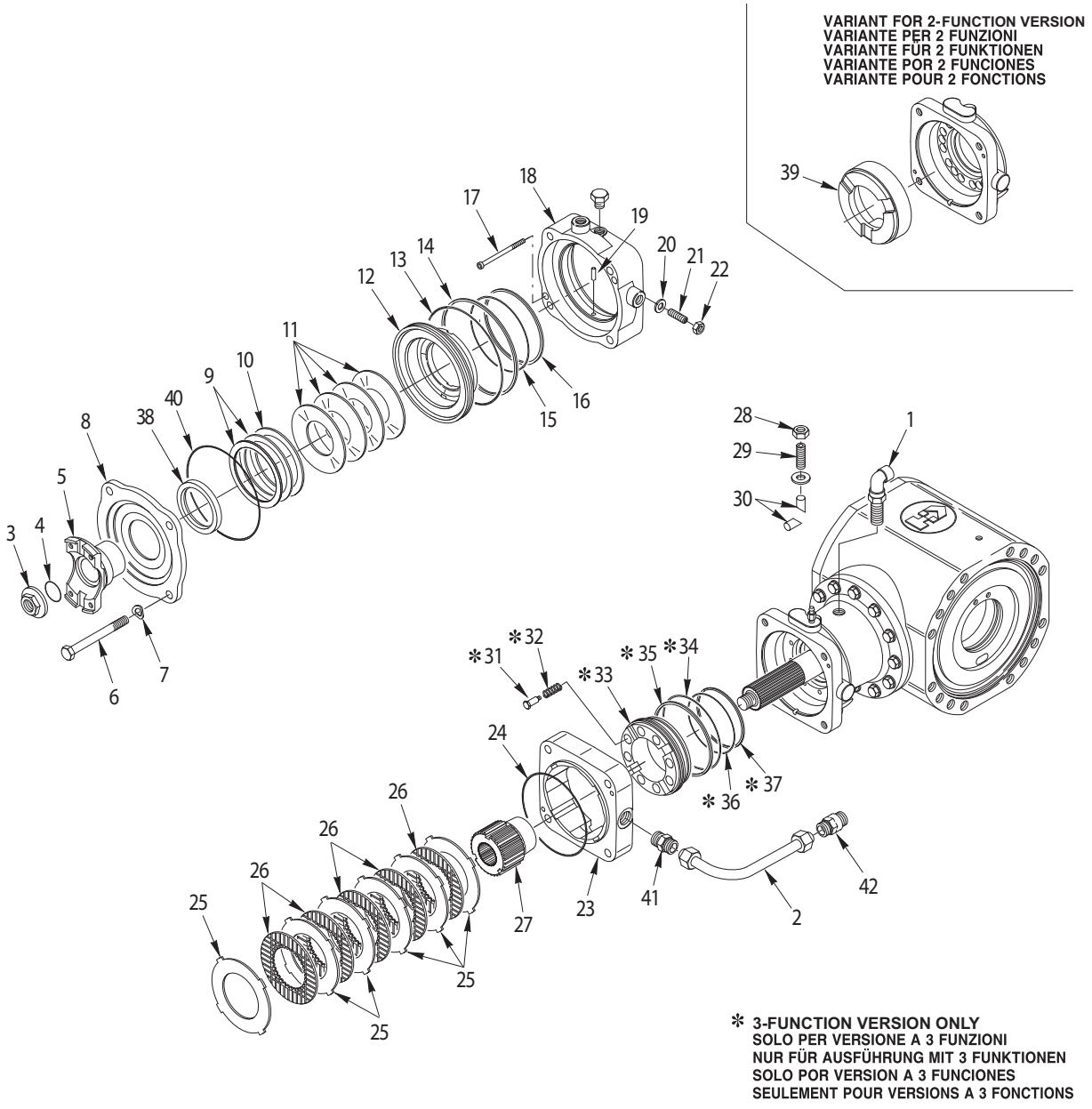

https://truckmanualshub.com/

DISASSEMBLY

⚠ DANGER

Before maintaining brakes, when the axle is installed on the vehicle, follow all safety instructions in the Original Equipment Manufacturer (OEM) manual that came with the vehicle.

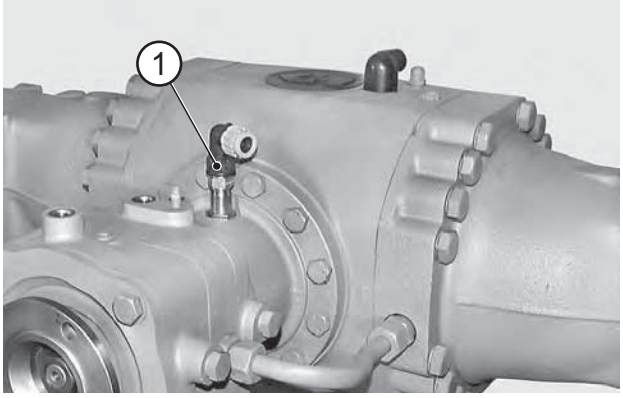

FIGURE 1: Remove electronic sensor (1), if fitted.

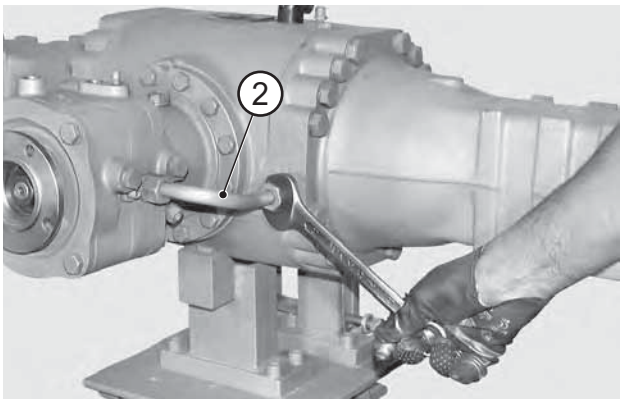

FIGURE 2: Loosen the two nuts and remove lubrication tube (2).

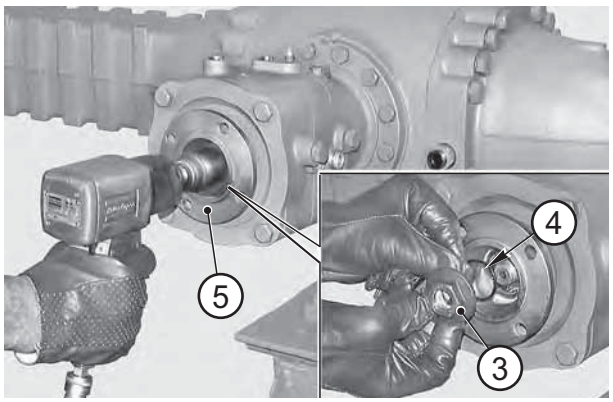

FIGURE 3: Remove nut (3), o-ring (4) and flange (5).

NOTE:

If disassembly is awkward, heat nut (3) about 176 F° (80C°).

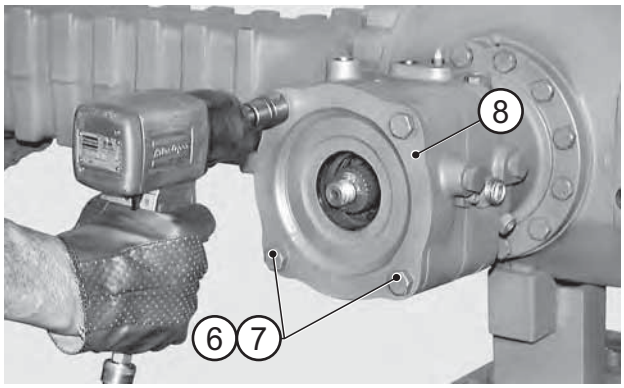

FIGURE 4: Loosen screws (6) in an alternate and criss-cross method until the action of Belleville washers (11) becomes null. Remove screws (6) and spring washers (7) of cover (8).

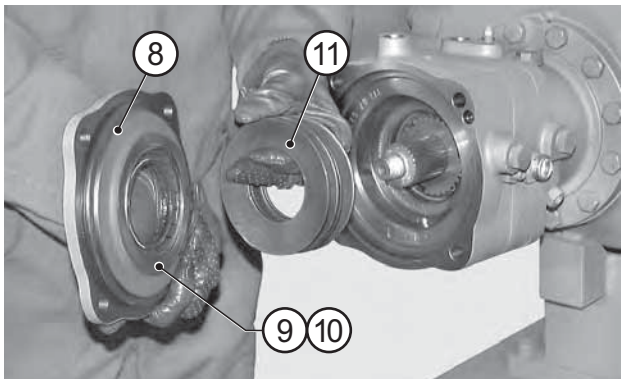

FIGURE 5: Pull out cover (8), shims (9) separating ring (10) and Belleville washers (11).

NOTE:

Take note of the assembly direction of: shims (9) and Belleville washers (11).

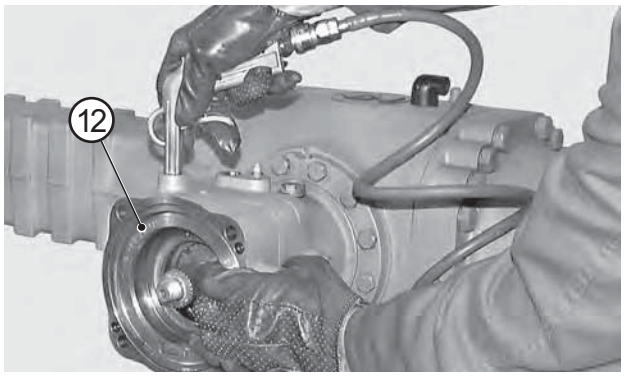

FIGURE 6: Slowly introduce compressed air through the negative brake connection point in order to extract the piston (12).

https://truckmanualshub.com/

⚠CAUTION

Hold piston (12) as it may be rapidly ejected and damaged.

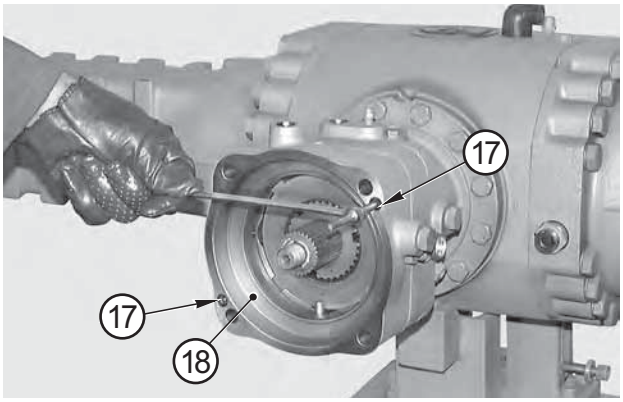

FIGURE 7: Remove check screws (17) from cylinder (18).

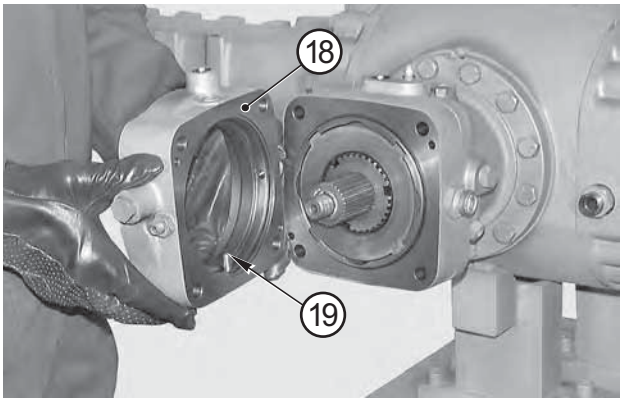

FIGURE 8: Remove cylinder (18) complete with guide pin (19) of piston (12).

NOTE:

Take note of direction of assembly.

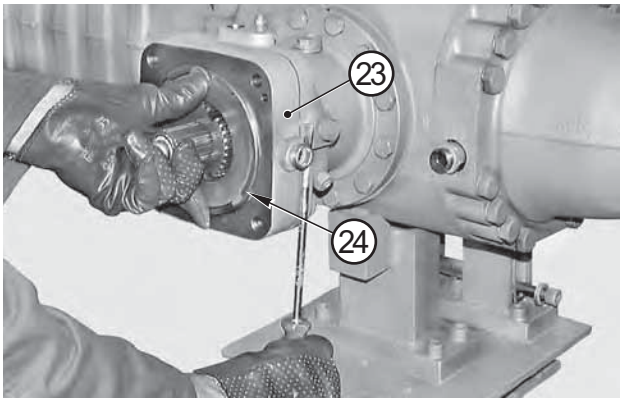

FIGURE 9: With the help of a lever, pry off the cover (23) complete with o-ring (24).

NOTE:

Thoroughly clean the face of bevel pinion support where the hub rests, check the o-ring (24) and replace it if necessary.

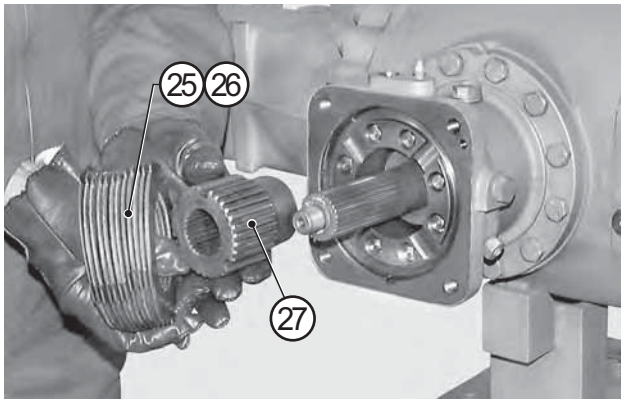

FIGURE 10: Remove friction discs (25), (26) and hub (27).

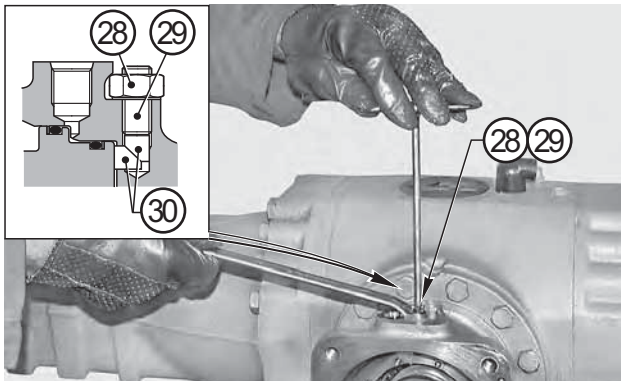

FIGURE 11: 3-FUNCTION VERSION ONLY
Loosen nuts (28) and unscrew studs (29) to retract the adjustment points (30).
ONLY IF NECESSARY. Remove points (30).

NOTE:

Loosen studs (29) in an alternate manner until the piston comes to end of backstroke.

https://truckmanualshub.com/

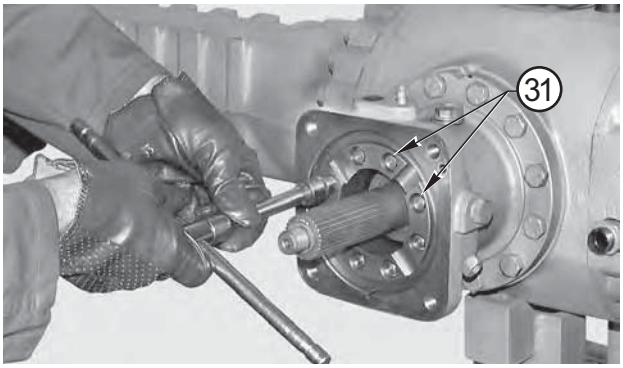

FIGURE 12: 3-FUNCTION VERSION ONLY
Loosen and remove the pin-type screws (31).

NOTE:

Loosen screws (31) in an alternate and criss-cross method.

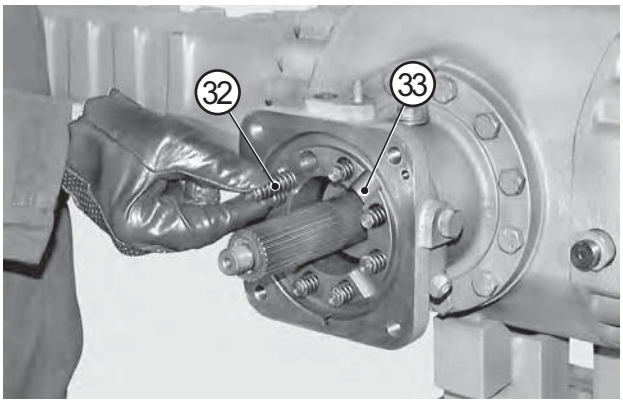

FIGURE 13: 3-FUNCTION VERSION ONLY
Remove springs (32) of piston (33) backward movement.

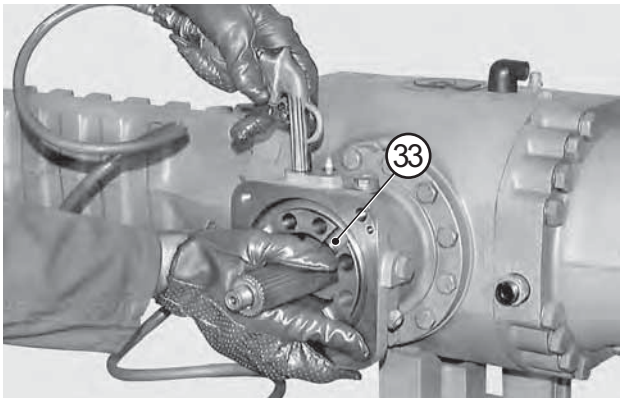

FIGURE 14: 3-FUNCTION VERSION ONLY
Slowly introduce compressed air through the connection point of the service brake to extract the piston (33).

⚠CAUTION

Hold piston (33) as it may be rapidly ejected and damaged.

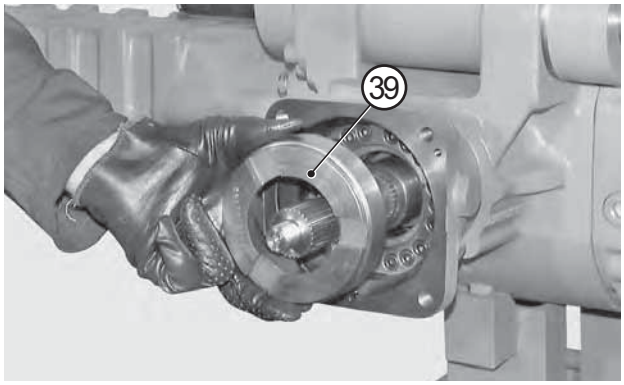

FIGURE 15: 2-FUNCTION VERSION ONLY
Remove the spacer (39).

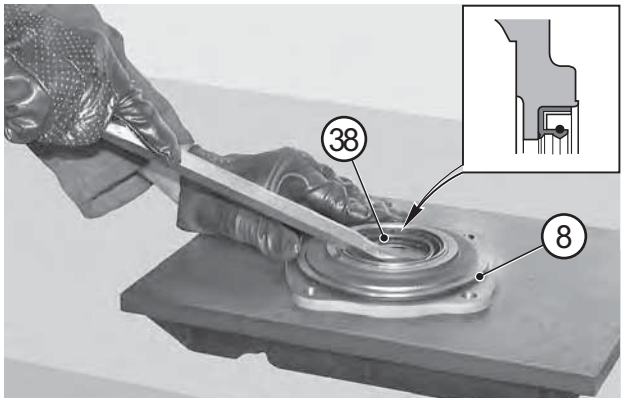

FIGURE 16: Remove sealing ring (38) from cover (8).

NOTE:

Take note of direction of assembly of ring (38) and replace ring every time the unit is disassembled.

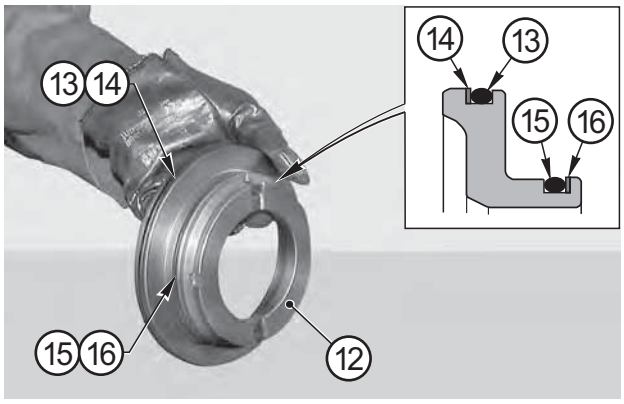

FIGURE 17: Remove sealing rings (13) and (15) and anti-extrusion rings (14) and (16) from the piston (12).

https://truckmanualshub.com/

NOTE:

Sealing rings (13) and (15) and anti-extrusion rings (14) and (16) must be replaced each time the unit is disassembled.

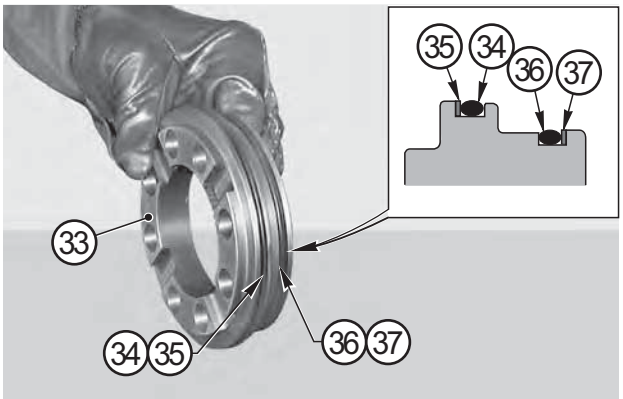

FIGURE 18: 3-FUNCTION VERSION ONLY
Remove sealing rings (34) and (36) and anti-extrusion rings (35) and (37) from piston (33).

NOTE:

Sealing rings (34), (36) and anti-extrusion rings (35), (37) must be replaced each time the unit is disassembled.

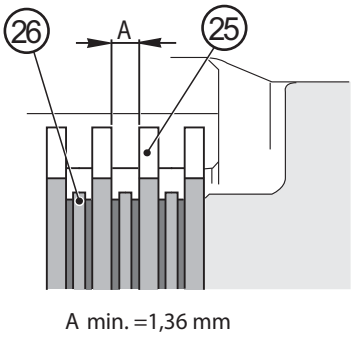

FIGURE 19: Always check the thickness of braking discs (26), even if the braking unit is being disassembled for other reasons than this.
If thickness "A" of one of the discs (26) is close to the minimum admissible size of 1.36 mm, replace the whole pack.

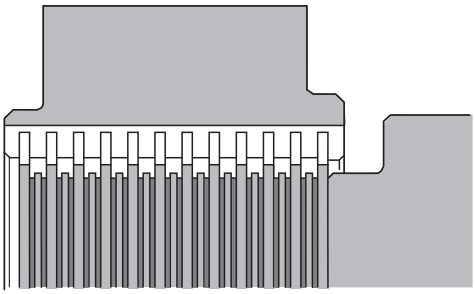

FIGURE 20: BRAKING DISCS PACK CONTENTS
The braking discs pack is comprised of: 11 braking discs and 12 steel counterdiscs.

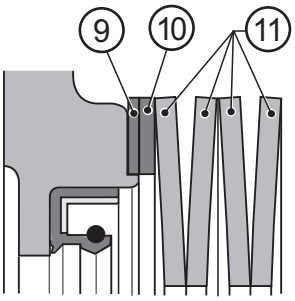

FIGURE 21: If the braking discs unit is replaced, shims (9) - which determine the preloading of Belleville washers (11) - must to be restored.

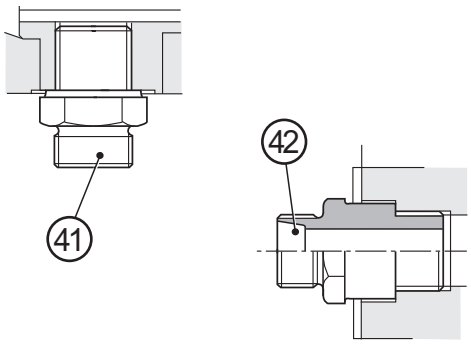

FIGURE 22: ONLY WHEN REPLACEMENT IS NECESSARY
Remove the union pieces (41) and (42) connecting the lubrication tube (2).

NOTE:

During the assembly stage, union pieces (41) and (42) must be coated with Loctite 577 and tightened to a torque wrench setting of 35 - 50 N·m.

https://truckmanualshub.com/

ASSEMBLY

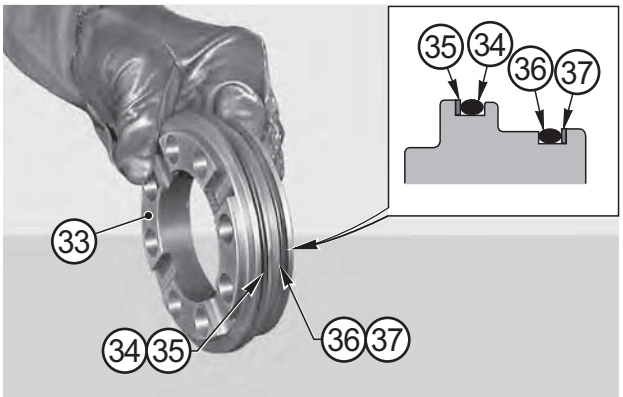

FIGURE 23: 3-FUNCTION VERSION ONLY
Fit the sealing rings (34), (36) and the anti-extrusion rings (35), (37) onto the piston (33) of the service brake.

NOTE:

Carefully check the assembly position of anti-extrusion rings.

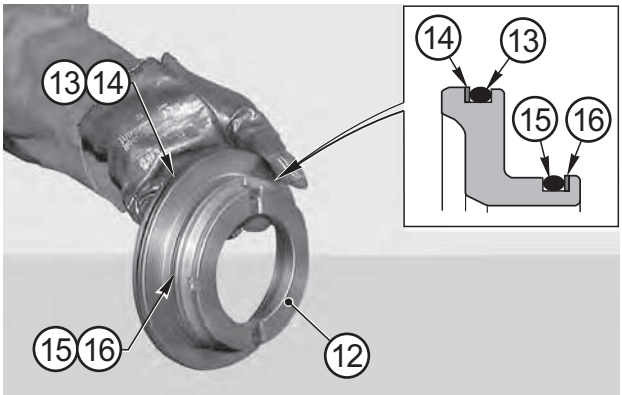

FIGURE 24: Fit the sealing rings (13), (15) and the anti-extrusion rings (14), (16) onto the piston (12) of the negative brake.

NOTE:

Carefully check the assembly position of the anti-extrusion rings.

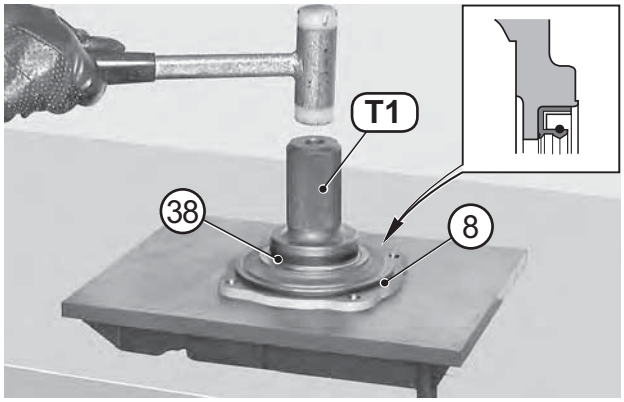

FIGURE 25: Lubricate sealing ring (38) and, using tool T1 (See drawing T1 p. 122), fit it into the cover (8).

NOTE:

Carefully check the direction of ring (38).

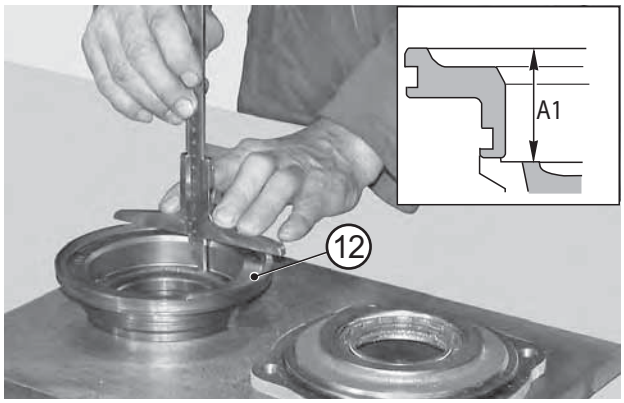

FIGURE 26: 3-FUNCTION VERSION ONLY
Measure size "A1" of piston (12) and note it down.

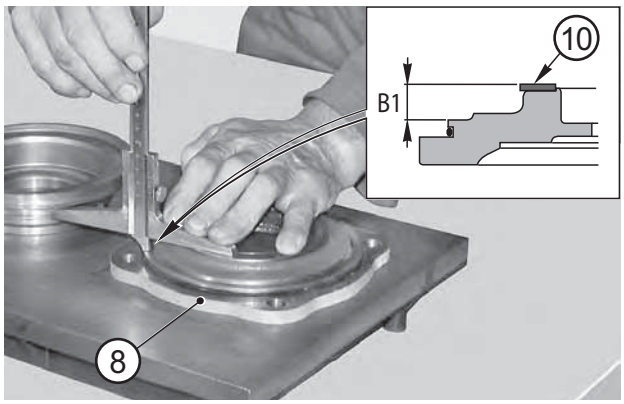

FIGURE 27: 3-FUNCTION VERSION ONLY
Fit the separating ring (10) of Belleville washers onto the cover (8), measure size "B1" and note it down.

https://truckmanualshub.com/

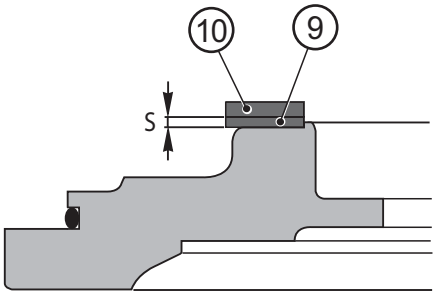

FIGURE 28: 3-FUNCTION VERSION ONLY
Using the measurements just taken, calculate thickness "S" of shims (9) as follows: S=(A1+1.5)±(B1+18.4) where:
S=Shim thickness - 1.5 mm=fixed measure of braking discs clearance - 18.4 mm=fixed measure of Belleville washers.

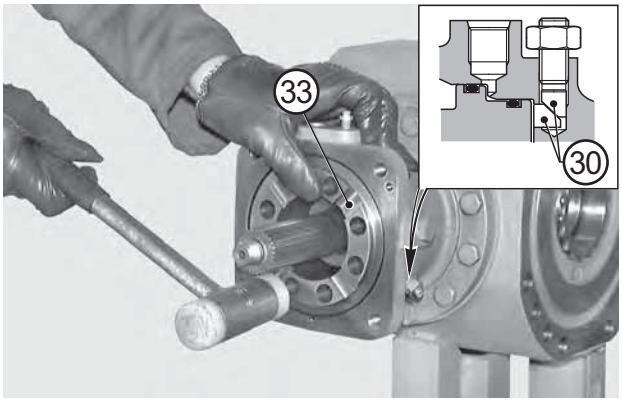

FIGURE 29: 3-FUNCTION VERSION ONLY
Lubricate the o-rings and install the whole piston (33). Orient the piston with the help of a lever and push it to end of stroke with a plastic hammer.

⚠CAUTION

Check that the adjusting stakes (30) are thoroughly inserted and make sure they perform a sliding motion in relation to each other.

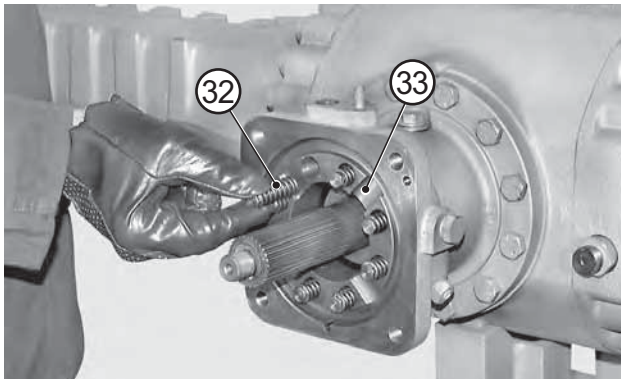

FIGURE 30: 3-FUNCTION VERSION ONLY
Insert springs (32) for piston (33) backward movement.

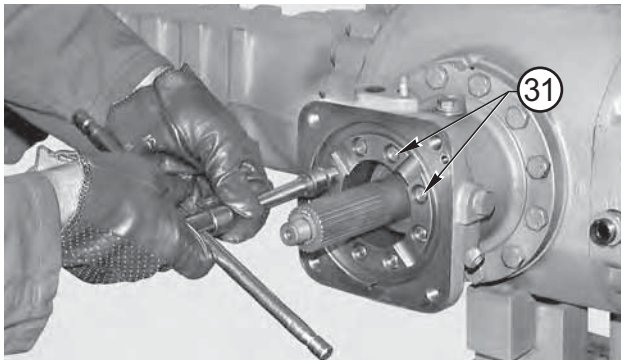

FIGURE 31: 3-FUNCTION VERSION ONLY
Apply Loctite 242 to the thread of screws (31) and tighten.

NOTE:

Tighten the screws with a normal wrench in an alternate and criss-cross method.

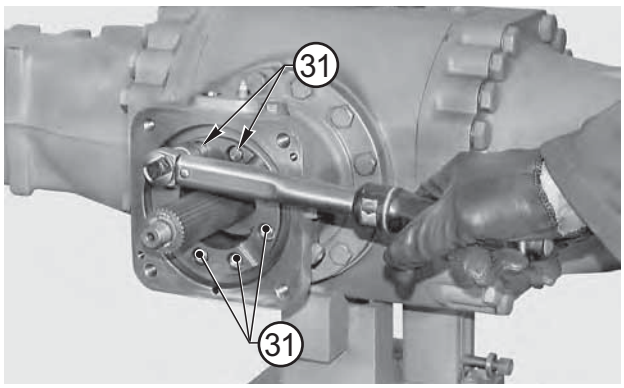

FIGURE 32: 3-FUNCTION VERSION ONLY
Lock screws (31) in a criss-cross method by using a torque wrench set to a maximum torque of 10 N·m.

⚠CAUTION

Do not exceed the specified torque setting.

https://truckmanualshub.com/

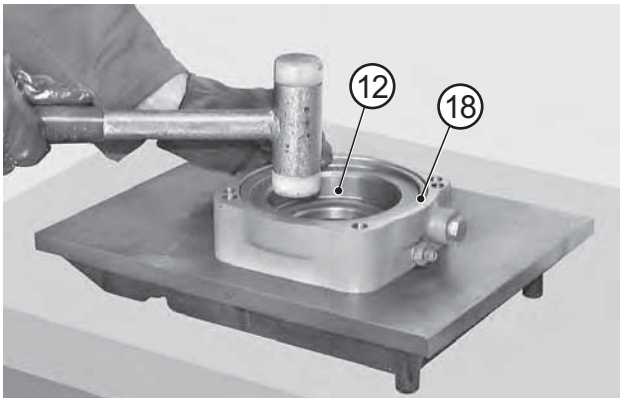

FIGURE 33: Lubricate seals (13), (15) and fit the piston (12) into the cylinder (18). Engage piston on the pin (19).
For the assembly, use a plastic hammer and push the piston (12) to end of stroke.

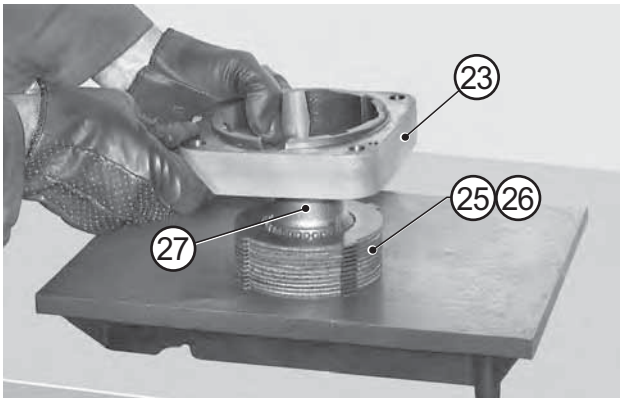

FIGURE 34: Lightly lubricate the braking discs (25), (26) and fit them onto the hub (27).
Align discs (25) and fit the cover (23).

NOTE:

The braking discs pack starts and ends with steel discs (25).

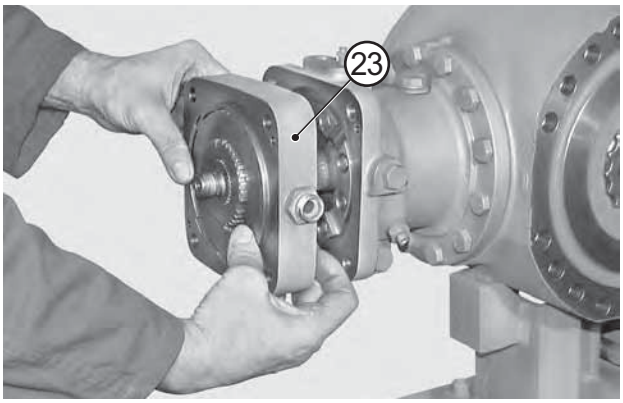

FIGURE 35: Apply Loctite 510 on the face of the cover (23).
Fit the discs-hub-cover assembly prepared in the previous stages onto the pinion and engage it.

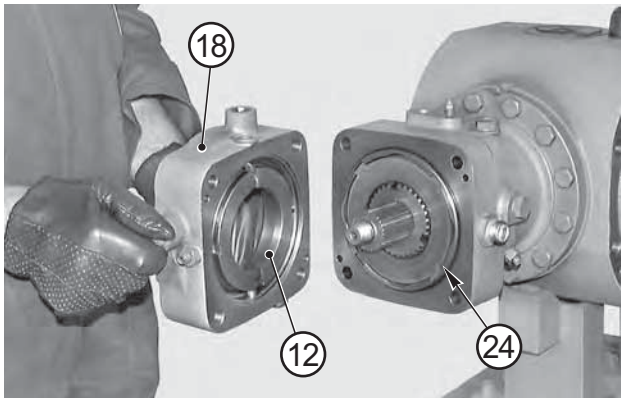

FIGURE 36: Lubricate the o-ring (24) and fit cylinder (18) complete with piston (12).

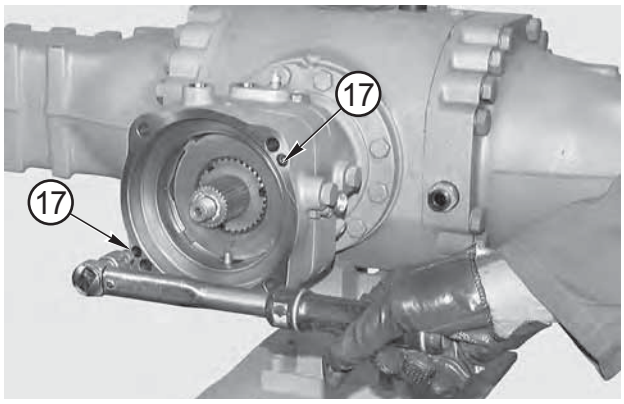

FIGURE 37: Introduce screws (17) and tighten in a criss-cross method. Use a torque wrench setting of 9.5 - 10.5 N·m.

NOTE:

Before giving the final tightening, align the external surfaces of the components.

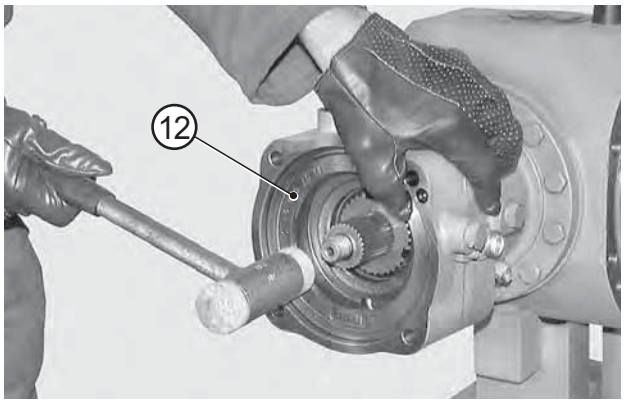

FIGURE 38: 3-FUNCTION VERSION ONLY
Using a plastic hammer, push the piston (12) to the end of stroke.

https://truckmanualshub.com/

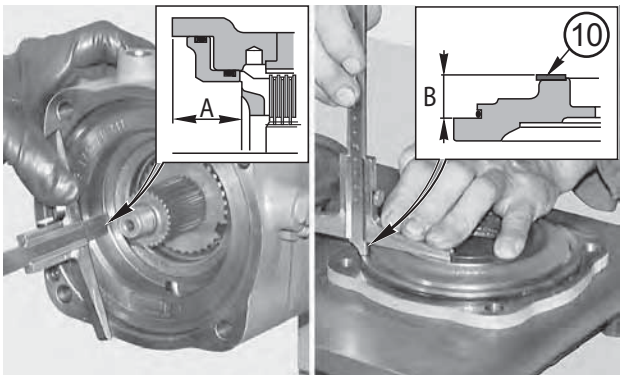

FIGURE 39: 2-FUNCTION VERSION ONLY
Fit the separating ring (10) of Belleville washers onto the cover (8), measure size "B" and note it down.
Measure size "A" which you will need for calculating the shims (9) according to the following:
S=A±(B+18.4) where: S=Shim thickness - 18.4 mm=fixed measure of Belleville washers.

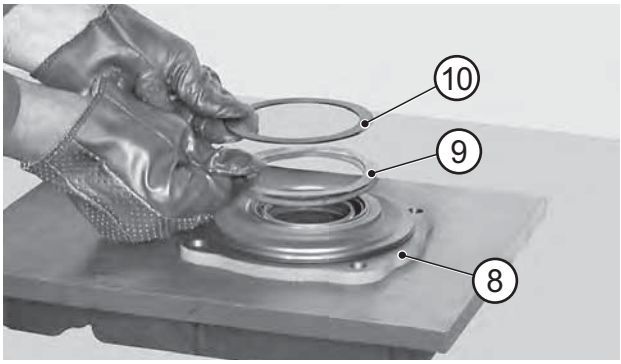

FIGURE 40: Lightly lubricate the shims (9) required according to calculations and the separating ring (10) of the Belleville washers. Fit shims and ring on the cover (8).

NOTE:

Position the larger shim so that it leans against the cover.

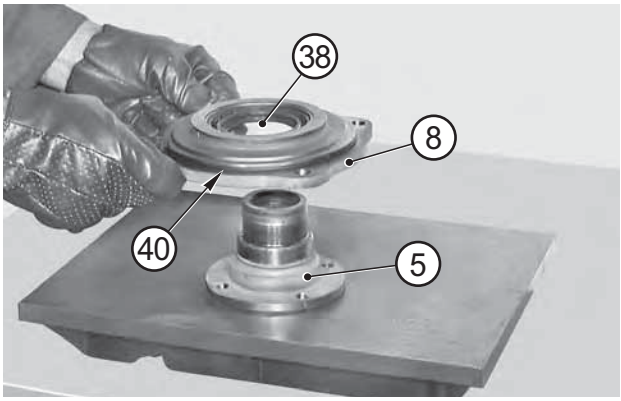

FIGURE 41: Check the state of the o-ring (40).
Lubricate sealing ring (38) and fit flange (5) into the cover (8).

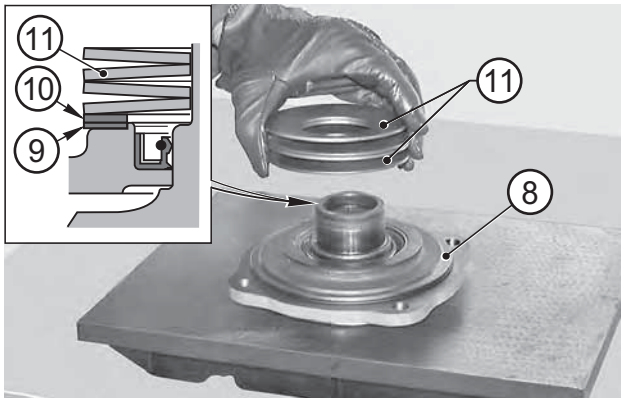

FIGURE 42: Fit the Belleville washers (11) onto the cover (8), thoroughly checking washers orientation.

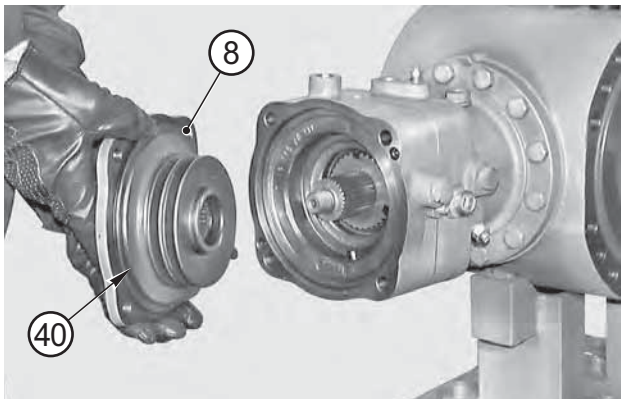

FIGURE 43: Lubricate the o-ring (40) and install the cover assembly (8).

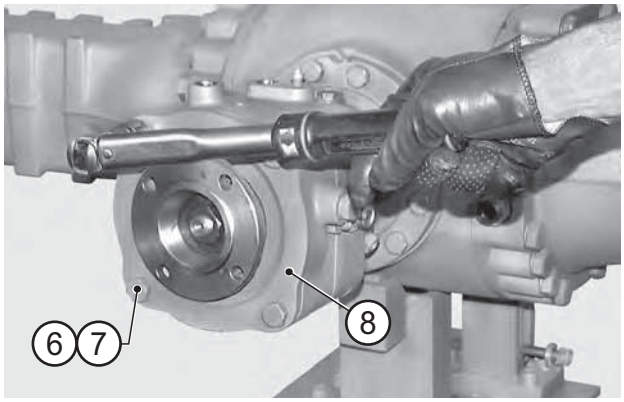

FIGURE 44: Install screws (6) and washers (7). Lock the cover with a torque wrench setting of 116 - 128 N·m.

NOTE:

Tighten in an alternate and criss-cross method.

https://truckmanualshub.com/

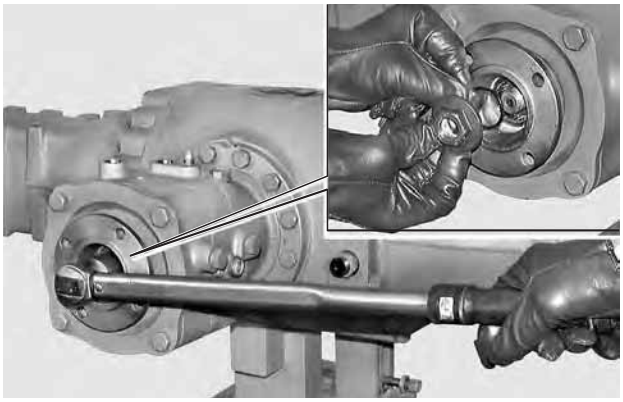

FIGURE 45: Apply Loctite 242 to the threaded portion of the pinion, fit o-ring (4) and nut (3). Tighten the nut with a torque wrench set to 280 - 310 N·m.

NOTE:

Use tools T2 (See drawing T2 p. 122) and T3 (See drawing T3 p. 123).

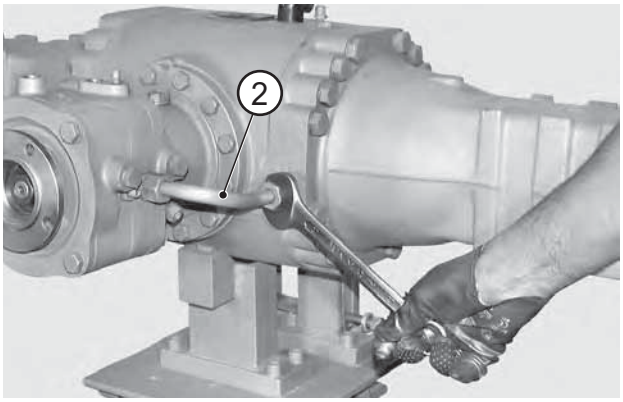

FIGURE 46: Install the lubrication tube (2).

FIGURE 47: 3-FUNCTION VERSION ONLY
Connect the service and negative brakes to an external pump; introduce pressure up to a value of 20 - 25 N·m.

NOTE:

Check that pressure is kept stable for at least 5 minutes and make sure there are no leaks.

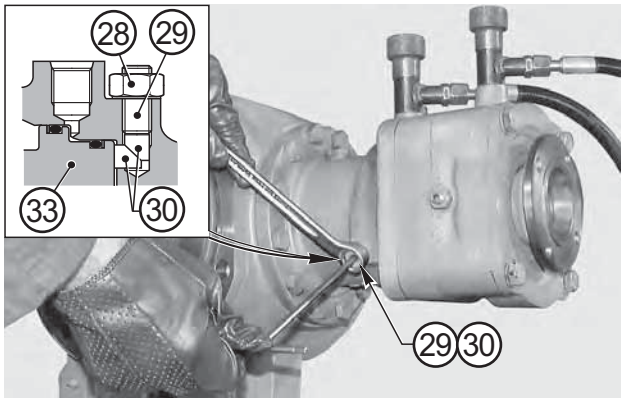

FIGURE 48: 3-FUNCTION VERSION ONLY
Screw studs (29) until pins (30) position themselves against the piston (33), then unscrew studs by one turn to obtain a 1.5 mm stroke.
Lock studs (29) into position with the nuts (28) tightened at 15 N·m.
Release pressure.

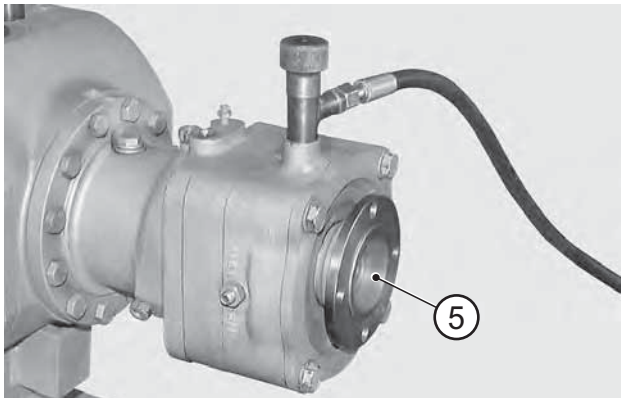

FIGURE 49: Check negative brake release by introducing a pressure of 16 - 35 bar and by manually rotating the flange (5). Release pressure.

https://truckmanualshub.com/

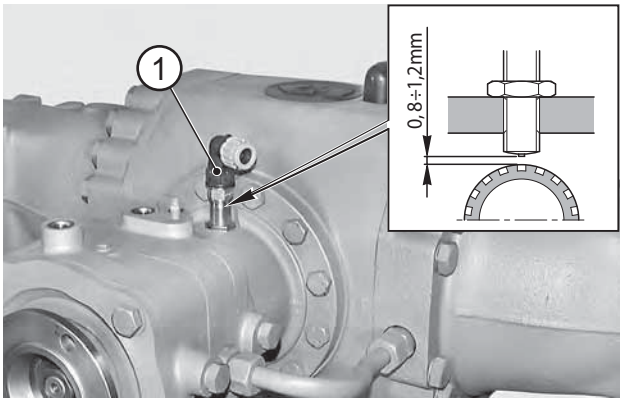

FIGURE 50: Fit the electronic sensor (1) and screw it up to the limit stop. Unscrew sensor by 3/4 turn and lock into position with nut. Locking torque: maximum 30 N·m.

⚠CAUTION

Do not exceed the specified torque setting.

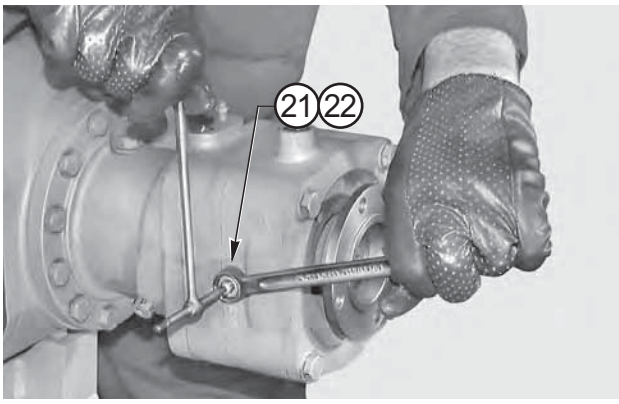

FIGURE 51: To release the negative brake during an emergency, (lack of pressure due to vehicle breakdown), loosen nuts (22) and screw studs (21) in an alternate and gradual manner until you notice some preloading;
continue by giving another 1.5 turns.

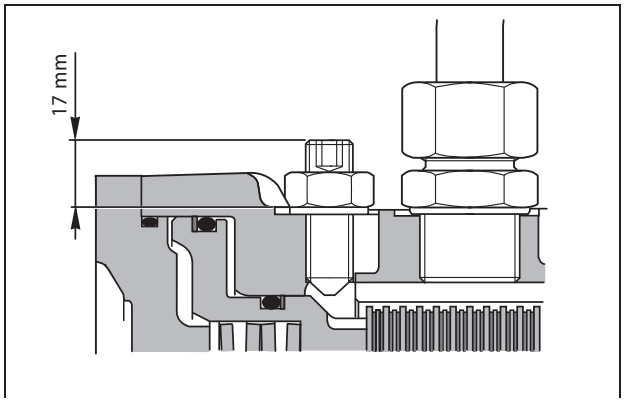

FIGURE 52: When the emergency is over, loosen the studs in an alternate manner until a 17 mm projection is obtained; lock into position with the nuts (22) tightened to 15 N·m.

https://truckmanualshub.com/

SPECIAL TOOLS

T1

P/N: 3739

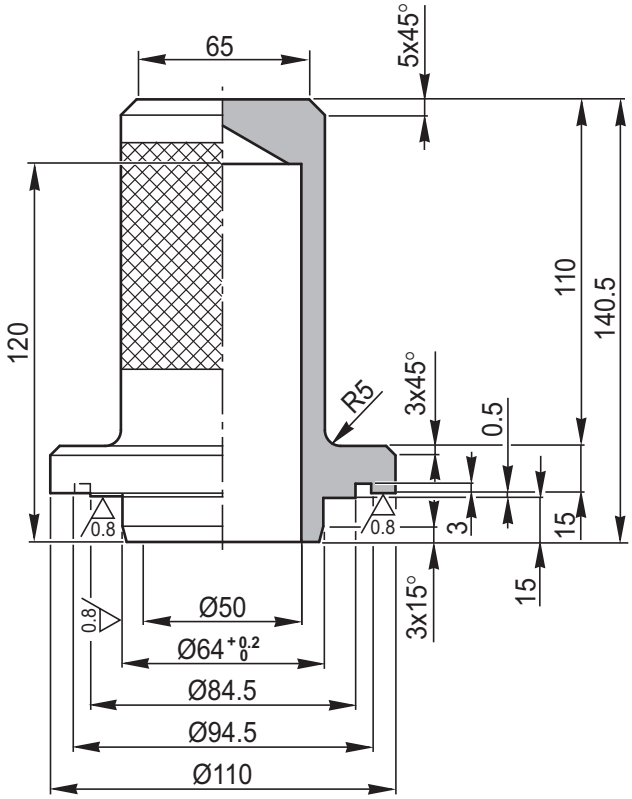

T2

P/N: 3317/3

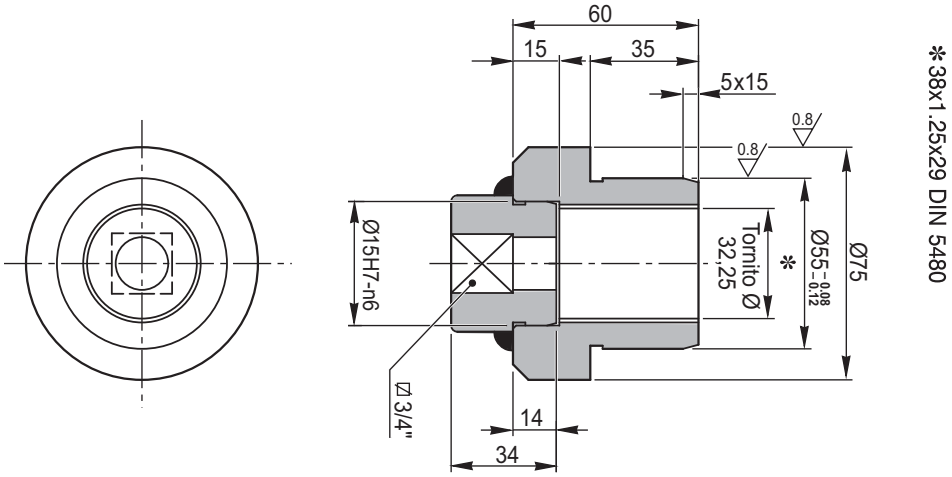

https://truckmanualshub.com/

T3

P/N: 3317/A

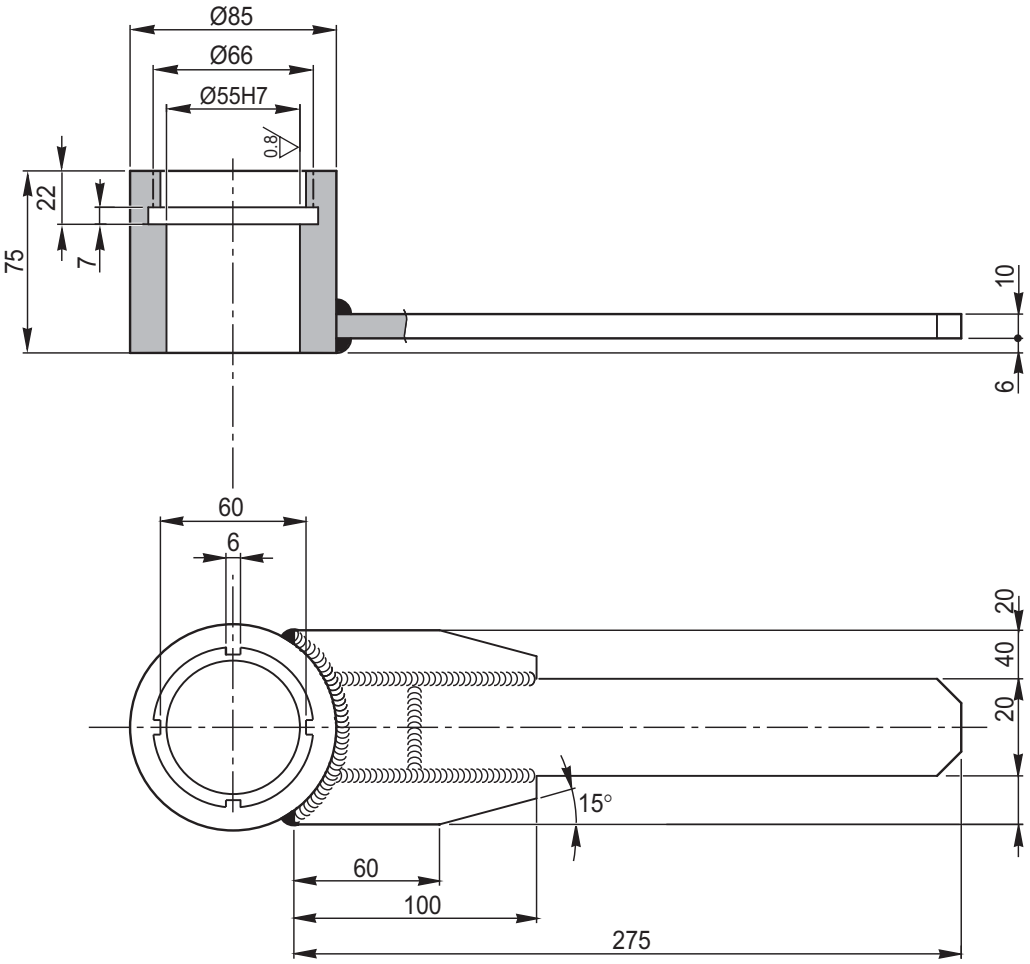

https://truckmanualshub.com/

https://truckmanualshub.com/

NORMAL DIFFERENTIAL UNIT

EXPLODED VIEW

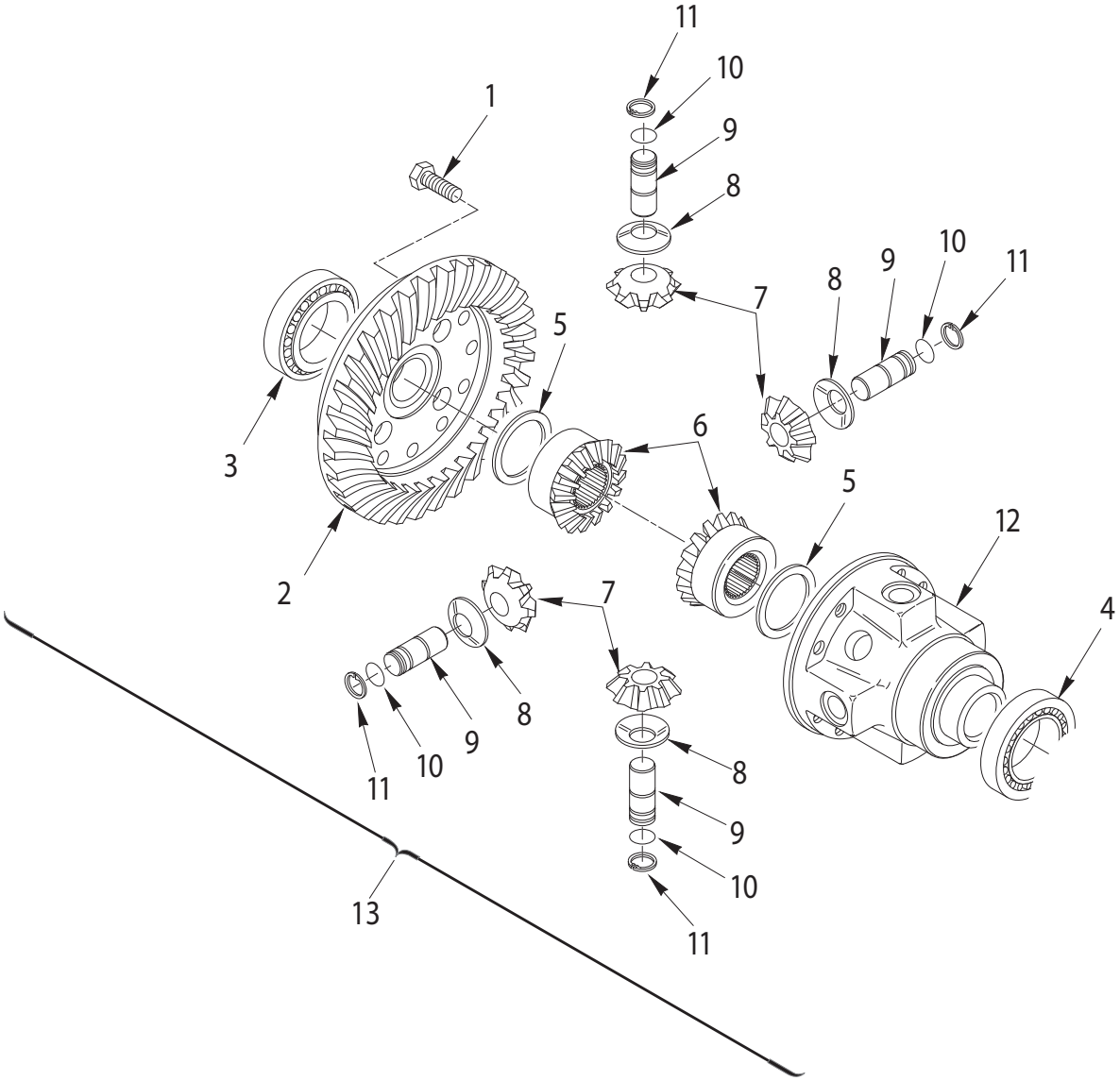

https://truckmanualshub.com/

DISASSEMBLY

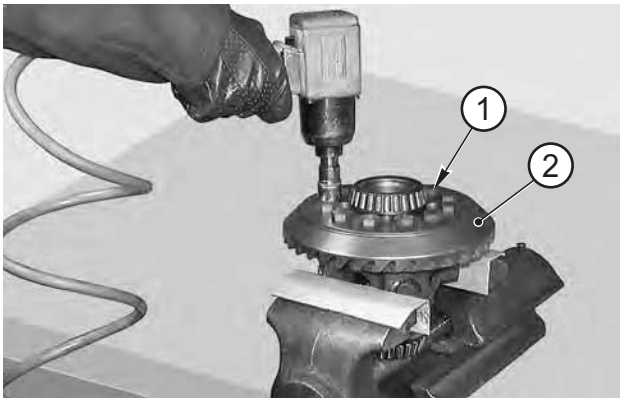

FIGURE 1: Remove the capscrews (1) from the crown (2).

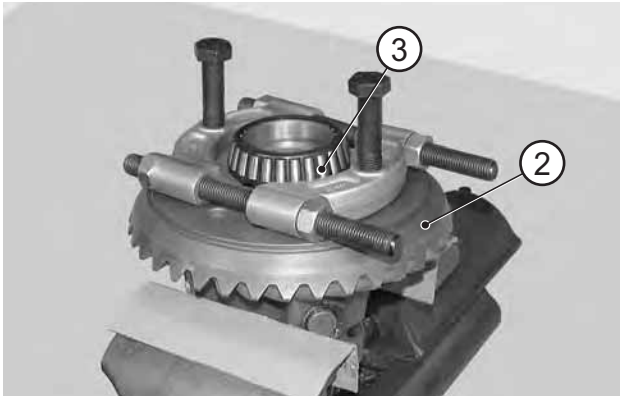

FIGURE 2: If the bearing needs replacing, extract the bearing (3) and remove the crown (2).

FIGURE 3: Remove the shim washer (5) and the planetary gear (6).

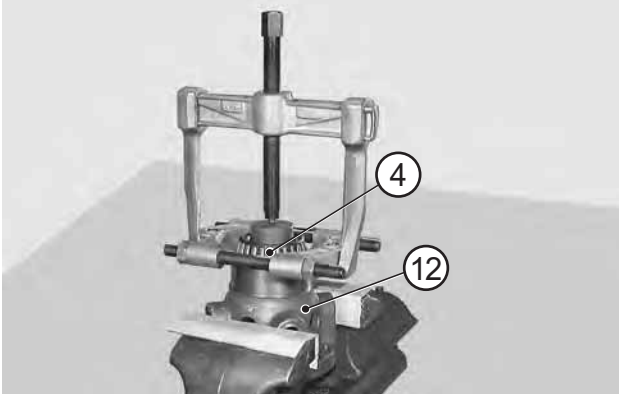

FIGURE 4: If the bearing need replacing, extract the bearing (4) from the differential carrier (12).

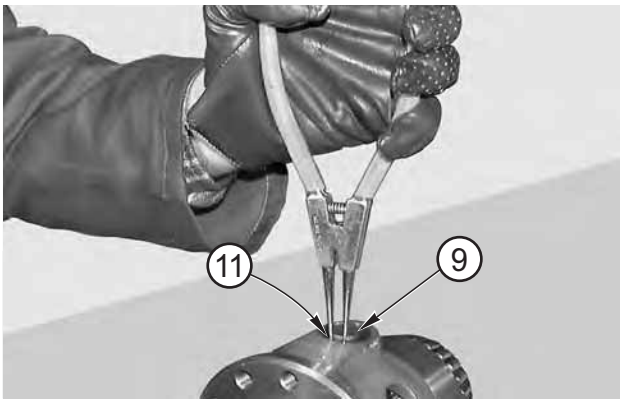

FIGURE 5: Remove the snap rings (11) from the two pins (9) of the planetary gears (7).

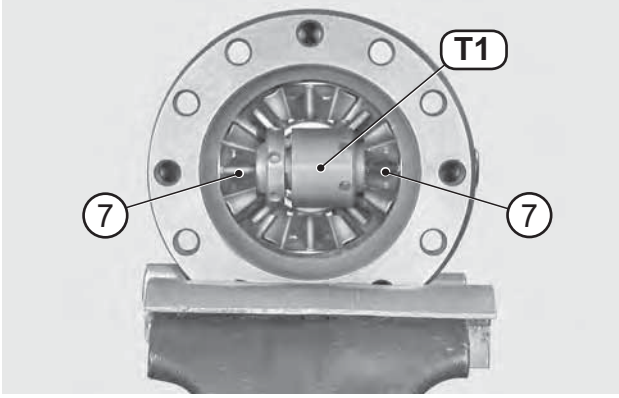

FIGURE 6: Insert tool T1 (See drawing T1 p. 131) between the planetary gears (7).

https://truckmanualshub.com/

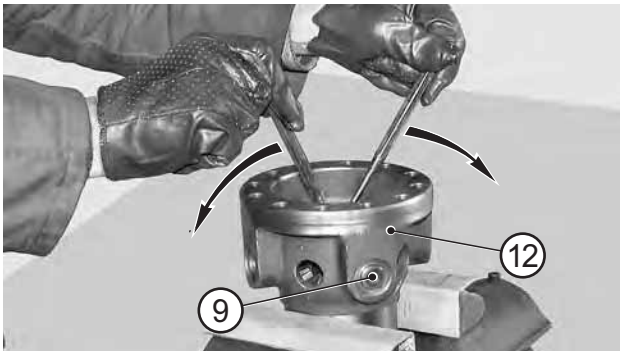

FIGURE 7: Force tool T1 (See drawing T1 p. 131) in-between the planetary gears (7) using two pin-drivers.

⚠CAUTION

Make sure that tool T1 (See drawing T1 p. 131) is perfectly lined up with the pins (9) when locked.

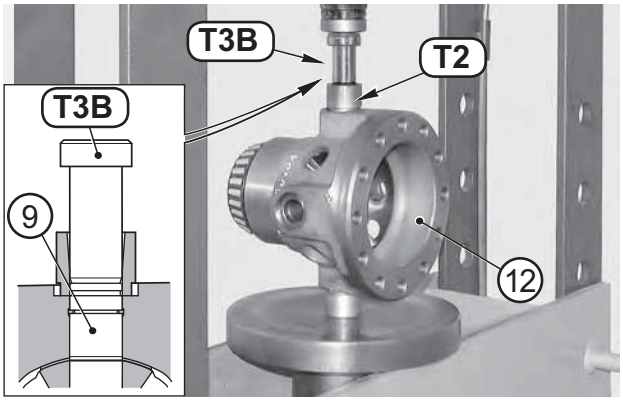

FIGURE 8: Place the differential carrier (12) under a press, position guide bushing T2 (See drawing T2 p. 131) and insert press tool T3A (See drawing T3 p. 132). Press T3A (See drawing T3 p. 132) pin to limit position.

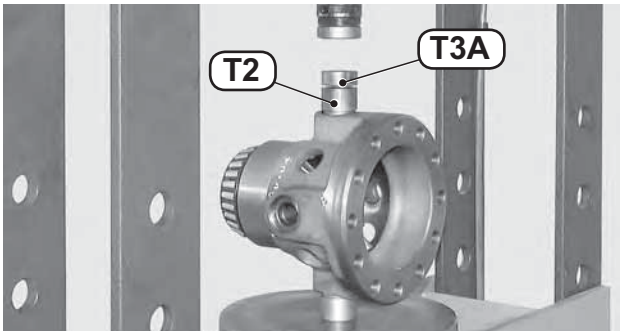

FIGURE 9: Remove press tool T3A (See drawing T3 p. 132) and guide bushing T2 (See drawing T2 p. 131).

NOTE:

In this condition the tool T1 (See drawing T1 p. 131) contains pin (9).

FIGURE 10: Remove tool T1 (See drawing T1 p. 131) together with the pin (9) of the planetary gear.

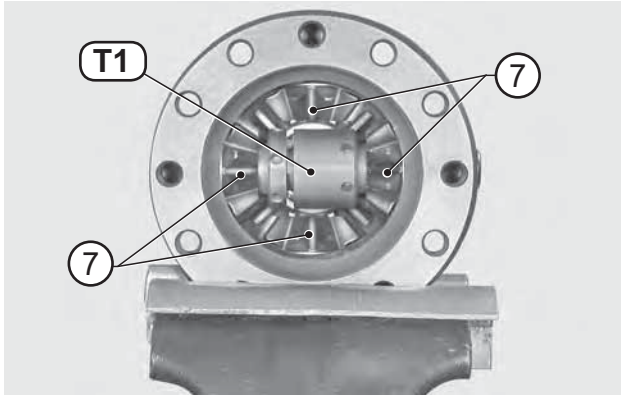

FIGURE 11: Leave the released planetary gear in position and again lock tool T1 (See drawing T1 p. 131).
Repeat the operations for the extraction of the pin of the 2nd planetary gear (9).
Repeat the operations for all other pins.

FIGURE 12: Remove tool T1 (See drawing T1 p. 131) and remove the last two planetary gears (7), the 2nd differential side gear (6) and the relative shim washer (5) from the differential carrier.

https://truckmanualshub.com/

ASSEMBLY

FIGURE 13: Insert the shim washer (5) and the differential side gear (6) in the differential carrier (12).

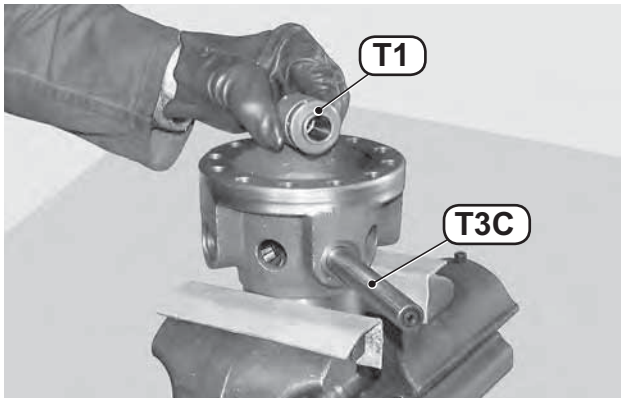

FIGURE 16: Insert tool T1 (See drawing T1 p. 131) between the two planetary gears (7). Line up the entire unit by pushing bar T3C (See drawing T3 p. 132) all the way down until press tool T3A (See drawing T3 p. 132) is ejected.

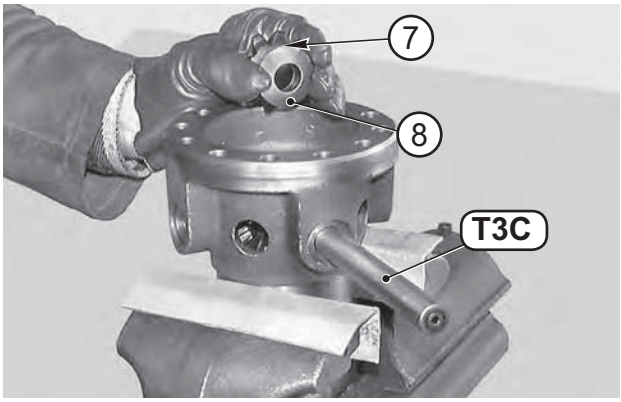

FIGURE 14: Position the shim washer (8) and the first planetary gear (7).
Hold them in position using bar T3C (See drawing T3 p. 132).

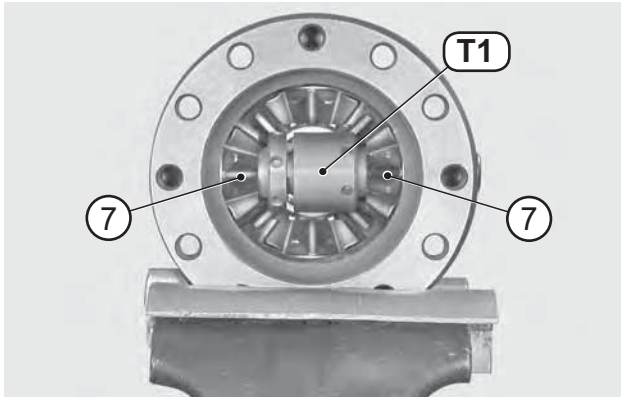

FIGURE 17: Lock tool T1 (See drawing T1 p. 131) behind the planetary gears (7).
After locking, remove bar T3C (See drawing T3 p. 132).

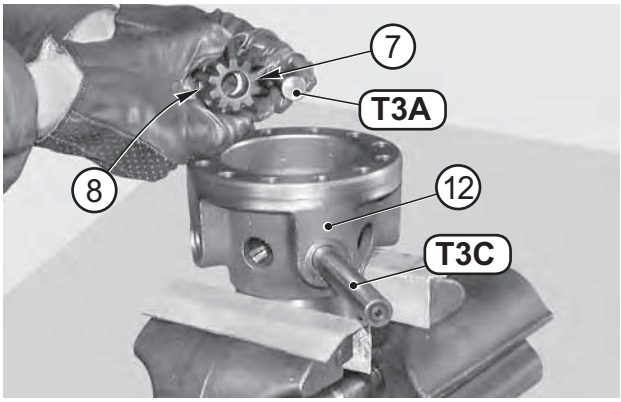

FIGURE 15: With the help of press tool T3A (See drawing T3 p. 132), position the second planetary gear (7) and the relative shim washer (8).

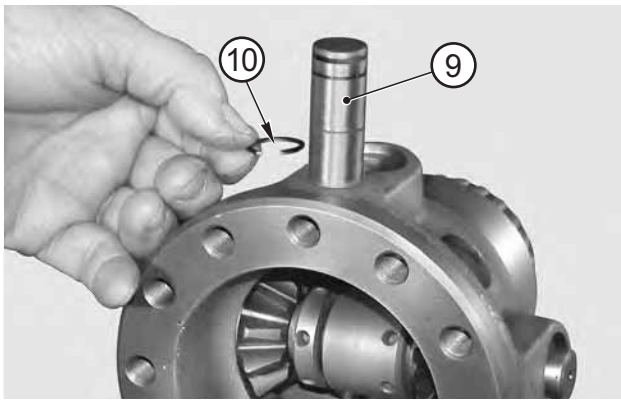

FIGURE 18: Fit the snap rings (11) onto the pins (9).

https://truckmanualshub.com/

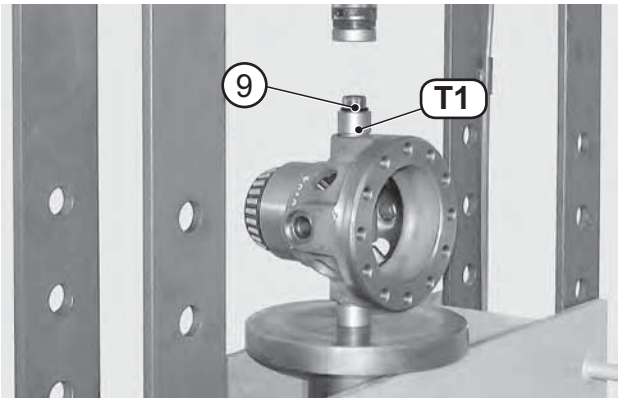

FIGURE 19: Place the differential carrier (12) under the press, position guide bushing T2 (See drawing T2 p. 131) and insert the planetary pin (9).

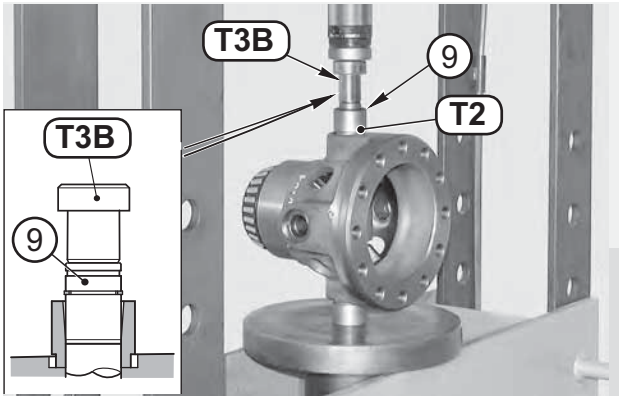

FIGURE 20: Put press tool T3B (See drawing T3 p. 132) on top of the planetary wheel pin (9).

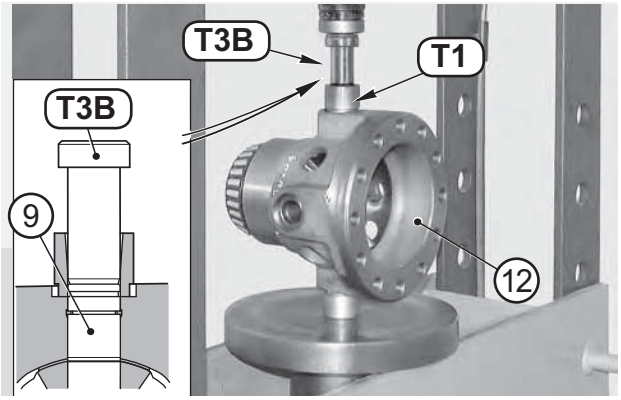

FIGURE 21: Press T3B (See drawing T3 p. 132) pin all the way down.

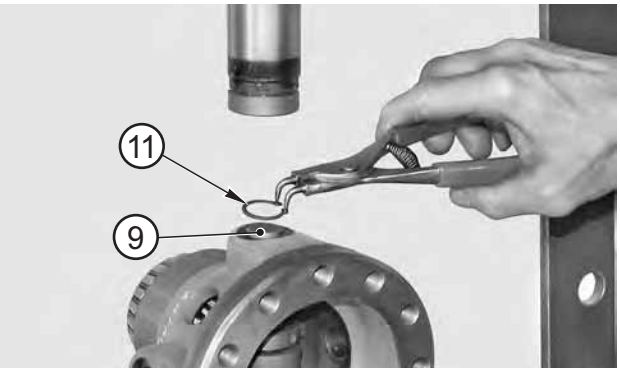

FIGURE 22: Remove press tool T3B (See drawing T3 p. 132), bushing T2 (See drawing T2 p. 131) and fit the snap ring (11) on the pin (9).

⚠CAUTION

Make sure that the snap ring centers the seat and that it rests on the surface of the differential carrier. Repeat the operations on the other planetary pins.

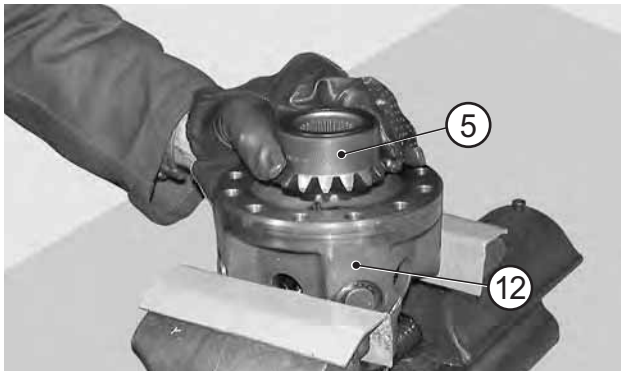

FIGURE 23: Position the second planetary gear (6) in the differential carrier (12).

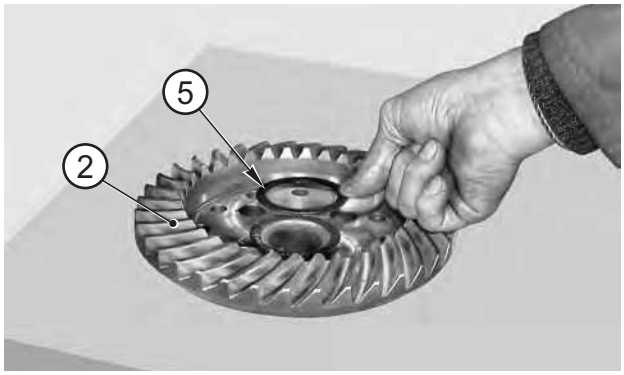

FIGURE 24: Position the shim washer (5) on the crown (2).

NOTE:

In order to hold the shim washer (5) in position, apply grease to it.

https://truckmanualshub.com/

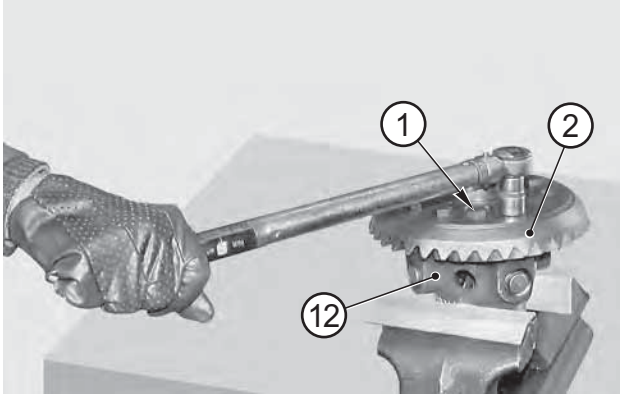

FIGURE 25: Position the crown (2) on the differential carrier (12) and lock it with screws (1) applied with Loctite 242. Torque wrench setting for screws: 128 - 142 N·m

NOTE:

Secure the screws using the criss-cross method.

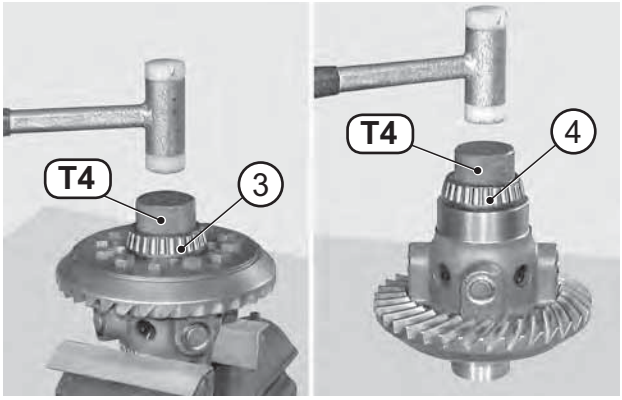

FIGURE 26: Install the bearings (3) and (4) using tool T4 (See drawing T4 p. 132).

https://truckmanualshub.com/

SPECIAL TOOLS

T1

P/N: 3708

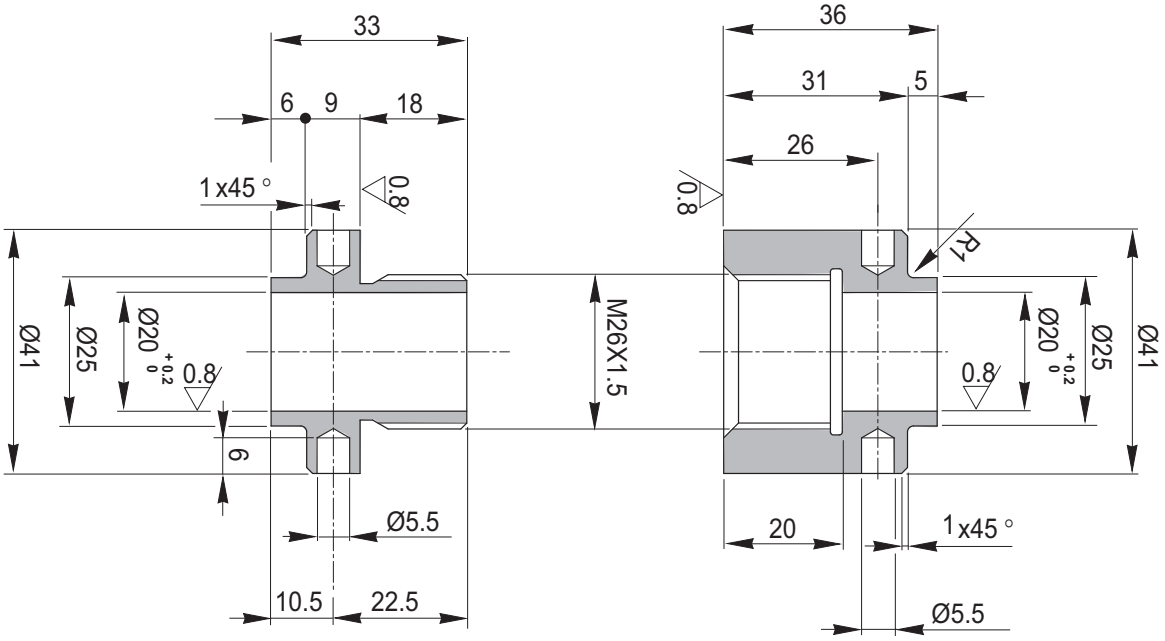

T2

P/N: 3424

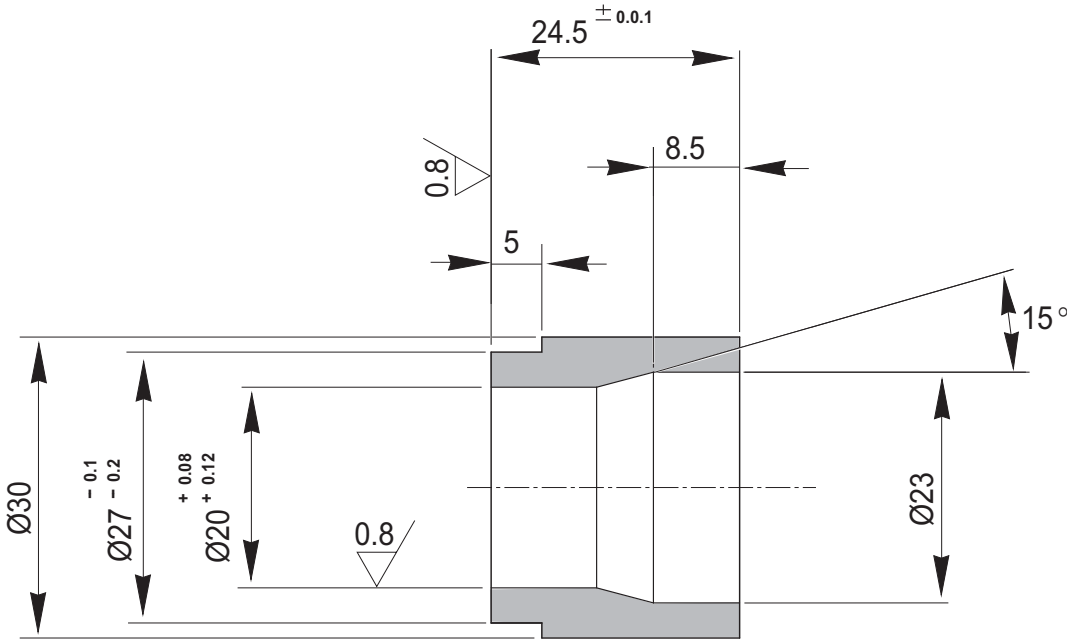

https://truckmanualshub.com/

T3

P/N: 2306

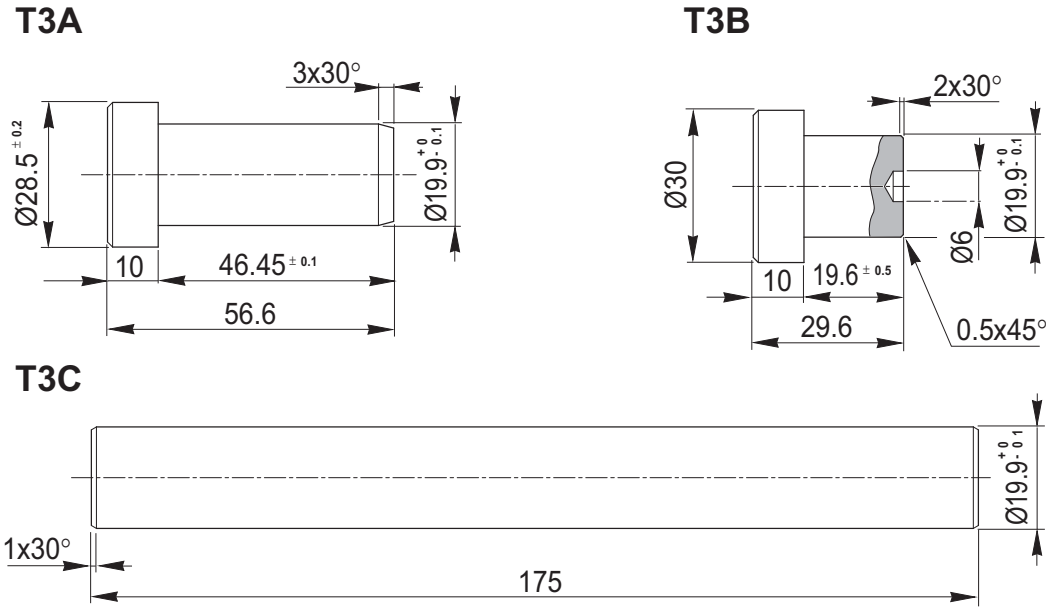

T4

P/N: 3332

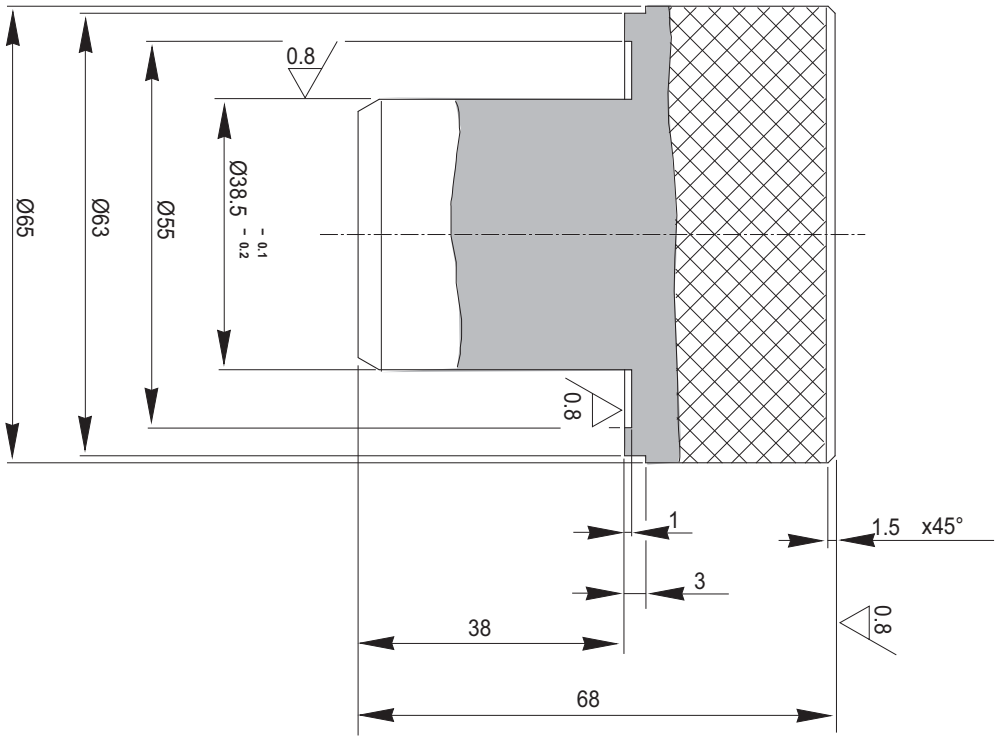

https://truckmanualshub.com/

LIMITED SLIP DIFFERENTIAL UNIT (25% AND 45%)

EXPLODED VIEW

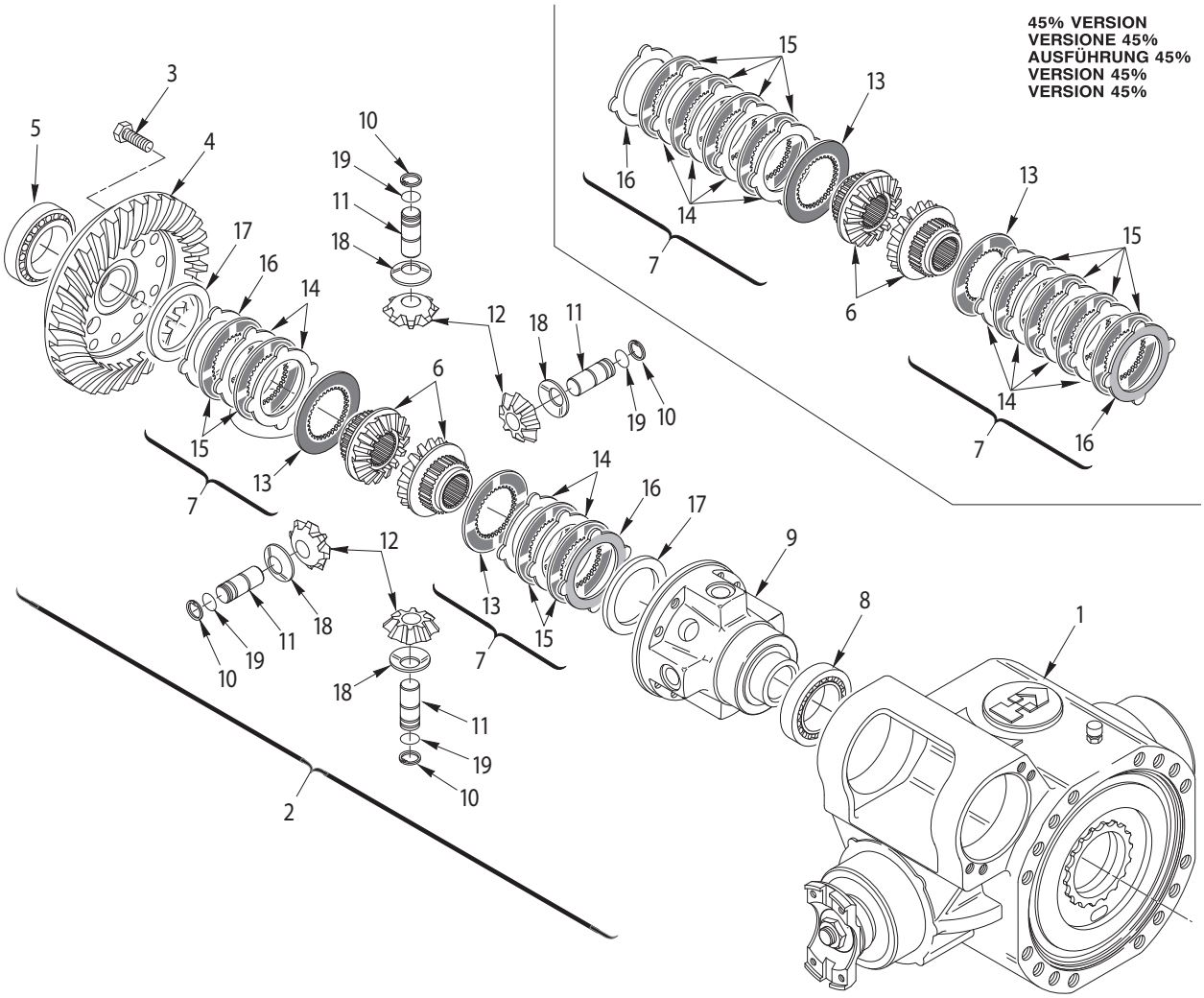

https://truckmanualshub.com/

DISASSEMBLY

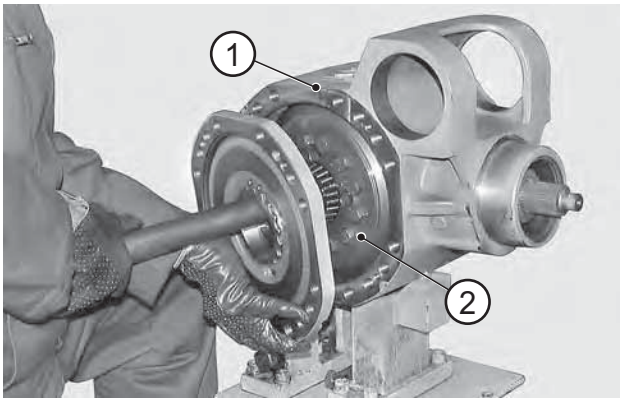

FIGURE 1: Remove the whole differential unit (2) from the central axle unit (1).
For details, see DIFFERENTIAL UNIT p. 61.

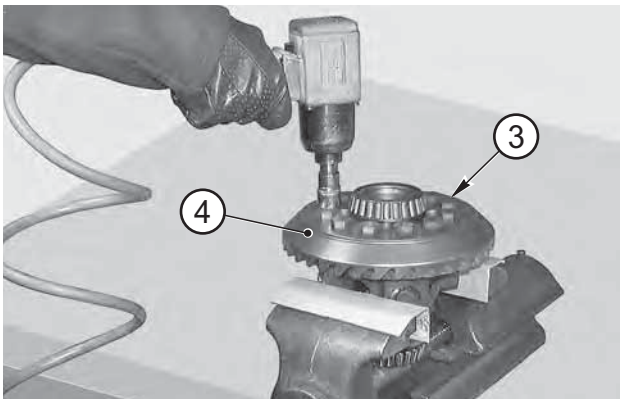

FIGURE 2: Remove the check screws (3) of the crown (4).

NOTE:

Write down the position of the notches of the central hole in relation to the protrusions of the friction unit steel discs.

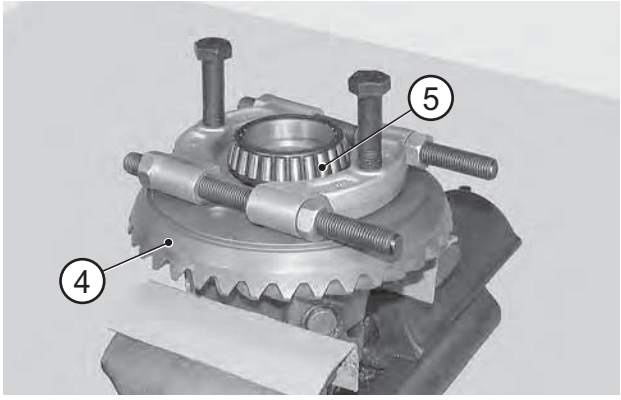

FIGURE 3: If bearing (5) needs replacing, remove it; remove crown (4).

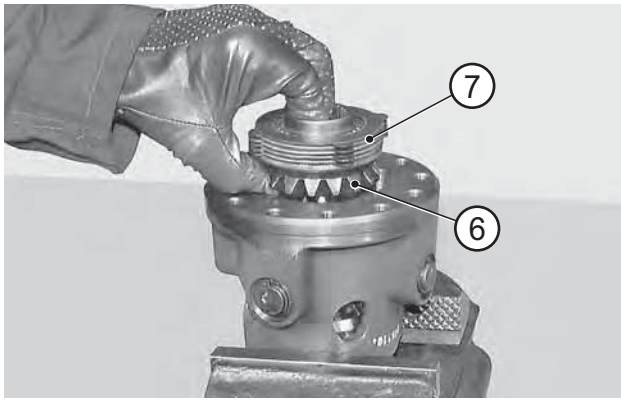

FIGURE 4: Remove the planetary gear (6) and the whole friction unit (7).

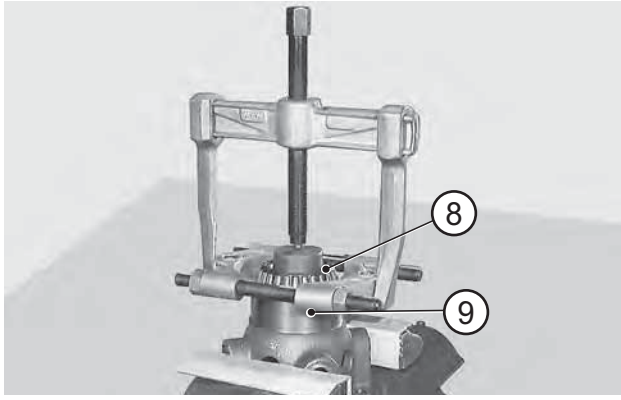

FIGURE 5: If bearing (8) needs replacing, extract it from the differential unit (9).

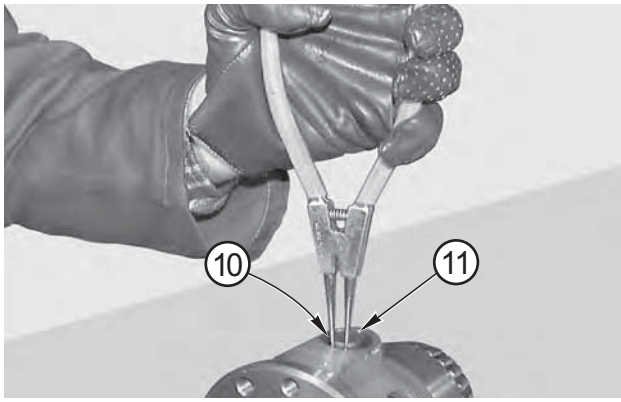

FIGURE 6: Remove the snap rings (10) from the pins (11) of the planetary gears (12).

https://truckmanualshub.com/

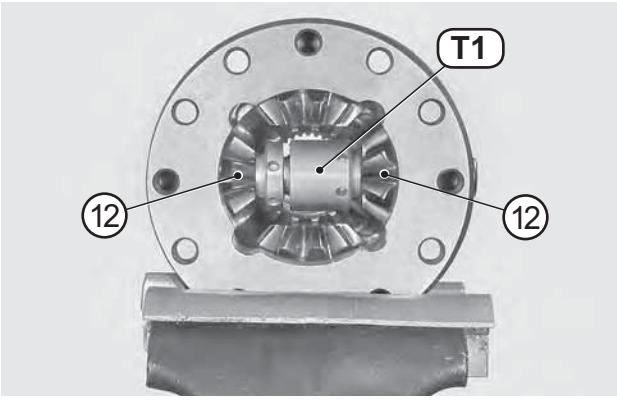

FIGURE 7: Introduce tool T1 (See drawing T1 p. 140) in-between the planetary gears (12).

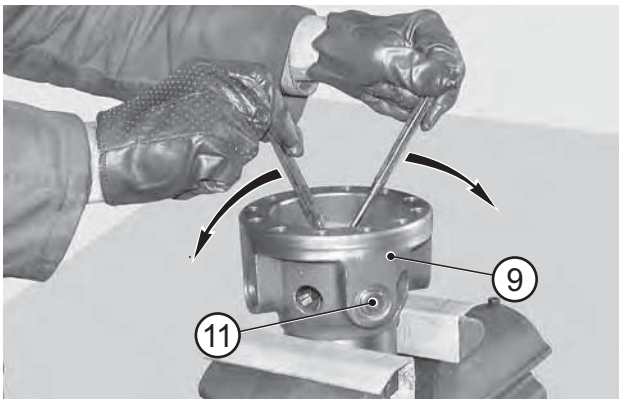

FIGURE 8: Using two pin-drivers, engage tool T1 (See drawing T1 p. 140) in between the planetary gears (12).

⚠CAUTION

Carefully check that tool T1 (See drawing T1 p. 140) keeps in an aligned position with the pins (11) when locked.

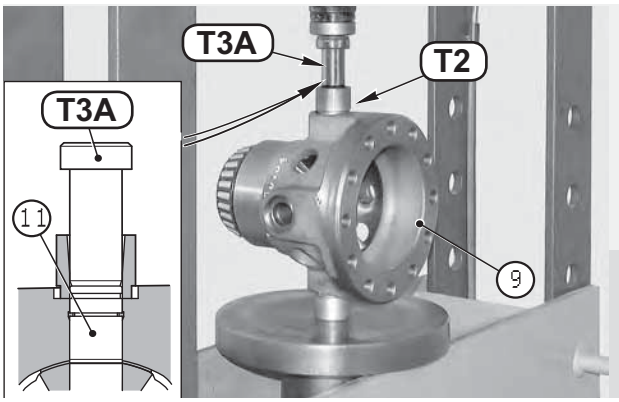

FIGURE 9: Place the differential unit (9) under a press, position guide bushing T2 (See drawing T2 p. 140) and insert press tool T3A (See drawing T3 p. 141). Press press tool T3A (See drawing T3 p. 141) to end of stroke.

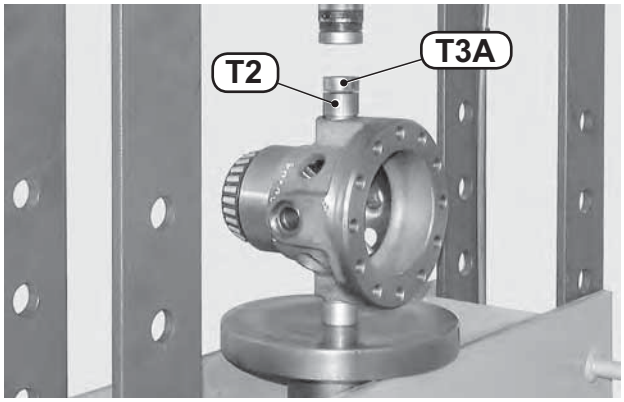

FIGURE 10: Remove press tool T3A (See drawing T3 p. 141) and bushing T2 (See drawing T2 p. 140).

NOTE:

In this state, the pin (11) is contained within tool T1 (See drawing T1 p. 140).

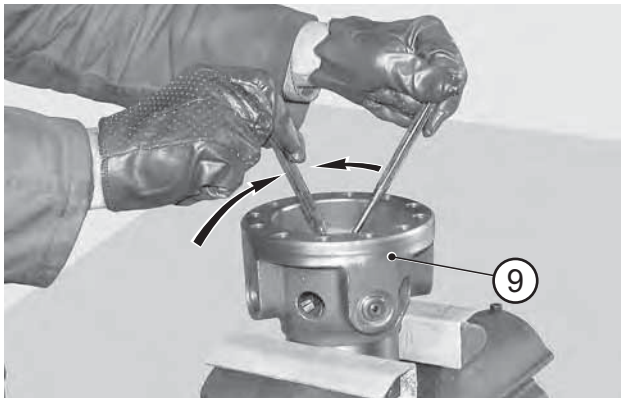

FIGURE 11: Remove tool T1 (See drawing T1 p. 140) and planetary pin (11) with it.

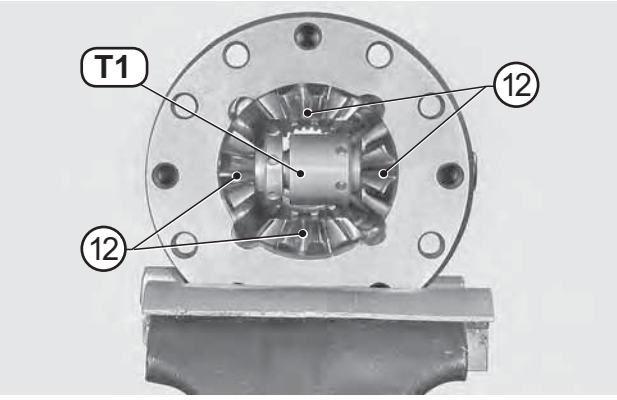

FIGURE 12: Leaving the released planetary in its position, lock again tool T1 (See drawing T1 p. 140).
Repeat pin extraction operation on the second planetary pin (11).
Repeat the same operations on the remaining pins.

https://truckmanualshub.com/

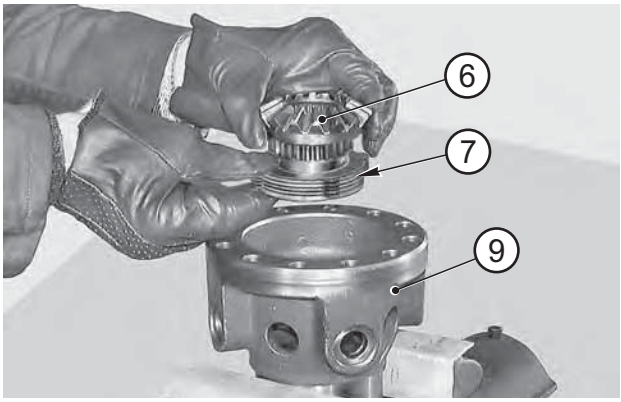

FIGURE 13: Remove tool T1 (See drawing T1 p. 140) and extract from the differential unit (9) the two final planetary gears (12), the 2nd differential side gear (6) and the whole friction assembly concerned (7).

https://truckmanualshub.com/

ASSEMBLY

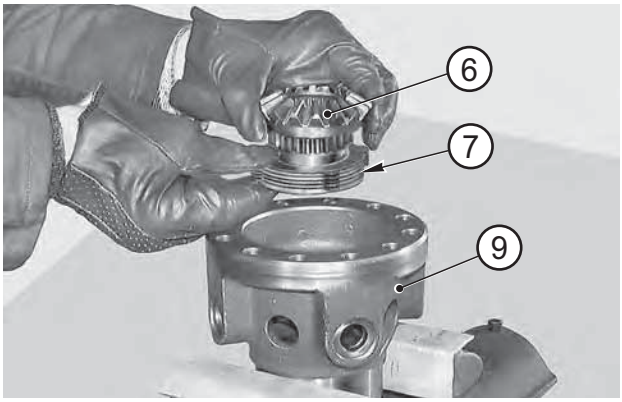

FIGURE 14: Place the friction disc assembly (7) - suitable for the specific type of slipping and differential side gear (6) into the differential unit (9).
The composition of the unit is illustrated in the points below.

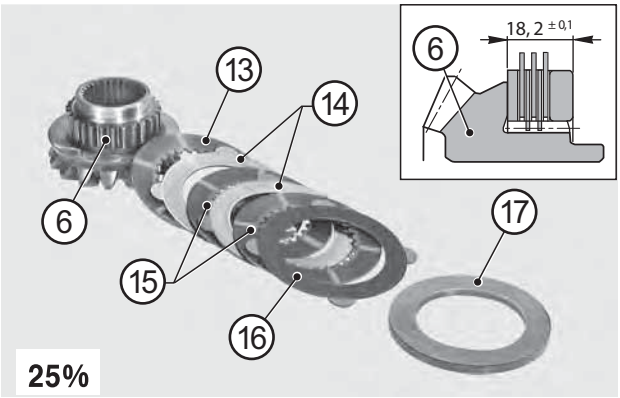

FIGURE 15: 25% FRICTION UNIT COMPOSITION
Friction ring with inner disc (13), intermediate discs (14) and friction discs (15) alternated, outer disc (16) and spacer (17).

⚠CAUTION

As to rings (13) and (16), the side without notches must face outwards.

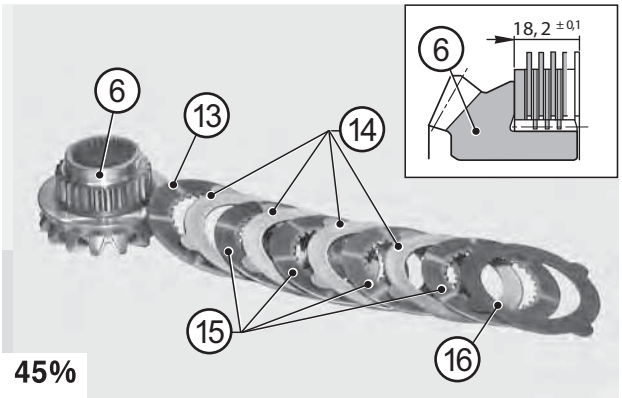

FIGURE 16: 45% FRICTION UNIT COMPOSITION
Friction ring with inner disc (13), intermediate discs (14) and friction discs (15) alternated, outer disc (16) and spacer (17).

⚠CAUTION

As to rings (13) and (16), the side without notches must face outwards.

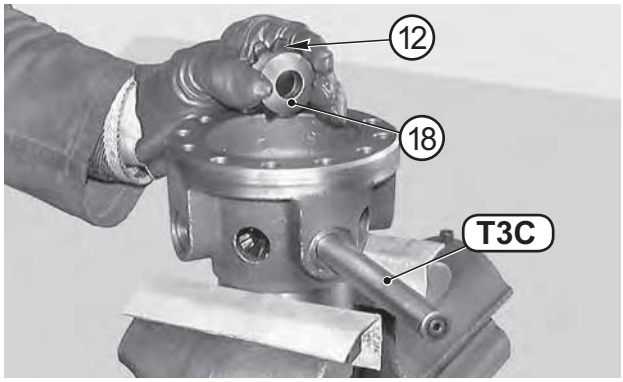

FIGURE 17: Position shim washer (18) and the first planetary gear (12).
Hold in position with bar T3C (See drawing T3 p. 141).

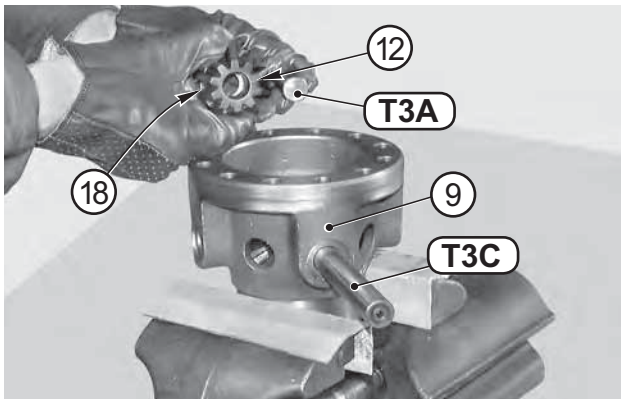

FIGURE 18: Using press tool T3A (See drawing T3 p. 141), position the second planetary gear (12) and relative shim washer (18).

https://truckmanualshub.com/

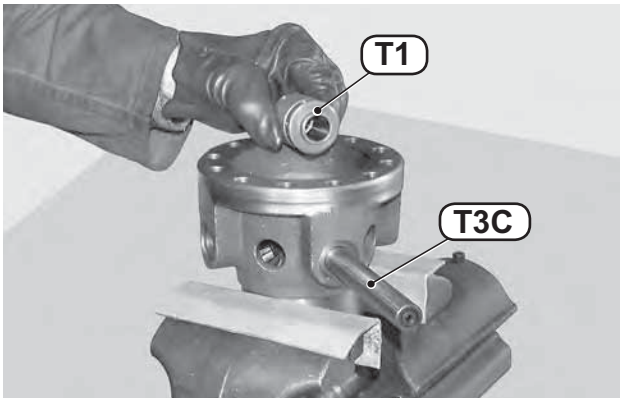

FIGURE 19: Insert tool T1 (See drawing) in-between the two planetary gears (12).
Align the whole unit, pushing bar T3C (See drawing T3 p. 141) in as far as it will go, until press tool T3A (See drawing T3 p. 141) is expelled.

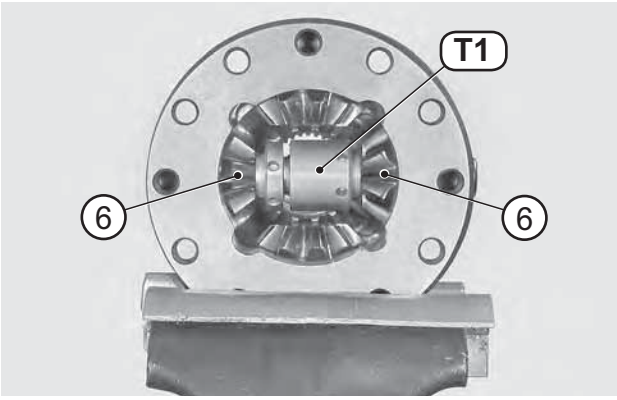

FIGURE 20: Lock tool T1 (See drawing T1 p. 140) behind the planetary gears (12).
After locking the tool, remove bar T3C (See drawing T3 p. 141).

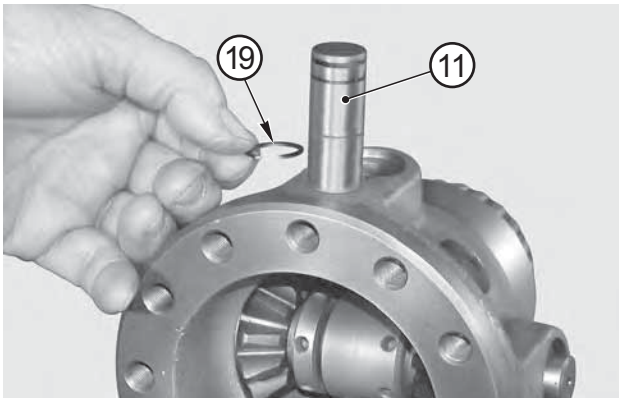

FIGURE 21: Fit snap rings (19) onto the pins (11).

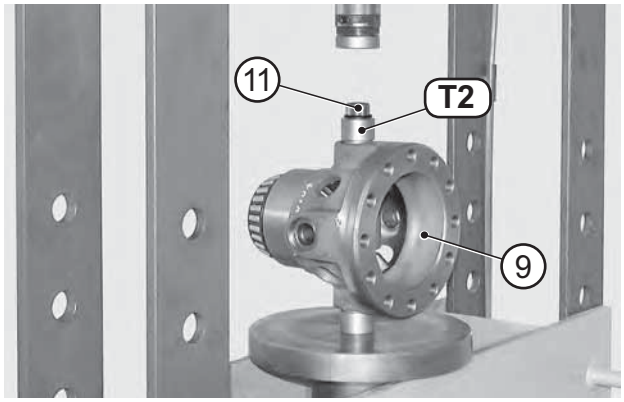

FIGURE 22: Position the differential unit (9) under the press, position bushing T2 (See drawing T2 p. 140) and insert the planetary pin (11).

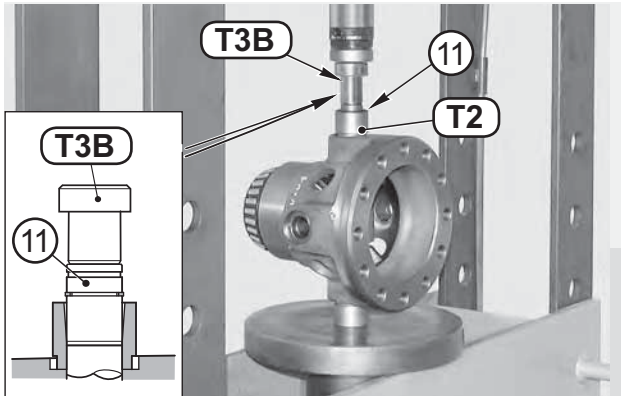

FIGURE 23: Place press tool T3B (See drawing T3 p. 141) on top of the planetary pin (11).

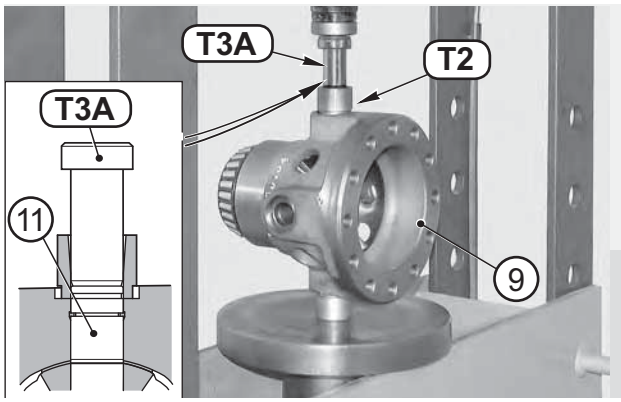

FIGURE 24: Press press tool T3B (See drawing T3 p. 141) as far down as it will go.

https://truckmanualshub.com/

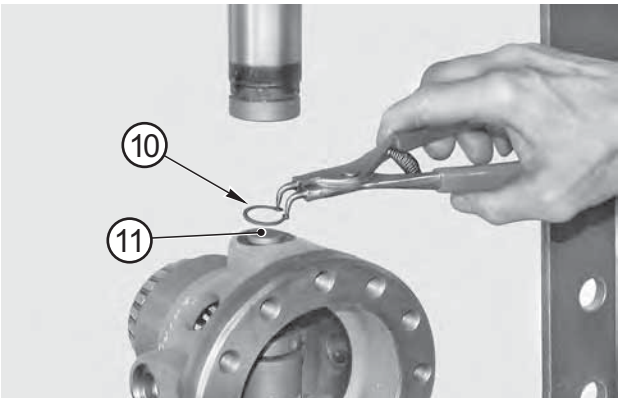

FIGURE 25: Remove press tool T3B (See drawing T3 p. 141), bushing T2 (See drawing T2 p. 140) and fit the snap ring (10) onto the pin (11).

⚠CAUTION

Make sure that the snap ring centers seat and positions itself on the differential unit face.
Repeat the operations on the other planetary pins.

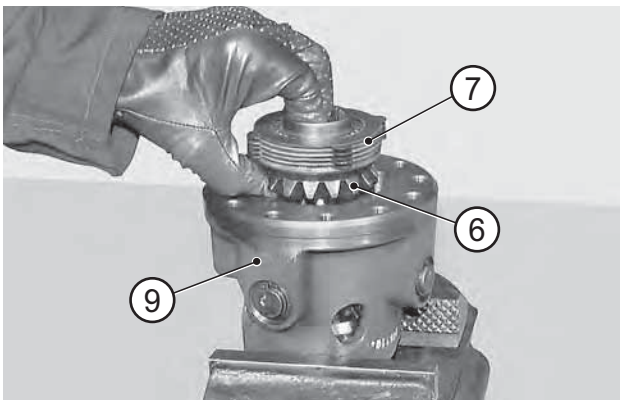

FIGURE 26: Check that planetary have a light clearance in relation to the first planetary gear.
Position the second differential side gear (6) and the second friction disc assembly (7) into the differential unit (9).

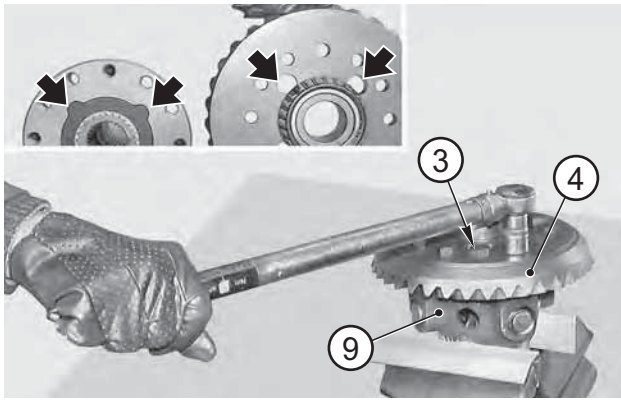

FIGURE 27: Line the lubrication holes up with the slots in the differential carrier. Orient the holes of the crown (4) towards the protrusions of the braking unit. Position the crown (4) on the differential unit (9) and lock it with the screws (3) previously coated with Loctite 242.
Torque wrench setting for screws: 128 - 142 N·m.

NOTE:

Tighten screws using the criss-cross method.

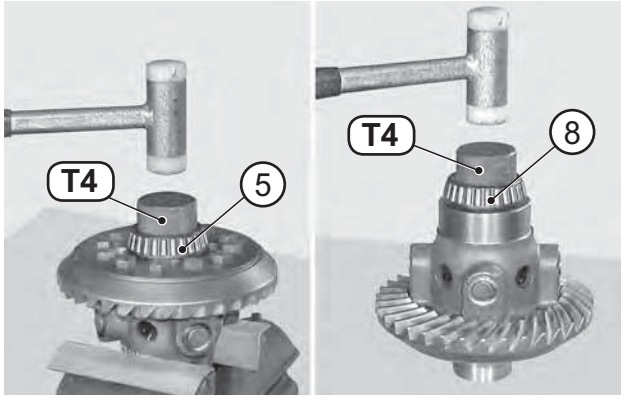

FIGURE 28: If bearings (5) and (8) have been removed, install them using tool T4 (See drawing T4 p. 141).

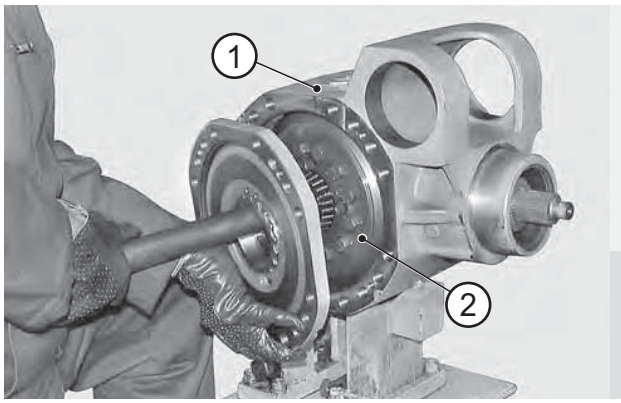

FIGURE 29: Install the whole differential assembly (2) into the central body (1).
For details, see DIFFERENTIAL UNIT p. 61.

https://truckmanualshub.com/

SPECIAL TOOLS

T1

P/N: 3708

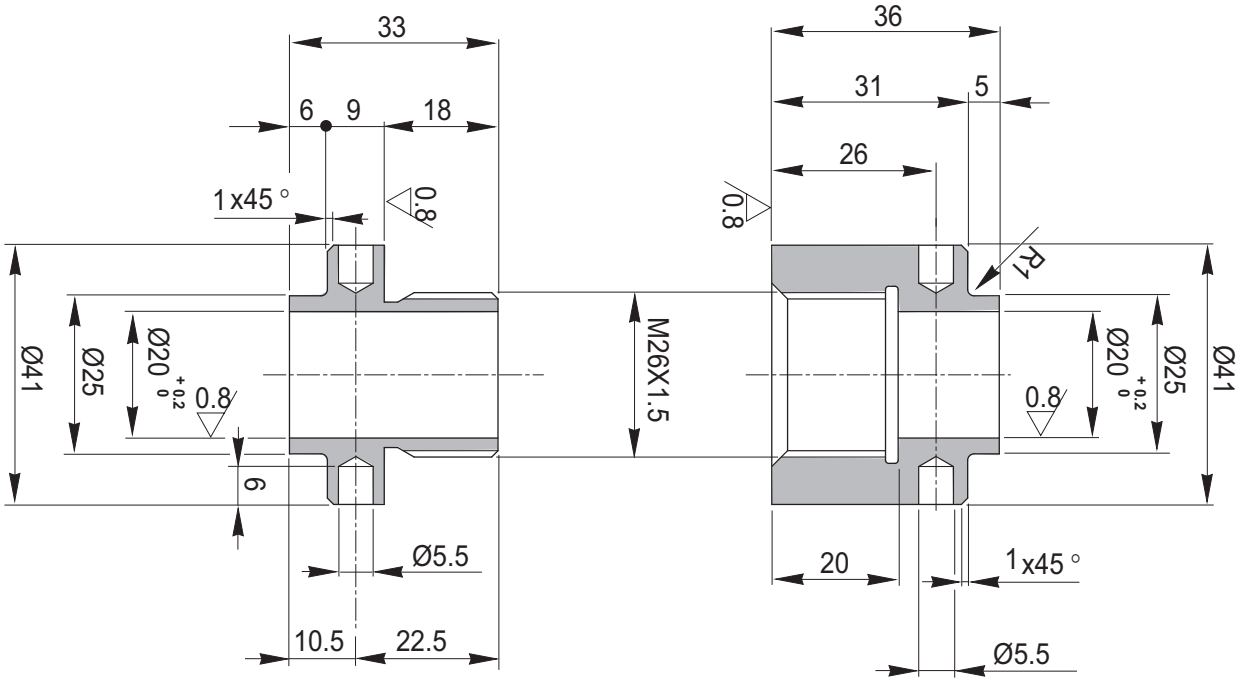

T2

P/N: 3424

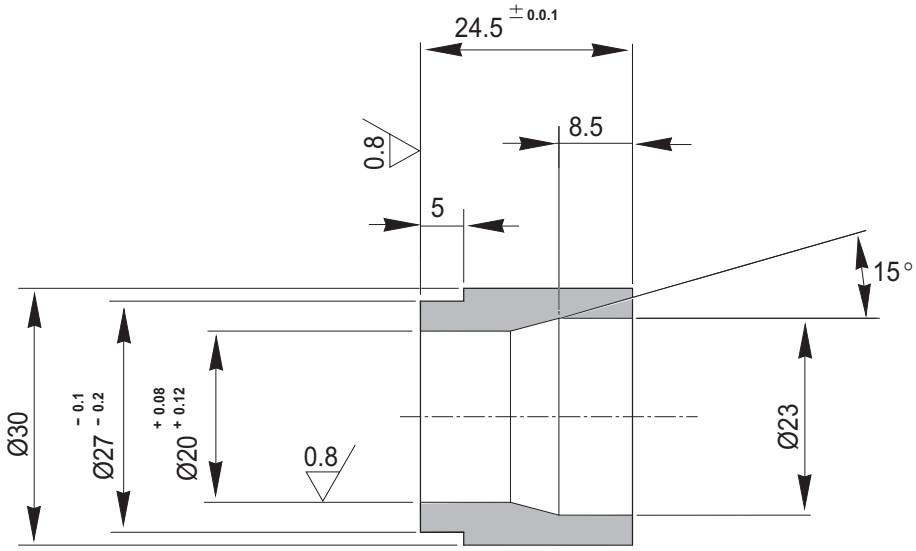

https://truckmanualshub.com/

T3

P/N: 2306

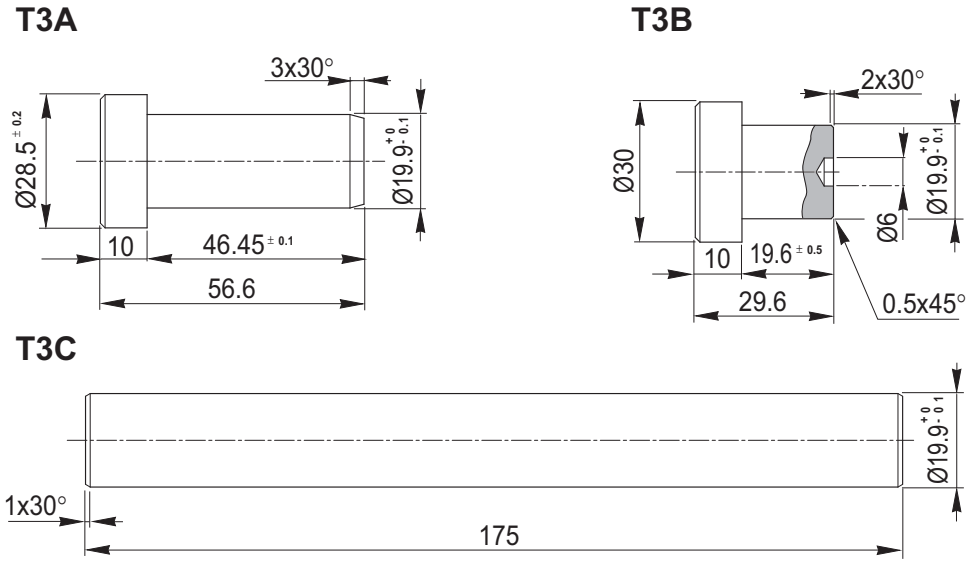

T4

P/N: 3332

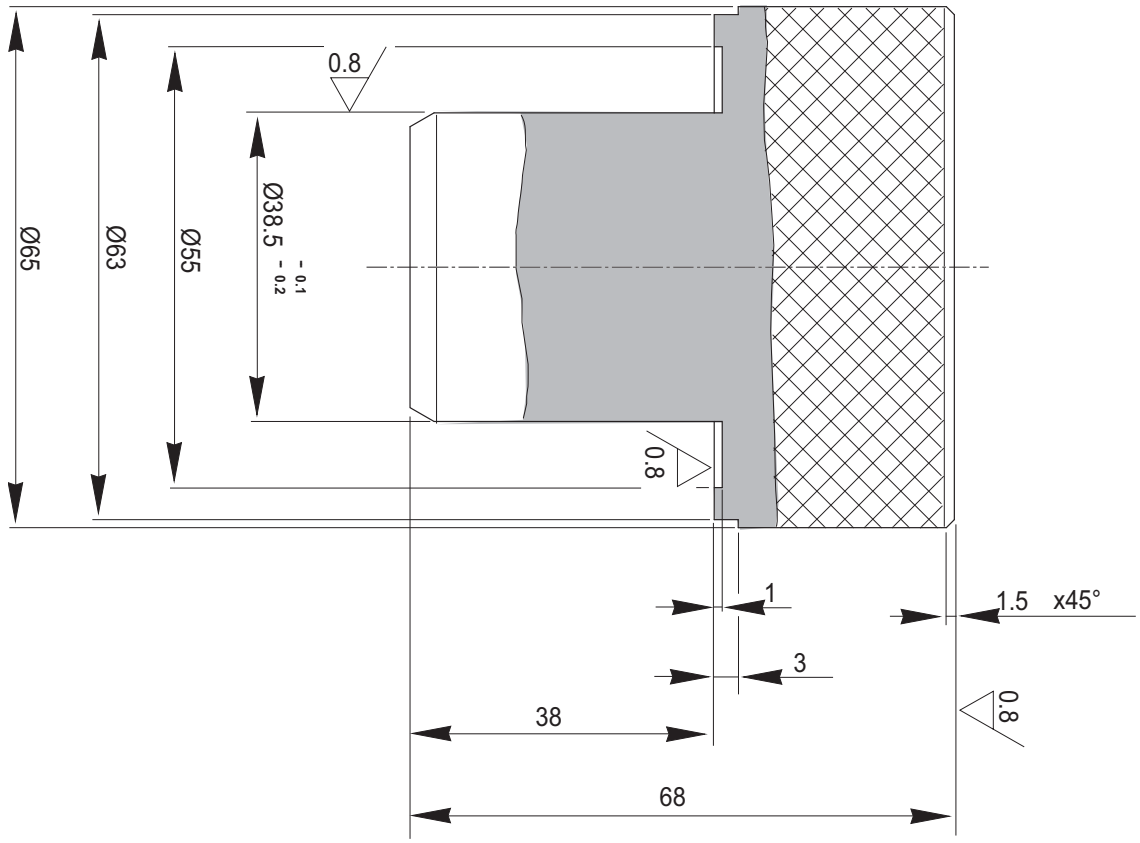

https://truckmanualshub.com/

https://truckmanualshub.com/

HYDRAULIC DIFFERENTIAL LOCK

EXPLODED VIEW

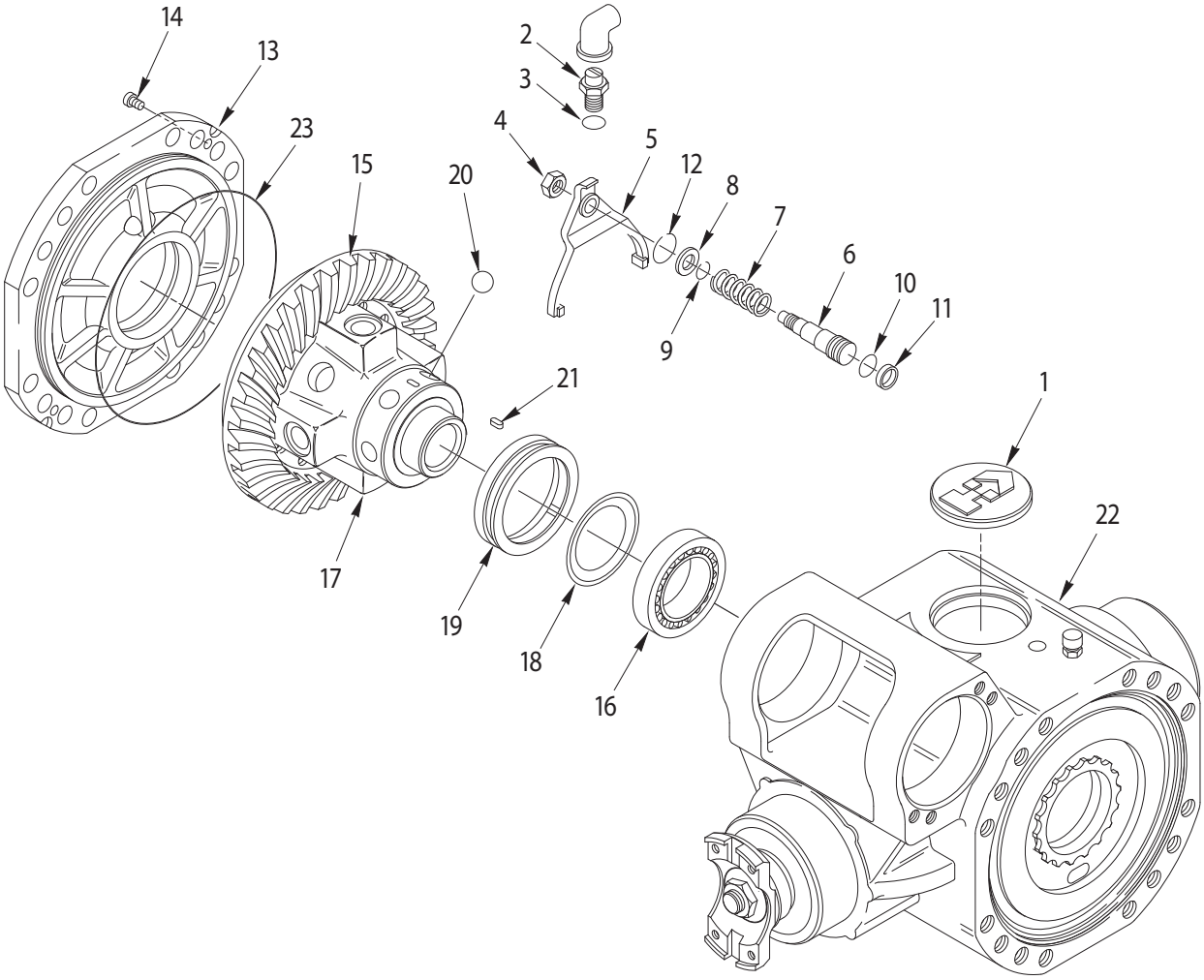

https://truckmanualshub.com/

DISASSEMBLY

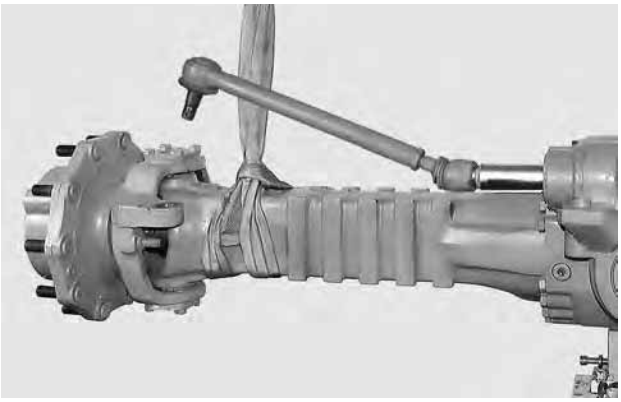

FIGURE 1: Remove the arms.
For details, see CHECKING WEAR AND REPLACING THE BRAKING DISCS p. 19.

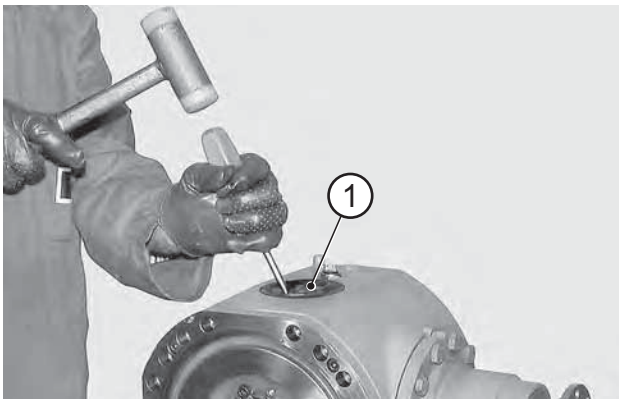

FIGURE 2: Remove the top cap (1).

NOTE:

The cap must be replaced each time the unit is disassembled.

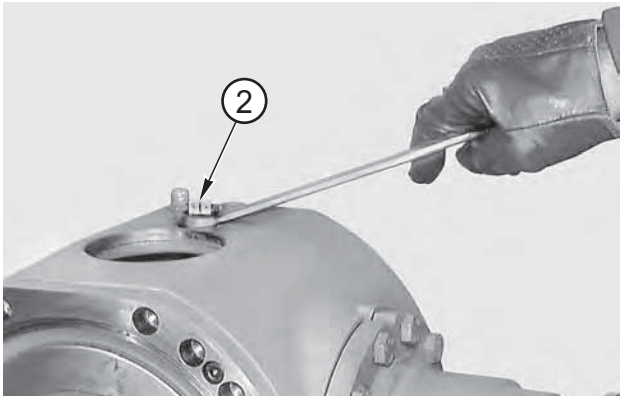

FIGURE 3: Remove the security switch (2).

NOTE:

Check the state of the o-ring (3).

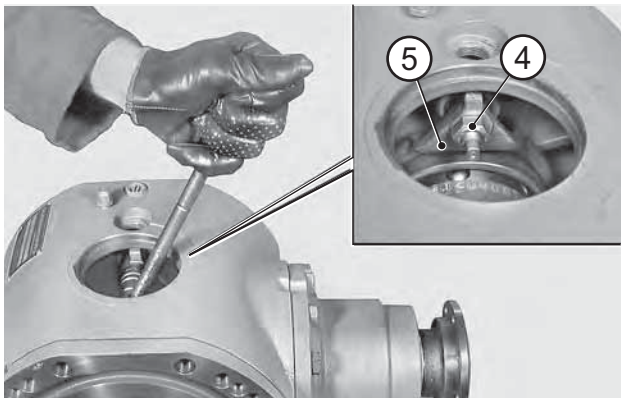

FIGURE 4: Loosen the lock nut (4) of selector fork (5) by approximately 2 turns.

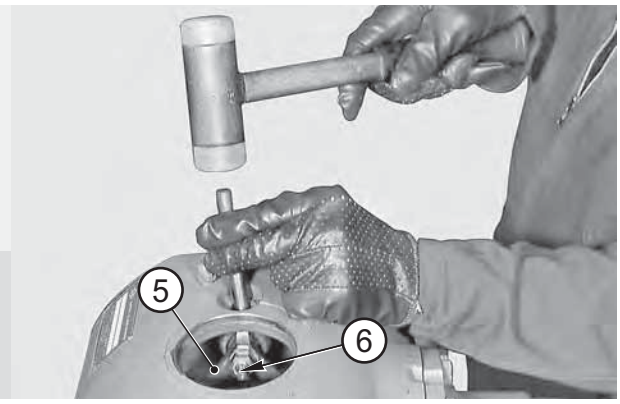

FIGURE 5: Using a metal punch and a hammer, disengage selector fork (5) from piston cone (6).

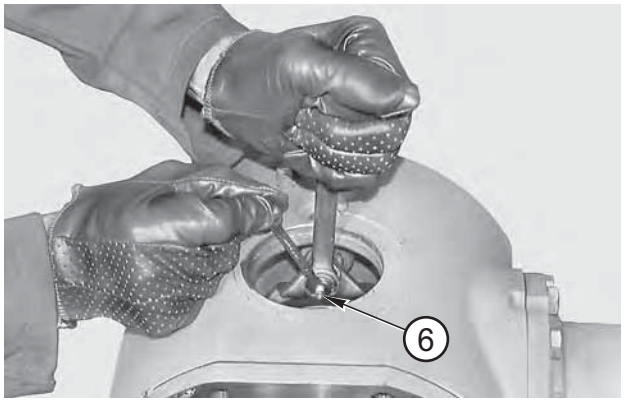

FIGURE 6: Using two wrenches, lock piston (6) and remove nut (4).

https://truckmanualshub.com/

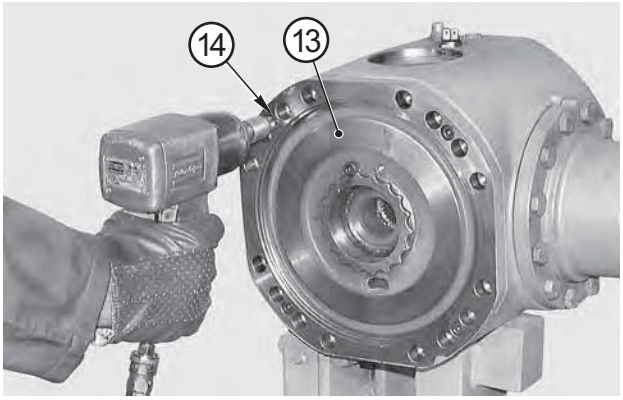

FIGURE 7: Remove screws (14) and remove the intermediate cover (13).

NOTE:

Support the differential unit with a lever.

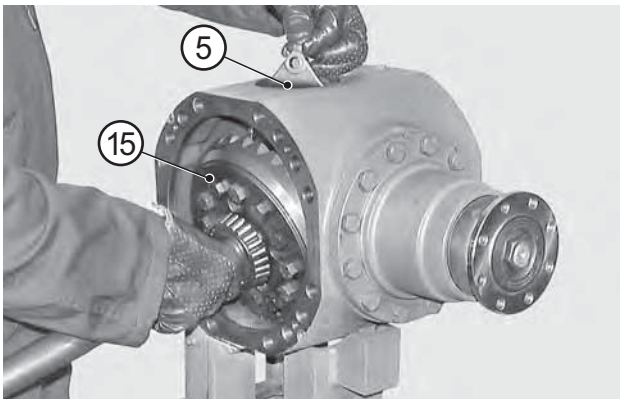

FIGURE 8: Disconnect selector (5) from piston (6). While holding the selector up, remove the differential unit (15).

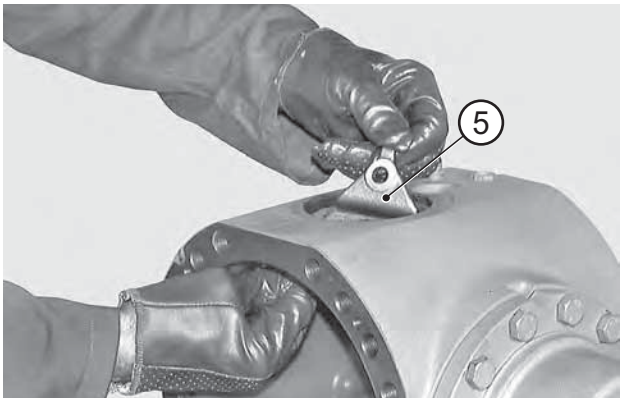

FIGURE 9: Extract selector fork (5).

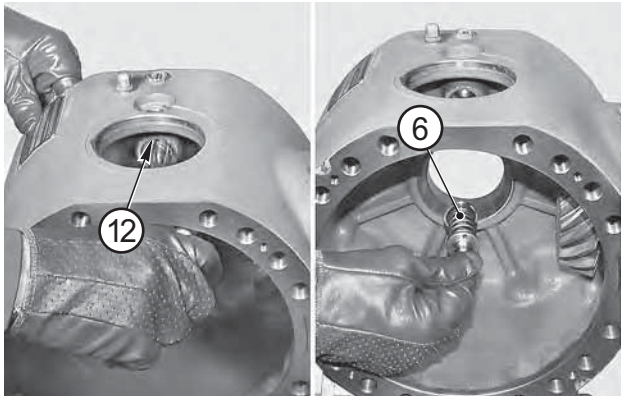

FIGURE 10: Remove snap ring (12) and whole piston (6).

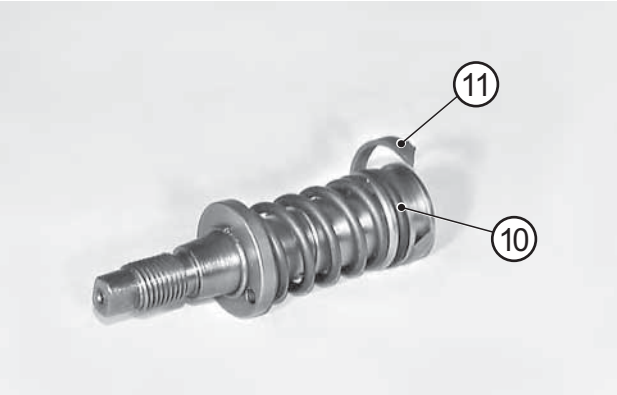

FIGURE 11: Remove guide ring (11) and o-ring (10).

NOTE:

The guide ring (11) and o-ring (10) must be replaced each time the unit is disassembled.

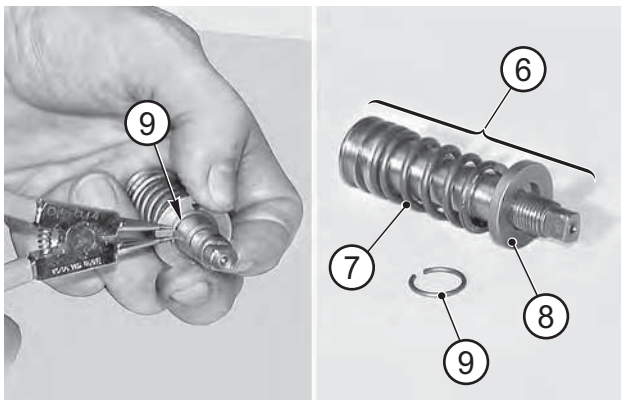

FIGURE 12: Remove snap ring (9) and take piston unit (6) apart. Remove all component parts.

https://truckmanualshub.com/

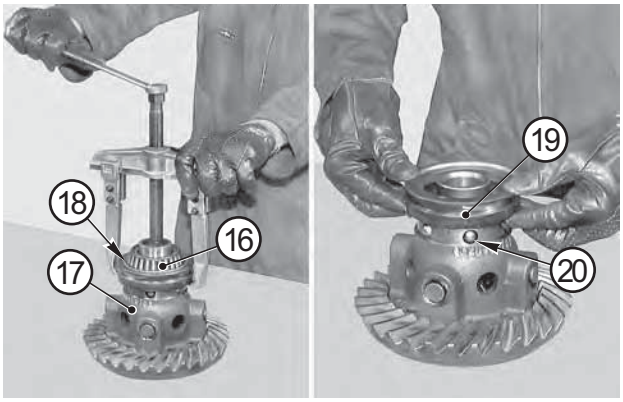

FIGURE 13: Remove bearing (16) from the differential carrier (17) as well as the stop ring (18), the sleeve (19) and the spheres (20).

NOTE:

Write down the direction of assembly of the stop ring (18).

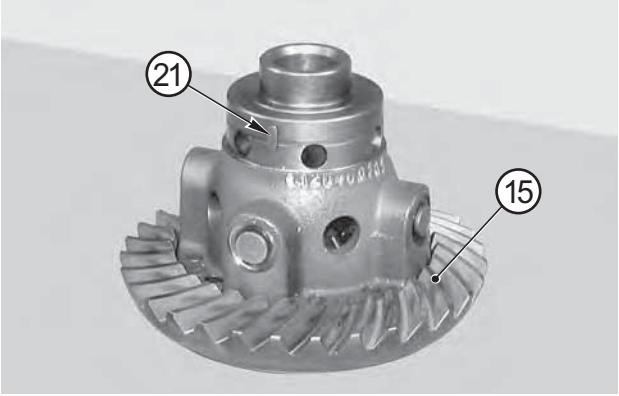

FIGURE 14: ONLY IF NECESSARY
Remove the key (21) and disassemble the differential unit (15).
For details, see DIFFERENTIAL UNIT p. 61.

https://truckmanualshub.com/

ASSEMBLY

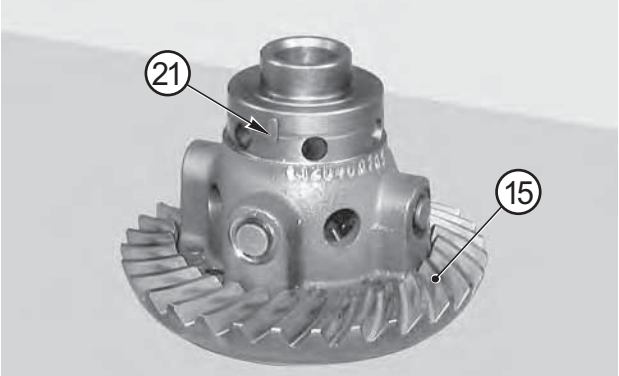

FIGURE 15: ONLY IF PREVIOUSLY DISASSEMBLED
Assemble the differential unit (15). (For details, see DIFFERENTIAL UNIT p. 61). Position the key (21) in the differential unit (19).

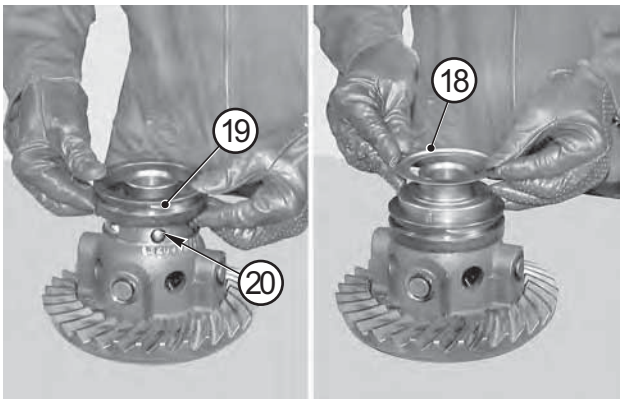

FIGURE 16: Install spheres (20), sleeve (19) and stop ring (18).

NOTE:

Pay great attention to ring orientation (18).

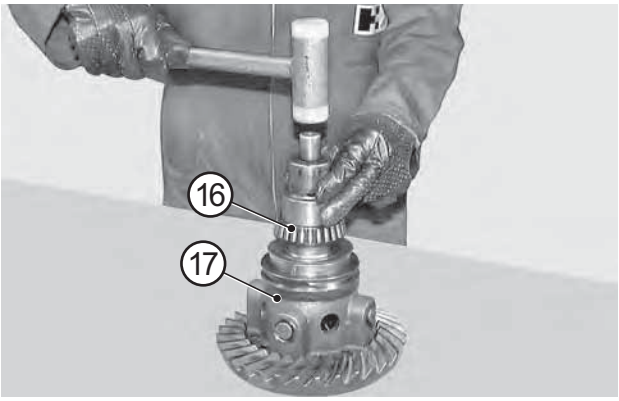

FIGURE 17: Install bearing (16) onto the differential carrier (17).

NOTE:

Make sure that the bearing is well set in the differential carrier.

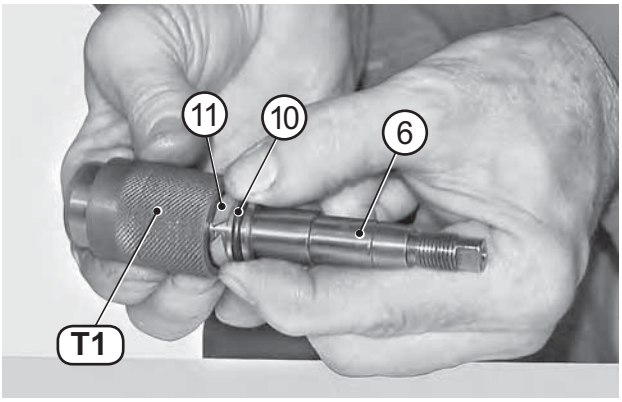

FIGURE 18: Fit o-ring (10) and guide ring (11) onto the piston (6). Lubricate seals and insert the assembly into tool T1 (See drawing T1 p. 149).

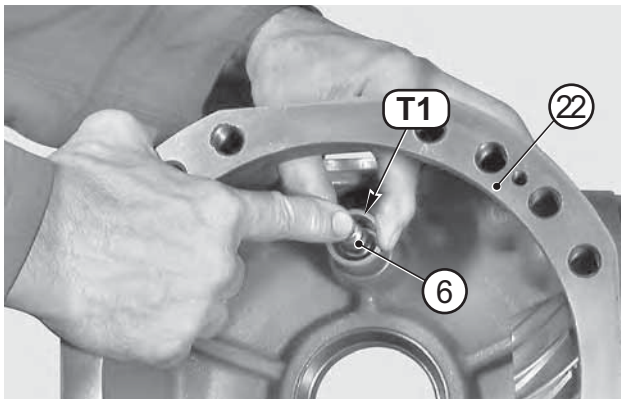

FIGURE 19: Insert tool T1 (See drawing T1 p. 149) in the central unit (22) and push the piston (6) into the seat.
Remove tool T1 (See drawing T1 p. 149)

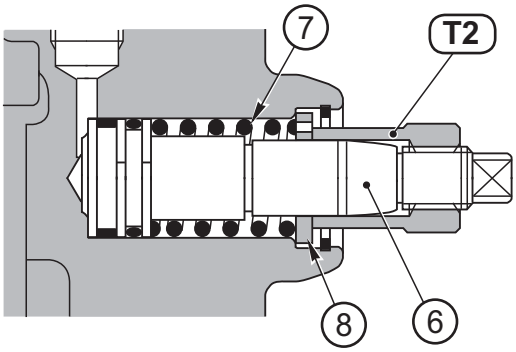

FIGURE 20: Install spring (7) and washer (8) on the piston (6) and install tool T2 (See drawing T2 p. 149).

https://truckmanualshub.com/

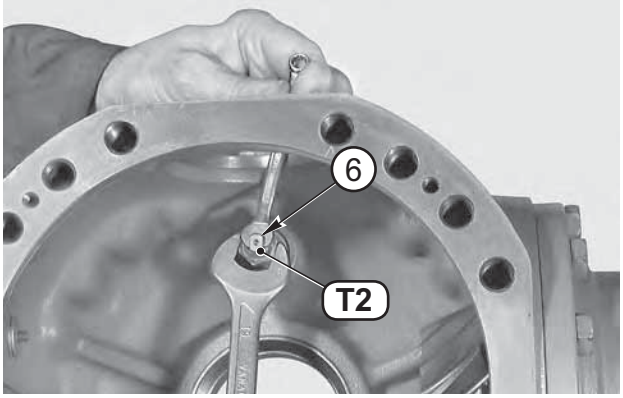

FIGURE 21: Screw tool T2 (See drawing T2 p. 149) on the thread of the piston (6) to compress the spring (7) and vacate the seat for installing the snap ring (12).

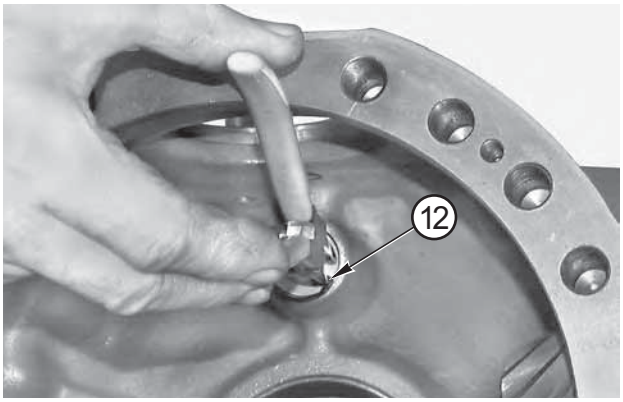

FIGURE 22: Install the snap ring (12).
Remove tool T2 (See drawing T2 p. 149) and fit the snap ring (9) of spring (7).

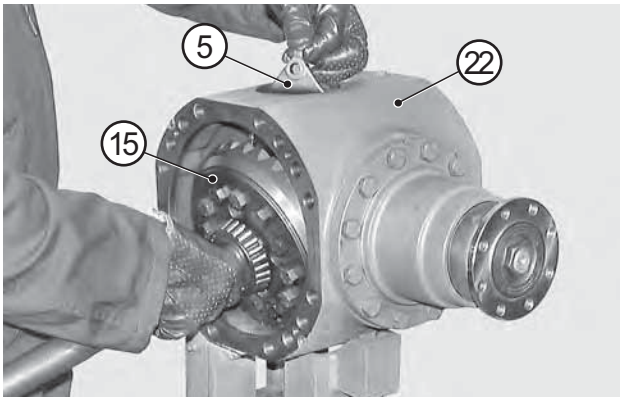

FIGURE 23: Insert the selector fork (5) and the differential unit (15) into the central unit (22).
Engage the selector fork (5) in the coupling (19) and on the piston (6).

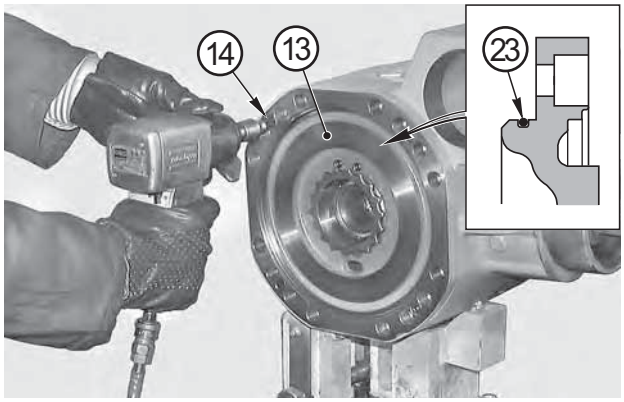

FIGURE 24: Install the intermediate cover (13) and lock it with screws (14). Tighten screws using a torque wrench setting of 23.8 - 26.2 N·m.

NOTE:

Carefully check the state of the o-ring (23).

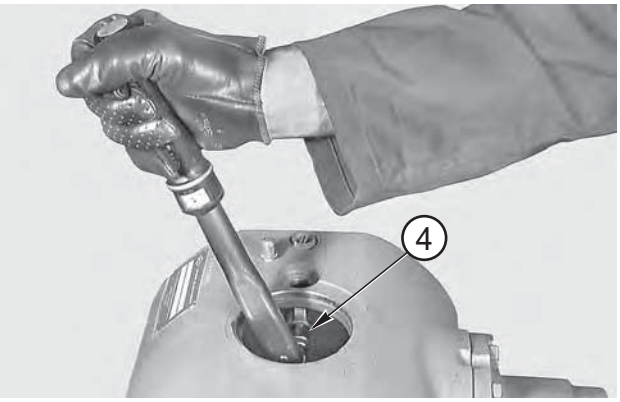

FIGURE 25: Install the lock nut (4) of the selector fork (5) and lock it with a torque wrench set to a torque of 70 - 75 N·m.

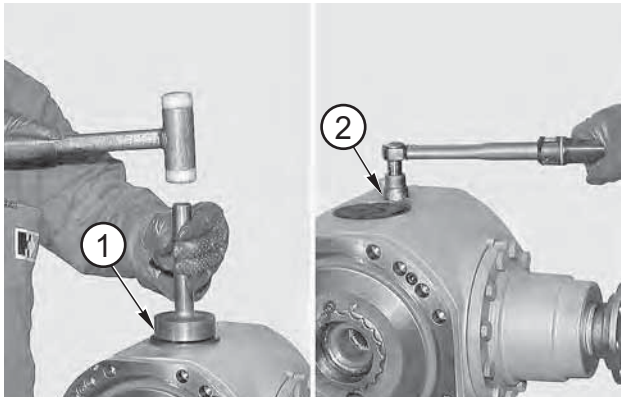

FIGURE 26: Install the security switch (2) complete with o-ring; torque wrench setting: maximum 30 N·m.
If necessary, adjust differential unit clearances. (see DIFFERENTIAL UNIT p. 61).
Install the top cap (1) and the arms. (For details, see CHECKING WEAR AND REPLACING THE BRAKING DISCS p. 19).

https://truckmanualshub.com/

SPECIAL TOOLS

T1

P/N: 3543

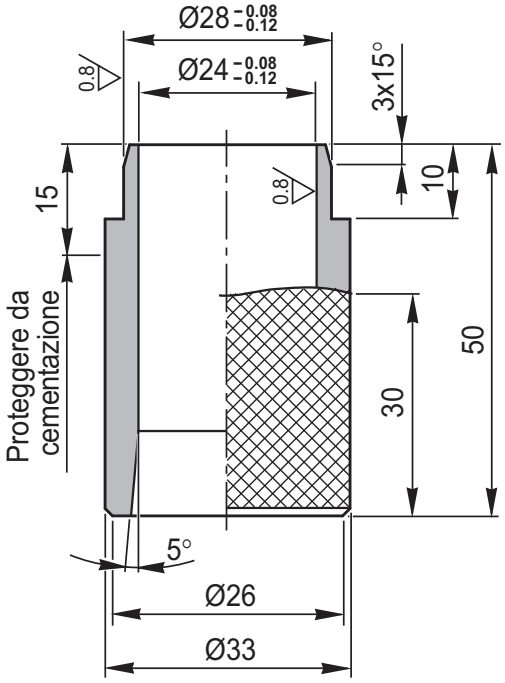

T2

P/N: 2316

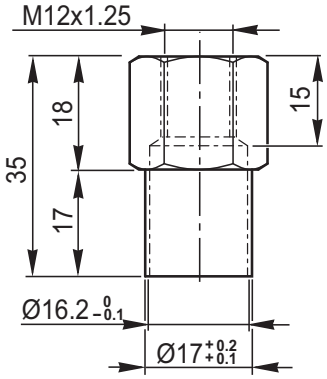

https://truckmanualshub.com/

https://truckmanualshub.com/

HYDRAULIC NEGATIVE BRAKE

EXPLODED VIEW

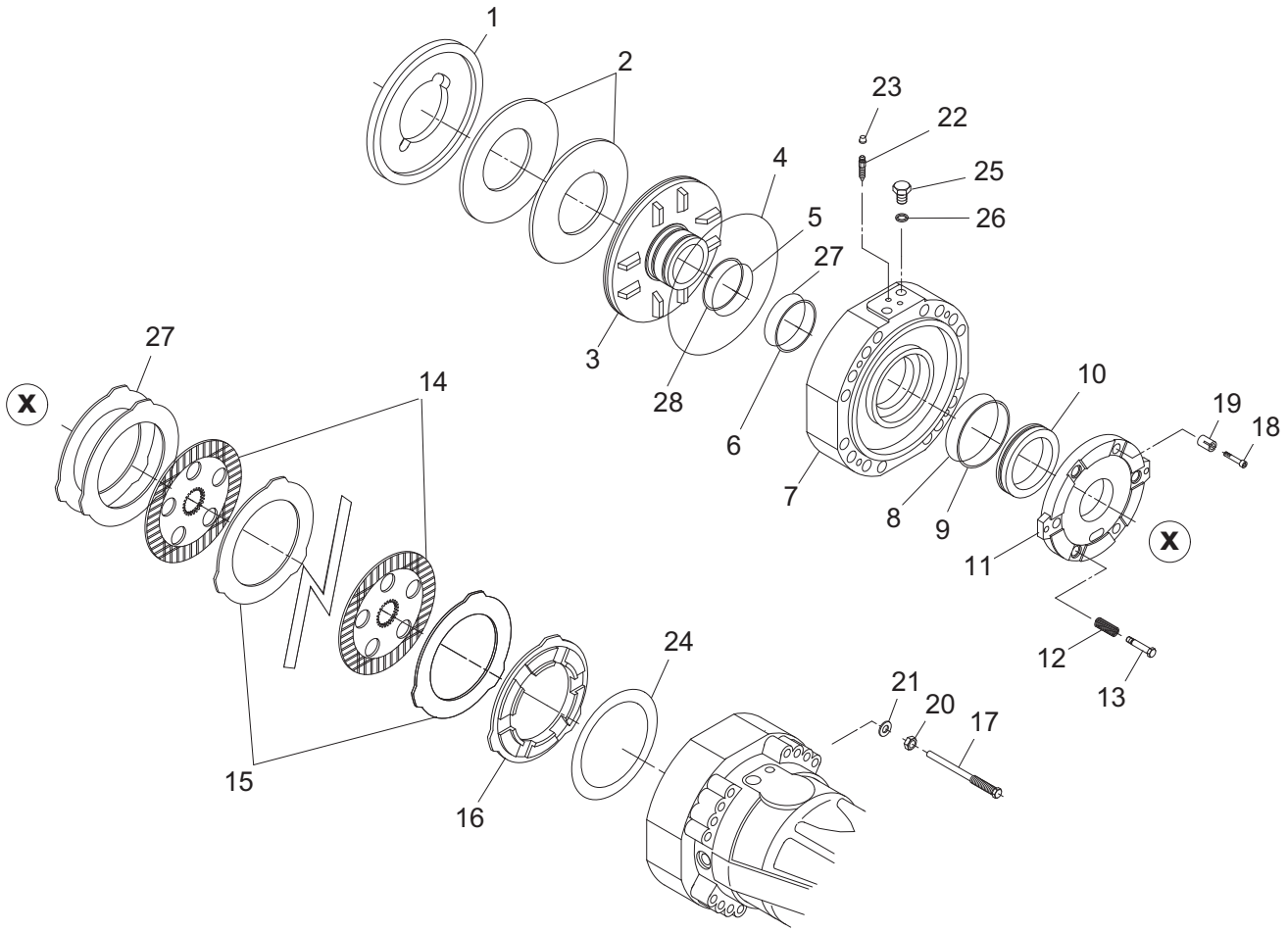

https://truckmanualshub.com/

DISASSEMBLY

⚠ DANGER

Before maintaining brakes, when the axle is installed on the vehicle, follow all safety instructions in the Original Equipment Manufacturer (OEM) manual that came with the vehicle.

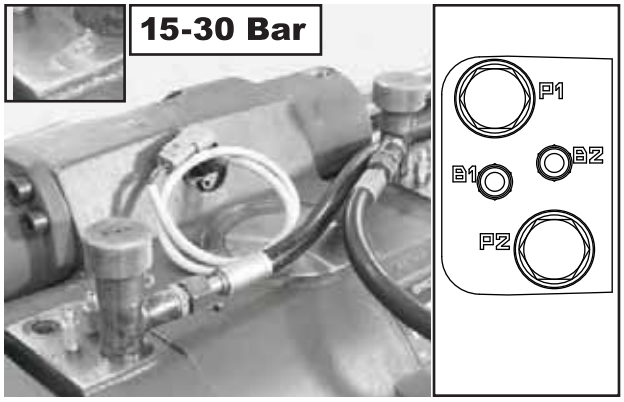

FIGURE 1: ADJUSTING THE BRAKES
Connect an external pump to the union piece " P1 " of the negative brake and introduce a pressure of 15 - 30 bar to eliminate the pressure of the Belleville washers (2).

FIGURE 2: Sling the arm to be removed and connect it to a hoist.
Loosen and remove screws (17) .

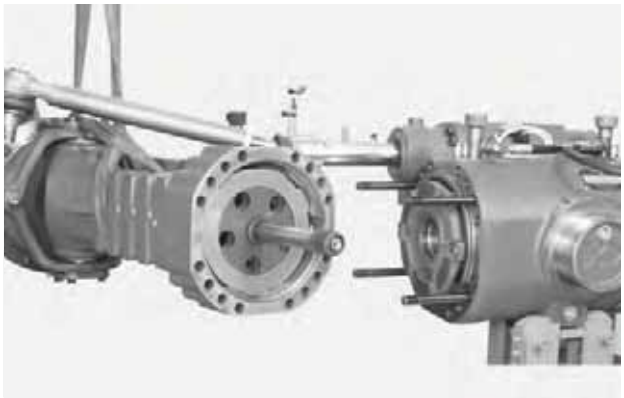

FIGURE 3: Remove arm together with brakes and axle shafts; lay down the arm vertically.
Release pressure.

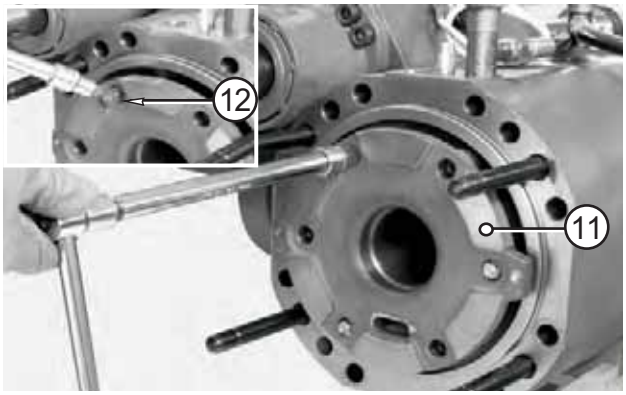

FIGURE 4: Remove the reversal springs (12) from the cover (11).

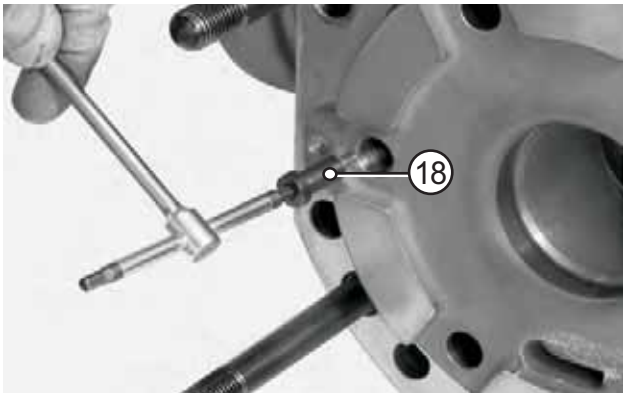

FIGURE 5: Remove the pin screws (18) guiding the cover (11).

⚠ CAUTION

If the screws are to be replaced, write down the different colors for the different brake gaps.

https://truckmanualshub.com/

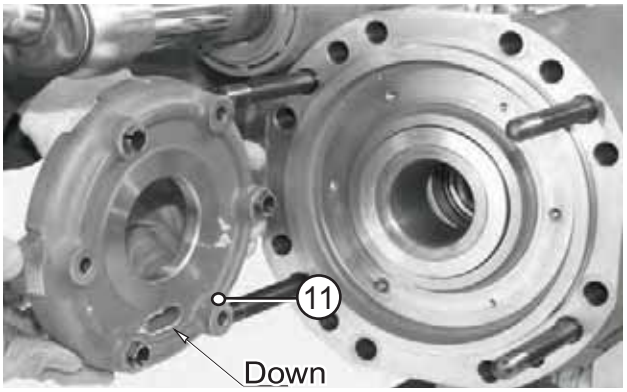

FIGURE 6: Write down their order of assembly and remove the counterwasher (11).

FIGURE 7: Loosen the studs and remove two of them.

FIGURE 8: Loosen the studs and remove two of them.

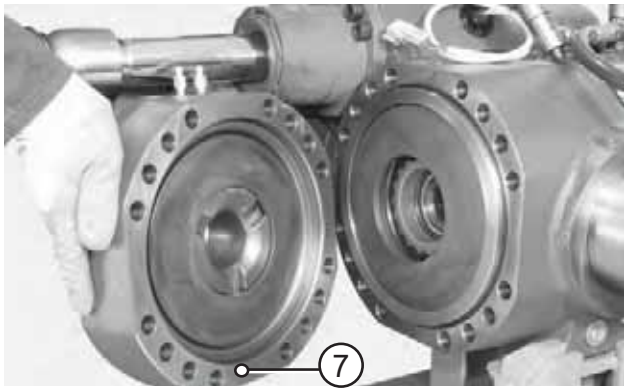

FIGURE 9: Move the cover (7) outwards.

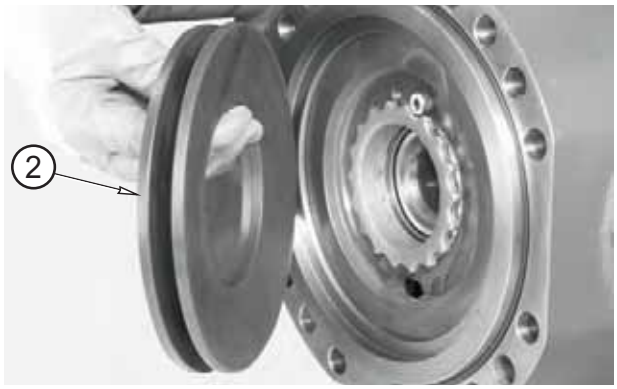

FIGURE 10: Remove the Belleville washers (2) and write down direction of assembly.

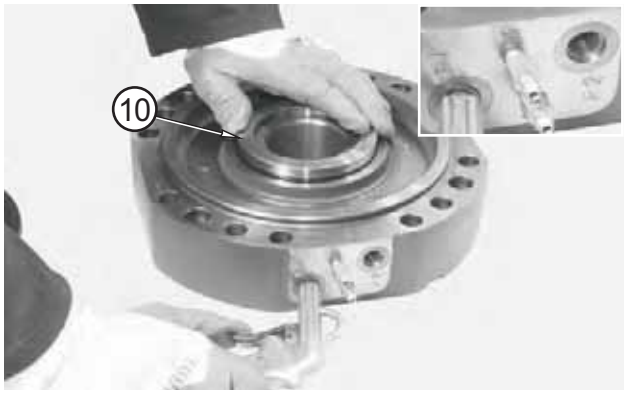

FIGURE 11: Slowly introduce low-pressure compressed air through the connection member for the service brake, in order to extract the piston (10).

⚠CAUTION

Hold the piston (10) back, as it may be suddenly ejected and damaged.

https://truckmanualshub.com/

NOTE:

The o-rings must be replaced each time the unit is disassembled.

FIGURE 12: Write down their order of assembly and mark and remove negative piston sign the position.

FIGURE 13: Slowly introduce low-pressure compressed air through the connection member for the negative brake, in order to extract the piston (3).

⚠CAUTION

Hold the piston (3) back, as it may be suddenly ejected and damaged.

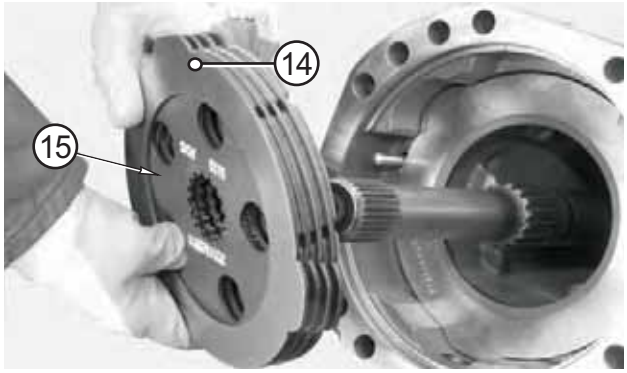

FIGURE 14: Remove brake discs (14) and (15), writing down direction of assembly.

NOTE:

If disks are not to be replaced, avoid changing their position.

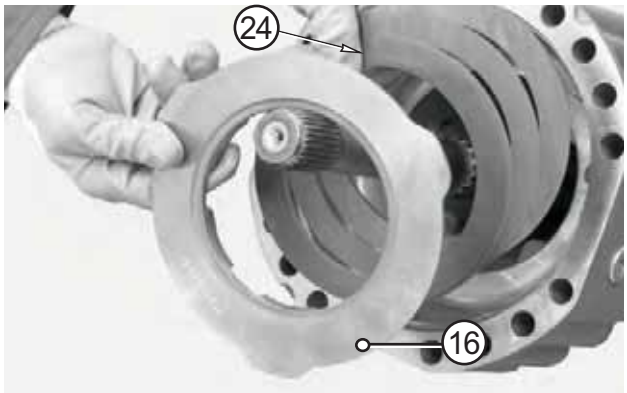

FIGURE 15: Remove braking discs (16) and shims (24), writing down direction of assembly.

NOTE:

If disks are not to be replaced, avoid changing their position.

https://truckmanualshub.com/

ASSEMBLY

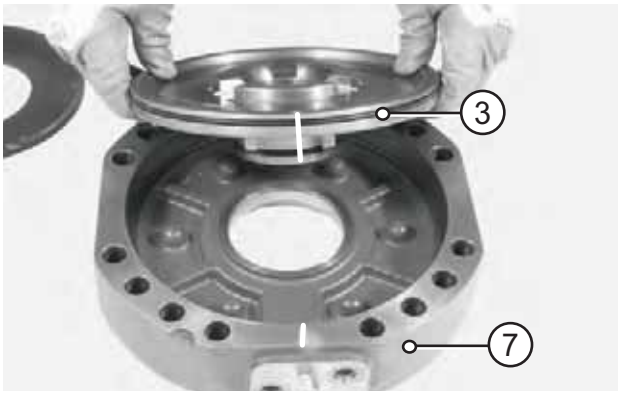

FIGURE 16: Fit o-rings (4)(28)(27)(5)(6) onto the piston (3). Lubricate the piston and the o-rings and install the unit into the cylinder (7).

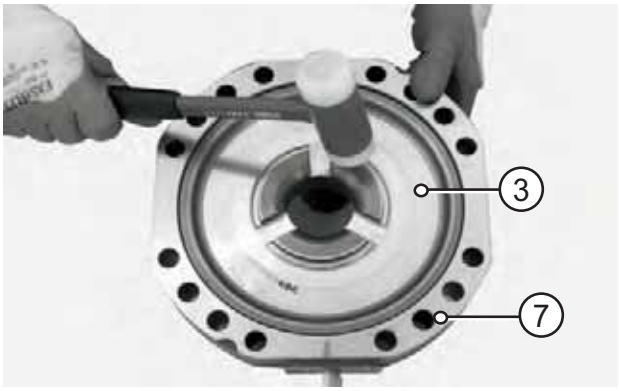

FIGURE 17: Using a plastic hammer, insert the piston (3) into the cylinder (7).

NOTE:

Lightly hammer all around the edge in an alternate sequence.

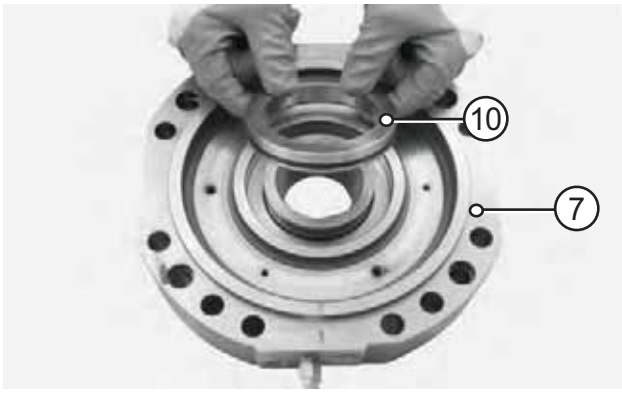

FIGURE 18: Fit o-rings (9) and (8) onto the piston (10). Lubricate the piston and the o-rings and install the unit into the cylinder (7).

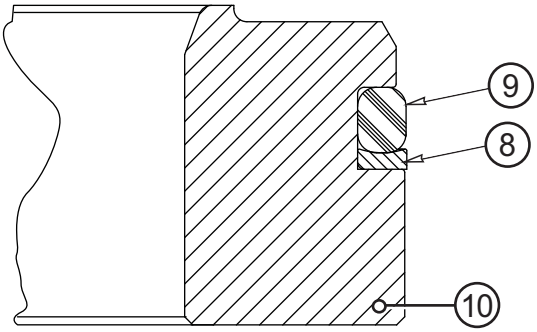

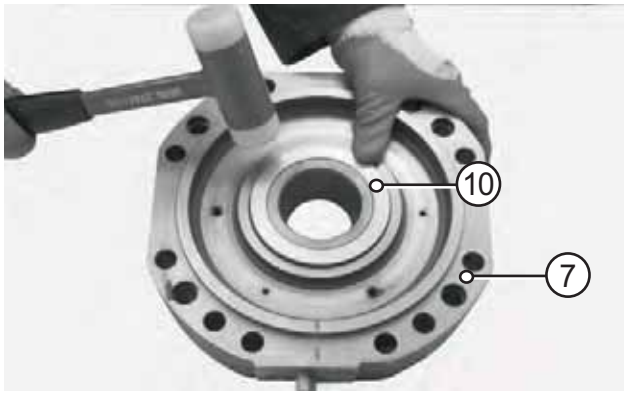

FIGURE 19: Using a plastic hammer, insert the piston (10) into the cylinder (7).

NOTE:

Lightly hammer all around the edge in an alternate sequence.

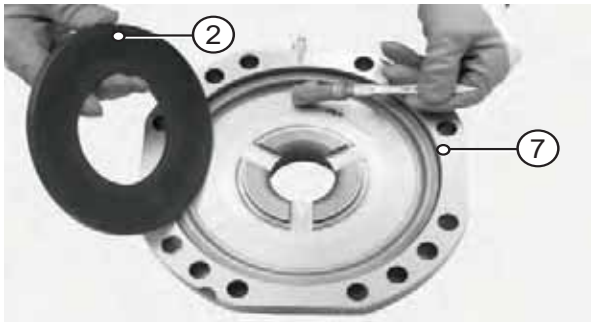

FIGURE 20: Apply grease and position the Belleville washers (2) and engage the cylinder (7).

NOTE:

Check the sense of direction of washers (7) and relative centering.

https://truckmanualshub.com/

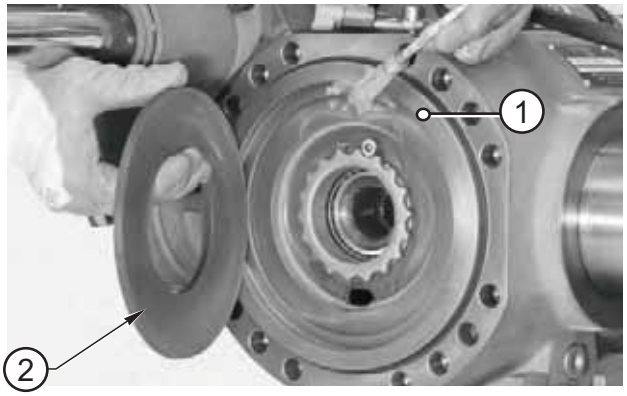

FIGURE 21: Apply grease and position the Belleville washers (2) and engage the cylinder (1).

NOTE:

Check the sense of direction of washers (2) and relative centering.

FIGURE 22: Check quality and position of the cylinder's o-ring.

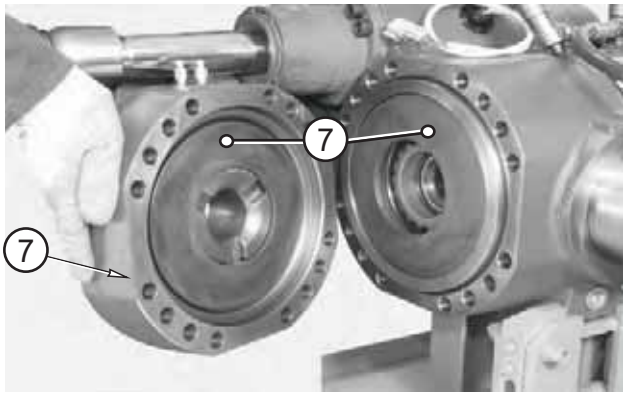

FIGURE 23: Position the Belleville washers (2) and engage the cylinder (7).

NOTE:

Check the sense of direction of washers (2) and relative centering.

FIGURE 24: Lock the cylinder.

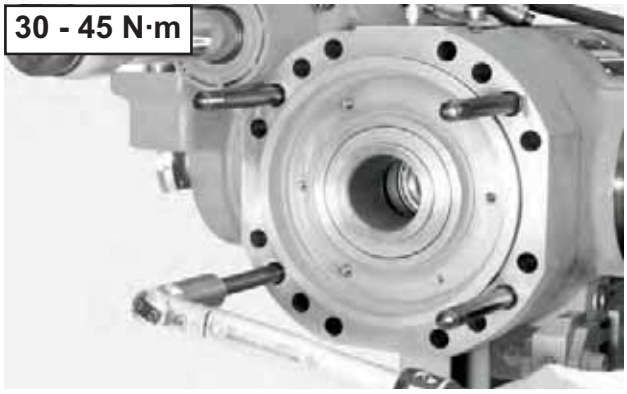

FIGURE 25: Tightening the studs with a torque wrench set to a torque of 30 - 45 N·m.

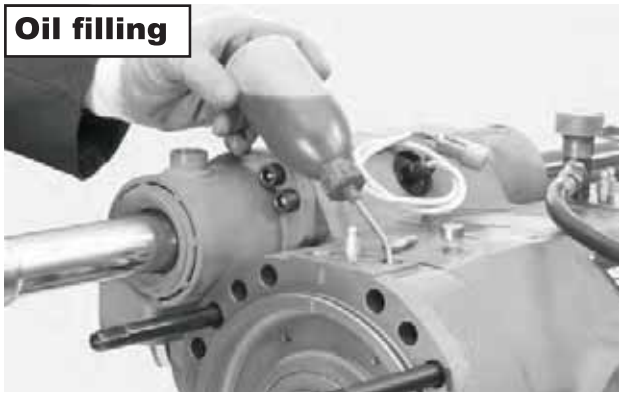

FIGURE 26: Fill with ATF oil. For details see ADJUSTMENT AND CHECKS p. 14

https://truckmanualshub.com/

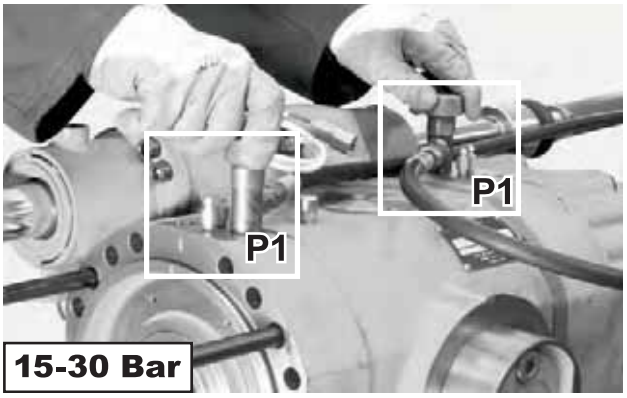

FIGURE 27: Connect an external pump to the negative brake and introduce pressure to 15 - 30 bar.

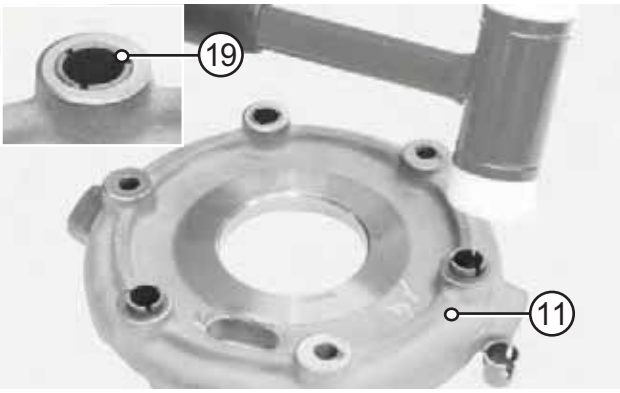

FIGURE 28: Insert the stroke automatic regulation springs (19); place them in line with the piston (11).

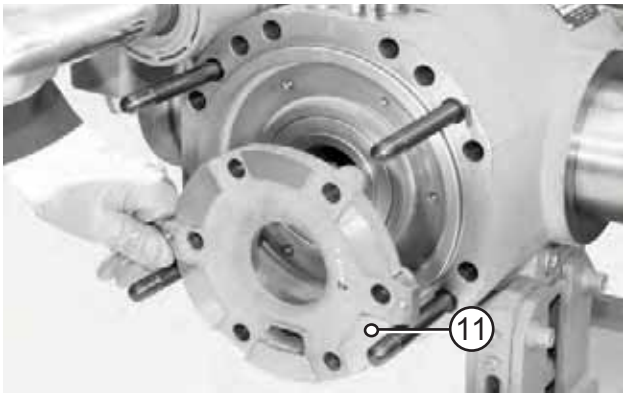

FIGURE 29: Insert the intermediate disk (11).

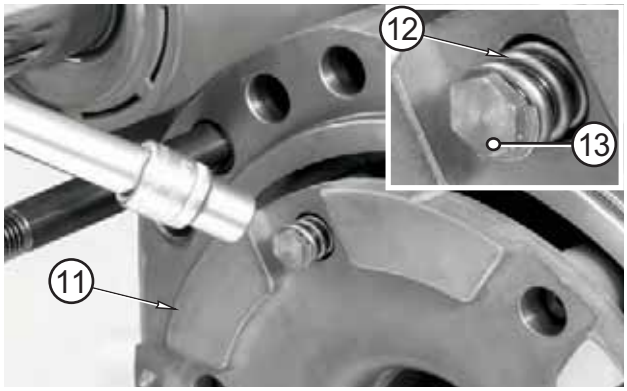

FIGURE 30: Fit the reversal springs (12)(13) on the piston (11).

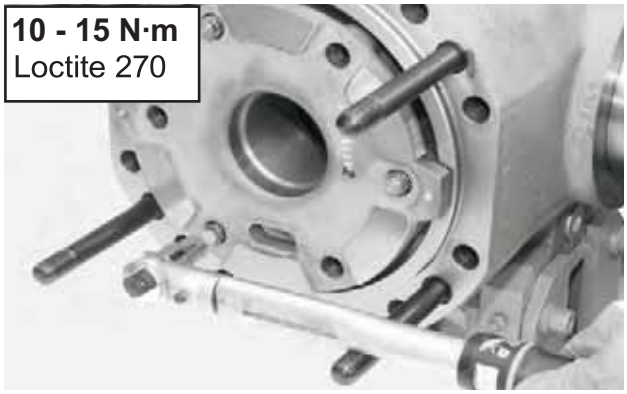

FIGURE 31: Apply LOCTITE 270 to the thread of the pistion adjustment nut.
Tighten with torque wrench setting of 10 - 15 N·m

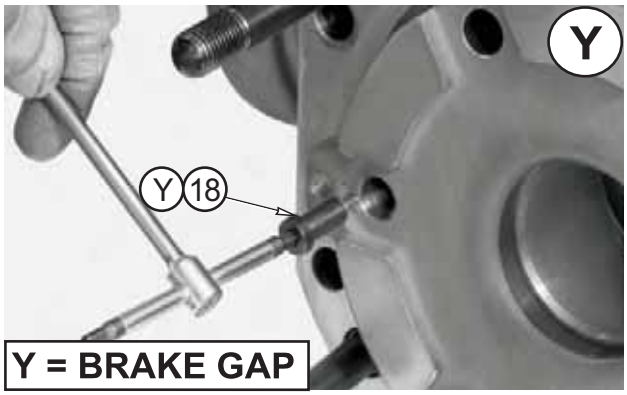

FIGURE 32: Y=brake gap
0,75mm 1,00mm 1,25mm 1,50mm
Depending on axle configuration.

https://truckmanualshub.com/

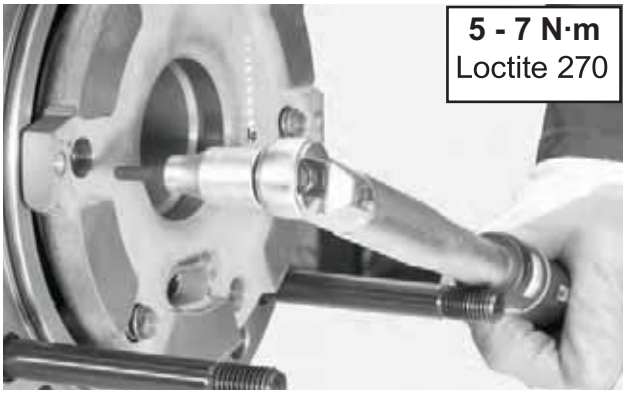

FIGURE 33: Fit the pin screws making sure that they are all of the same color.
Apply Loctite 270 to the thread.
Torque wrench setting: 5 - 7 N·m.

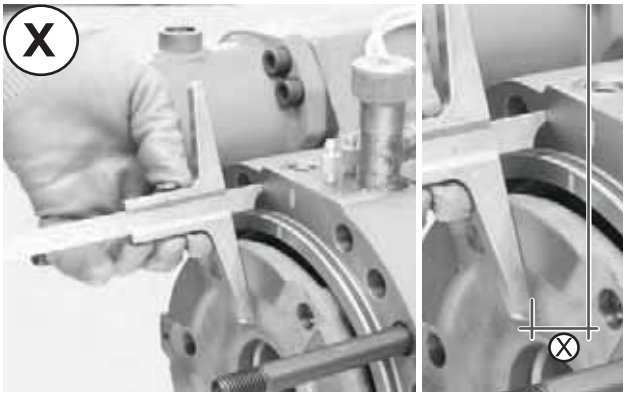

FIGURE 34: Take the measurement from the surface of the intermediate disk to the cover sealing surface with 30 bar of pressure introduced.
EXAMPLE: 25.4 mm

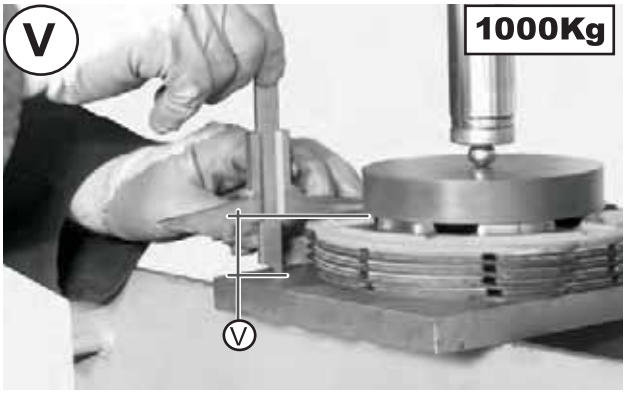

FIGURE 35: Put the brake disc pack including the shim under a press, load with 1000 kg and take the measure “V”.
EXAMPLE: V = 40 mm

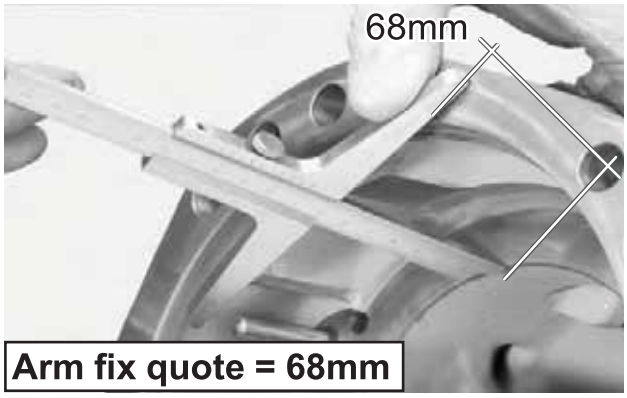

FIGURE 36: Arm fix quote = 68 mm

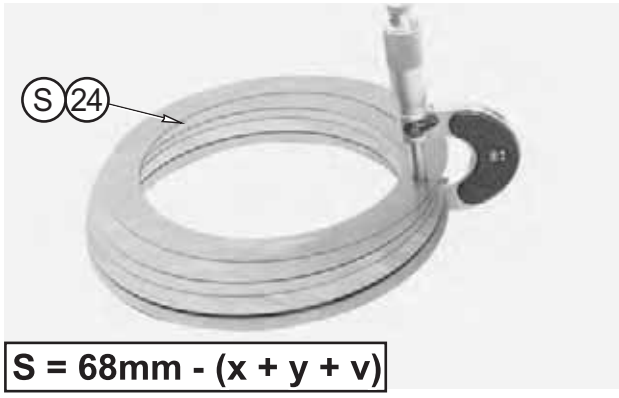

FIGURE 37: S = 68 mm - (x + y + v) = Thickness of shims to insert under the shim washer.

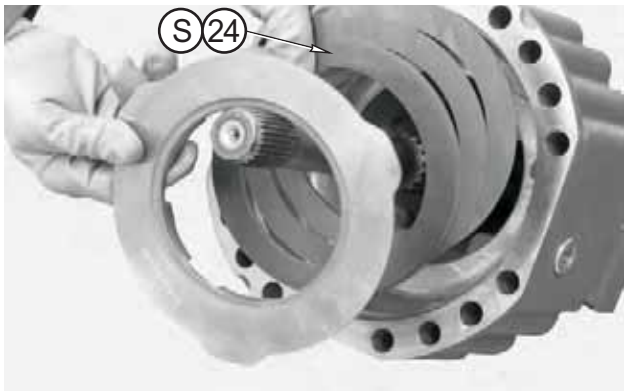

https://truckmanualshub.com/

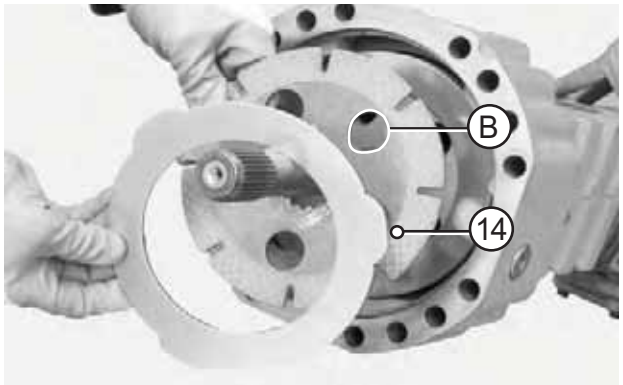

FIGURE 38: Slightly lubricate the braking disks (14) and fit them in the arm following the correct sequence; orient them so that the oil circulation holes and the marks “B” are lined up.
When installing the steel discs, the slot corresponding to the oil level cap should always be kept free.

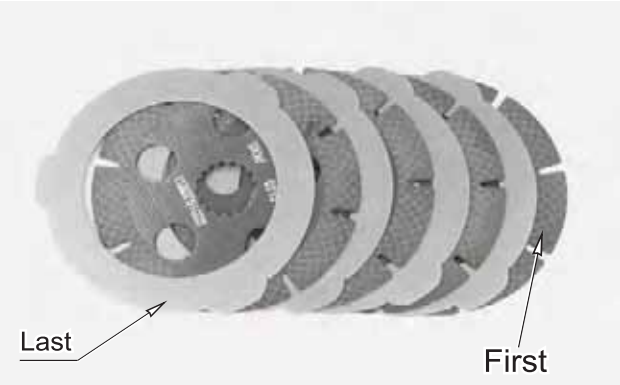

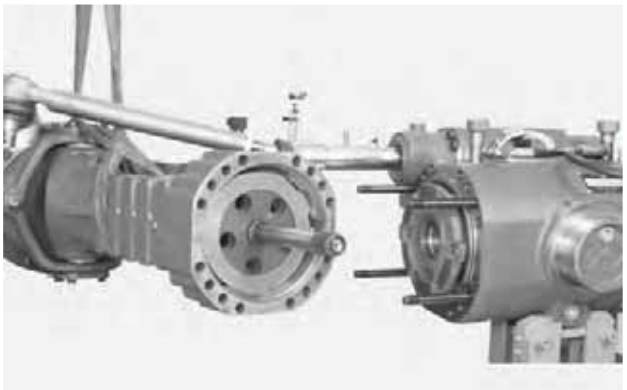

FIGURE 39: Check integrity and position of the arm's o-ring; install the complete arm.

NOTE:

To assist axle shaft centering, slightly move the wheel hub.

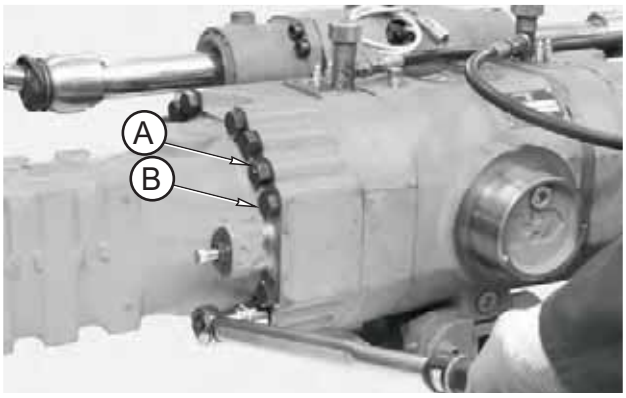

FIGURE 40: Torque wrench setting:
A = 200 N·m
B = 283 N·m

NOTE:

Tighten using the criss-cross method.

https://truckmanualshub.com/

https://truckmanualshub.com/

INCORPORATED REDUCTION GEAR AND PINION 602

EXPLODED VIEW

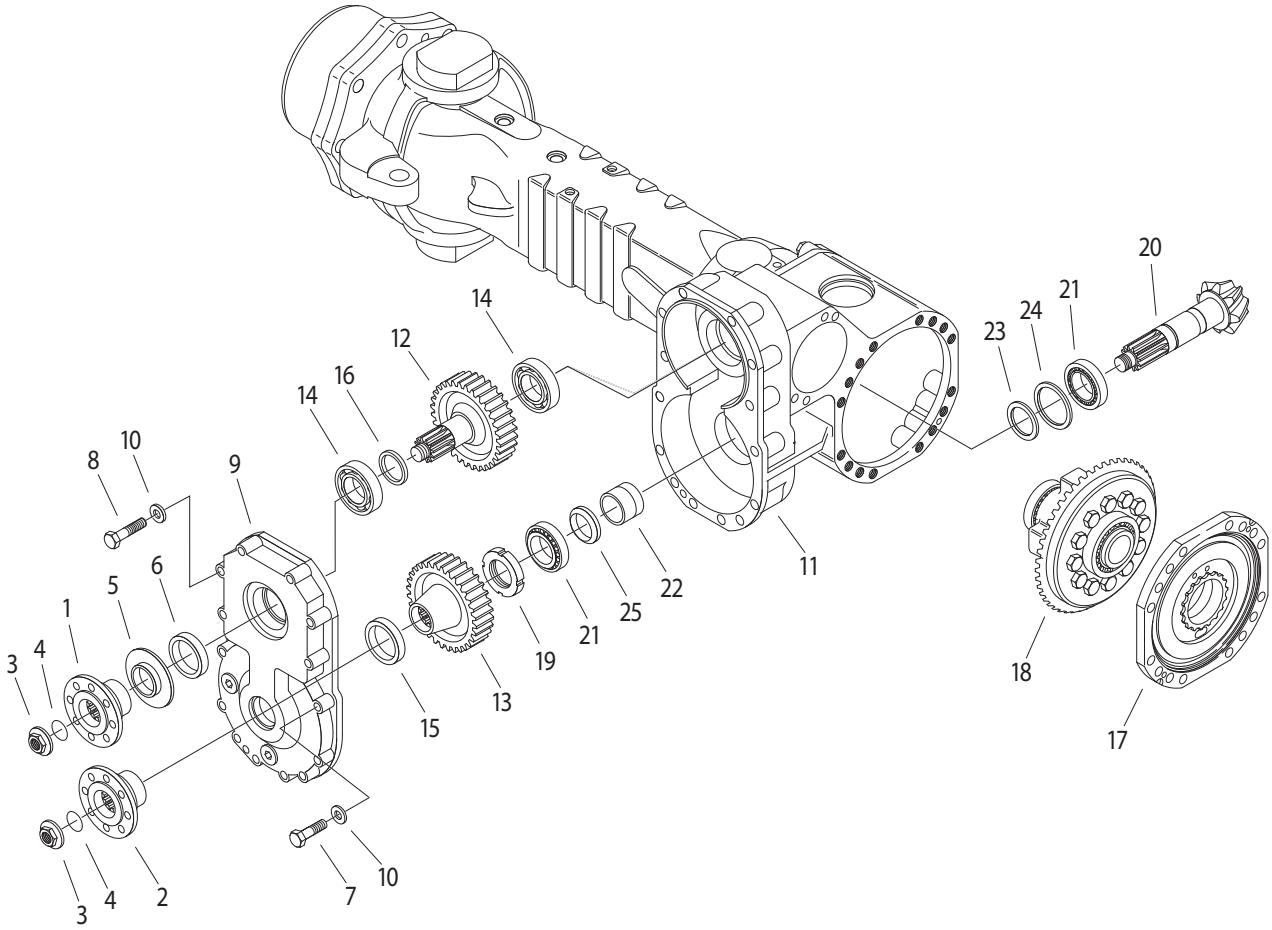

https://truckmanualshub.com/

DISASSEMBLY

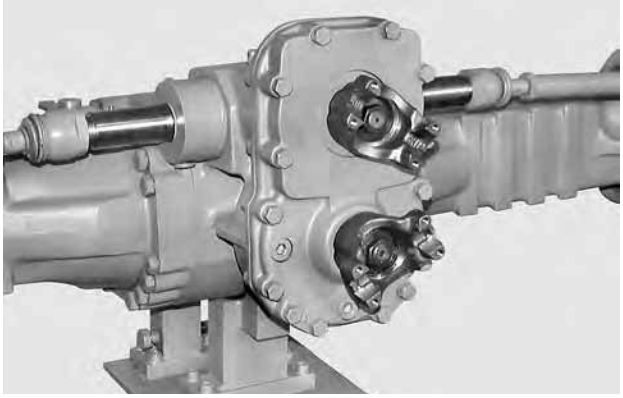

FIGURE 1: The figure shows the axle with incorporated reduction gear with Mechanic flanges; disassembly and assembly procedures also apply to DIN flanges.

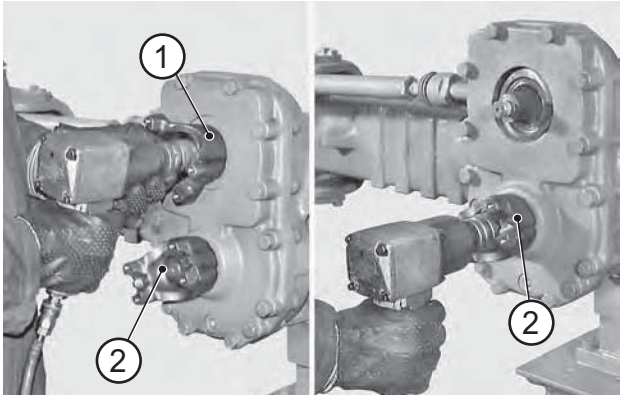

FIGURE 2: Loosen the check nuts on upper (1) and lower (2) flange.

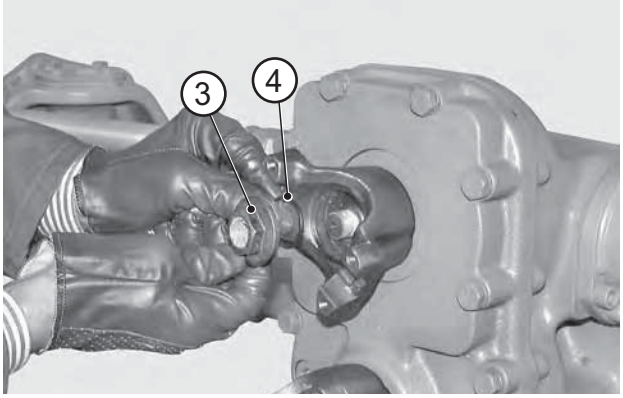

FIGURE 3: Draw out nuts (3) and o-rings (4).

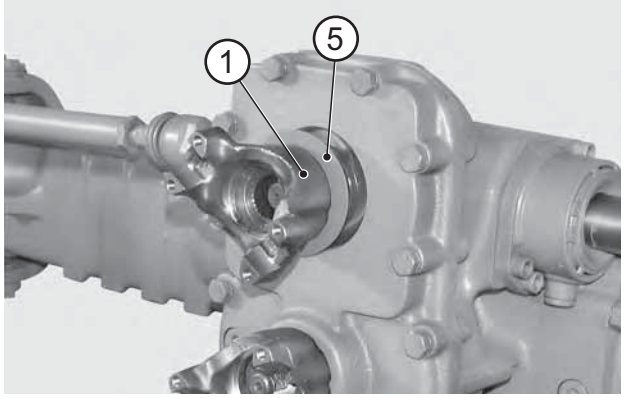

FIGURE 4: Remove the upper flange (1) together with dust ring (5).

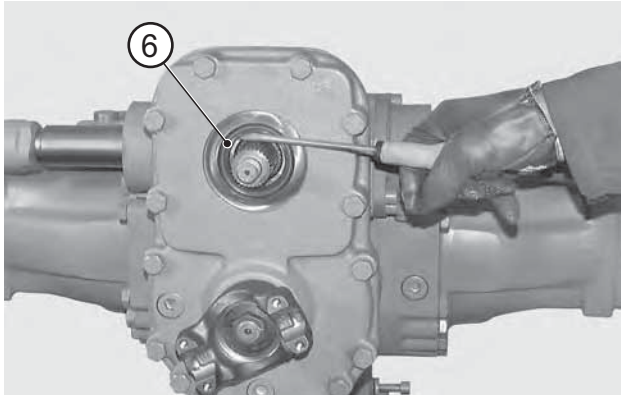

FIGURE 5: Remove the snap ring (6) and discard it.

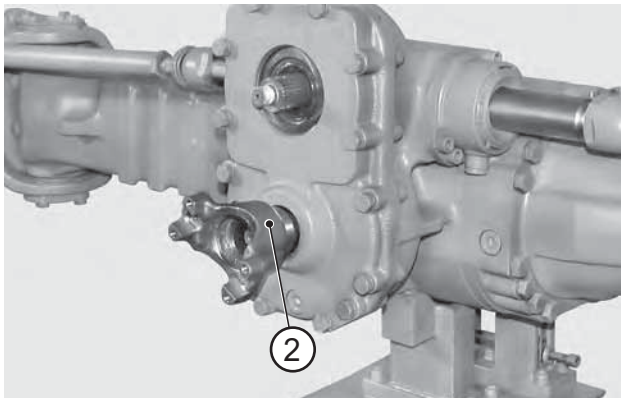

FIGURE 6: Remove the lower flange (2).

https://truckmanualshub.com/

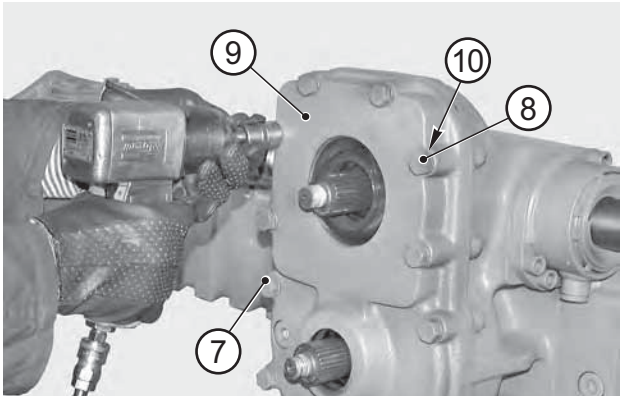

FIGURE 7: Remove check screws (7), (8) and relative washers (10) from cover (9).

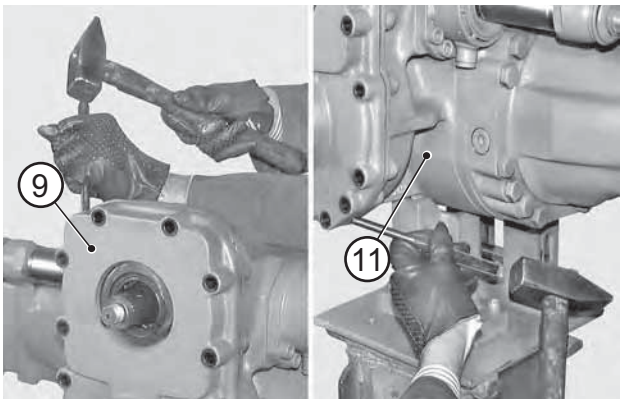

FIGURE 8: In turn, insert a punch in the slots provided and, tapping lightly with a hammer, separate the cover (9) from the body of the reduction gear (11).

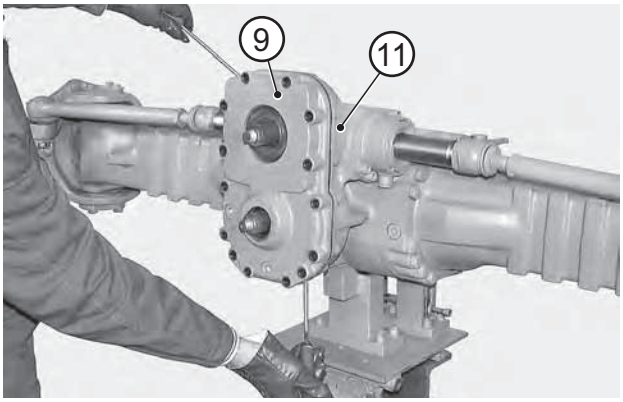

FIGURE 9: Insert two levers in the provided slots and move the cover (9) away from the body of the reduction gear (11).

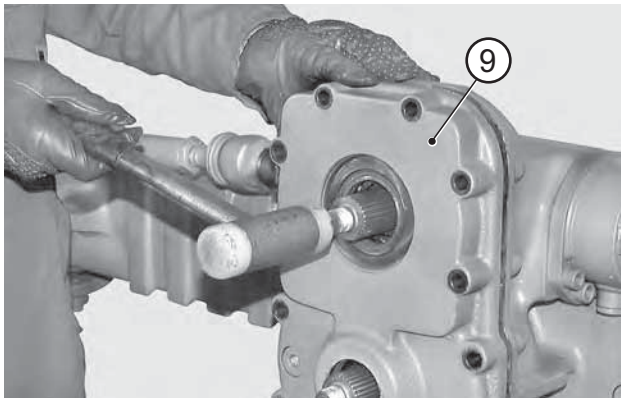

FIGURE 10: Lightly tap with a hammer to disengage cover (9) from upper gear (12).

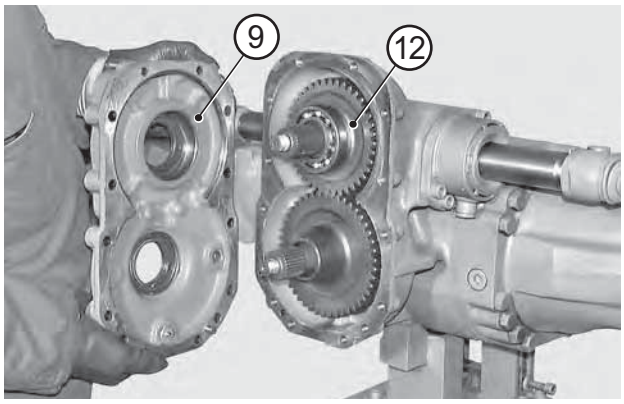

FIGURE 11: Draw out cover (9) and remove any sealant left.

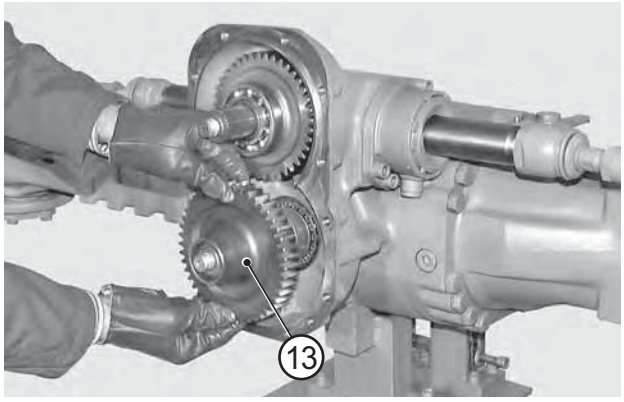

FIGURE 12: Remove lower gear (13).

https://truckmanualshub.com/

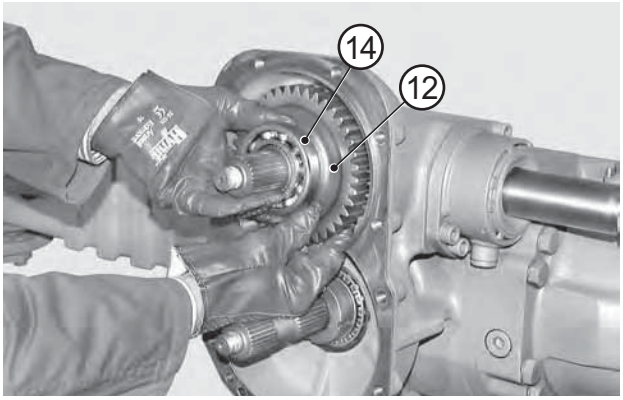

FIGURE 13: Remove upper gear assembly (12) complete with bearings (14).

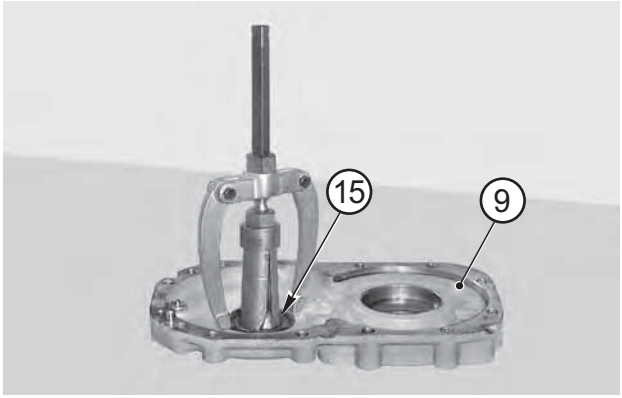

FIGURE 14: Using a puller, remove snap ring (15) from cover (9) and discard it.

NOTE:

Write down direction of installation.

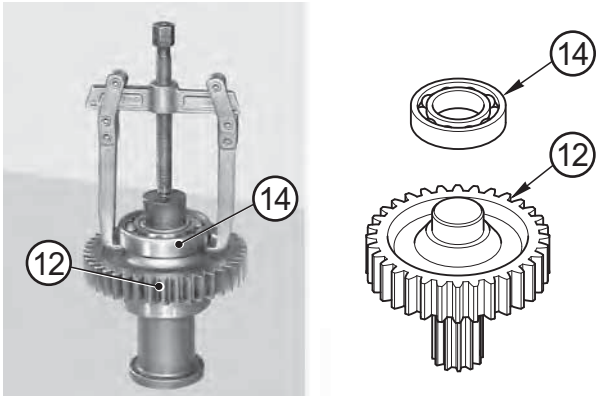

FIGURE 15: Remove inner bearing (14) from gear assembly (12).

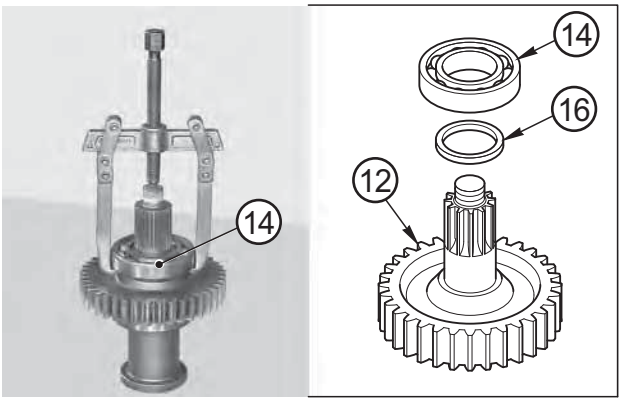

FIGURE 16: Remove outer bearing (14) and spacer (16).

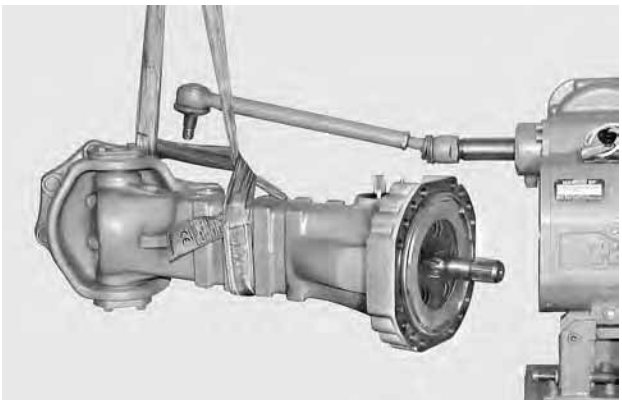

FIGURE 17: Disjoin from the steering case the steering bar located by the side of the intermediate cover (17).
Remove the complete arm.
For details, see CHECKING WEAR AND REPLACING THE BRAKING DISCS p. 19.

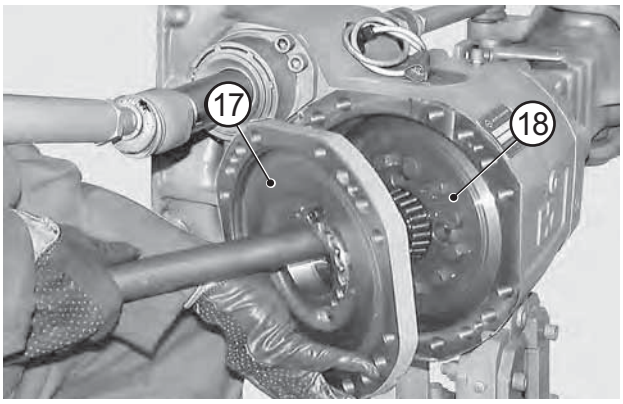

FIGURE 18: Remove the intermediate cover (17) and the whole differential unit (18).
For details, see DIFFERENTIAL UNIT p. 61.

https://truckmanualshub.com/

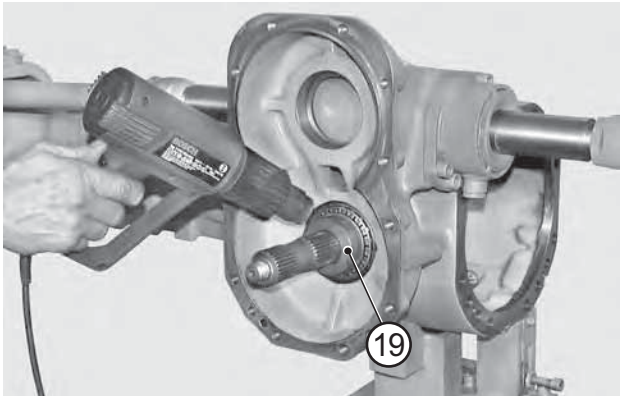

FIGURE 19: Heat the ring nut (19) at approx. 80°C.

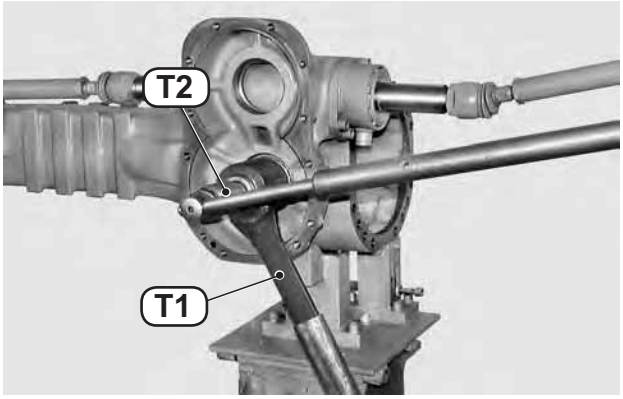

FIGURE 20: Engage special wrench T1 (See drawing T1 p. 169) on the ring nut (19) and apply bar-hold T2 (See drawing T2 p. 170) on the pinion (20).

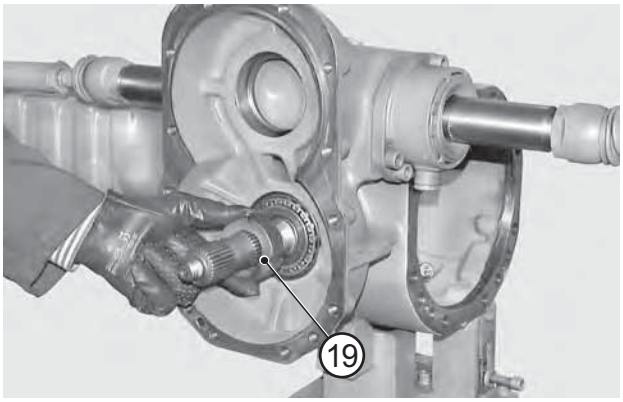

FIGURE 21: Remove ring nut (19).

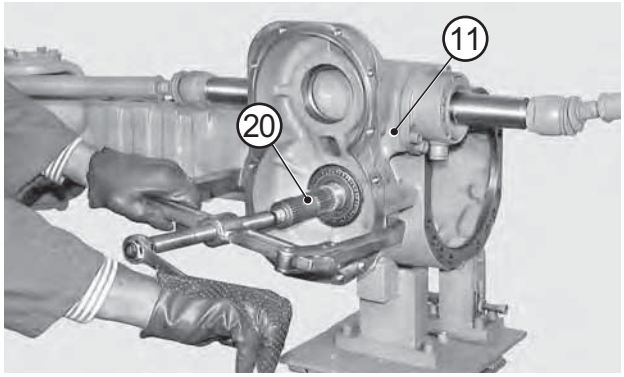

FIGURE 22: Using a puller, extract pinion (20) complete with inner bearing (21), spacer (22) and distance washers.

NOTE:

The thrust blocks of the bearings remain in the central body (11).

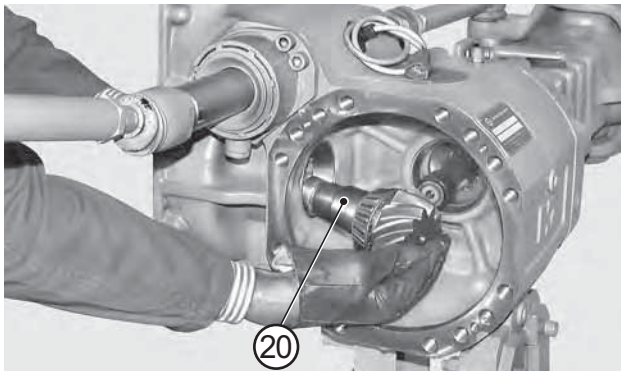

FIGURE 23: Remove the complete pinion (20).

NOTE:

Carefully check and note direction of installation of spacer.

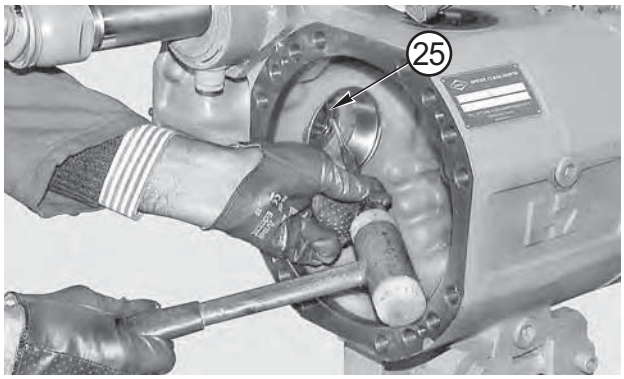

FIGURE 24: Using a punch and a hammer, extract the snap ring (25).

NOTE:

Note direction of installation of snap ring (24).

https://truckmanualshub.com/

ASSEMBLY

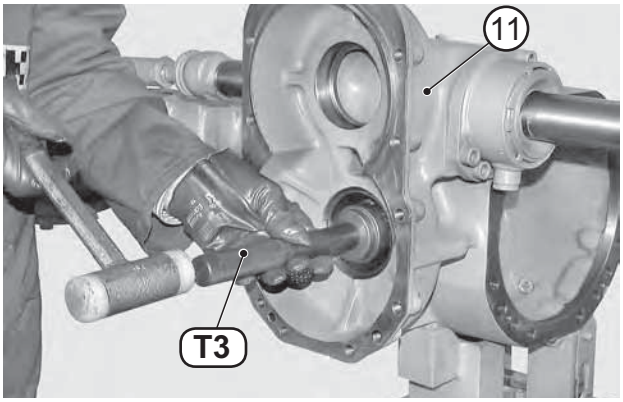

FIGURE 25: Find the value of the distance washers (23) and (24) and insert the thrust blocks of the conical bearing of the pinion into the body of the reduction gear (11) (See BEVEL PINION p. 67).
Using tool T3 (See drawing T3 p. 171) insert the snap ring (25) previously lubricated with grease.

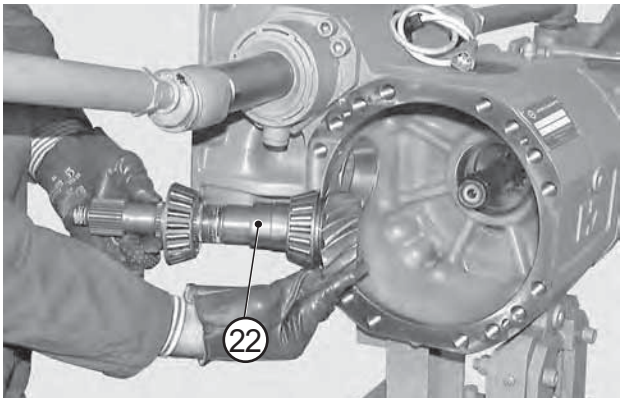

FIGURE 26: Assemble the pinion assembly as shown in the picture, checking that spacer (22) is correctly oriented.

NOTE:

Apply grease to the outer surface of the spacer (22).

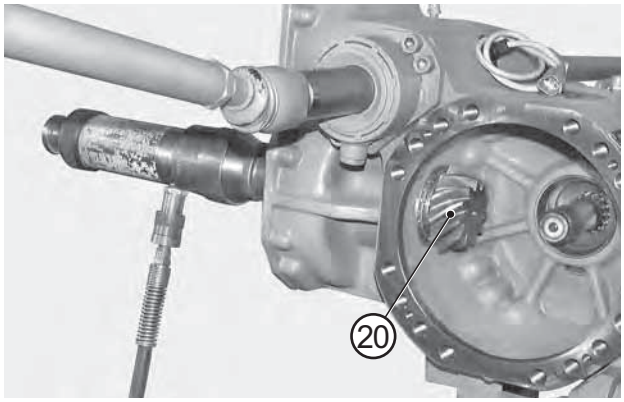

FIGURE 27: With tools T4C (See drawing T4 p. 172), T4D (See drawing T4 p. 172) and T4B (See drawing T4 p. 172) connected to a press, insert the complete pinion assembly (20).

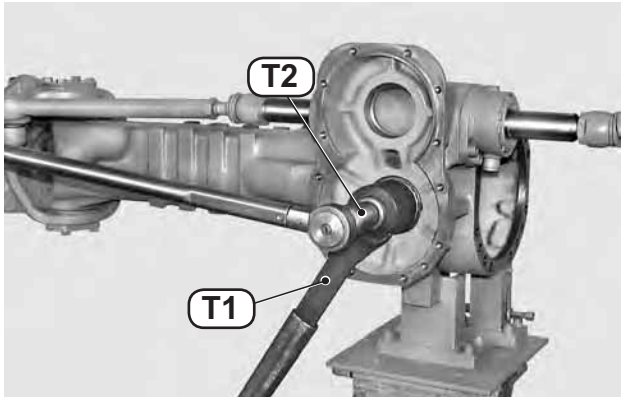

FIGURE 28: Apply Loctite 242 to the thread of the pinion and screw the ring nut (19). Engage special wrench T1 (See drawing T1 p. 169) on the ring nut and apply bar-hold T2 (See drawing T2 p. 170) to the pinion (20).
Tighten the ring nut (19) following the appropriate procedure (See BEVEL PINION p. 67) and check that torque is 170 - 220Ncm.

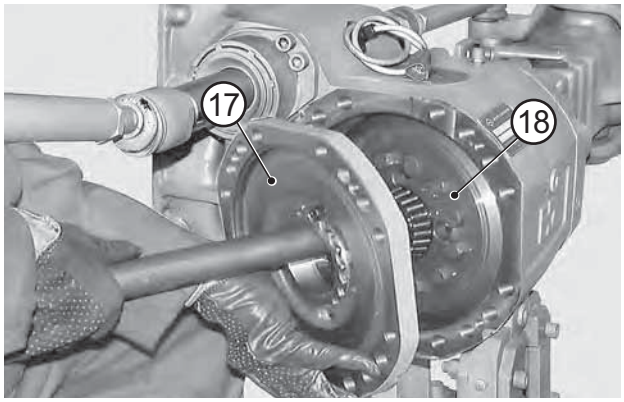

FIGURE 29: Re-install the differential unit (18) and the intermediate cover (17).

https://truckmanualshub.com/

⚠CAUTION

If the crown has been replaced, reinstate clearances.
For details, see DIFFERENTIAL UNIT p. 61.

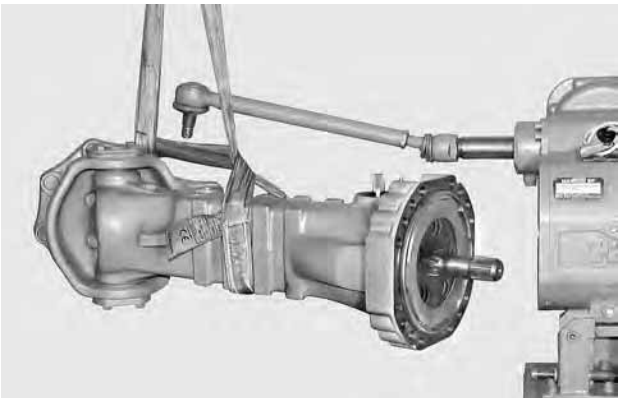

FIGURE 30: Re-install the complete arm checking flatness and blocking the arm by keeping to the appropriate procedures illustrated in section CHECKING WEAR AND REPLACING THE BRAKING DISCS p. 19.
Also connect the steering bar.

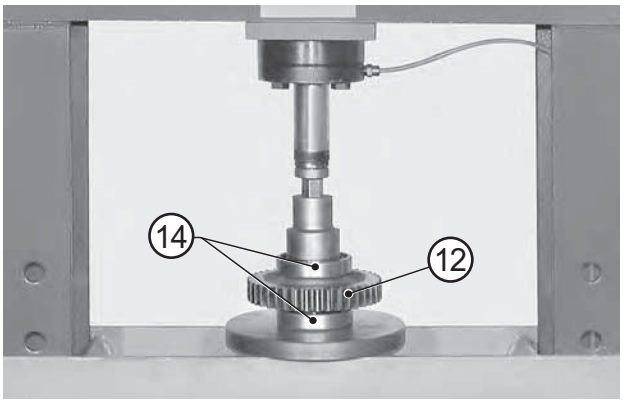

FIGURE 31: Using a press, fit the bearings (14) and the spacer (16) on the upper gear (12).

⚠CAUTION

The di stance piece (16) must be positioned between the outer bearing and the gear.

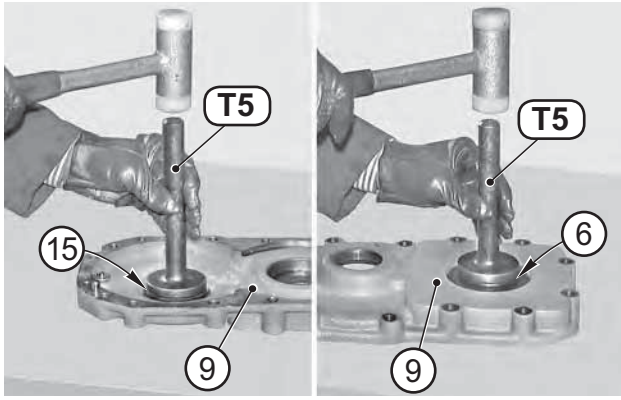

FIGURE 32: Grease snap rings (15) and (6); position the snap rings in the cover (9) using tool T5 (See drawing T5 p. 173).

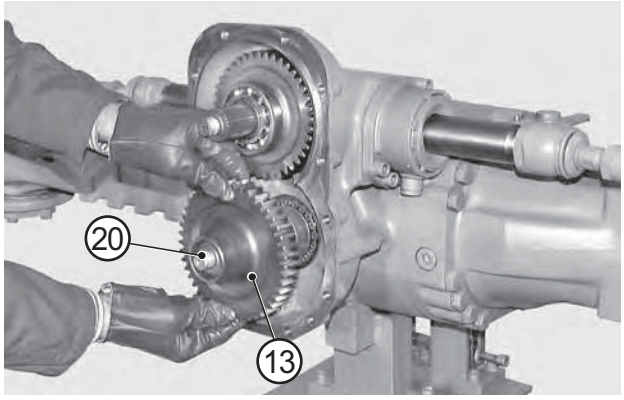

FIGURE 33: Fit the lower gear (13) onto the pinion (20).

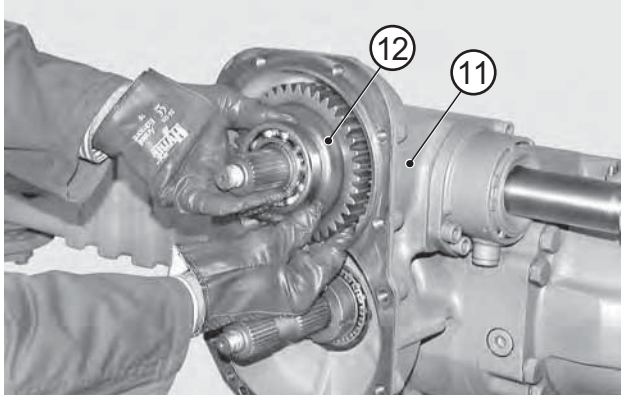

FIGURE 34: Insert the upper gear unit (12) into the body of the reduction gear (11).

https://truckmanualshub.com/

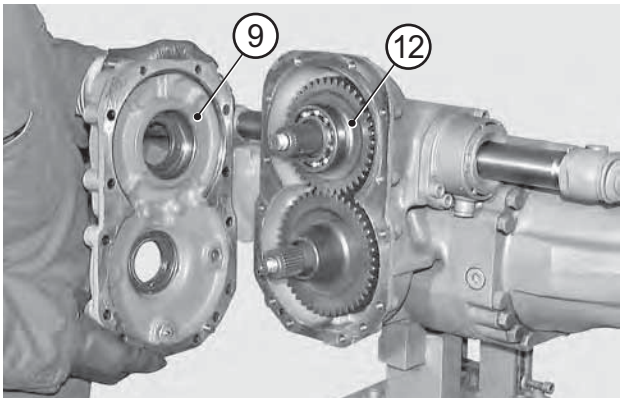

FIGURE 35: Apply Loctite 510 to the locking surface of the body of the reduction gear (11).
Lubricate snap rings (6) and (15); fit cover (9) and set cover (if necessary) by lightly tapping with a plastic hammer.

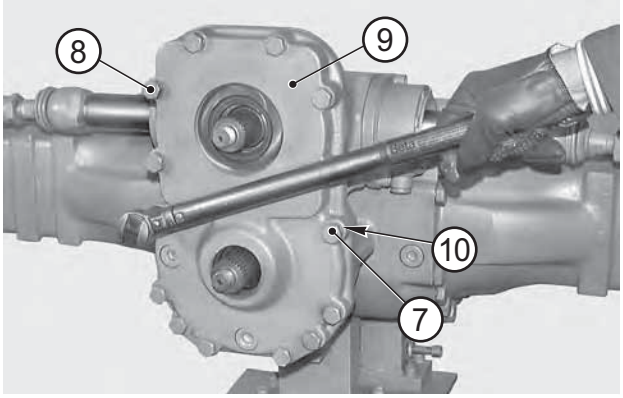

FIGURE 36: Block cover (9) with screws (7) and (8) and relative washers (10). Tighten using the criss-cross method.
Torque wrench setting: 82 - 91 N·m.

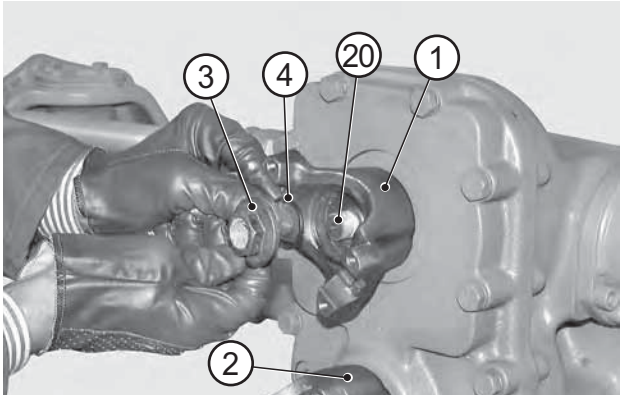

FIGURE 37: Fit the upper (1) and lower (2) flanges.
Apply Loctite 242 to the threaded portion of pinion (20) and upper gear (12).
Fit o-rings (4) and nuts (3).

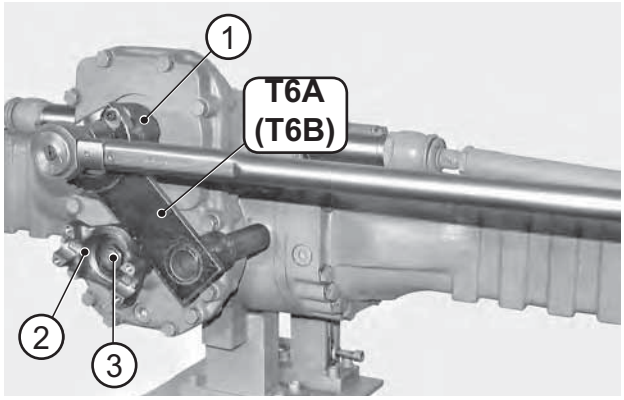

FIGURE 38: Apply tool T6A (See drawing T6 p. 174) (or T6B) to flanges (1) and (2) and tighten nuts (3) using a dynamometric wrench.
Torque wrench setting: 280 - 310 N·m.

https://truckmanualshub.com/

SPECIAL TOOLS

T1

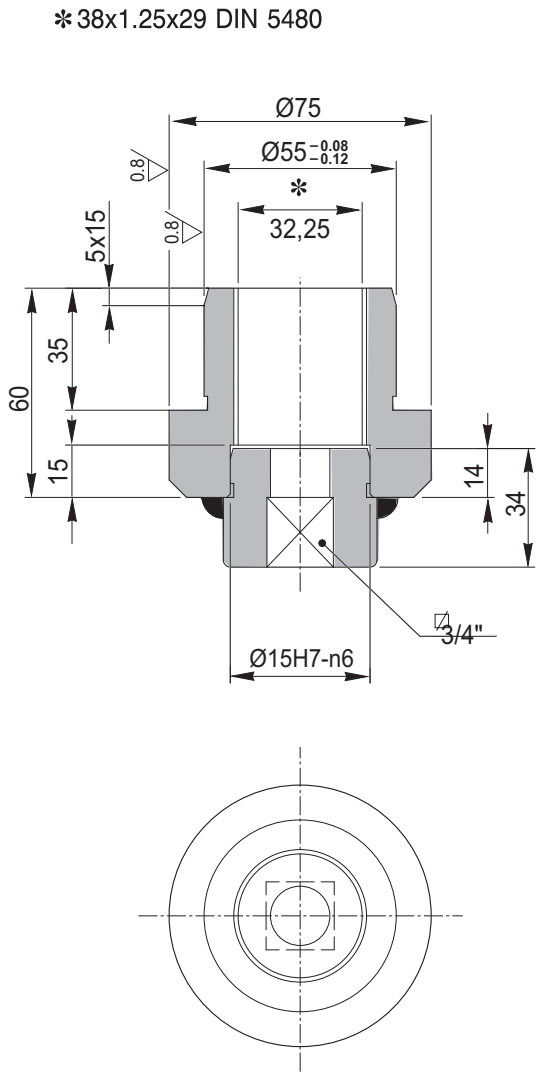

https://truckmanualshub.com/

T2

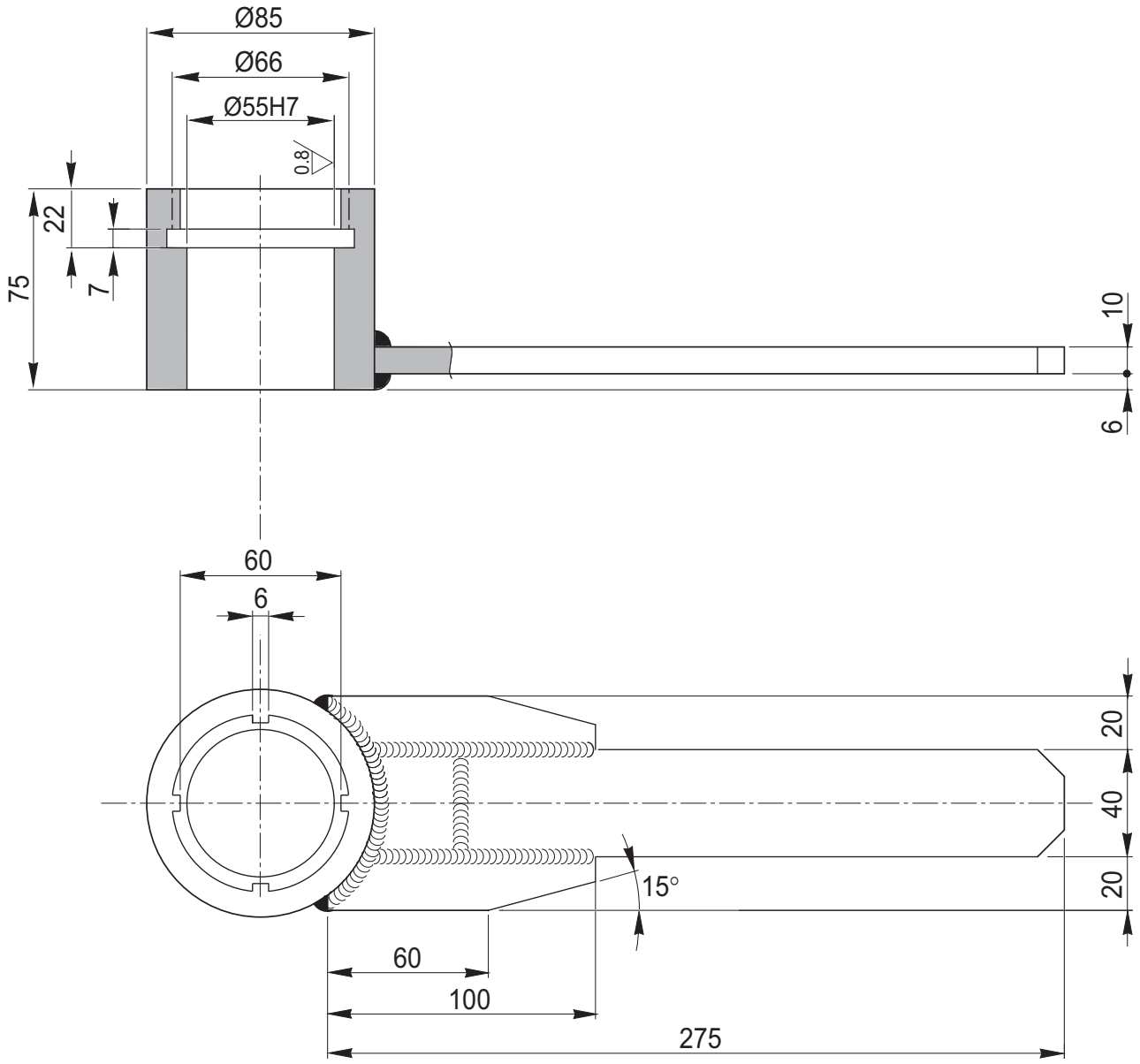

https://truckmanualshub.com/

T3

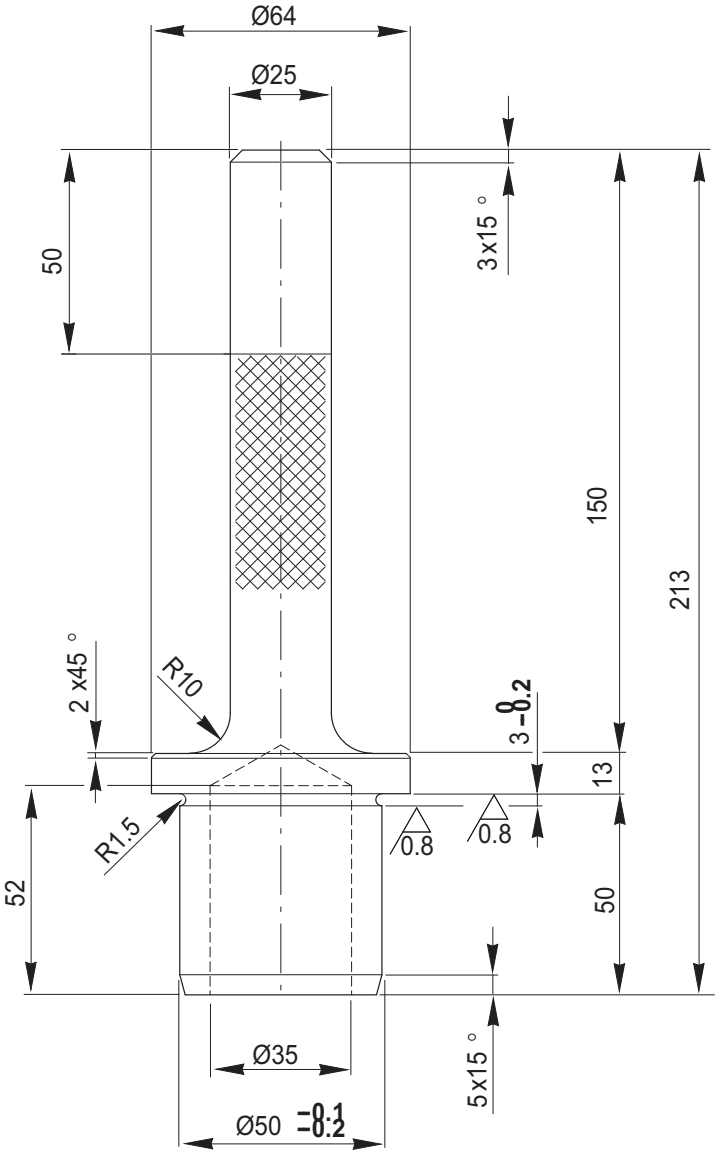

https://truckmanualshub.com/

T4

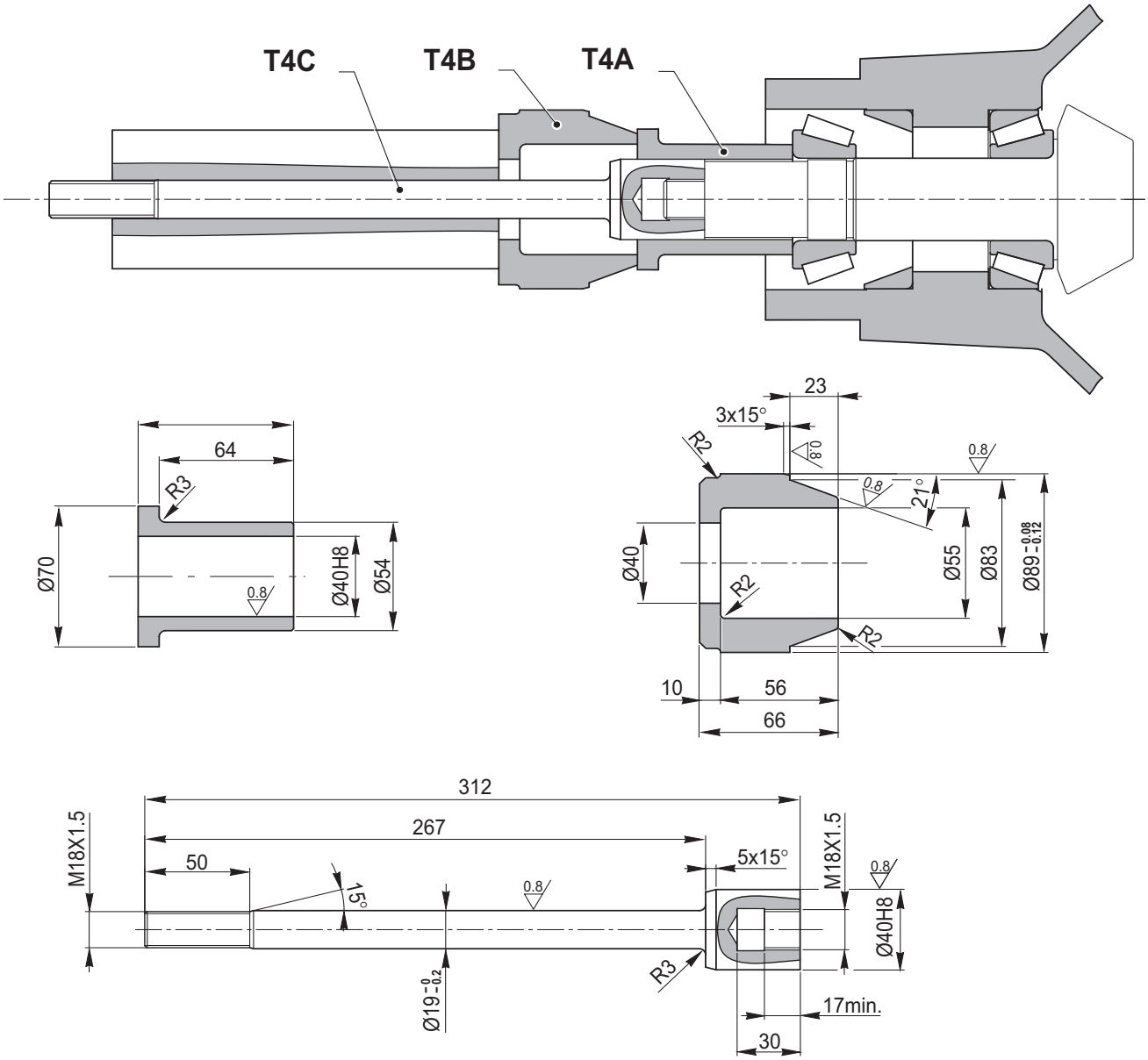

https://truckmanualshub.com/

T5

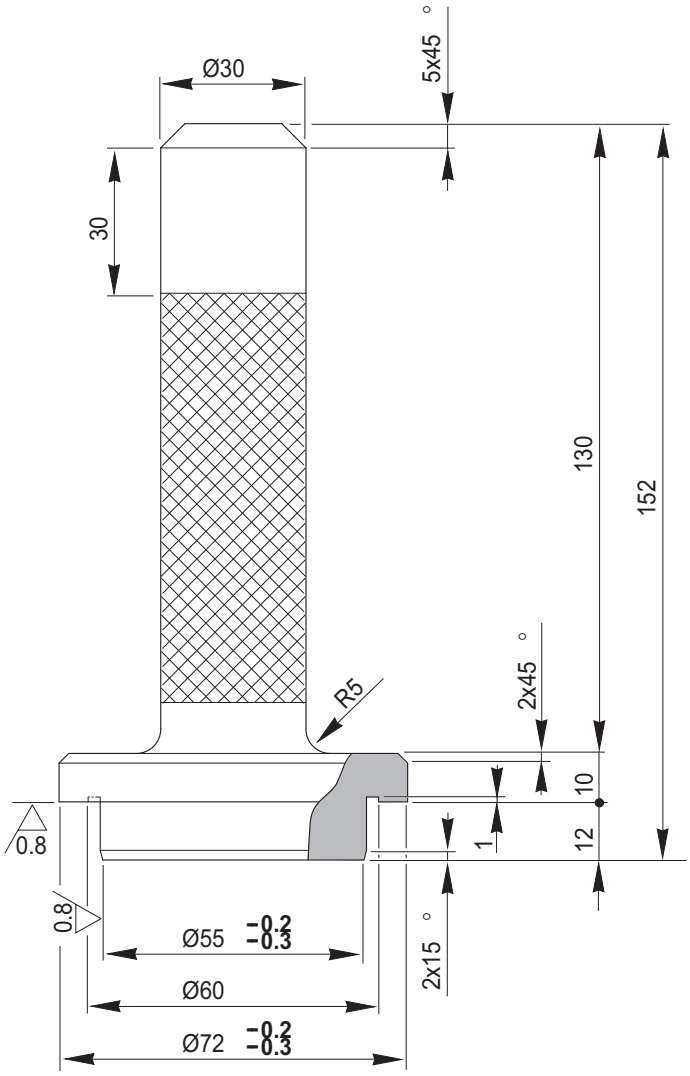

https://truckmanualshub.com/

T6

T6A

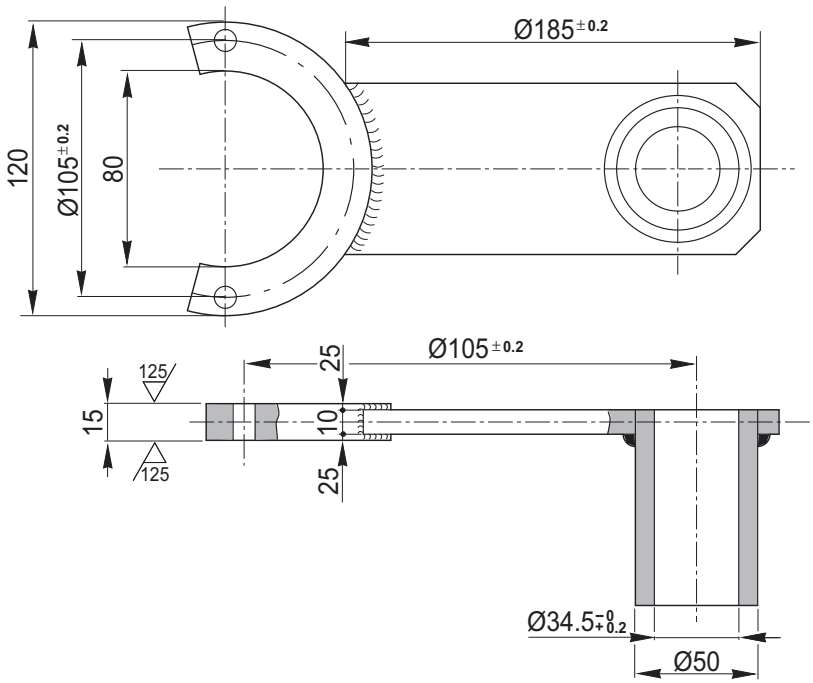

T6B

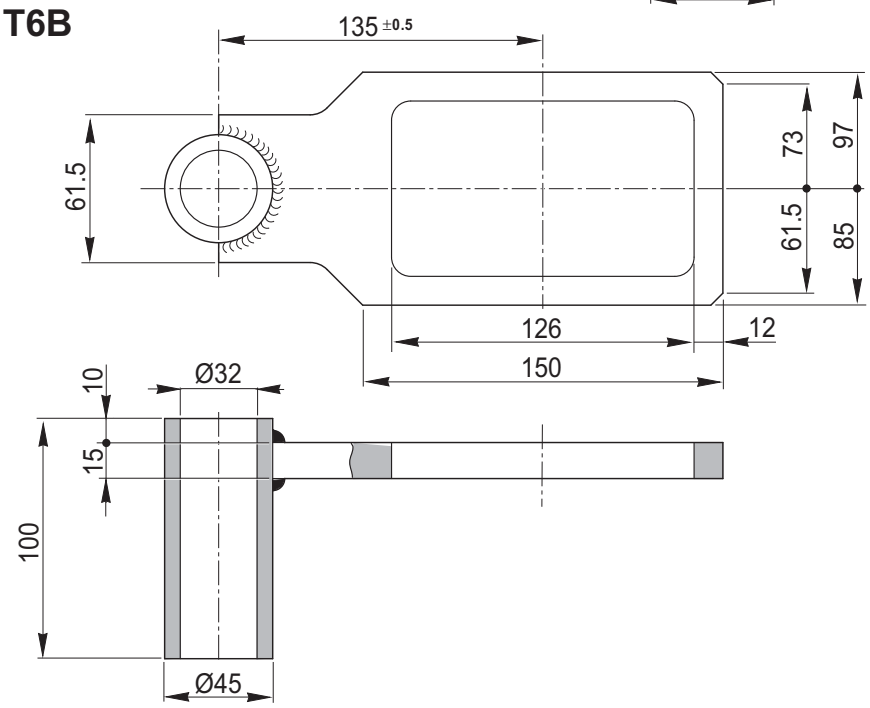

https://truckmanualshub.com/

https://truckmanualshub.com/

© Copyright 2013 Dana Holding Corporation
All content is subject to copyright by Dana and may not be reproduced in whole or in part by any means, electronic or otherwise, without prior written approval. THIS INFORMATION IS NOT INTENDED FOR SALE OR RESALE, AND THIS NOTICE MUST REMAIN ON ALL COPIES.

For product inquiries or support,
visit www.dana.com or call 419-887-6445
For other service publications,
visit www.SpicerParts.com/literature.asp
For online service parts ordering,
visit www.SpicerParts.com/order.asp

DANA

SPICER®
Off-Highway Products

https://truckmanualshub.com/

https://truckmanualshub.com/

31200162

An Oshkosh Corporation Company

JLG Industries, Inc.
1 JLG Drive
McConnellsburg PA. 17233-9533
USA
Phone: +1-717-485-5161
Customer Support Toll Free: 1-877-554-5438
Fax: +1-717-485-6417

JLG Worldwide Locations

JLG Industries (Australia)
P.O. Box 5119
11 Bolwarra Road
Port Macquarie
N.S.W. 2444
Australia
Phone: +61 2 65811111
Fax: +61 2 65813058

JLG Latino Americana Ltda.
Rua Antonia Martins Luiz, 580
Distrito Industrial João Narezzi
13347-404 Indaiatuba - SP
Brazil
Phone: +55 19 3936 8870
Fax: +55 19 3935 2312

JLG Industries (UK) Ltd
Bentley House
Bentley Avenue
Middleton
Greater Manchester
M24 2GP
England
Phone: +44 (0)161 654 1000
Fax: +44 (0)161 654 1001

JLG France SAS
Z.I. de Baulieu
47400 Fauillet
France
Phone: +33 (0)5 53 88 31 70
Fax: +33 (0)5 53 88 31 79

JLG Deutschland GmbH
Max-Planck-Str. 21
D - 27721 Ritterhude-Ihlpohl
Germany
Phone: +49 (0)421 69 350 20
Fax: +49 (0)421 69 350 45

JLG Equipment Services Ltd.
Rm 1107 Landmark North
39 Lung Sum Avenue
Sheung Shui N.T.
Hong Kong
Phone: +852 2639 5783
Fax: +852 2639 5797

JLG Industries (Italia) s.r.l.
Via Po. 22
20010 Pregnana Milanese - MI
Italy
Phone: +39 029 359 5210
Fax: +39 029 359 5845

JLG Europe B.V.
Polaris Avenue 63
2132 JH Hoofddorp
The Netherlands
Phone: +31 (0)23 565 5665
Fax: +31 (0)23 557 2493

JLG Polska
Ul. Krolewska
00-060 Warsawa
Poland
Phone: +48 (0)914 320 245
Fax: +48 (0)914 358 200

Plataformas Elevadoras
JLG Iberica, S.L.
Trapadella, 2
P.I. Castellbisbal Sur
08755Castellbisbal, Barcelona
Spain
Phone: +34 93 772 4 700
Fax: +34 93 771 1762

JLG Sverige AB
Enkopingsvagen 150
Box 704
SE - 176 27 Jarfalla
Sweden
Phone: +46 (0)850 659 500
Fax: +46 (0)850 659 534

www.jlg.com