https://truckmanualshub.com/

OPERATOR'S MANUAL

FOR FRONT END LOADER (TX2000)

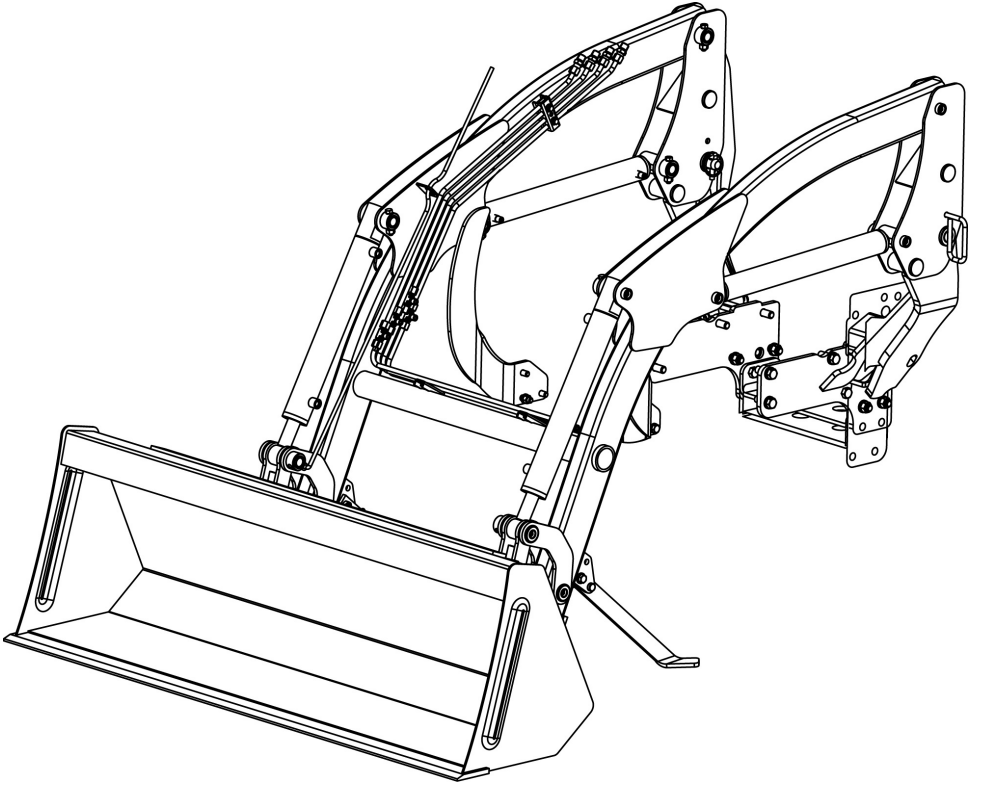

WARRANTY CONDITIONS

https://truckmanualshub.com/

Warranty Coverage :

TYM Tractor Division, herein referred to as TYM, undertakes to replace or repair any part of a TYM loader where damage has been proven to be caused by defects in material or workmanship.

This Warranty is valid for a period of 1 year from the date of the original retail sale. Parts replaced or repaired under the terms of this Warranty are guaranteed only until the original warranty expires. Warranty only applies to the original purchaser.

It is further understood and agreed that the defect should be immediately reported to the Selling Dealer. The Selling Dealer will generally perform Warranty repairs or replacements and the Purchaser shall deliver the TYM Loader to the Dealer's place of business or repair.

The obligation of TYM to the Purchaser under this Warranty is limited to the repair or replacement of defective parts by an authorized TYM dealer. Repair or replacement in accordance with this Warranty shall constitute fulfillment of all liabilities of TYM and the Selling Dealer in respect to TYM Loaders.

There are no warranties beyond those which expressly appear herein. Any implied warranty of merchantability or fitness for a particular purpose is specifically exclude here from.

Warranty Provisions :

TYM's liability under this warranty is subject to the observance by the Purchaser of the following provisions:

The purchaser shall at all times in the operation of any TYM Product, use those brands and grades of lubricating oils, lubricants or fuel and spare parts officially approved by TYM.

The TYM Loaders shall have been used in accordance with the procedures specified in the Operator's Manual. This Warranty does not extend to damage resulting from misapplication, abuse, misuse, failure to preform maintenance, negligence, fire, accidents or changes or faulty mounting carried out by the Purchaser. When making a Warranty exchange of parts, the Purchaser shall compensate TYM for the time that the parts have been used if they have been exposed to extreme wear.

Compensation is not paid for physical harm, deadlock, resulting damages or other losses.

To obtain warranty service, the Purchaser must (1) report the product defect to an authorized TYM dealer and request repair within the applicable warranty term and (2) present evidence of purchase.

The Warranty shall be void if the TYM Loader has been altered or repaired outside of a TYM dealership or travel of dealer personnel to customer location for Warranty repair. The customer shall also pay any premium for overtime labor requested by the customer.

Temporary repairs or additional costs due to the work being performed after normal working hours will not be compensated.

The above warranty is in lieu of all other warranties on TYM's behalf and neither party assumes any other liability in connection with TYM's Products.

Right To Make Design and Product Changes :

TYM reserves the right to make changes in the design and other changes in its TYM Products at any time without incurring any obligation with respect to any product previously ordered, sold or shipped.

TABLE OF CONTENTS

https://truckmanualshub.com/

SAFETY - 1 ---------- 5
SAFETY - 2 ---------- 6
SAFETY DECALS ---------- 7
LOADER SPECIFICATION ---------- 8
INTRODUCTION ---------- 9
TRACTOR PREPARATION ---------- 18
LOADER OPERATION ---------- 20
LOADER REMOVAL ---------- 25
LOADER MOUNTING ---------- 26
LUBRICATION AND MAINTENANCE ---------- 27
TROUBLE SHOOTING ---------- 29
METRIC FASTENER(ISO)TORQUE CHART ---------- 33
PART ILLUSTRATIONS ---------- 35
BUCKET ---------- 36
QUICK ATTACHMENT ASSEMBLY ---------- 40
MOUNTING FRAME ASSEMBLY---------- 44
BOOM ASSEMBLY ---------- 46
POST ASSEMBLY---------- 48
STAND ---------- 50
HYDRAULIC PIPING ASSEMBLY ---------- 52
3RD FUNCTION VAVLE SUB ---------- 58
DECAL ---------- 60
LOADER INSTALLATION ---------- 62
FRONT END LOADER HISTORY CARD ---------- 66

SAFETY

https://truckmanualshub.com/

Understand that your safety and the safety of other persons is measured by how you service and operate this loader. Know the position and operations of all controls before you to operate.
Make sure you check all controls in all safe area before starting.

The safety information given in this manual does not replace any safety Codes, insurance needs, federal, state and local laws.
Make sure your Machine has the correct equipment required by your local laws and regulations.

Read this manual completely and thoroughly and make sure you understand all controls. All equipment has a limit. Make sure you are aware of the stability and load characteristics of this loader before you begin operation.
This safety alert symbol indicates important safety messages in this manual.
When you see this symbol, carefully read the message that follows and be alert to the possibility of personal injury or death.

SAFETY PRECAUTIONS

-Before starting the engine of your tractor, make sure all operation controls are in park lock or neutral position.
-Operate controls only when seated in the operator's seat.
-Equip your tractor with a ROPS cab or frame for your protection.
-See your tractor operator's manual for correct seat belt usage.
-A frequent cause of personal injury or death is persons falling off and being run over.
-Do not permit others to ride on your tractor. Only one person, the operator, should be on the machine when it is in operation.
-Before leaving the tractor, stop the engine, put all controls in neutral, engage the parking brake and remove the key from the ignition.
-When using remote hydraulic tractor valves on some tractors, the loader lift and dump cylinders will continue moving unless the control levers are manually returned to neutral, or until relief pressure is reached at the ends of piston strokes.
-Observe the bucket movement and maintain control with the control levers.
-Stop the loader arms gradually when lowering or lifting loads.
-Stay off of slopes too steep for safe operation.
-Shift down before you start up or down a hill with a heavy load.
-Avoid "free wheeling"
-Travel speed should be such that complete control and machine stability is maintained at all times. Where possible, avoid operation near ditches,embankments and holes.
-Reduce speed when turning, crossing slopes, and on rough, slick or muddy surfaces.
-Never use your hand to check for suspected leaks under pressure.
-Use a piece of cardboard or wood for this purpose. Escaping hydraulic oil or diesel fuel leaking under pressure can have sufficient force to penetrate the skin and cause infection or other injured by leaking fluid, seek medical attention immediately.
-To prevent personal injury, relieve all pressure before disconnecting fluid lines.
-Before applying hydraulic pressure, make sure all hydraulic connections are tight and components are in good condition.

SAFETY

https://truckmanualshub.com/

-Contact with overhead power lines can cause severe electrical burn or death from electrocution. Make sure there is enough clearance between raised equipment and overhead power lines.

-Add recommended rear tire liquid weight or rear wheel weights for increased stability.

-A loader attachment should be transported in a low position at slow ground speeds.

-Make turns slowly and use the tractor brakes cautiously.

-A loaded attachment in the raised position alters the center of gravity location of the machine and increases the possibility of mishaps.

-Do not stand, walk or work under a raised loader or attachment unless it is securely blocked or held in position. Accidental movement of a control lever of leak in the hydraulic system could cause the loader to drop, or attachment to dump, causing severe injury.

-Make sure all parked loaders on stands are on stands are on a hard level surface with all safety devices engaged to prevent loader from falling and being damaged or injuring someone.

-When using a loader, be alert of bucket position at all times.

-Loader in raised position with bucket rolled back can dump material on tractor causing damage or injury to tractor and / or operator.
-Always park loader with bucket attached to loader.

WARNING SIGNS IN THIS MANUAL

The following warning signs in this manual draw additional attention to items of importance for the safe and correct operation of the tractor.

SIGN	MEANING OF THE SIGN
DANGER	Serious hazard with a very high level of risk of either serious injury or death
WARNING	Hazard or unsafe practice that can lead to severe injury or death.
CAUTION	Hazard or unsafe practice that can lead in injury or death.
IMPORTANT	Instructions for the correct operation of the machine which, if followed, will ensure that it performs at it’s best

All information,illustrations and specifications in this manual are based on latest information available at the time of publication.The right is reserved to make changes at any time without notice.

https://truckmanualshub.com/

SAFETY DECALS

- Safety Decal Locations

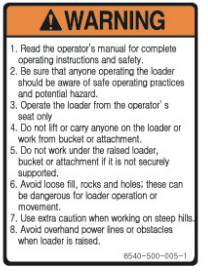

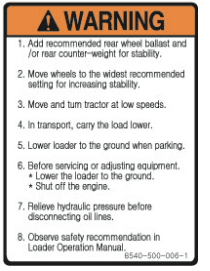

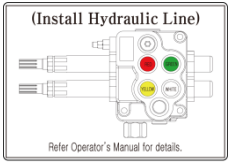

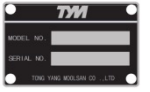

- Care of Safety Decals.

1. Keep safety decals clean and free of obstructing material.

2.Clean safety decals with safety decal (s) affixed is replaced with a soft cloth.

3. If a component with a safety decal (s) affixed is replaced with a new part, make sure new safety decal (s) are attached in the same location (s) as the replaced components.

4. Mount new safety decals by applying on a clean dry surface and pressing air bubbles to outside edges.

LOADER SPECIFICATION

https://truckmanualshub.com/

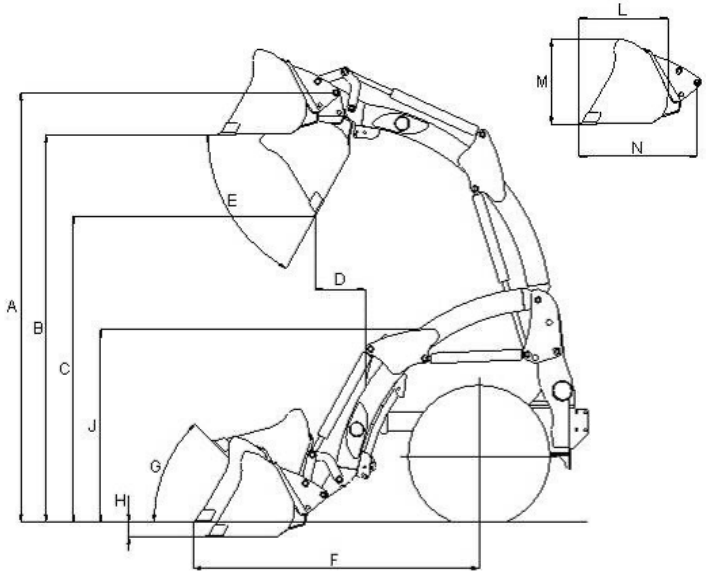

	Loader Total Weight (1+2+3)	310kg	723 lb
1	Weight of Boom & Quick Atta.	165kg	373 lb
2	Weight of Mounting Frame	53kg	148 lb
3	Weight of Bucket	92kg	203 lb
Boom raising time			4.1sec
Boom lowering time			2.3sec
Bucket rollback time			2.6sec
Bucket dumping time			4.1sec

A	Maximum lift height to pivot pin	2165 mm	85.2 "
B	Maximum lift height under lever bucket	2030 mm	80 "
C	Clearance with bucket dumped	1650 mm	65 "
D	Reach at maximum lift height	674 mm	26.5 "
E	Maximum dump angle	47 °	47 °
F	Reach with bucket on ground	1485 mm	58.5"
G	Maximum rollback angle	33 °	33 °
H	Digging depth	110 mm	4.3 "
J	Overall height in carry position	1160 mm	45.7 "
L	Depth of Attachment (to back of inner shell)	424 mm	16.7 "
M	Height of Attachment	485 mm	19.1 "
N	Length of Attachment (to pivot pin)	590 mm	13.2 "
	Lift capacity to maximum height at pivot pin	626kgf	1380 lbs
	Breakout force at ground level, pivot pin	934kgf	2059 lbs
	Bucket rollback force at ground line	724kgf	1596 lbs
	Relief valve setting (Loader control valve)	160kg/cm^2	2276psi
	Rated Flow (Tractor System)	18.9 L/min	5 gpm
	Lift Cylinder	45X30mm	1.8X1.2 "
	Bucket Cylinder	50X30mm	2.0X1.2 "
	Bucket Width	1520mm	60 "
	Bucket Capacity	0.137m^3	4.8ft^3

https://truckmanualshub.com/

INTRODUCTION

The purpose of this manual is to assist you in maintaining and operating your loader. Read it carefully, it furnishes information and instructions that will help you achieve years of dependable performance. Some information may be general in nature due to unknown and varying conditions. However, through experience and these instructions, you should be able to develop operating procedures suitable to your particular situation.

"Right" and "Left" as used throughout this manual are determined by facing the direction the machine will travel when in use.

The photos, illustrations and data used in this manual are current at the time of printing, but due to possible in-line production changes, your machine may vary slightly in detail.

The manufacturer reserves the right to redesign the manufacturer reserves the right to redesign the machine as may be necessary without notification.

Loader Serial Number Information

Date purchased _____

Loader Serial Number _____

Dealer Name and Telephone Number _____

Important

-Illustrations used in this manual may not show all safety equipment that is recommended to ensure safe operation of tractor and loader. Refer to the Safety Precautions section of this manual for information concerning safety. Consult your dealer for further information.

Warranty Registration

The Delivery and Warranty Registration forms must be filled out and signed to validate Your warranty protection.

The items on the form under "I hereby Acknowledge" should be read and understood.

The terms and conditions of the warranty on this machine are specified in the front of this manual.

Serial Number and Location

The serial number is important information about the machine and it may be necessary to know it before obtaining the correct replacement part. The serial number plate is located on the LH(left hand) inside of front area of boom. The serial number should be recorded on the Deliver and Registration form and also below for your reference.

FILLING THE BUCKET

https://truckmanualshub.com/

Approach and enter the pile with a level bucket.Ease lever back and toward you to lift and rollback the bucket.

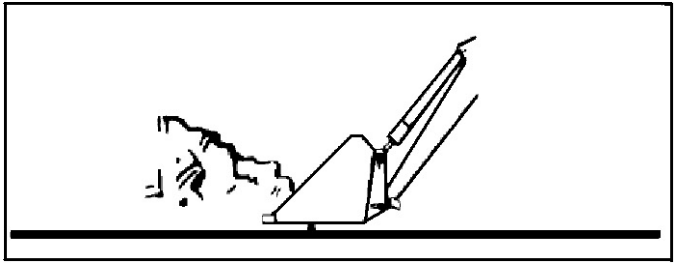

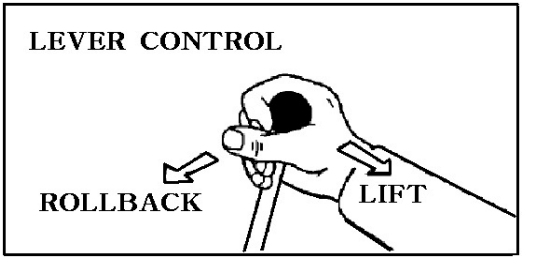

The lift and rollback of the bucket will increase efficiency because a level bucket throughout the lifting cycle resists bucket lift and increases breakaway effort.

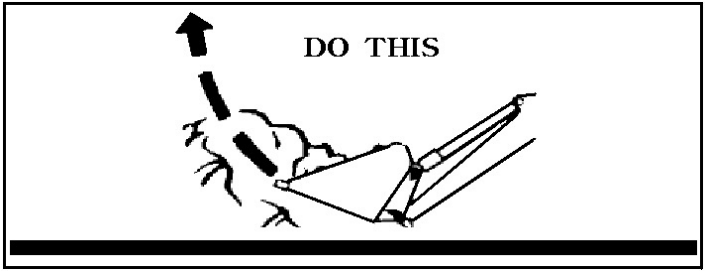

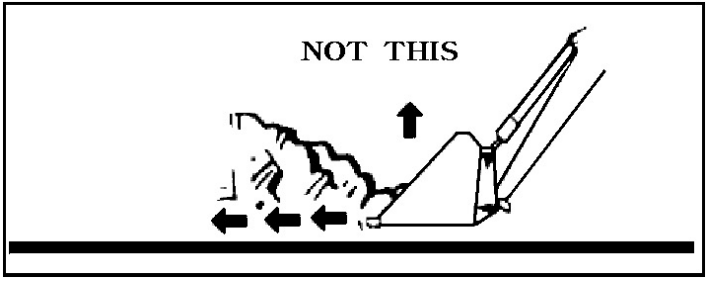

Note: Do not be concerned if the bucket is not completely filled during each pass Maximum productivity is determined by the amount of material loaded in a given period of time.Time is lost if two or more attempts are made to fill the bucket on each pass

https://truckmanualshub.com/

LIFTING THE LOADER

WARNING

Do not lift or carry anyone in the bucket or on any other position of the loader or loader attachment.

Inadvertent movement of the loader or attachment could result in serious Injury or Death from falling or crushing.

CAUTION

Make sure material in bucket cannot rollout and down on tractor when bucket is raised to full height .Keep clear of overhead obstructions such as trees, limbs or power lines when raising the bucket.

When lifting the load, Keep the bucket positioned to avoid spillage.

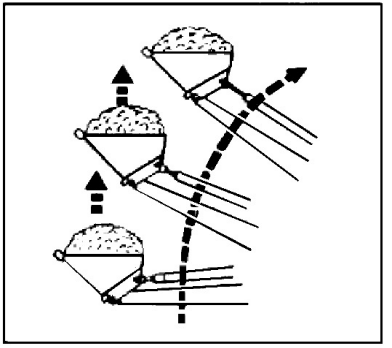

TOWING OPERATION

WARNING

NEVER use the Front end loader with TOWING

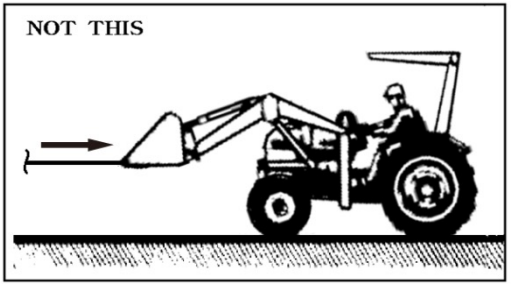

IMPORTANT: To prevent damage to Loader:

https://truckmanualshub.com/

CARRYING THE LOAD

Position the bucket just below the level of the tractor hood for maximum stability and visibility, whether the bucket is loaded or empty.

You need to drive at a reduced speed, e.g 10 km/h max , with a loaded attachment

Use extreme caution when operating the loader on a slope, Keep the bucket as low as possible ,this keeps the bucket and tractor center of gravity low and will provide maximum tractor stability.

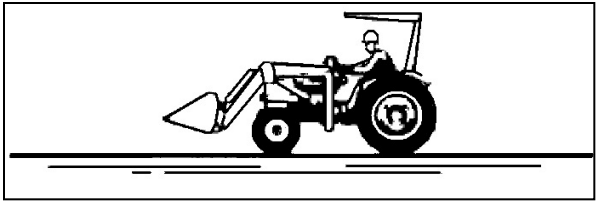

CAUTION

Operating the loader on a hillside is dangerous. Extreme care is recommended.

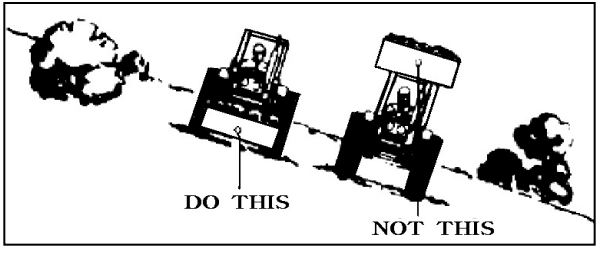

When transporting the load, Keep the bucket as low as possible to avoid tipping, in case a wheel drops in a rut.

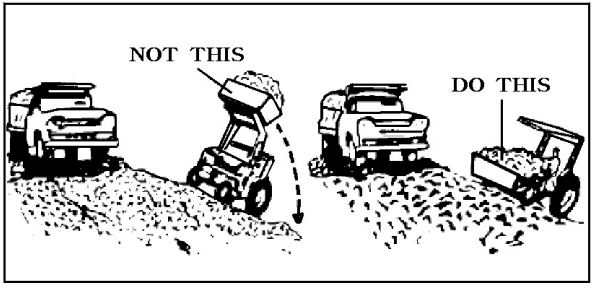

DUMPING THE BUCKET

Lift the bucket high enough to clear the side of the vehicle.

Move the tractor in as close to the side of the vehicle as possible, then dump the bucket

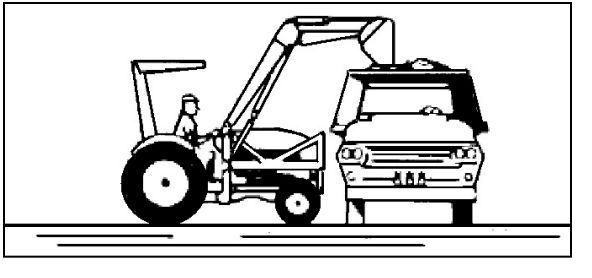

https://truckmanualshub.com/

LOWERING THE BUCKET

After the bucket is dumped,back away from the vehicle while lowering and rolling back the bucket

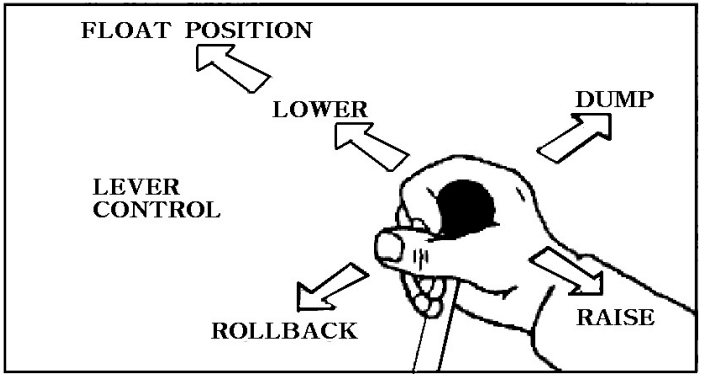

OPERATING WITH FLOAT CONTROL

During hard surface operation,Keep the bucket level and put the lift control in the float position to permit the bucket to float on the working surface.If hydraulic down pressure is exerted on the bucket,It will wear faster than normal.

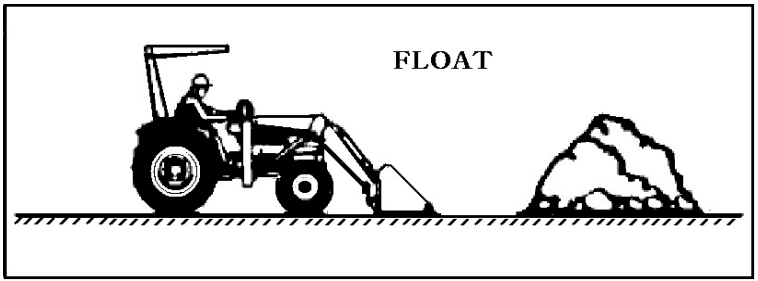

The float will also prevent the mixing of surface material with stockpile material.The float position will reduce the chance of surface gouging when removing snow or other material.

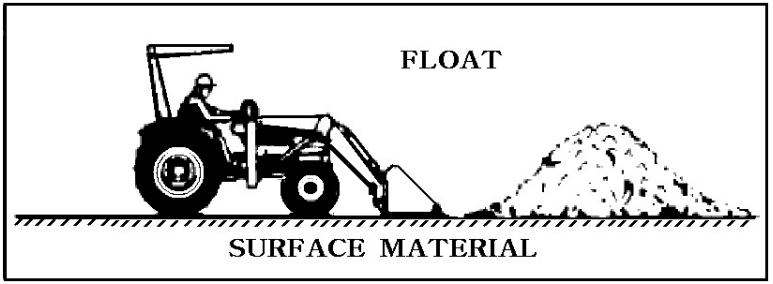

LOADING FROM A BANK

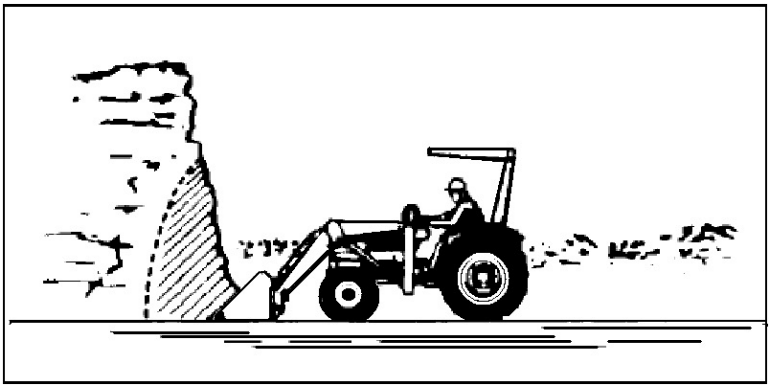

Exercise caution when under cutting high Banks.Dirt slides can be dangerous.Load from as low as possible for maximum efficiency.Loader lift and breakaway capacity diminish as loading height is increased

https://truckmanualshub.com/

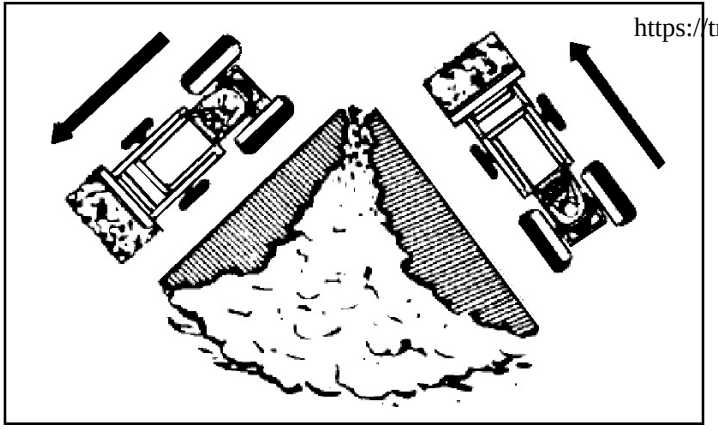

Side cutting is a good technique for cutting down a big pile

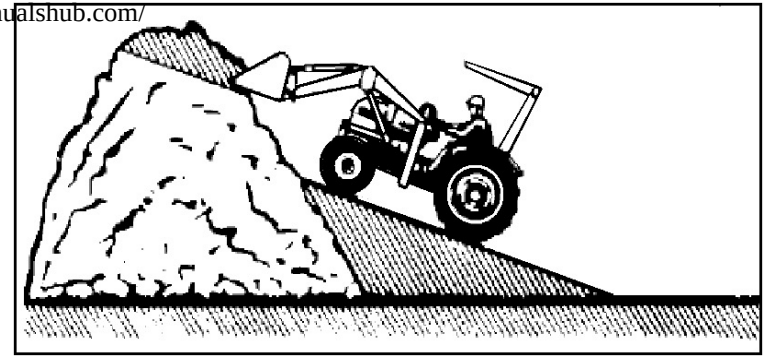

Another method for large dirt piles is to build a ramp approach to the pile.

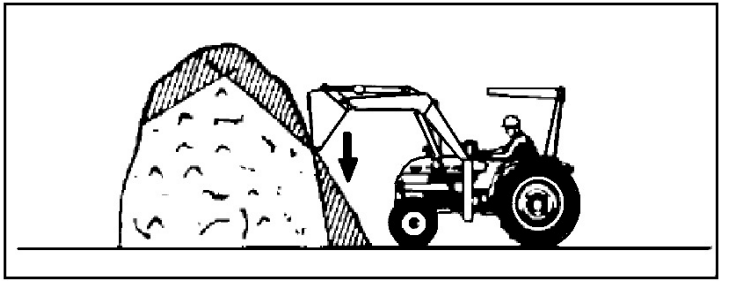

If the pile sides are too high and liable to cause cave-in, Use the loader to break down the sides until a slot can be cut over the top.

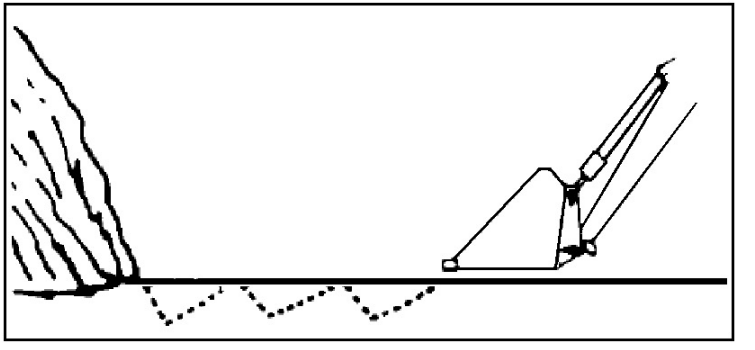

It is important to keep the bucket level when approaching a bank or pile. This will help to prevent gouging the work area

PEELING AND SCRAPING

https://truckmanualshub.com/

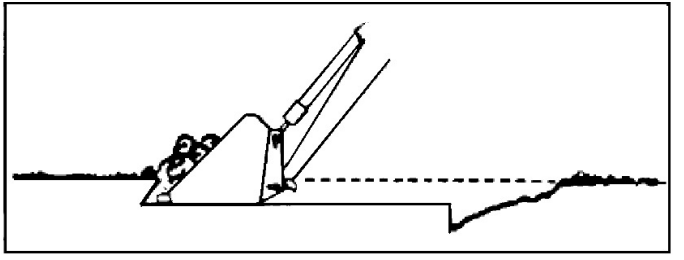

Use a slight bucket angle,travel forward,and hold the lift control forward to start the cut. Make a short, angle cut approximately 6” deep and break out cleanly.

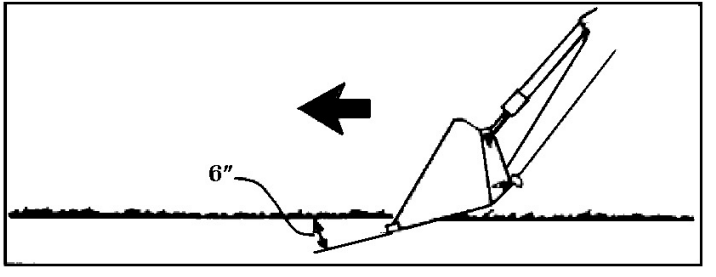

With the bucket level,start a cut at the notch approximately 2” deep.

Hold the depth by feathering the bucket control to adjust the cutting lip up or down.When the front tires enter the notch,adjust the lift to maintain proper depth.

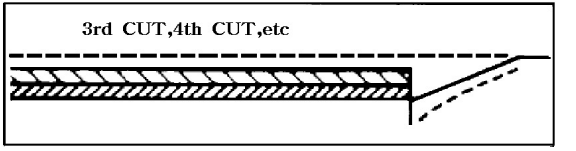

Make additional passes until the desired depth is reached.During each pass,only use the bucket control while at working depth.This will allow you to concentrate on controlling the bucket angle to maintain a precise cut.

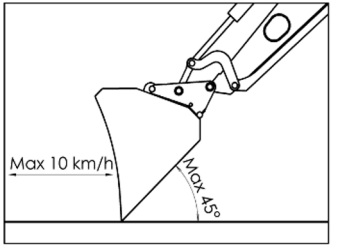

When levelling do not drive faster than 10 km/h.
In this process tilt the implement a maximum of 45°.

LOADING LOW TRUCKS OR SPREADERS FROM A PILE

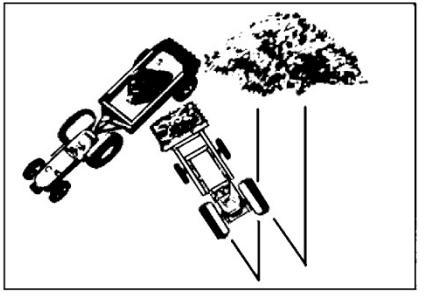

For faster loading,minimize the angle of turn and length of run between pile and spreader

BACK FILLING

https://truckmanualshub.com/

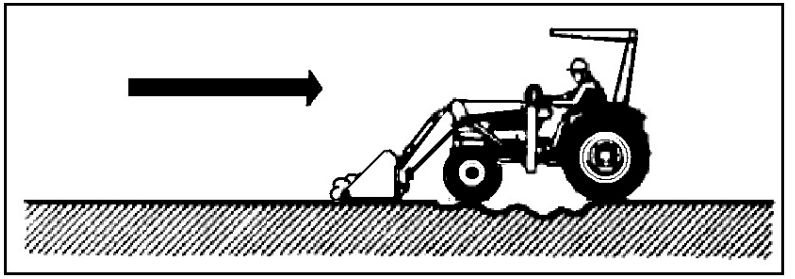

Backgrade occasionally with a loaded bucket to keep the working surface free of ruts and holes.Hold the lift control forward in FLOAT POSITION so the full weight of the bucket is scraping the ground.Use only the heel of the bucket while backgrading.

IMPORTANT: To prevent damage to Cylinders:

(1) Do not backgrade with bucket cylinders extended.

(2) Always backgrade with valve in float position.

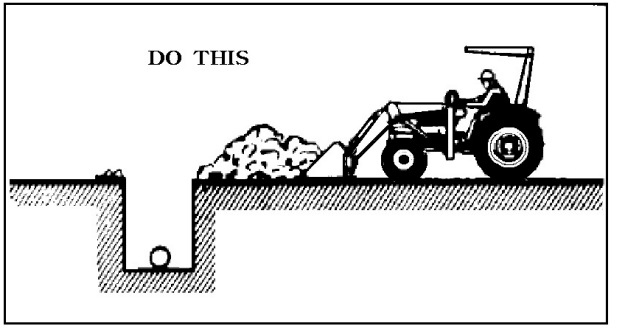

Approach the pile with a flat bucket

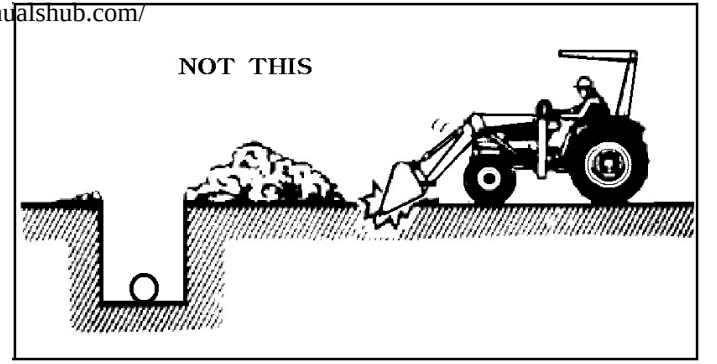

Poor methods actually move no more dirt and make it more difficult to hold a level grade.

Do not use the bucket in the dumped position for bulldozing or backgrading. This method, shown above, will impose severe shock loadings on the dump linkage, the bucket Cylinder, and the Tractor.

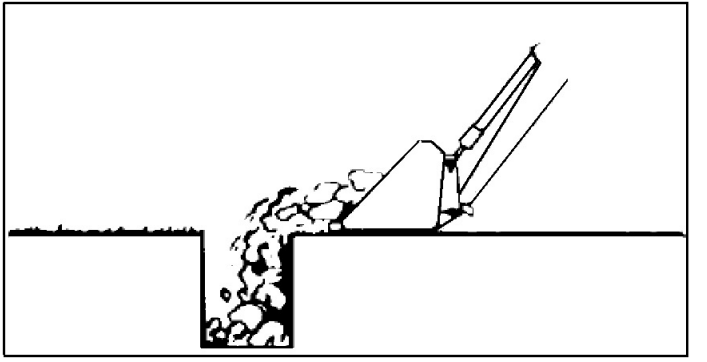

Leave dirt in the bucket because dumping on each pass wastes time.

https://truckmanualshub.com/

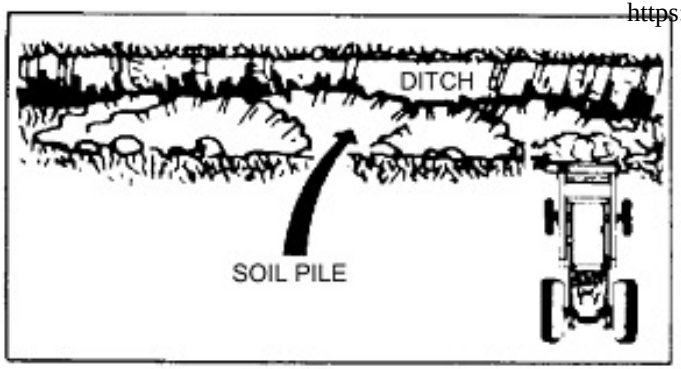

Operate at right angles to the ditch,Take as big as the tractor can handle without lugging down.

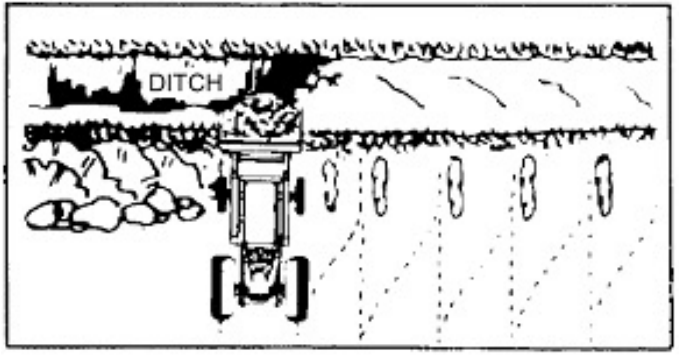

Leave dirt which drifts over the side of the bucket for final clean-up

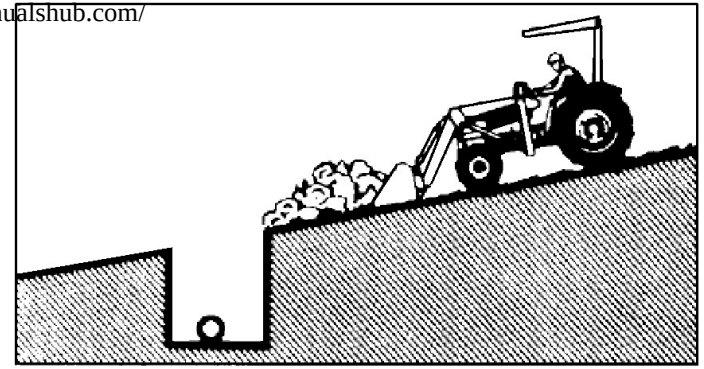

Pile dirt on the high side for easier backfilling on a slope

HANDLE LARGE HEAVY OBJECTS

WARNING

Do not Use front end loaders for handling large, heavy objects such as large, Round or rectangular bales, logs and oil drums.

Handling large heavy objects can be extremely dangerous due to:

- **Possibility of rolling the tractor over.**
- **Possibility of upending the Tractor.**
- **Possibility of the object rolling or sliding down the loader arms onto the operator.**

https://truckmanualshub.com/

TRACTOR PREPARATION

Rear Counterweight

Caution

-Add recommended rear tire liquid weight, rear wheel or rear ballast for increased stability.

Caution

-Do not exceed the manufacturer's rating for maximum gross vehicle weight.

-Refer to Operator's Manual or ROPS serial plate provided with tractor.

-The use of adequate counterweight to counter balance for maximum loader capacity is required for safe loader operation.

-Weight added to rear of the tractor provides better traction and easier, more efficient loader operation, The tractor can be counter weighted by filling rear tires with liquid calcium solution and/or by the installation of rear wheel weights.

-Additional counterweight requirements will vary with loader attachments and equipment applications.

-Additional weight can be added by installation of Three Point Hitch mounted ballast.

Caution

The tractor/loader must only be operated with all safety equipment properly installed.

TRACTOR TIRES

-Selection of tires (size, profile, tread type) should be restricted to tire recommendations as specified by TYM

Tire Inflation

-Front tires must be maintained at the maximum recommended inflation to Maintain normal tire profile with the added weight of loader/material.

-Rear tires must be maintained at equal pressure within the recommended tire inflation range.

-Unequal rear tire inflation can prevent loader attachment from contacting the ground across its full width.

https://truckmanualshub.com/

Caution

-Certain specific conditions may not permit safe use of loader at loader rating or may require more careful restricted operation at the rated load.

-Refer to Tractor Operator's Manual for specific recommendations on counterweight tractor.

ROPS System

-The tractor must be equipped with an approved ROPS System to ensure adequate operator's protection.

Tractor Hydraulic System

-Tractor operation in a loader application significantly increase demands on the tractor Hydraulic System.

-Check the tractor Hydraulic system fluid level daily.

-Refer to your tractor Operator's Manual maintenance section for instructions regarding tractor hydraulic system maintenance.

-Adhere to recommendation in your Tractor Operator's Manual concerning hydraulic fluid and filter specifications, and change intervals.

Wheel Tread Settings

-Tractor front wheel tread setting must be restricted to wheel tread spacing recommended in the tractor Operator's Manual.

Front Counterweight

-Use of front counterweight is not recommended when tractor is being used in a loader application.
Front counterweight adds unnecessary front axle load in loader applications.

https://truckmanualshub.com/

LOADER OPERATION

Caution

The tractor/loader should only be operated with all safety equipment properly installed.

Precautionary Notes

Do not lower the edge of the bucket too low for loading. Keep the bottom of the bucket level with the ground when loading.

Important

Do not use the bucket for pushing down material with bucket cylinders partially extended.
Damage to the cylinders may result.

Important

Do not tip bucket cutting edge down(fully extended bucket cylinders) during backfilling/back grading operations.

Important

-Operation with front tractor wheels off the ground is not recommended.
-Position vehicle to be loaded as near the pile as possible and in such a direction as to minimize the amount of tractor turning required to dump.
-Do not lower the loader with the tractor engine shut off.
-Keep the unit clean and perform regular service. Observe safety messages
-whenever cleaning, servicing, or lubricating.

We urge you to follow this advice:

1.Read and understand this manual as well as the Tractor Operator's Manual.

2.Remember and observe the Safety Precautions brought to your attention in this manual, the tractor manual and on the machinery itself.

3.Use good common sense in the everyday operation of this unit. Safety recommendations can never be all-inclusive and you are responsible for watching out for and avoiding unsafe conditions.

4.Never exceed the limits of a piece of machinery. If its ability to do a job or to do so safely is in question, don't try it.

5. Don't hurry the learning process or hake the unit for granted. Ease into it and become familiar with your new loader and tractor.

Caution

When lowering a heavy load, ease it downward slowly. Never drop a loaded attachment and "catch it hydraulically" Stopping a load after it has gained downward momentum places undue strain on the unit and may cause unnecessary damage to the loader or tractor or Even worse, personal injury.

Caution

Before disconnecting hydraulic lines, relieve all hydraulic pressure.

Escaping hydraulic oil under pressure can have sufficient force to penetrate the skin causing serious personal injury. If injured by escaping hydraulic oil, seek medical Attention immediately.

Caution

Do not operate the loader if the fittings are leaking or if the hoses are damaged.

A sudden line burst would cause the mainframe to drop suddenly, causing damage to the tractor or loader or injury to personnel.

Initial Loader Operation

Before operating the loader fully raise and lower the boom two or three time. Then raise the bucket approximately four(4) feet above the ground and cycle the bucket to the ground.

Check the tractor hydraulic oil and the correct oil level.

Caution

Before leaving the machine, stop the engine, remove the key, place all controls in neutral, and either set the parking brake or place tractor in park as equipped.

Always keep cylinders in a retracted position when the loader is not in use to guard against rust and contamination which may cause damage to the cylinder rods or hydraulic system.

Cold Weather Operation

For smooth operation in cold weather, let the tractor warm up. Slowly cycle the lift and bucket cylinders several times to warm the oil in the hydraulic system. The loader may operate erratically until the hydraulic oil has warmed to operating temperatures.

https://truckmanualshub.com/

LOADER OPERATION

Caution

Operate controls only when seated in the operator's seat

Loading Bucket

For the most efficient loading, slowly drive the tractor straight into the material to be loaded and increase speed only after contact has been made. Roll the attachment back a small amount and slowly lift to break away the material. As the load increase, continue rolling the attachment back so as to get the maximum load.

Remove the top levels first when loading from large piles of material When bucket is full, raise loader so the bucket is clear of material and slowly back out of the pile.

Dumping Bucket

When in the dump area slowly drive the tractor forward and raise the loader at the same time.

Raise the loader to the height needed to dump the bucket. Make sure to keep a level bucket position to prevent spilling from the bucket. Dump the bucket, and keep all movements smooth.

Transporting a Loaded Bucket

Transport material with the bucket as low as possible to prevent spilling and keep maximum stability. The loader must be in a position that will not block the operators' vision. a loaded Bucket must not be transported in the upright position or at excessive speed.

Observe the following safety warning when transporting a loaded bucket.

Caution

When using a loader, be aware of bucket location at all times.

When raising a loader with bucket rolled back, material can dump onto tractor causing damage to tractor of injury to operator.

Caution

Contact with overhead power lines can cause severe electrical burns or death from electrocution.

Make sure there is clearance between raised equipment and over head power lines.

Caution

Stop the loader arms gradually when lowering or lifting.

https://truckmanualshub.com/

Caution

A loaded Bucket should be transported in a low position at low ground speeds.

Make turns slowly and use the tractor brakes cautiously.

A full bucket in the raised position alters the center of gravity location of the machine and increases the possibility of accidents.

Caution

Do not stand, walk or work under a raised loader unless it is securely blocked or held in position.

Accidental movement of a control lever or leak in hydraulic system could cause the loader to drop, or attachment to dump, resulting in serious injury or death.

Scraping

When scraping, the Boom lever must be used to keep the bucket on the ground horizontally.

The bucket must be kept level to the ground during scraping operations.

Backfilling/Back grading

When “Backfilling” of “Back grading”, position the bucket so it is level on the ground.

Do not dump material from bucket following each pass. As additional weight of material in

bucket will assist in “Back grading” and increases loader efficiency during “ backfilling”

Controlled Rate of Loader Functions

By “feathering” the control lever, reduced operational speeds can be controlled.

This action controls the position of the valve spool in the valve body and regulates flow of oil to/from cylinders.

It is important to utilize this operational practice when lowering loader boom when the bucket is loaded with material.

LOADER OPERATION

https://truckmanualshub.com/

Loader Hydraulic Controls

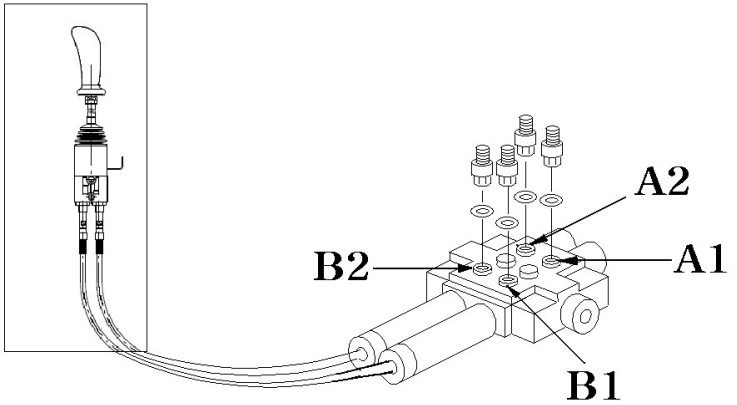

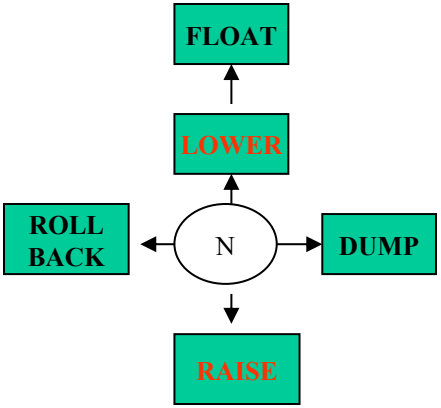

The single lever and joystick control lever is mounts on the tractor from the factory.
The control lever has the safety lock function.
Lock the control level when leaving the tractor while the Bucket is in the air.

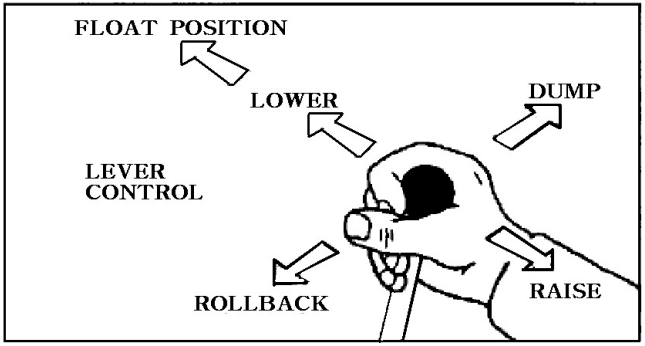

The loader hydraulic valve lift Cylinder circuit incorporates a "FLOAT" position which allows the loader bucket to follow ground contours. The "FLOAT" position is engaged by shifting the control lever forward into "Detent" until the operator pulls the control lever out of the "Detent" position.

Refer to "Scraping" operation for recommended use of "FLOAT" position.

The control valve has a neutral position that prevents movement of loader or bucket.
When the control valve is released from the work position, the spool will return to neural.

Important :
Contaminates in hydraulic oil can cause valve spools to stick. Be alert when operating loader and follow your Tractor Operator's Manual maintenance schedule.

LOADER REMOVAL

https://truckmanualshub.com/

Caution

Never park loader without bucket attached the loader.

Caution

Never allow weight of tractor to be put on parking leg when removing loader

STEP 1.

Park the tractor and loader on hard level surface.

STEP 2.

Raise the boom until the bucket is about 2 feet off the ground.

STEP 3.

Set the parking legs with pivot pin and keeper.

STEP 4.

Lower the boom until the parking legs make contact on the ground.
Tip the bucket until the bucket cutting edge touch the ground.

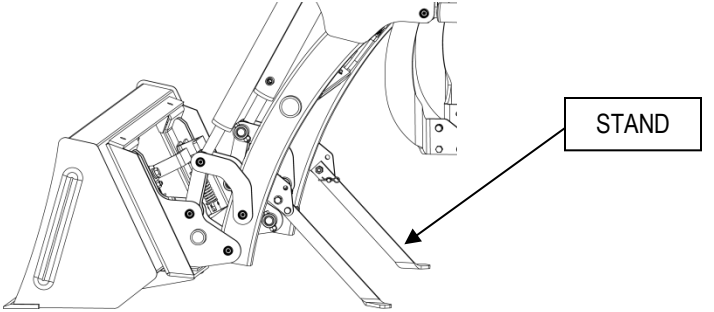

STEP 5.

Remove the latch pin while move the control lever back and forth
Slightly to make the latch pin easy.

STEP 6.

Pull the control lever to raise the loader until the post.
Adjust the bucket until the bottom surface of bucket touch the ground.

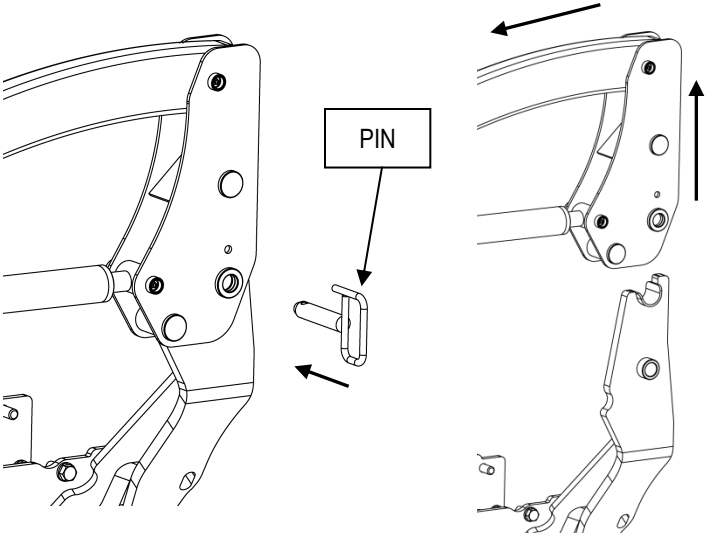

STEP 7.

Move the tractor rearward slowly and stop to avoid the Hydraulic hoses being tighten.

STEP 8.

Right several times to reduce the hydraulic pressure in the Hoses.

STEP 9. Disconnect the quick couplers on the hydraulic hoses.

https://truckmanualshub.com/

LOADER MOUNTING

Caution

Never allow weight of tractor to be put on parking when mounting loader.

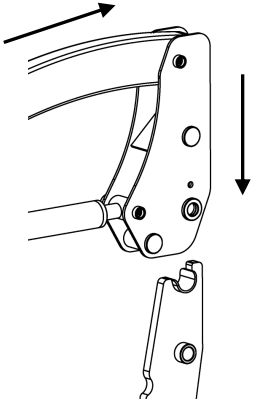

STEP 1.

Carefully drive the tractor into the loader to a position where the Hydraulic hoses (Quick coupler) can be connected to the control Valve block.

STEP 2.

Stop the engine and move the control lever back and forth, Left and right several times to reduce the pressure in the hydraulic Hoses.

Connect the hydraulic couplers match the color code rings.

STEP 3.

Start the engine and move the boom and bucket to adjust the height of the post.

Be sure to check the Hook of inner mounting frame is slightly

Higher than the pin welded on mounting frame.

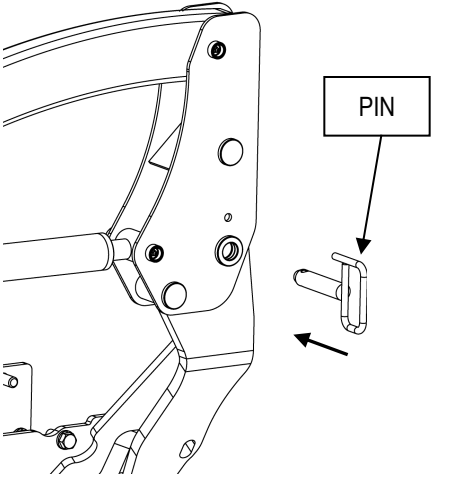

STEP 4.

Move the tractor forward to put into the inner mounting frame.

Stop the tractor When the hook is right over the pin.

Lower the inner mounting frame with moving the boom and bucket until it hooked securely each other

STEP 5.

Align the latch pin holes with moving the bucket and boom. insert the latch pins.

Rubber hammer can be used to put the pin in if needed.

STEP 6.

Remove pin and keeper holding the parking legs and return.

To storage position, Make secure by using pin and keeper.

https://truckmanualshub.com/

LUBRICATION AND MAINTENANCE

Caution

Do not perform and service or maintenance Operations with loader raised off the ground.

For additional access to tractor components remove loader.

Important

Lower the loader to the ground and relieve pressure in loader hydraulic lines prior to performing any service or maintenance operations on the tractor or loader.

Caution

Escaping fluid under pressure can have sufficient force to penetrate the skin, causing serious injury. Before disconnecting lines, be sure to relieve all pressure.

Before applying pressure to the system, be sure all connections are tight and that lines, pipes and hoses are not damaged. Fluid escaping from a very small hole can be almost invisible.

Use a piece of cardboard or wood rather than your hands to search for suspected leaks.

If injured by escaping fluid, seek medical attention immediately. Serious infection or reaction can develop if correct medical treatment is not administered immediately.Refer to Lubrication and maintenance Chart" for quick reference to Maintenance Operations.

Caution

Do not operate the loader if the fittings are leaking or if the hoses are damaged.

A sudden line burst could cause the mainframe to drop suddenly, causing damage to the tractor or loader or injury to personnel.

Caution

Operate the loader from the tractor seat only.

Caution

Do net stand or walk under a raised loader. Accidental movement of control lever or leak in hydraulic system could cause mainframe to drop, causing severe injury.

Check the tractor hydraulic system as outlined in the Tractor operator's Manual.

Note

When checking hydraulic system oil level, the loader should be on the ground and bucket fully retracted

(all cylinders in retracted position.)

Grease all loader pivot points daily (10 hours).

Refer to Tractor Operator's Manual for lubricant recommendations.

Inspect hydraulic hoses, connections, control valve and cylinders for evidence of leakage.

Tractor tires should be maintained at maximum recommended inflation to maintain normal tire profile with added weight of loader/material. Unequal rear tire inflation can result in bucket not being level to the ground.

https://truckmanualshub.com/

LUBRICATION AND MAINTENANCE

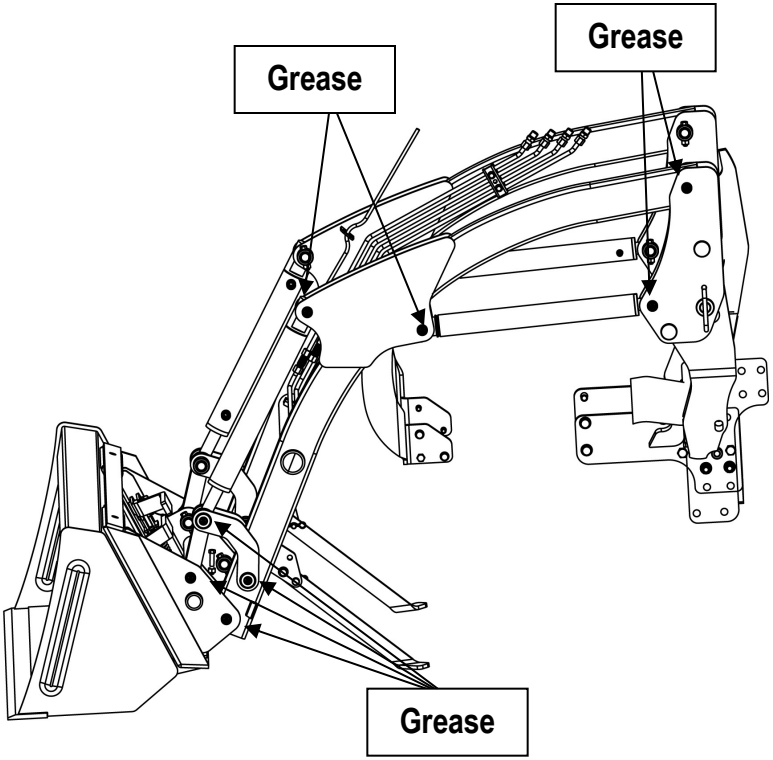

ITEM	SERVICE	SERVICE INTERVAL
Hydraulic system oil level	Check	Daily10 hours
Hydraulic system oil/Filter	Replace	As specified in Tractor Operator's Manual
Tire Inflation	Check	Weekly/50 hours
Loader pivot points	Lubricate	Daily/10 hours
Loader hydraulic lines, hoses Connections	Check for leaks, wear	Daily/10 hours
Lift and bucket cylinder rod packing	Check for seepage, service as needed	Daily/10 hours
Pivot bolts and dust covers	Check, replace if missing	Daily/10 hours
Mid-mount latch and lynch pins	Check, replace if necessary	Daily/10 hours
Loader mount hardware	Check visually	Daily/10 hours
Loader mount hardware	Retighten	Every 25 hours

TROUBLE SHOOTING

https://truckmanualshub.com/

This Trouble Shooting Chart is provided for reference to possible loader operational problems.Determine the problem that best describes the operational problem being experienced and eliminate the possible causes as Listed by following the correction procedures.

PROBLEM	POSSIBLE CAUSE	CORRECTION
Loader Lift slow and/or will not Dump	Low hydraulic fluid level.	Check and replenish hydraulic fluid.
	Hydraulic hoses connected improperly.	Check and correct hydraulic hose connections.
	Hydraulic hoses to/from control valve blocked	Check for damage (kinked) hoses,etc.
	Loader control valve or tractor main relief valve stuck open	Check system pressure. Repair or replace relief valve.
	Low system pressure supplied from hydraulic pump.	Check system pressure. Repair or replace pump.
	Control valve linkage broken.	Inspect. Repair as required.
	Quick disconnect coupler(s)are not fully connected or “Flow Check”	Check coupler connections. Replace coupler(s) unnecessary.
	Hydraulic hose or tube line blockage.	Check for evidence of damage to hoses or tube lines that would block flow of oil between cylinders and control valve.
	Cylinder piston assembly defective(not sealing)	Check cylinders for internal leakage as described in service section under cylinder leakage tests.
	Control valve blockage.	Inspect for blockage. Disassemble valve if necessary.
Lift and/or Bucket Cylinders operate in wrong direction relative to control valve level position.	Hydraulic hoses connected incorrectly	Correct hydraulic hose connections.
Aeration of Hydraulic Fluid (Generally indicated by foamy appearance of fluid)	Low hydraulic fluid level.	Check and refill hydraulic system to proper level.
	Air leaking into suction side of hydraulic pump	Check for loose or defective connections between reservoir and hydraulic pump.
	Hydraulic fluid foaming due to improper hydraulic oil usage.	Left to Tractor Operator’s Manual and replace hydraulic oil using recommended hydraulic oil.

TROUBLE SHOOTING

https://truckmanualshub.com/

PROBLEM	POSSIBLE CAUSE	CORRECTION
Slow or erratic lift	Low hydraulic fluid level.	Check and replenish hydraulic fluid.
	Cold hydraulic fluid.	Allow hydraulic system to warm up to operating temperature.
	Engine RPM too slow (hydraulic pump RPM too slow).	Increase engine speed to obtain satisfactory loader operation.
	Excessive weight in bucket. Material weight exceeds maximum specified loader capacity.	Reduce material load.
	Control valve linkage binding/defective	Check control valve linkage and repair if worn/defective.
	Aeration of hydraulic fluid	Refer to “Aeration of Hydraulic Fluid”
	Quick disconnect coupler restriction or coupler “Flow checks”	Check coupler connections. Repair or replace.
	Hydraulic hose or tube line restriction (hose/tube line) kinked or pinched.	Check hoses and tube lines for evidence of restriction.
	Lift cylinder piston assembly leakage.	Check cylinders for leakage. Repair as needed.
	Relief valve erratic or set below specifications.	Check and reset relief valve. Setting as needed.
	Control valve leaking internally. (bypassing fluid within valve)	Replace control valve and recheck operation.
	Inadequate hydraulic pump capacity.	Refer to “Hydraulic Pump Capacity Inadequate”
Inadequate lifting capacity	Engine RPM too slow.	Increase engine RPM
	Excessive load-material weight exceeds specified loader capacity.	Reduce load.
	Relief valve setting below specifications.	Check and reset relief valve setting as needed.
	Lift cylinder piston assembly leakage	Check cylinders for leakage. Repair as needed.
	Control valve leaking internally.	Replace control valve and recheck operation.
	Hydraulic pump defective.	Refer to “Hydraulic Pump Capacity Inadequate”

TROUBLE SHOOTING

https://truckmanualshub.com/

PROBLEM	POSSIBLE CAUSE	CORRECTION
System relief valve squeals.	Cold Hydraulic Fluid.	Allow hydraulic fluid to warm up to operating temperature.
	Excessive load in bucket. Weight exceeds specified loader capacity.	Reduce load.
	Relief valve setting below specifications.	Check and reset valve setting as needed
	Hydraulic hose, tube line or quick disconnect coupler restriction.	Check for evidence of restriction in hydraulic oil flow. Repair or replace defective components.
Loader drops with control valve spool in "centered" position (no external oil leakage evident.) **Note:A gradual drop over an extended period of time is a normal condition.**	Cylinder piston assembly leakage.	Check cylinder for leakage.
	Control valve internal leakage.	Replace control valve and recheck.
Control valve spool(s) will not return to centered position.	Control lever linkage binding.	Determine origin of binding and repair.
	Control valve spool centering is broken.	Replace centering spring.
	Control valve spool binding in valve body spool bore.	Disassemble valve for inspection and repair
External hydraulic fluid leakage.	Loose hydraulic connection.	Tighten loose connections.
	Defective hydraulic hose, tubeline, adapter fitting or adapter fitting O-ring.	Check for origin of oil leak and replace defective part.
	Control valve O-rings defective.	Replace defective O-rings
	Control valve spool or body damaged or worn.	Replace control valve.
	Cylinder rod packing set leakage.	Check cylinders for leakage. Repair as needed.

https://truckmanualshub.com/

TROUBLE SHOOTING

PROBLEM	POSSIBLE CAUSE	CORRECTION
Hydraulic pump capacity Inadequate.	Cold hydraulic fluid.	Allow hydraulic fluid to warm up to operating temperature.
	Engine RPM Too slow.	Increase engine RPM
	Low hydraulic fluid supply	Refer to Tractor Operator's Manual for service recommendations.
	Hydraulic hose restriction.	Check for evidence of restriction in hydraulic hose.
	Hydraulic pump defective.	Refer to Tractor Operator's Manual for recommend service procedures. Replace hydraulic pump if determined to be defective.
Lift cylinder rod bend when lift cylinders extended.	Excessive shock load on lift cylinders during transport.	Replace defective parts. Review and observe proper and safe operational practices.
Bucket cutting edge wear is uneven side to side	Bucket is not level to ground.	Check rear tire inflation and adjust to level bucket to ground.
Bucket cutting edge wear rate is excessive.(Wear rate is even across full width of bucket). **Note:Extensive use of bucket on concrete or asphalt surfaces will accelerate wear rate of bucket cutting edge.**	Incorrect operational practices. Excessive down pressure placed on bucket when being used on hard abrasive surfaces.	Refer to operation-scraping section for correct operating procedures. Utilize float position.
	Bucket wear pads worn.	Replace wear pads.

METRIC FASTENER(ISO) TORQUE CHART

https://truckmanualshub.com/

Note: Use these torques. Unless special torques are specified. Values are for UNF thread fastener, plated or un-plated as received from supplier. Fasteners can be dry or lubricated with normal engine oil. Values do not apply if graphite. moly-disulphide or other extreme pressure lubricant is used.

SAE Grade No.	2				5				8*			
Bolt head identification (see note 1)												
Bolt size	LB FT		NM		LB FT		NM		LB FT		NM	
	Min	Max	Min	Max	Min	Max	Min	Max	Min	Max	Min	Max
1/4	5	6	7	8	9	11	12	15	12	15	16	20
5/16	10	12	14	16	17	20.5	23	28	24	29	33	39
3/8	20	23	27	31	35	42	48	57	45	54	61	73
7/16	30	35	41	47	54	64	73	80	70	84	95	114
1/2	45	52	61	70	80	96	109	130	110	132	149	179
9/16	65	75	88	102	110	132	149	179	160	192	217	260
5/8	95	105	129	142	150	180	203	244	220	264	298	358
3/4	150	185	203	251	270	324	366	439	380	456	515	618
7/8	160	200	217	271	400	480	542	651	600	720	814	976
1	250	300	339	406	580	696	787	944	900	1080	1220	1464
1 1/8					800	880	1085	1193	1280	1440	1736	1953
1 1/4					1120	1240	1519	1681	1820	2000	2468	2712
1 3/8					1460	1680	1980	2278	2380	2720	3227	3688
1 1/2					1940	2200	2631	2983	3160	3560	4285	4827

Note.1:Bolt head identification marks as per grade. Manufacturing marks will vary.

***Thick nuts must be used with Grade 8 bolt**

METRIC FASTENER(ISO) TORQUE CHART

https://truckmanualshub.com/

Note: Use these torques. Unless special torques are specified. Values are for UNF thread fastener, plated or un-plated as received from supplier. Fasteners can be dry or lubricated with normal engine oil. Values do not apply if graphite. moly-disulphide or other extreme pressure lubricant is used.

ISO Class No.	8.8				10.9				12.9			
Bolt head identification (see note 1)												
Bolt size	LB FT		NM		LB FT		NM		LB FT		NM	
	Min	Max	Min	Max	Min	Max	Min	Max	Min	Max	Min	Max
M4	2	3	3	4	3	4	4	5	Because of the low ductility of these fasteners, the torque range is to be determined individually for each application. As a general rule,the torque ranges specified for grade 10.9 fasteners can be used satisfactorily on 12.9 fasteners *M14 is not a preferred Size.			
M5	5	6	6.5	8	7	8	9.5	11				
M6	8	9	10.5	12	11	13	15	17.5				
M8	19	23	26	31	27	32	37	43				
M10	38	45	52	61	54	64	73	87				
M12	66	79	90	75	93	112	125	150				
* M14	106	127	144	172	149	179	200	245				
M16	160	200	217	271	230	280	310	380				
M18	203	235	275	319	286	315	388	428				
M20	320	380	434	515	450	540	610	730				
M24	500	600	675	815	780	940	1050	1275				
M30	920	1100	1250	1500	1470	1770	2000	2400				

Note:Bolt head identification marks as per grade. Manufacturing mark will vary.

https://truckmanualshub.com/

PART ILLUSTRATIONS

GENERAL INFORMATION

Illustrations

The individual parts in their normal relationship to each other. Reference numbers are used in the Illustrations. These numbers correspond to those in the "Number" column and are followed by the quantity required and description.

Directional Reference

"Right hand" and "left hand" sides are determined by standing at the rear of the unit and facing in the direction of forward travel.

Part Order

Orders must give the complete description, correct part number, the total amount required, the product model, all the necessary serial numbers, the method of shipment and the shipping address.

LOADER INSTALLATION

https://truckmanualshub.com/

CAUTION:
See your Loader Operator's manual for Safety Precautions and Tractor Preparations

STEP 1.
Position tractor on hard level surface.

STEP 2.
Release loader, bucket and mount kit box from pallet.

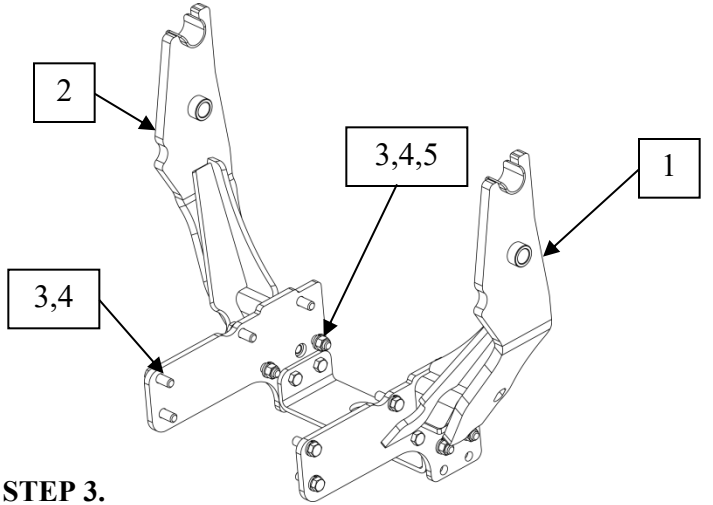

STEP 3.

Install Mounting Frame-L and mounting Frame-R

(1) Mounting Frame-LH : 1EA

(2) Mounting Frame-RH : 1EA

(3) Hex Head Bolt M16X2.0PX45L : 8EA

(4) Spring Washer Ø16 : 8EA

(5) Hex Head Nut M16X2.0P : 8EA

STEP 4.

Install Cross bar

(1) Cross Bar : 1EA
(2) Hex Head Bolt M16X2.0PX45L : 4EA
(3) Spring Washer Ø16 : 4EA
(4) Hex Head Nut M16X2.0P : 4EA

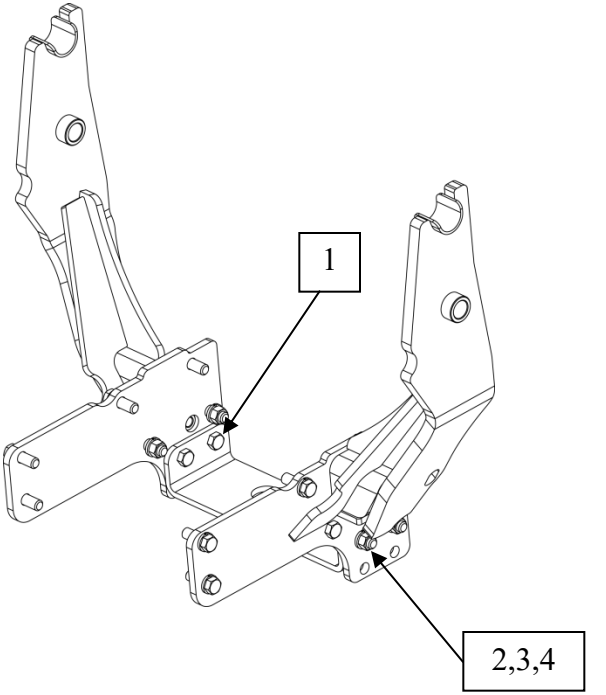

https://truckmanualshub.com/

LOADER INSTALLATION

STEP 5.

Install Grill Guard

(1) Grill Guard RH : 1EA
(2) Grill Guard LH : 1EA
(3) Hex Head Bolt M12X1.75PX30L : 4EA
(4) Hex Head Bolt M12X1.75PX40L : 2EA
(5) Spring Washer Ø12 : 6EA
(6) Hex Head Nut M12X1.75P : 2EA

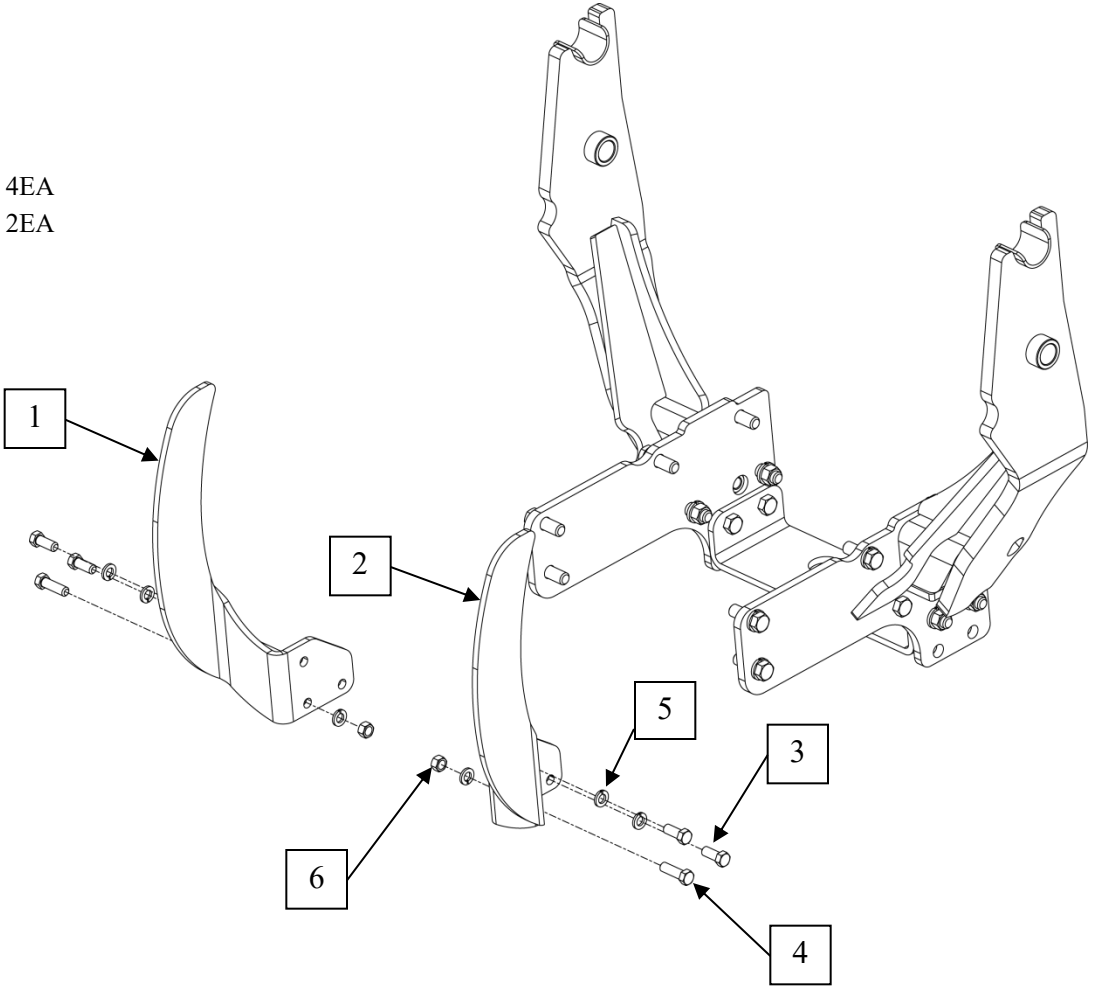

https://truckmanualshub.com/

LOADER INSTALLATION

STEP 6.

Install Boom ASS'Y

Hang the groove on the pin located on Mounting Frame

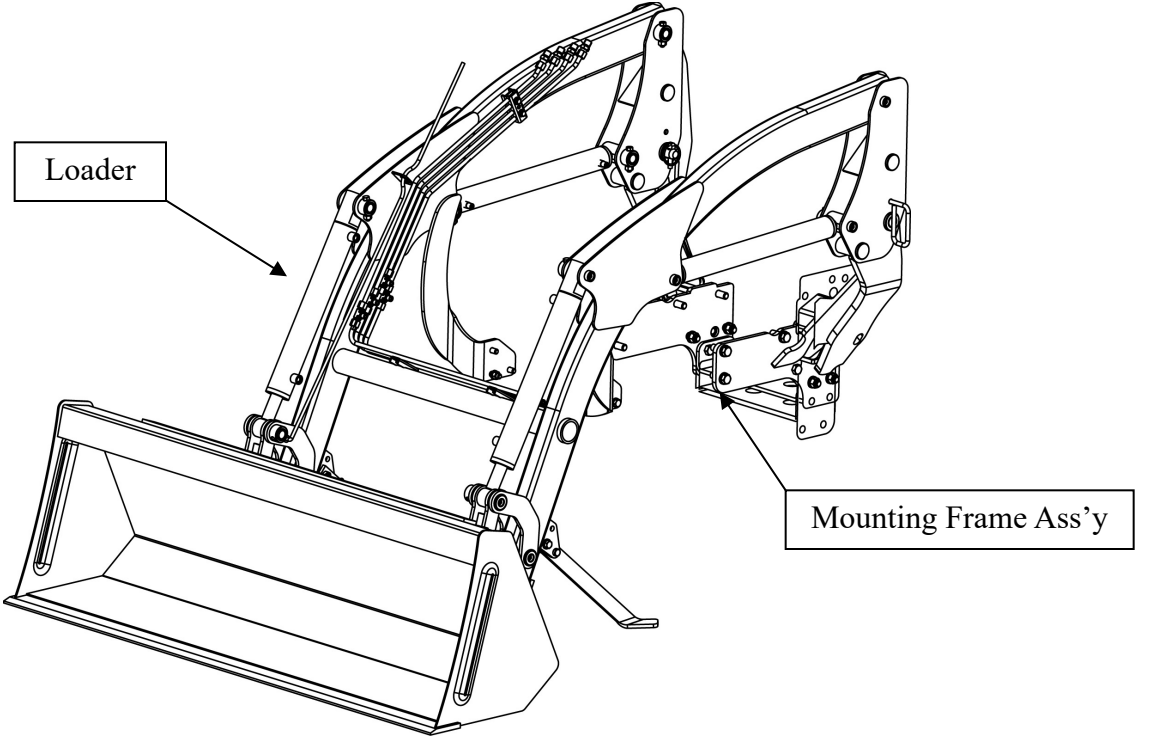

LOADER INSTALLATION

https://truckmanualshub.com/

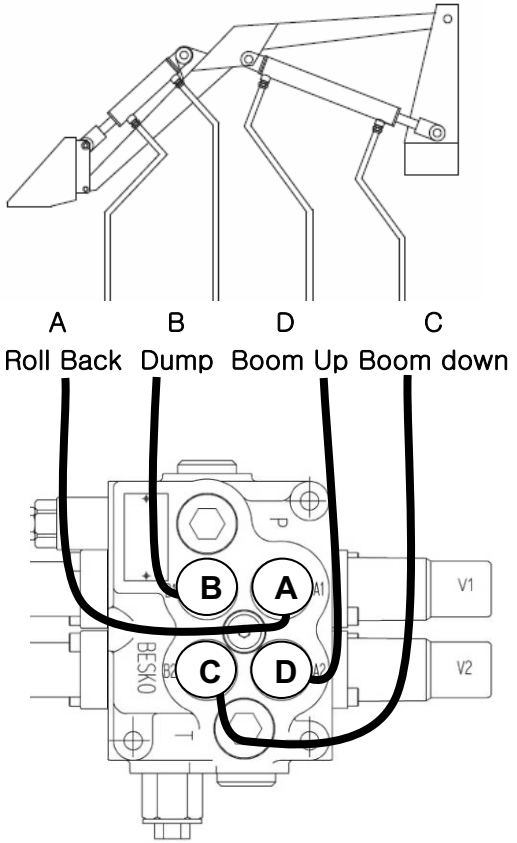

STEP 7.

Install Hydraulic Line

(1) Union PF3/8-PF1/4 : 4EA
(2) Nipple PT3/8 : 4EA
(3) HYD Hose 1300 (PF1/4, PT3/8) : 4EA
(4) Hose Cover 1000 : 1EA

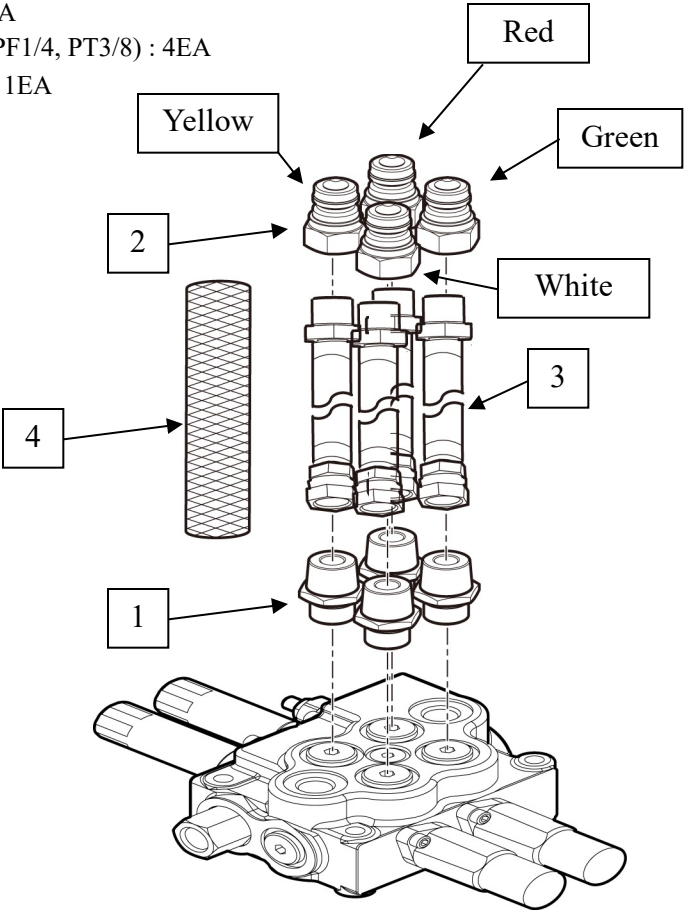

FRONT END LOADER HISTORY CARD

https://tractormanualshub.com/

DATE	JOB CARD NO.	NATURE OF DEFECT	PARTS REPLACEMENT	W/CLAIM NO. AND DATE	REMARKS

SERVICE RECORD

https://truckmanualshub.com/

DATE	TRACTOR HOURS	NATURE/TYPE OF REPAIR/SERVICE CARRIED OUT

https://truckmanualshub.com/

DAILY OPERATION LOG

DATE	JOB DONE	MACHINE HOURS		FUEL CONSUMPTION	ENGINE OIL TOPPED UP	REMARKS
		START	END			

PART REPLACEMENT RECORD

https://truckmanualsnb.com

DATE	PART DESCRIPTION	QTY	COST	DATE	PART DESCRIPTION	QTY	COST

https://truckmanualshub.com/

TX2000

OPERATOR'S MANUAL FOR FRONT END LOADER

CODE NO.

8511-700-000-0

Printed on Jan. 2019

2nd EDITION