https://truckmanualshub.com/

SERVICE REPAIR

MANUAL

Hyster B257 (B60ZHD, B80ZHD) Forklift

HYSTER

https://truckmanualshub.com/

STEERING MECHANISM

B60Z^{AC} [C230];
B60Z^{HD} [B262];
B80Z^{HD} [B257]

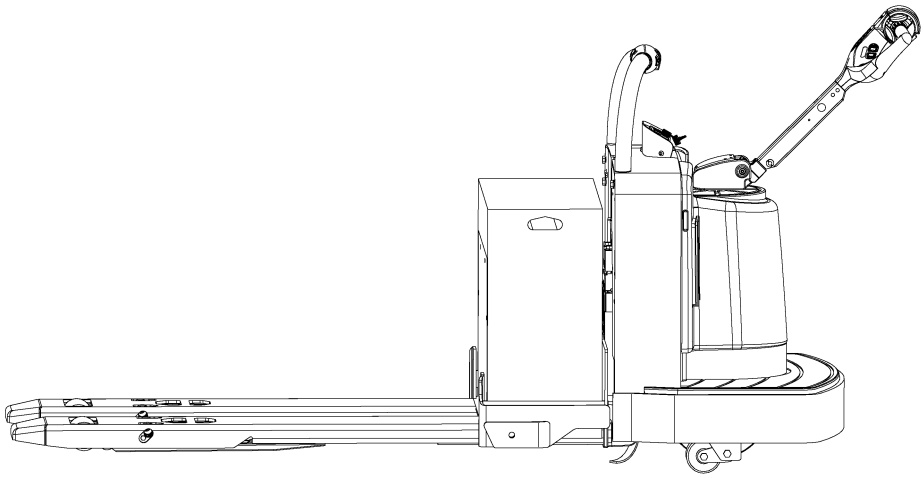

HYSTER

PART NO. 4096087

1600 SRM 1637

https://truckmanualshub.com/

SAFETY PRECAUTIONS
MAINTENANCE AND REPAIR

- The Service Manuals are updated on a regular basis, but may not reflect recent design changes to the product. Updated technical service information may be available from your local authorized Hyster® dealer. Service Manuals provide general guidelines for maintenance and service and are intended for use by trained and experienced technicians. Failure to properly maintain equipment or to follow instructions contained in the Service Manual could result in damage to the products, personal injury, property damage or death.
- When lifting parts or assemblies, make sure all slings, chains, or cables are correctly fastened, and that the load being lifted is balanced. Make sure the crane, cables, and chains have the capacity to support the weight of the load.
- Do not lift heavy parts by hand, use a lifting mechanism.
- Wear safety glasses.
- DISCONNECT THE BATTERY CONNECTOR before doing any maintenance or repair on electric lift trucks. Disconnect the battery ground cable on internal combustion lift trucks.
- Always use correct blocks to prevent the unit from rolling or falling. See HOW TO PUT THE LIFT TRUCK ON BLOCKS in the **Operating Manual** or the **Periodic Maintenance** section.
- Keep the unit clean and the working area clean and orderly.
- Use the correct tools for the job.
- Keep the tools clean and in good condition.
- Always use **HYSTER APPROVED** parts when making repairs. Replacement parts must meet or exceed the specifications of the original equipment manufacturer.
- Make sure all nuts, bolts, snap rings, and other fastening devices are removed before using force to remove parts.
- Always fasten a DO NOT OPERATE tag to the controls of the unit when making repairs, or if the unit needs repairs.
- Be sure to follow the **WARNING** and **CAUTION** notes in the instructions.
- Gasoline, Liquid Petroleum Gas (LPG), Compressed Natural Gas (CNG), and Diesel fuel are flammable. Be sure to follow the necessary safety precautions when handling these fuels and when working on these fuel systems.
- Batteries generate flammable gas when they are being charged. Keep fire and sparks away from the area. Make sure the area is well ventilated.

NOTE: The following symbols and words indicate safety information in this manual:

WARNING

Indicates a hazardous situation which, if not avoided, could result in death or serious injury.

CAUTION

Indicates a hazardous situation which, if not avoided, could result in minor or moderate injury and property damage.

On the lift truck, the WARNING symbol and word are on orange background. The CAUTION symbol and word are on yellow background.

https://truckmanualshub.com/

TABLE OF CONTENTS

General 1
Accessing the Drive Unit Compartment 1
Special Precautions 2
Electromagnetic Shield 3
Calibration 3
Power Assist Steering 3
Control Handle 4
Control Handle Head 4
Control Handle 4
Standard Steering 4
Remove 5
Install 5
Power Assist Steering 7
Remove 7
Install 8
Gas Spring 9
Discharging the Gas Spring 9
Remove 10
Install 10
Articulating Shaft and Pinions (EPAS) 11
Remove 11
Pinion Repair 12
Upper Pinion 12
Lower Pinion 13
Install 14
Steer Motor Assembly 14
Repair 14
Steer Motor, Replace 14
Steer Motor Gear, Replace 14
Gearbox/Complete Assembly, Replace 15
Steer Support Assembly 16
Standard Steering 16
Remove (Complete Unit) 16
Disassemble 17
Assemble 17
Install (Complete Unit) 18
Power Assist Steering (Option) 19
Remove (Complete Unit) 19
Disassemble 20
Support Base 20
Steer Swivel 21
Assemble 21
Steer Swivel 21
Support Base 22
Install (Complete Unit) 24
Advance Coast Control 24
Disassemble 24
Assemble 27
Coast Control Adjustment Procedure 27
Troubleshooting 28

https://truckmanualshub.com/

Thanks very much for your reading,

Want to get more information,

Please click here, Then get the complete manual

JustClickHere

NOTE:

If there is no response to click on the link above, please download the PDF document first, and then click on it.

Have any questions please write to me:
admin@servicemanualperfect.com

https://truckmanualshub.com/

This section is for the following models:

(B60ZAC) [C230];
(B60ZHD) [B262];
(B80ZHD) [B257]

https://truckmanualshub.com/

General

The control handle assembly is designed to perform several functions. The standard control handle includes the speed/direction control and buttons for the horn, traction reversing, and hydraulic functions. The control handle is connected to the Master Drive Unit (MDU) and is used to steer the truck as it turns the MDU. Move the control handle left or right to turn the drive/steer tire and steer the truck. Controls mounted in the handle are linked to the control panel by a wiring harness that passes through the center of the handle. The brake is applied when the handle is in the full up or down position.

A top-mounted control handle assembly is used on these lift trucks and is designed to be used while the operator is either walking beside the truck or riding on a small platform to the left or right side of the handle. A power assist option is available that senses when the operator begins to move the control handle side to side and activates a motor in the drive unit compartment to turn the drive unit. This greatly reduces the operator effort needed to steer the lift truck.

ACCESSING THE DRIVE UNIT COMPARTMENT

The drive unit compartment is concealed behind a molded cover which fits securely around the steer support assembly and into the frame. The floor mat fits snugly in the operator platform after the drive unit cover has been installed.

To remove the drive unit cover, first lift the corners of the floor mat and pull it out away from the drive unit. See Figure 1. Next, reach under the side of the drive unit cover near the bottom and find the grip slot. See Figure 2.

With both hands, pull up and away from the truck until the bottom of the cover kicks out from the retaining clips. Repeat this for the other side of the cover. Work around the edge of the cover until it is freed from the truck.

To install the drive unit cover, make sure the floor mat is pulled away from the drive unit and place the bottom of the drive unit cover onto the operator platform. Position the lower edges partially into the lower retaining clips. Push the top of the cover partially into the upper retaining clips. Do not push either edge of the cover in completely before starting all edges into the proper place. When the cover is aligned and started properly, press the cover completely into the retaining clips and place the floor mat into the operator platform around the cover.

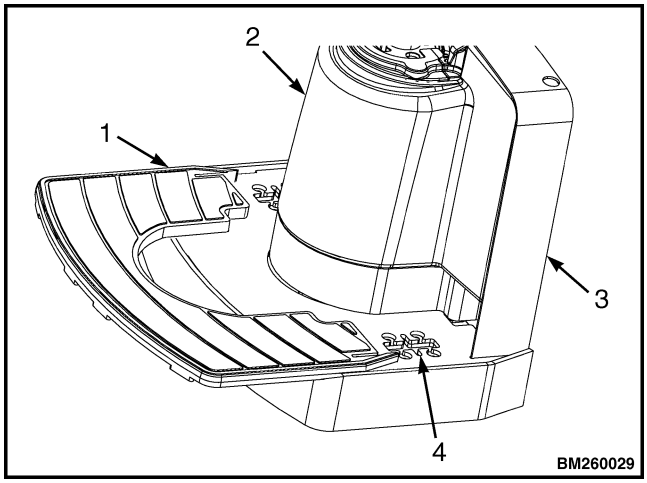

1. FLOOR MAT
2. DRIVE UNIT COMPARTMENT COVER
3. FRAME
4. CASTER ADJUSTMENT ACCESS

Figure 1. Floor Mat

https://truckmanualshub.com/

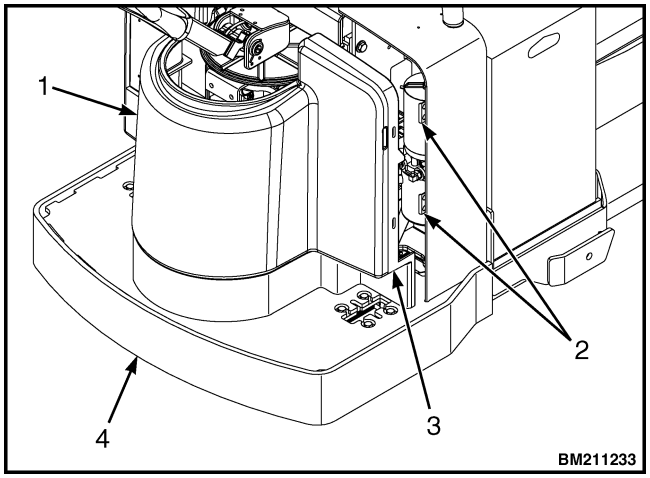

Figure 2. Drive Unit Compartment Cover

Legend for Figure 2

1. DRIVE UNIT COMPARTMENT COVER
2. RETAINER TABS
3. GRIP SLOT
4. FRAME

Special Precautions

WARNING

The capacitor in the transistor controller can hold an electrical charge after the battery is disconnected. To prevent electrical shock and personal injury, discharge the capacitor before inspecting or repairing any component. Wear safety glasses. Make certain the battery has been disconnected. DO NOT use a screwdriver to discharge the traction motor controller.

WARNING

To avoid personal injury and prevent electrical shock, perform the following steps before performing any troubleshooting or adjustments, and connecting or disconnecting a handset or PC.

CAUTION

To avoid controller damage, always disconnect the battery. Discharge the capacitor and never put power to the controller with any power wire disconnected.

Never short any controller terminal or motor terminal to battery. Make sure to use proper procedures when servicing the controller.

1. Turn the key switch to the **OFF** position and disconnect the battery.

2. Remove the drive unit compartment cover to access the controller. See Accessing the Drive Unit Compartment.

3. Discharge the capacitors in the controllers by connecting a 200-ohm, 2-watt resistor across the controller's B + and B− terminals using insulated jumper wires. See Figure 3. **DO NOT** short across the motor controller terminals with a screwdriver or jumper wire. Remove the 200-ohm, 2-watt resistor before reconnecting the battery.

https://truckmanualshub.com/

ELECTROMAGNETIC SHIELD

WARNING

Never operate Power Assist models with the Electromagnetic Shield removed.

A metallic shield is installed between the MDU and brake assembly and the steering assembly on power assist steering units. This shield deflects the electromagnetic field generated by the MDU and brake assembly which can interfere with the operation of the torque sensor. Make certain that the Electromagnetic Shield is reinstalled before operating the lift truck after servicing to prevent erratic operation of the power assist steering function.

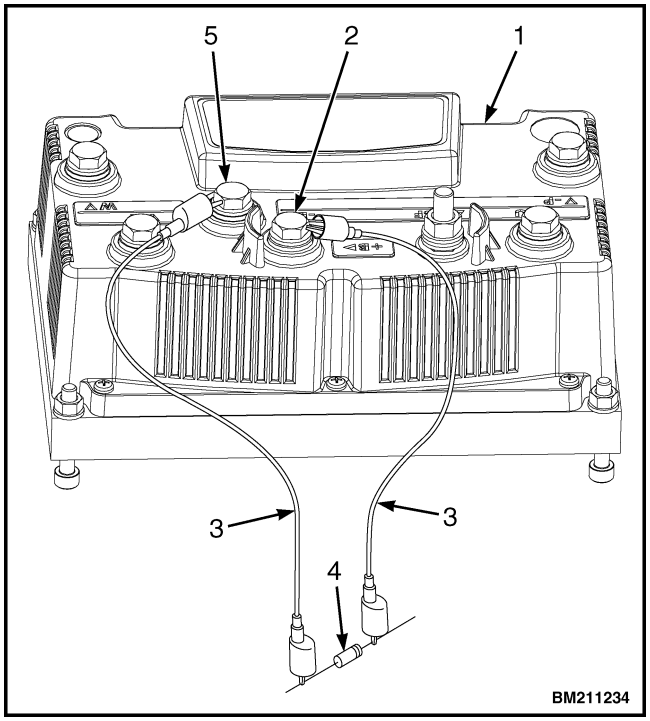

1. CONTROLLER
2. POSITIVE CONNECTION
3. INSULATED JUMPER WIRES
4. 200-OHM, 2-WATT RESISTOR
5. NEGATIVE CONNECTION

Figure 3. Discharging Capacitors

Calibration

POWER ASSIST STEERING

The following calibration instructions apply to all power assist steering models.

WARNING

If at any time a tiller handle slowly moves in one direction during startup, it is likely calibration needs to be performed.

Power assist steering calibration should be performed if either the torque sensor or power assist steering unit is serviced or replaced or anytime the drive tire is replaced.

1. Position the lift truck on a normal, smooth surface floor away from personnel or other equipment with the drive tire centered.
2. Turn the key switch to the **OFF** position and remove the drive unit compartment cover.
3. The Calibration Tab is an unconnected wire with a female spade connector hanging near the ETACC CAN connector. Attach the Calibration Tab to the B+ terminal (right post) of the contactor, using a 914 mm (36 in.) 14 Ga. jumper wire with an alligator clip on one end and a male spade connector on the other.

NOTE: If the lift truck is not equipped with coast control, wedge a deep well socket or 50 mm (2.00 in.) by 20 mm (0.75 in.) wood block into the control arm/swivel joint area to hold the handle in an operating position.

4. Position the control arm in the brake **OFF** position and secure using the coast control. See Figure 4.
5. Standing clear of the steer handle, turn the key switch to the **ON** position.

https://truckmanualshub.com/

NOTE: Communication error codes may appear during this process. This is a normal part of the calibration process.

6. The lift truck will start up in calibration mode and the tiller handle will begin to move on its own power during the calibration cycle.
7. Wait at least 5 seconds after the calibration cycle has ended (the tiller has stopped moving) and remove the jumper wire.
8. Wait at least 5 seconds after the jumper wire is removed and cycle the key switch to **OFF** and then back to **ON**.
9. If no power steering error appears, the power steering system was calibrated successfully.
10. Check the lift truck for proper operation. Reinstall the drive unit compartment cover and return to the lift truck to service.

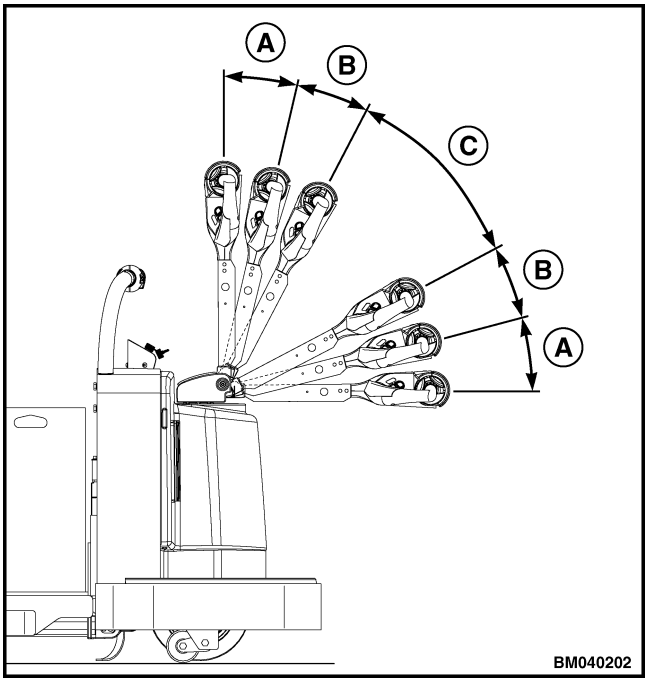

A. BRAKE ON
B. REGEN BRAKING
C. BRAKE OFF

Figure 4. Brake Activation

Control Handle

CONTROL HANDLE HEAD

The control handle head is primarily an electronic component and is discussed in the electrical section. For instructions on how to remove, install, or repair the control handle head, refer to the section **Electrical System** 2200SRM1640.

CONTROL HANDLE

The following procedures describe the removal and disassembly of parts of the control handle and dash assembly for repairs. The control handle and dash assembly may also be removed as a single unit with no further disassembly. This is useful when the control handle and dash assembly must be removed to access other components of the lift truck. For instruction on how to remove the control handle and dash assembly as a complete unit, see Steer Support Assembly in this section.

Standard Steering

WARNING

The gas springs used on the control handle are installed under tension and can release with enough force to cause personal injury or property damage.

WARNING

The capacitor in the controller can hold an electrical charge after the battery is disconnected. To prevent electrical shock and personal injury, discharge the capacitor before inspecting or repairing any component in the drive unit compartment. See Special Precautions in this section. Wear safety glasses. Make certain the battery has been disconnected.

Refer to Figure 5 for the following instructions.

https://truckmanualshub.com/

Remove

1. Turn the key switch to the **OFF** position and disconnect the battery. Remove the drive unit compartment cover. See Accessing the Drive Unit Compartment in this section.

2. Discharge the capacitors. See Special Precautions in this section.

CAUTION

DO NOT cut the wiring harnesses when removing the wire ties.

NOTE: It is not necessary to remove the main wiring harness unless harness is damaged and is being replaced.

3. **CAREFULLY** cut the wire ties securing the brake, brake switch, and control handle wiring harnesses together at the right rear of MDU.

NOTE: Be certain to note the routing of the wires before disconnecting any wire. The wiring must be routed properly at assembly to prevent steering problems and prevent chafing of the harness.

4. Tag and disconnect the brake wiring harness (two-pin connector) located near the brake.

5. Tag and disconnect the control handle wiring harness (eight-pin connector).

6. Remove cover from swivel by removing three screws. See Figure 5.

NOTE: Be careful not to damage the brake switches when removing the gas spring.

7. Remove the gas spring. See Gas Spring in this section.

8. Remove the pin from control handle arm and slide the pivot shaft out. Recover shims for later installation. Remove the control handle arm from the swivel.

9. Carefully pull the wiring harnesses through the center of the support.

10. Remove bushings from the control handle arm if necessary.

11. If necessary, remove the control handle head. See the section **Electrical System** 2200SRM1640. Remove nut and clamp and pull wiring harness through control handle arm.

12. Remove two screws from the swivel and remove the brake switches and nutplate.

Install

Refer to Figure 5 for the following instructions.

1. Install brake switches and nutplate into the swivel using two screws.

2. Install bushings into the control handle arm if removed.

3. Install the control handle head if removed. See the section **Electrical System** 2200SRM1640. Pull wiring harness through control handle arm and secure with clamp and nut.

4. Route the control handle and brake switch wiring harnesses down through the sleeves in the support. Carefully pull the wiring harnesses through the center of the support.

NOTE: Install shims onto pivot shafts as required to minimize side-to-side movement of handle.

5. Install the control handle arm into the swivel using pivot shaft, shims, and pin. Install shims between the control handle arm and swivel on the **LEFT** side of the swivel (side nearest the controller).

6. Install the gas spring to the control handle. See Gas Spring.

https://truckmanualshub.com/

CAUTION

Make sure that the wiring is properly routed to prevent steering problems and chafing of the harness.

7. Connect the control handle wiring harness to the main wiring harness.

8. Connect the brake switch connector and, if equipped, the optional coast control.

CAUTION

Make sure the wiring harness is not wrapped around the gas spring. Check the wiring harness with the control handle in the full up and full down positions. Turn the control handle fully to the left and right to check for restrictions.

9. With the control handle in the upright position, pull the harness and check for binding. Position the wiring harness with slack distributed evenly to allow for movement when the control handle is turned in any direction.

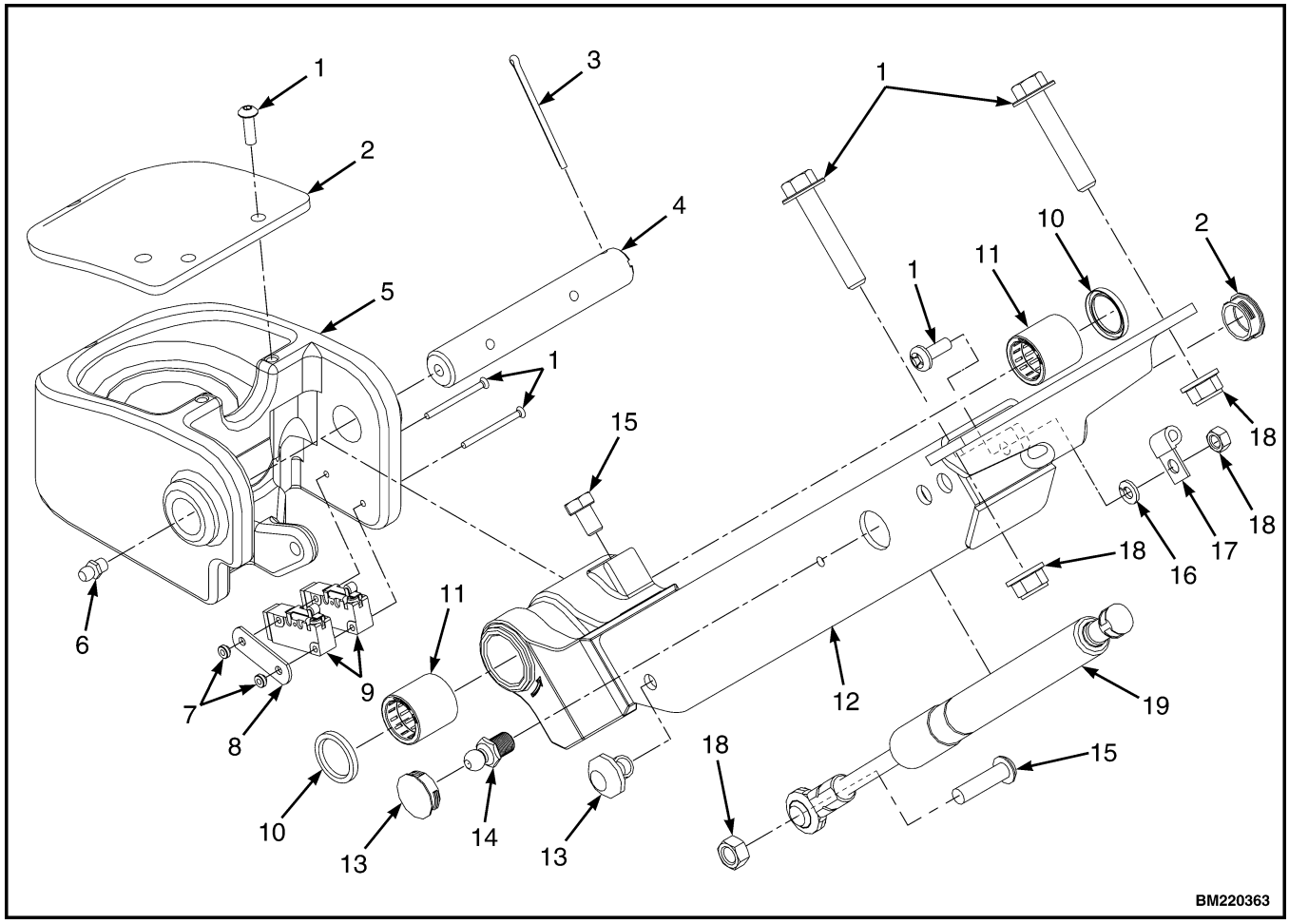

1. SCREW
2. COVER
3. PIN
4. PIVOT SHAFT
5. SWIVEL
6. GREASE FITTING
7. NUT
8. NUT PLATE
9. BRAKE SWITCHES
10. SHIM
11. BUSHING
12. CONTROL ARM
13. PLUG
14. BALL PIVOT
15. CAPSCREW
16. WASHER
17. CLAMP
18. NUT
19. GAS SPRING

Figure 5. Control Handle (Standard Steering)

https://truckmanualshub.com/

10. Remove excess slack by bundling control handle, brake, and brake switch wiring harnesses and secure using wire ties.

11. Install cover to swivel using three screws.

12. Connect the battery and test the operation of the truck prior to returning the lift truck to service.

13. Install the drive unit compartment cover and floor mat as removed.

Power Assist Steering

WARNING

The gas springs used on the control handle are installed under tension and can release with enough force to cause personal injury or property damage.

WARNING

The capacitor in the transistor controller can hold an electrical charge after the battery is disconnected. To prevent electrical shock and personal injury, discharge the capacitor before inspecting or repairing any component in the drive unit compartment. Wear safety glasses. Make certain the battery has been disconnected.

Refer to Figure 7 for the following instructions:

Remove

1. Turn the key switch to the **OFF** position and disconnect the battery. Remove the drive unit compartment cover. See Accessing the Drive Unit Compartment in this section.

2. Discharge the capacitors. See Special Precautions in this section.

CAUTION

DO NOT cut the wiring harnesses when removing the wire ties.

NOTE: It is not necessary to remove the main wiring harness unless harness is damaged and is being replaced.

3. **CAREFULLY** cut the wire ties securing the brake, brake switch, and control handle wiring harnesses together at the right rear of MDU.

NOTE: Be certain to tag, identify, and note the routing of the wires before disconnecting any wire. The wiring must be routed properly at assembly to prevent steering problems and prevent chafing of the harness.

4. Tag and disconnect the control handle wiring harness from the main wiring harness.

5. Remove the two capscrews holding the cover to the steer support studs and lift the cover off. See Figure 6.

6. Tag, identify, and disconnect the control handle wiring from the brake switches. Remove the two screws and spacer securing brake switches to the swivel. Remove the switches.

7. Disconnect the proximity switch from the main wiring harness. Remove the jam nut from the switch and unscrew switch from the MDU.

NOTE: Be careful not to damage the brake switches when removing the gas spring.

8. Remove the gas spring. Refer to Gas Spring in this section.

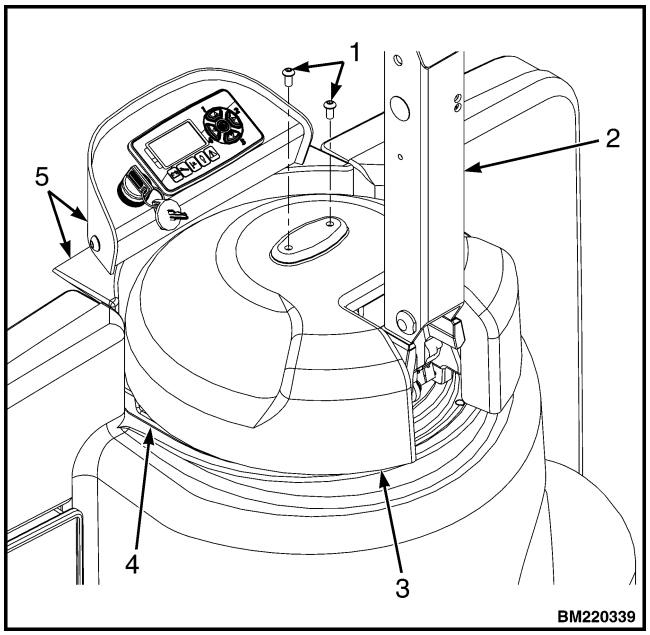

1. CAPSCREW
2. CONTROL ARM
3. SWIVEL COVER
4. STEER SUPPORT BASE
5. DASH

Figure 6. Swivel Cover

https://truckmanualshub.com/

9. Remove cotter pin from end of pivot pin. Remove grease fitting if necessary. See Figure 7.

10. Using a brass drift and hammer, remove pivot pin from swivel and control arm. See Figure 7.

NOTE: Make sure control handle wiring is disconnected/removed before removing control arm from swivel.

11. Separate control arm from swivel. See Figure 7.

12. Inspect bushings for excessive wear, remove from control if necessary.

Install

Refer to Figure 7 for the following instructions.

1. Install bushings into control arm.

2. Position control handle to swivel. Install pivot pin into control arm and swivel.

3. Install cotter pin into pivot pin. Install grease fitting if removed.

4. Reconnect control handle wiring as removed. Refer to tags for proper identification. Install wire ties as removed to secure control handle wiring to main harness.

NOTE: Be careful not to damage the brake switches when installing the gas spring.

5. Install the gas spring. Refer to Gas Spring in this section.

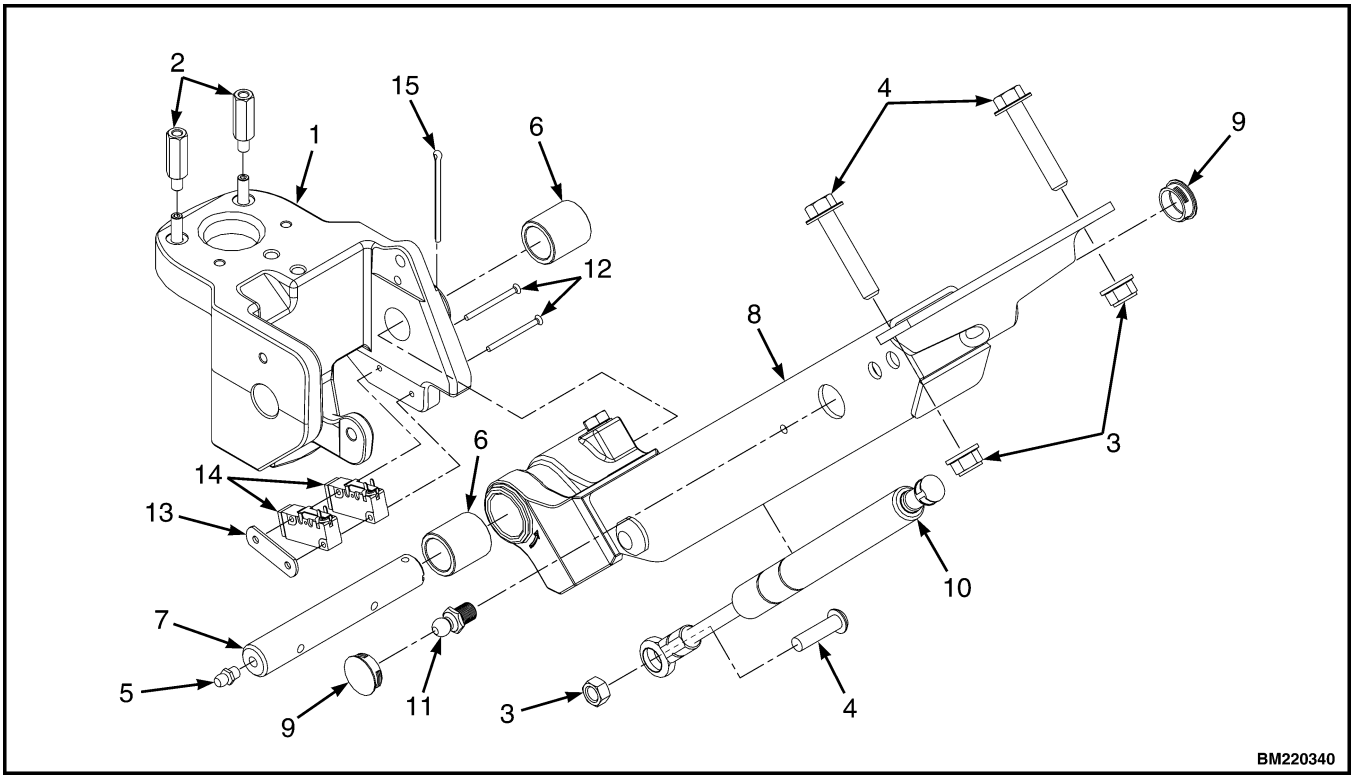

1. SWIVEL
2. STUD
3. NUT
4. CAPSCREW
5. GREASE FITTING
6. BUSHING
7. PIN
8. CONTROL ARM
9. CAP
10. GAS SPRING
11. BALL STUD
12. SCREW
13. NUT PLATE
14. BRAKE SWITCHES
15. COTTER PIN

Figure 7. Control Arm Mounting (Power Assist Steering)

https://truckmanualshub.com/

6. Calibrate the tiller angle potentiometer. Refer to the sections **User Interface** 2200SRM1323 or **User Interface** 2200SRM1324 for calibration procedures.

7. Position the cover to the steer swivel and install the two capscrews to secure.

8. Install drive unit compartment covers. See Accessing the Drive Unit Compartment in this section.

9. Connect the battery and turn the key switch to the **ON** position and test for proper operation. Return the lift truck to service.

Gas Spring

WARNING

Disconnect the battery by separating the battery connector before opening the compartment cover and before inspecting or repairing the electrical system. DO NOT place tool on top of the battery. If a tool causes a short circuit, the high-current flow from the battery can cause personal injury or property damage.

WARNING

The capacitor in the traction motor controller can hold an electrical charge after the battery is disconnected. To prevent electrical shock and personal injury, discharge the capacitor before inspecting or repairing any component. Make certain the battery has been disconnected and always wear safety glasses. See Special Precautions in this section. DO NOT attempt to discharge the capacitors by shorting the controller.

WARNING

The gas spring used on the control handle is installed under tension and can release with enough force to cause personal injury or property damage.

Review the following procedures before removing the gas spring.

DISCHARGING THE GAS SPRING

WARNING

Goggles and a face shield must be worn for personal protection as metal chips and hydraulic lubricant may be ejected from the drill operation due to the high internal pressure.

CAUTION

The control handle return spring is charged with pressurized gas and contains a hydraulic oil lubricant.

NOTE: This process is a destructive operation to the gas spring. A new gas spring must be used during reassembly. This is necessary because internal damage to the spring components which are not detectable could cause damage or injury when the spring is removed.

1. Check that the handle return spring is installed and properly secure the control handle arm in the full upright position. Remove the plastic plugs to increase visibility of the gas spring.

CAUTION

DO NOT damage the control handle wiring harness inside the control handle arm.

2. Locate and drill a 7 mm (0.25 in.) access hole through the center of the control handle tube, approximately 50 mm (2 in.) below the existing access hole.

WARNING

Contents are under pressure. This process may eject metal chips and oil.

3. Locate the gas spring inside the control handle through the newly drilled access hole and drill a 3 mm (0.125 in.) hole into the gas spring cylinder shell to relieve pressure.

4. Clean up any discharged oil and dispose of in accordance with local regulations.

https://truckmanualshub.com/

REMOVE

To remove the gas spring from the control handle:

1. Remove the stop bolt from the control handle arm.
2. Remove the plastic plugs to access the gas spring.
3. Discharge the pressure from the gas spring. See Discharging the Gas Spring.

CAUTION

DO NOT damage the control handle wiring harness inside the control handle arm.

4. Remove the retention clip from the gas spring ball socket. Disconnect the gas spring from the ball stud.
5. Remove the ball stud(s) from inside the control arm (and swivel, if equipped) as necessary.
6. On Standard Steering models, remove the hardware securing the rod end of the gas spring to the tiller swivel.

CAUTION

Be careful not to damage the sensor when driving out the pin.

7. On Power Assist Models, tap the retaining pin from the sensor side out toward the brake switch side of the steer swivel using a suitable punch and hammer. Remove the gas spring. See Figure 8

INSTALL

1. Install ball stud and nut into control arm if removed. Tighten to 27 N•m (20 lbf ft).
2. Lubricate both connection points with multipurpose lithium complex grease with 2 to 4% molybdenum.

CAUTION

DO NOT damage the control handle wiring harness inside the control handle arm.

3. Make certain the control handle arm is secured in the full upright position and position the new gas spring into the control handle arm. Connect the upper end of the gas spring to the ball stud inside the control handle arm. Install the retention clip to the gas spring ball socket as removed.

CAUTION

Be careful not to damage the brake switch while driving in the pin.

4. On Power Assist Steer models, align the lower end of the gas spring with the steer swivel retaining pin using a flat screwdriver and hold in position. Drive the retaining pin into the swivel until flush.

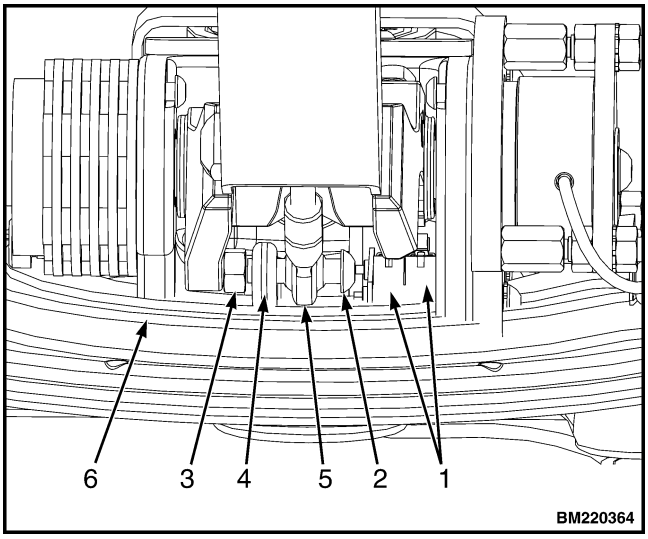

1. BRAKE SWITCH
2. CAPSCREW
3. NUT
4. SWIVEL
5. ROD END
6. SUPPORT BASE

Figure 8. Gas Spring Lower Connection

https://truckmanualshub.com/

NOTE: Apply Loctite® 242 to the capscrew threads before installing the nut.

5. On Standard Steer models, align the lower end of the gas spring into position using a screwdriver and hold in position. Install the hardware securing the rod end of the gas spring to the steer swivel. Tighten to 27 N•m (20 lbf ft).

6. Install the plastic plugs to the access holes on the control handle shaft as removed.

NOTE: Apply Loctite® 242 to the capscrew threads before installing the jam nut.

7. Install the stop bolt and jam nut to the control handle arm as removed.

8. Test for proper operation. Install covers as removed.

Articulating Shaft and Pinions (EPAS)

REMOVE

1. Turn the key switch to the **OFF** position and disconnect battery. Remove the drive unit compartment covers.

2. Discharge the capacitor. See Special Precautions in this section.

3. Gently pry the Hyster cover from the center of the steer support cover. Remove the two screws and washers securing the cover to the steer support and lift the cover off.

4. Loosen the two screws and remove the dash assembly. Secure dash out of the way or tag, identify, and disconnect all wiring from the BDI display and key switch if necessary to remove the dash. Refer to **Electrical System** 2200SRM1640.

5. Remove the capscrew and lock nut from the top of the articulated shaft.

6. Secure a sling around the steer support plate. Attach an overhead lifting device of sufficient capacity to the sling. Tighten the lifting device to support the weight of the steering support.

7. Slightly loosen the two upper capscrews, nuts, and washers that hold the steering support to the frame.

8. Remove the two lower capscrews, nuts, and washers that secure the steering support to the frame.

9. Lift the steer support (control arm end) so that it pivots on the two upper capscrews to separate the gear pin from the articulated shaft. Secure the articulated shaft out of the way.

10. Remove the capscrew and lock nut from the bottom of the articulated shaft.

11. Remove the articulating shaft from the lower pinion shaft. See Figure 9.

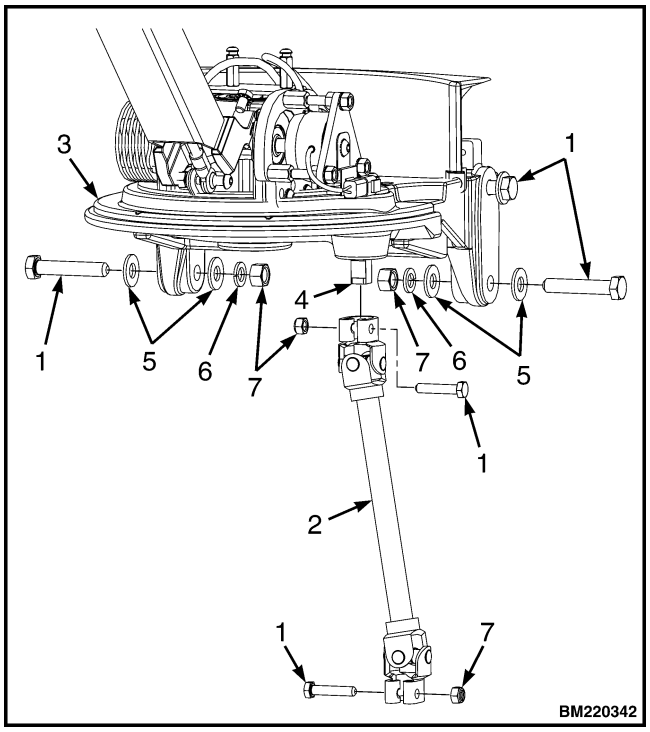

1. CAPSCREW
2. ARTICULATING SHAFT
3. SUPPORT BASE
4. UPPER PINION SHAFT (NOTCH FORWARD)
5. WASHER
6. LOCKWASHER
7. LOCK NUT

Figure 9. Articulating Shaft

https://truckmanualshub.com/

PINION REPAIR

CAUTION

Steering functions will not operate properly if pinions are not aligned properly with steer swivel (control handle) and drive tire.

Remove and repair the pinion assemblies as necessary.

Upper Pinion

After removing the articulating shaft, the upper pinion can be removed from the support base for repair.

1. Remove two screws, two washers and gear cover plate from the steer support. See Figure 10.

NOTE: Disassemble only as necessary for repair. Pinion assembly parts are not individually repairable, but the assembly may be replaced as a whole.

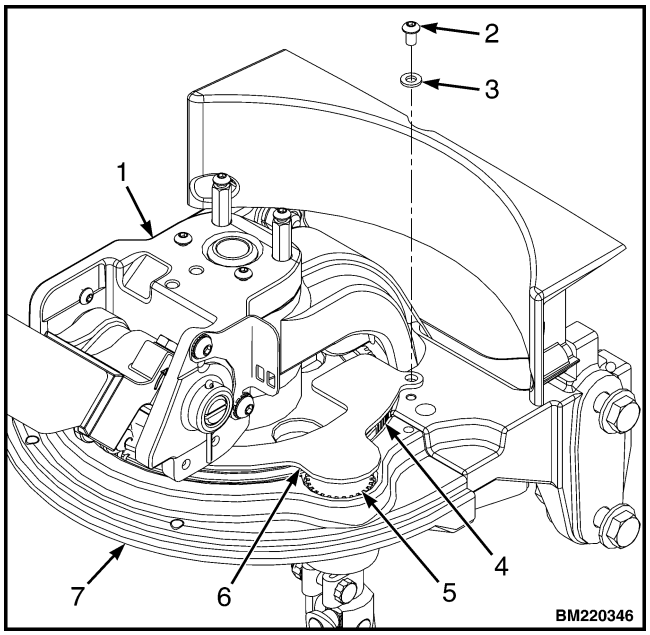

1. STEER SWIVEL
2. WASHER
3. SCREW
4. STEER SUPPORT GEAR
5. PINION GEAR
6. GEAR COVER PLATE
7. SUPPORT BASE

Figure 10. Gear Cover

2. Lift the upper pinion assembly from the support base. Remove bearing from shaft. Drive pin from gear and remove gear from shaft as necessary. See Figure 11.

3. Install gear to shaft as removed. Align hole in gear with hole in shaft and install retaining pin. Install bearing onto shaft.

CAUTION

Ensure that pinion shaft notch and steer swivel (control handle) are aligned in the "straight ahead" position before continuing.

4. Install the pinion into the support base with the notch aligned with the steer swivel (control handle) in the straight ahead position. Position the gear cover to the support base and install two screws and washers to secure.

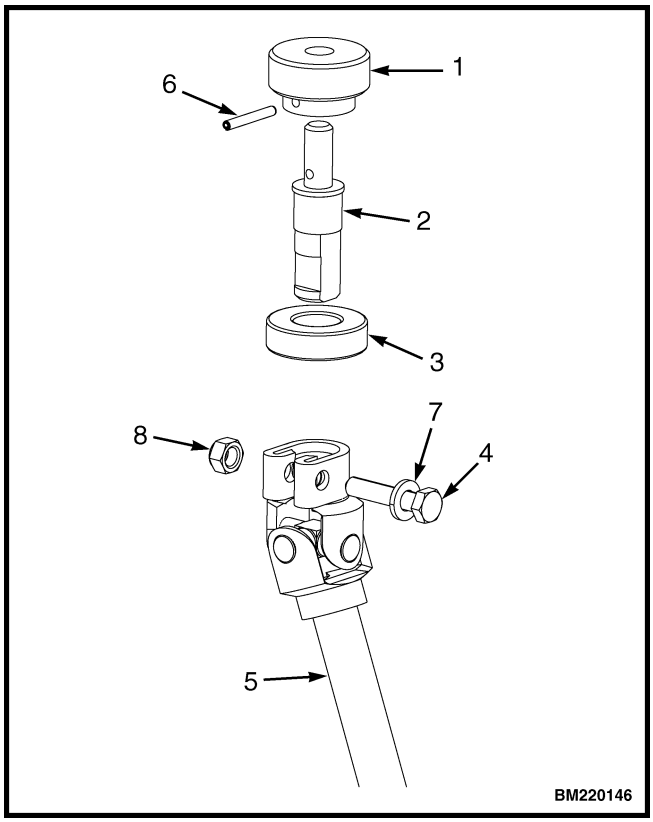

1. PINION GEAR
2. PINION SHAFT
3. BEARING
4. CAPSCREW
5. ARTICULATING SHAFT
6. RETAINING PIN
7. WASHER
8. LOCK NUT

Figure 11. Upper Pinion Assembly

https://truckmanualshub.com/

Lower Pinion

After removing the articulating shaft, the lower pinion can be removed from the mounting plate for repair. See Figure 12.

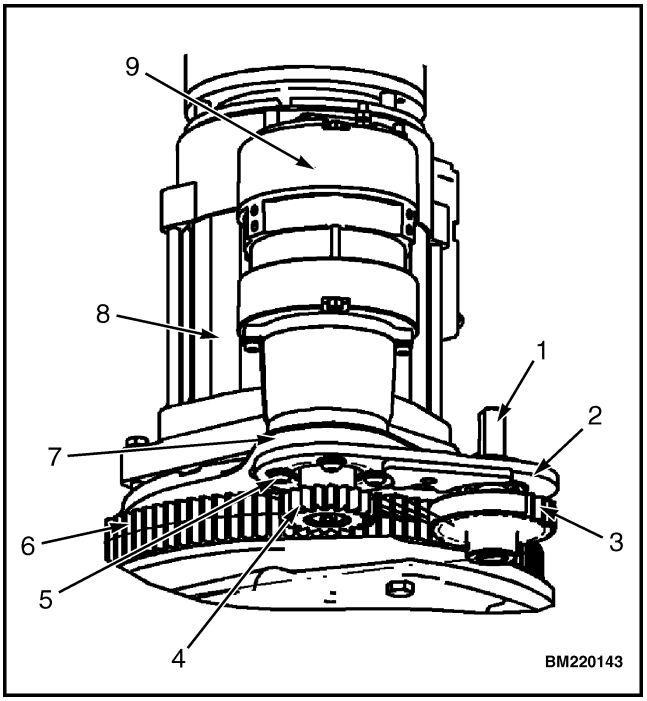

1. LOWER PINION SHAFT (NOTCH FORWARD)
2. LOWER PINION MOUNTING PLATE
3. LOWER PINION GEAR
4. STEER MOTOR GEAR
5. MOUNTING SCREWS
6. STEER GEAR
7. DRIVE UNIT HOUSING
8. TRACTION MOTOR
9. STEER MOTOR

Figure 12. Lower Pinion Mounting

1. Remove the capscrew, lockwasher, washer, and gear retaining washer from bottom of pinion assembly. Remove gear from shaft and recover the Woodruff key. Remove pinion shaft and bearing from mounting bracket. Remove bearing from shaft. See Figure 13.

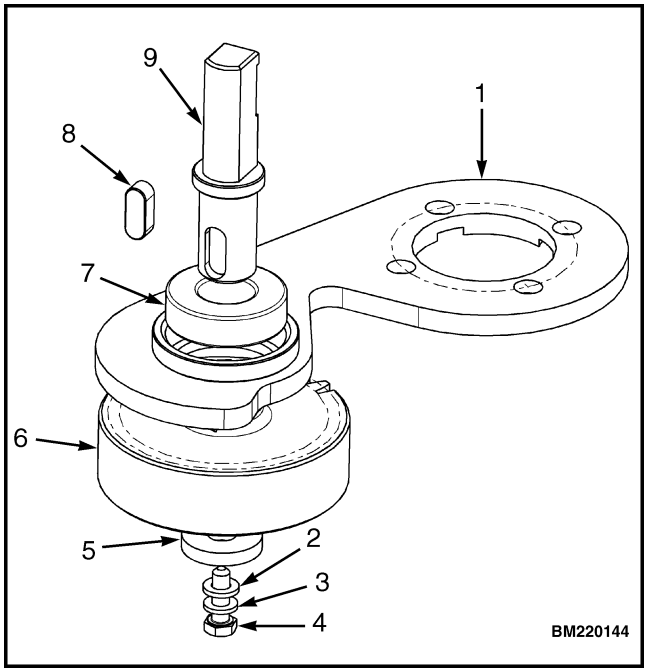

1. LOWER PINION MOUNTING BRACKET
2. WASHER
3. LOCKWASHER
4. CAPSCREW
5. RETAINING WASHER
6. GEAR
7. BEARING
8. WOODRUFF KEY
9. PINION SHAFT

Figure 13. Lower Pinion Assembly

2. Install new bearing onto shaft and position into mounting bracket as removed. Install the Woodruff key into shaft. Align pinion shaft with the notch in the "straight ahead" position.

CAUTION

Steering functions will not operate properly if pinion is not installed with notch aligned properly with drive tire.

3. Slide gear onto shaft and key. Secure in place with gear retaining washer, washer, lockwasher, and capscrew as removed.

https://truckmanualshub.com/

INSTALL

CAUTION

Ensure that the drive tire and notch of the lower pinion shaft are aligned in the steer swivel (control handle) are aligned in the "straight ahead" position.

Ensure that the steer swivel (control handle) and notch of the upper pinion shaft are aligned in the "straight ahead" position.

1. Align the notch of the upper and lower articulated shaft pinions in the "straight ahead" position.
2. Install the articulated shaft onto the lower pinion shaft. Install the capscrew into the lower clevis of the articulated shaft next to the flat of the pinion to secure. Install the lock nut and torque to 14 to 20 N•m (10 to 15 lbf ft).
3. Lift the steer support (control arm end) up so that it pivots on the two upper capscrews. Position the articulated shaft to the pinion.
4. Lower the steer support (control arm end) while guiding the articulated shaft onto the pinion shaft.
5. Install the remaining two lower capscrews, washers, and nuts securing the steer support to the frame. Tighten all four capscrews to 41 to 47 N•m (30 to 35 lbf ft). Remove the sling and lifting device.
6. Install the capscrew into the clevis of the articulated shaft next to the flat of the pinion to secure. Install the lock nut and torque to 14 to 20 N•m (10 to 15 lbf ft).
7. Install the dash to the steer support as removed. Secure using two screws. Refer to **Electrical System** 2200SRM1640.
8. Replace the drive unit compartment covers as removed. Reconnect the battery and turn the key switch to the **ON** position. Test for proper operation.

Steer Motor Assembly

REPAIR

The steer motor assembly consists of three primary sections: the electric motor, the gearbox, and the steer motor gear. Repair procedures vary greatly depending on what components are being serviced. If only the electric motor or the steer motor gear is to be replaced, they may simply be replaced on the assembly while installed to the drive unit. See Steer Motor, Replace and Steer Motor Gear, Replace. However if the gearbox or total assembly replacement is necessary, the steer motor assembly and lower articulating shaft bracket and gear must be removed from the drive unit. This requires very specific alignment when reinstalling. See Gearbox/Complete Assembly, Replace. Remove only components necessary to safely complete repairs. In some instances, total replacement may be preferred over component repair. Discuss repair options with your supervisor. Begin all repairs to the steer motor assembly with the following procedures:

1. Turn the key switch to the **OFF** position and disconnect battery. Remove the drive unit compartment covers. See GeneralGeneral.
2. Discharge the capacitor. See Special Precautions in this section.

Steer Motor, Replace

Refer to Figure 14 for the following procedures.

1. Tag and disconnect all power cables and wiring from the steer motor.
2. Remove the two capscrews and washers securing the motor to the gearbox. Lift the motor from the gearbox and remove from the lift truck.
3. Position the new steer motor on to the gearbox as removed.
4. Install two screws and washers securing electric motor to gearbox.

NOTE: Refer to tags on cables for proper reinstallation.

5. Install wiring and cables to steer motor as removed.
6. Calibrate the power assist steering sensor. See Calibration in this section.

Steer Motor Gear, Replace

Refer to Figure 15 for the following procedures.

https://truckmanualshub.com/

1. Remove the capscrew and washers from the bottom of the steer motor gear.
2. Slide the gear from the motor shaft and recover the Woodruff key.

NOTE: Make sure the groove in the gear is aligned with the Woodruff key when installing.

3. Install the Woodruff key into the groove in the motor shaft and install the steer gear onto the shaft and key.
4. Install the washers and capscrew securing gear to shaft as removed.

Gearbox/Complete Assembly, Replace

Refer to Figure 14 and Figure 15 for the following procedures.

CAUTION

Very small variations of gear installations can prevent steering systems from operating properly.

1. Mark the articulating shaft lower pinion gear and the steer gear so it can be reassembled in the exact same place. Refer to Articulating Shaft and Pinions (Power Assist Models) for more information.
2. Remove the steering motor gear. See Steer Motor Gear, Replace.

NOTE: The screws that secure the steer motor also secure the articulating shaft lower bearing bracket to the drive unit housing.

3. Remove the four screws securing the steer motor to the drive unit housing. Secure the articulating shaft and bearing bracket out of the way.
4. Remove the steer motor assembly from the lift truck. Repair or replace as necessary.

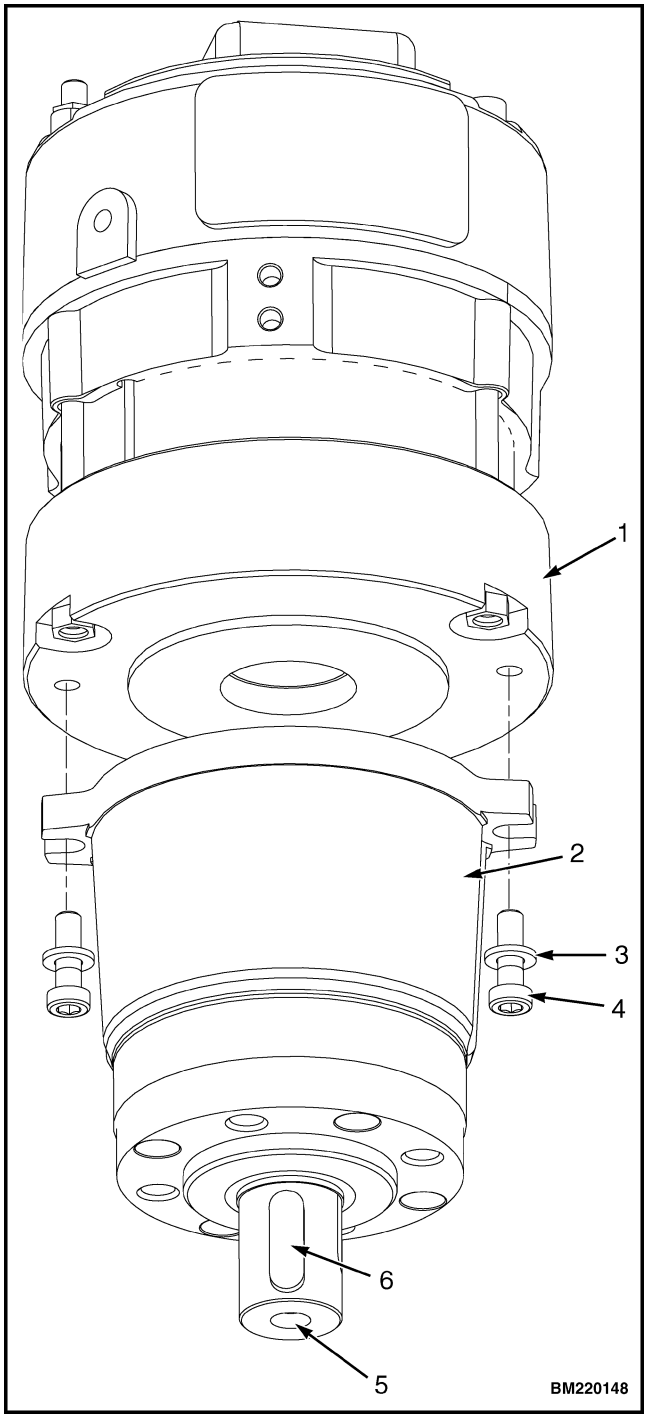

1. STEER MOTOR
2. GEARBOX
3. WASHER
4. CAPSCREW
5. SHAFT
6. WOODRUFF KEY

Figure 14. Steer Motor

https://truckmanualshub.com/

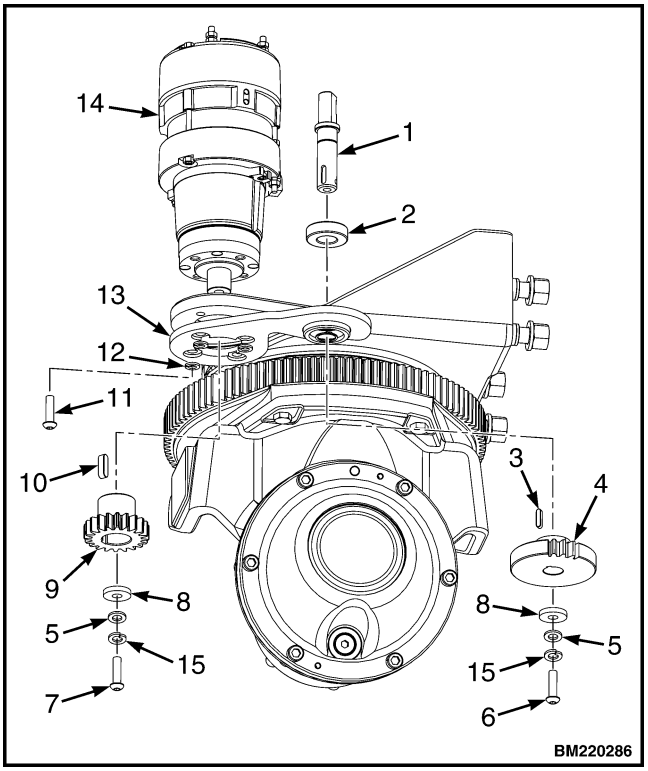

1. LOWER PINION SHAFT
2. BEARING
3. WOODRUFF KEY
4. LOWER PINION GEAR
5. WASHER
6. CAPSCREW
7. CAPSCREW
8. WASHER
9. STEER MOTOR GEAR
10. WOODRUFF KEY
11. SCREW
12. WASHER
13. BRACKET
14. STEER MOTOR
15. LOCK WASHER

Figure 15. Steer Motor Assembly

5. If replacing the gearbox, remove the two screws and washer securing the electric motor to the gearbox. Remove the gearbox from the motor and install the new gearbox. Secure in place with two screws and washers as removed.

6. Position the steer motor assembly to the drive unit housing as removed.

CAUTION

Very small variations can prevent steering systems from operating properly.

7. Align the marks on the articulating shaft lower pinion gear with the mark on the steer gear as removed. Refer to Articulating Shaft and Pinions (Power Assist Models) for more information on gear alignment. Position the lower bearing bracket to the drive unit housing as removed and install four capscrews securing bracket and steer motor to the drive unit housing.

NOTE: Make sure the groove in the gear is aligned with the Woodruff key when installing.

8. Install the Woodruff key into the groove in the motor shaft and install the steer gear onto the shaft and key.

9. Install cover and floor mat as removed. See General-General. Connect the battery and turn the key switch to the **ON** position. Test for proper operation.

Steer Support Assembly

STANDARD STEERING

WARNING

The steering assembly and dash is heavy and requires the use of an overhead lifting device to position it during removal and installation. Be sure the overhead lifting device is adequate to lift the steer support assembly.

The following instructions are for removing the entire steer support assembly without disassembly. This procedure is useful when the dash and control handle must be removed for access to other parts of the lift truck such as when removing the traction motor. Some items may be serviced without removing the steer support assembly. Remove only the components necessary to safely complete the required service.

Remove (Complete Unit)

1. Turn the key switch to the **OFF** position and disconnect battery. Remove the drive unit compartment covers.

2. Discharge the capacitor. See Special Precautions in this section.

3. Remove the three screws securing the cover to the steer support and lift the cover off.

https://truckmanualshub.com/

4. Loosen the two screws and remove the dash assembly. Secure dash out of the way or tag, identify, and disconnect all wiring from the BDI display and key switch if necessary to totally remove the dash. See **Electrical System** 2200SRM1640.

5. Identify, tag, and disconnect the control handle wiring harness, the brake switches, and coast control harness (if equipped) from the main wiring harness. Clip the wire tie securing the harnesses to the main harness for removal.

6. Remove the hardware securing the connecting plate to the steer support and to the MDU. Remove the connecting plate.

7. Secure a sling around the steer support plate. Attach an overhead lifting device of sufficient capacity to the sling. Tighten the lifting device to support the weight of the steering support. See Figure 17.

8. Remove the four capscrews, washers, and nuts securing the steer support assembly to the frame.

9. Using the overhead lifting device, carefully remove the steer support from the frame.

Disassemble

For the following instructions, refer to Figure 16.

1. Remove control handle swivel:
   a. Remove cover by removing three screws.
   b. Remove nut by bending tabs on locking washer down using a flat screwdriver and turning nut counterclockwise.
   c. Remove nut and locking washer.
2. Lift control handle swivel off dash and stand-off shaft and recover Woodruff key.
3. Remove dash cover by removing screws. Refer to **Electrical System** 2200SRM1640 for additional information.
4. Remove stand-off, spacer, and lower bearing:
   a. Remove capscrews, washers, and nuts securing stand-off to steer plate.
   b. Lower stand-off and bearing assembly from the support.
   c. Remove the lower bearing from stand-off using a standard bearing puller then remove spacer by hand.
   d. Remove lower sleeve from bottom of stand-off.
5. Remove upper sleeve, spacer, and upper bearing.

NOTE: Use a brass punch to remove bearing races. Be careful not to damage bearing races or support when during removal.

6. Clean and inspect bearing races for pits and grooves.
7. Remove bearing races from support using a hammer and brass punch if necessary.

Assemble

1. Install bearing races to support using a hammer and proper size bearing driver, if removed.
2. Pack bearings with Hyster synthetic grease, P/N 2074114, using a standard bearing packing device. Place a liberal coating of synthetic grease on the surface of the bearing races.
3. Install stand-off and bearing assembly:
   a. Install spacer and lower bearing to stand-off using a press.
   b. Install sleeve to bottom of stand-off.
   c. Lift stand-off and bearing assembly into the support.
   d. Install capscrews, washers, and nuts to secure stand-off to steer plate.
4. Install upper bearing and spacer to stand-off shaft.
5. Position Woodruff key into groove on stand-off shaft and lower swivel onto shaft. Turn swivel left and right alternately to align groove with Woodruff key **WHILE** holding Woodruff key in place.
6. Apply antiseize lubricant to threads and install locking washer and nut to end of stand-off shaft. Tighten nut to 26 N•m (19 lbf ft) and bend tabs on locking washer against nut.
7. Install sleeve.
8. Install control handle wiring harness through support.
9. Place cover on swivel and secure with screws.

https://truckmanualshub.com/

Install (Complete Unit)

1. Using the overhead lifting device, carefully position the steer support to the frame. Align the holes in the steer support with mounting holes in the frame. See Figure 17.

2. Install the four capscrews, washers, and nuts securing the steer support to the frame. Tighten to 88 N•m (65 lbf ft). Remove the sling and lifting device.

3. Connect the control handle wiring harness, the brake switch, and the sensor from the main wiring harness as noted. Install a new wire tie securing the harnesses to the main harness as removed.

4. Reconnect wiring to the BDI display and key switch if removed. Align the slots in the dash with the retaining screws and position the dash to the steering support and frame. Tighten the two screws to secure the dash assembly in place. See **Electrical System** 2200SRM1640.

5. Position the cover onto the steer swivel. Install the three screws securing the cover in place.

6. Install the drive unit compartment covers as removed. Connect the battery and turn the key switch to the **ON** position. Test for proper operation.

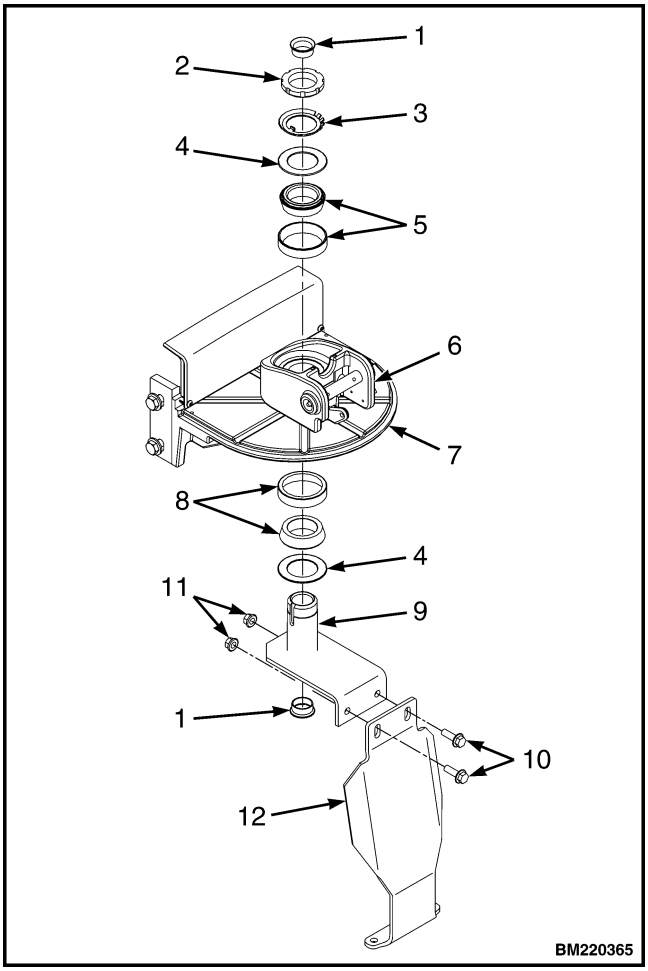

1. WIRE SLEEVE
2. BEARING NUT
3. LOCKING WASHER
4. SPACER
5. UPPER BEARING
6. SWIVEL
7. CENTER SUPPORT
8. LOWER BEARING
9. STEER SHAFT
10. CAPSCREW
11. NUT
12. STEER PLATE

Figure 16. Steer Support (Standard Steering)

https://truckmanualshub.com/

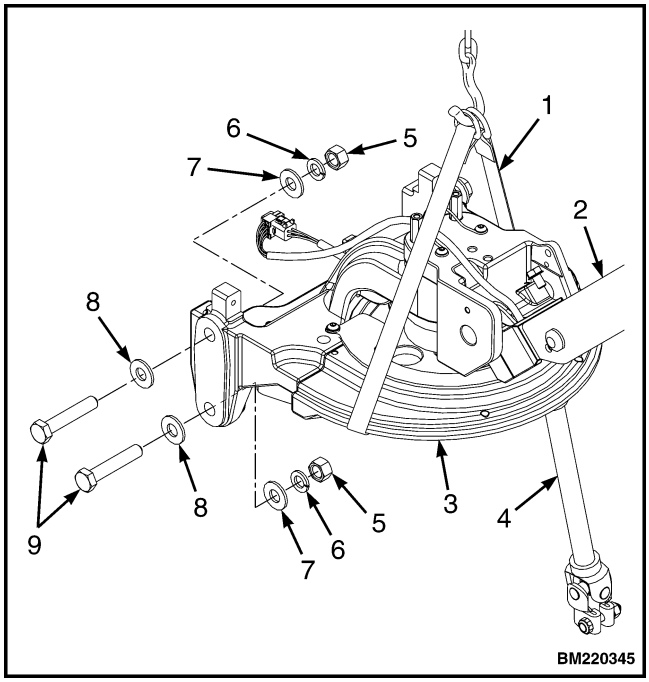

1. STRAP
2. TILLER HANDLE
3. SUPPORT
4. ARTICULATING SHAFT
5. NUT
6. LOCKWASHER
7. WASHER
8. WASHER
9. CAPSCREW

Figure 17. Steering and Dash - Complete Removal

POWER ASSIST STEERING (OPTION)

WARNING

The steering assembly and dash is heavy and requires the use of an overhead lifting device to position it during removal and installation. Be sure the overhead lifting device is adequate to lift the steer support assembly.

The following instructions are for removing the entire steer support assembly without disassembly. This procedure is useful when the dash and control handle must be removed for access to other parts of the lift truck such as when removing the traction motor. Some items may be serviced without removing the steer support assembly. Remove only the components necessary to safely complete the required service.

Remove (Complete Unit)

Refer to Figure 17 for the following instructions.

1. Turn the key switch to the **OFF** position and disconnect battery. Remove the drive unit compartment covers.
2. Discharge the capacitor. See Special Precautions in this section.
3. Remove the two capscrews securing the cover to the steer support and lift the cover off.
4. Loosen the two screws and remove the dash assembly. Secure dash out of the way or tag, identify, and disconnect all wiring from the BDI display and key switch if necessary to remove the dash. See **Electrical System** 2200SRM1640.
5. Identify, tag, and disconnect the control handle wiring harness, the brake switch, and the sensor from the main wiring harness. Clip the wire tie securing the harnesses to the main harness for removal.
6. Remove the articulated shaft. Refer to Articulating Shaft and Pinions (EPAS) in this section.
7. Lower the overhead lifting device until the steer support rests on top of the brake. Readjust the sling and tighten to support the steer support evenly.
8. Remove the remaining capscrews, nuts, and washers securing the steer support to the frame.
9. Using the overhead lifting device, carefully remove the steer support from the frame.

https://truckmanualshub.com/

Disassemble

Support Base

The support base may be disassembled to access the steer swivel bearings, the steering gear, or the torque sensor.

1. Remove the steer support assembly as a unit if necessary to access the support base. See Remove (Complete Unit) in this section. Move the assembly onto a clean workstation and securely support in position for disassembly.
2. Remove the two screws and washers securing the gear cover and remove. See Figure 18. Lift the pinion from the support base. Repair or replace as necessary. Refer to Articulating Shaft and Pinions (EPAS).
3. Remove two capscrews and washers from the bottom of the support base. See Figure 19. Lower the support base from the center support.
4. Remove the snap ring and bearing from the support base using an appropriate-sized driver.
5. Remove the pin from the bottom of the steer gear and lower the gear from the torsion shaft. See Figure 20.

NOTE: Make note of torque sensor position and orientation.

6. Recover the torque sensor from the swivel.
7. Check that sensor guard is securely mounted to the underside of the center support and properly engages with the sensor to prevent rotation. Repair or replace as necessary. See Figure 21.

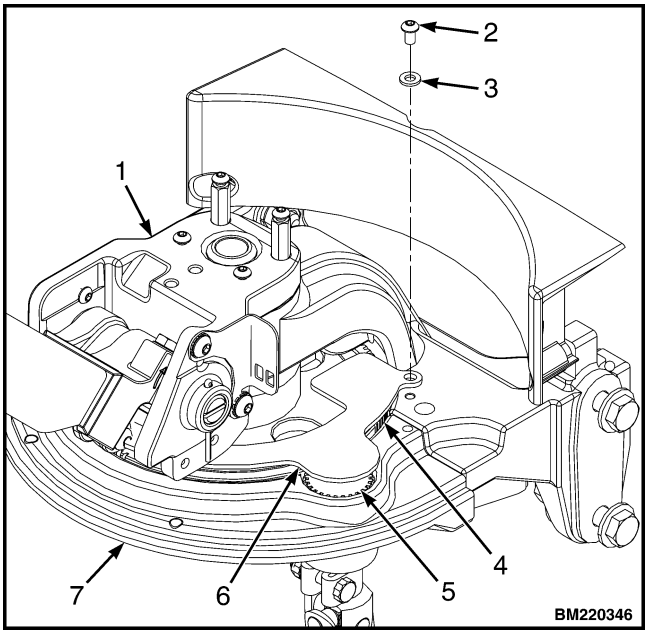

1. STEER SWIVEL
2. WASHER
3. SCREW
4. STEER GEAR
5. PINION
6. GEAR COVER
7. SUPPORT BASE

Figure 18. Steer Gear and Pinion

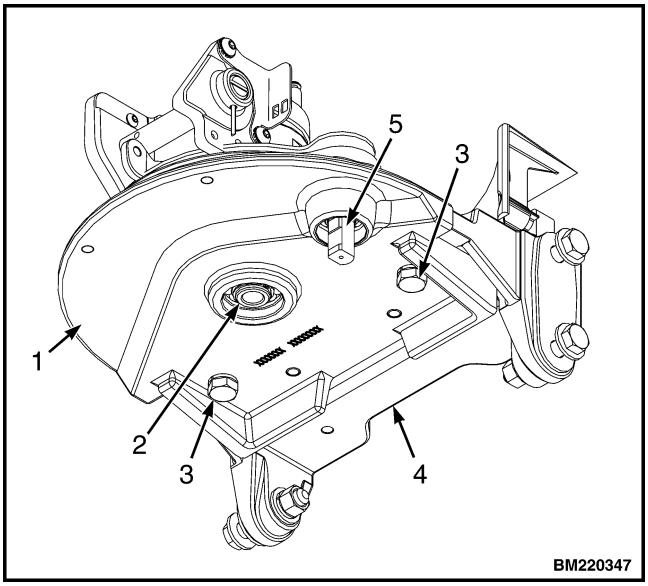

1. SUPPORT BASE
2. SNAP RING
3. CAPSCREW AND LOCKWASHER
4. CENTER SUPPORT
5. PINION SHAFT

Figure 19. Support Base