https://truckmanualshub.com/

menzi muck

The king's class of mobile Allterrain-Excavators.

Menzi Muck A81 mobile

www.menzimuck.com

SWISSPOWER

https://truckmanualshub.com/

The mobile multi-purpose technology. The Menzi Muck A81.

The new generation of Menzi Muck A81 is based on long-standing experience. New technologies, ecological and economic aspects, customer suggestions and practical experience have been packaged in a new version. The convincing result: optimised efficiency with increased cooling, low noise values and minimised fuel consumption.

Depending on the application of the mobile multi-purpose excavator, numerous options in the module system are available for creating tailored solutions.

The Menzi Muck A81 is the most powerful machine within the 8-ton class and is a reference within the industry.

The Menzi Muck A81 has been specially designed for rough areas and extreme operations on steep slopes. It is driven by two wheels and can reach a maximum speed of more than 12 km/h on roads.

menzi muck

https://truckmanualshub.com/

The basic information of the Menzi Muck A81.

Menzi Muck A81 mobile

Hydrostatic two-wheel drive via the large wheels.
Two dismountable fully-floating axles with bogie wheels.
Hydraulic telescopic stabilizers.
Optional: rear steering.

Engine

Brand	**John Deere**
No.	**4045HF285**
Type	**4-cylinder Turbo**
Emission tier	**3a (TIER 3)**
Regulated output	**89 kW / 120 PS**
Displacement	**4‘500 ccm**
Maximal rpm	**2‘000 min-1**
Maintenance intervals	**500 h**
Injection	**Commonrail**

Electric system

Voltage	**24 Volt**
Batteries	**2 dry batteries**
Capacity	**2x 95 Amp**
Starter	**7.2 kW**
Alternator	**45 Amp**
Electrical output	**1080 Watt**

Tank fuel capacities

Operating tank (diesel)	**135 litres** **36 US./gall.**
Reserve tank (diesel)	**220 litres** **58 US./gall.**
Hydraulic system capacity	**200 litres** **53 US./gall.**

Weight

Menzi Muck A81 mobile	**> 8‘500 kg** **> 18‘739 lb**

Empty weight without tool.
Varies depending on optional equipment.

Swing

Swivel speed	**up to 10 rpm**
Swivel force	**40‘000 Nm**

Forces

Ripping Force	**52‘000 N**
Breakout Force	**66‘000 N**
Max. Lifting force @ 3 m	**6‘300 kg** **13‘890 lb**
Max. Lifting force @ 4.5 m	**3‘700 kg** **8‘157 lb**
Max. Lifting force @ 6 m	**2‘600 kg** **5‘732 lb**

Max. lifting forces with boom and shaft cylinder.

https://truckmanualshub.com/

Economic. Powerful. Efficient. The heart: engine, hydraulics & cooling.

The objective when tuning engine, hydraulics and cooling system was to find the optimum balance between economy and ecology. The new design achieves maximum efficiency with cooling, low noise levels and minimised fuel consumption.

Hydraulics with load limit control

Optimised hydraulic tuning has been a Menzi tradition. The harmonious operating cycle is geared towards smooth and optimised performance. The most recent knowledge in hydraulic technology has been included in the design. Socially-responsible load sensing hydraulics from Linde (LUDV - load-independent flow distribution) with electronic load limit control for fast, precise and content interplay between the engine and the hydraulics.

The system works with two output-controlled swash plate axial piston pumps, one for the working hydraulics (215 l/min. up to 280 bar) and one for the driving hydraulics (112 l/min up to 400 bar). The load limit control allows two additional operating modes: fine mode for millimetre precision at unlimited power output. Power mode for short increases in power by pressure increase in the working pump.

Drive unit

The machine has its own output-controlled swash plate axial piston pump for powerful driving. The system works in a closed cycle; supply volume of driving pump 112 l/min. The two large wheels are driven hydrostatically. A hydraulic differential lock and automatic parking brakes ensure efficiency and ease of operation.
Optional: two-stage drive mechanism with a maximum speed of 12.5 km/h. The maximum driving torque increases in the this model by 16%.

menzi muck

https://truckmanualshub.com/

JOHN DEERE

The John Deere Engine.

Brand	John Deere
Type	4-cylinder Turbo
No.	4045HF285
Maximum output	89 kW / 120 PS
Displacement	4'500 ccm
goverened to	2'000 rpm
Maintenance intervals	500 h

Automotive driving

The load limit control also enhances comfort when driving on roads and conveys a new drive feel. Engine revs and drive pump are synchronised via the accelerator pedal. This achieves an automatic-like characteristic; the revs increase on acceleration and decrease on deceleration. The potentiometer limits the top speed; the accelerator is released more smoothly.

Swing

A proportional, demand-driven torque control is applied to regulate the turning force via the joystick. An axial piston engine with automatic multi-disc brake acts on the internal gears of the double-row slewing ring via a planetary gear.
Swing speed up to 10 rpm. Swing torque 40'000 Nm.

Cooling with more effiency

The suctioning fan system is generously dimensioned for superior effiency has features cooling reserves. Optimised air flow through three coolers arranged side by side. The cooling elements for water, hydraulic oil and charge air are size-optimised. Energy-saving progressive control of the hydraulic fan motor.
Optional: reversible fan.

Powered by John Deere

Power is supplied by the reliable technology of John Deere, the long-standing engine partner with a worldwide service network. The 4-cylinder turbo diesel engine with charge air cooling is set apart by high torque and extremely smooth running. The directly-injected common rail engine satisfies the requirements for emission tier 3a in accordance with Standard 97/68 (TIER 3). Vibration-free installation through oil filled engine support.

Hydraulic Connections

Control circuit 1 (standard)
via foot pedal up to 160 l/min. / 42 US/gall., proportional - double action

Control circuit 2 (standard)
via joystick up to 80 l/min. / 21 US/gall. digital - double action

Control circuit 3 (option)
for hydr. quick changer
digital - double action

Winch connection (option)
via foot pedal up to 100 l/min. / 26.5 US/gall., proportional - double action

Return pipe (standard)
for hydraulic hammer

Leak oil line (option)

https://truckmanualshub.com/

The operator's cab. Comfortable, generous.

Safety cab

Comfortable and spacious cab with all-round view and suspension seat, low-vibration on rubber mounts, roll prevention, ROPS test according to DIN ISO 3471. Efficient heating with high defrost capacity. Large storage shelves and document compartments.
Cab can be tilted hydraulically.

Optional: air condition, FOPS roof, comfort-seat with seat-heating.

Controls

Two ergonomic multi-joysticks, each with max. 25 functions. Logical design for ease of use of chassis and excavator functions. No double functions. Foot pedals for actuation of telescope, drive, hydraulic attachment and winch. Operator's seat, joysticks and foot pedals can be adjusted to suit to the operator.

https://truckmanualshub.com/

The information centre.
User friendly layout.

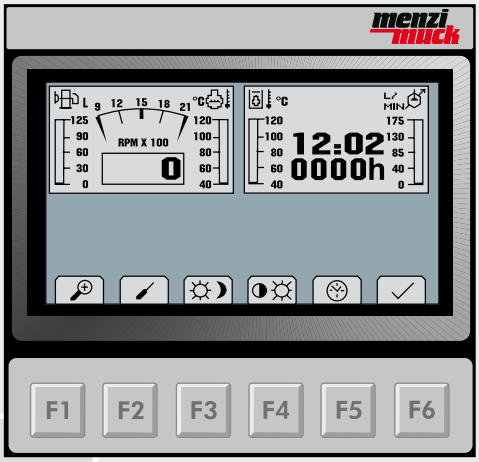

Main view

The main screen accommodates all the important operating displays: engine speed, fuel gauge, cooling water and hydraulic oil temperature. The key basic information also includes various warning symbols combined with audible signals.
The sub-menu displays the individual operating modes in figures.

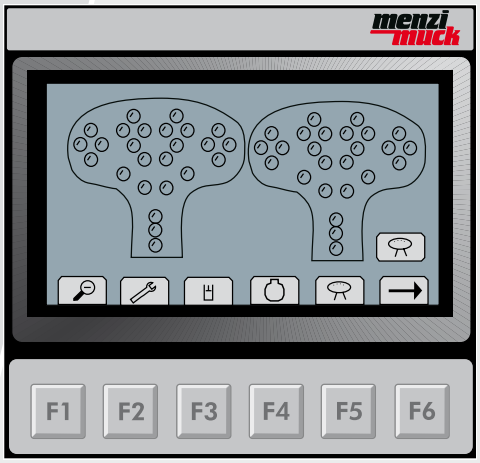

Diagnostics

All control units are checked and the status displayed when the machine is started-up. The various sub-menus offer the following diagnostic displays: hydraulic control circuit, diesel engine, joystick output signals, solenoid output signals The machine is checked for operability and a fault diagnostic report created where applicable.

Detail menu

The detail menu is informing about:
– battery tension
– due date of next maintenance
– hydraulic and water temperatures
– time and date
– fuel economy

https://truckmanualshub.com/

Rugged. Stable.
The Chassis.

Structural master performance.

Great importance was attached to the structural calculations. Long-standing practical experience provided us with the correct design for the structural FEM calculations. The tried-and-tested undercarriage with maximum adjustable suspension angles has been designed for the highest level of stability. The reserve diesel tank integrated into the chassis body has a volume of 220 litres.

Prop / lugs

Telescopic prop with study lug system for secure positioning on any terrain. Two different locating positions for the steel lugs increase stability as required. Rubber lugs can be fitted without dismantling the steel ones.

Hydraulic cylinders

All hydraulic cylinders on the chassis have ball-and-socket joints for low-wear force transmission. Menzi Muck's safety concept includes double check valves (hose break protection). The hydraulic cylinders are arranged protected, preventing damage caused by exposure.

Undercarriage control.

The large number of hydraulic functions in the undercarriage are controlled by the CAN bus system. This guarantees an independent and fast handling of the hydraulic stabilizers. No double functions. All components arranged in the undercarriage are suitable for continuous operation in water

Quality forest tyres

We went for optimised quality in the choice of tyres. The robust NOKIAN traction tyres with very good self-cleaning properties guarantees longevity. Burst protection from steel and a robust rubber compound set these forest tyres apart. Strong rim flange and valve protection also prevent damage from external influences.

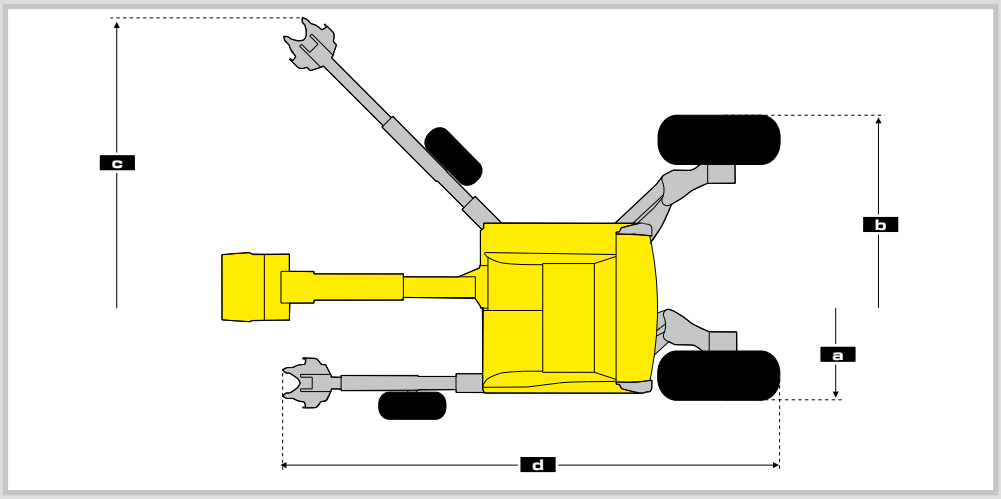

a	Minimum width hub drive (transport width) .....mm/inch.....	2'230 / 7'4"
b	Max. positioning width hub drive .....mm/inch....	4'450 / 14'7"
c	Max. positioning width stabilizers .....mm/inch.....	6'100 / 20'
d	Chassis length .....mm/inch....	5'400 / 17'8"

nokian HEAVY TYRES

https://truckmanualshub.com/

Menzi Muck A81.
The technical data.

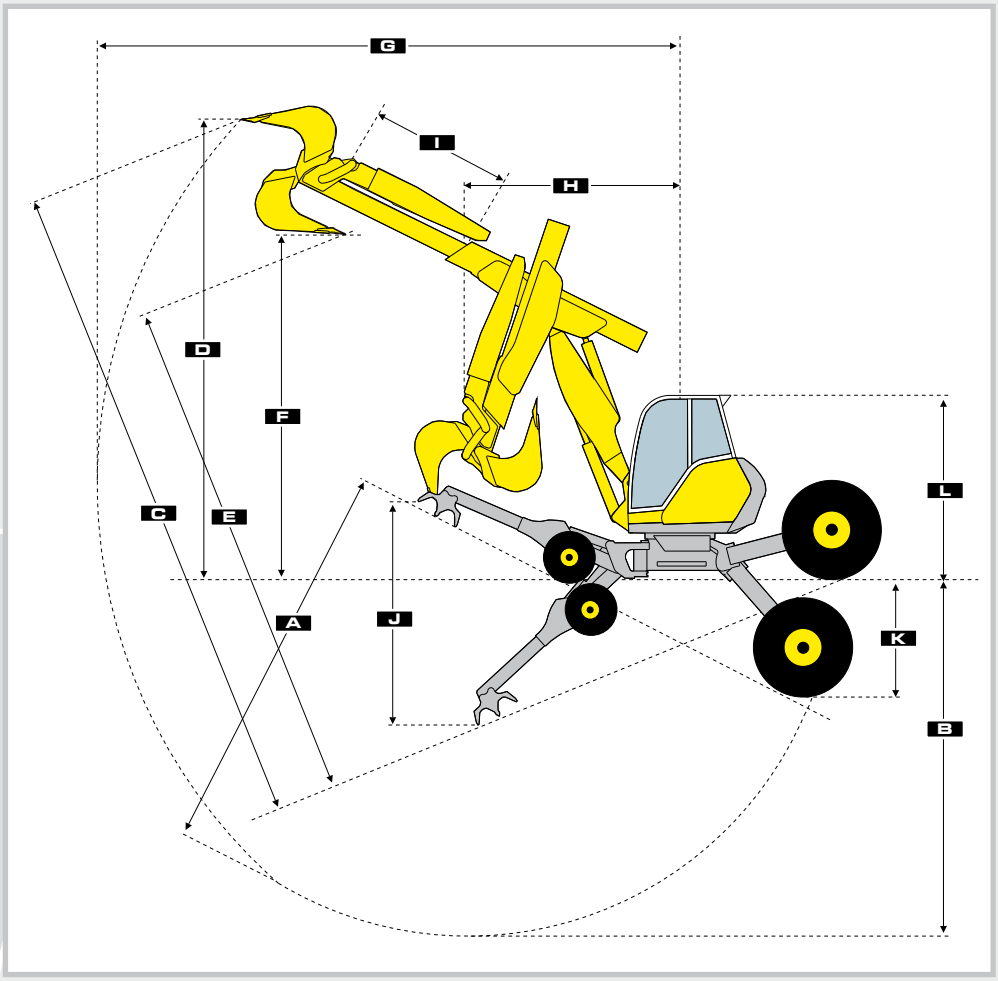

Rear steering.

The additional steering of the large wheels (optional) makes the A81 more agile. The steering angle of +/- 20 degrees helps the diagonal and transverse movement on inclines.

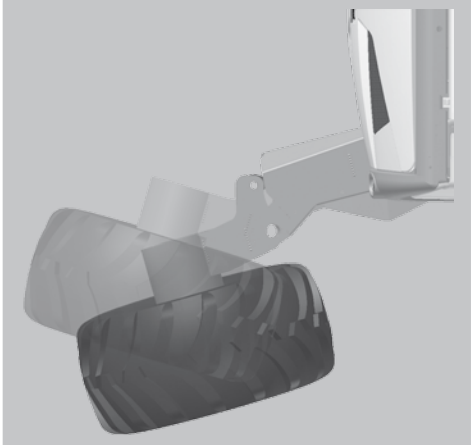

Smallest turning circle: 10'850 mm

Tyres

Hub drive (standard) 600/50-22.5, 16 pr
Nokian Forestry tyres with steel insertions
1'140 x 600 mm / 3'7" x 2' inch

Hub drive (optional) 500/50-22.5, 16 pr
Alliance forestry tyres with steel insertions
1'100 x 500 mm / 3'8" x 1'7" inch

Front drive (standard) 12,5/60-15
720 x 275 mm / 2'4" x 8" inch

Front drive (optional) 300-15
800 x 300 mm / 2'8" x 1' inch

Measurements

A	Max. Excavation depth (with adjusted chassis)	mm/inch	5650 / 18'6"
B	Max. Excavation depth (chassis horizontal)	mm/inch	5220 / 17'1"
C	Max. Excavation height (with adjusted chassis)	mm/inch	9350 / 30'8"
D	Max. Excavation height (chassis horizontal)	mm/inch	6860 / 22'6"
E	Max. Discharge height (with adjusted chassis)	mm/inch	6810 / 22'4"
F	Max. Discharge height (chassis horizontal)	mm/inch	4780 / 15'8"
G	Max. Jib Range	mm/inch	8180 / 26'10"
H	Min. Swivelling radius	mm/inch	2770 / 9'1"
I	Dipper length	mm/inch	1800 / 5'11"
J	Positioning range stabilizers	mm/inch	2780 / 9'1"
K	Positioning range hub drive	mm/inch	1790 / 5'10"
L	Transport height	mm/inch	2530 / 8'3"

https://truckmanualshub.com/

The individual choice. The Menzi Muck to suit your requirements.

Automatic central lubrication

The correct lubrication of pivot points minimises wear and increases service life. Depending on the model, the Menzi Muck can have more than 60 grease points requiring lubrication at various intervals. Leave this laborious task to the automatic central lubrication system. During operation, the pivot points are optimally and reliably lubricated as they move.

Biodegradable hydraulic oil

If using biodegradable hydraulic oil, we recommend, based on long-standing good experience, the product PANOLIN HLP SYNTH 46. A guarantee declaration must be obtained from the manufacturer if using different oils.

Hydraulic bypass filter (optional)

The careful handling and maintenance of the hydraulic oil determine its lifespan and preserve the components. While the machine is operating, five litres of hydraulic oil per minute continuously pass through the auxiliary flow filter over a fine filter.

A host of other options

We will be happy to advise you on further machine options, such as air-conditioning systems, auxiliary heating, comfort seat, lighting designs, special paint, safety windows, impact protection grilles, travel limiter, check valves on the boom cylinders etc. We will meet your individual requirements wherever possible.

PANOLIN® Swiss High-Quality Oil +

Country-specific optional equipment:

Hoist

If loads are lifting using a hook, the law of many countries prescribes the use of appropriate safety equipment. This usually comprises: burst hose safety device on the boom cylinder and activatable and audible overload warning signal

Soot particle filter

Passive filter system with catalytic converter-coated filters with pre-oxidation catalytic converter. Regeneration from an emission temperature of 210 degrees. Post-treating the emission guarantees 97% soot separation. Data logger and on-road display are supplied as standard. An ash-free engine oil must be used.

Road equipment

The specified equipment for driving on public roads varies from country to country.
The undercarriage technology.
The concept for a safe stance.

menzi muck

https://truckmanualshub.com/

The standards.
The options.

The modular system enables standard equipment to be expanded by a number of options geared towards meeting the customer's needs.

Operator's cab

Vibration-free driver cab ROPS-proofed	+
FOPS roof to cab	o
Air-sprung driver seat Klepp	+
Air-sprung comfort seat Grammer	o
Folding arm rest for hydraulic safety	+
Adjustable armrests (incline and height)	+
Ergonomic joystick with hand rest	+
Lexan safety windows	o
CD player/radio	+
State-of the-art LCD function/operator display	+
Sun visor	+
Documents/stowage compartment/bottle holder	+
Shelf/clothes hook	+
Mobile phone socket	+
Heater	+
Air-conditioning unit	o
Lap strap	+
„Belt and suspender" three-point safety belt	o
Auxiliary heater with timer	o

Stabilizing

Hydraulic telescopic feet	+
Steel pads with 4 tips	+
Steel pads with 6 tips	o

Hydraulic system

Mineral hydraulic oil	+
Biologically biodegradable hydraulic Panolin	o
Hydraulic connection for winch (chassis)	o
Double-acting connection on boom, proportional	+
Double-acting connection on boom, digital	+
Return line for hydraulic hammer	+
Double-acting connection for hydr. quick-change	o
Bypass filter	o
Leak oil line	o
Electronic load limit control	+

Traction / Steering

Hydrostatic two-wheel drive	+
Rear steering (+/- 40 degrees)	o
Driving potentiometer	+
Two-phase traction drive	o
Hydraulic idle running gear	o
Automatic park brake	+

Boom

Equipment for hoist operation	o
Mechanical protection for boom cylinder	o
Advertising space on hydraulic pipe on boom	o
Travel limited boom	o
Burst hose safety device on boom cylinder	o
All hoses are in the driver's field of vision	+
Sensor-controlled travel limited telescopic boom	o

Lighting

2 front spotlights	+
2 rear spotlights	+
Protected indicators / reversing light	+
Spotlight on boom (with impact protection)	o
Rotating light on roof	o
LED spotlight	o
Xenon spotlight	o
Spotlight crown (roof); alternator 100 Amp	o
Interior lighting	+

Tyres

Steering wheels: 12.5/60-15	+
Stacking truck wheels 300-15	o
Forest tyres Nokian 600/50-22.5	+
Forest tyres Nokian 500/60-22.5	o
other tyres on demand	o

Other equipment

Protection grille for windscreen	o
Swing limit	o
Switchable check valves for all boom cylinders	o
Paintwork in corporate colour	o
Particle filtre	o
Anti-slip covers on stabilizers	+
Manual lubrication block for telescopic inner pipe	o
Central lubrication	o
Toolbox integrated into engine compartment	+
Reversible fan motor (hydr. reversible fan)	o

Legend

Standard + Option o

https://truckmanualshub.com/

The Menzi Muck A81 in action.

Technical data vary upon tyre/tool and they subject to change / 0310

Menzi Muck AG Maschinenfabrik
CH-9443 Widnau/Switzerland

Telefon +41 (0)71 727 12 12
Fax +41 (0)71 727 12 13
info@menzimuck.com
www.menzimuck.com