TM 10-3930-647-14&P

TECHNICAL MANUAL

OPERATOR'S, ORGANIZATIONAL, DIRECT SUPPORT AND GENERAL SUPPORT MAINTENANCE MANUAL (INCLUDING REPAIR PARTS INFORMATION AND SUPPLEMENTAL MAINTENANCE INSTRUCTIONS)

FOR

TRUCK, FORKLIFT, GASOLINE ENGINE DRIVEN, PNEUMATIC TIRES, 4000-LB CAPACITY, 144-IN LIFT HEIGHT
CLARK MODEL C500Y45, MHE 243
NSN 3930-01-085-3767

INTRODUCTION AND DESCRIPTION 1-1

PREPARATION FOR USE 2-1

OPERATION 3-1

PERIODIC INSPECTION, MAINTENANCE AND LUBRICATION 4-1

REPAIR 5-1

ILLUSTRATED PARTS BREAKDOWN INDEX 7-1

SUPPLEMENTAL OPERATING, MAINTENANCE AND REPAIR PARTS INSTRUCTIONS 1

HEADQUARTERS, DEPARTMENT OF THE ARMY
OCTOBER 1981

www.truck-freeworkshop.com/clark/

www.truck-freeworkshop.com/clark/

WARNING

It is not recommended that tires with breaks be used again.

WARNING

In all cases, when removing tires with split rims from the machine for repair or periodic rotation, completely deflate tires. This is accomplished by removing the valve core.

WARNING

In all cases, when removing tires equipped with the lock ring type rim from the machine for repair or periodic rotation, completely deflate tires. This is accomplished by removing the valve core.

WARNING

When repairing tires used on machines that employthe lock ring type rim, use caution when inflating tire. If lock ring is not located properly, it is possible for it to pop off rim with great force when tire is inflated and could result in serious injury.

WARNING

After raising machine and before making any adjustments or adjustment checks, place adequate (heavy) blocking (sufficient to support the weight of the machine) under the frame, not under the counterweight, to prevent accidental lowering or falling of the vehicle, thus preventing personal injury to mechanic or bystanders.

WARNING

Keep clear of load and carriage when making adjustments to avoid injury if any malfunction should occur and cause load or carriage to fall.

WARNING

Support carriage by running chain through lower carriage bar and wrapping chain around the lift cylinder just above the chain anchor bracket. Chain should contact cylinder barrel, not the push rod.

WARNING

Dry ice is a solid with an extreme low temperature. Contact with the skin will cause serious freezing. Use gloves and forceps or bent wire to remove metal parts. Never touch metal that has been in dry ice until temperature has risen above the freezing point.

WARN ING

Upright assembly weighs approximately 750 pounds; use due safety precautions when removing or installing upright assembly.

WARNING

Counterweight weighs approximately one ton; use due safety precautions when removing or installing the counterweight.

WARNING

Dry cleaning solvent, used to clean parts is potentially dangerous to personnel and property. Do not use near open flame or excessive heat. Flash point of this solvent is 138°F.

www.truck-freeworkshop.com/clark/

WARNING

Do not smoke, weld, or employ any open flame near the battery, as an explosive gas is produced by the battery during its operation.

WARNING

Never drive the truck in open area of the warehouse or storage yard without the guard in place over the operator's compartment. There is no periodic maintenance other than checking for security of mounting.

WARNING

Do not operate machine for prolonged periods in a unventilated area. All gasoline engines produce poisonous carbon monoxide gas which is extremely toxic if allowed to accumulate in a closed area.

WARNING

A small amount of fuel spillage will result when the filter housing is removed. Make certain that no spark or open flame exists in the work area, and also that the engine is sufficiently cool to prevent the possibility of igniting the gasoline fumes resulting from the fuel spillage.

WARNING

This truck is equipped with a pressurized cooling system. Use extreme care when removing the radiator cap when the engine has recently been operating. The sudden release of pressure from the system can cause sudden boiling of the coolant and a dangerous steam flash. Always loosen the cap slowly and allow the pressure to vent off slowly before removing cap.

WARNING

Make certain that pressure bleeder tank is certified for use under pressures exceeding 30 psi before using.

WARNING

Always relieve pressure from bleeder tank when bleeding operation is completed.

WARNING

Never allow sparks or open flame in the area when checking the battery,storage batteries produce hydrogen, an explosive gas, as a normal by-product of operation.

WARNING

Disconnect battery ground strap before performing any service on electrical system.

WARNING

Pull damaged rims or wheels. Deflate tires prior to the removal of rims or wheels from the vehicle.

www.truck-freeworkshop.com/clark/

WARRANTY

Any defects in material or workmanship, under normal use and service for a period of 15 months from date of acceptance or 1500 vehicle operating hours, whichever may occur first, should be reported to the local dealer and/or the Government Contract Administration Section.

www.truck-freeworkshop.com/clark/

www.truck-freeworkshop.com/clark/

CHANGE

NO. 2

HEADQUARTERS
DEPARTMENT OF THE ARM-Y
Washington D.C., *18 March 1991*

OPERATOR' S, ORGANIZATIONAL, DIRECT SUPPORT AND GENERAL SUPPORT MAINTENANCE MANUAL (INCLUDING REPAIR PARTS INFORMATION AND SUPPLEMENTAL MAINTENANCE INSTRUCTIONS)

TRUCK, LIFT, FORK; GASOLINE ENGINE DRIVEN, PNEUMATIC TIRES; 4,000 LB CAPACITY, 144-INCH LIFT HEIGHT (CLARK MODEL C500Y45, ARMY MODEL MHE-243)

NSN 3930-01-085-3767

TM 10-3930-647-14&P, 30 October 1981, is changed as follows:

1. Remove old pages and insert new pages as indicated below.
2. New or changed information is indicated by a vertical bar in the margin of the page.

Remove Pages	Insert Pages
4-52J through 4-52Q	4-52J through 4-52Q

File this change sheet in front of the publication for reference purposes.

By Order of the Secretary of the Army:

CARL E. VUONO
General, United States Army
Chief of Staff

Official:

PATRICIA P. HICKERSON
Colonel, United States Army
The Adjutant General

Distribution:
To be distributed in accordance with DA Form 12-25-E (Block 2152) Operator, Unit, Direct Support and General Support maintenance requirements for TM10-3930-647-14&P.

www.truck-freeworkshop.com/clark/

www.truck-freeworkshop.com/clark/

CHANGE

No. 1

HEADQUARTERS
DEPARTMENT OF THE ARMY
Washington, D.C., *22 December 1989*

OPERATOR'S, ORGANIZATIONAL, DIRECT SUPPORT AND GENERAL SUPPORT MAINTENANCE MANUAL (INCLUDING REPAIR PARTS INFORMATION AND SUPPLEMENTAL MAINTENANCE INSTRUCTIONS)

TRUCK, LIFT, FORK; GASOLINE ENGINE DRIVEN, PNEUMATIC TIRES; 4,000 LB CAPACITY, 144-INCH LIFT HEIGHT (CLARK MODEL C500Y45, ARMY MODEL MHE-243) NSN 3930-01-085-3767

Current as of 1 April 1989

TM 10-3930-647-14&P, dated 30 October 1981, is changed as follows:

1. The manual title is changed to read as shown above.

2. Remove old pages and insert new pages.

3. New or changed material is indicated by a vertical bar in the margin of the page and by a vertical bar adjacent to the TA number.

Remove Pages	Insert Pages
"i" and ii	*i and ii*
4-5 and 4-6	*4-5 and 4-6*
5-81 through 5-86	*5-81 through 5-86*
5-125 through 5-128	*5-125 through 5-128*
7-55 and 7-56	*7-55 and 7-56*
7-59 through 7-64	*7-59 through 7-64*
7-67 through 7-70	*7-67 through 7-70*
INDEX 1 through INDEX 4	*INDEX 1 through INDEX 4*
7 and 8	*7 and 8*
B-1 and B-2	*B-1/(B-2 blank)*
C-5 and C-6	*C-5 and C-6*

4. File this change sheet in front of the publication for reference purposes.

www.truck-freeworkshop.com/clark/

By Order of the Secretary of the Army:

CARL E. VUONO
General, United States Army
Chief of Staff

Official:

WILLIAM J. MEEHAN II
Brigadier General, United States Army
The Adjutant General

Distribution:

To be distributed in accordance with DA Form 12-25F (Block Nos, 2152, 2153, 2154), Operator, Unit, and Direct Support and General Support maintenance requirements for Fork Lift, 4000 LB Capacity, Pneumatic Tire, Gas (Model MHE 243).

www.truck-freeworkshop.com/clark/

TECHNICAL MANUAL

NO. 10-3930-647-14&P

HEADQUARTERS
DEPARTMENT OF THE ARMY
Washington, D.C., *30 October 1981*

OPERATOR'S, ORGANIZATIONAL, DIRECT SUPPORT AND GENERAL SUPPORT MAINTENANCE MANUAL (INCLUDING REPAIR PARTS INFORMATION AND SUPPLEMENTAL MAINTENANCE INSTRUCTIONS)

FOR

TRUCK, LIFT, FORK; GASOLINE ENGINE DRIVEN, PNEUMATIC TIRES; 4,000 LB CAPACITY, 144-INCH LIFT HEIGHT (CLARK MODEL C500Y45, ARMY MODEL MHE-243)

NSN 3930-01-085-3767

REPORTING ERRORS AND RECOMMENDING IMPROVEMENTS

You can help improve this manual. If you find any mistakes or if you know of a way to improve the procedures, please let us know. Mail your letter, DA Form 2028 (Recommended Changes to Publications and Blank Forms), or DA Form 2028-2, located in the back of this manual, direct to: Commander, U.S. Army Tank-Automotive Command, ATTN: AMSTA-MB, Warren, MI 48397-5000. A reply will be furnished to you.

This technical manual is an authentication of the manufacturer' s commercial literature and does not conform with the format and content specified in AR 310-3, Military Publications. This technical manual does, however, contain available information that is essential to the operation and maintenance of the equipment.

www.truck-freeworkshop.com/clark/

TABLE OF CONTENTS

Section		Page
I	INTRODUCTION AND DESCRIPTION	1-1
1-32.	Air Cleaner	1-9
1-39.	Alternator	1-19
1-48.	Body and Seat	1-21
1-35.	Carburetor	1-10
1-30.	Component Description	1-9
1-17.	Counterweight	1-21
1-11.	Detailed Description	1-1
1-19.	Drive Axle	1-4
1-23.	Electrical System	1-4
1-15.	Engine and Drive Line	1-1
1-13.	Engine Assembly	1-1
1-22.	Engine Cooling System	1-4
1-25.	Engine Fuel System	1-5
1-33	Engine Governor	1-9
1-34	Engine Water Pump	1-9
1-27.	Exhaust System	1-5
1-12.	Frame	1-1
1-31.	Fuel Pump	1-9
1-3.	General Description	1-1
1-29.	Hydraulic System	1-9
1-38	Ignition Distributor and Coil	1-18
1-1.	Introduction	1-1
1-44.	Lift Cylinder	1-20
1-51.	Machine Serial Number and Upright Deck Number Location	1-21
1-41.	Main Hydraulic Pump	1-19
1-40	Oil Filters	1-19
1-46.	Overhead Guard	1-20
1-50.	Parking Brake	1-21
1-3.	Purpose Of Equipment	1-1
1-28.	Service Brake and Inching Control System	1-6
1-24.	Starter Lockout	1-4
1-36.	Starter Motor	1-18
1-37.	Starter Solenoid	1-18
1-42.	Steering Hydraulic Pump	1-19
1-26.	Steering System	1-5
1-21.	System Descriptions	1-4
1-45.	Tilt Cylinder	1-20
1-16.	Torque Converter	1-1
1-18.	Transmission Assembly	1-4
1-20.	Upright and Carriage	1-4
1-43.	Upright and Lift Carriage	1-19
1-49	Wheels and Tires	1-21
II	PREPARATION FOR USE	2-1
2-1.	General	2-1
2-10	Lubrication	2-2
2-9.	Operational Check	2-2
2-3.	Preliminary Inspection	2-1
2-6.	Switches, Gages and Lights	2-2
III	OPERATION	3-1
3-37.	Battery	3-9
	Instruments	3-3
3-36.	Cooling System	3-9
3-42.	Cooling System	3-9
3-29.	Depositing Load on a Tiered Stack	3-6
3-30	Depositing the Load In Storage Area	3-7
3-20.	Drive Axle	3-1
3-27.	Driving the Truck	3-5
3-48.	Dusty Conditions	3-10
3-43.	Electrical System	3-9
3-9.	Engine	3-1
3-40.	Extreme Cold	3-9
3-35.	Extreme Heat	3-9
3-39.	Fuel System	3-9
3-45.	Fuel System	3-9
3-1.	General	3-1
3-4.	General	3-1
3-46.	Humid Climates	3-10
3-38.	Lubrication	3-9
3-44.	Lubrication	3-9
3-24.	Operating Instructions	3-3
3-34.	Operation Under Unusual Conditions	3-9
3-32.	Overhead Guard Operating	3-8
3-28.	Picking Up the Load	3-6
3-3.	Principles of Operation	3-1
3-33.	Safety Precautions	3-8
3-41.	Shelter	3-9
3-26.	Starting the Engine	3-3
3-31.	Stopping the Truck	3-7
3-13.	Torque Converter and Transmission	3-1
IV	PERIODIC INSPECTION, MAINTENANCE AND LUBRICATION	4-1
4-7.	Air Cleaner	4-1
4-34.	Batt Light Load Test	4-28

www.truck-freeworkshop.com/clark/

TABLE OF CONTENTS (continued)

Section		Page
IV 4-32	Battery Maintenance	4-27
4-33	Battery Tests	4-28
4-25	Brake Adjustments	4-26
4-19	Brake Bleeding System	4-22
4-21	Brake Manual Bleeding	4-24
4-18	Brake Master Cylinder Checks	4-21
4-17	Brake Pedal Check and Free Travel Adjustment	4-20
4-20	Brake Pressure Bleeding	4-22
4-16	Brake System Maintenance	4-20
4-13	Cooling System Drain and Refill	4-17
4-12	Cooling Syst Service	4-16
4-47	Distributor Breaker Point Alignment	4-36
4-46	Distributor Breaker Point Inspection	4-35
4-45	Distributor Centrifugal Advance	4-34
4-44	Distributor Checks	4-34
4-48	Distributor Point Cap Adjustment	4-36
4-49	Distributor Point Set Replacement	4-37
4-75	Drive Axle Ends, Clean and Repack	4-55
4-31	Electrical System	4-27
4-63	Electrical Wiring, Switches and Fuses	4-50
4-40	Engine Compression Check	4-32
4-38	Engine Cylinder Head Fasteners Torque Check	4-30
4-51	Engine Intake Manifold Vacuum Test	4-38
4-8	Engine Lubricating Oil Change	4-8
4-36	Engine Performance Check	4-29
4-41	Engine Spark Plug Check	4-32
4-37	Engine Tune-Up	4-30
4-39	Engine Valve Clearance (lash) Adjustment	4-31
4-15A	Fan and Alternator Belt Adjustments	4-19
4-55	Final Idle Mixture and Speed Adjustment	4-40
4-53	Fuel Initial Idle Mixture Adjustment	4-39
4-54	Fuel Initial Idle Speed Adjustment	4-40
4-52	Fuel Mixture and Idle Speed Adjustment	4-39
4-11	Fuel System Service	4-16
4-46	Governor and Linkage Adjustments	4-41
4-66	Hydraulic Circuit Flow Test	4-50
4-10	Hydraulic System	4-14
4-64	Hydraulic System Checks	4-50
4-65	Hydraulic System Pressure Check	4-50
4-43	Ignition Coil Checks	4-34
4-50	Ignition Timing Adjustment	4-37
4-68	Neutral Start Switch Adjustment	4-52H
4-28	Parking Brake Check and Adjustment	4-26
4-30	Parking Brake Major Adjustment	4-26
4-29	Parking Brake Minor Adjustment	4-26
4-3	Periodic Inspection	4-3
4-5	Periodic Service and Lubrication	4-4
4-42	Spark Plug Wiring Replacement	4-34
4-1	Special Tools	4-1
4-25	Starting Charging System Tests	4-23
4-74	Steer #eel Adjustment	4-55
4-73	Steer Wheel Bearings, Clean, Repack and Adjust	4-53
4-72	Steer Wheels and Wheel Bearings	4-53
4-60.	Steering Gear Adjustments	4-48
4-62.	Steering Gear Lash Adjustments	4-49
4-61.	Steering Gear Thrust Adjustment	4-49
4-58	Steering System Adjustment Check	4-44
4-59.	Steering System Adjustments	4-48

www.truck-freeworkshop.com/clark/

TABLE OF CONTENTS (continued)

Section		Page
IV 4-57	Steering System Maintenance. . . .	4-41
4-14	Thermostat Test and Replacement. . . .	4-18
4-67	Transmission Checks	4-52
4-70.	Transmission Fluid Aeration Check .	4-52G
4-71.	Transmission Fluid Leakage Checks .	4-52G
4-9	Trans Power Steering Hydraulic System .	4-9
4-69.	Transmission Pressure Tests.	4-52B
4-67	Transmission Shift Linkage.	4-51
4-68	Transmission Stall Test	4-52
	Trouble Shooting . .	4-67
4-15	Viscous Fan.	4-19
V REPAIR.		5-1
5-63	Alternator.	5-50
5-66	Alternator Bushing Replacement . . .	5-50D
5-68	Alternator Circuit Resistance Check	5-50D
5-66	Alternator Cleaning, Inspection and Test of Parts. .	5-50A
5-66	Alternator Output Test	5-50E
5-67	Alternator Reassembly and Testing. . .	5-50D
5-66	Alternator Regulator. . . .	5-50C
5-62.	Alternator Trouble Shooting . . .	5-49A
5-165	Auxiliary Valve. .	5-202
5-99	Brake Removal and Disassembly. . .	5-81
5-98	Brake Repairs. . .	5-81
5-77	Carburetor . . .	5-53
5-139	Carriage Assembly.	5-93
5-155	Counterweight. . .	5-194
5-88	Drive Axle Adaptor and Differential.	5-63
5-87.	Drive Axle End Reassembly. . . .	5-62
5-86	Drive Axle End Removal Disassembly . . .	5-60
5-23	Engine.	5-13
5-51	Eng Balancer Assem.	5-41
v 5-41	Engine Camshaft and Timing Gears Installation. . . .	5-31
5-44	Engine Connecting Rod Bearing Replacement	5-38
5-46	Engine Crankshaft End Play Check. . . .	5-39
5-45	Engine Crankshaft Installation. . . .	5-38
5-27	Engine Cylinder Head.	5-16
5-35	Engine Cylinder Head Reassembly and Installation. . . .	5-25
5-48	Engine Cylinder Sleeve Installation. . . .	5-41
5-43	Engine Fitting New Piston Rings. . . .	5-37
5-47	Engine Flywheel Runout Check. . . .	5-40
5-52	Engine Oil Pan Installation. . . .	5-44
5-50.	Engine Oil Pump Assembly.	5-41
5-49	Engine Piston and Connecting Rod Installation. . . .	5-41
5-42	Engine Pistons, Connecting Rods and Crankshaft Removal.	5-33
5-25	Engine Removal. . . .	5-13
5-34	Engine Rocker Arm Disassembly and Repair.	5-25
5-40	Engine Timing Gears and Camshaft Removal. .	5-28
5-33	Engine Valve Grinding (Refacing). . . .	5-24
5-31	Engine Valve Guide Replacement	5-21
5-32	Engine Valve Seat Refacing and Replacement	5-23
5-36.	Engine Water Pump Removal	5-26
5-170	Exhaust System. . . .	5-205
5-18	Filler Metals	5-6
5-16	Fire Protection	5-5
5-42A.	Flywheel Ring Gear Removal	5-34A
5-83	Fuel Pump Repair. . .	5-60
5-1	General	5-1

www.truck-freeworkshop.com/clark/

TABLE OF CONTENTS (continued)

Section		Page
V 5-7.	General Assembly. . .	5-4
5-4.	General Cleaning. . .	5-3
5-3.	General Disassembly .	5-1
5-5.	General Inspection. .	5-3
5-2.	General Removal Instructions. . . .	5-1
5-6.	General Repairs . . .	5-3
5-174.	Governor.	5-205
5-122.	Hydraulic Pump. . .	5-91D
5-129.	Hydraulic Valve . . .	5-94
5-70.	Ignition Distributor.	5-51
5-22.	Indemnity	5-11
5-21.	Inspection.	5-11
5-178.	Instrument Panel Gauges.	5-208
5-147.	Lift Cyl & Upright.	5-102
5-102.	Master Cyl Assembly.	5-83
5-93.	Parking Brake Disassembly . . .	5-86F
5-94.	Parking Brake Reassembly. . . .	5-86F
5-14.	Preinspection	5-5
5-19.	Preparation	5-8
5-158.	Radiator.	5-195
5-8.	Repair Welding. . . .	5-5
5-15.	Safety.	5-6
5-180.	Seat.	5-205
5-161.	Side Shift Cylinder.	5-198
5-53.	Starter	5-44
5-46.	Starter Armature Tests	5-45
5-59.	Starter Brush Replacement	5-48
5-60.	Starter Checking Brush Spring Pressure . .	5-48
5-58.	Starter Commutator Repair.	5-47
5-57.	Starter Field Coil Test	5-47
5-61.	Starter Reassembly and Installation. .	5-48
5-183.	Steer Axle.	5-110
5-110.	Steering Cylinder . .	5-87
5-106.	Steering Gear	5-85
5-117.	Steering Pump . . .	5-91A
5-113.	Steering Valve. . . .	5-88
5-133.	Tilt Cylinder	5-96
5-127.	Tilt Lock Valve . .	5-93A
5-84.	Transmission and Drive Axle. . . .	5-60
5-92.	Transmission Clutch Pack Disassembly.	5-80
v 5-95.	Transmission Clutch Pack Reassembly.	5-80A
5-96.	Transmission Control Valve	5-80AL
5-92.	Trans Disassembly . .	5-63
5-95.	Trans Reassembly. .	5-80G
5-154.	Upright	5-113
5-37.	Ventilation	5-6
5-20.	Welding	5-10
VII	ILLUSTRATED PARTS BREAKDOWN INDEX.	7-1

LIST OF TABLES

Table 1.	Specifications. . . .	1-3
Table 2.	Special Tools for Inspection and Maintenance	4-1
Table 3.	Preventive Maintenance Inspection.	4-2
Table 4.	Troubleshooting Guide	4-67
Table 5.	Engine Wear Limits and Service Specifications. . .	5-14

www.truck-freeworkshop.com/clark/

S P E C I F I C A T I O N

ENGINE:
- MANUFACTURER ..... WAUKESHA
- MODEL D176G
- TYPE ..... OVERHEAD VALVE
- SERIES ..... CLARK
- HORSE POWER ....52 @ 2350

CARBURETOR:
- MANUFACTURER ..... MARVEL-SCHEBLUR
- MODEL GLE-44

ALTERNATOR :
- MANUFACTURER ..... DELCO
- TYPE ..... 12 VOLTS, NEG. GROUND

STARTER :
- MANUFACTURER ..... DELCO-REMY
- TYPE ..... 12 VOLTS-25 AMPERE

TRANSMISSION:
- MANUFACTURER ..... CLARK
- MODEL H200D2
- TYPE ..... HYDRAULIC
- SERIES ..... HYDRATORK
- RATED CAPACITY ..... 16 QUARTS

AXLE END ASSY. (FRONT)
- MANUFACTURER ..... CLARK
- MODEL ..... 120951 R.H. - 120952 L.H.
- TYPE ..... PLANETARY

CLUTCH ..... NOT APPLICABLE

RADIATOR:
- MANUFACTURER ..... CLARK
- MODEL 2326454
- PRESSURE ..... 7 LBS
- RATED CAPACITY ..... 10 QUARTS

MASTER CYLINDER:
- MANUFACTURER ..... WAGNER
- TYPE ..... SINGLE STAGE HORIZ.

WHEEL CYLINDER:
- MANUFACTURER ..... WAGNER

POWER STEERING PUMP:
- MANUFACTURER ..... PARKER-HANNIFIN
- SERIES H-25
- TYPE ..... GEAR
- PRESSURE RELIEF VALVE SETTING 1750
- RATED CAPACITY ..... 2.5 GPM
- ..... @ 750 TO 2350 ENGINE R.P.M.

POWER STEERING CYLINDER:
- MANUFACTURER ..... CLARK
- MODEL 180040

STEERING GEAR ASSEMBLY:
- MANUFACTURER ..... SAGINAW
- MODEL 525-D-267
- TYPE ..... RECIRCULATING BALL

BATTERY:
- MANUFACTURER ..... DELCO
- MODEL 3EMT70-D
- RATED CAPACITY ..... 46 AMP HOUR

TIRES, FRONT DRIVE:
- MODEL ..... 7:00 x 12-12 PLY
- TYPE ..... PNEUMATIC

TIRES, REAR STEER:
- MODEL ..... 6:50 X 10-10 PLY
- TYPE ..... PNEUMATIC

HYDRAULIC PUMP:
- MANUFACTURER ..... PARKER-HANNIFIN
- MODEL M07AB2J
- TYPE ..... GEAR
- PRESSURE .....2000 P.S.I. 11 CPM 1450 RPM

CYLINDER, TILT:
- MANUFACTURER ..... CLARK
- MODEL 1791918
- TYPE ..... DOUBLE ACTING
- PRESSURE ..... 2000 P.S.I.

POWER BRAKE ASSEMBLY ..... NOT APPLICABLE

LIFT CYLINDER:
- MANUFACTURER ..... CLARK
- MODEL 2355448
- TYPE ..... TELESCOPIC
- PRESSURE ..... 2000 LB

www.truck-freeworkshop.com/clark/

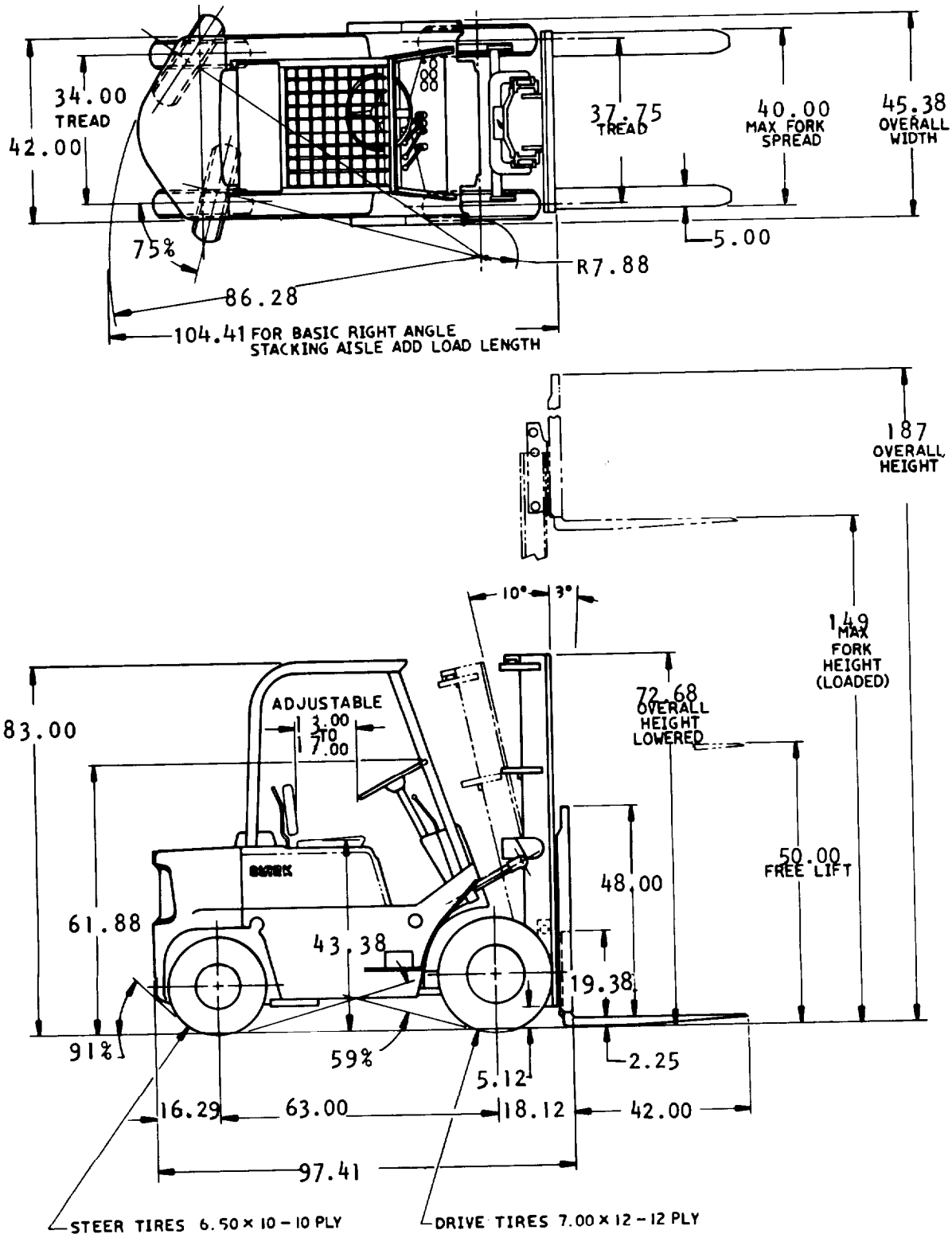

Figure 1-1. ForkliftTruck, **C500-Y45**

www.truck-freeworkshop.com/clark/

TIGHTENING TORQUE VALUES FOR STEEL THREADED FASTENERS

The following torque values are for use in general applications and where torque values are not otherwise specified. They are not limited to parts covered by the reference Clark standards, which are examples only, but apply to all steel screw threaded fasteners having the same strength levels and coated as specified herein.

COARSE AND FINE TREADED FASTENERS	REF CLARK STDS	TENSILE (NUT PROOF) STRENGTHS, PSI [MPa], MINIMUM	SCREW OR BOLT NOMINAL THREAD SIZE, INCH								
			0.250	0.3125	0.375	0.4375	0.500	0.5625	0.625	0.750	0.875
			TIGHTENING TORQUE, LB,FT, MAXIMUM * LB.IN [N-m] MINIMUM [N-ml								
CAP SCREW, BOLT AND NUT	1C-2C 15C-16C 610-62D	120 000 [825] SAE GRADE 5	90 * [10] 80 [9]	200 * [23] 180 [21]	28 [38] 25 [34]	45 [61] 40 [54]	70 [95] 65 [88]	100 [135] [170]	140 [190] 125 [170]	245 [330] 220 [300]	360 [490] 330 [450]
CAP SCREW, BOLT AND NUT	17C-18C 23C-24C 63D-640	150 000 [1030] SAE GRADE 8	120 * [14] 110 [13]	240 * [27] 215 [24]	40 [54] 35 [48]	65 [88] 60 [82]	100 [135] 90 [125]	140 [190] 125 [170]	190 [260] 175 [240]	330 [450] 300 [410]	525 [710] 475 [645]
SOCKET HEAD CAP SCREW	25C-26C 73G-74G	160 000 [1100]	145 * [16]	300 * [34]	50 [68]	75 [102]	120 [160]	165 [225]	230 [310]	400 [540]	650 [880]
12 POINT HEAD CAP SCREW	93G-94G		130 [15]	270 [31]	45 [61]	70 [95]	110 [150]	150 [205]	210 [285]	360 [490]	600 [815]
			1.000	1.125	1.250	1.375	1.500	1.625	1.750	1.875	2.000
CAP SCREW, BOLT AND NUT	1C-2C 15C-16C 61D-62D	105 000 [725] SAE GRADE 5	525 [710] 475 [645]	720 [975] 650 [880]	1000 [1360] 900 [1220]	1350 [1830] 1200 [1630]	1650 [2240] 1500 (2040]	2200 [2980] 2000 [2720]	2750 [3730] 2500 [3390]	3500 [4750] 3150 [4270]	4200 [5700] 3800 [5150]
CAP SCREW, BOLT AND NUT	17C-18C 23C-24C 63D-64D	150 000 [1030] SAE GRADE 8	800 [1085] 725 [985]	1175 [1600] 1050 [1425]	1625 [2200] 1475 [2000]	2200 [2980] 2000 [2720]	2850 [3870] 2600 [3530]	3800 [5150] 3450 [4680]	4800 [6500] 4300 [5830]	6100 [8300] 5500 [7450]	7200 [9800] 6500 [8800]
SOCKET HEAD CAP SCREW	25C-26C 73G-74G	160 000 [1100]	1000 [1360]	1450 [1970]	2000 [2720]	2700 [3660]	3450 [4680]	4600 [6240]	5700 [7730]	7200 [9800]	8600 [11 700]
12 POINT HEAD CAP SCREW	93G-94G		900 [1220]	1300 [1770]	1850 [2510]	2450 [3330]	3150 [4270]	4150 [5630]	5100 [6920]	6500 [8800]	7800 [10 600]

NOTES:

1. Torque values shown represent results of extensive laboratory testing, field experience and study of accumulated supplier data on various types of cap screws coated with zinc phosphate and oil in accordance with Clark Protective Treatment specification H and used with hardened plain or H coated washers, such as covered by Clark standard 27E.

ISSUED	REVISED	REFERENCE
15 February 77		

NOTE: Suppliers shall assume the following responsibilities for materials furnished to Clark Equipment Company, its subsidiaries and their licensees: 1. Compliance with the latest issue of this standard and/or specification and other documents referenced therein to the extent specified. 2. Compliance with all applicable government regulations and requirements. 3. Infringement of adversely held domestic or foreign patents. 4. Resulting product liability claims.

www.truck-freeworkshop.com/clark/

2. All torque values shown in customary (LB.FT) units represent values as described in NOTE 1 rounded to the nearest multiple of 5 or, in some cases, to the nearest whole number. All torque values shown in metric (N.m) units are rounded conversions that are estimated to be practical for the increments involved in torque wrenches calibrated in newton-metre units.

3. The torque values listed develop clamping forces that are based on material proof loads specified in SAE Standard J429 in conjunction with the coefficient of friction value found to be characteristic of the H coating. For Grades 5 and 8 cap screws, the clamping forces developed are 85±5% and 75±5% of proof loads for coarse and fine threads respectively. For socket head and 12 point cap screws,the clamping forces developed are 100±5% and 90±5% of proof loads for coarse and fine threads respectively.

4. The same torque values apply to both coarse and fine threaded fasteners as a result of the clamping forces being approximately equal when calculated in accordance with NOTE 3. To illustrate, the proof loads for Grade 8 fasteners with .750-10 and .750-16 threads are 40 100 and 44 800 lb respectively. The clamping forces, determined by multiplying these proof loads by 0.85 and 0.75 respectively, are 34 100 lb and 33 600 lb, which for all practical purposes are considered equal.

5. The torque values given apply while the fastener is being turned. After a joint is tightened, it may be checked by trying to tighten it further, recognizing that the torque required to start further motion will be about 10% higher than the specified value.

ISSUED	REVISED	REFERENCE
15 February 77		

NOTE: Suppliers shall assume the following responsibilities for materials furnished to Clark Equipment Company, its subsidiaries and their licensees: 1. Compliance with the latest issue of this standard and/or specification and other documents referenced therein to the extent specified. 2. Compliance with all applicable government regulations and requirements. 3. Infringement of adversely held domestic or foreign patents. 4. Resulting product liability claims.

www.truck-freeworkshop.com/clark/

www.truck-freeworkshop.com/clark/

1-1. INTRODUCTION

1-2. This manual provides operation, maintenance, and repair instructions for the Model C500-Y45 Fork, Lift Truck, manufactured by Clark Equipment Company, Industrial Truck Division, Battle Creek, Michigan 49016.

1-3. PURPOSE OF EQUIPMENT

1-4. The fork lift truck (herinafter referred to as the truck) is designed for use in warehousing, storage, and shipping operations; and is used for lifting, loading, stacking, and moving cargo pallets, crates, boxes, and packaged materials.

1-5. GENERAL DESCRIPTION

1-6. The truck (See Figure 1-1) is a gasoline engine driven vehicle, designed for high maneuverability and ease of operation in confined areas. The truck is outfitted with a two-speed automatic transmission with HI & LO range shift, pneumatic rubber tires, power steering, and hydraulic brakes.

1-7. The truck will operate efficiently on well surfaced gravel yards or on sol id floors, runways, etc. Top speed approximately 12 MPH empty.

1-8. Maximum load capacity is 4000 pounds, with the load center of gravity at 24 inches from the heel of the forks. The maximum fork height (loaded) is 149 inches. Refer to Figure 1-1 for detailed specifications.

1-9. The truck is powered by gasoline engine, which provides power to the drive wheels through a two speed forward and reverse automatic transmission and torque converter. The transmission, torque converter, axle differential and axle end adapters are assembled together and mounted directly to the engine, forming a rigid, unitized drive line.

1-10. Carriage lift and tilt functions are accomplished by hydraulic cylinders. Act ion of the lift and tilt cylinders is controlled by valves which are manually operated through levers on the instrumnet panel. Hydraulic fluid pressure for Cylinder operation is provided by a hydraulic pump mounted on the engine, and gear driven from the engine.

1-11. DETAILED DESCRIPTION

1-12. FRAME. The truck frame is of unitized welded construct ion, and incorporates the body, the fuel tank, the hydraulic fluid reservoir, and provides the mounting facilities for the engine and drive line, the steering axle, and the upright and carriage assembly.

l-13. ENGINE ASSEMBLY. The engine assembly consists of the basic engine and its associated accessories, which comprise the fuel system, cooling system, ignition system, and exhaust system.

NOTE

Throughout this manual the terms right, left, 'Front, and rear, with respect to the engine and truck, indicate directions from the viewpoint of the operator when sitting in the seat of the truck.

1-14. The engine is an in-line, four cylinder, liquid-cooled, gasoline engine which developes 52 horsepower at 2350 RPM. Accessories mounted to the engine and normally considered a part of the complete engine, are the alternator, starting motor, distributor, coil, fuel pump, governor, coolant fan, water pump and thermostat.

1-15. ENGINE AND DRIVE LINE. The engine assembly complete with mounts, radiator and hose, and accessories used in conjunction with the torque converter, automatic transmission, and drive axle assembly from an integrated unit referred to as the "engine and unitized drive line."

1-16. TORQUE CONVERTER. The purpose of the torque converter is to multiply the torque or twisting force of the engine to the transmiss ion. The amount of load or aresistance applied to the output shaft of the torque converter determines the extent to which engine input torque is multiplied. There is no multiplication of torque when the load can be moved with the amount of torque being produced by the engine.

www.truck-freeworkshop.com/clark/

TABLE 1. SPECIFICATIONS

GENERAL :

Vehicle Model	C500-Y45
Machine Weights:	
Drive:	
Empty	4218 LBS.
Loaded	10928 LBS.
Service	8668 LBS.
Overall length with forks	139.41 inches
Overall length without forks	97.41 inches
Overall width	45.38 inches
Overall height	83 inches
Tread, drive tires	37.75 inches
Tread, steer tires	34.00 inches
Basic aisle for right angle stacking (Add length of load)	104.41 inches
Turning radius, outside	86.28 inches
Turning radius, inside	7.88 inches
Ground clearance	
Under Counterweight	6.88 inches
Under rear axle	6.38 inches
Under front axle	5.38 inches
Under upright	5.12 inches
Between Frame	6.00 inches
Grade Clearance	59%
Draw bar pull (loaded) at 12 inch coupler height	3870 LBS.

Travel speeds :	
Loaded	12.3 MPH
Empty	12.4 MPH
Gradeability: Low Forward	
Loaded: Maximum	30.7%
Empty	21.8%
Lifting & Lowering Speeds:	
Lift:	
Loaded	84 FPM
Empty	91 FPM
Lower :	
Loaded	72 FPH
Empty	77 FPM

ENGINE:

Model	CLARK
Type	Overhead Valve
Number of cylinders	4
Bore	3.625
Stroke	4.25
Displacement	176 Cu. In.
Governed speed (no load)	2350 RPM
Bare engine HP at governed RPM	52
Maximum torque	135 ft/lb @ 1200 RPM
Firing order	1-2-4-3
Governed speed (Loaded)	2200 RPM
Crankcase capacity:	
With filter	5 quarts
Without filter	4 quarts
Lubrication system	Pressure lubricated by submerged gear-type pump

FUEL TANK CAPACITY: 10.5 gallons

FAN BELT DEFLECTION: 1/2 to 3/4 inch

TORQUE CONVERTER:

Diameter	11 inches
Torque multiplication	2.15 to 1.0

TRANSMISSION:

Speeds	TWO
Gear ratio:	
Forward :	
First	1.440 to 1
Second	.737 to 1
Reverse :	
First	1.357 to 1
Second	.695 to 1

STEER AXLE:

Axle alignment :	
Toe-in	0 degrees
Camber angle	1 degrees
Caster	0 degrees
Left-hand turning radius angle:	
Left wheel	75 degrees
Right wheel	55 degrees
Right-hand turning radius angle:	
Left wheel	55 degrees
Right wheel	75 degrees

TRANSMISSION/AXLE ADAPTER:

Ratio	4.4 to 1.0
Common sump capacity	18 quarts

WHEELS AND TIRES:

Type	Pneumatic
Size:	
Front	7:00 X 12 12 Ply
Rear	6:50 X 12 10 Ply
Air Pressure:	
Drive	100 LBS.
Steering	100 LBS.

www.truck-freeworkshop.com/clark/

WHEELS

Torque Specifications:
Drive Wheel..290-300 ft/1bs (dry thread)
Steer Wheel..115-125 ft/1bs (dry thread)
Steering gear pitman arm . . . . . .
Lock nut torque . . . . . 120-130 16 ft.
Steering gear mounting bolts..33 lb. ft.

HYDRAULIC SYSTEM:

Sump tank capacity . . . . . 8 gallons
Sump tank filter (replaceable).. 25 micron
Sump tank breather (replaceable).10 micron
Hydraulic Pumps:
Main Pump:
Type . . . . . Gear
Capacity . . . . . 7 GPM
. . . . . at 1040 engine RPM @ 100 PSI

Steer Pump:
Type . . . . . Gear
Flow Control setting . . . . . 2.5 GPM
Relief Valve setting . . . . . .1750 PSI
Hydraulic Valve:
Pressure Relief Valve Setting.. 1750 PSI

BRAKE SYSTEM:

Type . . . . . Hydraulic
Brake pedal free travel . . . . . 1/8 inch

DISTRIBUTOR:

Rotation (viewed from cap end)...Clockwise
Point opening 0.021
Maximum advance:
RPM 1873
Degree (Dist.). 11
Cam angle range 31-34
Breaker spring tension:
(Ounces)..... 17-21 @ center of contact
. . . . . 19-23 @ back edge of contact
Dwell angle . . . . . 69 - 3

DO NOT set contact gap outside limits to obtain specified dwell.

Condenser . . . . . 18 to .23 Microfarads
Side play . . . . . .005" Max.
Fit new bearings to . . . . . .0005"
End play . . . . . .003" to .010"
Measure with collar in place

SPARK PLUGS:

Gap:
Standard 0.025

STARTER RELAY:

Point opening . . . . . 0.017 to 0.033
Opening voltage . . . . . 3.7 to 5.2

BATTERY (Negative Ground)

(Volts) 12
Number of cells 6
Number of plates 9
20 Hour rate (amp/hr) 45
300 Amps., 0 deg. F.

STARTING MOTOR:

No Load Test:
Draw current (amps) 125
. . . . . (Inc. solenoid)
Volts 10.6
Speed (RPM)....6200 min., 9400 max.
Teeth in pinion 9
No. teeth in ring gear 142
Starter to crankshaft ratio.. 1:15.77
Starting medium . . . . . Electric

ALTERNATOR:

Field Coil draw . . . . . @ 80° F.
. . . . . 2.2 to 2.6 amps @ 12 Volts
Type . . . . . Delcatron
Rated output . . . . . 32 Amps
output test:
@ 80 F 2350 engine RPM 30 Amps.
2350 engine RPM 14 Volts
550 engine RPM 7 Amps.

www.truck-freeworkshop.com/clark/

1-17. The torque converter has three basic components; they are the impeller, turbine, and housing or stator. Under normal operating conditions, the action of the impeller causes the turbine blades to turn almost freely and fluid passes through the converter easily and quickly, striking each blade at a very slight angle. When a load is encountered, the turbine slows down because it is directly connected to the load shaft, and the fluid strikes the turbine blades at a sharp angle. As the force of the fluid is relayed from blade to blade, the output torque accumulates. The twisting force that accumulates as the fluid is directed and redirected is the output torque of the converter. Thus, the converter selects the proper output torque for any load, doing automatically what must be done manually in a mechanical transmission.

1-18. TRANSMISSION ASSEMBLY. The torque converter and automatic transmission assemblies are mounted between the engine and drive axle assembly, immediately below the driver's floor plates. The transmission case is connected to the flywheel housing on one end and the axle adapter housing on the other. The transmission assembly is controlled by valves mounted on the transmission. The valves are connected by linkage to rods extending through the floor plate and up to the cowl. Levers extending thru the cowl are easily accessible to the operator's right hand. By proper manipulation of the direction selector, the operator can place the vehicle in neutral, forward, or reverse gear. The oil used by the transmission when operating the vehicle is cooled by the oil cooler in the radiator.

1-19. DRIVE AXLE. The front vehicle axle is the drive axle of the truck. The axle adapter and axle end assemblies contain the gears, shafts, bearings, and-other components necessary to transmit power to the truck drive wheels. The axle is of single speed type, having double reduction gearing. Final reduction is achieved at the drive wheels through a ring and pinion gear mounted in the axle and housing.

1-20. UPRIGHT AND CARRIAGE. The upright assembly consists of a vertical mast of twin steel rails, an intermediate section and an inner telescoping section. The carriage is mounted to this telescoping section and the lifting forks are attached to the carriage. A telescoping hydraulic cylinder within the mast provides the lifting force.

1-21. SYSTEM DESCRIPTIONS

1-22. ENGINE COOLING SYSTEM. (See Figure 1-2.) The engine cooling system consists of the radiator, water pump, connecting hoses, engine water jacket, thermostat, fan and fan belt. Total cooling system capacity is 11-1/2 quarts. The radiator is of the heavy duty, tube-and-fin, cross flow type. Cooling air is drawn through the radiator by action of the fan, which is driven by V-belt from the crankshaft pulley. The thermostat, located between the water pump and cylinder head, restricts the flow of coolant through the engine until the engine has warmed up to normal operating temperature.

1-23. ELECTRICAL SYSTEM. The radio frequency emission electrical system is negatively grounded andemploys a 12-volt alternator that is mounted to the engine and driven by the V-type belt. Output of the alternator is controlled by a voltage regulator mounted in the alternator. Major components of the electrical system are the alternator, 12-volt storage battery, engine starting motor, distributor, coil, spark plugs, vehicle lights, and various electrically powered indicators.

1-24. To keep the starter from starting when the engine is running, a lockout system is employed. The automatic disengagement and lockout system functions as follows:

a. The starter relay has points which are closed as long as the engine is not running.Under this condition, the starter can be operated.

b. However, when the engine is running the starter relay is energized, the relay points open and the starter circuit is broken. Thus..the starter cannot be operated.

www.truck-freeworkshop.com/clark/

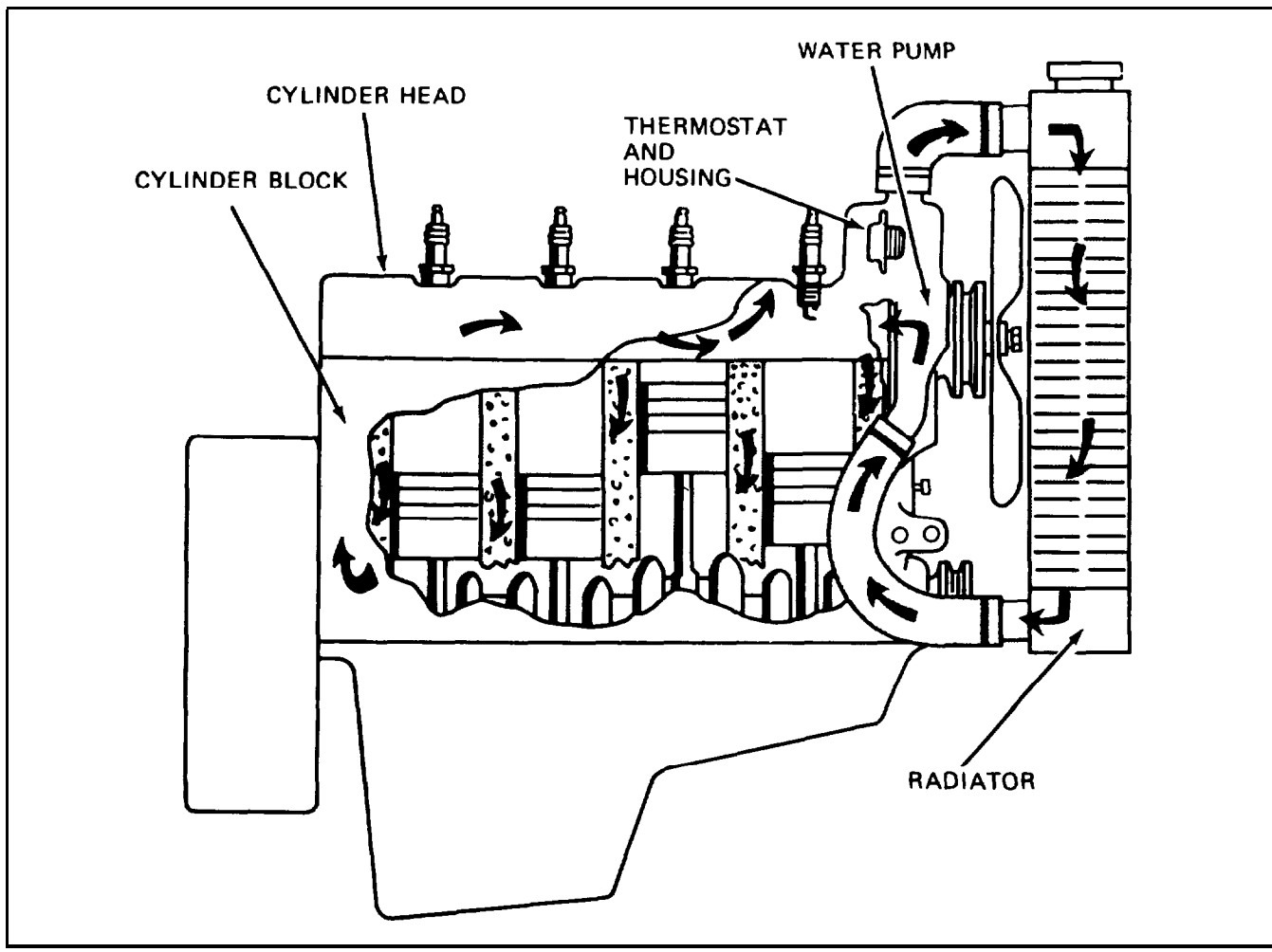

Figure 1-2. Cooling System Diagram

1-25. ENGINE FUEL SYSTEM. The engine fuel system consists of the fuel tank with a 10.5 gallon capacity that is built into the left side of the truck frame, a fuel filter installed in the main fuel line between the tank and fuel pump, a diaphragm fuel pump and an up-draft carburator that are part of the engine assembly. The fuel tank has a vented lock-type safety fuel cap, and built-in strainer.

1-26. STEERING SYSTEM. The truck is steered by movement of the rear wheels. Steering is accomplished by a combination of mechanical and hydraulic forces controlled by the steering wheel. The mechanical portion of the steering system consists of a steering gear assembly, a drag link assembly that connects with the power steering cylinder, and a steering axle with two rods that connects the steering spider of the axle with the steering wheels. The steering booster system is powered by a gear-type hydraulic pump mounted on the timing gear housing cover and driven by the camshaft gear. Major components of the power steering system are the hydraulic pump and a hydraulic cylinder, with an internal control valve, that is anchored to a welded bracket on the vehicle frame. The hydraulic control valve reacts to the steering wheel movement directing hydraulic fluid under pressure to extend or retract the piston and assist in steering the vehicle. The system permits manual steering of the truck when the engine is not running or when the hydraulic steering is inoperative.

1-27. EXHAUST SYSTEM. Exhaust gases are expelled from the engine manifold. TWO short exhaust pipes connect the exhaust manifold to the engine muffler, mounted above the steer axle.

www.truck-freeworkshop.com/clark/

1-28. SERVICE BRAKE AND INCHING CONTROL SYSTEM.

Examing the inching and brake circuits you will note that we have two master cylinders - the left one for left foot inching and braking, the right one for right foot braking only. With neither pedal applied, the inching valve is in a neutral position. Note that there is no residual pressure from either the right or left master cylinder to the inching-and-brake selector valve and wheel cylinders does have residual pressure. (Refer to Fig. 1-3)

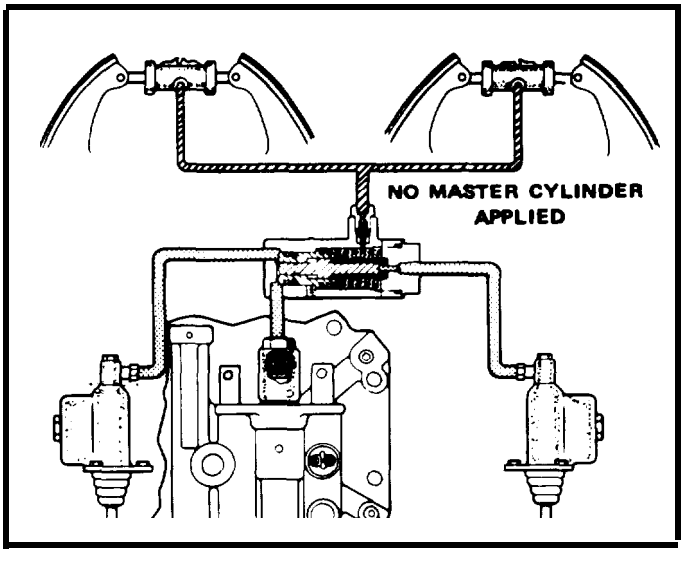

Figure 1-3

INDICATES RESIDUAL PRESSURE

INDICATES NO APPLIED PRESSURE

When the right master cylinder is applied for braking, fluid under pressure flows from the master cylinder, through the selector valve, and through the residual check valve to both wheel cylinders. (Refer to Fig. 1-2)

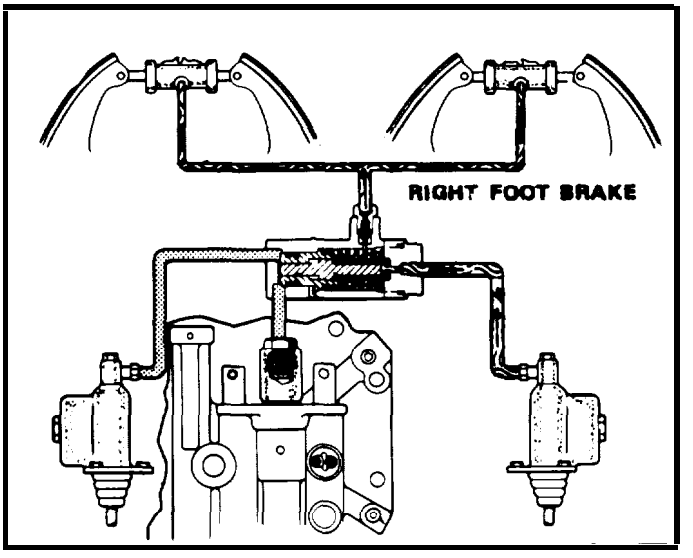

Figure 1-2

INDICATES APPLIED PRESSURE

INDICATES NO APPLIED PRESSURE

The inching-and-brake selector valve, mounted on top of the differential housing, controls flow of fluid to the wheel cylinders.

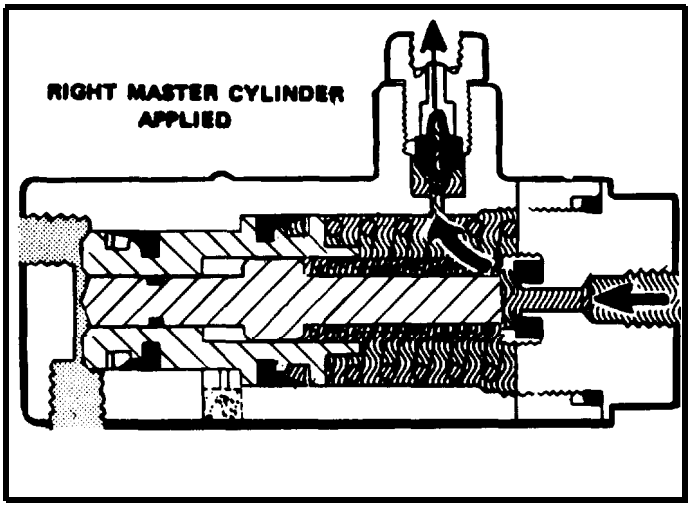

www.truck-freeworkshop.com/clark/

This detail of the selector valve shows the flow through it when the right master cylinder is applied. (Refer to Fig. 1-3)

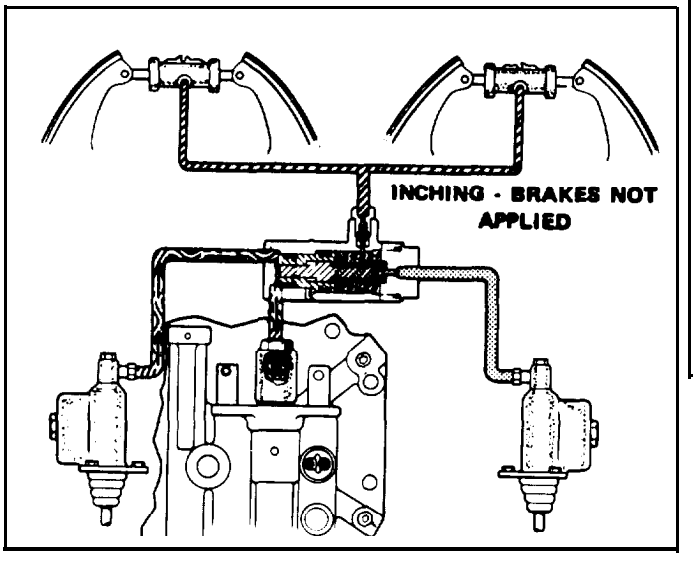

Figure 1-4.

INDICATES RESIDUAL PRESSURE

INDICATES APPLIED PRESSURE

INDICATES NO APPLIED PRESSURE

When the left foot inching pedal is applied, the primary lockout piston is forced in and blocks the inlet passage from the right master cylinder. Then the pressure rises, and the inching piston moves to start disengaging. the transmission without brake application. (Refer to Fig. 1-4)

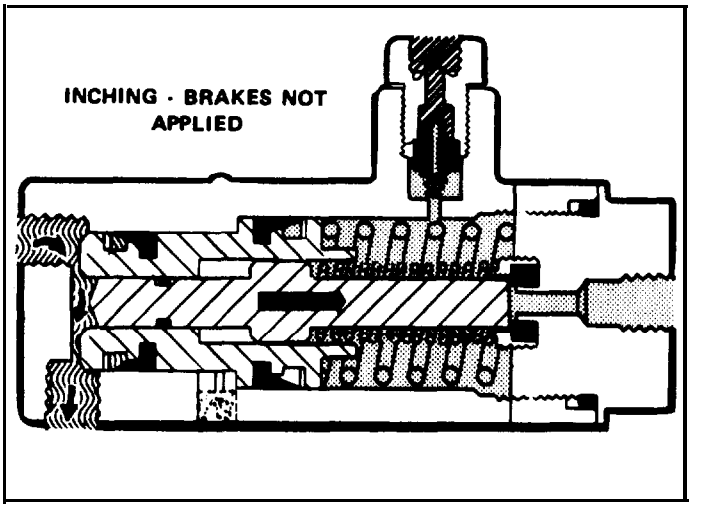

Figure 1-5

INDICATES RESIDUAL PRESSURE

INDICATES APPLIED PRESSURE

INDICATES NO APPLIED PRESSURE

This detail of selector valve shows action of lockout piston and inching piston during inching operations. (Refer to Fig. 1-5).

www.truck-freeworkshop.com/clark/

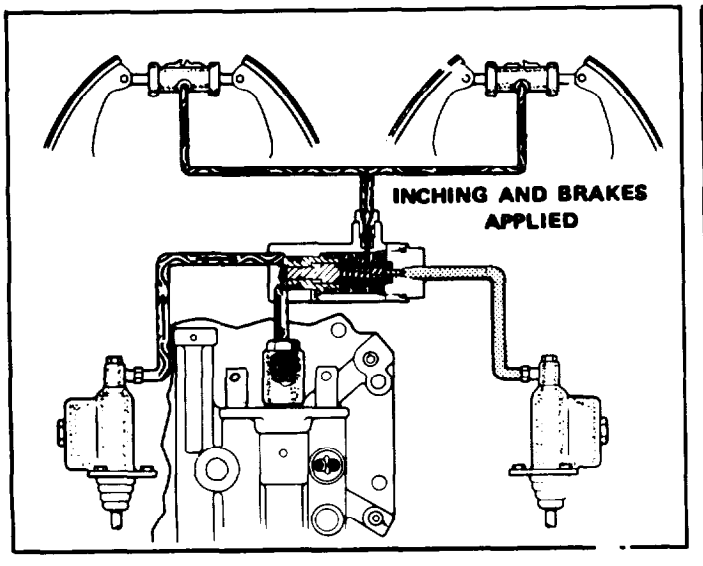

Figure 1-6

INDICATES APPLIED PRESSURE

INDICATES NO APPLIED PRESSURE

When the inching pedal is pushed down to a point where the transmission is partially disengaged, the brake piston is applied. Fluid, trapped between the brake piston cup and the lockout piston, then flows through the residual check valve, and to the wheel cylinders to start applying the brakes. (Refer to Fig. 1-6)

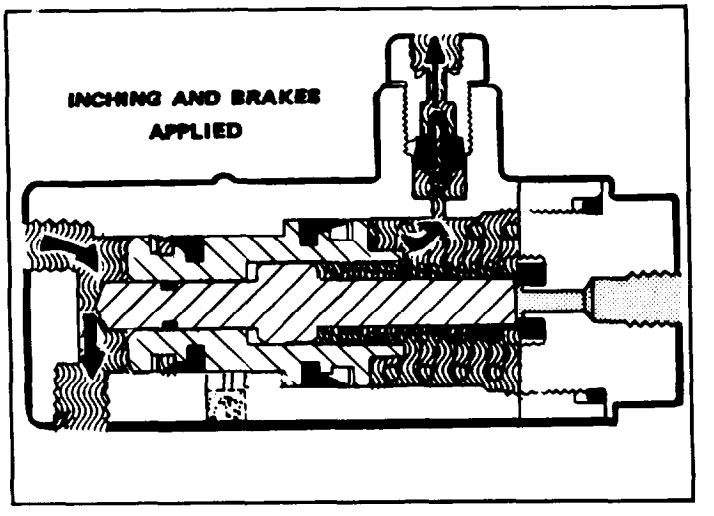

Figure 1-7

INDICATES APPLIED PRESSURE

INDICATES NO APPLIED PRESSURE

This detail of the selector valve shows fluid, trapped between the brake piston cup and the lockout piston, being forced out of valve to start applying brakes during inching operation. (Refer to Fig. 7)

www.truck-freeworkshop.com/clark/

1-29. HYDRAULIC SYSTEM. In the vehicle lift and tilt hydraulic system, oil is drawn from the reservoir by the pump which is mounted to the engine gear case cover. The oil is forced through the high pressure line to the control valve. When the lift and tilt control levers are in the neutral position, oil flows through the valve and back to the reservoir. When one of the control levers is moved (forward or rearward), oil is diverted through tubes and hoses to the corresponding cylinder to extend or retract the piston. When the limit of this motion or stroke is reached, the oil pressure in the system builds up to approximately 2,000 PSI, forcing a plunger in the relief valve section of the control valve to open and return excessive oil to the reservoir. The tilt lock valve prevents the flow of oil to and from the tilt cylinders when the hydraulic cylinders are not pressurized, even though the tilt control valve lever is depressed. This prevents tilting of the upright mast when the engine is not running. Major parts of the hydraulic system are the oil reservoir that is built into the right hand truck frame, the hydraulic pump that operates off an idler gear of the crankshaft, the lift cylinder, two tilt cylinders, a tilt lock valve, a lift and tilt control valve. The valves are controlled by mnaual levers.

1-30. COMPONENT DESCRIPTION.

1-31. FUEL PUMP. The fuel pump is mounted to the engine cylinder block on the left side. This diaphragm pump is actuated by an accertric lever that operates against a cam on the engine camshaft. A fuel filter with a replaceable element is installed on the inlet side of the pump.

1-32. AIR CLEANER. The carburetor air cleaner is of the dry type, and is mounted on the frame, to the manifold side of the engine. The purpose of the air cleaner is to prolong engine life by preventing dirt and grit from being drawn into the engine through the carburetor and intake manifold. Air enters the cleaner through an opening in the cleaner outer shell, passes through the element and enters the carburetor through a short "L" shaped rubber tube.

1-33. ENGINE GOVERNOR. The engine is equipped with a centrifigual-type governor for controlling excessive speed of the engine. The governor is driven from the camshaft timing gear. Governor setting is adjusted by means of a spring on the governor control linkage. Tension of this spring is adjustable.

1-34. ENGINE WATER PUMP. The impeller-type water pump is bolted to the engine block and is driven by V-type belt off the crankshaft pulley. The coolant fan is bolted to the water pump pulley.

www.truck-freeworkshop.com/clark/

1-35 CARBURETOR

PRINCIPLE OF OPERATION:

Marve1-Schebler Carburetors are used on thousands of tractor and industrial engines and have been designed to provide many years of trouble-free service, however, as in the case of all mechanical devices, they do in time require proper service and repairs. An understanding of their construction and how they operate as well as an understanding of their function with respect to the engine will not only avoid many false leads on the part of the service man in diagnosing so-called carburetor complaints but will create customer satisfaction and a profitable business for the progressive service shop.

To understand a carburetor it is necessary to realize there is only one thing a carburetor is designed to do and that is to mix fuel and air in the proper proportion so the mixture will burn efficiently in an engine. It is the function of the engine to convert this mixture into power.

There are three major factors in an engine which control the change of fuel and air into power: I-Compress ion. 2-Ignition. 3-Carburetion.

Carburetion has been listed last because it is absolutely necessary for the engine to have good compress ion and ignition before it can have good carburetion.

When the average person thinks of "carburetion" they immediately think of the carburetor as a unit. Carburetion is the combined function of carburetor, manifold, valves, piston and rings, combustion chamber, and cam shaft.

It is readily seen that "carburetion" is a far deeper subject than consideration of the carburetor alone, and expecting the carburetor to cure faulty ignition, compression, valves, etc. will only result in wasted time and effort on the part of the service man and added expense to the customer.

It must be remembered that the function of the carburetor does not extend beyond delivering the proper mixture of fuel and air to the manifold and the other factors which effect power and economy cannot be changed or corrected by the carburetor. Inability to understand all factors that effect engine operation is the reason many service mechanics change from factory standards and attempt to improve on the engine set-up by their own methods or "standards". All that any service mechanic should ever try to do is make the particular engine he is working on as good as the manufacturer intended it to be, but he can make it a lot worse. Far too many engines are running below their standard of performance in service today.

For the carburetor to accomplish its function it must be able to vary the mixture strength dependent upon engine demands. It must supply a mixture strength that will allow the engine to give maximum horsepower, whenever the throttle is fully opened, while at part throttle conditions it must lean out the mixture so that maximum economy can be obtained. In addition it must have flexibility throughout the entire range of operating speeds, from idle and part throttle to full power wide open throttle position. The carburetor must also have an accelerating "well" with enough fuel capacity to start handling sudden maximum loads. In other words the carburetor not only varies volume of fuel and air that enters the engine but also varies amount of fuel that goes in with a given amount of air, in order to produce the proper mixture proportion for any condition under which the engine is operating at any time.

www.truck-freeworkshop.com/clark/

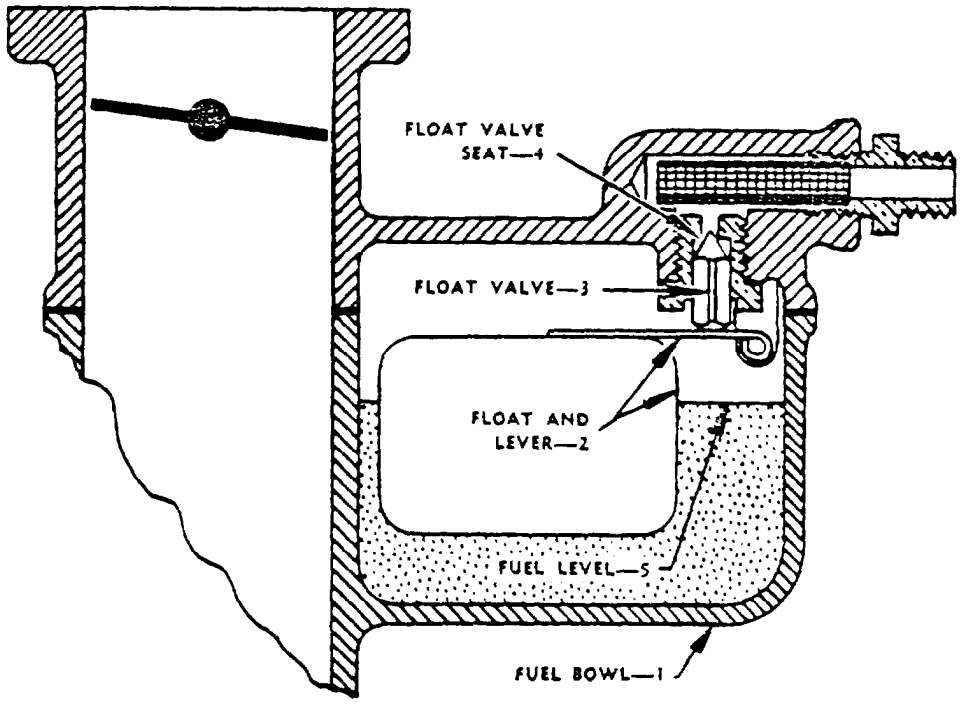

Fig. 16150 (FLOAT SYSTEM)

In order to understand the function and operation of the Marvel-Schebler Tractor and Industrial Carburetors it is well to consider the systems that make up each carburetor. These systems are: The Float System, The Idle System, The Power Fuel Feed System, The Back Suction Economizer System, and The Choke System.

A thorough knowledge of each system will help the service mechanic to quickly locate and correct legitimate carburetor complaints as well as to inspect, repair, and put back to standard any carburetor that requires an overhaul.

a. FLOAT SYSTEM:

The float system controls the level and supply of gasoline in the fuel bowl throughout the operating range of the engine.

When the fuel bowl (1) is empty the float and lever (2) and float valve (3) drop and fuel under pressure from the fuel pump (or gravity feed) is forced through the float valve seat (4) around the float valve (3) and into the fuel bowl (1). As the fuel in the bowl approaches the correct operating level it raises the float and lever (2) with enough force to raise the float valve and cut off the flow of fuel into the bowl. As fuel feeds through the carburetor jets into the engine the fuel level (5) drops, allowing additional fuel to enter the fuel bowl.

Under actual operating conditions the fuel level (5) and float and lever (2) automatically position themselves so that the inward flow of gasoline to the carburetor is equal to the outward flow of gasoline to the engine.

www.truck-freeworkshop.com/clark/

As can readily be seen the float system under the most favorable of operating conditions is subjected to a certain amount of wear. Under severe conditions that result in excessive vibrations being transmitted to the carburetor, float valve and float valve seat wear is accelerated.

It should be an established policy that whenever the carburetor is disassembled for whatever cause the service man make following checks:

1. Examine float valve for any signs of wear. If it is not absolutely true or is grooved and hasn't a perfect taper, a new float valve and also a new float valve seat must be used. These float valves and seats are supplied in matched sets and are tested at the factory for leaks. Always use a new float valve seat gasket to make sure of a perfect seal.

2. Examine float for any signs of failure. To test metal float, submerge float in pan of hot water and if air bubbles are observed, replace with new float.

   Examine cork float for bare places or cracks in coating. If either are found, or if float shows evidence of having been soggy, replace with new one. attempt to recover f (do not shellac or varnish.)

3. Set float height to the proper specification for the particular model carburetor being serviced. Make certain that the entire assembly works free and that there is no binding.

4. Wash fuel strainer assembly in gasoline and clean screen with air under pressure. If the screen, or the threads on the strainer are not in good condition, install a new assembly. When reinstalling fuel strainer assembly always use a new strainer gasket if a gasket is used to obtain a seal.

   It has been proven, with few exceptions, that with a float system in good order, carburetor flooding only occurs when dirt or foreign matter becomes lodged between the float valve (3) and the float valve seat (4).

b. THE IDLE SYSTEM:

The idle system controls the flow of fuel at idle speed and at slow speeds until the throttle is opened wide enough to allow the power fuel feed system to function,

When the throttle valve (6) is in the idle position the edge of the valve is between the primary idle orifice (7) and the secondary idle orifice (8). With the valve in this position the air pressure (manifold vacuum) at the primary idle orifice (7) is lower than the air pressure in the fuel bowl chamber (9) and fuel is forced from the fuel bowl (1) into the idle fuel passage (10). As the fuel travels through the idle fuel passage (10) it passes through the metering orifice of the idle jet (11) to the point where it is combined with air entering through the idle adjusting needle seat (12). The mixing of air with gasoline helps to atomize the fuel and this process is repeated at the secondary idle or if ice (8) as the fuel travels through the idle fuel passage (10).

www.truck-freeworkshop.com/clark/

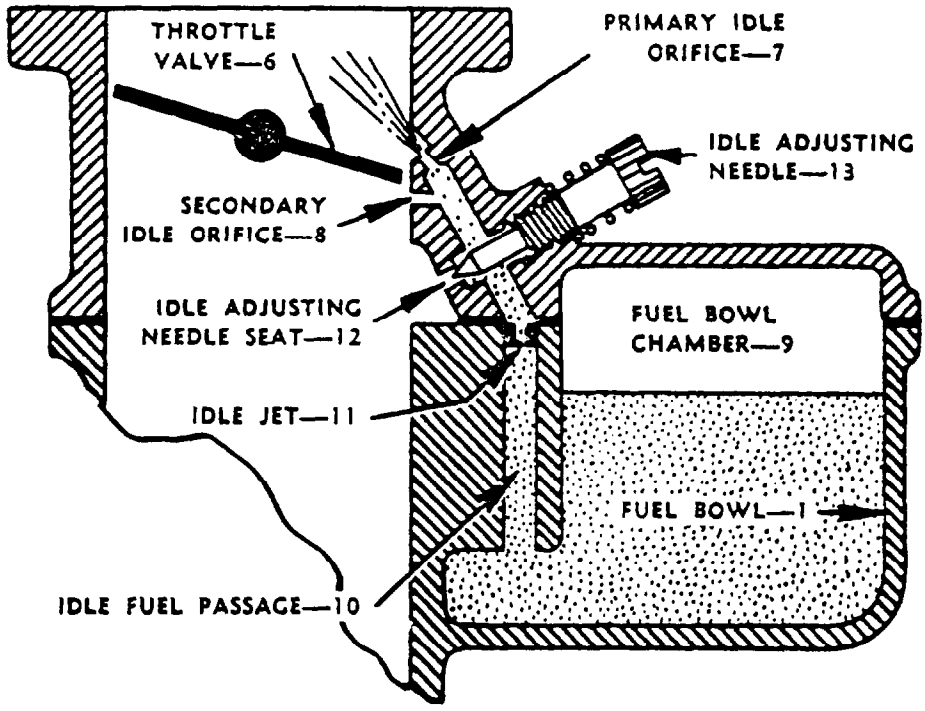

Fig. 16151 (IDLE SYSTEM)

As this rich mixture of fuel and air emerges from the primary idle orifice (7) it is reduced to correct proportions by the air which passes around the throttle valve (6) since this valve must be slightly open to permit the engine to idle. The resultant mixture is correct for operating engine at idle speed, provided the idle adjusting needle (13) is properly adjusted.

As the throttle valve (6) is slowly opened from the slow idle position it gradually subjects the secondary idle orifice (8) to intake manifold vacuum, and the secondary idle orifice (8) no longer bleeds air to the idle fuel passage (10) but feeds an additional quantity of fuel into the engine. This is proper since the throttle valve is now open wider and will admit a greater amount of air to blend with this additional fuel to maintain the correct proportions of fuel and air for the engine.

As the throttle valve (6) is opened still wider, the idle fuel delivery begins to fade out, however, the throttle valve at this point is far enough open for the power fuel feed system to begin functioning.

The idle system is the most positive and satisfactory of idle systems, as it is working under very high suction and the mixture flows through the small passages and orifices at very high velocities. It is necessary to bear in mind, however, that there are times when these small holes may become plugged with particles of dirt or foreign matter and will require cleaning. At such times the passages, jets, and small drilled holes should only be cleaned with a cleaning fluid such as gasoline and air under pressure. Never use drills or wires as a change in size of these small openings will change the entire calibration of the carburetor.

www.truck-freeworkshop.com/clark/

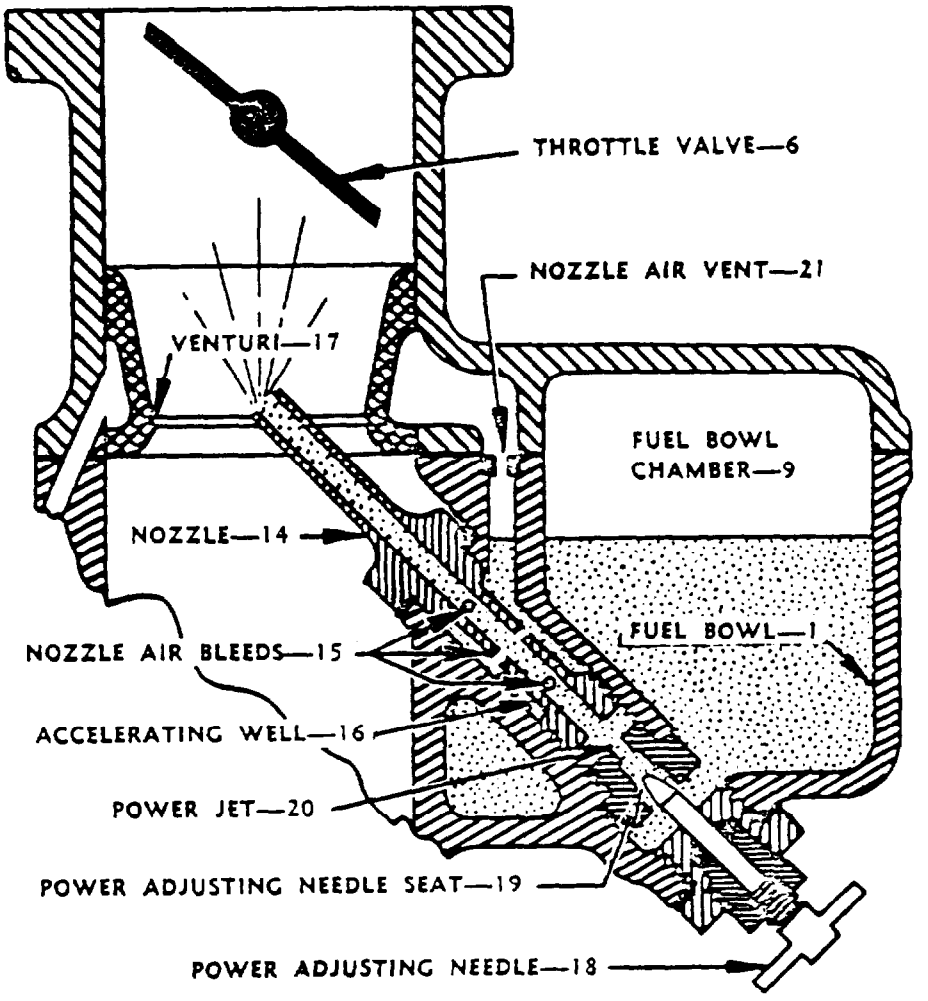

Fig. 16152 (POWER FUEL FEED SYSTEM)

c. POWER FUEL FEED SYSTEM:

With the throttle valve (6) in slow or just off slow idle position, fuel rises up through the nozzle (14) and out the nozzle air bleeds (15) to fill the accelerating well (16) to approximately the height of the fuel level in the fuel bowl (1).

As the engine speed is increased from the slow idle posit on the air flow through the venturi (17) is gradually increased, and, as he idle system begins to diminish, the velocity through the venturi (17) is high enough to create a pressure at the tip of the nozzle (14) slightly less than the pressure in the fuel bowl chamber (9) and the accelerating well (16). Fuel, therefore, feeds from the fuel bowl (1) through the opening between the power (load) adjusting needle (18) and the power adjusting needle seat (19), through the power jet (20) and out the nozzle (14) to be discharged into the air stream at the venturi (17). At the same time, the fuel that s stored in the accelerating well (16) is also forced through the nozzle air bleeds (15) into the nozzle (14).

www.truck-freeworkshop.com/clark/

Because the size of the power jet (20) and the position of the power adjusting needle (18) restrict the amount of fuel which can enter the nozzle (14), the fuel in the accelerating well (16) will soon be exhausted and air will then enter through the nozzle air bleeds (15) to mix with the fuel passing through the nozzle (14). The amount of air that can enter into the nozzle (14) is limited by the size of the nozzle air vent (21).

The result of air bleeding into the nozzle (14) is, to help atomize or break up the fuel into finer particles, to regulate the quantity and rate of discharge of fuel fed from the accelerating we11 (16), during acceleration, and to provide correct mixture proportions for full throttle operation.

As the throttle valve is opened toward the wide open position the velocity through the venturi (17) continues to increase, lowering the air pressure at the nozzle (14) and resulting in additional fuel being supplied to the engine as the speed is increased.

When the throttle valve (6) is opened suddenly from slow or just off slow idle position, the fuel stored in the accelerating well (16) is forced out through the nozzle air bleeds (15) very rapidly and serves to provide the extra richness required by the engine to meet the sudden load. When the throttle valve (6) is closed, fuel again fills the accelerating we11 (16), ready for the next acceleration.

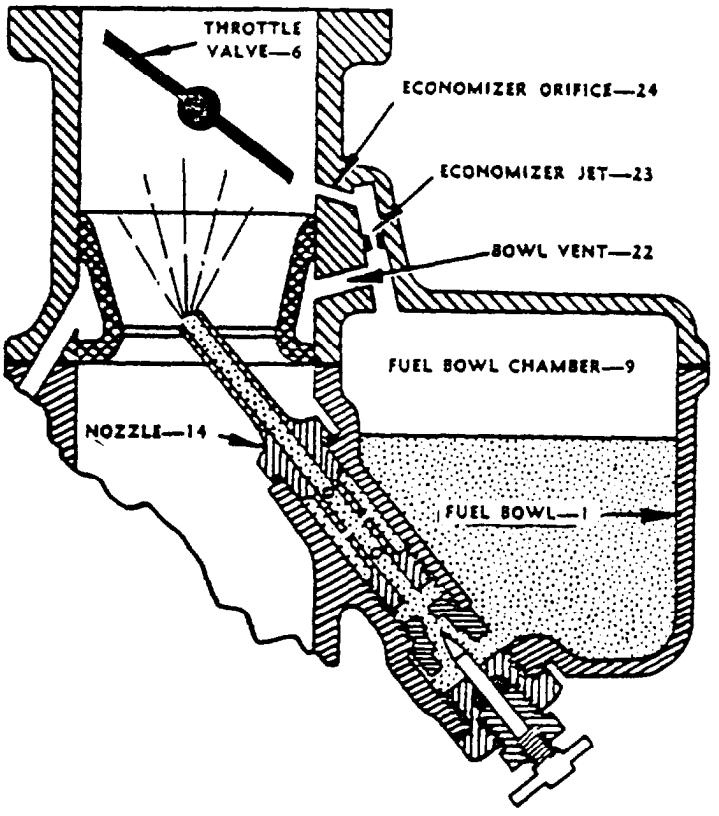

Fig. 16153
(BACK SUCTION ECONOMIZER SYSTEM)

d. BACK SUCTION ECONOMIZER SYSTEM:

The amount of fuel supplied to an engine is controlled by the size of the power jet, the position of the power adjusting needle, and the difference in air pressure between the fuel bowl chamber and the venturi. However, in many engines the mixture must be leaned out additionally during part throttle operation to obtain maximum economy. To provide this leaner mixture Marvel-Schebler Tractor and industrial Carburetors make use of the "Back Suction Economizer System". With this method of metering fuel, air pressure in the fuel bowl chamber is regulated and controlled according to load conditions by a combination of bowl vent and economizer passages communicating with throttle bore of the carburetor.

www.truck-freeworkshop.com/clark/

Through regulations of the air pressure in the fuel bowl chamber the fuel flow through carburetor can be controlled to provide proper mixture proportions for the engine.

All the air that enters the fuel bowl chamber (9) must first pass through the air cleaner and the bowl vent (22). The size of the bowl vent (22) controls or limits the amount of air that can enter the fuel bowl chamber (9). The amount of air that is drawn out of the fuel bowl chamber (9) is controlled by the size of the economizer jet (23), the economizer orifice (24) and the position of the throttle valve (6) as its position determines the manifold vacuum or suction on the economizer orifice (24). As the throttle valve (6) is opened from the fast idle position the economizer orifice (24) is gradually exposed to manifold suction, and air flows from the fuel bowl chamber (9), through economizer jet (23) and out the economizer orifice (24). This air must be replaced by air entering through the bowl vent (22) but as the size of the bowl vent (22) restricts the amount of air that can enter, the resultant pressure in the fuel bowl chamber (9) will be lowered, reducing the difference in air pressure between the nozzle (14) and the fuel bowl chamber (9). The flow of fuel will therefore be retarded so that the exact economy mixture ratio will be delivered to the engine at this particular throttle opening. Opening throttle valve (6) further exposes the entire economizer orifice (24) to manifold suction, which results in additional air being removed from the fuel bowl chamber (9), again leaning out the mixture ratio to the correct proportions for this new throttle position. After the economizer orifice (24) is fully exposed to manifold suction the amount of air that is drawn out of the fuel bowl chamber (9) is controlled by the manifold vacuum or suction at any given throttle valve (6) position and as this suction decreases as the throttle approaches wide open position, less air is drawn out of the fuel bowl chamber and additional fuel flows to engine to provide the extra richness required for operation at heavy loads where maximum horsepower is necessary.

The "Back Suction Economizer System" assures the proper metering of fuel to the engine throughout the service life of carburetor as there are no moving parts to wear out or adjustments to get out of order. It is essential, however, that the system remain free of dirt and foreign matter because any foreign substance in the system will restrict the flow of air thereby creating improper pressures in the fuel bowl chamber and resulting in improper fuel delivery to the engine.

www.truck-freeworkshop.com/clark/

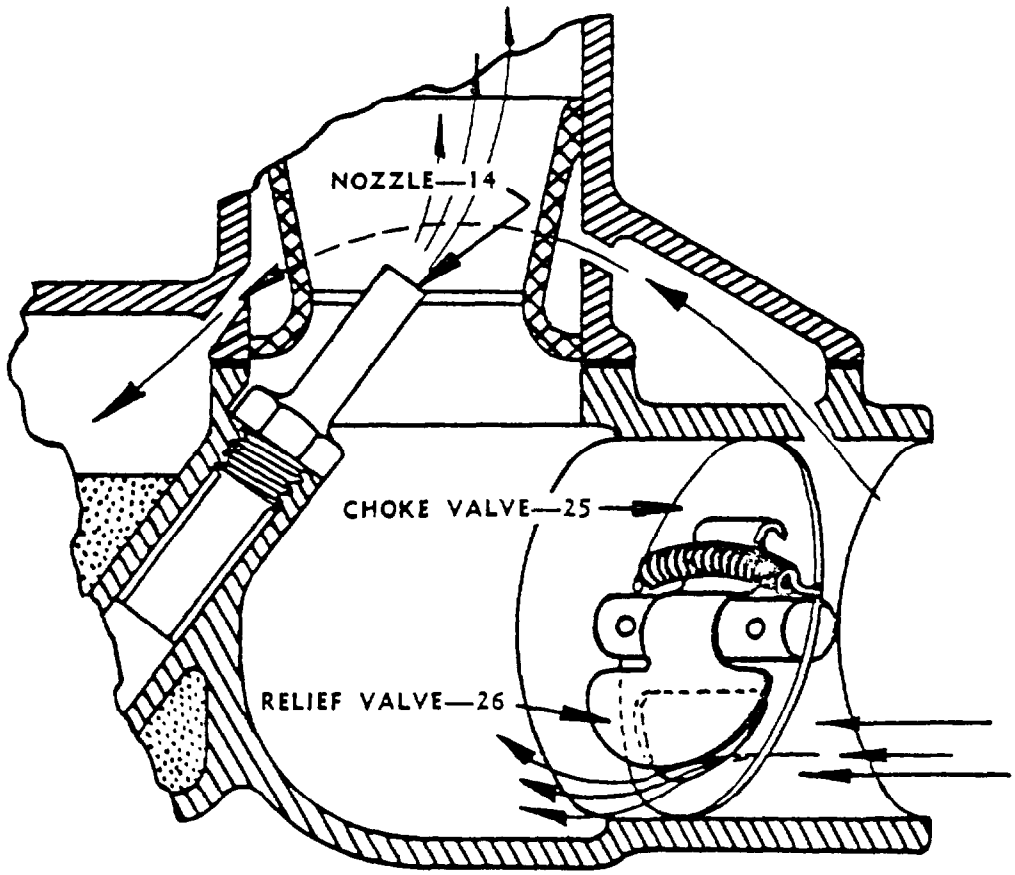

Fig. 16154 (CHOKE SYSTEM)

e. CHOKE SYSTEM:

The choke system is used during cold starting and the warm-up period. Under these cold conditions it is necessary to supply an additional rich mixture of fuel and air, as only the "light ends" or more volatile port ions of the fuel will vaporize with the manifold and air temperatures at these cold conditions. Consequently it is necessary that a large quantity of fuel be available so that there will be enough "light ends", to combine with the air to form a combustible mixture for starting the engine.

The function of the choke valve (25) is to restrict amount of air that can enter the carburetor and to increase the suction on the nozzle (14) so additional fuel will be drawn into the manifold. As soon as the engine fires and runs the rich mixture must be rap idly reduced to prevent stalling. This change in mixture is accomplished by the operator positioning choke valve to provide the proper mixture. However, a few degrees movement of choke valve (25) will make a big change in mixture strength and help reduce sensitivity of the choke valve (25) position. Use is made of a spring loaded relief valve (26) in many applications. This valve opens automatically with engine speed and load and eliminates a great deal of manipulation of the choke on the part of the operator.

www.truck-freeworkshop.com/clark/

When the engine has obtained normal operating temperature the choke valve (25) must be fully opened to assure maximum power and economy. In addition, extended use of the choke results in more gasoline being supplied to the engine than can be burned. A large percentage of the unburned gasoline is lost through the exhaust system. The remainder of the raw gasoline is forced between the pistons and cylinder walls, washing away the protective oil film and increasing engine wear, and enters the crankcase where it dilutes the engine oil.

Any adjustments that are necessary on the carburetor should never be attempted until the engine has obtained its normal operating temperature and the choke valve (25) has been placed in the wide open position.

1-36. STARTER MOTOR. The starting motor is bolted to the engine flywheel housing on the right underside of the vehicle. The motor is a two pole, four-field, 12 volt unit which cranks the engine when the pinion drive is engaged to the flywheel ring gear. An electrical interlock prevents starter engagement when the engine is running.

1-37. STARTER SOLENOID. The starter solenoid is bolted to the starter drive housing and serves two functions; that of engaging the starter pinion to the flywheel ring gear, and acts as a switch to close the circuit between the battery and starter motor. The solenoid becomes energized when the ignition switch mounted on the dash is held in the start position.

1-38. IGNITION DISTRIBUTOR AND COIL. The single point set 'distributor is located on the left side of the engine and is driven by the oil pump shaft. This location provides easy access for service. The distributor shaft features offset drive gear which makes improper assembly impossible. The distributor cap is molded of an alkyd material to reduce arcing and current leakage. The distributor features automatic spark advance through the action of centrifugal force on the advance weights. The 12 volt automative type coil is mounted just forward of the distributor in a bracket attached to the left side of the engine.

1-39. ALTERNATOR. The alternator is a 12 volt, 32 ampere unit mounted on an adjusting bracket to the side of the engine and driven by a V-belt.

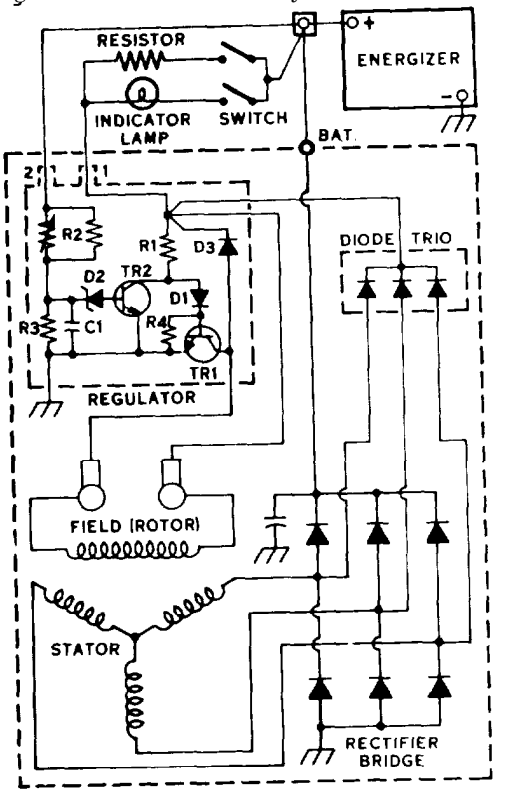

Typical 10-SI Wiring Diagram.

Basic principles of operation are as follows:

When the SWITCH is closed, current from the ENERGIZER follows through the AMMETER and the RESISTOR to the generator no. 1 terminal (at top of REGULATOR), through resistor R1, diode D1, and the base emitter of transistor TR1 to ground, and then back to the ENERGIZER. The ammeter is then energized. The resistor in parellel with the ammeter reduces total circuit resistance to provide higher field current for initial voltage buildup when the engine starts.

www.truck-freeworkshop.com/clark/

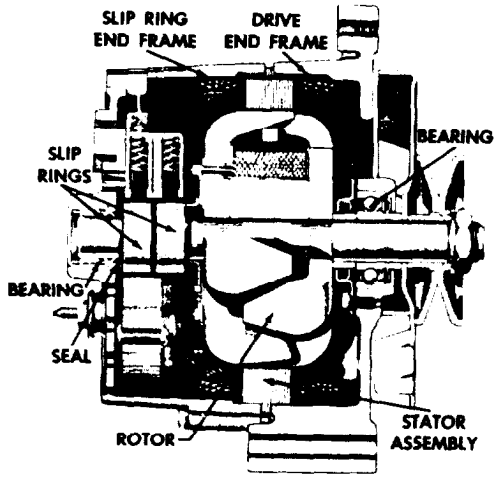

Plate 12346.

Cross-Section View of Typical Delcotron with Built-in Solid State Voltage Regulator in Frame.

With the alternatoroperating, a.c. voltages are generated in the stator windings, and the stator supplied d.c. field current through the diode trio, the field, TR1, and then through the grounded diodes in the rectifier bridge back to the stator. Also, the six diodes in the rectifier bridge change the stator a.c. voltage to a d.c. voltaqe which appears between ground and the alternatorBAT. terminal. As alternatorspeed increases current is provided for charging the energizer and operating electrical accessories. Also, with the alternatoroperating, the same voltage appears at the BAT. and No. 1 terminals, and the ammeter indicates the alternator is producing voltage.

The No. 2 terminal on the alternator is always connected to the energizer, but the discharge current is limited to a negligible value by the high resistances of R2 and R3. As thealternator speed and voltage increase, the voltage between R2 and R3 increases to the point where zener diode D2 conducts. Transistor TR2 then turns on and TR1 turns off. With TR1 off, the field current and system voltage decrease, and D2 then blocks current flow, causing TR1 to turn back on. The field current and system voltage increase, and this cycle then repeats many times per second to limit the alternator voltage to a preset value.

Capacitor C1 smooths out the voltage across R3, resistor R4 prevents excessive current through TR1 at high-induced-voltages in the field windings when TR1 turns off. Resistor R2 is a thermistor which causes the regulated voltage to vary with the temperature, thus providing the opimum voltage for charging the energizer.

1-40. OIL FILTERS. The engine oil filter and the transmission and power steering fluid filters are both spin-on throwaway cartridge type. The engine oil filter is mounted on a bracket to the right side of the frame, just inside the engine compartment. The filter uses a lo-micron element. The transmission filter is mounted to the left side of the engine and uses a 15-micron element.

1-41. MAIN HYDRAULIC PUMP. The hydraulic pump is a high pressure rotary-gear type pump that pumps oil from the oil reservoir for use in lifting and tilting operations of the mast assembly.

1-42. STEERING HYDRAULIC PUMP. The steering pump is a rotary gear-type pump, driven off the engine timing gears. The pump draws hydraulic fluid from the hydraulic sump and provides fluid under pressure to the power steering cylinder.

1-43. UPRIGHT AND LIFT CARRIAGE. The forks of the truck are mounted on a carriage which is raised and lowered on the upright rails. The lift assembly utilizes a multi-state system to raise the cargo loads.

www.truck-freeworkshop.com/clark/

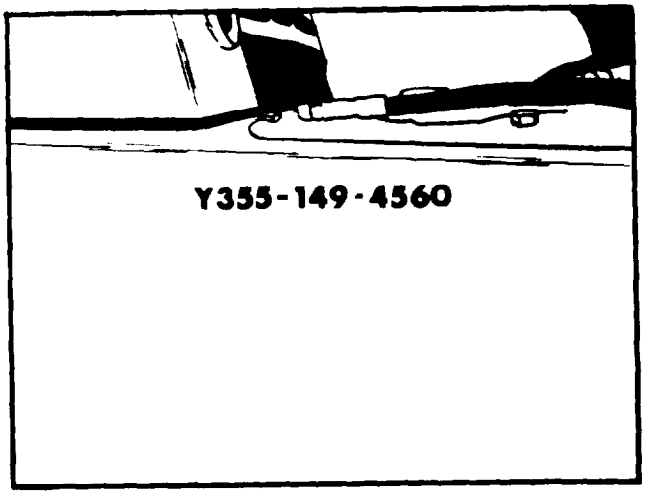

Figure 1-8. Serial Number Location

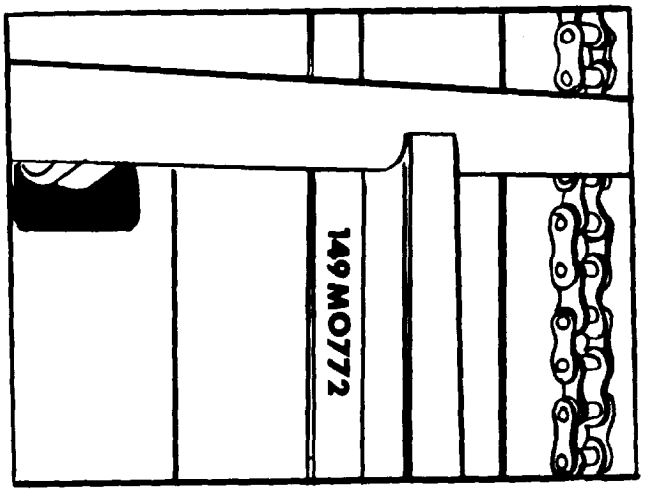

Figure 1-9. Upright Deck Number Location

The first stage uses chains which have one end attached to the lift cylinder chain anchor. The other end is attached to the lifting carriage. As the first stage piston extends. It pulls the carriage upward. At the upper extreme of the stroke, the piston bottoms against a spacer stopping the piston and diverting the oil to the inner piston rod. In the second stage of the lift, the outer barrel, intermediate rod, and stationary rod are forced upward on the inner rod, moving the inner rails and carriage upward. The carriage, inner and outer tracks of the upright assembly have rollers for ease of movement. The carriage upper fork bar is notched to permit forks to be moved horizontally on the upper bar to obtain varying distances between forks. To move fork horizontally, lift lever on top of fork and slide in direction desired.

1-44. LIFT CYLINDER. The telescopic lift cylinder is mounted in a vertical position between the masts on the front of the vehicle. The intermediate piston rod of the cylinder is bolted to the lifting chain sheave carriage at the top. The cylinder innner stationary tube is bolted to the lower mounting bracket of the mast assembly. The purpose of the lift cylinder is to supply the power to hoist and hold the cargo load. The control lever for operating the lift cylinder is on the cowl to the left of the tilt control lever. Lowering rate of the mast assembly is regulated by movement of the control valve lever and lift cylinder flow control valve and is in no way affected by the engine speed.

1-45. TILT CYLINDERS. The two tilt cylinders are located on each side of the vehicle below the operator's floor plates. The purpose of the tilt cylinders is to tilt the mast assembly forward or backward. The control lever for operating these cylinders is on the cowl to the right of the operator.

1-46. OVERHEAD GUARD. The overhead guard meets the ANS B56.1 Safety Standard for Powered Industrial Trucks and has been subjected to an impact test load of 16,000 foot pounds. The overhead guard should remain installed on the truck at all times during operation. With the upright completely collapsed the overall height of the truck with overhead guard will operate in a 84 inch door opening.

www.truck-freeworkshop.com/clark/

1-47. COUNTERWEIGHT. The counterweight at the rear of the truck counter balances the truck when capacity loads are handled or carried. The drive axle then becomes the pivotal point of the vehicle.

1-48. BODY AND SEAT. The truck has hinged panels on both sides of the engine and above the engine to provide easy access to the engine compartment. The floor plate may be removed to gain access to the the torque converter, transmission, tilt cylinders, brake master cylinder, hydraulic lines, etc. The adjustable operator's seat includes a back rest and seat cushion.

1-49. WHEELS AND TIRES. The truck is moved (powered) by the front vehicle wheels and steered by the rear wheels. The front (drive) wheels are driven by a ring gear mounted in the hub of the wheel. The rear (steering) wheels are connected by spindles to the axle. All the wheels are mounted on tapered roller bearing hubs.

1-50. PARKING BRAKE. The vehicle parking brake is operated by a brake lever that is mounted on the front hood support to the right of the operator. The brake consists of a rotating drum affixed to a shaft which is driven by the transmission gears. Two brake shoes and a cam are mounted inside the drum. The position of the cam is controlled by the parking brake lever and cable. Then the lever is pulled over-center, the cam forces the shoes against the drum and prevents moving the truck by locking the output shaft. Tension of the cable is adjusted through the knob on the end of the lever.

1-51. MACHINE SERIAL NUMBER AND UPRIGHT DECK NUMBER LOCATION. The machine serial number will be found stamped into the frame, along the right side, as shown in figure 1-8. The upright deck number (essentially a serial number for the upright and carraige) will be found stamped into the left or right side outer rail of the upright as shown in figure 1-9. These numbers should be shown on any machine records, correspondence regarding warranty claims, or parts orders.

www.truck-freeworkshop.com/clark/

SECTION II
PREPARATION FOR USE

2-1. GENERAL.

2-2. When a new or reconditioned truck is first received by the using organization, it is necessary to determine that the vehicle is in satisfactory condition and will operate properly when first placed into service. For this reason, follow closely the service procedures outlined in the following paragraphs.

2-3. PRELIMINARY INSPECTION.

2-4. Visually inspect the vehicle upon receipt for obvious damage, such as broken, cracked, dented or missing parts. Unpack any removable equipment and check against the packing list to determine that all items are furnished and in good condition. Report any damage, errors or discrepancies on the appropriate forms.

2-5. Check the following for proper quantity:

a. Engine Coolant Level — Remove radiator cap. Check to see that coolant level reaches the metal tab located 2-3/4 inches below the top of the filler neck. (See figure 2-1.)

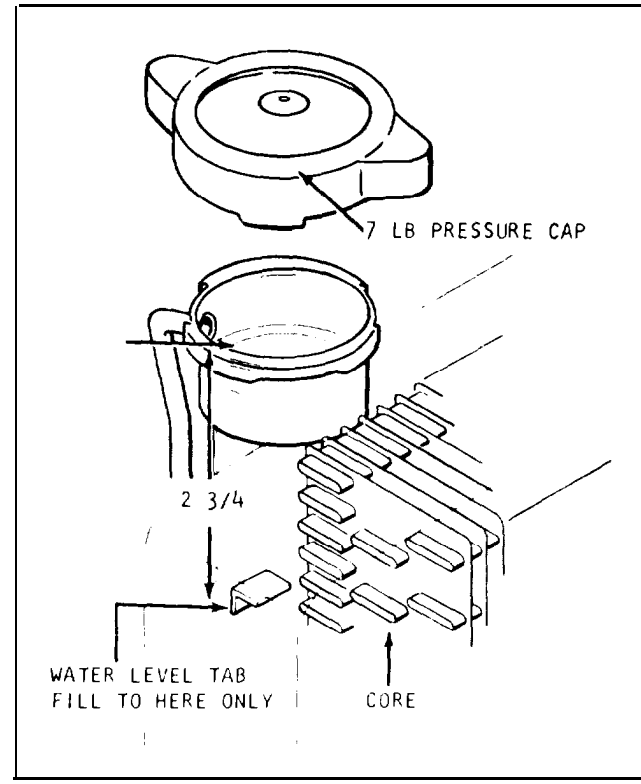

Figure 2-1. Checking Coolant Level

b. Fuel Level — Remove fuel filler cap and strainer, or check instrument panel gage reading with ignition switch "ON".

Note

If vehicle has been shipped with a preservative in the fuel tank, a prominent tag will be attached to the machine indicating this fact. Drain the fuel tank of preservative by removing drain plug directly underneath the tank.

C. Engine Oil Level — Open the engine compartment side panels and raise seat support for engine access. Remove dipstick on left side of engine and check oil level, shown on dipstick. See figure 2-2.

d. Transmission Fluid Level — The transmission dipstick is located in the differential housing between the drive wheels under the front dash support. Easier access may be gained for dipstick removal by tilting the upright forward. Check fluid level on dipstick with engine running and transmission in neutral, with parking brake set. See figure 2-3.

e. Inching and Brake Master Cylinder Fluid Level — Check fluid level in each master cylinder by removing filler cap. Fluid level should be 1/4 inch below top of filler neck.

f. Hydraulic Fluid Level — Remove hydraulic sump filler cap on top of right side frame. A dipstick is incorporated in the filler cap to indicate fluid level in the sump.

www.truck-freeworkshop.com/clark/

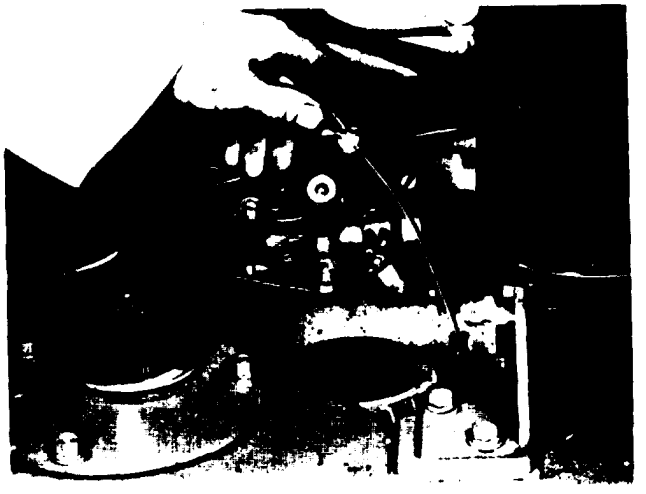

Figure 2-2. Checking Engine Oil Level

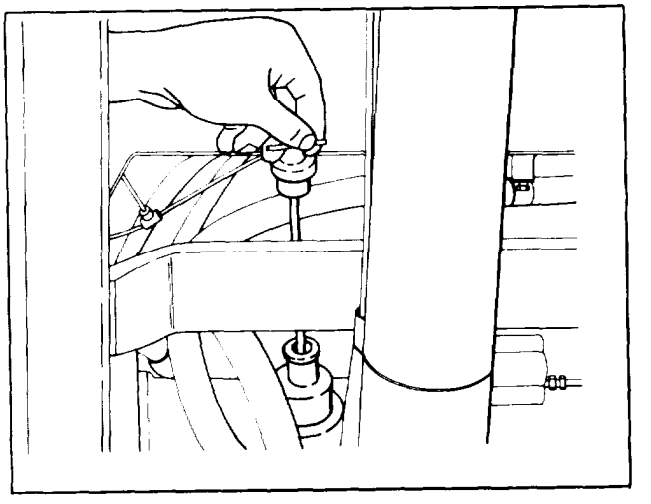

Figure 2-3. Transmission Fluid Level Check

g. Battery Water Level and State of Charge – Remove filler caps on the battery and check water level, which must cover plates at least 3/8 inch. Check state of charge with a hydrometer.

```
x x x x x x x x x x x x x x x x x x x x x x x x x x
X                                                   X
X                    W A R N I N G                  X
X                                                   X
X DO NOT SMOKE, WELD, OR EMPLOY ANY OPEN            X
X                                                   X
X FLAME NEAR THE BATTERY, AS AN EXPLOSIVE           X
X                                                   X
X GAS IS PRODUCED BY THE BATTERY DURING             X
X                                                   X
X ITS OPERATION.                                    X
X                                                   X
x x x x x x x x x x x x x x x x x x x x x x x x x x
```

2-6. SWITCHES, GAGES. AND LIGHTS. Set parking brake and apply service brakes. Check operation of neutral start switch by placing direction selector in forward or reverse position and turning ignition switch to "START". Starter must not engage until direction selector is returned to "NEUTRAL" position.

2-7. Start engine and check hour-meter, temperature gage, oil pressure gage, ammeter, and fuel level gage for proper operation.

2-8. Pull light switch and check to see that headlight and taillight are both operable. Check operation of horn by depressing center button in steering wheel.

2-9. OPERATIONAL CHECK. Refer to operating instructions in Section III and check operation of tilt and lift cylinders. Check inching and brake function. Check that parking brake will prevent truck motion with transmission in gear and engine at full stall speed.

2-10. LUBRICATION. Check machine record or service tags for indication of last periodic maintenance performance. If necessary, service the vehicle in accordance with the lubrication chart, Figure 4-1.

www.truck-freeworkshop.com/clark/

3-1. GENERAL

3-2. This section provides information and instructions concerning the theory of operation and proper use of the truck. Operating and maintenance personnel should become thoroughly familiar with the truck, and these instructions, before attempting to operate or service the truck.

3-3. PRINCIPLES OF OPERATION.

3-4. GENERAL. This truck provides a compact, mobile means of transporting and stacking or unstacking palletized or skid-mounted loads of up to 4000 lbs. The truck engine provides power for mobile operation and drives the pumps for hydraulic lift, tilt and steering.

3-5. Torque generated by the engine is multiplied by the torque converter as required in the lower speed ranges with the engine under load; under no-load conditions, the converter acts as an efficient fluid coupling between engine and transmission. The transmission is a heavy duty power-shift, constant mesh type. It provides forward, reverse and neutral gear ranges and accomplishes shifting by means of hydraulic clutch packs.

3-6. An "inching" circuit in the transmission provides for gradual disengaging of engine power from the drive wheels, even with engine running at top speed. This provides for fast hydraulic lift action while the truck itself is moving slowly. The circuit is controlled by the free-travel Portion of the left foot inching/brake master cylinder. This initial pedal travel controls hydraulic pressure on the direction selector clutch pack, allowing controlled slippage in the drive line. Excessive heat generated by clutch action is drawn off in the oil cooler, which is located in the left side tank of the radiator.

3-7. The transmission, which houses the torque converter, is mounted directly to the rear of the engine. The differential case and axle adapter bolts to the back of the transmission forming a rigid, unitized drive line.

3-8. Final drive is accomplished through a spiral bevel pinion and ring gear with differential gearing for the axle shafts. The axle shafts are full-floating; the axle housing carries the weight of the truck. Final gear reduction is made through a fully enclosed ring gear and pinior at the drive wheels. The axle shaft pinion gear engages the internal ring gear in the axle ends and provides a 4:1 torque multiplication at the wheel. In this design, the axle shaft carriers only one-fourth the torque which is delivered to each wheel.

3-9. ENGINE.

3-10. The engine is a four cylinder, in line, 4 cycle overhead valve type, which operates on regular grade gasoline. The basic design of the engine is derived from a diesel engine which is inherently rugged in construction. Fuel is atomized in the up-draft carburetor and ignited by a coil and distributor spark ignition system. The engine is cooled by water circulating in the engine which passes through the radiator, where excess heat is drawn off by the flow of air through the radiator.

3-11. Filters are provided in the fuel line, lubrication system, and intake air cleaner to protect the engine from damage by dust, dirt, sediment or other foreign materials.

3-12. A dynamic balancer is built into the engine crankcase which absorbs some of the reciprocal forces in the engine and provides smoother operation than is normally obtainable with the four-cylinder design.

3-13. TORQUE CONVERTER AND TRANSMISSION

3-14. The torque converter consists of three units: the impeller and its cover, which form the housing for the converter, driven by the engine; a stator which can rotate only in the

www.truck-freeworkshop.com/clark/

direction of impeller rotation because of a sprag clutch built into the stator; and a turbine which is driven by the fluid thrown from the impeller. Each of these units contain vanes or blades which act upon, or are acted upon, by fluid within the converter. This fluid is thrown from the impeller (acting as a pump), through the turbine blades, across the stator, and back to the impeller. When the engine is operating under load, turbine speed is slowed so that fluid passing through the turbine and stator adds its energy to that of the impeller, thus increasing torque at sacrifice of speed. Once turbine speed has built up to 9/10th of impeller speed, torque multiplication ceases, and the converter acts merely as a fluid coupling between engine and transmission. Through the action described above, the torque converter eliminates the needs for changing gears to accomodate heavier loads.

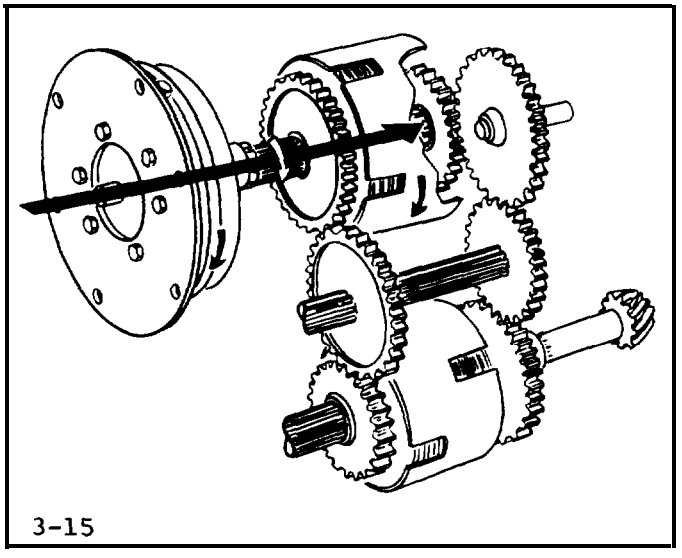

3-15. With the forward or reverse selector lever in neutral both forward and reverse packs are disengaged and no power can be transmitted through the intermediate gears and high-low drum to the pinion or output shaft.

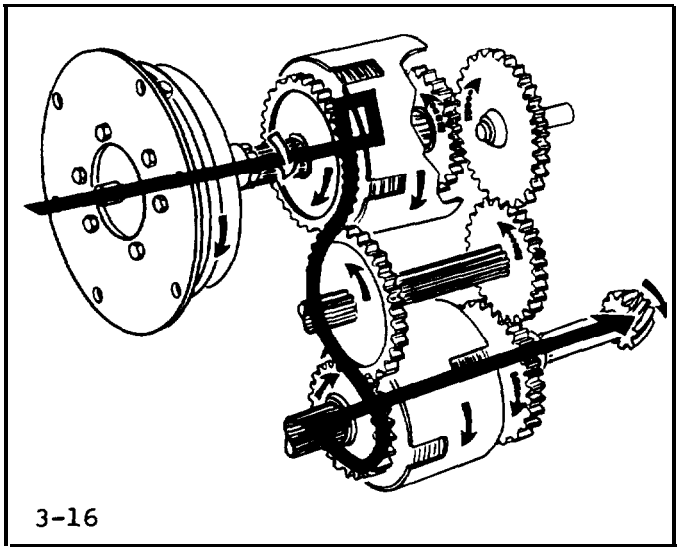

3-16. When the transmission is in forward and high speed, the forward and high packs are engaged. Under this condition, the forward gear drives the intermediate high gear, which drives the high gear. The high gear drives the high-low drum which drives the output shaft clockwise - thus driving the machine forward in high speed range. The gears with borken arrows are idling and transmit no power.

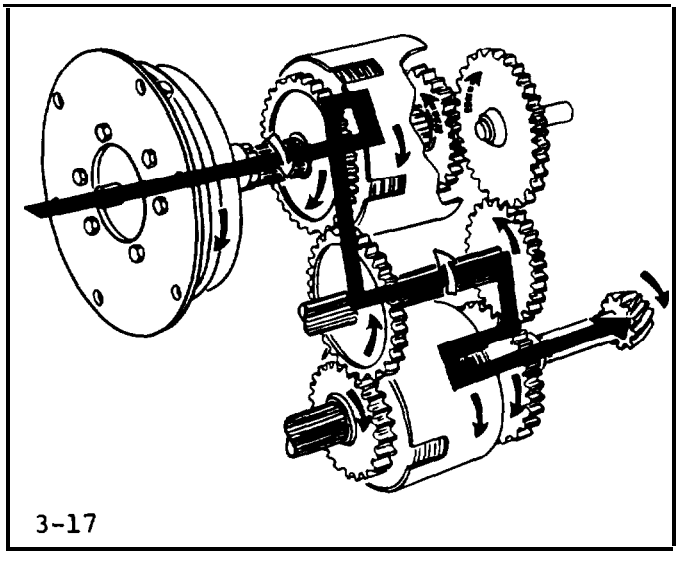

www.truck-freeworkshop.com/clark/

3-17. When low speed is selected, with the transmission in forward gear, the forward and low packs are engaged. Power flow goes from the forward gear, through the intermediate high gear, through the intermediate shaft, through the intermediate low qear and through the low gear. With the low pack locked up, the high-low drum drives the output shaft clockwise and the machine moves forward in low speed.

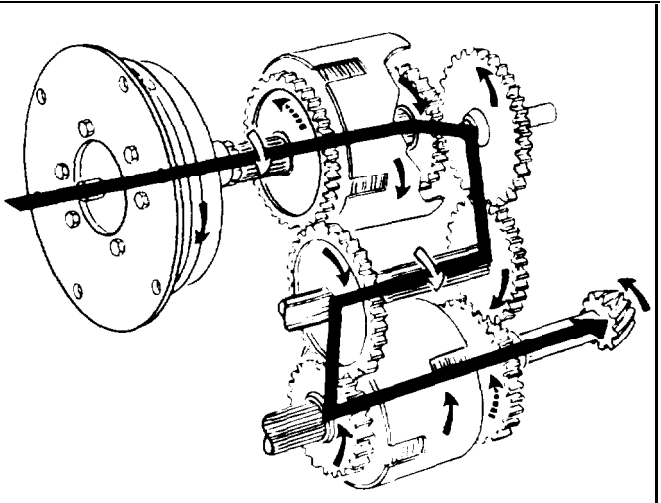

3-18

3-18. With the truck in reverse and in high range, the power flow is as follows. The reverse pack is locked up to drive the reverse gear. The reverse gear drives the idler gear which drives the intermediate low gear. Power is transmitted through the intermediate shaft, turning the intermediate high gear which turns the hiqh gear. With the high pack locked up, the high-low drum turns counterclockwise and drives the output shaft counterclockwise. The truck now moves in reverse and in high range.

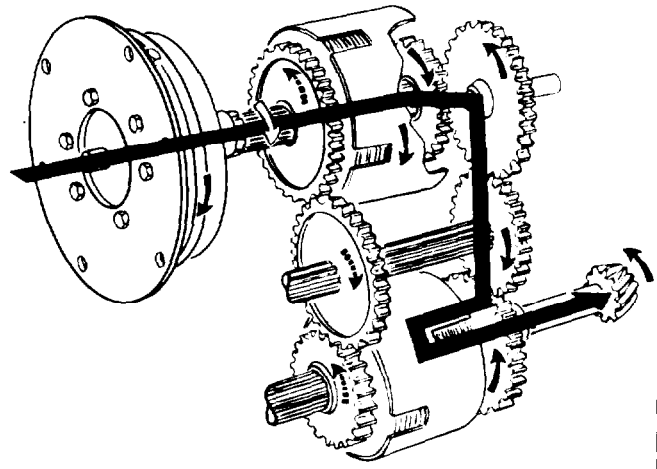

3-19

3-19. With the truck in reverse and low range, the flow is as follows. The reverse pack is locked up to drive the reverse gear. The reverse gear drives the idler gear which drives the imtermediate low gear. The intermediate low gear drives the low gear. With the low pack locked up, the high-low drum drives the output shaft counterclockwise, and the truck moves in reverse and in low range.

www.truck-freeworkshop.com/clark/

3-20. DRIVE AXLE. The drive axle is mounted directly to the transmission and is driven by the spiral bevel pinion on the 'transmission output shaft. The differential assembly is of the bevel gear, full floating type and is mounted in the carrier on tapered roller bearings. The differential case is secured to the ring gear which is in mesh with the drive pinion. The axle shafts are splined into the differential side gears. Final gear reduction in the axle is accomplished by a ring and pinion gear; the pinion gear being on the end of the axle shaft and the ring gear being a part of the wheel hub. The service brakes are mounted inside the wheel hubs; the backing plate mounted to the axle housing and the drums being turned by the wheel hubs.

3-21. CONTROLS AND INSTRUMENTS.

3-22. The following paragraphs explain the function and proper use of all controls and instruments furnished on the truck.

3-23. Refer to figure 3-2 for an illustration of all controls and instruments. The table accompanying the illustration explains the function of each control and gives the normal reading for each gage.

3-24. OPERATING INSTRUCTIONS.

3-25. Personnel required to operate this vehicle should become thoroughly familiar with all controls and instruments as described in preceding paragraphs and illustrations, and should also become acquainted with the specific handling and operating characteristics of this vehicle prior to actual performance of loading/unloading operations.

3-26. STARTING THE ENGINE.

a. Perform the daily preventive maintenance services, indicated in figure 4-1.

b. Pull back on parking brake lever to make certain truck will remain in a stationary position while it is being started.

c. Make certain the direction shift lever is in neutral (central) position.

d. At initial starting, or if engine is cold, pull choke control all the way out.

e. Press down on accelerator pedal approximately one-third the distance from its normal position.

CAUTION

Do not operate the starter motor continuously for more than 30 seconds. If the engine fails to start after 30 seconds, allow the starter motor to cool for at least two (2) minutes before attempting to start the engine again.

f. Turn the ignition switch to START position. The starter motor will crank the engine. When the engine starts, release switch and it will automatically return to ON position.

Note

If engine becomes over-choked or carburetor floods, push choke control in, depress accelerator pedal fully, and engage starter. If all equipment is in working order, the engine should start.

g. Hold accelerator pedal steady and allow engine to warm up at a fast idling speed. Immediately observe engine oil pressure gage and ammeter for normal readings. As engine begins to warm up, gradually push in on choke control; as soon as engine is warm, push choke control all the way in.

h. Warm engine until it will idle smoothly with the choke control pushed all the way in. Check for proper reading on ammeter, engine oil pressure gage, engine temperature indicator, and fuel indicator. Be sure hour meter is operating properly.

i. Remove foot pressure from accelerator pedal. Report any malfunctions to the proper authority.

www.truck-freeworkshop.com/clark/

LEGEND FOR FIGURE 3-2

INDEX NO.	NOMENCLATURE	NORMAL USE OR READ I NC
1.	Ignition Switch	When turned fully clockwise, actuates engine starter — when released, returns to "ON" position. Turned counterclockwise, shuts off engine
2.	Lift Lever	Pull back to raise carriage, forks and/or load — push forward to lower.
3.	Tilt Lever	Push forward to tilt upright and carriage forward — pull back to tilt upright and carriage to rear.
4.	Direction Selector Lever	Push forward for forward gear; pull back for reverse gear; center for neutral.
5.	Choke Control	Pull out to check engine for cold starting.
6.	Light Switch	Pull up to turn on headlights and taillight.
7.	Hourmeter	Indicates total engine operating time in' hours and tenths.
8.	Water Temperature Gauge	Indicates temperature of engine coolant water in degrees (°F). Normally 175° F - 220° F.
9.	Oil Pressure Gauge	Indicates engine lubricating oil pressure in PSI. Normally 15-32 PSI (5-15 PSI at idle).
10.	Fuel Level Gauge	Indicates quantity of fuel remaining in fuel tank E - empty, F - Full (Tank capacity is 6.8 gallons) .
11.	Ammeter	Indicates rate of battery charge or discharge With engine running, should read slightly to the + side of "0"
14.	inch ing/brake Pedal	Free travel (initial depression) actuates Inching valve, gradually disengaging power from drive wheels. Further depression will apply service brakes.
15.	Serv ice Brake Pedal	Depress to apply service brakes.
16.	Accelerator	Depress to Increase engine speed.
17.	Parking Brake Lever	Pull back to apply parking brake; pull forward to release parking brake.
18.	Brake Lever Knob	Turn Clockwise to tighten linkage and remove slack.
19.	Seat Adjuster	Push In to adjust seat position. Release to lock seat in place. 4 Inches maximum fore/aft seat adjustment.
20.	Hi & Lo Range Shift Lever	Push Forward for High Range. Pull back for low range up or down shift at about half throttle.
21.	Side Shift Lever	Push forward for left side shift Pull back for right side shift

www.truck-freeworkshop.com/clark/

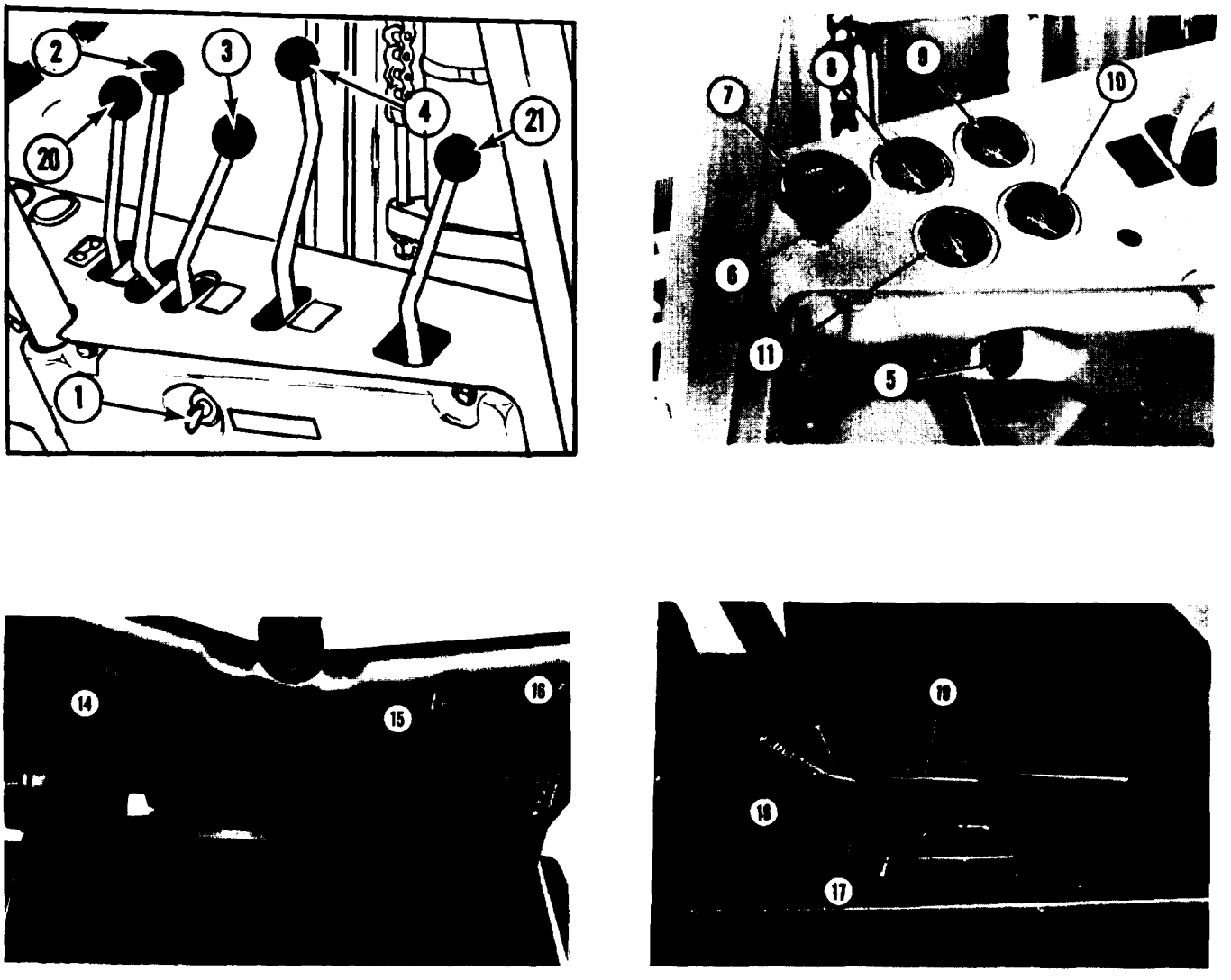

Figure 3-2. Operators Controls and Instruments

3-27. DRIVING THE TRUCK,

a. Accelerate the engine slightly and move the lift control lover gradually to the rear and raise the forks to normal traveling position (approxlmately 8 to 10 inches above the working surface).

b. Move the tilt control lever backward to tilt the forks backward,

c. Move the direction shift lever from neutral position to forward or reverse position depending upon the desired direction of travel.

d. Place foot on the accelerator pedal, and release the parking brake lever. Continue to depress the accelerator pedal until safe operating speed is attained. If the truck falls to move, shut off the engine immediately and report this to the proper authority.

www.truck-freeworkshop.com/clark/

CAUTION

When driving the truck, never "ride" the inching brake pedal as this will damage the transmission.

3-28. PICKING UP THE LOAD.

Note

At least once each shift, or every eight hours of operation, the upright should be elevated to its upper limit. This procedure insures adequate lubrication to the telescoping cylinder rods and seals.

a. Approach the load squarely and halt the truck. Move the tilt control lever forward and bring the mast assembly to the vertical position. Raise or lower the forks to the proper height to pick up the load, or side shift the forks to the proper position to pick up the load by using the side shifter.

b. The forks should be adjusted sideways from the fork bar to obtain maximum balance in proportion to the width of the load to be carried. To adjust fork position, lift the lever behind the top of the fork as shown in figure 3-4. Slide the fork sideways to a desired position, and return lever to latched position as shown in figure 3-5. Make certain that the latch pin engages one of the grooves in the fork bar.

c. Move the truck forward until the forks are positioned under the load. Make certain the forks are fully inserted in the pallet or under the load.

Note

'To inch the truck forks into a load, the inching/brake pedal should be depressed in the free-travel range, the parking brake released, and the directional shift lever placed in the forward position. Accelerate the engine as required, while releasing pressure on the pedal to regulate the inching control valve. This' permits controlled slippage of the transmission clutches, allowing the truck to inch, or creep, forward.

d. Apply the parking brake to prevent the truck from shifting position during the lifting operation.

e. Move the direction shift lever to neutral.

f. Move the lift control lever to the rear and accelerate the engine to raise the load approximately 12 inches above ground level. Release the control lever. Move the tilt control lever backward to tilt the forks backward. Release the lever and decelerate the engine.

g. Move the direction shift lever from neutral position to the proper position for the desired direction of travel.

h. Release the parking brake lever, depress the accelerator pedal, and move the load to the desired location.

3-29. DEPOSITING LOAD ON A TIERED STACK.

a. Enter the unload area squarely, especially when placing one load on top of another, in order that all stacks will be square and secure.

b. Move the lift control lever to the rear and accelerate the engine until the load reaches the desired height above the tier.

www.truck-freeworkshop.com/clark/

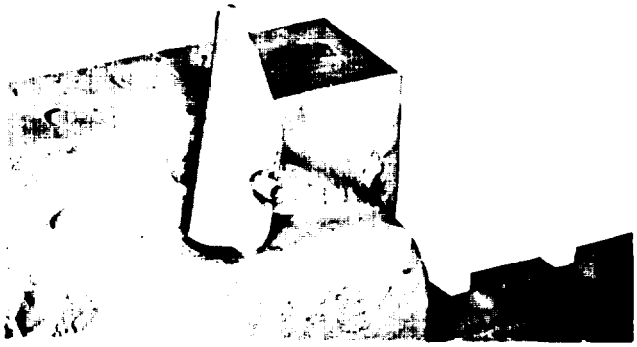

Figure 3-4. Fork Latch Disengaged

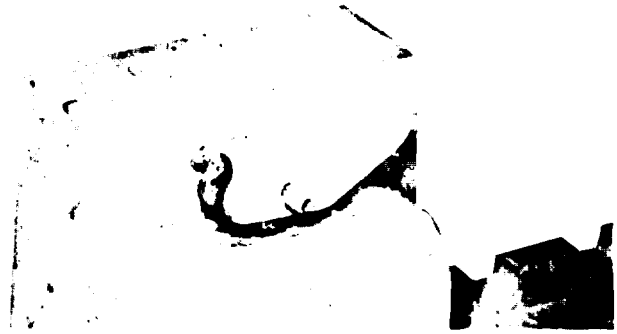

Figure 3-5. Fork Latch Engaged

c. Drive the truck forward until the load is above its resting place. To slowly maneuver the truck forward while high engine speed is needed, use the inching/brake pedal.

d. Pull back on the parking brake lever to apply the parking brake.

e. Move the direction shift lever to neutral position. Move the tilt control lever forward, tilting forks, until the load is aligned with the tier.

f. Move the lift control lever forward and carefully lower the load into position on the tier. Continue to lower the forks until they can be easily withdrawn from the pallet.

g. Move the direction shift lever to reverse position. Release the parking brake lever, and slowly back the truck away from the tiered stack until the forks are clear.

h. Move the lift control lever forward to lower the forks into normal traveling position (8 to 10 inches above surface).

3-30. DEPOSITING THE LOAD IN A STORAGE AREA.

a. Carefully drive up to the position at which the load is to be deposited. Depress the brake to halt the truck.

b. Apply the parking brake and move the direction shift lever to neutral position.

c. Move the tilt control forward to bring the upright to the vertical position.

d. Move the lift control lever forward and carefully lower the load to the ground. Continue to lower the forks until they can be easily withdrawn from under the load.

e. Place the direction shift lever in reverse position. Release the parking brake lever, and slowly back the truck away from the deposited load.

3-31. STOPPING THE TRUCK.

a. Remove foot from the accelerator pedal.

b. Apply gradual pressure on the brake pedal to bring the truck to a safe smooth stop. Avoid sudden stops.

c. Apply the parking brake. Move the direction shift lever to neutral position.

d. Move the tilt control lever forward to bring the upright to the vertical position.

e. Move the lift control lever forward and lower the forks to the ground.

www.truck-freeworkshop.com/clark/

f. Turn the starter and ignition switch to OFF position to stop the engine.

CAUTION

If the engine has been operating at, or near, full load, it should be allowed to run at fast idle (600 to 800 RPM) for several minutes after the load is removed before being stopped. This allows internal engine temperatures to equalize.

3-32. OVERHEAD GUARD OPERATION.

The overhead guard meets the ANS B56.1 Safety Standard for powered industrial trucks and subjected to an impact test load of 16,000 foot pounds. The overhead guard should remain installed on the truck at all times during operation. With the upright completely collapsed the overall height of the truck with overhead guard will operate in a 84 inch door opening.

WARNING

Never drive the truck in open area of the warehouse or storage yard without the guard in place over the operator's comportment. There is no periodic maintenance other than checking for security of mounting.

3-33. SAFETY PRECAUTIONS. The use of powered equipment is subject to certain hazards that cannot be overcome by purely mechanical means. The exercise of intelligence, care and common sense by the truck operator is essential to minimize the hazards of overloading, slipping, and unbalanced loads; obstructions in the path of travel, or the use of equipment in operations for which it is not intended or designed. Following are a few suggestions that should be followed in the operation of this vehicle:

a. Operate vehicle with forks close to floor, loaded or empty, but high enough to avoid hitting obstructions.

b. If vision is obstructed by the load, operate vehicle in reverse, at low speed, turning in the seat to maintain clear vision.

c. Avoid sudden stops or starts. When backing up, check for obstructions or personnel in the path of the truck before moving the truck.

d. Drive carefully at all times. Exercise caution at cross aisles, sounding horn for safety.

e. Be sure loads are safe to move. Have loads properly centered on forks. Refer to the capacity data in Section I for various load centering ratings.

f. The operator should be qualified and drive in accordance with safety rules.

g. If the truck does not operate properly, report to proper authority. A minor adjustment now may save a major repair later.

h. Do not allow riders.

i. Operate the truck at a safe distance behind other vehicles.

j. Do not operate truck with wet or greasy hands.

k. Observe highway traffic laws in the operation of the truck.

l. Drive carefully on wet or slippery floors.

m. Keep feet within perimeter of floor board.

n. Observe the Operating Instructions and

www.truck-freeworkshop.com/clark/

Preventive Maintenance Instructions given in this manual.

o. Avoid overloading the truck - this is a hazardous practice, for the operator as well as the equipment. Overloading shortens the life of the truck and increases maintenance.

WARNING

Do not operate machine for prolonged periods in an unventilated area. All gasoline engines produce poisonous carbon monoxide gas which is extremely toxic if allowed to accumulate in a closed area.

p. Be sure the brakes are in proper working condition. Be sure all mechanical and electrical components are in good working order prior to each shift of operation.

3-34. OPERATION UNDER UNUSUAL CONDITIONS.

3-35. EXTREME HEAT.

3-36. COOLING SYSTEM.

a. Make sure fan belts are properly adjusted.

b. Check coolant level frequently, and be sure radiator cap is secure.

c. Keep exterior of radiator clean and free of foreign matter which might affect circulation of air.

d. Flush and clean cooling system frequently.

3-37. BATTERY. Check electrolyte level frequently and maintain at proper levels.

3-38. LUBRICATION. Observe instructions on Lubrication Chart, figure 41.

3-39. FUEL SYSTEM. Fill fuel tank at end of day to expel moisture which may collect in vapor form inside the tank.

3-40. EXTREME COLD.

3-41. SHELTER. The truck should be sheltered in a closed building with some heat, if possible. If this is not possible, cover with a tarpaulin or similar kind of material.

3-42. COOLING SYSTEM. Add proper amount of ethylene glycol anti-freeze to cooling system. A solution of 6 quarts ethylene glycol and 5-1/2 quarts of water will afford protection to -35°F. If anti-freeze is not available, drain radiator and cylinder block when ambient temperature is expected to drop below 32°F. Never add water to the cooling system without subsequently checking the anti-freeze solution for adequate strength and adding anti-freeze if necessary.

3-43. ELECTRICAL SYSTEM.

a. Test the specific gravity of the electrolyte in the battery, using a hydrometer. Specific gravity reading should be between 1.286 and 1.375 at 80°F.

b. Electrolyte level of battery must be maintained at 1/2 inch above plates. Do not add water to a battery which has been exposed to cold temperature except when engine is to be operated immediately.

c. Remove battery and store it in a warm place when shelter for truck is not available. The efficiency of the battery decreases at lower temperatures, and a completely discharged battery will freeze at 20°F.

d. Be sure that wires and cables are in good condition and that all connections are clean, dry and secure.

e. Clean spark plugs and check gaps.

f. Be sure terminal sockets and spark plug terminals are clean.

3-44. LUBRICATION. Follow lubrication instructions contained in Lubrication chart, figure 5-1.

3-46. FUEL SYSTEM.

a. Use prescribed winter grade of fuel.

www.truck-freeworkshop.com/clark/

b. Fill fuel tank at the end of the day to expel moisture.

3-46. HUMID CLIMATES.

3-47. In tropical areas, if paint is chipped, or scratched, the affected area should be refinished immediately to prevent rapid formation of rust. Remove all loose paint with paint remover, sandpaper, or sandblasting equipment. Apply two coats of red lead primer and, when dry, apply finishing coat of paint.

3-48. DUSTY CONDITIONS.

3-49. Operators of trucks used in extremely dusty conditions should check the air cleaner and hydraulic sump breather daily to insure that excessive build-up of dust or dirt, which would restrict air flow, is not permitted. Lubrication service intervals for all items should be reduced to one-half the normal period, or as short as 50 hours, depending upon the severity of the service.

www.truck-freeworkshop.com/clark/

SECTION IV
PERIODIC INSPECTION, MAINTENANCE AND LUBRICATION

4-1. SPECIAL TOOLS.

4-2. Special tools required for the performance of inspection, maintenance and testing of the truck and its components are listed in Table 2.

4-3. PERIODIC INSPECTION.

4-4. A periodic inspection schedule must be established and maintained in accordance with the information given in Table 3. Intervals specified are maximum periods permissible and are based on optimum service conditions. Adjust inspection intervals accordingly if extreme climatic or operating conditions exist for any extended period of truck operation.

4-5. PERIODIC SERVICE AND LUBRICATION. Refer to figure 4-1 for the lubrication chart, which indicates proper lubricants to be used in servicing the truck, the points of application, and the maximum intervals for performance of lubrication services. Adjust lubrication intervals to some shorter periods if extreme climatic conditions or severity of service require more frequent attention to lubrication.

4-6. Access to the engine compartment is gained by depressing spring latch in the side panel, opening side panels on each side of the truck, and raising seat support as shown in figure 4-2.

4-7. AIR CLEANER. Air cleaner service intervals are determined primarily by the service conditions under which the vehicle operates. The condition of the filter element should be checked every 8 hours and cleaned every 50 hours as a minimum.

TABLE 2. SPECIAL TOOLS FOR INSPECTION AND MAINTENANCE

Nomenclature	Part/Model No.	Manufacturer	Range	Application
Cooling System Tester		Stant Manufacturing	4-17 psi	See para. 4-13
Expanded Scale Voltmeter	260	Simpson	0-50 volts	See paras. 4-34 & 4-35
Pressure Bleeder	Fluid-Bal	Wagner-Electric	0-30 psi	See para. 4-20
Compression Gage			0-300 psi	See para. 4-40
Distributor Tester		Sun		See para. 4-45
Vacuum Gage			0-30 in. hg.	See para. 4-51
Hydraulic Pressure	Quadrigage	Mico Manufacturing	0-3000 psi	See para. 4-65
Hydraulic Circuit Tester	H S D	Schroeder Brothers	0-3000 psi 0-30 GPM 0-240°F.	See para. 4-66

www.truck-freeworkshop.com/clark/

TABLE 3. PREVENTIVE MAINTENANCE INSPECTION

	INSPECTION INTERVAL		
	DRY, When used	3 months or 300 operating hours, whichever comes first	Annual, or 1200 operating hours, whichever comes first
AXLES			
Check and tighten wheel driving flange bolts.		X	
Check security of axle mounting to frame.			X
Check differentials for oil leaks.		X	
Check differential and drive axle planetaries oil level.		X	
BATTERY			
Check specific gravity.		X	
Check electrolyte level.	X		
Check terminals and cables for corrosion and tightness.		X	
BRAKES - SERVICE			
Check brake lines for leaks.	X		
Check brakes for proper operation.	X		
Inspect linings for wear.			X
Check brake pedal for excessive travel.	X		
BRAKES - PARKING			
Check linkage for wear.		X	
Check linings for wear.			X
Check for proper operation.	X		
COOLING SYSTEM			
Check coolant level in radiator	X		
Check anti-freeze protection.		X	
Check coolant color and cleanliness.		X	
Check all hoses and connections for leaks.	X		
Check water pump inlet and outlet connection for leaks.		X	
Flush coolant system.		X	
Check radiator for leaks, and mounting for security.		X	
Check thermostat operation, and housing for tightness.		X	

www.truck-freeworkshop.com/clark/

TABLE 3. PREVENTIVE MAINTENANCE INSPECTION (Continued)

	INSPECTION INTERVAL		
	Daily, When used	3 months or 300 operating hours, whichever comes first	Annual, or 1200 operating hours, whichever comes first
ENGINE			
Check cylinder head nuts.			X
Check manifold nuts and gasket.			X
Check tappet clearance and oil supply to valve springs and seats.			X
Check air cleaner for condition of the element.	X		
Check and adjust water pump and alternator belt tension.		X	
ENGINE FUEL SYSTEM			
Drain fuel filter.	X		
Clean fuel filter element.		X	
Drain fuel tank.		X	
Check all fuel lines for leaks.		X	
Check fuel supply gage, for accuracy.		X	
Check fuel pump gaskets for leaks.		X	
Visually check fuel tank for leaks.		X	
Check accelerator linkage clevis pins and cotter pins for wear or damage.		X	
ENGINE ALTERNATOR			
Check ammeter to ensure that the alternator is functioning correctly.	X		
Check for worn brushes.			X
Check voltage regulator output.		X	
ELECTRICAL			
Check all connections.			X
Check for chafed or broken wires.			X
Check retaining clips and grommets.			X
Check operation of lights.	X		
Clean exterior of lamps.	X		
With engine running, check for normal operation and indications of instruments.	X		

www.truck-freeworkshop.com/clark/

TABLE 3. PREVENTIVE MAINTENANCE INSPECTION (Continued)

	INSPECTION INVERVAL		
	Daily, When used	3 months or 300 operating hours, whichever comes first	Annual, or 1200 operating hours, whichever comes first
HYDRAULIC SYSTEM			
Replace filter, inspect for proper operation and leaks.		X	
Check pump attaching bolts.		X	
Check lines for damage and leaks.		X	
Check oil level. Add oil if necessary.	X		
Drain and refill.			X
Check all fittings and connections. Tighten if necessary.		X	
Check operation of hydraulic valves and cylinders. Check for leakage.	X		
TRANSMISSION/CONVERTER			
Check oil level. (Must be done with engine running or immediately after)	X		
Check for oil leaks at lines, fittings, and gaskets.		X	
Check converter pump pressures (both converter charging and transmission clutch pressure).		X	
Drain oil and refill.			X
Remove and clean sump screen.			X
WHEELS AND TIRES			
Check tires for cuts or foreign objects.	X		
Check hub bolt nuts.		X	
Check bearings for looseness.			X
Check oil seals.		X	
Cross-switch tires, if uneven tread is noted.		X	
Remove wheel bearings and check bearings and race for defects.			X
UPRIGHT AND CARRIAGE			
Bleed lift cylinder.			X
Check lift chain adjustment.			X
Adjust roller clearances.			X
Check for damage or warped upright rails on carriage.		X	
Check forks for damage.		X	
Check cylinders for leakage.		X	

www.truck-freeworkshop.com/clark/

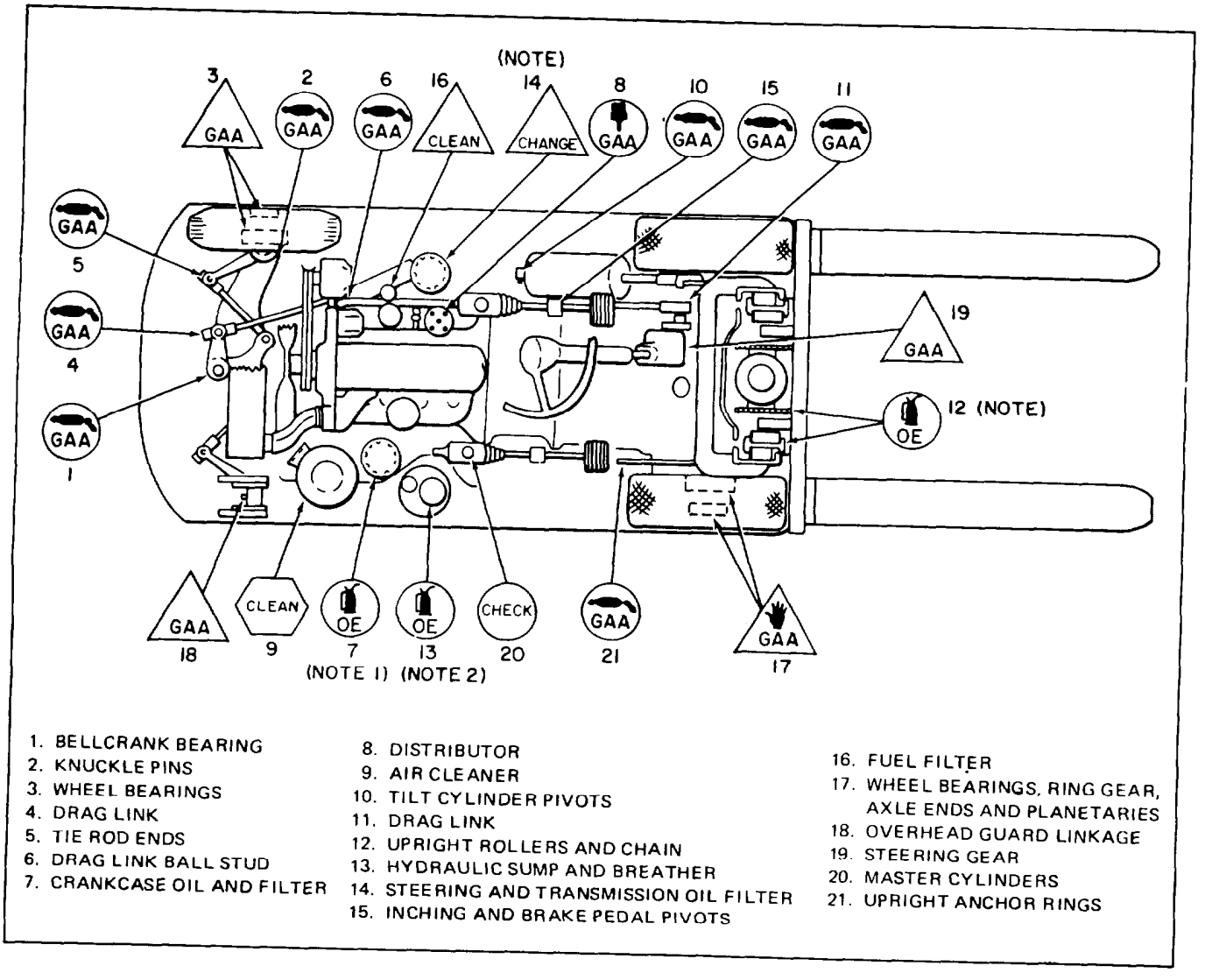

1. BELLCRANK BEARING
2. KNUCKLE PINS
3. WHEEL BEARINGS
4. DRAG LINK
5. TIE ROD ENDS
6. DRAG LINK BALL STUD
7. CRANKCASE OIL AND FILTER
8. DISTRIBUTOR
9. AIR CLEANER
10. TILT CYLINDER PIVOTS
11. DRAG LINK
12. UPRIGHT ROLLERS AND CHAIN
13. HYDRAULIC SUMP AND BREATHER
14. STEERING AND TRANSMISSION OIL FILTER
15. INCHING AND BRAKE PEDAL PIVOTS
16. FUEL FILTER
17. WHEEL BEARINGS, RING GEAR, AXLE ENDS AND PLANETARIES
18. OVERHEAD GUARD LINKAGE
19. STEERING GEAR
20. MASTER CYLINDERS
21. UPRIGHT ANCHOR RINGS

Figure 4-1. Lubrication Chart (Sheet 1 of 2)

www.truck-freeworkshop.com/clark/

INTERVAL	LUBRICANT KEY			
	SYMBOLS AND TYPES OF LUBRICANTS	TEMPERATURE RANGES AND LUBRICANT SPECIFICATIONS		
		32°F (0°C) AND ABOVE	0°F (-18°C) TO 32°F (0°C)	0°F (-18°C) TO -65°F (-54°C)
WEEKLY 50 HOURS ⬡ MONTHLY 100 HOURS ○ QUARTERLY 300 HOURS □ SEMIANNUALLY 600 HOURS △	OE LUBRICATING OIL, ENGINE	OE-30 MIL SPEC MIL-L-2104B	OE-10 MIL SPEC MIL-L-2104B	OES MIL SPEC MIL-L-10295
	OE OIL, HYDRAULIC	OE-10 MIL SPEC MIL-H-2104	OE-10 MIL SPEC MIL-H-2104	OE-10 MIL SPEC MIL-H-2104
	TF AUTOMATIC TRANSMISSION FLUID-TYPE "A" SUFFIX "A"	ALL TEMPERATURE RANGES		
	GP GREASE, AUTOMOTIVE AND ARTILLERY	MIL SPEC MIL-L-10924B	MIL SPEC MIL-L-10924B	MIL SPEC MIL-L-10924B

APPLICATION SYMBOLS	
	OIL CAN
	GREASE GUN
	HAND
	BRUSH

LUBRICATION NOTES

1. DRAIN CRANKCASE WHILE ENGINE IS HOT. CHANGE ENGINE OIL FILTER AT LEAST EVERY SECOND OIL CHANGE. CLEAN CRANKCASE BREATHER AT LEAST EVERY 100 HOURS; MORE OFTEN UNDER DUSTY CONDITIONS.
2. CHANGE HYDRAULIC SYSTEM FILTER EVERY 600 HOURS. FLUSH RESERVOIR THOROUGHLY AFTER DRAINING.
3. WHEN OPERATING IN ABRASIVE ATMOSPHERES (DUST, ETC.), KEEP LIFT CHAINS FREE OF OIL.
4. CLEAN THE LUBRICATION FITTINGS WITH DRY CLEANING SOLVENT, FEDERAL SPECIFICATION P-D-680. DRY BEFORE APPLYING LUBRICANT.
5. INTERVALS SPECIFIED ARE FOR NORMAL OPERATION. THE MAINTENANCE OFFICER MAY ADJUST THE INTERVALS TO COMPENSATE FOR UNUSUAL CLIMATIC OR OPERATIONAL CONDITIONS.
6. EVERY 100 HOURS LUBRICATE THROTTLE, SHIFT, CONTROL LEVERS AND LINKAGE, PARKING BRAKE LINKAGE, HOOD LATCHES AND HINGES, AND SEAT ADJUSTER WITH OE.
7. REFILL MASTER CYLINDERS WITH FLUID, HYDRAULIC BRAKE (VV-B-680).
8. CHANGE POWER STEERING IN-LINE FILTER EVERY 1000 HOURS OF OPERATION.

TA502238

Figure 4-1. Lubrication Chart (Sheet 2 of 2)

www.truck-freeworkshop.com/clark/

Figure 4-2. Opening Side Panel

4-7. AIR CLEANER (cont.)

a. Refer to figure 4-3 and remove wing nut (1) from center stud (2) and remove element case (3). Wipe the inside of case clean.

b. Remove element from air cleaner base (see figure 4-4).

c. Tap the element on a hard, flat surface to shake loose dirt and dust accumulations. Use compressed air (100 psi max.) to blow away dust loosened by tapping the element. Blow out inside of element first.

CAUTION

When using compressed air to clean element, do not place air nozzle too close to the element, as the air blast could rupture the element. If the element cannot be cleaned sufficiently to remove all dust deposits, replacement of the element will be required.

d. Check the element gasket for damage or deterioration, and replace as required.

www.truck-freeworkshop.com/clark/

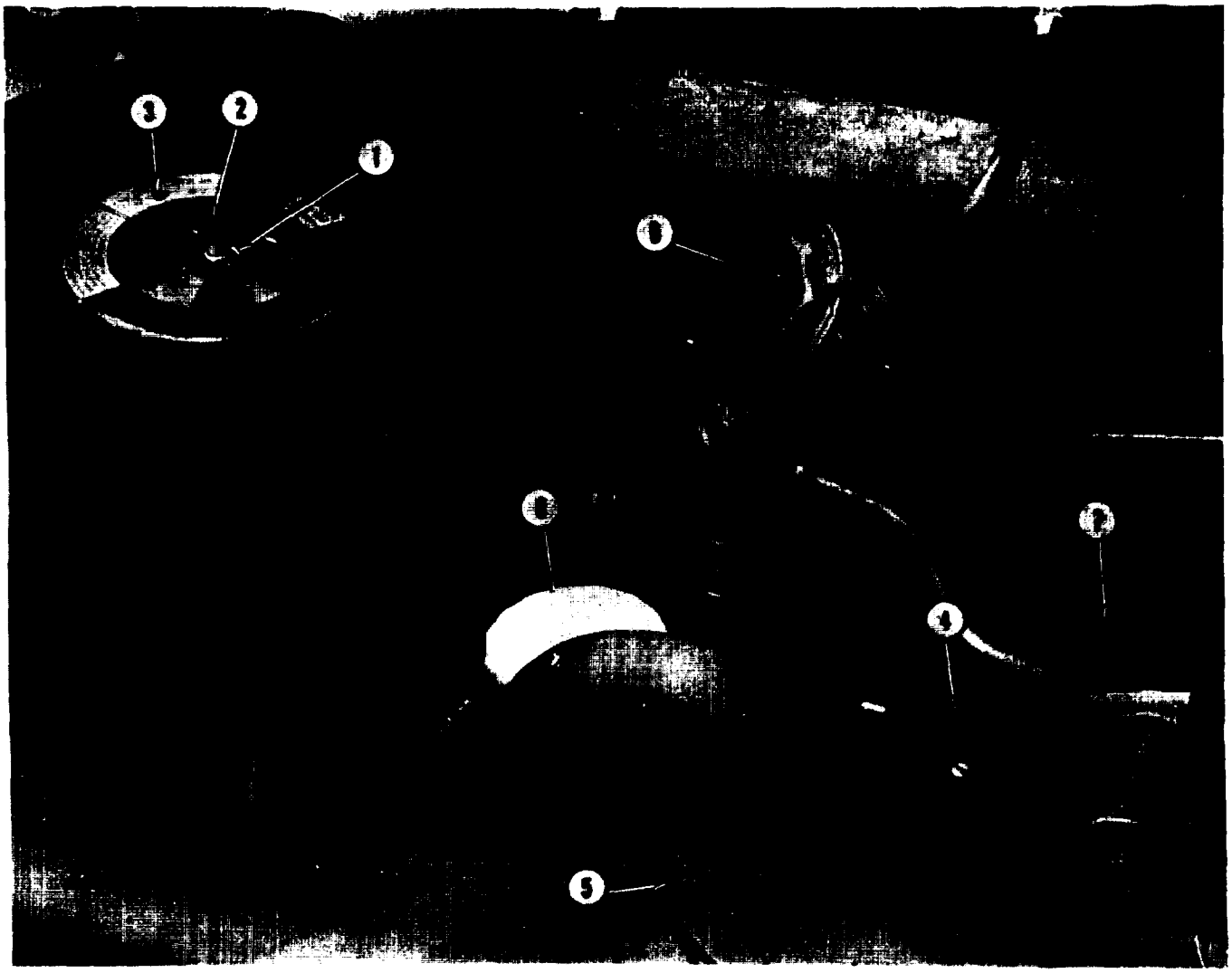

1. Wingnut
2. Center stud
3. Element case
4. Hydraulic sump breather
5. Sump filter cover plate
6. PCV valve
7. Master cylinder filler cap
8. Filter cartridge

Figure 4-3. Engine Compartment, Right Side

e. Install new or cleaned element, replace case, and tighten wingnut securely.

f. Check hose connections between the air cleaner and carburetor to make certain all clamps are tight and secure. Replace hose or clamps as required to restore air-tight connections between air cleaner and carburetor. See figure 4-5.

4-8. ENGINE LUBRICATING OIL CHANGE. Proper oil change and filter replacement intervals are best determined according to the severity of service and climatic conditions in which the truck operates. In moderate service, the filter need only be changed every second oil change. In severe service, oil change periods should be shortened and the filter replaced at each change.

a. The engine should be run up to operating temperature before oil is drained, so that the sediment in the crankcase will be drained off with the oil.

b. Remove the magnetic drain plug, and allow the crankcase to drain thoroughly.

c. Clean the magnetic drain plug thoroughly and reinstall.

www.truck-freeworkshop.com/clark/

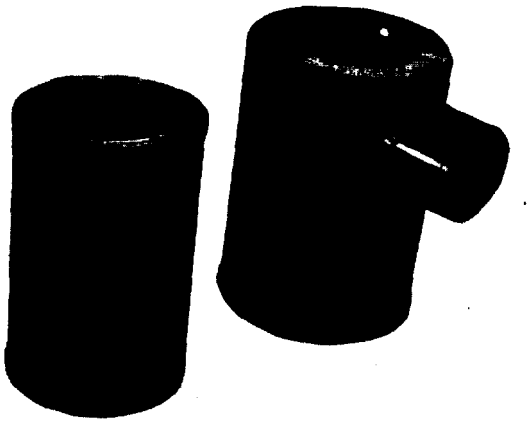

Figure 4-4. Element and Case

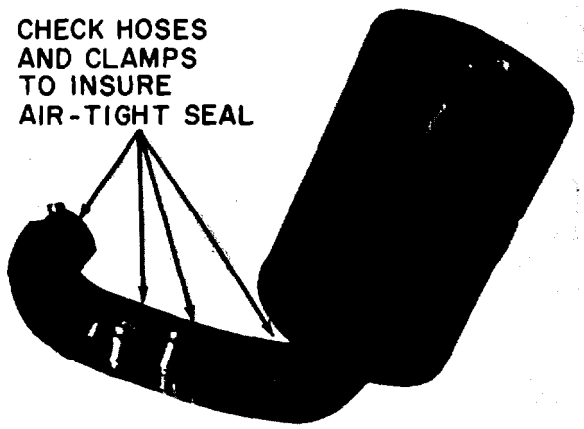

Figure 4-5. Air Cleaner Hose Connections

d. Refer to figure 4-2 and remove filter cartridge (8) by unscrewing from base. If cartridge gasket sticks to filter base, peel off and discard gasket.

e. Install new filter cartridge and gasket. Coat gasket with a thin film of clean engine oil before installing cartridge. Screw cartridge down over base until cartridge contacts gasket, then tighten 1/2 turn farther.

f. Refill crankcase as shown in figure 4-6. Use 4-1/2 quarts of oil of the proper grade and weight.

Note

Do not use multi-viscosity oils unless the proper weight of oil for temperature conditions to be encountered is unavailable.

g. Start engine and check oil filter for leaks. Run engine at idle for five minutes, then shut off and allow time for oil to drain back to crankcase.

h. Check oil level on dipstick (see figure 4-1) and add oil as required to bring level to full mark on dipstick.

4-9. TRANSMISSION/POWER STEERING HYDRAULIC SYSTEM. The transmission sump provides oil for operation of the torque converter, transmission clutches, and power steering. A filter of the spin-on throwaway type is provided to prevent dirt or foreign material from circulating through the system. Transmission fluid and filter should be changed at each 500 hours of service, or at time of any transmission repair.

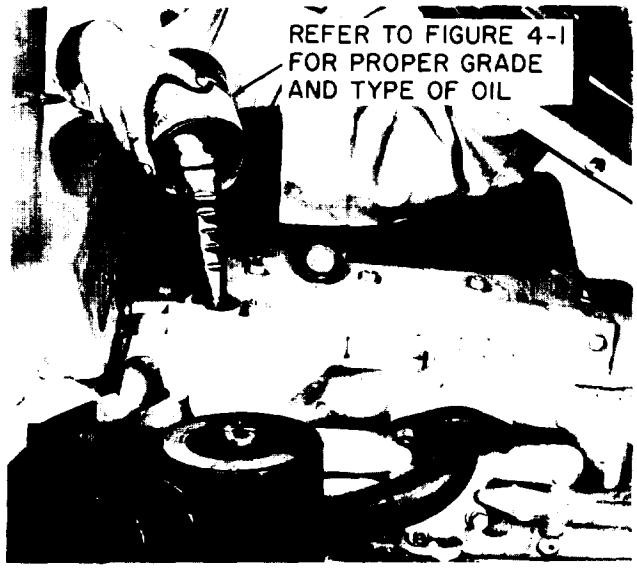

Figure 4-6. Crankcase Fill Procedure

a. Operate the vehicle until normal operating temperature is reached, then remove both transmission drain plugs, shown in figures 4-8 and 4-9.

www.truck-freeworkshop.com/clark/

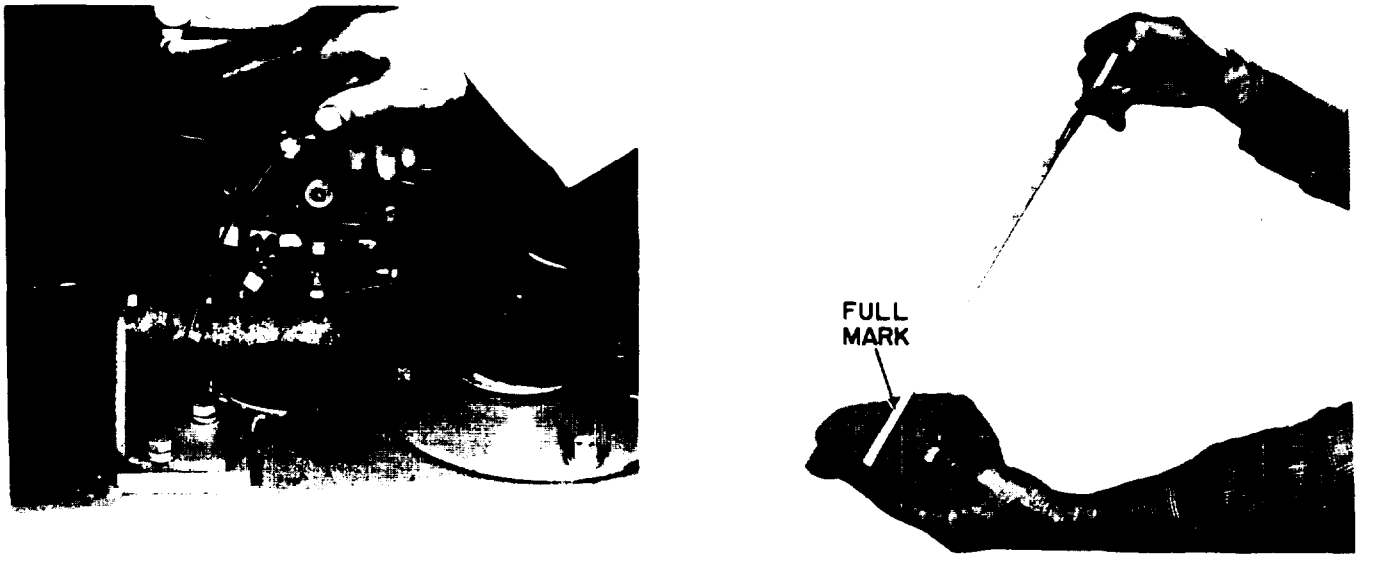

Figure 4-7. Checking Oil Level

Figure 4-8. Transmission Drain Plug

b. Clean drain plugs of all foreign material, using solvent, Specification P-D-680, and dry thoroughly.

c. Refer to figure 4-10 and remove transmission sump screens. Check sealing O-rings inside screen cover for damage or signs of aging, and replace as required.

d. Clean sump screens with solvent, Specification P-D-680, and dry with compressed air stream. When drying, direct air stream outward from inside the screen.

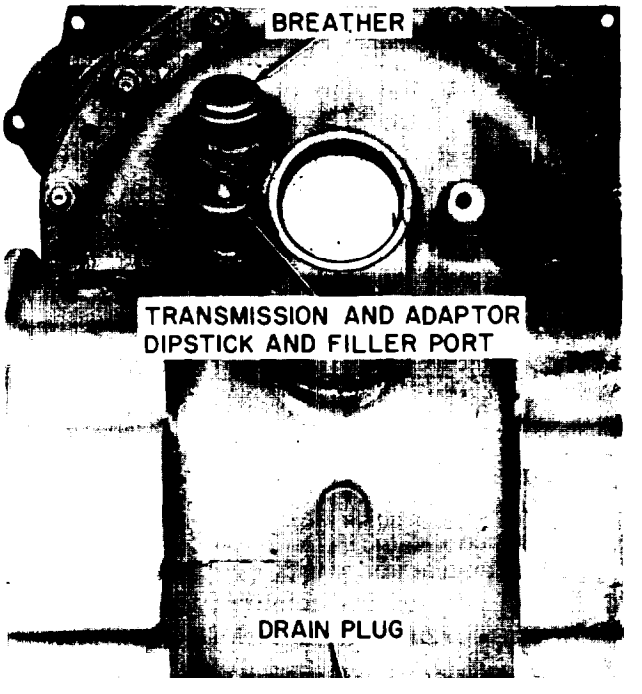

Figure 4-9. Transmission Dipstick, Breather and Drain

e. Install screens and drain plugs, and tighten securely to prevent leakage.

f. Refer to figure 4-11, and remove the

www.truck-freeworkshop.com/clark/

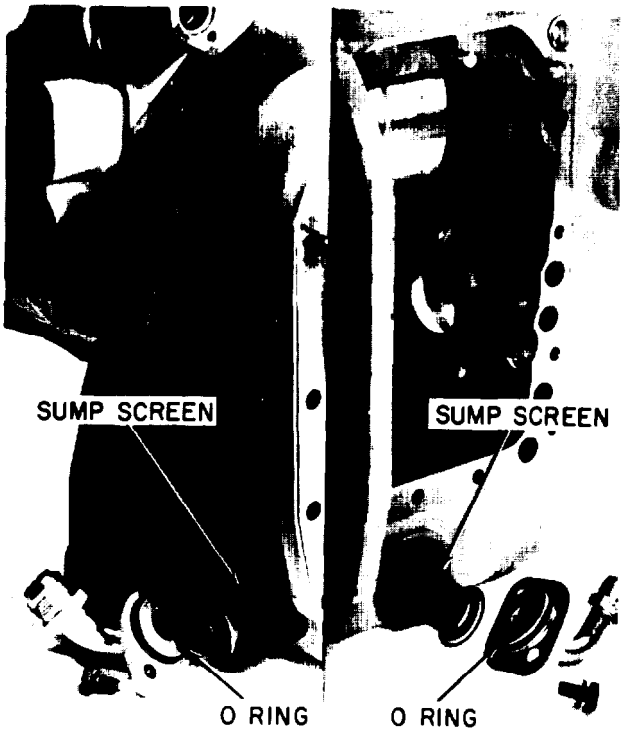

Figure 4-10. Sump Screen Removal

transmission/steering filter cartridge by unscrewing from the filter base.

g. Clean off the filter base, and install a new filter cartridge. Lightly coat the new gasket (supplied with each cartridge) with a light film of clean transmission fluid before installing.

h. Screw the cartridge down until gasket just contacts base, and tighten 1/2 turn more. Do not overtighten.

i. Change steering in-line filter (in pump suction line) every 1000 hours.

j. Refill transmission through filler opening on axle adapter, as shown in figure 4-12. Use only Type "A", Suffix "A", Automatic Transmission Fluid. (Containers must display a qualification number prefixed by "AQ-ATF".)

k. Operate engine at fast idle for approximately four minutes to distribute lubricant throughout the system and expel trapped air.

1. Shut off the engine and check fluid level at axle adapter dipstick, and add fluid as required to bring level to full mark.

4-10. HYDRAULIC SYSTEM. Under normal service conditions the hydraulic sump should be drained and the filter element changed after each 500 hours of operation. Severe service or adverse operating conditions will require that a proportionately shorter interval be allowed between services.

a. Lower carriage, and make certain that parking brake is set. Shut engine off.

b. Remove cover plate to gain access to main control valve pressure check point, as shown in figure 4-13.

c. Remove pipe plug from the pressure check point and connect a hose to the open port. The hose should be of sufficient length to reach into a 10 gallon container placed on the floor to catch the drained fluid, as shown in figure 4-13.

d. Place the free end of the hose into the container and start the truck engine, allowing the engine to run at idle speed (500-550 RPM) while holding lift control lever back until the fluid running from the hose starts to bubble and spurt, which indicates that the pump is beginning to draw air. Shut off the engine immediately.

CAUTION

Do not operate engine after the oil supply to the pump is exhausted. Running the pump without adequate lubrication can result in serious damage to the pump.

e. Reinstall pipe plug in the pressure check point of main control valve.

f. Place a flat pan of sufficient capacity under the sump tank drain plug as shown in figure 4-14. The pan should hold about 2 gallons.

www.truck-freeworkshop.com/clark/

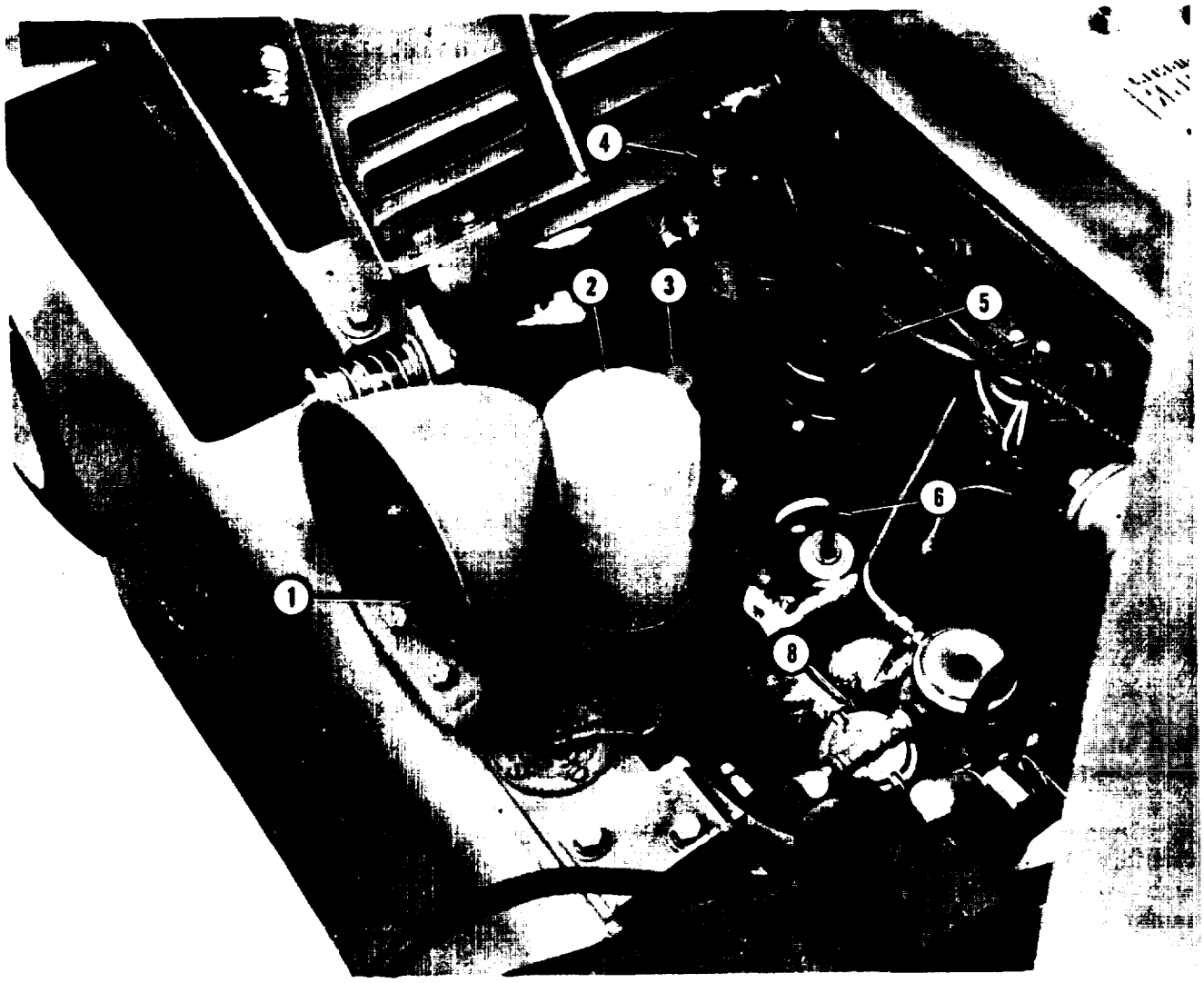

1. Fuel tank filler
2. Trammission/steering fluid filter
3. Inching master cylinder
4. Ignition coil
5. Distributor
6. Crankcase dipstick
8. Fuel filter

Figure 4-11. Engine Compartment, Left Side

www.truck-freeworkshop.com/clark/

Figure 412. Transmission Refill Procedure

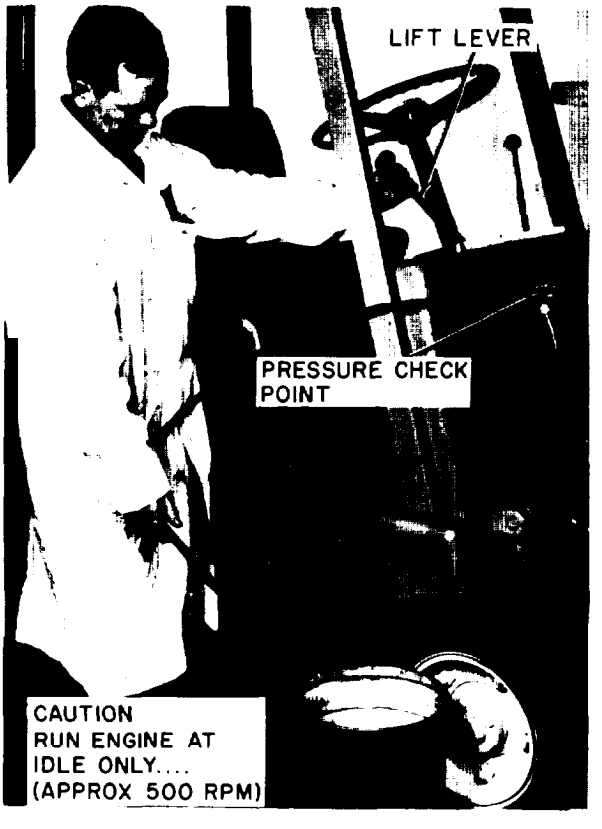

Figure 4-13. Draining Hydraulic System from Main Control Valve

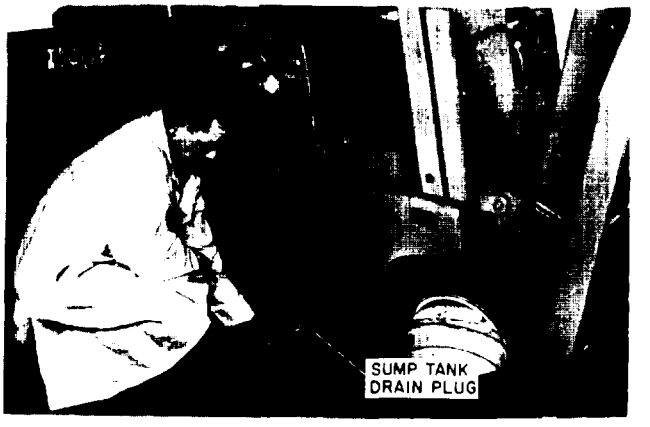

Figure 4-14. Draining Sump Tank

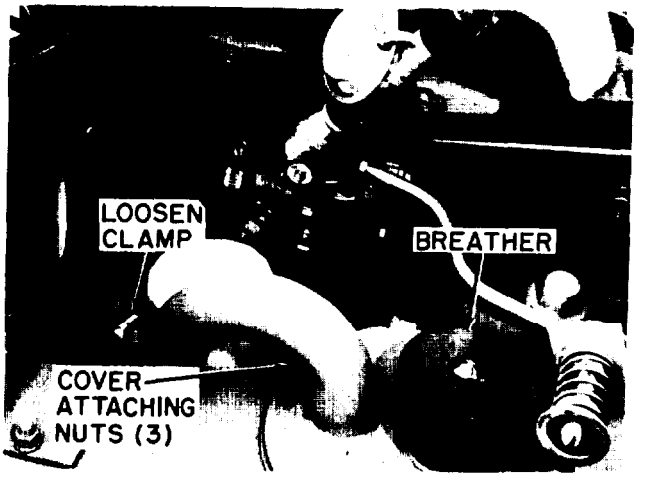

Figure 4-15. Removing Sump Tank Cover

g. Unscrew the sump tank dram plug and allow the tank to drain thoroughly.

h. Remove filler cap breather from top of sump tank cover. Replace breather if it appears dirty or clogged with foreign matter.

i. Remove three nuts retaining the sump tank cover, and disconnect suction hose by loosening clamp as shown in figure 4-15.

j. Remove the suction pipe, cover and filter housing assembly from the sump tank. Figure 4-16 shows internal details of the filter assembly.

www.truck-freeworkshop.com/clark/

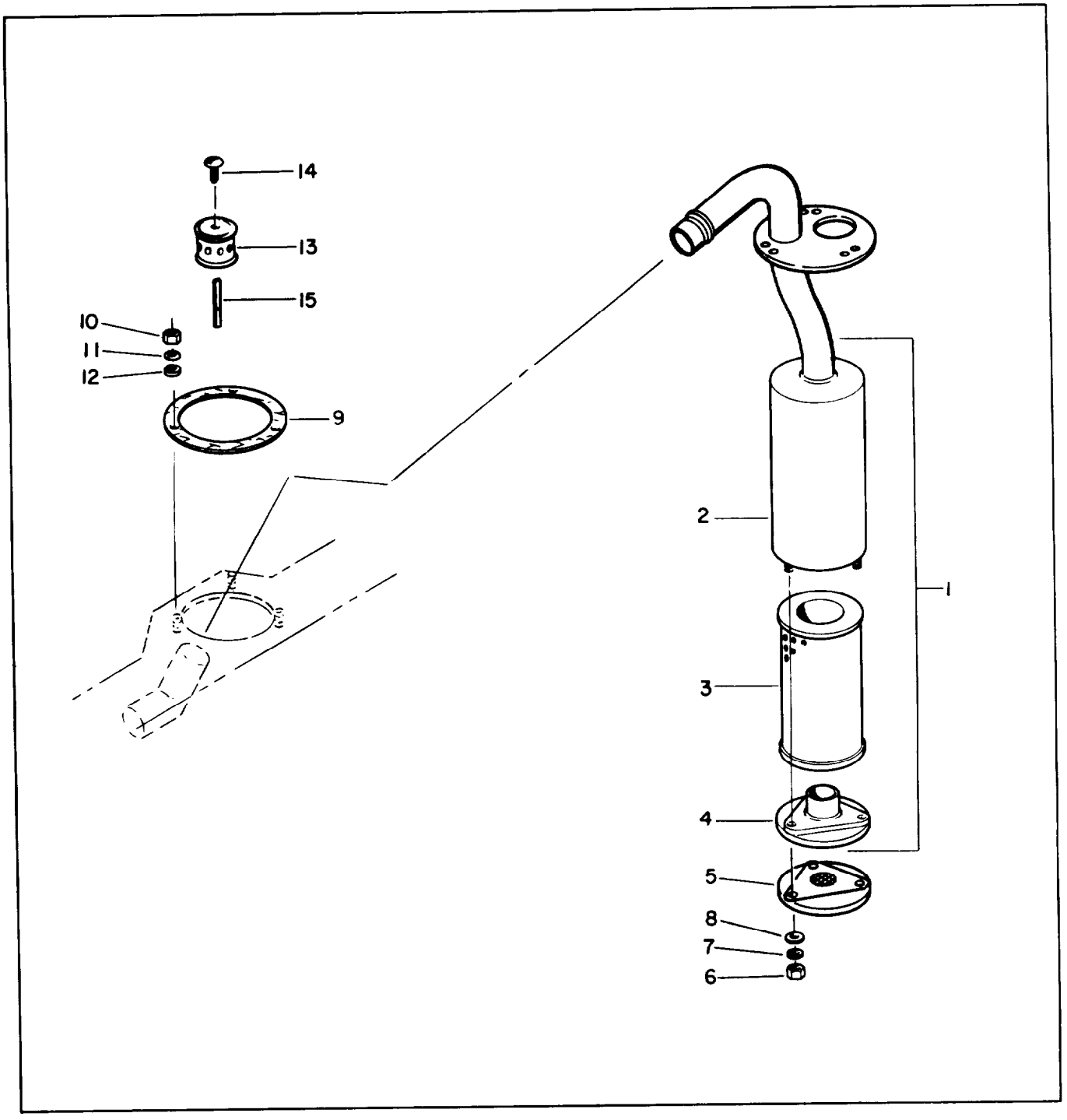

1. Filter assembly
2. Case assembly
3. Element
4. Valve assembly
5. Screw
6. Nut
7. Lockwasher
8. Plain washer
9. Gasket
10. Nut
11. Lockwasher
12. Plain washer
13. Breather
14. Screw
15. Dipstick

Figure 4-16. Sump Filter Assembly

www.truck-freeworkshop.com/clark/

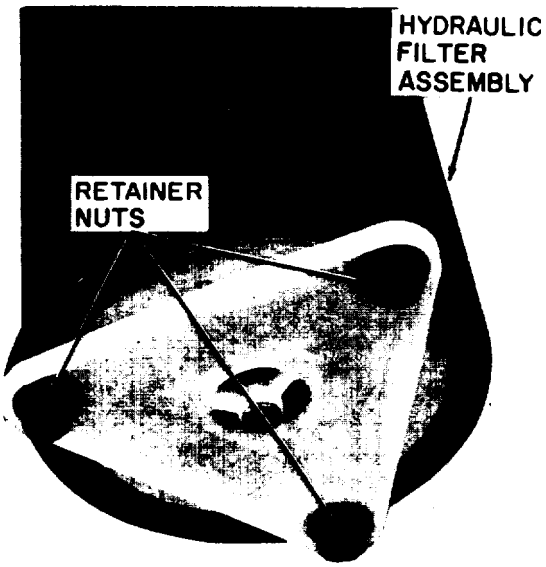

Figure 4-17. Element Retainer Nuts

Figure 4-19. Sump Tank Refill Procedure

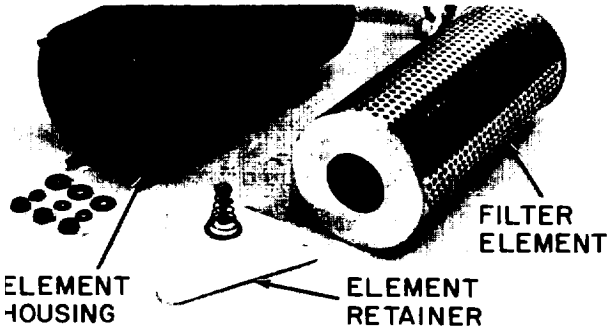

Figure 4-18. Filter Disassembled

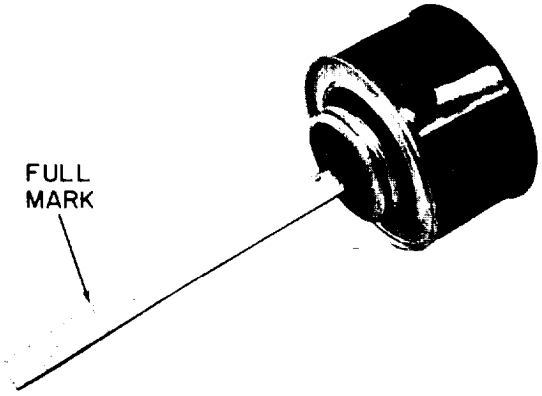

Figure 4-20. Sump Breather Dipstick

k. Remove the three filter element retainer nuts from the retainer plate as shown in figure 4-17.

l. Separate element retainer, element, and housing as shown in figure 4-18. Discard old element and clean housing and retainer thoroughly.

m. Install a new filter element, inserting into housing so that seal on top of element will contact the closed upper end of housing.

n. Secure element in position by installing retainer plate and three retainer nuts. Reinstall filter assembly into sump tank and tighten clamp on suction pipe.

o. Install sump cover plate, securing with three nuts on cover studs. Tighten nuts to 7 lb./ft.

p. Refill sump tank, as shown in figure 4-19, with 7-1/4 gallons of hydraulic fluid per specification shown in lubrication chart, figure 4-1.

q. Start engine and operate hydraulic controls several times, checking for leaks. Check oil level on breather dipstick (see figure 4-20) and add oil as required to bring level to full mark on dipstick.

www.truck-freeworkshop.com/clark/

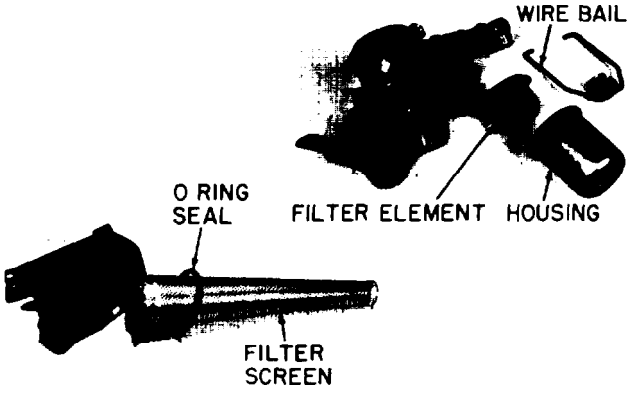

Figure 4-21. Fuel Filler Cap and Filter Screen

4-11. FUEL SYSTEM SERVICE. The fuel system should be checked periodically for leakage at tube fittings and hose connections, and the fuel filter replaced, according to the schedule established in figure 4-1.

a. Refer to figure 4-21 and remove filler cap and filter screen with o-ring seal. Check condition of filter screen and clean as required.

b. Check that the o-ring seal around neck of filter screen is intact and in otherwise good condition.

c. Make certain that filter screen is properly in place before replacing filler cap.

d. The fuel filter is mounted adjacent to the fuel pump and is accessible from the left side of the engine compartment.

WARNING

A small amount of fuel spillage will result when the filter housing is removed. Make certain that no spark or open flame exists in the work area, and also that the engine is sufficiently cool to prevent the possibility of igniting the gasoline fumes resulting from the fuel spillage.

e. Unhook the wire bail from underneath the filter element housing and separate housing from filter cover as shown in figure 4-21.

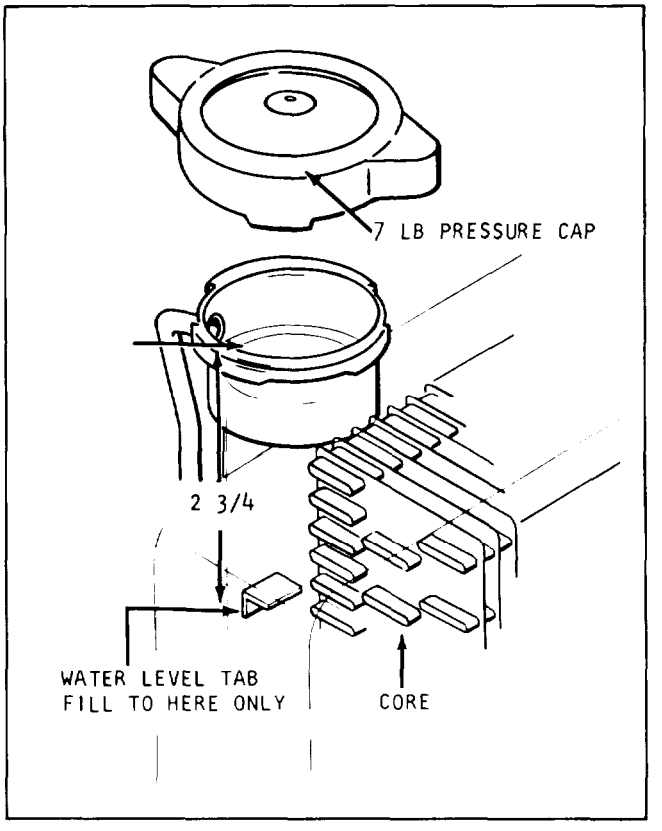

Figure 4-22. Coolant Level Indicator

f. Remove filter element and housing gasket, and discard. Clean filter element housing thoroughly.

g. Position the new element in the filter element housing. Coat the new gasket with a light film of engine oil and place gasket in position on filter element housing.

h. Place housing under filter cover, with element in place, and snap wire bail over bottom of housing to retain assembly.

4-12. COOLING SYSTEM SERVICE.

WARNING

This truck is equipped with a pressurized cooling system. Use extreme care when removing the radiator cap when the engine has recently been operating. The sudden release of pressure from the system can

www.truck-freeworkshop.com/clark/

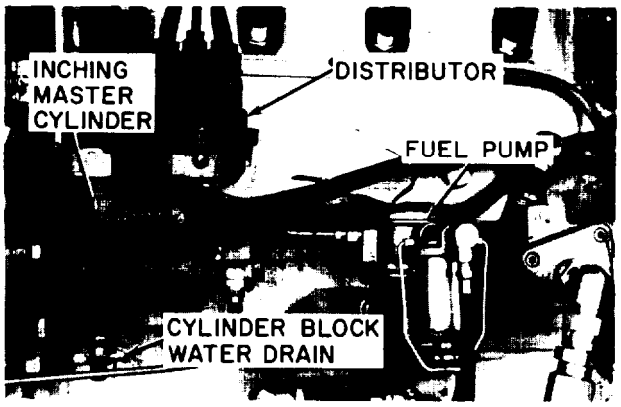

Figure 4-23. Cylinder Block Drain Location

cause sudden boiling of the coolant and a dangerous steam flash. Always loosen the cap slowly and allow the pressure to vent off slowly before removing cap.

a. Remove radiator cap slowly, and check coolant level. The coolant level should be checked with the engine shut off.

b. Make certain coolant level reaches the coolant level tap inside the filler neck, 2-3/4 inches below the top of the filler as shown in figure 4-22, but never higher.

CAUTION

Never pour cold water or cold anti-freeze solution into the radiator of an overheated engine. Allow the engine to cool and avoid the danger of cracking the cylinder head or block. Keep the engine running while adding water or anti-freeze. When using ethylene-glycol (permanent-type) anti-freeze, the solution must contain a minimum of 40% water.

c. Use only clean water, or clean water and anti-freeze solution, in refilling the radiator. Add 1 ounce per gallon of soluble oil to the coolant. If the truck is likely to be exposed to temperatures lower than 32°F, check anti-freeze protection level using a hydrometer.

d. Check radiator and water pump gasket surfaces and hose connections for leakage.

e. Blow out debris and foreign material from radiator core by directing a compressed air stream through the radiator from outside the engine compartment.

413. COOLING SYSTEM DRAIN AND REFILL.

a. Dram all coolant from engine cylinder block and radiator. (See figure 4-23 for cylinder block drain location.)

Note

Draining of cooling system is most effective when the engine has just been operating, as the combination of heat and circulation of the water will hold some of the sediment in suspension, to be drained off with the coolant. Disconnecting the lower radiator hose will allow larger particles of sediment and scale to be drained off.

b. Close cylinder block and radiator drains and refill cooling system, adding cleaning compound, Military Specification MIL-C-10597.

c. Operate engine for approximately 15 minutes, then completely drain the system and flush with clean water.

d. Refill cooling system with clean water or anti-freeze solution, to the level shown in figure 4-22.

e. Operate engine and check for leaks at radiator, water pump gasket surfaces, and hose connections. Recheck coolant level as engine will expel trapped air while operating.

f. Check radiator cap gasket surfaces, and replace cap if sealing surface appears cracked, broken or deteriorated. See figure 4-24.

g. Inspect pressure cap for freedom of operation. Pressure caps employ a spring loaded, rubber-faced valve which presses against a seat in the radiator top tank. Pressure caps employ either a vacuum valve held against its seat under spring pressure, or

www.truck-freeworkshop.com/clark/

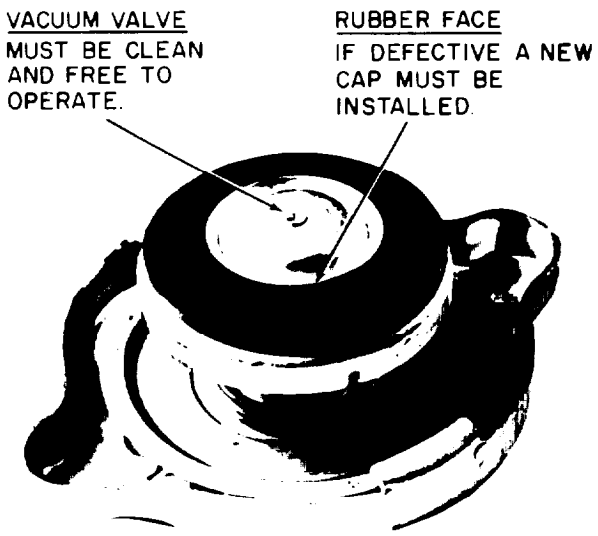

Figure 4-24. Radiator Cap Sealing Surface

a weighted vacuum valve which hangs open until forced closed by a surge of vapor or coolant. Check to be sure components are free to operate.

Note

If a new cap is required, always install a cap of the same type and pressure rating.

h. The radiator pressure relief valve can be tested for proper operation by means of the cooling system tester shown in figure 4-25. This device is manufactured by the Stant Manufacturing Co., and comes equipped with adapters so that it can be used to check the radiator and the radiator cap.

i. Inspect for dented or clogged overflow pipe. To remove clogged material, run a flexible wire through pipe until obstruction is removed. When a pressure cap opens the sudden surge of vapor or liquid must pass thru the overflow pipe. If the pipe is dented or clogged, the pressure developed by the obstruction may cause damage to radiator or hoses.

4-14. THERMOSTAT TEST AND REPLACEMENT. An engine which runs too hot or too cold will not perform properly, will lack power, and create more maintenance problems than an engine operating at the proper

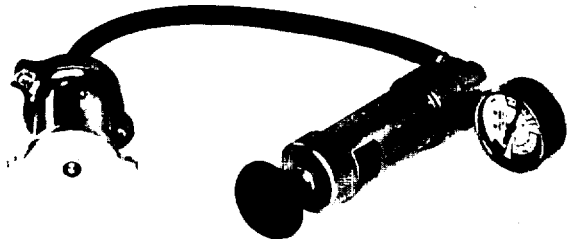

Figure 4-25. Pressure Testing Radiator Cap

temperatures, If the thermostat is suspected of being faulty, it may be tested and/or replaced as follows:

C A U T I O N

Never run the engine with the thermostat removed. Removal of thermostat will allow water to bypass the radiator and circulate only through the engine, causing serious overheating and resultant engine damage.

a. Drain the cooling system as outlined in paragraph 4-13.

b. Remove the bolts which retain the water outlet elbow to the cylinder head and thermostat housing.

NOTE

Mark or tag bolts during removal, so that they may be installed in their original holes at time of assembly.

C. Remove thermostat by pulling out from housing.

d. Hand the thermostat in a pan or glass breaker, so that no part of the thermostat touches the bottom or sides of the container, see figure 4-17. Also suspend in the water a thermometer of known accuracy, having a range of at least 250° F.

e. Heat the water to 158° F., and observe action of bellows in the thermostat as water termperature is raised an additional 10 F. at a time, pausing at 168° F., 178° F, and 188° F. for one minute to check if thermostat is beginning to open.

www.truck-freeworkshop.com/clark/

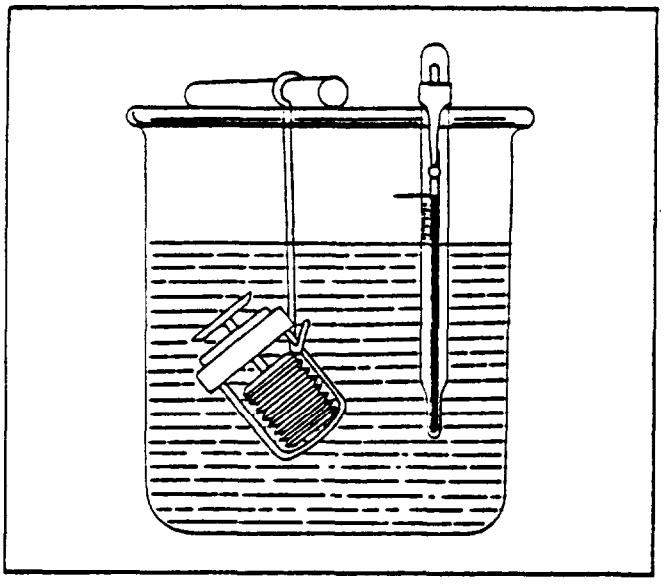

Figure 4-17. Thermostat Test

f. If thermostat starts to open before 175 F. or doesn't open until 185° F., it is defective and must be replaced. thermostat should be fully open at 202 F.

g. Using gasket sealer on both sides, affix both water outlet elbow gaskets to water outlet elbow flanges.

NOTE

Scrape or otherwise remove all residue of old gaskets and sealer before installing new gaskets.

h. Position thermostat in bore of water pump flange, and install water outlet elbow, securing with cap-screws previously removed.

1. Torque attaching screws at water pump and cylinder head flanges to 20 ft./lbs. torque.

4-15. VISCOUS FAN: Whenever a malfunction of the viscous, fan is suspected, always make sure all other parts of the cooling system are in good working order first.

CHECK FOR:

1. Low coolant level.
2. Broken or loose fan belt.
3. Defective radiator cap.
4. Broken or leaking hoses.
5. Inacurrate temperature sensing unit.
6. Radiator core fins block by debris.
7. Stuck or broken thermostat.
8. Sludged radiator core.
9. Worn water pump.
10. Transmission problems.

If all the above are checked out as not the cause of overheating the engine, then follow these steps for checking the viscous fan.

a. The engine should be relatively cold (turned off for at least four hours.)

b. Start engine and set throttle at about 2000 RPM minimum. This should be done in a warm area.

C. It should be noted that the fan speed may be high upon initial engine start, but will reduce in speed within a few minutes time.

d. Within ten minutes there should be enough heat generated (180 degrees F. air temp at bi-metal coil) to cause the fan speed to increase.

e. To make specific measurements of coil air temperature and fan speed, requires some reliable equipment. It is possible, with experience, to make a judgment in this area without measuring equipment.

f. If it is obvious that the viscous fan clutch did engage and increase the fan speed, then the clutch can be considered to be operating satisfactorily.

www.truck-freeworkshop.com/clark/

9. If on the other hand it is obvious that the viscous fan clutch did not engage and increase the fan speed, the clutch can be considered defective due to "low fan speed at operating temperature".

h. Finally, a movement of the fan blade in excess of 1/4", exclusive of fan blade deflection, usually means a mechanical failure.

4-15A. FAN AND ALTERNATOR BELT ADJUSTMENT. The adjustment of the alternator drive belt should be checked periodically and adjusted if found to be excessively tight or loose. Too tight adjusted belts cause early bearing failure in the alternator. Belts that are too loose cause engine overheating and low battery charge.

Check belt tension by applying finger pressure (approximately 25 lbs. force) to point "A" shown in figure 4-19. The belt should deflect 1/2 to 3/4 inch under the pressure.

b. Loosen the adjusting bolt and the two mounting bolts shown in figure 4-29.

C. Move alternator away from engine to tighten the belt, or toward engine to loosen belt tension. When correct tension is obtained by the method described in step a., tighten the adjusting bolt (4 foot/pounds) and the mounting bolts (7 foot/pounds).

C A U T I O N

When tightening belt tension, apply pressure against the stator laminations between the end frames and not against either end frame. When adjusting for deflection, pull alternator by hand. Do not use a pry bar. Exercise caution when adjusting belts. Belts adjusted too loose will result in belt wear and high engine temperature due to belt slippage.

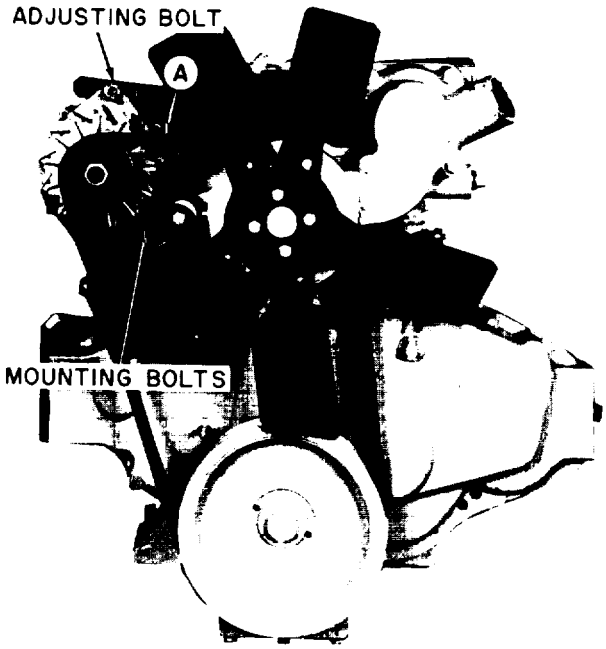

Figure 4-29. Alternator Belt Adjustment

4-16. BRAKE SYSTEM MAINTENANCE

4-17. PEDAL CHECK AND FREE TRAVEL ADJUSTMENT. The following checks should be made at each 50-hour maintenance interval and appropriate adjustments made when necessary.

a. Depress each pedal (brake and inching) and hold under pressure for at least ten seconds. Pedal must be solid, not spongy feeling, and no drift or leak-down should be evident.

b. Hold a ruler against the floor board so that the pedal released height can be measured as shown in figure 4-30.

C. Push pedal down by hand until resistance is felt in the master cylinder. This initial travel should be no more or less than 1/8 inch.

d. Adjust free travel by means of the push rod nut shown in figure 4-30.

www.truck-freeworkshop.com/clark/

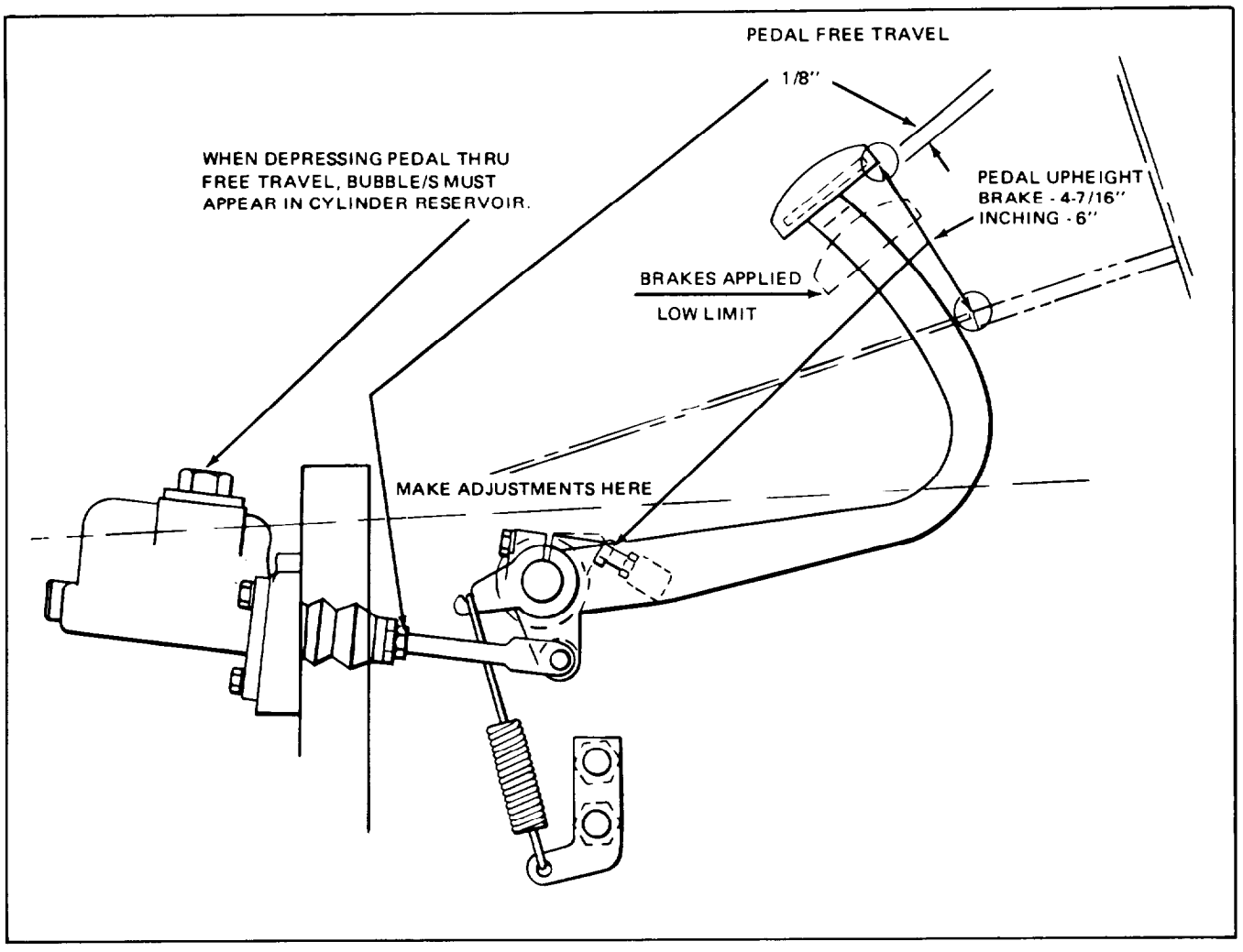

Figure 4-30. Pedal Adjustments

e. Pedal up-height must conform to the dimensions shown in Figure 4-30. Adjustment is made at the stop screw shown in the illustration.

f. If pedal travel exceeds the approximate "low limit" shown in the illustration, brake fluid is low, air is trapped in the brake system, or brake linings are worn and require replacement.

4-18. MASTER CYLINDER CHECKS. The master cylinder should be checked whenever pedal travel adjustments are made. Proceed as follows:

a. Check the fluid level within the master cylinder, The fluid level should be within 1/4 inch from the top of the filler neck. Use only SAE 70 R3 Heavy Duty Hydraulic Brake Fluid, when adding fluid.

b. Check the master cylinder filler cap vent hole. This vent must be open at all times, to allow proper fluid movement within the master cylinder. If necessary, use a fine wire or small drill to clear the vent of any obstruction. See Figure 4-31 for vent location.

C. Always make certain that pedal adjustments are properly made, as improper pedal up-height will cause the internal porting in the master cylinder to be blocked so that fluid will be trapped, under pressure, in the brake lines. This fluid can hold the linings in constant contact with the drums, causing excessive lining wear and fuel consumption.

www.truck-freeworkshop.com/clark/

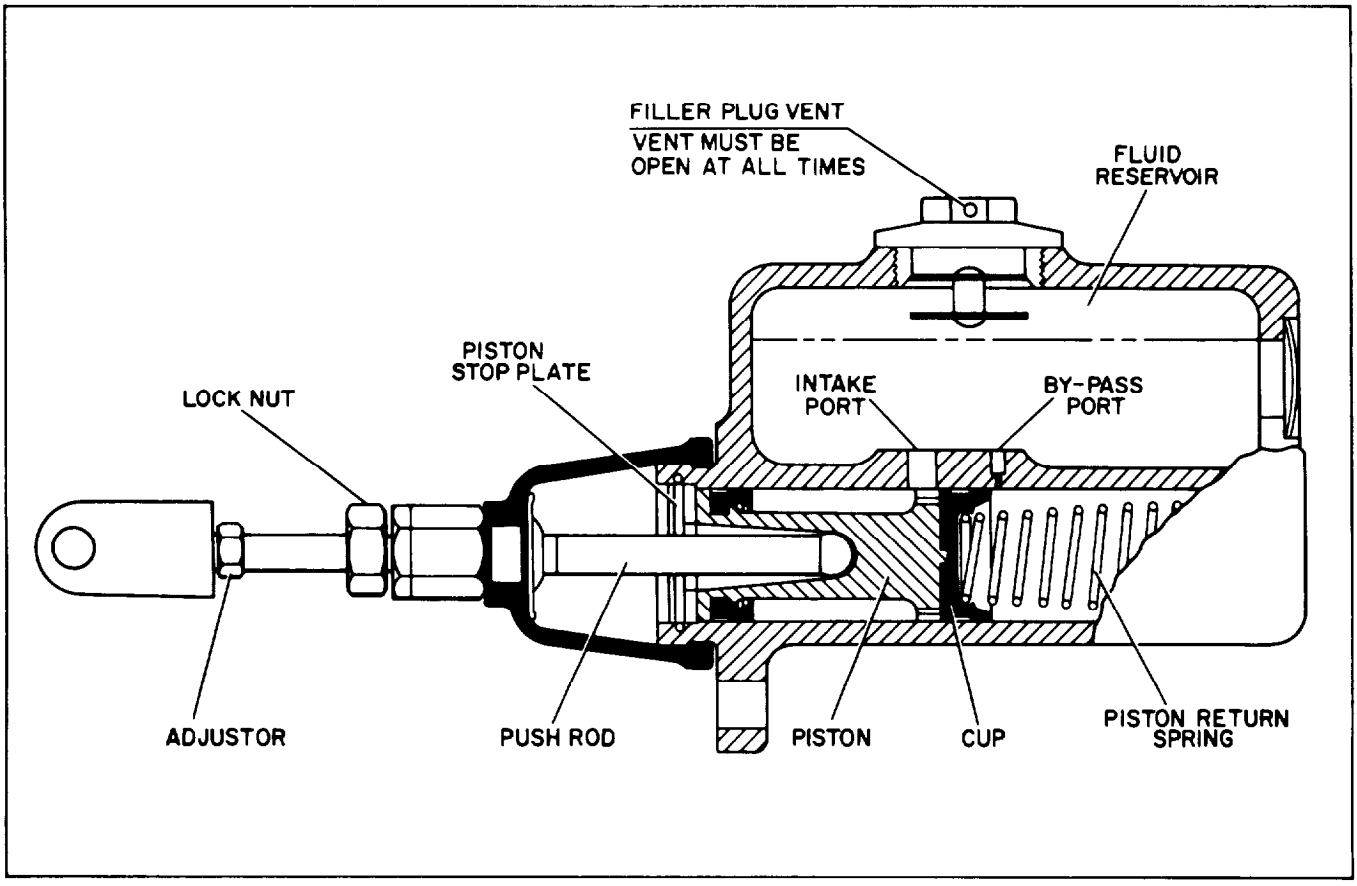

Figure 4-31. Master Cylinder Cross Section

4-19. BLEEDING BRAKE SYSTEM. Whenever the brake system is opened for any reason, such as repairs to master cylinder, wheel cylinder, valves or tubing, air will enter the brake system and must be expelled through the bleeding procedure outlined in the following paragraphs. Pressure bleeding, as outlined in paragraph 4-20, is the preferred method if the proper equipment is available.

4-20. PRESSURE BLEEDING. Make certain that the pressure bleeding equipment will hold enough of the right type of brake fluid to do the job (about 2 quarts). Do not intermix different types of brake fluid, and never reuse fluid that has been drained from the brake system.

WARNING

Make certain that pressure bleeder tank is certified for use under pressures exceeding 30 psi before using.

a. Clean all dirt, grease, etc., from around the master cylinder reservoir cap on both the brake and inching master cylinder.

b. Remove the master cylinder reservoir cap and fill reservoir with SAE 70 R3 Heavy Duty Hydraulic Brake Fluid to within l/4 inch from the top of the reservoir.

c. Fill the pressure bleeder reservoir with about 2 quarts of the same fluid, and pressurize the tank to not more than 30 psi.

www.truck-freeworkshop.com/clark/

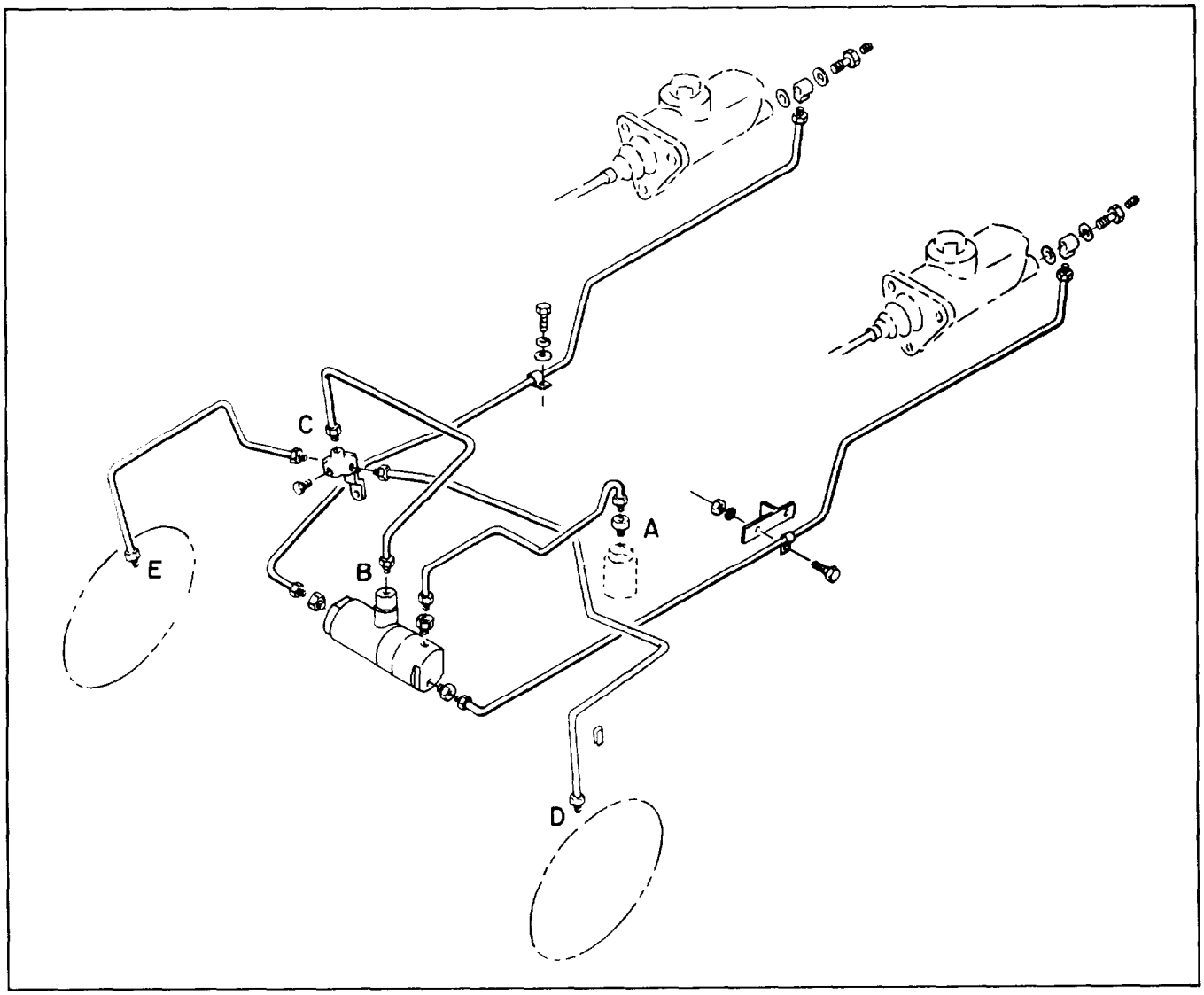

Figure 4-32. Brake System Bleed Points

d. Place a flat pan under the axle adapter to catch brake fluid spillage, and connect the pressure bleeder line to the brake master cylinder. Open the pressure bleeder valve.

e. Refer to figure 4-32 for identification of the various bleed points within the brake system.

f. With the bleeder hook-up completed as shown in figure 4-33, open bleed points B and C (fittings shown in figure 4-34) and allow fluid to flow from loosened fittings until no further bubbles appear in the flow. Tighten fittings securely when all air is expelled.

g. When bleeding wheel cylinders (bleed points D and E), attach a small hose to the bleeder screw on the axle adapter, submerge the other end of the hose into a jar of clean brake fluid. Hold the jar at a point higher than the bleeder screw, and open the bleeder screw, allowing fluid to flow into the jar until no more bubbles can be seen in the flow as shown in figure 4-35.

www.truck-freeworkshop.com/clark/

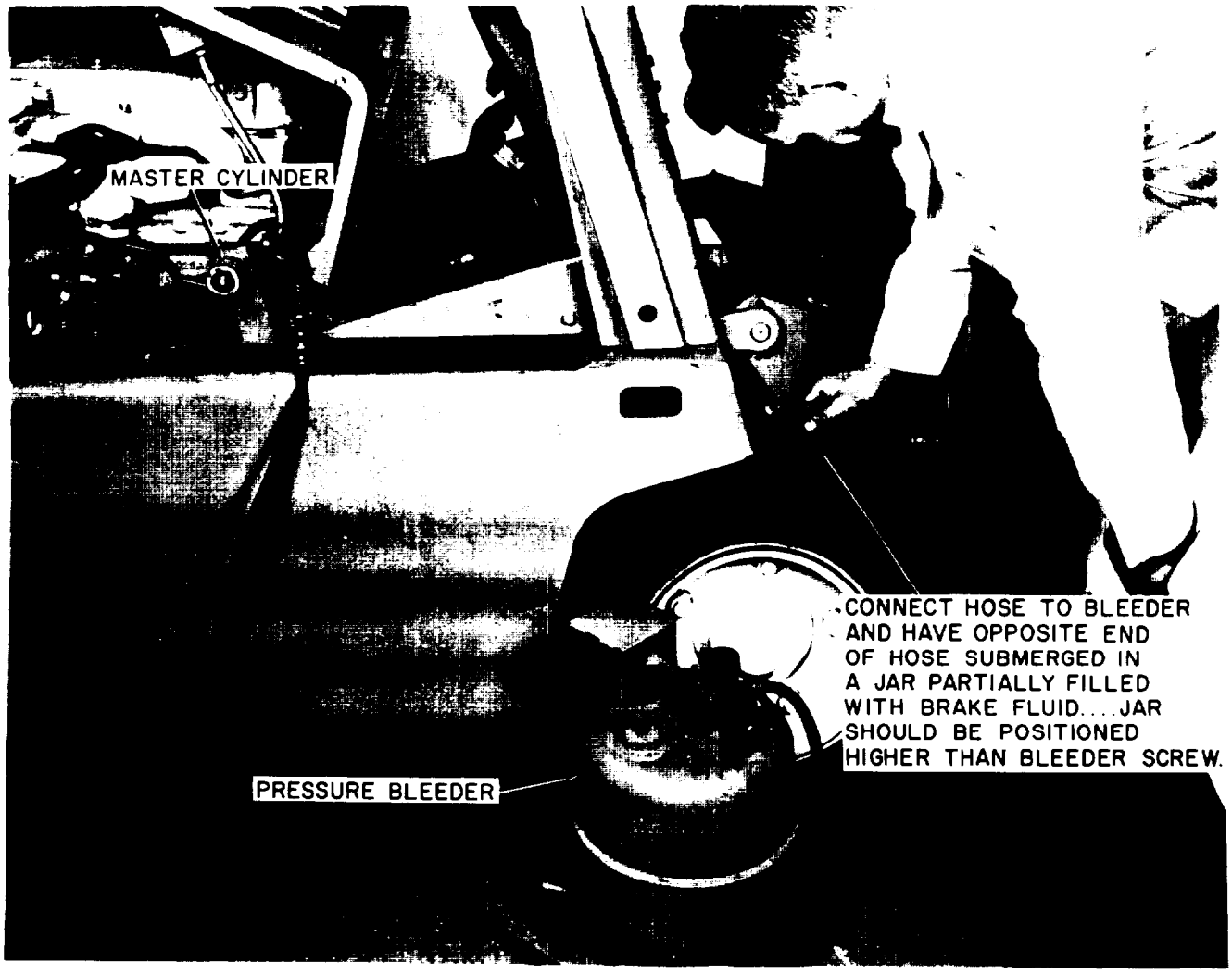

Figure 4-33. Pressure Bleeder Hook-up

h. When air bubbles stop coming into the container, close the bleeder fitting and remove the tube. Close bleeder tank valve.

i. Disconnect bleeder tank line from master cylinder and connect it to the inching master cylinder.

j. Follow the same procedure as outlined above, but start at bleeding point "A," shown in figure 4-36.

k. When bleeding operation is completed, fill both cylinders to within l/4 inch from the top.

WARNING

Always relieve pressure from bleeder tank when bleeding operation is completed.

4-21. MANUAL BLEEDING. Manual bleeding

www.truck-freeworkshop.com/clark/

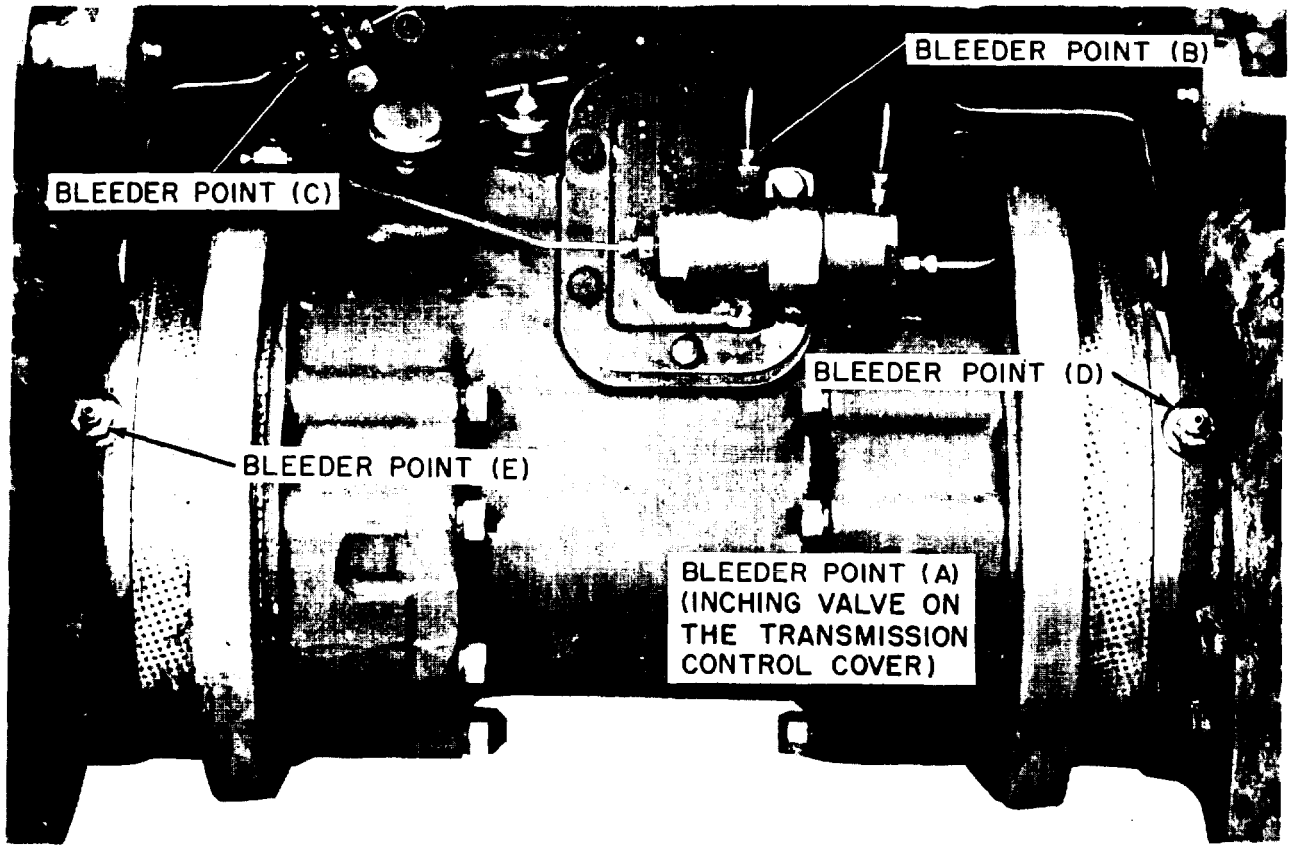

Figure 4-34. Axle Adapter Bleed Points

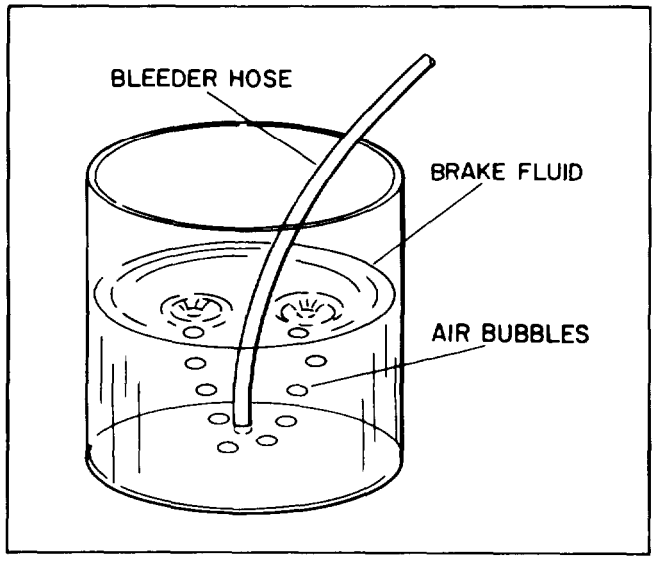

Figure 4-35. Bleeder Jar

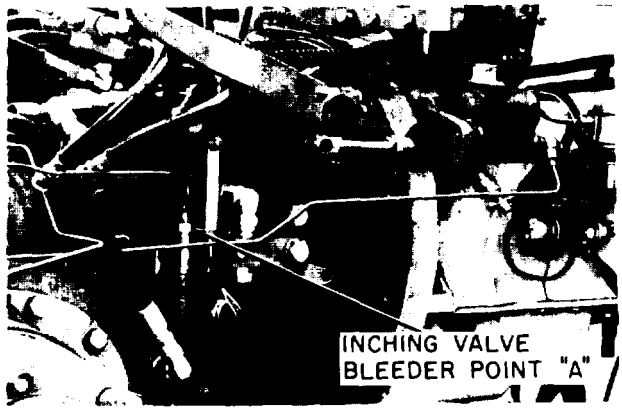

Figure 4-36. Inching Valve Bleed Point

www.truck-freeworkshop.com/clark/

may be performed when pressure bleeding equipment is unavailable. Manual bleeding will require two men, one to depress and hold the brake pedal while the other opens and closes the bleeder valves. Proceed as outlined under pressure bleeding, but observe the following special instructions:

4-22. It must be remembered that the brake pedal should be depressed slowly and held until the line connections or bleeder screws are securely tightened. This prevents the possibility of air being drawn into the system during the bleeding operation. Check the master cylinder reservoir level often during manual bleeding and keep within 1/4 inch from the top.

4-23. With filler cap off the master cylinder, depress and release brake pedal. A small displacement of fluid should be noticed in the cylinder reservoir. If this happens, the brake pedal (upon being released) is returning the master cylinder piston to its normal position to open a master cylinder port. This port must be open.

4-24. If fluid is not displaced upon releasing the brake pedal, a pedal adjustment is required.

4-25. BRAKE ADJUSTMENTS.

4-26. When the brake system is operating properly, the cam like action of the reaction arm allows self-adjustment for the total thickness of the brake linings, without any noticeable increase in brake pedal free travel. The self-adjustment feature eliminates the need for manual adjustment of the brakes.

4-27. When the brake linings become worn beyond their designed limits, there will be a noticeable change in the brake pedal effort required to stop the machine or, brakes will become noisy during application. If either of these conditions exist, the axle ends should be removed so an inspection of the brake linings can be made to determine their further serviceability. If lining replacement appears necessary, refer to Section V.

4-28. PARKING BRAKE CHECK AND ADJUSTMENT. Periodic checks to determine efficiency of the parking brake are to be made as described below.

Note

The parking brake must be capable of holding truck, with rated capacity load, on a 15% grade, If a major adjustment as described in paragraph 4-30 will not restore proper operation, the parking brake linings should be replaced. See Section V.

a. Fully apply hand brake, moving lever from full forward to full rearward position. Cable tension should be sufficient to require a definite effort in pulling the lever over the center position.

b. With hand brake set, start truck engine and place directional control lever in forward position.

c. Depress engine throttle until engine runs up to maximum stall speed (approximately 1500 RPM). Truck should not move or creep.

d. If either of the above tests indicate a need for adjustment, perform the minor adjustment first and recheck brake action. Then, if necessary, a major adjustment should be performed.

4-29. MINOR ADJUSTMENT. Minor adjustment to the parking brake linkage is made by placing the lever in the full forward (released) position, then turning the knurled knob on the end of the lever several turns clockwise. After making this adjustment, recheck brake action as described above. If necessary, repeat adjustment.

Note

If brake effectiveness cannot be restored within the range of travel of the lever knob, a major adjustment must be performed.

4-30. MAJOR ADJUSTMENT. When minor adjustment is not sufficient to restore brake efficiency, a major adjustment should be performed as outlined below:

a. Release hand brake lever, returning lever to the full forward position.

b. Rotate knurled knob on the end of the lever counterclockwise as far as possible, and pull lever rearward to the applied position.

www.truck-freeworkshop.com/clark/

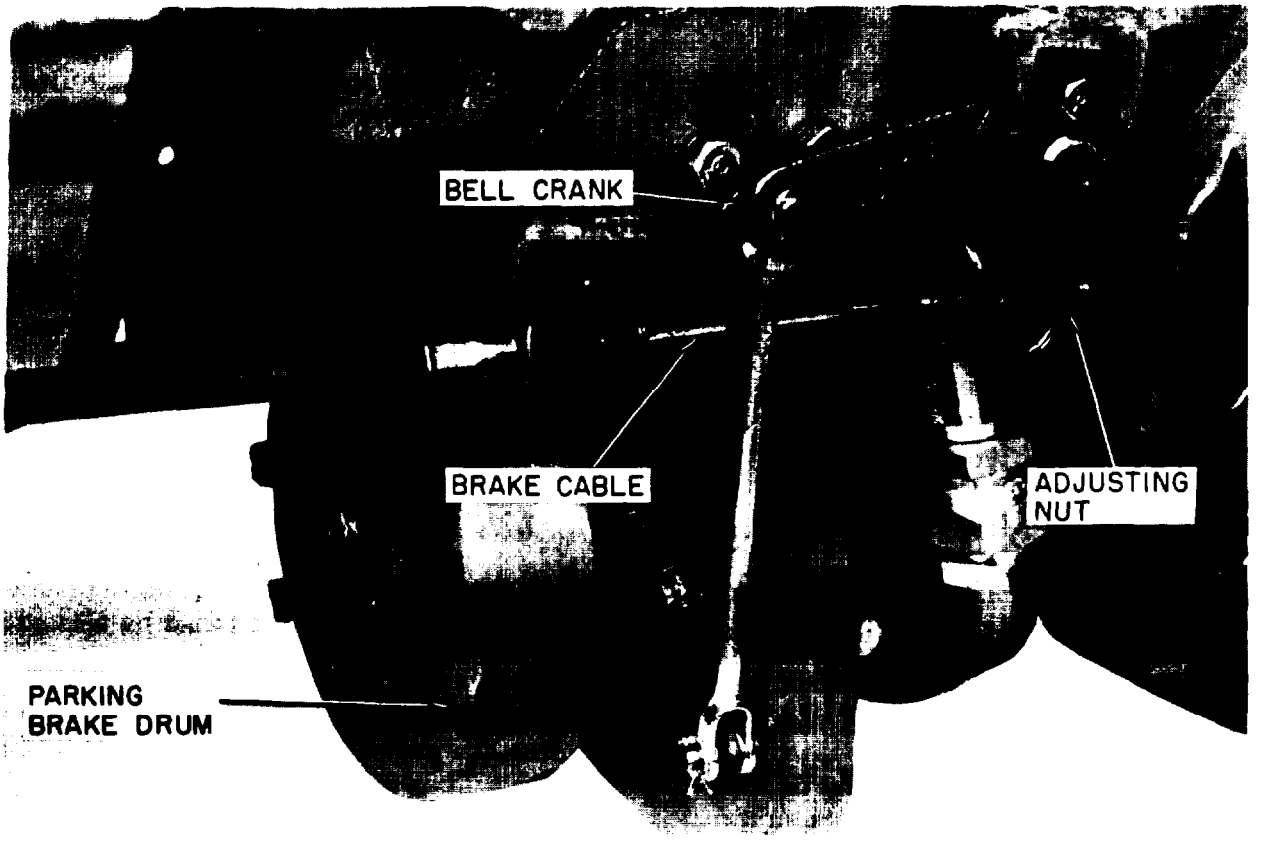

Figure 4-37. Parking Brake and Linkage

c. Refer to figure 4-37 and locate the adjuster nut. Turn this nut clockwise until all slack is removed from the brake cable.

d. Check feel of brake lever to see if some tension can be felt by moving the lever. Leave lever in the applied (rearward) position.

e. Turn adjusting nut on brake linkage to increase cable tension until the bellcrank on the cable bracket can be seen to move upward. Continue adjustment until bellcrank has moved upward the full extent of its travel. Check by pressing upward on the lever by hand.

f. Release hand brake lever to the full forward position. Rotate knurled adjustment knob on the end of the lever several turns clockwise to place additional tension on the brake cable.

g. Check brake tension by following the procedures of paragraph 4-28. If additional adjustments do not restore full brake effectiveness, replace the parking brake linings (see Section V).

4-31. ELECTRICAL SYSTEM.

4-32. BATTERY MAINTENANCE. The battery is the heart of the electrical system. It does not produce electricity, but merely stores it, through chemical action, until such time as it is needed. In order for the battery to render its maximum service, it must be properly cared for, according to the following instructions.

a. Check battery electrolyte level frequently, especially in hot weather. Maintain the level at 1/4 to 1/2 inch over the top of the plates by adding distilled water, when necessary.

www.truck-freeworkshop.com/clark/

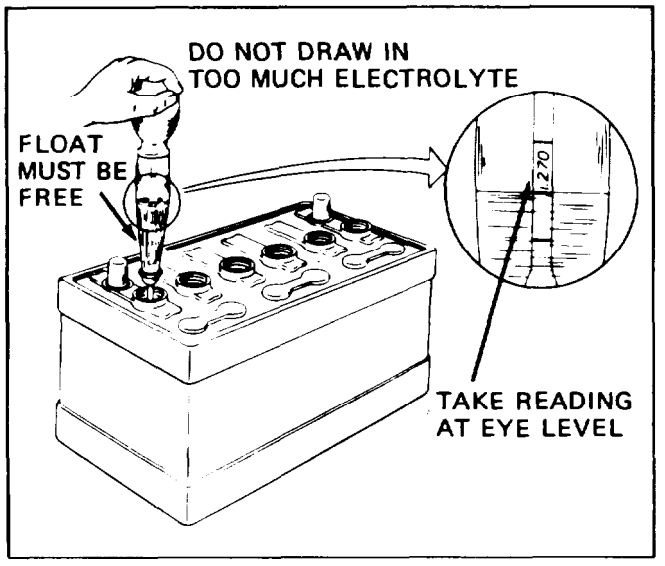

Figure 4-38. Checking Battery Specific Gravity

WARNING

Never allow sparks or open flame in the area when checking the battery. Storage batteries produce hydrogen, an explosive gas, as a normal by-product of operation.

b. Hydrometer readings should be used to determine the battery state of charge. This is particularly true in cold weather, as a partially discharged battery may freeze at temperatures up to 20°F.

c. Take readings on the hydrometer as shown in figure 4-38. Battery will need charging if the specific gravity reads 1.225 (or less) at 75°F.

CAUTION

Specific gravity should be 1.265 or greater if battery is exposed to freezing temperatures. If machine is operated in tropical climates where no freezing weather is encountered, the full charge specific gravity may be lowered from 1.375 to 1.225 by diluting the electrolyte with distilled water.

Note

Do not add distilled water to electrolyte immediately after charging the battery.

d. Check all battery cable connections periodically to make sure they are clean and tight.

e. Remove any corrosion from battery terminals by scrubbing with a solution of baking soda, or ammonia, and water.

f. After cleaning, coat the exterior of the cable terminals with a light film of Vaseline to retard further corrosion.

4-33. BATTERY TESTS.

4-34. LIGHT LOAD TEST. A defective battery or a discharged battery may be found by performing the following "Light Load Test."

a. Place an electrical load on the battery by cranking the engine for three seconds. If it starts, turn the ignition off immediately.

b. Place a 10 ampere load across the battery terminals for one minute. This will condition the battery so an accurate voltage comparison test can be made between cells.

c. After one minute, and with the 10 ampere load still on the battery, check the individual cells with an expanded scale voltmeter.

Note

Checking individual cell voltage on newer batteries with the completely enclosed "hard-top" case is not possible. Use the tests described in paragraph 4-35 to determine battery condition.

d. Place the positive voltmeter prod on the positive side of the cell and the other prod on the negative side. A good battery, sufficiently charged will read 1.95 volts or more on each cell with a difference of less than 0.05 volt between highest and lowest cell.

e. If cells read both above and below 1.95 volts

www.truck-freeworkshop.com/clark/

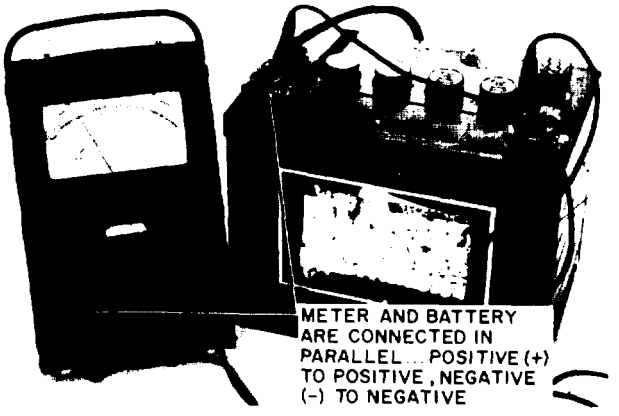

Figure 4-39. Battery Test Hook-up

and the difference between highest and lowest cell is less than 0.05 volt, battery is good but requires charging.

f. If any cell reads 1.95 volts or more and there is a difference of 0.05 volt or more between the highest and lowest cell, the battery is defective.

g. If all cells read less than 1.95 volts, battery is too low to test accurately. Boost-charge and repeat light load test.

4-35. STARTING/CHARGING SYSTEM TESTS. The following test will help in localizing any problem within the alternator, starter or battery.

a. Disconnect the high tension coil wire from the distributor cap. Clip a jumper lead onto the coil wire terminal and ground the jumper to the engine block or ground strap.

b. Hook up a voltmeter across the battery terminals as shown in figure 4-39.

c. Depress the accelerator pedal fully (to obtain higher compression) and crank the engine over by engaging the starter for a few seconds, while observing voltmeter reading.

d. During cranking, voltmeter should read at least 9.6 volts. If reading is low, a problem exists in the cranking system (battery, starter, or cables).

e. Immediately after cranking, voltmeter should read 12+ volts. If reading is below 12 volts, battery is defective or under-charged.

f. Reconnect coil wire to distributor, and start and accelerate the engine to obtain a reading of alternator output. Charging system output should be at least 12-l/2 volts. If not at least 12-l/2 volts, then the problem is in the charging system.

4-36. ENGINE PERFORMANCE CHECK. At every 1000-hour maintenance interval, the following check of engine performance should be made to determine whether engine is in need of a tune-up or is out of adjustment.

a. Before making check, run engine until unit is at operating temperature. This is important as the transmission oil temperature should be 200 degrees F. and the engine water jacket should be at operating temperatures. Apply parking brake.

b. With the engine operating at idle and the transmission in NEUTRAL, check the fluid level on the dipstick. Fill if necessary to the FULL mark on the dipstick, using Type "A", Suffix "A" Automatic Transmission Fluid (Clark Part Number 879803; fluid containers must display a qualification number prefixed by "AQ-ATF").

c. With a tachometer, check engine for governed speed at full throttle. The unloaded engine RPM should be set at 2350.

d. Check the governed engine speed with partial load. With engine at full throttle and the tilt lever in full backward tilt, momentarily hold the tilt lever back to load the engine. With the engine loaded in this manner, the approximate engine RPM should be 2200.

CAUTION

Prolonged stalling of the converter can cause internal damage to the converter. Stall converter only long enough to attain the peak RPM reading - maximum 30 seconds.

e. With a capacity load on the forks, check for normal stall RPM by positioning machine against

www.truck-freeworkshop.com/clark/

an immovable object, or by applying a correctly adjusted parking brake equipped with good brake linings. Place the machine in gear and accelerate engine to full throttle. Normal stall is 1450 to 1600 RPM.

f. If readings taken are not reasonably close to those listed above, appropriate repairs/adjustments should be made. Refer to Engine Tune-Up Procedures outlined in paragraph 4-37.

4-37. ENGINE TUNE-UP.

Engine tune-up is the orderly and systematic process of checking the engine and accessory equipment to maintain or restore satisfactory engine performance. Engine tune-up must be accomplished semi-annually and more frequently if engine performance indicates the need for these services. Perform engine tune-up as outlined in the following paragraphs after checking the following items:

a. Air Cleaner: be sure air cleaner has received proper service. Air cleaner must be installed before making engine tune-up.

b. Fuel Pump: be sure the fuel pump bowl and strainer has been properly serviced and the fuel pump is operating satisfactorily.

c. Torque Values for Threaded Fasteners: Engines have many studs, bolts, screws, and nuts of special material and varying sizes and it is very important to see that all such fasteners are torqued to the proper values in order that the engine will be restored to its original efficiency. Refer to the chart below for torque ratings of various fasteners.

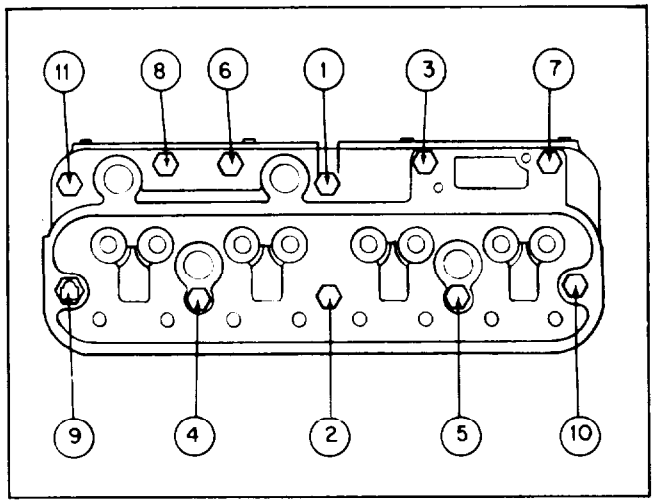

Figure 4-40. Cylinder Head Torque Check Sequence

4-38. CYLINDER HEAD FASTENERS TORQUE CHECK. Remove valve rocker arm cover from cylinder head and check all fasteners for correct torque. Refer to table in the preceeding paragraph for proper torque values. Check cylinder head gasket for leakage.

CAUTION

The sequence listed in illustration (Figure 4-40) must be followed. All hex capscrews or nuts must be tightened evenly and torqued in accordance with limits listed in paragraph 4-37.

Check intake and exhaust manifold fasteners for proper torque and check for evidence of gasket leakage .

Size (Diameter)	5/16	3/3	7/16	1/2	9/16	5/6
APPLICATION						
Cylinder Head		35-40	70-85	100-110	130-140	145-155
Manifold	5-20	25-30	40-50	50-60	50-60	60-70
Gear Covers, Pumps, Front and Rear End Plates	15-20	25-30	50-55	80-90		
Oil Pans	12-16	12-16				

NOTE: All *above values expressed in foot-pounds torque.*

www.truck-freeworkshop.com/clark/

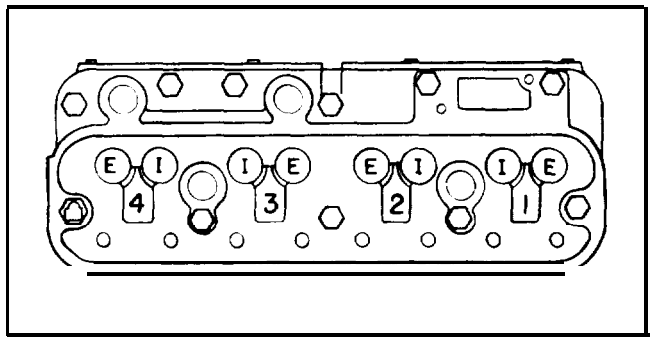

Figure 4-41. Valve Arrangement

Figure 4-42. Setting Valve Lash

4-39. VALVE CLEARANCE (LASH) ADJUSTMENT. Maintaining the proper valve lash setting is one of the most important factors relating to excellent engine performance and long life. Valve lash that is adjusted too tight causes the valves to operate too early and close too late. This does not allow the valve to remain on the seat long enough to cool properly and results in early valve warping and burning. When the valves are allowed to operate with too loose a setting, they open too late and close too early. When this condition exists, the ramp on the camshaft lobe, which slows down the closing of the valve before it contacts the seat, is not allowed to perform its function. Therefore, the valve strikes the seat while traveling at a very high speed, resulting in increased valve and camshaft wear and possible breakage of the valve due to the high impact force.

Note

Before adjusting the valve clearance, run the engine at approximately 1200 RPM, for a minimum of 30 minutes in order to stabilize engine temperatures. Then proceed as follows:

a. Reduce the engine speed to approximately 650 RPM, then shut engine off. Apply parking brake.

b. Remove the rocker arm cover hold down nuts.

c. Jar the rocker arm cover with the heel of your hand or a soft leather hammer to loosen the gasket from the cylinder head.

d. Remove the rocker arm cover.

e. "Bump" the starter and crank the engine until the No. 4 (farthest from fan end) exhaust valve is fully up and intake valve is just starting its downward stroke, At this point the No. 1 valves should both be up. See figure 4-41.

f. Loosen the lock nut and the adjusting screw on the rocker arm stud and with a flat feeler gauge adjust the intake valve clearance to have 0.010 inch. Adjust the exhaust valve to have 0.020 inch clearance - engine hot (normal water jacket temperature). See figure 4-42.

g. Now tighten the lock nut and continue with the other valves by cranking the engine until No. 3 exhaust valve is up and intake valve is just starting down. Now check and adjust No. 2 cylinder valve clearance as outlined in steps e, f and g above.

h. Crank engine until No. 1 exhaust valve is fully up and intake valve is just starting down. Check and adjust No. 4 cylinder valve clearance.

i. Finally, crank engine until No. 2 exhaust valve is fully up and intake valve is just starting down. Check and adjust valve clearance for No. 3 cylinder.

j. After all adjustments are made, clean the gasket surfaces, install a new valve cover gasket, and replace the valve cover.

www.truck-freeworkshop.com/clark/

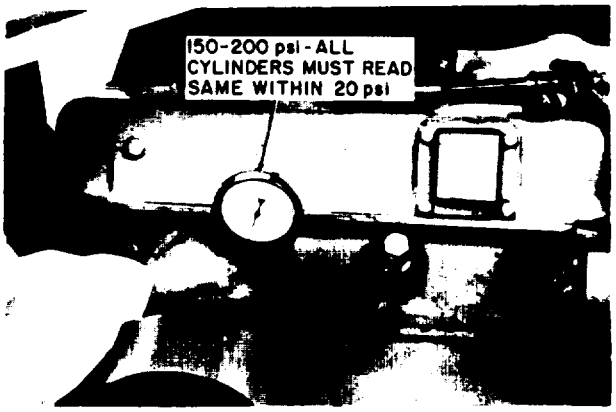

Figure 4-43. Compression Check

4-40. COMPRESSION CHECK. A cylinder compression test aids in determining the condition of the valves, rings and head gasket.

a. Be sure the battery is good. Operate the engine until normal operating temperature is reached. Turn the ignition switch off. Loosen the spark plugs, blow out any dirt in the spark plug wells, then remove the plugs.

b. Set the accelerator in the wide open position and be sure the choke is wide open.

c. Remove the coil high tension lead in the distributor, and ground it securely to the engine. Install a compression gauge in No. 1 cylinder. Crank the engine until the gauge registers a maximum reading and record the reading and note the number of compression strokes required to obtain this reading. See figure 4-43.

d. Repeat the test on each cylinder, cranking the same number of times that were needed to obtain the maximum reading on No. 1 cylinder.

e. During the compression test, the indicated pressure should rise evenly on each succeeding stroke until the maximum reading is obtained. If the pressure rise is erratic, or fails to rise on any stroke, a sticky or stuck valve is indicated.

f. The pressure should be approximately 150-200 pounds. However, the compression of all cylinders should be uniform within 20 pounds.

g. A reading of more than 10 pounds above normal indicates carbon or lead deposits in the cylinder.

h. A reading of more than 10 pounds below normal indicates leakage at the head gasket, rings, or valves.

i. A low even compression in two adjacent cylinders indicates a head gasket leak. This should be checked before condemning the rings or valves.

j. To determine whether the rings or the valves are at fault, squirt the equivalent of a tablespoon of heavy oil into the combustion chamber and repeat the compression test. The oil will temporarily seal leakage past the rings. If the same reading is obtained, the rings are satisfactory, but the valves are leaking. If the compression has increased 10 pounds or more over the original reading, it indicates there is leakage past the rings.

4-41. SPARK PLUG CHECK. Under normal conditions, these spark plugs will give long life performance with the normal maintenance listed in this manual. The spark plugs should be cleaned, tested and gapped at the recommended intervals.

a. Loosen the spark plugs one full turn, then blow any accumulation of dirt out of the spark plug wells before completing the removal.

b. Examine firing end of plug carefully and compare findings with figure 4-44. Careful analysis of spark plug deposits can reveal a great deal about engine operating conditions.

c. Remove carbon and other deposits from the threads with a stiff wire brush. Any deposits will retard the heat-flow from the plug to the cylinder head, causing spark plug overheating and pre-ignition.

d. Clean any heavy carbon deposits from the inside of the plugs with a thin-bladed knife, then finish cleaning them with an abrasive-type cleaner. Use the cleaner sparingly, as excessive abrasive blasting may damage the porcelain around the center electrode. If the porcelain is badly glazed or eroded, replace the spark plugs.

www.truck-freeworkshop.com/clark/

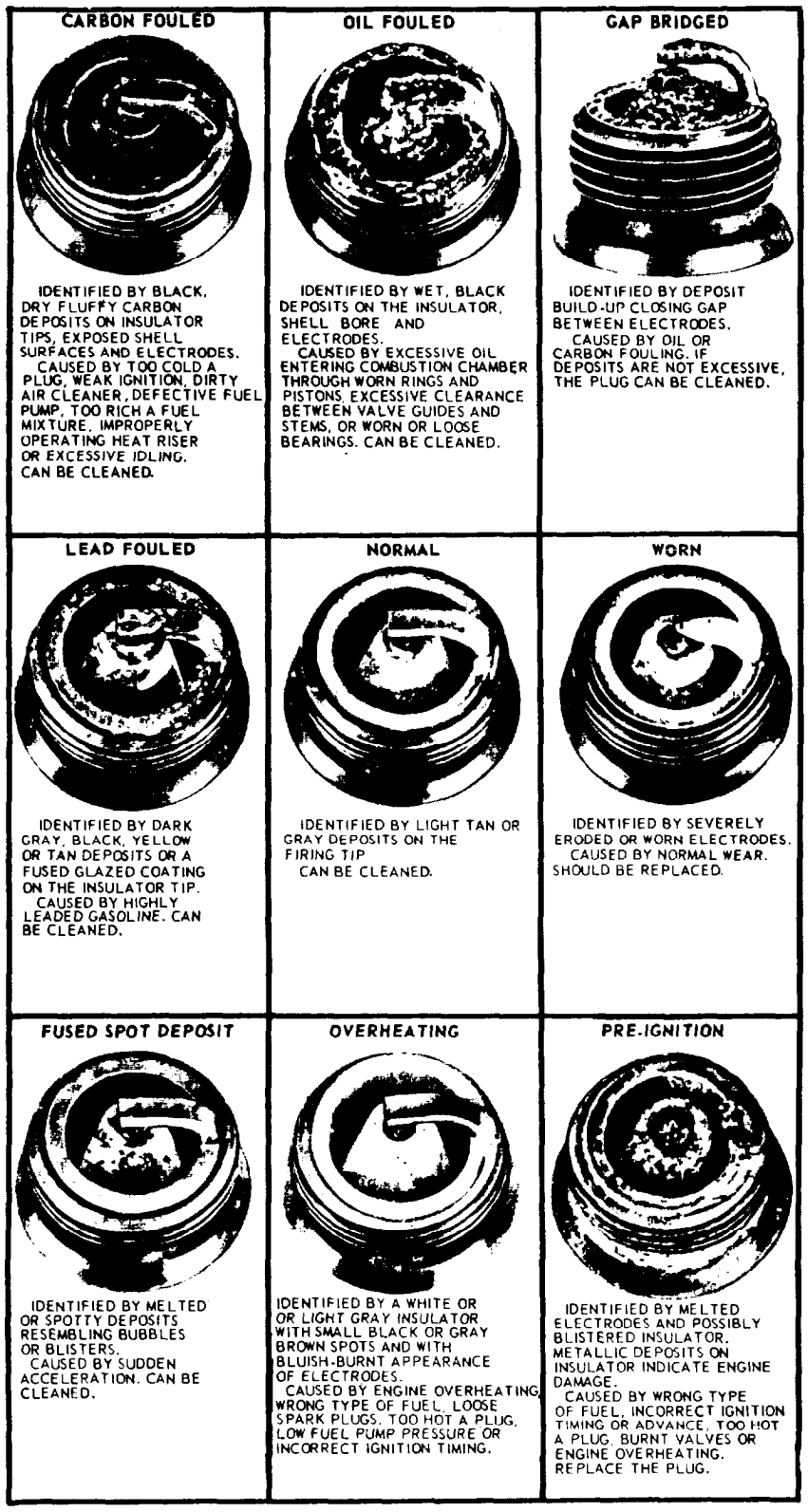

Figure 4-44. Spark Plug Inspection Chart

www.truck-freeworkshop.com/clark/

e. After cleaning, examine the plug carefully for cracked or broken insulator, badly eroded electrodes and other signs of failure. Replace as required.

f. Clean the electrode surfaces with a small file. Dress the electrodes to secure flat parallel surfaces on both the center and Bide electrode.

g. Adjust the spark plug gap to: Standard 0.025 inch, Resistor 0.035, by bending only the outside electrode. Use a round wire-type gauge to check the gap. If old spark plugs are reused, install with new gaskets. Torque to 35 pounds/feet.

Note

Do not overtighten spark plugs, the gap may change considerably due to distortion of the plug outer shell, or the insulator may be cracked.

4-42. SPARK PLUG WIRING REPLACEMENT. Whenever an examination of the high tension wiring reveals cracks, chafed areas, burned insulation or other deterioration, the wiring set should be replaced. Such poor insulation leads to rapid spark plug fouling and misfiring due to current leakage.

When removing the wires from the spark plugs - grasp, twist, and pull on the moulded cap only. Do not pull on the wire because the wire connections inside the cap may become separated or the weather seal may be damaged.

Removal: Disconnect wires at plugs and at the distributor cap. Remove coil high tension lead.

Installation: Connect wires to proper plugs. Insert ends of wires in the correct Sockets in distributor cap. Be sure wires are all the way down into their sockets and that they are held firmly in position. The No. 1 socket is identified on the cap. Install wires in a clockwise direction in the firing order 1-2-4-3, starting at No. 1 socket. NOW install coil high tension lead. Push all weather seals into position.

4-43. IGNITION COIL CHECKS. Check the coil for secure mounting. Wipe the coil with a damp cloth moistened in Stoddard type solvent and check for cracks in the coil case. Check coil terminals for tight connections and proper polarity.

4-44. DISTRIBUTOR CHECKS. Disconnect spark plug wiring at the distributor cap, remove distributor cap and make the following inspection:

a. **Distributor Cap:** Clean the distributor cap with a soft bristle brush and Stoddard type cleaning solvent. Dry the cap with compressed air. Inspect the cap for cracks burned contacts, permanent carbon tracks or dirt or corrosion in the sockets. Replace the cap if it is defective.

b. Rotor: Clean the rotor with a soft bristle brush and a Stoddard type cleaning solvent. The rotor should be dried with compressed air. Inspect the rotor for cracks or burning. Replace the rotor if it is defective.

c. Check the contact dwell. If the contact dwell is not within specifications, adjust the breaker points.

d. Check the breaker arm spring tension and adjust it if necessary.

4-45. CENTRIFUGAL ADVANCE. The spark advance is checked to determine if the ignition timing advances in proper relation to engine speed and load.

a. Connect the electrical leads of a distributor test set to the distributor. Do not connect the vacuum line to the diaphragm. Set the tester for 0 degree advance at 300 RPM.

b. Operate the distributor in the direction of rotation and slowly increase the RPM to the setting specified for the first advance reading listed in the specifications.

c. If the correct advance is not indicated at this RPM, stop the distributor and bend one spring adjustment bracket to change its tension. Bend the adjustment bracket away from the distributor shaft to decrease advance (increase spring tension) and toward the shaft to increase advance (decrease spring tension). After the adjustment is made, identify the bracket that is bent.

www.truck-freeworkshop.com/clark/

CONDITION	CAUSED BY
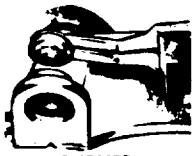 BURNED	ANY DISCOLORATION OTHER THAN A FROSTED GREY SHOULD BE CONSIDERED AS BURNED POINTS.
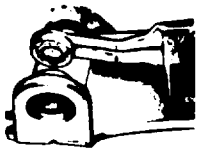 EXCESSIVE METAL TRANSFER OR PITTING	INCORRECT ALIGNMENT. INCORRECT VOLTAGE REGULATOR SETTING. RADIO CONDENSER INSTALLED TO THE DISTRIBUTOR SIDE OF THE COIL. IGNITION CONDENSER OF IMPROPER CAPACITY. EXTENDED OPERATION OF THE ENGINE AT SPEEDS OTHER THAN NORMAL.

Figure 4-45. Breaker Point Inspection

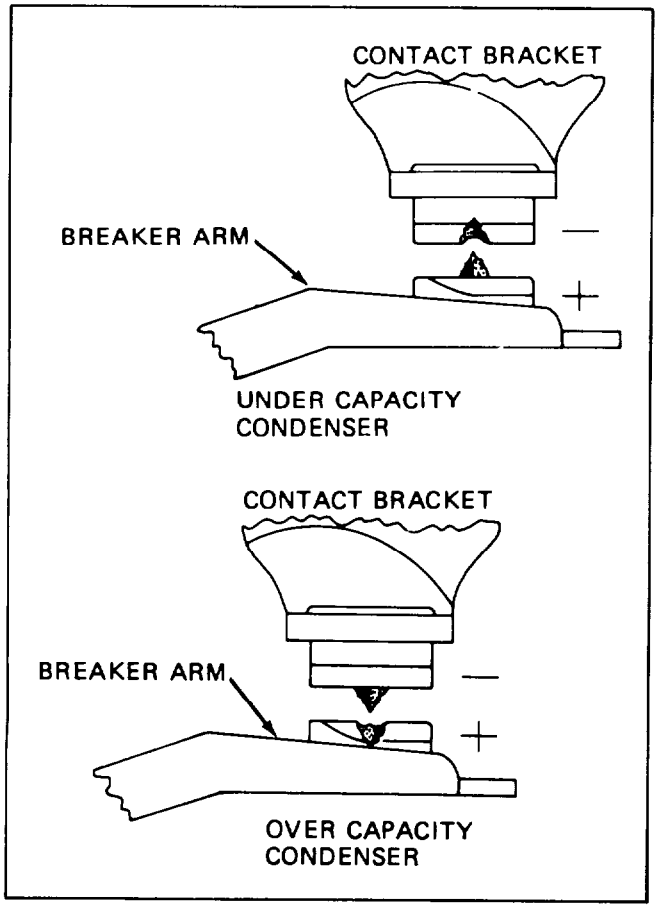

Figure 4-46. Breaker Point Metal Transfer

d. After an adjustment has been made to one spring, check the minimum advance point again.

e. Operate the distributor at the specified RPM to give an advance just below the maximum. If this advance is not to specifications, stop the distributor and bend the other spring bracket to give the correct advance.

4-46. BREAKER POINT INSPECTION. During the tune-up procedure, breaker points should be examined as outlined below, aligned and/or replaced, as necessary.

a. If points are pitted, burned or worn to an unserviceable condition, install a new set of points.

b. The normal color of contact points should be a light gray. If the contact point surfaces are black, it is usually caused by oil vapor, or grease from the cam. If they are blue, the cause is usually excessive heating due to improper alignment, high resistance or open condenser circuit.

c. Badly pitted points may be caused by a defective or improper condenser capacity. See figure 4-45.

d. If the condenser capacity is too high, the crater (depression) will form in the positive contact. If the condenser capacity is too low, the

www.truck-freeworkshop.com/clark/

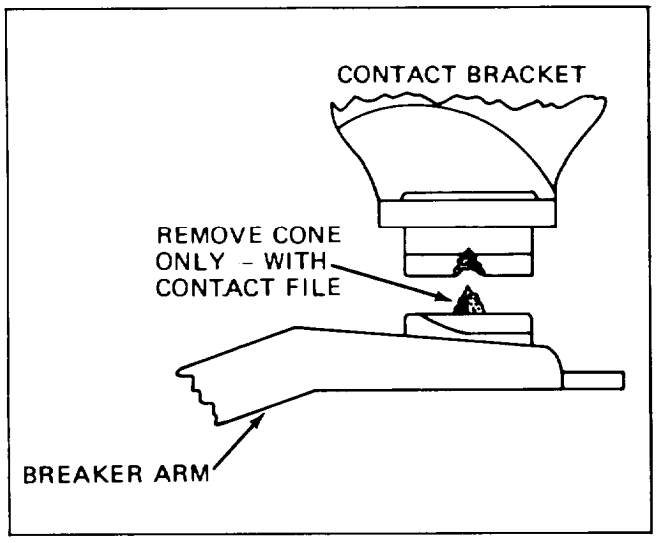

Figure 4-47. Filing Contact Points

crater will form in the negative contact. See figure 4-46.

e. For a temporary repair, dress the contact points with a few even strokes using a clean fine-cut contact file. Do not attempt to remove all roughness or dress the point surfaces down smooth. See figure 4-47.

CAUTION

Never use emery cloth or sandpaper to clean points as particles will be imbedded in the points and cause arcing and rapid burning.

4-47. BREAKER POINT ALIGNMENT. The breaker points must be accurately aligned and strike squarely in order to realize the full advantages provided by this design and assure normal breaker point life. Any misalignment of the breaker point surfaces will cause premature wear, overheating and pitting.

a. Turn the cam so that the breaker points are closed and check the alignment of the points. Contact area should be centered. See figure 4-48.

b. Align the breaker points to make full face contact by bending the stationary breaker point bracket. Do not bend the breaker arm.

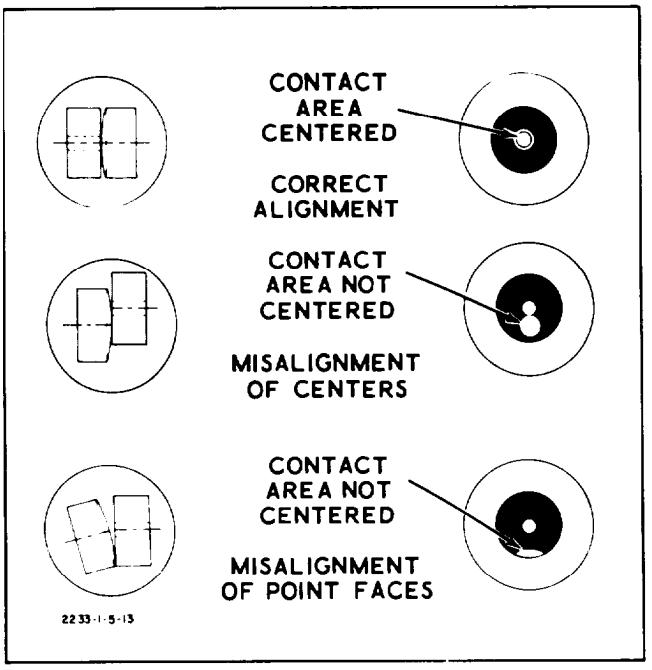

Figure 4-48. Breaker Point Alignment

c. After the breaker points have been properly aligned, adjust the breaker point gap or dwell.

4-48. POINT GAP ADJUSTMENT. A scope, a dwell meter, or a feeler gauge can be used to check the gap of new breaker points. A scope or a dwell meter can be used to check the gap of used breaker points. Due to the roughness of used points, it is not advisable to use a feeler gauge to check the gap*

a. Remove distributor cap and check and correct point alignment, if necessary.

b. Rotate the distributor until the rubbing block rests on the peak of a cam lobe.

c. If the distributor is in the engine, place the rubbing block on the peak of the cam by proceeding as follows:

d. With the ignition switch off, crank the engine by using an auxiliary starter switch between the S and battery terminals of the starter relay.

e. Insert the correct blade of a clean feeler gauge between the breaker points. (For points opening Spec. Refer to Table I, page 1-3).

www.truck-freeworkshop.com/clark/

f. Insert a screwdriver blade into the adjustment slot in point set and breaker plate as shown in figure 4-49.

g. Rotate screwdriver blade until only a very slight drag is felt on feeler gage. This represents proper adjustment. Make certain that the screw securing the stationary contact is tightened after adjustment is made.

h. Set the ignition timing. If scope or a dwell meter is used to adjust new points, be sure the points are in proper alignment. Also, set the contact dwell to the low setting.

4-49. POINT SET REPLACEMENT. If point set is burned or badly pitted, it should be replaced as follows:

a. Remove the distributor cap and rotor.

b. Disconnect the primary and the condenser wires from the breaker point assembly.

c. Remove the breaker point assembly and condenser retaining screws. Lift the breaker point assembly and condenser out of the distributor.

d. Place the new breaker point assembly and new condenser in position and install the retaining screws.

e. Align and adjust the breaker point assembly.

f. Connect the primary and condenser wires to the breaker point assembly.

g. Install the rotor and the distributor cap.

4-50. IGNITION TIMING ADJUSTMENT. (See figure 450.) Ignition timing is indicated by a pointer affixed to the engine, which aligns with the edge of the crankshaft pulley. The pulley is marked with two notches, one indicating exact Top Dead Center (TDC) at the time No. 1 spark plug fires. The other notch indicates 5° before TDC. A neon timing light is used to illuminate the pulley at the time the spark plug fires.

a. Remove the plug wire from No. 1 spark plug.

b. Install spark plug adapter on spark plug.

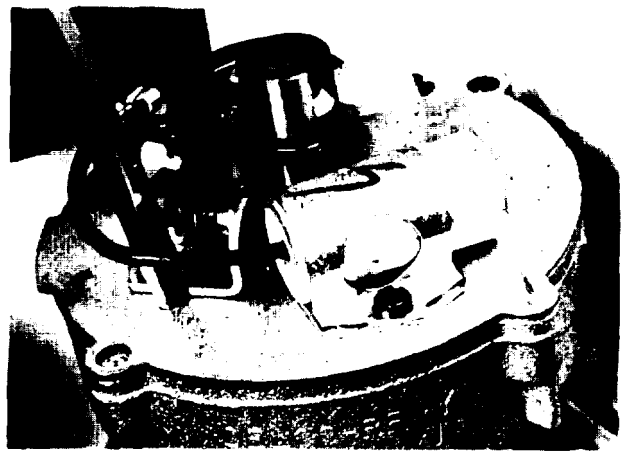

Figure 4-49. Setting Point Gap

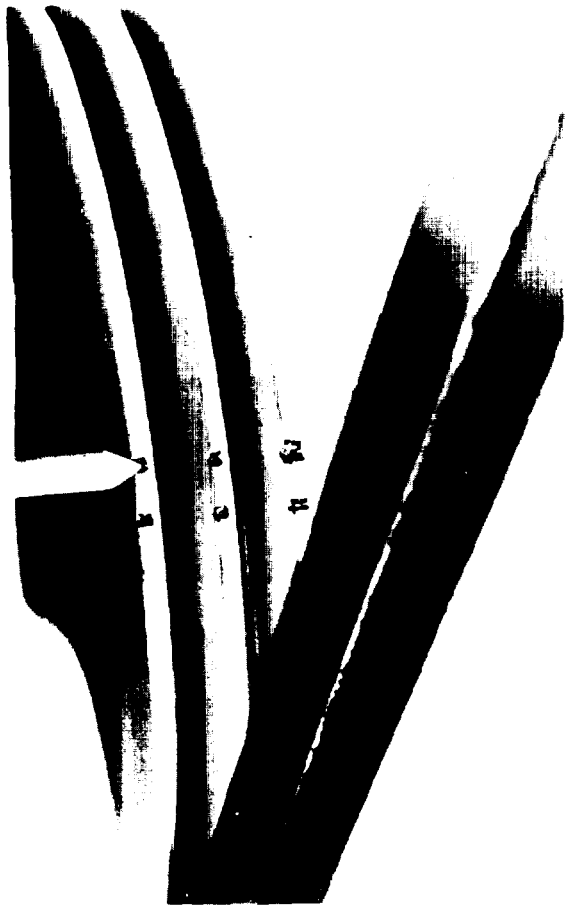

Figure 4-50. Timing Pointer and Crankshaft Pulley

www.truck-freeworkshop.com/clark/

Figure 4-51. Checking Timing with Timing Light

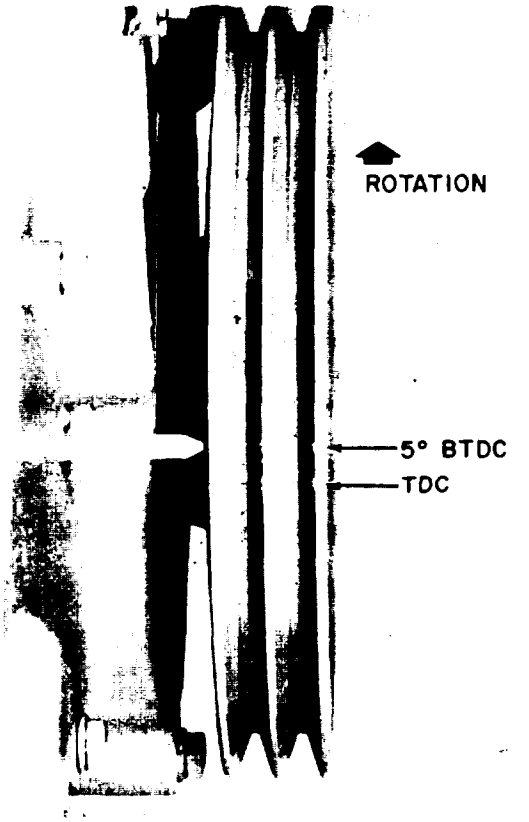

Figure 4-52. Timing Marks

c. Connect plug wire to spark plug adapter.

d. Clamp timing light spark plug lead to the spark plug adapter.

e. Connect timing light battery leads to battery terminals.

f. If necessary, clean and mark the timing marks.

g. Operate the engine at the specified idle RPM and point the timing light at the timing pointer. See figure 4-51.

h. If the timing is incorrect, loosen the distributor hold down bolt and rotate the distributor until the desired initial advance is obtained. See figure 4-52.

i. Tighten the distributor hold down bolt and check the timing again.

j. Remove the timing light and connect the vacuum line.

4-51. INTAKE MANIFOLD VACUUM TEST. A manifold vacuum test aids in determining the condition of an engine and also in helping to locate the cause of poor engine performance. To test manifold vacuum: CAUTION: Set parking brake before attemptinq test.

a. Operate the engine at 1200 RPM until normal operating temperature is reached.

b. Install an accurate, sensitive vacuum gauge on the fitting in the intake manifold. See figure 4-53.

c. Operate the engine at idle RPM with the load disengaged (transmission in Neutral).

d. Check the vacuum reading on the gauge which should be 18 inches or higher.

e. Check vacuum at maximum governed speed

www.truck-freeworkshop.com/clark/

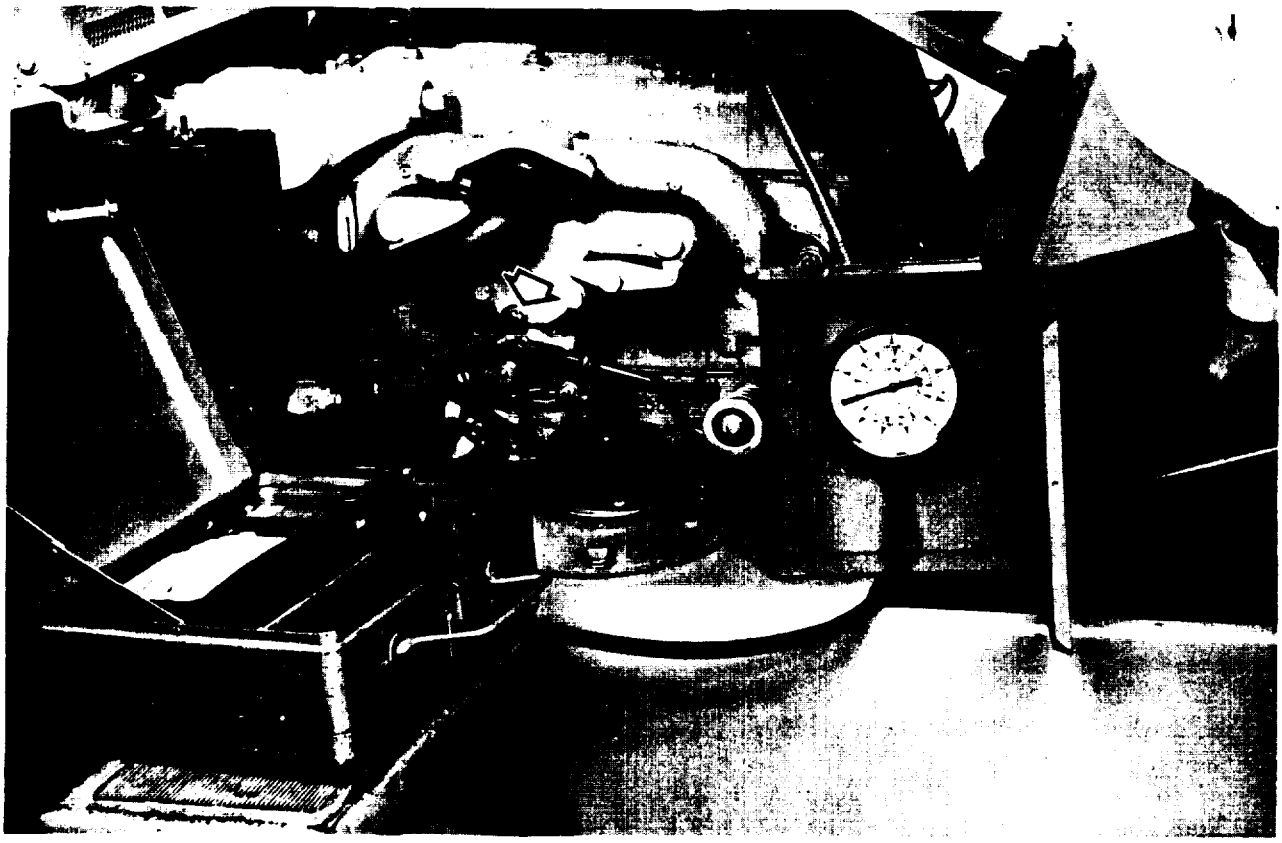

Figure 4-53. Intake Manifold Vacuum Test

(2150 RPM) which should be 14-16 inches.

f. With operator on seat and engine at full throttle, hold tilt lever all the way back, and read vacuum which should be 4 to 6 inches.

g. Set parking brake firmly. Place transmission m FORWARD range and accelerate engine to full stall speed. At stall, vacuum should read 0 to l-1/2 inches.

h. Manifold vacuum is affected by carburetor adjustment, valve timing, the condition of the valves, cylinder compression, and leakage at the intake manifold, carburetor, or cylinder head gasket.

i. Because abnormal gauge readings may indicate that more than one of the above factors is at fault, use caution in analyzing an abnormal reading. For example, if the vacuum is low, the correction of one item may not increase the vacuum enough to indicate that the trouble has been corrected. It is important, therefore, that each cause of an abnormal reading be investigated and further tests conducted where necessary in order to arrive at the corrected diagnosis of the trouble.

j. Allowance should be made for the effect of altitude on the gauge reading. The engine vacuum will decrease with an increase in altitude.

4-52. FUEL MIXTURE AND IDLE SPEED ADJUSTMENT.

4-53. INITIAL IDLE MIXTURE ADJUSTMENT (See Figure 4-54). Set the preliminary idle mixture by turning the idle mixture screw in ward (clockwise) until it is lightly seated, then turn the screw outward (counterclockwise) 1 to l-1/2 turns. Do not turn the screw needle tightly against its seat as this may groove the end. If the needle is

www.truck-freeworkshop.com/clark/

Figure 4-54. Idle Mixture Adjustment

damaged it must be replaced before a satisfactory fuel mixture can be obtained.

4-54. INITIAL IDLE SPEED ADJUSTMENT (See figure 4-55). A stop screw at the throttle lever flange of the carburetor controls the engine idle speed. Turn the screw outward (counterclockwise) to increase the engine idle speed and inward (clockwise) to decrease the engine idle speed. Initial idle adjustment will automatically set the preliminary fast idle (hot engine) RPM required.

a. Position the choke control lever so that the choke plate is fully open.

b. Seat the throttle plate in the throttle bore. Set the idle adjusting screw to just make contact with the cam contour; then, turn the screw outward (counterclockwise) 1-1/2 turns.

4-55. FINAL IDLE MIXTURE AND SPEED ADJUSTMENT. The final idle fuel mixture and engine idle speed is adjusted to settings for a hot engine.

a. Operate the engine until the engine temperatures are stabilized at a hot, normal operating temperature.

b. Place the transmission control lever in neutral position and set the parking brake.

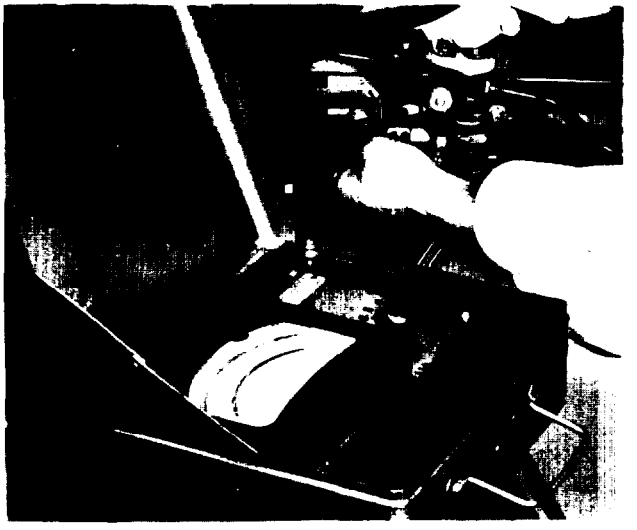

Figure 4-55. Idle Speed Adjustment

c. Turn on the head lamp to place the alternator under a load condition in this manner in order to obtain the specified idle speed during the adjustment procedure.

d. Attach a tachometer to the engine.

e. Make sure the choke plate is fully opened. With the transmission selector lever in neutral position, turn the idle speed adjustment screw in a direction to obtain the specified engine idle RPM (500 to 550). Open the throttle by hand and allow it to close normally.

f. Place the transmission selector lever in FORWARD range and adjust the idle speed to specifications (500 to 550). The engine idle speed is adjusted first with the automatic transmission selector lever in neutral. The final idle speed and fuel mixture adjustments are made with the transmission selector lever in gear.

g. Turn the idle fuel mixture adjustment screw inward until the engine RPM begins to drop due to the lean mixture. See figure 4-54. Turn the idle fuel mixture screw outward until the engine RPM increases and begins to drop; then, turn the idle mixture screw inward for maximum engine RPM and smoothness. Always favor a slightly rich fuel mixture.

www.truck-freeworkshop.com/clark/

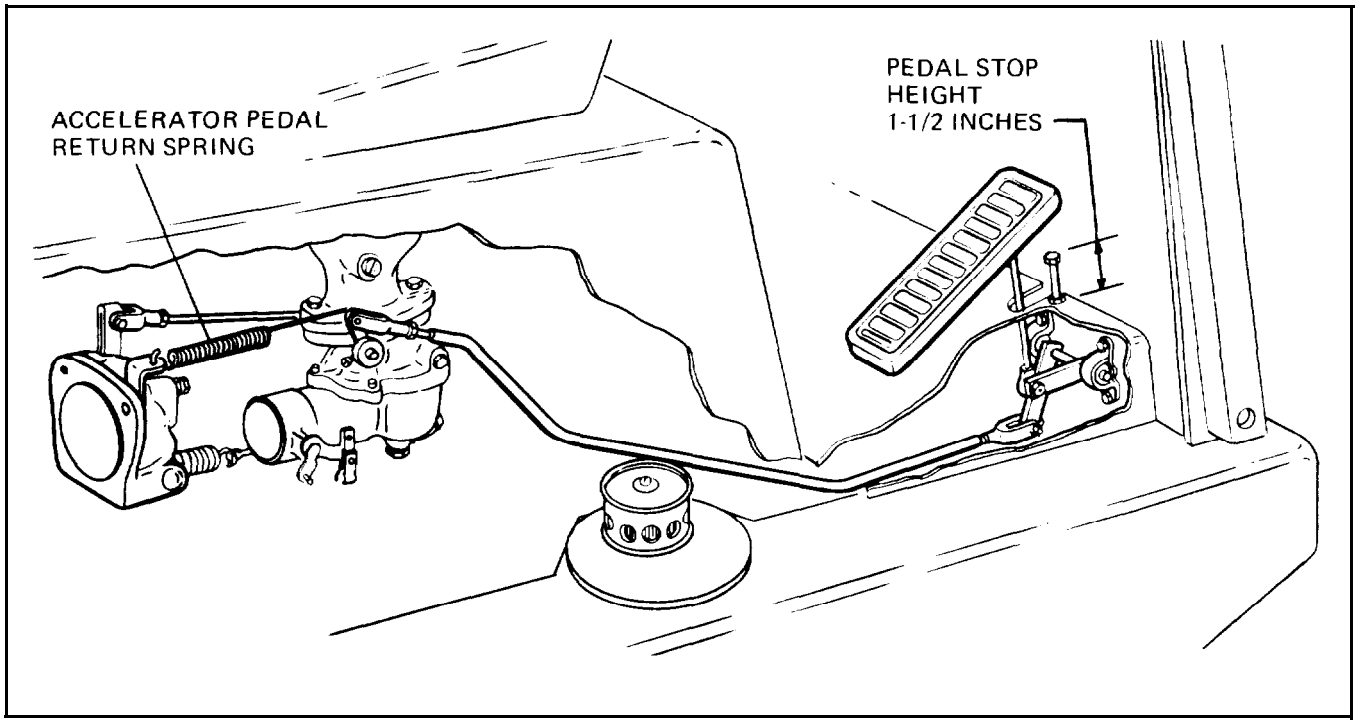

Figure 4-56. Pedal and Linkage Adjustment

h. Check the engine idle (hot engine) speed and adjust it to specifications, if necessary. See figure 4-55 for adjustment point.

j. Place the transmission selector lever in neutral. Shut off the engine and switch off the headlamp. Remove the tachometer.

4-56. GOVERNOR AND LINKAGE ADJUSTMENTS. The governor of this engine is external and is a flyweight type driven off the idler pump drive gear. It is extremely accurate when properly set, and is adjusted as follows:

a. With engine shut down, remove the accelerator pedal return spring, as shown in figure 4-56.

b. Then check and, if necessary, adjust accelerator pedal stop height which must be 1-1/2 inches.

c. Refer to figure 4-57 and adjust governor linkage as follows;

d. With governor spring (1) connected, push with finger at (2) until breakover arm (3) contacts governor arm (4).

e. Adjust clevis (5) to obtain 1:32 of an inch clearance at (6).

f. Then, adjust the accelerator pedal clevis (7) to obtain 1/32 of an inch clearance at the carburetor throttle shaft breakover arm (8).

g. Start the engine and check no-load maximum governed speed, which should be 2350 RPM. If this speed is low, adjust governor spring tension at point (1) by loosening locknut on adjusting rod, and tightening adjusting nut until proper engine speed is obtained.

h. Tighten locknut at point (1) securely after adjusting spring tension.

4-57. STEERING SYSTEM MAINTENANCE.

4.58. ADJUSTMENT CHECK. The following check may be made to determine if steering system is operating within original design limits.

www.truck-freeworkshop.com/clark/

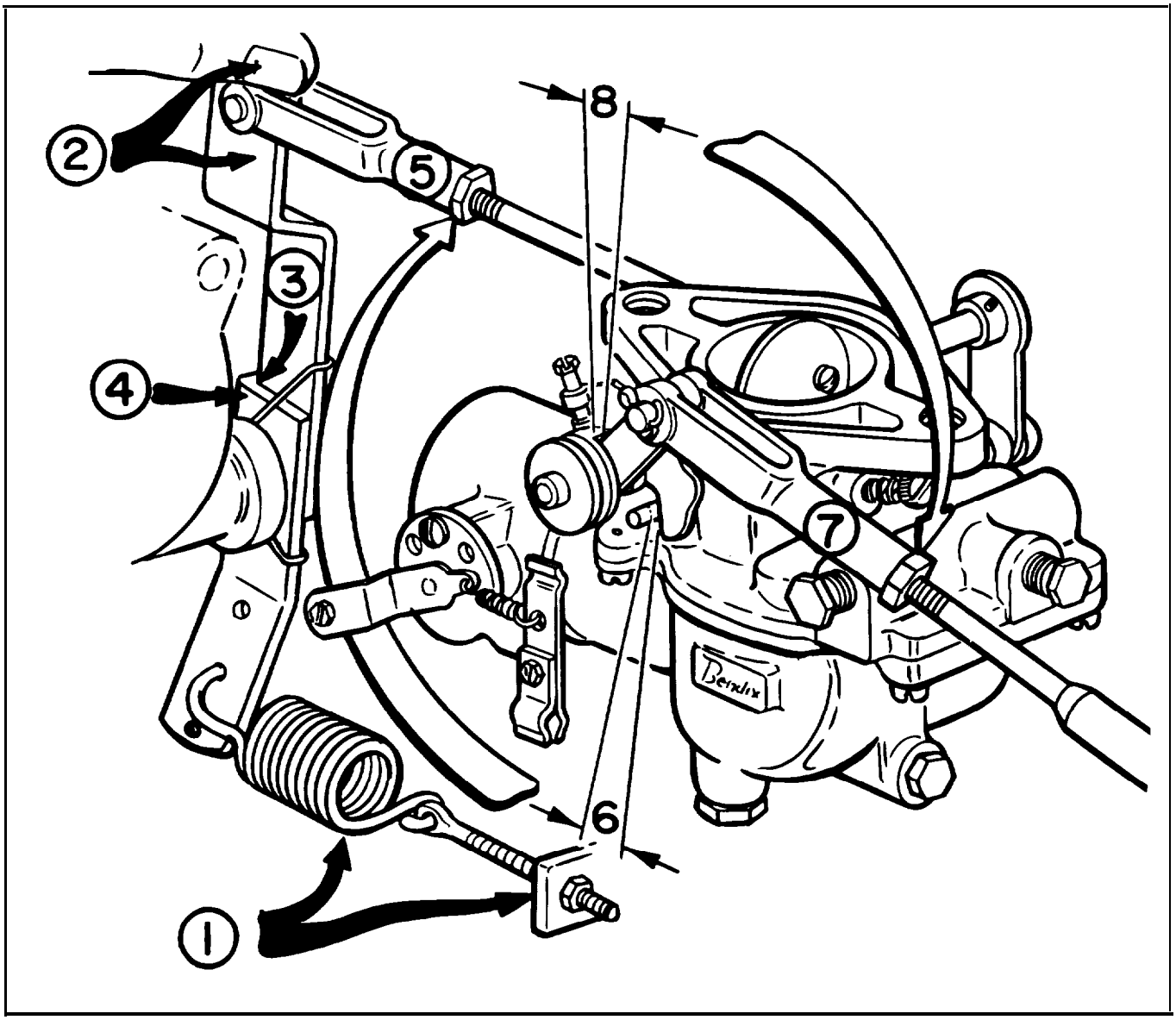

Figure 4-57. Governor and Linkage Adjustment

a. Start the engine and run at idle until it has warmed to normal operating temperature.

b. Rotate steering wheel one full turn clockwise, listening to see if pump starts by-passing through the relief valve. No relief by-pass sound should be heard.

Note

Operation of steering pump when by-passing through the relief valve is indicated by an audible hissing sound from the pump.

c. Rotate steering wheel counterclockwise to one full turn past the straight-ahead position, again listening for the sound of by-pass operation. No indication of by-pass operation should be heard.

d. If pump is by-passing during either phase of the above check, then the steering system adjustments outlined in paragraph 4-59 will have to be performed.

www.truck-freeworkshop.com/clark/

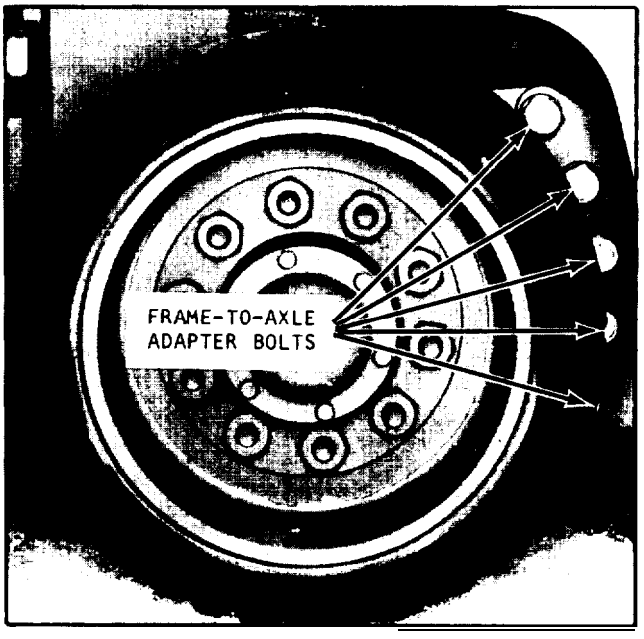

#10978 Typical Frame-To-Axle Adapter Bolts

STEERING SYSTEM ADJUSTMENT:

NOTE

In making power steering adjustments, we are out to acomplish these basic things:

(a) To torque all i terns which have a bearing on steering.
(b) To eliminate end play and free play of the hand wheel.
(c) To center the hand wheel and the pitman arm with the steer wheel s straight.
(d) To eliminate any steering linkage looseness caused by wear or misadjustment.
(e) To set the pitman arm stops so that the power steering pump will operate at its minimum pressure when steer wheels are turned full right and full left. . ..with steer wheels off the ground.

The following procedures will I achieve these objectives. They are laid out to enable you to do a thorough job, and at the same time, do it efficiently and fast. . , .without jumping around or backtracking. Thus, it will pay you to follow the steps in the order given. It is also important to remember that incorrect power steering adjustments can shorten the life of various steering system components.

Before starting any adjustment, strip the truck down to a point where you can get at the conponents . This includes: Removing the side hoods, removing the floor board, and removing the entire seat assembly.

With these operations out of the way, we can now continue with the step-by-step procedures.

1. Check and adjust the tilt cylinder rods to eliminate upright racking. Torque tilt cylinder yoke nuts 80 to 90 lbs./ft.

2. Torque the frame-to-axle adaptor bolts to 620-730 lbs./f t. It is necessary to remove the wheels on pneumatic tire machines.

WARNINC

DEFLATE TIRES BEFORE REMOVING FROM MACH I NE.

AFTER RAISING MACHINE AND BEFORE MAKING ANY ADJUSTMENTS OR ADJUSTMENT CHECKS, PLACE ADEQUATE (HEAVY) BLOCKING (SUFFICIENT TO SUPPORT THE WEIGHT OF THE MACHINE) UNDER THE FRAME.... NOT UNDER THE COUNTERWEIGHT....TO PREVENT ACCIDENTAL LOWERING OR FALLING OF THE VEHICLE, THUS PREVENTING PERSONAL INJURY TO MECHANIC OR BYSTANDERS.

NOTE

Torque the center capscrew first; then, torque the top capscrew....then, torque the bottom capscrew. Recheck torque, again starting with the center capscrew.

www.truck-freeworkshop.com/clark/

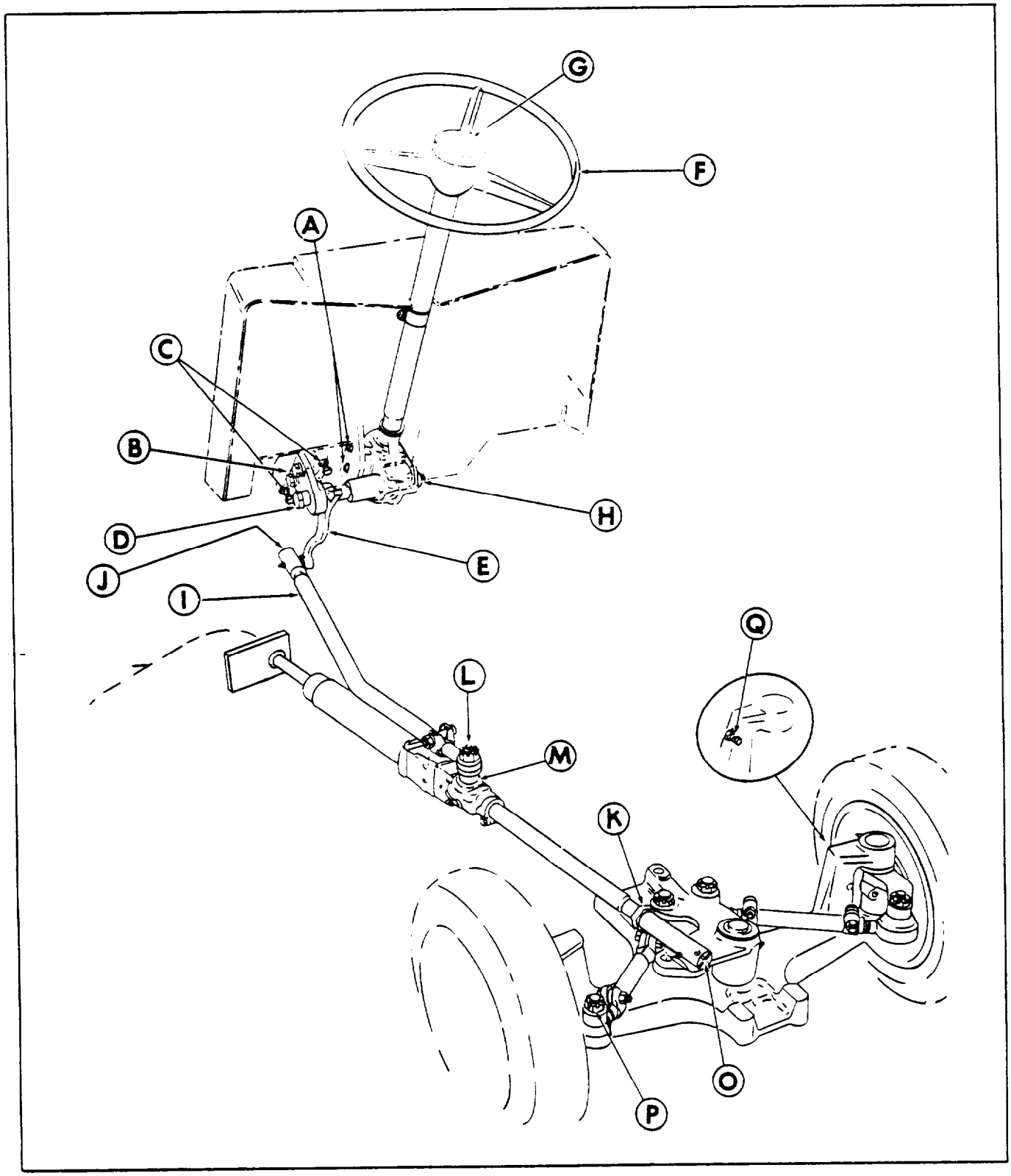

www.truck-freeworkshop.com/clark/

3. Now... check the torque of the steering gear mounting bolts (refer to ' Plate 9856):

Steer gear to frame bolts (A); 40-50 Ibs./ft.

Outboard bearing bolts (B): 110-150 Ibs./ft.

Al1 the above torqueing steps must be carried out each time you perform power steering adjustments.... because each of the items torqued has a definite bearing on the steering characteristics of the truck. With these torqueing steps out of the way. . ..we can now get to work on checking out the steering system.. , . starting by determining whether there is hand wheel end play.

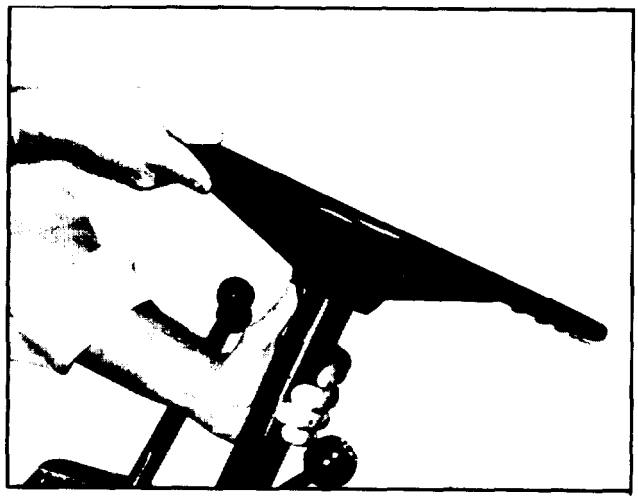

#9843. Typical Hand Wheel End Play Check

4. To check for hand wheel end play.... first place the steer wheels in a straight position. Then.... place your left hand on the steering column with your thumb just touching the hand wheel mounting base, as shown. Now,, . turn the hand wheel, with the right hand, back and forth. Any up and down movement indicates:

(a) That the steering shaft thrust adjustment screw at the base of the steering shaft must be drawn up.

5. If the capscrews that secure both caps are loose, tighten them securely (#9844).

6. If there is still end play in the steering shaft, loosen the steering shaft thrust adjusting screw locknut....and turn the adjusting screw in until end play is eliminated. Then... tighten the adjusting screw locknut (#9845).

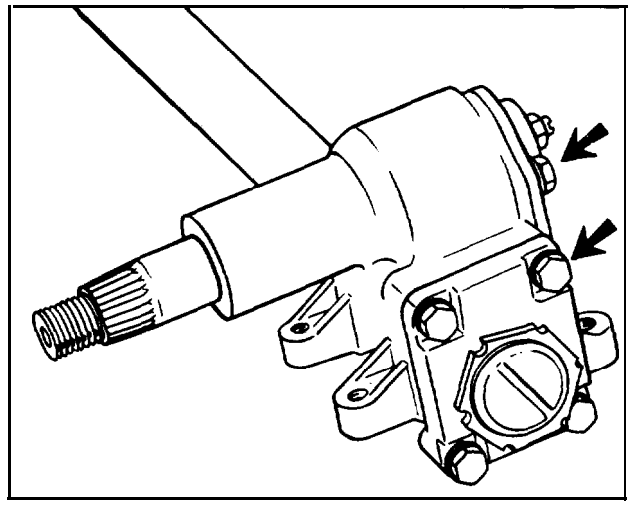

#9844. Typical Side & End Caps Security Check

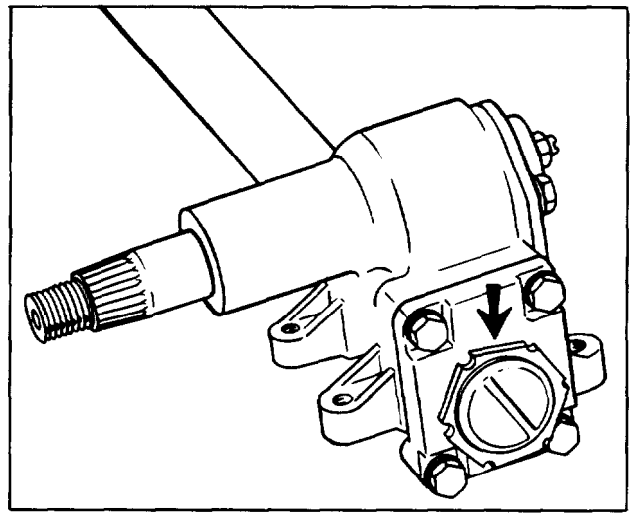

#9845. Typical Thrust Adjustor Check

7. With end play eliminated, now check to make sure the hand wheel and pitman are are centered in relationship to the steering gear. To do this.... remove the pitman arm stop jam nuts (C) and completely back off the pitman arm in both directions.

8. Now.... turn the hand wheel as far as possible in both directions. The pitman arm should not contact either stop. If the pitman arm does hit a stop, then....reposition it on the shaft one spline to the right or the left... to center it between the stops.

www.truck-freeworkshop.com/clark/

NOTE

In some cases the pitman arm may barely contact the stops when the hand wheel is fully turned right or left. In such cases it i s not necessary to reposition the pitman arm on the shaft, since final adjustment of the pitman arm stops will correct this condition.

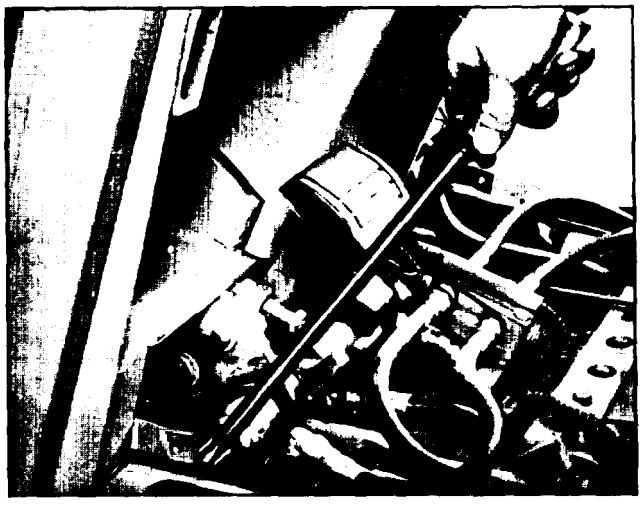

9848. Typical Pitman Arm Shaft Locknut Torque

9. Torque the pitman arm shaft locknut (I tern D) 105-130 pound feet....even when you haven' t had to reposition the pitman arm.

10. With the pitman arm (E) and steering gear centered., . . next check for free play between the hand wheel and pitman arm....by turning the hand wheel. The pitman arm should move the instant the hand wheel moves,

11. Then.... center the steering gear by turning the hand wheel (F) full right to full left . . ..counting turns from right to left and bringing the hand wheel back to its halfway position. When installing the hand wheel . . . . torque the hand wheel nut (G) to 35 to 40 pound feet....and, using a prick punch, stake the nut to the shaft.... in two places 180 degrees apart. If the hand wheel has three evenly spaced spokes . . . . then spoke position can be disregarded.

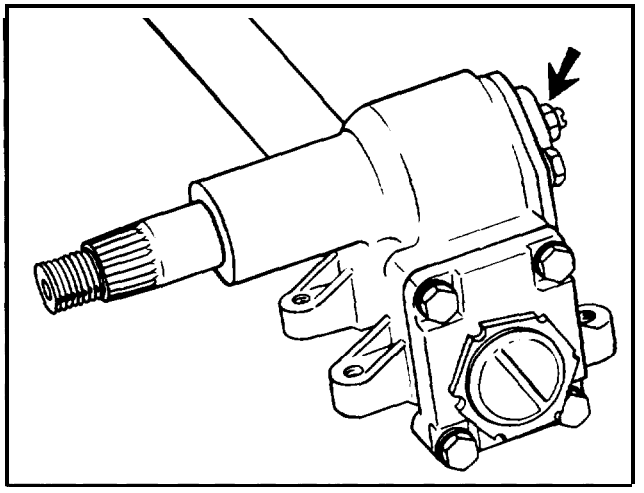

9846. Typical Sector Lash Adjustment Screw

12. If the pitman does not move instantly . . . . loosen the jam nut on the sector lash adjustment screw (H) and turn the adjustment screw in until all free play between the hand wheel and pitman arm is eliminated. Then....tighten the jam nut,

reconnect the front drag link (1) to the pitmen are. Torque the front drag link ball stud adjusting screw (J) to 18-22 pound feet, and back if off to the nearest hole, install cotter pin.

14. Be sure cylinder piston rod stroke is centered so that piston does not bottom out in either direction.

15. With the cylinder and steering gear centered, the steer wheels should be straight. If they are not... it will be necessary to adjust the rear drag I ink (K) as we check out the linkage.

www.truck-freeworkshop.com/clark/

16. Now check for free play caused by loose or misadjusted linkage. TO do this...first, torque the cylinder valve control ball stud nut (L) to 90 to 110 pound feet. Then...check the cylinder valve control stud (M) for movement before the steer wheels move. Its normal allowable total valve travel is about l/4". If ball stud travel exceeds this.. . .cylinder removal and adjustment will be required.

17. Then.. . inspect the rear drag I ink. If necessary, adjust it to assure that the steer wheels are straight with cylinder and steering gear centered, making certain to tighten the locknut shown after the adjustment is made. Tighten the rear drag link ball socket screw (0) to 18-22 pound feet and back if off to nearest hole.

18. Now...inspect the steer axle stop lock- replace them. If you replace the tie rods the measurement for the tie rod is 12 11/16" from center tie rod. If the tie rod stud is loose, tighten the stud nut. The tie rod stud nut should be torque to 68-82 lbs. ft., then increase to next cotter slot.

19. Now... inspect the steer axle stop locknuts (Q) for tighteness. If an axle stop is missing...install a stop...making certain to maintain a 78 degree steer wheel angularity for sol id tired trucks. For pneumatic tired trucks, the steer wheel anguiarity is 75 degrees.

20. Then . ..place masking tape on right and left spindle arm. PI ace tape on the spindle stop bolt head, on some model s. Now.. .connect a tachometer and start the engine with the transmission in neutral. With the engine running at 500 RPM, turn the hand wheel full right and full left so that each steer wheel contacts its axle stop (stop contacts tape) or until engine speed decreases.

21. Then.. . shut off the engine and check the masking tape for an imprint. Both tapes should have an imprint. If one of the tapes has no imprint.. . then the rear drag link is out of adjustment and must be adjusted so that the tape will be imprinted when the wheel is fully turned.

22. When both tapes are imprinted, we are ready for final adjustment... .which is the setting of the pitman arm stops. There are two ways of doing this.... with a pressure gauge or with a tachometer. The use of a pressure gauge is preferred, however, because it provides more accurate readings.

23. When using a pressure gauge, hook up the gauge in the pressure line going to the power steering cylinder.

Now. . .with the parking brake set, the truck blocked up, the transmission in neutral and the engine idling, turn the hand wheel to the extreme right.... until the axle stop makes contact and you get a sharp rise in pressure. Then back off hand wheel until pressure drops to a minimum: Hydracool 90 PSI and Hydratork 70 PSI.

24. When minimum pressure is reached, hold the hand wheel at this position and screw in the pitman arm adjusting screw until it touches the pitman arm. Then back off the hand wheel and turn the pitman arm adjusting screw one full additional turn toward the pitman arm.

25. Now... tighten the stop bolt jam nut (C) . . .which must always be installed as shown. Then, turn the hand wheel to contact the adjusting screw with considerable force. The pressure should not rise above the minimum' pressure specified.

Repeat the same procedures for the left turn adjustment.

When the tachometcr only is being used, the same routine is followed except that instead of reading pressures, you will read RPHs. With the engine running at 500 RPH, turn the hand wheel to the extreme right until the RPM drops. Then.... slowly back off the hand wheel until engine speed canes back to 500 RPM.

When 500 RPM is reached, hold the hand wheel at this position and screw in the pitman arm adjusting screw one full additional turn toward the pitman arm...and install and tighten .the adjusting screw jam nut. Now. . . turn the hand wheel to contact the adjusting screw with considerable force. The engine speed should not decrease. Repeat these same procedures for the left turn adjustment.

When the above adjustments have been made, disconnect any gauges used and lubricate a11 axle and linkage points. Then lower the truck to the floor and install the seat assembly, floor board, and side hoods.

www.truck-freeworkshop.com/clark/

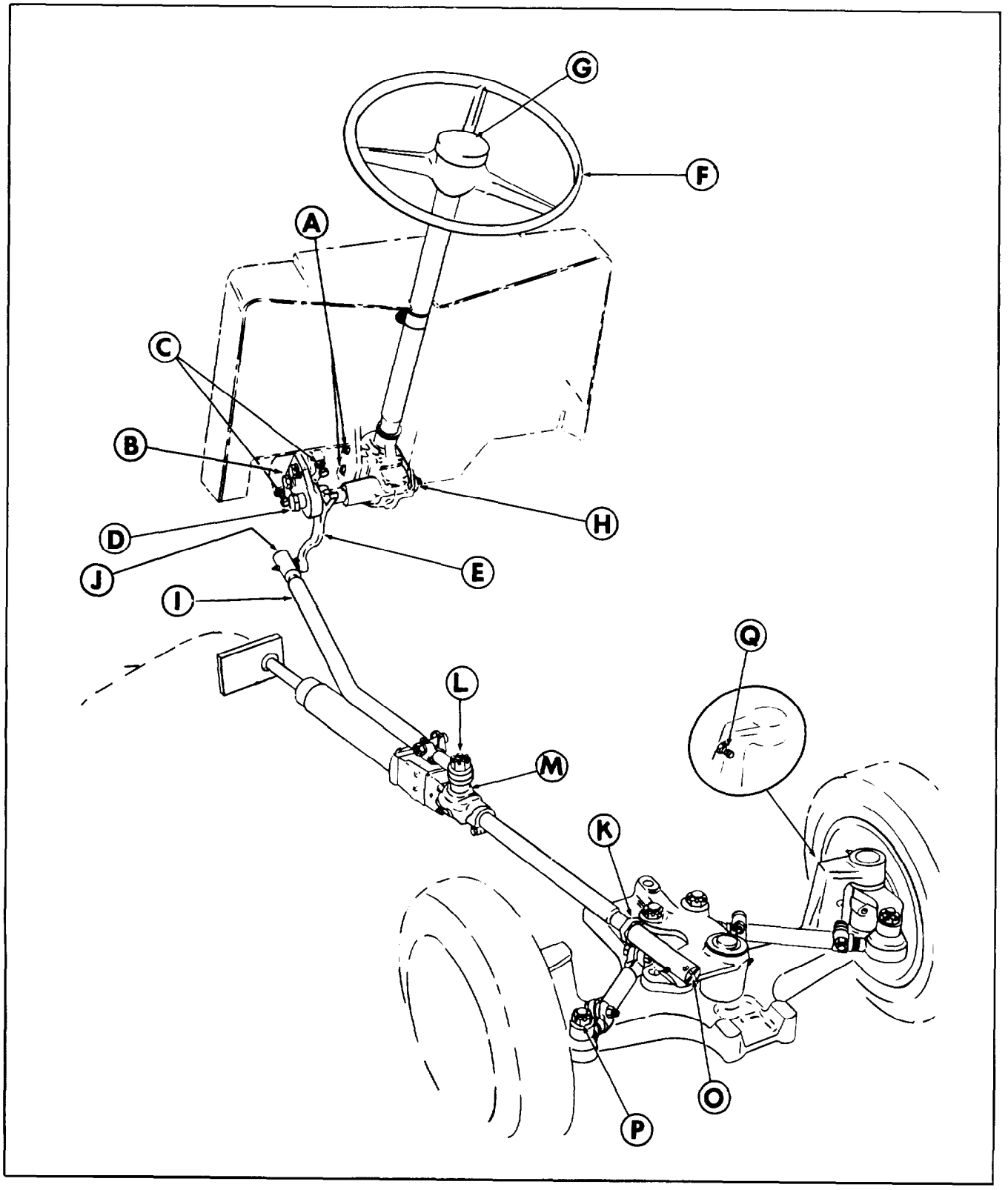

www.truck-freeworkshop.com/clark/

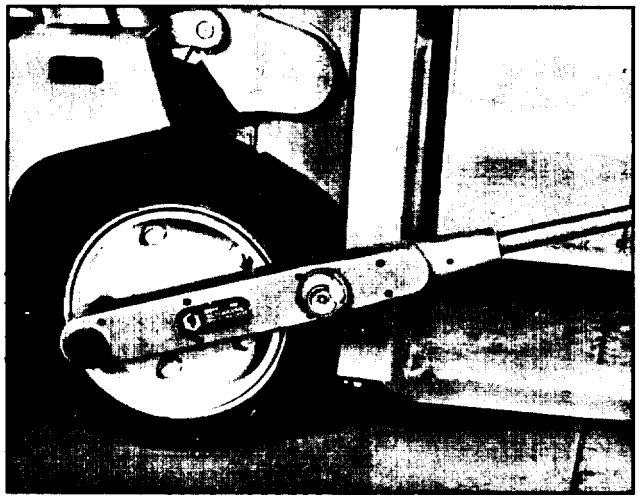

#9852. Typical Drive Wheel Lug Nuts Torque

26. Now... torque all drive wheel lug nuts to the correct torque: STD & TTU, 290-390 lbs.ft. and wide drive, 190-225 lbs.ft.

The above specifications cover both cushion and pneunatic tire model machines.

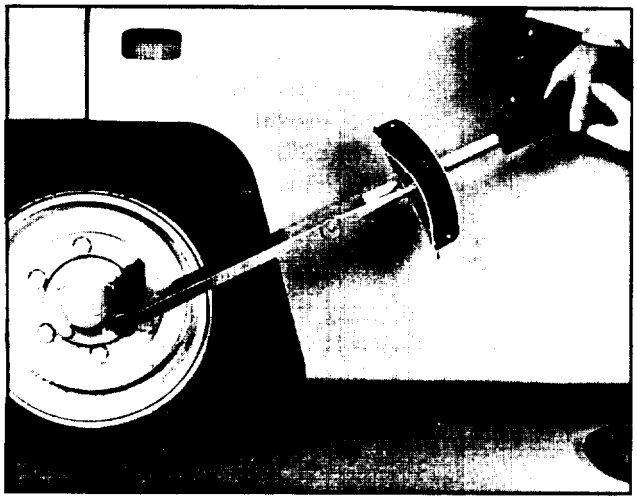

#9853. Typical Steer Wheel Lug Nuts Torque

27. Then. . . torque all steer wheel lug nuts to 100-140 pound feet...all model s.

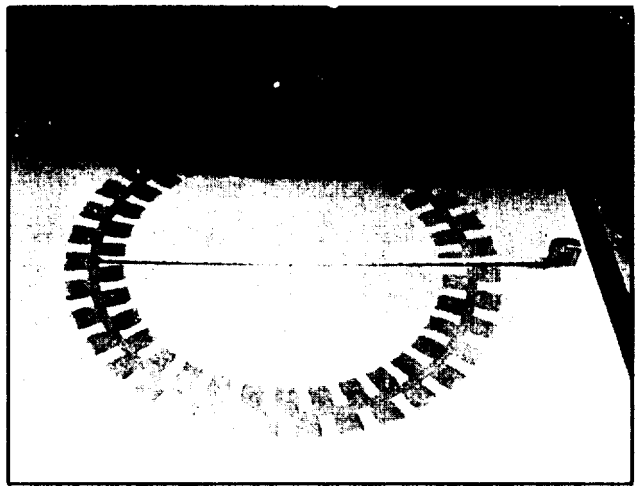

#9854. Typical Adjustments Check

28. To check the correctness of your adjustments, drive the truck in full left and right turns and measure the inside turning diameter of each drive tire. The two diameters should be nearly equal.

29. The basically simple routine we have covered must be followed in every power steering adjustment. There is no short cut to doing the job right. And every step shown should be carried out in the order given. By so doing, you will insure that the job will be done right and efficiently.

www.truck-freeworkshop.com/clark/

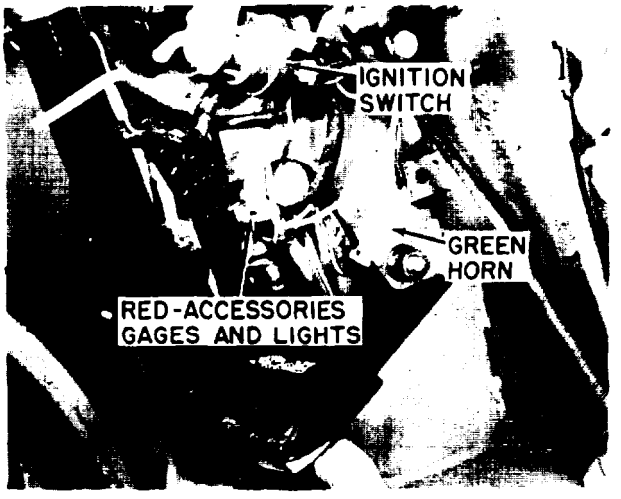

Figure 4-72. Fuses and Underdash Wiring

4-63. ELECTRICAL WIRING, SWITCHES, AND FUSES.

a. The wiring system on the vehicle is a 12-volt negative ground system. Extreme care must be taken when connecting an outside source of power to any component for test purposes, to observe the proper ground polarity.

WARNING

Disconnect battery ground strap before performing any service on electrical system.

b. Wiring circuitry and color codes are indicated on the electrical schematic, figure 1-3.

c. Be sure to replace all light bulbs and instruments with parts rated for 12-volt operation.

d. Access to the fuses may be gained through removal of the underdash cowling. Fuses are identified in figure 4-72.

4-64. HYDRAULIC SYSTEM CHECKS.

4-65. PRESSURE CHECK. The hydraulic relief valve setting may be checked with a Mico Quadrigage (Clark Part No. 1800106) or, by installing a conventional pressure gauge with a 0-4000 psi scale at the discharge (pressure) line of the hydraulic pump or at the hydraulic valve. See figure 4-73.

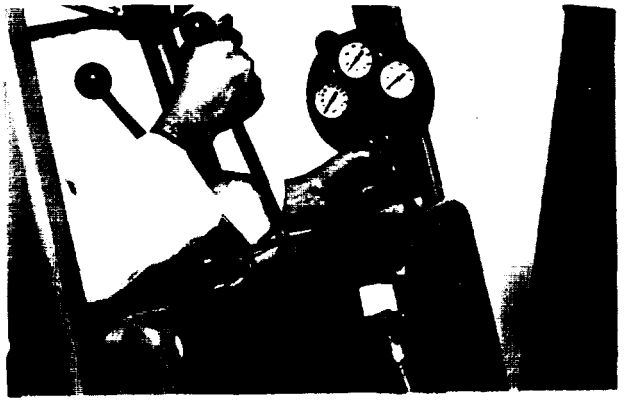

Figure 4-73. Hydraulic System Pressure Check

a. Connect the pressure line from the gauge to the test port of the pump or valve by removing plug from test port.

b. Apply parking brake. Start engine and operate at governed RPM. Hold tilt lever back until the pressure builds up and moves the pressure relief valve off its seat; avoid holding the tilt lever longer than is necessary to check pressure reading of gauge. Take reading then release accelerator and tilt lever.

c. The pressure reading will indicate the setting of the relief valve. If reading taken is not reasonably close to those listed in specifications, appropriate repairs should be made. Report to designated authority.

4-66. HYDRAULIC CIRCUIT FLOW TEST. If a Schroeder Hydraulic Circuit Tester (Clark Part No. 1800060) is available, the hydraulic relief valve setting and the rate of flow being delivered by the hydraulic pump may be checked as follows:

a. Connect the pressure line from the tester to the test port at the hydraulic pump, or at the test port of the hydraulic valve. Remove sump tank breather and insert the return line from the tester into the sump tank.

www.truck-freeworkshop.com/clark/

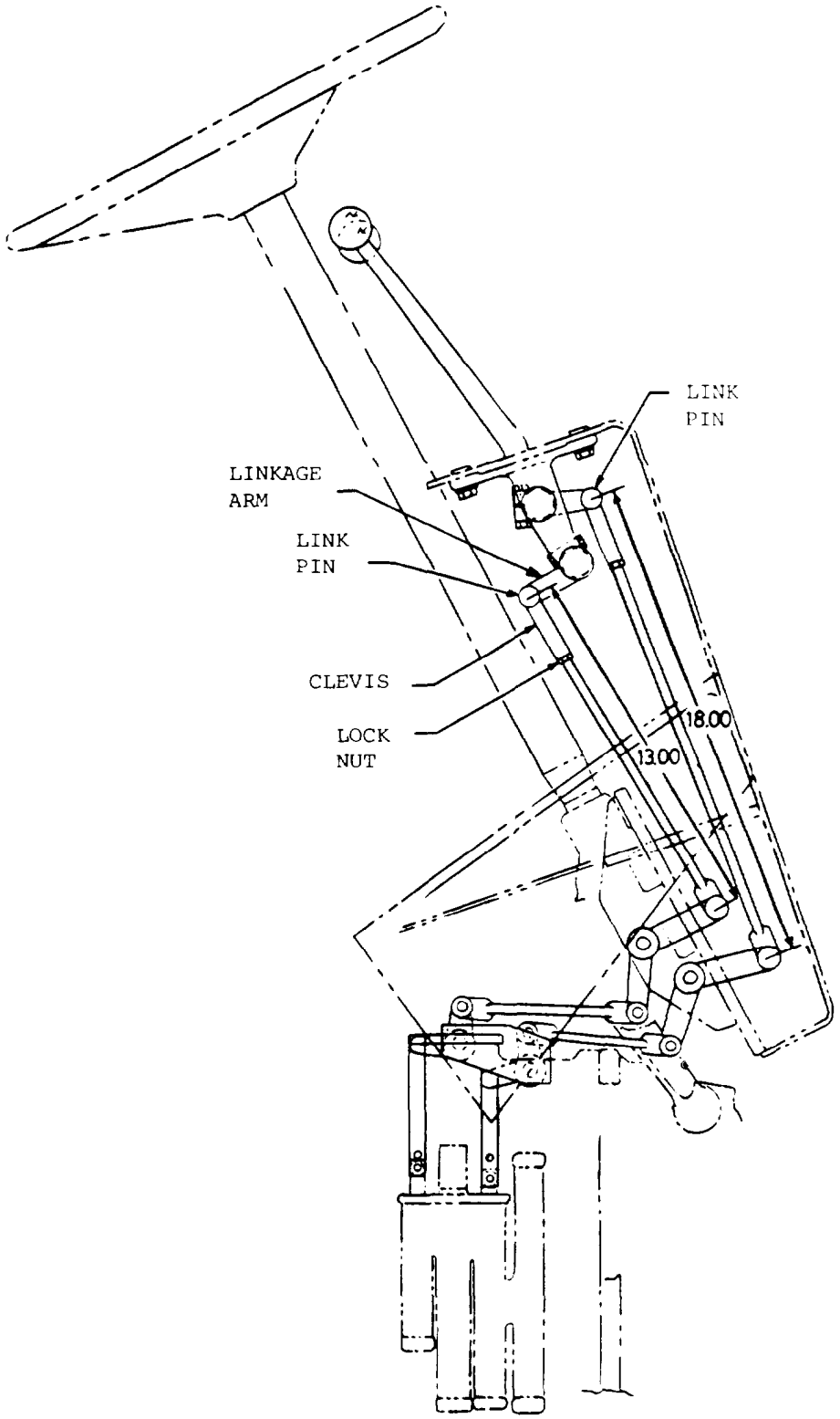

FIGURE 4-75. TRANSMISSION LINKAGE ADJUSTMENT

www.truck-freeworkshop.com/clark/

www.truck-freeworkshop.com/clark/

b. Applying parking brake. Start engine and operate at governed RPM. Hold tilt lever back while gradually closing the load valve until pressure reaches 1500 psi.. Continue to hold the tilt lever until hydraulic fluid reaches test temperature (120) degrees F.) With the hydraulic fluid at this temperature, make a note of the flow reading so it may be compared with the rate of flow found in the following step.

c. With engine operating at governed RPM, hold tilt lever in back position and continue to close the load valve until the pressure no longer increases on the gauge. (Close the load valve ONLY ENOUGH to reach the peak pressure reading and avoid holding the lever longer than necessary to check rate of flow and pressure).

d. The pressure reading will indicate the setting of the relief valve. The flow reading should be compared with the flow register at 1500 psi. If the pump or valve is worn, flow will drop off appreciably as pressure is increased. This is due to internal oil slippage in the components.

NOTE

Severely vibrating gauges are often an indication of entrained air. Check for suction line leaks.

e. If readings taken are not reasonably close to those listed in specifications, appropriate repairs should be made. Report to designated authority.

4-67. ADJUSTING TRANSMISSION SHIFT LINKAGE (Refer to Fig. 4-74)

a. Check forward-reverse and high-low control linkages for correct adjustment. If these linkages are out of adjustment operation of the transmission will be adversely affected. Make sure you have full travel and can feel the detents in all positions - neutral, forward and reverse for the forward-reverse shift lever, and high and low for the high-low shift lever. If you cannot feel the detents in any one of these positions adjust the linkage as follows:

Step 1. Remove the two capscrews from the cowl access hole cover and remove the cover.

Step 2. Measure the distance (Refer to figure 4-74) of the high-low linkage rod, and the forward-reverse linkage rod. The pre-set measurement is 18" for the high-low linkage rod at neutral position and 13.38" for the forward-reverse linkage rod at neutral position.

Step 3. If adjusment is to be made proceed as follows:

a. Remove the cotter pins from the link pins and remove the link pins from the linkage arms and clevis. (Refer to Figure 4-74). Let linkage rods drop free, do not remove.

b. Make necessary adjustments by loosening lock-nuts and turning clevis to make measurement fall within the pre-set measurements of linkage rods when they are assembled.

c. After adjustment is made tighten lock nuts and install the linkage rods to their prospective linkage arms and install the link pins and cotter pins. Measure the distances again and see if they fall within the pre-set measurements, if they don't make adjustment again.

d. Test linkage for full travel and that you can feel the detents in all positions.

e. Install cowl access hole cover and its fasteners.

www.truck-freeworkshop.com/clark/

TRANSMISSION STALL AND PRESSURE CHECKS

Minimum Tools Required

1 - Pressure Gauge, 0 - 250 PSI
1 - Tachometer

IMPORTANT

Before making transmission checks, the machine should be:

1. Steam cleaned..... it is important that the radiator be clean externally and internally so that it is capable of maintaining proper cooling for the engine and transmission.

2. Run machine until unit is at operating temperature....this is important as the transmission oil temperature should be 200 degrees F. to obtain accurate readings; and, the transmission plumbing and torque converter must be fully charged.

3. With the engine operating at idle and the transmission in NEUTRAL, check the fluid level on the dipstick. Fill if necessary to the FULL mark on the dipstick.....using Type "A", Suffix "A" Automatic Transmission Fluid (Clark Park Number 879803....fluid containers must display a qualification number prefixed by "AQ-ATF").

4. Check pedal free travel..... the inching/brake pedal/s must be adjusted correctly..... refer to page 4-20 & 4-21 for procedure and specifications.

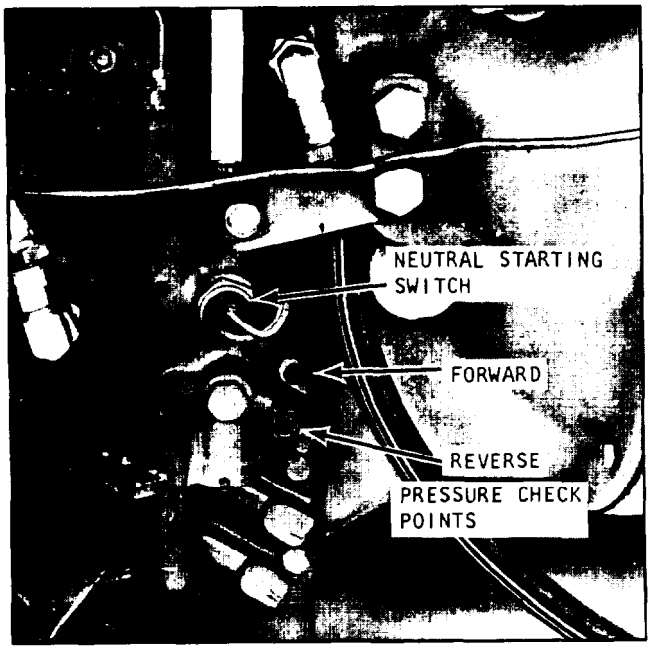

Plate 9774. 1-SPEED Transmission Control Cover Cushion Tire Machines.

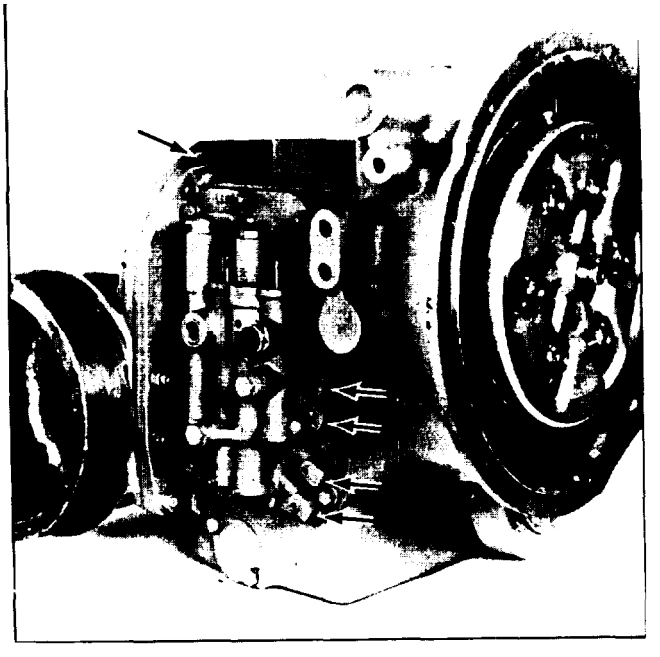

Plate 9220. P-SPEED Transmission Control Cover Pneumatic Tire Machines.

www.truck-freeworkshop.com/clark/

5. With a tachomter, check engine for governed speed at full throttle. The unloaded engine RPM should be set at 2350.

6. Check governed engine speed with partial load. With engine at full throttle and the tilt lever in full backward tilt, momentarily hold the tilt lever back to load the engine. With the engine loaded in this manner, the approximate engine RPM should be 2200.

NOTE

Engine properly tuned before making transmission stall checks.

CAUTION

PROLONGED STALLINGOF THE CONVERTER CAN CAUSE INTERNAL DAMAGE TO THE CONVERTER. STALL CONVERTER ONLY LONG ENOUGH ATTAIN THE PEAK RPM READING.....MAXIMUM 30 SECONDS.

7. With a capacity load cm the forks, check for normal stall RPM by positioning machine against an immovable object....or by applying a correctly adJusted parking brake..... equipped with goodbrake linings. Place the machine in gear and accelerate engine to full throttle. Normal stall is 1450 to 1600 RPM.

8. Low engine stall RPM is 850 to 1050 . . . . . .loss of engine power is indicated.

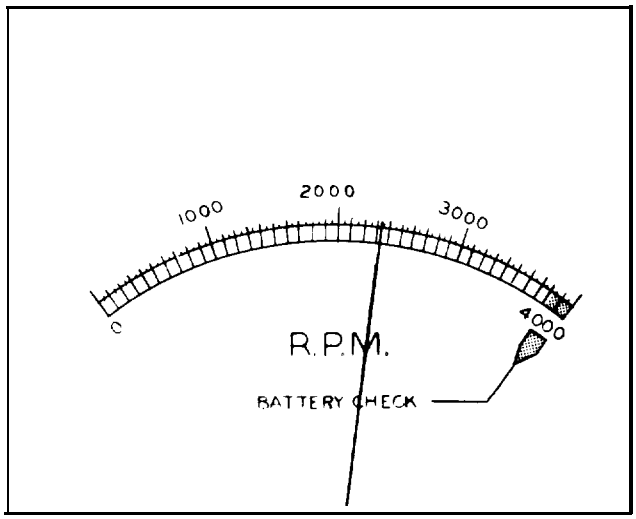

Plate 6683. Engine RPM [no load]

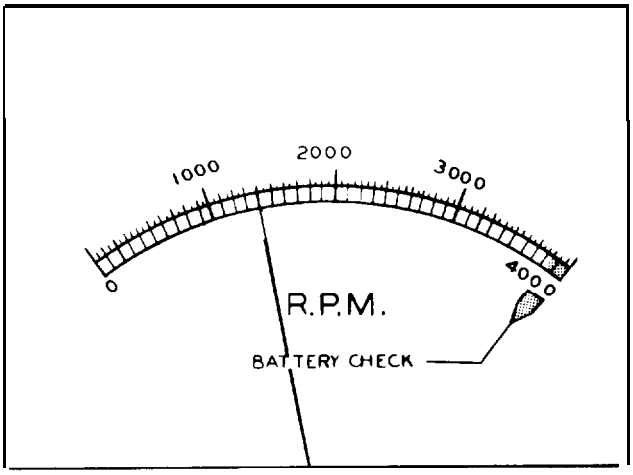

Plate 6684. Normal Engine Stall

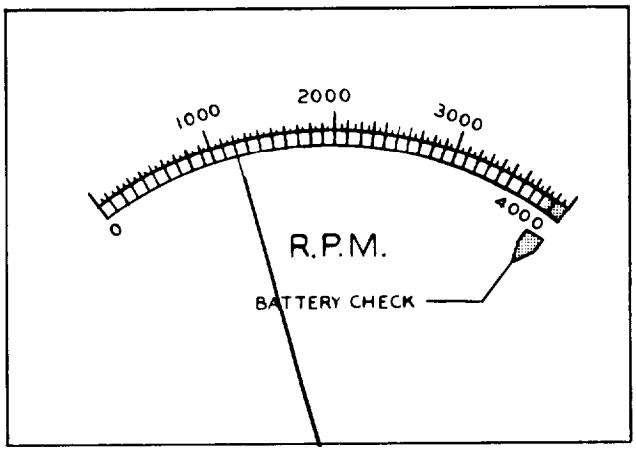

Plate 7327. Interim Stall

www.truck-freeworkshop.com/clark/

9. **Low engine stall RPM is 850 to 1050 ..... converter malfunction is indicated.**

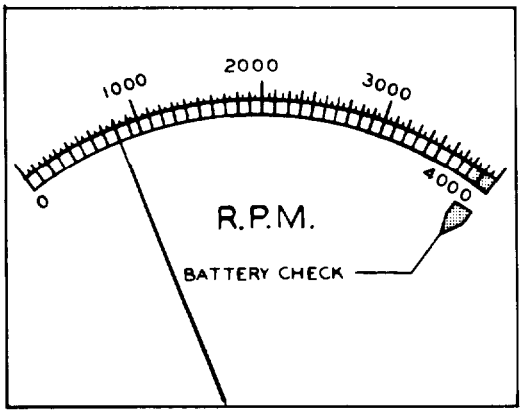

Plate 6686. Low Engine Stall

10. **High engine stall RPM is anything above 1600..... either slippage of the selector packs or low oil pressure is indicated.**

NOTE

Any STALL READING other than NORMAL should be **reported to designated person in authority.**

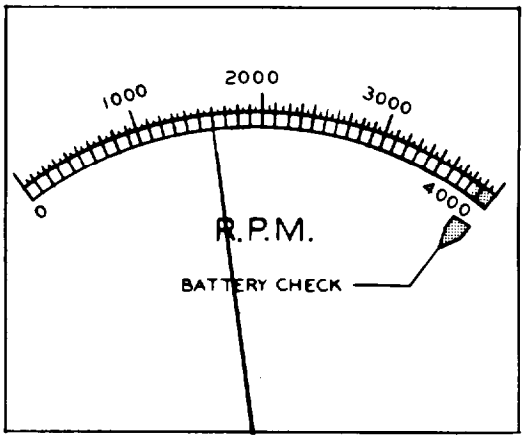

Plate 7328. High Engine Stall

TRANSMISSION PRESSURE CHECKS

The transmission pressure checks are made at the testing ports of the control cover... refer to previous page for location of check points.... note that cover used on pneumatic tire machines is identical with solid tired vehicles with the addition of H & L ports at lower right corner of cover.

Refer to the following pages for test procedures (proper PSI and proper RPM).... these procedures cover both l-SPEED and P-SPEED Hydratork Transmission models (cushion and Pneumatic tire machines).

www.truck-freeworkshop.com/clark/

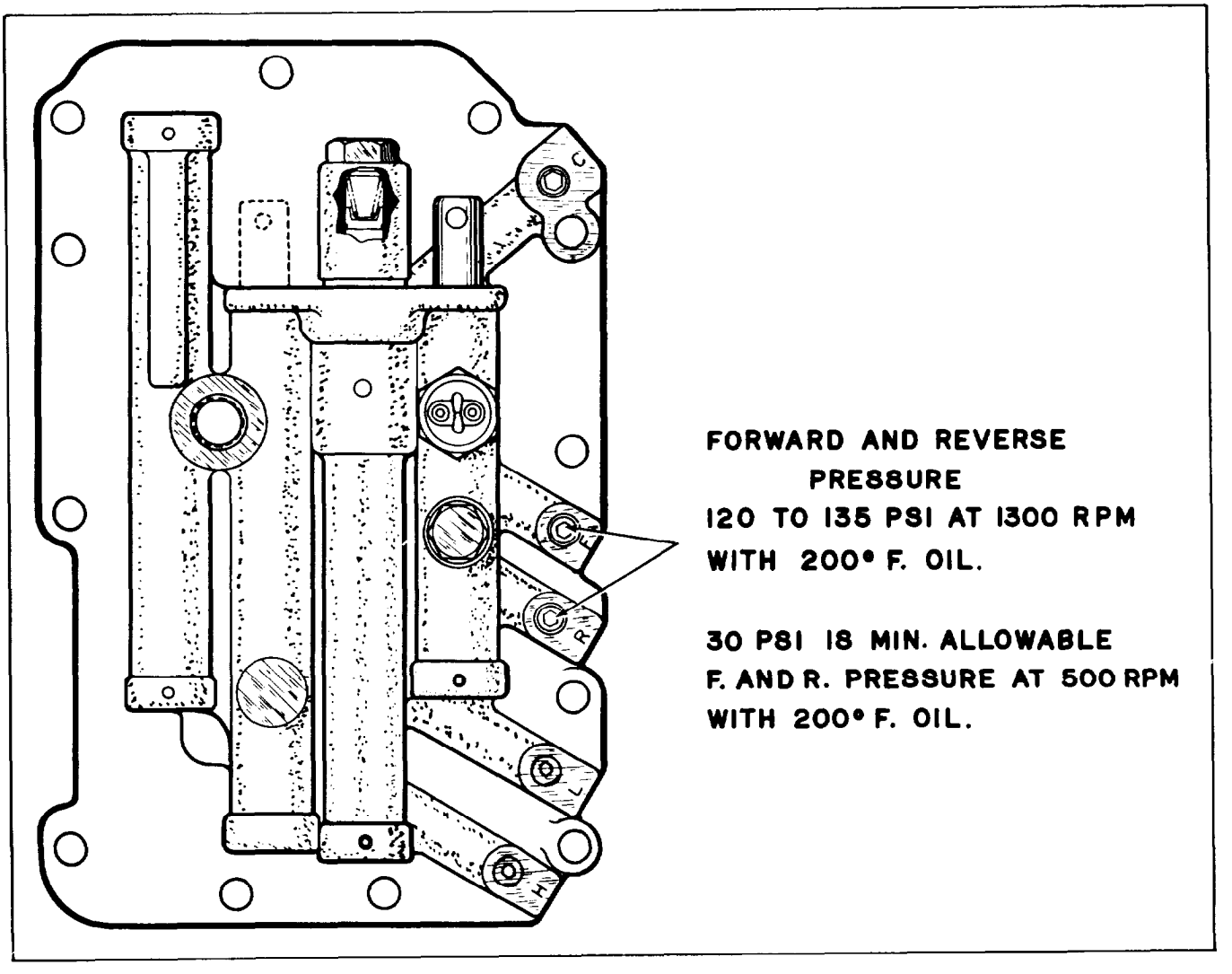

Plate 9863. Forward and Reverse Pressure Check...

Oil Temperature should be 200 degrees F. prior to making the above checks.

www.truck-freeworkshop.com/clark/

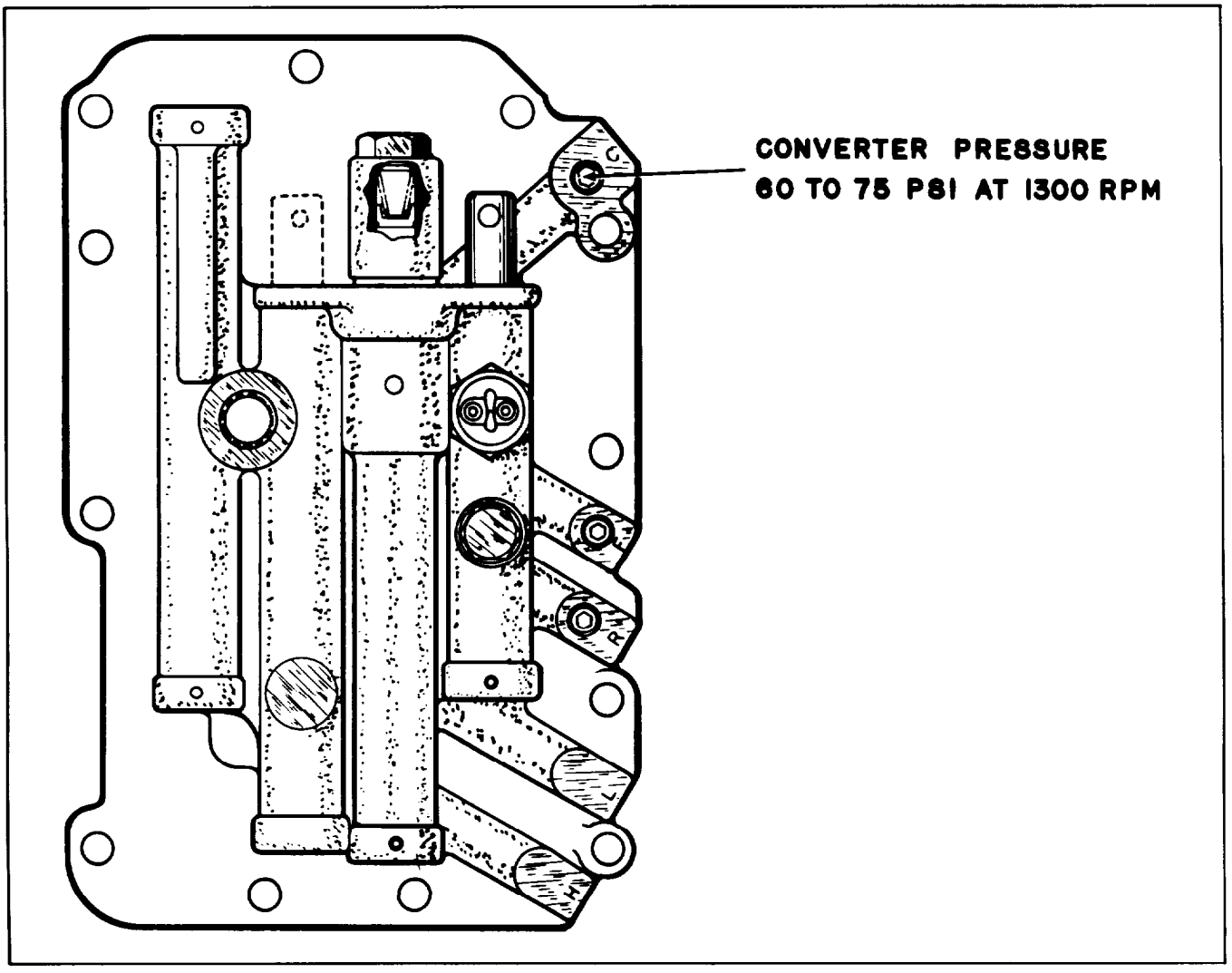

Plate 9864 Converter Pressure Check.....

Oil Temperature should be 2OO degrees F. prior to making the above checks.

www.truck-freeworkshop.com/clark/

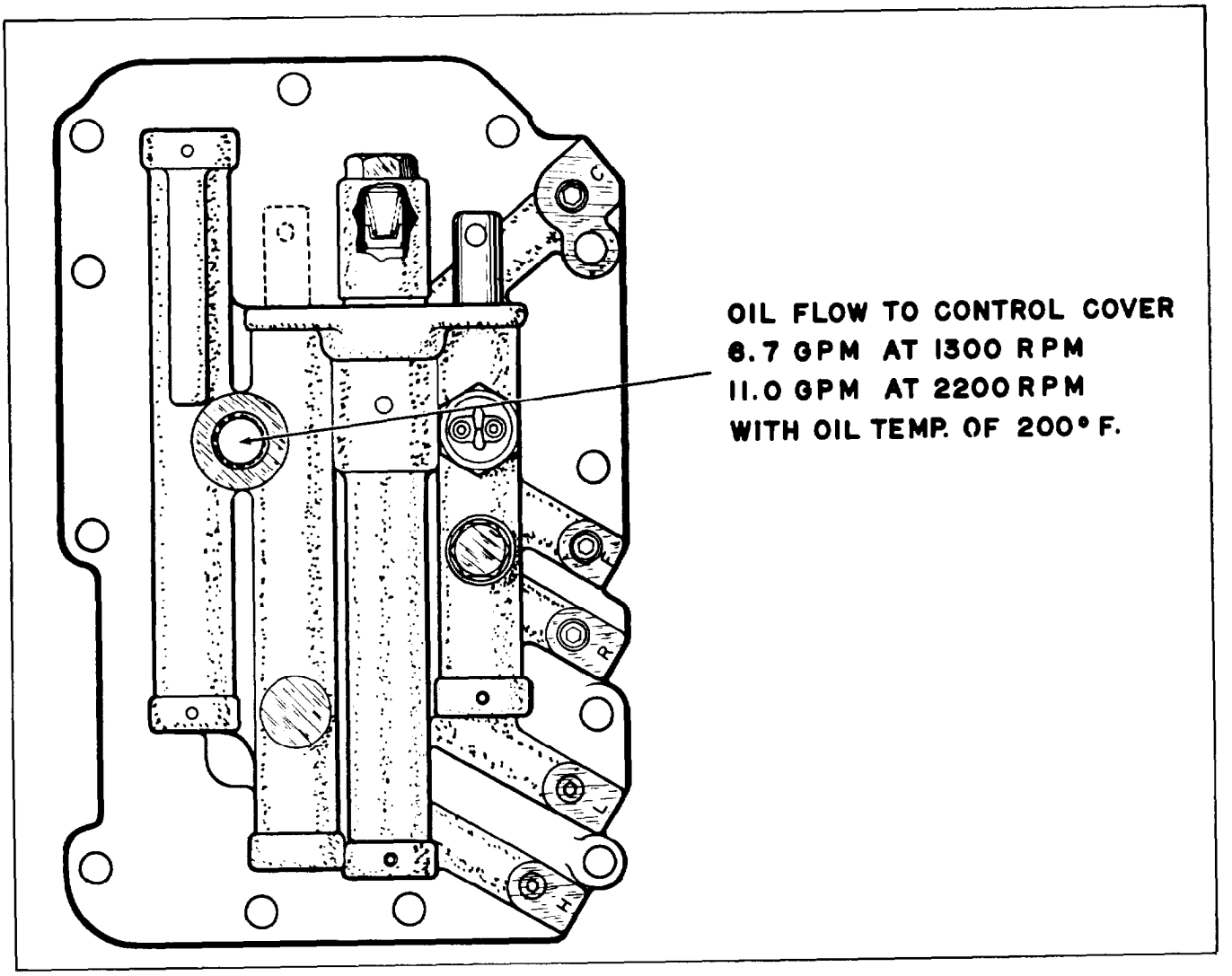

Plate 9865. Oil Flow To Control Cover.....

Oil Temperature should be 200 degrees F. prior to making the above checks.

www.truck-freeworkshop.com/clark/

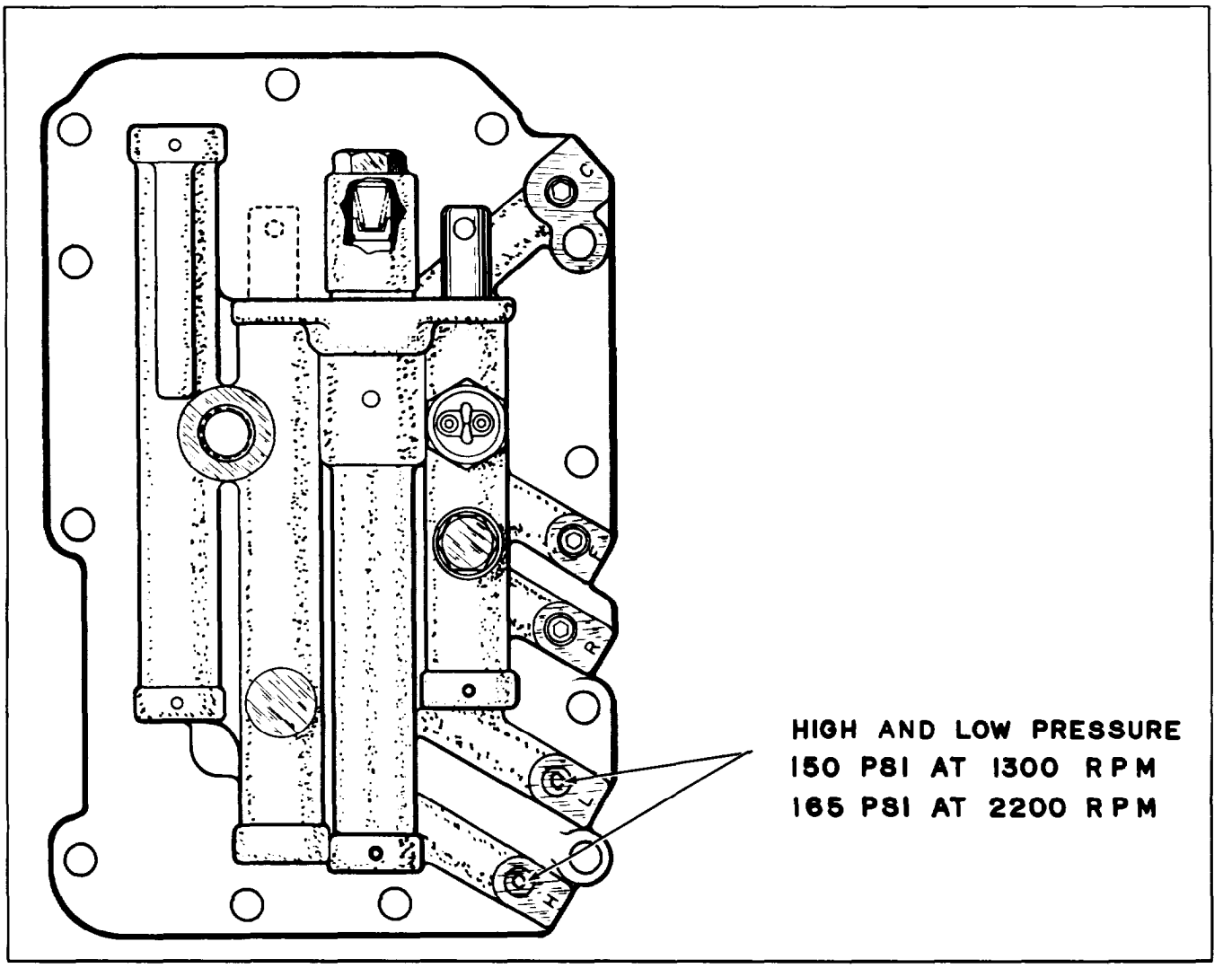

Plate 9866. High and Low Pressure Check.....

Oil Temperature should be 200 degrees F. prim to making the above checks.

www.truck-freeworkshop.com/clark/

TRANSMISSION
FLUID AERATION CHECK

A fluid level that is too high will cause the fluid to become aerated. Aerated fluid will cause low control pressure and the aerated fluid may be forced out the vent.

Check the transmission fluid level. Low fluid level can affect the operation of the transmission and may Indicate fluid leaks that could cause transmission damage.

TRANSMISSION FLUID LEAK AGE CHECKS

Leakage at the control cover, inlet and outlet ports often can be stopped by tightening the attaching bolts. If necessary, replace the gasket.

Check the fluid lines and fittings between the transmission and the cooler in the radiator' tank or on the transmission for losseness, wear, or damage. If leakage cannot be stopped by tightening a fitting, replace the defective parts.

The cooler can be further checked for leaks by disconnecting the Lines from the cooler fittings and applying 5 psi air pressure to the fittings. If the cooler is leaking and will not hold this pressure, the radiator must be replaced. The cooler cannot be replaced separately.

Inspect the pipe plug on the left side of the transmission case at the front. If the plug shows leakage, torque the plug to specification. If tightening does not stop the leeks, replace the plug.

When converter drain plugs leak, remove drain plugs. Coat the threads with a sealing compound and install the plugs. Torque the drain plugs to specification.

I M P O R T A N T

THIS TRANSMISSION USES ONLY TYPE "A", SUFFIX "A" AUTOMATIC TRANSMISSION FLUID (CLARKPART #879803). CONTAINERS MUST DISPLAY A QUALIFICATION NUMBER PREFIXED BY AQ-ATF.

www.truck-freeworkshop.com/clark/

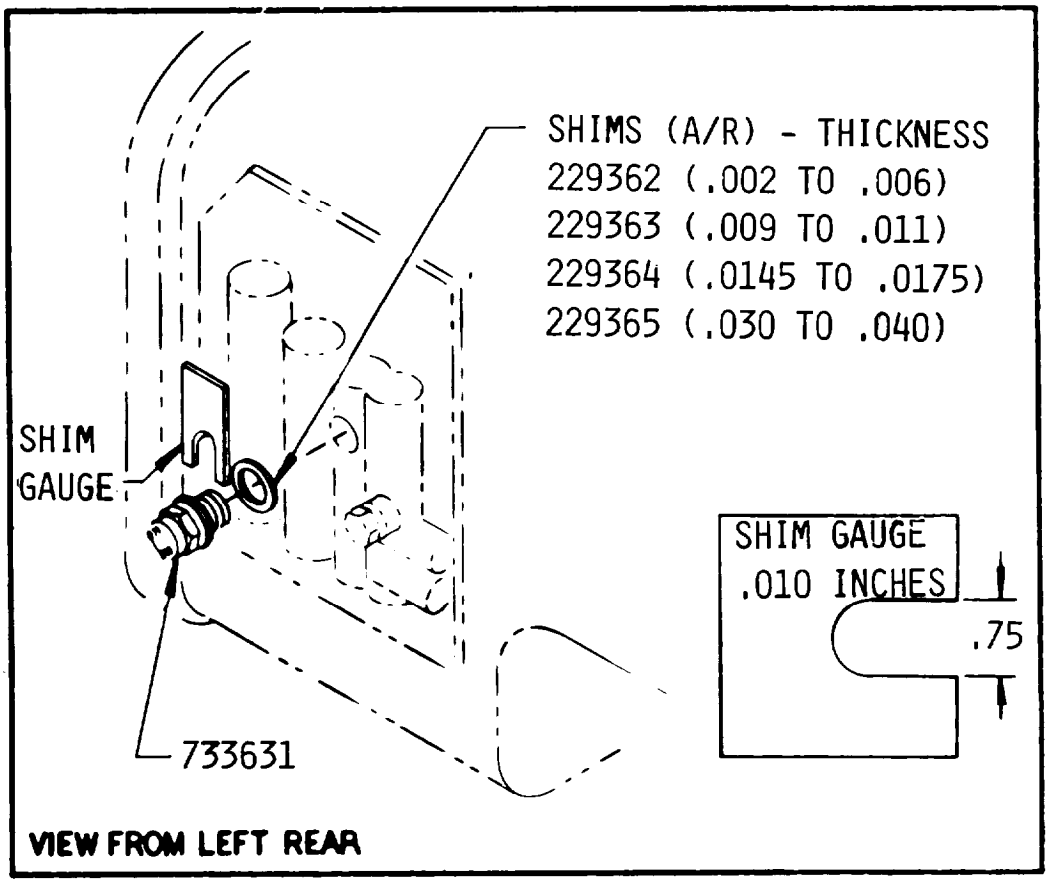

TO ADJUST - USE ,010" SHIM GAUGE AND MINIMUM THICKNESS OF SHIMS UNDER THE SWITCH TO CLOSE WHEN TRANSMISSION IS IN NEUTRAL,

REMOVE GAUGE AND TORQUE SWITCH TO 25 FT-LBS,

NOTE: SHIM GAUGE USED TO ALLOW FOR WEAR OF PARTS,

4-68. NEUTRAL START SWITCH ADJUSTMENT

The neutral starting switch should be adjusted so that the engine will not start except when the transmission is in the exact neutral position.

1. Occupy the driver's seat, set the parking brake, and put the transmission in gear (with clutch pedal depressed on standard transmissions).

2. Turn and hold the ignition switch in the start position while gently moving the shift lever towards neutral position.

3. If the engine doesn't start, repeat this check in all other gears.

4. If the engine should start, coming from any gear position <u>before</u> reaching exact neutral position, then the neutral start switch must be either replaced or adjusted.

5. Adjust by means of shims underneath the switch until the engine will not start in <u>any gear position except exact neutral.</u>

www.truck-freeworkshop.com/clark/

RIM AND WHEEL MAINTENANCE:

NOTE

"In order to maintain and insure maximum service, a continuous maintenance program is advisable... maintenance procedures should be carried out both during tire inspections and during tire changes."

WARNING

PULL DAMAGED RIMS OR WHEELS. DEFLATE TIRES PRIOR TO THE REMOVAL OF RIMS OR WHEELS FROM THE VEHICLE.

Check ail metal surfaces thoroughly while making tire inspections...watch for...

1. Fatigue cracks in metal.
2. Bent flanges, resulting from road obstructions.
3. Deep rim tool marks.
4. Loose, missing or damaged nuts.
5. Bent or stripped studs.
6. Excessive rust or corrosion.

Hark damaged or hazardous areas with chalk so that part will be removed from service...replace damaged parts .

Insure that replacements are made with the proper sizes and types ...refer to your machine serial number when ordering replacement parts. Care should be taken to assure that ail replacement parts are interchangeable with the original parts and of a quality equal to that provided in the original equipment.

Check ail metal surfaces, as listed above, and check for cracks. These are caused by deep rim tool marks, overloading and overinflating tires and using larger than recommended tire sizes.

Cracks in wheel between stud holes are caused by loose wheel nuts...improper installation procedures and use of incorrect sizes or types of attaching parts. lnsufficient mounting torque can cause wheel shimmy, resulting in damage to parts and extreme tire tread wear. Excessive mounting torque can cause studs to break and disc to crack in the stud hole area.

Thoroughly clean wheels...remove rust, dirt and other foreign materials from all surfaces. Hand or electric wire brushes, and blasting or chemical baths may be used.

Bead seat areas of the rim should be free of rust and rubber deposits. This is especially important for drop-center tubless rims...because of the air-sealing element.

Paint rim by brush or spray with a fast-drying metal primer. Surfaces should be clean and dry prior to painting. Insure that bare metal areas on outside or tire side of rim are covered. This is especially important on drop-center tubless rims, because warm and sometimes moist air is in constant contact with the metal surface on the tire side of the rim.

Lubricate tire side of rim base just prior to mounting tire ...avoid the use of any lubricant which contains water or solvent that is injurious to rubber ...a combination lubricant and rust-preventive compound is preferable. This protective measure is of particular importance with drop-center tubless rims as the air in the tire is contained by the tire-side rim surface.

NOTE

Rim Distributors can supply the proper compound that serves as a lubricant and rust preventive.

TIRE MAINTENANCE:

Inspect for proper inflation. Refer to Specifications for correct tire pressure.
(Table 1, page 1-2)
Inspect tires and wheels regularly for cuts, breaks, alignment , security of wheel clamp bolts (on machine using split rims), and lug nuts or bolts.

Even with the best of maintenance practices, cuts will still be a source of tire trouble. The correct procedure for handling and repairing tires should be given careful attention. Close inspect ion of alI tires should be made at the time of inflation check, and all tires having cuts that penetrate into the cord body should be taken off for proper repair.

Failure to make regular inspections and repairs, when needed, will result in further deterioration of the cord body and eventually a blowout. Small rocks and dirt will get into shallow cuts in the tread and if neglected will gradually be pounded through the cord body.

One simple method to forestall this action is to clean out the cut with an awl or similar tool to remove any stones or other matter which may be lodged in the cut. Use a sharp, narrow-bladed knife and cut away the rubber around the cut to form a cone-shaped cavity extending to the bottom of the injury. The sides of the cavity should be slanted enough to prevent stones from

www.truck-freeworkshop.com/clark/

TIRE MAINTENANCE (CONTINUED) :

wedging into it. Tires with cuts treated in this manner may be continued in service without danger of further growth of these injuries. If a tire has at least one deep cut that requires a repair, then all smaller cuts may be quickly and economically repaired and vulcanized by the steam kettle method.

WARNING

IT IS NOT RECOMMENDED THAT TIRES WITH BREAKS BE USED AGAIN.

If uneven tire wear Is evident, wheel alignment should be checked.

TIRE INFLATION:

Before inflating tires, make certain all wheel nuts are tightened to proper torque (see Specifications on Table 1, page 1-3)

WARNING

IN ALL CASES, WHEN REMOVING TIRES WITH SPLIT RIMS FROM THE MACHINE FOR REPAIR OR PERIODIC ROTATION, COMPLETELY DEFLATE TIRES. THIS IS ACCOMPLISHED BY REMOVING THE VALVE CORE.

WARNING

IN ALL CASES, WHEN REMOVING TIRES EQUIPPED WITH THE LOCK RING TYPE RIM FROM THE HACHINE FOR REPAIR OR PERIODIC ROTATION, COMPLETELY DEFLATE TIRES. THIS IS ACCOMPLI SHED BY REMOVING THE VALVE CORE.

WARNING

WHEN REPAIRING TIRES USED ON MACHINES THAT EMPLOY THE LOCK RING TYPE RIM, USE CAUTION WHEN INFLATING TIRE, PROCEED AS FOLLOWS:

1. Always Inflate tires mounted on rims with demountable side ring flanges or lockrings In an Inflation safety cage, or serious Injury or loss of life could result.

2. Improperly seated side ring flanges or lockrings could blow off during Inflation. Never attempt to seat side ring flanges or lockrings during or alter lnflation. Serious Injury or loss of life could result.

3. Never inflate tires over 40 pounds per square Inch (PSI) to seat tire beads. Serious Injury or loss of life could result.

4. When Inflating tires In a safety cage, always use an extension air hose and gage for safety cage use. Failure to do so could cause serious Injury.

WARNING

IF LOCK RING IS NOT LOCATED PROPERLY, IT IS POSSIBLE FOR IT TO POP OFF RIM WITH GREAT FORCE WHEN TIRE IS INFLATED AND COULD RESULT IN SERIOUS INJURY TO ANYONE STRUCK BY IT.

On machines using split rims, make periodic checks for noises in the wheel, as It is possible for damage to occur to the wheel bolts If they are not securely tightened when tires are changed. If the wheel bolts are loose or have been sheared off as a result of being loose, a grinding or scraping noise will be present when wheels are turned. Should this condition exist, It will be necessary to immediately remove the rim and tire from the machine and determine the cause of noise and repair or replace defective parts.

NOTE

Refer to WARNING on deflation of tires before removing wheels from machine.

www.truck-freeworkshop.com/clark/

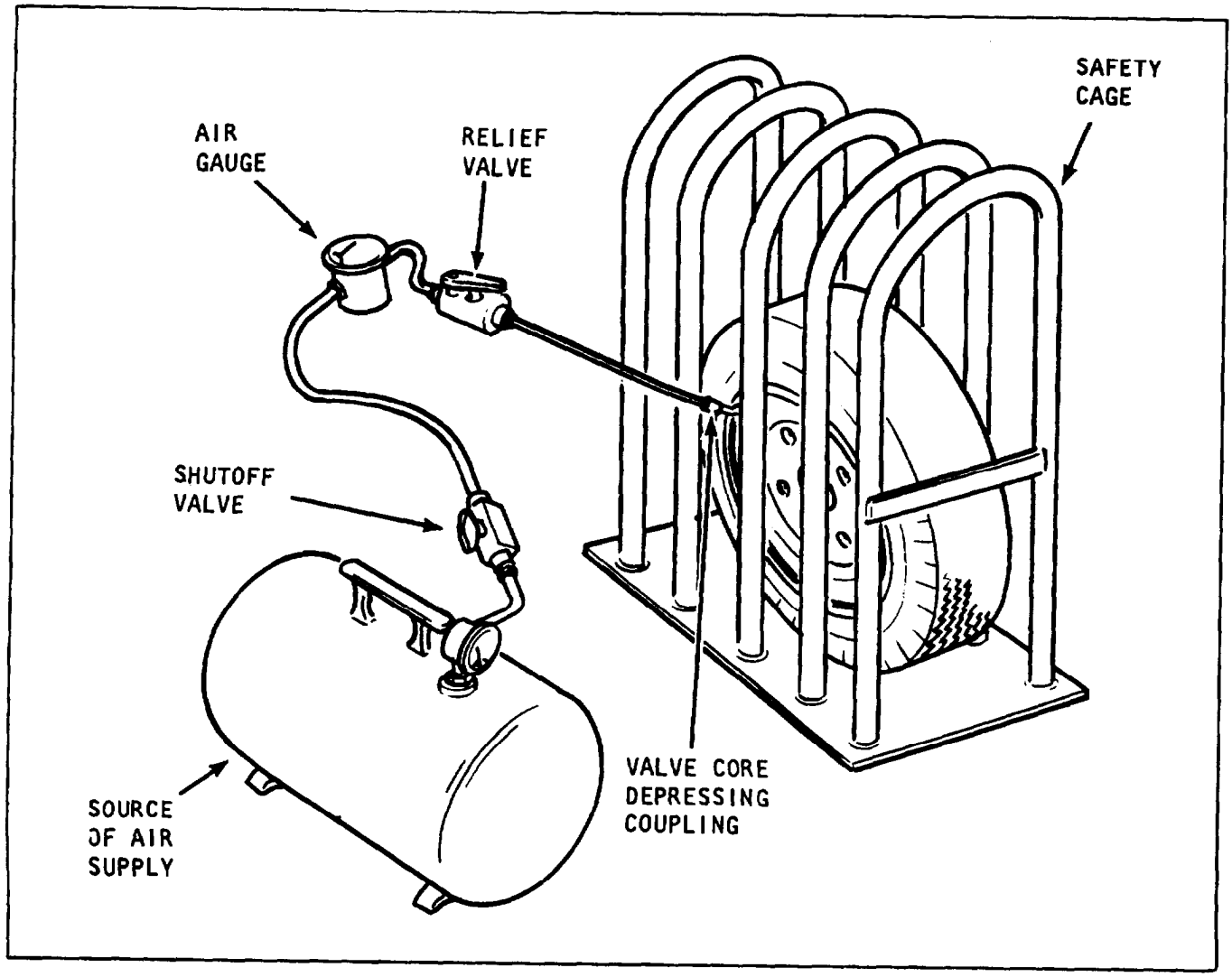

Plate 9702. Typical Tire Inflation Procedure

Torque wheel stud nuts or wheel bolts to the values listed in specifications. Excessive torque of wheel nuts can cause stud and rim damage.

Any replacement parts used should be of a quality equal to that provided in the original manufacture.

Inflation

CAUTION

ALL FASTENERS SHOULD BE PROPERLY INSTALLED BEFORE INFLATING WHEEL/TIRE ASSEMBLY.

Tires with split wheels should be inflated in a safety cage or when properly installed on the vehicle. In either case. make sure all nuts and bolts are properly installed and torqued according to specifications.

CAUTION

USE ONLY AN APPROVED SAFETY CAGE DESIGNED FOR THIS PURPOSE.

Tires used on lock-ring type wheels inflate in a safety cage (see previous caution) using a clip-on type air chuck and stand aside (in-line with the tire tread) during inflation. Insure that rings are properly

www.truck-freeworkshop.com/clark/

Plate 7613. Typical Split Wheel

seated prior to inflation. An inflated tire contains potentially explosive energy that can blow rings loose.

All wheel/tire assemblies should be inflated in a safety cage. The air hose should have a special set-up as shown in Plate 9702. The hose should have an adapter so that it can be securely fastened to the valve stem. Using this set-up you would:

1. Attach air hose to valve stem.

2. Open shut-off valve allowing compressed air to enter tube.

3. Shut off air supply occasionally to check pressure in tube at air gauge.

4. Inflate to proper capacity. If pressure exceeds proper inflation capacity, depress the relief valve to release excess air pressure.

5. This alternating procedure is followed until proper inflation is reached See specifications.

IMPORTANT

MAINTAIN UNIFORM INFLATION IN BOTH TIRES OF A DUAL ASSEMBLY SO THAT WEIGHT IS EQUALLY SUSTAINED.

NEVER RE-INFLATE A TIRE THAT HAS GONE FLAT WITHOUT FIRST INSPECTING IT AND THE WHEEL ASSEMBLY.

The tire inflation arrangement as shown in Plate 9702 can be made up from local suppliers.

Parts can be ordered from the following suppliers:

Relief Valve - Model 250V-l/4"

Humphrey Products
P.0. Box 2008
Kilgore at Sprinkle Rd.
Kalamazoo, Mich.

Shut-Off Valve - lmperia1 #77E (1/4 to

Kendall Industrial Supplies, Inc.
702 N. 20th St.
Battle Creek, Mich. 49016

Air Gauge - Marshal town #23 (160 lb, 1/4 1 PT, 2 1/2" diameter gauge)

Kendall Industrial Supplies, Inc.
702 N. 20th St.
Battle Creek, Mich. 49016

Safetv Cane

Meyers Tire Supplies
6400 Epworth Blvd.
Detroit, Mich.

www.truck-freeworkshop.com/clark/

DIRECTIONAL TREAD TIRES

Ail directional tread tires are to be mounted in the correct position with respect to the arrow cast on the side of the tire as explained and illustrated below.

Directional Tread Dual Tires:

1. Inside dual tire arrow to point In the direction of foward rotation, see Plate 6422.

   (Rotate wheel to bring arrow on tire above the wheel. Arrow must point toward front of truck.)

2. Outside dual tire arrow to point in the direction of rearward rotation, see Plate 6423.

   (Rotate wheel to bring arrow on tire above the wheel. Arrow must point toward rear of truck.)

Directional Tread Single Drive Tires:

1. Tire arrow to point in the direction of forward rotation, see Plate 6422.

   (Rotate wheel to bring arrow on tire above the wheel. Arrow must point toward front of truck, see Plate 6422.

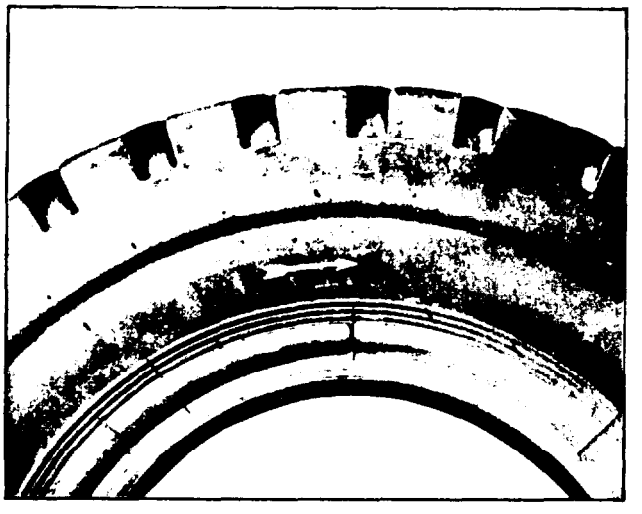

Plate 6422. Inside Dual Tire (or Single Drive Tire) (Arrow to point toward front of truck)

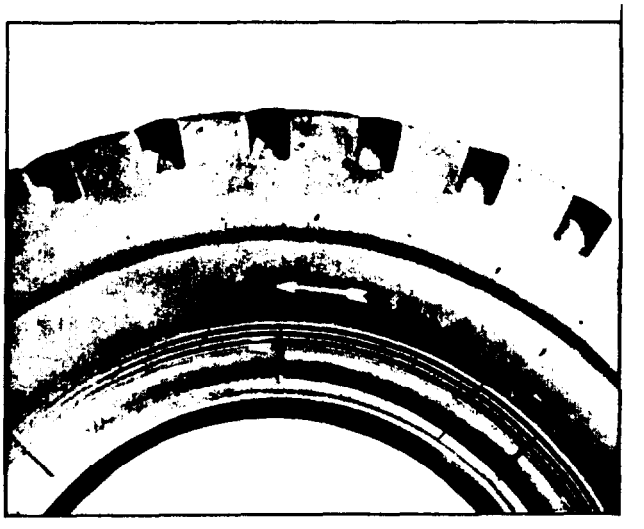

Plate 6423. Outside Dual Tire (Arrow to point toward rear of truck)

SOLID OR CUSHION TIRE AND RIM MAINTENANCE

1. Inspect tires regularly - remove ail sharp objects picked up by treads before they have a chance to cut further into the rubber and cause chipping or possible separation of the rubber from the base metal.

2. Avoid overloading and do not allow vehicle to stand under heavy loads for prolonged periods as this will cause a "flat" spot on the tires.

3. Check steering axle alignment regularly to protect against fast, irregular tread wear and separation.

4. If rubber tires come in contact with oils, grease, and gasoline they should be wiped off without delay.

5. Regular lubrication of ail wheel bearings will assure free-roiling and elimination of tire drag when stopping or starting.

www.truck-freeworkshop.com/clark/

1. NEVER WELD ON A RIM. REPLACE ANY PART THAT IS DISTORTED, CRACKED OR DAMAGED.

2. ALWAYS EXHAUST ALL AIR FROM A SINGLE TIRE AND FROM BOTH TIRES OF A DUAL ASSEMBLY PRIOR TO REMOVING ANY RIM COMPONENTS, OR ANY WHEEL COMPONENTS, SUCH AS NUTS AND RIM CLAMPS.

   MAKE SURE TO REMOVE THE VALVE CORE AND EXHAUST ALL AIR FROM THE TIRE.

   REMOVE THE VALVE CORES FROM BOTH TIRES OF A DUAL ASSEMBLY.

   CHECK THE VALVE STEM BY RUNNING A PIECE OF WIRE THROUGH THE STEM TO MAKE SURE IT IS NOT PLUGGED.

3. CHECK RIM COMPONENTS PERIODICALLY FOR FATIGUE CRACKS. REPLACE ALL CRACKED, BADLY WORN, DAMAGED AND SEVERAL RUSTED COMPONENTS.

4. CLEAN RIMS AND REPAINT TO STOP DETRIMENTAL EFFECTS OF CORROSION. BE VERY CAREFUL TO CLEAN ALL DIRT AND RUST FROM THE LOCK RING GUTTER.

   THIS IS IMPORTANT TO SECURE THE LOCK RING IN ITS PROPER POSITION.

   A FILTER ON THE AIR INFLATION EQUIPMENT TO REMOVE THE MOISTURE FROM THE AIR LINE PREVENTS A LOT OF CORROSION. THE FILTER SHOULD BE CHECKED PERIODICALLY TO SEE THAT IT IS WORKING PROPERLY.

5. MAKE SURE CORRECT PARTS ARE BEING ASSEMBLED. CHECK YOUR DISTRIBUTOR OR THE MANUFACTURER IF YOU HAVE ANY DOUBTS.

6. DOUBLE CHECK TO MAKE SURE ALL COMPONENTS ARE PROPERLY SEATED PRIOR TO INFLATION.

7. MIXING PARTS OF ONE MANUFACTURER' S RIMS WITH THOSE OF ANOTHER IS POTENTIALLY DANGEROUS. ALWAYS CHECK MANUFACTURER FOR APPROVAL.

8. DON' T OVERLOAD OR OVER - INFLATE RIMS. CHECK YOUR RIM MANUFACTURER IF SPECIAL OPERATING CONDITIONS ARE REQUIRED.

9. DON' T REINFLATE A TIRE THAT HAS BEEN RUN FLAT WITHOUT FIRST INSPECTING THE TIRE, RIM, AND WHEEL ASSEMBLY.

   DOUBLE CHECK THE LOCK RING FOR DAMAGE...MAKE SURE THAT IT IS SECURE IN THE GUTTER BEFORE INFLATION.

www.truck-freeworkshop.com/clark/

10. NEVER RUN A VEHICLE ON ONE TIRE OF A DUAL ASSEMBLY. THE CARRYING CAPACITY OF THE SINGLE TIRE AND RIM IS DANAGEROUSLY EXCEEDED, AND OPERATING A VEHICLE IN THIS MANNER CAN RESULT IN DAMAGE TO THE RIM.

11. DON'T BE CARELESS OR TAKE CHANCES, IF YOU ARE NOT SURE ABOUT THE PROPER MATING OF RIM AND WHEEL PARTS, CONSULT A WHEEL AND RIM EXPERT. THIS MAY BE THE TIRE HAN WHO IS SERVICING YOUR FLEET, THE RIM AND WHEEL DISTRIBUTOR IN YOUR AREA, OR THE CLARK DEALER.

12. DON' T USE UNDERSIZED RIMS. USE THE RIGHT RIMS FOR THE JOB.

13. DON' T SEAT RINGS BY HAMMERING WHILE THE TIRE IS INFLATED.

DON' T HAMMER ON AN INFLATED OR PARTIALLY INFLATED TIRE/RIM ASSEMBLY.

14. DON' T LET ANYONE MOUNT OR DEMOUNT TIRES WITHOUT PROPER TRAINING.

15. NEVER SIT ON OR STAND IN FRONT OF A TIRE AND RIM ASSEMBLY THAT IS BEING INFLATED. INFLATE IN A SAFETY CAGE. USE A CLIP-ON CHUCK AND MAKE SURE INFLATION HOSE IS LONG ENOUGH TO PERMIT THE PERSON INFLATING THE TIRE TO STAND TO THE SIDE OF THE TIRE, NOT IN FRONT OR IN BACK OF THE TIRE ASSEMBLY.

16. DO NOT, UNDER ANY CIRCUMSTANCES, ATTEMPT TO REWORK, WELD HEAT, OR BRAZE ANY RIM COMPONENTS THAT ARE CRACKED, BROKEN OR DAMAGED. REPLACE WITH NEW PARTS OR PARTS THAT ARE NOT CRACKED, BROKEN, OR DAMAGED, WHICH ARE OF THE SAME SIZE, TYPE AND MAKE.

17. INFLATE IN A SAFETY CAGE.

18. REGARDLESS OF HOW HARD OR FIRM THE GROUND APPEARS, PUT HARDWOOD BLOCKS UNDER THE JACK.

19. BLOCK THE TIRE AND WHEEL ON THE OTHER SIDE OF THE VEHICLE, BEFORE YOU PLACE THE JACK IN POSITION...ALWAYS CRIB UP WITH BLOCKS JUST IN CASE THE JACK HAY SLIP.

20. REMOVE THE BEAD SEAT BAND SLOWLY TO PREVENT IT FROM DROPPING OFF AND CRUSHING YOUR TOES. SUPPORT THE BAND ON YOUR THIGH AND ROLL IT SLOWLY TO THE GROUND THIS WILL PROTECT YOUR BACK AND TOES.

21. BEAD BREAKERS AND RAMS APPLY PRESSURE TO BEAD FLANGES. KEEP YOUR FINGERS CLEAR. SLANT BEAD BREAKER ABOUT IO DEGREES TO KEEP IT FIRMLY IN PLACE. IF... ...IT SLIPS OFF, IT CAN FLY WITH ENOUGH FORCE TO KILL. ALWAYS STAND TO ONE SIDE WHEN YOU APPLY HYDRAULIC PRESSURE.

21. WHEN USING A CABLE OR CHAIN SLING, STAND CLEAR...IT MIGHT SNAP AND LASH OUT.

SAFETY TIPS

* U.S. GOVERNMENT PRINTING OFFICE: 1991 543-016/40068

www.truck-freeworkshop.com/clark/

4-72. WHEELS AND WHEEL BEARINGS.

4-73. CLEAN, REPACK AND ADJUST STEERING WHEEL BEARINGS. (See Figure 4-75.)

a. Every 1000 operating hours or every six months of operation, whichever occurs first, clean, repack and adjust wheel bearings using a smooth stringy multi-purpose grease or refined mineral oil blended with a lithium soap thickner containing anti-wear, anti-rust and anti-oxidants with EP additives. To meet or exceed Clark Specifications MS-107 and Timken Test 40 Lbs. minimum (NLGI No. 1 or NLGI No. 2). Examples:

Shell Aluania EP Grease No. 1 or No. 2.
Sun Prestige 741 EP No. 1 or 742 EP No. 2
Gulfcrown Grease Ep No. 2
AMOLITH Grease EP No. 1 or No. 2
Citgo HEP No. 1 or No. 2
Texaco Multifak EP No. 1 or Marfak all Purpose No. 2
Poco HT Grease EP No. 1 or No. 2
Molub-Alloy General Purpose Grease No 1 or No. 2.

or the equivalent of the equivalent of the above listed lubricants.

Figure 4-75. Steering Wheel Bearings

www.truck-freeworkshop.com/clark/

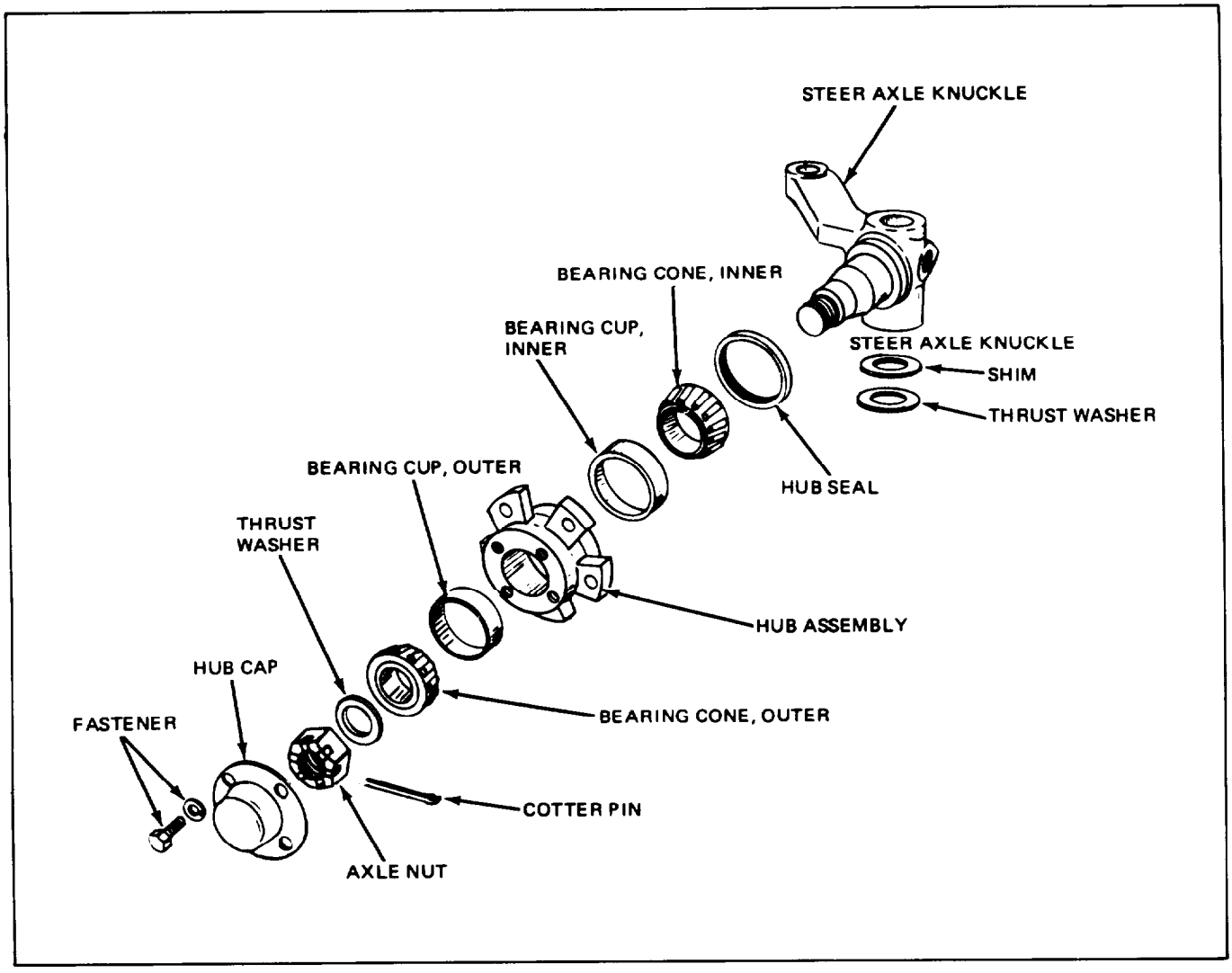

Figure 476. Bearing Details

b. Raise the rear of the machine far enough to clear the floor and place heavy blocking under the machine frame, not under the counterweight, so it cannot accidentally become lowered. Remove the wheels from the hub assembly.

WARNING

After raising machine and before making any adjustments or adjustment checks, place adequate (heavy) blocking (sufficient to support the weight of the machine) under the frame, not under the counterweight, to prevent accidental lowering or falling of the vehicle, thus preventing personal injury to mechanic or bystanders.

c. Clean the bearings in a Stoddard type cleaning solvent. After all solidified particles of lubricant are removed from the bearings, blow dry with compressed air. Direct air stream across bearings to prevent spinning. Slowly rotate bearings by hand to facilitate drying. Inspect bearings and races carefully to determine if they are in good condition and suitable for further service. Dry the hub with compressed air.

d. Repack with a smooth stringy multi-purpose grease of refined mineral oil blended with a lithium

www.truck-freeworkshop.com/clark/

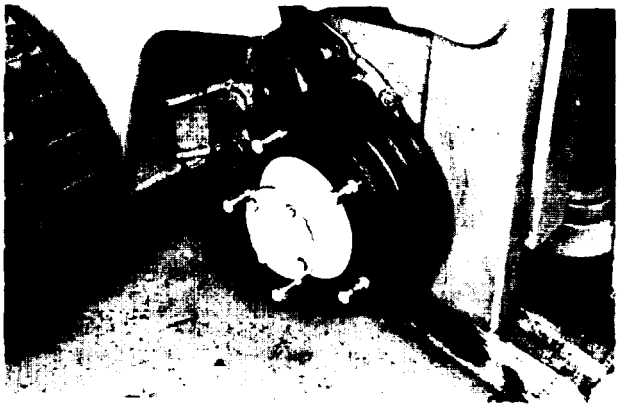

Figure 477. Wheel Removed

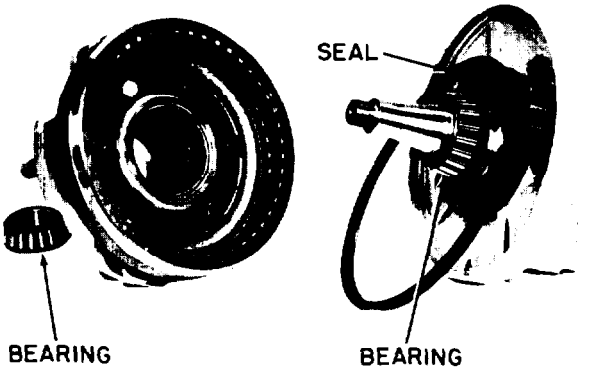

Figure 478. Axle End Removed

soap thickner containing anti-wear, anti-rust and anti-oxidants with EP additives. To meet or exceed Clark Specifications MS-107 and Timken Test 40 lbs. minimum (NLGI No. 1 or NLGI No. 2).

4-74. ADJUSTMENT CHECK.

a. Inspect adjustment of bearings by gripping top and bottom of tire, chuck tire in and out to determine looseness or wobble. Now grip front and rear side of tire, chuck tire in and out to determine looseness or wobble.

Note

Before making wheel bearing adjustment, be sure play (looseness or wobble) is in the wheel bearings and not in the king pins. (If wheel bearings need adjustment, clean and repack bearings before making adjustments. Refer to lubrication instructions in preceding paragraph.)

b. If bearings are loose and require adjustment, refer to figure 4-76 and remove hub cap and spindle cotter pin. Tighten nut with a 12 inch wrench and at the same time rotate the wheel in one direction and then in the other until there is a slight bind to be sure all bearing surfaces are in contact. Then back off the nut l/6 to l/4 turn, allowing the wheel to rotate freely. Secure nut at this position with a new cotter pin and replace hub cap.

4-75. CLEAN AND REPACK AXLE ENDS.

a. Every 1000 operating hours or every six months of operation, whichever occurs first, clean and repack the axle ends using a smooth stringy multi-purpose grease or refined mineral oil blended with a lithium soap thickner containing anti-wear, anti-rust and anti-oxidants with EP additives. To meet or exceed Clark Specifications MS-107 additives.

Test 40 lb. minimum (NLGI No. 1 or NLGI No. 2)
- Shell Aluania EP Grease No. 1 or No. 2
- Sun Prestige 741 EP No. 1 or 742 EP No. 2
- Gulfcrown Grease EP No. 2
- Amolith Grease EP No. 2
- Citgo HEP No. 1 or No. 2
- Texaco Multifak EP No. 1 or Marfak All Purpose No. 2
- Molub-Alloy General Purpose Grease No. 1 or No. 2

or the equivalent of the above listed lubricants.

b. Tilt upright back. Place solid heavy blocks under each upright rail. Tilt upright forward until vertical to the floor. This should allow the drive wheels to clear the floor. Remove the wheels from the hub assembly. See figure 4-77.

c. Remove hub cap, cotter pin, washer, spindle nut and pull hub assembly from vehicle (see figure 4-78).

www.truck-freeworkshop.com/clark/

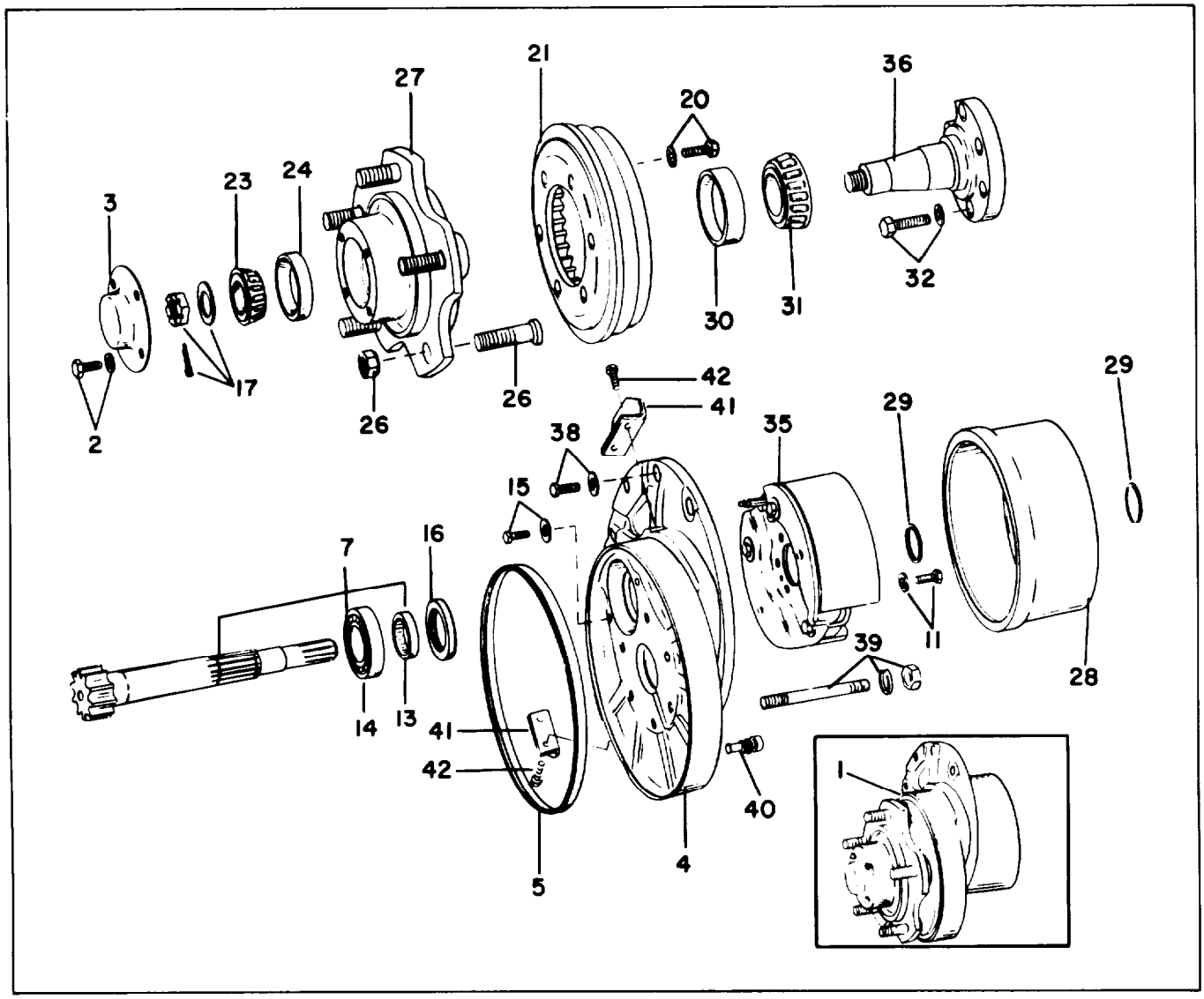

1. Axle end assembly, R.H., or L.H.
2. Hub cap bolt and lockwasher
3. Hub cap
4. Spindle support
5. Spindle support seal
7. Axle shaft, bearing and sleeve
11. Brake mounting bolt
13. Axle shaft sleeve
14. Ball bearing
15. Bearing bolt and lockwasher
16. Shaft seal
17. Bearing washer, nut, and cotter pin
20. Ring gear bolt
21. Internal ring gear
23. Outer bearing cone
24. Outer bearing cup
26. Drive wheel bolt
27. Drive wheel hub and bearing cup
28. Brake drum
29. snap ring
30. Inner bearing cup
31. Inner bearing cone
32. Spindle bolt and washer
35. Brake assembly
36. Spindle
38. Bolt and washer
38. Stud, washer and nut
40. Vent
41. Dust shield
42. Dust shield screw

Figure 4-79. Axle End Details

www.truck-freeworkshop.com/clark/

Figure 4-80. Repack Axle End Bearings

d. Remove bearings and clean in a Stoddard type cleaning solvent. Slosh bearings up and down in solvent. Remove and tap large side of bearing against a block of wood to dislodge solidified particles of lubricant. Repeat operation until bearings are thoroughly clean. Blow bearings dry with compressed air. Direct air stream across bearing to avoid spinning. Slowly rotate bearing by hand to facilitate drying. Dip bearings in gear oil and wrap them in clean paper until time of installation.

e. Clean ring gear, pinion drive shaft, hub assembly, spindle and spindle support in a Stoddard type cleaning solvent. See figure 4-79 for parts identification.

f. Inspect seal for cuts, scratches and nicks. It is necessary to replace seal if such a condition is found.

g. Refer to figure 4-80 and repack each axle end with specified lubricant. Each- axle end holds approximately 1 pound of grease. Check axle end vent for obstruction, vent must be open.

h. Install bearings, seal, hub, washer, spindle nut, cotter pin and hub cap. Tilt upright back and remove blocking.

4-76. UPRIGHT AND LIFT MECHANISM MAINTENANCE AND ADJUSTMENTS.

4-77. LIFT AND TILT CYLINDERS. Check for drift, leakage at packings, damage and security of mountings. (Anchor pivot pins, flanges and mounting rings.)

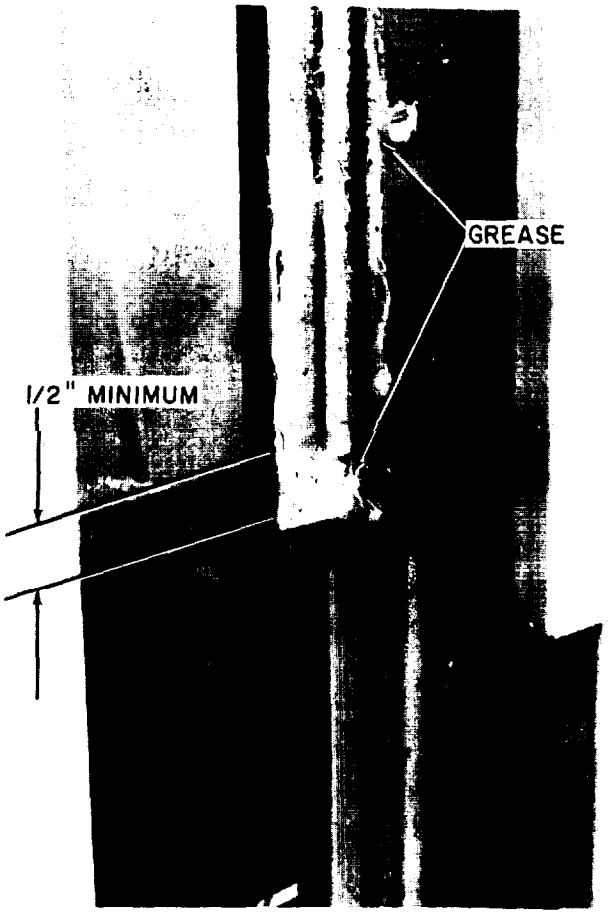

Figure 4-81. Carriage Roller Travel Check

4-78. LIFT CHAINS. The lift chains are mounted to the chain anchors on the lift carriage and at the chain anchor rods near the lift cylinder piston head.

a. If it becomes necessary to adjust the lift chains, proceed as follows:

WARNING

Keep clear of load and carriage when making adjustments to avoid injury if any malfunction should occur and cause load or carriage to fall.

www.truck-freeworkshop.com/clark/

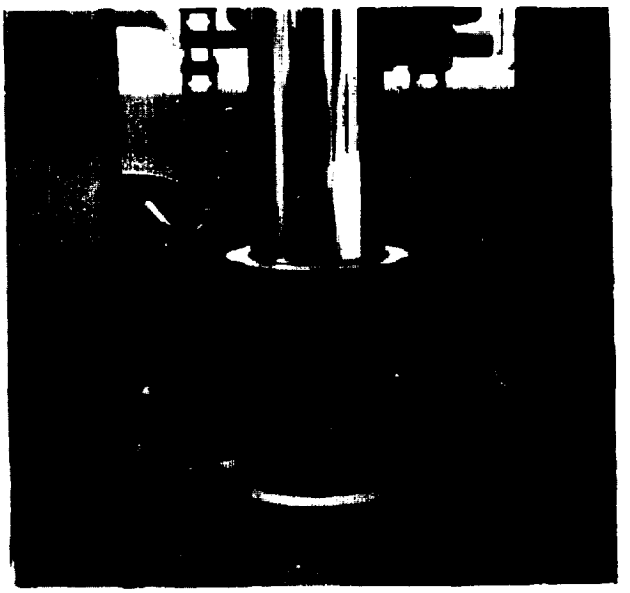

Figure 4-82. Lift Chain Adjustment

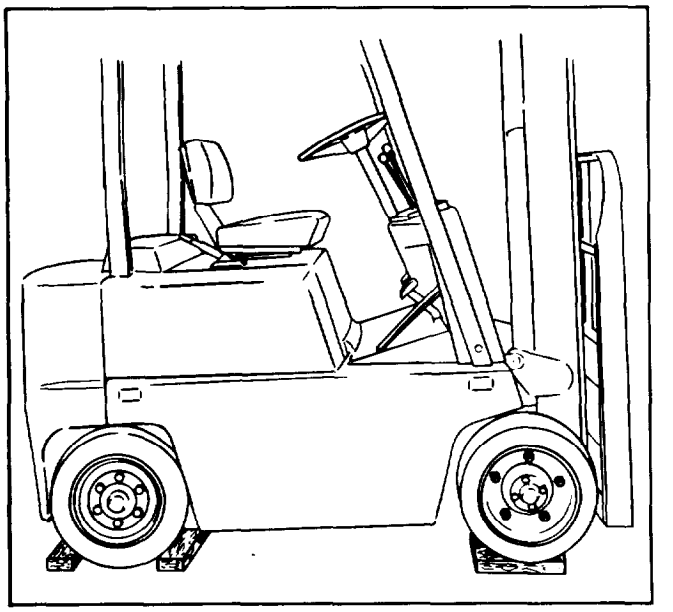

Figure 483. Blocking Wheels

b. Elevate carriage to about 4 feet.

c. Smear grease on the inner-slide channel as shown in figure 4-81.

d. Pick up a capacity load.

Note

It is important that the chain adjustment be made with a capacity load. In this manner you will allow for chain stretch.

e. Making sure upright is either vertical or aft of vertical, lower load to the bottom.

f. Remove capacity load.

g. Raise carriage and measure the distance from where the center of ***the bottom carriage roller*** stopped, to the bottom edge of the inner slide. Distance must not be less than 1/2 inch. Adjust chain length at anchors (see figure 4-82) as required to obtain this dimension.

4-79. LIFT CARRIAGE AND UPRIGHT ROLLER ADJUSTMENT CHECK.

a. Extend upright and carriage to the upper limit.

b. Check to be sure there is no bind, as the upright is lowered slowly. Rail assembly should be free to lower smoothly without hesitation or hang-up.

c. If there is any evidence of binding (rail assembly hesitates, remaining stationary briefly while lift cylinder continues to retract), upright rollers must be adjusted. Refer to paragraph 4-83.

4-80. LUBRICATE MACHINE. Lubricate all miscellaneous linkage with SAE 20 oil and all grease fittings with chassis grease. (Refer to Lubrication Chart.)

CAUTION

When lubricating machine, inspect for leaking hydraulic lines, fittings and electrical wiring.

4-81. HYDRAULIC CONTROL VALVE AND LINES. Inspect for damage, leakage and security of mounting.

4-82. LIFT BRACKET. Inspect for damage, bent forks, etc.

www.truck-freeworkshop.com/clark/

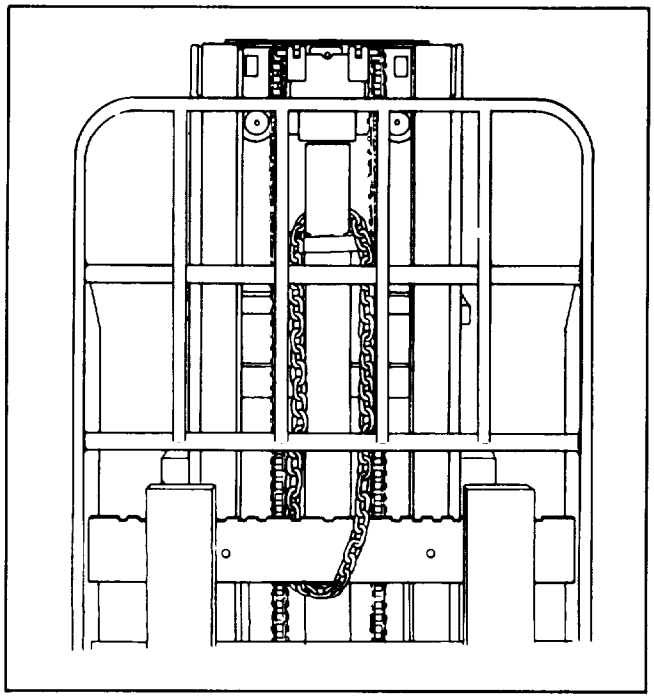

Figure 4-84. Supporting Carriage

4-83. UPRIGHT ROLLER ADJUSTMENT. If upright is binding or sticking during operation, an adjustment of the upright rollers is necessary. This adjustment is to be performed as follows:

a. Tilt the upright forward to raise drive wheels off the ground, and block up drive wheels and steering wheels as shown in figure 4-83.

b. Raise carriage and secure at its upper limit on upright with a heavy chain as shown in figure 4-84.

WARNING

Support carriage by running chain through lower carriage bar and wrapping chain around the lift cylinder just above the chain anchor bracket. Chain should contact cylinder barrel, not the push rod.

c. Position inner rail about 5 inches above the full down position. Check for excessive clearance at top and bottom of both sides of the inner rail

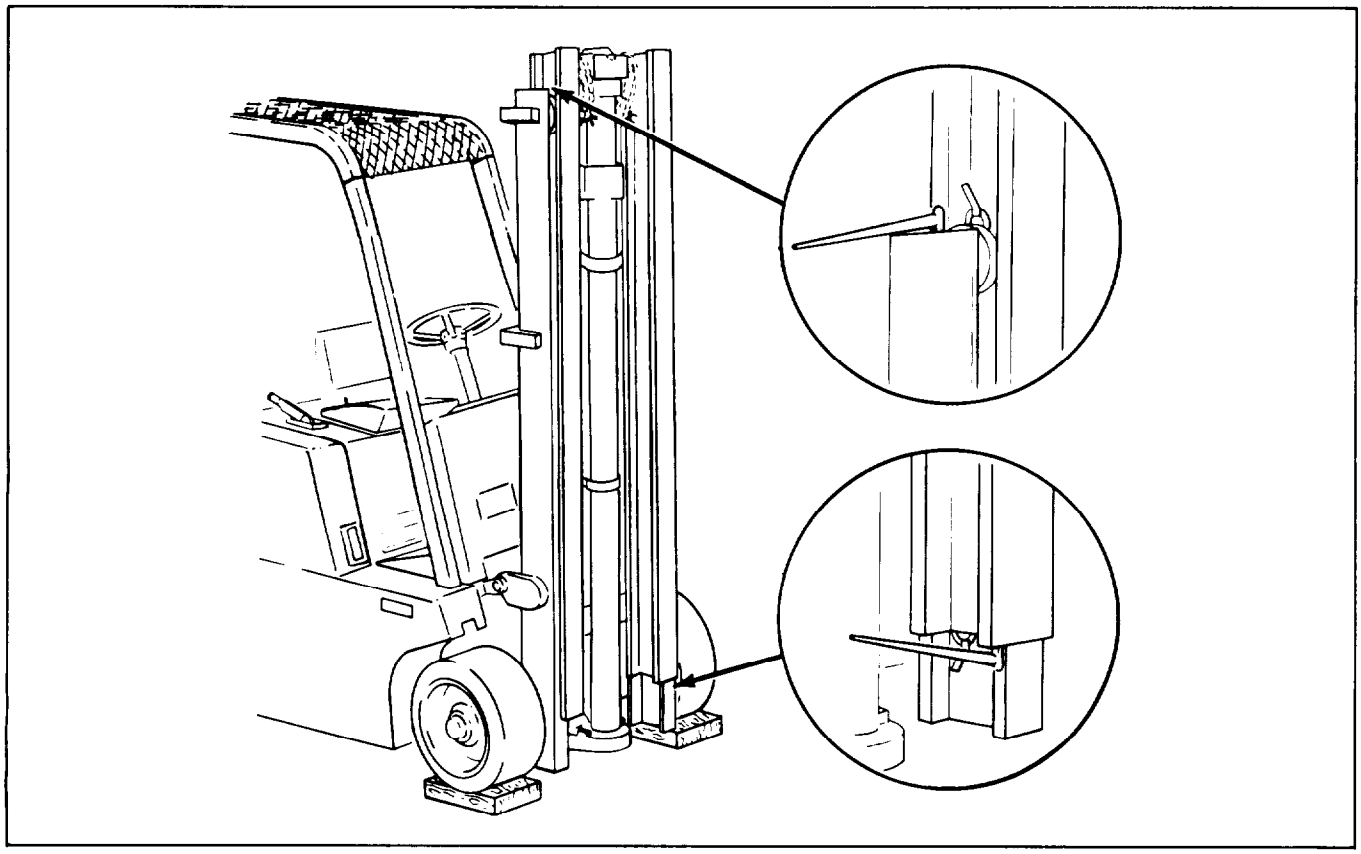

Figure 4-85. Roller Clearance Check

www.truck-freeworkshop.com/clark/

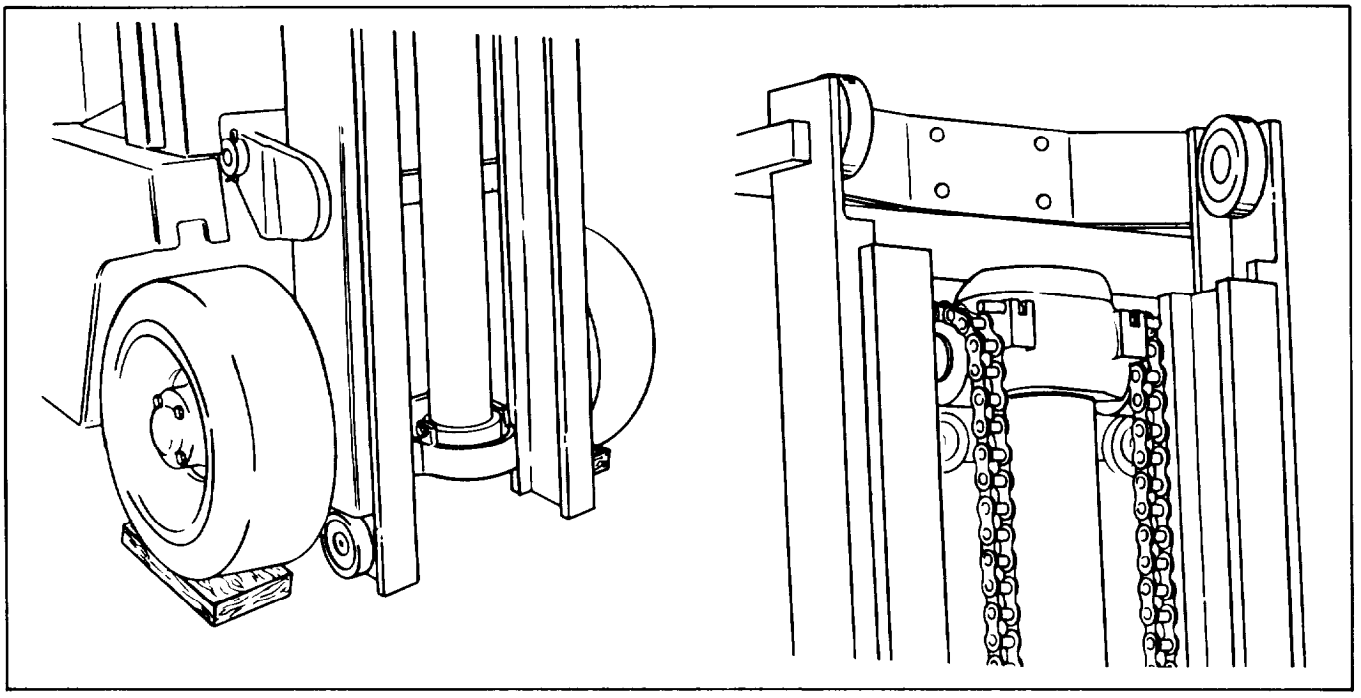

Figure 4-86. Upper and Lower Upright Rollers Exposed

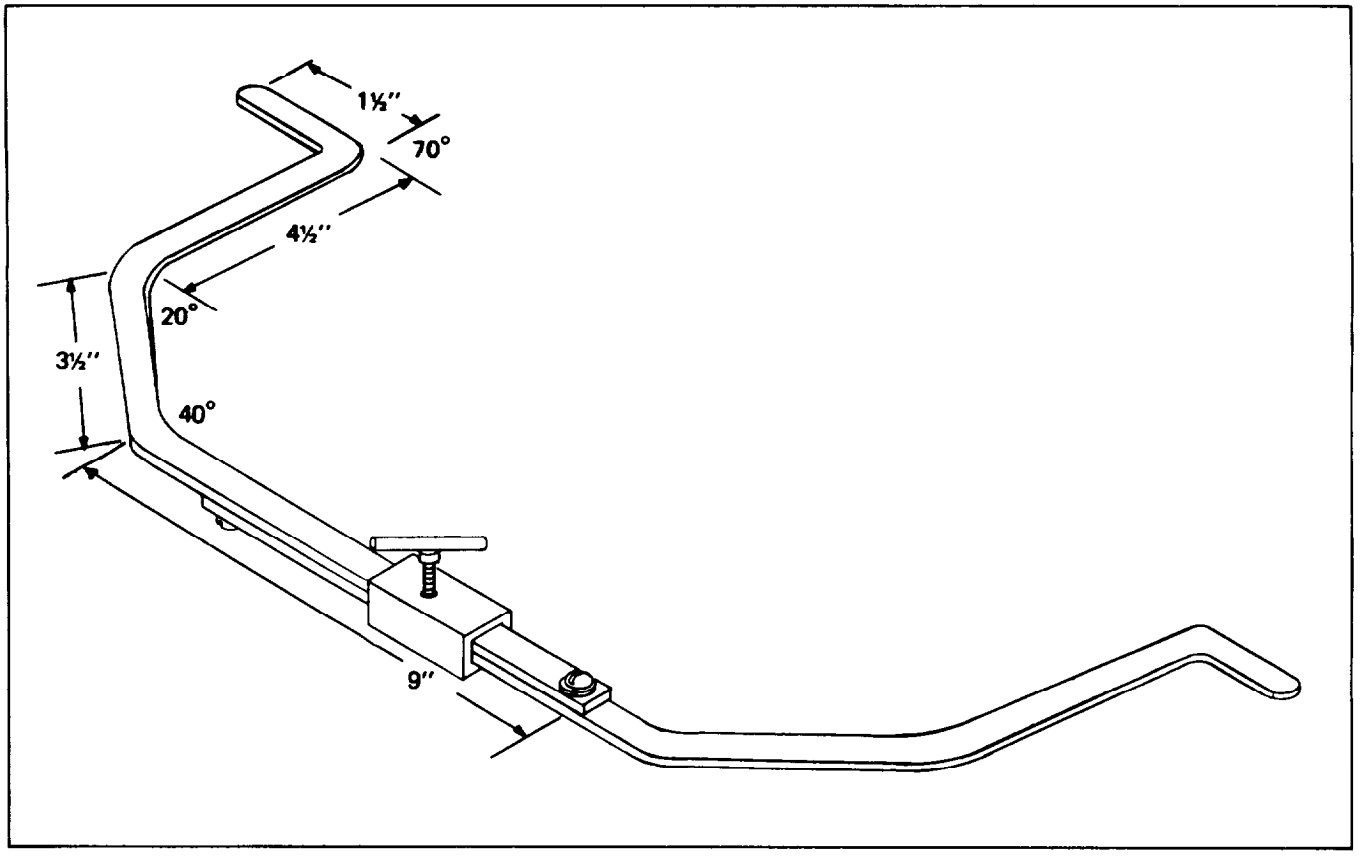

Figure 487. Inside Spanning Tool

www.truck-freeworkshop.com/clark/

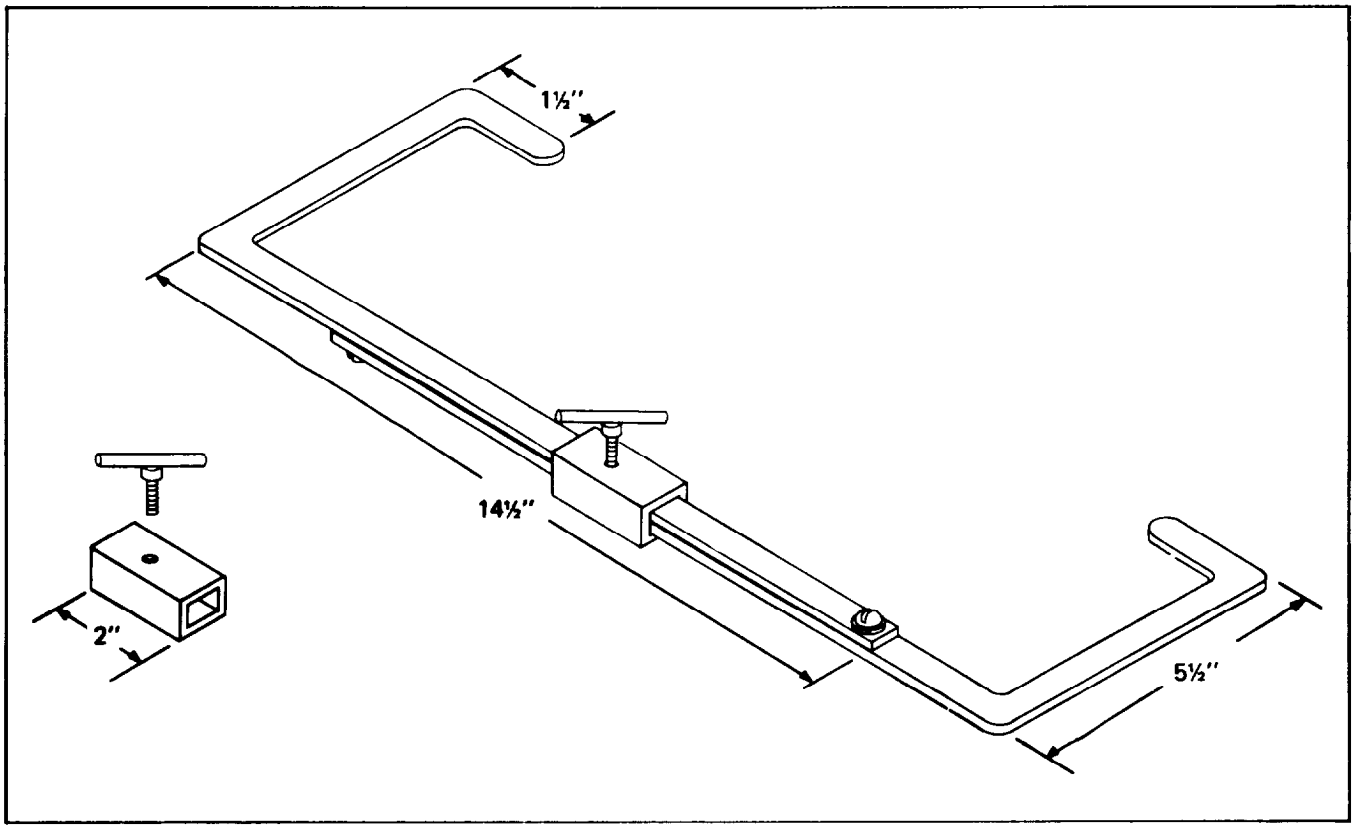

Figure 4-88. Outside Spanning Tool

(see figure 4-85). Some clearance must he evident but not to exceed 1/32 inch. Record actual clearances measured and determine the number of shims required under the roller to bring clearance into the 1/32 range. Write this number on the inner rail (bottom rollers) or outer rail (top rollers), adjacent to the roller.

d. Raise inner rail to 1/2 full up position. Check roller clearances as in step c (figure 485) and record number of shims needed to adjust clearance. For top rollers, record number on the outer rail. For bottom rollers, record number on the lower rail.

e. Raise inner rail to its full up position and repeat roller clearance check, recording numbers on the inner and outer rails as before. There will now be 3 numbers recorded on the upright rails adjacent to each roller.

f. Lower inner rail part way and remove stop block from top of inner rail

g. Lower inner rail until the upper and lower rollers are exposed as shown in figure 4-86.

h. Remove the right and left hand upper rollers and count the number of shims used with each.

i. Refer to the numbers previously recorded on the outer rail. The smallest of these numbers represents the number of shims to be added behind the roller.

j. Ideally, there should be the same number of shims behind each of the upper rollers. If, however, an extra shim is required behind one of the rollers, do not remove it. Mark the outer rail, on the side having the extra shim, with a plus one (+l).

k. Repeat steps h, i and j on the bottom rollers. If an extra shim is required on one of the bottom rollers, it must be installed on the same side as the extra shim (if needed) on the top roller.

1. After roller adjustment is made and all rollers

www.truck-freeworkshop.com/clark/

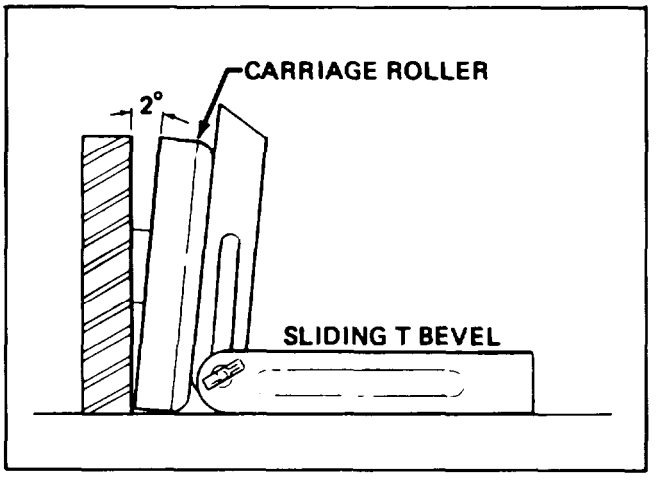

Figure 4-89. Checking Roller Angle

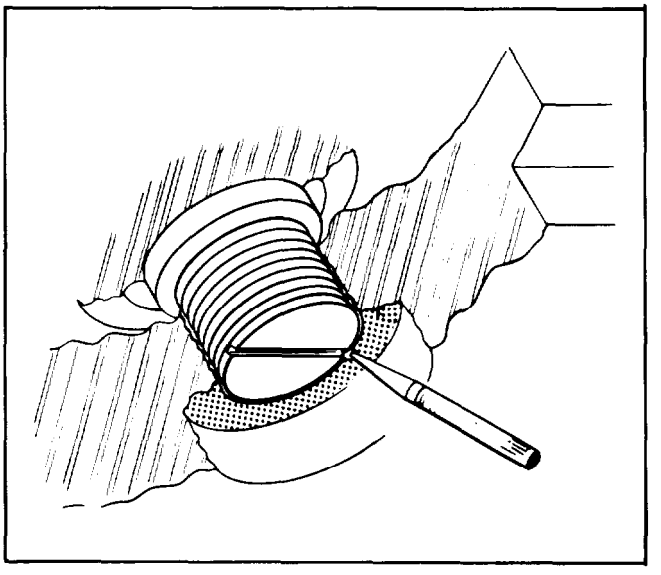

Figure 4-90. Securing Outer Thrust Roller

are in place, raise inner rail enough to install the stop block behind the inner rail.

4-84. CARRIAGE ROLLER ADJUSTMENT. Carriage roller adjustment will require removal of the carriage. Refer to paragraph 5-140 for carriage removal procedures.

4-86. TOOLS REQUIRED. Special measuring devices called spanners are required to perform the carriage roller adjustments. Refer to figures 4-87 and 4-88 for details of construction.

4-86. CLEARANCE ADJUSTMENT.

a. Use inside spanning tool, figure 4-87, to check the distance between the inner rails at every ten inches over their entire length. Lock the tool at the smallest span obtained.

Note

Measurements must be taken inside the rails, not on the edges, and the spanning tool must be held perpendicular to the rails.

b. Use a sliding "T" bevel to check angle of the carriage rollers. This angle must be 2° ± 1/2°. If not, the roller pin must be replaced. (See figure 489.)

c. Set outside spanning tool to match span of the inside spanning tool, and lock the outside tool in position.

d. Span upper carriage rollers

checking across the upper outside of the roller (outermost camber point). Add or subtract shims behind rollers until the span across the rollers is equal to the inner rail span, less l/16 inch total. The l/16 inch clearance must not be exceeded. No more than l/32 inch clearance is permissible over the roller on each side.

4-87. CENTERING ADJUSTMENT.

a. Check outer thrust rollers for wear and loose mounting studs. If bearings are worn, replace, If loose, tighten and stake in place as shown in figure 4-90.

b. Center the carriage roller within the outer thrust rollers by placing a 6-inch scale on the carriage roller surface and measuring the distance to the outer thrust roller face. Check this distance on both sides. (See figure 491.)

c. Transfer shim from one side to the other to make the measurement equal on both sides. Do not remove a shim from one side without replacing that shim on the opposite side.

4-88. SQUARING ADJUSTMENT.

a. Check for an out-of-square condition by placing a carpenter's square over the rollers and upper fork bar as shown in figure 4-92. Hold the

www.truck-freeworkshop.com/clark/

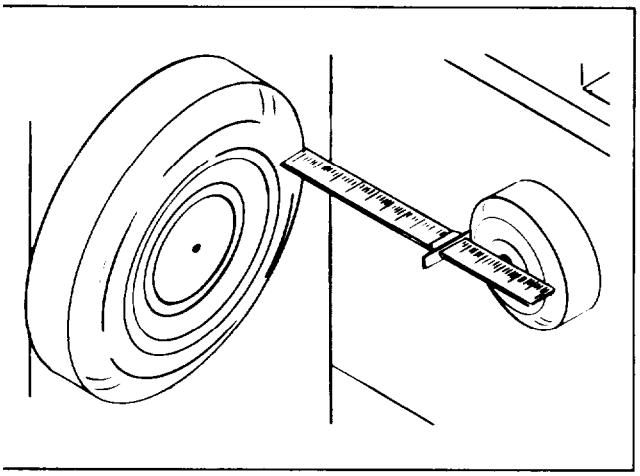

Figure 4-91. Roller Centering Measurement

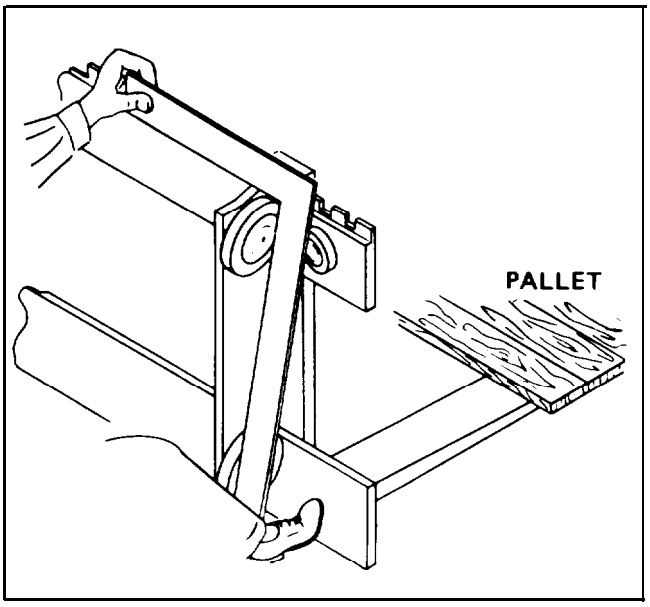

Figure 4-92. Checking Rollers for Squareness

square in place with hand and ankle as shown.

b. Hold square tightly and measure distance between the top face of the upper fork bar to the edge of the square at Point A shown in figure 4-93.

c. Take a similar measurement at far end of square. This measurement should be the same as that obtained in step b. If it is not, add or remove shims on lower roller shaft to make these measurements the same.

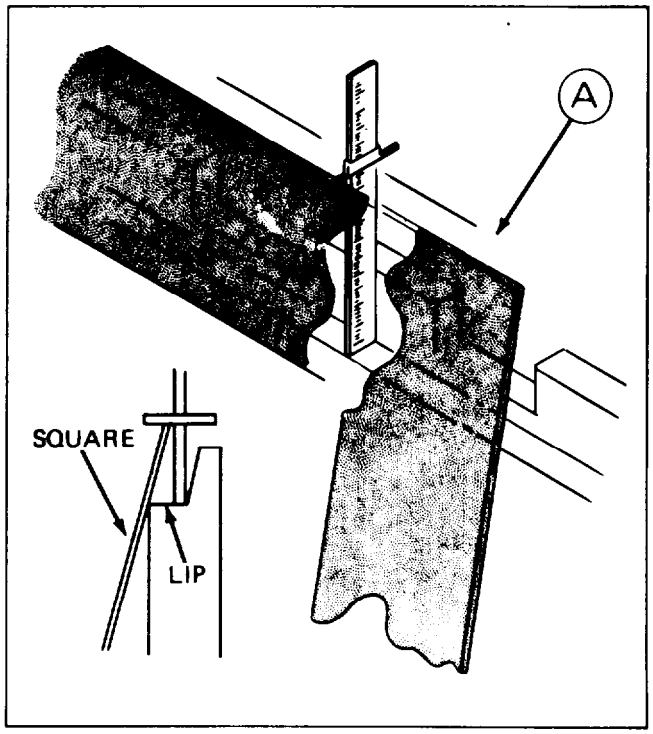

Figure 4-93. Measuring Out-of-Square

d. After the lower roller on one side is squared, shims will have to be added or removed from the opposite side to bring the roller span to the proper dimension, as outlined in paragraph 4-86, steps c and d.

www.truck-freeworkshop.com/clark/

www.truck-freeworkshop.com/clark/

TABLE 4. TROUBLESHOOTING GUIDE

TROUBLE	PROBABLE CAUSE	REMEDY
	1. ENGINE	
Starting motor will not crank engine	Battery discharged	Recharge or replace battery.
	Battery cable terminals loose or corroded. Ignition fuse blown	Remove and clean, reinstall and tighten cables. Replace fuse.
	Starting motor drive gear jammed in flywheel teeth	Loosen starting motor and free-up gear.
	Improper oil	Change oil to proper grade.
	Battery cable terminal broken	Replace cable.
	Poor starting switch contacts	Replace switch.
	Faulty Neutral Starting Switch	Refer to Starting Motor.
Starting motor operates, but fails to crank engine when switch is engaged	Starting motor gear does not engage flywheel	Remove starting motor, and clean drive mechanism.
	Starting motor or drive gear defective	Replace starting motor.
Engine will not start. No spark. Ammeter shows no discharge (Zero reading) with ignition switch "on".	Ignition switch partly "on".	Turn switch "on" fully.
	Ignition switch defective	Replace switch.
	Ignition primary wires or starting motor cables broken or connections loose	Repair, or replace and tighten.
	Ignition coil primary winding open	Replace coil.
	Distributor points dirty	Clean and adjust points.
	Distributor points not closing	Adjust or replace points.
	Loose or corroded ground, or battery cable connections	Remove and clean, reinstall and tighten cables.
Engine will not start.	Defective condenser	Replace condenser.
Ammeter showing abnormal discharge with ignition switch "on".	Shortcircuited or burned distributor cap or rotor	Replace parts.

www.truck-freeworkshop.com/clark/

TABLE 4. TROUBLESHOOTING GUIDE (Continued)

TROUBLE	PROBABLE CAUSE	REMEDY
1. ENGINE (Continued)		
Engine will not start. Ammeter showing abnormal discharge with ignition switch "on". (continued)	Short-circuited wire between ammeter and ignition switch Shortcircuited primary winding in ignition coil Distributor points not opening	Repair or replace wire. Replace coil. Clean or replace, and adjust points.
Weak spark	Distributor points pitted or burned Distributor condenser weak Ignition coil weak Primary wire connections loose High-tension, spark plug wires, or distributor cap wet High-tension, spark plug wires, or distributor cap damaged Distributor cap or rotor burned or broken Spark plug gap incorrect Shortcircuited secondary circuit in coil	Clean or replace, and adjust points. Replace condenser. Replace coil. Tighten. Dry thoroughly. Replace defective parts. Replace defective parts, Reset gaps. Replace coil.
Good spark	Fuel tank empty Dirt or water in carburetor, or float stuck Carburetor and engine flooded by excessive use of choke Fuel does not reach carburetor Dirt in fuel lines or tank	Refill tank. Drain and clean carburetor. Depress accelerator pedal fully, crank engine with starting motor, when engine starts, reset throttle and leave choke control "in". Inspect for damaged or leaky lines or air leak into line between tank and fuel pump. Disconnect lines, drain tank, and blow out lines.

www.truck-freeworkshop.com/clark/

TABLE 4. TROUBLESHOOTING GUIDE (Continued)

TROUBLE	PROBABLE CAUSE	REMEDY
1. ENGINE (Continued)		
Engine will not start. Good spark. (Continued)	Fuel line pinched Ignition wires incorrectly installed in distributor cap Ignition timing incorrect Fuel Strainer Clogged Fuel pump does not pump Lack of engine compression	Repair or replace line. Install wires correctly. Reset timing. Remove and clean strainer. Clean screen, replace pump if defective. Report to designated authority.
Backfiring	Ignition out of time Spark plug wires incorrectly installed at distributor cap or spark plugs Distributor cap cracked or shorted Valve holding open	Reset timing. Install wires correctly. Replace cap. Report to designated authority.
Engine operates, but backfires and spits	Improper ignition timing Spark plug wires incorrectly installed in distributor cap Dirt or water in carburetor Carburetor improperly adjusted Carburetor float level low Valve sticking or not seating properly, burned or pitted Excessive carbon in cylinders Valve springs weak	Reset timing. Install wires correctly. Drain and clean carburetor. Clean and adjust carburetor. Report to designated authority. Report to designated authority. Remove carbon from cylinders. Report to designated authority.

www.truck-freeworkshop.com/clark/

TABLE 4. TROUBLESHOOTING GUIDE (Continued)

TROUBLE	PROBABLE CAUSE	REMEDY
1. ENGINE (Continued)		
Engine operates, but backfires and spits (continued)	Heat control valve not operating	Free-up, and adjust valve.
	Fuel pump pressure low	Clean screen; replace pump, if defective.
	Fuel strainer clogged	Remove and clean strainer.
	Partly clogged or pinched fuel lines	Clean and repair lines.
	Intake manifold leak	Inspect gaskets and tighten manifold stud nuts.
	Distributor cap cracked or Shorted	Replace cap.
Engine stalls on idle	Carburetor throttle valve closes too far, or idle mixture incorrect	Adjust carburetor.
	Carburetor choke valve remains closed.	Free-up and lubricate valve.
	Dirt or water in idler passages of Carburetor	Clean or replace carburetor.
	Air leak at intake manifold	Inspect gaskets and tighten manifold stud nuts.
	Heat control valve defective	Free-up and adjust valve.
	Spark plugs defective, gaps incorrect	Clean or replace spark plugs, set gap clearance.
	Ignition timing early	Reset timing.
	Low compression	Report to designated authority.
	Water leak in cylinder head or head gaskets	Replace gasket; report cylinder head leak to designated authority.
Engine misfires on one or more cylinders	Dirty spark plugs	Clean, adjust, or replace plugs.
	Spark plug gap incorrect	Reset gap.

www.truck-freeworkshop.com/clark/

TABLE 4. TROUBLESHOOTING GUIDE (Continued)

TROUBLE	PROBABLE CAUSE	REMEDY
1. ENGINE (Continued)		
Engine misfires on one or more cylinders (continued)	Cracked spark plug porcelain	Replace spark plug.
	Spark plug wires grounded	Replace wires.
	Spark plug wires incorrectly installed in cap or at spark plugs	Install wires correctly.
	Distributor cap or rotor burned or broken	Replace defective parts.
	Valve tappet holding valve open	Report to designated authority.
	Low engine compression	Report to designated authority.
	Leaky cylinder head gasket	Replace gasket.
	Cracked cylinder block, broken valve tappet or tappet screw	Report to designated authority.
Engine does not idle properly	Ignition timing	Reset timing.
	Dirty spark plugs, or gaps too close	Clean and adjust spark plugs.
Engine misses at high speeds	Ignition coil or condenser weak	Replace defective parts.
	Distributor points sticking, dirty or improperly adjusted	Clean, adjust, or replace points.
	Distributor rotor or cap cracked or burned	Replace defective parts.
	Leaky cylinder head gaskets	Replace gaskets.
	Uneven cylinder compression	Report to designated authority.
	High-tension or spark plug wires leaky, cracked insulation	Replace defective parts.
	Carburetor choke not adjusted	Adjust choke.
	Carburetor accelerating pump system defective, dirt in metering jets or float level incorrect.	Report to designated authority.

www.truck-freeworkshop.com/clark/

TABLE 4. TROUBLESHOOTING GUIDE (Continued)

TROUBLE	PROBABLE CAUSE	REMEDY
1. ENGINE (Continued)		
Engine misses at high speeds (continued)	Fuel pump defective, causing lack of fuel	Clean screen, replace defective pump.
	Air cleaner dirty	Clean complete air cleaner and refill oil cup.
	Heat control valve defective	Free-up and adjust.
	Valves sticking, weak or broken valve springs	Report to designated authority.
	Fuel strainer clogged	Remove and clean strainer.
	Weak distributor bracket arm spring	Replace point set.
	Excessive play in distributor shaft bearing	Replace distributor.
	Spark plugs defective, dirty or gap incorrectly set	Clean, adjust or replace spark plugs.
Engine pings (Spark Knock)	Ignition timing early	Reset timing.
	Distributor automatic spark advance stuck in advance position, or spring broken	Replace distributor.
	Excessive carbon deposit in cylinders	Remove cylinder head and clean.
	Incorrect fuel	Drain, use correct fuel.
Engine lacks power	Ignition timing late	Reset timing.
	Incorrect fuel	Use correct fuel.
	Leaky cylinder head gasket	Replace gasket.
	Excessive carbon formation	Remove cylinder head, and clean cylinder head, piston heads, cylinder block, and valves.
	Engine runs cold	Test thermostat; in cold weather, cover radiator.

www.truck-freeworkshop.com/clark/

TABLE 4. TROUBLESHOOTING GUIDE (Continued)

TROUBLE	PROBABLE CAUSE	REMEDY
1. ENGINE (Continued)		
Engine lacks power (continued)	Insufficient oil, or improper grade oil	Lubricate in accordance with lubrication section.
	Oil system failure	Report to designated authority.
	Air Cleaner dirty	Clean complete air cleaner, change oil in cup.
	Spark plug gaps too wide	Reset gaps.
	Choke valve partially closed, or throttle does not open fully	Adjust valve or throttle.
	Manifold heat control inoperative	F' ree-up and adjust control.
	Exhaust pipe, muffler or tail pipe obstructed	Service or replace obstructed parts.
	Low compression, broken valve springs, sticking valves	Report to designated authority.
	Improper tappet adjustment	Adjust tappets.
	Lack of fuel	Clean filter, inspect fuel pump, inspect carburetor for water or dirt and clean if necessary.
Engine overheats	Cooling system deficient. Water low, air flow through radiator core restricted	Clean radiator core from engine side with compressed air or water, or fill radiator to proper level.
	Clogged radiator core (Clogged internally)	Clean by flushing radiator.
	Cylinder head gasket leaking	Tighten cylinder head stud nuts and/or replace gasket.
	Radiator or water pump leaking	Repair or replace defective parts.
	Damaged or deteriorated hose or fan belt	Replace defective parts.
	Loose fan belt	Adjust fan belt tension.
	Cylinder block or head leaking	Report to designated authority.

www.truck-freeworkshop.com/clark/

TABLE 4. TROUBLESHOOTING GUIDE (Continued)

TROUBLE	PROBABLE CAUSE	REMEDY
1. ENGINE (Continued)		
Engine overheats (continued)	Ignition timing incorrect	Reset timing.
	Damaged muffler, bent or clogged exhaust pipe	Service or replace defective parts.
	Excessive carbon in cylinders	Remove cylinder head, and clean cylinder head, piston heads cylinder block, and valves.
	Insufficient oil, or improper grade	Refer to Lubrication Instructions.
	Air Cleaner restricted	Clean or replace element.
	Inoperative thermostat	Replace thermostat and gasket.
	Water pump impeller broken	Replace pump.
	Poor compression	Report to designated authority.
	Valve timing incorrect	Reset timing.
High fuel consumption	High engine speeds (Excessive driving in lower gear range)	Correct driving practice.
	Air cleaner clogged	Clean or replace element.
	Carburetor float level too high, accelerating pump not properly adjusted	Report to designated authority.
	Fuel line leaks	Correct leaks, replace lines.
	Overheated engine	See "Engine overheats".
	Carburetor parts worn or broken	Replace fuel carburetor.
	Fuel pump pressure too high, or leaky diaphragm	Replace fuel pump.
	Engine running cold	Inspect thermostat, cover radiator in winter.
	Ignition incorrectly timed	Reset timing.

www.truck-freeworkshop.com/clark/

TABLE 4. TROUBLESHOOTING GUIDE (Continued)

TROUBLE	PROBABLE CAUSE	REMEDY
1. ENGINE (Continued)		
High fuel consumption (Continued)	Spark advance stuck	Replace distributor.
	Leaking fuel pump bowl gasket	Replace gasket.
	Low compression	Report to designated authority.
	Carburetor controls sticking	Free-up and lubricate controls.
	Engine idles too fast	Adjust carburetor throttle stop screw.
	Spark plugs dirty	Clean or replace spark plugs.
	Weak coil or condenser	Replace coil or condenser.
	Clogged muffler, or bent exhaust pipe	Service or replace defective parts.
	Loose engine mounts, permitting engine to shake and raise fuel level in carburetor	Tighten; if damaged, replace defective mounts.
High oil consumption	High engine speeds, or excessive driving in low gear range	Correct driving practice.
	Oil leaks	Replace leaking gaskets.
	Improper grade oil, or diluted Oil	Use new oil of proper grade.
	Overheating of engine causing thinning of oil	See "Engine overheats".
	Oil filter clogged	Clean filter case thoroughly and replace element.
	Defective piston or rings, excessive side clearance of intake valves in guides, cylinder bores worn (scored, out-of-round, tapered); excessive bearing clearance, misaligned connecting rods	Report to designated authority.
Low oil pressure	Insufficient oil supply	Fill crankcase to prescribed level.

www.truck-freeworkshop.com/clark/

TABLE 4. TROUBLESHOOTING GUIDE (Continued)

TROUBLE	PROBABLE CAUSE	REMEDY
1. ENGINE (Continued)		
Low oil pressure (Continued)	Improper grade of oil, or diluted oil foaming at high speeds	Change oil, inspect crankcase ventilator, inspect for water in oil.
	Oil too heavy (funneling in cold weather)	Change to proper grade oil. (Refer to Lubrication Instructions.)
	Oil pump screen clogged	Remove oil pan and clean pump screen.
	Oil leaks	Report to designated authority.
	Faulty oil pump, pressure regulator valve stuck or improperly adjusted, or spring broken	Report to designated authority.
Defective valves	Incorrect tappet adjustment	Adjust tappets.
	Other valve troubles	Report to designated authority.
Abnormal engine noises	Loose fan, fan pulley or belt, heat control valve	Tighten or correct conditions as required.
	Leaking intake or exhaust manifold or gaskets, cylinder head gasket, or spark plugs	Tighten loose components or replace defective gaskets.
	Overheated engine, clogged exhaust system	Remove obstruction from exhaust system. Inspect for further serviceability.
	Other abnormal engine noises	Report to designated individual in authority.
Poor compression	Incorrect tappet adjustment	Adjust tappets.
	Leaking, sticking, or burned valves; sticking tappets; valve spring weak or broken; valve stems and guides worn; piston ring grooves worn or rings worn, broken, or stuck; cylinder bores scored or worn	Report to designated authority.

www.truck-freeworkshop.com/clark/

TABLE 4. TROUBLESHOOTING GUIDE (Continued)

TROUBLE	PROBABLE CAUSE	REMEDY
2. FUEL SYSTEM		
Fuel does not reach carburetor	No fuel in fuel tank	Fill fuel tank.
	Fuel pump inoperative	Replace pump.
	Fuel line air leak between tank and fuel pump	Repair or replace line.
	Fuel line clogged	Disconnect and blow out lines.
	Fuel tank cap vent clogged	Clean vent.
Fuel reaches carburetor, but does not reach cylinders	Choke does not close	Free-up and lubricate, inspect for proper operation.
	Fuel passage in carburetor clogged	Clean or replace carburetor.
	Carburetor float valve stuck closed	Report to designated authority.
High fuel consumption	Lubricant in power train too heavy	Use correct lubricant.
	Incorrect adjustment of carburetor	Adjust carburetor.
	Vehicle overloaded	Reduce loads to specified maximum capacity.
	Tight brakes	Adjust brakes.
Low fuel pressure	Air leak in fuel lines	Tighten connections, repair lines if damaged.
	Fuel pump defective, diaphragm broken; valves leaking, linkage worn	Replace fuel pump.
	Fuel lines clogged	Clean or replace lines.
Engine idles too fast	Improper carburetor throttle stop adjustment.	Adjust throttle stop screw.
	Carburetor control sticking	Free-up and lubricate control.

www.truck-freeworkshop.com/clark/

TABLE 4. TROUBLESHOOTING GUIDE (Continued)

TROUBLE	PROBABLE CAUSE	REMEDY
2. FUEL SYSTEM (Continued)		
Engine idles too fast (continued)	Control return spring weak	Replace spring.
Fuel gauge does not register	Loose wire connection at instrument panel or tank unit	Tighten connections.
	Instrument panel unit or tank unit inoperative	Replace unit.
3. IGNITION SYSTEM		
Ignition system troubles	Weak spark	Refer to "Engine will not start".
	Timing incorrect	Retime ignition.
	Moisture on distributor wires, coil, or spark plugs	Clean and dry thoroughly.
	Ignition switch inoperative	Replace switch.
	Primary or secondary wiring loose, broken, or grounded	Service.
	Coil defective	Refer to "Ignition coil troubles", below.
	Distributor defective	Refer to "Distributor troubles", below.
	Spark plug defective	Refer to spark plug troubles below.
Ignition coil	Connections loose; dirty or broken external wire, wet	Clean and tighten, or repair, dry thoroughly.
	Coil defective	Replace coil.
Distributor troubles	Distributor breaker points dirty or pitted, points gaps incorrect	Clean, adjust or replace breaker points.
	Distributor breaker point arm spring weak	Replace breaker point arm.
	Distributor breaker points sticking	Free-up breaker points.

www.truck-freeworkshop.com/clark/

TABLE 4. TROUBLESHOOTING GUIDE (Continued)

TROUBLE	PROBABLE CAUSE	REMEDY
3. IGNITION SYSTEM (Continued)		
Distributor troubles (continued)	Distributor automatic advance defective	Lubricate and free-up. If seized, replace distributor.
	Distributor cap or rotor shorted, cracked or broken	Replace defective parts.
	Distributor rotor does not turn	Report to designated individual in authority.
	Condenser defective	Replace condenser.
Spark plug troubles	Cracked, broken, leaking, or improper type	Replace spark plug.
	Spark plug wires incorrectly installed on plugs or in distributor cap	Install wires correctly.
	Spark plugs dirty; gap incorrect	Clean, set gaps, or replace plugs.
	Spark plug porcelain cracked or broken	Replace plug.
4. STARTING MOTOR		
Starting motor cranks engine slowly	Engine oil too heavy	Change to proper grade oil.
	Battery charge low	Recharge or replace battery.
	Battery cell shorted	Replace battery.
	Battery connections corroded, broken, or loose	Clean and tighten, or replace cables.
	Dirty commutator	Clean commutator.
	Insufficient brush surface contact	Free-up or replace brush.
	Defective starting motor	Replace starting motor.
	Starting switch defective	Replace switch.
Starting motor does not crank engine	Engine oil too heavy	Change to proper grade oil.
	Starting motor, Solenoid, or cables defective; loose connections	Replace or tighten loose connections.

www.truck-freeworkshop.com/clark/

TABLE 4. TROUBLESHOOTING GUIDE (Continued)

TROUBLE	PROBABLE CAUSE	REMEDY
4. STARTING MOTOR (Continued)		
Starting motor does not crank engine (continued)	Starting motor pinion gear jammed in flywheel drive gear	Remove starting motor and reinstall. Replace defective driving gear.
	Dirty drive mechanism	Clean and lubricate drive mechanism.
	Faulty Relay Switch	Replace Relay Switch.
	Ignition fuse blown	Replace fuse.
	Faulty ignition switch	Replace switch.
	Faulty Neutral starting switch	Replace switch.
5. BATTERY, LIGHTS AND HORN		
Battery discharged	Battery solution level low	Add distilled water to bring level above plates; inspect for cracked case.
	Short in battery cell	Replace battery.
	Generator not charging	Inspect generator, fan belt, and regulator.
	Loose or dirty connections; broken cables	Clean and tighten connections; replace cables.
	Excessive use of starting motor	Tune up engine; charge battery.
	Idle battery, or excessive use of lights with engine at idle	Recharge or replace battery. Use lights sparingly.
	Short circuits	Replace defective wiring.
Battery (other troubles)	Overheated battery	Inspect for short circuit or excessive generator charge.
	Case bulged (or out of shape)	Inspect for overcharging and over-tightening of holddown screws.
Light switch	Loose or dirty connections; broken wire	Clean and tighten; replace broken wire.

www.truck-freeworkshop.com/clark/

TABLE 4. TROUBLESHOOTING GUIDE (Continued)

TROUBLE	PROBABLE CAUSE	REMEDY
5. BATTERY, LIGHTS AND HORN		
Light switch [continued)	Defective switch	Replace switch.
Wiring	Loose or dirty connections; broken wire or terminal	Clean, tighten, repair or replace. Wire or terminal.
Lights do not light	Switch not fully "on" Loose or dirty connections; broken wire Wiring circuit short-circuited, or open Light burned out	Turn switch "on" fully. Clean and tighten; replace or repair wire or terminal. Correct short circuit or replace defective parts. Replace light.
Lights dim	Loose or dirty connection Wiring short-circuited Defective switch	Clean and tighten connections. Correct short circuit or replace defective parts. Replace switch.
Horn troubles	Loose or dirty wiring connections	Clean and tighten connections.
Horn sounds continuously	Short-circuit in wiring between horn and horn button	Replace wire.
Improper tone	Loose or dirty wiring connections Cover or bracket screws loose Points adjusted improperly	Clean and tighten connections. Tighten. Adjust points.
Horn will not operate	Horn fuse blown Open circuit Faulty horn relay	Replace fuse. Trace, repair or replace as required. Replace relay.

www.truck-freeworkshop.com/clark/

TABLE 4. TROUBLESHOOTING GUIDE (Continued)

TROUBLE	PROBABLE CAUSE	REMEDY
6. TRANSMISSION, CONVERTER AND AXLE ADAPTOR (HYDRATORK DRIVE)		
Machine will not move in either direction	Parking brake not released	Release brake.
	Control linkage not properly adjusted	Readjust linkage.
	Oil level low	Determine cause and correct. Fill to proper level with Type "A" Automatic Transmission Fluid Armour Qualified.
	No oil pressure	Report to designated authority.
Machine will move in one direction only	Control linkage not adjusted	Adjust linkage.
	No oil pressure to directional selector. Seals and "0" rings in directional selector may be defective	Report to designated authority.
	Directional selector discs not releasing. Discs defective. Relief hole in D.S. drum clogged	Report to designated authority.
Machine moves slowly in both directions at wide open throttle	Oil level low	Fill to correct level and determine cause for loss of oil.
	Low oil pressure. Faulty inching valve, faulty relief valve, faulty pump	Report to designated authority.
	Brakes dragging	Report to designated authority.
	Clogged sump screen	Clean screen.
Transmission overheating	Low oil	Check and fill to correct level.
	Low directional selector pressure (check with gauge). Inching valve not functioning properly	Report to designated authority.
	Seals in selector defective	Report to designated authority.
	Regulating valve sticking open	Report to designated authority.
	Brakes dragging	Report to designated authority.

www.truck-freeworkshop.com/clark/

TABLE 4. TROUBLESHOOTING GUIDE (Continued)

TROUBLE	PROBABLE CAUSE	REMEDY
6. TRANSMISSION, CONVERTER & AXLE ADAPTER (Hydratork Drive) (Continued)		
Transmission overheating (continued)	Clogged sump screen	Clean screen.
	Insufficient oil to torque converter and cooler	Report to designated authority.
	Cooler clogged internally stopping flow of oil	‘ Clean cooler.
	Bushing in torque converter impeller hub worn, allowing oil to leak out	Report to designated authority.
	Slipping stator	Refer to transmission pressure checks.
Machine has full power and overheats	Overloading machine	Check capacity loads. Never overload.
	Radiator core clogged externally	Clean core.
	Pressure regulator valve sticking, giving low pressure	Report to designated authority.
7. DRIVE AXLE		
Continuous axle noise	Badly worn parts	Replace worn parts with new.
	Unevenly worn tires	Replace tires.
	Improperly adjusted wheel bearing	Adjust correctly.
	Lack of lubricant	Add sufficient lubricant of correct grade.
Axle noise on drive or on coast only	Differential pinion gear and ring gear out of adjustment or worn excessively	Adjust, repair or replace entire unit if conditions warrant.
Excessive backlash in axle driving	Loose axle shaft drive flange cap screws	Tighten cap screws.
	Flange loose on axle shaft	Reweld flange to shaft.
	Worn splines on axle shaft at differential end	Replace drive flange and shaft assembly.

www.truck-freeworkshop.com/clark/

TABLE 4. TROUBLESHOOTING GUIDE (Continued)

TROUBLE	PROBABLE CAUSE	REMEDY
7. DRIVE AXLE (Continued)		
Excessive backlash in axle driving (continued)	Differential drive pinion gear and ring gear out of adjustment or worn excessively	Adjust or replace as condition warrants.
Complete failure to function	Broken axle shaft	Replace axle shaft.
	Broken teeth on ring gear or pinion gear	Replace ring gear and pinion and other parts of differential necessary. Adjust ring gear and pinion gear correctly.
8. STEERING AXLE		
Trouble	Damaged axle	Replace axle.
	Lubrication leaks	Replace oil seals. (Refer to lubrication section). Report to designated authority.
	Incorrect caster or camber	Report to designated authority.
	Uneven tire wear	Check wheel alignment.
9. STEERING		
Steering difficult	Lack of lubrication	Lubricate.
	Tight steering system connections	Lubricate and adjust linkage.
	Tight steering gear; misaligned wheels	Report to designated authority.
	Bent steering connecting linkage or arm	Straighten or replace linkage.
	Misaligned steering gear mounting	Adjust mounting.
Wander or weaving	Improper toe in, camber, or caster (axle twisted)	Report to designated authority.
	Steering system connections or king pin bearings not properly lubricated	Lubricate.
	Loose wheel bearings	Adjust wheel bearings.

www.truck-freeworkshop.com/clark/

TABLE 4. TROUBLESHOOTING GUIDE (Continued)

TROUBLE	PROBABLE CAUSE	REMEDY
9. STEERING (Continued)		
Wander or weaving (continued)	Steering gear worn or maladjusted	Report to designated authority.
	Steering gear mountings loose	Tighten mounting bolts.
low speed shimmy or wobble	Loose steering connections	Adjust and tighten linkage.
	Steering gear worn, or adjustment too loose	Report to designated authority.
	Loose wheel bearings	Adjust wheel bearings.
Vehicle pulls to one side	Odd size, or new and old tires on opposite wheels	Match tires.
	Tight wheel bearings	Adjust. Lubricate wheel bearings.
	Bent steering arm or connection	Straighten or replace bent linkage.
10. BRAKES		
Brakes drag	Improper pedal adjustment	Adjust brake pedal free travel.
	Brake pedal return spring broken or weak	Replace spring.
	Brakes improperly adjusted	Adjust brakes.
	Brake shoe anchor pin tight in shoe	Free-up pin and lubricate lightly.
	Brake shoe return spring broken or weak	Replace spring.
	Loose or damaged wheel bearings	Adjust or replace wheel bearings.
	Insufficient brake shoe clearance, or improper brake anchor pin adjustment	Adjust brakes.
	Brake backing plate loose	Tighten plate.
	Grease on linings	Correct grease leakage; clean or install new shoes and lining assemblies.

www.truck-freeworkshop.com/clark/

TABLE 4. TROUBLESHOOTING GUIDE (Continued)

TROUBLE	PROBABLE CAUSE	REMEDY
10. BRAKES (Continued)		
Brakes drag (continued)	Dirt imbedded in lining	Clean lining with wire brush.
	Drums scored or rough	Replace drum and brake shoe and lining assemblies.
Severe brake action on light pedal pressure	Brake shoes improperly adjusted	Adjust brakes.
	Grease on linings	Correct grease leakage; clean or install new shoes and lining assemblies.
	Loose brake shoe anchor	Adjust and tighten.
Brake locked	Brake pedal lacks free travel	Adjust pedal free travel.
	Brakes frozen to drums (cold weather)	Break loose by driving vehicle.
Brake noisy or chatters	Brake lining worn	Replace shoe and lining assemblies.
	Grease on linings	Correct leakage; clean or replace shoe and lining assemblies.
	Dirt embedded in linings	Clean lining with wire brush.
	Improper or loose linings	Replace shoe and lining assemblies.
	Brake shoe or drum distorted	Straighten or replace.
Excessive pedal travel	Lining worn	Adjust or replace shoe and lining assemblies .
	Brake improperly adjusted	Adjust brake.
	Scored brake drums	Repair or replace drums.
Excessive pedal pressure	Grease on linings; worn or glazed lining	Correct grease leakage; clean up and replace shoe and lining assemblies.
	Warped brake shoes, or defective brake linings	Replace shoe and lining assemblies.
	Shoes improperly adjusted	Adjust brakes.
	Brake drum scored or distorted	Repair or replace drums.

www.truck-freeworkshop.com/clark/

TABLE 4. TROUBLESHOOTING GUIDE (Continued)

TROUBLE	PROBABLE CAUSE	REMEDY
10. BRAKES (Continued)		
Excessive pedal pressure (continued)	Shoes improperly adjusted	Adjust brakes.
	Insufficient fluid in master cylinder	Fill master cylinder to within l/4 inch of the top.
Wheel troubles	Wheel wobbles; bent	Inspect mounting on hub, spindles, and drive axle; replace defective wheel or mounting.
	Wheel loose on hub	Tighten.
	Wheel out of balance	Balance wheel.
	Wheel bearings run hot	Adjust, lubricate wheel bearings.
11. HYDRAULIC SYSTEM		
Pump not delivering oil	Wrong direction of rotation	Must be reversed immediately to prevent seizure and breakage of parts due to lack of oil.
	Tank oil level low	Add recommended oil.
	Oil intake pipe or suction filter plugged	Replace filter cartridge, clean strainer if so equipped.
	Air leak in suction line	Will prevent priming, or cause noise and irregular action of control circuit.
	Oil viscosity too heavy to pick up prime	Thinner oil should be used, per recommendations for given temperature and service.
	Broken pump shaft or gear	Report to designated authority.
Pump not developing pressure	Pump not delivering oil for any of the above reasons	Check oil circulation by watching oil in tank.
	Relief valve setting not high enough	Refer to relief valve instructions.
	Relief valve sticking open	Dirt under pressure adjustment valve. Refer relief valve instructions.

www.truck-freeworkshop.com/clark/

TABLE 4. TROUBLESHOOTING GUIDE (Continued)

TROUBLE	PROBABLE CAUSE	REMEDY
11. HYDRAULIC SYSTEM (Continued)		
Pump not developing pressure (continued)	Leak in hydraulic control system (cylinders or valves)	Find leak and correct.
	Partially clogged intake line, intake filter or restricted intake pipe	Pump must receive intake oil freely or cavitation will take place.
Pump making noise	Small air leak at pump intake piping joints	Test by pouring oil on joints while listening for change in operation. Tighten as required.
	Air leak at pump shaft packing	Repair or replace.
	Tank air vent plugged	Must be open thru breather opening or air filter.
	Too high oil viscosity	Use recommended oils.
	Shaft packing worn	Replace shaft packing per preceding instructions.
	Oil filter dirty	Replace filter element.
Forks do not lift to maximum height	Hydraulic oil level low	Fill sump tank.
Lift or tilt action fails	Loss of oil pressure	Report to designated authority.
Oil leak at top of lift cylinder assembly	Worn or damaged lift piston seal	Replace seal.
	Scored cylinder wall	Replace cylinder.
	Plugged vent line	Clean out vent line. Replace if collapsed.
Oil leak around piston rod at tilt cylinder	Worn seal	Replace seal.
	Scored piston rod	Replace rod and eliminate cause of scoring which may be caused by mis-alignment, worn bearing or foreign matter.
With load centered on lift forks load is lifted unevenly	Lift chains out of adjustment	Adjust chains.

www.truck-freeworkshop.com/clark/

SECTION V
REPAIR

5-1. GENERAL. Instructions within this section provide for removal and repair of all major components and assemblies of the vehicle. It is assumed that organizations undertaking such depth of repair shall have proper facilities and equipment for proper performance of the work. The following paragraphs 5-2 through 5-7 provide general instructions to be used as a guide in performing disassembly, cleaning, inspection, repair, and reassembly.

CAUTION

Prior to performing any repair by welding, refer to paragraph 5-8 for specific instructions regarding welding of highly stressed parts.

5-2. GENERAL REMOVAL INSTRUCTIONS.

a. Before attempting removal of any electrical or hydraulic component, make certain that the system is not energized. Disconnect battery ground strap, lower carriage to the floor and provide suitable blocking to relieve all pressure from the hydraulic system.

b. Insure that adequate clearance is available for removal of the component. Disassemble the truck to the extent necessary to provide adequate working clearance.

c. Use a chain hoist, jack or other aid when lifting the heavier components. The lifting device should be positioned and attached to the component to remove all strain from the mounting hardware before the last of the hardware is removed.

d. To facilitate reassembly and installation, apply identifying tags to mating ends of electric or hydraulic lines as they are disconnected. Identify parts of similar configuration to insure correct reassembly.

5-3. GENERAL DISASSEMBLY.

a. Preformed packings, gaskets, seals, and similar material should be discarded when removed. Do not use metal tools to remove sealing material. To prevent damage to mating surfaces, use wood or plastic as probes.

b. Cotter pins, lockwashers, lockwire, self-locking nuts, and any similar locking devices shall be discarded when removed.

c. To facilitate reassembly and installation, apply identifying tags to mating points of electric, pneumatic, hydraulic lines, etc., when they are disconnected. Identify parts of similar configuration to ensure correct reassembly.

d. To prevent moisture and foreign matter from entering open housings, lines, and other openings, apply protective covers as soon as practicable after disassembly. Wrap all parts in clean paper or dip parts in preservative oil, Military Specification MIL-C-8188, or equivalent.

e. Remove only those parts requiring repair or replacement. Do not disassemble a component any further than necessary to accomplish needed repairs.

5-4. GENERAL CLEANING.

a. When cleaning ball or roller bearings, place them in a basket and suspend them in a container of dry cleaning solvent overnight. If necessary, use a brush to remove caked grease, chips, etc. Avoid rotating the bearing before solid particles are removed to prevent damaging races and balls. When bearings have been cleaned, spin them immediately in light lubricating oil to remove solvent.

b. Do not clean preformed packings or other rubber parts in dry cleaning solvent. These parts should be wiped clean with a clean, dry, lint-free cloth.

www.truck-freeworkshop.com/clark/

c. Prior to disassembly of the vehicle, the exterior parts of the equipment should be thoroughly cleaned to remove accumulated mud, tar, and grease. This procedure will facilitate inspection and disassembly. For cleaning exterior parts, use a vapor pressure spray rinse cleaner.

d. For cleaning the exterior of the engine frame and hoods, use Gun, Engine, Kerosene Spray, Stock No. 7900-402730, or equivalent. Use Compound, Aircraft Cleaning, Military Specification MIL-C-25769, in a mixture consisting of one part compound with four to nine parts dry cleaning solvent, Federal Specification P-D-680. Allow application to remain on item surface for approximately 10 minutes before rinsing. Rinse with hot or cold water under pressure. If available, use hot water under 80 to 120 pounds pressure. An ordinary garden hose with nozzle may be used if other equipment is not available. Rinse thoroughly.

CAUTION

Do not clean tires, lubricant seals, rubber hoses, or electrical components with preceding cleaning agent.

e. Electrical parts, such as coils, junction blocks, switches, and wiring, incorporating insulating materials should not be soaked or sprayed with cleaning solutions. Clean these parts with a clean, lint-free cloth moistened with dry cleaning solvent, Federal Specification P-D-680.

f. Oil and fuel tanks and similar reservoirs should be flushed, using a spray gun and dry cleaning solvent.

CAUTION

Do not use soap or alkalies for cleaning tank interiors.

g. The cooling system radiator core should be cleaned with steam or hot water. If sediment within the core cannot be completely removed by this method, the core may be boiled in a solution of sodium carbonate and water. Use a solution of one pound of sodium carbonate, Federal Specification O-S-571, to each gallon of water. Flush with clean, hot water, or steam.

h. The electrical system battery exterior surfaces should be cleaned with a weak solution of baking soda and water. Apply the solution with a bristle brush to remove any corrosive buildup on the battery cable clamps and terminals and battery tray.

i. When cleaning hydraulic system components, use petroleum-free solvents. Clean and dry parts thoroughly to make sure that no residue remains. If a coating of preservative is required prior to reassembly, apply a light film of preservative oil, Military Specification MIL-O-6083. If petroleum-free solvents are not available for cleaning, use hydraulic fluid compatible with that used in the vehicle system.

CAUTION

Do not use gasoline or other petroleum base products to clean or preserve hydraulic system components.

j, Wash painted surfaces of vehicle with a solution consisting of l/4 lb. of soap chips, Federal Specification P-S-579, to 1 gallon of water.

55. GENERAL INSPECTION.

a. Examine bearings for rusted or pitted balls, races, or separator. Examine balls and races for brinnelling, abrasion, and serious discoloration. The following are causes for bearing rejection:

1. Cuts or grooves parallel to ball or roller rotation.

2. Fatigue pits (as opposed to minor machine marks or scratches).

3. Cracks detected during magnetic particle inspection.

Note

Excluding defects which may cause bearing binding or misalignment, nicks or gouges outside race load areas are not cause for rejection.

www.truck-freeworkshop.com/clark/

b. Inspection consists of checking for defects such as physical distortion, wear, cracks, and pitting, and checking dimensions of parts for compliance with maximum wear limits data. Parts subjected to heavy load or pressure shall be inspected more thoroughly by performing surface temper, magnetic particle, or fluorescent penetrant procedures where necessary. Clean all parts before inspection.

c. When removing drain plugs from transmission, engine, or hydraulic system components, inspect the sediment adhering to the plug. Accumulations of grit and/or fine metal particles may indicate actual or potential component failure. A few fine particles are normal. This inspection is effective in determining defective parts prior to internal inspection of the component, and to predict degradation of the equipment.

d. Gears should be inspected upon removal for the following conditions:

1. Normal wear in excess of practical limits.

2. Pitting of teeth due to extreme pressure loading.

3. Abrasive wear due to foreign materials in lubricant.

4. Scoring, siezing, and galling of teeth due to excessive loads and clearance.

5. Burning and loss of temper due to extreme high temperature operation. Caused by excessive friction and lack of lubrication.

6. Rolling or plastic yielding due to extreme loads over a long period.

7. Cracks and fractures due to shock-loading.

Note

If visual inspection proves the service of gears doubtful, perform a surface temper or magnetic particle inspection, or both.

e. Inspect shaft splines for wear, pitting, rolling or peening, and for fatigue cracks. In many instances, the same inspection procedure will apply as for gears. However, the condition, if ever present, will in most cases be much less pronounced. When doubtful of the actual serviceable condition of splines, perform a magnetic particle inspection.

f. Check all hose surfaces for broken or frayed fabric. Check for breaks caused by sharp kinks or rubbing against other parts of the truck. Inspect copper tubing lines for kinks. Inspect the fitting threads for damage. Replace any part found defective. Following reassembly and during initial truck operation period, check for leaks.

g. Visually inspect all castings and weldments for cracks. Parts upon which great stress is placed may be inspected further, using the magnetic particle inspection method. Critical non-ferrous parts may be flourescent penetrant inspected.

h. Inspect all harnesses for chaffed or burned insulation. Inspect all terminal connectors for loose connections and broken parts.

5-6. GENERAL REPAIR.

a. Remove burrs from gear teeth with a fine-cut file or hand grinder.

b. Alternator slip rings and starter commutators may be polished in a lathe, using a strip of 00 sandpaper. After polishing, blow all dust and residue from commutator with compressed air.

c. Chassis and exterior painted parts may be resurfaced where paint is damaged, or where parts have been repaired, by using an abrasive disc driven through a flexible shaft.

CAUTION

Suitable precautions should be taken to guard other parts of the vehicle from abrasive dust. The operation should not be performed near exposed working parts and all openings which would allow the dust to reach working parts should be masked.

d. Remove residue and oil stain from bearing races with crocus cloth.

www.truck-freeworkshop.com/clark/

e. Prior to resurfacing, scrape off loose and blistered paint from damaged areas. Clean area to be painted by sanding or buffing. Remove residue cleaning material with paint thinner, Federal Specification TT-T-306, and dry thoroughly.

f. During repair operations, bare steel surfaces shall be protected from oxidation when not actually undergoing repair work, i.e., while awaiting any repair step, reinspection or reassembly. Such protection shall be accomplished by dipping the parts in, or spraying them with corrosion preventive compound, Military Specification MIL-C-6259. The same protective coating shall be applied to other metals, if necessary to prevent oxidation under climatic or atmospheric conditions prevailing. Aluminum parts may require protection in atmospheres having a high salt content. Steel parts must be protected in all instances.

Note

The above instruction is applicable to polished and machined steel parts not protected by cadmium, tin, copper, or other plating or surface treatment. Bare metal surfaces must be free of moisture when applied. Acid present in perspiration and skin oils may attack steel surfaces if fingerprints are not removed. Dip parts in fingerprint remover compound, Military Specification MIL-C-15074, after handling, to prevent such action.

g. Welding and brazing processes may be employed for the repair of cracks in external steel parts, such as brackets, panels, and light framework. However, the time required, the difficulty of working with the metal, and the chance of embrittlement and subsequent failure make such repairs of questionable value. Hence they should be attempted only when replacement parts are not available. Welding and brazing of castings and running parts or parts to which great stress is applied is not permissible, except in emergencies. Refer to paragraph 5-8 for specific welding instructions.

h. Replace all broken, worn, or burned electrical wiring. Wires on which several strands are broken must be replaced. Broken strands will increase the resistance of the wire and impair efficiency of the electrical components, especially the ignition system.

i. Replace all broken, frayed, crimped, or soft flexible lines and hoses. Replace fittings which are stripped or damaged. Replace entire flexible hose if fittings are damaged. Make sure the hose clamps do not crimp hoses.

j. Replace any bolt, screw, nut, or fitting on which threads are damaged. Inspect tapped holes for thread damage. If cross-threading or spalling is evident, retap the hole for the next oversize screw or stud. When retapping will result in weakening the part, or when the cost of the part makes retapping impractical, replace the damaged part. At times, merely chasing the threads with the proper size tap or die will be adequate.

5-7. GENERAL REASSEMBLY.

a. Remove protective grease coatings from new parts prior to installation.

b. To replace a preformed packing, first dovetail groove, then stretch packing and place into position. Rotate component on flat surface, applying a downward pressure to uniformly press the packing into position.

c. To provide added sealing for gaskets, coat both sides with Permatex Super 300 gasket sealant (Permatex Co., Inc., West Palm Beach, Fla.) or equivalent. Be sure that all traces of previous gasket and sealant are removed before installing new gasket.

d. Install oil seals with seal lip facing in, applying an even force to the outer edge of seal. Coat oil seals evenly with oil or grease before installing. If oil seals are to be installed over keyed or splined shafts, use a guide to prevent sharp edges of the keyway of splines from cutting the leather or neoprene seal. Guides can be constructed of very thin gage sheet metal and shaped to the required diameter. However, make certain the guide edges are not sharp and are bent slightly inward so they do not cut the seal.

e. During reassembly of shafts and bearings in housings, first mount bearing on shaft, then install

www.truck-freeworkshop.com/clark/

the assembly by applying force to the shaft. When mounting bearings on shafts, always apply force to the inner races.

f. Lubricate all preformed packings with a thin coating of light mineral oil before installation.

g. Lubricate bearings prior to reassembly with the type of lubricant normally used in the related housing or container. This will provide lubrication during the first run-in until lubricant from the system can reach the bearings.

5-8. REPAIR WELDING. CAUTION

5-9. GENERAL. Clark Equipment Company has historically opposed field repair of critical components of any Industrial Truck Division product. It is recommended, rather, that the failed or damaged component be replaced at the lowest serviceable level. The manufacturer does, however, recognize that situations may arise in which replacement of the part(s) is not feasible for reasons of time limitations, spare parts shortages, etc.

5-10. In those cases of emergency where welding repair is apparently the only practical means of restoring the serviceability of the vehicle, the instructions given below must be rigidly followed.

5-11. In no case is but&welding to be allowed on rail section, channels, beams, forks, or fork bars. If fractured, these must be replaced, preferably at the next higher weldment assembly.

6-12. Personnel should be cautioned against adding brackets and attachments by welding on upright members, for personal interests. The nature of this practice invites disregard for good welding design, as well as creating unnecessary visibility problems for the operator.

6-13. WELDING PRACTICES, The surfaces of parts to be welded shall be free from paint, grease, and scale which can be removed by chipping and wire brushing, and other foreign matter. When multiple layers of weld metal are required, each layer shall be thoroughly cleaned before depositing another layer. All welded parts and assemblies shall be free from cracks and other imperfections that may reduce the effectiveness of the part or assembly. All weldments shall be free from slag, flux, weld spatter, and other impurities detrimental to the strength and soundness of the weld. Work shall be positioned for flat welding whenever practicable. Butt type joints having members of equal thickness shall be aligned within 10 percent of the thickness of the members involved. Weldments shall be free from overlays. Undercut in weldments of type 2 and type 3 steels shall not be more than 0.01 inch deep when its direction is transverse to the primary stress in the part that is undercut. Undercut shall be not more than 1/32-inch deep when its direction is parallel to the primary stress in the part that is undercut.

5-14. PREINSPECTION.

a. The area of the machine to be repaired must be thoroughly cleaned. Steam-cleaning of the entire machine is recommended.

b. It must be remembered that whenever a failure occurs in any component, the same shock forces causing the failure have been present elsewhere in that component, and have been transmitted throughout the structure wherever there is resistance to that force. Because of this factor, a thorough inspection of all members and weld joints so affected must be made, such as:

*Forks
Fork hanger brackets
Carriage fork bars
Carriage lift brackets
*Carriage rollers
Carriage roller shafts
*Lift chain
*Chain sheaves
Upright mounting trunnions
All upright tiebars
Upright tilt brackets
Upright roller shafts
*Upright rollers
Upright lift cylinder support casting
Upright lift cylinder chain anchor
Reactive frame members
Attachment/Device members, if any
Load backrest, if any
Overhead guard, if affected

*These components must be replaced. DO NOT REPAIR.

www.truck-freeworkshop.com/clark/

c. The use of magnetic particle and/or dye penetrant techniques of nondestructive testing for this inspection are highly recommended.

5-15. SAFETY.

a. Protect-o-seal (anti-flashback) fuel tank cap must be in place before grinding, burning, or welding. Preferred procedure is to empty the fuel tank and purge with CO_2 .

CAUTION

Before attaching welding ground cable to the machine, be sure that the alternator harness and/or battery cables are disconnected. This is to prevent burning out the diodes in the alternator because of reverse polarity.

b. Always wear helmet, asbestos gloves, suitable shoes, apron, or other suitably protective clothing when welding.

c. Clothing should be heavy, free from oil or grease. Pockets and cuffs should be protected against sparks and slag.

d. Portable grinders should have proper wheel guards. Operator should be equipped with goggles or safety shield.

e. Always use proper torch, tip, electrode, and holder for the job.

f. Maintain good welding cables, preferably protected by loom.

g. Ground cables to work, never to house systems, hoists, chain falls, etc. Attach welding ground cable to one of the two members being joined. Do not run current through bearings or wear surfaces.

h. Welding area should be clean and dry.

i. Oxygen should never be used as compressed air, in cleaning or drying operations.

j. Do not use rope to suspend work when flame-cutting, grinding, or welding.

5-16. FIRE PROTECTION.

a. Remove work from hazardous area before cutting or welding. If this is not possible, remove flammable material from work area, or cover with flame arresting material.

b. Correct those conditions where sparks or slag can travel into combustible materials.

c. Keep oil or grease separated from oxygen. This combination is explosive if ignited.

d. Do not allow clothing to collect pure oxygen. In this concentrated or oxygen-enriched condition, materials burn violently.

e. Keep fully charged fire extinguishers nearby. Employ standby assistant with extinguisher during unavoidably hazardous conditions.

5-17. VENTILATION.

a. Fans on welders and work help to assure good ventilation. Adequate exhaust fans are essential. However, a breeze directed on the arc can destroy the gas shield around the arc.

b. Never use oxygen for ventilation, or as air jet.

c. Avoid all welding or cutting in paint booths, around dip tanks, degreasing, or other naturally hazardous areas.

d. Excessive or continued breathing of smoke, toxic fumes, or dust is injurious. Use respirator in addition to ventilation under severe conditions.

e. Keep all air in work area moving toward exhaust system.

5-18. FILLER METALS.

a. All stick electrodes for subject contract joints must be low hydrogen coated (herein called L.H.) L.H. electrode E-7018 (AWS Class.) is recommended, except when specially noted.

b. E-7018, E-8018, E-9018, E-10018, E-11018 have AC-DC polarity, reversing current, with a coating of low hydrogen iron powder.

c. L.H. electrodes are supplied from the vendor

www.truck-freeworkshop.com/clark/

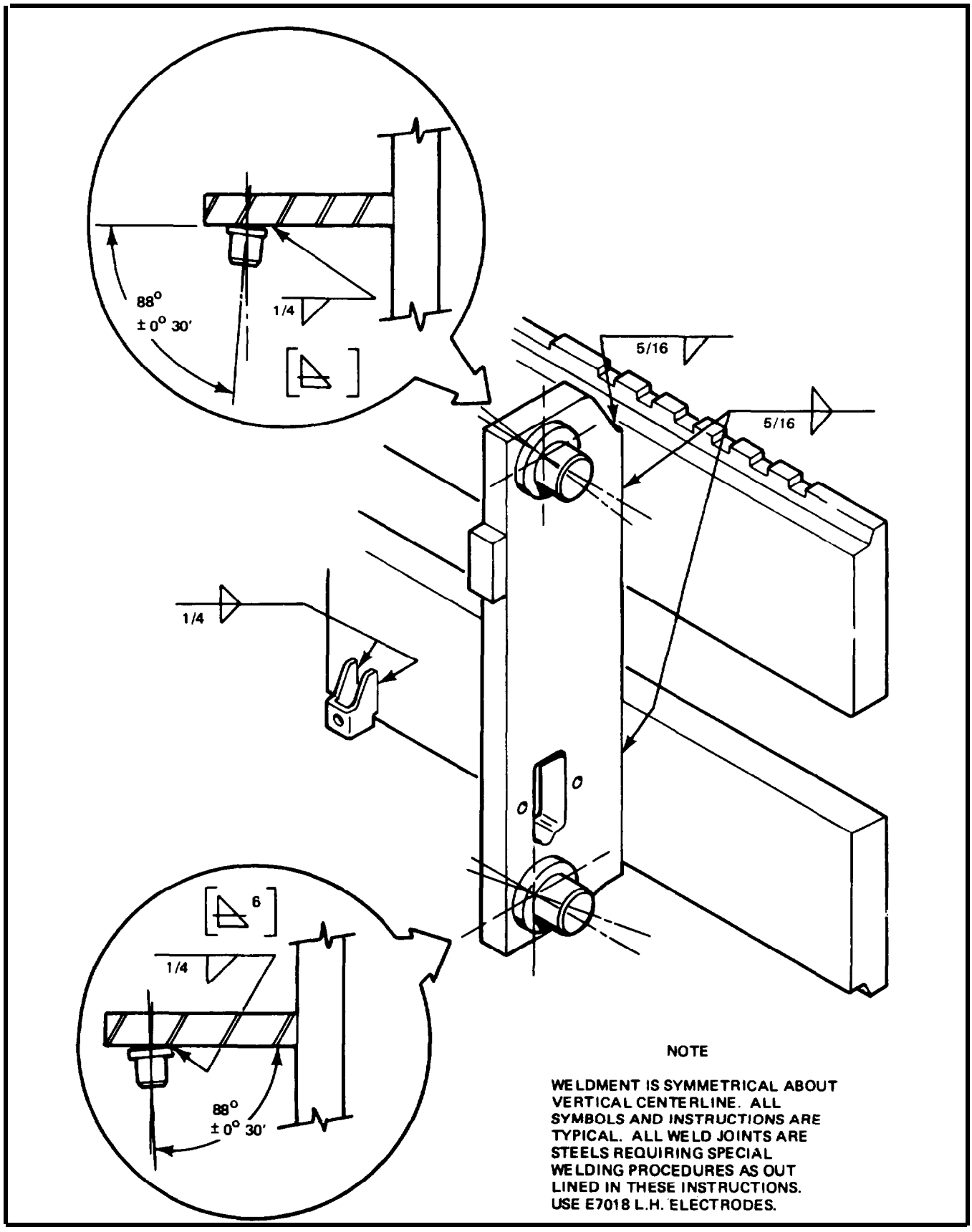

Figure 5-1. Welding Repair of Carriage

www.truck-freeworkshop.com/clark/

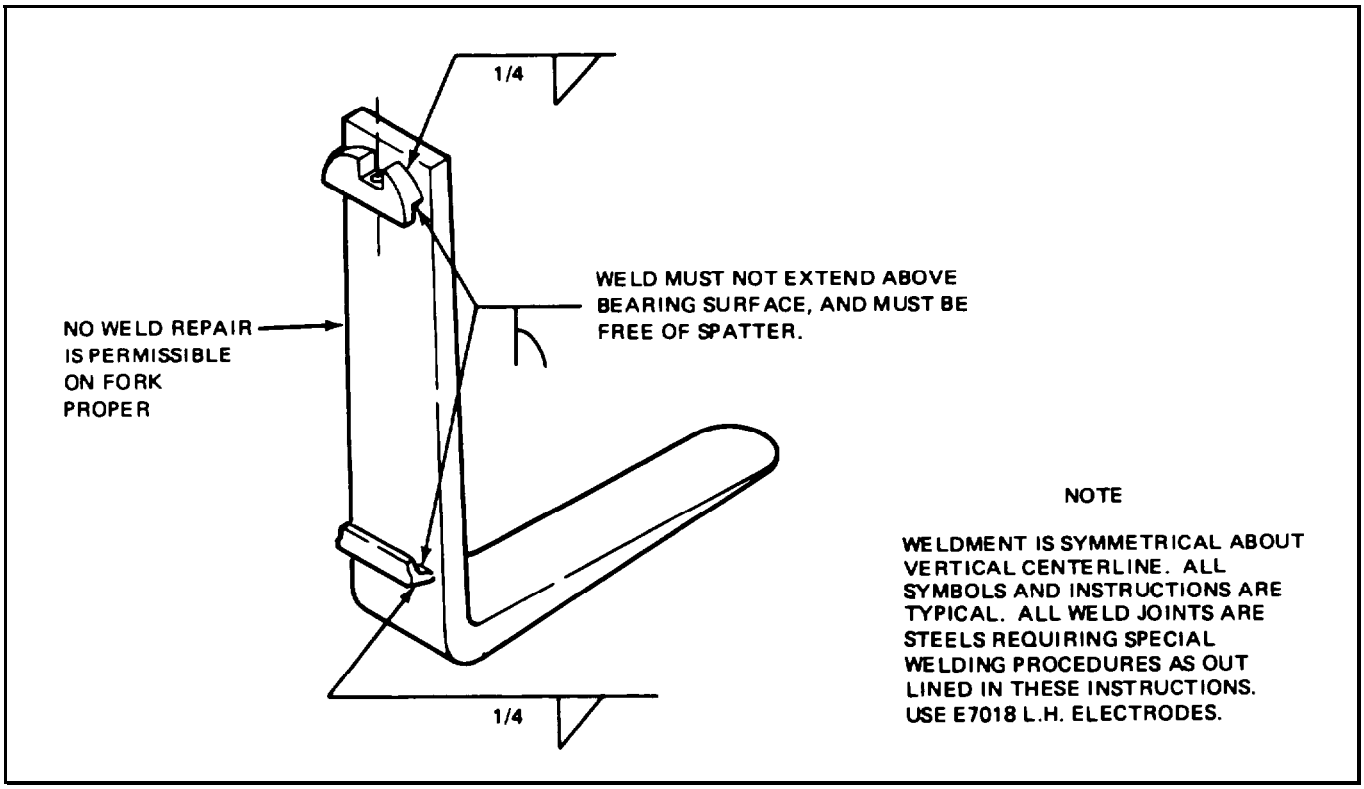

Figure 5-2. Welding Repair of Fork Assembly

in hermetically sealed containers, and must have storage care normal to their type. If containers have been opened for electrodes to become exposed to normal (and above) atmospheric humidity, the electrodes should be oven baked at 700° F. for 1 hour, minimum.

d. L.H. electrodes which have been in water should be scrapped.

e. Remove only enough electrodes from the container to perform the immediate job. Open containers should be stored in heated storage containers held at 200° to 300° F.

f. Clark Equipment employs little or no TIG production welding at the Industrial Truck Division (ITD).

g. Clark Equipment (ITD) employs MIG welding extensively in production welding. Due to its nature however, the welding instruction herein (repair, as opposed to production welding) will deal only with stick electrodes. The precautionary and preparation instruction herein applies also to MIG or TIG welding.

5-19. PREPARATION.

a. In natural ambient temperatures of 60° F. or less, the machine (or component) should be "room soaked" overnight in 70° F. (+) to equate a preheat. If this is impossible, the weld zone (area 6" to 10" each side) should be preheated to a minimum of 100°F. before welding. This minimum temperature should be maintained on the heat zone of each joint until that joint is completed.

b. Repair of forks, hangers and guides require a preheat of 150° to 250°F. Thermal sticks may be used to check these weld heat-affected zones. Tempil sticks are available from welding suppliers in 50° increments from 100°F. through 2200° F. Welding repair of fork proper is not recommended.

c. All cracks in the damaged area, or in areas listed in paragraph 5-14 above, must be

www.truck-freeworkshop.com/clark/

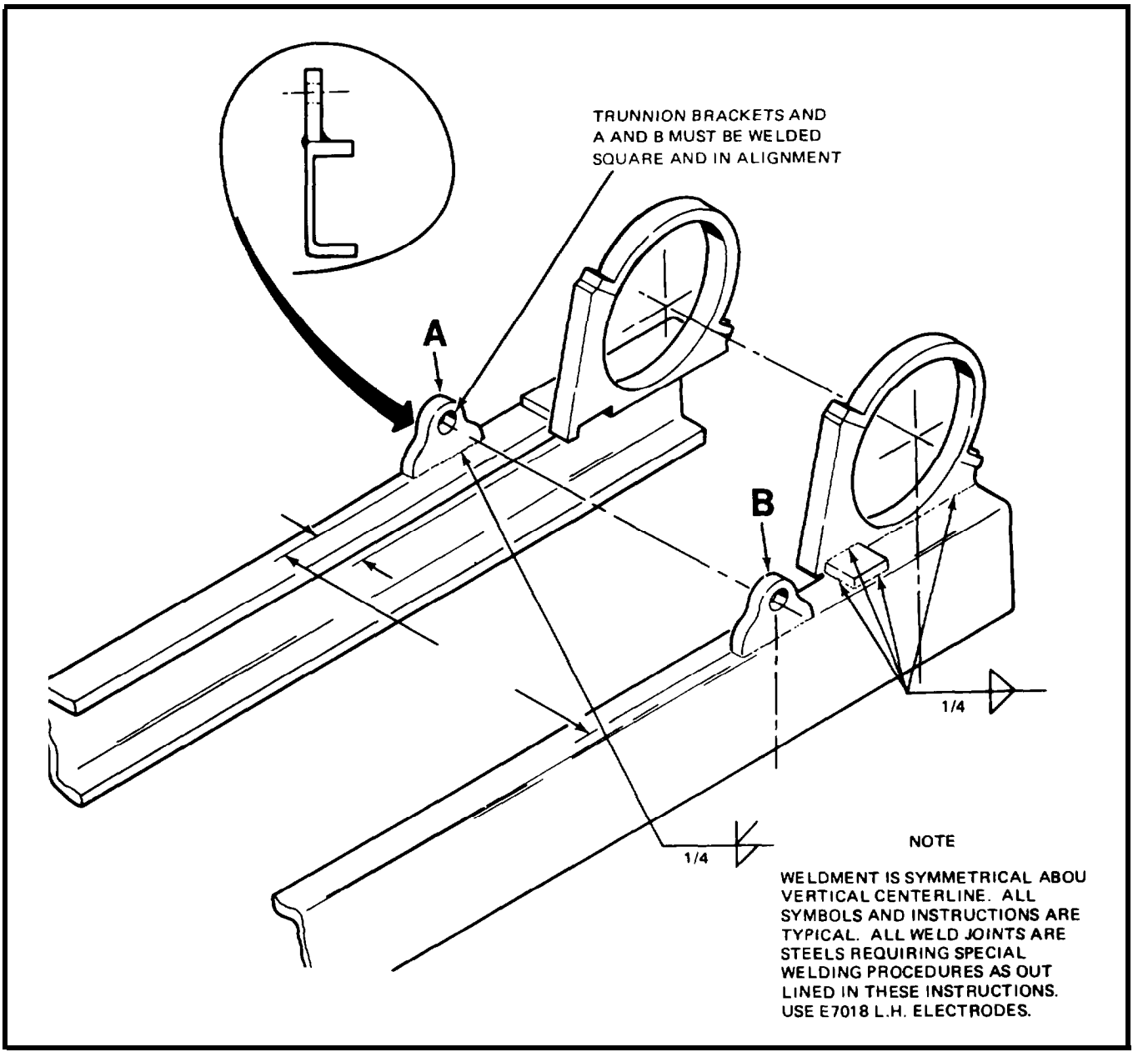

Figure 5-3. Welding Repair of Outer Rail Trunnion

groove-ground the entire length of the crack, and the entire crack removed. Any weld repair must be made on sound material.

d. No notches, gouges, or craters should be left in the area of weld repair, but must be weld-filled and ground to the original contour before repair welding. Preparation for weld assumes smooth surfaces and contours easily accessible to the weld arc. Surfaces of the upright rails are to be protected against such cratering, which can create surface embrittlement and a tendency to fracture.

e. Finish grind marks after welding (if any) on any surface should not exceed 63 microinches, and should run in the direction of the load. When

www.truck-freeworkshop.com/clark/

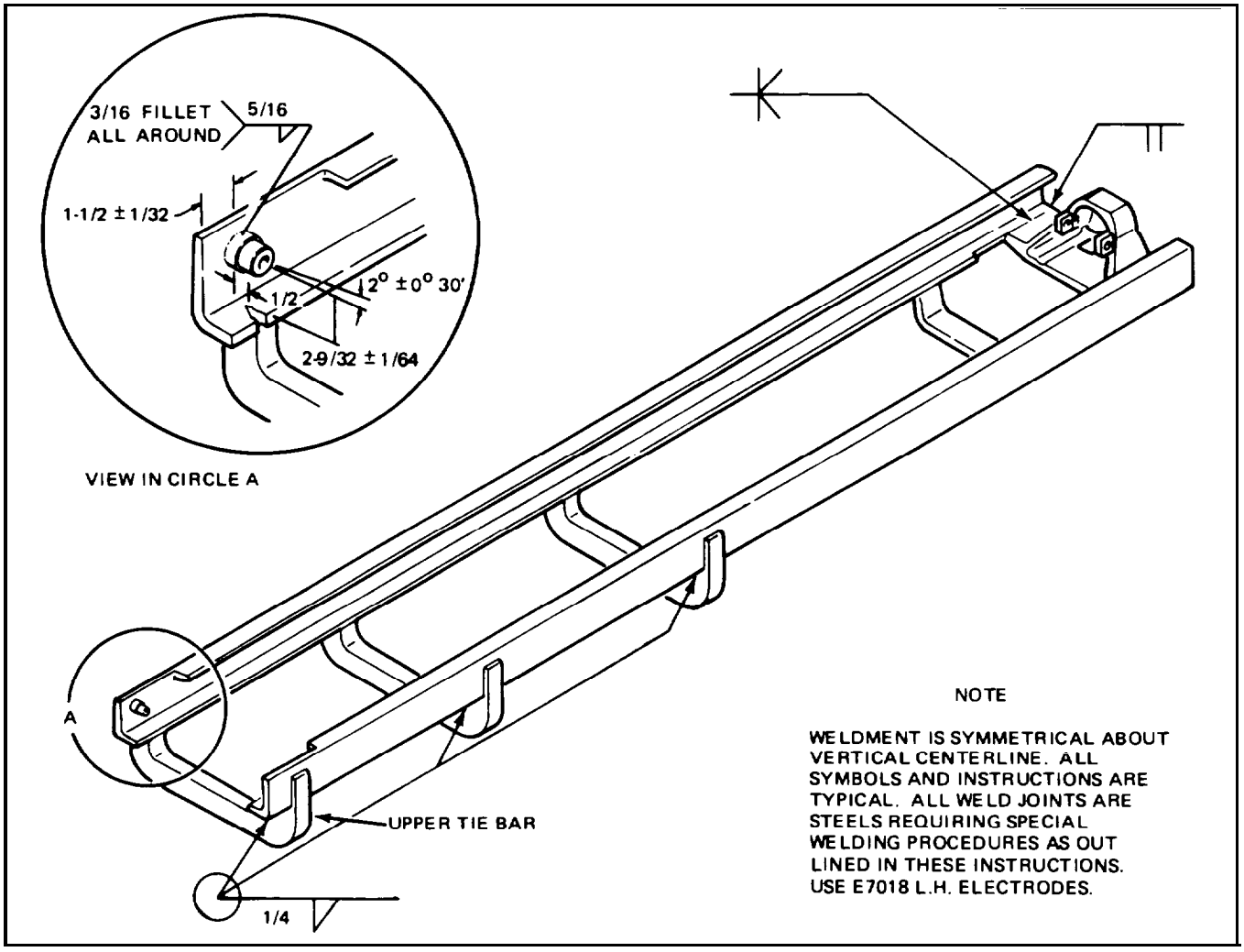

Figure 5-4. Welding Repair of Outer Rail Assembly

required, a disc grinder with #80 grit abrasive is recommended.

5-20. WELDING.

a. Welding should be performed by experienced/qualified welders.

b. Voltage/amperage/speed settings should be balanced to produce a well-formed bead, and to assure proper penetration.

c. For subject component welding, the following ranges apply for E-7018, E-8018, E-9018, and E-10018 electrodes: Manufacturers recommendation for arc length and amperage is to be followed.

Size	Amperage	Weld Inches/Min. (Average)
3/32	70-120	-
1/8	100-150	6 - 8
5/32	120-200	8 - 10
3/16	200-275	10 - 12
7/32	275-350	12 - 14
1/4	300-400	14 - 16

These ranges must be balanced per (b.) above.

d. On the rectifier type welders (most common today) the voltage is variable and is automatically keyed to the amperage. The voltage range is therefore omitted from the listing.

e. Average welding speed (inches per minute) is based on l/4" fillets and on flat and horizontal

www.truck-freeworkshop.com/clark/

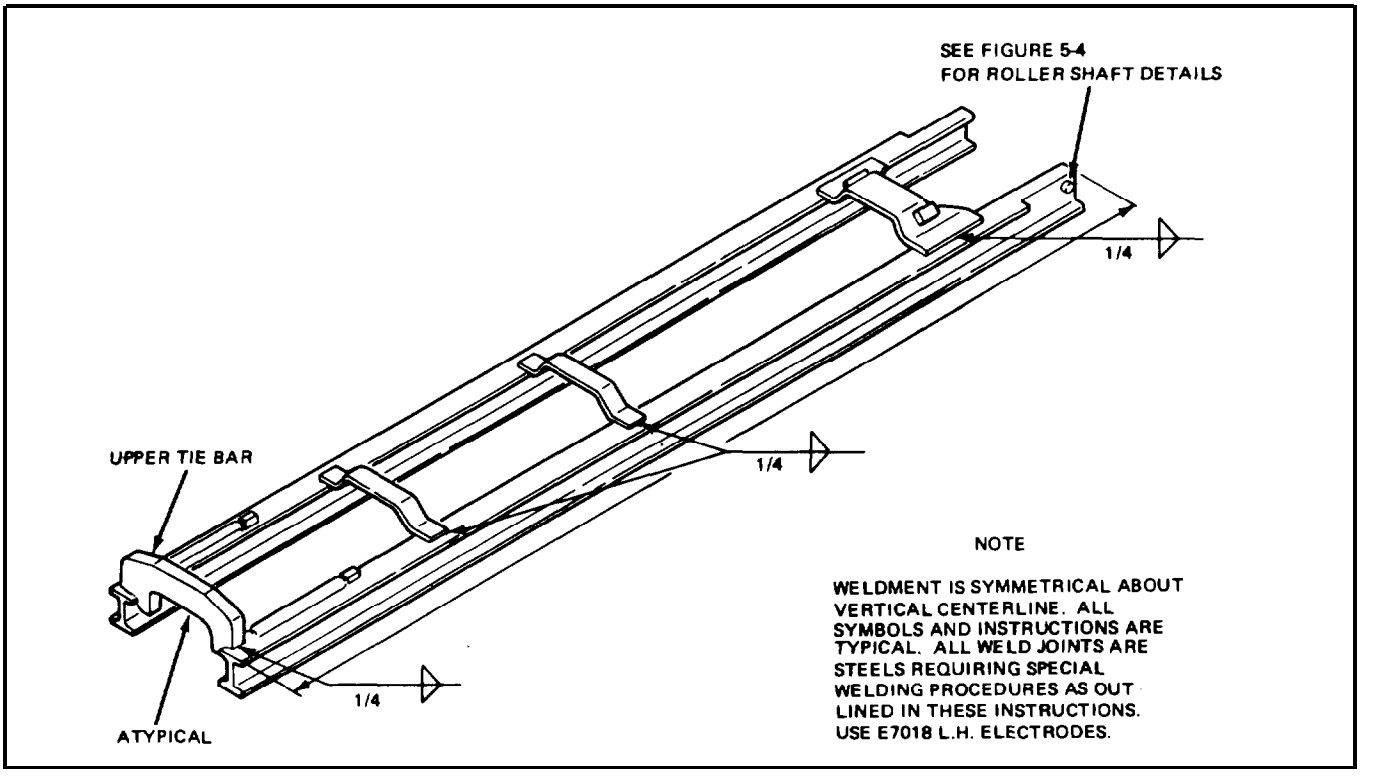

Figure 5-5. Welding Repair of Inner Rail Assembly

joints. It will be obvious that the selection of electrode sizes under 5/32" is unwise for this application.

f. All joints calling for 3/8" (or more) fillet must be made in 2 or more passes. Bead from first pass is to be chipped and work must not be allowed to cool between passes.

g. Welding on fork assemblies or upright members usually involves material with up to 0.45% Carbon. Two-pass welding with slag removal between passes allows one pass to act as additional preheat or post heat to the other pass. The heat-affected zone hardness will be kept low and safe in this manner.

h. Figures 5-1 thru 5-5 illustrate points of weld and proper weld symbols for the types of weld to be used in each case when welding on carriage and upright parts.

5-21. INSPECTION.

a. Remove slag and spatter, and check for conformity to paragraph 5-20 (above). Finished and cooled joints should be thoroughly inspected for chill cracks. If any, prepare as in paragraph 5-19 (above) and reweld.

b. Joint inspection is recommended by either of the following methods:

1. Dye penetrant, wet or dry process.

2. Magnetic particle inspection. Manufacturer's instructions included with the testing gear should be followed as applied to the size, shape, or other nature of the work being tested. In general, however, the conditions shown below will serve in most cases, whether the process employs direct or rectified current.

(a) Distance between prods shall not be less than 2 inches.

(b) Ratio for prod spacing/amperage/section thickness:

Spacing	Thickness Under 3/4"	Thickness over 3/4"
2" to 4"	200-300 amps	300-400 amps
4" to 6"	300-400 amps	400-600 amps
6" to 8"	400-600 amps	600-800 amps

www.truck-freeworkshop.com/clark/

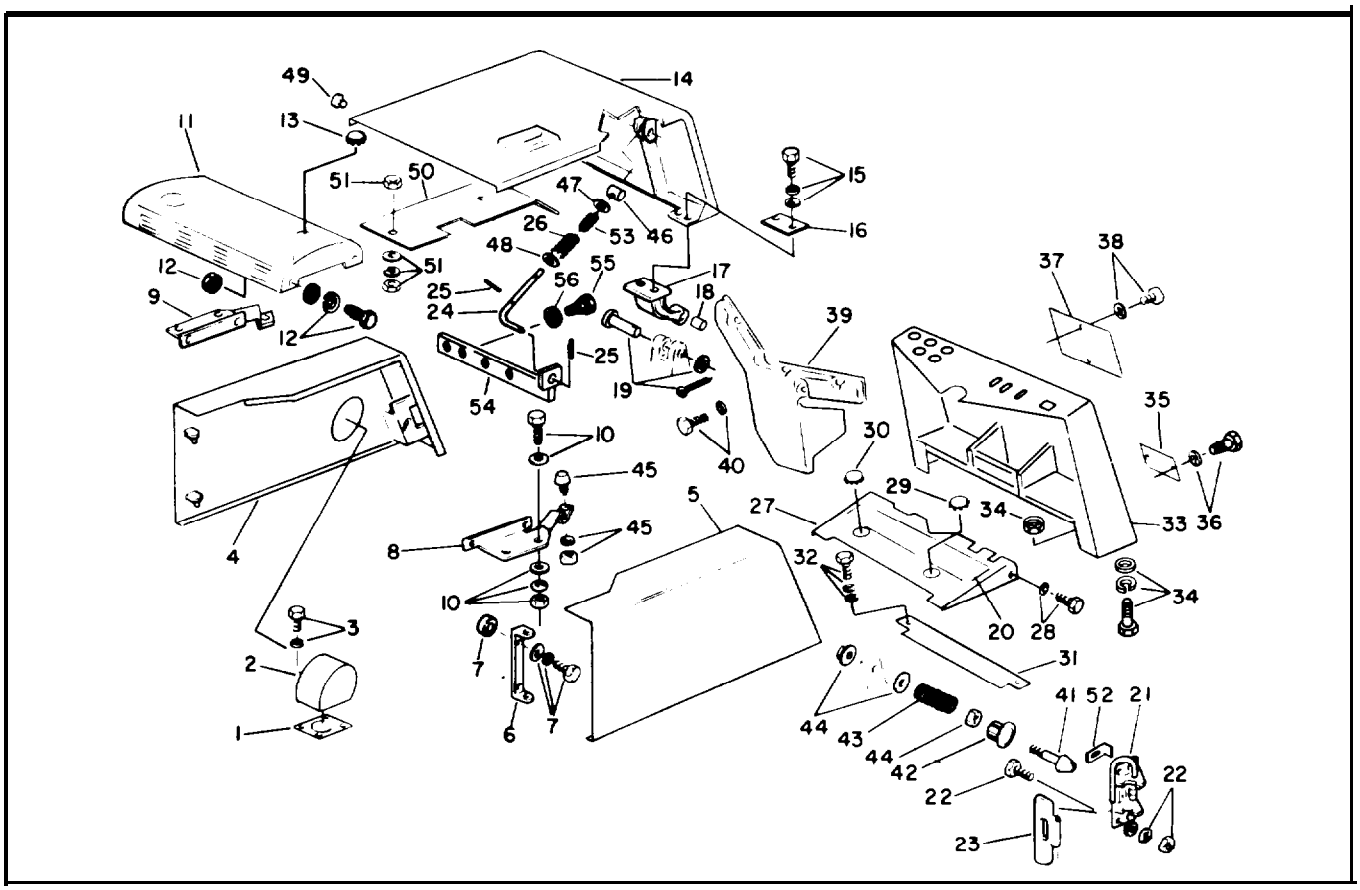

1. Gasket
2. Well
3. Bolt, lockwasher
4. Hood
5. Hood
6. Bracket
7. Bolt, washer, lockwasher, spacer
8. Bracket
9. Bracket
10. Bolt, washer, lockwasher, nut
11. Hood
12. Bolt, lockwasher, nut
13. Plug
14. Support
15. Bolt, lockwasher, Washer
17. Bracket
18. Bushing
19. Pin, washer, cotter
21. Latch
22. Bolt, lockwasher, nut
23. Handle
24. Prop
25. Pin, cotter
26. Spring
27. Plate
28. Bolt, lockwasher
29. Plug
30. Plug
31. Plate
32. Bolt, lockwasher, washer
33. Cowl assembly
34. Bolt, washer, lock-washer, nut
35. Cover
36. Bolt, lockwasher
37. Cover
38. Bolt, lockwasher
39. Panel
40. Bolt, washer
41. Dovetail
42. Retainer
43. Spring
44. Nut, washer, washer nut
45. Bumper, lockwasher, nut
46. Support
47. Washer
48. Washer
50. Shield
51. Washer, lock-washer, nut
52. Clip
53. Spring
54. Prop bracket
55. Bolt
56. Washer

Figure 5-6. Sheet Metal

(c) For circular magnetization using the direct method care must be taken to provide sufficient contact area to pass the required amperage without overheating or burning the work. 100 to 400 amperes per inch of diameter should be used.

c. Continuous or residual inspection may be employed.

d. Repaired weldment should be checked for straightness, flatness, and overall conformance to original dimensions prior to returning to service.

5-22. INDEMNITY.

It is understood by all parties that the welding

www.truck-freeworkshop.com/clark/

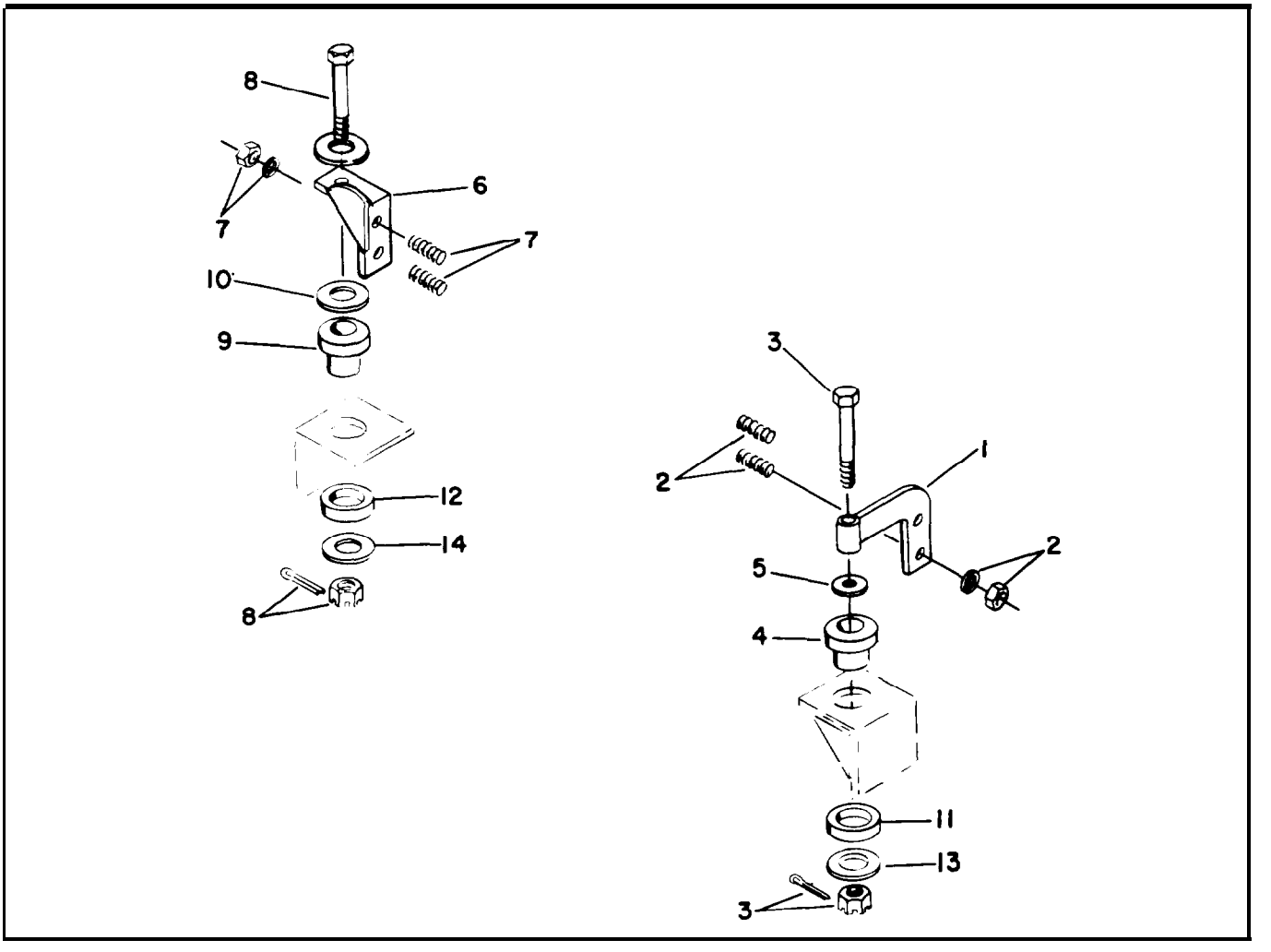

1. Bracket
2. Stud, nut, washer
3. Bolt, nut
4. Mount
5. Washer
6. Bracket
7. Stud, nut, washer
8. Bolt, washer, nut
9. Mount
10. Washer
11. Mount
12. Mount
13. Washer
14. Washer

Figure 5-7. Engine Mounts

repair of any damaged fork, carriage, or upright component on the machines of subject Government contract, and the compliance with the instructions and conditions contained herein, is to be the responsibility of the agency authorizing that repair, and not Clark Equipment Company.

5-23. ENGINE REPAIR. The following instructions are provided to enable using personnel to perform corrective maintenance involving removal and replacement of major components and restore these parts to their original degree of serviceability.

5-24. The information presented in Table 3 will aid in determining if worn parts should be continued in service, and also provides specifications to be used when rebuilding an engine.

5-25. ENGINE REMOVAL. In order to remove the engine, it will be necessary to first remove the

www.truck-freeworkshop.com/clark/

TABLE 5. ENGINE WEAR LIMITS AND SERVICE SPECIFICATIONS

1. GENERAL.

Model . . . . . .Clark D176G
Displacement . . . . . 176 cu. in.
Number of cylinders 4
Bore . . . . . .3-5/8 in.
Stroke . . . . . 4-1/4 in.
Compression ratio . . . . . 7.6 to 1
Compression test at cranking speed . 155-175 psi

2. TORQUE SPECIFICATION.

Main bearing cap bolts . . . . . .88-92 ft./lbs.
Connecting rod nuts:
Original equipment . . . . . .32-35 ft./lbs. (elastic stop nut)
Service replacement . . . . . .45-50 ft./lbs. (marsden lock nut)
Cylinder head bolts . . . . . 90-92 ft./lbs.
Rocker arm bolts . . . . . 20 ft./lbs.
Crankshaft pulley . . . . . .75-85 ft./lbs.
Flywheel . . . . . .67-69 ft./lbs.
Balancing cradle to crankcase bolt . . . . .35 ft./lbs. (oiled)
No. 9 Head Bolt . . . . . 89.5-91.6 ft./l&.

3. PISTONS.

Piston land clearance with bore:
Top land . . . . . 0.024-0.0295 in.
2nd land 0.024-0.0295 in.
3rdland . : : : : : : : : : : : 0.020-0.0255 in.
4th land . . . . . .0.020-0.0255 in.

Skirt clearance to give 3 to 6 lb. pull, using l/2 x 0.002 in. Feeler.

Permissible weight variation . . . . . l/4 oz.

4. RING WIDTH/TYPE.

0.093-0.0935 in. . . . Chrome plated compression
0.0925-0.0935 in. . . . Tapered face compression (marked "TOP")
0.0925-0.0935 in. . . . Tapered face compression (marked "TOP")
0.186-0.1885 in. . . . . Chrome plated groove oil cutter (spring toward top)

5. RING GAP/MAX. WEAR LIMIT.

Top-0.010-0.020 in. . . 0.045 in. max. wear limit
2nd-0.010-0.020 in. . . 0.045 in. max. wear limit
3rd-0.010-0.020 in. . . 0.045 in. max. wear limit
4th-0.010-0.023 in. . . 0.045 in. max. wear limit

6. GROOVE CLEARANCE/MAX. WEAR LIMIT.

Top-0.0025-0.004 in. . 0.006 in. max. wear limit
2nd-0.0015-0.0035 in. . 0.006 in. max. wear limit
3rd-0.0015-0.0035 in. . 0.006 in. max. wear limit
4th-0.0015-0.003 in. . 0.006 in. max. wear limit

7. PISTON PIN.

Clearance in piston . . . Light thumb pressure at room temperature
Piston pin diameter . . . . . .8741- .8743 in.
Piston pin running clearance inbushing . . . . . 0.0008-0.0013in.
Piston pin out-of-round and taper limit . . . . . 0.00001 in.

8. CONNECTING ROD.

Desired fitting clearance . . . 0.0005-0.0013 in.
Side clearance (total) . . . . 0.0065-0.0125 in.
Permissible weight variation . . . . . l/4 oz.
Manner of adjustment . . . . . Replace precision bearings
Distance between center of large and small end of corm. rod . .6.890-6.895 in.
Piston pin bushing:
Burnish in place 862-.863h
Diamond bore in place . . . .8754-8751 in.

9. CRANKSHAFT.

Dia. of main bearing journals . . .2.250-2.249 in.
Dia. of connecting rod bearing journals . . . . . .1.749-l .750in.
Runningclearance-main brgs. 0.0002-0.0027in.
End clearance . . . . . 0.0025-0. 0105 in. (max. wear 0.012 in.)
Main bearing adjustment . . . Replace precision bearings
Crankshaft out-of-round and taper limit . . . . . 0.0005 in.
Crankshaft fillets ' . . 3/32 in. min.; l/8 in. max.

www.truck-freeworkshop.com/clark/

WEAR LIMITS

1. Cylinder sleeve bore wear	.001" per inch of diameter
2. Cylinder sleeve bore - maximum taper (after ridge removal and honing)	.0005" per inch of piston travel
3. Piston diameter wear	.0005" per inch of diameter - measure at skirt and above pin
4. Piston pin diameter wear	.001" total wear
5. Piston pin bore wear and pin bushing wear	
A. In piston	.0005" per inch of diameter
B. In rod	.0005" per inch of diameter
6. Journal clearance	
A. Main and connecting rods	.0005" per inch of diameter over high limit
7. Crankshaft	
A. Main journal maximum out-of-round	.0004" per inch of diameter
B. Main journal maximum taper	2 times allowable taper of new shaft
C. Connecting rod journal maximum out-of-round	.0004" per inch of diameter
D. Connecting rod journal maximum taper	2 times allowable taper of new shaft
E. End play	.005" over high limit
8. Camshaft - minimum journal diameter	.0005" per inch diameter under the low limit
A. Bushing I. D.	.0005" per inch diameter over the high limit
B. End play	.010" over high limit
9. Valves	
A. Minimum stem diameter	.001" total wear
10. Valve guide - maximum I. D.	.0015" total wear
11. Valve seat maximum width	Original width + 15%

CAUTION

Piston rings must be replaced if they have been disturbed after 50 hours of operation.

www.truck-freeworkshop.com/clark/

www.truck-freeworkshop.com/clark/

10. CAMSHAFT

Ream Cam Bushing
in place ....1.7515-1.752 in.
Camshaf journal.0.D..... 1.749-1.750 in.
Running..clearance..... ....0.0015-0.003 in.
(max wear 0.005 in.)
End thrust taken up between camshaft gear and thrust button.

11. ROCKERARMS

Running clearance
on rocker shaft .... 0.0005-0.0025 in.

12. GOVERNOR
Ream governor gear bushing
in place . . . . . 0.439-0-440 in.
Running clearance in
bushing ..... 0.0025-0.004 in.
Ream governor shaft bushing
in place . . . . . 0.376-0-377 in.
Running clearance
in bushing . . . . . 0.0015-0.0032 in.

13. CYLINDER HEAD

Retorgue head after first warm-up
and after 50 hours of operation.
Exhaust valve
insert O.D. . . . . 1.5015-1.5025 in.
Bore in cylinder head..1.499-1.500 in.
Counterbore depth . . . . 0.260-0.263 in.
Valve face runout..... 0.002 in max.
Valve seat angle . . . . . 45 degrees
Valve seat width ..... .80-,090 in.

VALVE SPRING PRESSURE
Free length (intake) . . . . . 2.78 in.
Free length (exhaust).....2.314 in.
Valve guide projection . . .9375 in.

14. TIMING GEARS BACKLASH.

Dial indicator readings to be taken in plane of rotation.
Between all gears except balancing idler gear and balancing gears
0.0055-0.011 in.
(Replace at 0.016 in.)
Between rear idler and balancer
gear . . . . . 0.0054-0.0095 in.
(replace at 0.0145 in.)
Between balancing gears 0.0054-0.0135 in.
(replace at 0.0185 in.)
Between front idler gear and
crankshaft gear . . . . . 0.002-0.012 in.
(replace at 0.017 in.)

15. IGNITION.

Spark plug gap ..... 0.025 in.
Contact point gap ..... 0.020 in.
Time distributor at 5 deg. BTC at 400-500 RPM. (align timing pin and notch on crankshaft pulley.)

16. LUBRICATION.

Normal oil pressure . . . .28-30 psi.

17. GOVERNED SPEED

Maximum loaded speed . . . . . 2200 RPM

18. BALANCING SYSTEM

Idler gear bushing I.D. ..0.875-0.876 in.
Idler spindle O.D. . . . . 0.8745-0.8733 in.
Running clearance . . . . . 0.0005-0.0027 in.
Balancing shaft bushing I.D.
Front . . . . . 1.002-1.005 in.
Rear ..... 1.290-1.2925 in.
Balancing Shaft O.D.
Front ..... 0.9975-0-998 in.
Rear ..... 1.2845-1.285 in.
Running clearance
Front..... 0.004-0.0075 in.
Rear ..... 0.005-0.008 in.
Idler gear end play . . . 0.002-0.010 in.
Shaft end play ..... 0.005-0.008 in.
(obtained by use of shims)

19. CLUTCH FACE RUNOUT..... .008 in.

20. CYLINDER SLEEVE
PROJECTION ..... .001 to .004 in.

www.truck-freeworkshop.com/clark/

hood and seat support, floor plate and side door hoods. These parts are shown in figure 5-6.

a. After removal of sheet metal parts, tag and disconnect all electrical wiring and hydraulic hoses at the engine and pumps.

b. Disconnect fuel line at the fuel filter on the left side of the engine.

c. Drain the cooling system and disconnect the radiator hoses at the water pump inlet and thermostat housing.

d. Drain the oil pan, and disconnect accelerator linkage.

e. Through the openings in the converter housing, remove the 5/16 inch bolts securing the torque converter driving disc to the engine flywheel.

NOTE

It will be necessary to rotate the engine flywheel to make all these bolts accessible for removal.

f. Remove counterweight and radiator and hoses to gain additional forward clearance for engine removal.

g. Remove mounting bolts at torque converter housing and flywheel housing flange.

h. Refer to figure 5-7 and remove mounting bolts from left and right engine mounts.

i. Hook up a suitable hoist and sling arrangement for engine removal. Move engine forward to disengage stator support shaft from torque converter.

j. Lift engine from truck and place in repair stand.

5-26. ENGINE REPAIR. Engine repair instructions are given below under functional component headings (CYLINDER HEAD, etc.). Refer to the table of contents for location of functional group headings for each component.

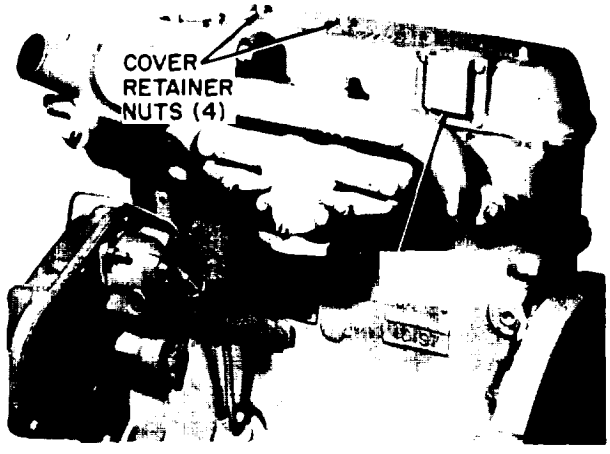

Figure 5-8. Rocker Arm Cover

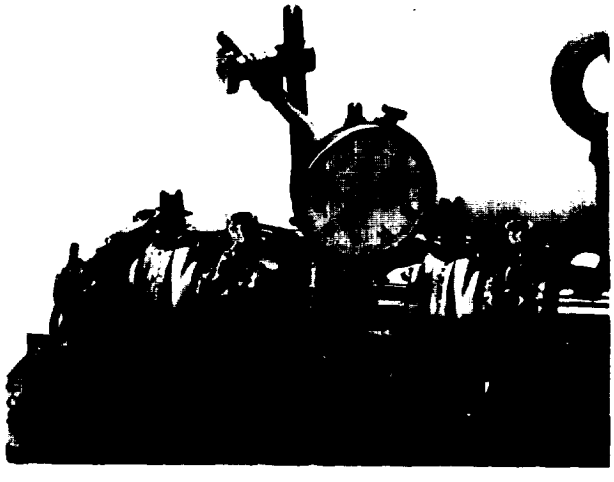

Figure 5-9. Checking Camshaft Lift

5-27. CYLINDER HEAD. The following preliminary procedures should be performed prior to removal of the cylinder head.

a. Refer to figure 5-8 and remove the rocker arm cover retainer nuts and the rocker arm cover.

b. Scrape away all old gasket material from rocker arm cover and cylinder head surfaces.

www.truck-freeworkshop.com/clark/

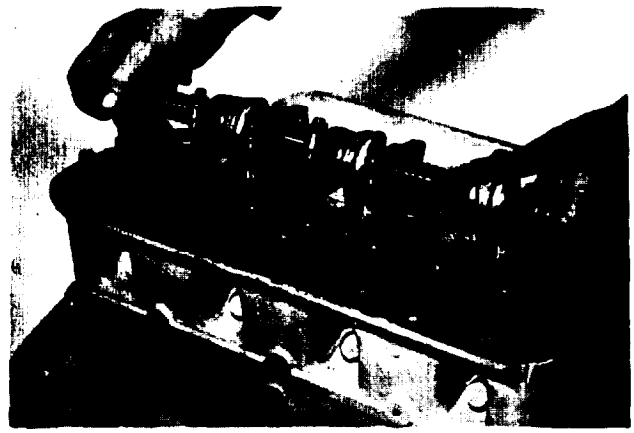

Figure 5-12. Rocker Arm Removal

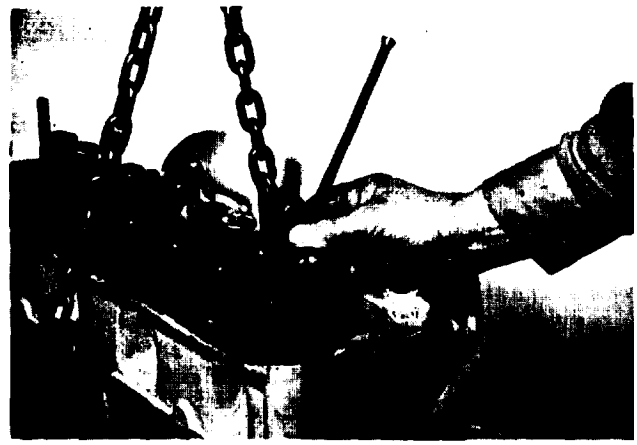

Figure 5-13. Pushrod Removal

c. Remove P.C.V. system from rocker arm cover.

d. Carefully inspect rocker arm assembly for broken springs or rocker arms, excessive wear or evidence of poor lubrication.

e. Check valve (camshaft) lift by installing a dial indicator as shown in figure 5-9.

f. Make sure the pushrod is in the valve lifter socket. Install a dial indicator so that the actuating point of the indicator is in the pushrod socket and in the same plane as the pushrod movement.

g. Rotate the crankshaft over until the lifter is in its lowest position.

h. Zero the dial indicator. Continue to rotate crankshaft slowly until the pushrod is in the fully raised position.

i. Compare the total lift recorded on the indicator with specifications.

j. If the lift on any lobe is below specified wear limits, the camshaft and the valve lifters operating on the worn lobe(s) must be replaced.

www.truck-freeworkshop.com/clark/

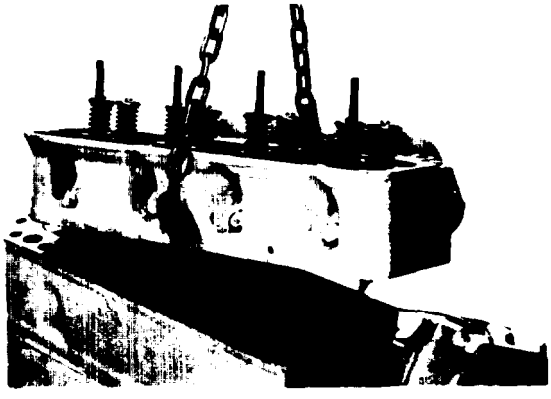

Figure 5-14. Cylinder Head Removal

LEGEND FIGURE 5-15

1. Gasket set
2. Lifter
3. Gear
4. Plunger, spring
6. Bushing
7. Key
8. camshaft
9. Push rod
10. Adjuster
11. Rocker arm assembly
12. Rocker arm assembly
13. washer
14. Hair pin
15. cap
17. Pivot
18. spring
19. support
20. Stud, nut, washer
21. cup
22. Lock
23. Lock
24. Rotator
25. Seat
26. Retainer
27. Spring
28. Spring
29. Seal
30. Guide
31. Guide
32. Seat
33. Valve. exhaust
34. Value intake
35. Head
36. Plug-expansion
37. Head assembly

5-28. REMOVAL

a. Remove water outlet assembly before loosening cylinder head bolts. This prevents cracking of the water outlet casting.

b. Remove water outlet bolts and mark them for proper position, as the bolts vary in length.

c. Check water outlet casting for cracks.

d. Remove the rocker arm assembly, noting the length of the retaining bolts. Do not mix these bolts with any others as bolts of the proper length must be used at reassembly. See Figure 5-12 for rocker arm removal.

e. Number all pushrods so that they must be reinstalled in same location, and remove all pushrods as shown in Figure 5-13.

f. Check for bent or broken push rods. Replace bent or broken rods . . . Do Not attempt to straighten or repair.

g. Disconnect spring and linkage between governor and carburetor, and remove carburetor from intake manifold.

h. Remove cylinder head bolts.

1. Attach lifting eyes and remove cylinder head (with manifolds attached) from the cylinder block as shown in Figure 5-14.

NOTE

It may be necessary to tap the cylinder head sharply with a fibre hammer a few times to break the cylinder head gasket seal.

5-29. DISASSEMBLY Cylinder head disassembly is outlined below. Refer to Figure 5-15 for general parts identification.

a. Using valve spring compressor as shown in Figure 5-16 compress the valve springs, remove spring locks . . . release spring compressor and remove . . . rotator (exhaust) seat (intake), spring and spring pilot. See Figure 5-17 for valve parts removed.

b. Check valve stem for burrs and remove before trying to take valve from guide (burrs will damage valve guide).

c. Remove all parts of intake and exhaust valves in order. Mark valves and parts and store together for installation in same order and relationship as removed

www.truck-freeworkshop.com/clark/

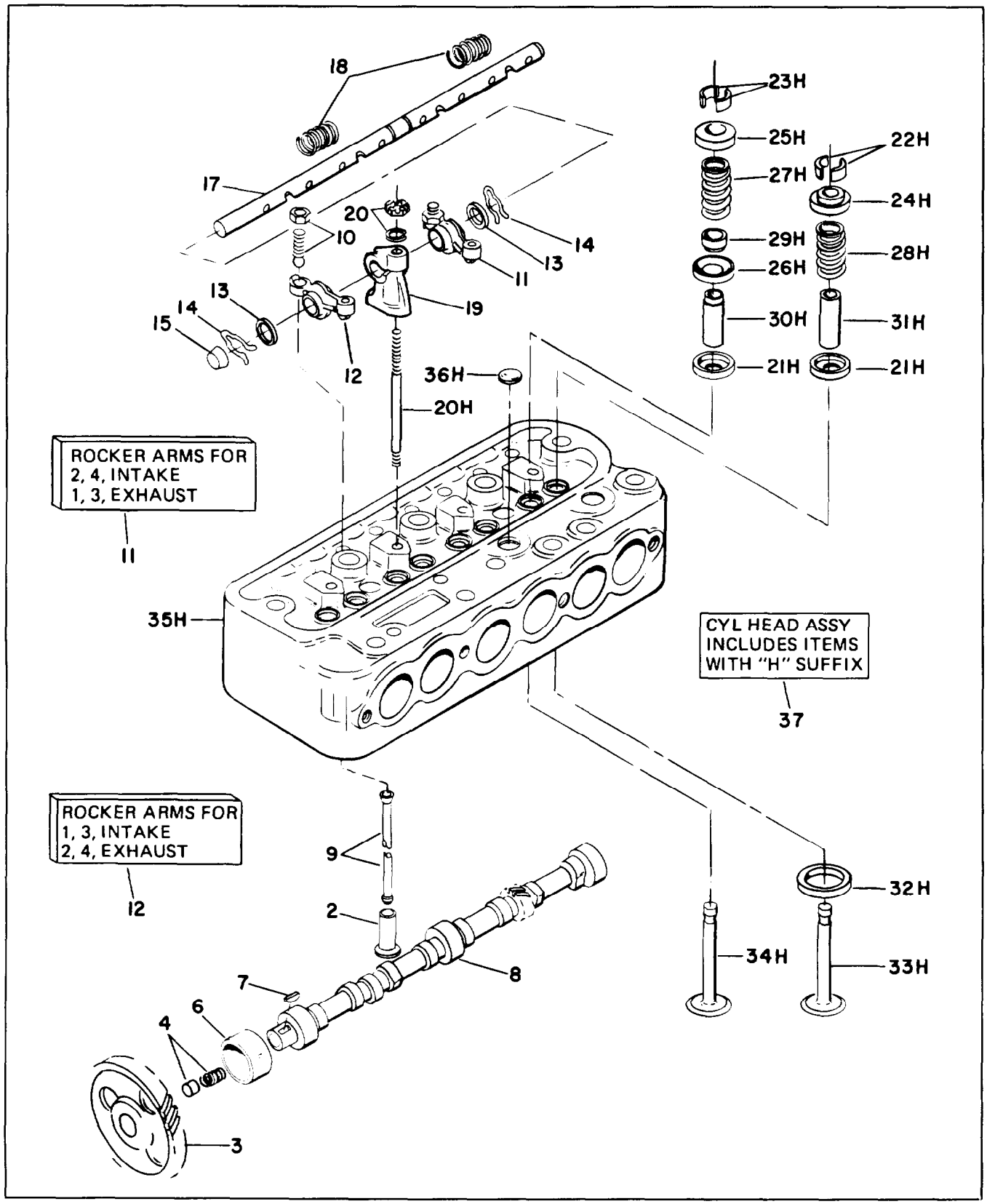

Figure 5-15. Cylinder Head and Camshaft

www.truck-freeworkshop.com/clark/

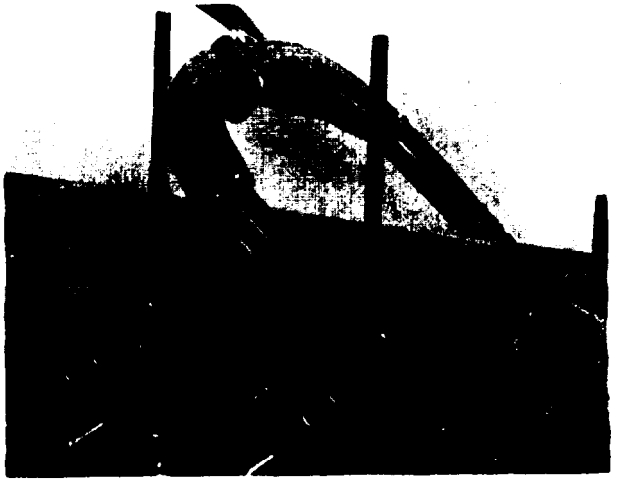

Figure 5-16. Valve Removal

5-30. REPAIR.

a. Test valve spring pressure and length, using spring tester as shown in figure 5-18. If springs do not meet specifications of Table 6, replace with new spring.

b. Check valve face runout as shown in figure 5-19. Face runout must not exceed specifications of Table 5. If runout is excessive, valve must be refaced or replaced.

c. Check valve seat runout, using an accurate gage installed as shown in figure 5-20.

d. Place indicator point on face of seat, set indicator at "0" and rotate the gauge set-up while observing gage reading.

e. If runout exceeds 0.002 inch above or below "O", the seat must be refaced or replaced.

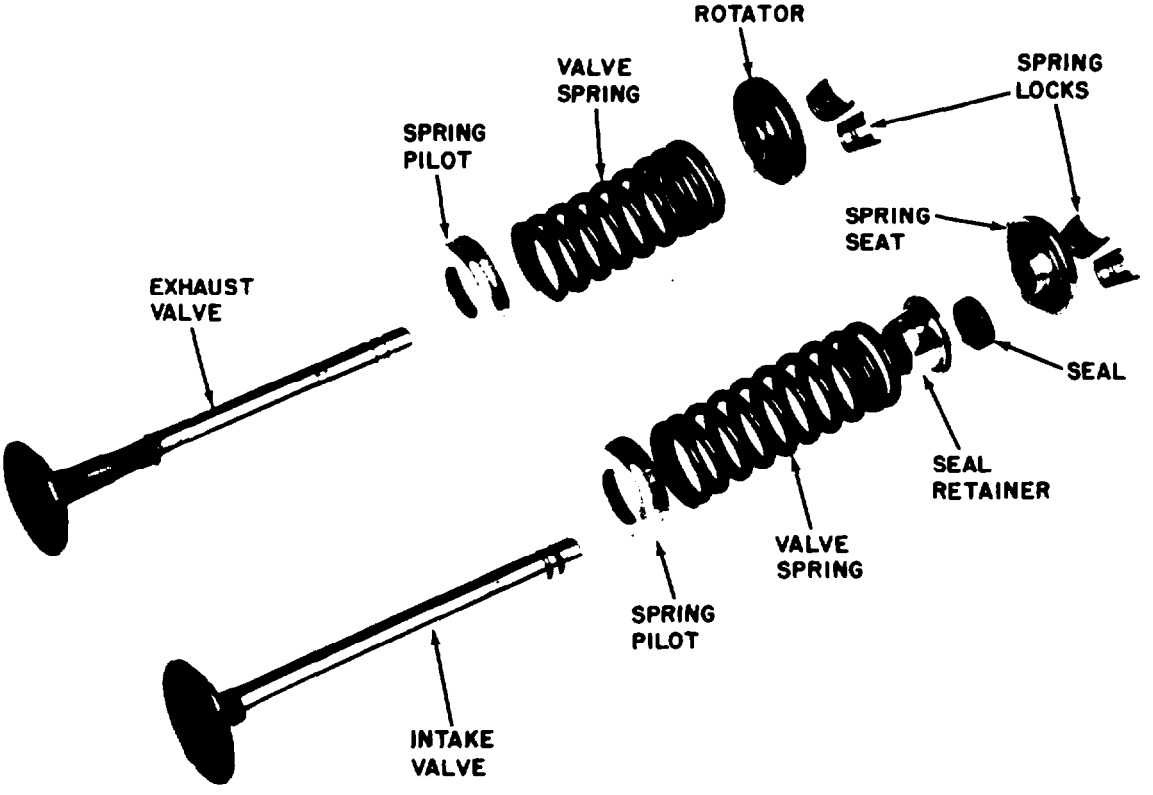

Figure 5-17. Value Parts Removed

www.truck-freeworkshop.com/clark/

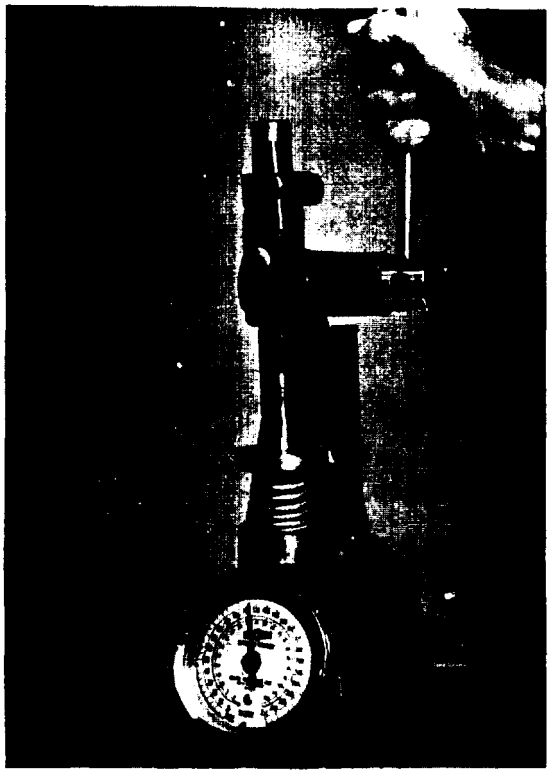

Figure 5-18. Testing Valve Spring

f. Check cylinder head for flatness by placing a straightedge across cylinder head in several directions as shown in figure 5-21 and measuring gaps under straightedge with feeler gage. Cylinder head must be flat within 0.005 inch.

g. Clean valve guides using electric drill and carbon cutter as shown in figure 5-22. Check valve guides against specifications of Table 5 to determine if they must be replaced.

5-31. VALVE GUIDE REPLACEMENT. If valve guides are worn oversize, they must be replaced as follows:

a. The old valve guide may be removed by driving guide from head using an appropriate driving tool.

b. To insert the new guide, select an installation tool of correct size to prevent damage to the guide, and position in place. See figure 5-23.

c. Press guide into place using an appropriate press. DO NOT DRIVE GUIDE INTO PLACE USING A HAMMER; DAMAGE TO GUIDE WILL RESULT IN DOING SO. Make sure guide is extended above head as specified in Specifications of Table 5.

d. Ream valve guide only if necessary to remove high spots and burrs by the use of a valve guide reamer (high spots sometimes occur when new guides are pressed in head). See figure 5-24.

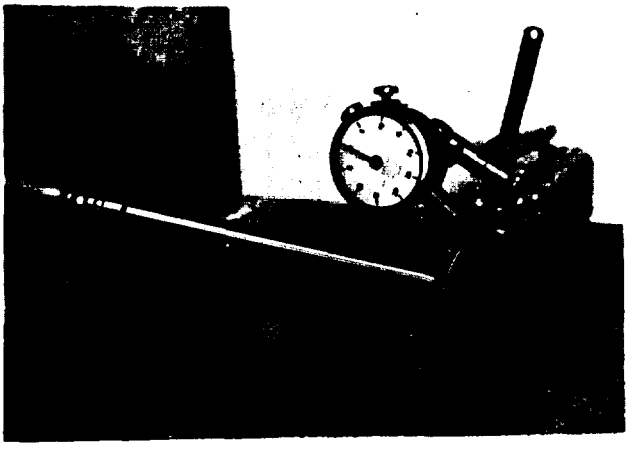

Figure 5-19. Checking Valve Face Runout

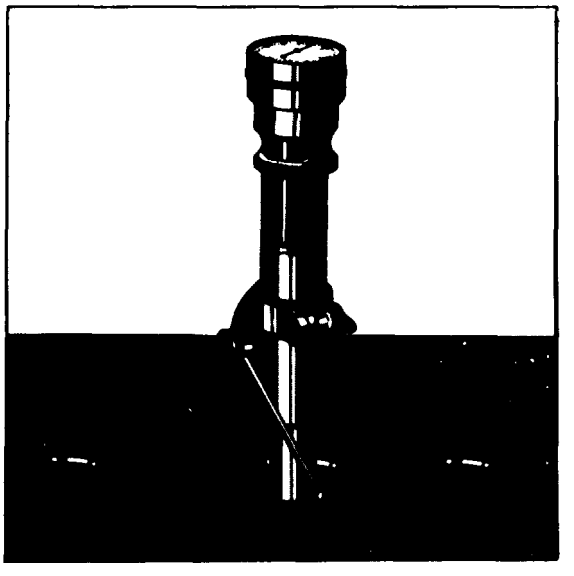

Figure 5-20. Checking Valve Seat Runout

www.truck-freeworkshop.com/clark/

Figure 5-21. Checking Cylinder Head Flatness

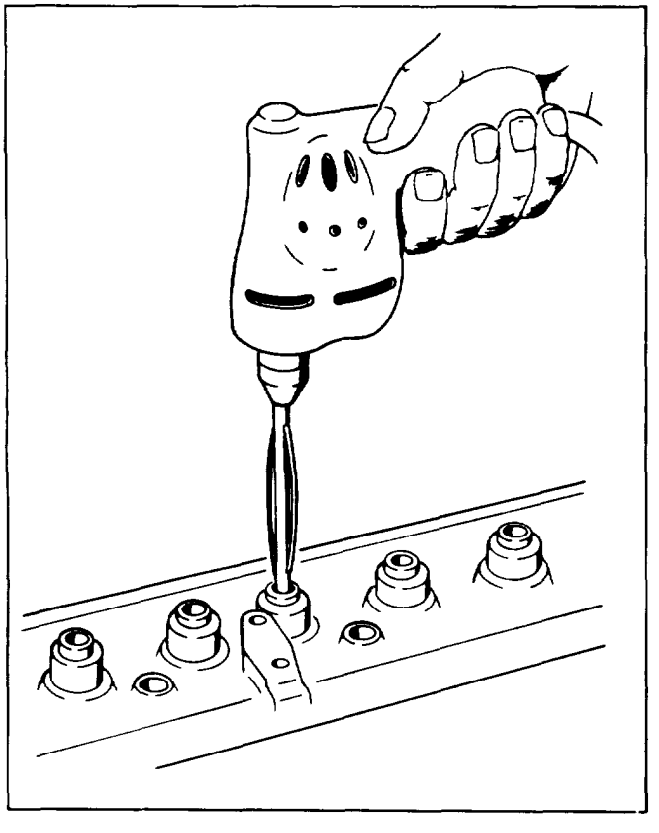

Figure 5-22. Cleaning Valve Guides

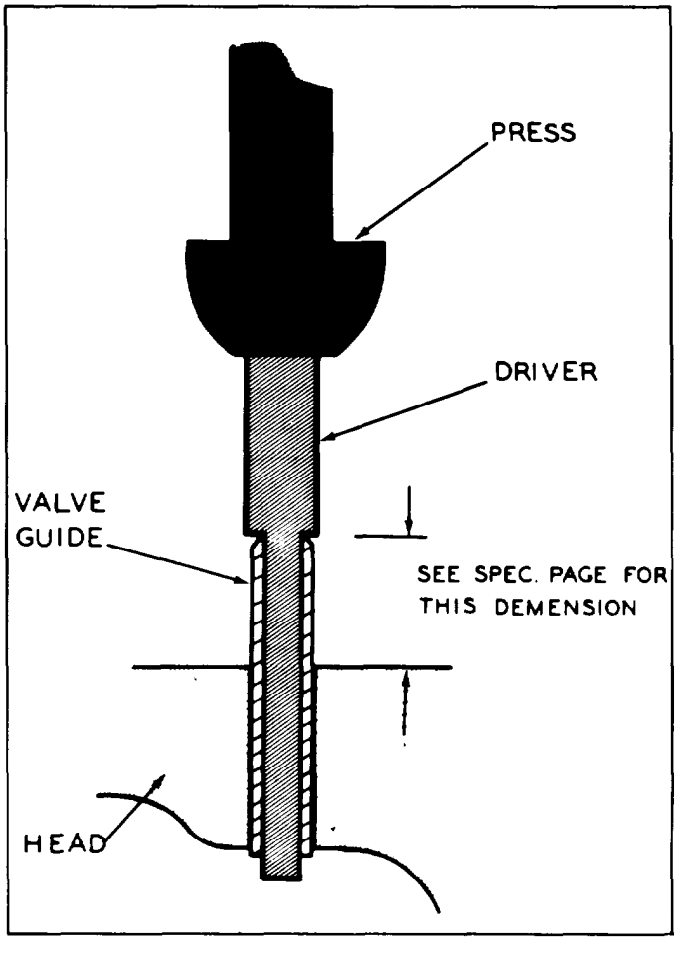

Figure 5-23. Installing Valve Guide

www.truck-freeworkshop.com/clark/

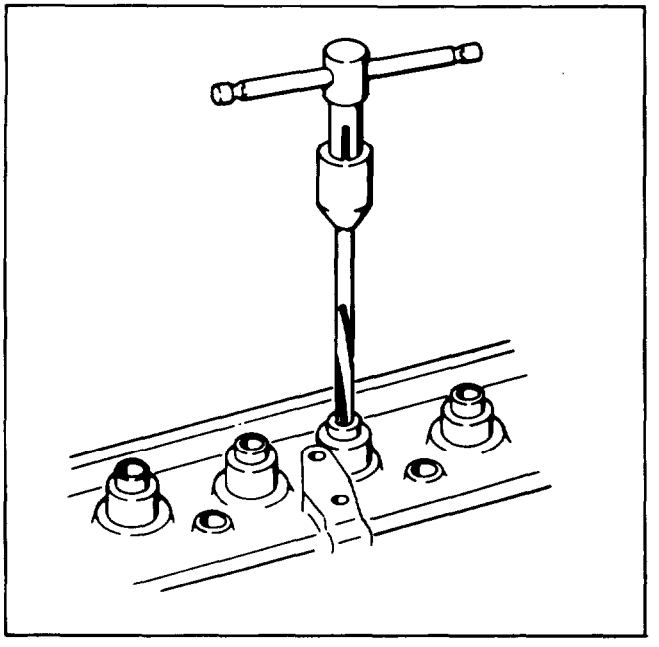

Figure 5-24. Reaming Valve Guides

e. Do not over-ream valve guides. Use ream no larger than original guide size (see Table 5).

5-32. VALVE SEAT REFACING AND REPLACEMENT.

a. If valve seats are not worn too badly they may be refaced, using an electric tool with seat grinding attachment as shown in figure 5-25.

b. Be sure that the refacer grinding wheel is properly dressed at the ‘ correct angle and are the proper wheels for the valve seat material (exhaust valve seat inserts are Stellite No. 3).

c. Remove only enough stock to clean up pits and grooves and to correct valve seat runout.

d. Exhaust valve seat inserts must be replaced if seats are loose, pits and grooves too deep to be removed, runout too excessive.

e. If seat is worn so badly that it cannot be refaced to within specifications of Table 5, the seat will have to be driven out and replaced.

f. The preferred method of valve seat removal is to use a valve seat insert puller. If a puller is not

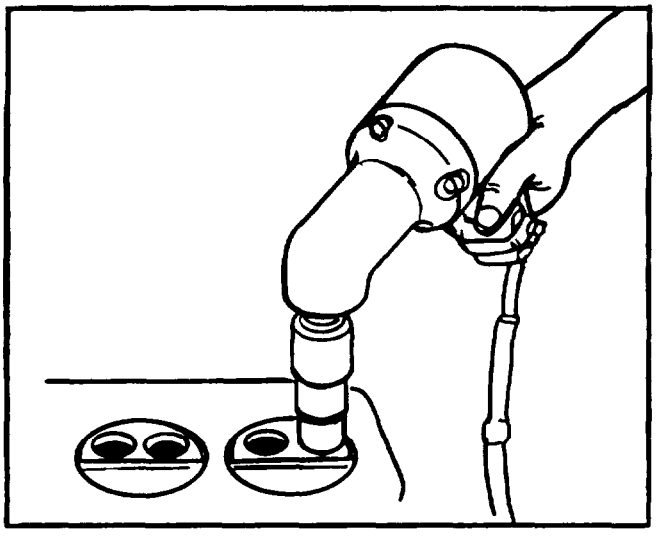

Figure 5-25. Refacing Valve Seat

available, proceed as outlined below:

g. Obtain a scrap valve and grind three notches, equally spaced, around the perimeter of the valve face.

h. Place valve in position against valve seat to be removed, as shown in figure 5-26, and tack weld to seat at each notch. Use an old head gasket to protect head surface while welding, and exercise care not to weld on cast head metal.

i. Use a rawhide hammer to drive out valve and old seat, as shown in figure 5-27.

j. Remove all burrs and foreign material from counterbores.

k. To insure squareness in entering and driving the insert in the counterbore, it is important to provide a driving tool piloted in the valve guide. Such a tool is easily made up or adapted from the valve guide installation tool by slipping a sturdy washer-like driving plate somewhat larger than the insert over the tool pilot.

l. Shrink the valve seat by placing in dry ice until sufficiently chilled.

www.truck-freeworkshop.com/clark/

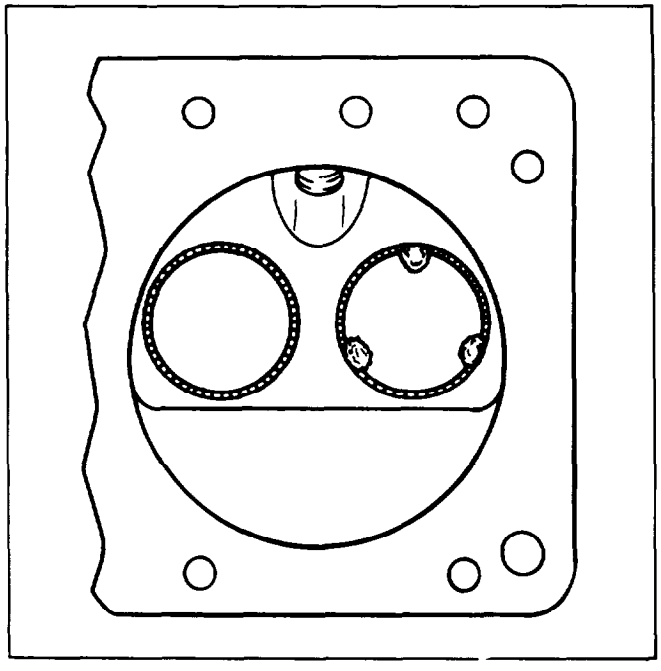

Figure 5-26. Scrap Valve Welded In Place

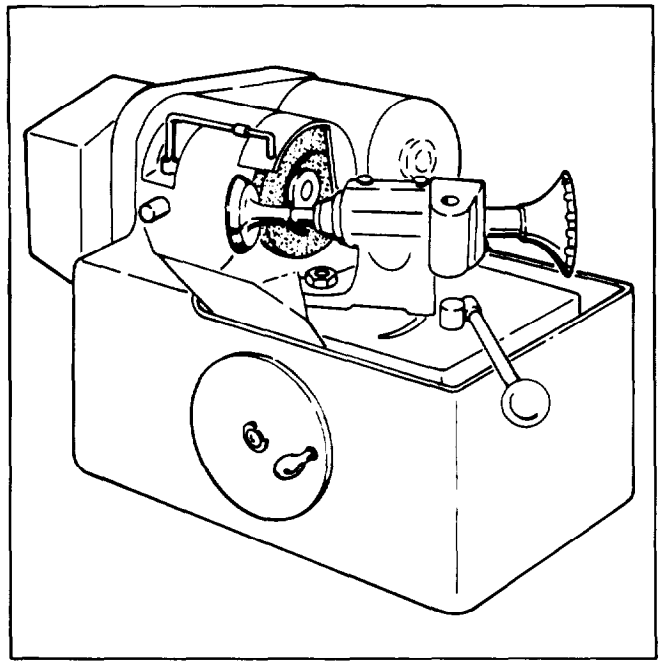

Figure 5-28. Valve Grinding Machine

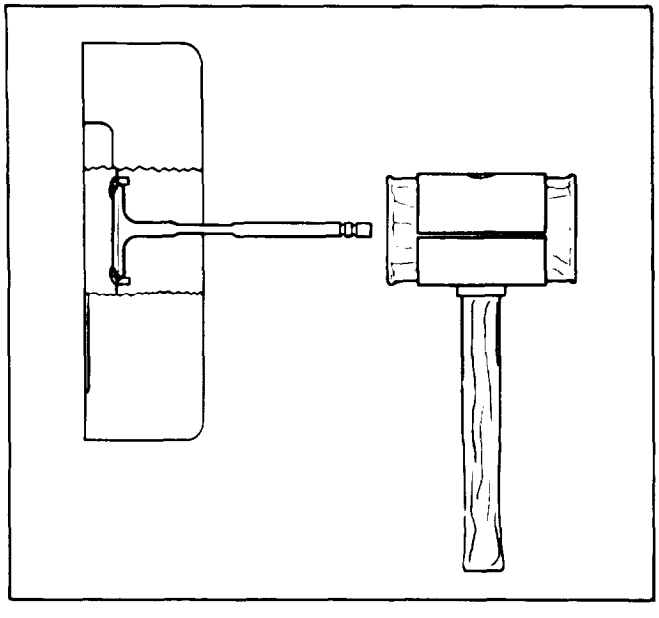

Figure 5-27. Driving Out Seat

WARNING

Dry ice is a solid with an extreme low temperature. Contact with the skin will cause serious freezing. Use gloves and forceps or bent wire to remove metal parts. Never touch metal that has been in dry ice until temperature has risen above the freezing point.

m. Using a pair of forceps or a hooked wire (see warning), quickly lift the chilled insert from the dry ice and locate it over the counterbore so the lower edge is entered squarely. Start the driving tool pilot in the valve guide, bringing the driving face against the insert upper surface accurately, and tap the tool with a medium weight hammer.

CAUTION

If severe hammering seems to be required, the counterbore is not clean or has burrs, the insert is not chilled enough, or not started into the counterbore straight and true.

5-33. VALVE GRINDING (Refacing).

a. A valve grinding device similar to that shown in ~~Figure 5-28~~ will be required to reface the valves at the proper angle according to the specifications of ~~Table 5.~~

www.truck-freeworkshop.com/clark/

Figure 5-29. Rocker Arm Retainer

b. Be sure that the refacer grinding wheels are properly dressed and are the proper wheels for the valve material (exhaust valves are Stellite faced).

c. Remove only enough stock to correct the runout or to remove pits and grooves. Care must be exercised so that the entire Stellite facing is not removed.(Stellite facing is .040" min. depth)

d. If the edge of the valve head is less than l/32 inch after refacing, replace the valve as it will run too hot in the engine.

5-34. ROCKER ARM DISASSEMBLY AND REPAIR.

a. Refer to figure 5-29 and remove retainer clip as shown by arrow.

b. Slide parts off shaft, number rocker arms as they are removed for reassembly in same order as removed. See figure 5-15 for exploded view.

c. Check for wear and broken parts, clean, making sure all oil passages are clear of dirt, varnish and gum deposits.

d. Rocker arms cannot be rebushed and must be replaced is the bushing surface is excessively worn or is otherwise unfit for further service.

e. Reassemble the rocker arm assembly as shown in figure 5-15, and make certain that the retainer clip is properly in place as shown by figure 5-29.

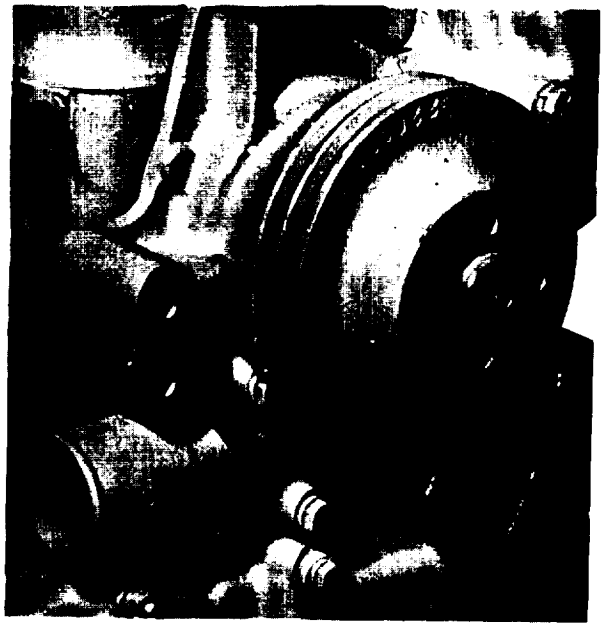

Figure 5-30. Captive Water Pump Bolt

5-35. CYLINDER HEAD REASSEMBLY AND INSTALLATION.

a. Refer to figure 5-15 and install the components of the cylinder head assembly as shown by the illustration. Do not install rocker arm assembly at this time.

b. Install new head gasket into position.

c. Install the cylinder head and head bolts. Torque bolts to specifications and in proper sequence as shown in figure 4-40.

CAUTION

The No. 9 head bolt is a special retainer drilled for passage of oil and will require less torque than the other retainers (see Specifications, Table 3).

d. Install push rods, installing each rod into the same socket from which it was removed. Replace bent or worn push rods with new ones.

www.truck-freeworkshop.com/clark/

e. Install rocker arm assembly and make certain that push rods engage with rocker arms. Torque bolts to specifications shown in Table 5.

f. Perform a valve clearance adjustment as outlined in Section IV.

g. Install rocker arm cover, using a new gasket and torque rocker arm cover retainers to specifications. Do not over tighten.

5-36. WATER PUMP REMOVAL

a. Proir to removing water pump, drain colling system completely, remove colling fan from water pump pulley and disengage V-belts from water pump pulley.

b. Loosen and remove all bolts (except captive bolt shown by arrow in figure 5-30) which secure water pump to cylinder block.

c. Captive bolt may be loosened for water pump removal, but cannot be removed from pump unless pulley is removed.

d. Carefully tap on the pump body (not pulley) until gasket seal is broked and pump can be removed.

5-37. DISASSEMBLY. (Refer to figure 5-32)

a. With the fan blade and pulley removed, use a bar type puller to remove the pulley hub. Discard the hub. It is dangerous to re-use a hub that has been removed since it won't fit properly.

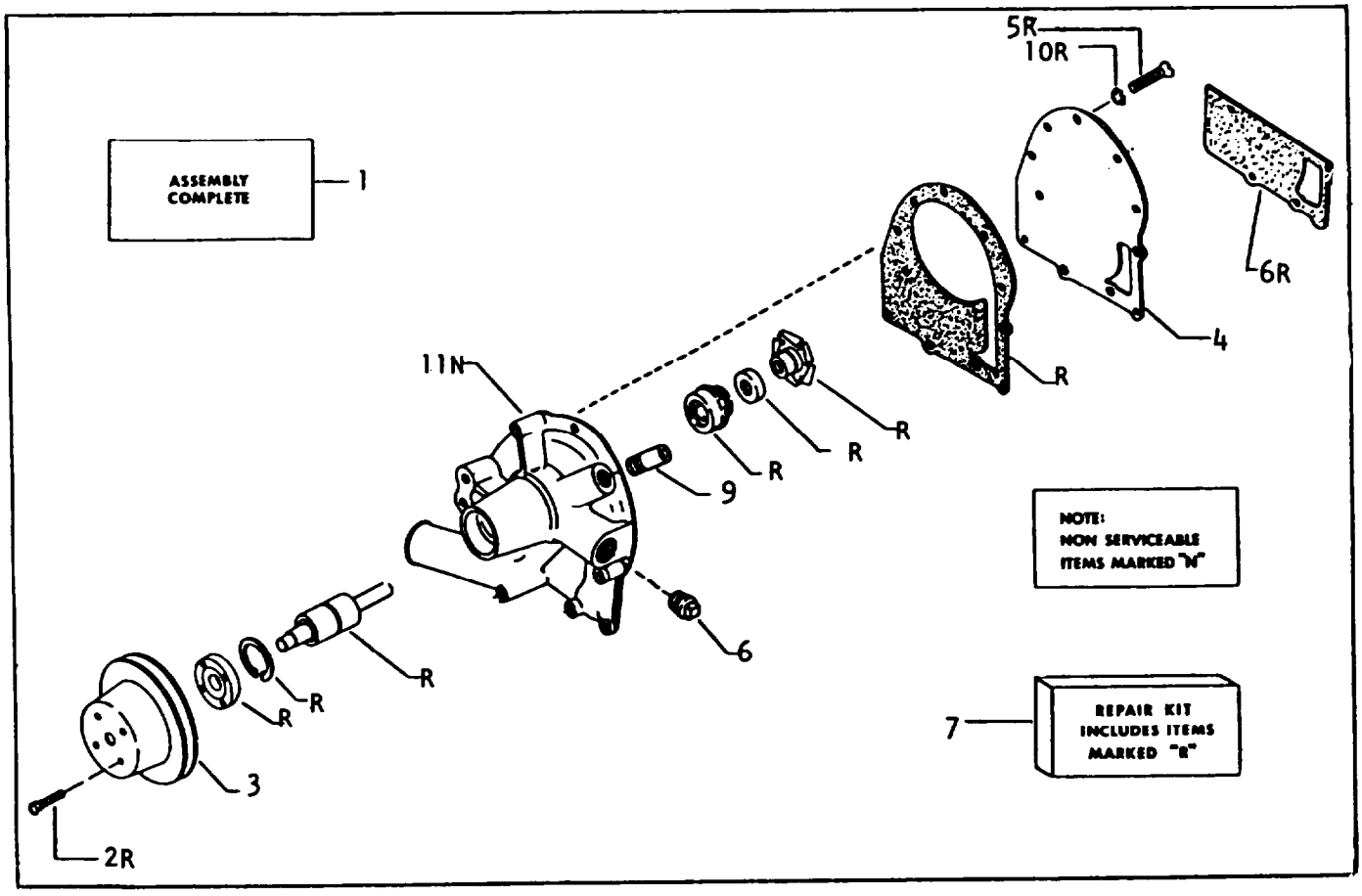

1. Pump assembly
2. Capscrew
3. Pulley
4. Cover
5. Screw
6. Gasket
7. Repair kit
8. Plug
9. Fitting
10. Washer
11. Body

Figure 5-32 Water Pump Assembly

www.truck-freeworkshop.com/clark/

b. Remove the pump cover which is secured to the pump body with flat head screws.

c. Remove and discard the shaft retainer. Place the pump (hub end down) on the base of an arbor press. Using a dowel slightly press the shaft out of the pump body. The impeller blades will bottom against the inside of the pump body so that the shaft is pressed out of the impeller as well as out of the body. Discard the shaft and the impeller.

d. Turn the pump body over and apply slight pressure to the water pump seal to remove it from the recess in the body. Discard the seal and the seal seat.

e. Carefully inspect the water pump body for damage. If the body is damaged, replace the entire pump. If the body is serviceable reassemble the pump using a water pump repair kit.

5-38. REASSEMBLY

a. Carefully wipe the carbon sealing surface of the water pump seal and the mating face of the ceramic seal seat with a soft cloth or absorbent paper to remove all traces of wax, grease, or oil. Use a small amount of solvent if necessary. To provide for initial lubrication of the seal and the seal seat, apply either a 1% soluble oil and water solution or ethyoline glycol type antifreeze to the sealing surfaces of both. Lubricate the O.D. of the seal lightly with a soft sealant, such Permatex No. 3, before installing the seal in the body recess. To install the seal, press against the outer flange with light pressure only to avoid damaging the seal.

b. Place the pump body (cover end down) on the base of the arbor press. Insert the long end of the pump shaft through the seal carefully. To press the shaft into the pump body, use a tube or pipe slightly smaller than the O.D. of the shaft bearing, and press against the outer race of the pump bearing until it is seated in the pump body. Do not apply pressure against the end of the shaft. Install the shaft retainer in the groove in the pump body.

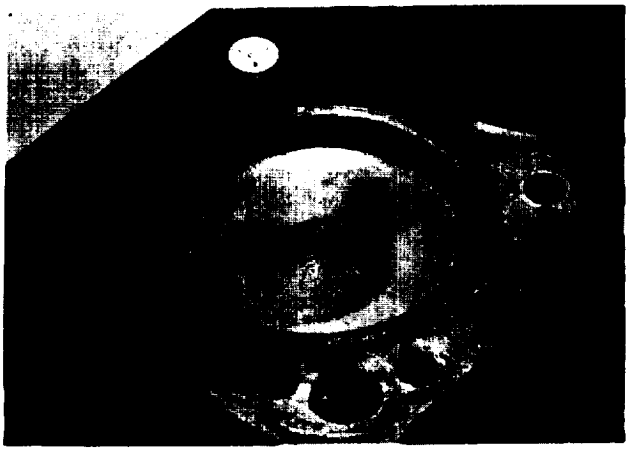

Figure 5-33. Cylinder Sleeve Locks

c. Turn the pump body over and support the pulley end of the shaft. Carefully slide the seal seat (rubber insert side up) onto the shaft. Use a tube or pipe with an I.D. slightly larger than the I.D. of the impeller to press onto the shaft. Start the impeller straight and true on the shaft to avoid binding while it is being pressed on. Pressure should be applied to the inner impeller flange area only to avoid damaging the impeller. Allow .010-.025" (.245-.635mm) clearance between the vanes and body. After the impeller is installed, rotate the shaft to ensure that the impeller blades do not contact the pump body.

d. Again turn the pump over and block against the shaft, not against the impeller hub. Position the pulley on the shaft so that the four holes align **with** the threads in the pulley hub. Install the two capscrews and torque to 70 in. /lbs.

e. Replace the gaskets and pump cover.

5-39. INSTALLATION

a. Position pump, and new gasket, against mounting surface of cylinder block. Install all bolts and torque to specifications on page vii.

b. Install and tighten V-belt . Refer to Section

www.truck-freeworkshop.com/clark/

Figure 5-34. Removing Crankshaft Pulley Nut

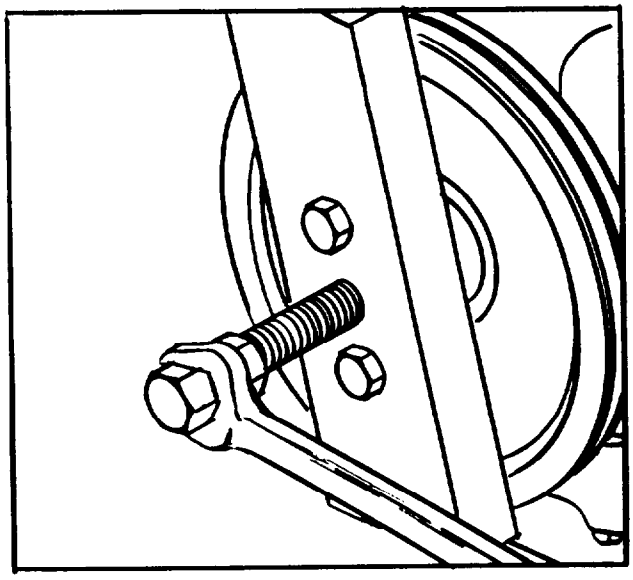

Figure 5-35. Pulley Removal

LEGEND FOR FIGURE 5-36

1.	Seal	11.	Bolt, L.W.	21.	Dowell	31.	Shaft
2.	Oil Lube	12.	Bolt, L.W	22.	Plate	32.	Bolt, L.W.
3.	Fitting	13.	Bolt, L.W.	23.	Retainer	33.	Bolt
4.	Fitting	14.	Bolt, L.W.	24.	Gasket	34.	Bolt, L.W.
5.	Bolt	15.	Bolt, L.W.	25.	Snap Ring	35.	Bolt, L.W.
6.	Bolt, L.W.	16.	Bolt, L.W.	26.	Washer	36.	Bolt, L.W.
7.	Bolt, L.W.	17.	DoWel	27.	Idler Gear	37.	Bolt
8.	Bolt, L.W.	18.	Bolt, L.W.	28.	Bushing	38.	Plate
9.	Bolt, L.W.	19.	Bolt, L.W.	29.	Washer	39.	Gasket
10.	Dowell	20.	Cover	30.	Spacer		

IV for proper belt tension and adjustment procedure.

d. Install cooling fan,

e. Refill cooling system with clean water or water-antifreeze solution.

5-40. TIMING GEARS AND CAMSHAFT REMOVAL.

a Refer to figure 5-33 and install cylinder sleeve locks as shown in the illustration. If not locked down in this manner, cylinder sleeve will be pushed out by upward travel of the piston.

b. Remove the crankshaft pulley nut by blocking the flywheel with a piece of wood or soft bar stock to prevent crankshaft motion, and removing pulley nut with wrench as shown in figure 5-34.

c. Using a bar type puller, remove the pulley. When using the puller, be carefull not to damage the threaded end of the crankshaft.

d. Inspect the crankshaft pulley wear sleeve. The wear sleeve provides a replaceable running surface for the front

www.truck-freeworkshop.com/clark/

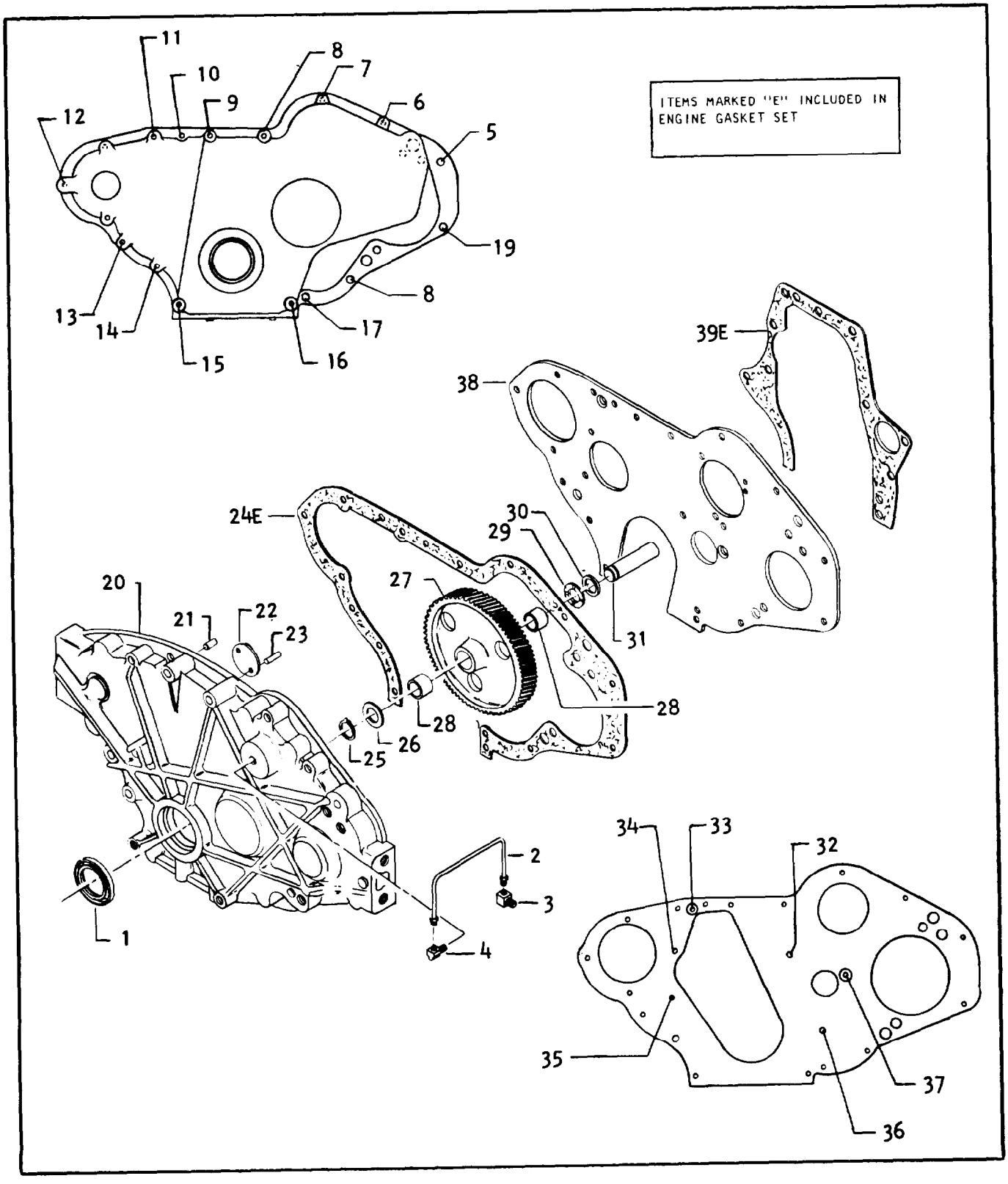

Figure 5-36. Timing Gear Cover Parts

www.truck-freeworkshop.com/clark/

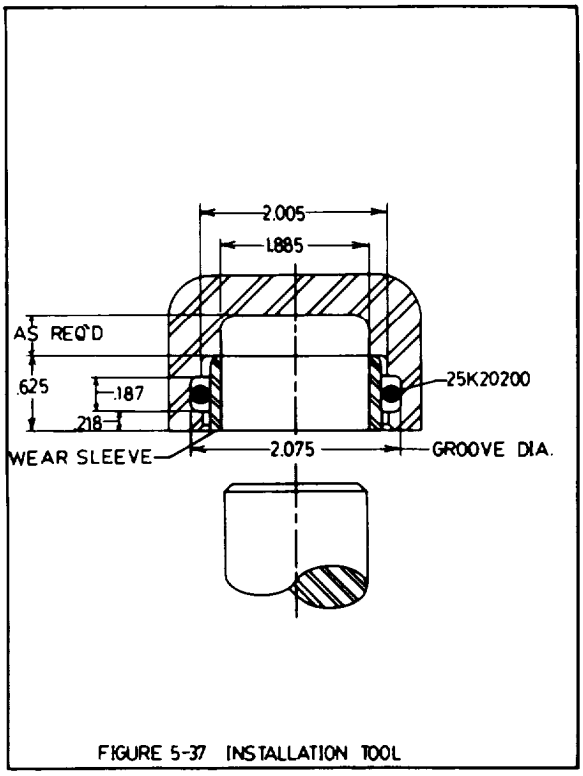

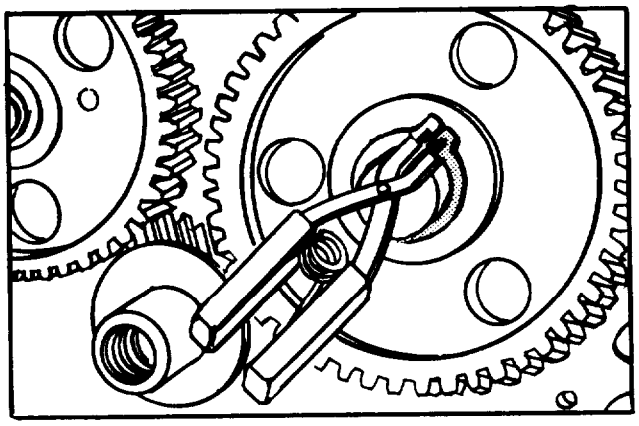

Figure 5-39. Idler Gear Removal

Figure 5-40. Camshaft Removal

Figure 5-38. Camshaft Thrust Plunger Removal

Figure 5-41. Backing Plate Removal

www.truck-freeworkshop.com/clark/

oil seal. If the seal running surface of the wear sleeve is grooved or damaged, the wear sleeve must be replaced to prevent oil leakage past the front oil seal.

e. If it's necessary to replace the wear sleeve, remove it by tapping with a hammer, by heating, or by careful use of a rounded, blunt chisel. If is not necessary to cut the wear sleeve completely to remove it.

f. To install a new wear sleeve, remove all dirt and oil from the seating surface. Coat the shaft surface with a liquid sealant or gasket cement.

g. Press wear sleeve into position (.590"-,610" from end of hub) with an installation tool. Do not hammer on the thin edge of the sleeve for it may become warped or out of round.

h. Remove excess sealant from the wear sleeve edges. None should be left on the finished working surface or seal leakage may result.

i. The installation tool for the National wear sleeve is simple and inexpensive to make. Use an "0" ring to avoid damage to the finish of the sleeve, the tool is used to press-fit the sleeve onto the shaft. (Refer to Fig. 5-37)

j. Refer to figure 5-36 for general parts identification and proceed to remove the timing gear cover.

k. Removal of timing gear cover will expose timing gears as shown in figure 5-37.

1. Remove the camshaft thrust plunger and spring as shown in figure 5-38

m. For camshaft removal, the lifters must be blocked up in the raised position, or removed.

NOTE

The engine can be inverted on the bench as shown in figure 5-40 to hold the lifters off the camshaft lobes.

n. Pull the camshaft forward, out of the crankcase, very carefully to avoid scratching the camshaft lobes and bearing journals.

o. Remove the timing gear backing plate as shown in figure 5-41.

p. Clean and inspect all parts in accordance with the general instructions at the beginning of this section.

q. Refer to Table S for maxium wear limits to determine serviceability of used parts.

r. Replace any parts that appear danaged or worn beyond allowable limits.

5-41. CAMSHAFT AND TIMING GEARS INSTALLATION

a. Prior to camshaft installation make certain that all lifters are in place and blocked up out of position This easily accomplished by inverting the engine on the bench as shown in figure 5-40.

b. Install timing gear backing plate.

c. Oil the camshaft bearing journals with a light film of clean oil, and install the camshaft into the cylinder block.

d. As the camshaft is nearly seated rotate the camshaft gear to bring it into proper time with the crankshaft and idler gears. See figure 5-43 for gear timing.

e. Dip all parts in oil before installing and oil idler shaft.

f. Install spacer on shaft so it seats flush with surface of crankcase.

www.truck-freeworkshop.com/clark/

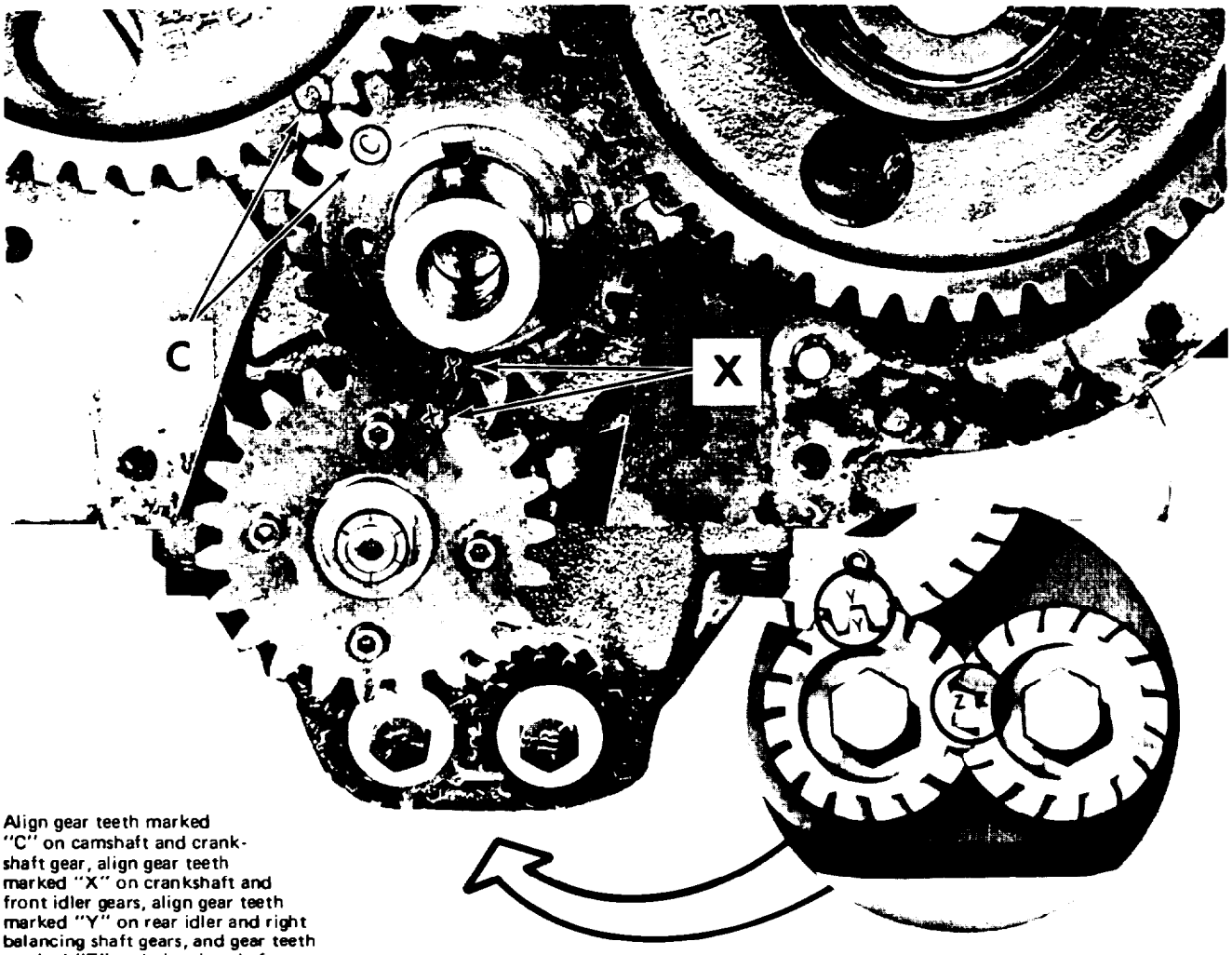

Align gear teeth marked "C" on camshaft and crankshaft gear, align gear teeth marked "X" on crankshaft and front idler gears, align gear teeth marked "Y" on rear idler and right balancing shaft gears, and gear teeth marked "Z" on balancing shaft gears.

Figure 5-43. Gear Timing

g. Install thrust washer on shaft with oil grooves facing away from engine.

h. Install idler gear assembly on shaft with longest side of hub facing away from engine.

i. Install thrust washer on shaft with oil grooves facing engine and flush with gear hub.

j. Using an external retainer ring pliers, install snap ring in the groove on the idler shaft.

k. Install camshaft thrust plunger.

l. Install timing gear cover and new gasket. Torque timing cover bolts to specifications on page vii.

m. Coat the pulley seal with a light film of Vaseline, or vegetable shortening and install into timing gear cover.

n. Install pulley into position on the crankshaft.

O. Install pulley retainer and torque to specifications on page vii.

www.truck-freeworkshop.com/clark/

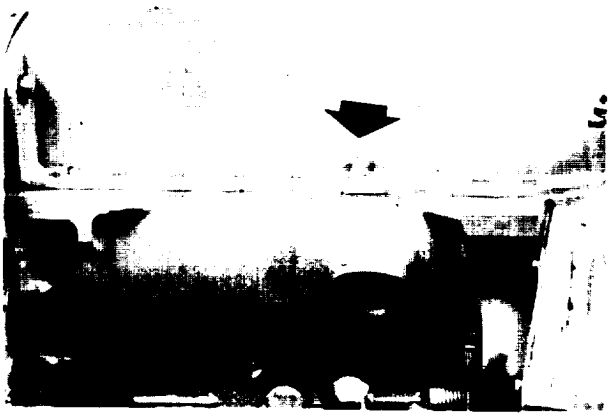

Figure 5-44. Oil Pan

5-42. PISTONS, CONNECTING RODS AND CRANKSHAFT REMOVAL.

a. Drain the oil pan and remove cylinder head, water pump, timing gears and camshaft as previously outlined.

b. The engine should be inverted on the bench for further disassembly as outlined below.

c. Remove the oil pan bolts and the oil pan. Note the position of the extra long bolts which are located in the fourth position from the front of the engine. See figure 5-44.

d. Refer to figure 5-45 and remove the balancer assembly by removing retainers and pulling assembly away from engine.

e. Carefully inspect the balancer for excessive wear and part failure, paying special attention to the bushings and gears.

f. See figure 5-66 for exploded view of balancer assembly.

g. Remove oil pump mounting screws and remove the pump assembly as shown in figure 5-46.

h. Refer to figure 5-67 for an exploded view of the oil pump.

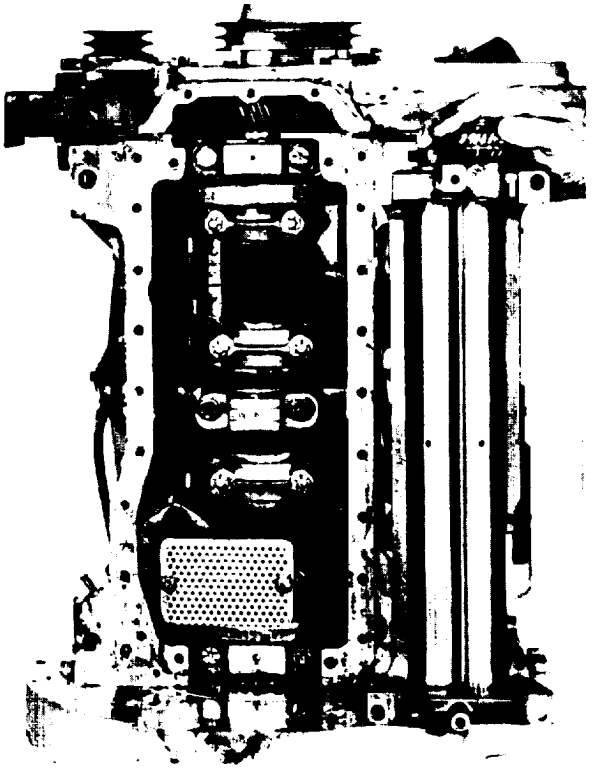

Figure 5-45. Removing Balancer Assembly

Figure 5-46. Removing Oil Pump

www.truck-freeworkshop.com/clark/

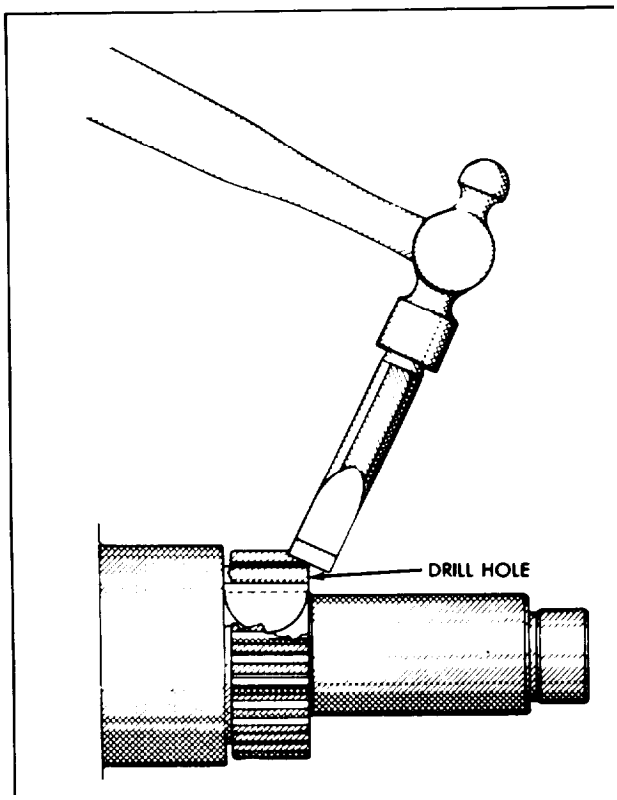

Figure 5-47. Crankshaft Gear Removal

Figure 5-48. Flywheel Removal

i. In those instances where replacement of the crankshaft gear is necessary and a puller is not available or the gear is too tight, it will be necessary to split the gear.

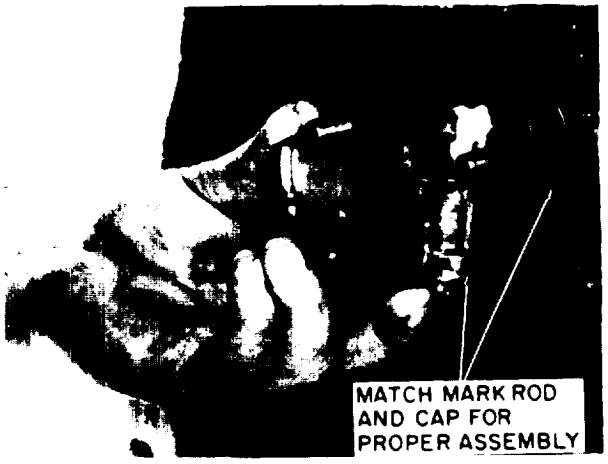

Figure 5-49. Cap and Bearing Removal

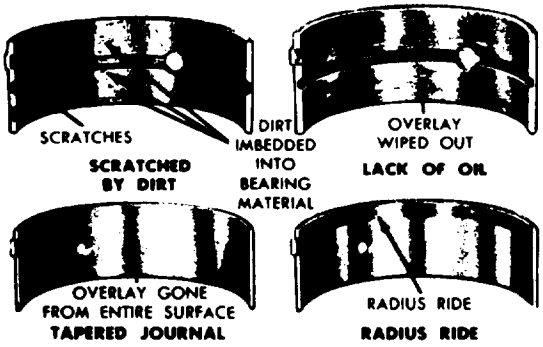

Figure 5-50. Bearing Inspection

j. To split the gear, first drill a hole of approximately l/4 inch diameter lengthwise of the gear and between the keyway and the teeth. After drilling, a light blow with a cold chisel will spread the gear a few thousandths and permit removal. See figure 5-47.

k. Remove the flywheel as shown in figure 5-48.

1. When removing the flywheel, mark the crankshaft flange and flywheel as they will reassembly in one position.

m. To remove bell housing, remove retainer and pull housing from engine assembly. Remove rear main seal from housing by tapping aroung edge of seal with drift & hammer.

www.truck-freeworkshop.com/clark/

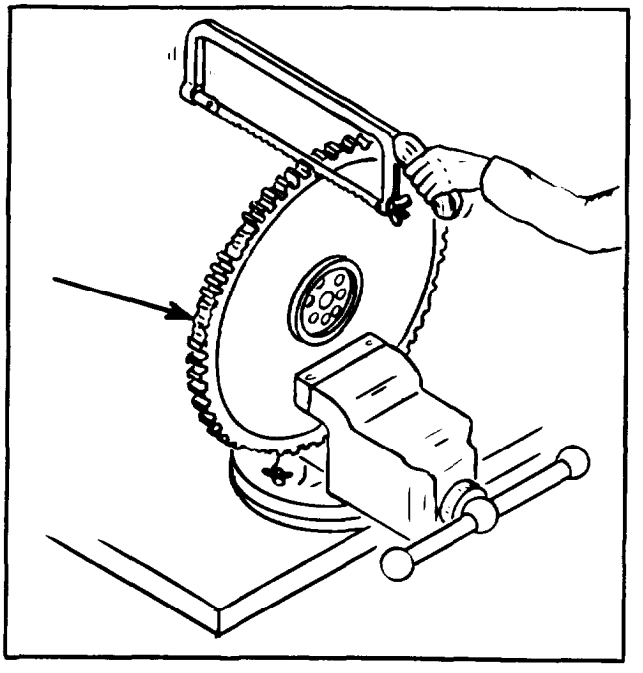

Figure 5-48A

Before removing the ring gear inspect it for worn or broken teeth as shown by the arrow in Figure 5-48A. When gear teeth are worn to the point that the starter will not engage the flywheel then the ring gear must be replaced.

5-42A. FLYWHEEL RING GEAR REMOVAL

a. Remove flywheel as shown in Figure 5-48.

b. Place flywheel in a vise as shown in Figure 5-48A.

CAUTION

USE A PROTECTIVE COVERING ON THE VISE, TO PROTECT THE MACHINED SURFACE OF THE FLYWHEEL.

C. Use a hacksaw and cut ring gear as shown in Figure 5-48A.

CAUTION

DO NOT CUT ALL THE WAY THROUGH, FOR THE PROBABILITY OF CUTTING OR NICKING THE MACHINE SURFACE OF THE FLYWHEEL IS INCREASED.

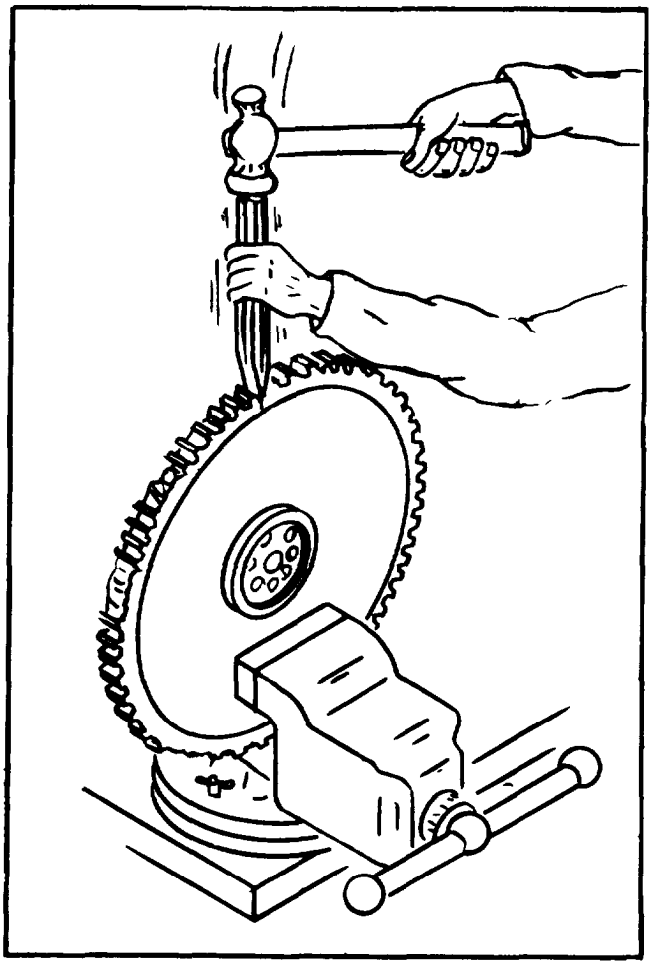

Figure 5-48B

d. After cutting a channel in the ring gear, use a hammer and chisel (as shown in Figure 5-48B) to slit the ring gear.

CAUTION

USE ENOUGH FORCE TO SPLIT THE RING GEAR, BUT DO NOT NICK THE MACHINED SURFACE OF THE FLYWHEEL.

Remove the ring gear and discard.

5-42B. INSPECTION

a. Inspect the flywheel machine surface for nicks.

b. If nicks occured during removal of ring gear. Use emery cloth to remove the nicks. Do not use any other process for the flywheel ring gear is a heat press fit to the flywheel.

www.truck-freeworkshop.com/clark/

5-42C. INSTALLATION

a. Remove the flywheel from the vise and place it on a flat surface with the side the ring gear slips over face up (refer to Figure 5-48C).

b. Position ring gear on the flywheel and heat with a oxygen and acetyline mix torch (CAUTION: REFER TO PAGE 5-6 SECTIONS 5-15, 5-16 and 5-17 FOR SAFETY PRECAUTIONS.)

C. Using a circular motion,heat flywheel ring gear until it falls into its place on the flywheel.

d. Let the ring gear cool on its own. DO NOT IMMERSE IN WATER.

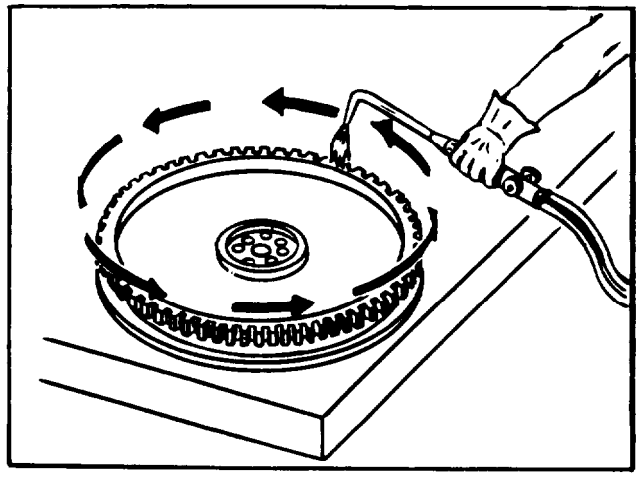

Figure 5-48C

www.truck-freeworkshop.com/clark/

Figure 5-51. Piston Removal

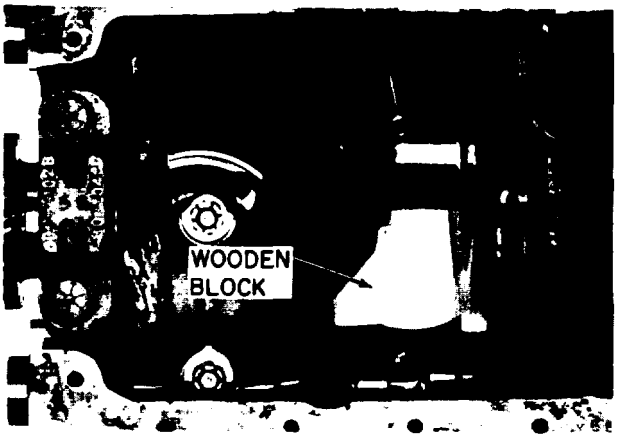

Figure 5-52. Forcing Cylinder Sleeve Up

n. Remove connecting rod bearings and caps. Make sure the rods and caps are marked for position of piston for reassembly in same cylinder as removed. See figure 5-45 for cap and bearing removal.

o. As the caps are removed and the bearings are exposed, carefully inspect each bearing. A careful inspection of each bearing will indicate possible trouble areas. See figure 5-50.

P. Remove ridge from top of cylinder sleeve before removing pistons. To remove the piston assembly, carefully tap on connecting rod with a wooden hammer handle until piston is free from cylinder and remove piston and rod from top of block. See figure 5-51.

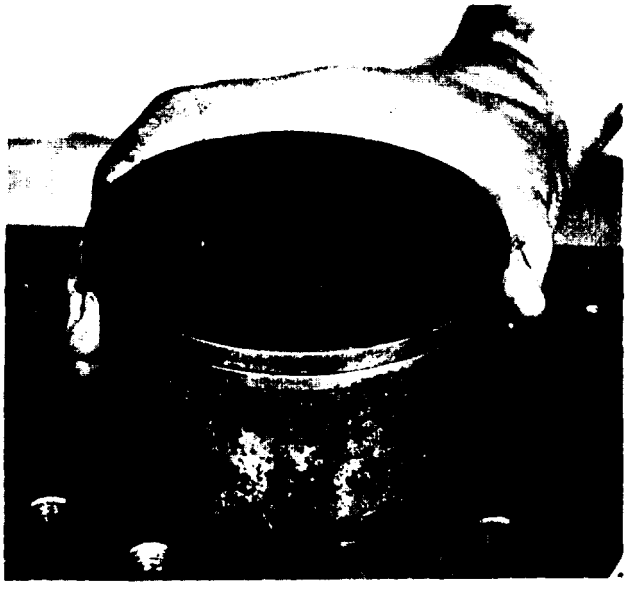

Figure 5-53. Cylinder Sleeve Removal

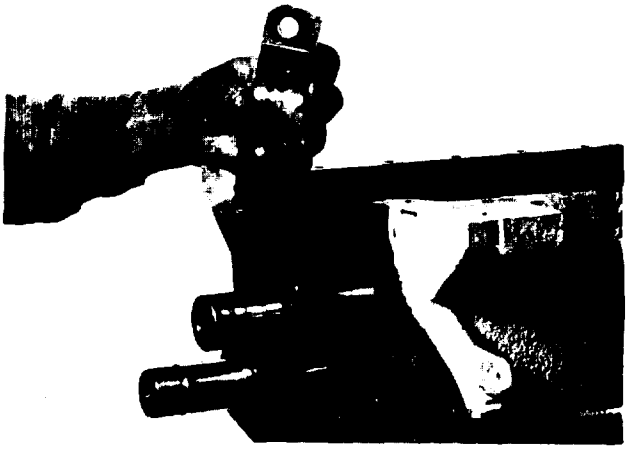

Figure 5-54. Main Bearing Cap Removal

q. After piston is removed, remove the old rings and discard. Do not attempt to reuse old rings as they will not reseat properly.

r. Clean the piston to remove all carbon and foreign material, paying special attention to ring grooves, as foreign material will not allow the rings to seat properly and ring breakage may occur.

www.truck-freeworkshop.com/clark/

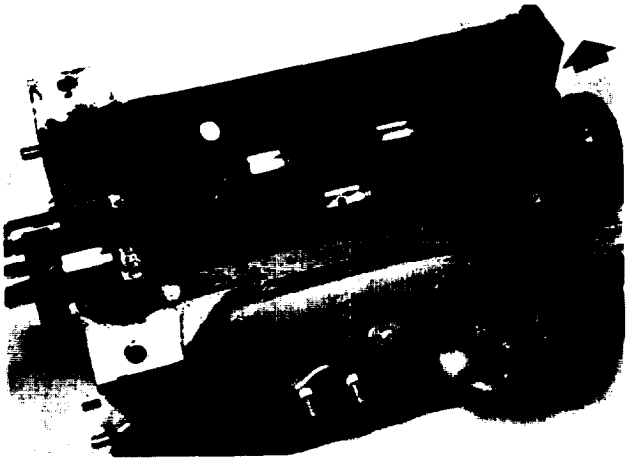

Figure 5-55. Crankshaft Removal

s. The cylinder sleeve may be removed by placing d wooden block between the crankshaft and the bottom of the cylinder sleeve and turning the crankshaft, forcing the sleeve out. See figure 5-52. After the cylinder sleeve has been lifted from its seat, pull the sleeve up and out of engine block, as shown in figure 5-53.

t. Remove the main bearing caps one at a time, and match mark each cap for proper position at time of assembly. See figure 5-54.

u. Inspect bearings as they are removed for abnormal conditions shown in figure 5-50.

v. Remove crankshaft by lifting upward out of crankcase, exercising care to prevent damage to machined surfaces. See figure 5-55.

w. Carefully inspect crankshaft for wear, out of round and rough areas on bearing surfaces.

x. Clean all oil passages and make sure they are free of obstructions and foreign material.

y. Remove valve lifters one at a time, as shown in figure 5-56 and mark for proper location so that they may be reinstalled in the same position.

z. Inspect lifters for excessive wear and replace as necessary. Refer to specifications of Table 3 to determine wear limits.

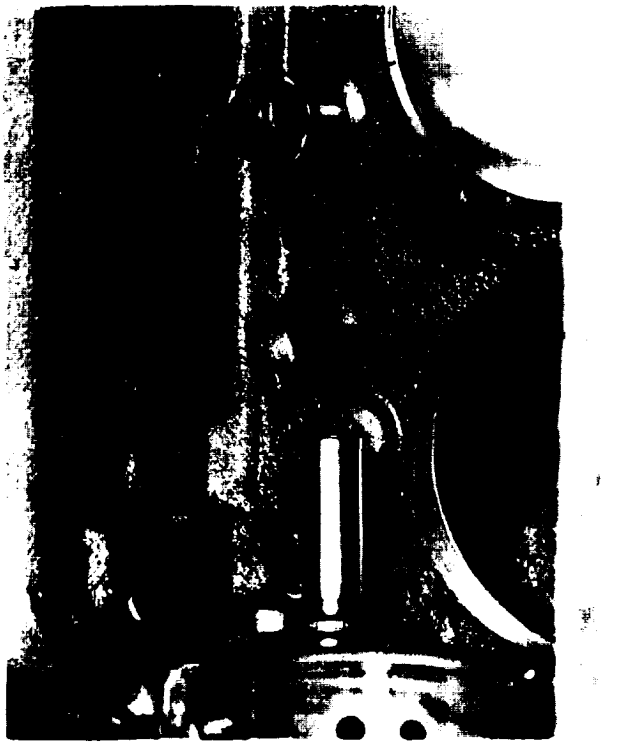

Figure 5-56. Removing Valve Lifters

Figure 5-57. Measuring Ring Gap

www.truck-freeworkshop.com/clark/

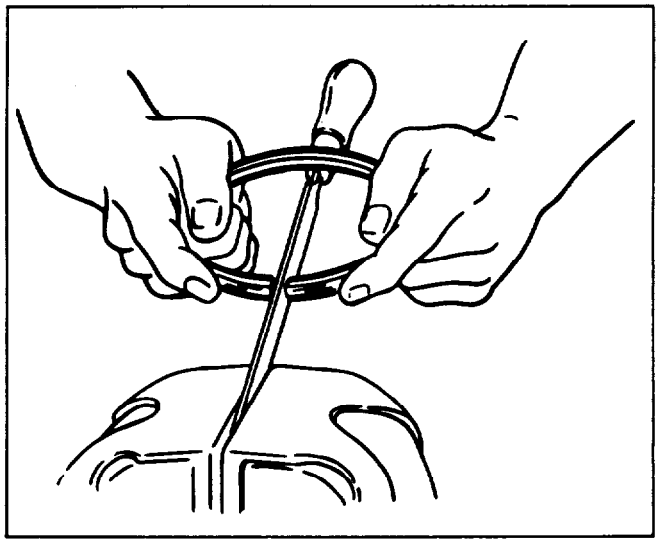

Figure 5-58. Filing Ring Gap

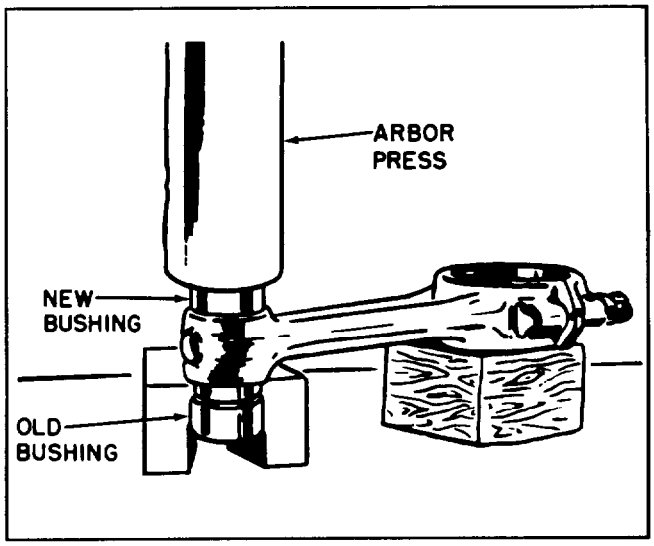

Figure 5-60. Connecting Rod Bushing Removal

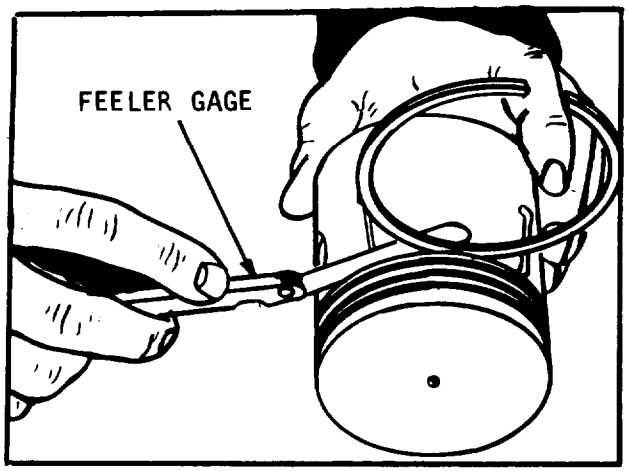

Figure 5-59. Checking Ring Side Clearance

5-43. FITTING NEW PISTON RINGS.

a. Select the proper ring set (standard, oversize, etc.).

b. Position the ring in the cylinder bore in which it is going to be used.

c. Use the head of a piston to position the ring in the cylinder bore, at bottom of piston travel. Measure the gap as shown in figure 5-57.

d. Measure the gap between the ends of the ring with a feeler gauge. If the rings must be filed to allow the gauge to fit, see step e.

e. Place a medium to fine toothed file in a vise as shown in figure 5-58. Grip the piston ring with both hands as shown and apply even pressure to both sides of the piston ring and file both ends of the ring evenly by moving ring back and forth over the file.

f. Check ring gap frequently as outlined in steps b, c, and d, during the filing operation to avoid removal of too much material.

g. Refer to figure 5-59 and check the ring side clearance of the compression rings with a feeler gauge inserted between the ring and its lowest land. The gauge should slide freely around the entire ring circumference without binding. Any wear that occurs will form a step at the inner portion of the lower land. If the lower lands have high steps, the piston should be replaced.

Note

When piston rings are installed, the ring gaps must be staggered and not in line with each other.

www.truck-freeworkshop.com/clark/

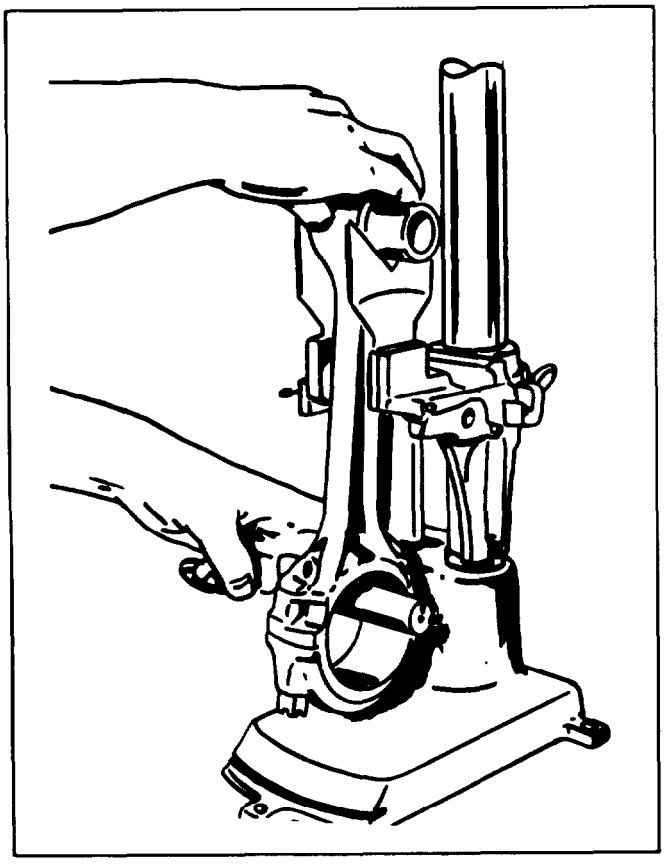

Figure 5-61. Checking Rod Alignment

5-44. CONNECTING ROD BEARING REPLACEMENT.

a. Connecting rod bearings must be inspected according to figure 5-50 and bearings evidencing any abnormal condition must be replaced.

b. The connecting rod bushing (wrist pin bushing) should be checked for wear internally and also for good fit in the rod eye.

c. If the bushing requires replacement, it should be pressed out of the rod as shown in figure 5-60, and the new bushing installed in a similar manner.

d. Ream the new bushing to size (see Table 3) after installation.

e. Connect rod alignment should be checked in a fixture such as that shown in figure 5-61. Do not attempt to straighten a bent rod, it must be replaced.

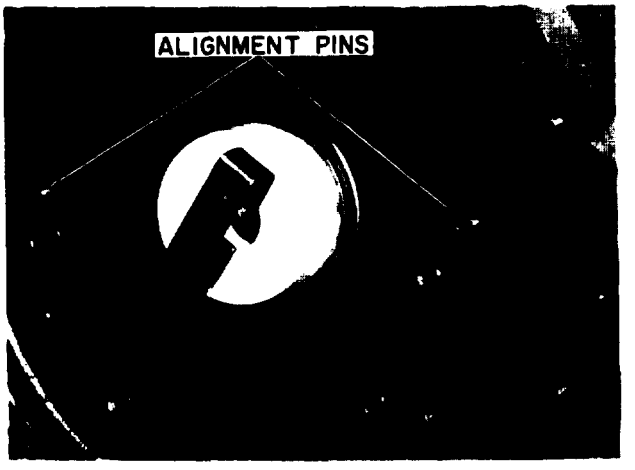

Figure 5-62. Flywheel Housing Installation

5-45. CR.ANKSHAFT INSTALLATION.

a. Prior to crankshaft installation, install all valve lifters in the bores from which they were originally removed. Lifters should be dipped in clean engine oil before installing.

b. Install crankshaft and gear assembly, using new bearings.

c. If new crankshaft gear is to be installed, heat the gear to a maximum of 400°F, and using tongs and asbestos gloves, install gear on crankshaft, making sure that keyway is properly positioned.

d. Torque all bearing caps to specifications and check bearing clearances.

e. Check to see that crankshaft rotates freely.

f. Install the rear main seal. Lightly coat the steel edge of the seal (flywheel side) with non-hardening Permatex.

g. The small side of the steel lip must be installed toward the engine side and the oil seal must be installed 1/32 inch below machined surface on engine side of flywheel housing.

h. Install flywheel housing. Install new O-ring seal on flywheel housing, with vulcanized joint toward top of engine.

www.truck-freeworkshop.com/clark/

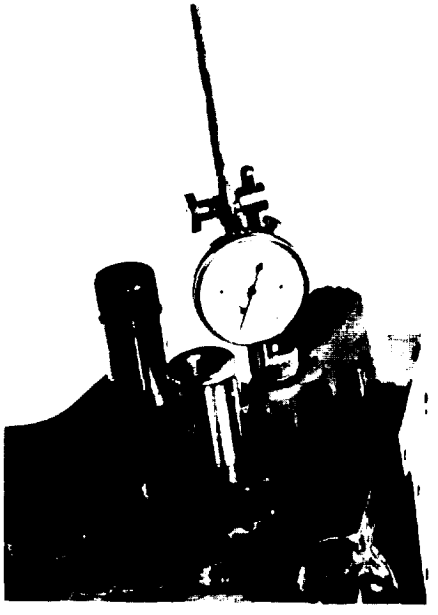

Figure 5-63. Crankshaft End Play Check

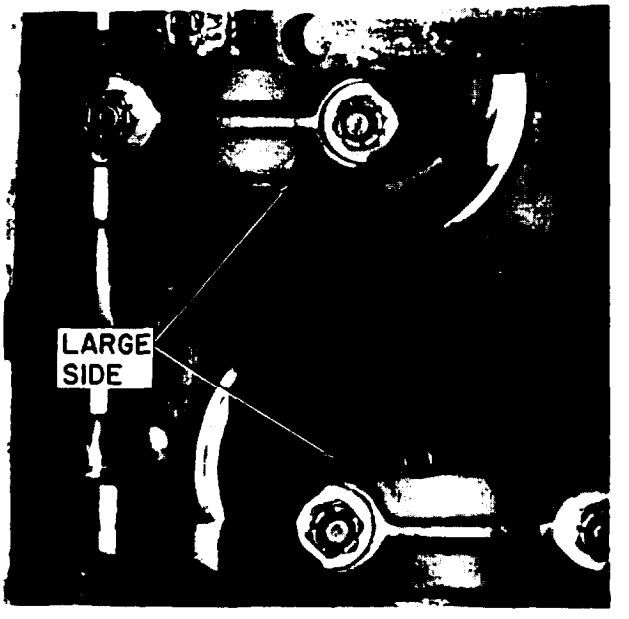

Figure 5-65. Connecting Rod Orientation

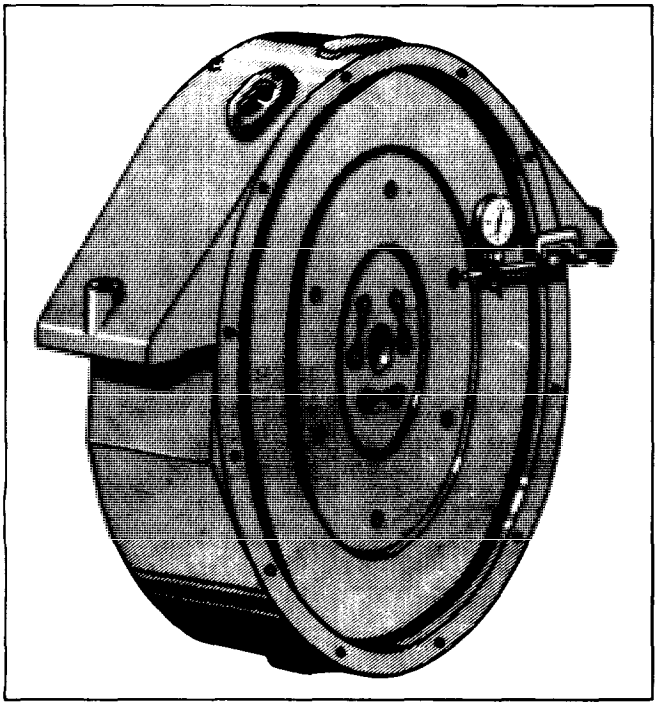

Figure 5-64. Flywheel Runout Check

i. Coat the rear seal assembly with a light film of low temperature non-fibrous grease.

j. If the housing alignment dowels are installed in the cylinder block, coat the exposed ends with non-hardening Permatex. If pins are removed from the assembly, they will be installed in step l.

k. Place the flywheel housing into position and install fasteners, but do not tighten.

l. Coat the housing alignment dowels with non-hardening Permatex and install as shown in figure 5-62.

m. Torque all housing fasteners to specifications.

n. Install flywheel to crankshaft mounting flange. Torque all fasteners to specifications, and lockwire in pairs.

5-46. CRANKSHAFT END PLAY CHECK.

a. Force the crankshaft toward the rear of the engine.

b. Install a dial indicator so that the contact point rests against the crankshaft gear, as shown in figure 5-63.

www.truck-freeworkshop.com/clark/

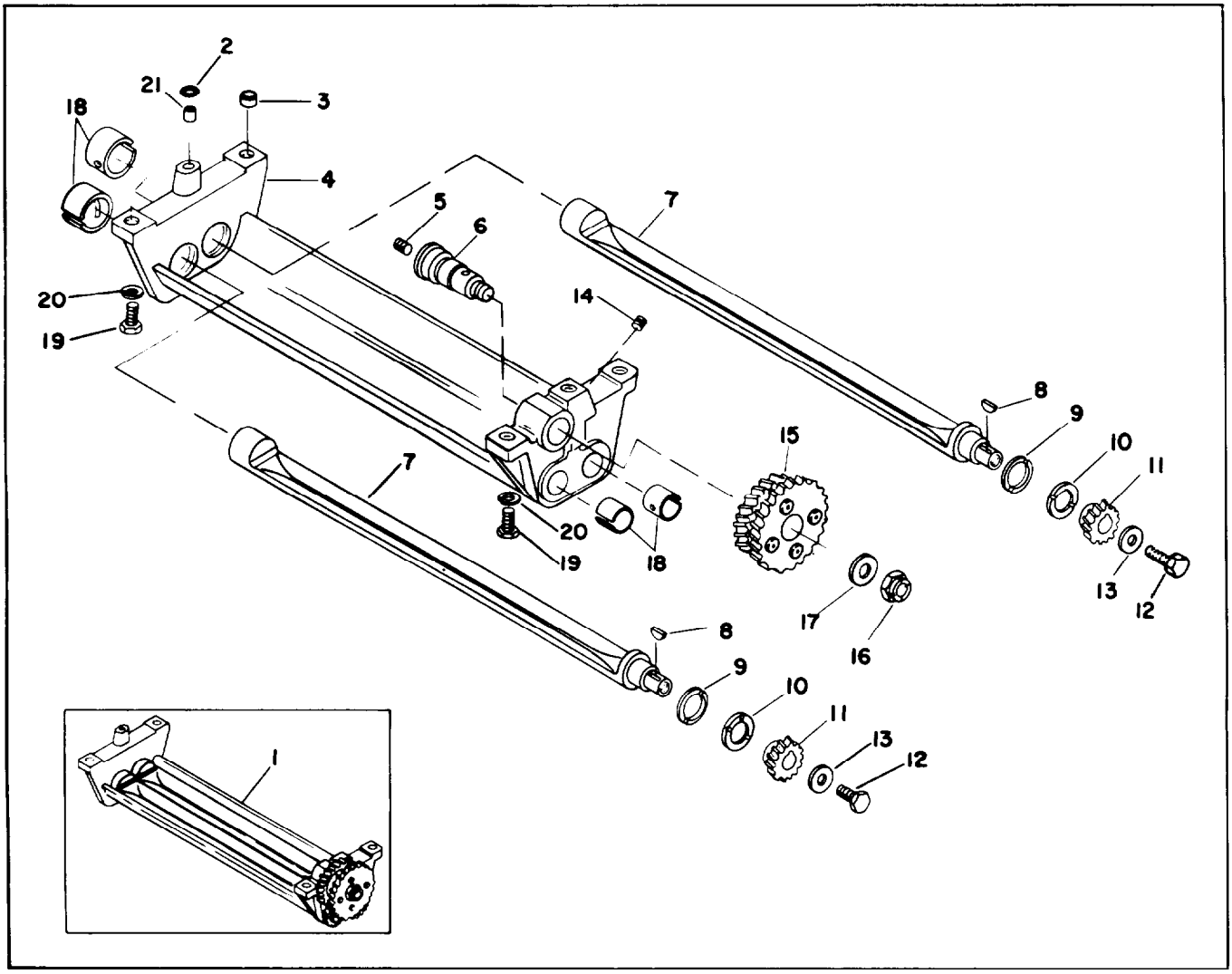

1. Balancer assembly
2. Oil tube seal
3. Dowel pin
4. Frame
5. Spindle plug
6. Spindle
7. Weight
8. Key
9. Shim
10. Bearing
11. Gear
12. screw
13. Washer
14. Plug
15. Gear assembly
16. Retainer
17. Thrust washer
18. Bearing
19. screw
20. Washer
21. Oil tube

Figure 5-66. Engine Balancer Assembly

c. Zero the dial indicator. Push the crankshaft forward and note the reading on the dial, and compare to specifications.

d. If the end play exceeds the wear limit, replace the thrust bearing. If the end play is less than the minimum limit, inspect the thrust bearing and crankshaft thrust faces for scratches, burrs, nicks or dirt.

5-47. FLYWHEEL RUNOUT CHECK.

a. Install a dial indicator so that the indicator point bears against the flywheel face. See figure 5-64.

www.truck-freeworkshop.com/clark/

b. Turn the flywheel, making sure that it is fully forward or rearward, so that crankshaft end play will not be indicated as flywheel runout.

c. If the clutch face runout exceeds specifications, remove the flywheel and check for burrs between the flywheel and the face of the crankshaft mounting flange.

d. Replace the flywheel or machine the crankshaft flywheel mounting face if the mounting face is not square with shaft axis and perfectly flat.

5-48. CYLINDER SLEEVE INSTALLATION.

a. Cylinder bore in block and cylinder sleeve must be free of all dirt and foreign material.

b. Install new O-rings on cylinder sleeves.

c. Soap cylinder sleeve with oil soap or liquid detergent.

d. Insert sleeve in sleeve bore, press into place using finger pressure only.

e. If sleeve will not position properly, check to see that O-rings are still in place and not damaged.

f. Check to see that cylinder sleeve is properly seated by laying straightedge across cylinder sleeve, use feeler gage to measure distance between engine block and straightedge (see Table 5 for sleeve projection).

5-49. PISTON AND CONNECTING ROD INSTALLATION.

a. Install new piston ring sets onto pistons as noted in Table 5, and stagger ring gaps so that they are not in line.

b. Install new upper bearing, making sure it is free of all dirt and foreign material.

c. Dip piston and rod assembly in clean oil.

d. Compress rings with ring compressor.

e. Before inserting piston, note that the connecting rod and cap has a large side. The large side of the No. 1 piston and the large side of the No. 2 piston must face each other. The large side of the No. 3 piston and the large side of the No. 4 piston must face each other. See figure 5-65.

f. Insert assembly in cylinder bore and tap top of piston with wood hammer handle to prevent damage to top of piston.

g. Carefully guide connecting rod on crankshaft to prevent damage to machined surfaces as piston is driven into position.

h. Install new lower bearing in rod cap, and dip in clean oil,

1. Install connecting rod cap and torque retainers to speccifications in Table 5, page 5-14.

j. Check connecting rod side clearance.

5-50 OIL PUMP ASSEMBLY

a. Refer to Figure 5-67 for parts identification

b. Replace any parts that appear damaged.

c. Place oil pump in clean lubricating oil until pump is full of oil.

d. Use new gasket.

e. The oil pump must be timed with the distributor. See figure 5-68 for special installation procedure.

5-51. BALANCER ASSEMBLY.

a. Refer to figure 5-56 for parts identification.

b. Inspect all parts of the balancer assembly for wear or damage, particularly gears and bearings.

c. Replace any parts found to be defective before installing balancer assembly.

www.truck-freeworkshop.com/clark/

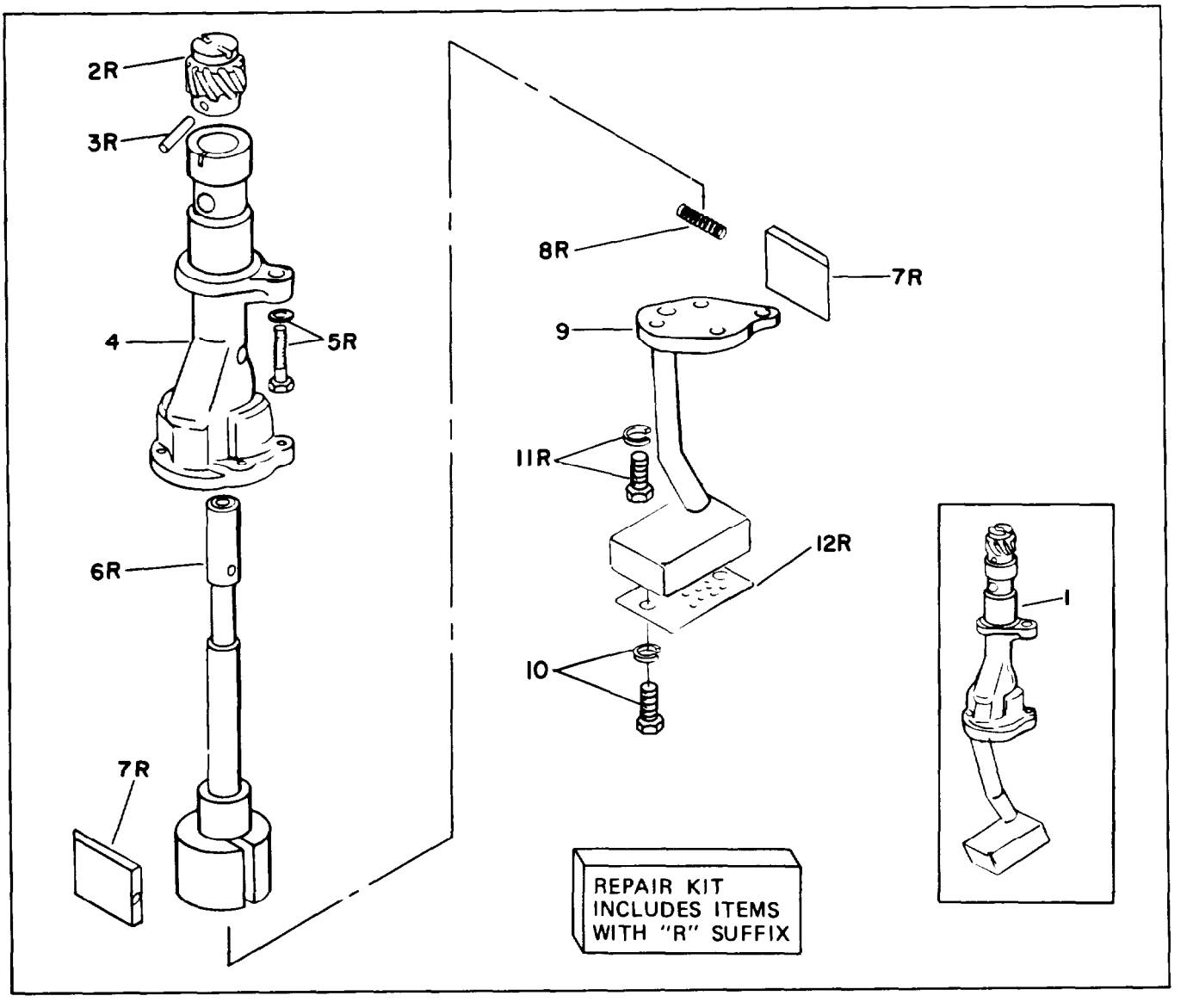

1. Oil pump assembly
2. Drive gear
3. Pin
4. Body
5. Bolt, washer
6. Drive shaft
7. Vane
8. Spring
9. Cover
10. Bolt
11. Bolt
12. Strainer

Figure 5-67. Oil Pump Assembly

d. Dip all parts in clean engine oil prior to installation.

e. Make certain that the oil tube seals are in place and properly seated.

f. Refer to figure 5-43 for proper gear timing, and install balancer so that gears will be in time.

g. Refer to Table 5 for torque specifications when tightening balancer assembly retaining bolts.

h. After balancer is mounted, apply a coat of "Moly" grease to gear teeth.

www.truck-freeworkshop.com/clark/

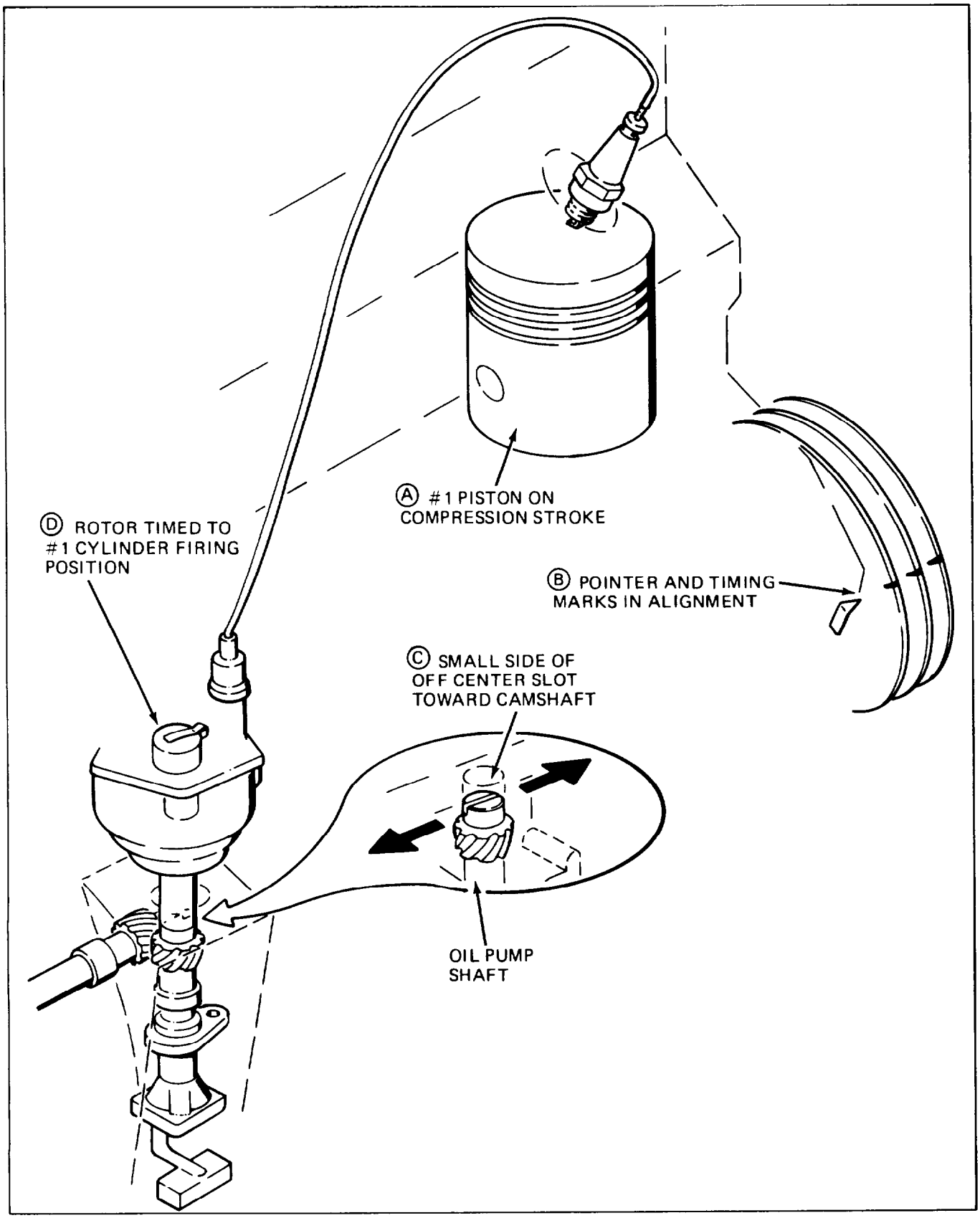

Figure 5-68. Timing Oil Pump and Distributor

www.truck-freeworkshop.com/clark/

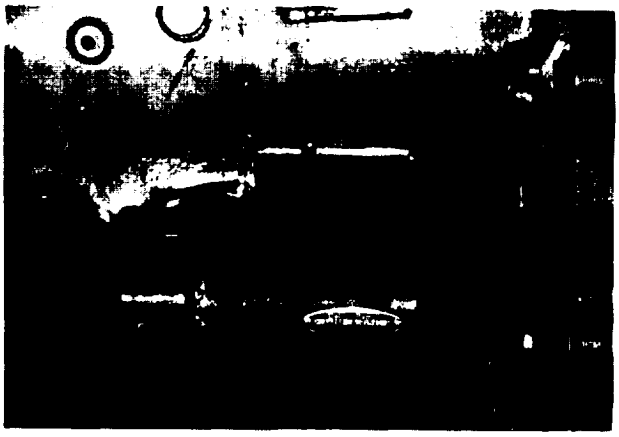

Figure 5-89. Starter Removal

5-52. OIL PAN INSTALLATION

a. Inspect oil pan carefully after cleaning with Stoddard solvent.

b. Check for cracks, particularly along the mounting flange, and weld any cracks to prevent leakage and gasket damage.

c. Using a new gasket, install oil pan to cylinder block and tighten all hardware finger tight. Make certain the special long fasteners are installed in the fourth hole from the front of the pan.

d. Torque the screws at the oil pan/flywheel housing joint first, then tighten the remaining fasteners to the specified torque on page vii.

e. Install engine, reverse the procedure as found in Section 5-25 page 5-13.

5-53. STARTER

5-54. REMOVAL

a. Disconnect battery ground strap.

b. Disconnect the field coil connections from the solenoid motor terminal.

c. Refer to figure 5-69 and remove the bolts holding the starter pinion flange to the flywheel housing.

d. Remove the starter from the machine.

e. Pinion Clearance: The pinion clearance cannot be adjusted but should be checked after reassembly of the motor to insure proper clearance. Improper clearance is an indication of worn parts.

To check pinion clearance, follow the steps listed below:

1. Disconnect the motor field coil connector from the solenoid motor terminal and INSULATE IT CAREFULLY.

2. Connect a battery, of the same voltage as the solenoid, from the solenoid switch terminal to the solenoid frame.

3. MOMENTARILY flash a jumper lead from the solenoid motor terminal to the solenoid frame. This will shift the pinion into cranking position and it will remain so until the battery is disconnected.

4. Push the pinion back toward the commutator end to eliminate slack movement.

5. Measure the distance between pinion and pinion stop .010" to .140".

5-55. REPAIR

a. Refer to figure 5-70 for parts identification and procede as follows:

b. Normally, disassembly should be necessary only to the extent necessary to effect the repair. For example, the field coils should be checked for opens or grounds while still in the motor frame, and if found to be in good condition, they need not be removed.

c. Remove the thru-bolts (Item 29).

www.truck-freeworkshop.com/clark/

d. Remove the commutator end frame (Item 28) and field frame assembly (Item 3). It may be necessary to tap the end frames with a fibre hammer to remove them from the motor frame.

e. Remove the solenoid (Item 9) and shift lever assembly (Item 6) from the drive housing, them remove the armature (Item 14) from the drive housing.

f. Remove the thrust collar (Item 11) from the armature shaft.

g. Remove the pinion (Item 13) from the armature; by sliding a metal cylinder onto the shaft; with a hammer striking the metal cylinder against the retainer, drive the retainer toward the armature core and off the snap ring.

h. Remove the snap ring (Item 12) from the groove in the armature shaft.

1. Remove the motor drive clutch (Item 15). Roller type clutches are designed to be serviced as a complete unit, therefore DO NOT disassemble. Replace if necessary.

j. Clean all parts with a Stoddard type solvent and inspect carefully for conditions of wear or damage. The following tests will help to locate electrical faults in the components.

5-56. ARMATURE TESTS.

STEP 1. Test for shorts (Figure 5-71)

a. Check armature for shorts by placing it on a "growler" and with a steel strip or hack-saw blade held on armature core, rotate armature. If blade vibrates, armature is shorted in an area of the coare below the vibrating blade.

b. Cooper or brush dust in slots between commutator bars sometimes cause shorts which can be eliminated by bending wire slightly and reinsulating exposed bare wire. If short cannot be eliminated, armature must be replaced.

STEP 2. Test for open circuits.

a. Open circuits in an armature may be caused by a poor connection of leads in the commutator bars or by a broken wire in a armature coil. Either will cause sparking at the brushes. Poor connections and broken wires can often be detected visually. When this is not possible, test for open circuits as follows:

b. Growler Test. Set up the armature on the growler as shown in figure 5-71. Test the top two adjacent bars with an AC Millivoltmeter. Rotate the armature and continue testing adjacent bars. When the millvoltmeter bridges the two bars connected to the open coil, the meter pointer will not be deflected. All other bars will give a deflection.

STEP 3. Bar-to-meter test. (Figure 5-72).

a. This method of finding an open coil is more satisfactory and reliable than the growlermeter test and is often used in preference to it.

b. Place the armature in "V" blocks and connect a source of direct current to the commutator, using the circuit of figure 5-72.

c. Test by spanning bar with Millivoltmeter leads.

d. The meter will not show a reading until it bridges bars 6 and 7 as an example shown in figure 5-72. The meter completes the circuit.

www.truck-freeworkshop.com/clark/

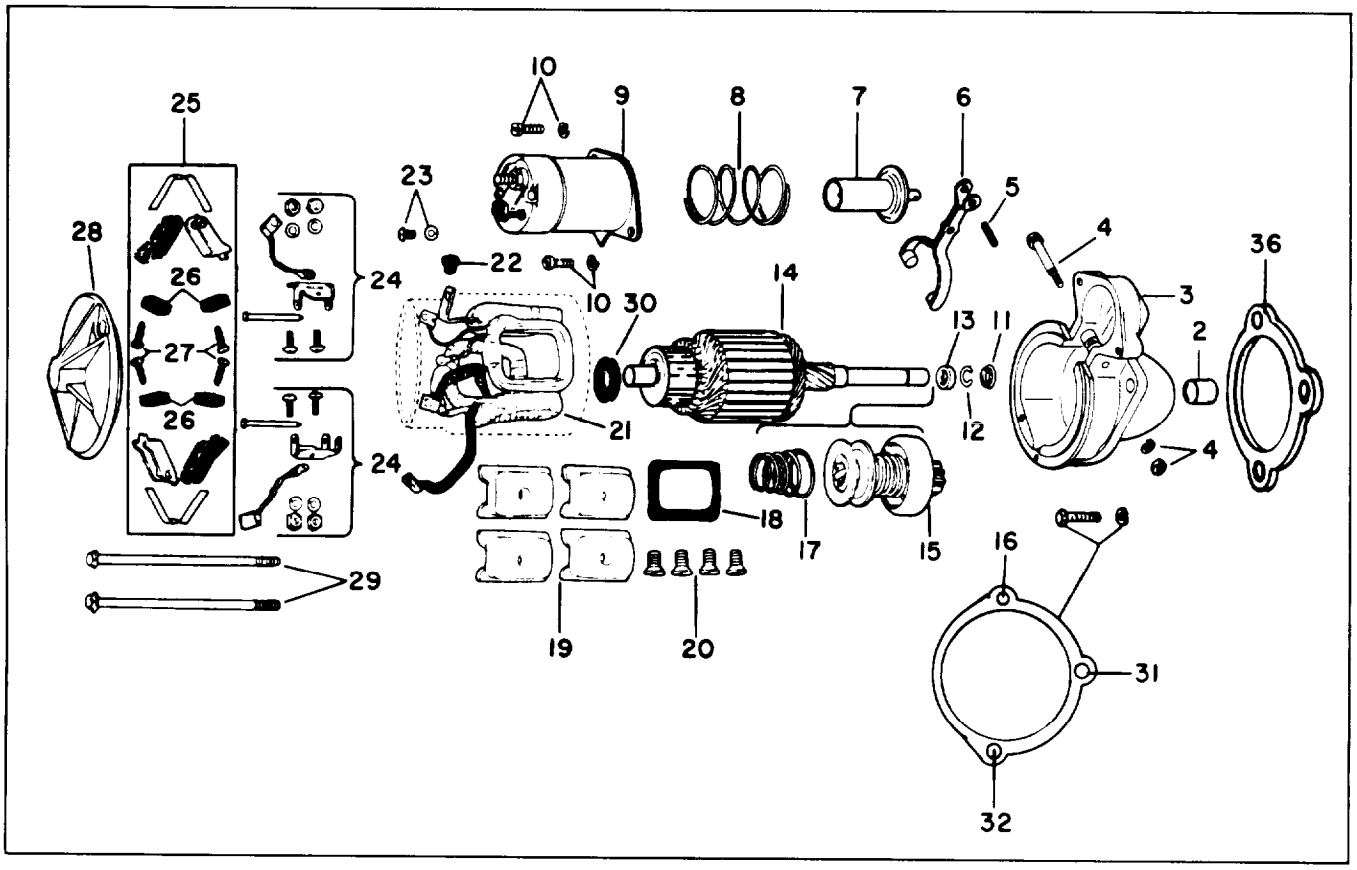

1. Starting motor
2. Bearing
3. Housing (pinion)
4. Lever pivot bolt
5. Pin
6. Lever
7. Plunger
8. Spring
9. Switch
10. Screw assembly
11. Collar
12. Ring
13. Collar
14. Armature
15. Motor drive assembly
16. Stud, nut, washer
17. Shift spring
18. Insulator
19. Pole shoe
20. Screw
21. Field coil assembly
22. Grommet
23. Screw, washer
24. Support package
25. Brush package
26. Brushes
27. Screw
28. End frame
29. Bolt
30. Washer
31. Bolt, washer
32. Bolt, washer
33. Housing
36. Gasket

Figure 5-70. Starter Assembly

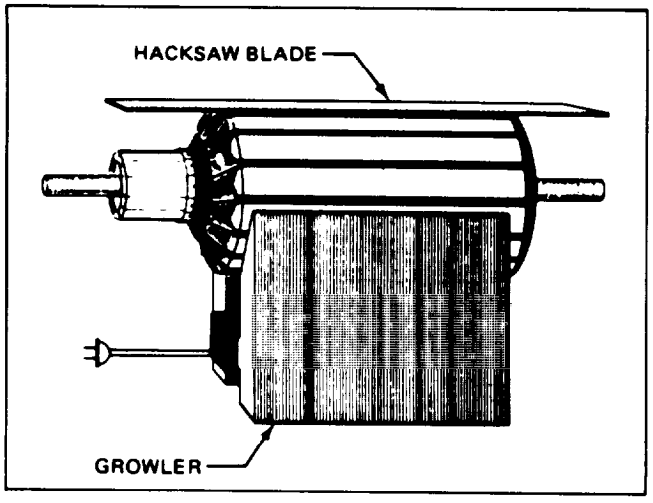

Figure 5-71. Growler Test

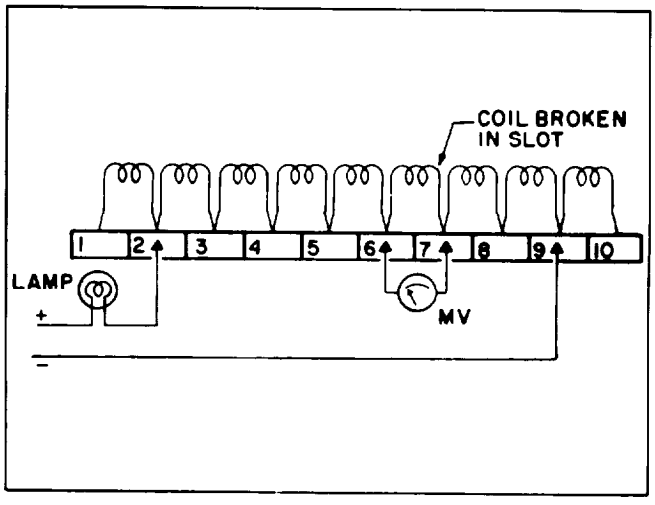

Figure 5-72. Bar-To-Meter Test

www.truck-freeworkshop.com/clark/

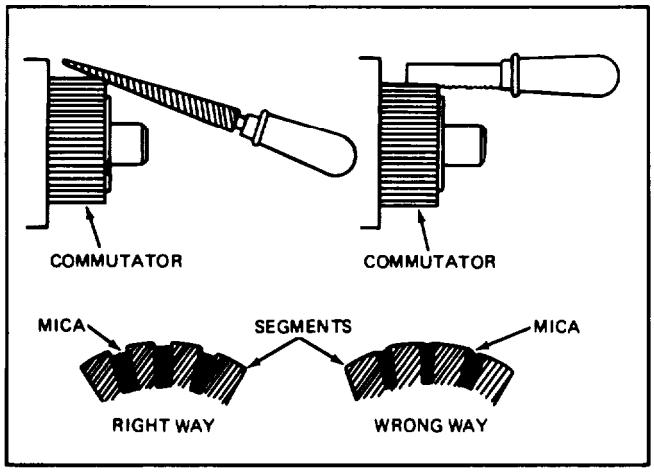

Figure 6-73. Undercutting Mica

CAUTION

Meter needle will jump wildly; precautions should be taken to avoid damage to instrument.

STEP 4. To test armature for grounds, place one probe of test lamp on armature core or shaft and place other probe on commutator bars. If lamp lights, armature is grounded and must be repaired or replaced.

5-67. FIELD COILS TEST.

a. To test for gounded fields, place one probe of test lamp on field frame and other probe on field terminal. If lamp lights, field coils are grounded and must be replaced if ground cannot be located and repaired.

b. Paint or spray field coils and inside of motor frame with Class "F" air drying varnish. The armature coils, core, and end of commutator bars, and mica cone ring can be sprayed or painted with class "F" baking varnish. (Bake per varnish manufacturer's instructions.)

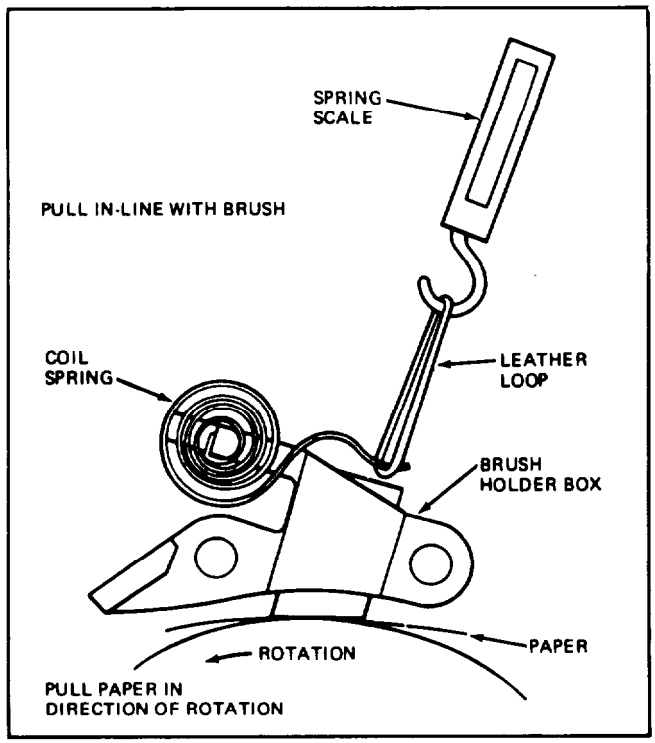

Figure 5-74. Brush Spring Pressure Check

CAUTION

Do not use silicone base varnishes.

5-58. COMMUTATOR REPAIR. Carefully inspect the commutator. If burned, rough or out-of-round, it must be turned and the mica undercut.

a. Place armature in a lathe and turn down commutator until true. Make certain cut is not made on commutator riser bars as solder will be removed and weaken coil connections. Remain approximately 3/16 inch from riser bars when cutting.

b. Undercut mica to a depth not exceeding 0.030 inch. Undercut must be full width of mica and flat at bottom. See figure 5-73.

c. Sand commutator lightly with No. 00 sandpaper to remove any burrs left from undercutting. Clean slots.

www.truck-freeworkshop.com/clark/

5-59. BRUSH REPLACEMENT. Brushes can be replaced without removing motor from truck.

a. Disconnect battery cable.

b. Remove brush covers (band or plates).

c. Remove shunt retaining screw and remove brush from brush box.

d. Seat new brush to contour of commutator by sanding on a drum the same diameter as communutator or inserting sandpaper between the brush face and the commutator.

CAUTION

Never use emery cloth or emery paper, the grit is metallic and will cause damage.

e. Final seating of brushes can be achieved by using a fine mesh seating stone compound similar to a product made by Ideal Industries, Inc., Sycamore, Illinois. Follow directions on the box.

5-60. CHECKING BRUSH SPRING PRESSURE

a. Insert a paper strip between brush and commutator. See Figure 5-74.

b. Place leather loop, or spring scale hook, between pressure spring and brush.

c. With pull in line with center of brush, lift spring scale until paper begins to move free.

d. The reading on the spring scale is the total spring force. Record reading and compare with specifications. Replace spring if necessary

5-61. STARTER REASSEMBLY AND INSTALLATION.

a. Refer to figure 5-70 and reassemble the starter assembly.

b. As each part is reinstalled, examine it for serviceability. Do not reinstall worn or damaged parts. Procede as follows:

c. Place the clutch assembly (Item 15) on the armature shaft (Item 14). To facilitate replacing the snap ring (Item 12) and retainer (Item 13) onto the armature:

1. Place the retainer (Item 13) on the armature shaft with the cupped surface facing the snap ring groove.

2. Place the sanp ring (Item 12) on the end of the shaft. With a piece of wood on top of it, force the ring over the shaft with a light hammer blow, then slide the snap-ring down into the groove.

3. To force the retainer (Item 13) over the snap ring place a suitable washer over the shaft and squeeze the retainer and washer together with pliers.

4. Remove the washer.

5. Assemble collar (Item 11) over shaft.

d. Refer to the disassembly procedure and follow in reverse to complete the reassembly.

e. When the solenoid is reinstalled, apply sealing compound between field frame, flange and solenoid junction.

f. After reassembly, install the starter to the engine flywheel housing and secure with three bolts as shown in Figure 5-69.

www.truck-freeworkshop.com/clark/

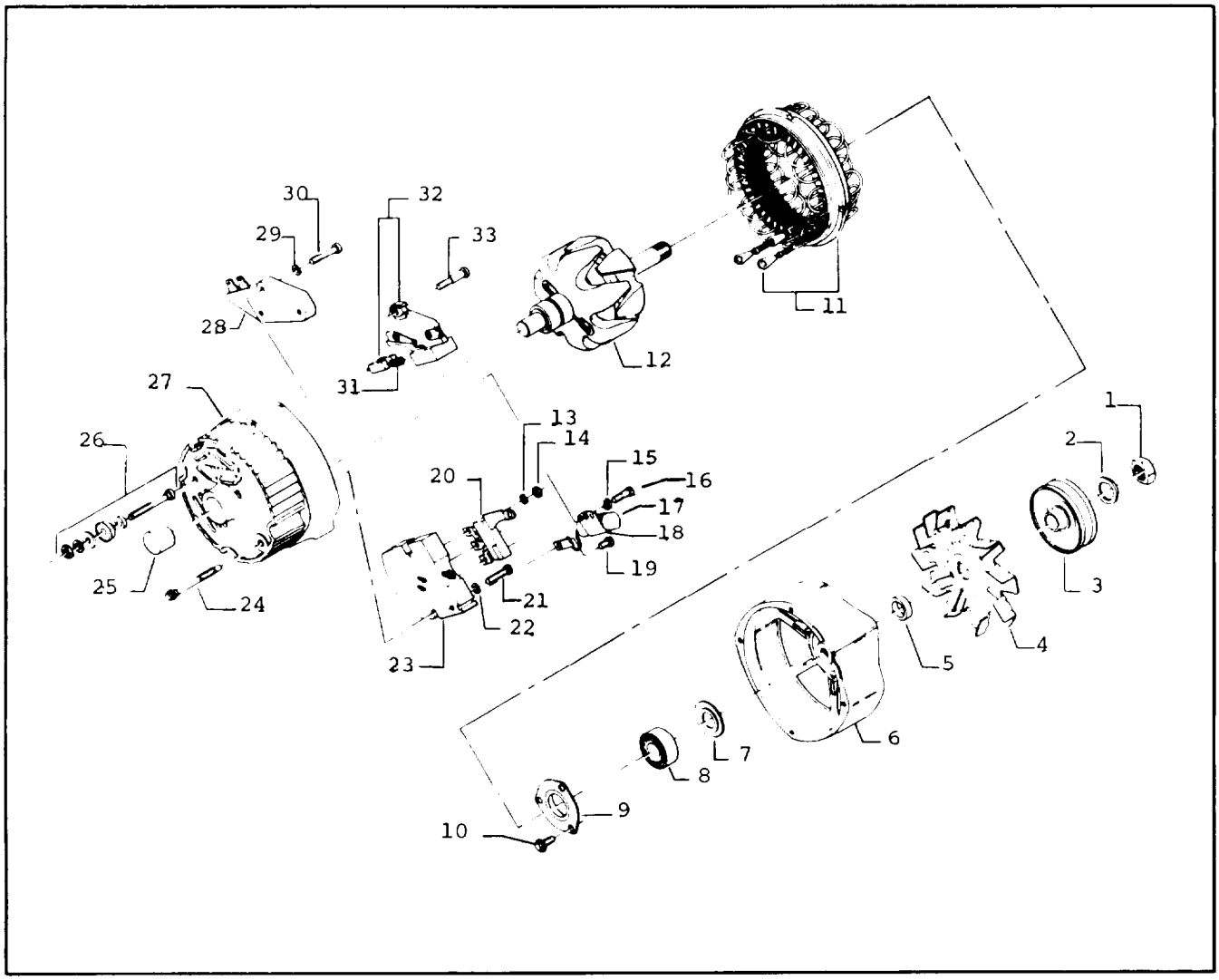

Figure 5-79. Alternator Assembly

1.	Nut	12.	Rotor Assembly	23.	Rectifier Assembly
2.	Washer	13.	Lockwasher	24.	Screw
3.	Pulley	14.	Nut	25.	Bearing
4.	Fan	15.	bockwasher	26.	Terminal Package
5.	Colar	16.	Screw	27.	Frame Assembly
6.	Drive End Frame	17.	Capacitor	28.	Voltage Regulator
7.	Oil Slinger	18.	Bracket	29.	Lockwasher
8.	Bearing	19.	Screw	30.	Screw
9.	Retainer Plate	20.	Diode Trio	31.	Brush Spring
10.	Screw	21.	Screw	32.	Brush Holder w/Brushes
11.	Stator Assembly	22.	Rectifier Assembly	33.	Screw

www.truck-freeworkshop.com/clark/

www.truck-freeworkshop.com/clark/

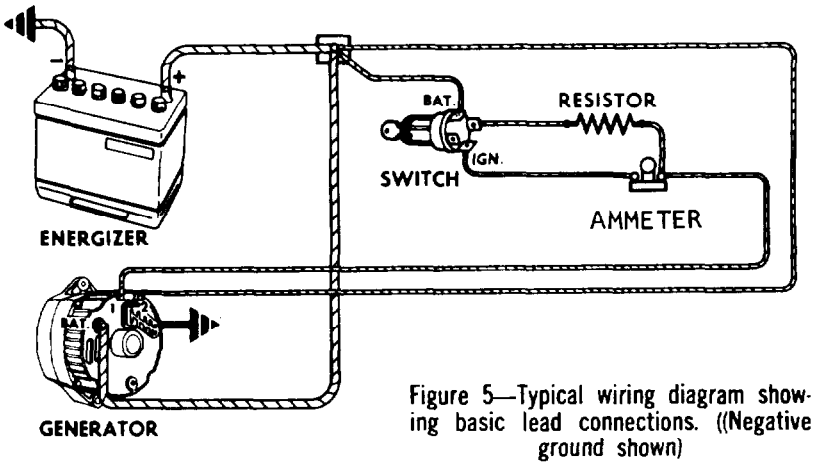

Figure 5—Typical wiring diagram showing basic lead connections. ((Negative ground shown)

5-62 TROUBLE SHOOTING PROCEDURES

Close adherence to the following procedures in the order presented will lead to the location and correction of charging system defects in the shortest possible time. Only a portion of these procedures need be performed. It will never be necessary to perform all the procedures in order to locate the trouble.

A basic wiring diagram showing lead connections is shown in Figure 5. To avoid damage to the electrical equipment, always observe the following precautions:

1. Do not polarize the alternator.

2. Do not short across or ground any of the terminals in the charging circuit except as specifically instructed herein.

3. NEVER operate the alternator with the output terminal open-circuited.

4. Make sure the alternator and energizer have the same ground polarity.

5. When connecting a charger or a booster Energizer to the vehicle Energizer, connect negative to negative and positive to positive.

A. UNDERCHARGED ENERGIZER - This condition, as evidenced by slow cranking and low specific gravity readings, can be caused by one or more of the following conditions even though the indicator lamp may be operating normally. The following procedure also applies to circuits with an ammeter.

1. Insure that the undercharged condition has not been caused by accessories having been left on for extended periods.

2. Check the drive belt for proper tension.

3. Inspect the wiring for defects. Check all connections for tightness and cleanliness, including the slip connectors at the alternator and firewall, and the cable clamps and battery posts.

4. With ignition switch on and all wiring harness leads connected, connect a voltmeter from:

a. Alternator "BAT" terminal to ground

b. Alternator No. 1 terminal to ground

c. Alternator No. 2 terminal to ground.

A zero reading indicates an open between voltmeter connection and Energizer.

www.truck-freeworkshop.com/clark/

5. If previous Steps 1 thru 5 check satisfactorily, check Delcotron alternator as follow:

a. Disconnect Energizer ground cable.

b. Connect an ammeter in the circuit at the "ABT" terminal of the alternator.

c. Reconnect Energizer gound cable.

d. Fully load electrical circuit. Connect a carbon pile across the Energizer.

d. Operate engine at moderate speed as required, and adjust carbon pile as required, to obtain maximum current output.

f. If ampere output is within 10 percent of rated output as stamped on alternator frame, alternator is not defective; recheck Steps 1 thru 5.

g. If ampere output is not within 10 percent of rated output, ground the field winding by inserting a screwdriver into the test hole (Fig. 6).

C A U T I O N

Tab is within 3/4 inch of casting surface. Do not force screwdriver deepter than one inch into end frame.

h. Operate engine at moderate speed as required, and adjust carbon pile as required to obtain maximum current output.

1. If output is within 10 percent of rated output replace regulator as covered in "Alternator Repair" section, and check field winding.

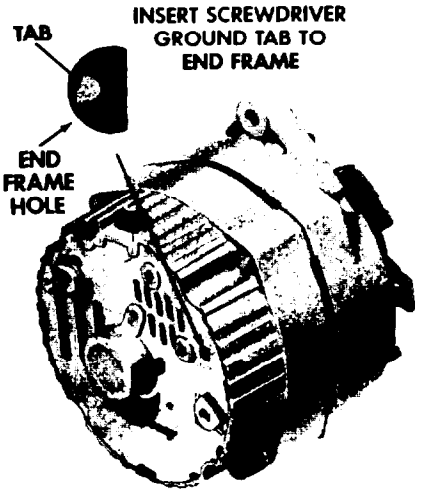

Figure G-Grounding generator field winding. (Wiring connections not shown.)

j. If output is not within 10 percent of rated output, check the field winding, diode trio, rectifier bridge, and stator as covered in "Alternator Repair" section.

k. Remove ammeter from Alternator and turn accessories off.

B. OVERCHARGED ENERGIZER

1. Connect a voltmeter from alternator No. 2 terminal to ground. If reading is zero, No. 2 lead circuit is open.

2. If Energizer and No. 2 lead circuit check good, but an obvious overcharge condition exists as evidenced by excessive Energizer water usage proceed as follows:

a. Separate end frames as covered in "Disassembly" section under heading of "Alternator Repair".

Check field winding for shorts. If shorted replace rotor and regulator.

b. Connect ohmeter using lowerst range scale from brush lead clip to end frame as shown in Step 1, Fig. 8, then reverse lead connections.

www.truck-freeworkshop.com/clark/

c. If both readings are zero, either the brush lead clip is grounded or regulator is defective.

d. A grounded brush lead clip can result from omission of insulating washer (Fig. 8.), omission of insulating sleeve over screw, or damaged insulating sleeve. Remove screw to inspect sleeve. If satisfactory, replace regulator as covered under heading of "Alternator Repair".

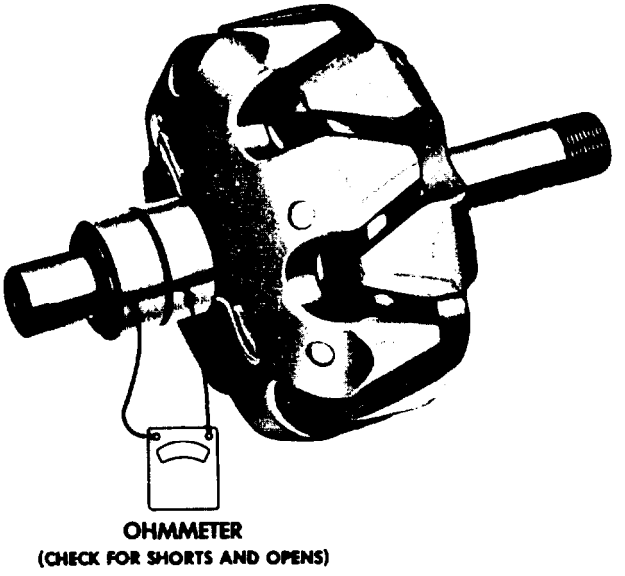

Figure 7. Checking rotor winding

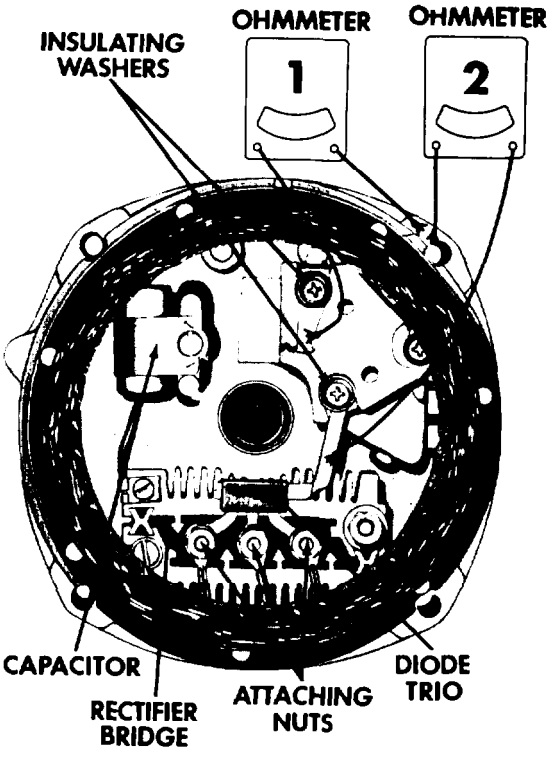

Figure 8. Inside View, Type 10-S1 End Frame Assembly. (Connect Ohmmeter to Type 27-S1 Series in same manner.)

www.truck-freeworkshop.com/clark/

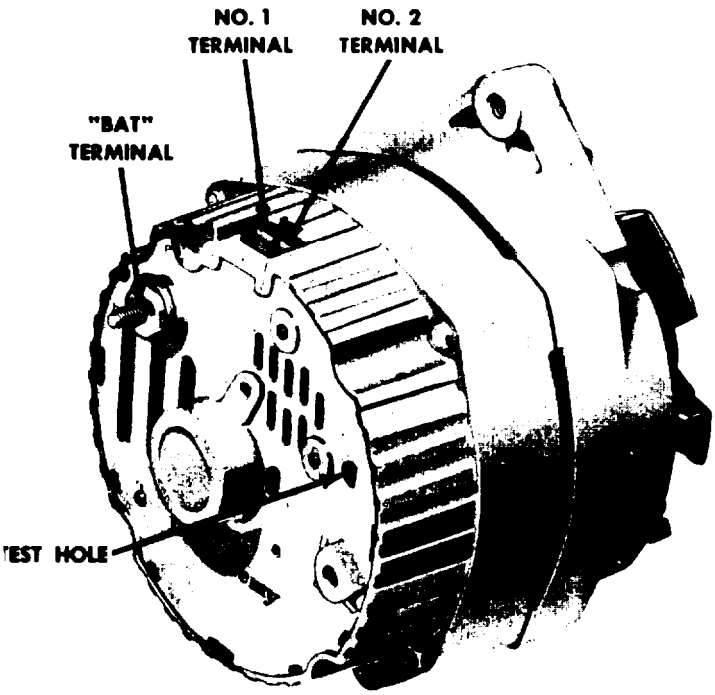

Typical 10-SI Series Generator

5-63. INTRODUCTION:

The DELCOTRON Generator illustrated on this page features a solid state voltage regulator that is mounted inside the generator slip ring end frame. All regulator components are enclosed within a solid mold, and this unit along with the brush holder assembly is attached to the slip ring end frame. The regulator voltage setting never needs adjusting, and no provision for adjustment is provided.

The generator rotor bearings contain a supply of lubricant and require no further lubrication. Two brushes carry current through the two slip ring to the field coil mounted on the rotor and under normal conditions will provide long periods of attention-free service.

The stator windings are reassembled on the inside of a laminated core that forms part of the frame. A rectifier bridge connected to the stator windings contains six diodes and electrically changes the stator a. c. voltage to d. c. voltage which appears at the generator output terminal.

Generator field current is supplied through a diode trio which also is connected to the stator windings. A capacitor, or condenser, mounted in the end frame protects the rectifier bridge and diode trio from high voltages and suppresses interference.

No periodic adjustments or maintenance of any kind are required on the entire generator assembly.

5-64. REMOVAL:

a. Disconnect battery ground strap.

b. Disconnect wiring to alternator

c. Loosen alternator mounting and adjusting bolts and swing alternator toward engine far enough to disengage the V-belt from the alternator pulley.

d. Remove mounting hardware and remove alternator from its mounting bracket.

5-65. DISASSEMBLY:

a. Refer to figure 5-79 for parts identification.

b. Scribe a line to matchmark parts for reassembly in the same relative position.

c. Remove the four thru-bolts and separate the drive end frame and rotor assembly from the stator assembly by prying apart with a screwdriver at the stator slot.

d. Place a piece of tape over the slip ring

www.truck-freeworkshop.com/clark/

IMPORTANT: Read the introductory paragraphs on 5-50B before proceeding with either one of these sections.

UNDERCHARGED ENERGIZER

This condition, as evidenced by slow cranking and law specific gravity readings, can be caused by one or more of the following conditions even though the indicator lamp may be operating normally. The following procedure also applies to circuits with an am meter.

1. Insure that the undercharged contion has not been caused by accessories having bee" left on for extended periods.
2. Check the drive belt for porper tension.
3. Inspect the wiring for defects. Check all connections for tightness and cleanliness, Including the slip connectors at the alternator and firewall, and the cable clamps and battery posts.
4. With ignition switch on connect a voltmeter from:
   a. Alternator "BAT" terminal to ground
   b. Alternator No. 1 terminal to ground
   c. Alternator No. 2 terminal to ground

   A zero reading indicates an open between voltmeter connection and Energizer.
5. If previous Steps 1 through 4 check satisfactorily, check Delcotron alternator as follows:
   a. Disconnect Energizer ground cable.
   b. Connect an ammeter in the circuit at the "BAT" terminal of the alternator,
   c. Reconnect Energizer ground cable.
   d. Fully load electrical circuit. and connect a carbon pile across the Energizer,
   e. Operate enqine at moderate speed as required, and adjust carbon pile as required. to obtain maximum current output.

OVERCHARGED ENERGIZER

1. connect a voltmeter fron alternator No. 2 terminal to ground. If reading is zero, No. 2 lead circuit is open.
2. If Energizer and No. 2 lead circuit check good, but a" obvious overcharge condition exists as evidenced by excessive Energizer water usage, proceed as follows:

   a. Separate end frames as covered in "Disassembly" section under heading of "ALTERNATOR REPAIR". Check field winding for shorts. If shorted replace rotor and regulator.

   b. Connect ohmmeter using lowest range scale from brush lead clip to end frame as shown in Step 1, Figure 8, then reverse lead connections.

   c. If both readings are zero, either the brush lead clip is grounded or regulator is defective

   d. A grounded brush lead clip can result from omission of insulating washer (Fig. 8), omission of lnsulating sleeve over screw, or damaged insulating sleeve. Remove screw to inspect sleeve If satisfactory, replace regulator as covered under heading of "ALTERNATOR REPAIR".

If ampere output is within 10 percent of rated output as stamped on alternator frame, alternator is not defective; recheck Steps 1 thru 5.

If ampere output is not within 10 percent of rated output, ground the field winding by inserting a screwdriver into the test hole (Fig, 6). CAUTION: Tab is within 3/4 inch of casting surface. Do not force screwdriver deeper than one inch into end frame.

Operate engine at moderate speed as required, and adjust carbon pile as required to obtain maximum current output.

If output is within 10 percent of rated output, replace regulator as covered in ALTERNATOR REPAIR" section, and check field winging.

If output is not within 10 percent of rated output, check the field winding, diode, trio, rcctifier bridge, and stator as covered in "ALTERNATOR REPAIR" section.

www.truck-freeworkshop.com/clark/

end frame bearing to prevent entry of dirt and other foreign material; also place a piece of tape over the shaft on the slip ring end.

CAUTION

USE PRESSURE SENSITIVE TAPE AND NOT

FRICTION TAPE, WHICH WOULD LEAVE A

GUMMY DEPOSIT ON THE SHAFT.

a. If brushes are to be reused, clean with a soft dry cloth.

f. To remove the drive end frame from the rotor, place the rotor in a vise and tighten only enough to permit removal of the shaft nut.

CAUTION

AVOID EXCESSIVE VISE TIGHTENING, AS

THIS HAY CAUSE DISTORTION OF THE ROTOR.

g. Remove the shaft nut, washer, pulley, fan and the collar, then separate the drive end frame from the rotor shaft.

5-66. INSPECTION

ROTOR FIELD WINDING CHECKS:

a. To check for opens, connect the test lamp or ohmmeter to each slip ring. If the lamp fails to light, or if the ohmmeter reading is high (infinite), the winding is open, (Plate 12337).

b. The winding is checked for short circuits or excessive resistance by:
   1. connecting a battery and ammeter in series with the edges of the two slip rings. An ammeter reading above the value specified (Refer to SPFCIFICATIONS section)indicates shorted windings; a reading below the value specified indicates excessive resistance.
   2. an alternative method, which is to check the resistance of the field by connecting an ohmmeter to the two slip rings (per Plate 12337) . If the resistance reading is below the specified value, the winding is shorted; if above the specified value, the winding has excessive resistance.

NOTES:

1. The specified resistance value can be determined by dividing the voltage by the current given in SPECIFICATION Section.
2. Remember that the winding resistance and ammeter readings will vary slightly with winding temperature changes.

NOTE

If the rotor is not defective, but the generator fails to supply rated output, the defect is in the diode trio, rectifier bridge or stator.

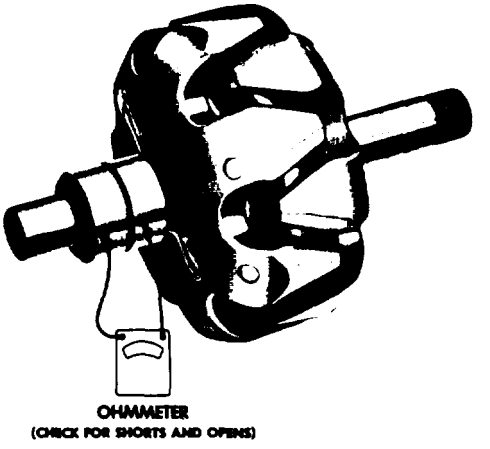

Plate 12337. Checking Rotor Field Winding

DIODE TRIO CHECK:
The diode trio is identified in Plate 12338. First, connect an ohmmeter using lowest range scale from diode trio long connector to the end frame (as shown in plate 12338, step 2), then reverse lead connections. If both readings are the same, check for grounded brush lead clip caused by omission of insulating washer (plate 12338) , omission of insulating sleeve over screw,

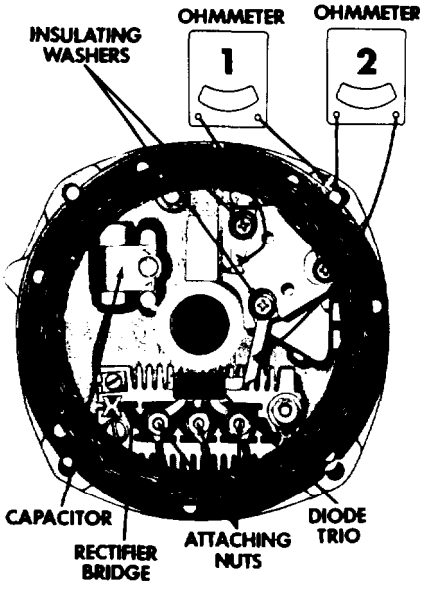

Plate 12338. View Inside Typical End Frame Ass' y

www.truck-freeworkshop.com/clark/

or damaged insulating sleeve. Remove screw to nspect sleeve.

NOTE

If screw assembly is correct, and both ohmmeter readings are the same, replace the regulator.

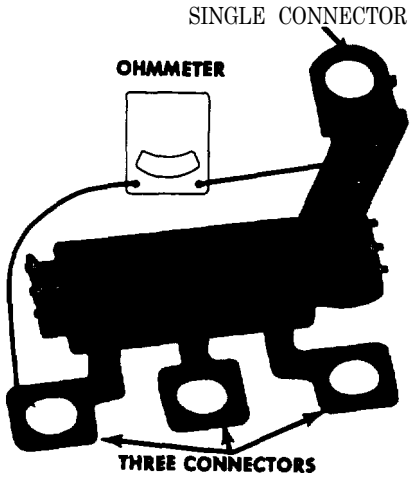

Plate 12339. Diode Trio Check

a. To check the diode trio, remove it from the end frame assembly by detaching the three nuts, the attaching screw, and removing the stator assembly.

NOTE

The insulating washer on the screw is assembled over the top of the diode trio connector.

b. Connect an ohmmeter having a 1-1/2 volt cell, and using the lowest range scale, to the single connector and to one of the three connectors (as shown in plate 12333).

c. Observe the reading. Then reverse the ohmmeter leads to the same two connectors. if both readings are the same, replace the diode trio. A good diode trio will give one high and one low reading.

d. Repeat this same test between the single connector and each of the other two connectors. Also, connect the ohmmeter to each pair of the three connectors (not illustrated). if any rear ding is zero, replace the diode trio.

NOTE

Plates 12338 and 12339 illustrate two diode trios differing in appearance. Either one of these diode trios may be used, as they are interchangeable.

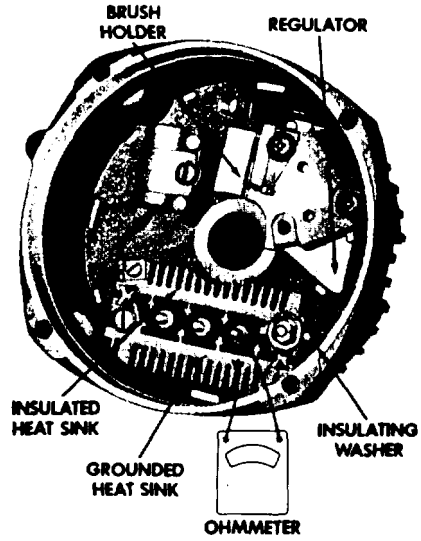

Plate 12340. Rectifier Bridge Check

RECTIFIER BRIDGE CHECK:

As shown on plate 12340, the rectifier bridge has a grounded heat sink and an insulated heat sink connected to the output terminal. (On 10-51 generators, there is an insulating washer located between the insulated heat sink and end frame.) Check the rectifier bridge as follows:

a. Connect the ohmmeter to the grounded heat sink and one of the three terminals (plate 12340).

IMPORTANT

IF THE RECTIFIER BRIDGE IS CONSTRUCTED AS SHOWN IN PLATE 12341, CONNECT OHMMETER PRESSING DOWN VERY FIRMLY ONTO FLAT METAL CONNECTOR, NOT STUD (SHOWN IN PLATE 12340).

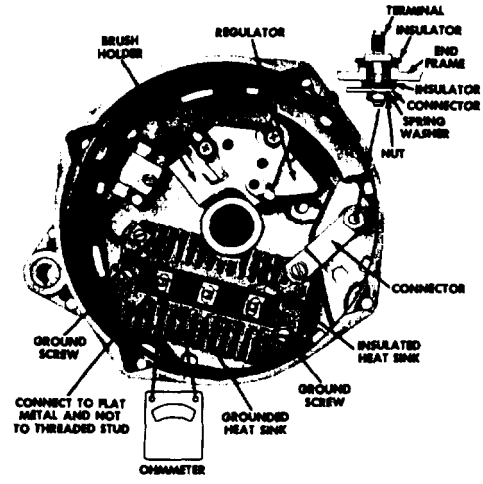

Plate 12341. Rectifier Bridge Check (Showing Correct Terminal Assembly Section)

www.truck-freeworkshop.com/clark/

b. Then reverse the lead connections to the grounded heat sink and same terminal (or connector). If both readings are the same, replace the rectifier bridge. A good rectifier bridge will give one high and one low reading. Repeat this same test between the grounded heat sink and the other two terminals, and between the insulated heat sink and each of the three terminals. This makes a total of six checks, with two readings taken for each check.

c. The ohmmeter check of the rectifier bridge, and of the diode trio as previously covered, is a valid and accurate check. DO NOT replace either unit unless at least one pair of readings is the same.

CAUTION

DO NOT USE HIGH VOLTAGE TO CHECK THESE UNITS, SUCH AS A 110-VOLT TEST LAMP.

d. To replace the rectifier bridge, remove the attaching screws, and disconnect the capacitor lead.

NOTE

There is an insulator between the insulated heat sink and end frame (plate 12340). Rectifier bridges may vary in appearance but are completely interchangeable in these generators.

CHECKING STATOR WINDINGS:

a. The stator windings may be checked with a 110-volt test lamp or an ohmmeter.

b. If the lamp lights, or if the meter reading is low when connected from any stator lead to the frame, the windings are grounded.

c. If the lamp fails to light, or if the meter reading is high when successively connected between each pair of stator leads on 10-S1 Series, the windings are open (plate 12342).

d. A short circuit in the stator windings is difficult to locate without laboratory test equipment due to the low resistance of the windings. However, if all other electrical checks are normal and the generator fails to supply rated output, shorted windings are indicated. Also, a shorted stator can cause the indicator lamp to be on with the engine at low speed.

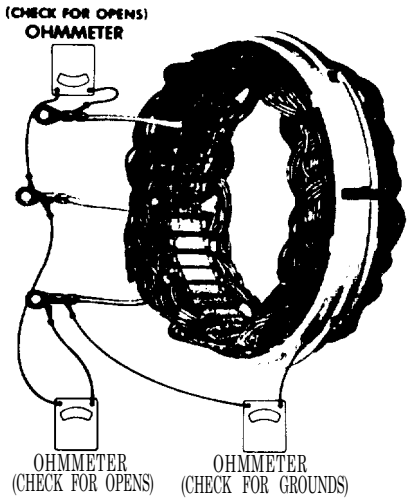

Plate 12342. Checking Stator Windings

BRUSH HOLDER AND REGULATOR REPLACEMENT:

After removing the three attaching nuts, the stator and diode trio screw (plates 12340 and 12341). the brush holder and regulator may be replaced by removing the two remaining screws.

Notice the two insulators located over the top of the brush clips in plate 12338, and that these two screws have special insulating sleeves above the threads. The third mounting screw may or may not have an insulating sleeve. If not, this screw must not be interchanged with either one of the other two screws, as a ground may result, causing no output or uncontrolled generator output. Requlators may vary in appearance but are completely interchangeable in these generators.

SLIP RING SERVICING:

If the slip rings are dirty, they may be cleaned and finished with 400-grain or finer polishing cloth. Spin the rotor and hold the polishing cloth against the slip rings until they are clean.

CAUTION

THE ROTOR MUST BE ROTATED IN ORDER TO CLEAN THE SLIP RINGS EVENLY; CLEANING SLIP RINGS BY HAND WITHOUT SPINNING ROTOR MAY RESULT IN FLAT SPOTS ON SLIP RINGS, CAUSING BRUSH NOISE.

www.truck-freeworkshop.com/clark/

Slip rings which are rough or out of round should be trued in a lathe to .002 inch maximum indicator reading. Remove only enough material to make the rings smooth and round. Finish with 400-grain or finer polishing cloth and blow away all dust.

BEARING REPLACEMENT AND LUBRICATION:

a. The bearing in the drive end frame can be removed by detaching the retainer plate screws and then pressing the bearing from the end frame. If the bearing is in satisfactory condition and is to be reused, it should be filled one-quarter full with special grease (Part number 1800574)

CAUTION

DO NOT OVERFILL, AS THIS MAY CAUSE THE BEARING TO OVERHEAT. USE ONLY THE RECOMMENDED LUBRICANT (PER 01M00 LUBRICATION SPECIFICATIONS AND RECOMMENDATIONS).

b. To install a new bearing, press in with a tube or collar that just fits over the outer race, with the bearing and slinger assembled into the end frame (as shown in plate 12343). It is recommended that a

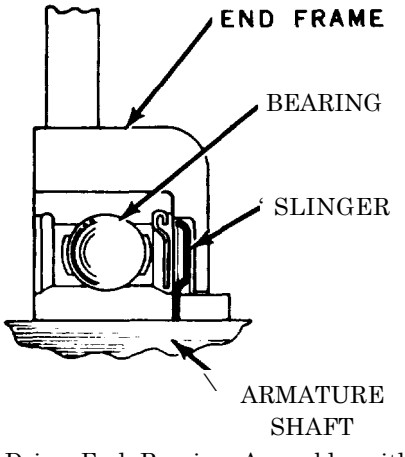

Plate 12343. Drive End Bearing Assembly with Slinger (some models use flat washer instead of slinger)

new retainer plate be installed if the felt seal in the retainer plate is hardened or excessively worn. Fill the cavity between the retainer plate and bearing with special lubricant called for in Step I.

c. The bearing in the slip ring end frame should be replaced if its grease supply is exhausted. No attempt should be made to re-lubricate and reuse the bearing. To remove the bearing from the slip ring end frame, press out with a tube or collar that just fits inside the end frame housing. Press from the outside of the housing towards the inside.

d. To install a new bearing, place a fiat plate over the bearing and press in from the outside toward the inside of the frame until the bearing is flush with the outside of the end frame. Support the inside of the frame with a hollow cylinder to prevent breakage of the end frame. Use extreme care to avoid misalignment or otherwise placing undue stress on the bearing.

e. If the seal is separate from the bearing, it is recommended that a new seal be installed whenever the bearing is replaced Press the seal in with the lip of the seal toward the rotor when assembled; that is, away from the bearing. Lightly coat the seal lip with oil to facilitate assembly of the shaft into the bearing.

5-67. REASSEMBLY:

Reassembly is the reverse of disassembly.

Remember when assembling the pulley to secure the rotor in a vise only tight enough to permit tightening the shaft nut to 40-60 pound feet torque. If excessive pressure is applied against the rotor, the assembly may become distorted. To install the slip ring and frame assembly to the rotor and drive end frame assembly, remove the tape over the bearing and shaft, and make sure the shaft is perfectly clean after removing the tape. Insert a rod through the hole to hold up the brushes. Carefully install the shaft into the slip ring end frame assembly to avoid damage to the seal. After tightening the thru-bolts, remove the brush retaining rod to allow the brushes to fail down onto the slip rings.

5-68. GENERATOR BENCH CHECK

To check the generator in a test stand, proceed as follows:

IMPORTANT

GROUND POLARITY OF ENERGIZER AND GENERATOR MUST BE THE SAME. USE A FULLY CHARGED ENERGIZER OR BATTERY.

www.truck-freeworkshop.com/clark/

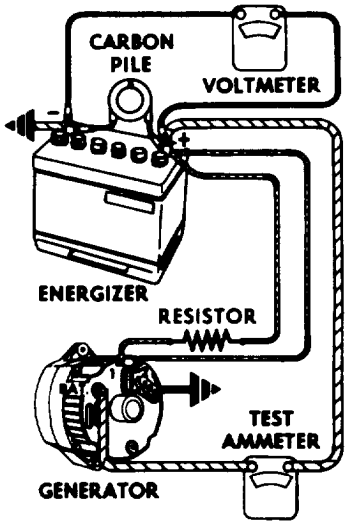

Plate 12344. Connections for Bench Check of Generater (Negative Ground Generator Shown.)

STEP 1 Make connections as shown in plate 12344, except leave the carbon pile disconnected.

CAUTION

USE A TEN-OHM RESISTOR RATED AT SIX WATTS OR MORE BETWEEN THE GENERATOR NO. 1 TERMINAL AND THE ENERGIZER.

STEP 2. Slowly increase the generator speed and observe the voltage.

STEP 3. If the voltage Is uncontrolled with speed and increases above 15.5 volts on a 12-volt system, or 31 volts on a 24-volt system, check for a grounded brush lead clip as covered in TROUBLE SHOOTING Section under the heading, "Overcharged Energizer", Step 3. If not grounded, replace the regulator and check field winding.

NOTE

The energizer or battery MUST be fully charged when making this check.

STEP 4. If voltage is below 15.5 volts on a 12-volt system, or 31 volts on a 24-volt system, connect the carbon pile (as shown in plate 12344).

STEP 5. Operate the generator at moderate speed as required and adjust the carbon pile as required to obtain maximum current output.

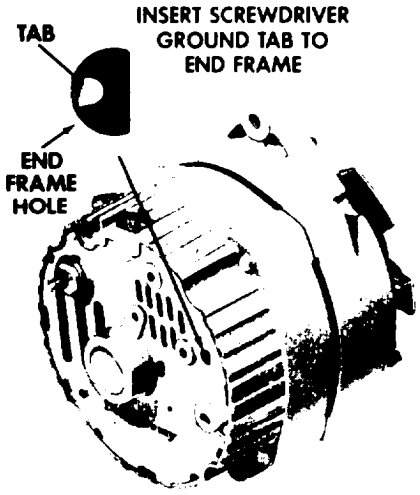

Plate 12348. Grounding Generator Field Winding (Wiring Connections Not Shown.)*

STEP 6. If output is within 10 per cent of rated output as stamped on generator frame, generator is good.

STEP 7. If output is not within 10 per cent of rated output, keep energizer or battery loaded with carbon pile and ground the generator field (as shown in plate 12348).*

STEP 8. Operate the generator at moderate speed as required and adjust the carbon pile as required to obtain maximum current output.

STEP 9. If output is within 10 per cent of the rated output as stamped on generator frame, replace regulator (as outlined in this section under "Brush Holder and Regulator Replacement," page 12M103E).

STEP 10. If output is not within 10 per cent of rated output, check the field winding, diode trio, rectifier bridge, and stator as previously covered.

*CAUTION

TAB IS WITHIN 3/4 INCH OF CASTING SURFACE. DO NOT FORCE SCREWDRIVER DEEPER THAN ONE INCH INTO END FRAME.

www.truck-freeworkshop.com/clark/

5-69. INSTALLATION.

a. When reassembly is complete, install the alternator onto the mounting brackets on the engine and secure with the mounting and adjusting bolts previously removed.

b. Install drive belt and adjust belt tension as outlined in Section IV.

c. Reconnect wiring to the alternator in the same relationship as before removal.

d. Connect battery ground strap.

S P E C I F I C A T I O N S
DELCOTRON GENERATORS WITH BUILT-IN VOLTAGE REGULATORS

GENERATOR PART NUMBER	SERIES	TYPE	GROUND	ROTATION VIEWING DRIVE END	FIELD CURRENT (80°F.)		COLD OUTPUT				RATED HOT OUTPUT* (AMPS)
					AMPS	VOLT	SPECIFIED VOLTS	AMPS	RPM	APPROX AMPS	APPROX RPM
905949	10-SI	100	NEG	EITHER	4.0-4.5	12	@	12	2000	33	5000	37

* At maximum operating speed.
@ Voltmeter not needed for cold output check. Load battery with carbon pile to obtain maximum output.

www.truck-freeworkshop.com/clark/

www.truck-freeworkshop.com/clark/

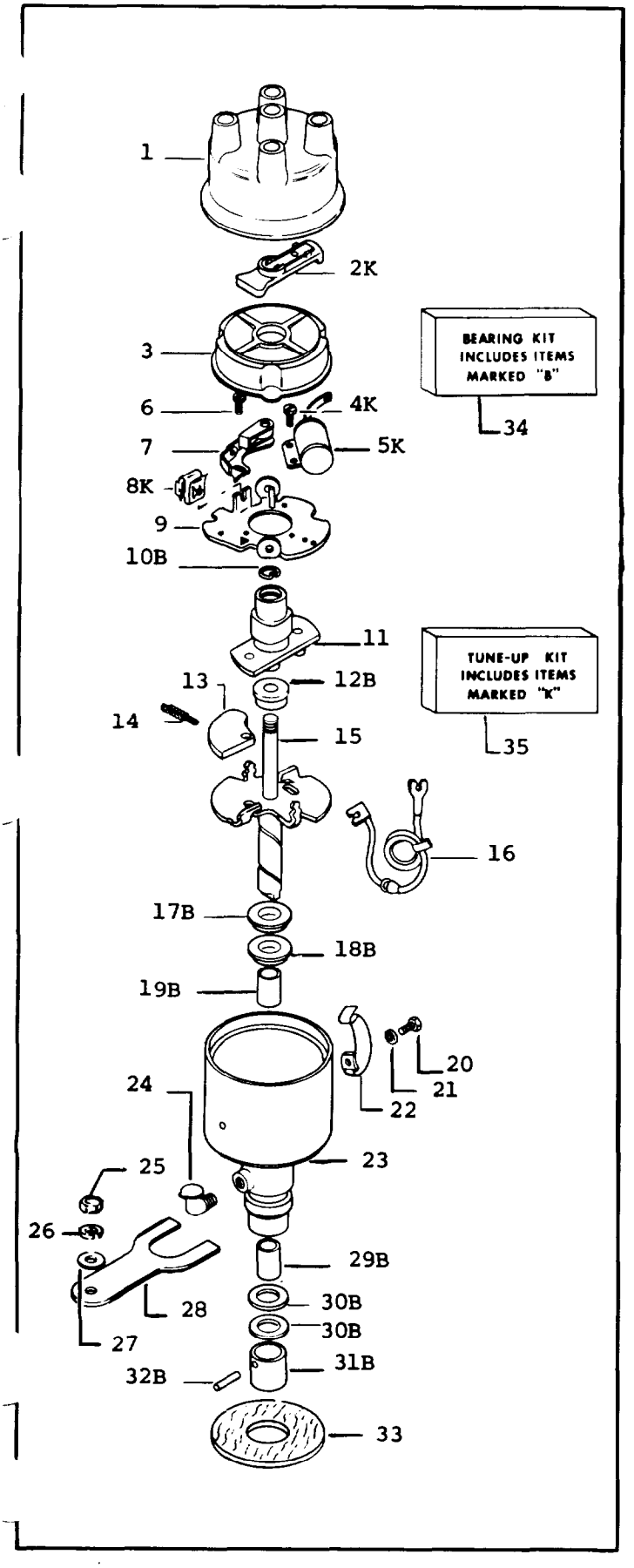

FIGURE 5-80 DISTRIBUTOR ASSEMBLY

1.	Cap	17.	Bearing
2.	Rotor	18.	Bearing
3.	Cover	19.	Bearing
4.	Screw	20.	Screw
5.	Condenser	21.	Lockwasher
6.	Screw	22.	Spring & Support
7.	Point Set	23.	Housing
8.	Lock	24.	Oiler
9.	Plate	25.	Nut
10.	Retainer	26.	Lockwasher
11.	Cam	27.	Washer
12.	Bearing	28.	Clamp
13.	Weight	29.	Bearing
14.	Spring	30.	Shim
15.	Mainshaft	31.	Collar
16.	Primary Lead	32.	Pin
		33.	Gasket

5-70. IGNITION DISTRIBUTOR.

5-71. REMOVAL AND DISASSEMLBY.

a. Disconnect battery ground strap.

b. Disconnect coil and spark plug wires at distributor cap. Disconnect condenser lead.

c. Remove mounting hardware and clamp at base of distributor, and lift distributor off the engine.

Note

If possible, block the flywheel or provide some other means of preventing the engine from being cranked over while the distributor is removed. This will simplify the retiming of the distributor when it is installed.

d. Refer to figure 5-80 for parts identification.

www.truck-freeworkshop.com/clark/

and disassemble the distributor as follows:

e. Unsnap cap springs, take off cap, rotor and dust seal.

f. Disassemble terminal. Loosen terminal nut and pull wire spring from terminal. (The terminal nut on the inside of the distributor bowl has been eliminated, on some models, and replaced with a notched terminal head screw and a special nut which screws down into a recess in the outer terminal block.) To detach the terminal assembly, remove the outer hex nut and washer from terminal screw. Remove the special slotted nut with a slotted bit screwdriver or other pronged tool. Remove the terminal screw and both matched insulator blocks.

g. Take off breaker plate attaching screws and lift out breaker plate.

h. Remove coupling or gear by grinding or filing off the peened-over head of pin and then drive out pin.

i. Unscrew bearing and take the accessory drive shaft out of the housing.

j. Shaft and advance mechanism can now be lifted out. Advance mechanism is disassembled by taking off nuts fastening hold-down plate in place.

5-72. BUSHING REPLACEMENT.

Bushings or bearings can be replaced on many applications, including units which have built-in lubrication. Porous bushings are available as service replacement parts (sold by special arrangement), but the actual installation requires great care, as well as the use of a special arbor, in order to prevent damage to the bearing surface. Proper lubrication with a porous bushing depends upon a uniform predictable seepage of oil through the structure of the bushing. The amount of oil which seeps through a porous bushing may be seriously affected by scratches or scuffed areas on the bearing or transmitting surfaces. Porous bushings are manufactured to an exact size and should not be reamed, scraped, or filed. It is very important to use only the grade of oil specified for the oil reservoir since other grades will allow either excessive or inadequate lubrication, depending upon viscosity. Under no circumstances must grease be used in the oil reservoir.

5-73. CLEANING, INSPECTION AND TEST OF PARTS.

Clean and examine all parts of the distributor after disassembly. Do not clean cap, rotor, condenser, insulators or housing (on units with built-in lubrication) in any degreasing compound, since this may damage the part. Examine the centrifugal advance parts, weights, springs and plate, for signs of wear and replace parts that look worn or otherwise damaged. On units with a dust seal, replace the sealing washer if it is hard, worn or dirty. Replace contact points that are worn or pitted, or if the breaker lever rubbing block or bushing is excessively worn. On units with a cam lubricator, replace the lubricator if the lubricating felt wick is worn, hard or dirty.

a. Condenser. Inspect the condenser for broken leads, frayed insulation and loose or corroded terminal. Make sure the condenser is firmly mounted and makes a good ground contact. Be sure terminal is tight.

b. Open the breaker contacts and insulate them with a small card. Check the condenser for capacity and grounds by testing from the primary terminal to the distributor base. If this test shows the condenser is defective, remove condenser and test again. Replace if second test shows the condenser is faulty.

c. Centrifugal Advance. Check the centrifugal advance mechanism for freeness by turning the breaker cam in the direction of rotation and then release it. The advance springs should return the cam to its original position without sticking.

d. Distributor Cap. Wipe out the distributor cap with a clean cloth and inspect it and the rotor for chips, cracks and carbonized paths which would allow high-tension leakage to ground. Such defects require replacement of the part.

5-74. REASSEMBLY AND TESTING.

Reassembly is the reverse of disassembly. After reassembly, the contact point opening and cam angle should be checked and adjusted, refer to

www.truck-freeworkshop.com/clark/

Table 5. The point opening of new points can be checked with a wire feeler gauge, or a Dwell Angle Meter. A meter of this type indicates the cam or contact angle. This angle is the number of degrees that the breaker cam rotates from the time the points close until they open again. The cam angle increases as the point opening is increased. Manufacturers of this type equipment furnish complete instructions as to their use. Refer to Table 5 for dwell angle.

5-75. CONTACT POINT PRESSURE.

The contact point pressure should be checked with a spring gauge. The scale should be hooked to the breaker lever and the pull exerted at an angle of 90 degrees with the point surface. Reading should be taken just as points separate. The pressure can be adjusted by bending the breaker lever spring. If the pressure is excessive, it can be decreased by pinching the spring carefully. To increase, the lever must be removed from the distributor so the spring can be bent away from the lever. Avoid excessive spring distortion. New breaker lever springs may be stronger than required in service; be sure to check the spring tension of all new levers when installed. Remember that excessive pressure causes rapid rubbing block, cam, and contact point wear while insufficient pressure will permit high-speed point bounce which will, in turn, cause arcing and burning of the points and missing of the engine.

Breaker lever spring tension should be 17-21 ounces when measured at the center of the contact or 19-23 ounces when measured just behind the contact. The tension may be measured with any suitable spring gauge, provided the pull is exerted at 90 degrees and the reading taken just as the points begin to separate.

The distributor should be tested on a distributor tester that will check the centrifugal advance mechanism.

5-76. REINSTALLATION.

When installing a distributor, observe the following cautions:

1. Be sure the distributor mounting is clean so there will be a good ground connection for the distributor.

2. Check engine breather pipes, since clogged pipes cause crankcase pressure which will force oil up into the distributor.

3. If the advance mechanism of the old distributor was found to be worn, check the engine for worn oil pump gears, since these cause backlash which produces torsional vibration; such vibration causes rapid advance mechanism wear.

4. Be sure to install the new distributor all the way down in its mounting well. If the distributor is not pushed all the way down, the distributor shaft is apt to freeze in the distributor housing and cause complete destruction of the unit.

5. Be sure that unit is properly timed, as shown in figure 5-68.

5-77. CARBURETOR.

5-78. REMOVAL.

a. Remove cotter key from accelerator rod at throttle arm and pull rod from throttle arm hole.

b. Remove the air cleaner to the carburetor hose.

c. Disconnect choke control.

d. Disconnect fuel pump to carburetor line.

e. Remove two nuts and lockwashers at the manifold to carburetor flange and withdraw carburetor from machine.

5-79. DISASSEMBLY. (See figure 5-81.)

Disassembly of the carburetor is not recommended except by experienced mechanics. The disassembled view will identify the various component parts and show their relation to assembly. Use the disassembled view with the identifying part numbers to identify and locate parts when performing the disassembly and reassembly operations.

A. REPAIR PARTS.

Refer to the parts section of this manual for carburetor repair kits. The use of the proper repair parts kit is essential in the event repair is to be performed on the carburetor. The following

www.truck-freeworkshop.com/clark/

LEGEND FOR FIGURE 5-81

1. Carbutor	12. Screw	23. Screw	34. Lever
2. Repair kit	13. Gasket	24. Plug	35. Pin
3. Gasket kit	14. Spring	25. Clamp	36. Venturi
4. Screw	15. Screw	26. Nut	37. Retainer
5. Spring	16. Spring	27. Lockkwasher	38. Body
6. Screw	17. Stud	28. Nut	39. Bowl
7. Screw	18. Screw	29. Washer	40. Plug
8. Screw	19. Swivel	30. Plate	41. Bracket
9. Float	20. Cotter	31. Stop	42. Shaft
10. Jet	21. Screw	32. Lever	43. Plate
11. Plug	22. Jet	33. Pin	

suggested general hand tools will perform the service job.

B. GENERAL HAND TOOLS.

7/16" Open End Wrench	Long Nosed Pliers
1/2" Open End Wrench	6" Depth Gauge
1/4" Blade Screw Driver	Light Hammer
5/32" Blade Screw Driver	Long Rod or Punch

a. Remove the four assembly screws and lockwashers which attach the throttle body to the fuel bowl, using a screwdriver.

b. Separate the throttle body from the fuel bowl assembly.

Disassemble Throttle Body

c. Remove float axle as follows:

1. Press screwdriver against float axle at slotted side of float hinge bracket and force through hinge bracket.

2. Remove float axle completely with fiiers from opposite side and remove float.

d. Remove fuel valve needle.

e. Remove the assembly gasket from the machined surface of the throttle body.

f. Remove the venturi.

g. Remove the fuel valve seat and fibre washer from machined surface of throttle body, using screwdriver.

h. Remove the idle jet from passage in machined surface of throttle body near fuel valve seat, using a small screwdriver (5/32 inch blade).

i. Remove the idle adjusting needle and fiction spring from the side of throttle body.

j. Remove the throttle plate, screws and lockwashers, shaft and stop lever assembly as follows:

1. Unscrew throttle stop screw until threaded end is flush with lever.

2. Make match marks with file on throttle body and levers to act as a guide to reassemble these parts in the same position as removed.

3. Remove the screws and remove the throttle plate.

4. Remove the throttle shaft and stop lever assembly from the throttle body.

k. Drive shaft hole plug out, using a 6-inch length of 1/4 inch drill rod inserted through opposite shaft hole.

1. Remove throttle shaft seal and retainer using the end of a small screwdriver to lift the parts out.

Disassemble Fuel Bowl Body

m. Remove the passage plug or main jet adjusting needle assembly and fibre washer from bottom of fuel bowl body, using a 1/2 inch wrench.

n. Remove the drain plug (hex) from outside

www.truck-freeworkshop.com/clark/

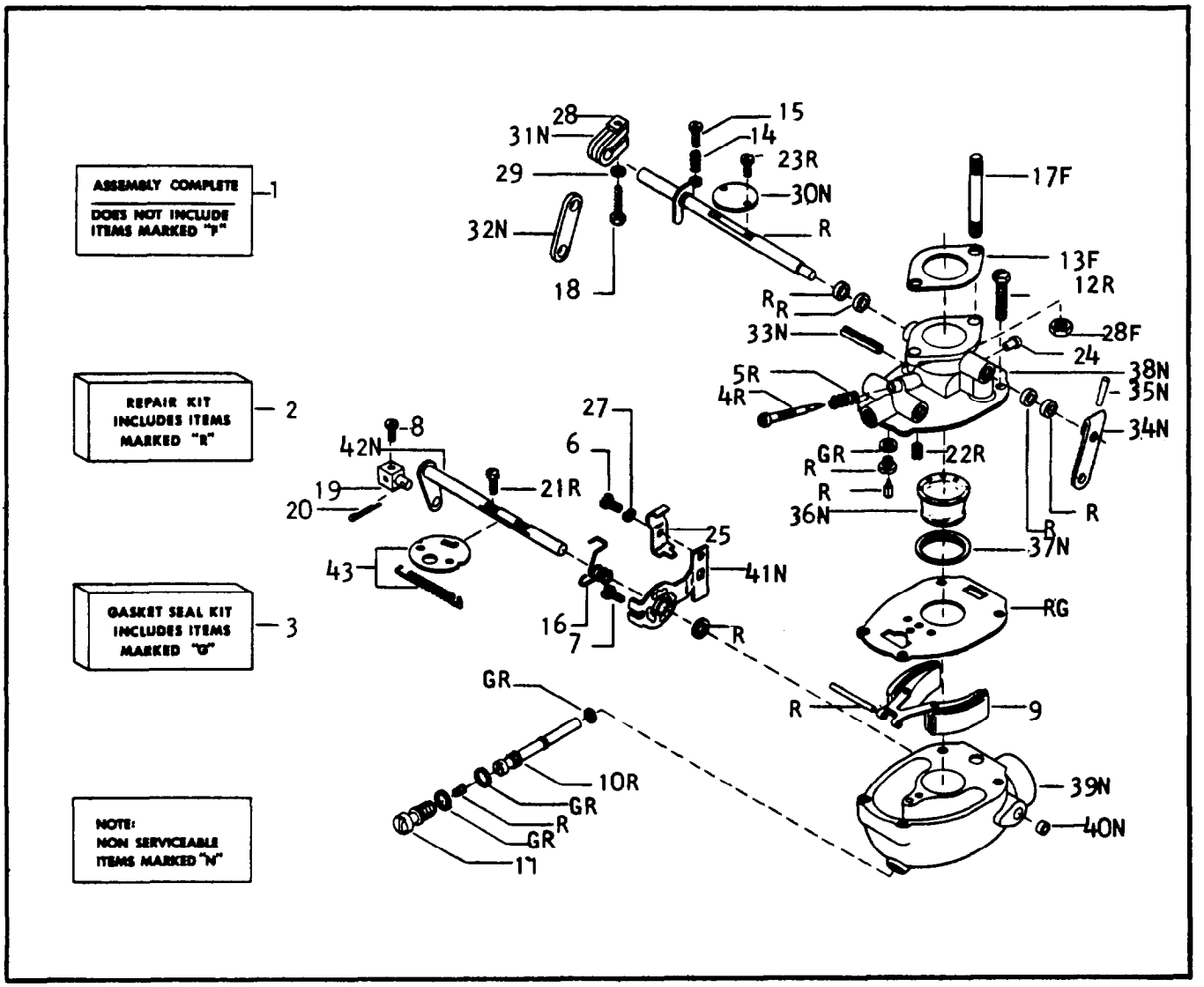

Figure 5-81. Carburetor Assembly

www.truck-freeworkshop.com/clark/

bottom of fuel bowl, using a 7/16 inch open end wrench.

o. Remove discharge jet and fibre washer.

p. Remove well vent jet from center of large opening in machined surface of the fuel bowl with a small screwdriver.

q. Remove main jet and fibre washer from inside of fuel bowl, using a screwdriver.

r. Dissemble choke as follows:

1. Make match marks with a file or prick punch on choke bracket, choke lever and adjacent shaft boss as an aid to correct reassembly.

2. Remove choke lever spring.

3. Remove choke plate screws and lockwashers.

4. Remove the choke plate and choke shaft and lever.

Note

In some cases it may be necessary to bend the bowl vent tube up a very little to give the choke clearance. (Use a screw driver inserted in the tube.)

5. Remove bracket assembly screws, packing washer and choke bracket.

6. Remove choke shaft hole plug, packing washer and retainer, using method suggested in throttle body disassembly section "Disassembly Throttle Body," items K and L.

5-80. CLEANING AND INSPECTION.

a. Refer to figure 5-81 for parts identification and proceed as follows:

b. Clean all metal parts thoroughly with cleaning solution and rinse in solvent.

c. Blow out all passages in the air intake and fuel bowl assembly and throttle body.

Note

Be sure all carbon despoits have been removed from throttle bore and idle port.

d. It is advisable to reverse flow of compressed air in all passages to insure that all dirt has been removed. NEVER use a wire or drill to clean out jets.

e. Replace float assembly if loaded with gasoline, damaged, or if float axle bearing is worn excessively. Inspect top side of float lever for wear where it contacts fuel valve needle.

f. Replace the float axle if any wear can be visually detected on the bearing surface.

g. Always replace fuel valve seat and needle because both parts wear and may cause improper float level.

h. Idle adjusting needle point must be smooth and free of ridges.

i. Inspect throttle plate for burrs or damaged edges. Never clean with a buffing wheel or sharp instrument.

j. Inspect air shutter for bends, butts or damaged edges.

k. Check air shutter shaft bearing surface for wear - see that shaft is straight.

1. Replace all gaskets and fibre washers every time carburetor is disassembled.

Note

Replacement parts must be of the same part number and specifications.

m. Check float level with throttle body in an inverted position, measure level from machined surface of body to top of float at highest point. The measurement, "A" figure 2, should be 1-5/32 inches + or - 1/32 inch. To increase or decrease measurement, bend float close to float body. See figure 5-82.

www.truck-freeworkshop.com/clark/

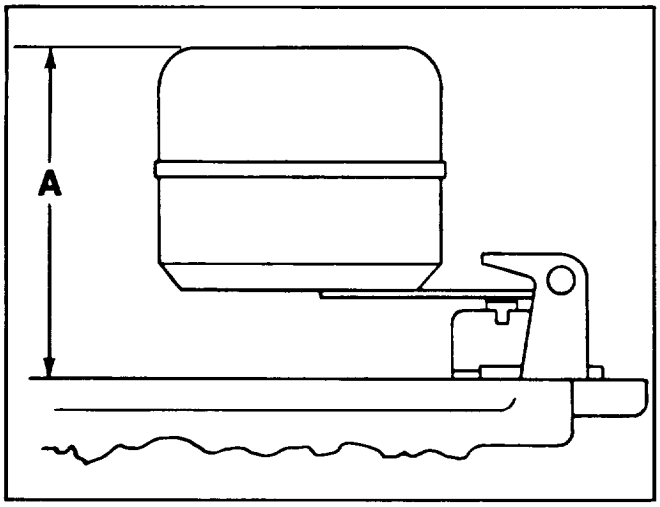

Figure 5-82. Float Level Check

5-81. REASSEMBLY. (See figure 5-81.)

Fuel Bowl Body.

a. Install the choke shaft hole plug, packing and retainer in fuel bowl body as follows:

1. Assemble packing and retainer and place completed assembly on bushing driver with packing facing small end of tool.

2. Start retainer into counter bore in body and lightly drive retainer into body until it is flush with machine surface.

3. Install shaft hole plug with hammer.

b. Reassemble choke parts as follows:

1. Refer to match marks for correct position and install choke bracket, screws and lockwashers.

2. Start the choke plate, poppet valve first and stem down, into the air intake.

3. Hold the choke plate up and insert the choke shaft into place with cut-out section facing up.

4. Rotate the shaft to the closed position, place the choke plate in the cut-out section and install the screws. (Be sure the plate is properly centered before tightening the screws.)

5. Install lever spring to return the choke to the wide open position.

c. Install main jet and fibre washer in the fuel bowl, using a screwdriver.

d. Install well vent jet in fuel bowl and tighten with a small screwdriver.

e. Install discharge jet and fibre washer in large threaded passage beneath the fuel bowl.

f. Install the drain plug in threaded passage, bottom of fuel bowl, using a 7/16 inch end wrench.

g. Install main jet adjustment or passage plug and fibre washer, using a 1/2 inch wrench.

Throttle Body

h. Install throttle shaft hole plug in the side opposite the stop pin, using a light hammer to drive it into place flush with the boss.

i. Install throttle shaft seal, open side out, followed by retainer, using fingers only.

j. Install the throttle shaft and stop lever assembly, throttle, screws as follows:

1. Insert the throttle shaft and stop lever assembly in throttle body.

Note

Be sure stop is backed out far enough to permit complete closing of throttle.

2. Rotate throttle shaft to closed position, insert throttle plate in the cut-out section of the shaft, holding the plate in position with fingers.

3. Start throttle plate screws and tighten with small screwdriver, being sure that the throttle plate is properly centered in the throttle body bore.

Note

The screw holes in the throttle plate are off center. Start the side of the throttle plate

www.truck-freeworkshop.com/clark/

LEGEND FOR FIGURE 5-83

1. Fuel pump
2. Stud
3. Gasket
4. Repair kit
5. Diaphragm kit
6. Nut
7. Lockwasher
8. Capscrew
9. Lockwasher
10. Screw
11. Retainer
12. Body
13. Arm
14. Retainer
15. Cover & Valve
16. Cover
17. Lockwasher
18. Capscrew

with the shortest distance between the screw holes and beveled edge into place first. The throttle plates are made with two opposite edges beveled to-fit the throttle body bore when the plate is closed. The throttle plate will not close tightly if installed upside down. Pressure on the plate must be maintained with the finger until the screws are tightened. When properly installed, the side of the throttle plate farthest away from the mounting flange will be aligned with the idle port when the plate is closed.

k. Install idle adjusting needle and friction spring in threaded passage on side of throttle body. Seat lightly with screwdriver and back out 1-1/4 full turns as preliminary adjustment.

1. Install idle jet in counter-bored passage in machined surface.

m. Install fuel valve seat and fibre washer, using wrench.

n. Place new throttle body to fuel bowl gasket on machined surface of fuel bowl cover.

o. Install fuel valve needle in seat followed by float and float axle;

p. Float Level. Check position of float assembly for correct measurement to obtain proper float level, using a depth gauge. The "A" dimension should be 1-5/32 inch plus or minus 1/32 inch, see figure 5-82.

1. With bowl cover assembly in an inverted position, viewed from free end of float, the float bodies must be centered and at right angles to the machined surface. The float setting is measured from the machined surface (no gasket) of cover to top side of float bodies at highest point.

2. Bending Float Lever. To increase or decrease distance between float body and machined surface, use long nosed pliers and bend lever close to float body.

Note

Replace with new float if position is off more than l/l6 inch.

q. Insert venturi in fuel bowl bore, small opening down.

Note

The flat side of venturi must be toward the well vent jet.

Assemble Carburetor Bodies.

r. Assemble the two completed bodies and four screws and lo&washers and tighten screws evenly and firmly.

s. Hold the throttle lever in a closed position and turn the throttle stop screw in until it just contacts the stop pin, then turn screw in l-l/Z additional turns as a preliminary adjustment of the idle speed.

5-82. INSTALLATION.

a. Place the carburetor against the manifold flange and install fasteners. Tighten evenly to prevent vacuum leaks, and always install a new gasket.

www.truck-freeworkshop.com/clark/

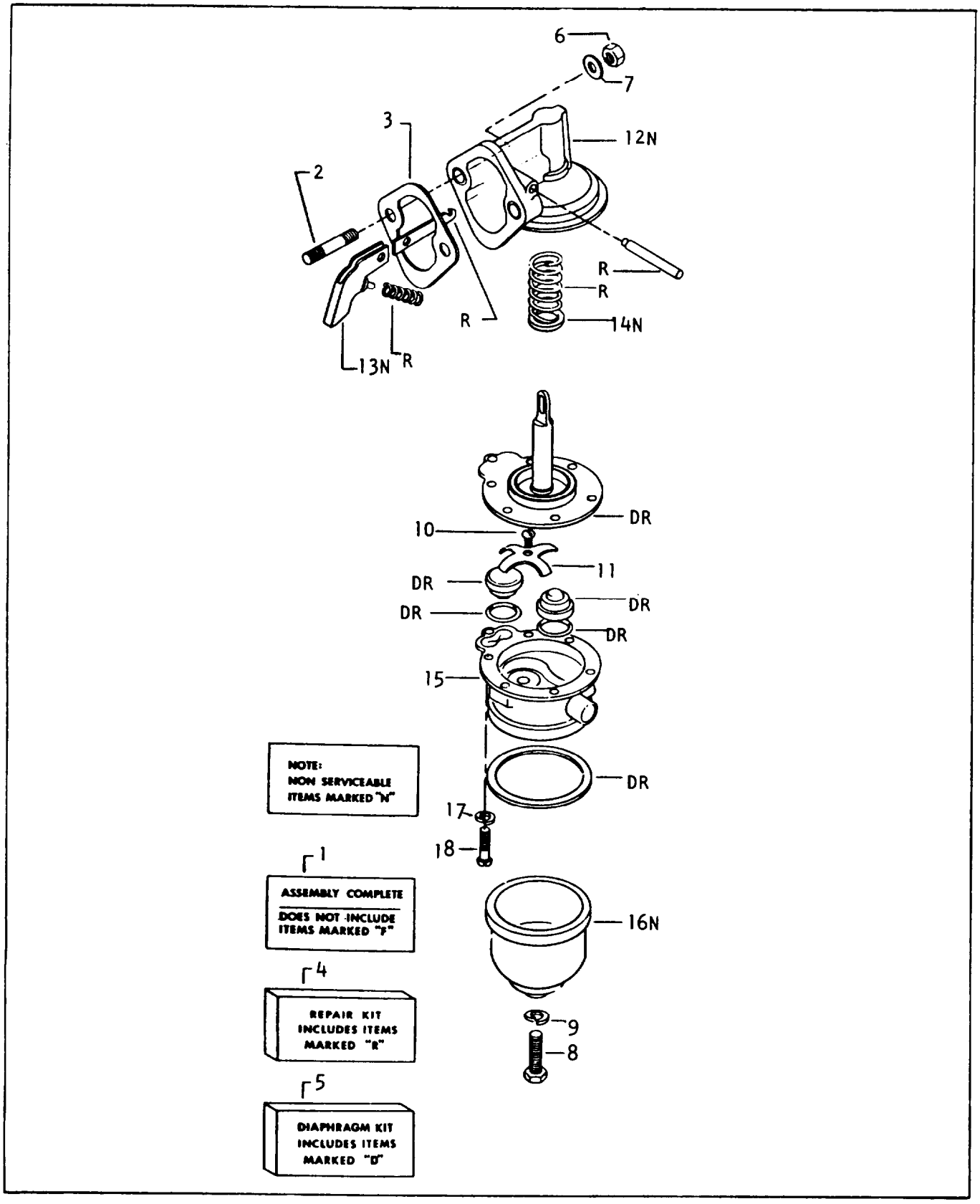

Figure 5-83. Fuel Pump

www.truck-freeworkshop.com/clark/

b. Connect fuel pump to carburetor hose, and air filter hose.

c. Connect accelerator and governor linkage and perform adjustments as outlined in Section IV.

5-83. FUEL PUMP REPAIR.

a. Refer to figure 5-83 for parts identification when disassembling the fuel pump.

b. Before disassembling any pump, scribe a mark across the housings in such a manner that they may be reassembled with inlet and outlet, fitting holes in correct location.

c. When disassembled, clean all parts (except diaphragms) in solvent and blow dry with compressed air. Examine the diaphragm for cracks, tom screw holes or ruptures. If deteriorated, install new diaphragm and pull rod assembly. Check the strainer screen and if found to be corroded or clogged, install a new screen. Check rocker arm for wear or scoring or that portion that contacts the camshaft eccentric. If arm is scored or worn, install a new one.

d. When reassembling a pump, do not use shellac or other adhesive on a diaphragm.

5-84. TRANSMISSION AND DRIVE AXLE.

5-85. REMOVAL.

a. Drain transmission and axle adaptor at drain plugs.

b. Remove all parts obstructing accessibility to the transmission.

c. Disconnect hydraulic brake fluid lines, directional range shifting linkage and shifting arms.

d. Remove upright assembly.

e. Through opening in converter housing, remove 5/16 inch bolts securing torque converter assembly to the engine flywheel.

Note

It will be necessary to rotate engine flywheel to make these bolts accessible.

f. Remove the bolts securing converter housing to engine flywheel housing.

g. Remove frame mounting bolts.

h. Remove transmission and wheel end as an assembly.

CAUTION

Make certain that the engine is properly blocked (supported) before removing any retainer capscrews.

i. Remove drain plug located on side of converter and drain oil.

j. Remove converter assembly from stator support by pulling converter straight outwards from main shaft and stator support.

k. Separate transmission from axle adaptor by removing the retainer bolts and stud nuts that connect these two units.

Note

There is one large seal and one or more shims located between the axle adaptor and transmission. Be careful not to damage these components at disassembly.

1. In the following instructions the front of the transmission will be the TORQUECONVERTER END, and the rear of the tranmission will be the ADAPTOR-END. To aid in disassembly, see the exploded view of the transmission shown in figure 5-93.

5-86. AXLE END REMOVAL AND DISASSEMBLY.

a. It is not necessary to remove the transmission in order to remove axle ends. Drain the axle adaptor if the transmission is not to be removed.

b. Refer to figure 5-84 for parts identification and proceed as follows:

c. Remove axle end capscrews and washers. Remove axle end stud nuts and washers.

www.truck-freeworkshop.com/clark/

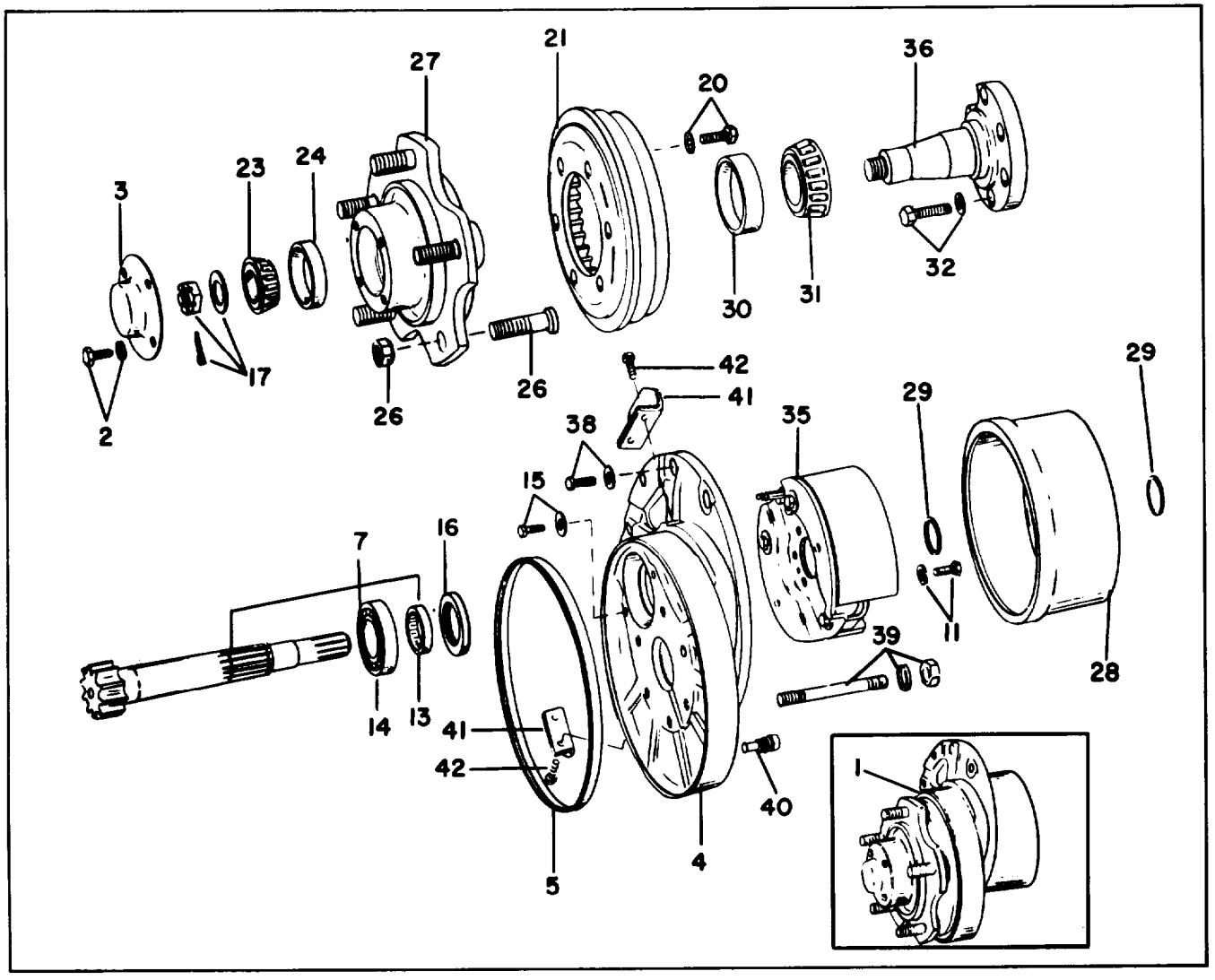

1. Axle end assembly
2. Hub cap bolt
3. Hub cap
4. Spindle support
5. Seal
7. shaft
11. Bolt, brake mounting
13. Sleeve
14. Bearing
15. Retainer bolt
16. Seal
17. Adjusting nut, washer, cotter pin
20. Hub gear bolt
21. Internal gear
23. Bearing cone, outer
24. Bearing cup, outer
26. Wheel mounting bolt
27. Hub, cup
28. Brake drum
29. Brake drum bolt
30. Bearing cup, inner
31. Bearing cone, inner
32. Spindle bolt
35. Brake assembly
36. Spindle
38. Bolt
39. Stud
40. vent
41. Dust shield
42. Dust shield bolt

Figure 5-84. Axle End Assembly

d. Remove axle end by pulling straight out until the assembly is clear of the adaptor housing.

e. Remove hub cap and fasteners. Remove axle bearing nut, washers and spacer as shown in Figure 5-86.

f. Remove the outer bearing cone as shown in ~~Figure 5-87.~~

g. Remove drive hub assembly by pulling unit straight out, to separate it from the axle end. See Figure 5-88.

www.truck-freeworkshop.com/clark/

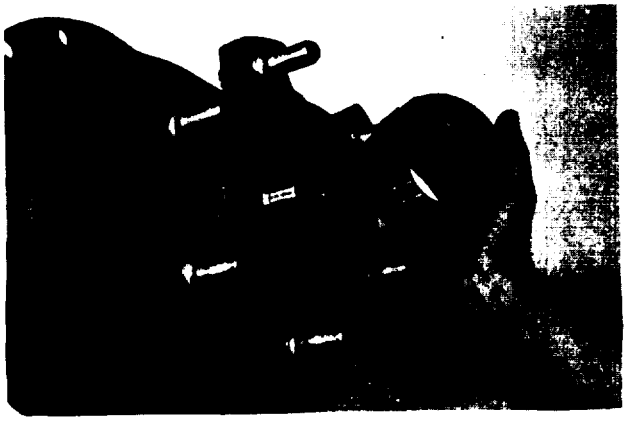

Figure 5-87. Outer Bearing Removal

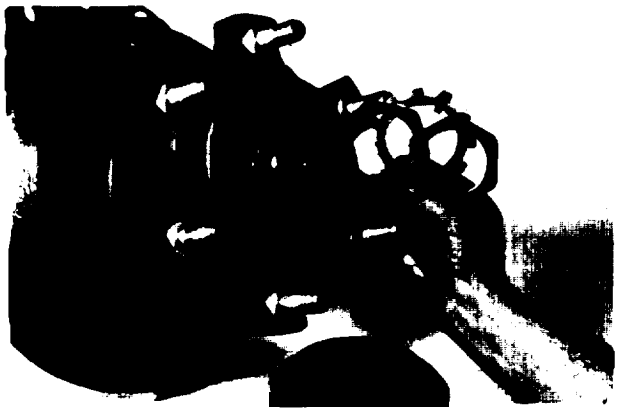

Figure 5-86. Removing Outer Bearing Nut

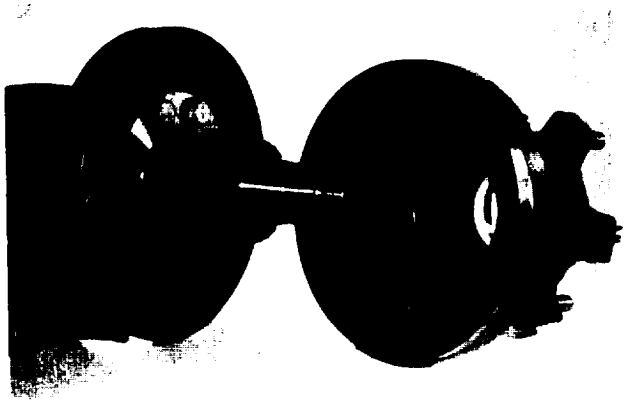

Figure 5-88. Drive Hub Removal

h. Remove drive axle spindle fasteners and drive axle spindle as shown in figure 5-89.

i. Remove drive axle shaft as shown in figure 5-90, by striking splined end with a rawhide mallet until shaft is driven out.

5.87. AXLE END REASSEMBLY.

a. Clean all parts in a Stoddard type cleaning solvent.

b. Carefully clean and inspect all bearings and bearing surfaces for excessive wear, pits and bearing failure, replace with new parts when necessary. Replace all seals and gaskets.

c. Before reassembling, carefully inspect all parts for excessive wear, cracks and breakage.

d. Install bearing on axle shaft, making sure hearing is well seated on shaft.

e. Insert drive axle assembly into position in housing. Using rawhide hammer, drive axle assembly into position making sure bearing is well seated.

f. Install inner bearing on drive axle spindle, making sure bearing is well seated.

g. Install drive axle spindle to housing assembly.

www.truck-freeworkshop.com/clark/

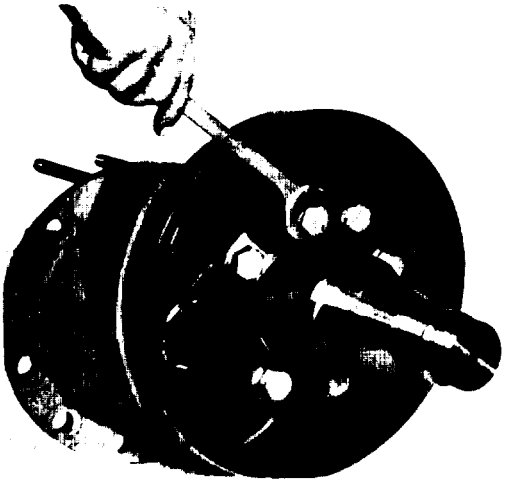

Figure 5-89. Drive Axle Spindle Removal

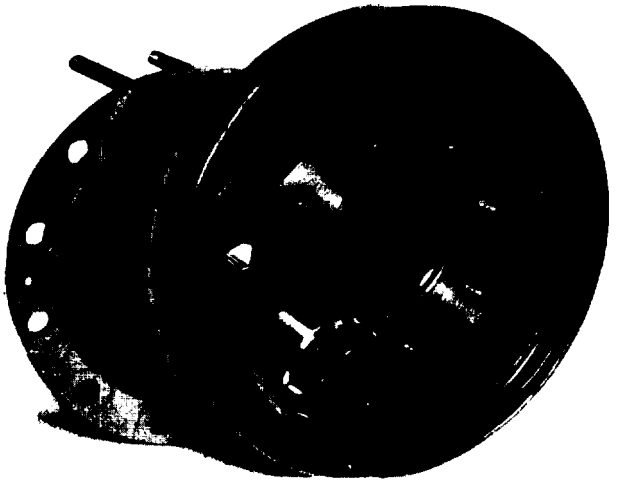

Figure 5-90. Drive Axle Shaft Removal

h. Carefully install drive hub assembly on axle spindle, making sure inner bearing is seated on bearing race and drive axle is in mesh with inner ring in hub assembly.

i. Install outer bearing on spindle, making sure bearing is well seated.

j. Install washer, bearing retainer, lock washer and locking retainer. Refer to Section IV for bearing adjustment procedure.

5-88. AXLE ADAPTER AND DIFFERENTIAL.

5-89. REMOVAL AND DISASSEMBLY.

a. Remove both wheel end assemblies as outlined in paragraph 5-86.

b. Refer to figure 5-91 for parts identification and proceed as follows:

c. Remove the capscrews securing the axle adapter to the rear of the transmission, and separate the two units.

Note

A number of shims are installed between the axle adapter and transmission (17, figure 5-91). Keep this shim pack intact for reinstallation.

d. Remove the bearing carrier stud nuts and washers from each side of the axle adapter.

e. Removal of bearing carriers will free the differential assembly for removal

Note

A number of shims (item 10) may be installed under the bearing carriers. Keep these shim packs intact for later installation.

f. Further disassembly is accomplished according to the exploded view illustration.

5-90. CLEANING, INSPECTION AND REPAIR.

a. Immerse all parts, except bearings, in a Stoddard type cleaning solvent until all parts are thoroughly cleaned.

b. Dip bearings in a Stoddard type cleaning solvent, and slosh up and down until bearings are clean. Remove bearings from solvent and strike large side of cone flat against a block of wood to dislodge solidified particles of lubricant. **Repeat** above operation until bearings are cleaned thoroughly. Do not spin bearings dry with compressed air. Allow to drip dry. Bearing may be slowly rotated by hand to facilitate drying procedure. Clean interior of housing thoroughly.

www.truck-freeworkshop.com/clark/

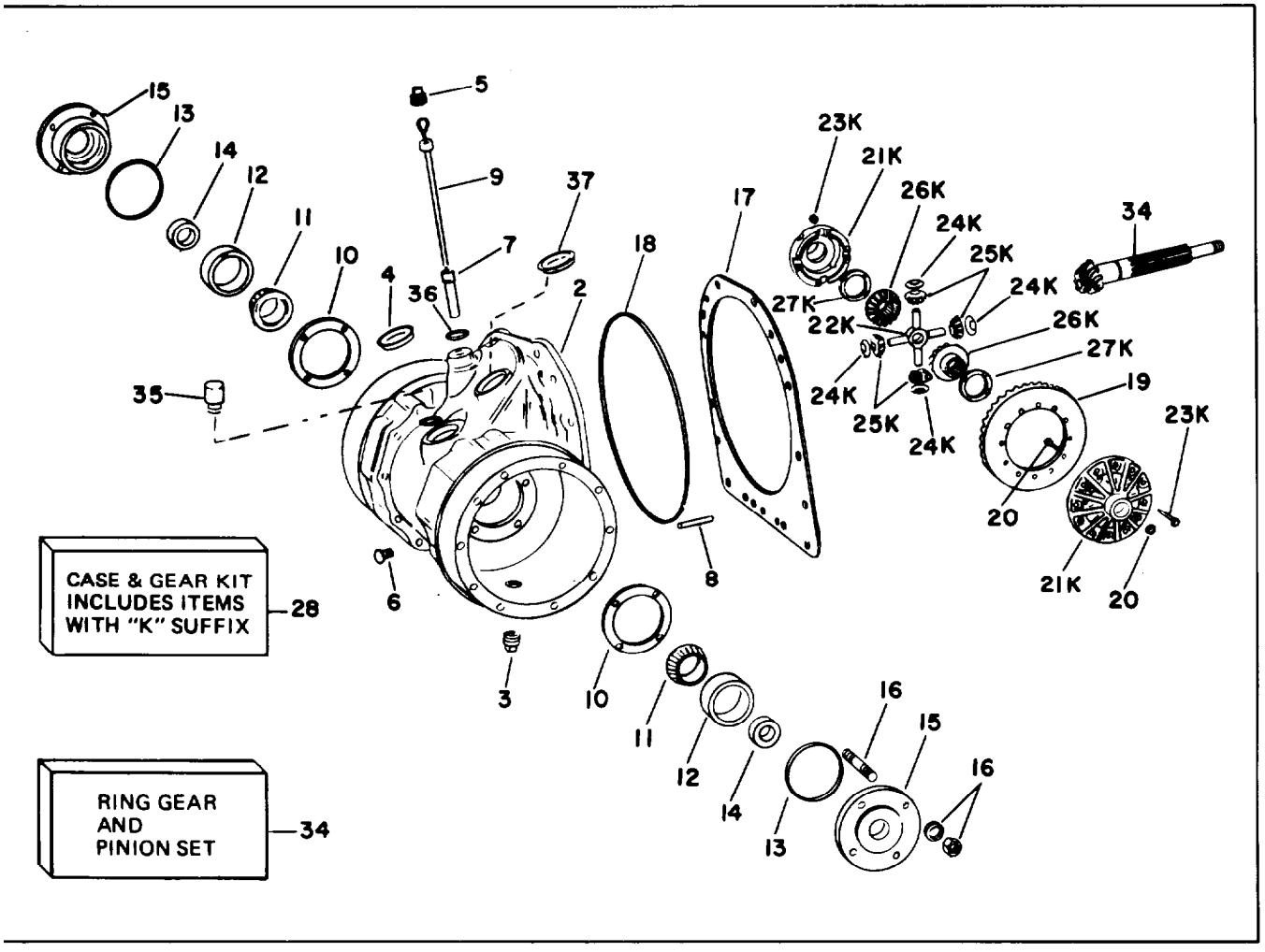

2. Differential housing
3. Drain plug
4. Inspection cover
5. Plug
6. Plug
7. Dipstick tube
8. Dowel pin
9. Dipstick
10. Bearing carrier shim
11. Differential bearing cone
12. Differential bearing
13. Bearing carrier seal cup
14. Bearing carrier seal
15. Bearing carrier
16. Nut, washer
17. Differential housing shim
18. Seal
19. Ring gear
20. Bolt, nut
21. Differential case
22. Spider
23. Case bolt
24. Thrust washer
25. Differential pinion gear
26. Differential side gear
27. Thrust washer
34. Ring gear, pinion set
35. Vent
36. Seal
37. Access cover

Figure 5-91. Axle Adapter and Differential

c. Examine differential case, side gears, pinions and thrust. washers for damage or excessive wear. Check clearance between pinions and pinion pin and thickness of all thrust washers. If differential side gears and pinions are worn or damaged, always replace with complete set - consisting of four pinions, two side gears and all thrust washers.

d. Inspect all parts to detect cracks or fissures to determine serviceability of parts. Surface of spindle support which contacts oil seal lip must. be round, smooth finished and free from nicks, scratches, grooves or scores.

e. Carefully inspect rollers, cages and cups for wear, chipping or nicks to determine fitness of

www.truck-freeworkshop.com/clark/

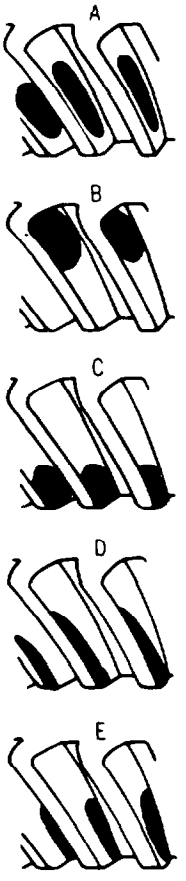

A. Correct gear tooth contact.

B. Short heel contact. Add shims at point 2 and remove shims from point 3 of drawing below. Remove shims at point 1.

C. Short toe contact. Add shims at point 1 of drawing below. Remove shims at point 2 and add shims at point 3.

D. Contact too close to tooth edge. Add shims at point 1 of drawing below. Remove shims at point 2 and add shims at point 3.

E. Contact too deep in gear groove. Add shims at point 2 and remove shims at point 3 in drawing below. Remove shims at point 1.

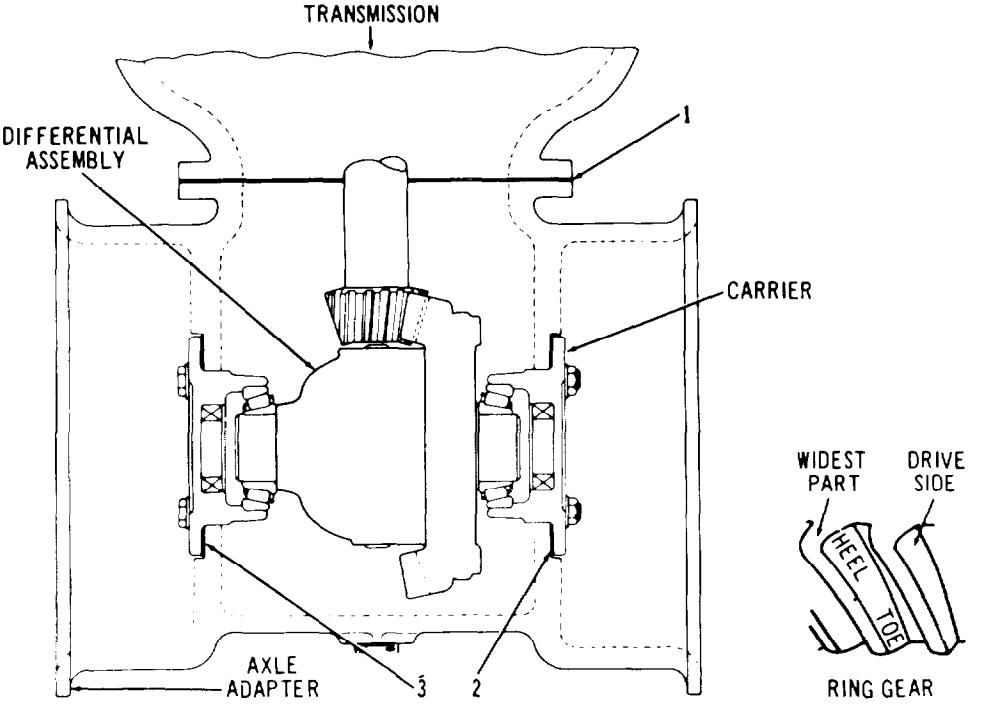

Figure 5-92. Tooth Contact Patterns

www.truck-freeworkshop.com/clark/

LEGEND FOR FIGURE 5-93

1. Transmission assembly
2. Auxiliary shaft bearing
3. Auxiliary shaft
4. Driven gear
6. Auxiliary shaft bearing
6. Retaining ring
7. Flange seal
8. Parking brake
9. Bolt, lockwasher
10. Parking brake drum
11. Bolt, lockwasher, nut
12. O-ring seal
13. Brake drum flange
14. Flange nut, washer
16. Stator support bearing
17. Stator support
18. Bolt, lockwasher
19. Pump drive gear
20. Oil distributor
21. O-ring seal
22. Forward oil tube
23. Reverse oil tube
24. O-ring seal
25. Input shaft
26. Output shaft nut
27. Outer bearing
28. Snap ring
29. Shim kit
30. Gasket
31. Control cover assemblv
32. Control cover stud
33. Bolt, lockwasher
34. Driven gear
35. Pinion shaft spacer
36. Auxiliary drive gear
37. Clutch pack
38. Intermediate gear
39. Retaining ring
40. Intermediate shaft
41. Retaining ring
42. Intermediate gear
43. Bearing
44. Reverse idler gear
45. Strainer spring
46. Strainer
47. Output shaft bearing
48. Snap ring
49. Spacer
50. Drain plug
51. Snap ring
52. Snap ring
53. Bearing
54. Bolt, lockwasher
55. Input shaft cap
56. O-ring seal
57. O-ring seal
58. Snap ring
59. Bearing
60. Thrust washer
61. Lock plate, bolt, washer
62. Reverse idler shaft
63. O-ring seal
64. Converter pump
65. Bolt, lockwasher
66. seal
67. Pedal shaft bearing
68. Driven gear
69. Key
70. snap ring
71. snap ring
72. Thrust washer
73. Gear, bearing
74. Bearing
75. Shaft
76. Lock
77. Sleeve
78. O-ring seal
79. Thrust washer
80. Snap ring
81. Bearing
82. Spacer
83. Sleeve
84. O-ring seal
85. Transmission case
86. Bearing
86. Top cover gasket
89. Top cover
90. Bolt, lockwasher
91. Pedal shaft bolt, lo&washer
92. Pedal shaft bolt, lo&washer
93. Gasket
94. Seal, gasket kit

bearings for further use. After inspection, dip bearings in gear oil and wrap in clean cloth or paper to protect them until installed.

f. It will be necessary to replace all O-rings and oil seals when unit is disassembled. It is more economical than premature overhaul to replace these parts at a future time. Further loss of lubricant through a worn seal may result in faiIure of other differential parts. Handle seals carefully, particularly when seals are being installed. Cutting, scratching or curling under of seal lip seriously impairs efficiency.

g. Examine teeth of both ring and pinion gears carefully for wear, pitting, chipping, nicks or scores. If gear teeth show spots where case hardening is worn through, install new ring gear and pinion set. Small nicks may be carefully removed with a suitable hone. Examine pinion gear teeth for wear and check pinion shaft for evidence of twisting, particularly at splines. If evident, install new set of gears.

h. Pinion and drive (ring) gears are available only in matched sets and must be installed as such to assure satisfactory operation.

5-91. REASSEMBLY.

a. Reassembly is the reverse of disassembly. However, after the axle adaptor and differential has been reassembled, the backlash should be checked. If the backlash is not right, it will be necessary to add or subtract bearing carrier shims in the axle adaptor and/or between the axle adaptor and transmission.

www.truck-freeworkshop.com/clark/

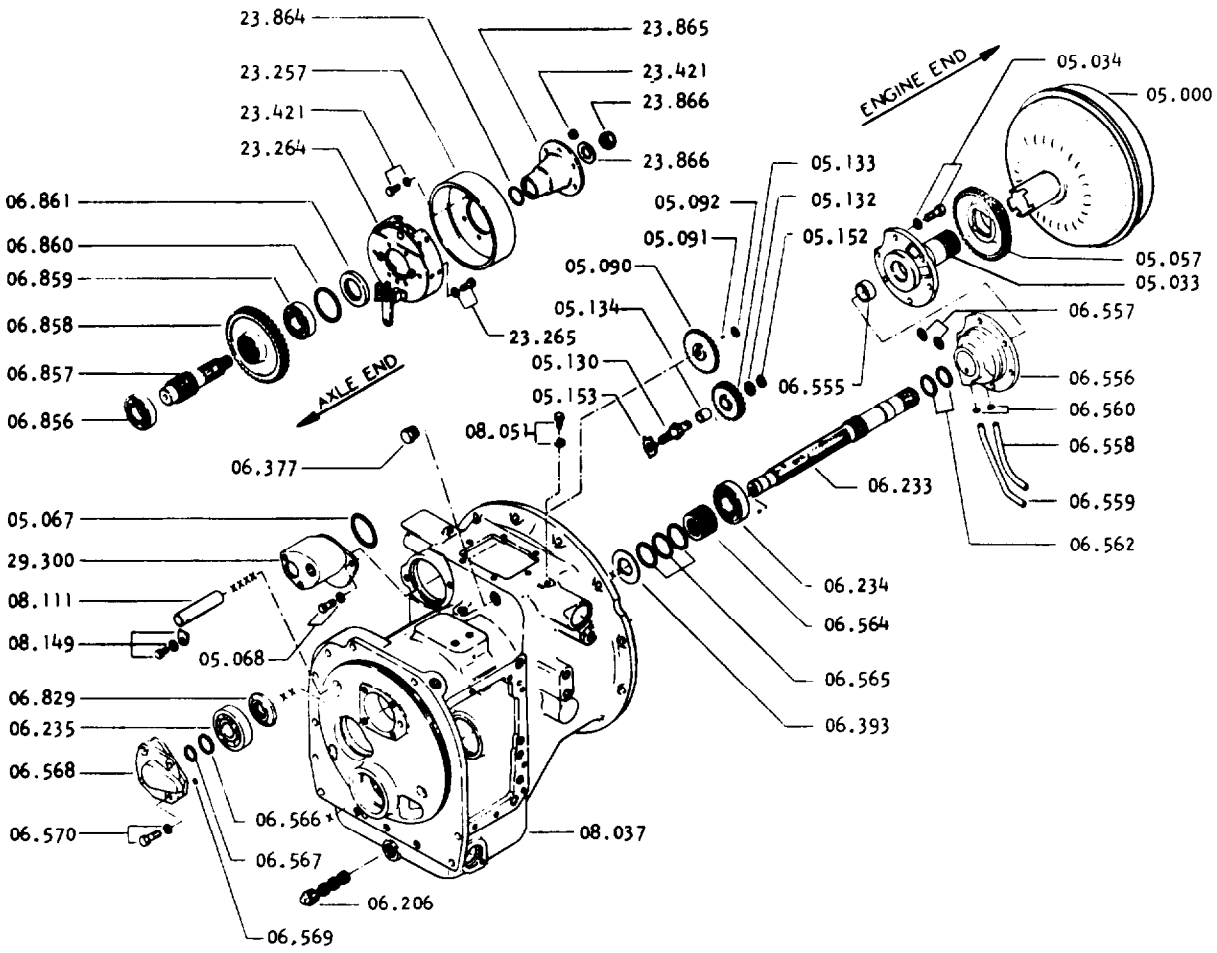

HYDRATORK TRANSMISSION

06.200	TRANSMISSION ASSEMBLY (CONT' D)
05.000	CONVERTER, TORQUE
05.033	STATOR SUPPORT, TRANSMISSION
05.034	FASTENER, TRANSMISSION STATOR SUPPORT
05.057	GEAR. CONVERTOR PUMP DRIVE
05.067	SEAL, CONVERTOR PUMP
05.068	FASTENER, CONVERTOR PUMP
05.090	GEAR, CONVERTOR PUMP DRIVEN
05.091	KEY, CONVERTOR PUMP
05.092	FASTENER, CONVERTOR PUMP DRIVEN GEAR
05.130	SHAFT, CONVERTOR PUMP IDLER
05.132	THRUST WASHER, CONVERTOR PUMP IDLER GEAR
05.133	GEAR, CONVERTOR PUMP IDLER
05.134	BEARING, CONVERTOR PUMP IDLER GEAR
05.152	FASTENER, CONVERTOR PUMP IDLER GEAR
05.153	LOCK, CONVERTOR PUMP IDLER GEAR SHAFT
06.206	PLUG, TRANSMISSION SUMP DRAIN
06.233	SHAFT. INPUT
06.234	BEARING, TRANS INPUT SHAFT (ENGINE END)
06.235	BEARING, TRANS INPUT SHAFT (AXLE END)
06.377	PLUG-PIPE, TRANSMISSION CASE
06.393	THRUST WASHER, FORWARD CLUTCH HUB DRUM
06.555	BEARING, TRANSMISSION STATOR SUPPORT
06.556	DISTRIBUTOR, TRANSMISSION DIRECTION SEL OIL
06.557	SEAL, TRANS DIRECTION SEL OIL DISTRIBUTOR
06.558	TUBE, TRANSMISSION "FWD" OIL
06.559	TUBE, TRANSMISSION "REV" OIL
06.560	SEAL. TRANSMISSION DIRECTION SEL OIL TUBE
06.562	SEAL, INPUT SHAFT (AT STATOR SUPPORT)
06.564	SLEEVE, TRANS DIRECTION SELECTOR OIL DIST
06.565	SEAL, TRANS DIRECTION SEL OIL DIST SLEEVE
06.566	RETAINER, TRANS INPUT SHAFT BRG (AXLE END)
06.567	SEAL, TRANSMISSION INPUT SHAFT INBOARD
06.568	CAP, TRANSMISSION INPUT SHAFT
06.569	SEAL, TRANSMISSION INPUT SHAFT CAP
06.570	FASTENER, TRANSMISSION INPUT SHAFT CAP
06.829	THRUST WASHER, REV CLUTCH HUB & DRUM (THICK)
06.856	BEARING, AUXILIARY SHAFT (AXLE END)
06.057	SHAFT, AUXILIARY
06.858	GEAR, AUXILIARY SHAFT DRIVEN
06.859	BEARING, AUXILIARY SHAFT (ENGINE END)
06.860	RING-RETAINING, AUX SHAFT BRG (ENGINE END)
06.861	SEAL, PARKING BRAKE DRUM FLANGE
08.051	PLUG, BRAKE HOLE
08.111	SHAFT, TRANSMISSION REVERSE IDLER
08.149	FASTENER, TRANS REVERSE IDLER SHAFT
23.257	DRUM, PARKING BRAKE
23.264	BRAKE ASSEMBLY, PARK I NC
23.265	FASTENER, PARKING BRAKE
23.421	FASTENER. PARKING BRAKE DRUM
23.864	SEAL, PARKING BRAKE DRUM FLANGE
23.865	FLANGE, PARKING BRAKE DRUM
23.866	FASTENER, PARKING BRAKE DRUM FLANGE
29.300	PUMP CONVERTOR (NO SERVICEABLE COMPONENTS)

www.truck-freeworkshop.com/clark/

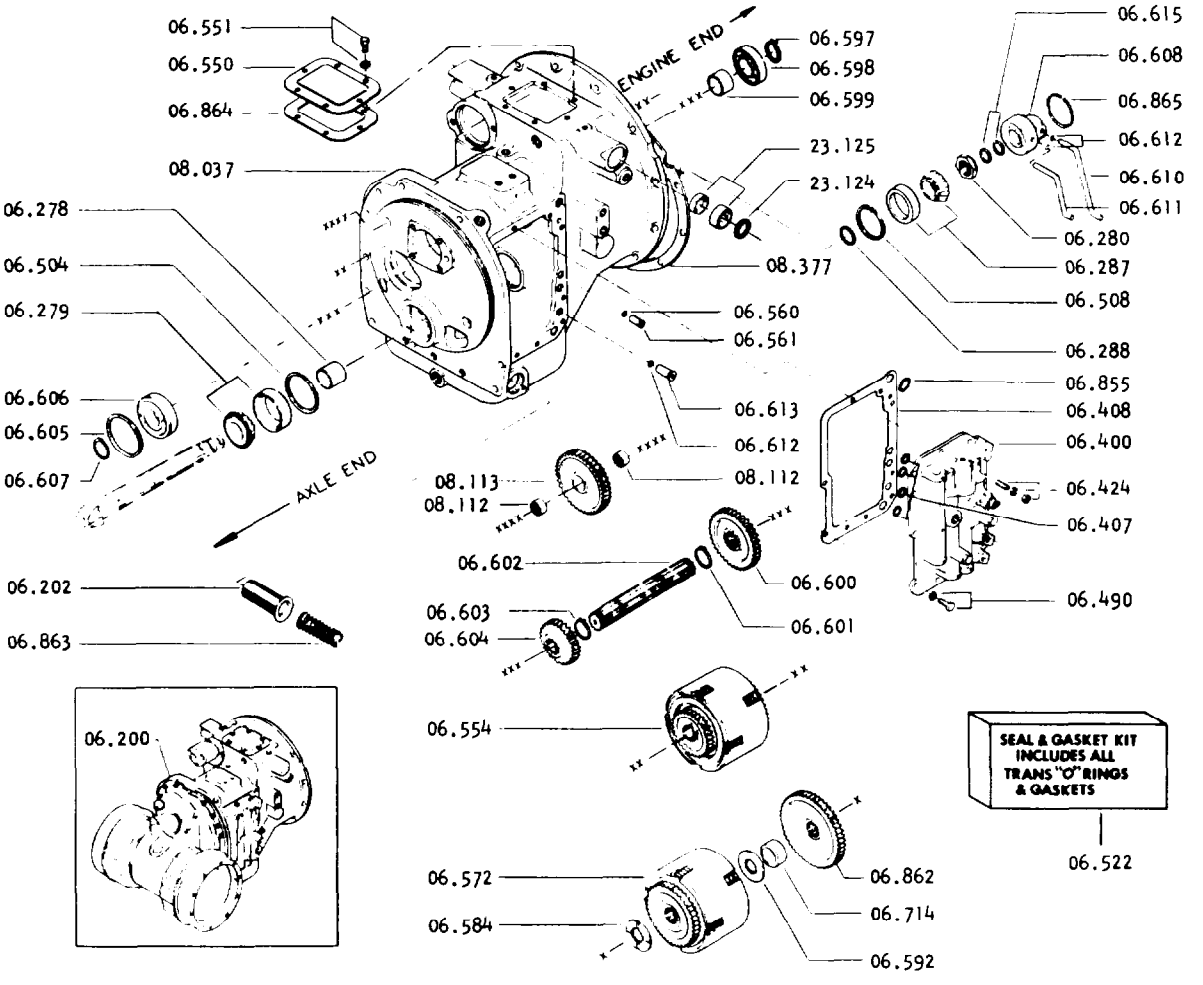

HYDRATORK TRANSMISSION

06.200	TRANSMISSION ASSEMBLY
06.202	STRAINER, TRANSMISSION SUMP
06.278	SPACER, OUTPUT SHAFT
06.279	BEARING, TRANS OUTPUT SHAFT (AXLE END)
06.280	FASTENER, TRANSMISSION OUTPUT SHAFT
06.287	BEARING, TRANS OUTPUT SHAFT OUTER
06.288	SHIM KIT, TRANS OUTPUT SHAFT BRG (ENGINE END)
06.400	CONTROL COVER ASSEMBLY
06.407	SEAL, CONTROL COVER OIL PASSAGE (SMALL)
06.408	GASKET, CONTROL COVER ATTACHING
06.424	FASTENER, CONTROL COVER
06.490	FASTENER, CONTROL COVER
06.504	RING, OUTPUT SHAFT BRG LOCATING (AXLE END)
06.508	RING, OUTPUT SHAFT BRG LOCATING (ENGINE END)
06.522	SEAL AND GASKET KIT, TRANSMISSION
06.550	COVER, TRANSMISSION CASE TOP
06.551	FASTENER, TRANSMISSION CASE TOP COVER
06.554	CLUTCH PACK, DIRECTION SELECTOR
06.560	SEAL, TRANS DIRECTION SEL OIL TUBE
06.561	SLEEVE, TRANS DIRECTION SEL OIL TUBE
06.572	CLUTCH PACK, SPEED SELECTOR
06.584	THRUST WASHER, 1ST CLUTCH HUB & DRUM
06.592	THRUST WASHER, 2ND CLUTCH HUB & DRUM
06.597	RETAINER, TRANS INTER SHAFT BEARING (ENG END)
06.598	BEARING, TRANS INTER SHAFT (ENGINE END)
06.599	SPACER, TRANSMISSION INTERMEDIATE SHAFT
06.600	GEAR, TRANSMISSION INTERMEDIATE (ENGINE END)
06.601	RING, TRANS INTER GEAR LOCATING (ENGINE END)
06.602	SHAFT, TRANSMISSION INTERMEDIATE
06.603	RING, TRANS INTER GEAR LOCATING (AXLE END)
06.604	GEAR, TRANSMISSION INTERMEDIATE (AXLE END)
06.605	RING, TRANS INTER SHAFT BKG LOCATING (AXLE END)
06.606	BEARING, TRANS INTER SHAFT (AXLE END)
06.607	RETAINER, TRANS INTER SHAFT BRG (AXLE END)
06.608	DISTRIBUTOR, TRANSMISSION SPEED SELECTOR OIL
06.610	TUBE, TRANSMISSION "HIGH" OIL
06.611	TUBE, TRANSMISSION "LOW" OIL
06.612	SEAL, TRANS SPEED SELECTOR OIL TUBE
06.613	SLEEVE, TRANS SPEED SELECTOR OIL TUBE
06.615	SEAL, TRANS SPEED SEL OIL DIST SLEEVE
06.714	SPACER, PINION SHAFT (ENGINE END)
06.855	SEAL, CONTROL COVER OIL PASSAGE
06.862	GEAR, OUTPUT SHAFT AUXILIARY DRIVE
06.863	SPRING, TRANSMISSION SUMP STRAINER
06.864	GASKET, TRANSMISSION CASE TOP COVER
06.865	RETAINER. SPEED SELECTOR OIL DISTRIBUTOR
08.037	CASE, TRANSMISSION
08.112	BEARING, TRANS REVERSE IDLER GEAR
08.113	GEAR, TRANSMISSION REVERSE IDLER
23.124	SEAL, BRAKE PEDAL SHAFT
23.125	BEARING, BRAKE PEDAL SHAFT
08.377	GASKET, TRANSMISSION TO ENGINE

www.truck-freeworkshop.com/clark/

Whenever the Hydratork transmission is disassembled, the following steps must be carefully followed to insure proper operation of the transmission upon reassembly.

Location of model and part numbers.

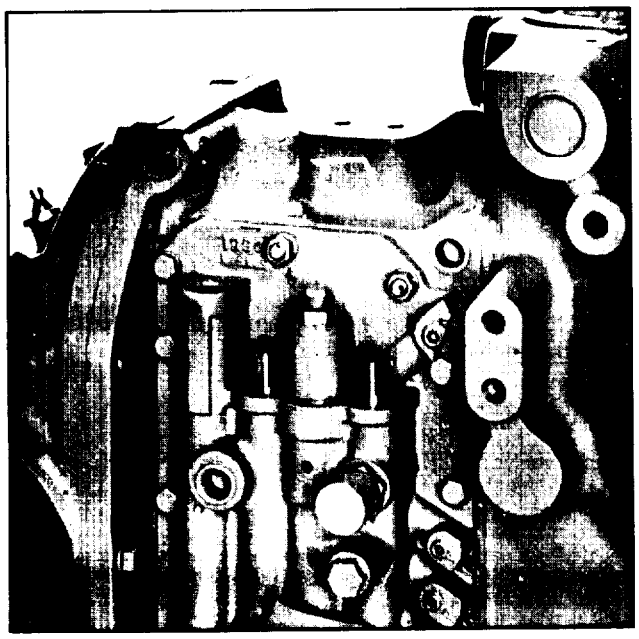

Plate 10220

5-92. TRANSMISSION DISASSEMBLY

STEP 1. Remove the torque converter.

Step 1. Plate 10221

STEP 2. Remove all fasteners from axle adaptor to transmission, and separate adaptor from transmission by use of jackscrews and remove axle adaptor assembly.

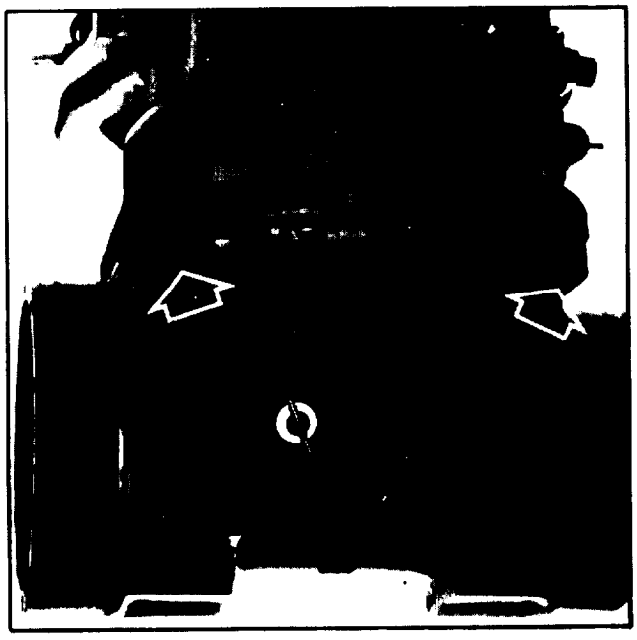

Step 2. Plate 10222

www.truck-freeworkshop.com/clark/

STEP 3. Remove the axle adaptor adjustment shim/s and "O" ring seal.

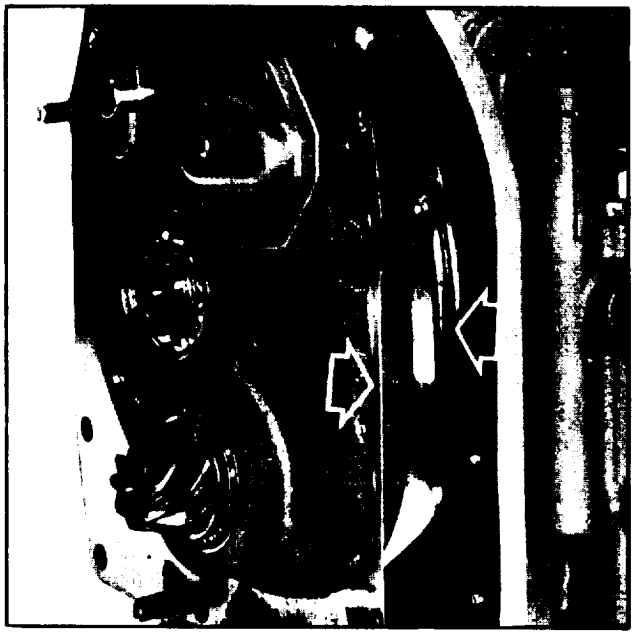

Step 3. Plate 10223

STEP 4. Remove from the transmission assembly the converter pump.

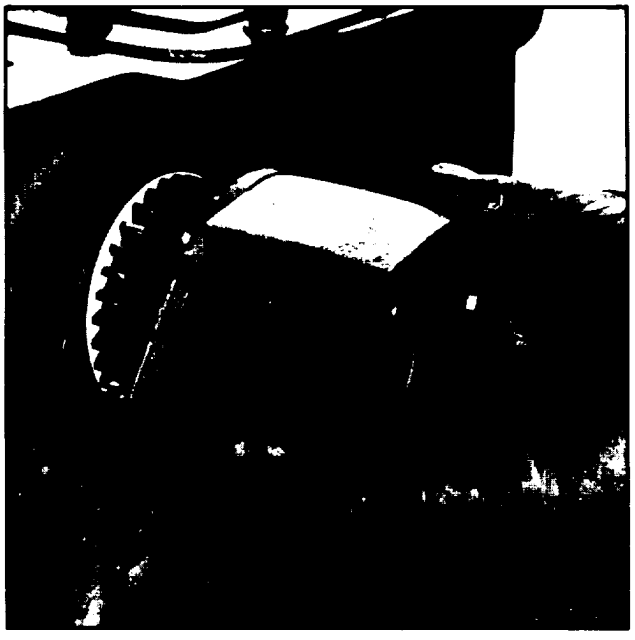

Step 4. Plate 10224

STEP 5. Remove the control cover assembly and gasket.

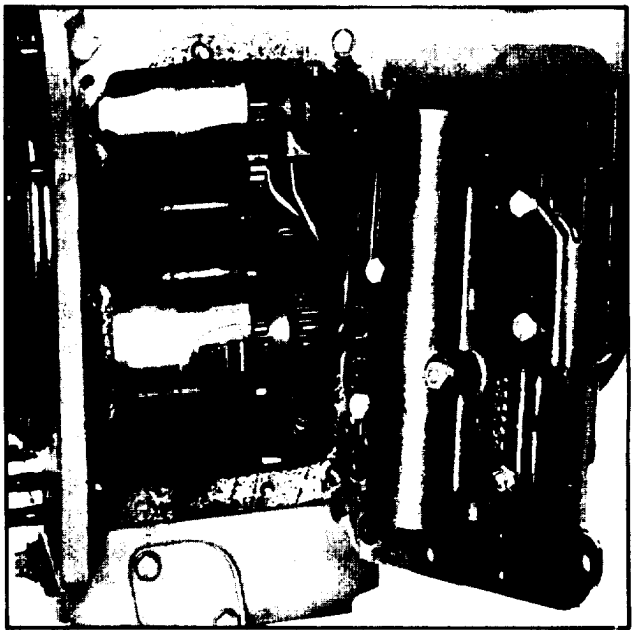

Step 5. Plate 10225

www.truck-freeworkshop.com/clark/

STEP 6. Using the control cover capscrews, Install into the threaded oil sleeves. After the capscrews are in place pry up on the capscrews while holding the oil tubes, to prevent damage to the tubes.

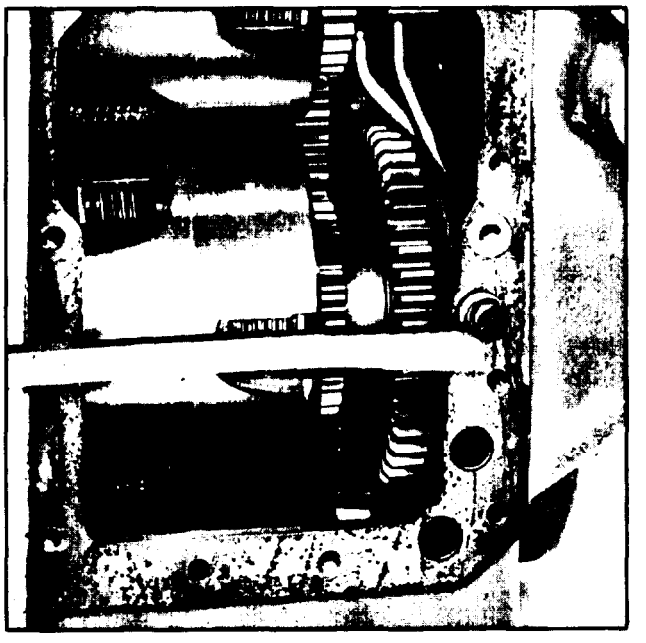

Step 6. Plate 10226

STEP 7. Remove the high and low oil tubes.

Step 7. Plate 10227

STEP 8. Remove the forward and reverse oil tubes,

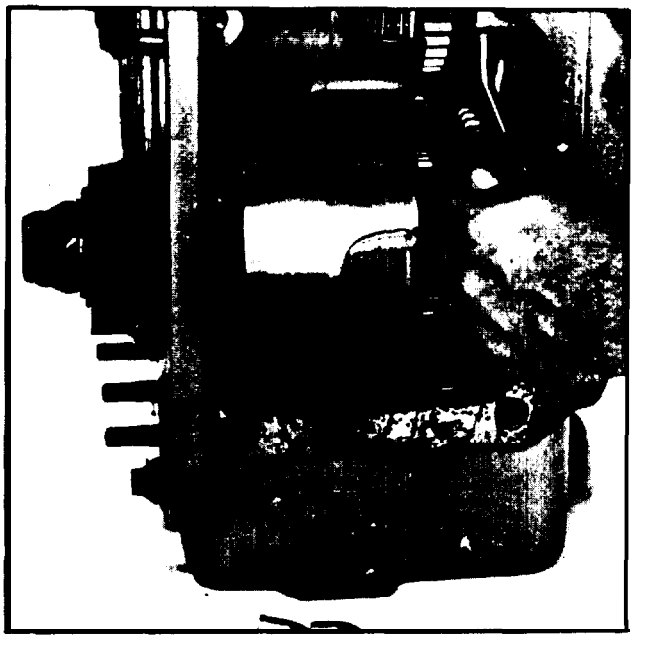

Step 8. Plate 10228

www.truck-freeworkshop.com/clark/

STEP 9. Remove the speed selector oil distributor retainer ring.

Step 9. Plate 10234

STEP 10. Remove the speed selector oil distributor by pulling straight out from transmission.

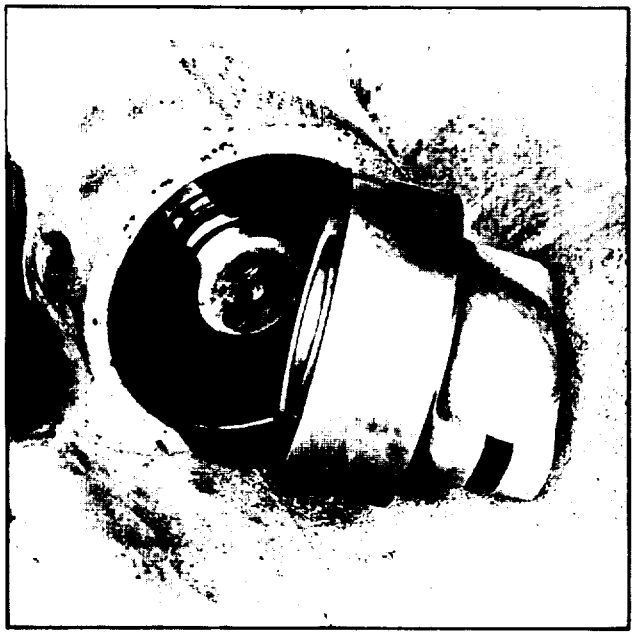

Step 10. Plate 10235

STEP 11. Block gear using soft brass stock as shown .

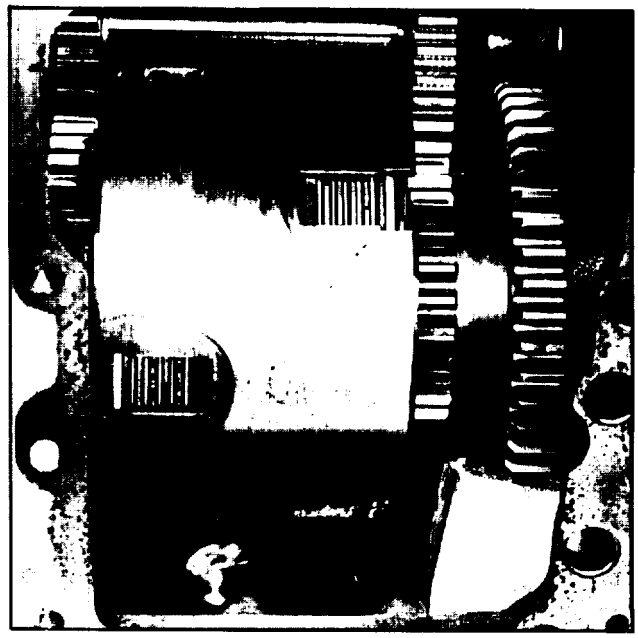

Step 11. 10236

www.truck-freeworkshop.com/clark/

STEP 12. Remove the output shaft retainer.

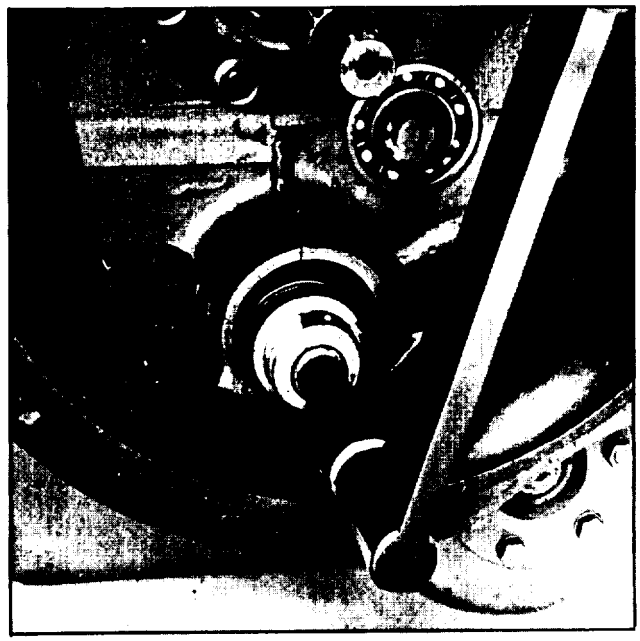

Step 12. Plate 10383

STEP 13. Drive the output shaft from the converter end toward axle adaptor end using a soft brass bar.

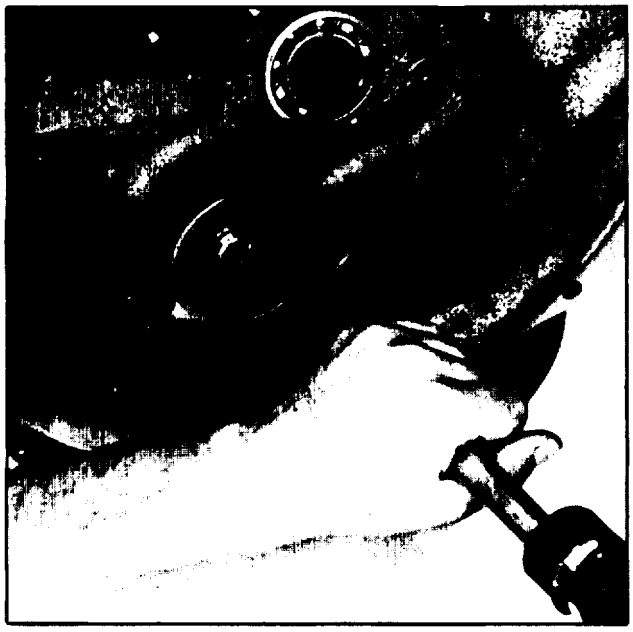

Step 13. Plate 10237

STEP 14. After shaft has been driven toward axle adaptor end enough to clear auxiliary gear, remove gear, spacer and thrust washer.

A. Continue to drive shaft until shaft assembly is free of clutch pack.

B. Remove Hi & Lo Clutch pack,

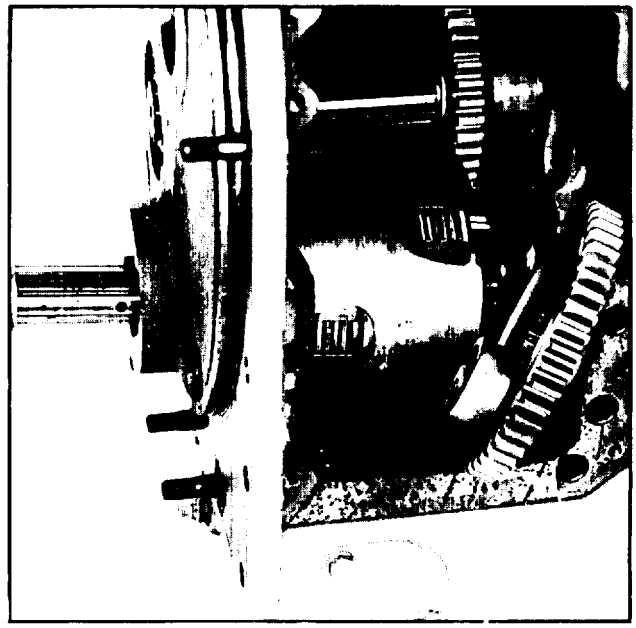

Step 14. Plate 10238

www.truck-freeworkshop.com/clark/

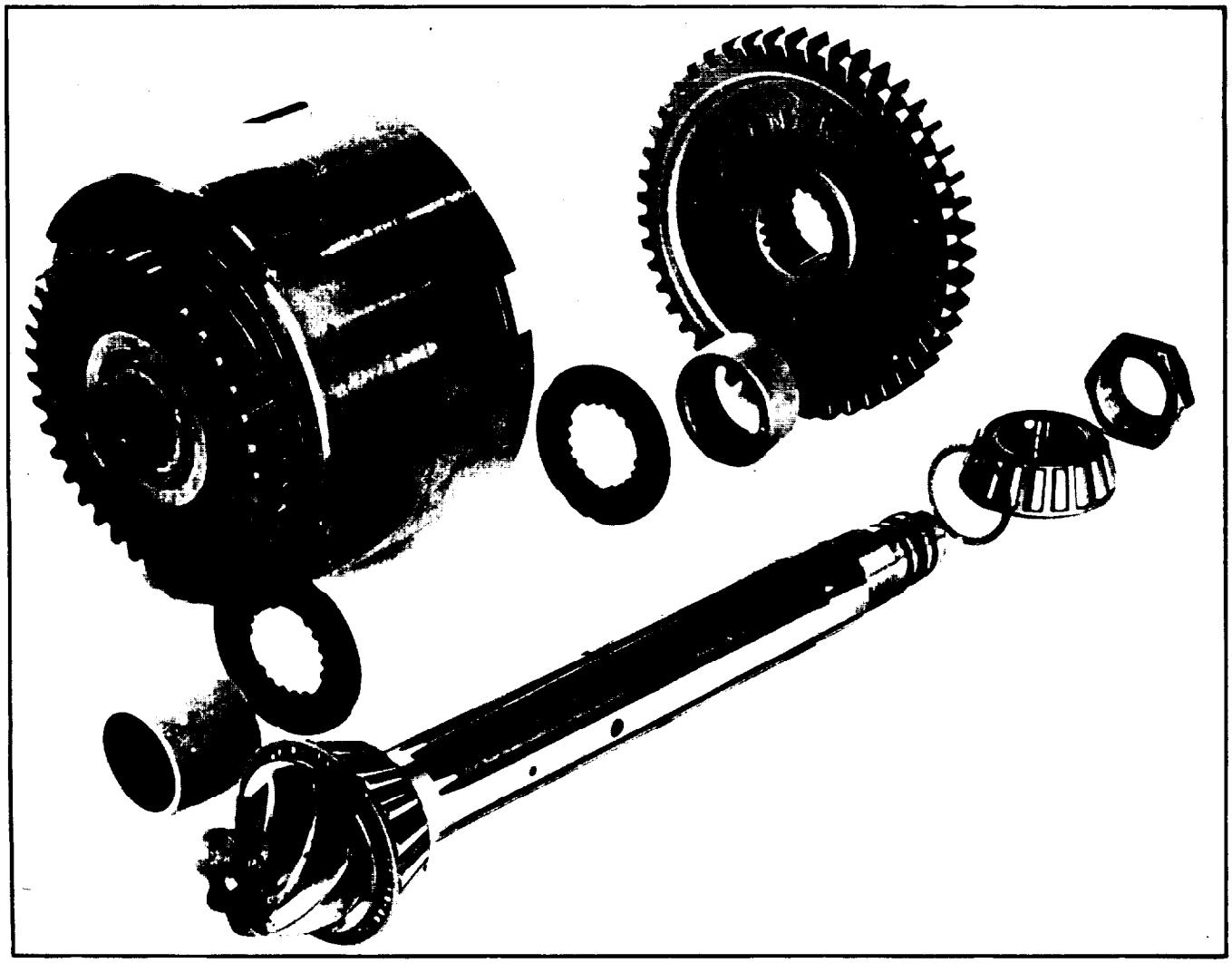

Plate 10244

Output Shaft Assembly

www.truck-freeworkshop.com/clark/

STEP 15. Remove the transmission Input shaft cap on axle adaptor end of transmission.

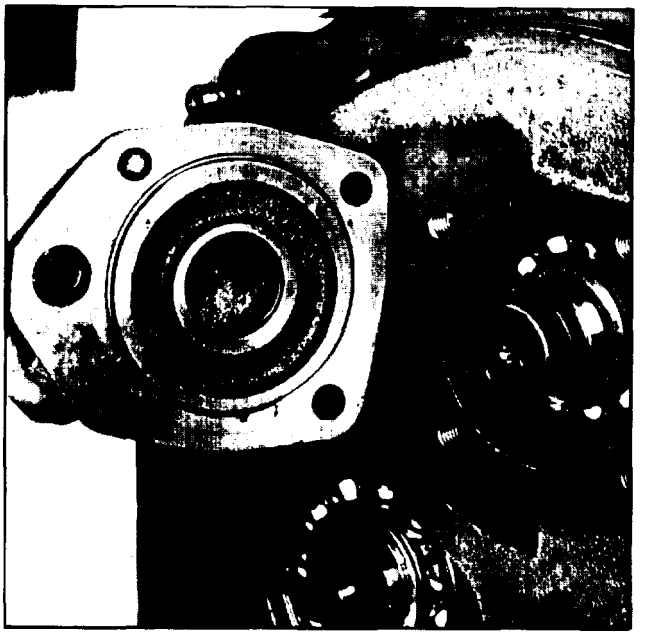

Step 15. Plate 10229

STEP 16. Check the input shaft cap for ring wear and imbeded foreign material. Cap must be replaced if one or both conditions exist.

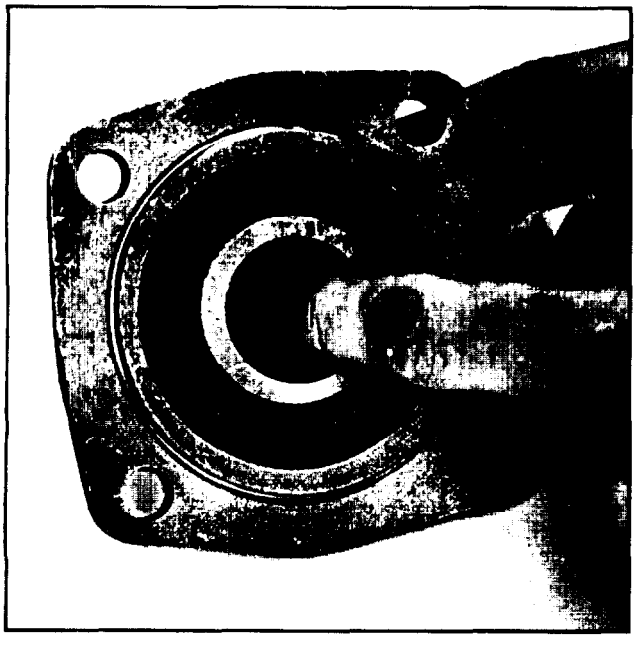

Step 16. Plate 10336

STEP 17. Remove the Input shaft retainer ring on the axle adaptor end of transmission.

Step 17. Plate 10230

www.truck-freeworkshop.com/clark/

STEP 18. Remove the stator support assembly.

Step 18. Plate 10231

STEP 19. Using a soft brass bar drive Input shaft from axle adaptor end toward converter end. Hold clutch pack as shaft is removed.

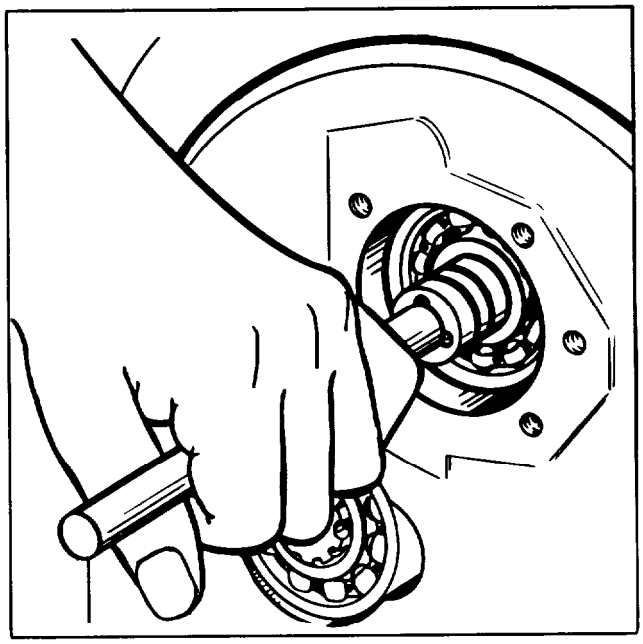

Step 19. Plate 10232

STEP 20. Remove the forward and reverse pack from the transmission.

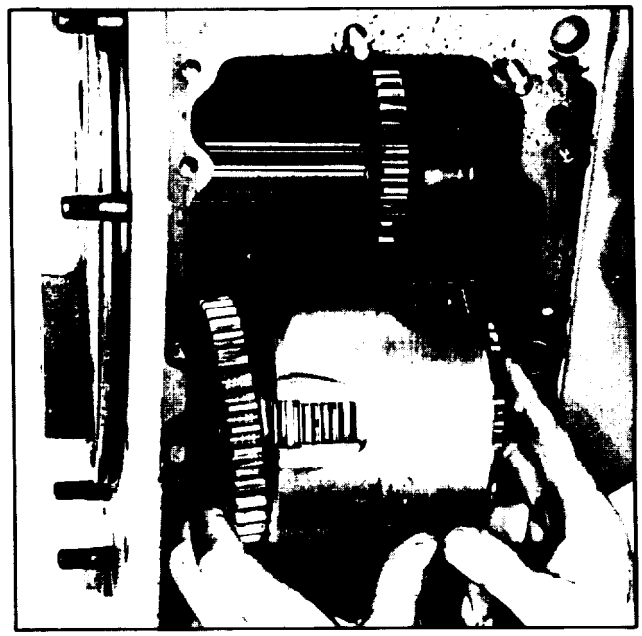

Step 20. Plate 10239

www.truck-freeworkshop.com/clark/

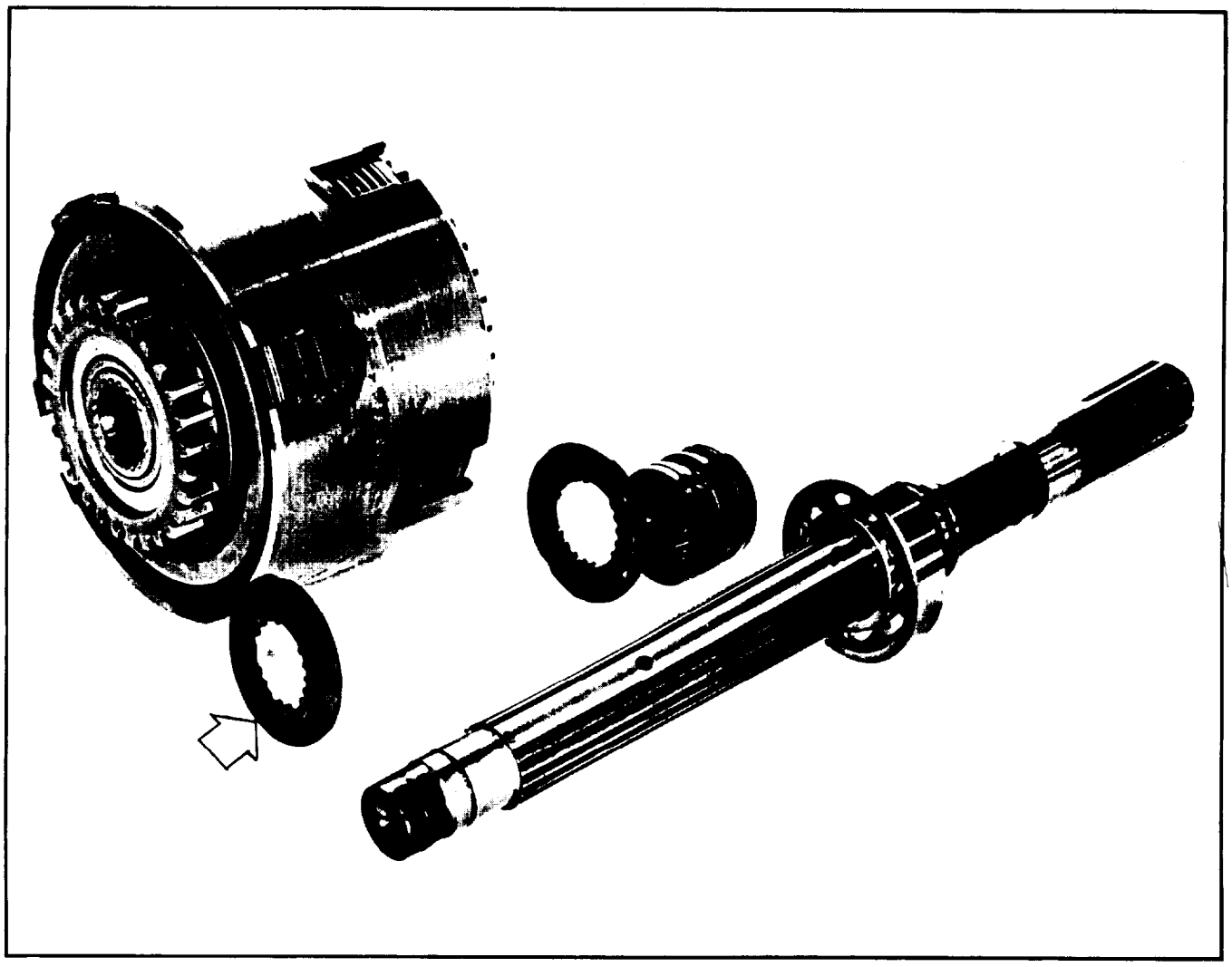

Plate 10243

Input Shaft Assembly

Located at the small gear end of the input shaft is a 1/4 In. thrust washer. Care must be used when reassembling transmission to make sure this washer is located In Its proper place.

www.truck-freeworkshop.com/clark/

STEP 21. Insert a long brass rod from axle adaptor end and drive the oil distributor from the transmission.

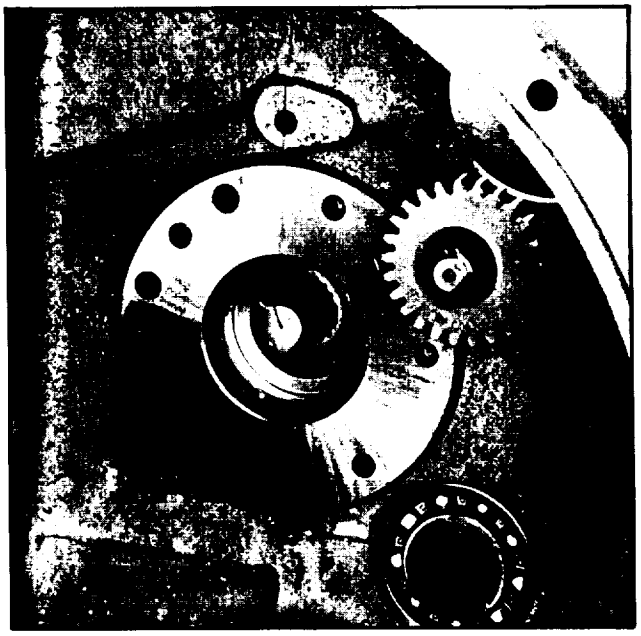

Step 21. Plate 10233

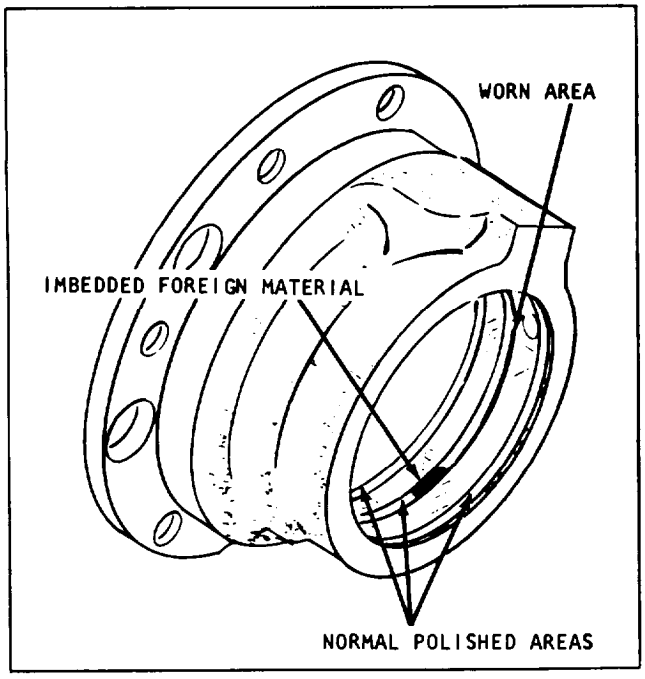

Step 22. Plate 10335

STEP 22. Check the oil distributor for ring wear and foreign material. The distributor must be replaced if one or both conditions e-xlst.

www.truck-freeworkshop.com/clark/

STEP 23. Remove the thrust washers, small gear and inner bearing race from the clutch pack.

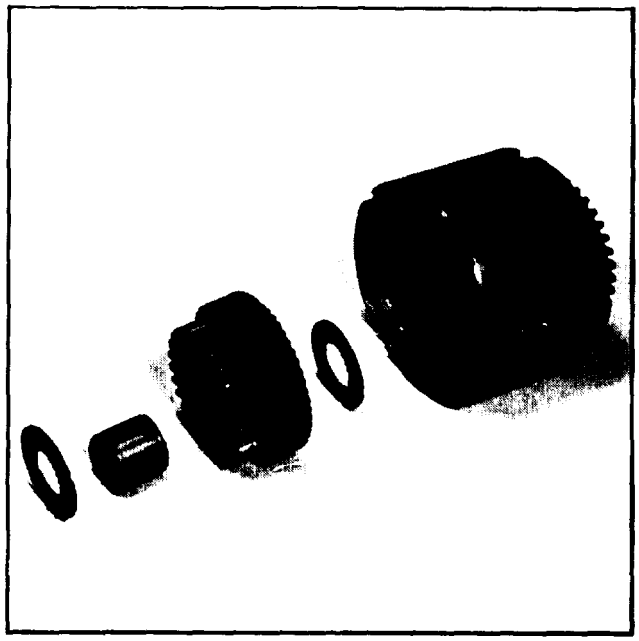

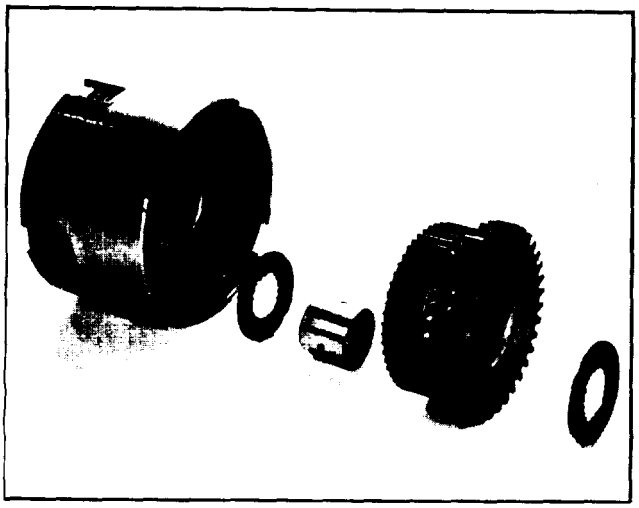

Step 23. Plate 10337

STEP 24. Remove the thrust washers, large gear and inner bearing race from the clutch pack.

www.truck-freeworkshop.com/clark/

STEP 25. Remove the clutch end plate and disc retainer ring and remove the clutch plates.

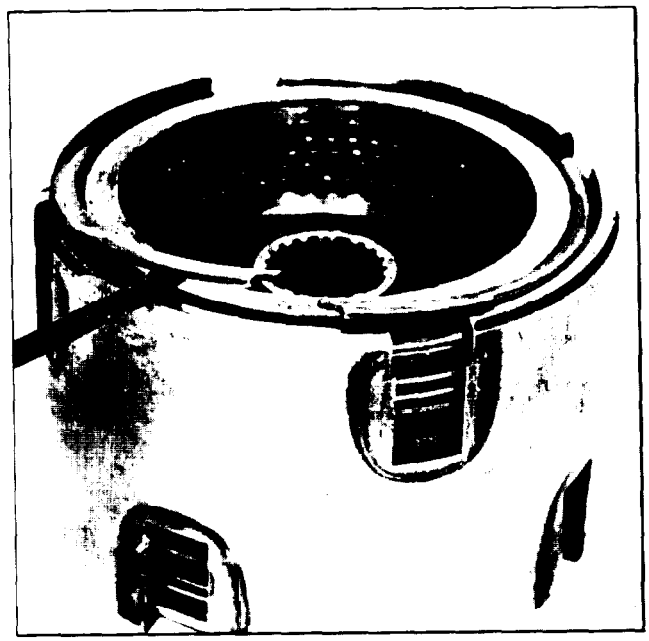

Step 25. Plate 10338

STEP 26. Install the clutch pack disassembly tool and remove the spring retainer snap ring, spring retainer, and springs.

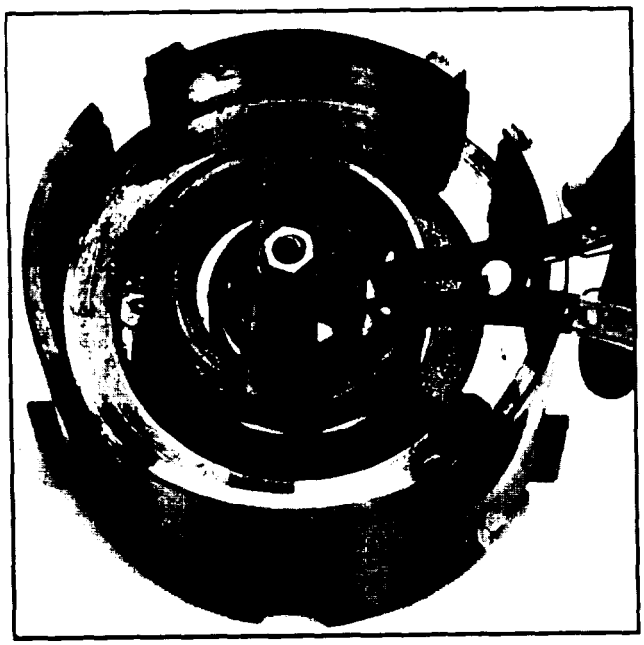

Step 26. Plate 10339

STEP 27. Remove the clutch pack piston assembly.

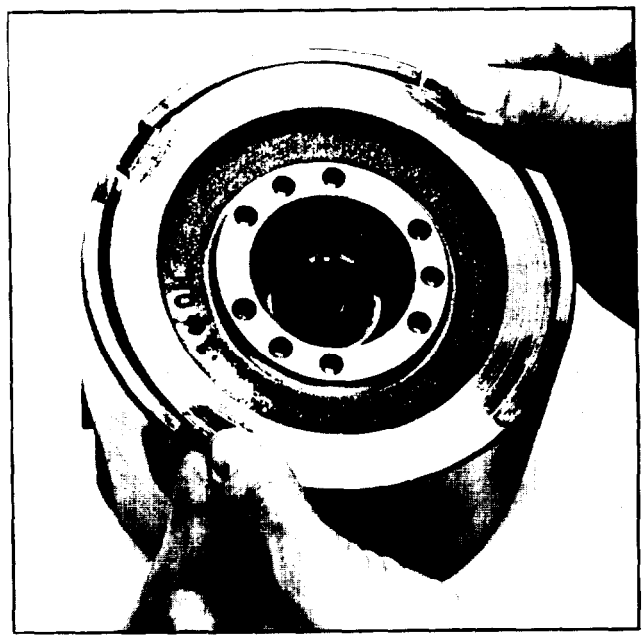

Step 27. Plate 10340

www.truck-freeworkshop.com/clark/

STEP 28. The clutch drum assembly contains bleedoff orifices and must be cleaned with a fine wire to remove all foreign material and obstructions.

Step 28. Plate 10341

STEP 29. Check the clutch hub ring seal side clearance. A MAXIMUM of .008 and above will require ring replacement.

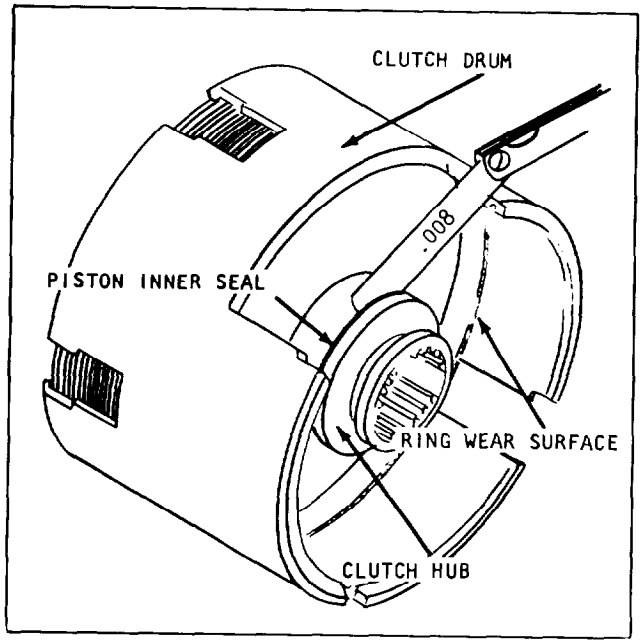

Step 29. Plate 10331

STEP 30. Check the clutch piston outer seal side clearance. A MAXIMUM of .008 and above will require ring replacement.

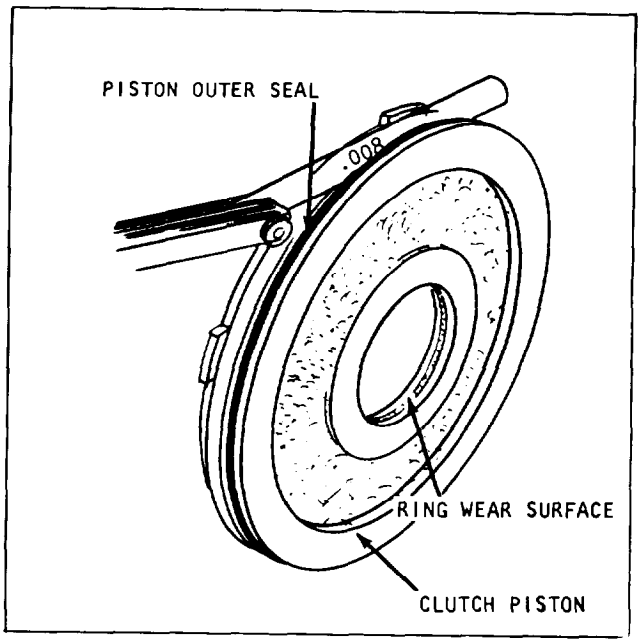

Step 30. Plate 10330

www.truck-freeworkshop.com/clark/

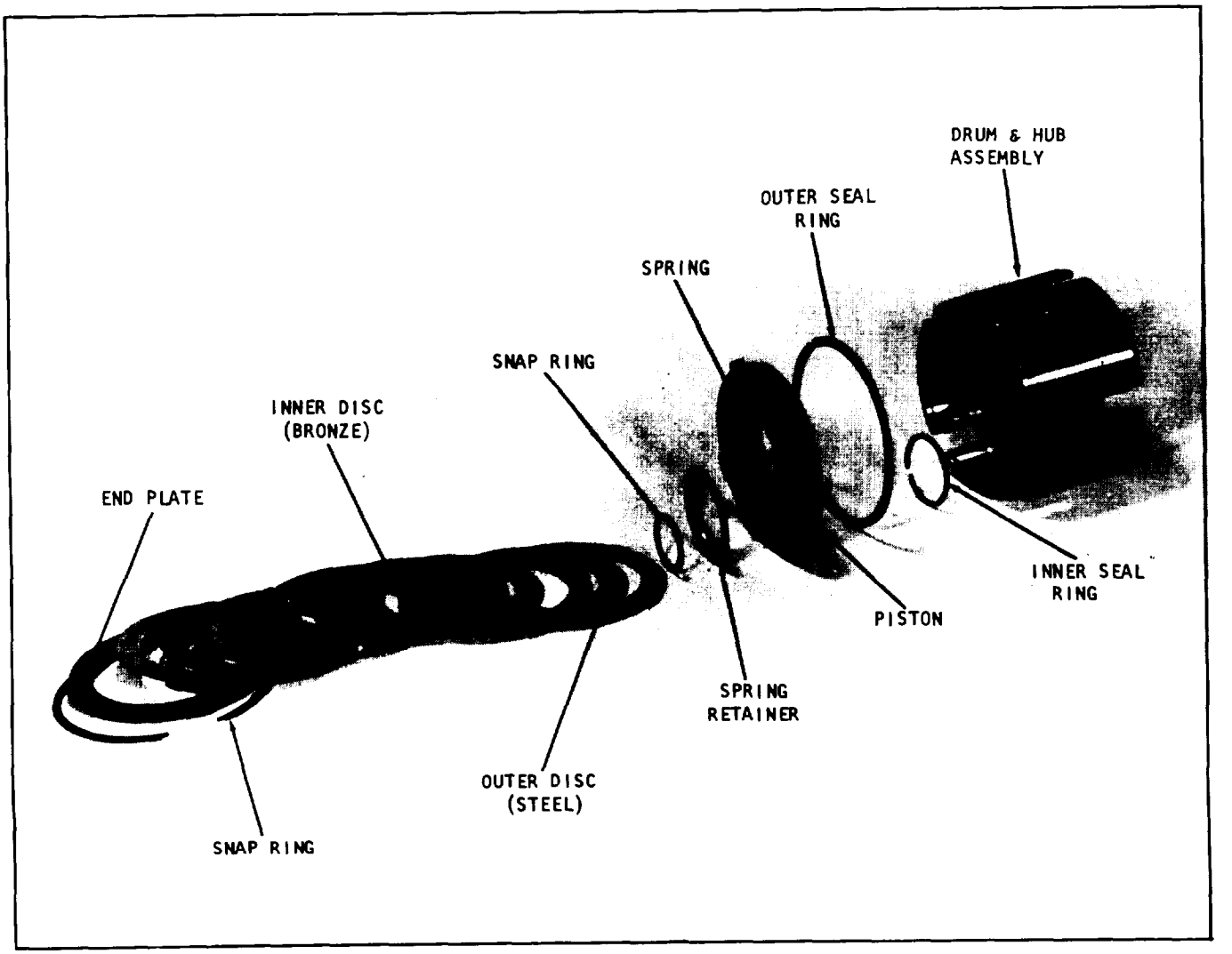

Plate 8039

Clutch Pack Assembly

www.truck-freeworkshop.com/clark/

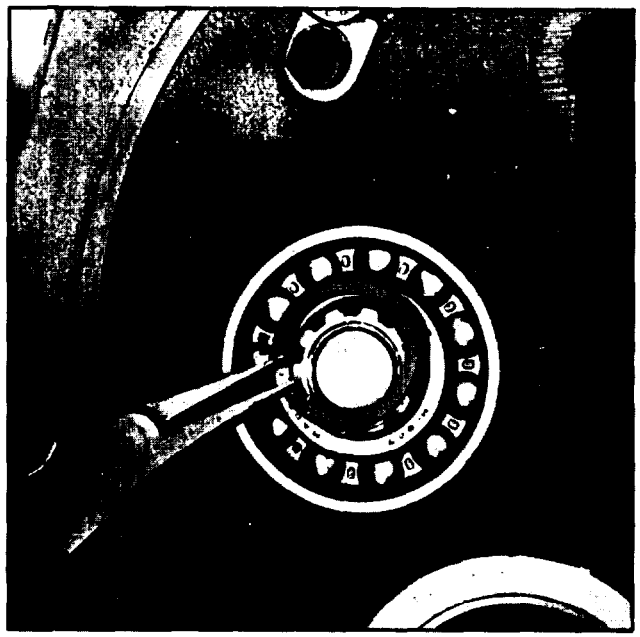

Step 31. Plate 10098

STEP 31. Remove the intermediate shaft retainer ring on the axle adaptor end of transmission.

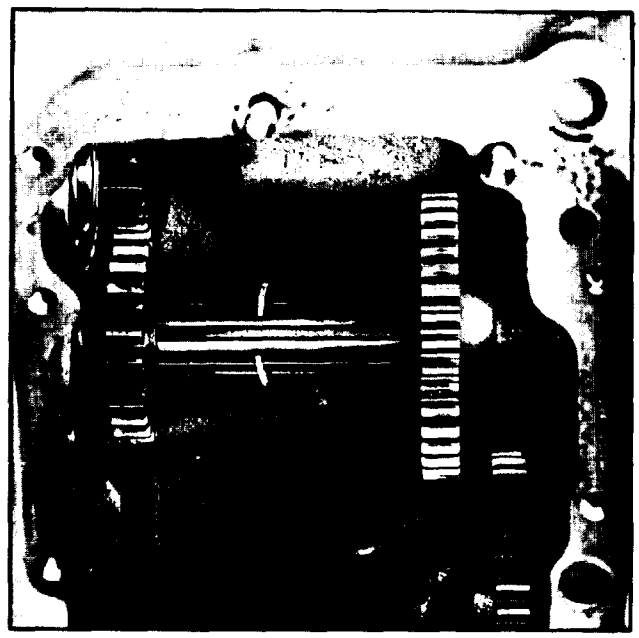

Step 32. Plate 10240

STEP 32. Remove the intermediate gear retainer ring from retainer slot and slide to position shown.

STEP 33. Using brass drift, drive intermediate shaft toward converter end about four inches,

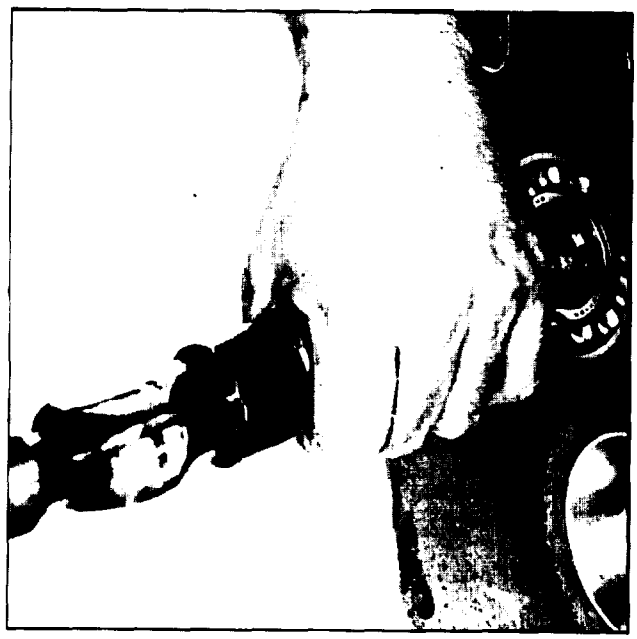

Step 33. Plate 10099

STEP 34. Remove intermediate gears and retainer rings by sliding off shaft.

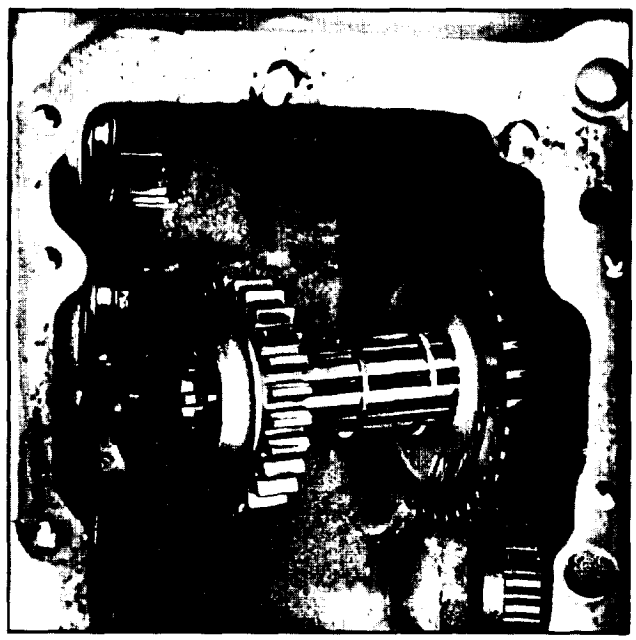

Step 34. Plate 10241

www.truck-freeworkshop.com/clark/

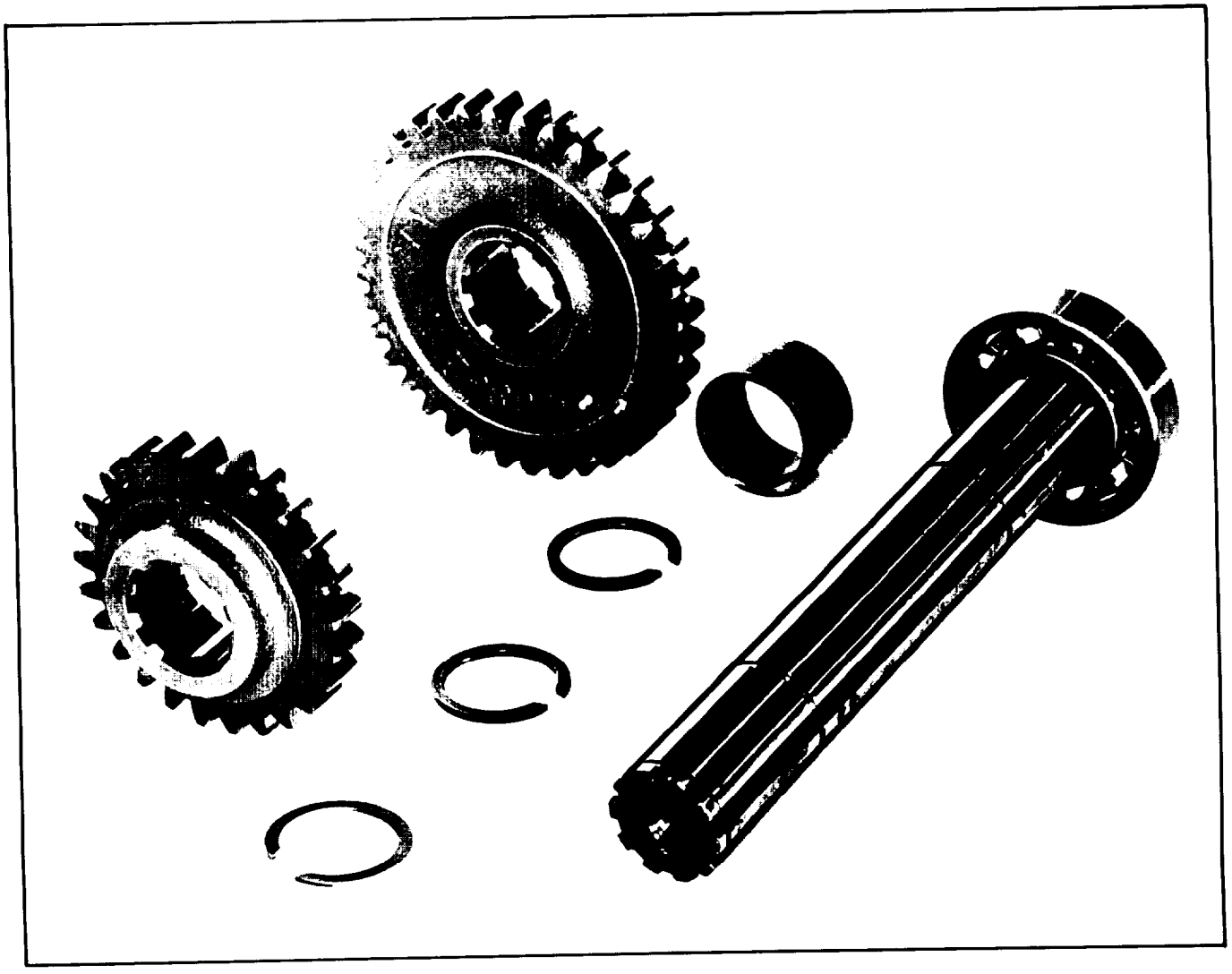

Plate 10242

Intermediate Shaft Assembly

www.truck-freeworkshop.com/clark/

STEP 34A. Remove reverse idler gear fasteners and gear.

STEP 35. Remove the converter pump idler gear fastener.

STEP 36. Remove the thrust washer and idler gear from shaft.

Step 35 - 36. Plate 10342

NOTE

The idler shaft has left hand threads, and must be loosened in a clockwise rotation.

STEP 37. Bend locking tang from shaft fiat and remove the shaft from transmission.

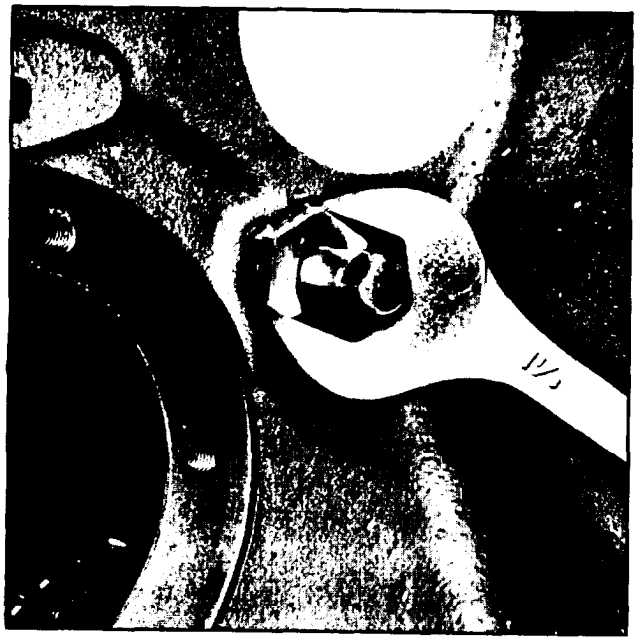

Step 37. Plate 10343

STEP 38. Note the position of the locking tang to the transmission housing.

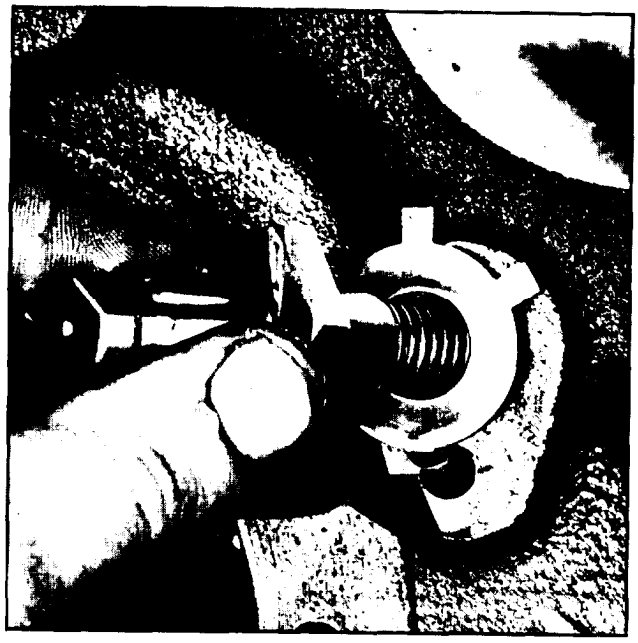

Step 38. Plate 10344

www.truck-freeworkshop.com/clark/

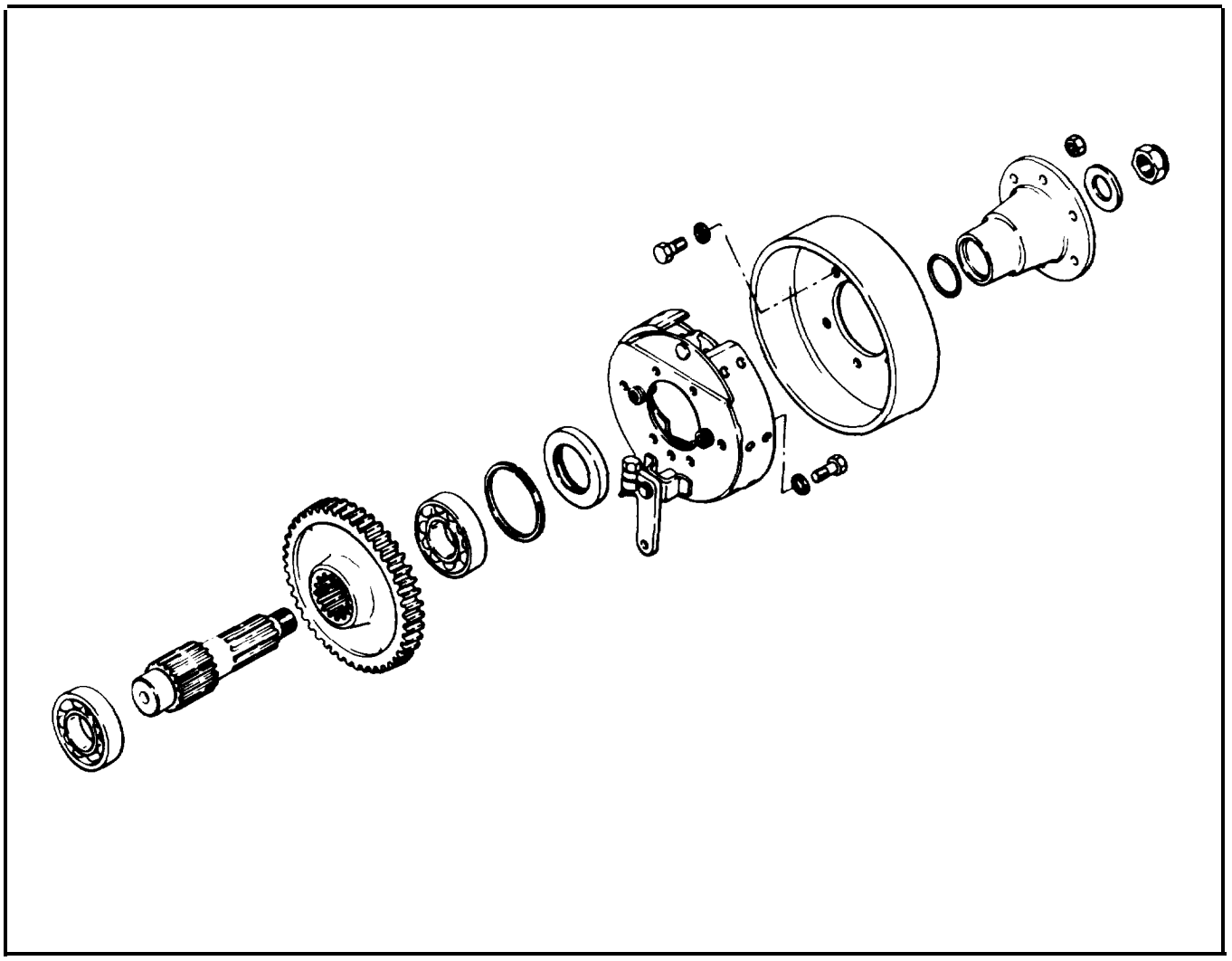

Plate 10103

The parking brake will not have to be removed except in the event of replacement of bearings, gears or seals.

DISASSEMBLY:

STEP 1. Remove parking brake drum fastener.

STEP 2. Remove drum and flange assembly from auxiliary shaft.

STEP 3. Remove parking brake fasteners and remove parking brake.

STEP 4. Using puller, remove parking brake drum flange seal.

STEP 5. Remove auxiliary shaft retainer ring.

STEP 6. Remove bearing using appropriate puller. (engine end)

STEP 7. Remove auxiliary gear and shaft

STEP 8. Remove auxiliary bearing. (axle end)

REASSEMBLY:

STEP 1. Install auxiliary bearing. (axle end)

STEP 2. Install auxiliary shaft and gear.

STEP 3. Install bearing and retainer ring. (engine end)

STEP 4. Install flange seal and parking brake assembly.

STEP 5. Install flange and drum assembly.

STEP 6. Install flange fastener (torque to specifications).

www.truck-freeworkshop.com/clark/

STEP 1. Install reverse idler gear and fasteners.

STEP 1A. Install the idler gear thrust washer making sure the locking tang is in the locking hole, and install the idler shaft.

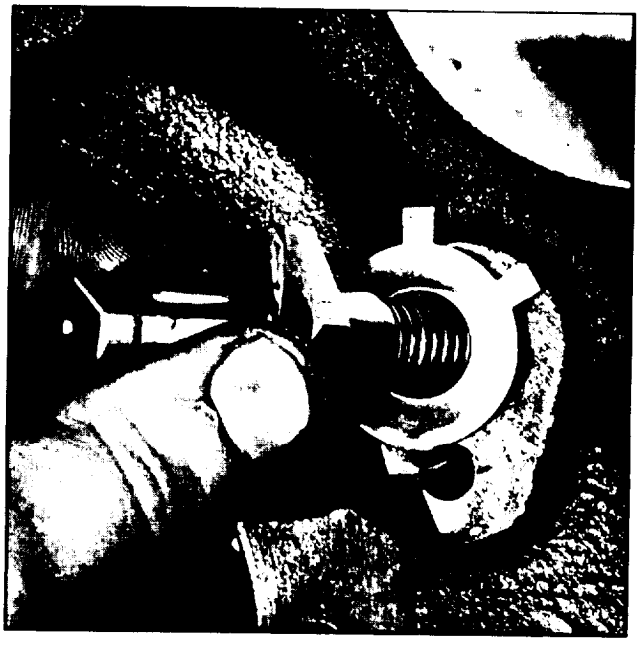

Step 1. Plate 10344

STEP 2. After shaft is installed shaft must be torqued (see specification page).

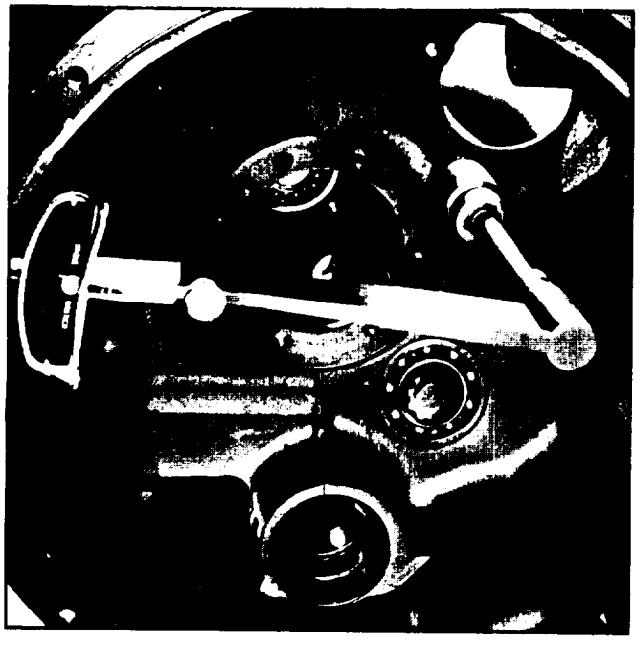

Step 2. Plate 10345

STEP 3. After shaft is torqued to specifications bend the locking tang down to prevent loosening of the shaft.

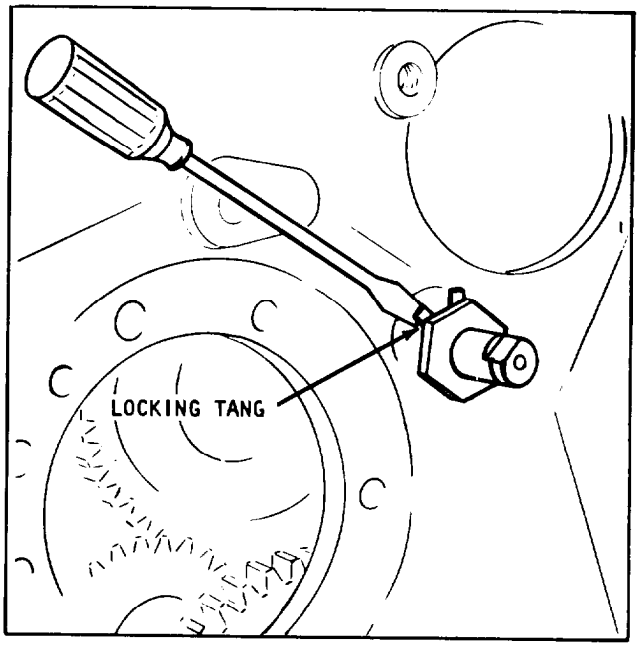

Step 3. Plate 10346

www.truck-freeworkshop.com/clark/

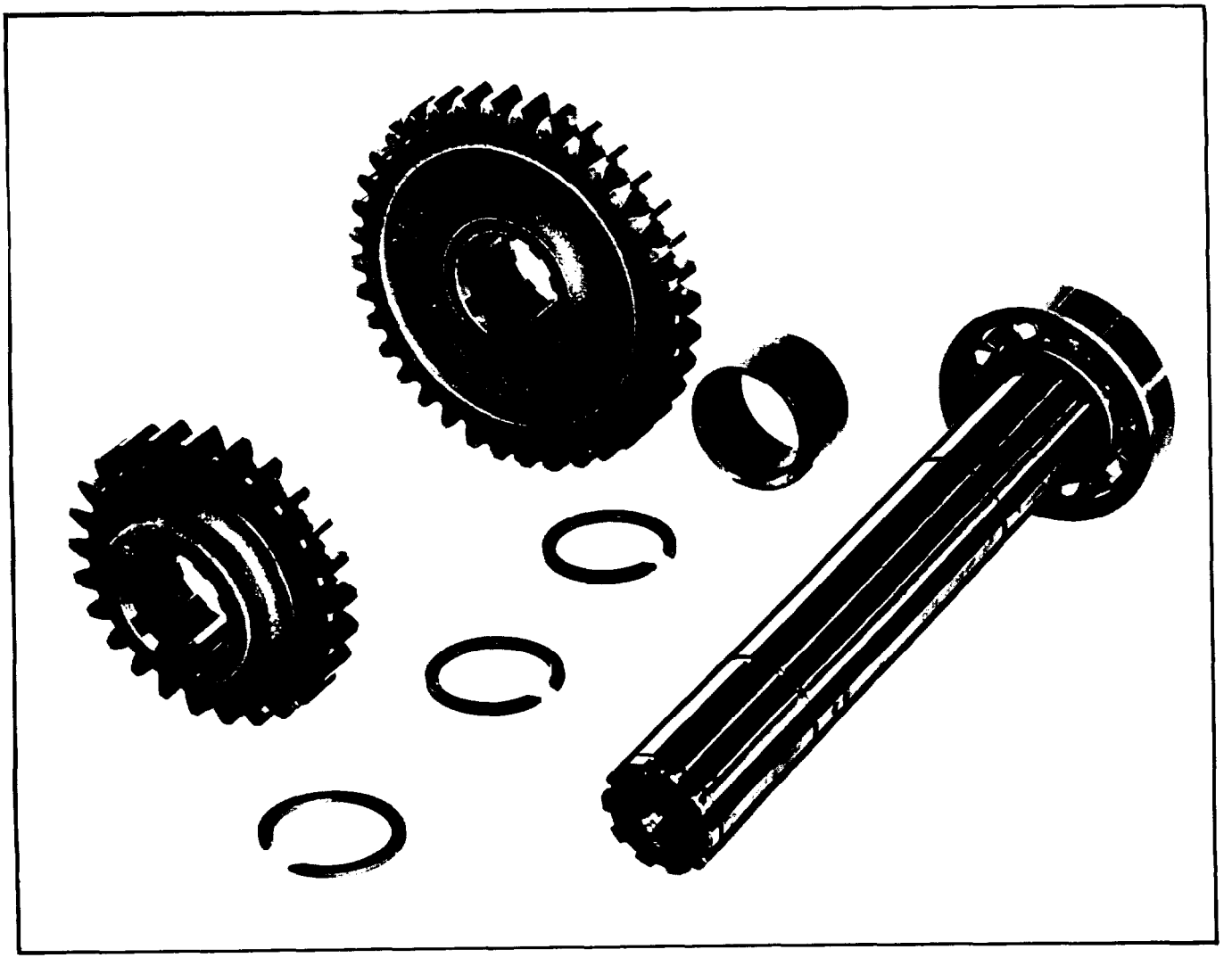

Plate 10242

Intermediate Shaft Assembly

www.truck-freeworkshop.com/clark/

STEP 4. Insert the intermediate shaft from the converter end of the transmission with bearing installed on shaft,

STEP 5. Install on the shaft, the shaft spacer, (making sure the beveled end of spacer is toward the bearing) large intermediate gear, (hub of gear toward converter end) large gear lock ring small gear locking ring. Small intermediate gear, (hub of gear toward axle adaptor end).

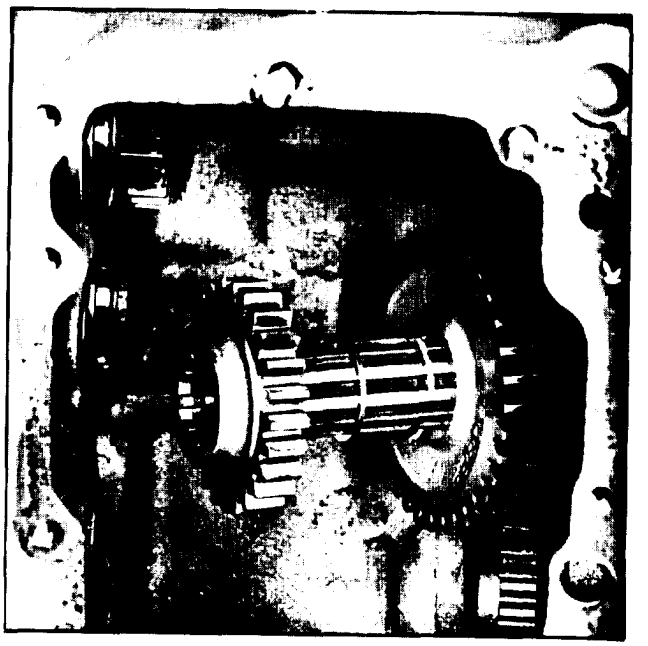

Step 4 - 5. Plate 10241

STEP 6. After the shaft has been installed into the intermediate bearing install the large gear retainer ring into position.

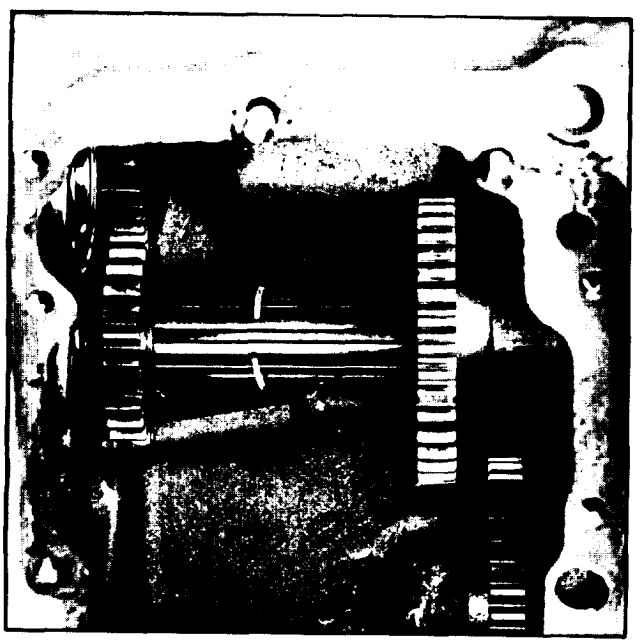

Step 6. Plate 10240

STEP 7. Install the intermediate shaft retainer on the axle adaptor end of the transmission.

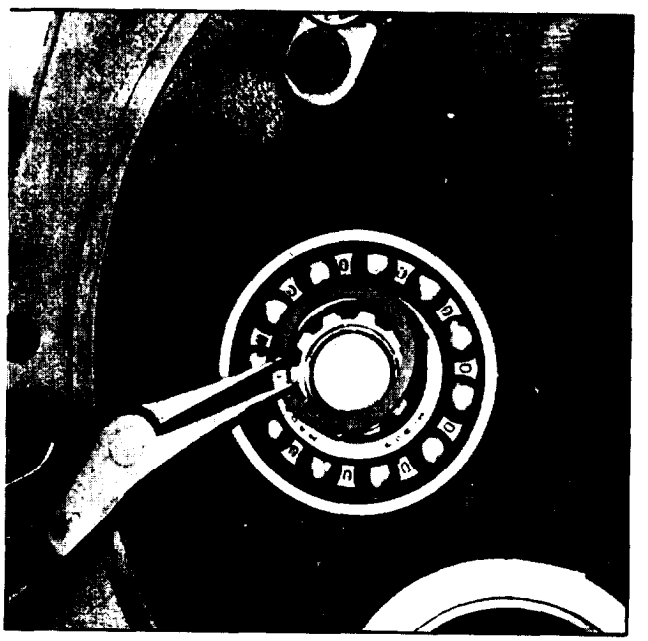

Step 7. Plate 10098

www.truck-freeworkshop.com/clark/

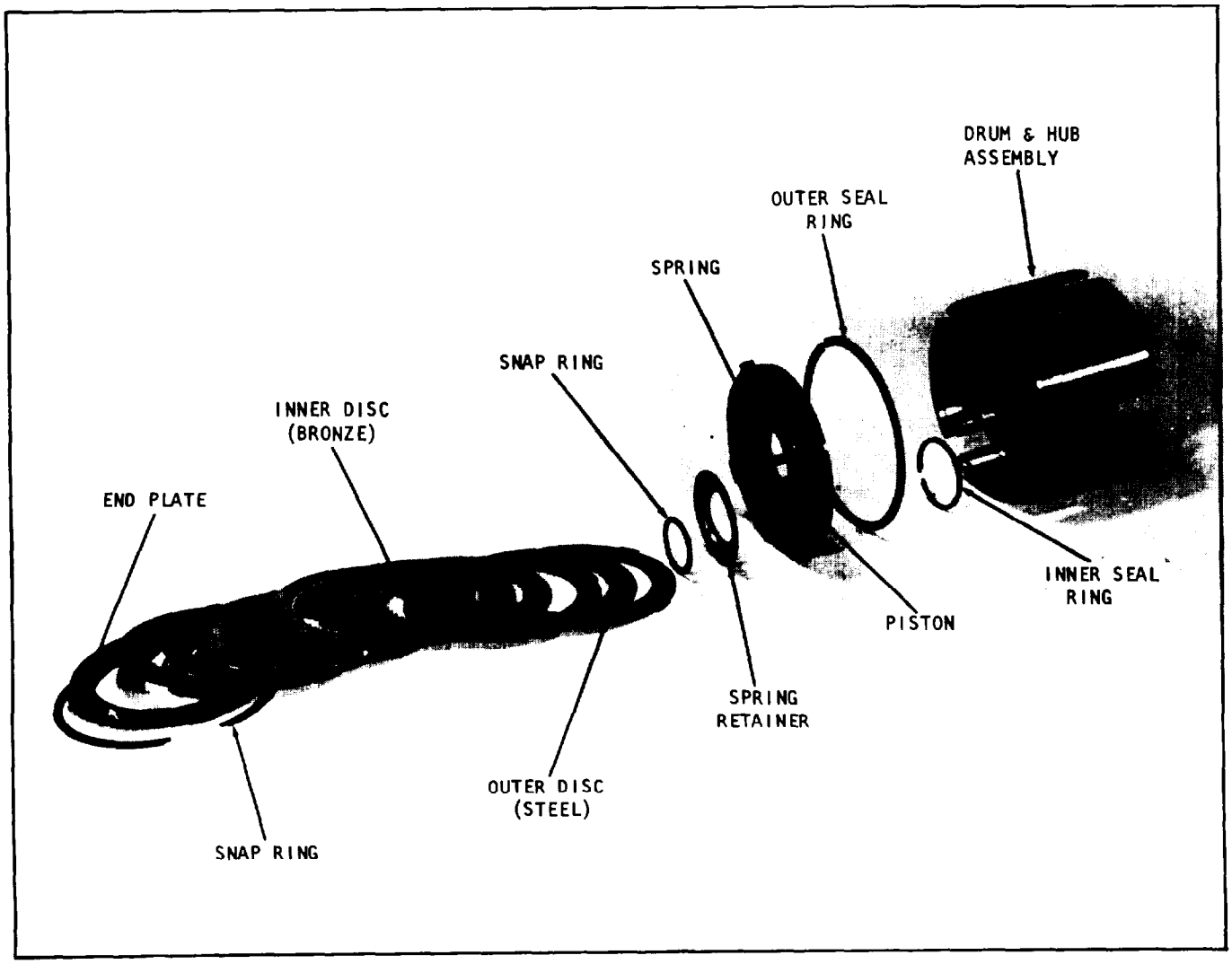

Plate 8039

CLUTCH PACK HUB AND DRUM, PISTON AND DISC ASSEMBLY.

www.truck-freeworkshop.com/clark/

STEP 8. Check the clutch hub ring seal side clearance. A MAXIMUM wear of .008 and above will require ring replacement.

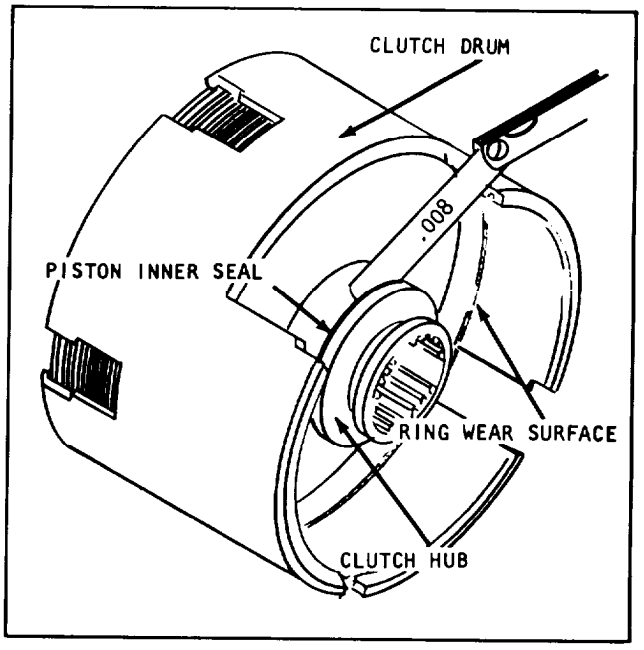

Step 8. Plate 10331

STEP 9. Check the clutch piston outer seal side clearance. A MAXIMUM wear of .008 and above will require ring replacment.

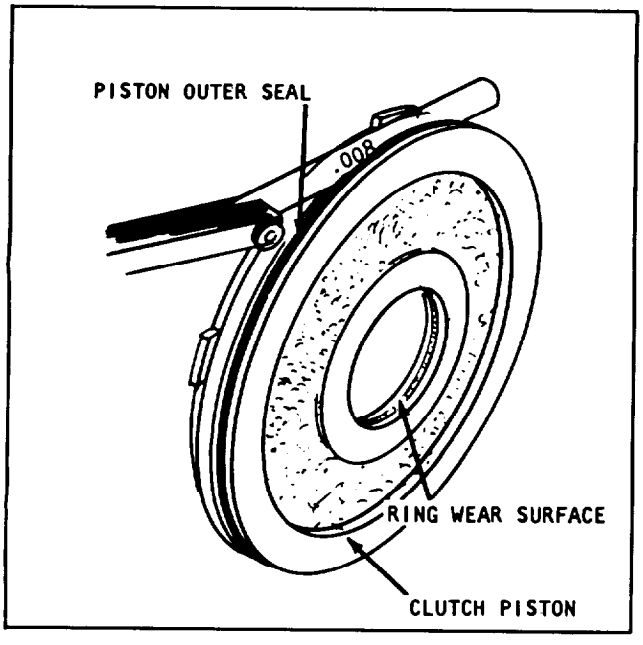

Step 9. Plate 10330

STEP 10. Check the clutch bleed-off orifices using a fine wire, to insure that all foreign material is removed.

Step 10. Plate 10341

www.truck-freeworkshop.com/clark/

STEP 11. Install the clutch piston into drum and over hub.

Step Il. Plate 10340

STEP 12. Install the clutch springs, spring retainer, and locking ring. Now install the spring compressing tool and tighten the tool until the locking ring can be installed and then remove the tool.

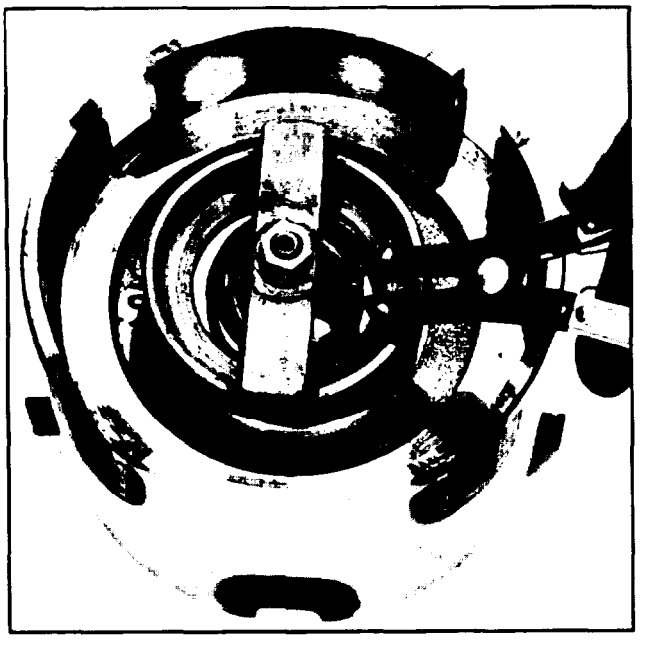

Step 12. Plate 10339

The below tool is used for ease of selector pack assembly. Two of the splines are slightly more shallow than the remaining splines and are used as an index to align oil holes. The shaft will enter the selector hub and inner bearing races in one position only.

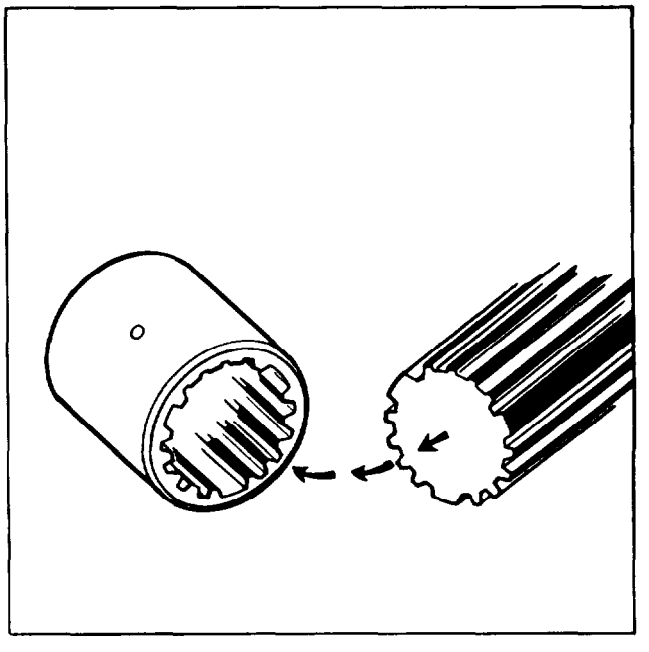

Plate 10245

www.truck-freeworkshop.com/clark/

STEP 13. Install a steel disc plate, then a bronze disc plate alternate In this manner until the appropriate number of plates have been installed.

STEP 14. Install the end plate and retainer ring.

STEP 15. Now turn the drun assembly over and complete steps 8 - 9 - 10 - 11 - 12 - 13 and 14. Both sides of the drum assemble the same.

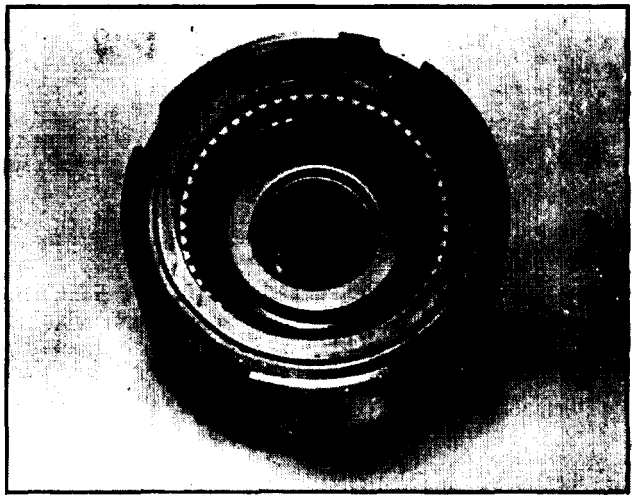

Step 13 - 14 - 15. Plate 8040

STEP 16. Install the clutch pack assembly tool through the clutch hub, the tool will only fit one way because of index splines. The part number of this tool is 801435.

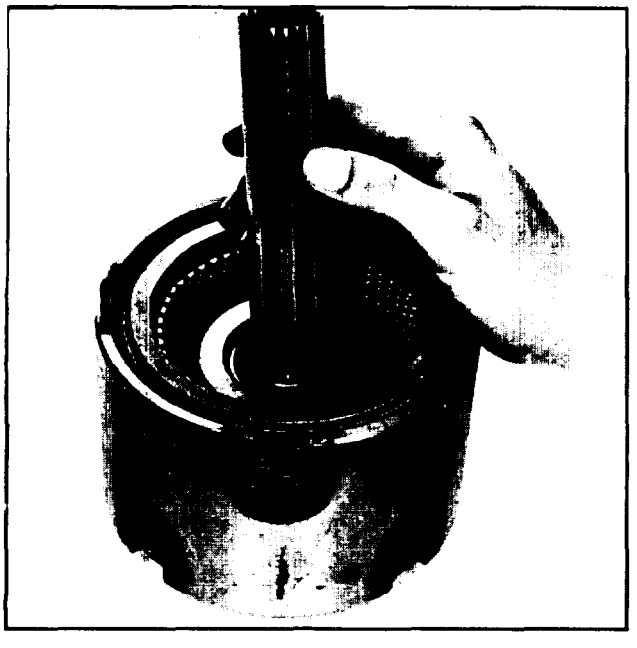

Step 16. Plate 10347

STEP 17. Install the inner thrust washer with its grooves up ..... using the tool as a guide.

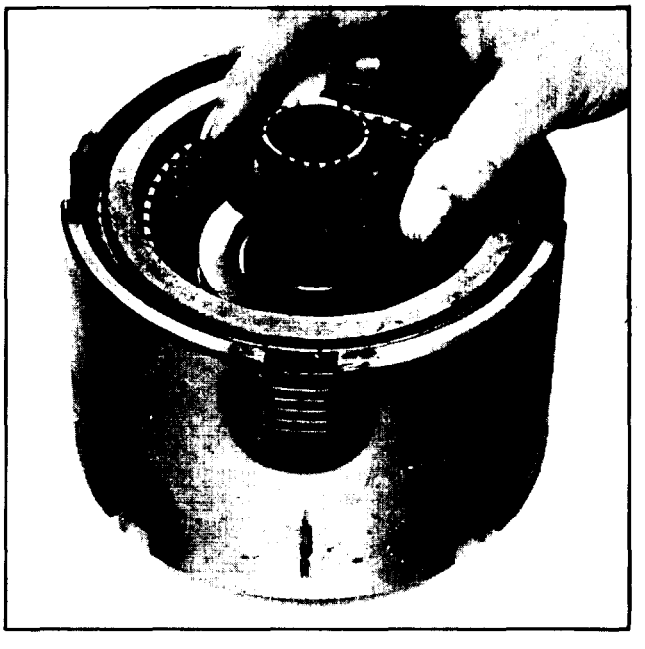

Step 17. Plate 10348

www.truck-freeworkshop.com/clark/

STEP 18. Install the gear, turning it back and forth until all of the bronze discs are engaged.

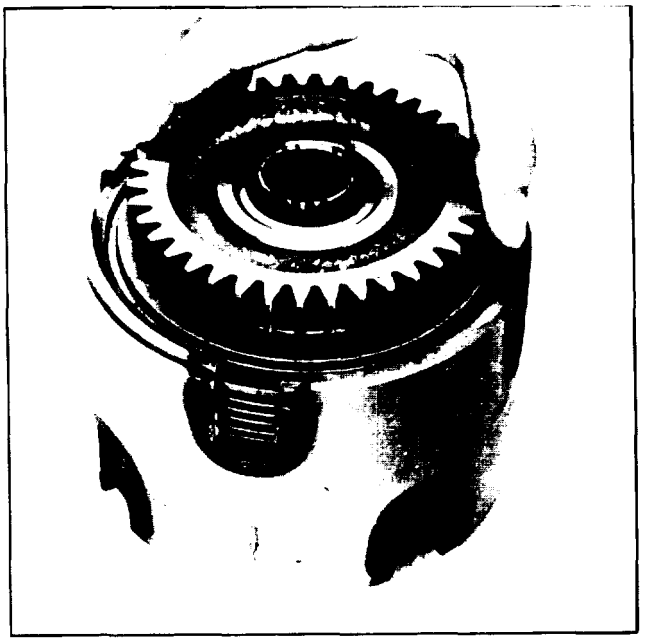

Step 18. Plate 10349

STEP 19. Insert the bearing race, remembering it will fit in only one position on shaft.

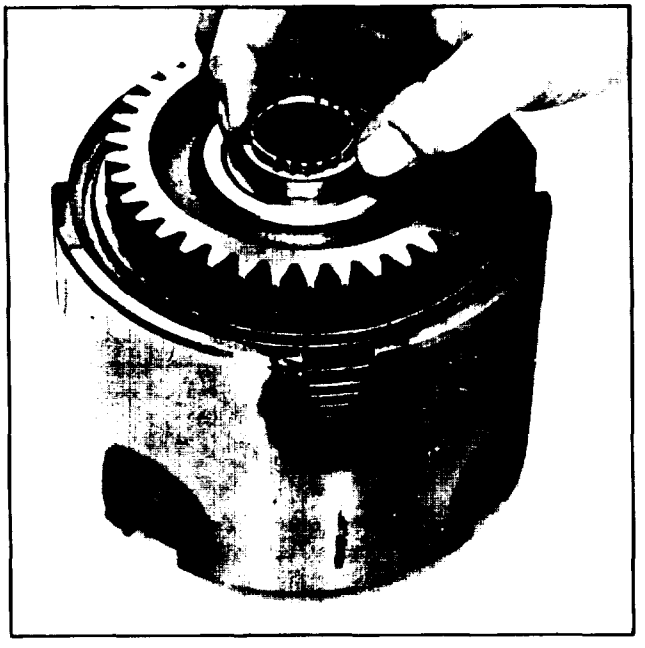

Step 19. Plate 10350

STEP 20. Install the outer thrust washer with its face down on shaft. Now turn the clutch pack up side down and complete steps 17 - 18 - 19 and 20.

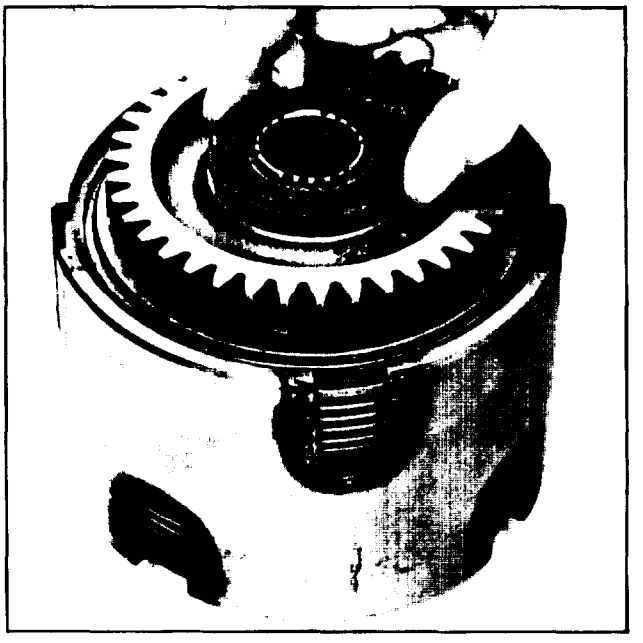

Step 20. Plate 10351

www.truck-freeworkshop.com/clark/

STEP 21. Parts location of small gear end of clutch pack.

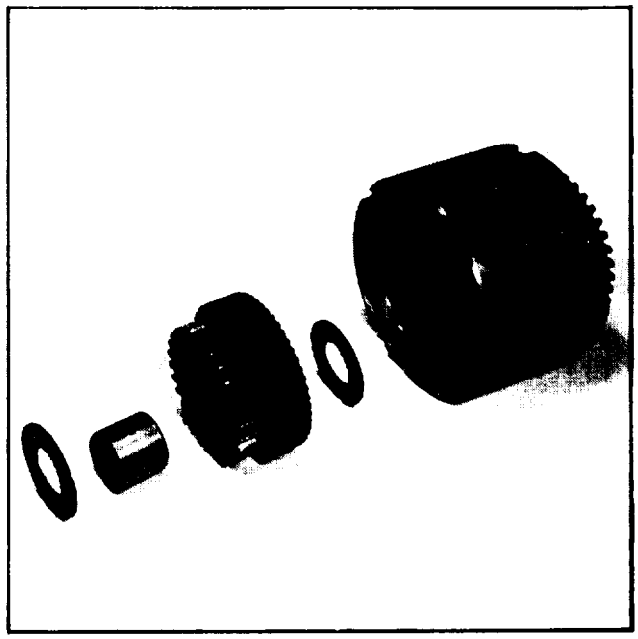

Step 21. Plate 8038

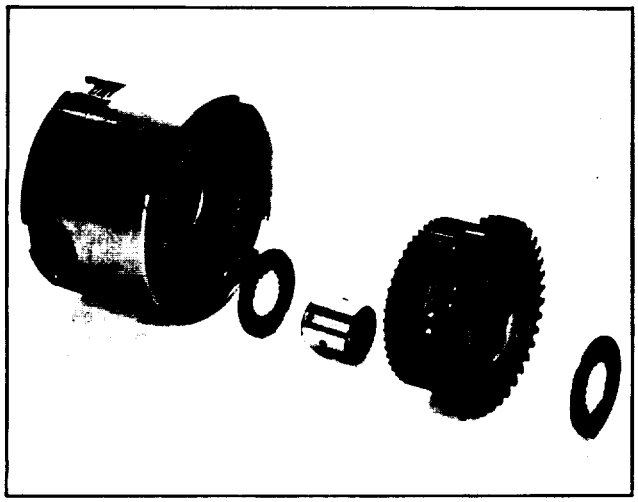

Step 22. Plate 10337

STEP 22. Parts location of large gear end of clutch pack.

www.truck-freeworkshop.com/clark/

STEP 23. Turn the gear and watch the inner discs to determine if they are engaged. When the gear has completely entered the discs it should be 1/4 inch below the top of the end plate. Install a thrust washer over the shaft with the lubrication grooves facing the gear.

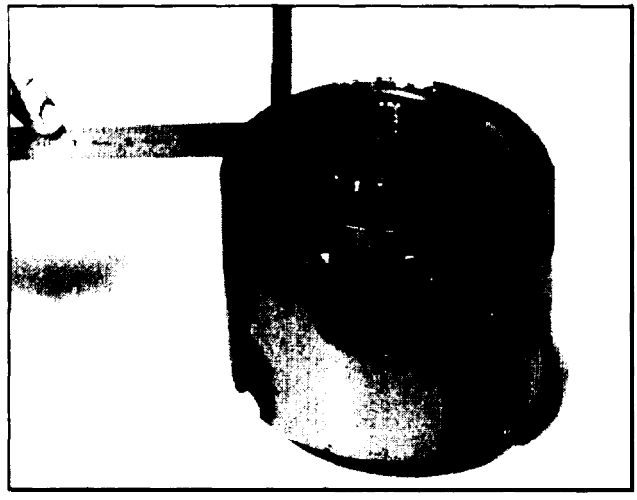

Step 23. Plate 8043

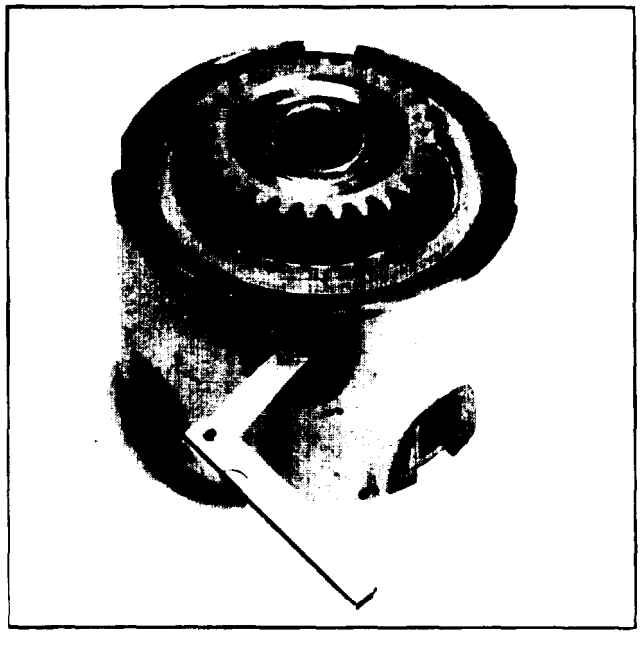

Step 24. Plate 8045

STEP 24. Check the total clearance of each set of discs by inserting a feeler-gauge between any two discs. if a .050 inch feeler will not enter between the discs the clearance is insufficient and one steel disc should be removed from the outer end of that particular pack. if a .120 feeler will enter, the clearance is too great and a steel disc should be added to the pack. Add or remove a steel disc as necessary to maintain a minimum clearance of .050 inch or a maximum of .120 inch at each pack.

www.truck-freeworkshop.com/clark/

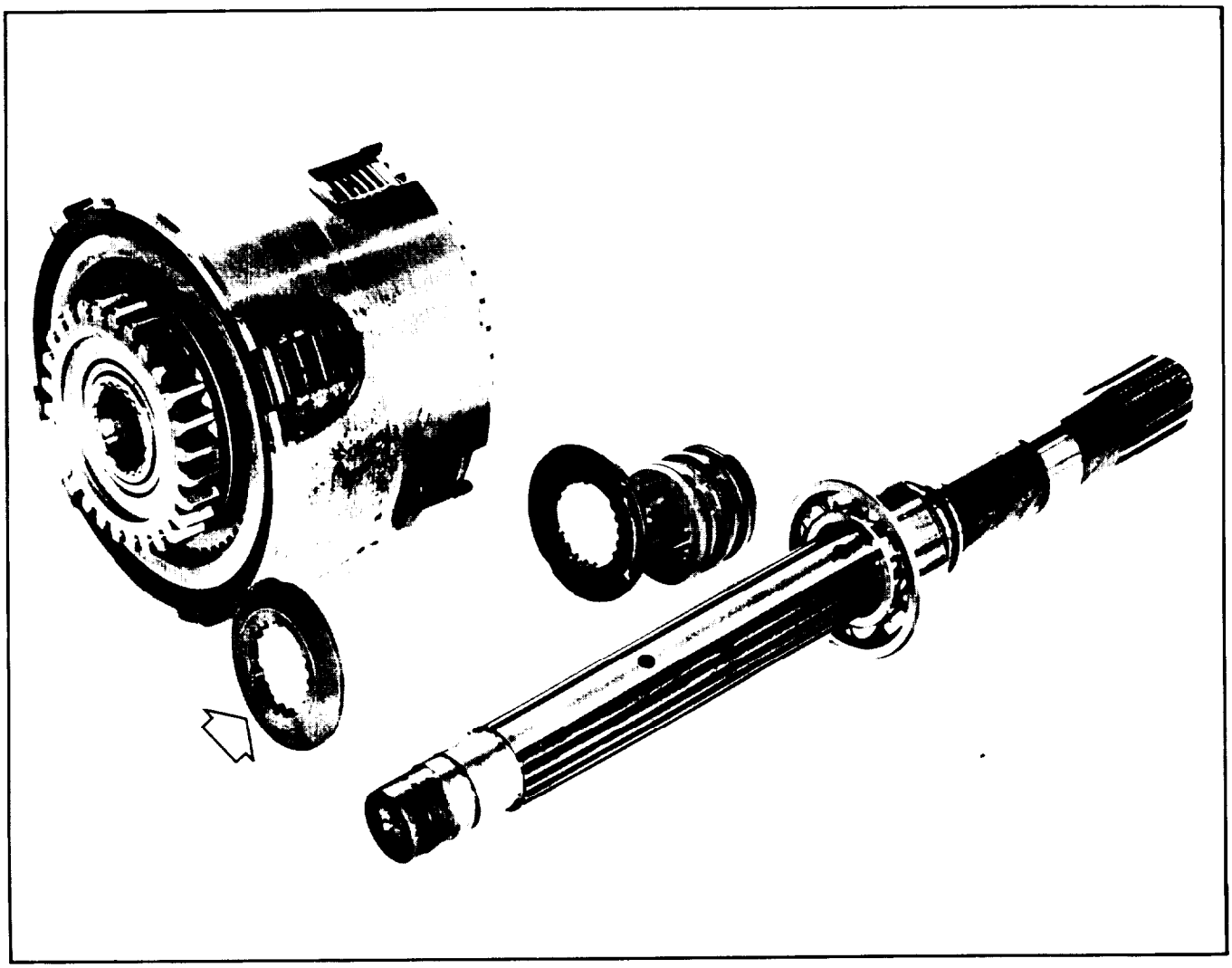

Plate 10243

INPUT SHAFT ASSEMBLY

Located at the small gear end of the input shaft is a 1/4 in. thrust washer. Care must be used when reassembling transmission to make sure this washer is located in its proper place.

www.truck-freeworkshop.com/clark/

STEP 25. Check the sealing rings on the input shaft. Rings must be replaced if a MAXIMUM of .008 wear and above exists.

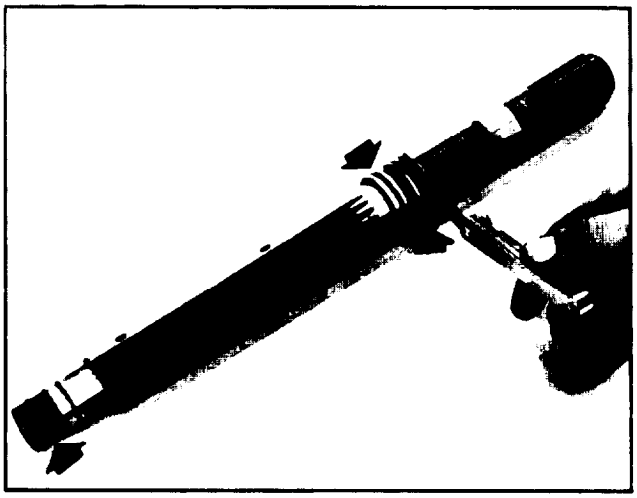

Step 25. Plate 10352

STEP 26. Install the sealing rings by starting the split locks first and pressing the ring down and on . . . . this will prevent the ring from becomming warped or broken.

Step 26. Plate 10353

STEP 27. Lock ring by holding one end of the split lock and roll the ring down into groove until one lock is above the other and press down on top lock until ring locks....this will prevent breakage of the locking tangs.

Step 27. Plate 10354

www.truck-freeworkshop.com/clark/

STEP 28. Check the oil distributor sleeve seals with a flat type feeler gauge as Illustrated. All three seals must not have more than a MAXIMUM of .004 side clearance.

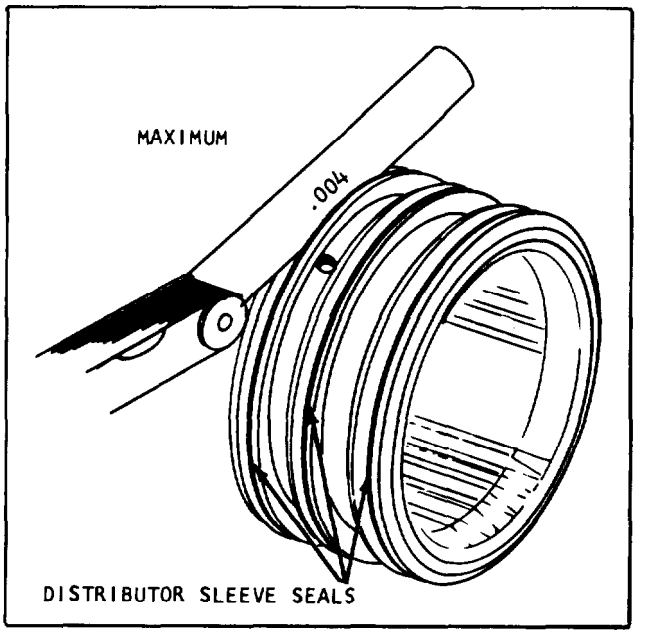

Step 28. Plate 10334

STEP 29. Carefully inspect the oil distributor for ring wear and imbedded foreign material.

Normal ring wear will show up as a polished surface free of ridges, rough spots, and grooves.

Ridges, rough spots and grooves will require replacement of the distributor and sealing rings.

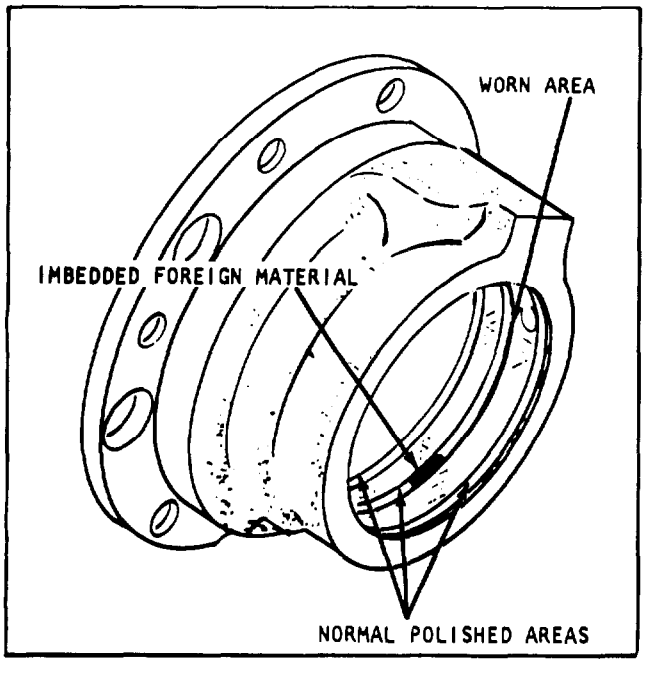

Step 29. Plate 10335

STEP 30. Replace the old "0" ring seals in the oil distributor. Make sure seals are well seated in the grooves.

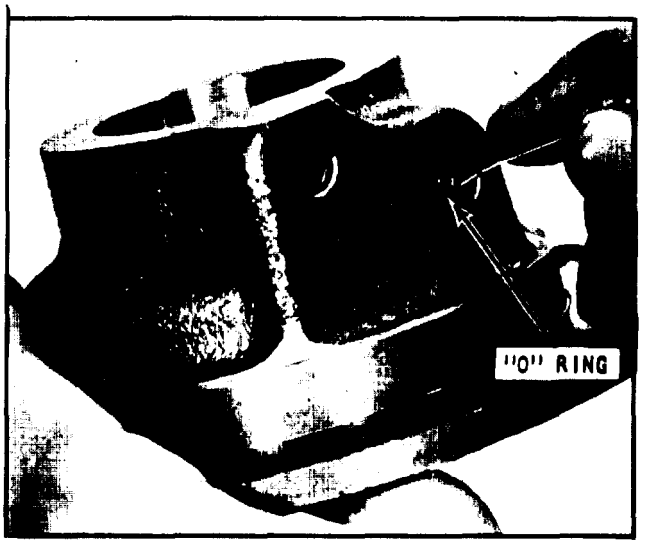

Step 30. Plate 10376

www.truck-freeworkshop.com/clark/

STEP 31. Replace the old oil distributor "0" ring seals with new seal s.

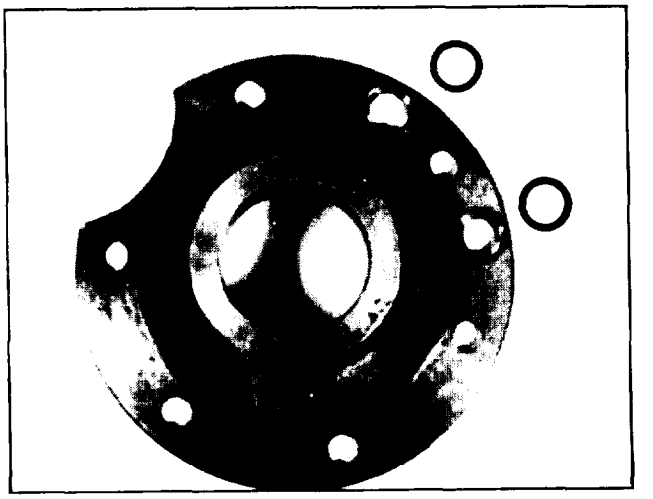

Step 31. Plate 8046

STEP 32. Place the transmission on the axle adaptor end and assemble oil distributor into transmission.

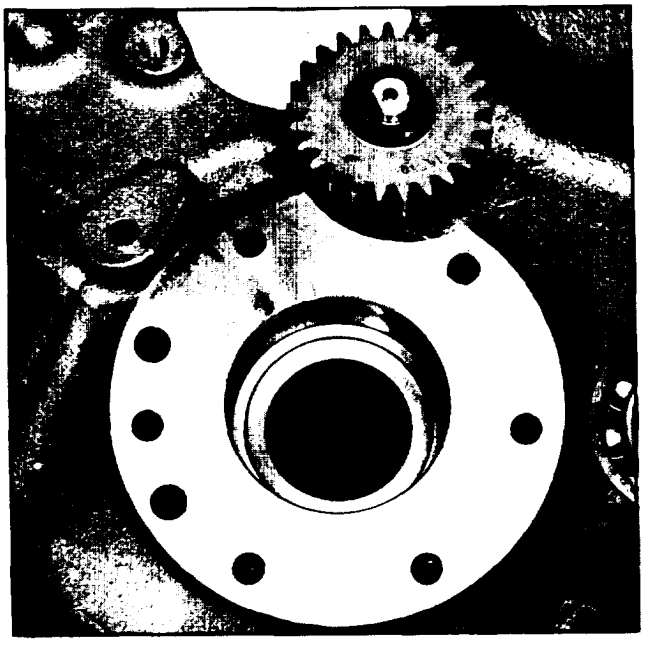

Step 32. Plate 10355

STEP 33. Assemble preassembled intermediate shaft clutch pack into transmission with small gear down.

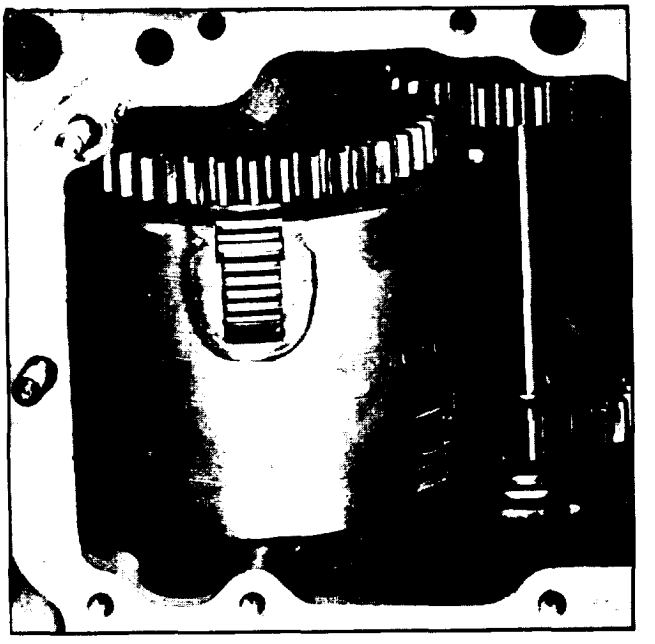

Step 33. Plate 10356

www.truck-freeworkshop.com/clark/

STEP 34. The beveled end of the distributor sleeve must face the input shaft bearing.

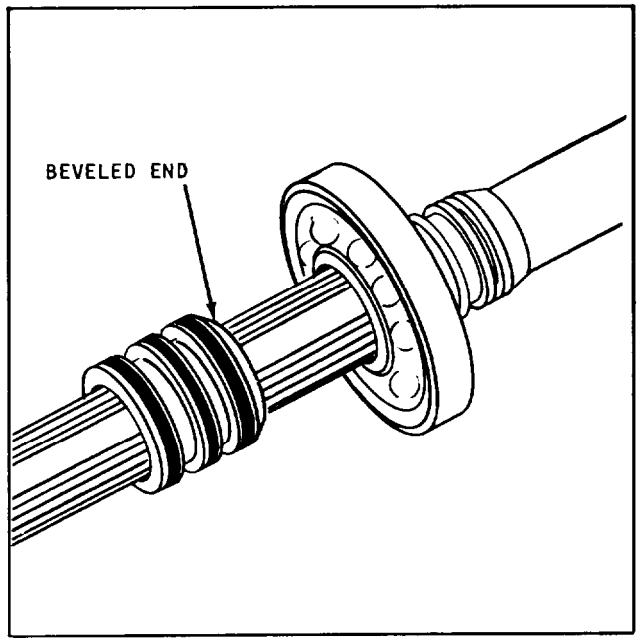

Step 34. Plate 10332

STEP 35. Insert the input shaft from the converter end, making sure index splines on shaft are lined up with index splines in clutch pack.

STEP 36. Carefully tap the input shaft down using a soft rawhide hammer, until index shaft is driven from the transmission assembly, continue to drive shaft down until shaft is seated into position.

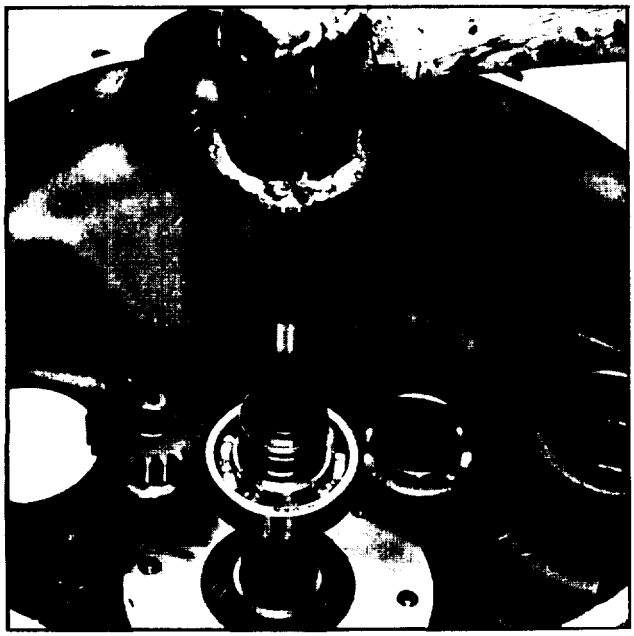

Step 35 - 36. Plate 10357

STEP 37. Install the stator support assembly and fasteners. Remove the clutch pack installation tool.

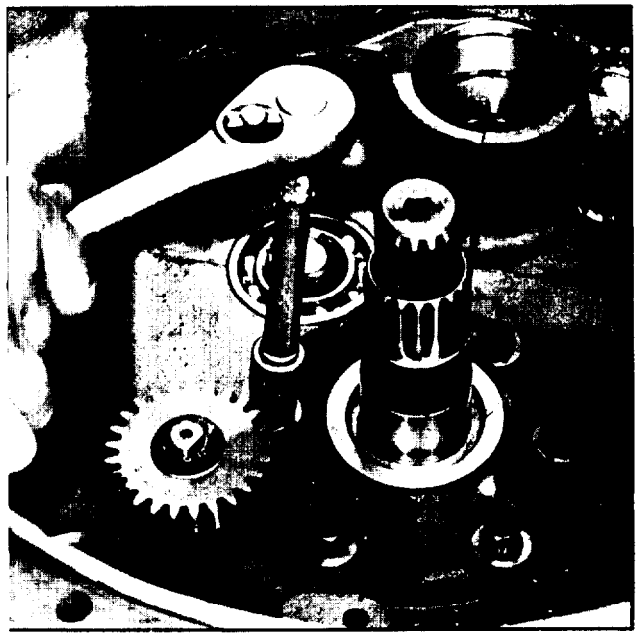

Step 37. Plate 10358

www.truck-freeworkshop.com/clark/

STEP 38. Place the transmission on the converter end of assembly.

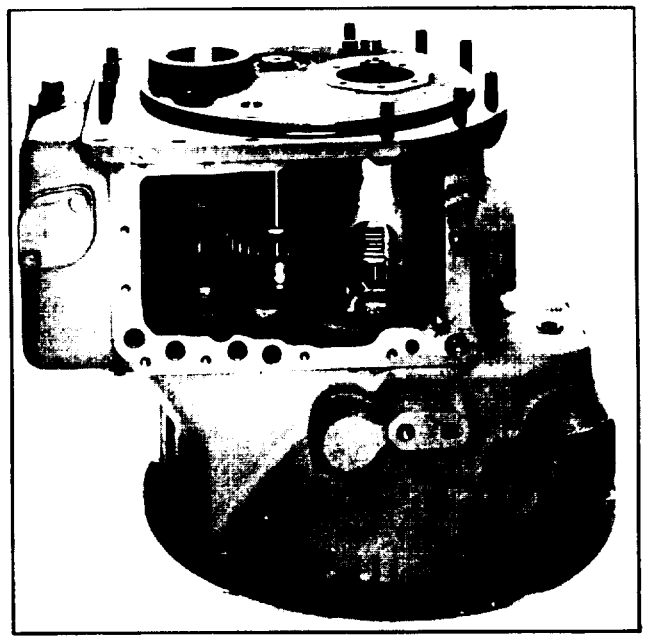

Step 38. Plate 10359

STEP 39. Install the inputshaft retainer ring.

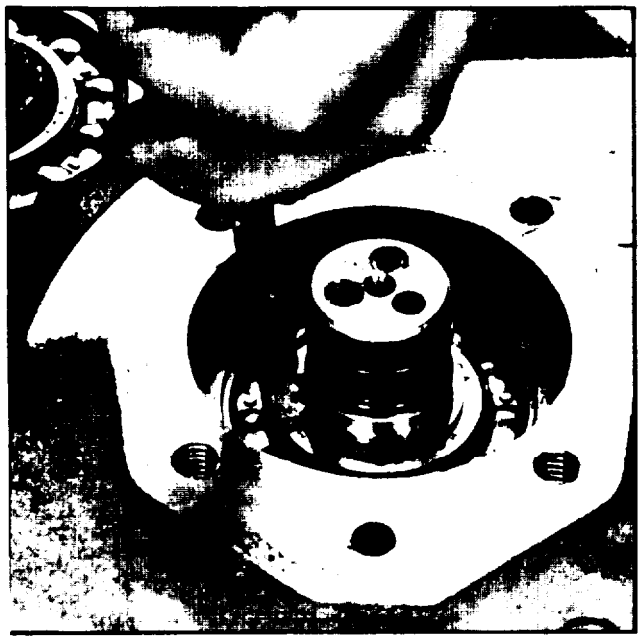

Step 39. Plate 10375

STEP 40. Carefully inspect the input shaft cap for ring wear, rough spots, and imbeded foreign material.

Cap must be replaced if one or all conditions exist.

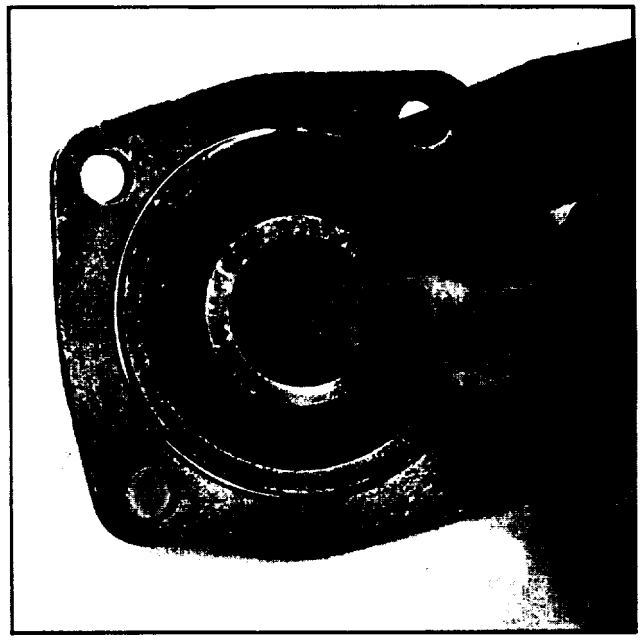

Step 40. Plate 10336

www.truck-freeworkshop.com/clark/

STEP 41. Install new input shaft cap seal.

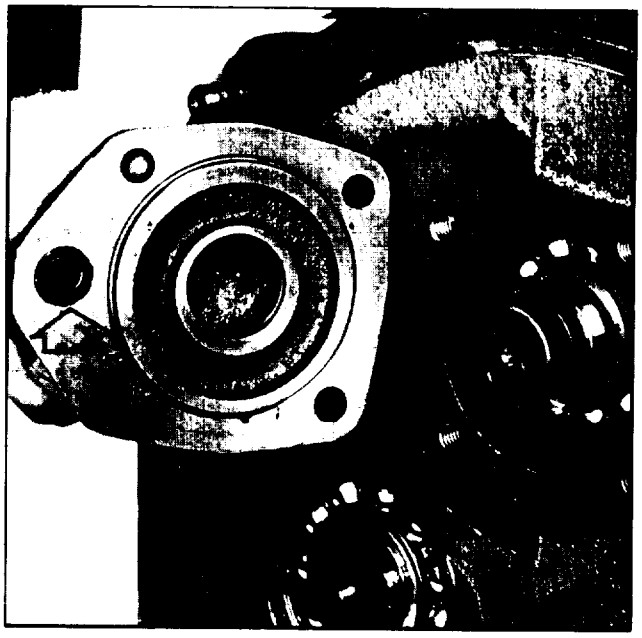

Step 41. Plate 10229

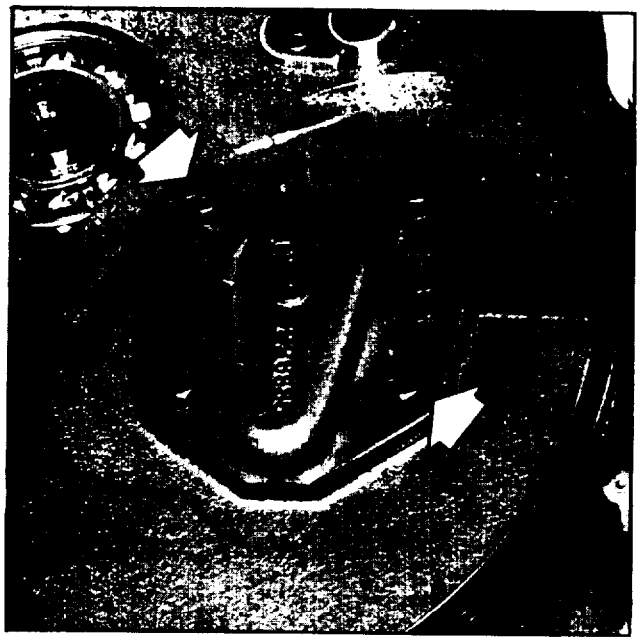

Step 42. Plate 10360

STEP 42. Assemble cap to transmission over end of input shaft and Install retainers.

Tighten retainers alternately and evenly to prevent breakage and misalignment.

www.truck-freeworkshop.com/clark/

Plate 10244

Output Shaft Assembly

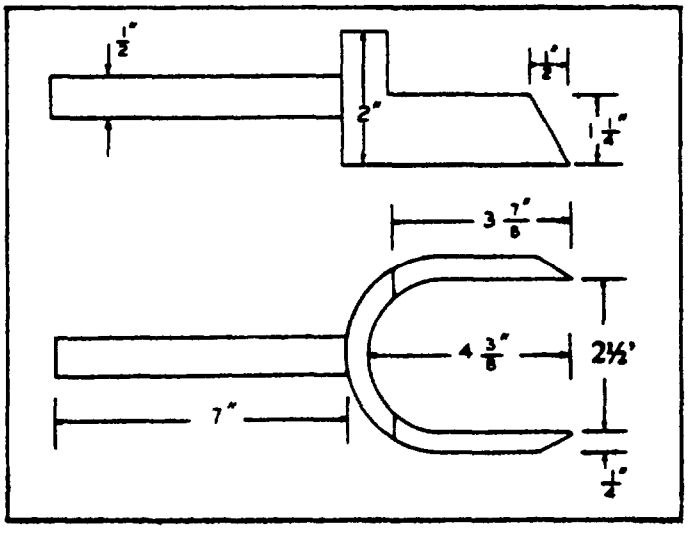

The clutch installation tool can be easily made in your shop and its dimensions are shown in this drawing.

www.truck-freeworkshop.com/clark/

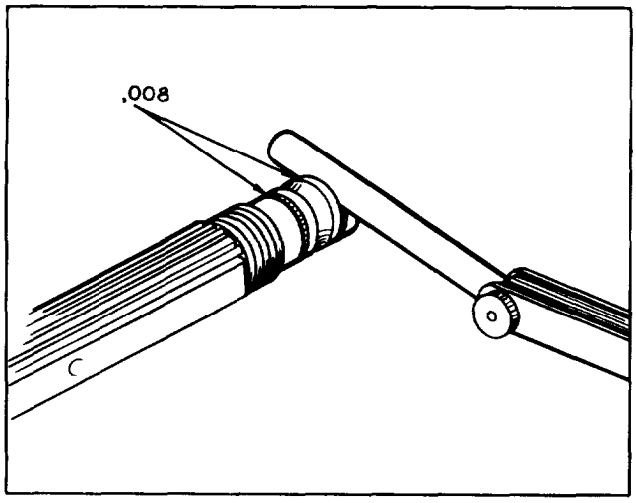

Step 43. Plate 10361

STEP 43. Measure the output shaft oil distributor sleeve seals.

Seals must be replaced if a MAXIMUM of .008" and above measurement is obtained.

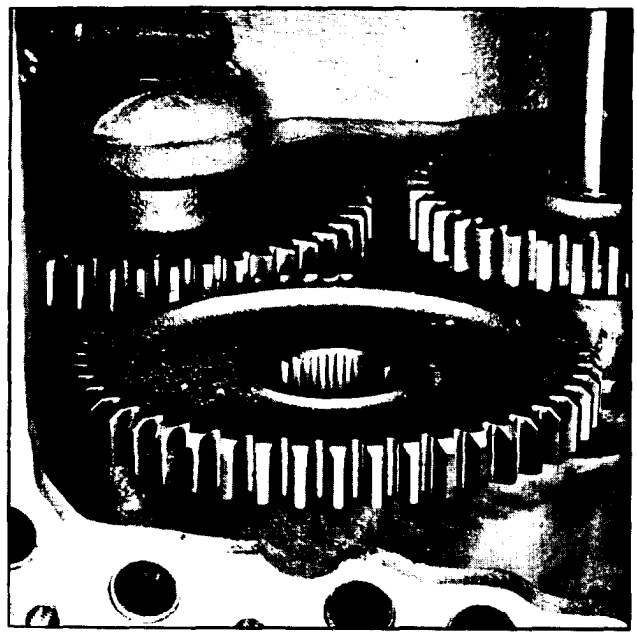

Step 44. Plate 10362

STEP 4. Assemble the auxiliary drive gear into transmission with hub of gear facing the converter end.

STEP 45. Using clutch install tool, place clutch pack assembly Into transmission with small gear down and tilt to one side, install spacer with beveled end toward auxiliary gear.

STEP 46. Carefully install clutch pack into position on spacer making sure spacer does not move out of position.

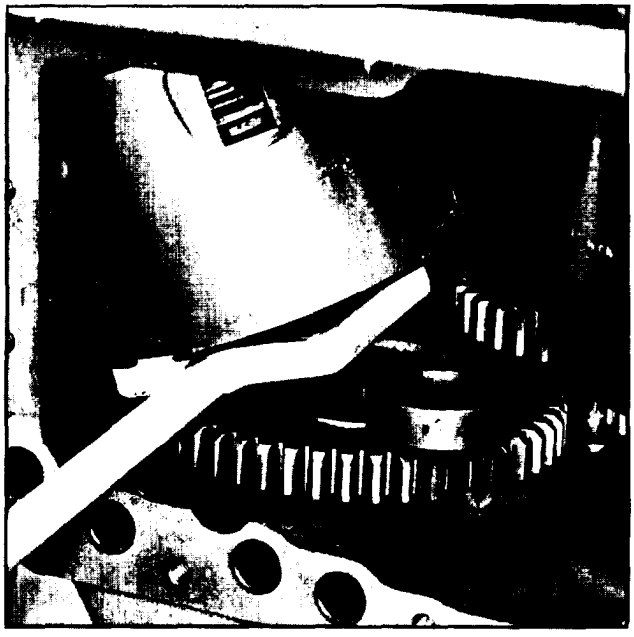

Step 45. Plate 10363

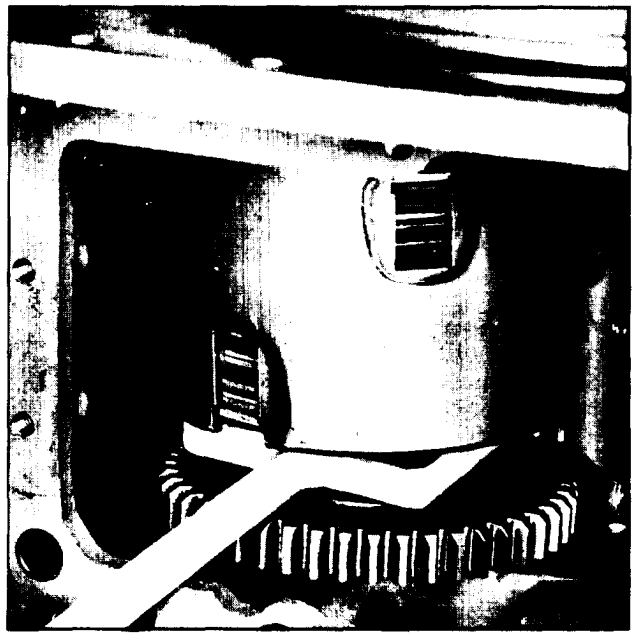

Step 46. Plate 10364

www.truck-freeworkshop.com/clark/

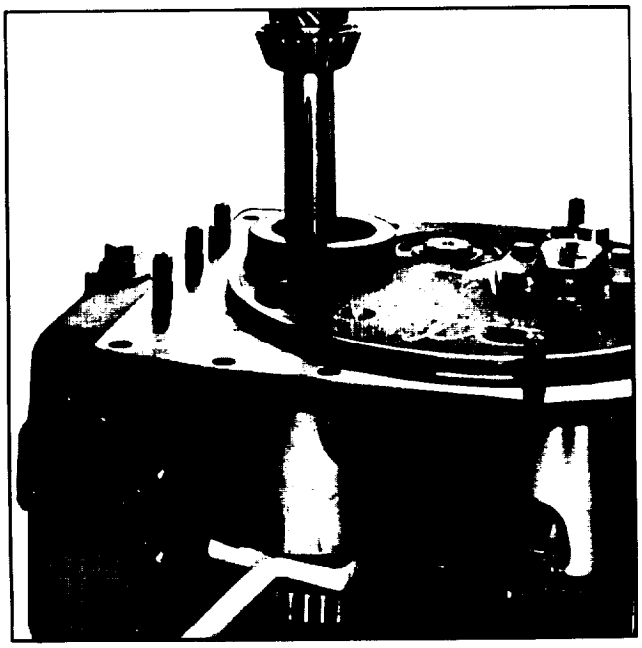

Step 47. Plate 10365

STEP 47. Assemble output shaft into transmission housing making sure index splines are in alignment with splines in clutch pack.

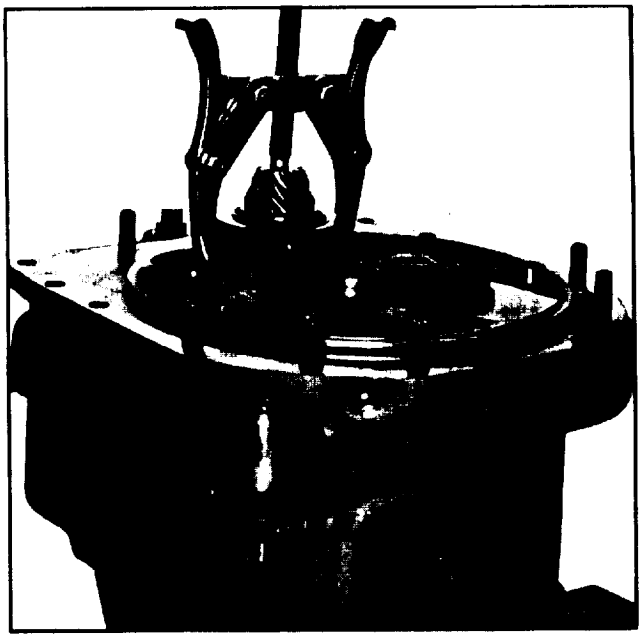

Step 48. Plate 10366

STEP 48. Using a bearing puller, anchor the output shaft in position . . . so it cannot move.

STEP 49. Position the transmission on its sump housing.

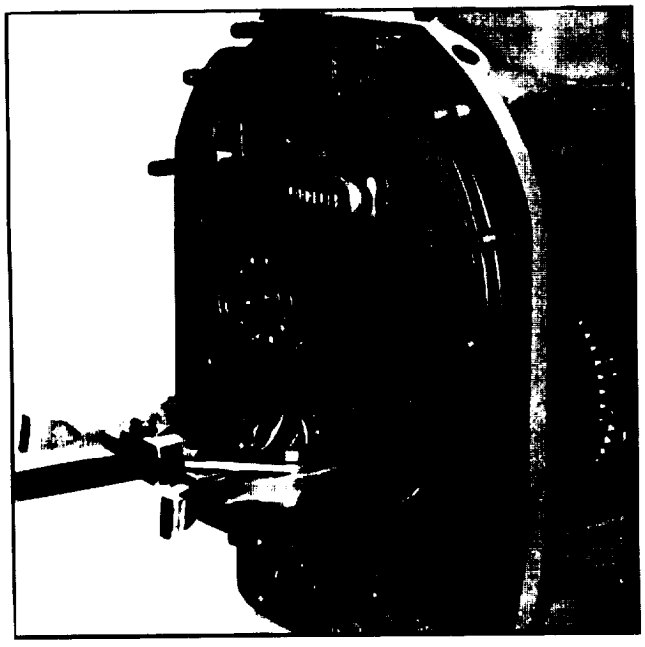

Step 49. Plate 10367

STEP 50. Install an equal number of shims that were removed upon disassembly of transmission.

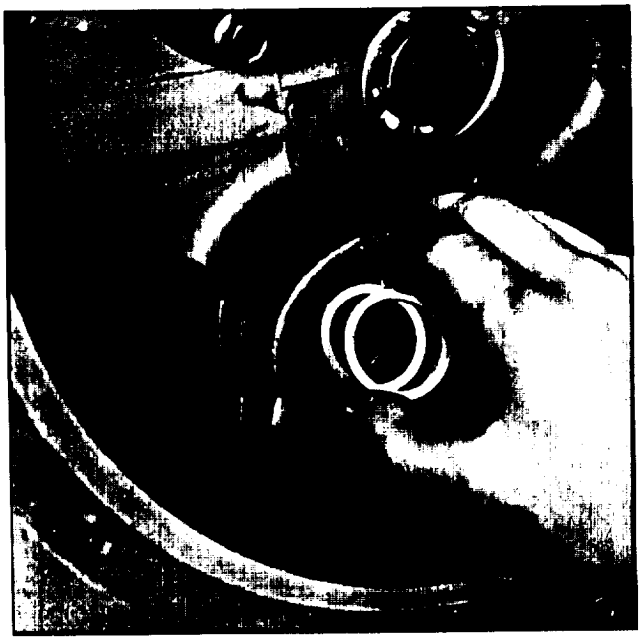

Step 50. Plate 10368

www.truck-freeworkshop.com/clark/

STEP 51. Install the output shaft fastener and torque to specifications.

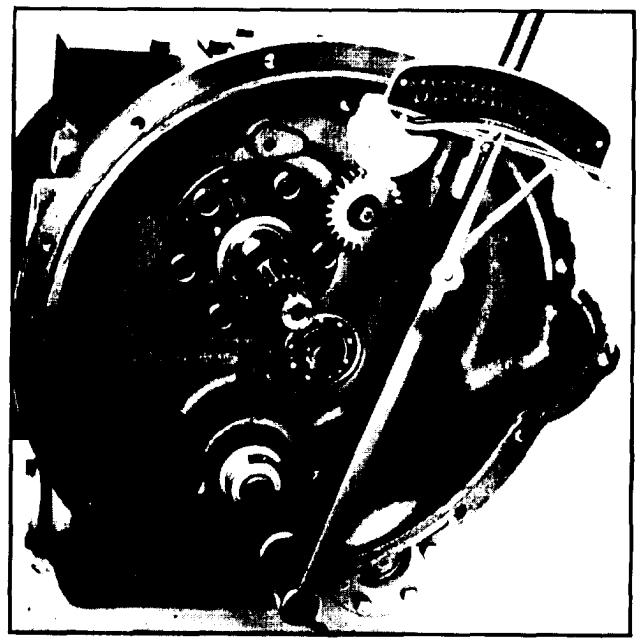

Step 51. Plate 10369

STEP 52. Using an inch pound torque wrench install on outputshaft retainer. Turn shaft and take the reading required to keep shaft rotating . . . . do not take reading required to start shaft rotating.

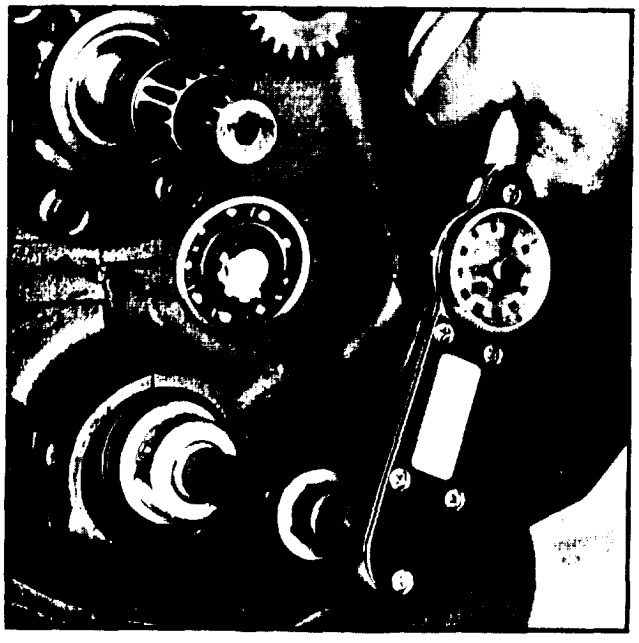

Step 52 - 53. Plate 10370

STEP 53. If torque to rotate shaft is above 8 to 13 inch pound add shims.

If shaft is below torque specifications subtract shims.

SEE SPECIFICATION PAGE FOR BEARING PRE-LOAD.

www.truck-freeworkshop.com/clark/

STEP 54. Install new "0" ring seals into the high and low oil distributor making sure they are well seated.

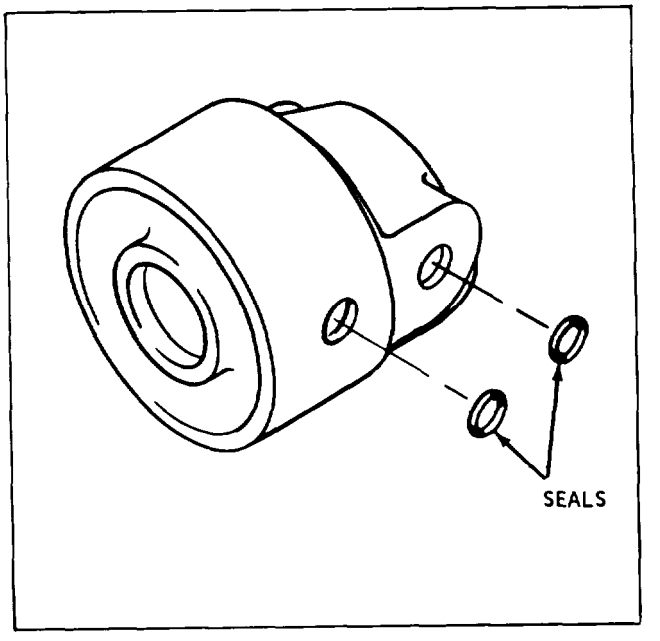

Step 54. Plate 10371

STEP 55. Assemble the oil distributor on the output shaft on the converter end of transmission.

Step 55. Plate 10235

STEP 36. Install the oil distributor retainer ring.

Step 56. Plate 10234

www.truck-freeworkshop.com/clark/

STEP 57. Install forward and reverse oil tubes into oil distributor. Be careful not to damage the seals in the distributor when installing tubes.

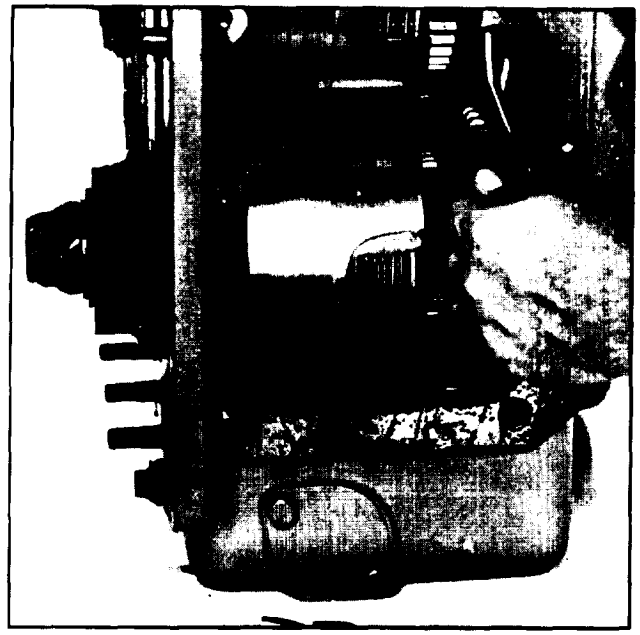

Step 57. Plate 10228

STEP 58. Install high and low oil tubes into the oil distributor being careful not to damage the oil seals.

Step 58. Plate 10227

STEP 59. Install new seals into the oil tube sleeves and install on oil tubes being careful not to damage seals.

Step 59. Plate 10372

www.truck-freeworkshop.com/clark/

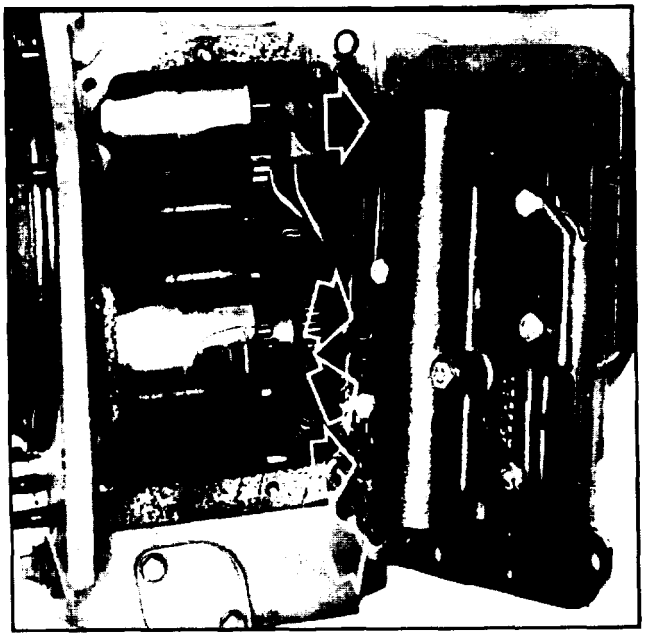

Step 60. Plate 10225

STEP 60. Install new "0" rings into position on control cover.

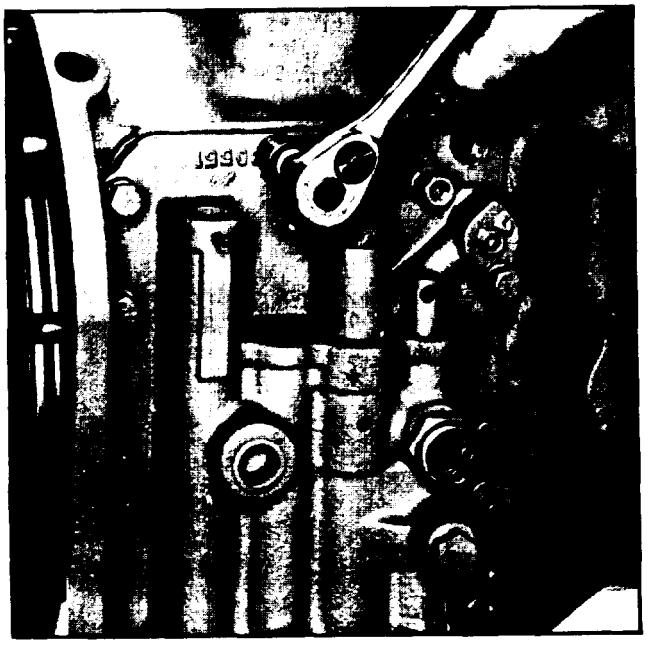

Step 61. Plate 10373

STEP 61. Install control cover to transmission assembly.

STEP 62. Install converter pump to transmission assembly making sure teeth on pump gear is lined up with teeth on idler gear.

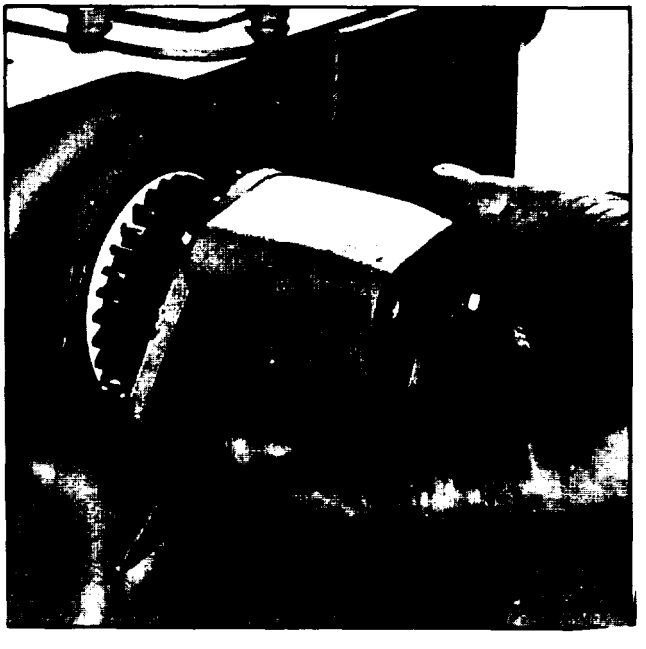

Step 62. Plate 10224

STEP 63. Install the torque converter on the stator support in the transmission.

STEP 63. Plate 10221

www.truck-freeworkshop.com/clark/

STEP 64. Install the axle adaptor assembly to the transmission assembly.

5-96 INSTALLATION

a. Install transmission assembly into the machine, follow the reverse of the procedures found in Section 5-85 page 5-60.

Step 64. Plate 10222

www.truck-freeworkshop.com/clark/

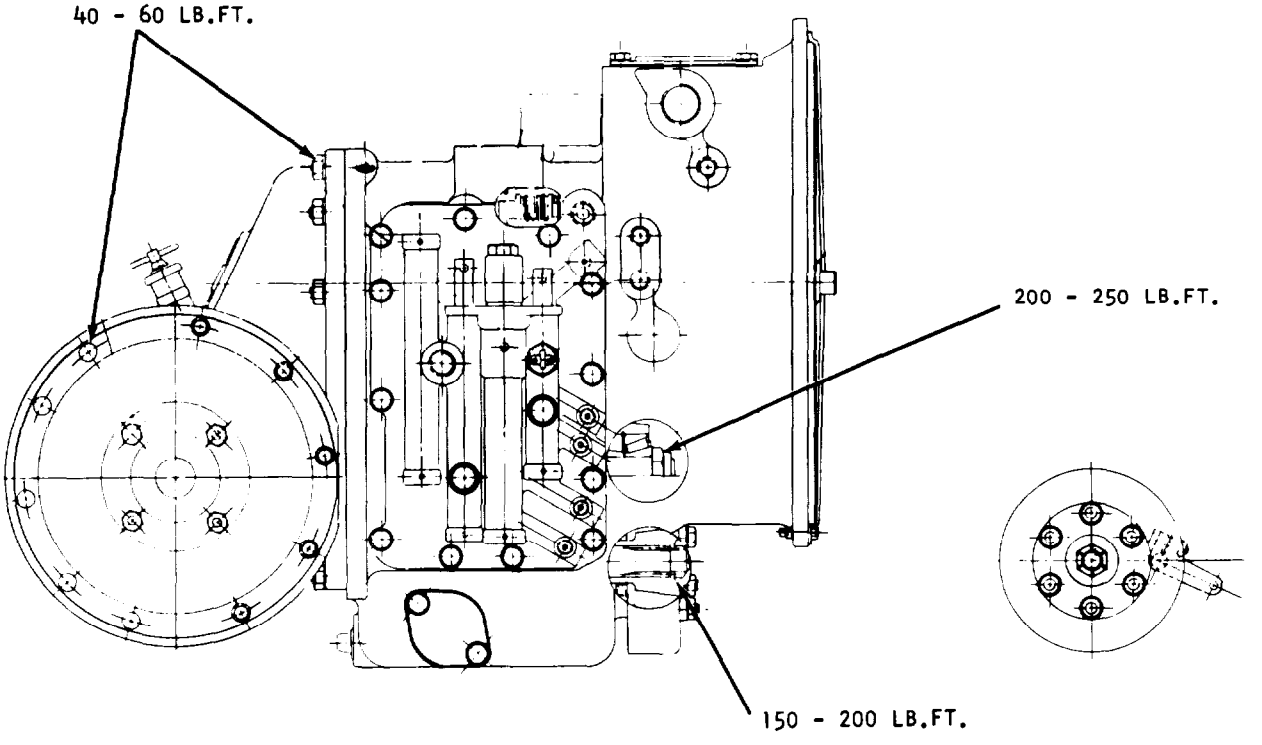

Converter pump idler gear shaft	70-85 LB.FT.

FLUID SEAL(S). SPECIFICATIONS:

Clutch piston outer seal, side clearance	MAX .008
Clutch hub ring seal, side clearance	MAX .008
Input shaft seals, side clearance	MAX .008
Oil distributor sleeve seals, side clearance	MAX .004

www.truck-freeworkshop.com/clark/

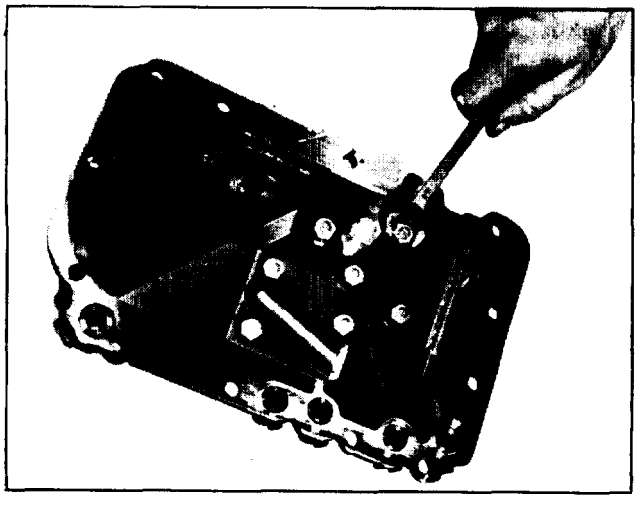

Step 1 Plate 8003

Remove the capscrews retaining the control cover plate and baffle.

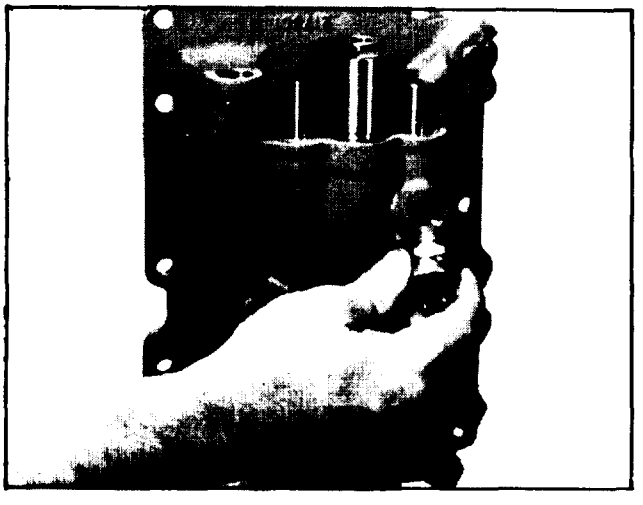

Step 2 Plate 8004.

Remove the neutral switch and spacer washer from the control cover.

CAUTION

IF THE CONTROL COVER IS CLAMPED IN A VISE FOR DISASSEMBLY - BE SURE THE VISE IS EQUIPPED WITH A SET OF SOFT JAWS - EXERCISE CARE TO AVOID SCRATCHING THE POLISHED SURFACES OF THE COVER.

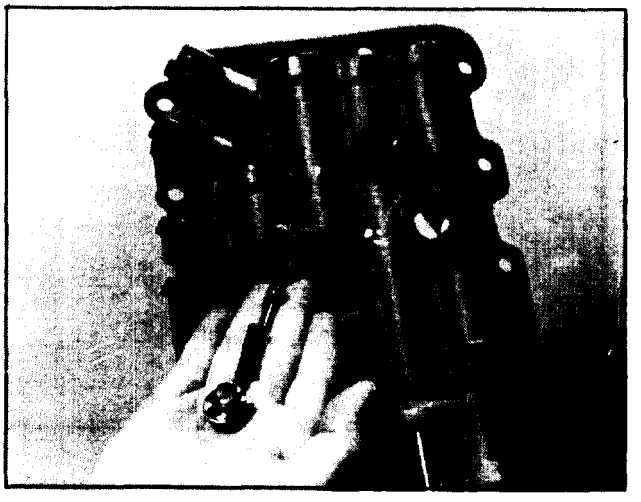

Step 3 Plate 8005

Remove the plug, washer, spring, stop and ball from both of the control spool locations.

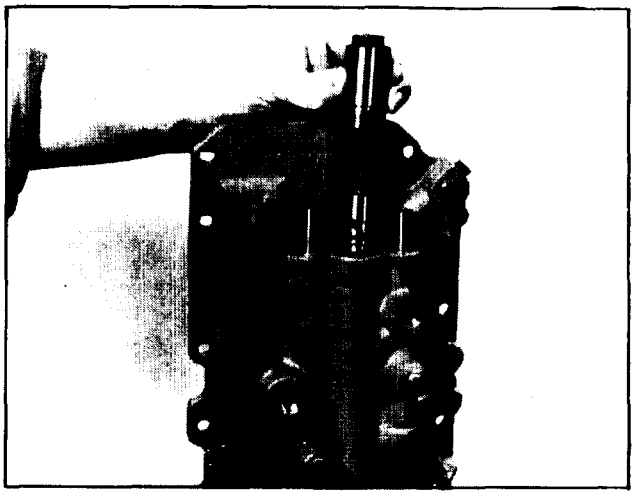

Step 4 Plate 8006.

Unscrew the inching piston housing and remove inching piston seal housing and its components.

www.truck-freeworkshop.com/clark/

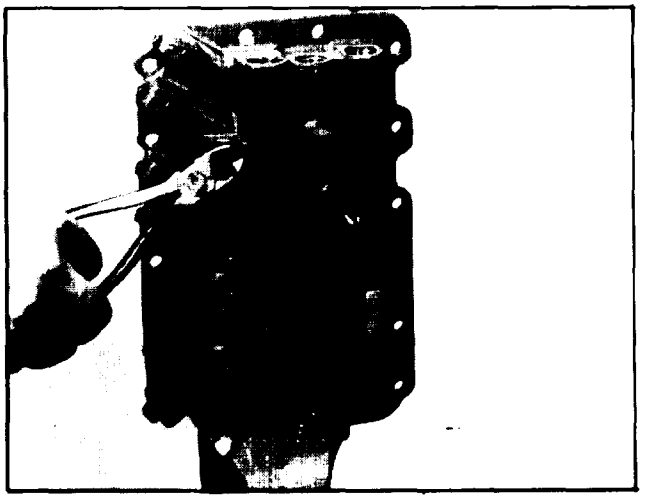

Step 5 Plate 8007.

Remove roll pins from cover with side cutters. When removing the roll pins from the convertor regulator and pressure regulator bores, wrap a cloth around the end to catch the stop and spring which is held under pressure by the roll pins.

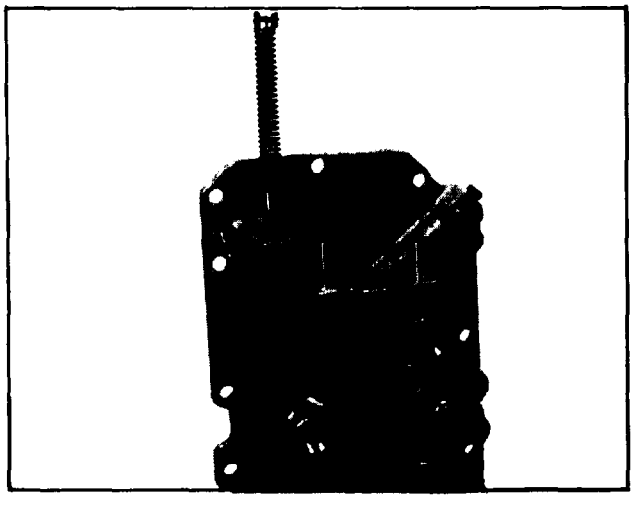

Step 6 Plate 8008.

Remove the stop, spring and pressure regulating valve from the housing.

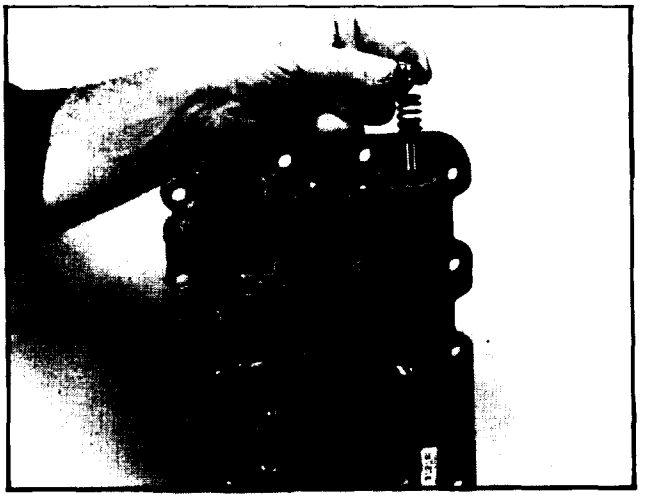

Step 7 Plate 8009.

Remove the stop, spring and convertor pressure regulating valve from housing.

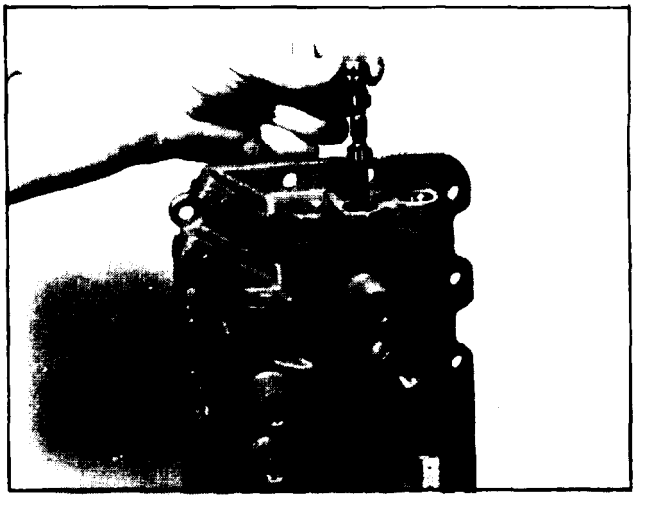

Step 8 Plate 8070.

Remove stop and high and low selector valve.

www.truck-freeworkshop.com/clark/

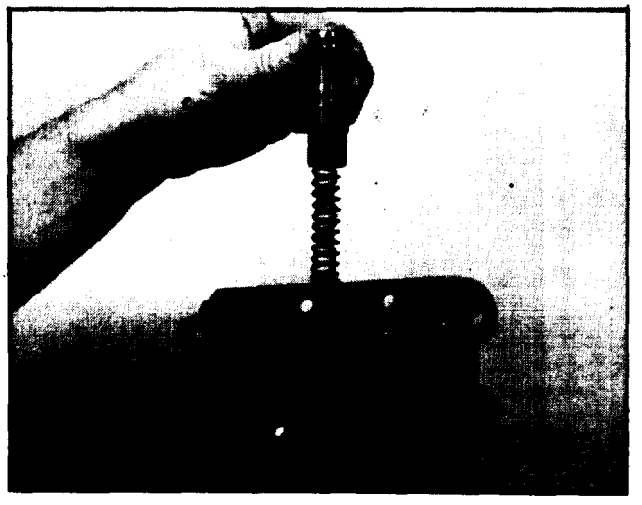

Step 9 Plate 8071.

Remove inching valve and components shown above.

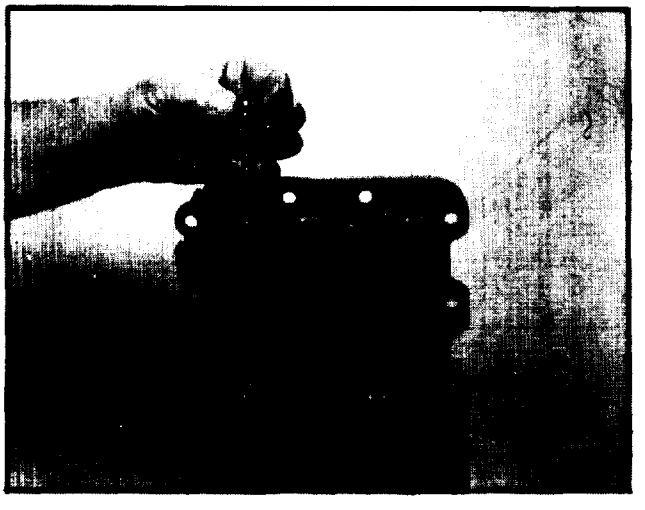

Step 10 Plate 8072.

Remove the stop and forward and reverse selector spool. Pry the spool oil seals from the cover. Exercise caution so as not to scratch the spool bore during removal of the seals.

CLEANING AND INSPECTION

CLEANING: Clean all metal parts thoroughly using a Stoddard Type cleaning solvent. It is recommended that parts be immersed in cleaning solvent and gently agitated until all old lubricant and foreign material is removed and parts are thoroughly cleaned. All parts cleaned should be dryed by using moisture-free compressed air.

INSPECTION: The importance of careful and thorough inspection of all parts cannot be overstressed. Any parts showing wear or an indication of stress should be discarded and new parts installed. It is more economical to replace a questionable part at this time than risk the possibility of a premature malfunction, necessitating a teardown of the assembly for replacement of faulty items.

Oil Seals, Inching Cup, "0" Rings and Cover Gasket: These items should be replaced with new parts. Apply a thin coat of Permatex #2 on the outer diameter of the seals to assure an oil tight fit in their retainers. Immerse inching cup in UCON-1145 fluid and lubricate sealing rings and inner diameter of oil seals with Automatic Transmission Fluid before assembly.

Spools, Valves and Housing: Inspect housing bores, valves and spools to be certain they are thoroughly cleaned and that mating surfaces are free from nicks or burrs. Minor nicks or burrs may be removed with a pocket type hone.

www.truck-freeworkshop.com/clark/

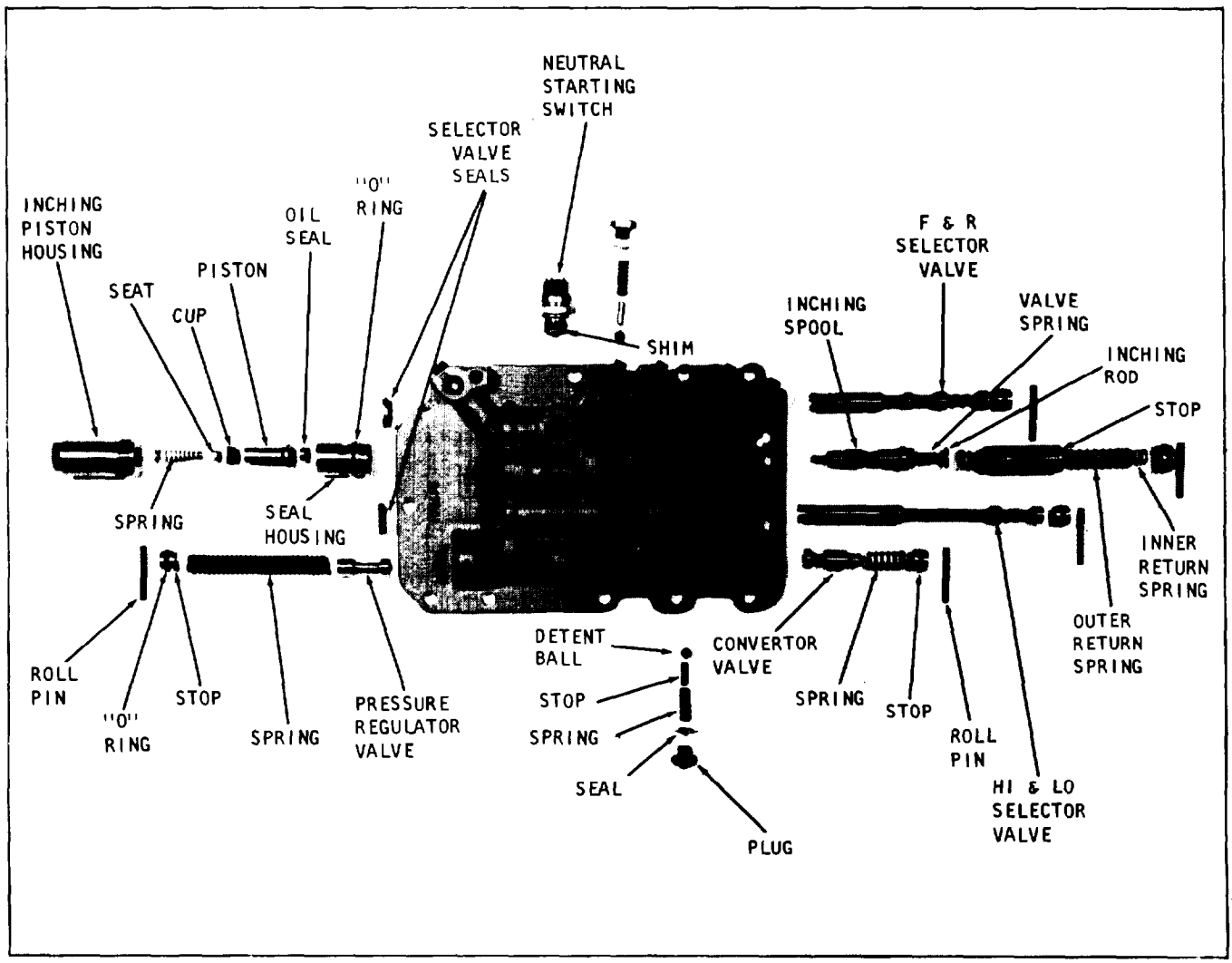

SECTION 5-97A

Plate 8002. Disassembled View of Control Cover

REASSEMBLY OF CONTROL COVER

See Plate 8002 for sequence of parts and parts identification.

NOTE

LUBRICATE ALL VALVES, SPRINGS, "0" RINGS, SLEEVES AND OIL SEALS WITH A LIGHT COAT OF TYPE "A" AUTOMATIC TRANSMISSION FLUID,

Coat the outside diameter of the selector oil seals with a light coat of Permatex number 2 to assure an oil tight fit in the housing.

Using the correct diameter seal driver, press the seals into the housing.

www.truck-freeworkshop.com/clark/

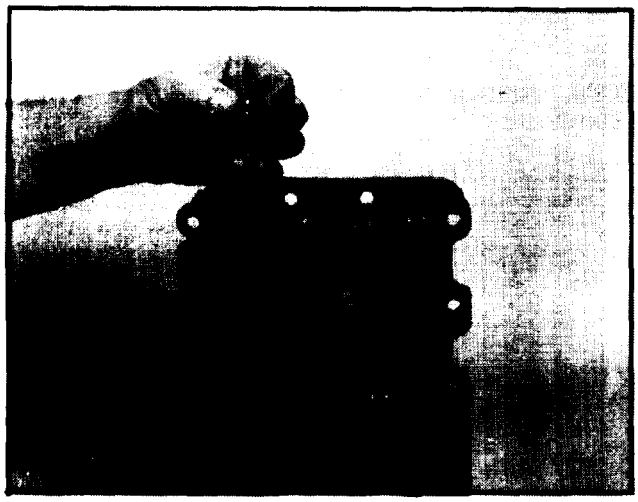

Step 1 Plate 8072.

Exercise catuion to avoid damaging the lip of the oil seal during installation of the selector spool. Place a new "0" ring on the stop and push it into the housing.

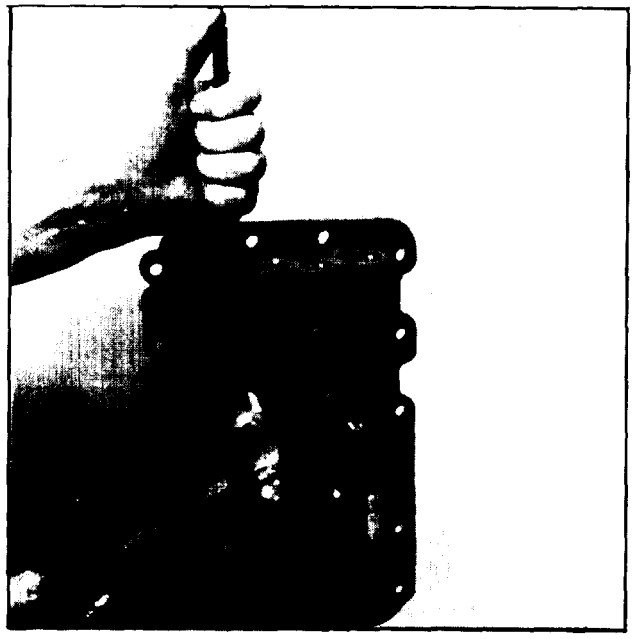

Step 2 Plate 8073.

Start a roll pin in the housing. Push down stop with a punch and tap roll pin in to retain the stop. This procedure will be repeated at each roll pin after the necessary components are installed in their bores.

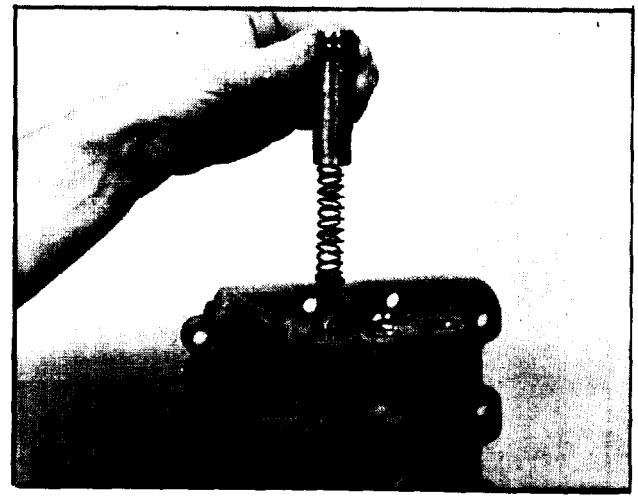

Step 3 Plate 8071.

Install inching valve and components shown above. Replace roll pin.

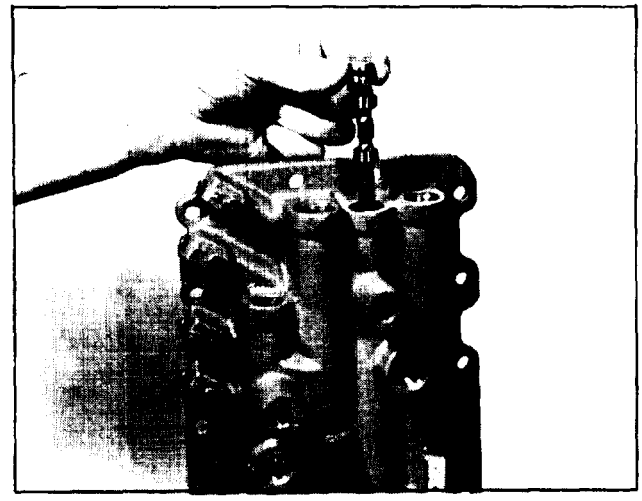

Step 4 Plate 8070.

Exercise caution to avoid damaging the lip of the oil seal during installation of the high & low selector spool. Place a new "0" ring on the stop and push it into the housing. Install the retaining roll pin.

www.truck-freeworkshop.com/clark/

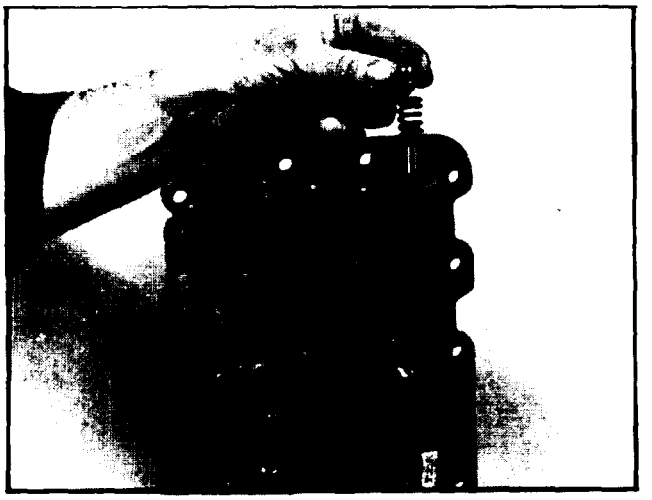

Step 5 Plate 8009.

Install the convertor pressure regulating valve, spring and stop. Replace the retaining roll pin.

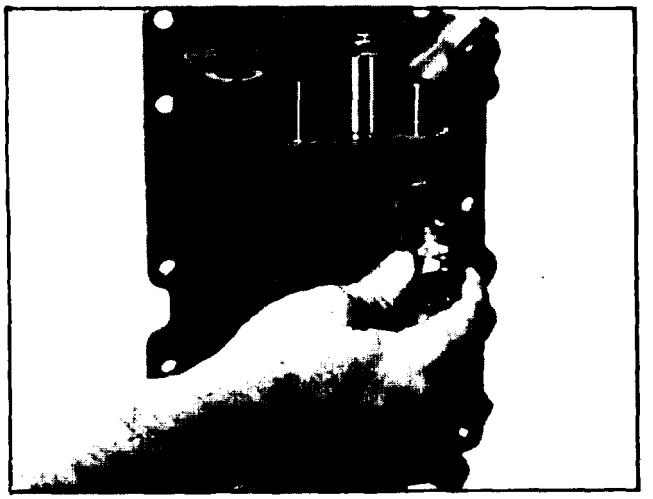

Step 6 Plate 8008.

Install the pressure regulating valve, spring and stop. Replace retaining roll pin.

Step 7 Plate 8005.

Replace the detent ball, stop, spring, seal washer and plug in the hole provided at the forward and reverse selector spool. Replace a set of identical parts at the high and low selector spool.

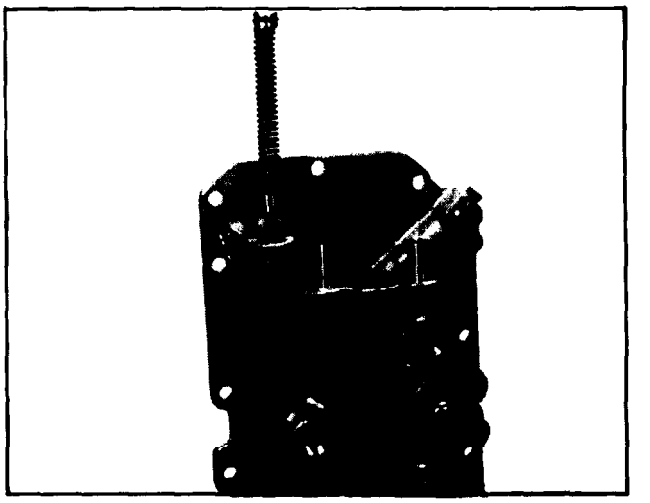

Step 8 Plate 8004.

Replace the shim and neutral starting switch at the forward and reverse selector spool.

www.truck-freeworkshop.com/clark/

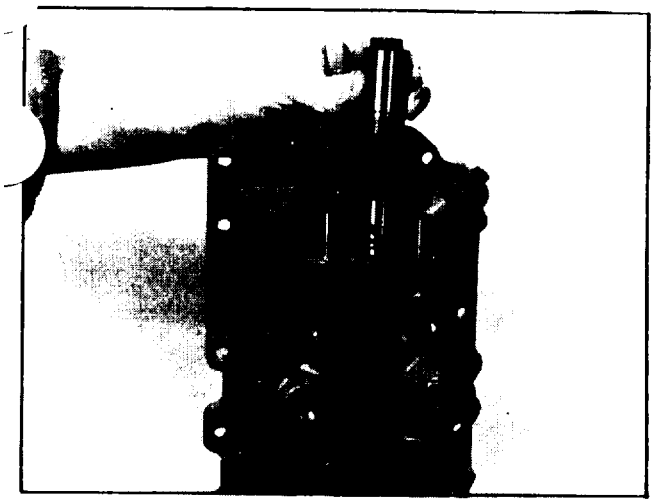

Step 9 Plate 8006.

Press a new oil seal in the inching piston seal housing. Install a new "0" ring and with finger pressure, push the housing into its seat in the control cover. Next place the inching piston in the seal housing. Install a new cup in the inching piston housing and screw housing into cover. Refer to disassembled view of control cover (Plate 8002) for correct sequence of parts.

NOTE

Immerse inching piston cup in UCON 1145 Fluid before installing it in the housing.

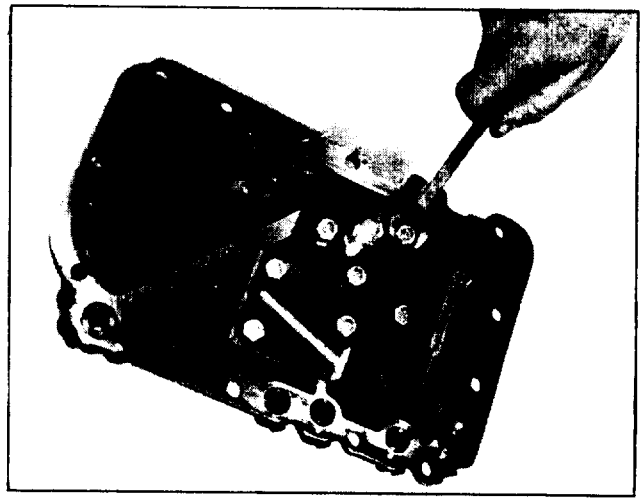

Step 10 Plate 8003.

Replace the control cover plate and baffle. Secure with the capscrews and lockwashers.

Step 11

Install control cover onto the transmission using the new gasket and "O"-rings.

www.truck-freeworkshop.com/clark/

www.truck-freeworkshop.com/clark/

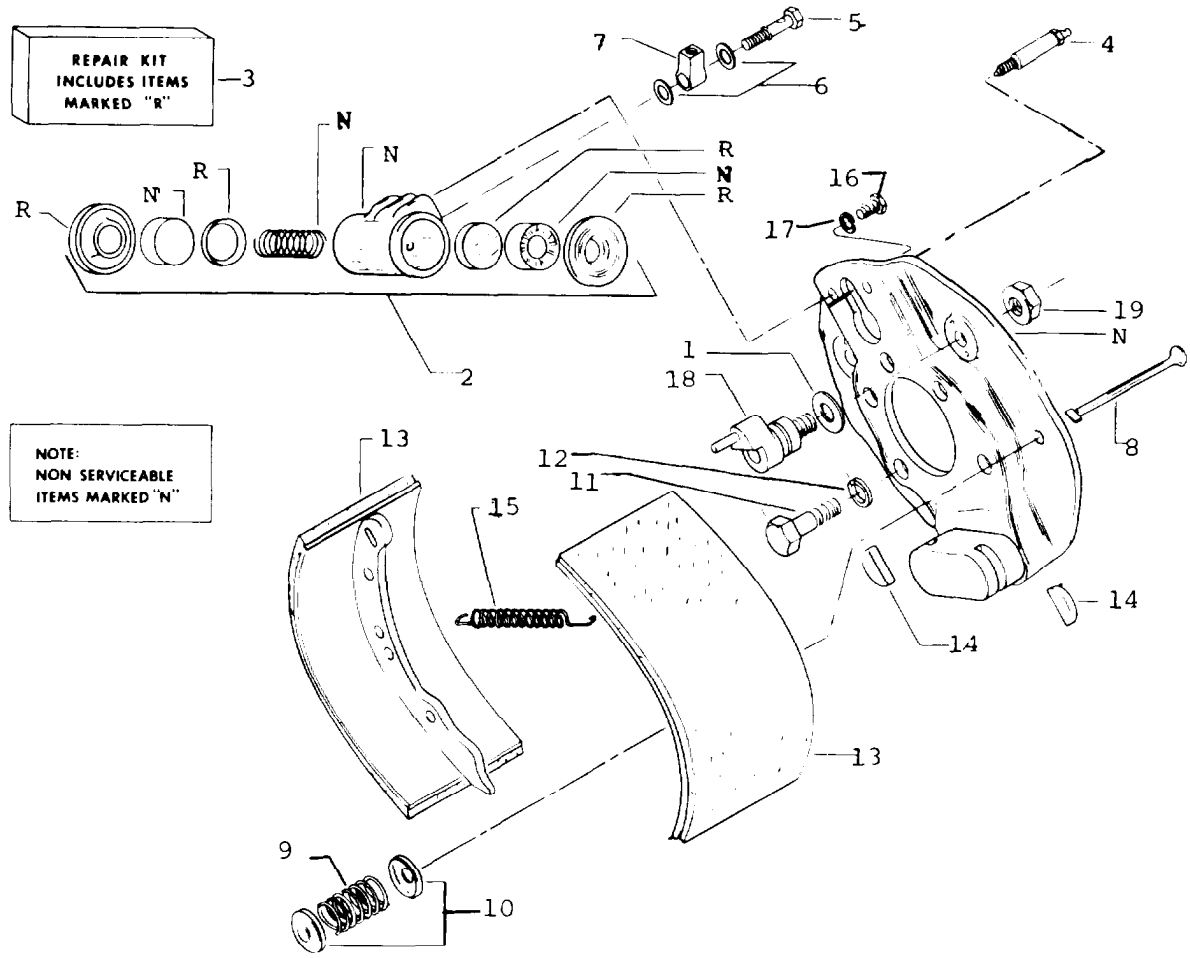

FIGURE 5-131 BRAKE ASSEMBLY

1.	WASHER	6.	GASKET	11.	CAPSCREW	16.	BOLT
2.	BRAKE CYLINDER	7.	FITTING	12.	LOCKWASHER	17.	LOCKWASHER
3.	CYLINDER REPAIR KIT	8.	GUIDE PIN	13.	SHOE	18.	ADJUSTOR
4.	BLEEDER SCREW	9.	SPRING	14.	KEY	19.	NUT
5.	FITTING BOLT	10.	CUP	15.	SPRING		

5-98. BRAKE REPAIRS

5-99 REMOVAL AND DISASSEMBLY - WHEEL BRAKE

a. Brake removal is outlined under paragraph 5-86. Refer to figure 5-131 for parts identification and proceed as follows:

b. Hold the guide pin from the back side and push down on the upper spring retainer cap and at the same time turn 90 degrees, then remove guide pin, guide pin spring, and lower spring retainer cap.

c. Disconnect the two brake shoe return springs,

d. Remove the two brake shoes from the backing plate.

www.truck-freeworkshop.com/clark/

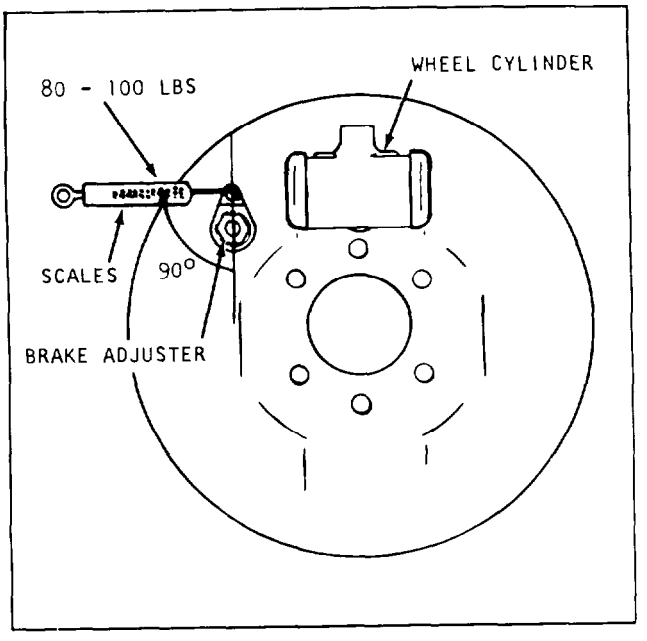

Plate 10329

C A U T I O N

THERE IS A SHOE ANCHOR KEY ON EACH SIDE OF THE ANCHOR BLOCK. THESE ARE LOOSE PIECES AND CARE SHOULD BE TAKEN SO THEY ARE NOT LOST.

e. Remove the two brake shoe anchor block mounting bolts and the anchor block.

f. Remove the wheel cylinder.

5-100. CLEANING AND INSPECTION.

a. Before reassembling the brake assembly, the backing plate should be checked for correct torque of the adjusters. To do this, an inch/pound torque wrench is used with a small drag link socket and inserted in the groove of the brake adjuster bolt. Then rotate the complete adjuster until the index washer that is locked to the adjuster reaction arm starts to move on the index washer that is locked to the backing plate.

b. The nut holding the adjuster arm to the disc should be tightened to 23 to 26 foot/pounds.

C A U T I O N

CARE SHOULD BE TAKEN SO THAT THE ADJUSTER IS NOT TURNED FAR ENOUGH TO MAKE THE INDEX WASHERS COME OFF THE HIGH SPOTS..

c. If you should turn the brake adjusters too far and the index washers come off the high spots, you will have to remove the roll pin and loosen the nut enough so you can relocate the two index washers until the high sports line up.

d. When you check the torque, should you find it is not correct, remove the roll pin and tighten or loosen adjuster bolt so you can insert the roll pin in the next notch in the adjuster nut. Repeat this until you have the proper torque.

e. Check the brake adjuster brake-away force by the following: (Refer to plate 10329).

STEP 1. Check the break-away force by using a pound rated scale.

STEP 2. Scale must be perpendicular to the pin as illustrated before reading is attempted.

STEP 3. Reading is taken just as the adjuster starts break-away movement. Reading should be 85-100 lbs.

STEP 4. If the break-away ability is under or above the specification the adjuster must be replaced.

www.truck-freeworkshop.com/clark/

Occasionally grease retainers become worn, allowing lubricant from wheel bearings to leak through in the brake drum. When grease comes into contact with the end closures, they become soft and enlarged, preventing them from protecting the cylinder from foreign matter. If this occurs, replace wheel cylinder.

Note

After a wheel cylinder is removed, it will be necessary to bleed brakes, as air will have entered the system with the wheel cylinder removed.

5-101. REASSEMBLY AND INSTALLATION.

b. Install the wheel cylinder casting onto the brake backing plate.

c. Install the brake shoe anchor block and bolts.

d. Install the brake shoe anchor key and the brake shoe.

Note

Before the brake shoe anchor keys are installed, they should be coated with lubriplate.

e. Connect the two brake shoe return springs.

f. Install brake shoe guide pin, spring, and caps.

g. After the brake has been reassembled as shown in the complete brake assembly, to double check, rotate each adjuster so the brake shoes will move out. The brake shoes should stay out and not be pulled back by the springs. Then turn the adjusters back so the brake drum will slide on over the brake shoes.

Note

It may also be necessary to tap the shoes either up or down to allow the drum to slide over the shoes. There is no other adjustment necessary. The first time the brakes are applied, the shoes will be centered and adjusted.

h. Install brake assembly on the axle end.

i. Install brake drum on axle end.

j. Install axle end in axle adaptor. Axle end mounting bolts and nuts should be torqued to 35 to 40 foot/pounds.

k. Install lines.

1. After lines have been installed, the brakes are ready to bleed. Refer to Section IV for brake bleeding instructions.

5-102. MASTER CYLINDER ASSEMBLY.

5-103. REMOVAL.

a. Disconnect the pedal linkage at the push rod clevis.

b. Disconnect hydraulic brake line at the outlet fitting.

c. Remove the three bolts which secure the cylinder to the mounting bracket, and remove the cylinder assembly.

www.truck-freeworkshop.com/clark/

5-104. CLEANING AND INSPECTION.

a. Clean master cylinder assembly with stoddard type solvent or hydraulic brake fluid.

CAUTION

Do not use mineral-base cleaning solvent such as gasoline, kerosene, distillant. carbon tetrachloride, acetone, paint thinner, etc. These solvents deteriorate rubber parts, causing them to become soft, tacky and swollen in an extremely short time.

b. Replace master cylinder assembly if any damage, malfunction, or leakage is identified.

www.truck-freeworkshop.com/clark/

5-105. INSTALLATION.

a. Fill the master cylinder reservoir with fluid, then force the piston through one full stroke. Repeat piston stroking until fluid is forced past the check valve and out of the outlet port. This leaves the master cylinder filled with fluid prior to installing it on the vehicle.

b. Install the master cylinder to the vehicle, hook up the brake line and pedal linkage in the reverse order of removal procedure.

c. Perform brake bleeding and pedal free-play adjustment as outlined in Section IV.

5-106. STEERING GEAR REMOVAL (Refer to figure 5-133 for Parts Identification)

a. Disconnect battery ground cable.

b. Remove rubber horn emblem (Item 41) by pulling up and away from steering wheel (Item 39).

c. Position a screwdriver in small square holes in the horn button and rotate horn button (Item 42) 3/4" counter-clockwise.

d. Remove button (Item 42), brass contact plates (items 43 & 45) and spring (Item 44).

e. Remove retaining plate fasteners (Item 46), retaining plate (Item 47) and brush assembly (Item 40).

f. Remove steering wheel fasteners (Items 21 & 22) and using a puller, remove steering wheel (Item 39).

g. Remove floor plates and lower dash panel.

h. Remove pitman arm fasteners (Item 8 and 9) and remove pitman arm from steering gear.

1. Remove mounting clamp fasteners (Items 34, 35, 36 and 37) and support bracket fasteners (Items 48, 49 & 50).

j. Remove steering gear mounting fasteners (Items 32 and 33) and remove steering gear from machine.

5-107. DISASSEMBLY.

a. Rotate steering worm until nut is in center of travel.

b. Remove sector shaft nut

c. Use puller to remove pitman arm.

d. Remove side cover screws and remove side cover and sector shaft from housing.

www.truck-freeworkshop.com/clark/

e. To remove side cover from sector shaft, turn adjustor screw in end of sector shaft down through cover.

f. Remove screws and take out end cover with worm bearing, adjustor and nut.

g. Lift out worm bearing from end cover, loosen worm bearing adjustor lock nut and turn adjustor screw thru cover.

h. Grasp lower end of steering worm and draw steering shaft and nut out of steering housing. Disassembly of worm nut is not recommended.

CAUTION

Be sure to keep shaft in horizontal position so that nut does not move against stops at any time, causing damage to ball return mechanism.

5-108. CLEANING AND INSPECTION.

a. Clean all parts thoroughly in a stoddard type cleaning solvent, and dry thoroughly.

b. Inspect all bearings for pitting or wear.

c. Inspect worm, and re-circulating ball nut for nicks or excessive wear. If either of these parts are unfit for use, it will be necessary to replace with a new sub-assembly as they are not serviced separately.

d. Inspect sector shaft for nicks or excessive wear.

e. Inspect side cover bushing for excessive wear. If the bushing cannot be reused, it will be necessary to replace the side cover new, as the bushing is not serviced separately.

5-109. REASSEMBLY.

Install worm shaft and nut assembly in gear housing, keeping ball nut away form stops on worm.

b. Install worm bearing adjusting screw with lower worm bearing, and adjustor lock nut in end cover.

c. Install end cover and attaching parts on gear housing, making sure bearings seat properly.

d. Tighten worm bearing adjusting screw until a slight drag is felt on bearings. Do not tighten lock nut.

e. Install a new gasket on side cover.

f. Install sector shaft and adjusting screw inside cover.

g. Rotate steering worm until ball nut is in center of travel so that center tooth on sector shaft will enter center space on nut.

h. Install side cover and sector shaft in gear housing.

i. Tighten sector shaft adjusting screw until a slight drag is felt on bearing but do not tighten locknut.

j. Position steering gear in machine, line up mounting holes and install fasteners (Items 32 & 33). Install support bracket (Item 10) and fasteners (Items 48 & 49). Install mounting clamp fasteners (Items 34 thru 37). Install steering wheel (Item 39) and fasteners (Items 21 & 22).

k. Install pitman arm and fasteners (Items 8 & 9) and torque all fasteners as outlined in Section 4-57, page 4-45.

www.truck-freeworkshop.com/clark/

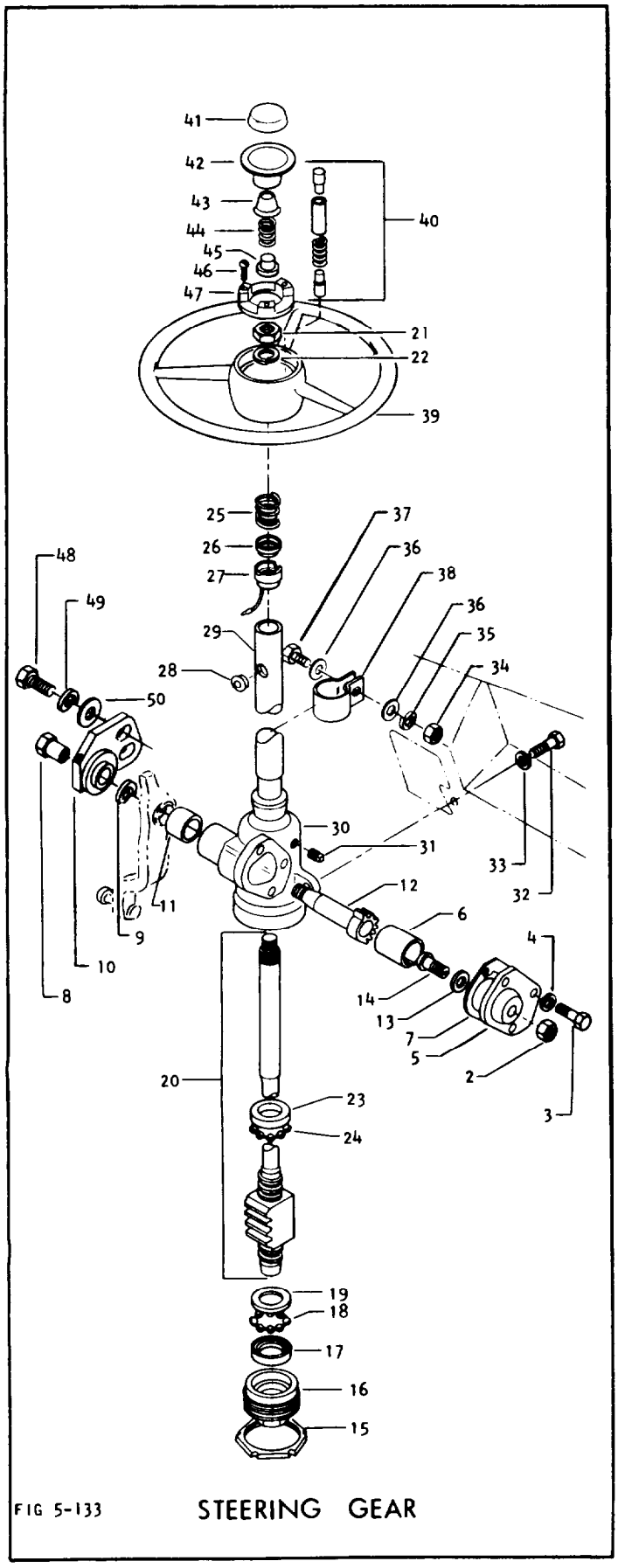

FIG 5-133 STEERING GEAR

2. NUT
3. BOLT
4. LOCKWASHER
5. BUSHING
6. BUSHING
7. GASKET
8. NUT
9. LOCKWASHER
10. SUPPORT
11. BUSHING
12. GEAR
13. SHIM
14. ADJUSTER
15. LOCKNUT
16. ADJUSTER
17. CUP
18. CONE
19. RETAINER
20. SHAFT ASSEMBLY
21. NUT
22. WASHER
23. CUP
24. BEARING
25. SPRING
26. SEAT
27. BEARING
28. GROMMET
29. JACKET
30. BUSHING
31. LUB FITTING
32. BOLT
33. LOCKNUT
34. NUT
35. LOCKWASHER
36. WASHER
37. BOLT
38. CLAMP
39. HANDWHEEL
40. BRUSH ASSEMBLY
41. EMBLEM
42. HORN BUTTON
43. CONTACT PLATE
44. SPRING
45. CONTACT PLATE
46. SCREW
47. RETAINING PLATE
48. CAPSCREW
49. LOCKWASHER
50. WASHER

www.truck-freeworkshop.com/clark/

www.truck-freeworkshop.com/clark/

1. Install horn contact brush assembly (Item 40) and retaining plate (Item 47) and fasteners (Item 46). Install contact plates (Items 43 & 45) and spring (Item 44) under horn button (Item 42). press down on horn button with thumbs and rotate 3/4" clockwise to lock into place. Install rubber emblem.

5-110. STEERING CYLINDER (See figure 5-134 for Parts Identification).

a. The cylinder assembly is a sealed unit. Overhaul procedures are restricted to replacing the sealing parts on the rod end and unscrew from cylinder piston rod.

b. Remove nut, bolt and lockwasher from the rod end and unscrew from cylinder piston rod.

c. Remove retainer snap ring with snap ring pliers. Rotate the rod and withdraw it far enough from the cylinder to expose scraper, wiper ring, retainer and washer. The shaft seal may be removed with a hooked scriber.

5-111. INSPECTION. Check cylinder shaft to make sure no nicks or burrs exist which could damage new seals. Remove nicks or burrs with a find hone. Shaft must be straight to avoid excessive and rapid seal wear. Replace any cylinder which has a badly nicked, scored, or bent shaft.

5-112. REASSEMBLY.

a. After making sure that the cylinder cap bore is clean, coat the rod seal assembly parts with petroleum jelly. Install two back-up rings over the rod and in the cylinder cap bore. Be sure that the split ends are staggered. Install the seal ring and two outer back-up rings, again with split ends staggered. Install the washer, retainer, wiper and scraper. Install the snap ring.

b. Screw the rod end sub-assembly onto the end of the cylinder rod. Align the split collar with the flat on the rod and install the locking bolt, nut and lockwasher.

www.truck-freeworkshop.com/clark/

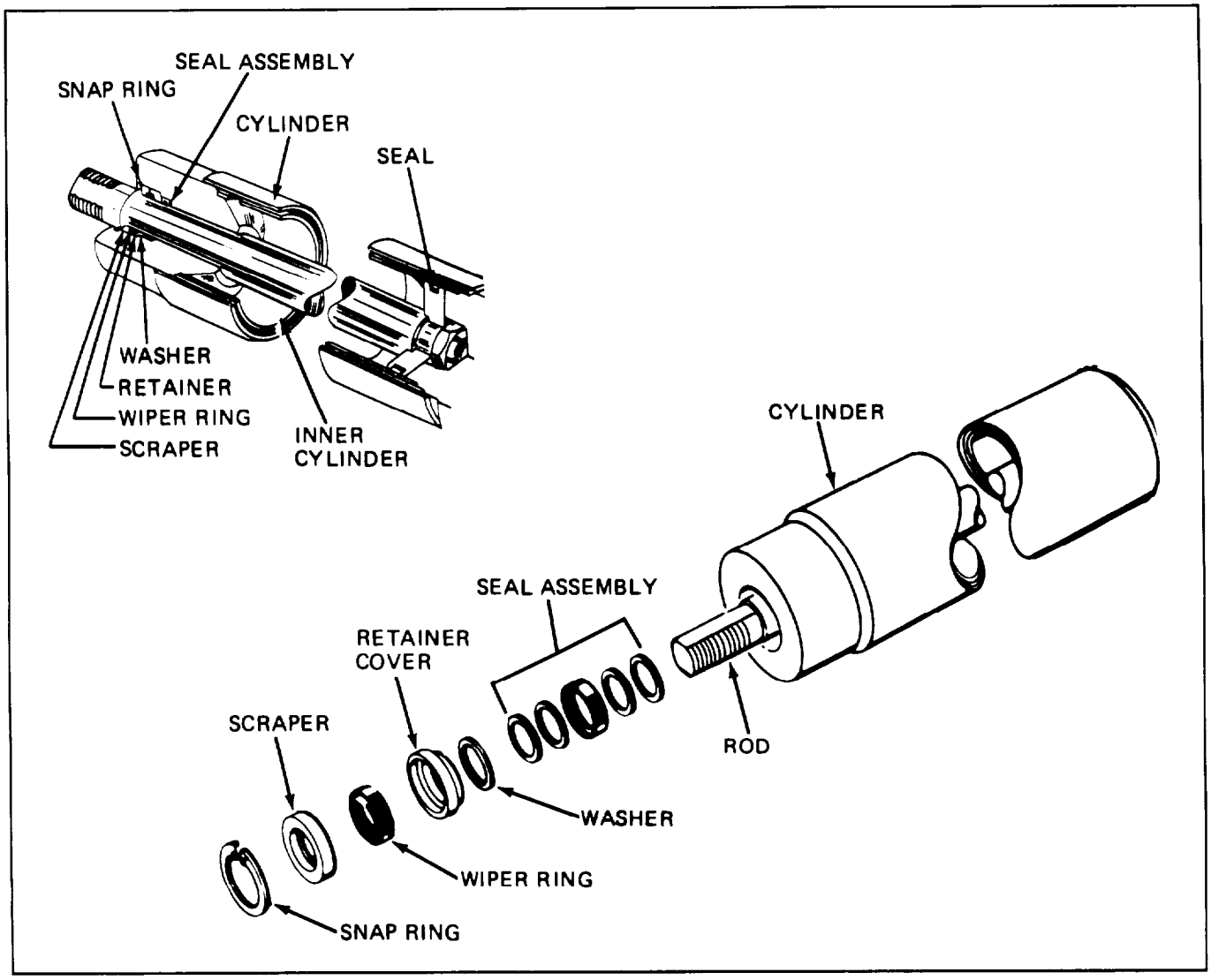

Figure 5-134. Steering Cylinder Seals

5-113. STEERING VALVE. (See figure 5-135.)

5-114. DISASSEMBLY

a. Hold control ball stud housing and valve assembly in a vise, by lightly clamping valve body. Use care not to distort spool bore in valve body.

b. Remove control valve dust cover and remove the wire snap ring which locks the control ball stud sleeve plug and remove plug. Remove control ball stud, two ball stud seats, spring washer and spacer.

c. Remove the bolts securing the ball stud housing to the valve and remove self-locking nut from spool capscrew. Remove capscrew, washer and control ball stud sleeve. Then lift the two centering spring retaining washers, centering spring and spacer from the valve body. Remove O-rings from valve body and from the spool.

d. Remove the check valve, O-ring, and ball from the valve body to complete the disassembly.

5-115. INSPECTION.

a. Discard all O-rings and seals and replace with new upon reassembly.

www.truck-freeworkshop.com/clark/

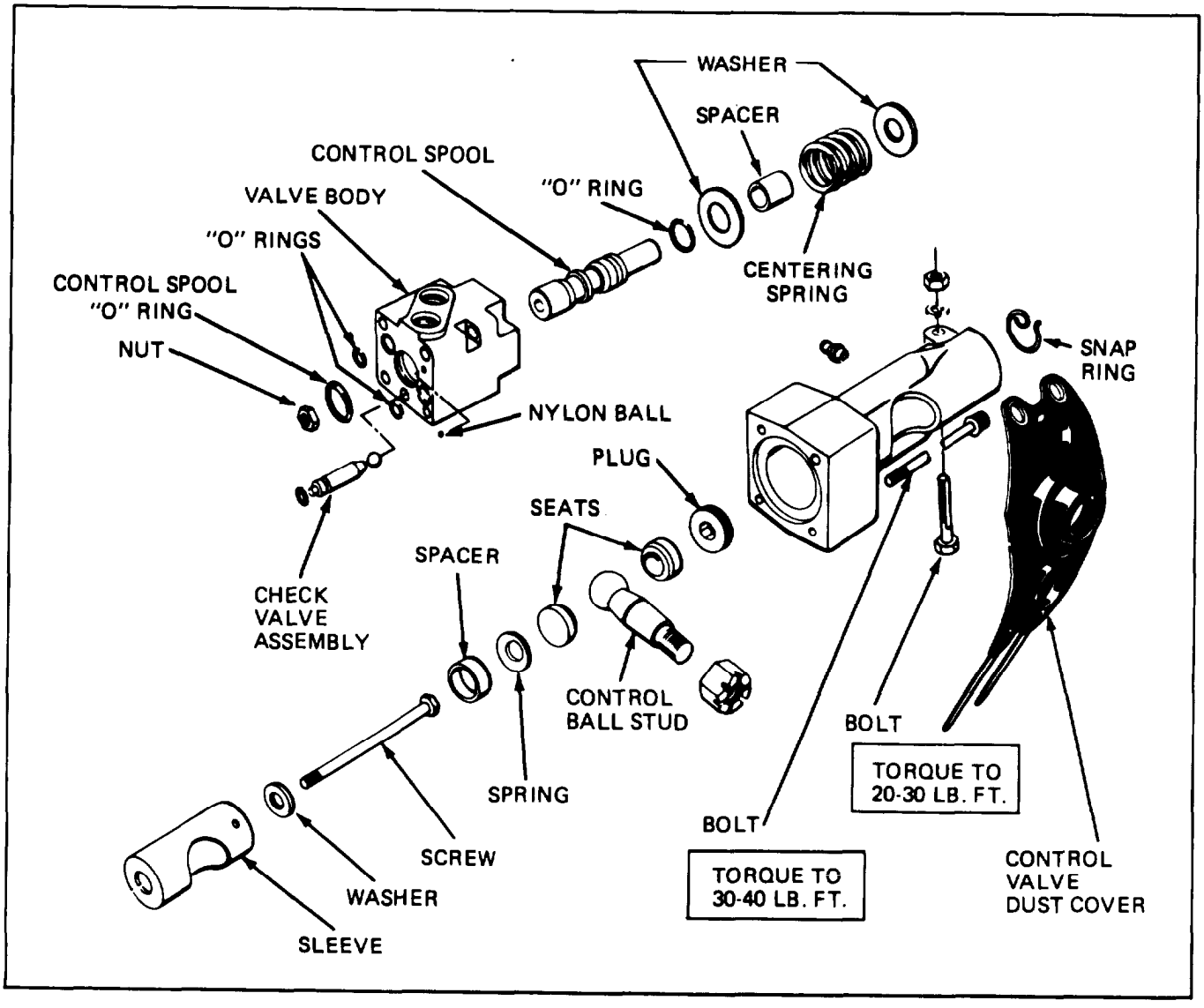

Figure 5-135. Steering Valve Assembly

b. Wash all parts in a Stoddard type cleaning solvent.

c. Inspect all fluid passages in valve body to be certain they are clean and free of obstructions.

d. Check each disassembled part for wear, cracks or pitting that would render them unfit for continued use. Replace all defective parts.

e. Inspect valve spool and valve spool bore for deep scoring and excessive wear. As these parts are not ordinarily serviced separately, they should be replaced as a unit if badly worn. Do not rework or attempt to touch up the valve spool. This practice will only result in improper steering unit operation and performance.

5-116. REASSEMBLY.

a. Immerse all parts in clean hydraulic fluid to facilitate assembly. Coat all O-rings and seals with petroleum jelly prior to assembly.

b. Install new O-ring (coated with grease or petroleum jelly) in cylinder end of valve body and

www.truck-freeworkshop.com/clark/

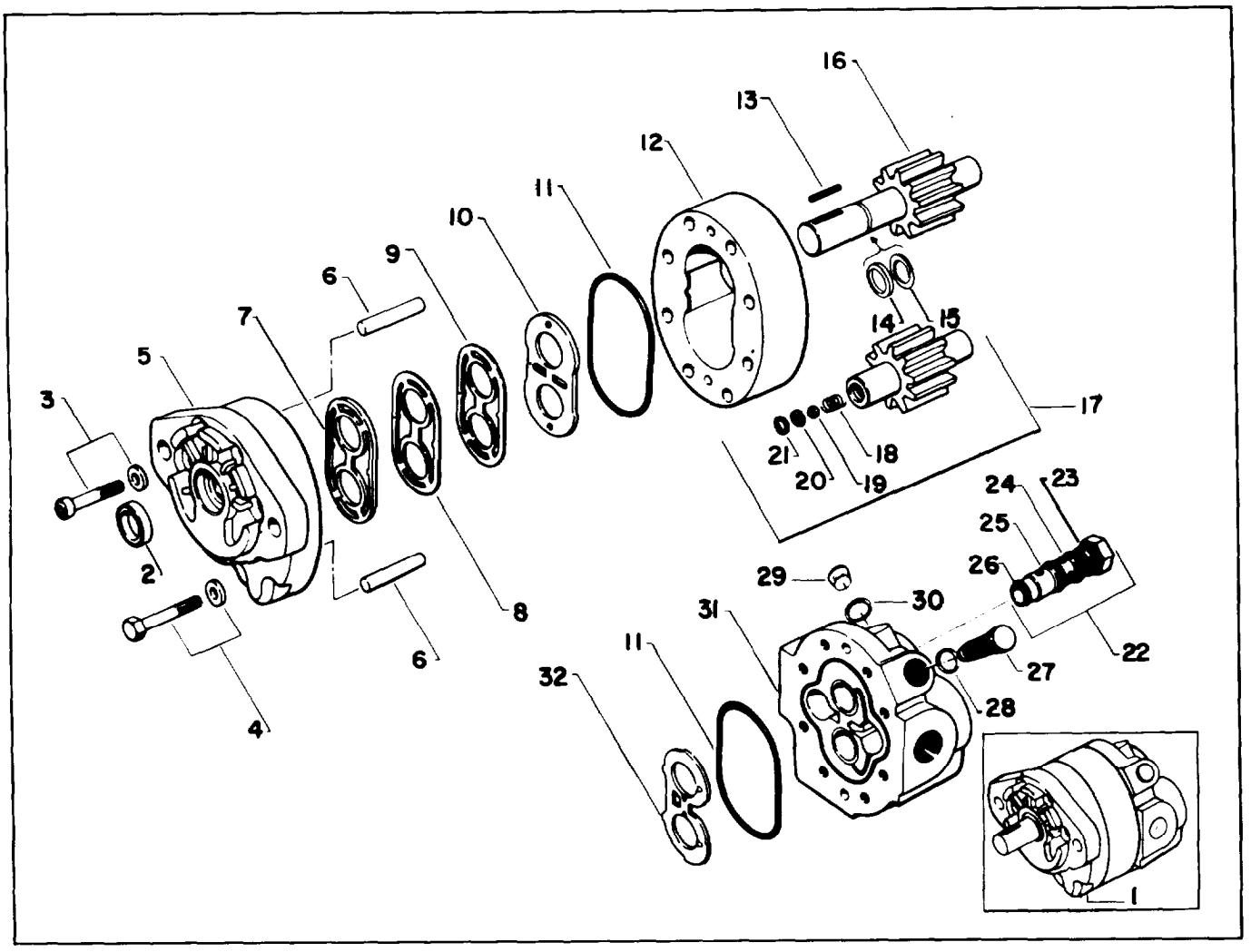

1. Pump assembly
2. Shaft seal
3. Cover bolt, washer
4. Cover bolt, washer
5. Cover
6. Dowel
7. v-seal
8. Gasket
9. Heat shield
10. Wear plate
11. Seal
12. Gear housing
13. Key
14. Retainer
15. Snap ring
16. Drive gear
17. Idler gear assembly
18. Valve spring
19. Valve
20. Valve seat
21. Retainer
22. Flow control valve assy.
23. O-ring
24. O-ring
25. O-ring
26. O-ring
27. Relief valve assembly
28. O-ring
29. Cover plug
30. O-ring
31. Cover assembly
32. Wear plate

Figure 5-136. Power Steering Pump

on control ball stud end of valve spool. Install spool in bore from the control ball stud end to avoid O-ring interference during assembly.

c. Install washer, spacer, centering spring, washer, control ball stud sleeve, capscrew washer and capscrew. Install self-locking nut and tighten until play between parts is removed. Be sure that nut is in good condition and that the centering spring remains aligned between the two retaining washers. Back nut off one flat (1/6 turn, or 60 degrees).

d. Start control ball stud sleeve plug in control ball stud sleeve.

e. Slide the control ball stud housing over the ball stud sleeve.

www.truck-freeworkshop.com/clark/

f. Install new O-ring on check valve and place ball and check valve in valve body recesses and hold valve against its port end mating surface, making sure the locating pin on the check valve engages the recessed hole to insure port alignment.

g. Locate control ball stud housing in desired position relative to control ball stud. Install four capscrews while holding valve and control assembly in place to prevent misalignment of O-rings. Tighten capscrews to porper torque. (Refer to Specifications on page vii).

h. Install control ball stud spacer. The spring washer must be installed with its convex (raised inside diameter) face toward ball stud to provide spring tension on ball stud. Next install ball stud seats and control ball stud. Position the stud and sleeve so that the stud is centered in the sleeve opening.

i. Tighten control ball stud sleeve plug snugly against seat. Back plug off until slot in plug lines with one of snap ring anchor holes in sleeve which are spaced at 60° intervals in control ball stud sleeve. Install hooked end in anchor hole and engage snap ring in groove in sleeve plug. This can most easily be done by engaging tang in hole in sleeve and then applying pressure with small screwdriver opposite tang on outside edge of snap ring.

5-117. DESCRIPTION AND PRINCIPLES OF STEER AND HYDRAULIC PUMPS.

These gear type pumps consists of two intermeshing hardened and precision ground gear assemblies which are lapped and enclosed in a three section housing assembly consisting of a die cast aluminum front cover, an intermediate (center) section made of high yield extruded aluminum and a back cover assembly Passages within this housing connect the intermeshing gears with the pump inlet and outlet ports.

Each gear assembly is press fitted on a separate precision ground and lapped shaft. Retaining rings are installed in grooves in these shafts to insure that gears will not move axially along the shaft.

The drive shaft is keyed to the gear to provide positive drive and extends thru the front cover to permit coupling the pump to an external driving means.

A double lip shaft seal is proveded in the front cover to prevent external leakage of fluid and the seal lip in contact with the fluid is spring loaded. Vent passages within the housing and driven shaft transmit pump inlet pressures to the shaft seal area to insure lowest possible pressures at the seal to extend seal service life.

A phenolic sheld, a paper composition gasket and molded rubber seal form compartments behind a steel backed bronze wear plate. These compartments are vented to either pump inlet or discharge pressures. Discharge pressure within these compartments axially loads and deflects the wear plate toward the gear faces to take up gear end clearances. This increases pump efficiency by reducing internal leakage.

Pump rotation is dependent on proper orientation of the heat shield, the gasket and the seal in the front cover with respect to the pump center section and back cover. Opposite pump rotation may be achieved by rotating the heat shield, the gasket, the seal, the wear plate, the center section and the back cover 180 degrees.

Pumping action is achieved by connecting the pump inlet port to an oil supply, the outlet port to a discharge line and rotating the pump drive shaft in a direction which causes the gear teeth to rotate away form the pump inlet port.

www.truck-freeworkshop.com/clark/

Rotation causes the volume at the gear mesh to increase on the inlet side and decrease on the pressure 'side. This creates a suction at the pump inlet port to allow filling of the gear tooth spaces by the pressure acting on the fluid in the inlet line.

NOTE

Always thoroughly clean unit to be disassembled with a non-corrosive stoddard type cleaning solvent which will not affect rubber components.

CAUTION

CLEAN WORKING AREAS ARE AN ABSOLUTE MUST WHEN DISASSEMBLING, REPAIRING OR REASSEMBLING HYDRAULIC COMPONENTS OF ANY TYPE.

5-117. POWER STEERING PUMP

5-118. REMOVAL (Refer to page 7-76).

a. Remove all the hydraulic lines to the power steering pump.

b. Cap the lines so that contamination does not occure.

c. Remove the two mounting bolts that mount the pump to the engine.

d. Remove pump from the machine

e. Remove all fittings from the pump.

5-119. DISSASSEMBLY (See figure 5-136 for parts identification).

STEP 1. Scribe a line across the three sections of the pump assembly being dismantled. This line will act as a guide in re-assembly.

STEP 2. Remove the cotter pin from the nut thats holding the drive gear in place.

STEP 3. Remove the nut washer and gear.

STEP 4. Remove the hex countersunk head screws and hex head capscrew (Items 3 and 4)

STEP 5. Remove the key (Item 13) from the exposed end of the pump drive shaft.

STEP 6. Remove the pump front cover (Item 5) by tapping the flange with a soft metal or fibre hammer.

STEP 7. The pump center section (Item 12) will remain attached to either the front cover (Item 5) or the back cover (Item 31)

STEP 8. Place the pump drive gear and shaft (Item 16) into the un-separated sections and, while holding the center section (Item 12), tap lightly to separate

NOTE

Use caution to avoid "Cocking" of the dowel pins (Item 6).

STEP 9. Remove wear plate (Item 10) and the thrust plate (Item 32)

STEP 10. Mark the front cover island next to the pressure vent hole in the heat shield (Item 9), the gasket (Item 8) and the rubber seal (Item 7).

NOTE

This mark will aid you in reassembly of the pump as the location of the vent hold determines pump rotations.

STEP 11. Use a piece of small diameter wire (paper clip) to remove the heat shield (item 9), the gasket (Item 8) and the rubber seal (Item 7). These three items should be thrown away as they should always be re-placed when pump is dissassembled.

www.truck-freeworkshop.com/clark/

STEP 12. Remove and discard the two O-Rings (Item 11) between end covers and pump center sections.

STEP 13. DO NOT REMOVE drive shaft seal (Item 2) in the front cover (Item 5) unless it is damaged or is leaking. If this seal must be replaced use care not to damage the seal recess in the front cover.

Heating the cover to 250 degrees will reduce the press fit and make removal of this seal easirer.

STEP 14. If the flow control valve (Item 22) or the relief valve (Item 27) are found to be defective they must be replaced as a unit. Refer to Troubleshooting.

5-120 INSPECTION.

STEP 1. Inspect drive and driven shaft assemblies (Item 16 and 17) for roughness in the sealing and bearing areas.

STEP 2. Measure drive and driven shafts (Items 16 and 17) for wear. Minimum acceptable shaft diameter is .7492".

STEP 3. Inspect shaft key for excessive wear.

STEP 4. Inspect gear end faces, outside diameters and teeth for roughness or wear.

STEP 5. Measure gear thickness and outside diameter for wear. Minimum acceptable gear width is -4531" and minimum gear diameter is 1.7140".

STEP 6. Make certain that shaft snap rings are secure; break off and smooth up any sharp edges on the sides of the gears.

STEP 7. Depress the seal pressurizing valve. (items 18,19,20 and 21) to be sure that there is some resistance but that movement is free.

STEP 8. Check bearing bore diameters in front and rear covers (Items 5 and 31) for wear. Specification for maximum acceptable bore diameter is .7518".

STEP 9. If bearings are scored, rough, or show signs of heat discoloration the end cover(s) must be replaced.

STEP 10. Inspect wear plate (Item 10) and thrust plate (Item 32) for wear. If wear ridge exceeds .0005" these plates must be replaced.

STEP 11. Inspect gear bore walls in center section (Item 12) for excessive wear or score marks. A wear ridge will have developed at the end of the bore where the thrust plate is located. This wear ridge should not exceed 1/32".

5-121. REASSEMBLY

STEP 1. All parts must be thoroughly cleaned prior to reassembly by dipping in solvent and brushing to remove all traces of contamination.

STEP 2. Install shaft seal (Item 2), if it was removed, in front cover with the spring loaded lip facing inward. Force seal into place with a flat steel rod slightly smaller in diameter than the O. D. of the seal.

www.truck-freeworkshop.com/clark/

NOTE

The front cover must be locked by a smooth clean surface during this operation to prevent damaging or scoring its face.

C A U T I O N

DO NOT BEND THE STEEL SEAL RETAINER OR SCORE THE HOUSING SEAL BORE.

STEP 3. Install the rubber seal (Item 7), the gasket (Item 8) and the heat shield (Item 9) into the end cover cavity as follows:

a. The small vent hole through all these parts must be aligned and positioned next to the scribe mark on the island made during disassembly.

b. The lips of the rubber seal must face toward the cavity and be tucked into the groove with a smooth dull tool to prevent damage to the rubber surface.

c. The gasket (Item 8) must be pressed firmly toward the bottom of the cavity with the thumbs so as to make sure that all of its perimiters are completely within the groove to avoid interference with subsequent reassembly.

d. The heat shield (Item 9) shall be firmly pressed toward the bottom of the cavity with the thumb until sufficient space is available for the wear plate.

STEP 4. Install O-ring (Item 11) into groove in front end cover (Item 5). Oil the O-ring and stretch it slightly, if necessary, to make it remain in the groove.

STEP 5. Install the wear plate (Item 10) with the bronze surface against the gears and the small hole in line with the vent hole in the heat shield (Item 9).

STEP 6. Install drive gear assembly (Item 16) and driven gear assembly (Item 17) into front cover. Apply oil to pump drive shaft at the drive end to prevent damage to the shaft seal when the shaft is pushed through. Check to make sure that the seal lip and spring is not pushed out by the shaft.

STEP 7. Check wear plate to make certain that it is still seated in its oval cavity and install the center section (Item 12) over the gears until it contacts the wear plate. Make certain that the scribed lines on the housing exteriors are in line.

STEP 8. Install the dowel pin (Item 6) and add a generous amount of oil to the gear cavities. Rotate the gears to insure distribution of the oil.

STEP 9. Place thrust plate (Item 32) on top of the gears in the center section. Make certain that the bronze side is toward the gears and the open side is toward the inlet ports.

STEP 10. Oil the O-ring (Item 11) and place it in the groove in the back cover face.

STEP 11. Install the back cover with the scribed mark aligned with the scribe marks in the center section and the front cover.

STEP 12. Install the housing retainer capscrews and cross-tighten to 16-19 lbs ft.

www.truck-freeworkshop.com/clark/

STEP 13. Add a generous amount of clean oil in both the inlet and outlet ports.

STEP 14. Install pump drive gear, washer and nut. Tighten nut snug and align hole in drive gear shaft (Item 16) with a slot in the nut. Install cotter pin. (Refer to page 7-72).

STEP 15. Rotate the shaft to distribute the oil. Shaft should rotate with the help of a short wrench (Max. torque 10 pound feet).

STEP 16. Install new O-ring on the fittings and install the fittings onto the pump (Refer to page 7-70 for proper location of fittings).

STEP 17. Install Steer pump into its position on the engine and install the mounting fasteners.

STEP 18. Remove caps from the hydraulic lines and install the hydraulic lines to their proper position on the fittings on the steer pump (Refer to page 7-70).

CAUTION

WHEN STEER PUMP IS REINSTALLED, ALLOW TO RUN FOR 2 TO 3 MINUTES BEFORE PRESSURIZING. TRY TO APPLY PRESSURE GRADUALLY FOR THE NEXT 5 MINUTES BUT DO NOT PRESSURIZE FOR MORE THAN 5 SECONDS AT A TIME.

5-122. HYDRAULIC PUMP

5-123. REMOVAL

STEP 1. (Refer to page 7-82) Remove and cap the hydraulic line (Item 31.018) from the outlet fitting (Item 31.014), loosen the clamp (Item 31.007) that holds the pump inlet hose (Item 31.006) to the pump inlet tube (Item 31.008) and remove the hose from the tube.

STEP 2. Remove the four capscrews and lockwashers (Items 31.012 and 90.775) from the flange (Item 31.011) and remove the tube from the machine.

STEP 3. Remove the fasteners that mount the pump to the front end cover and remove the pump from the machine (Refer to page 7-73).

5-124. DISASSEMBLY (Refer to Fig. 13344).

STEP 1. Scribe a line across the three sections of the pump assembly being dismantled. This line will act as a guide in accomplishing proper reassembly.

STEP 2. Remove the cotter pin from the slot in nut and remove the nut, the 2 washers and the drive gear from the pump shaft (Refer to page 7-73)

STEP 3. Remove the hex countersunk head screws and hex head capscrews (Item 2 and 3).

STEP 4. Remove the key (Item 23) from the exposed end of the pump drive shaft.

STEP 5. Remove the pump front cover (Item 5) by tapping the flange lightly with a soft metal or fibre hammer.

STEP 6. The pump center section (Item 12) will remain attached to either the front cover (Item 5) or the back cover (Item 21).

STEP 7. Place the pump drive gear and shaft (Item 13) into the unseparated sections and, while holding the center section (Item 12), tap lightly to separate.

www.truck-freeworkshop.com/clark/

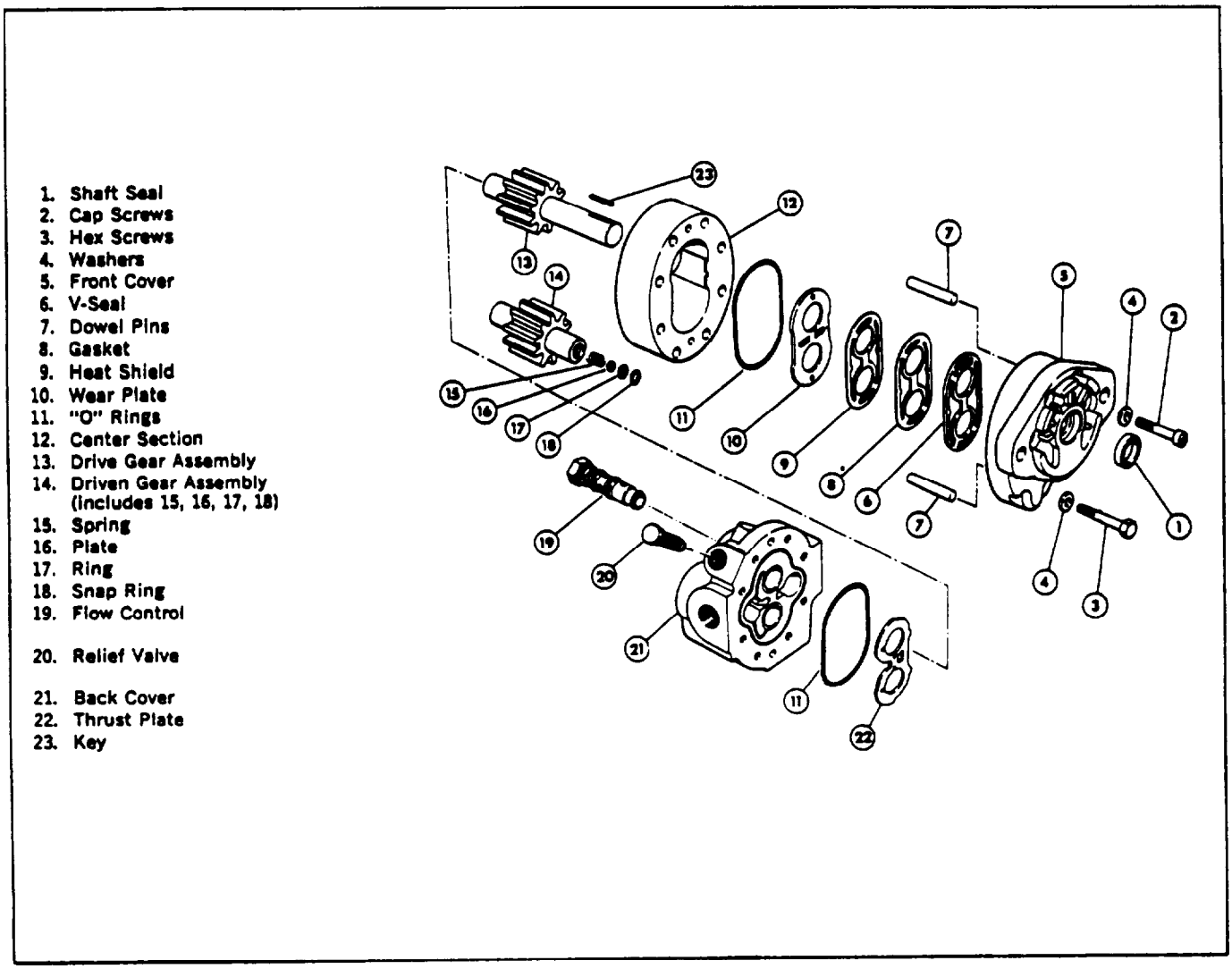

Fig. 13344

NOTE

Use caution to avoid "cocking" of the dowel pins (Item 7).

STEP 8. Remove wear plate (Item 10) and the thrust plate (Item 22).

STEP 9. Mark the front cover island next to the pressure vent hole in the heat shield (Item 9), the gasket (Item 8) and the rubber seal (Item 6).

NOTE

This mark will aid you in accomplishing proper reassembly of the pump as the location of the vent hole determines pump rotation.

STEP 10. Use a piece of small diamter wire (Paper clip) to remove the heat shield (Item 9), the gasket (Item 8) and the rubber seal (Item 6). These three items should be thrown away as they should always be replaced when pump is reassembled.

www.truck-freeworkshop.com/clark/

STEP 11. Remove and discard the two O-rings (Item 11) between end covers and pump center section.

STEP 12. Do Not Remove drive shaft seal (Item 1) in the front cover (Item 5) unless it is damaged or is leaking. If this seal must be replaced use care not to damage the seal recess in the front cover. Heating the cover to 250 degrees will reduce the press fit and make removal of this seal easier.

STEP 13. If the flow control valve (Item 19) or the relief valve (Item 20) on some pumps in this series are found to be defective they must be replaced as a unit.

5-125. INSPECTION:

STEP 1. Inspect drive and driven shaft assemblies (Items 13 and 14) for roughness in the sealing and bearing areas.

STEP 2 Measure drive and driven shafts (Items 13 and 14) for wear. Minimum acceptable shaft diameter is .9365".

STEP 3 Inspect shaft keyways, keys or splines for excessive wear.

STEP 4 Inspect gear end faces, outside diameters and teeth for roughness or wear.

STEP 5 Measure gear thickness and outside diameter for wear. Minimum acceptable gear width is .8065" and diameter is 2.1047".

STEP 6. Make certain that shaft snap rings are secure: break off and smooth up any sharp edges on the sides of the gears.

STEP 7. Depress the seal pressurizing valve, (Items 15,16,17, and 18) if pump is so equipped, to be sure that there is some resistance but that movement is free.

STEP 8. Check bearing bore diameter in front and rear covers (Item 5 and 21) for wear. Maximum acceptable bore diameter is .9394".

STEP 9. If bearings are scored, rough, or show signs of heat discoloration the end cover(s) must be replaced.

STEP 10. Inspect wear plate (Item 10) and thrust plate (Item 22) for wear. If wear ridge exceeds .0005" these plates must be replaced.

STEP 11. Inspect gear bore walls in center section (Item 12) for excessive wear or score marks. A wear ridge will have developed at the end of the bore where the thrust plate is located. This wear ridge should not exceed 1/32".

5-126. REASSEMBLY:

STEP 1. All parts must be thoroughly cleaned prior to reassembly by dipping in solvent and brushing to remove all traces of contamination.

STEP 2. Install shaft seal (Item 1), if it was removed, in front cover with the spring loaded lip facing inward. Force seal into place with a flat steel rod slightly smaller in diameter than the O.D. of the seal.

NOTE

The front cover must be backed by a smooth clean surface during this operation to prevent damaging or scoring its face.

www.truck-freeworkshop.com/clark/

C A U T I O N

DO NOT BEND THE SEAL RETAINER OR SCORE THE HOUSING SEAL BORE.

STEP 3. Install the rubber seal (Item 61, the gasket (Item 8) and the heat shield into the end cover cavity as follows:

a. The small vent hold through all these parts must be alligned and positioned next to the scribe mark on the island made during disassembly.

b. The lips of the rubber seal must face toward the cavity and be tucked into the groove with a smooth dull tool to prevent damage to the rubber surface.

c. The gasket (Item 8) must be pressed firmly toward the bottom of the cavity with the thumbs so as to make sure that all of its perimeters are completely within the groove to avoid interference with subsequent assembly.

d. The heat shield shall be firmly pressed toward the bottom of the cavity with the thumbs until sufficient space is available for the wear plate.

STEP 4. Install O-ring (Item 11) into groove in front end cover (Item 5). Oil the O-ring and stretch it slightly, if necessary, to make it remain in the groove.

STEP 5. Install the wear plate (Item 10) with the bronze surface against the gears and the small hole in line with the vent hold in the heat shield (Item 9).

STEP 6. Install drive gear assembly (Item 13) and driven gear assembly (Item 14) into front cover. Apply oil to pump drive shaft at the drive end to prevent damage to the shaft seal when the shaft is pushed through. Check to make sure that the seal lip and spring is not pushed out by the shaft.

STEP 7. Check wear plate to make certain that it is still seated in its oval cavity and install the center section (Item 12) over the gears until it contacts the wear plate. Make certain that scribed lines on the housing exterior are in line.

STEP 8. Install the dowel pins (Items 7) and add a generous amount of oil to the gear cavities. Rotate the gears to insure distribution of the oil.

STEP 9. Place thrust plate (Item 22) on top of the gears in the center section. Make certain that the bronze side is toward the gears and the open side is toward the inlet port.

STEP 10. Oil the o-ring (Item 11) and place it in the groove in the back cover face.

STEP 11. Install the back cover with the scribe mark aligned with scribe marks on the center section and the front cover.

STEP 12. Install the housing retainer screws and cross-tighten to the torque. values given on the specification page at end of this section.

STEP 13. Add a generous amount of clean oil in both the inlet and outlet ports.

www.truck-freeworkshop.com/clark/

STEP 14. Install the pump drive gear, the two washers and the nut onto the pump drive gear shaft. Tighten the nut snug and align slot in the nut with the hole in the pump. Install cotter pin.

STEP 15. Rotate the shaft to distribute the oil. Shaft should rotate with the help of a short wrench (Max. torque 100 pound-inches).

STEP 16. Install the pump into its position in the front end cover of the engine and install the fasteners that mount the pump (Refer to page 7-73).

STEP 17. Install the flanges around the pump inlet tube and install a new O-ring (Item 31.010) into the flange. (Refer to page 7-82).

STEP 18. Install pump inlet tube (Item 31.008) onto the pump and install the flange fasteners (Item 31.012 and 90.775). (Refer to page 7-82)

STEP 19. Install the pump inlet hose (Item 31.006) onto the tube (Item 31.008) and tighten clamp (Item 31.007) (Refer to page 7-82).

STEP 20. Remove cap from hydraulic line (Item 31.018) and install line onto the pump outlet fitting (Item 31.014) (Refer to 7-82).

C A U T I O N

WHEN PUMP IS REINSTALLED, ALLOW TO RUN FOR 2 TO 3 MINUTES BEFORE PRESSURIZING. TRY TO APPLY PRESSURE GRADUALLY FOR THE NEXT 5 MINUTES BUT DO NOT PRESSURIZE FOR MORE THAN 5 SECONDS AT A TIME.

www.truck-freeworkshop.com/clark/

TROUBLE	PROBABLE CAUSE	REMEDY
1. Noisy Pump	a. Low oil supply b. Oil too heavy, (i.e. viscous) c. Air leak in inlet line d. Partly blocked inlet line	a. Fill reservoir b. Change to proper viscosity c. Check plumbing d. Check for foreign object and/or clean
2. Foaming Oil	a. Pump cavitating b. Water in the oil	a. See 1a, 1b, 1c, 1d b. Check reservoir and/or heat exchange
3. Pump or oil overheating	a. Oil supply too thin b. Oil supply contaminated c. Pump cavitating d. Pump drive shaft excessively misaligned with pump driven shaft e. Pump drive shaft axially loaded by driving shaft (Prime Rover) f. System relief valve bypassing	a. Drain & fill with proper viscosity oil b. Drain, clean filter, & fill with clean oil c. See 1a, 1b, 1c, 1d d. Check alignment e. Check for clearance at ends of shafts, for shaft misalignment or worn driving keys, keyways or splines. If pulley drive check for belt alignment f. Check relief valve setting (see 4c)
4. Low Flow	a. Pump cavitating b. Foaming oil c. Relief valve leaks or set too low d. Speed too low e. Oil too hot	a. See 1a, 1b, 1c, 1d b. See 2a, 2b c. Check relief valve for foreign particles d. Check prime mover speed e. Check temperature (see 3a, 3b, 3c 3d & 3e)
5. Failure to build pressure	a. Defective Relief valve b. Low oil supply	a. Check and reset or replace b. Fill reservoir

NOTE

Always check the TROUBLE SHOOTING LIST before a pump is removed or disassembled.

www.truck-freeworkshop.com/clark/

TROUBLE SHOOTING

TROUBLE	PROBABLE CAUSE	POSSIBLE REMEDY
1 External leakage through valve cap vent hole.	1 Ruptured "0" ring or porous casting.	1 Replace "0" ring or complete valve assembly.
2 Failure to tilt forward.	2 Spool stuck in spool cap direction.	2 (A) Replace spool assembly. (B) Inspect orifice for obstruction; clean out orifice or replace body.
3 Chatter during forward tilt.	3 Oversize orifice.	3 Replace entire assembly.

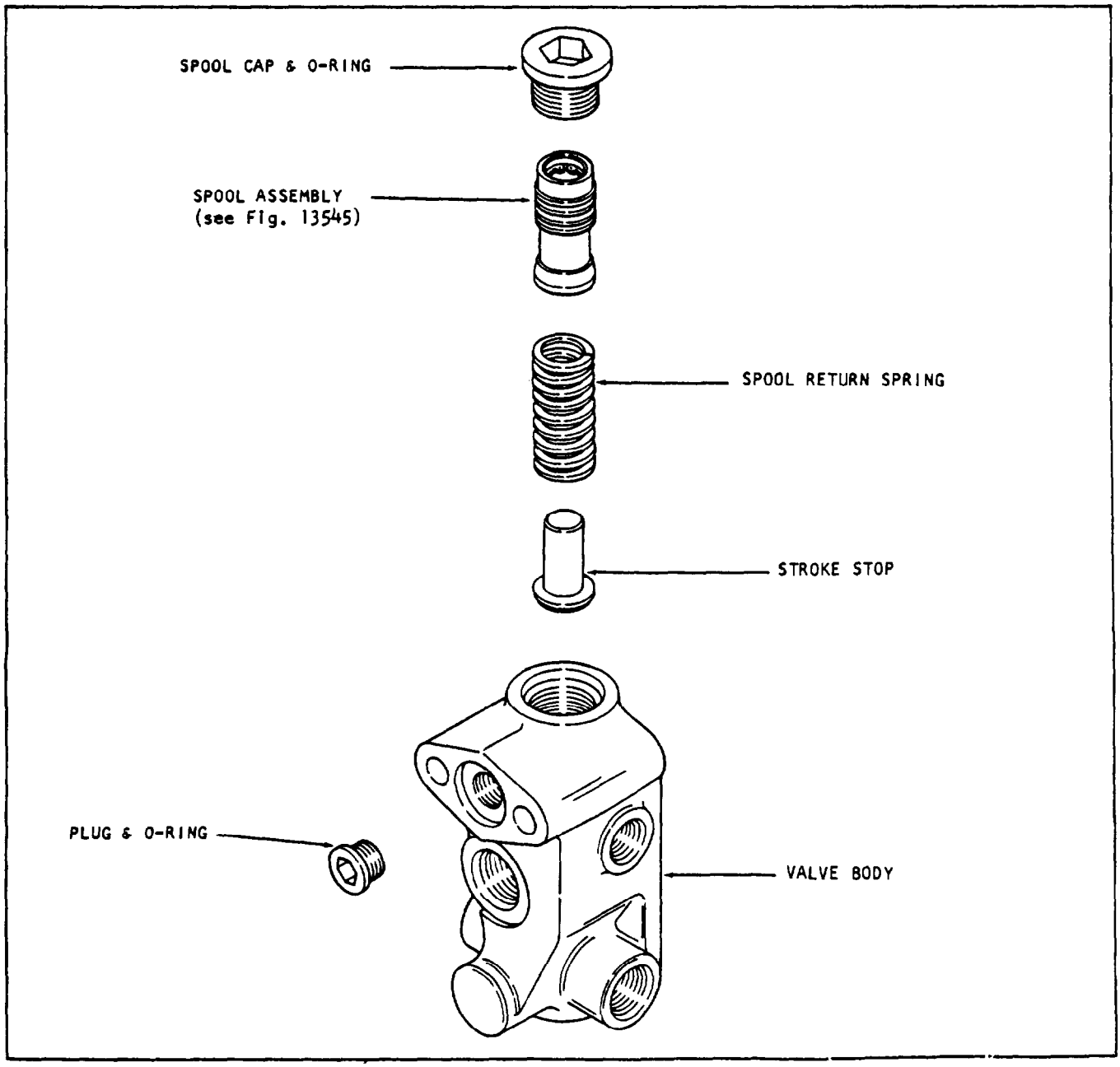

Fig. 13342

www.truck-freeworkshop.com/clark/

5-127
DISASSEMBLY AND INSPECT ION

WARNING

THE TILT LOCK VALVE SERVES AS A SAFETY DEVICE ON THE MACHINE. ANY TAMPERING WITH THE VALVE BY UNQUALIFIED PERSONNEL COULD LEAD TO A SERIOUS ACCIDENT.

NOTE

The spool assembly is available as an assembly only, not as individual parts.

STEP 1. Avoid disassembly of tilt lock valve plugs unless visible leakage or malfunction makes overhaul necessary. Remove spool cap and discard seal.

STEP 2. Remove spool assembly, spool return spring and stroke stop from valve body.

STEP 3. Inspect threads of cap and body for any scratches or nicks which could leak; use proper light source to check inside body cavity. Check spool major diameter for distortion or damage.

STEP 4. Check spool return spring and stroke stop against specifications, and inspect for distortion or unusual wear. Replace as necessary.

STEP 5. If trouble seems to be in the spool, remove inner snap ring (Fig. 13545) and disassemble and inspect plug spring and ball, as well as the inside cavity of the spool.

NOTE

If any part of the spool is damaged, replace entire spool assembly as a unit.

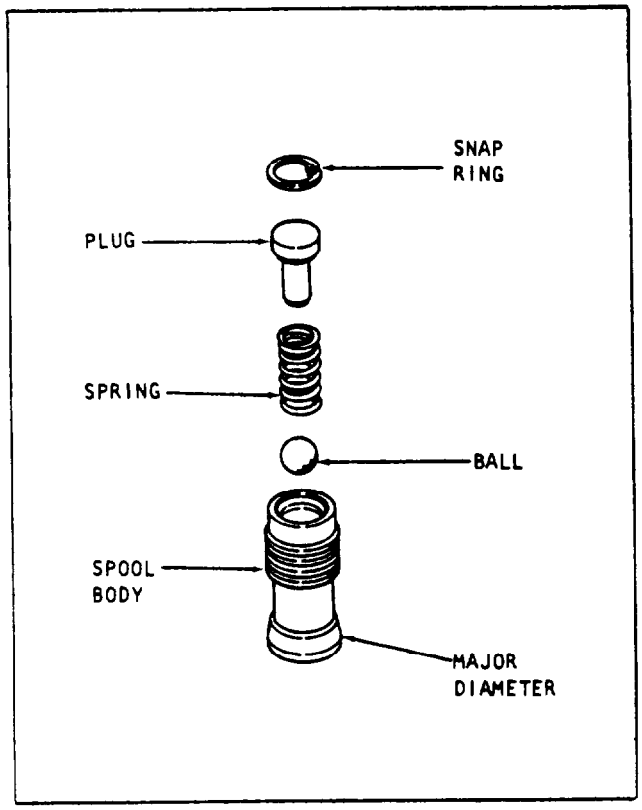

Fig. 13545

CAUTION

USE GREAT CARE DURING DISASSEMBLY NOT TO SCRATCH OR DAMAGE SURFACES INSIDE VALVE,

www.truck-freeworkshop.com/clark/

REASSEMBLY:

STEP 1. Install spool check ball, Spring, plug and internal snap ring. It may be necessary to press or drive plug into position SO the snap ring seats in recess.

STEP 2. Install stroke stop, spool return spring and spool assembly (preassembled in Step 1) into valve body (as shown in Fig. 13343). Install new O-ring and install valve cap, tightening properly.

CAUTION

USE GREAT CARE DURING ASSEMBLY NOT TO SCRATCH OR DAMAGE SURFACES INS IDE VALVE.

STEP 3. Install new O-rings and reinstall plugs in valve body, If tilt lock valve is not to be installed on truck immediately, insert shipping plugs in all uncovered openings in valve body to prevent dirt or particles from entering valve.

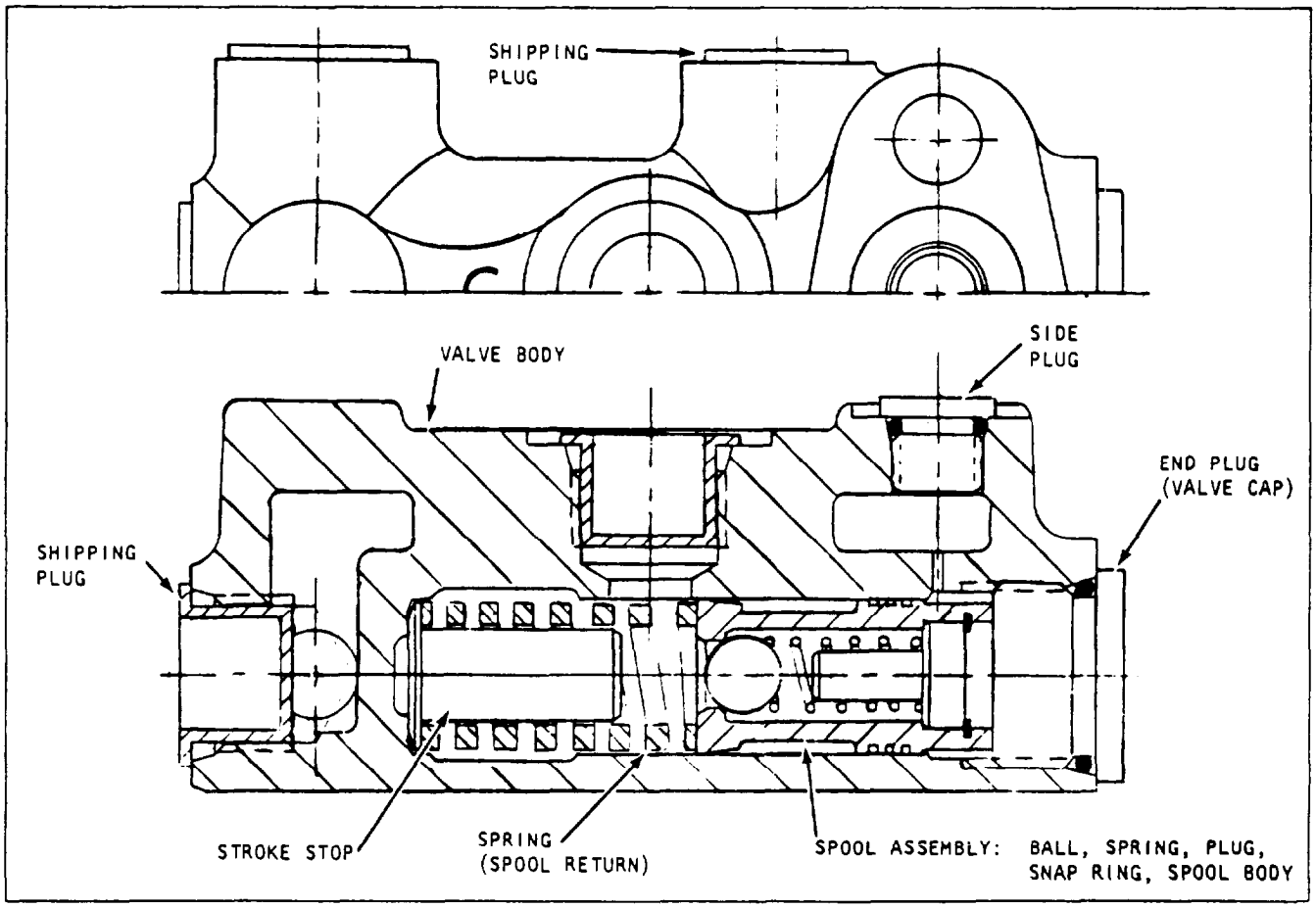

Fig. 13343

SPECIFICATIONS FOR TILT LOCK VALVE:

CLARK PART NUMBER	BODY TYPE	SPOOL ASSEMBLY (DISCARD & REPLACE AS COMPLETE UNIT)	SPOOL RETURN SPRING SPECIFICATIONS				STROKE STOP DIMENSIONS	
			COMPRESSED HEIGHT	FREE HEIGHT	MAX. I.D.	MIN. O.D.	LGTH ROD	O.D.
233471	CASTING	yes	.968" @ 100-120 lbs	1.540±.029"	Note 1	Note 2	1.029 (MIN)	.438 (MAX)

NOTES:

1 Spring must work over .438 inch rod (test with the stroke stop),
2 Spring must move freely inside hole .750 inch minimum.

www.truck-freeworkshop.com/clark/

LEGEND FOR FIGURE 5-138

1. Valve assembly
2. Inlet section
3. Inlet body
4. Screw
5. Sleeve retainer cover
6. Sleeve
7. Spring cover seal
8. Lower spool seal
9. Centering spring
10. C-washer
11. Valve spool
12. Plug, check valve
13. Back-up ring
14. Valve plug seal
15. Check valve spring
16. Check valve ball
17. Back-up ring
18. O-ring seal
19. Relief valve plug
20. Cap seal
21. Relief valve spring
22. Relief valve assembly
23. Plug
24. O-ring seal
25. Stud nut
26. Tie stud
27. Screw
28. Sleeve retainer cover
29. Sleeve
30. Spring cover seal
31. Lower spool seal
32. Centering spring
33. C-washer
34. Spool
35. Plug, check valve
36. Back-up ring
37. Valve plug seal
38. Check valve spring
39. Check valve ball
40. Back-up ring
41. O-ring seal
42. Outlet section
43. Outlet body
44. Seal retainer
45. Seal
46. Seal
47. Seal

5-129 HYDRAULIC VALVE

5-130 DISASSEMBLY. Refer to figure 5-138 and proceed as follows:

a. Remove cowl access hole cover fasteners and cover plate, remove lower dash panel fasteners and lower dash panel.

b. Be sure the valve is not subject to pressure. Disconnect and cap all lines and disconnect linkage to the spools. Remove valve mounting fasteners and remove valve from machine.

NOTE

During disassembly, particular attention should be given to identification of parts for reassembly. Spools are selectively fitted to valve bodies and must be returned to the same bodies from which they were removed. Valve sections must be reassembled in the same order.

c. Attaching Parts: Remove the tie studs and nuts and separate valve sections.

d. Slide the spool out of its bore and remove the O-rings from the grooves in the spool and from the valve body around the spool bore. Do not remove the centering spring and "C" washers unless it is necessary to replace them.

e. Grip the stem of the check valve plug with pliers and pull it out of the valve body. Remove the O-ring and back-up ring. Remove the spring and ball from the valve body.

f. Screw out the plug which retains the relief valve and remove the O-ring from the plug. Remove the spring and the relief valve.

5-131 CLEANING AND INSPECTION.

a. Discard all old seals. Wash all parts in a clean mineral oil solvent and place them on a clean surface for inspection.

b. Carefully remove burrs by light stoning or lapping. Be certain there is no paint or burring on mating surfaces of valve bodies.

c. Inspect the valve spools and bores for burrs and scoring. If scoring is not deer enough to cause objectionable leakage, the surfaces can be stoned or polished with crocus cloth. If scoring is excessive, the valve body and spool must be replaced. Check the valve spool for freedom of movement in the bore.

d. Check the relief valve for smooth movement in its bore. The valve should move from its own weight.

5-132 REASSEMBLY.

a. Install the O-ring on the relief valve plug. Place the relief valve assembly in its bore, hex nut end up. Install the spring and plug and tighten the plug securely but DO NOT over tighten.

www.truck-freeworkshop.com/clark/

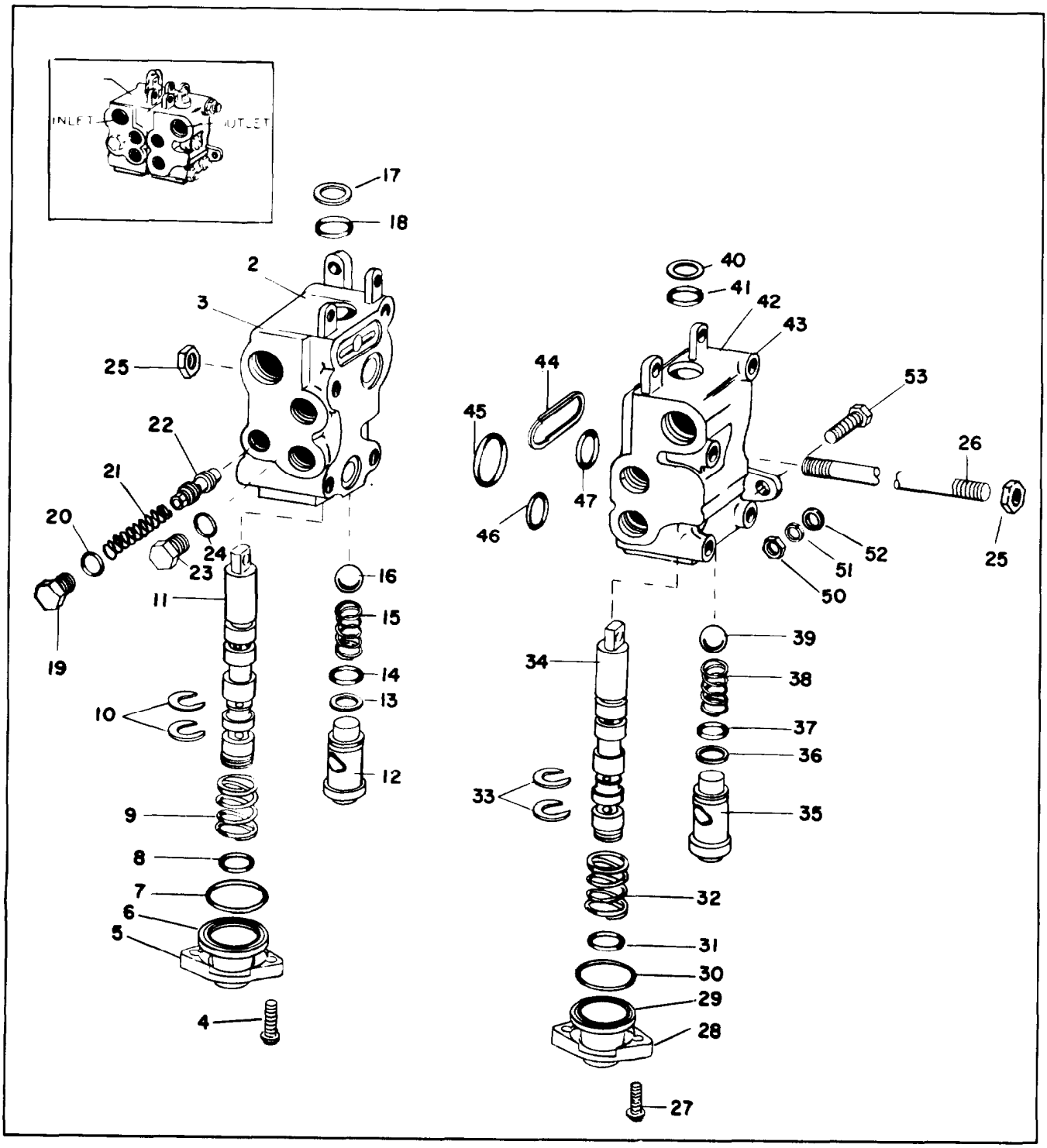

Figure 5-138. Hydraulic Valve Assembly

www.truck-freeworkshop.com/clark/

Legend for Figure 5-160

1.	Tilt Cyl. Assy.	9.	Bushing	17.	Plate	25.	Ring Segment
2.	Barrel	10.	Packing Set	18.	Lockwasher	26.	Boot
3.	u-cup	11.	Shim	19.	Capscrew	27.	Retainer
4.	Wear Ring	12.	Retainer	20.	Lub-Fitting	28.	Bushing
5.	Spacer	13.	Lockwasher	21.	Gland	29.	Adaptor
6.	O-Ring	14.	Capscrew	22.	Spacer	30.	Retainer
7.	Back-up Ring	15.	Wiper	23.	Retainer	31.	Spring
8.	Gland Assy.	16.	Pin	24.	Capscrew	32.	Packing Kit.

b. Install a new back-up ring and O-ring on the check valve plug with the O-ring toward the spring and bail. Place the bail and spring in the body and install the plug. Be sure the hole in the plug lines up with the stud hole in the body.

C. Install lower spool seal and back-up ring on valve spool, making sure that scarfed ends of back-up ring are closed up and correctly seated.

d. Install one "C" washer at each end of the centering spring. The fiat side of the "C" washer faces away from the spring when installed.

e. Install the upper spool quad ring on the spool, and install the O-ring on the spring cover sleeve face.

f. Carefully position spring cover and sleeve over the spool and against valve body. Install spring cover screws and tighten to IO foot/pounds torque.

g. After installation of valve and connection to operating lever linkage, check valve operation. Spools should return to neutral automatically when the control lever is released. The centering spring force is approximately 40 pounds. If more force is necessary, check linkage for binds.

5-133 TILT CYLINDERS.

5-134 REMOVAL. Should it be found that the tilt cylinders will not hold upright at desired angle of tilt, it will be necessary to remove and disassemble cylinder to determine the faulty condition.

a. Tilt upright to full forward position, disconnect hose lines at front and rear of cylinder.

```
x x x x x x x x x x x x x x x x x x x x x x x x x x
X                                                  X
X                  W A R N I N G                   X
X                                                  X
X SECURE UPRIGHT WITH A CHAIN TO PREVENT           X
X                                                  X
X FALLING.                                         X
X                                                  X
x x x x x x x x x x x x x x x x x x x x x x x x x x
```

b. Remove tilt cylinder pivot pins at rear mounting and at upright. Remove tilt cylinder from machine.

c. An exploded view of the tilt cylinder is shown on the preceding page to aid in disassembly and reassembly of the unit. See figure 5-160.

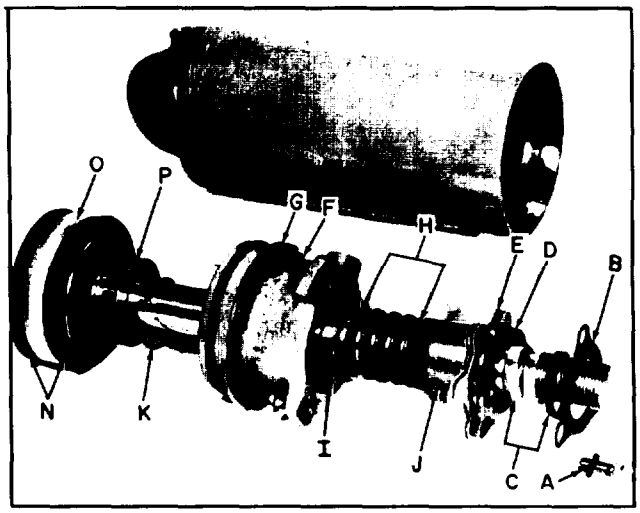

Figure 5-161. Tilt Cylinder Components.

5-135 DISASSEMBLY.

a. Refer to figure 5-160 for detailed parts identification and proceed as outlined below:

b. Figure 5-161 shows components of the tilt cylinder and body. Refer to this figure and remove three retainer bolts (A) securing the cover (6). seal guard kit (C), retainer (D) and shims (E). Pull these components from end of cylinder and piston rod.

c. See figure 5-162 for gland details and loosen gland bolts (F), using suitable wrench. Then, using a screwdriver, rotate each bolt until head is against gland assembly.

d. Now tap gland assembly inward into cylinder, being careful not to mar, nick, scratch, etc., the piston rod. Use a wooden or plastic mallet that does not have a metal frame that might contact piston rod when tapping gland.

www.truck-freeworkshop.com/clark/

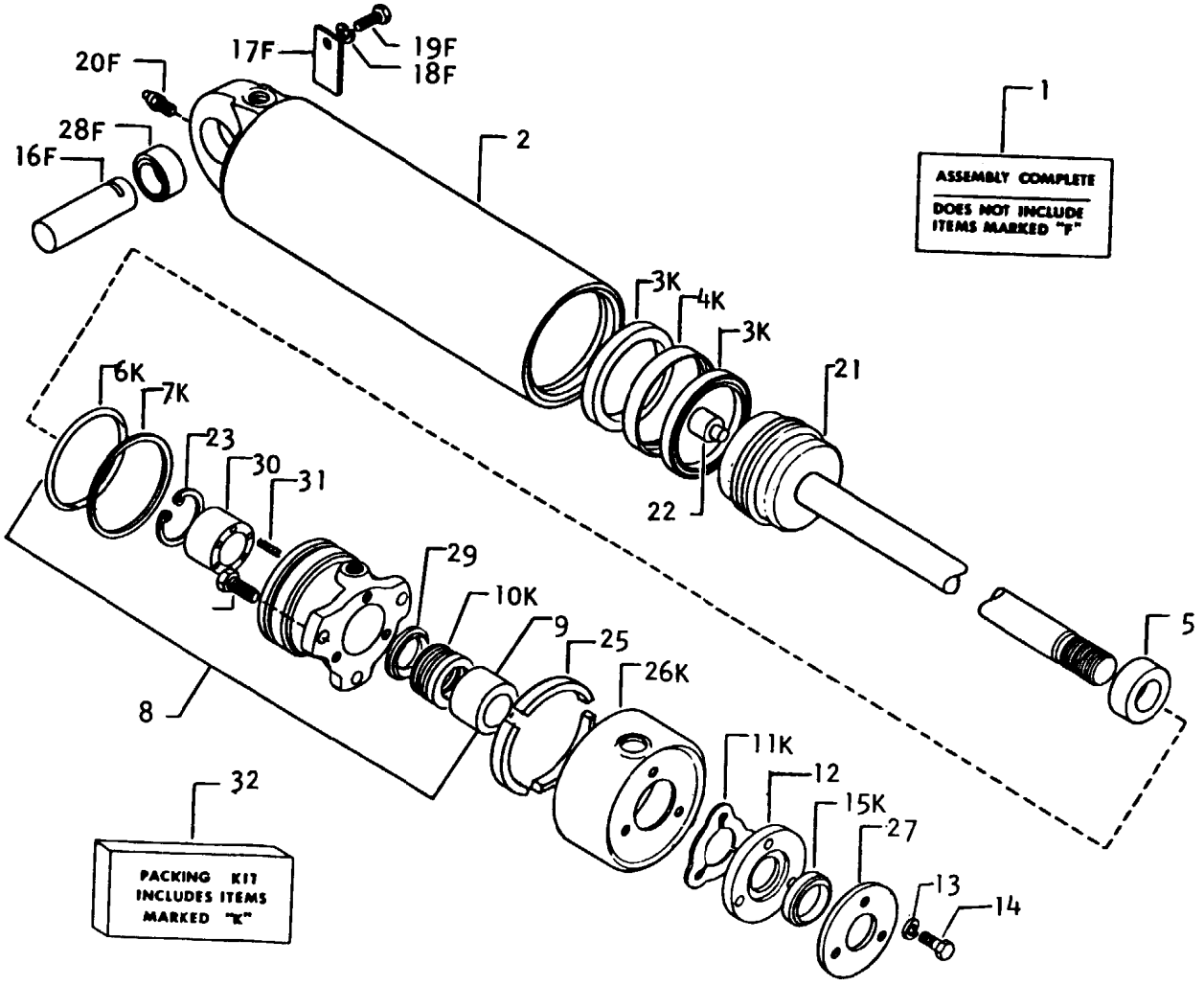

TILT CYLINDER

FIG. 5-160

www.truck-freeworkshop.com/clark/

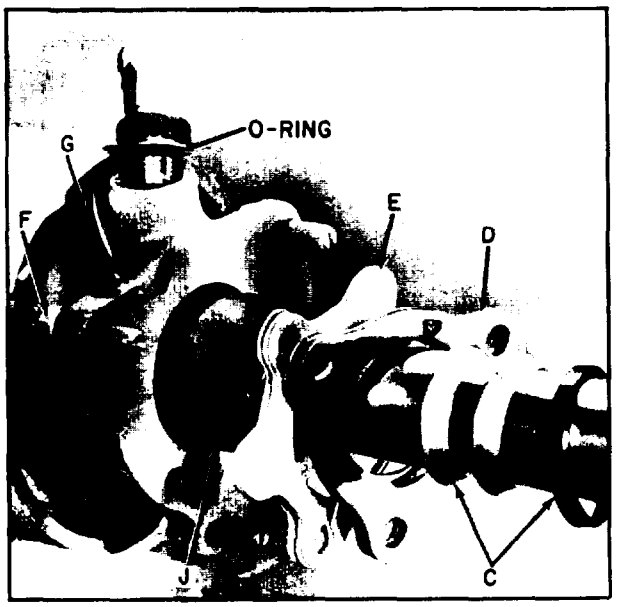

Figure 5-162. Gland Details

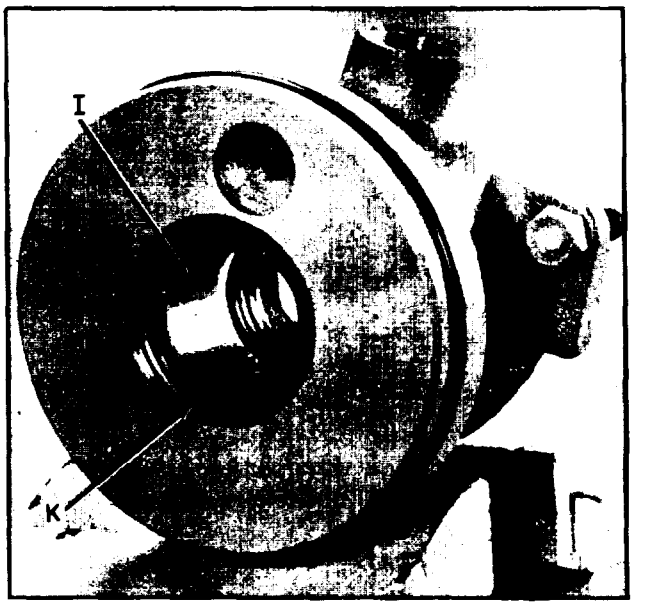

Figure 6-163. Gland Bushing

e. Remove segment rings (G), This will allow the gland assembly to be pulled from cylinder and piston rod.

f. Refer to figure 5-164 if it is necessary to remove and replace packing set (H) or seal guard kit (C). Upon reassembly be sure that ail components mate or properly seat in one another. The seal guard kit (C) must be correctly positioned in the seal guard retainer (D), and the fiat side of the rubber ring must face outward so the beveled sides of the ring will properly mate with both bronze wiper rings. The packing set has both a bottom and top adaptor. The flat side of the bottom adaptor must set fiat against the rear gland bushing (L) with the beveled side of the adaptor facing outward so it will properly mate with packing seals, and fiat side of top adaptor must face outward so it will set flush against the front gland bushing (J).

g. The rear gland bushing (I) is held in place by a snap ring (K), as shown in figure 5-163.

h. The gland assembly is equipped with one O-ring (L) and one back-up ring (M). These components must always be positioned as shown in figure 5-164. The back-up ring is always on the side opposite the pressure.

i. Pull piston rod from cylinder tube.

j. Check U-cup (N) figure 5-164) and wear ring (0) for wear or damage and replace as required.

5-136 CLEANING AND INSPECTION.

a. After disassembly, clean ail metal parts in a Stoddard type cleaning solvent and dry thoroughly with compressed air.

CAUTION

CLEAN ALL RUBBER, PLASTIC, FIBER, OR SYSTHETIC PARTS IN CLEAN HYDRAULIC FLUID.

b. Before reassembly, check ail parts for further serviceability. Replace all O-rings, and check packings for wear or damage. Be sure that mating parts have smooth surfaces. The piston rod must not have any burrs, nicks or rough spots - rod must be smooth finished. If there are burrs, nicks, etc., polish surface with crocus cloth until rod has an absolutely smooth finish.

CAUTION

DO NOT USE EMBERY CLOTH OR SANDPAPER. DO NOT POLISH SO MUCH THAT CHROME PLATING IS WORN OFF ROD. THIS IS IMPORTANT AS PACKINGS AND TUBE WILL BE DAMAGED IF ROD IS BURRED, NICKED, SCRATCHED, ETC. TAKE CARE NOT TO DAMAGE O-RINGS AND PACKING SEALS AT REASSEMBLY BY CHECKING CYLINDER, MAKING SURE THAT THE

www.truck-freeworkshop.com/clark/

C A U T I O N (CONTINUED)

SEALING AREAS ARE FREE OF NICKS, BURRS OR SHARP EDGES THAT MIGHT DAMAGE SEALS. LUBRICATE EACH COMPONENT WITH CLEAN HYDRAULIC FLUID TO FACILITATE ASSEMBLY.

5-137 REASSEMBLY.

a. Refer to figure 5-161 and install U-cup (N) and wear ring (0) on piston and rod assembly.

b. After installing spacer (14, figure 5-160) on end of piston, install piston and rod assembly in cylinder tube.

C A U T I O N

WHEN INSTALLING THE SEALS, PACKINGS, RINGS, ETC., THAT MAKE UP THE TILT CYLINDER, BE SURE TO LUBRICATE ALL PARTS WITH CLEAN HYDRAULIC FLUID.

c. Install gland bushing (I) and snap ring (K) as shown in figure 5-163. Make certain that compression springs are in place behind bushing.

d. Place gland (G) over piston rod and install packing set (H) and bushing (J) as shown in figure 5-161.

e. Replace O-ring (L) and back-up ring (M) as shown in figure 5-164. Install gland in place by inserting ring (G) and retaining screws (F).

f. Install gland cover over gland assembly end of tilt cylinder. Align threaded hole of gland with hole provided in cover.

g. Install shims (E, figure 5-162) provided in repair kit, and install shim retainer (d).

N O T E

After the machine has been in service with the tilt cylinder in use, you may want to remove shims (E) (Fig. 5-162) to increase pressure on packings, preventing cylinder leakage.

h. Install rod wipers (C). Install wiper retainer (B) and fasten with screws and washers (A).

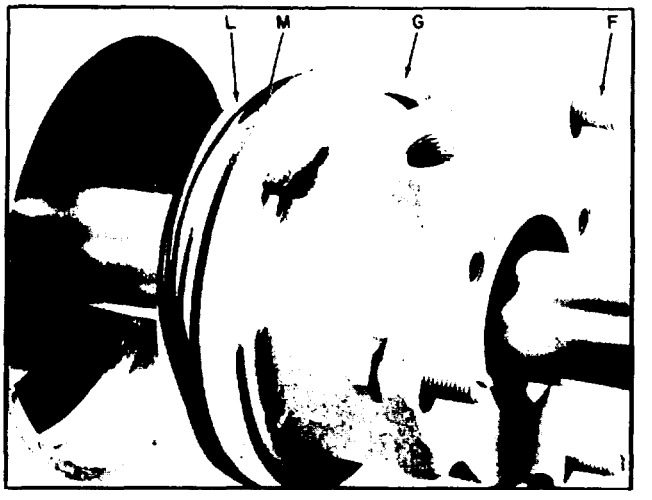

Figure 6-164. O-Ring and Back-up Ring

5-138 INSTALLATION.

a. Place tilt cylinder in rear mounting bracket, align pin hole and install cylinder mounting pin. Secure mounting pin in bracket with roil pin.

b. Support cylinder and align piston rod clevis with mast, install plain pin and secure with cotter pin.

c. Install hydraulic hoses to cylinder elbow fittings. Secure hoses by tightening coupling nuts.

d. Start engine, raise carriage off floor and operate tilt cylinders in both directions to bleed air from the system. After several minutes of operation, check fluid level in fluid reservoir tank, fill as necessary.

www.truck-freeworkshop.com/clark/

www.truck-freeworkshop.com/clark/

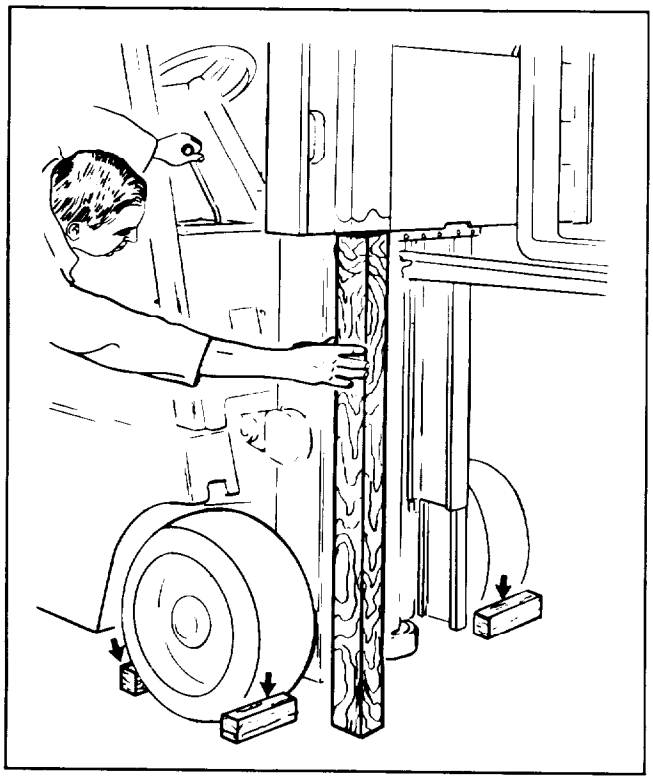

Figure 5-141. Blocking Carriage

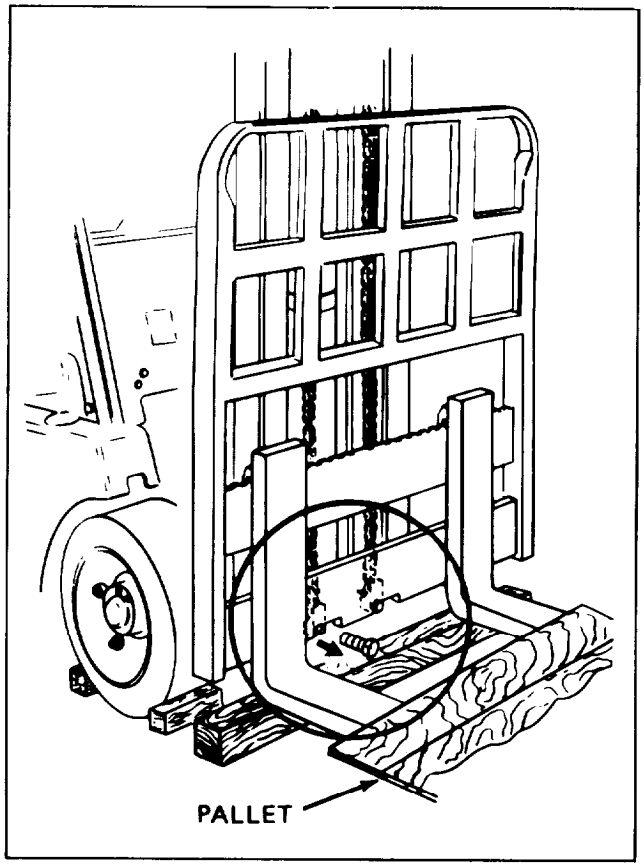

Figure 5-142. Fork and Carriage Blocking

CARRIAGE ASSEMBLY.

5-139. REMOVAL.

a. Set parking brake and block drive wheels securely.

b. Raise carriage about 4 feet. Place a 4 x 4 oak beam or steel I-beam, 3 to 4 feet in length, upright between carriage and floor and lower carriage until it rests on the end of the beam. (See figure 5-141.) Remove Hydraulic hoses from carriage.

c. Remove chain anchor pins from the bottom bar of the lift carriage. Remove only one pin at a

www.truck-freeworkshop.com/clark/

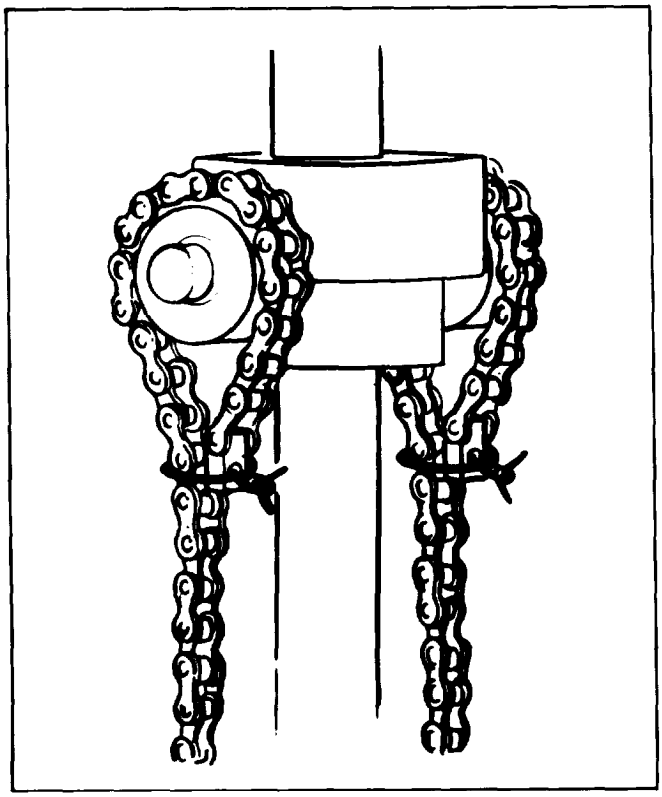

Figure 5-143. Securing Chains

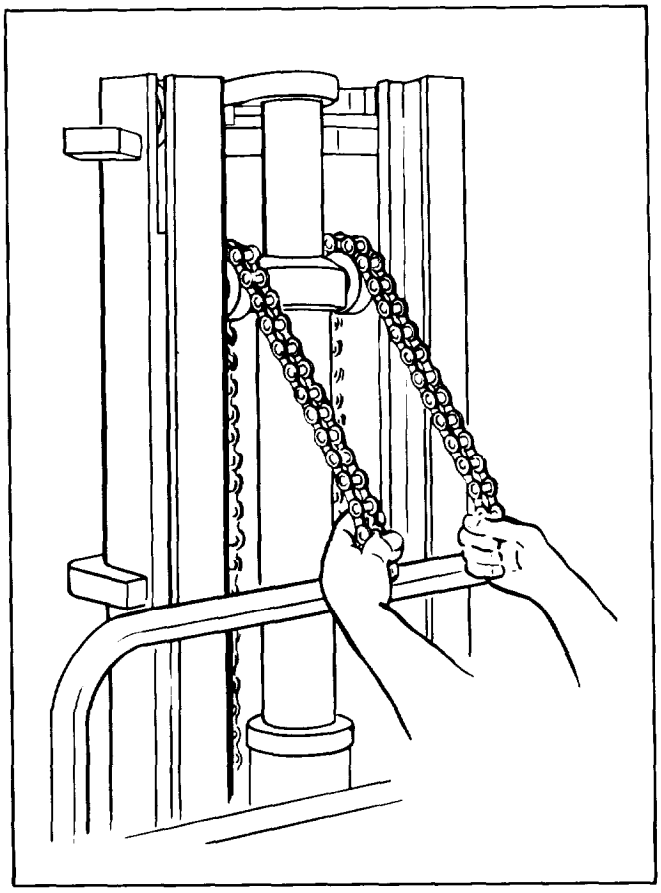

Figure 5-144. Seating Piston Head

time, and replace each pin with a 3/8 inch diameter x 2 inch long bolt.

d. Raise the carriage off the upright beam. Place the beam on the floor so that the lift forks will rest upon it when the carriage is lowered. (See figure 6142.)

e. Tilt the upright forward as far as it will go, and place a pallet or other weight across the forks so that the carriage will not tip backwards when it is removed from the upright. (See figure 5-142.)

f. Remove the two 3/8 inch bolts holding chain anchor in place. Pull the chain ends out of the anchor brackets.

g. Secure loose ends of the lift chain around the sprockets by wiring as shown in figure 6-143.

h. Grasp lift chains near piston head and raise piston to the full up position.

i. Raise inner rail of the upright until it clears the upper carriage rollers, so that the carriage will be entirely free of the upright.

j. Remove wheel blocking, release hand brake, and back truck away from the carriage.

5-140. CLEANING AND INSPECTION.

a. Clean components with a clean Stoddard type solvent and dry thoroughly.

b. Inspect carriage and rollers for evidence of wear or physical damage.

c. Check for cracks, particularly at welds, and evidence of permanent distortion or bending due to overloading or impact.

5-141. MINOR REPAIR.

a. Replacedamaged or bent forks and worn rollers.

www.truck-freeworkshop.com/clark/

b. Refer to the welding instructions at the front of this section before attempting any welding on the carriage.

c. Perform carriage roller adjustments as outlined in Section IV.

5-142. INSTALLATION.

Note

Before installing carriage, check roller adjustment of the upright. (See Section IV.)

a. With carriage resting on the floor, the heel of the forks resting on a 4 x 4 inch timber or I-beam, and a pallet or other weight on the free end of the forks, drive the truck up to the carriage and tilt the upright to match the angle of the carriage.

b. Raise the inner rails so that they just clear the upper carriage rollers.

c. Slowly move the truck forward until the inner rails are aligned vertically with the upper carriage rollers.

d. Lower the inner rails carefully over the carriage upper rollers. After checking to see that rollers are properly guided into the upright inner rails, lower the rails to the full down position.

e. Remove wires holding the chain ends over the sprockets.

Note

The following steps will require the assistance of another mechanic to operate the lift valve.

f. Grasp one chain in each hand and have an assistant open the lift control valve in the "down" position. Pull the piston to full down position as shown in figure 5-144, while the valve is open.

g. Position loose chain ends in the anchor brackets on the back of the carriage. Secure each chain anchor with a 3/8 diameter x 2 inch long bolt.

h. Raise the carriage approximately 4 feet and block it with a 4 x 4 timber as shown in figure 5-141. Lower the carriage so that it rests on the end of the beam.

i. Replace the 3/8 bolts, one at a time, with the cylinder anchor pins. Secure the anchor pins with cotter pins previously removed.

j. Raise and lower the carriage several times to check operation throughout the full range of travel.

5-143. UPRIGHT ASSEMBLY.

5-144. REMOVAL.

a. Install suitable hoist to upper tie bar.

WARNING

Upright assembly weighs approximately 750 pounds; use due safety precautions when removing or installing upright assembly.

b. Remove forks and load safety rack.

c. Remove cotter pins and plain pins securing tilt cylinder clevises to upright outer channel brackets.

Note

Place suitable drain pan under cylinder to catch oil when pressure hose is disconnected from lift cylinder fitting.

d. Loosen hydraulic pressure line coupling nut securing pressure line to lift cylinder fitting.

e. Remove support shaft lock plate bolt and lockwasher securing lock plate. Remove support shaft.

f. Using chain hoist, support and remove upright assembly from truck.

5-145. DISASSEMBLY AND REPAIR.

a. Refer to file 5-145 and disassemble the upright assembly according to the illustration.

www.truck-freeworkshop.com/clark/

LEGEND FOR FIGURE 5-145

1. Upright & Lift Cylinder Assembly
2. Outer Rail
3. Bolt
4. Roller
5. Shim
6. Bearing
7. Lock
8. Anchor
9. Capscrew
10. Inner Rail
11. Lever
12. Support
13. Capscrew
14. Retainer
15. Sleeve
16. Retainer
17. Intermediate Rail
18. Latch
19. Adaptor
20. Retainer
21. Retainer
23. Cylinder
24. Nut
25. Lockwashr
26. Lockwasher
27. Washer

b. Refer to welding instructions. at the front of this section before attempting any welding repair of the upright assembly.

c. Replace any worn upright rollers, or any other parts which appear worn or damaged.

d. Reassemble the upright assembly according to the exploded view illustration, figure 5-145.

5-146. INSTALLATION.

a. Using suitable hoist, position trunnion arms of upright assembly on truck, making sure trunnion bushings are in place and not damaged.

b. Position support shaft in trunnion arms and secure with lock plate, fastener bolts and lockwashers.

c. Position hydraulic hose on lift cylinder fitting. Tighten hose coupling nut to secure hose to fitting.

d. Position tilt cylinder clevises to align with mast outer channel bracket holes. Install plain pins and cotter pins to secure clevises to upright channels.

e. Install load safety rack and forks.

f. Remove hoist from upright tie bar.

g. Start engine and operate lift cylinder to bleed air from hydraulic system.

h. Inspect hydraulic cylinder and lines for oil leaks.

i. Check main hydraulic reservoir for proper fluid level. Fill as necessary.

5-147. LIFT CYLINDER.

5-148. REMOVAL.

a. Remove lift carriage.

b. Place suitable drain pan under lift cylinder and loosen coupling nut securing hydraulic oil hose to cylinder fitting. Remove hose from cylinder.

c. Remove snap-ring securing lift cylinder to cylinder support adapter.

d. Install suitable chain hoist to lift cylinder upper anchor bracket and support cylinder weight.

e. Remove bolts and lockwashers securing upper cylinder adapter to mast assembly. Remove lift cylinder with lift chains attached.

Note

Lift chains may be removed from lift cylinder by removing cotter pins, locking nuts, and adjusting nuts securing chain anchor pins to lift cylinder. Mark position of adjusting nuts on anchor pins before removing nuts to assure proper reassembly.

5-149. DISASSEMBLY.

a. Refer to figure 5-146 for parts identification and proceed as follows:

b. Lay cylinder across a bench, using notched out 2 x 4' s to prevent the cylinder from sliding around.

c. Clean all parts of the cylinder to prevent dirt and grime from entering the cylinder body.

www.truck-freeworkshop.com/clark/

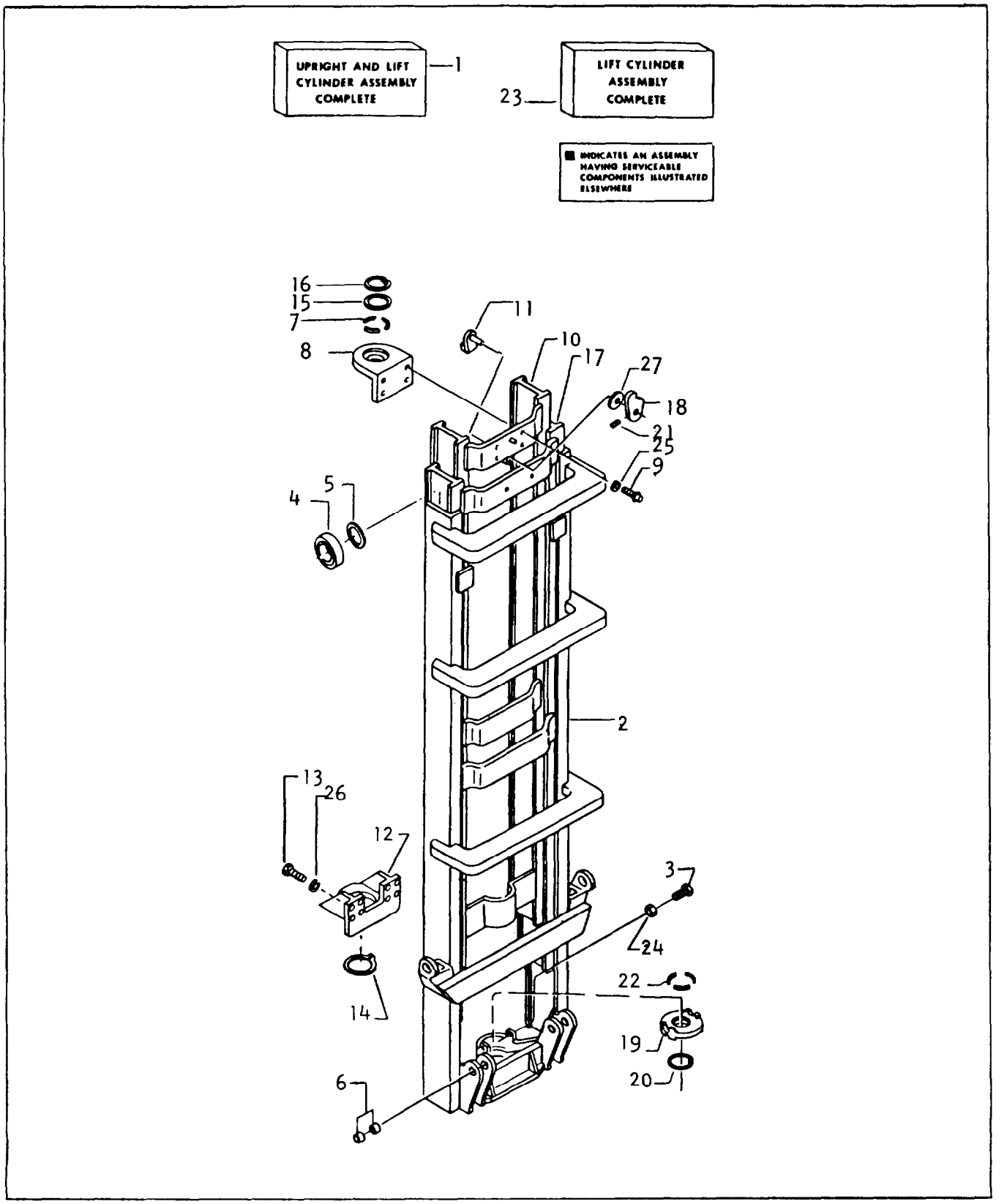

Figure 5-145. Upright Assembly

www.truck-freeworkshop.com/clark/

LEGEND FOR FIGURE 5-146

1. Lift cylinder assembly
2. Barrel-
3. Packing kit
4. Seal
5. Feed tube
6. Packing
7. Gland
8. Wiper
9. Wear ring
10. Sheave carrier rod
11. Bleeder
12. Adaptor
13. Retainer
14. Seal
15. Packing
16. Retainer
17. Wiper
18. Bearing
19. Back-up ring
20. Inner rail rod
21. Retainer
22. Wiper
23. Packing
24. Adaptor
25. Setscrew
26. Pellet
27. Bearing
28. Inter rod
29. Retainer
30. Wiper
31. Packing
32. Adaptor
33. Cap
34. Pellet
35. Bearing
36. Bearing
37. Bearing

d. Remove pipe elbow, vent line and O-ring from piston rod.

e. Refer to figure 5-147 and remove gland nuts using a spanner wrench. Place a container beneath cylinder end to catch oil spillage.

f. Remove ail "V" packings from the ends of the primary, stationary and secondary pistons, as each piston is extended from its barrel, as shown in figure 5-148.

g. If packings do not come out with pistons, they may be removed by hand as shown in figure 5-149, after pistons are removed.

h. Unscrew the stationary piston cap from the barrel (using a spanner wrench inserted in the two holes in the cap face) and pull out the stationary piston assembly far enough to remove the two allen head screws shown in figure 5-150.

i. Remove stationary piston cap from stationary piston by pulling stationary piston out far enough to insert a piece of drill rod through the cylinder body as shown in figure 5-151, and applying a spanner wrench to the end cap to unscrew it. The drill rod will prevent the stationary piston from turning.

j. Remove the secondary piston assembly from the stationary piston, and place the secondary piston assembly on the bench, supported by notched-out 2 x 4' s.

k. Remove the end cap from the secondary piston using a spanner wrench and piece of drill rod in the same manner as removal of the stationary piston end cap.

1. After end cap is removed, remove the flow tube as shown in figure 5-152.

m. Plow tube guide bushing may be removed, using a piece of drill rod as previously described and a special bushing removal wrench.

n. Remove primary piston from barrel as shown in figure 5-153. Remove any packings that did not come out with pistons.

5-150. CLEANING AND INSPECTION.

a. Clean all parts of the disassembled cylinder with solvent (Stoddard solvent, or similar mineral spirits), and dry thoroughly.

b. Check each cylinder wall and bore for cracks, pitting or scoring. Such irregularities will necessitate replacement of the affected part.

c. Small nicks and burrs on external cylinder surfacss may be removed by use of a fine india stone or hone, provided that removal of such defect does not leave a permanent notch or groove in the cylinder wall which might lead to packing damage and subsequent leakage.

d. All packings and seals should be replaced each time the cylinder is disassembled.

5-.151. REASSEMBLY.

a. Dip all packings and rings in clean oil prior to reassembly.

b. Place "V" ring packings together in sets of the various diameters required. Arrange each set in the following manner. Start with the brass ring, then

www.truck-freeworkshop.com/clark/

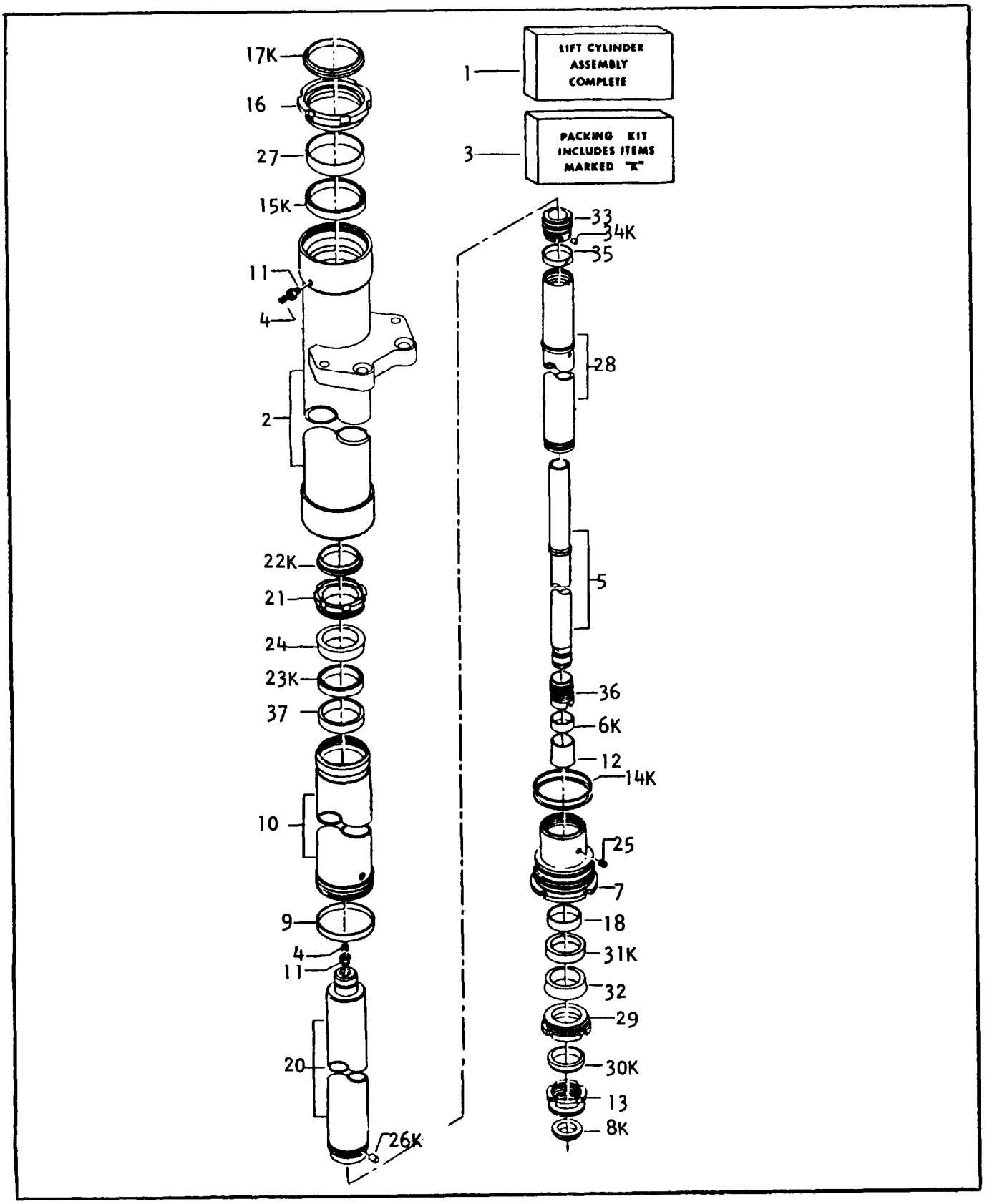

Figure 5-146. Lift Cylinder

www.truck-freeworkshop.com/clark/

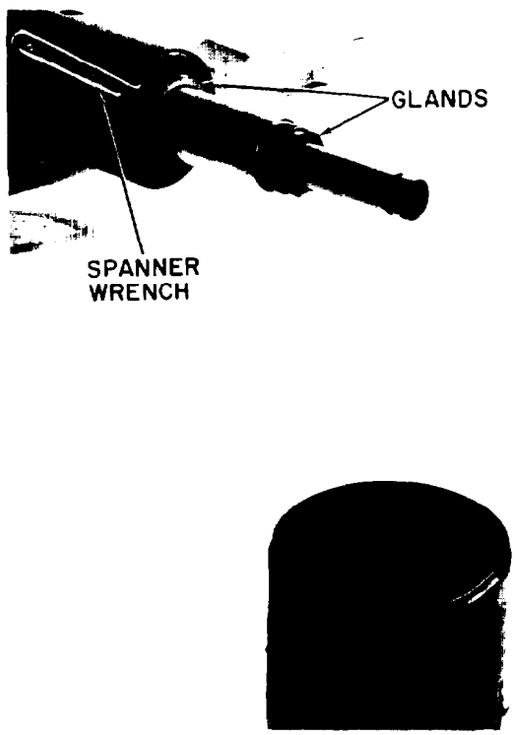

Figure 5-147. Gland Removal

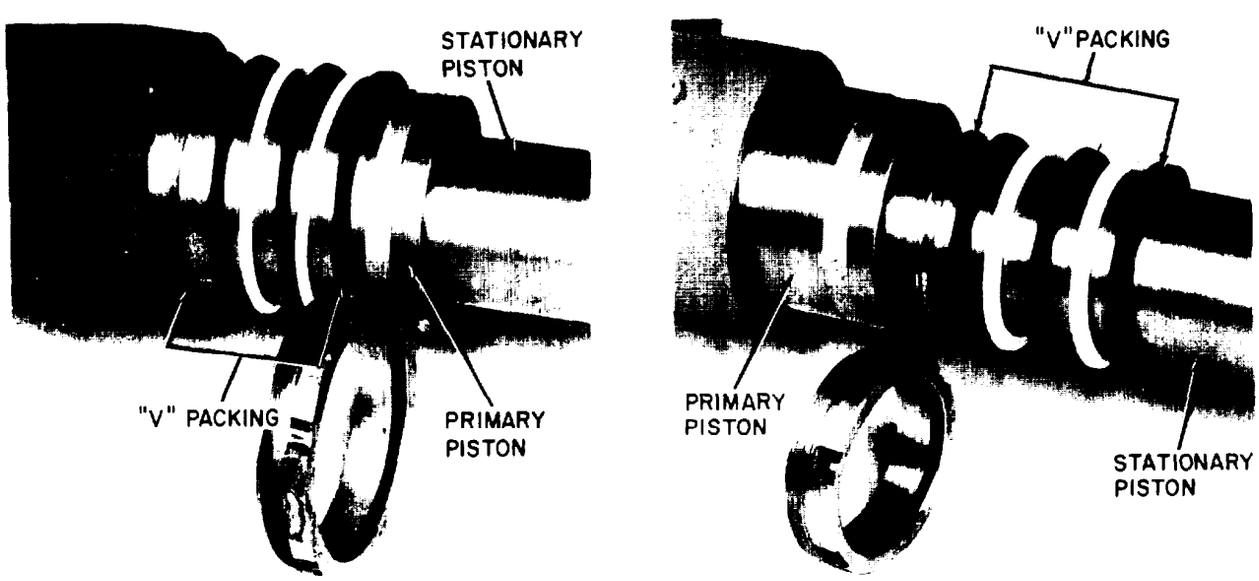

Figure 5-148. "V" Packings

www.truck-freeworkshop.com/clark/

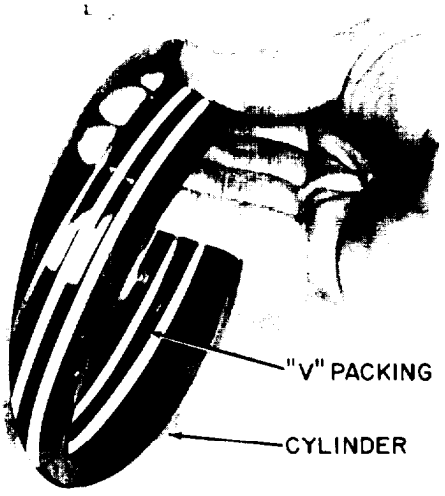

Figure 5-149. "V" Packing Removal

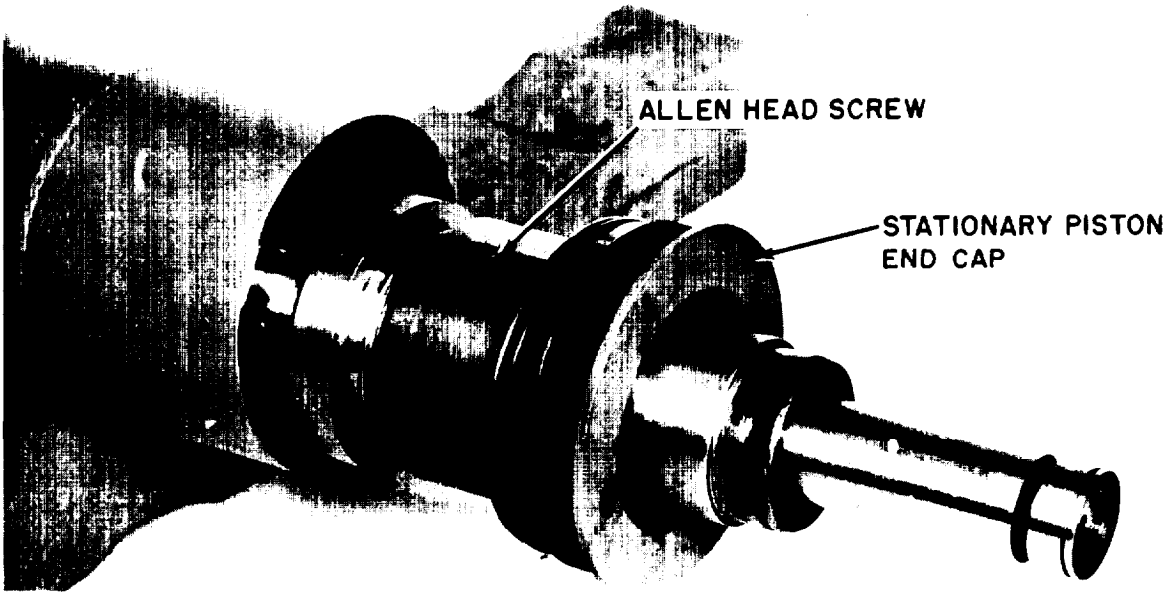

Figure 5-150. Stationary Piston End Cap

www.truck-freeworkshop.com/clark/

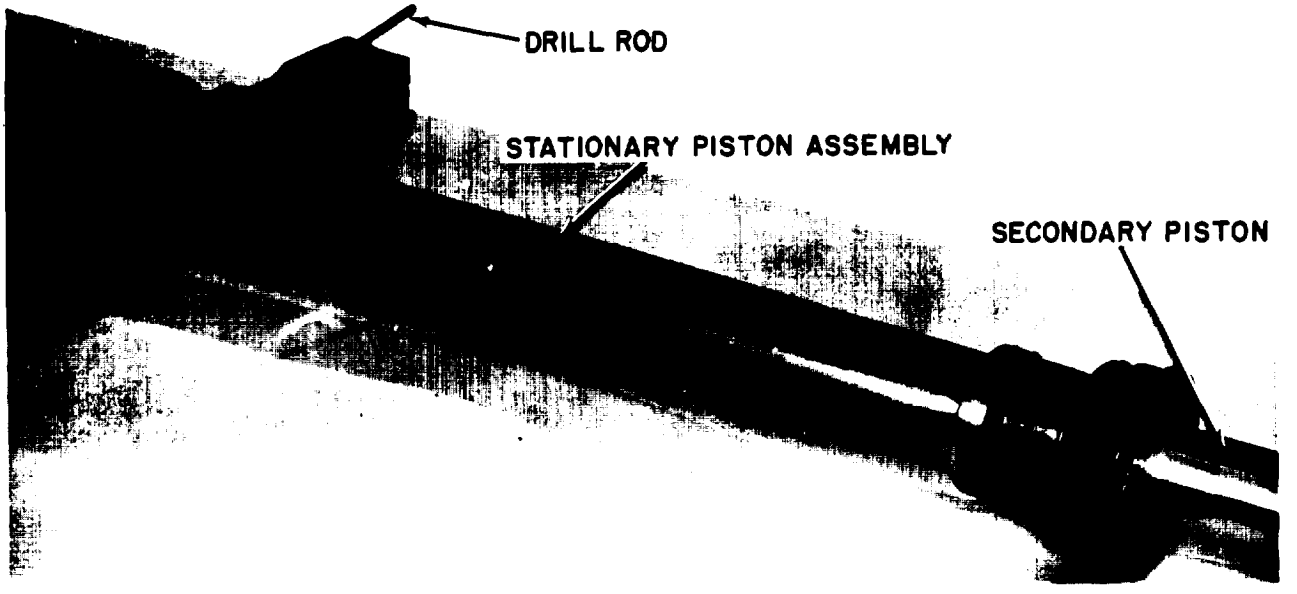

Figure 5-151. End Cap Removal

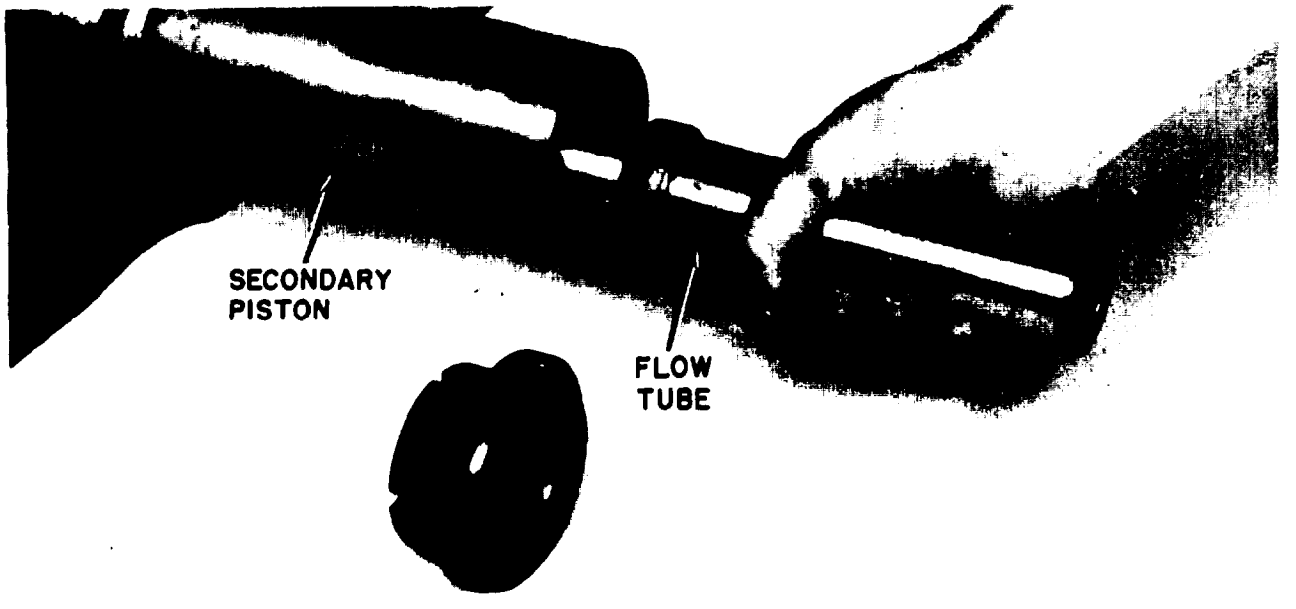

Figure 5-152. Flow Tube Removal

alternate one rubber and one plastic ring, always starting with the rubber ring, and build up the set until all rings are used. If any rubber rings are left over, they should be placed in the first position next to the brass stop ring.

c. Install primary piston into cylinder barrel, as shown in figure 5-153.

www.truck-freeworkshop.com/clark/

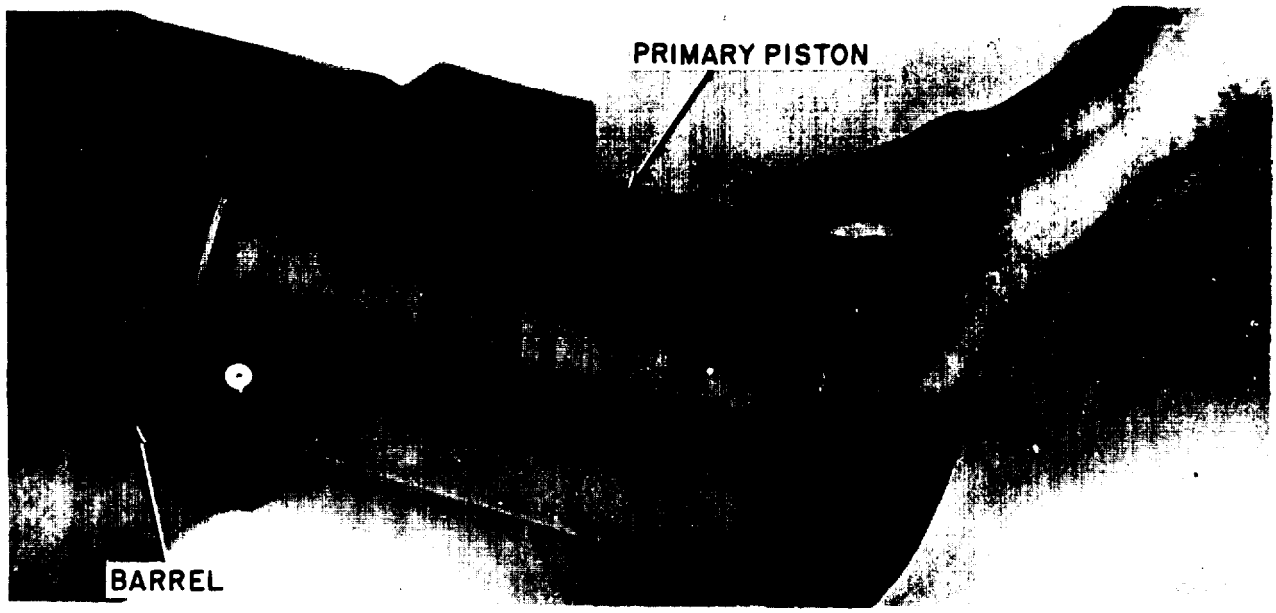

Figure 5-153. Primary Piston Removal

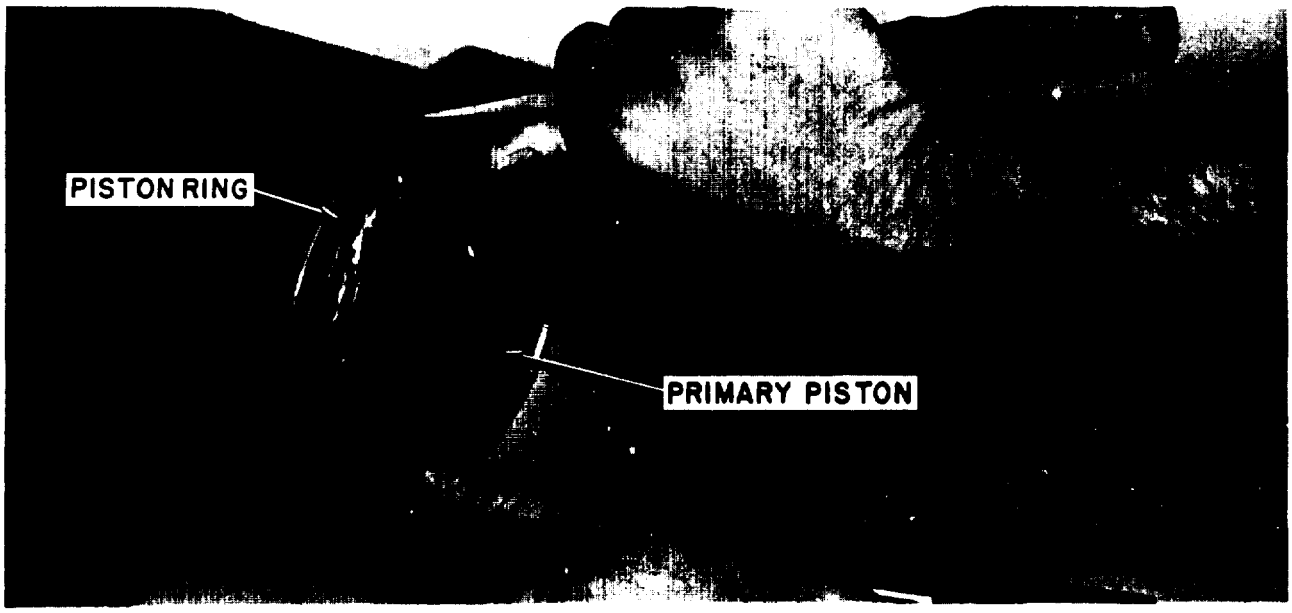

Figure 5-154. Primary Piston Installation

d. Complete installation of primary piston by compressing piston ring with two screwdrivers, and pushing in on the primary piston with the thumbs as shown in figure 6-154. Oil the piston ring prior to installation.

e. Install secondary piston into stationary piston by compressing piston ring by hand and inserting

www.truck-freeworkshop.com/clark/

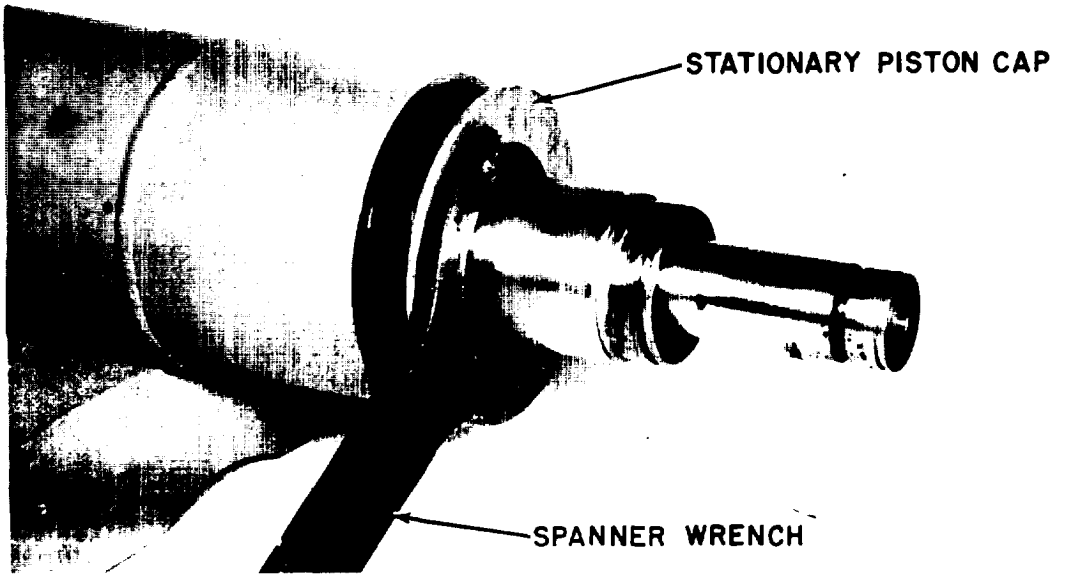

Figure 5-155. Stationary Piston Installation

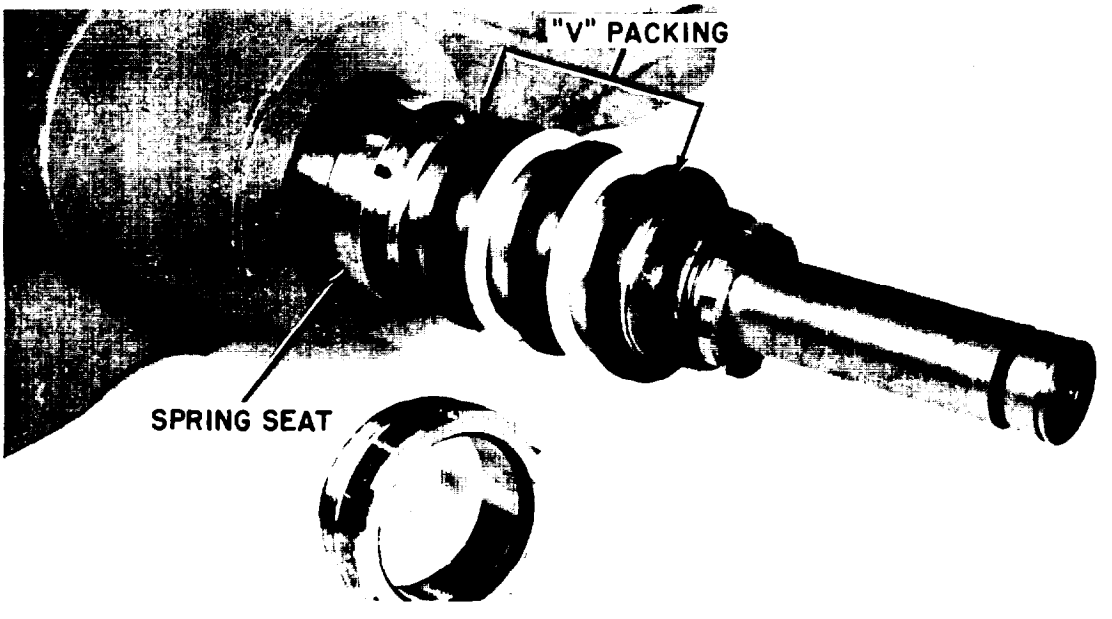

Figure 5-156. "V" Packing Arrangement

end of secondary piston into stationary piston. Secondary piston ring should be oiled prior to installation.

f. Assemble O-ring and backup ring to stationary piston end cap. Backup ring should be assembled to the side of O-ring, away from the oil pressure.

www.truck-freeworkshop.com/clark/

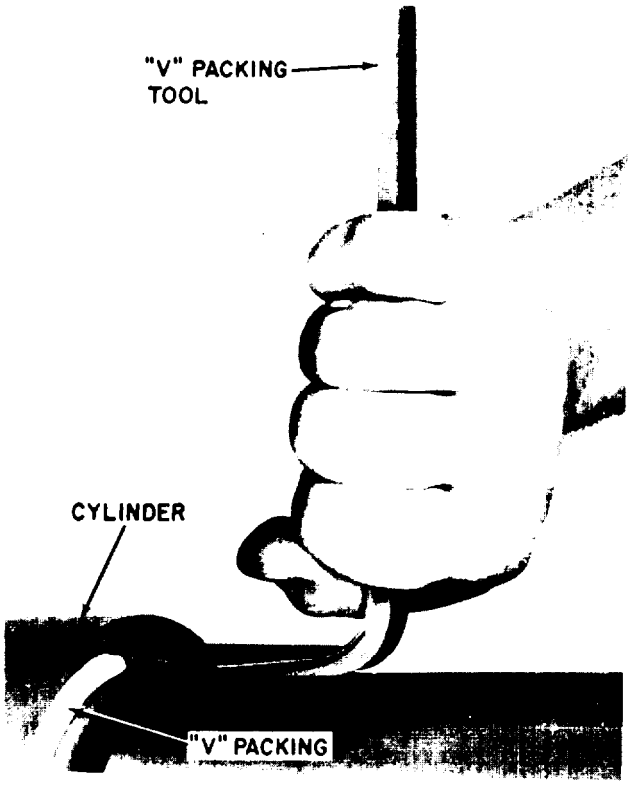

Figure 5-157. "V" Packing Tool

g. Install brass stop ring over stationary piston. Install end cap on stationary piston using a spanner wrench and piece of drill rod as shown in figure 5-151.

h. Install setscrew and allen head lockscrew in the position indicated in figure 5-150. Install stationary piston cap into barrel and tighten as shown in figure 5-155.

Note

Best mechanical practice when installing stationary piston is to support the opposite end of the stationary piston while threading in the end cap. Use a leather or canvas belting sling to hold the piston centered in the barrel to prevent cross-threading of the stationary piston end cap.

i. Replace spring seat, "V" packings and gland nut on secondary piston as shown in figure 5-156.

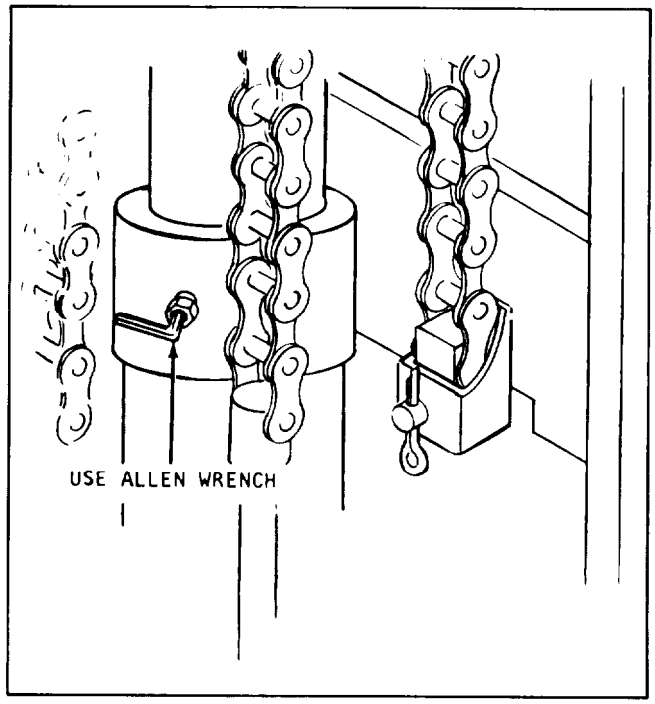

Figure 5-158. Side Bleeder Screw

DO NOT secure gland nut. Use packing tool to install packings into mating tube as shown in figure 5-157.

j. Replace "V" packings and gland nut on primary piston. Use tool for guiding in "V" packings as shown in figure 5-157. DO NOT secure gland nut.

k. Replace "V" packings and gland nut on stationary piston as shown in figure 5-148. Use packing tool for guiding packings into cylinder.

l. Tighten all gland nuts, using a spanner wrench like the one shown in figure 5-147.

5-152. INSTALLATION.

a. Using hoist, position lift cylinder on cylinder support adapter and secure with snap ring.

b. Position cylinder adapter to mast assembly and secure with bolts and lockwashers.

c. Position hydraulic hose on cylinder fitting and tighten coupling nut to secure hose.

d. Remove chain hoist from cylinder.

www.truck-freeworkshop.com/clark/

LEGEND FOR FIGURE 5-160

1. Tilt cylinder assy.
2. Barrel assembly
3. Rod, piston assembly
5. u-cup
6. Gland bushing retainer
7. Bolt
8. Wear ring
9. Segment ring
10. Gland cover
14. Spacer
15. Gland seal
16. Back-up ring
17. Gland
18. Gland bushing
19. V-packing set
20. Shim
21. Shim retainer
22. Bolt, lockwasher
23. Rod wiper
24. Wiper retainer
32. Support pin
33. Cotter pin
34. Grease fitting
35. Rear support bearing
37. Packing spring
38. Rod end
39. Key
40. Lack bolt
41. Lockwasber
42. Nut
43. Pivot pin
44. cotter pin

e. Start engine and operate lift cylinder to bleed air from the hydraulic system;

f. Check main hydraulic reservoir for proper fluid level. Fill as necessary.

g. Inspect hydraulic cylinder and oil lines for leaks.

5-153. BLEEDING LIFT CYLINDER. After installation, the lift cylinder should be bled to remove all trapped air from the cylinder.

a. Raise carriage about 4 feet or until bleeder screw is accessible.

Note

Check for proper oil level in sump before and after bleeding.

b. Loosen side bleeder screw, shown in figure 5-158, using an allen wrench. The piston will drop a few inches as the air is forced out.

c. When oil starts to flow from the bleeder screw, tighten the screw securely to stop leakage.

d. Now loosen the top bleeder screw, shown in figure 6-159, using an allen wrench. The piston will drop slightly as air is forced out. When oil starts to flow from the loosened screw, tighten the screw to stop leakage.

e. Check oil level in sump and add oil as required.

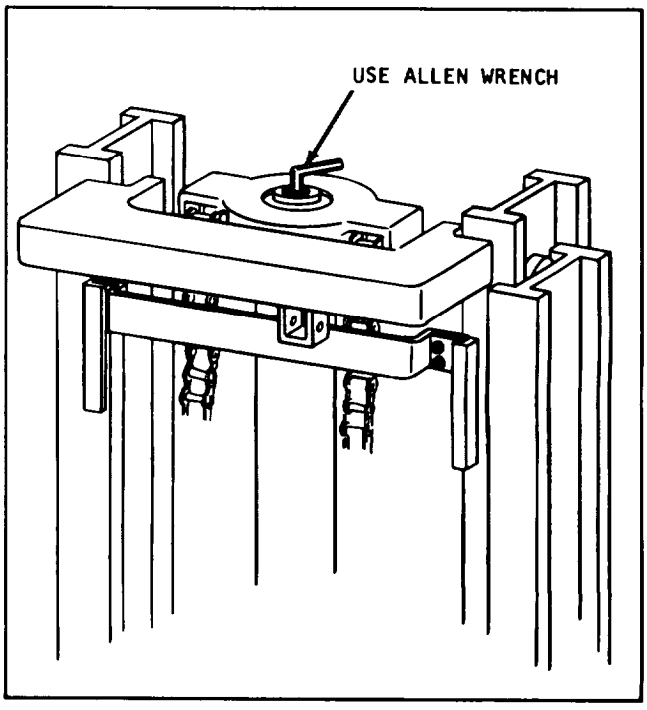

Figure 5-159. Top Bleeder Screw

www.truck-freeworkshop.com/clark/

SECTION 5-154

FULL FREE LIFT TRIPLE STAGE UPRIGHTS EQUIPPED WITH 6-ROLLER CARRIAGES

Operational Checks & Adjustments ..... Page 5-114
Latch Operation ..... Page 5-115
Intermediate Rail Chains ..... Page 5-116
Carriage Chains ..... Page 5-119
Checking Carriage Roll Patterns ..... Page 5-120
Hydraulic Cylinder Seals ..... Page 5-121
Upright Racking ..... Page 5-122
Load Testing ..... Page 5-123
Cylinder Drift Test ..... Page 5-126 & 5-127
Carriage Remove & Replace ..... Page 5-128 & 5-147
Adjusting Carriage Railers ..... Page 5-134

www.truck-freeworkshop.com/clark/

The following procedures cover FULL FREE LIFT TRIPLE STAGE UPRIGHTS equipped with six-roller carriages used on trucks rated from 2,000 through 12,000 pounds capacity.

The service procedure applies to all uprights with M-SERIAL NUMBER designation.

FULL FREE LIFT
TRIPLE STAGE UPRIGHTS
2,000 THROUGH 12,000 LBS.
CAPACITY

These numbers, called DECK NUMBERS, are located in front of the outer rails in the area indicated by the arrows.

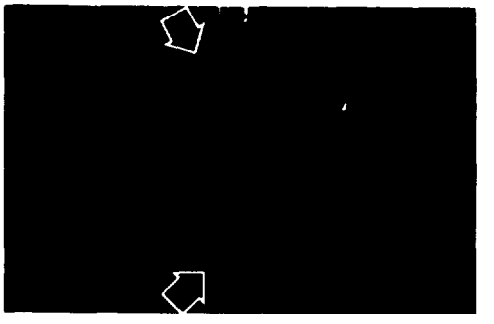

Fig. 16155

OPERATIONAL CHECKS & ADJUSTMENTS

The triple stage upright should be load tested to determine if adjustments are needed. First . . .

OPERATIONAL
CHECKS & ADJUSTMENTS.
LOAD TESTING.
CARRIAGE ADJUSTMENTS.

. . . the upright is a very heavy assembly with many moving parts.

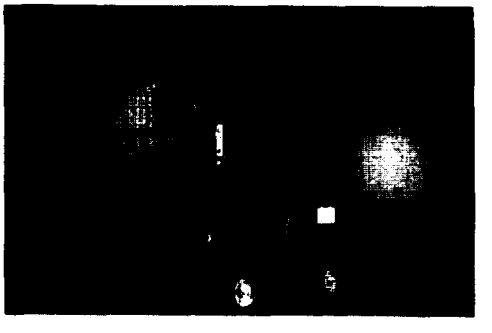

Fig. 16156

www.truck-freeworkshop.com/clark/

Maintenance procedures should be followed carefully.

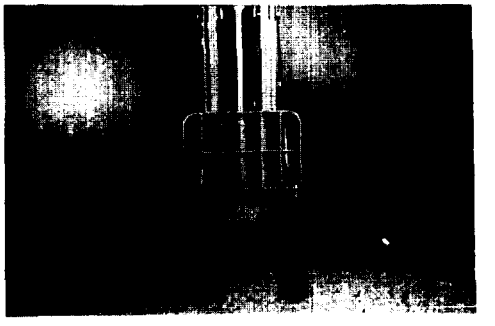

Fig. 16157

WORK SAFELY Keep hands and feet out from between moving parts unless parts are secured to prevent movement. Don' t allow others to disrupt your work . . . and especially keep all persons away from truck controls when you' re making measurements or adjustments, Before beginning any service on the triple stage upright . . .

WORK SAFELY

. . . the following operational checks should be made to determine if the upright is operating properly.

Any adjustments should be made prior to load testing, because equipment in unsatisfactory condition could fail under load and cause injury to personnel or damage to the truck.

OPERATIONAL

CHECKS & ADJUSTMENTS

LATCH OPERATION

A two-piece latch, located on the top inner rail tie bar, is designed to prevent the inner rails from raising before the carriage is fully extended.

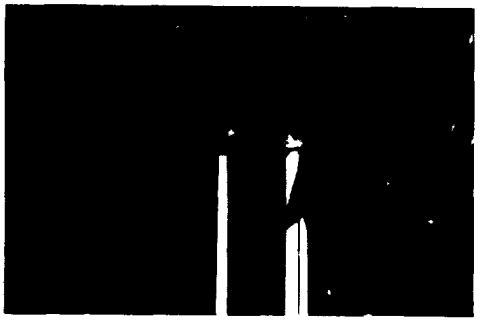

Fig. 16158

www.truck-freeworkshop.com/clark/

Here the carriage has just passed maximum full free-lift position. Notice that at this point the top carriage rollers are visible. When the carriage reaches this position ...

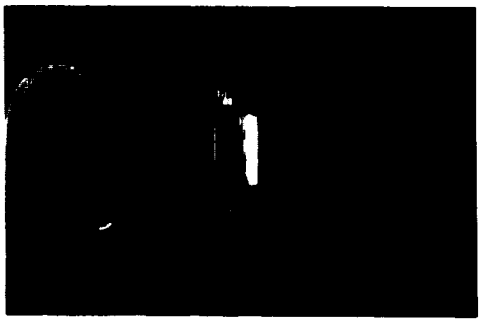

Fig. 16159

... the latch is tripped by a finger that protrudes slightly from the piston head. The latch should be checked immediately after it's tripped to see that it works freely.

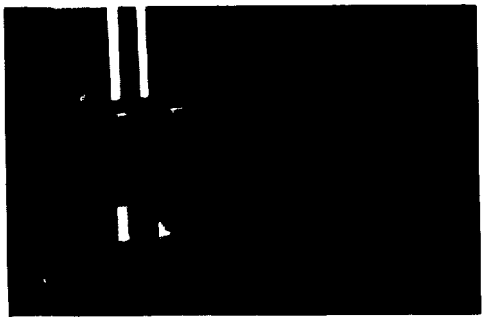

Fig. 16160

Check the latch from behind the upright with the key off. The latch should move up and down about 1/2-inch with slight finger pressure.

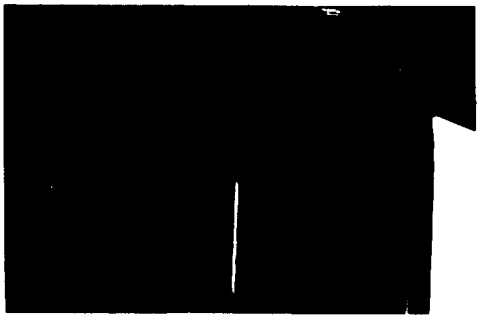

Fig. 16161

INTERMEDIATE RAILS

The intermediate rail chains extend downward from their anchor points on the lift cylinder ...

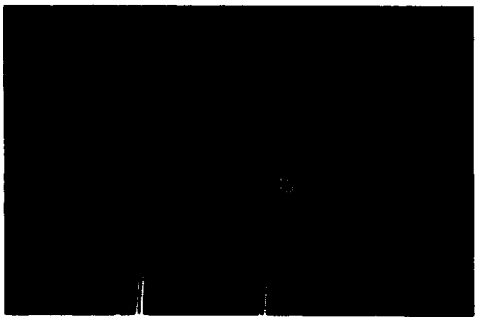

Fig. 16162

www.truck-freeworkshop.com/clark/

... pass around shives on the intermediate rail tie bar ...

Fig. 16163

... and anchor near the top of the outer rails. Inspect chains for wear and for equal tension, Refer to the Index for complete coverage of "Upright Lift Chain Check and Adjustment Procedures".

Two checks of intermediate rail chain length must be made.

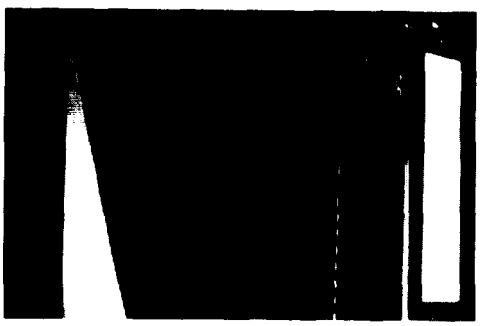

Fig. 16164

First, the stop block on the intermediate rail tie bar SHOULD NOT contact the outer rail tie bar.

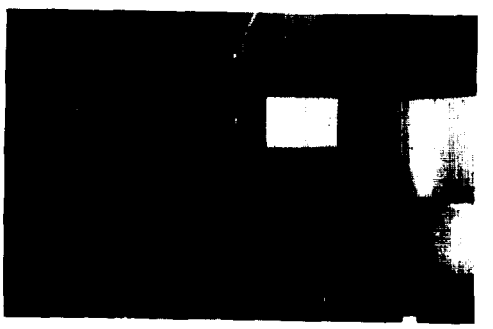

Fig. 16165

Second, the lift cylinder base should move slightly out of its socket ...

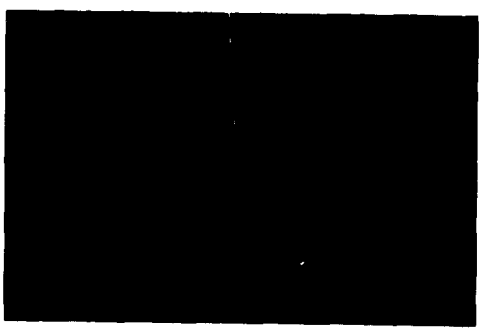

Fig. 16166

www.truck-freeworkshop.com/clark/

. . . when the upright is fully extended . . .

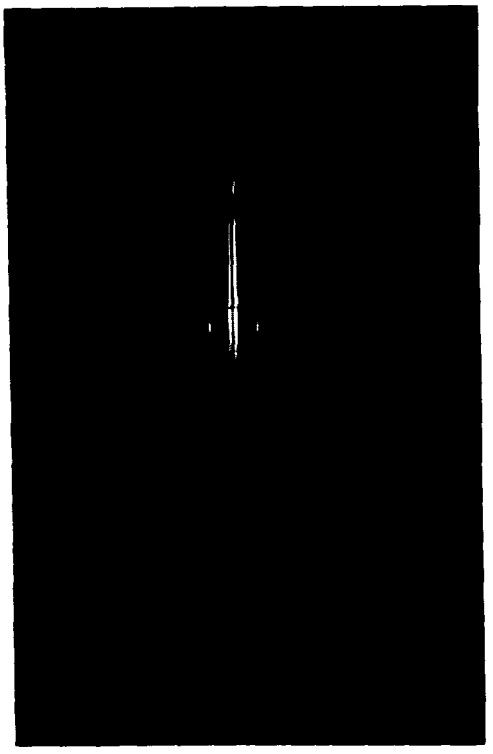

Fig. 16167

. . . like this . . .

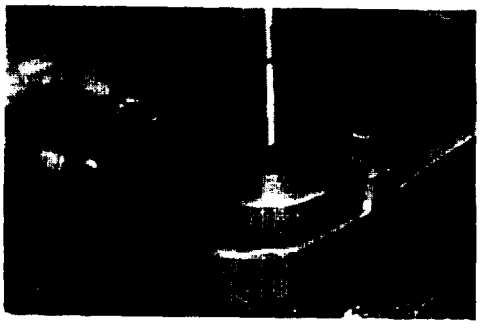

Fig. 16168

. . . but not so much that it jams against its retaining bolts. Either lack of free movement of the lift cylinder base when the upright is fully extended or the stop block resting on the tie bar, indicates that the intermediate rail chains are too long,

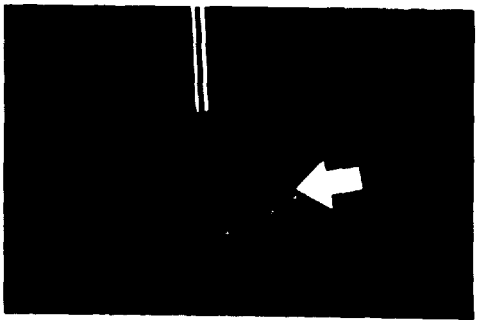

Fig. 16169

www.truck-freeworkshop.com/clark/

They should be shortened by means of their adjusting nuts on the anchor plate that's attached to the lift cylinder.

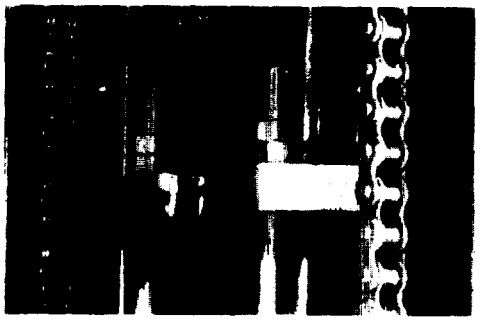

Fig. 16170

If these nuts are removed, be sure the nuts with conical seats are inserted first, so that the self-aligning design can work properly.

Fig. 16171

CARRIAGE CHAINS

The carriage chains are attached to the bottom of the carriage ...

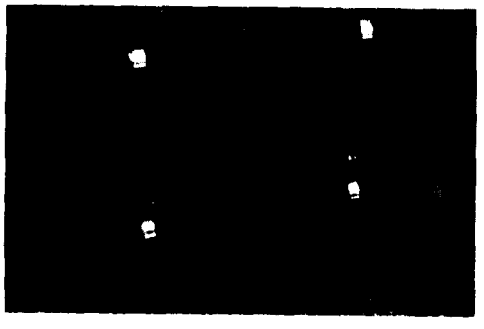

Fig. 16172

... travel upward around rollers on the piston head . . .

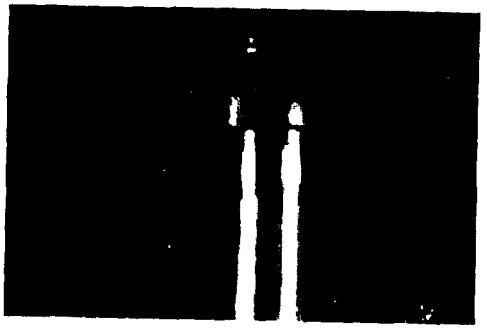

Fig. 16173

www.truck-freeworkshop.com/clark/

. . . and anchor to the same plate as the Intermediate rail chains, but enter the anchor plate from above.

Fig. 16174

Carriage chains should be adjusted so that forks are 1/2-inch above the ground with the upright vertical.

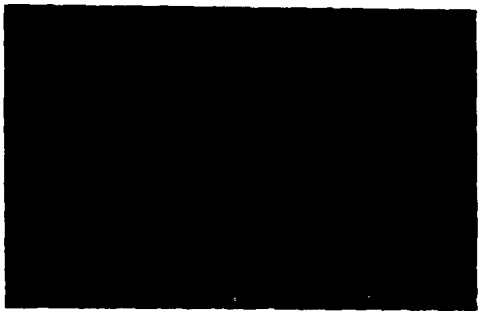

Fig. 16175

As with the intermediate rail chains, conical ends on anchor nuts should seat in the anchor plate. Inspect the carriage chains for wear.

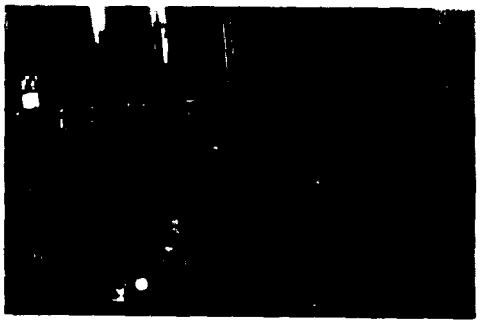

Fig. 16176

CHECKING ROLL PATTERNS

Impressions made by rollers on upright rails are called roll patterns. Roll patterns can give an indication of upright adjustment. Excessive metal sowing or gouging of the roller paths may indicate excessive pressure caused by damaged or misadjusted rollers. Roll patterns can be checked by . . .

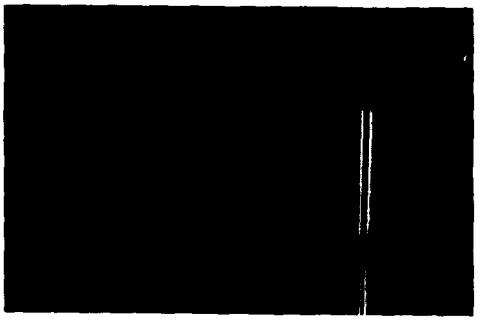

Fig. 16177

www.truck-freeworkshop.com/clark/

. . . applying a light coat of spray paint or a thin layer of grease to the roller contact area and then operating the upright several times with a load.

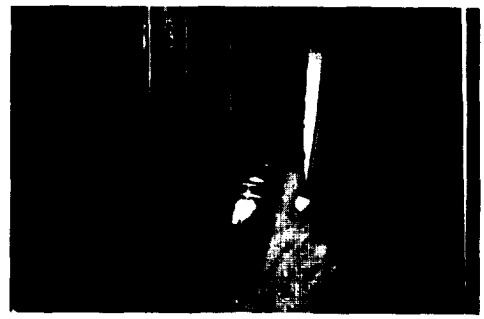

Fig. 16178

Roll patterns of carriage rollers, Including thrust rollers

Fig. 16179

. . . and main upright rollers, can be checked in this way.

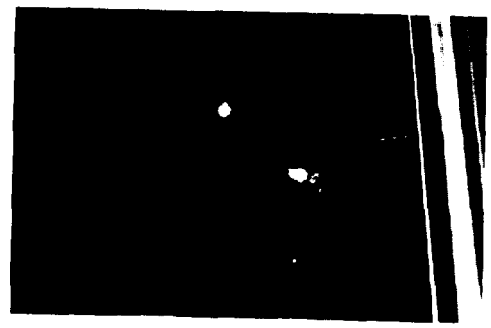

Fig. 16180

HYDRAULIC CYLINDER AND SEALS

Cylinder rod seals should be checked for leakage, Seals of the primary piston rod . . .

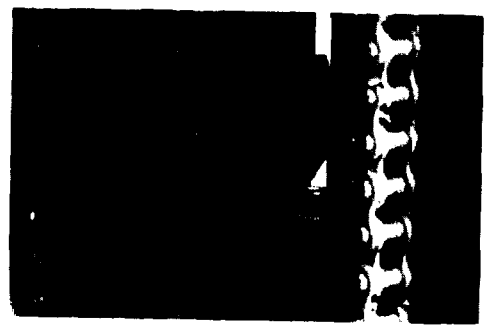

Fig. 16181

www.truck-freeworkshop.com/clark/

. . . secondary piston rod . . .

Fig. 16182

. . . and feed tube assembly should be checked. Cylinder rods should be free of grit, chemical residues, paint and nicks on ground or polished surfaces.

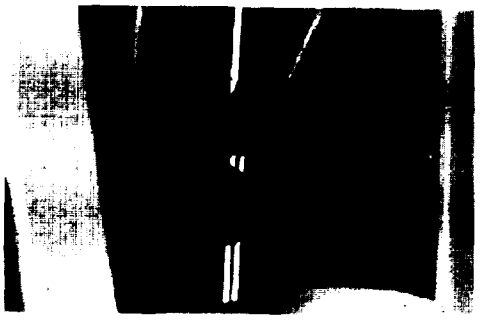

Fig. 16183

UPRIGHT RACKING

Upright racking occurs when tilt cylinder strokes are unequal. Tilt cylinders should be checked to determine if cylinder strokes . . .

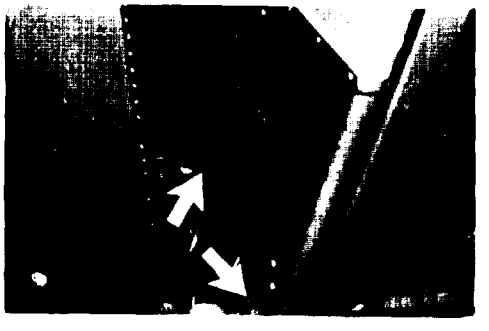

Fig, 16184

. . . are equal . To check for racking, start the/truck and raise the carriage about six inches off the ground. Operate the tilt circuit to full forward tilt and backward tilt several times. Observe to see if cylinder strokes are equal . . . movement of both cylinders should start and stop at the same time. If not, the yokes at the piston rods should be adjusted.

For adjustment procedures covering your particular model ... refer to the INDEX for 'Tilt Cylinder Rod Adjustment'.

www.truck-freeworkshop.com/clark/

If you observe no racking, check to see that keys are in place and locking bolts are tight.

Fig. 16185

This completes the operational checks of the upright. Before conducting the load tests . . .

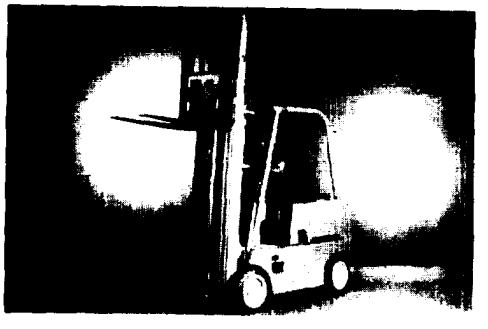

Fig. 16186

. . . operate the upright without a load and look for unusual operation. If the upright operates normally after the operational checks have been completed . . .

Fig. 16187

LOAD TESTING

. . . the load tests should be performed. Begin the load testing by . . .

LOAD TESTING

www.truck-freeworkshop.com/clark/

. . . placing a capacity load on the forks and securing it to the carriage. Tilt the upright back slightly.

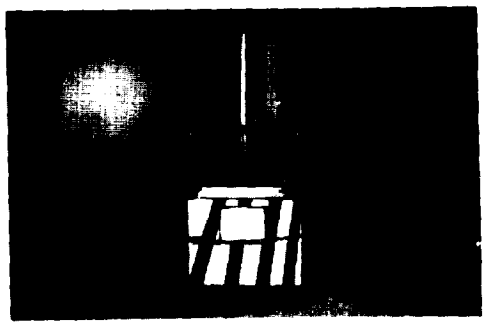

Fig. 16188

Raise the upright to maximum extension several times. Smoothness of operation, carriage play and play between rails ! should be noted. If operation is satisfactory, the load should then be placed . . .

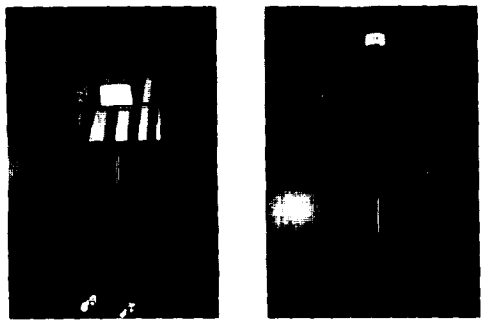

Fig. 16189

. . . four inches off center. In this case, to your left . . .

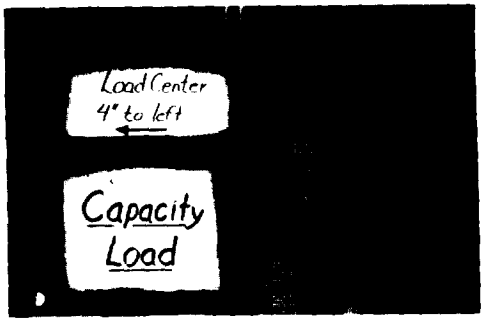

Fig. 16190

. . . and raised to maximum extension.

Fig. 16191

www.truck-freeworkshop.com/clark/

Then four inches off center in the other direction . . .

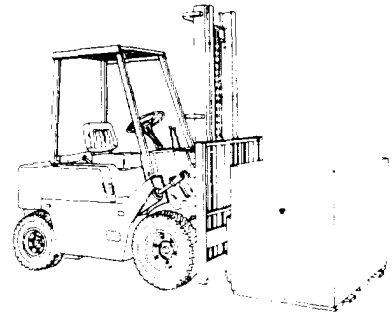

Fig. 16192 TA501956

. . . and again raised to full extension. The offset has been exaggerated here for clarity purposes. In your tests, offset loading must not exceed 4 inches.

Experienced fork truck mechanics know that both too much clearance and ...

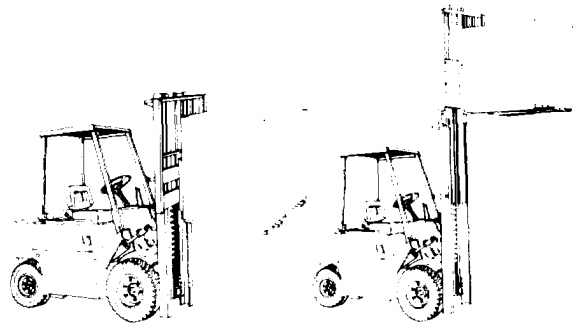

Fig. 16193 TA501957

. . . too little clearance can be the cause of binding and uneven operation.

The design of the interlocking rails requires some lateral movement of the carriage within the inner rails.

Fig. 16194 TA501958

Adequate clearance between rollers and rails is necessary to insure smooth operation and minimum wear.

Fig. 16195 TA501959

www.truck-freeworkshop.com/clark/

Providing the upright works smoothly with a capacity load, the service man should consider the application for which the truck is used in making a decision as to whether carriage or rail adjustments are necessary. If the product handled by the truck is very delicate or the operation sensitive, the serviceman should take these into consideration.

The adjustment of new uprights that have minimal operating time is not recommended unless there is some indication that the upright is not operating properly.

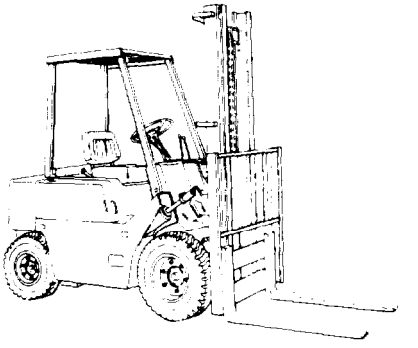

Fig. 16196 TA501960

Rollers require some time to seat in rails and initial stress relieving at weld areas will cause some dimensional changes that affect roller clearance.

Operators should be consulted on a regular basis as to any unusual operation of the upright as well as other parts of the truck.

group 34

TESTING THE DRIFT OF THE UPRIGHT AND TILT CYLINDERS

To check for drift, a TEST LOAD must be made up and the TEST LOAD must have even distribution on a 48" by 48" pallet. The TEST LOAD must be a fully rated load. Check the Serial Number Plate on your truck for rated capacity.

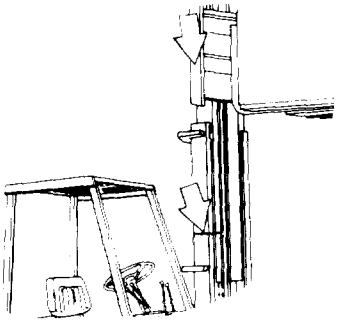

TA501961

Fig. 16197

www.truck-freeworkshop.com/clark/

The TEST LOAD must have stability on the pallet. The material used to make up the TEST LOAD must be put on the pallet so that it has stability. The TEST LOAD must not extend beyond the pallet,

First, make a TEST LOAD as stated above then position the load on forks.

1. Adjust fork width as wide as possible to get even distribution of weight.
2. Keep forks level when you raise the load.
3. Engage pallet and TEST LOAD In as far as possible. Move forward until forks completely engage the TEST LOAD. TEST LOAD and/or pallet must be In contact with load back rest.
4. Set parking brake and chock wheels.

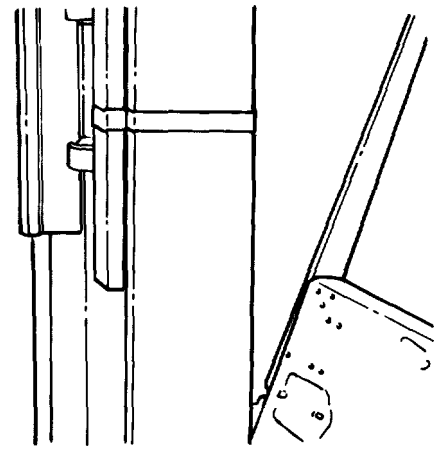

TA501962

Fig. 16197.1

TESTING THE DOWN DRIFT

Raise carriage and TEST LOAD so that the inner rails move up a few inches. Then tilt upright backward about 1 degree from vertical.

Move to one side of the upright (clear of the load) and mark the upright rails with a pencil and do a drift test.

DRIFT MUST NOT GO OVER ONE INCH PER MINUTE.

TESTING THE DRIFT OF THE TILT

Raise the carriage and TEST LOAD approximately 12 to 15 inches off the floor. Tilt the upright to the full back position.

Measure the drift between points ‘ A” shown in Fig. 16197.2,

THE LOAD MUST NOT DRIFT MORE THAN 1/2 TO 3/4 OF AN INCH IN FIVE MINUTES.

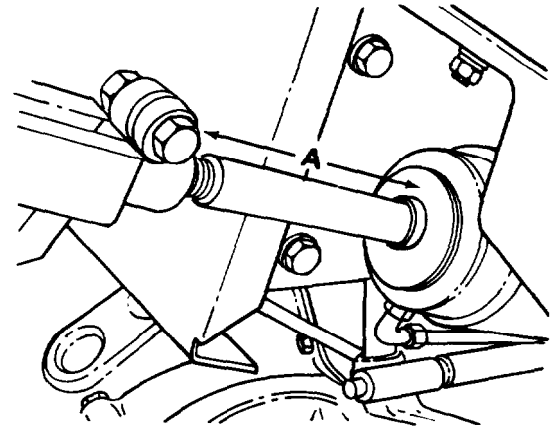

TA501963

Fig. 16197.2

www.truck-freeworkshop.com/clark/

Figures 16198 through 16202 and corresponding text are rescinded.

When performing tests and services on a truck . . . never walk under raised forks . . . with or without a load . . . and don't allow others to. If binding or excess carriage play is suspected, the following carriage adjustment procedure should be carried out.

CAUTION

NEVER WALK UNDER

RAISED FORKS

REMOVE THE CARRIAGE

If the truck you are servicing is internal combustion powered, the carriage should be removed in a well ventilated location where you will want to do your work. With the truck positioned, turn off the key . . .

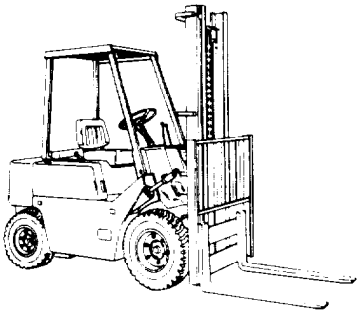

TA501964

Fig. 16203

www.truck-freeworkshop.com/clark/

. . . set the parking brake and . . .

Fig. 16204

. . . block the steer wheels to prevent the truck from moving forward or backward. With the transmission in neutral, start the truck and . . .

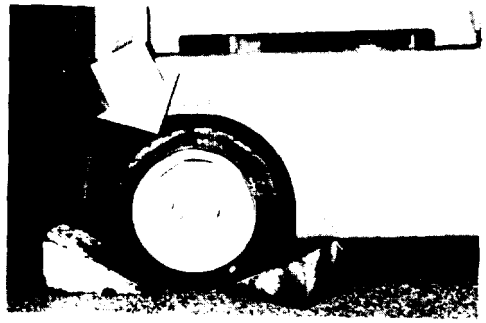

Fig. 16205

. . . raise the upright until the carriages is at a comfortable working distance above the ground. Place a 4 x 4 post squarely beneath the carriage lower fork bar, below the carriage chain anchor bracket as shown here. Then . . .

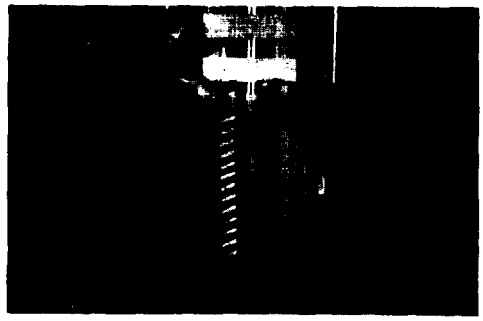

Fig. 16206

. . . standing clear of the upright, lower the carriage until it contacts the post. Lower the lift cylinder an Inch or so further so the carriage chains become slack. Check to see that the chains are loose and the 4 x 4 post squarely in place. Then turn the key off.

www.truck-freeworkshop.com/clark/

Working from behind the upright, remove the cotter keys from the carriage anchor pins.

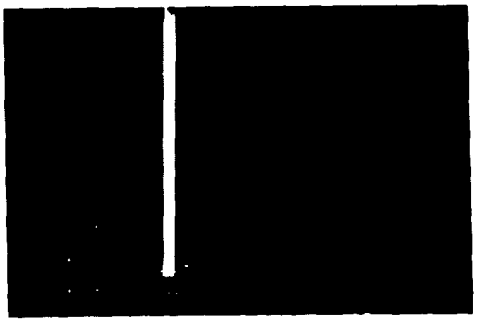

Fig. 16208

Then one at a time, hold the carriage chains with one hand and remove the anchor pins with the other. The chains must be held so they don't flip up over the shives.

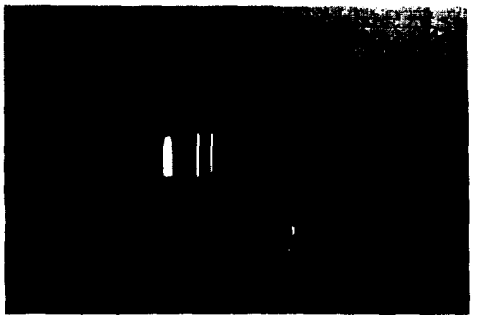

Fig. 16209

Replace them with machine bolts off the same length but of slightly smaller diameter.

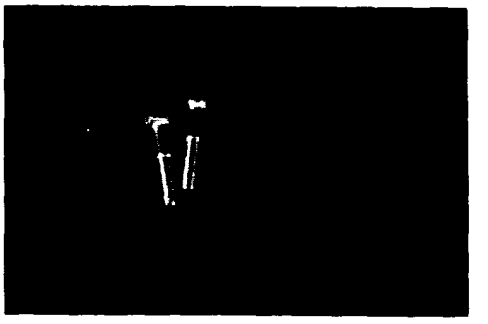

Fig. 16210

Here the anchor pin at the right has been replaced by a bolt.

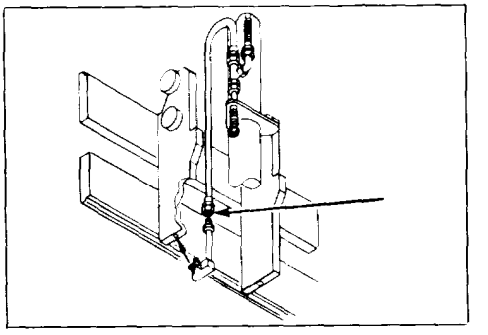

Fig. 16211

www.truck-freeworkshop.com/clark/

When both carriage anchor pins have been replaced with bolts, stand away from the carriage, start the truck, and raise the lift cylinder until the carriage is clear of the post.

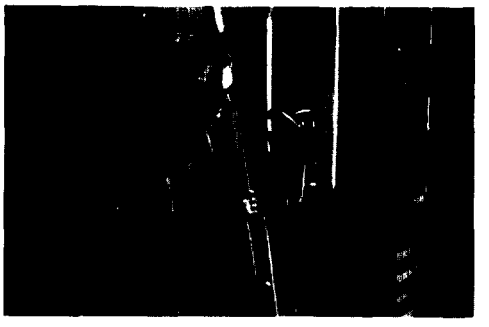

Fig. 16212

Remove the post . . .

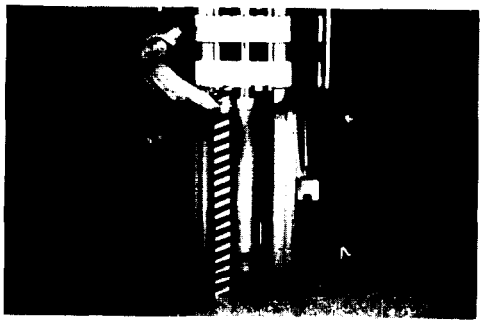

Fig. 16213

. . . and place it beneath the forks just in front of the fork heels. Slide a pallet about three-fourths of the way onto the forks. Then lower the lift cylinder all the way and turn off the key. The carriage chains will be slack.

Fig. 16214

Remove the bolts from both carriage anchor points.

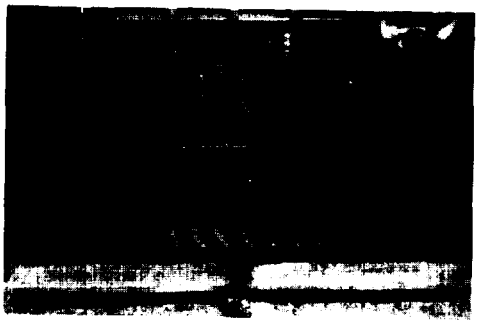

Fig. 16215

www.truck-freeworkshop.com/clark/

Push the carriage chains up around their shives on the piston head so that they will be out of the way of the carriage. Remove chocks from the steer tires.

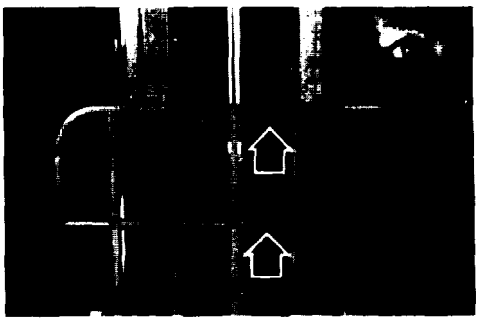

Fig. 16216

Start the truck and raise the lift cylinder until the carriage rollers are clear of the inner rails.

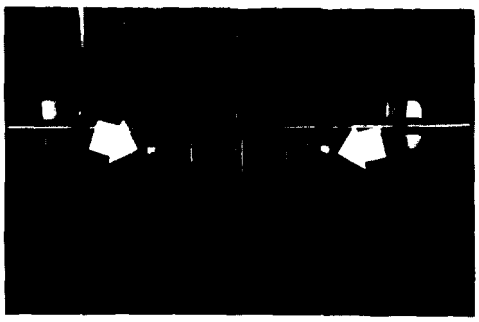

Fig. 16217

Release parking brake, place the truck in reverse, and slowly back away from the carriage.

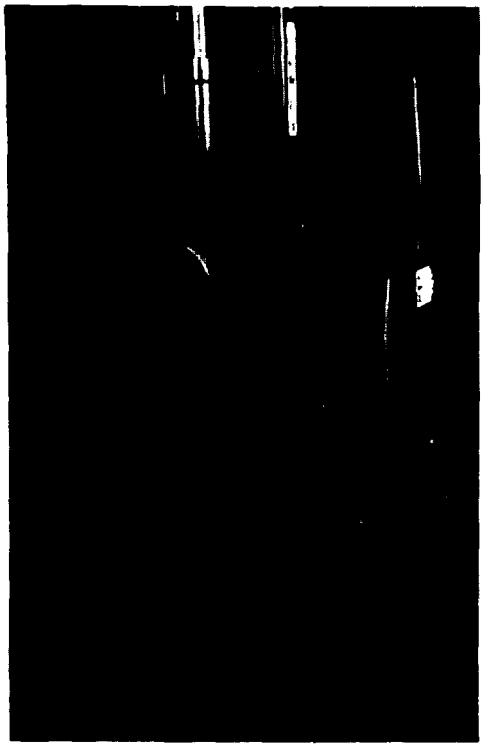

Fig. 16218

www.truck-freeworkshop.com/clark/

Lower the lift cylinder until the upright rails are down . . .

Fig. 16219

. . . but not enough to lower the piston head. Shut off the truck and set parking brake.

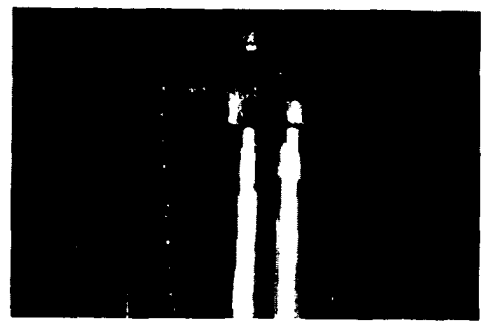

Fig. 16220

Tie the carriage chains front to back, just below the piston head.

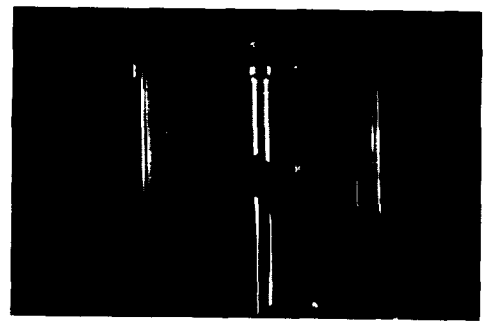

Fig. 16221

Make sure the removed carriage is stable . , . it's very heavy.

CAUTION

MAKE SURE THE

CARRIAGE IS STABLE

www.truck-freeworkshop.com/clark/

ADJUSTING CARRIAGE ROLLERS

These are special calipers designed for making carriage adjustments. The top caliper is an inside caliper . . . the lower one, an outside caliper.

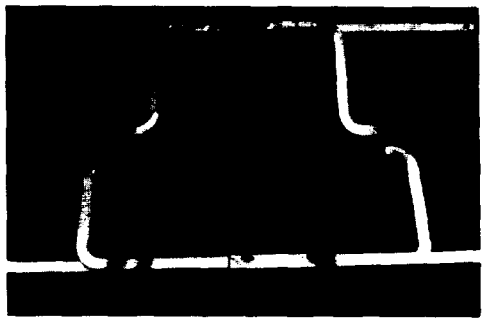

Fig. 16222

The first step in adjusting carriage rollers is to span the inner rails with the inside caliper. Loosen the thumb screws on the caliper and place it squarely across inside surfaces on the inner rails so it contacts both sides. Tighten the thumb screws.

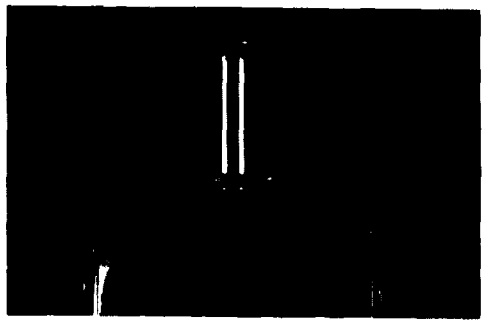

Fig. 16223

Move the caliper down and up the inner rails ...

Fig. 16224

. . . several times until the narrowest point is found. Now, at the narrowest point . . .

Fig. 16225

www.truck-freeworkshop.com/clark/

...add a 1/32nd inch thick shim . . .

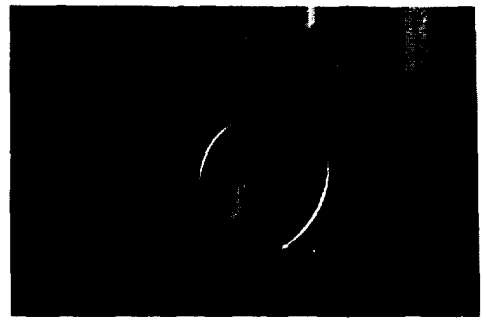

Fig. 16226

. . . between the contact point of the caliper and the inner rail. Then re-tighten the caliper and re-check the inside caliper setting. The shim will provide operating clearance for the carriage rollers within the inner rails.

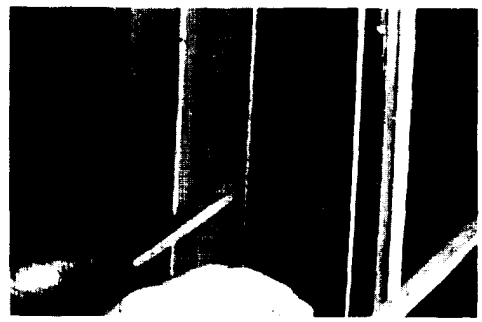

Fig. 16227

Now place the outside calipers so they contact the extreme points on the inside calipers. Adjust the outside caliper and tighten thumb screws when it' s square . . .

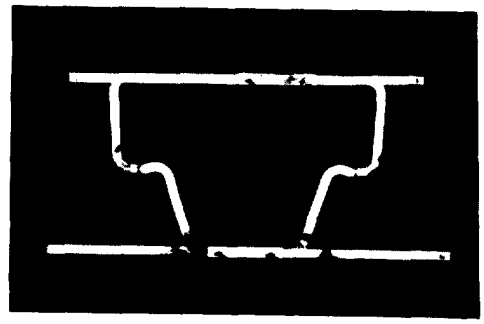

Fig. 16228

. . . and in contact with the inside calipers.

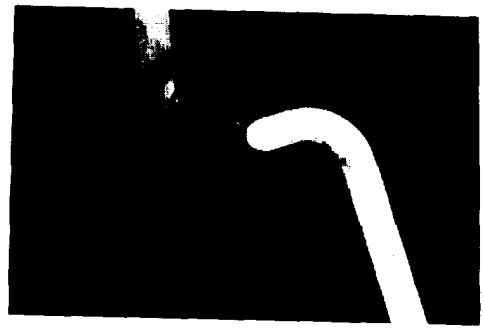

Fig. 16229

www.truck-freeworkshop.com/clark/

Now move to the back side of the carriage.

Fig. 16230

Inspect the side thrust rollers on the back side of the upper fork bar.

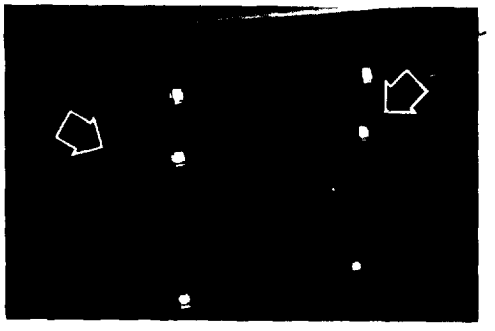

Fig. 16231

Check the rollers for damage to contact surfaces, seals and excessive play. These rollers are important when making measurements, because their positions are located and fixture drilled during carriage manufacture.

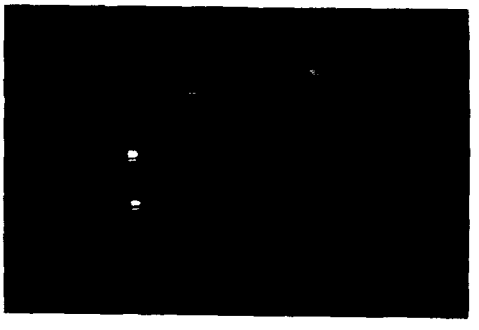

Fig. 16232

They are removed by loosening a socket head screw in their centers.

Fig. 16233

www.truck-freeworkshop.com/clark/

If the thrust rollers are in good condition, place the outside caliper across the second set of carriage rollers. Place the caliper on the side of the rollers near the back of the carriage fork bar.

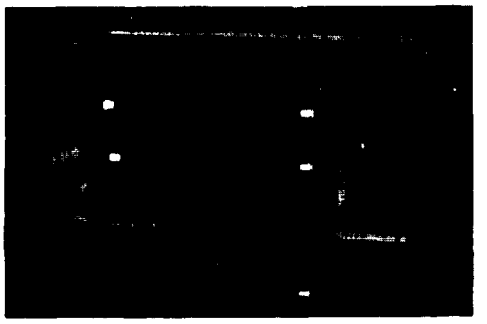

Fig. 16234

Remember that the carriage rollers are canted.

Fig. 16235

The caliper must be placed so that the maximum distance across the set of rollers is measured.

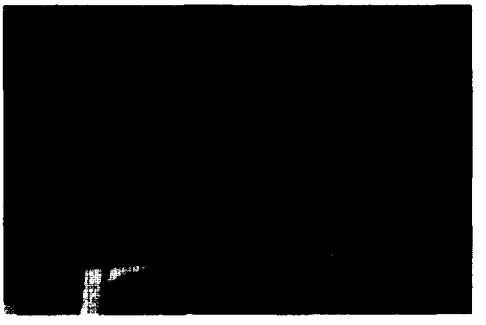

Fig. 16236

Holding the caliper carefully, insert shims between the roller side and caliper contact point until all clearance is eliminated. Shims are 1/32nd inch thick, so in this case three shims or 3/32nds of an inch clearance is indicated. We need to increase the distance between rollers by 3/32nds of an inch. We' ll do this by adding three shims behind the rollers.

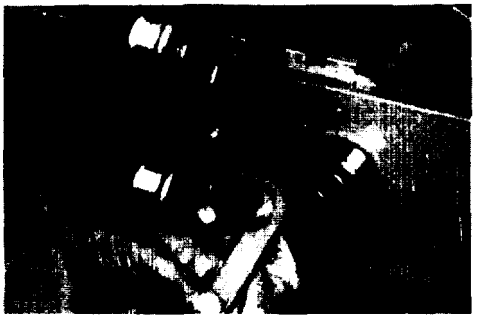

Fig. 16237

www.truck-freeworkshop.com/clark/

But before adding any shims, we must center this set of carriage rollers with the side thrust rollers. Using a steel rule, carefully measure the distance between the face of the side thrust roller and the side of the carriage roller.

Fig. 16238

Do this on both sides of the carriage. To obtain equal distance between side thrust and main carriage rollers on both sides, we find that two shims need to be added to the right roller and one to the left roller.

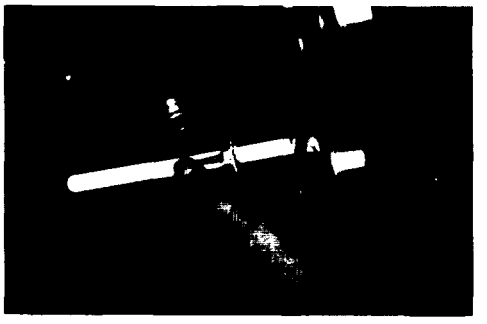

Fig. 16239

Remove rollers by working them off with pry bars or tapping them loose with a soft faced hammer.

Fig. 16240

Add the two shims to the right side . . .

Fig. 16241

www.truck-freeworkshop.com/clark/

... inspect the roller for damage or excessive wear ... replace it if necessary ... and ...

Fig. 16242

... re-install by tapping it on with a heavy plastic or a leather mallet.

Fig. 16243

Add the one shim to the left side, inspect the roller and replace it.

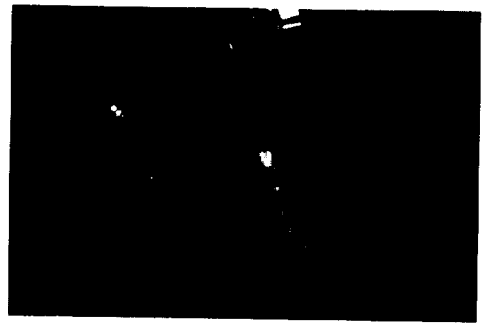

Fig. 16244

We're in good shape now. The caliper indicates a zero clearance.

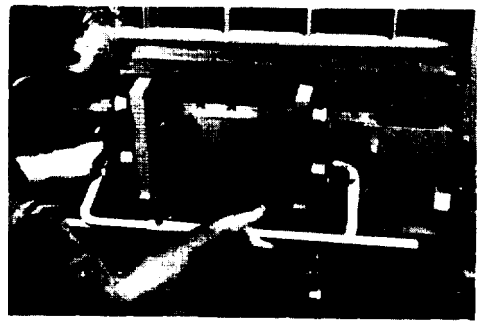

Fig. 16245

www.truck-freeworkshop.com/clark/

... a re-check with the rule shows that both thrust rollers ...

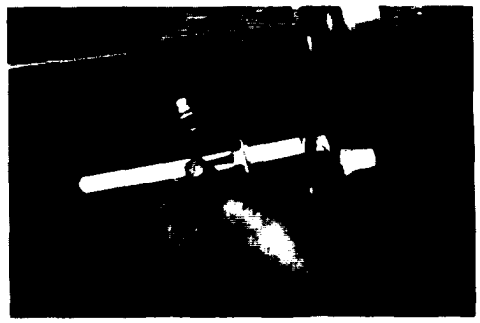

Fig. 16246

... are the same distance from the carriage rollers.

Fig. 16247

With the same caliper position, span the bottom carriage rollers. Here we find two shims are needed to eliminate clearance of the caliper.

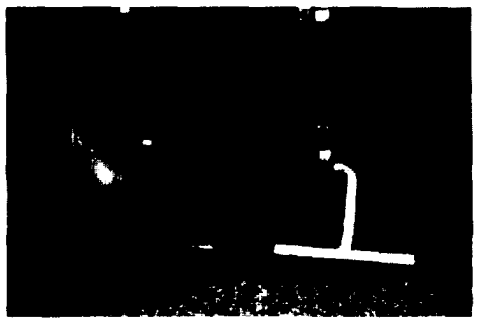

Fig. 16248

Note that these rollers are canted in the opposite direction . . .

Fig. 16249

www.truck-freeworkshop.com/clark/

. . . the calipers need to be placed on the side of the roller closest to you.

Fig. 16250

The bottom rollers must be directly below the center carriage rollers.

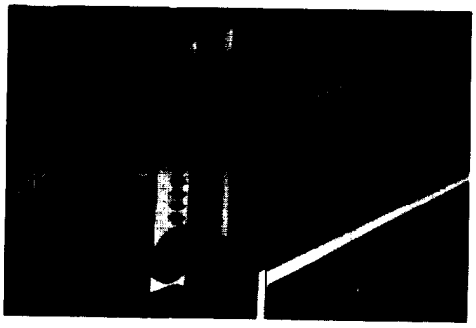

Fig. 16251

To get lower rollers directly beneath the center rollers, piece a carpenter's square between the back edge of the bottom roller and the front edge of the middle carriage roller . . .

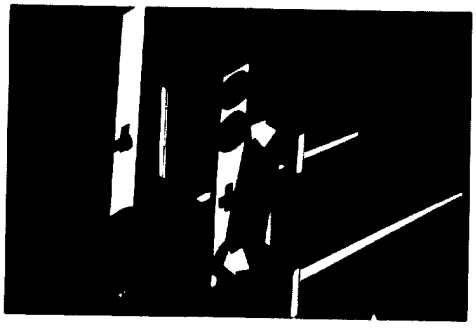

Fig. 16252

. . . like this.

Fig. 16253

www.truck-freeworkshop.com/clark/

Use your steel rule to get one leg of the carpenter' s square parallel to the upper fork bar.

Fig. 16254

Move the rule back and forth across the upper fork bar while checking the position of the lower roller with the center roller.

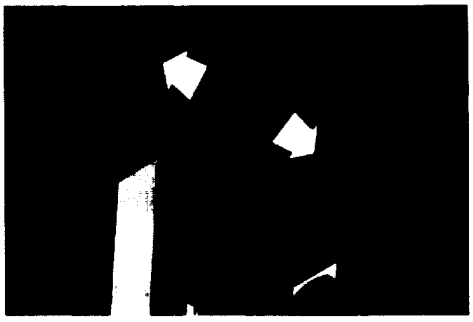

Fig. 16255

In this way the number of shims that need to be added . . . or subtracted . . . is determined. We' ve determined that two shims must be added to the right lower roller.

Fig. 16256

The roller is removed . . .

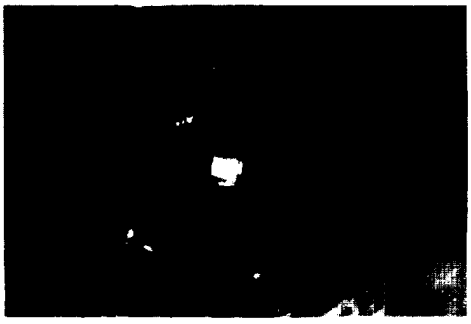

Fig. 16257

www.truck-freeworkshop.com/clark/

. . . and shims added.

Fig. 16258

A check with the square on the opposite side indicates no shims are needed.

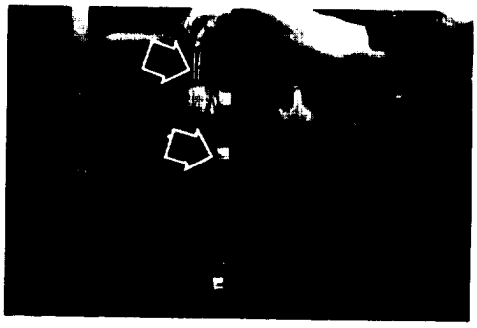

Fig. 16259

A re-check with the caliper shows zero clearance between the caliper' s contact points and the bottom roller set. Remember that the carpenter' s square must be used to position bottom rollers directly below the center rollers.

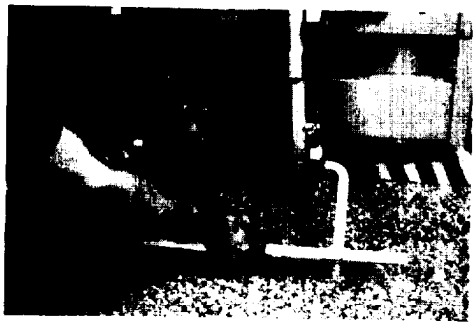

Fig. 16260

The top carriage rollers are checked last. Notice that the top carriage rollers extend out of the inner rails when the carriage is fully extended. To make re-entry of these rollers into the inner rails easier, additional clearance is provided for this top set of rollers,

Fig. 16261

www.truck-freeworkshop.com/clark/

Place a square directly through the centers of the lower and center rollers.

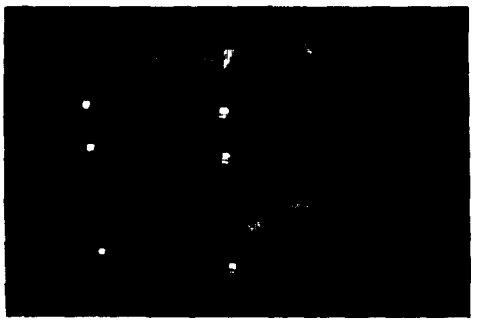

Fig. 16262

The top rollers nest be adjusted so that a 1/32nd inch inset is obtained . . . like so:

Fig. 16263

Top rollers are removed by removing a socket head cap screw.

Fig. 16264

Add shims as indicated by your measurement . . .

Fig. 16265

www.truck-freeworkshop.com/clark/

. . . and re-check for the 1/32nd inch inset.

Fig. 16266

The inset should be achieved on both sides.

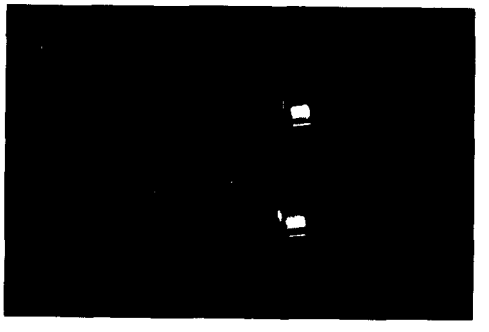

Fig. 16267

The last step in adjusting the carriage rollers Is to adjust the carriage side thrust rollers that operate on the inside of the inner rails.

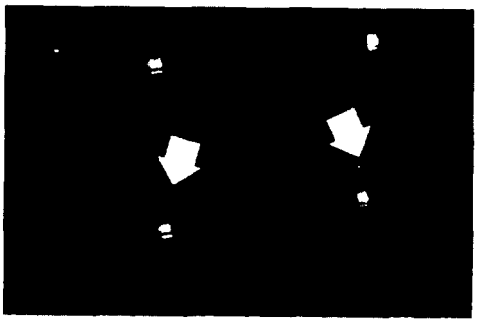

Fig. 16268

With the carpenter' s square placed across the diameters of the lower and center carriage rollers . . .

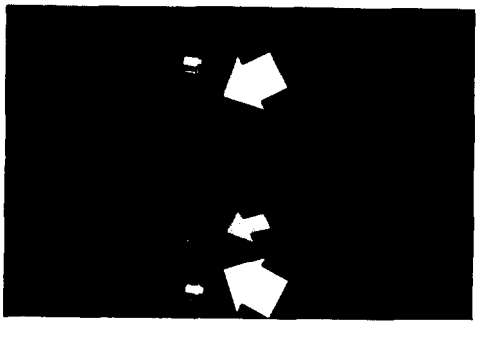

Fig. 16269

www.truck-freeworkshop.com/clark/

. . . the face of the thrust roller should overlap the edge of the rule by 1/64th of an inch on both thrust rollers.

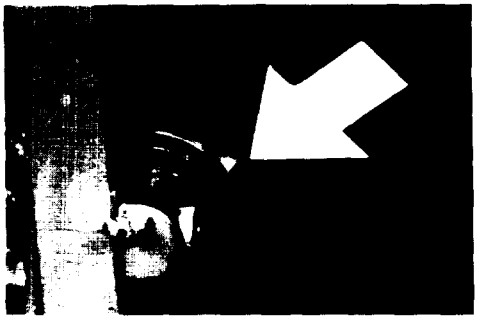

Fig. 16270

The side thrust rollers should also be checked with the lower fork bar for squareness.

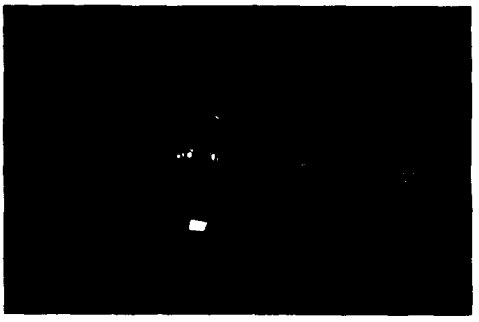

Fig. 16271

U-shaped shims, at the left, should be added as needed beneath . . .

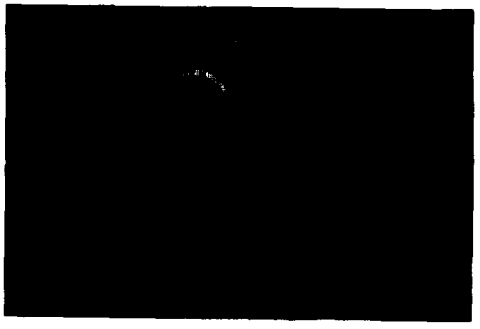

Fig. 16272

. . . either or both of the socket head mounting bolts used on thrust roller mounts.

Fig. 16273

www.truck-freeworkshop.com/clark/

After both thrust rollers have been adjusted, their grease fitting should be lubricated.

Fig. 16274

This completes the procedure for adjusting the six-roller carriage used on the triple stage upright. If upright rails are also going to be adjusted, the carriage would not be re-installed at this time, Upright adjustment procedure is given in Section 11, of this Manual. Whether installed at this point or after rail adjustment, here' s how it' s done.

Fig. 16275

INSTALLING THE CARRIAGE

Drive the truck up to the carriage.

Move the truck up slowly and raise the lift cylinder to position the carriage rollers directly below the inner rails and lower the lift cylinder completely. Turn off the truck, set the parking brake, and block the steer tires.

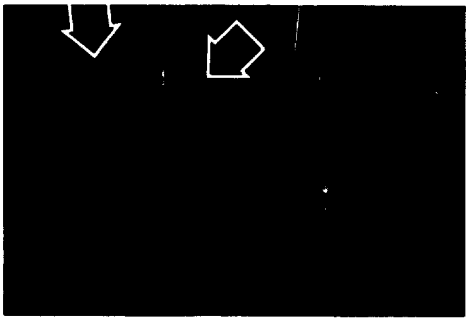

Fig. 16276

Untie the carriage chains.

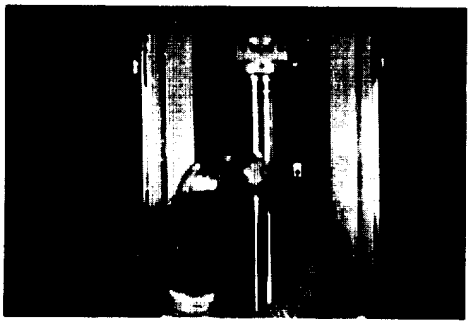

Fig. 16277

www.truck-freeworkshop.com/clark/

Then prop the lift cylinder control . . .

CONTROLS VARY WITH DIFFERENT TRUCK MODELS. REFER TO THE OPERATORS INSTRUCTION MANUAL COVERING THE PARTICULAR MODEL TRUCK YOU ARE WORKING ON.

Fig. 16278

. . . In the lower position with a block, or tie It forward with a wire.

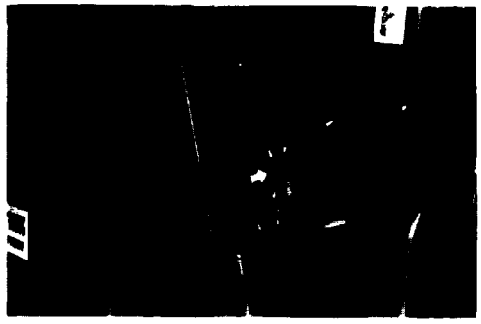

Fig. 16279

This wi1l permit you to pull on the carriage chains to lower the piston head. You' ll have to lift the chains over the load back-rest extension on the carriage.

Fig. 16280

When the carriage chains are all the way down, insert the machine bolts.

Fig. 16281

www.truck-freeworkshop.com/clark/

Then start the truck ...

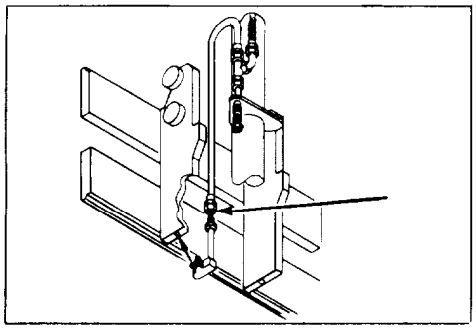

Fig. 16282

... and raise the lift cylinder until the pallet and the 4 x 4 can be removed.

Fig. 16283

Continue to raise the carriage until the 4 x 4 can be inserted beneath the carriage and . . .

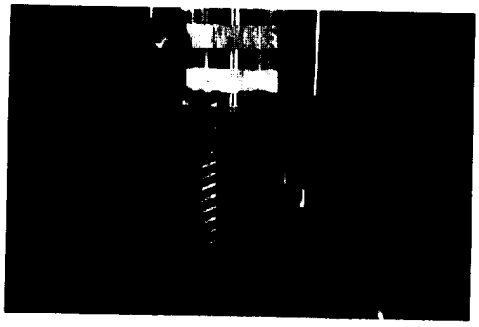

Fig. 16284

... lower the lift cylinder until the carriage Is supported on the post.

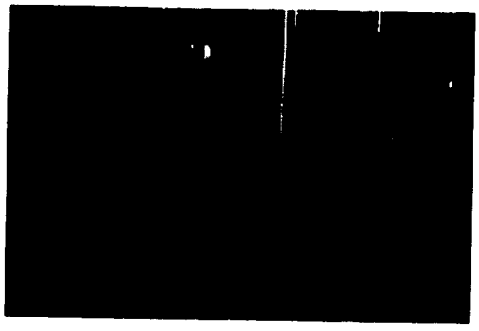

Fig. 16285

www.truck-freeworkshop.com/clark/

Turn off the truck. Exchange the machine bolts . . .

Fig. 16286

. . . for the carriage anchor pins.

Fig. 16287

Use new cotter keys to secure the anchor pins.

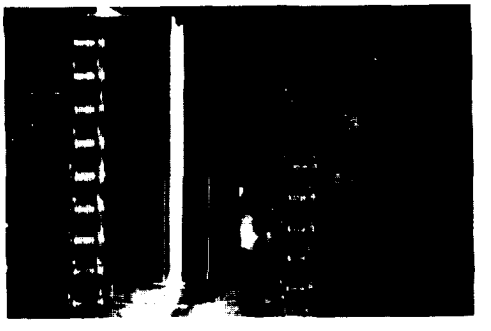

Fig. 16288

Then start the truck. Raise the lift cylinder and remove the 4 x 4 ...

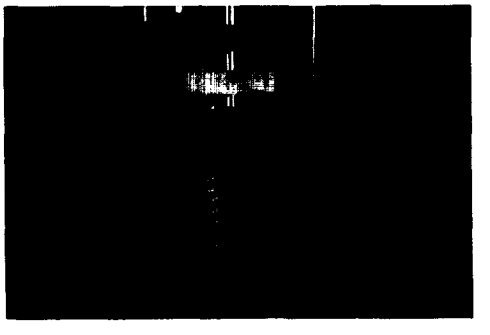

Fig. 16289

www.truck-freeworkshop.com/clark/

... then lower the carriage. Remove the safety blocks at the steer wheels.

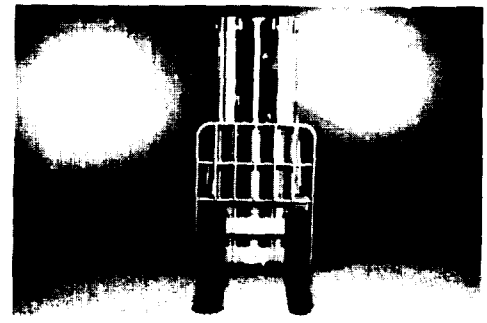

Fig. 16290

Operate the upright several times to be sure it is operating properly.

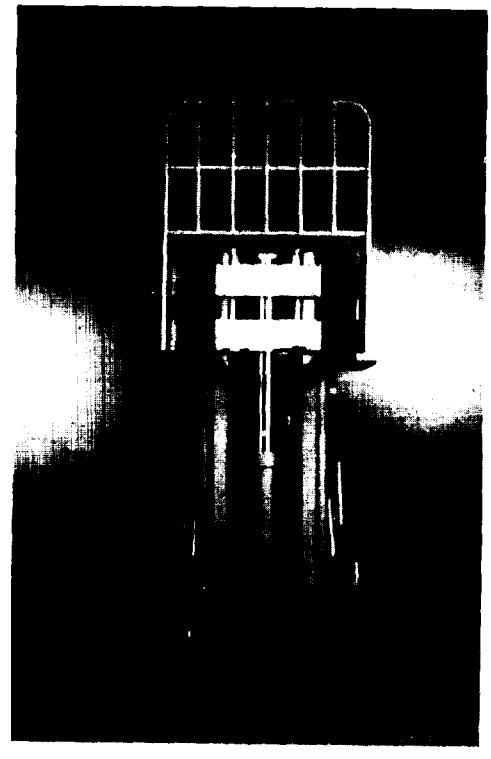

Fig. 16291

Make operational checks and load test before placing the truck in service.

This concludes the service procedure for making operational checks, the load testing, and carriage adjustments on the triple stage upright with six-roller carriage. The following section list the procedures for making rail adjustments on the triple stage upright.

www.truck-freeworkshop.com/clark/

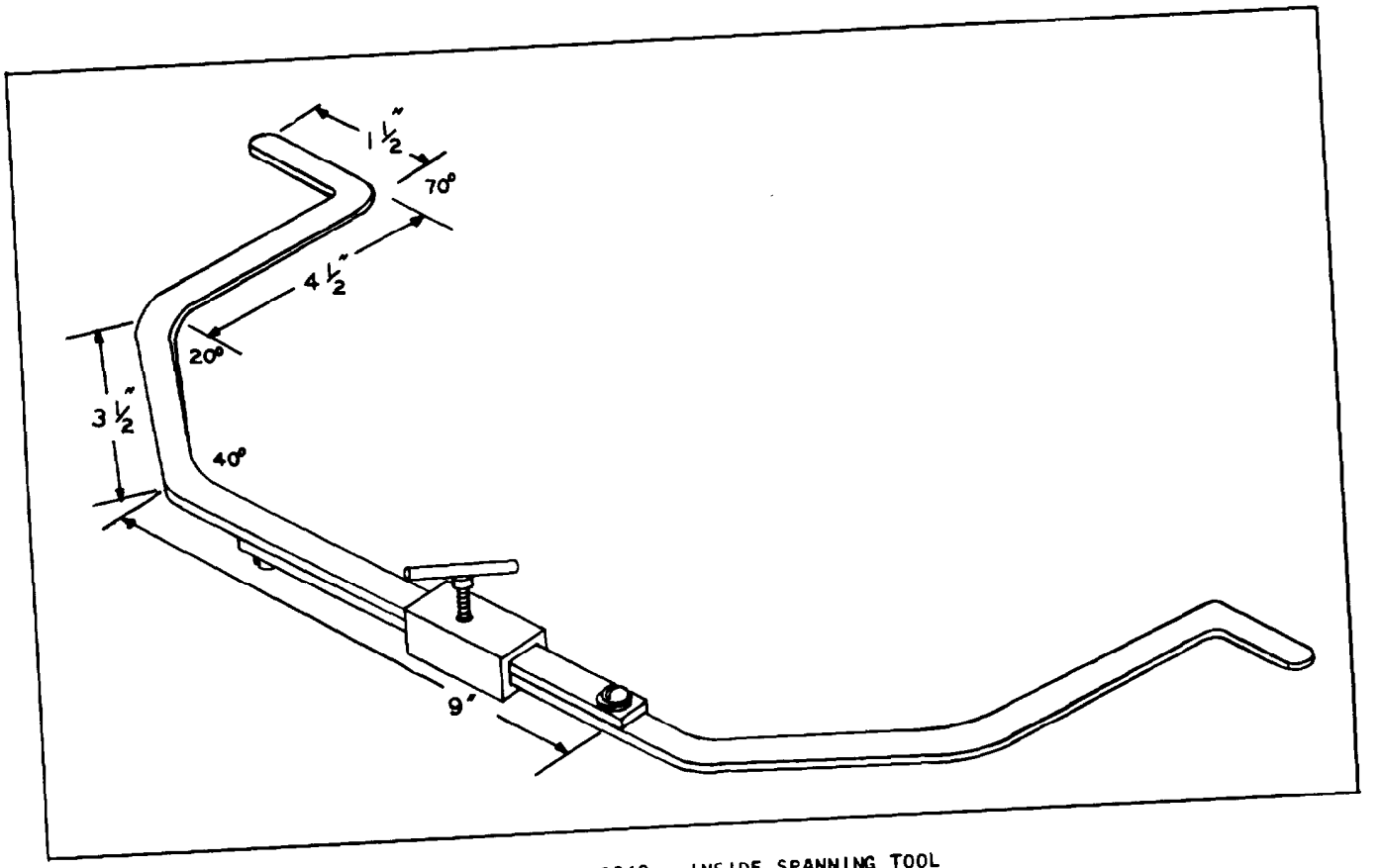

Fig. 13010. INSIDE SPANNING TOOL

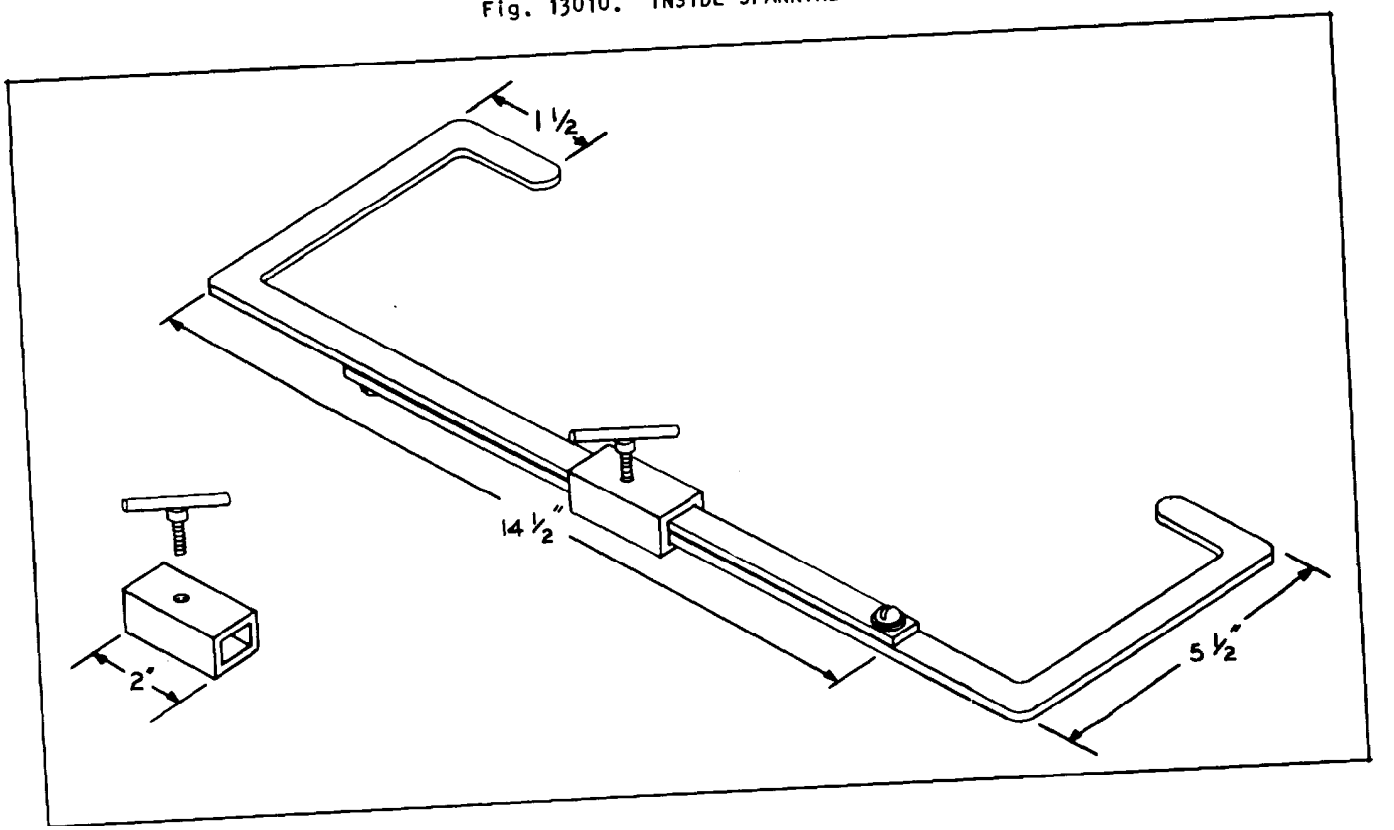

Fig. 13011. OUTSIDE SPANNING TOOL

www.truck-freeworkshop.com/clark/

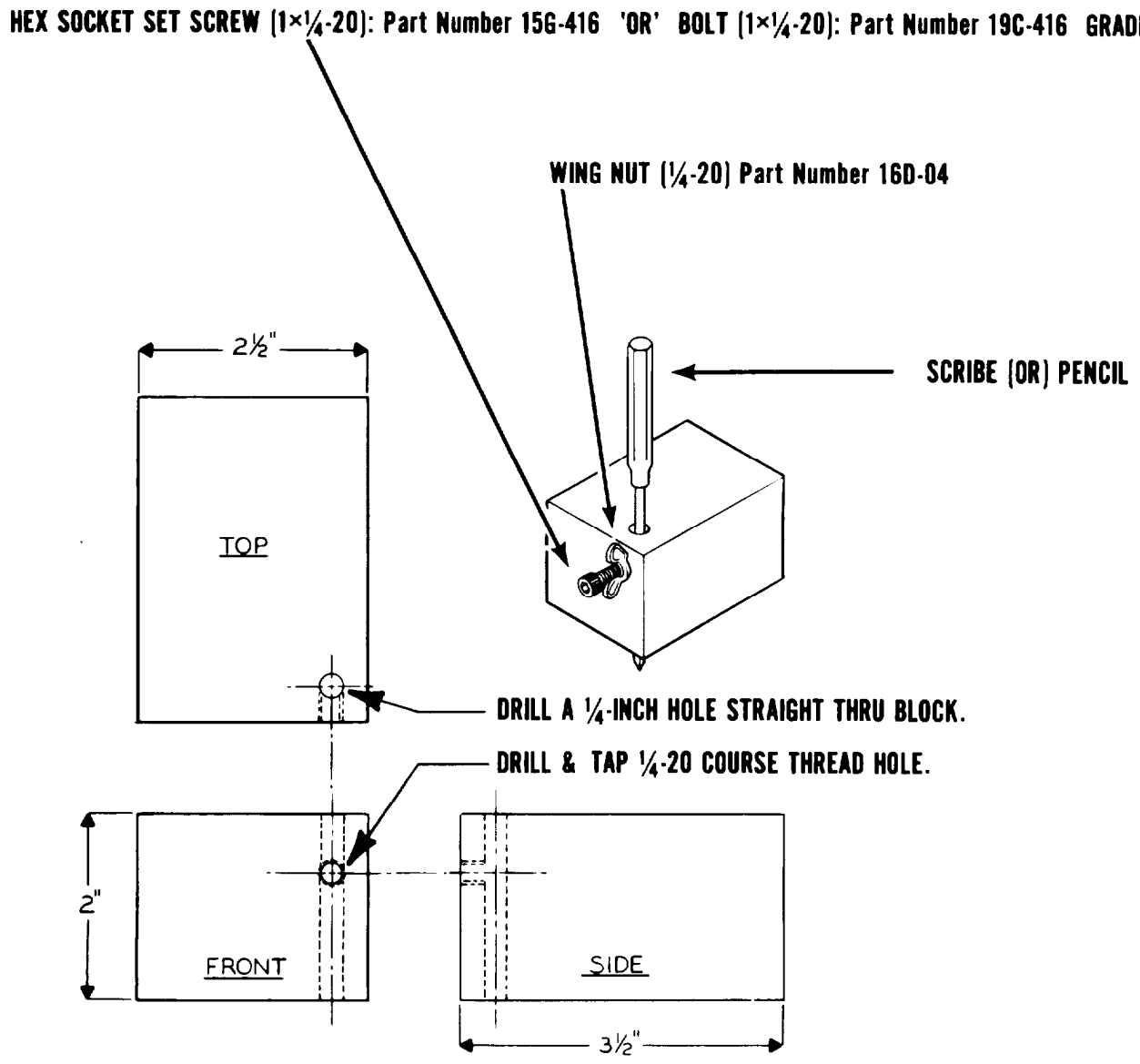

UPRIGHT 'MARKING BLOCK'. Material: WOOD OR PLASTIC – 'SQUARED'.

www.truck-freeworkshop.com/clark/

FULL FREE LIFT TRIPLE STAGE UPRIGHTS EQUIPPED WITH 6-ROLLER CARRIAGES

Upright Rails and Rollers ..... Page 5-156
Measuring Rail-To-Roller Clearance-Part 1... Page 5-158
Tools ..... Page 5-161
Measuring Rail-To-Roller Clearance-Part 2... Page 5-163
Adjusting Rail-To-Roller Clearance ..... Page 5-173

www.truck-freeworkshop.com/clark/

The following procedures cover Full Free Lift Triple Stage Uprights equipped with six-roller carriages used on trucks rated from 2,000 through 12,000 pounds capacity,

The service procedure applies to all uprights with M serial number designation.

These numbers, remember, are called DECK NUMBERS, and are located on the front of the outer rails.

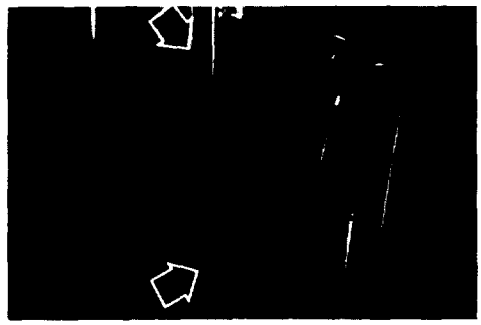

Fig. 16155

UPRIGHT RAILS TO ROLLERS

The following procedure explains how to:

1st-Measure rail-to-roller clearance.

2nd-Adjust rail-to-roller clearance.

The triple stage upright, as the name implies . . .

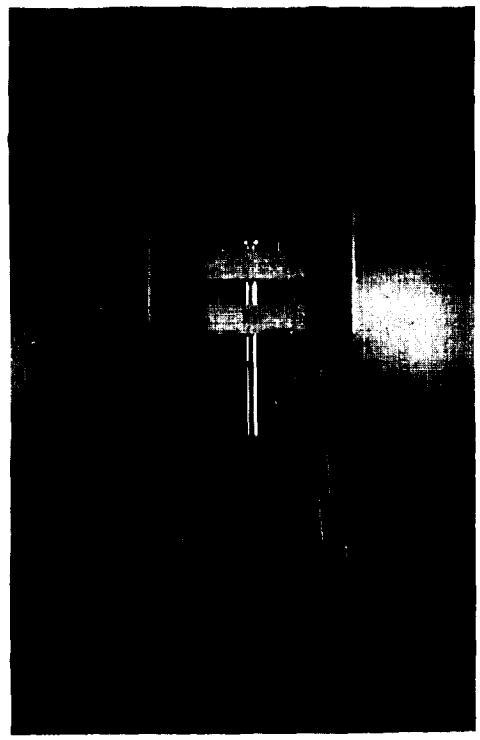

Fig. 16291

group 34

. . . has three sets of upright rails. The rails are identified as . . .

Fig. 16293

www.truck-freeworkshop.com/clark/

. . . outer rails . . .

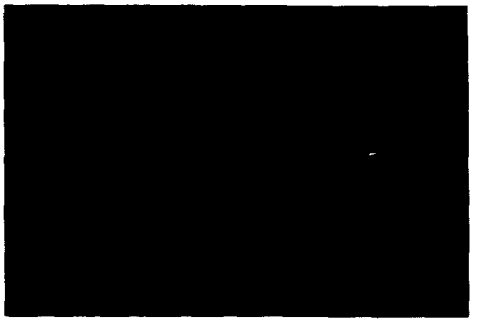

Fig. 16294

. . . intermediate rails . . .

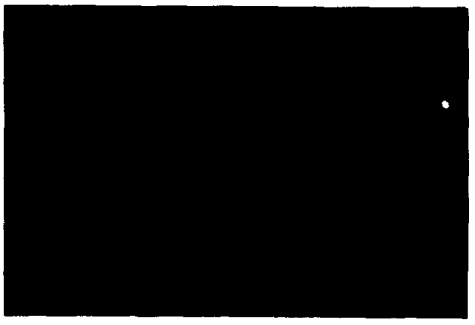

Fig. 16295

. . . and inner rails.

Fig. 16296

When the lift cylinder is raised, the fork carriage extends through what is called the "free lift" portion of cylinder travel. Just beyond the maximum free lift position, the rollers on the top of the carriage are visible as they extend out from the top of the Inner rails.

Fig. 16297

www.truck-freeworkshop.com/clark/

As the maximum free lift position is reached, the primary cylinder piston head trips a latch that permits the inner and intermediate rails to rise to maximum fork height. At the left the piston head approaches the latch . . . on the right the piston head trips the latch . . .

Fig. 16298

. . . permitting the rails to extend.

Fig. 16299

The upright is equipped with 8 rollers. These diagrams show the positions of the rollers within the triple stage upright.

Fig. 16300

There are four rollers that work between the outer rails and intermediate rails . . .

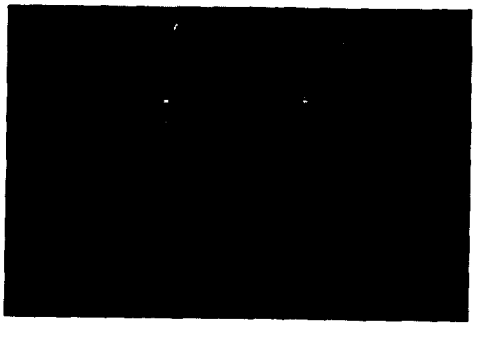

Fig. 16301

www.truck-freeworkshop.com/clark/

. . . and four rollers that work between the intermediate rails and inner rails.

Sharp fork truck mechanics know that with age and wear, the . . .

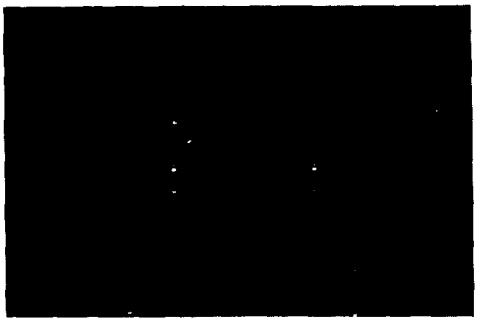

Fig. 16302

. . . clearance between upright rails can increase and cause excessive looseness between rails. Upright rollers become worn, rail surfaces wear, and stress relieving due to handling of heavy loads over a period of time may cause slight dimensional changes between upright rails.

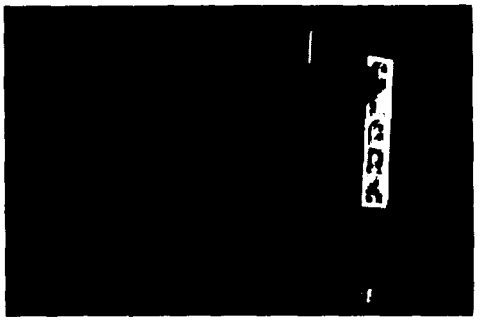

Fig. 16303

MEASURING RAIL-TO-ROLLER CEARANCE

The method for measuring rail-to-roller clearance is quite easy.

We' ll use this graphic example that shows the upright rails without flanges, to show how it' s done. The triple stage upright has four sets of rollers.

Fig. 16304

One set at the top of the outer rails . . .

Fig. 16305

www.truck-freeworkshop.com/clark/

. . . a second set at the bottom of the intermediate rails . . .

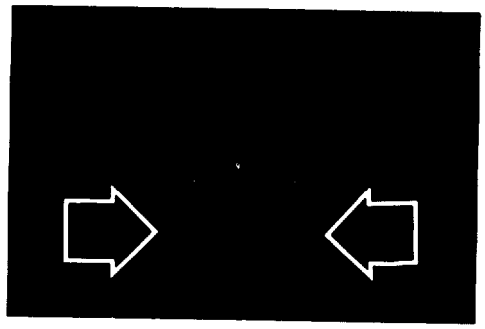

Fig. 16306

. . . a third set at the top inside of the intermediate rails, and . . .

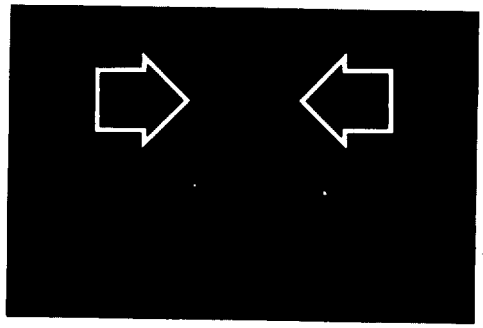

Fig. 16307

. . . a fourth set at the bottom of the inner rails.

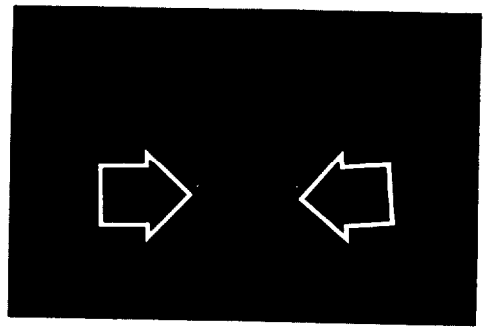

Fig. 16308

The white arrows show clearance between the inner rails and the top roller set of the intermediate rails.

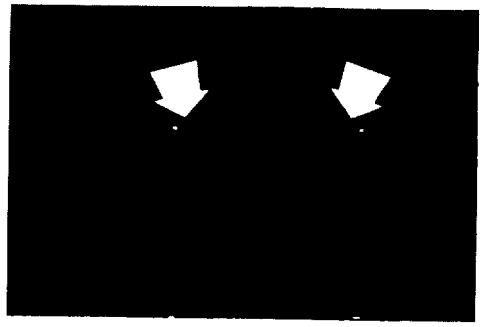

Fig. 16309

www.truck-freeworkshop.com/clark/

By prying the rails to the right, we move all clearance to the left side . . .

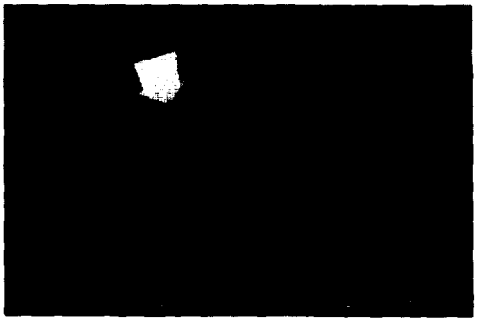

Fig. 16310

. . . by prying rails left, we have all clearance at the right. In this way rail-to-roller clearance for each roller set IS easily measured . . . as your'll see in a moment.

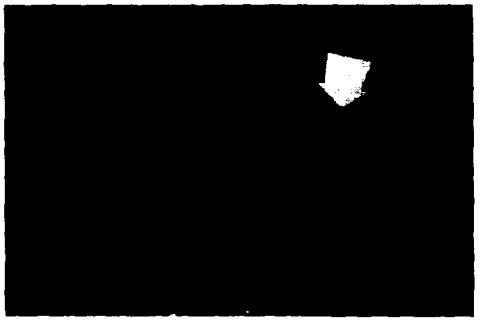

Fig. 16311

But obtaining the value for rail-to-roller clearance at only one point is not always satisfactory, since rails cannot be made or welded perfectly parallel.

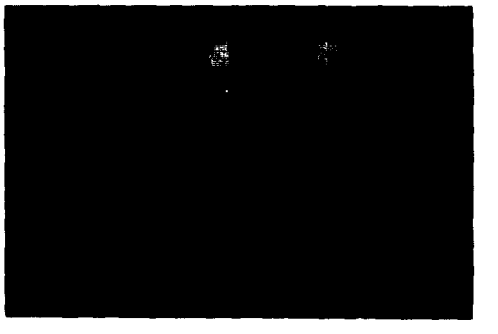

Fig. 16312

measurement . . . rail-to-roller clearance is checked at more than one place for each roller set. Clearance is checked with:

-- upright lowered,
-- at one-half extension and,
-- at full extension

-- for EACH ROLLER SET.

rails are welded in a slight "A" configuration . . . to make clearance minimal at maximum upright extension.

www.truck-freeworkshop.com/clark/

TOOLS

To check and adjust rail-to-roller clearance, you will need the following materials in addition to common hand tools.

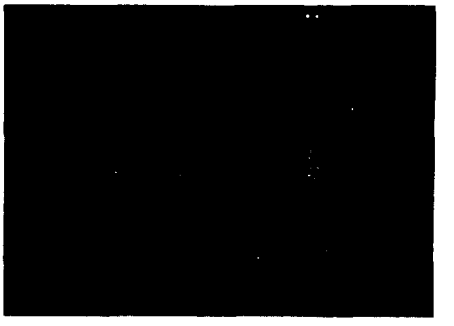

Fig. 16313

About four or five 4 x 4 hardwood posts In lengths from about 12" to 4 feet.

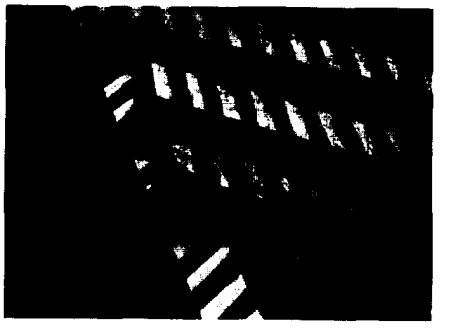

Fig. 16314

A ten foot chain with screw type clevices or locking hooks.

Fig. 16315

A steel mechanics rule graduated in 32nds of an inch . . .

Fig. 16316

www.truck-freeworkshop.com/clark/

... and a marking block equipped with a steel scriber or a sharply pointed pencil.

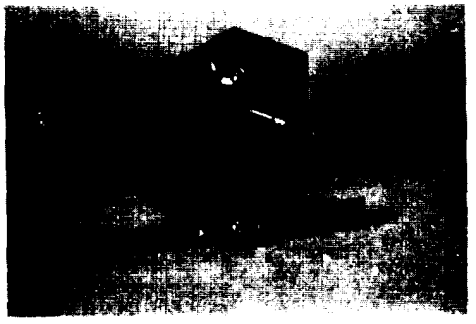

Fig. 16317

The block needs to have smooth square edges, and a locking bolt to hold the pencil or scribe firmly.

Fig. 16318

Pry bars like these lady slippers are also needed.

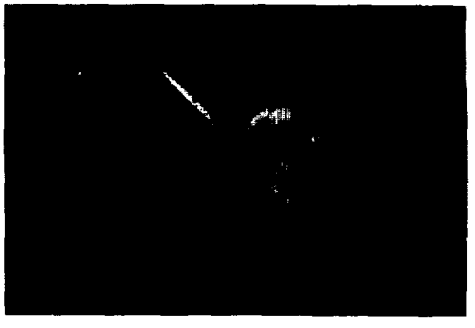

Fig. 16319

To begin, drive the truck onto short pieces of 2 x 6 or wider boards. Remember that we've already removed the carriage.

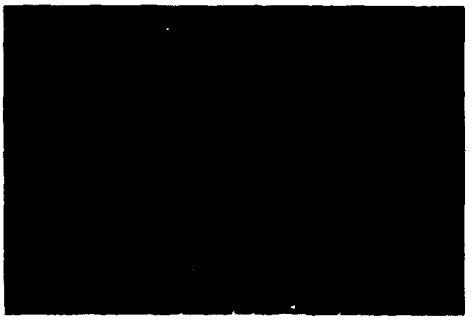

Fig. 16320

www.truck-freeworkshop.com/clark/

Set the parking brake . . .

Fig. 16321

. . . and block the steer wheels to prevent the truck from moving forward or backward.

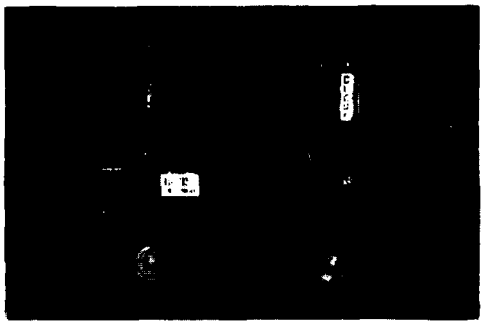

If the truck is gasoline, diesel, or LP powered, the work area should be well ventilated. You'll have to operate the truck at certain times during the measurement procedure, but it should always be turned off when measurements or adjustments are made.

Work Safely ... don' t put your hands or feet between moving parts unless they' re secured to prevent movement, and keep personnel away from truck controls during the service procedure,

WORK SAFELY

MEASURING RAIL-TO-ROLLER CLEARANCE

With the rule, a pencil or marking pen, a marking block, and pry bars, you' re ready to make measurements.

Fig. 16323

www.truck-freeworkshop.com/clark/

Begin by measuring the clearance between the top roller set of the outer rails and the intermediate rails.

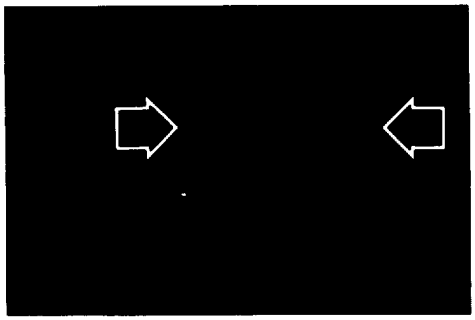

Fig. 16324

With the upright down, insert the pry bar between the outer and intermediate rail on the left and pry with moderate pressure to the right.

Fig. 16325

Hold the block flush with the flange of the intermediate rail and scribe a short line on the outer rail.

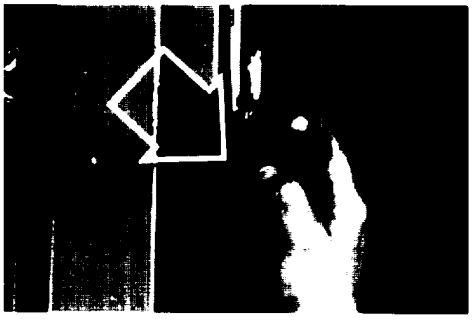

Fig. 16326

Then place the pry bar between the outer and intermediate rail on the right side and pry gently to the left, and then opposite the first scribe mark, make a second mark.

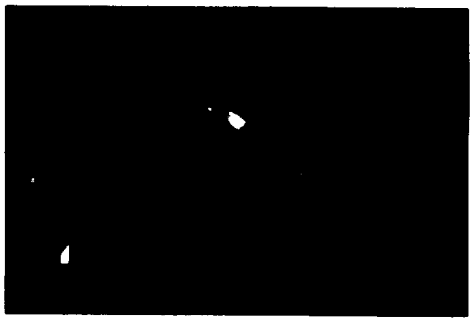

Fig. 16327

www.truck-freeworkshop.com/clark/

Then measure the distance between the two marks.

Fig. 16328

With pencil or a marking pen, record this below the scribe marks. In this case it is 7/32nds of an inch.

Fig. 16329

This means that 7/32nds of an inch is the total clearance between this roller set and the intermediate rails when they' re down completely.

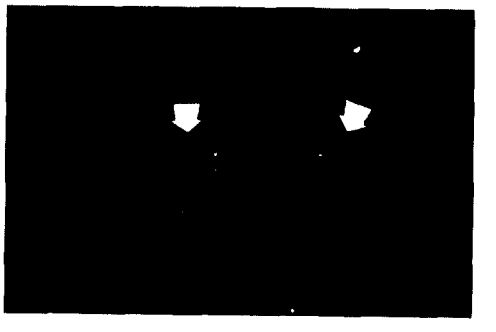

Fig. 16330

Then raise the upright so that it is one-half extended and shut off the truck. Repeat the same process. Pry the. intermediate and inner rails right, make a mark . . .

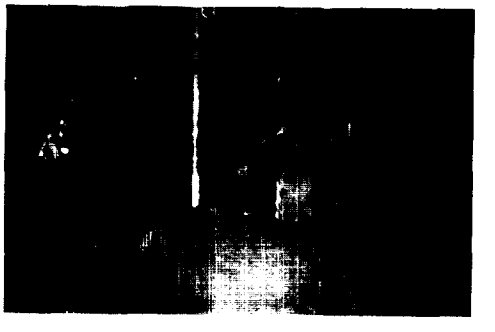

Fig. 16331

www.truck-freeworkshop.com/clark/

. . . and then pry the intermediate and Inner rails left, and make a parallel mark.

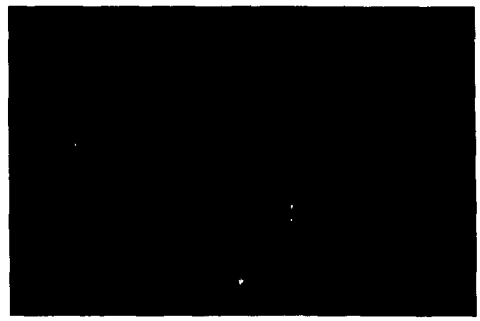

Fig. 16332

Measure the distance between the marks with a rule end record the distance directly under the scribe marks.

Fig. 16333

Then raise the upright to full extension and shut off the truck. Pry left, make a mark -- pry right, make a second mark, and record the distance between them.

In this example the clearance of the top of the outer rails with roller set at the LOP of the intermediate rails is 7/32nds of an Inch, 5/32nds of an inch, and 4/32nds of an inch, when measured with the upright down, et one half extension and fully extended.

Fig. 16334

Here we' ve re-written the values to make them more readable. Remember that clearance is always written on the rail that the rollers are attached to. These rollers are on the top of the outer rails . . . so we' ve written clearance values on the top of an outer rail. We shim to the smallest value, which is 4/32nds of an inch.

Fig. 16335

www.truck-freeworkshop.com/clark/

Four shims will be added to the pair of rollers at the top of the outer rails.

Fig. 16336

Next, determine clearance between the roller set at the bottom of the intermediate rails.

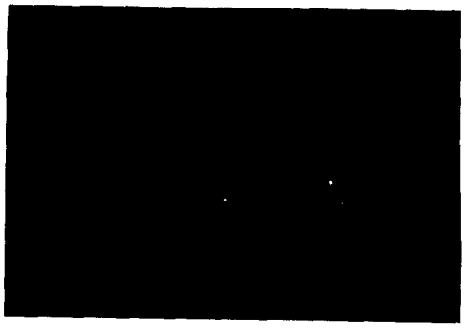

Fig. 16337

With the upright rails raised slightly, and truck shut off, pry the intermediate rail to the left, then right, and record the clearance.

Fig. 16338

Repeat with the upright at one-half extension . . . pry right...

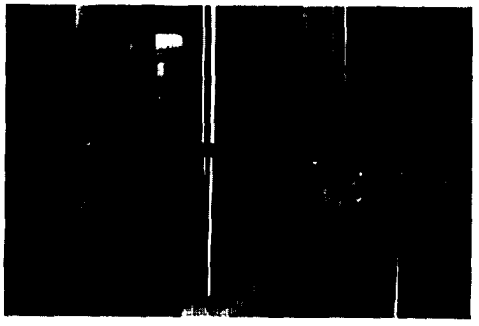

Fig. 16339

www.truck-freeworkshop.com/clark/

. . . then left and record the clearance.

Fig. 16340

Repeat the same operation at full upright extension with the key off. Pry to the right, make a mark...

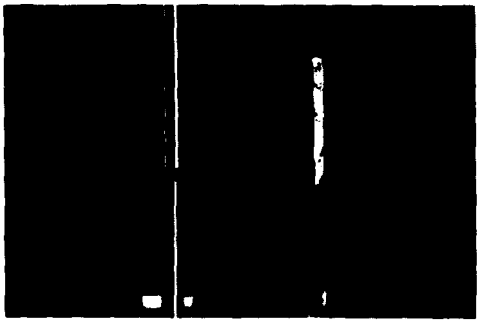

Fig. 16341

. . . pry to the left, make a mark: measure the distance between marks and record It.

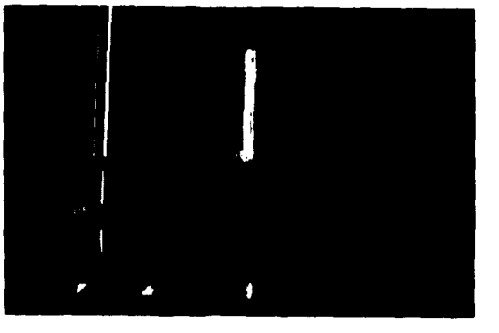

Fig. 16342

The clearance between the roller set at the bottom of the intermediate rails is 4/32nds, 6/32nds, and 8/32nds of an inch. Shimming to the smallest value requires that four shims be added to the roller set at the bottom of the intermediate rails.

Fig. 16343

www.truck-freeworkshop.com/clark/

Now we will measure clearance between the rollers set at the top of the intermediate rails with the inner rails.

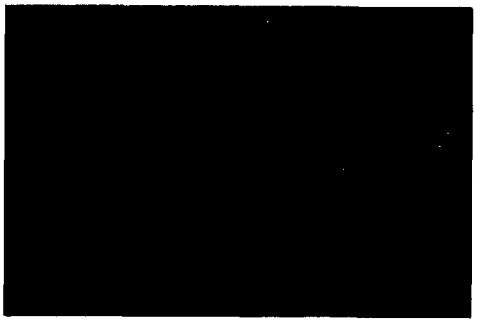

Fig. 16344

With upright fully down, pry the inner rails to the right and make a mark on the intermdiate rail,

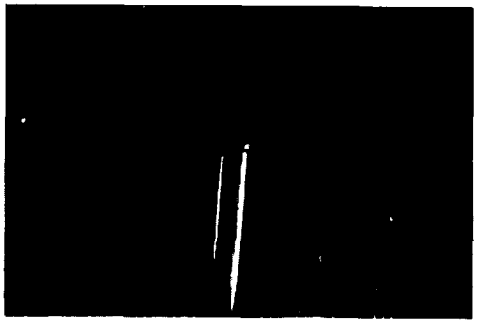

Fig. 16345

Note that the marking block is now placed on the flange of the Inner rail.

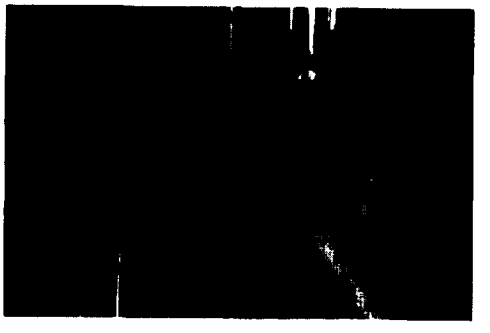

Fig. 16346

Pry the inner rail to the left, and make a parallel mark. Measure the distance between them and record it.

Fig. 16347

www.truck-freeworkshop.com/clark/

Repeat the same procedures at one-half and . . .

Fig. 16348

. . . at full upright extension. The key should be off when making each measurement.

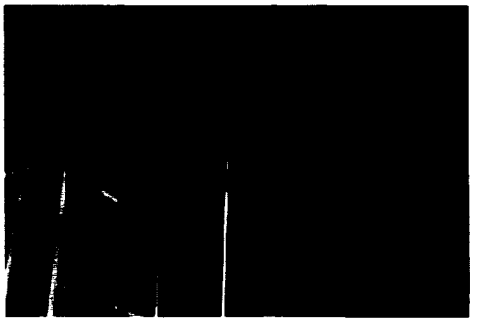

Fig. 16349

Notice that you must work quite high off the ground . . . use ladders and maintenance stands that meet applicable OSHA standards.

Fig. 16350

Clearance between the top intermediate roller set and inner rails at full down, one-half extension and full extension, is 2/32nds, 4/32nds and 6/32nds of an inch. We will shim to 2/32nds of an inch, so two shims must be added to the roller set at the top of the intermediate rails.

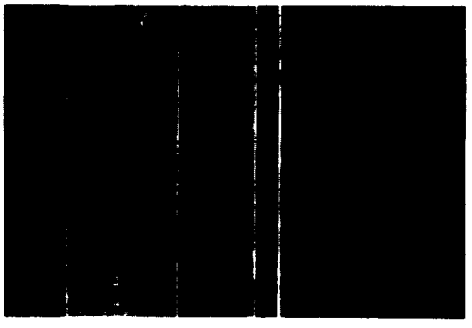

Fig. 16351

www.truck-freeworkshop.com/clark/

The last set of rollers that we must determine clearance for are those at the bottom of the inner rails.

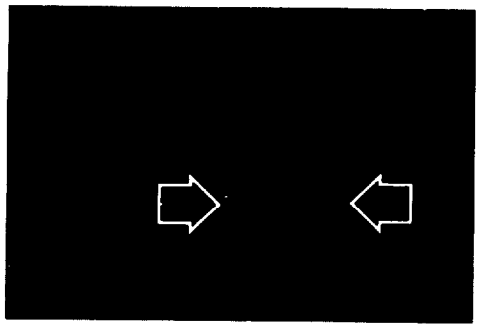

Fig. 16352

With the key off and rails slightly extended, pry right . . .

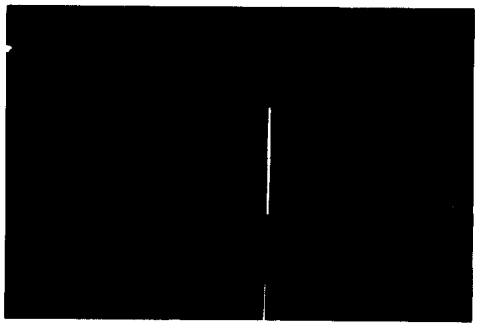

Fig. 16353

. . . pry left . . .

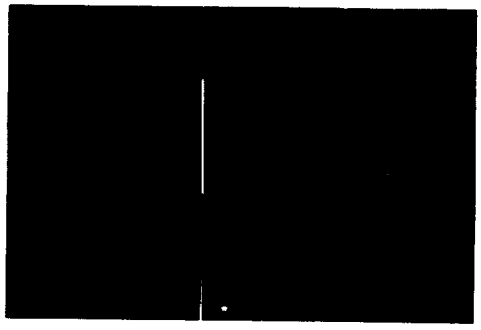

Fig. 16354

. . . and record the clearance.

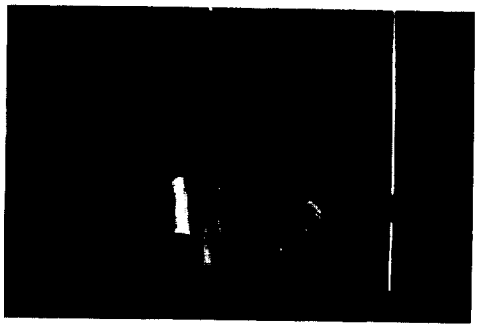

Fig. 16355

www.truck-freeworkshop.com/clark/

Repeat with the rails at one half...

Fig. 16356

Fig. 16357

... and full upright extension ...

Fig. 16358

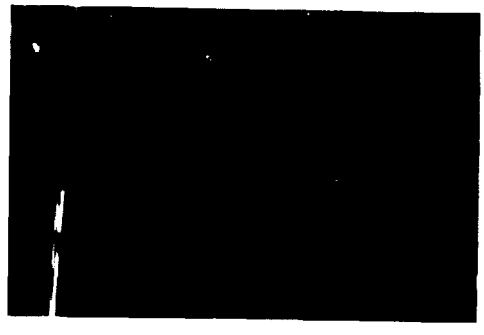

Fig. 16359

Here, clearance between the roller set at inner rails and intermediate rails is found to be 3/32nds of an inch, 5/32nds of an inch, and 7/32nds of an inch. We must add three 1/32nds inch shims to this roller set. This means that two shims will be added to one roller and one to the other.

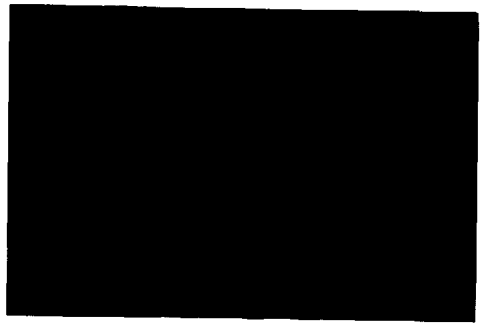

Fig. 16360

Having recorded the number of shims to be added to each set of upright rollers, we are now ready to make these adjustments.

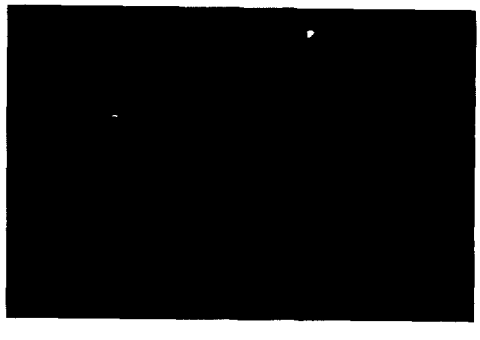

Fig. 16361

www.truck-freeworkshop.com/clark/

ADJUSTING RAIL-TO-ROLLER CLEARANCE

Remember, the parking brake is set ...

Fig, 16362

... drive wheels are on 2" thick boards, and steer tires chocked.

Fig. 16363

The piston head should be up and carriage chains tied back.

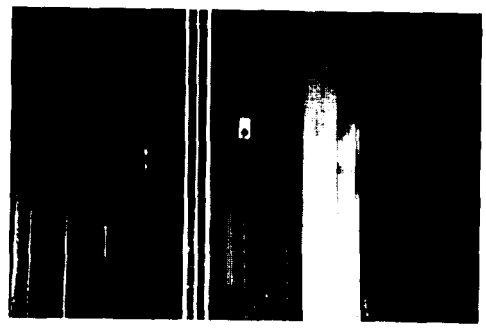

Fig. 16364

All rails have been marked with roller clearance.

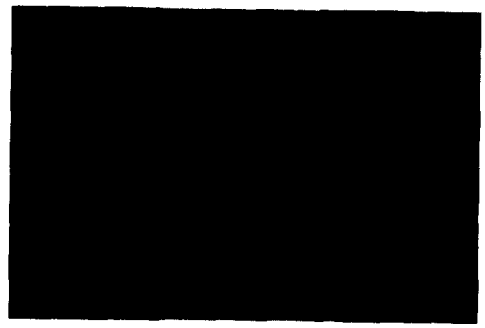

Fig. 16365

www.truck-freeworkshop.com/clark/

We' re ready to disassemble the upright.

Fig. 16366

Always block the inner and intermediate rails when working on the upright. Don' t put your hands or feet between parts that move unless they are secured to prevent movement. Keep all personnel away from truck controls during the service procedure. The key should be off at all times except when truck operation is indicated in the procedure.

CAUTION

BLOCK INNER AND INTERMEDIATE RAILS WHEN WORKING ON THE UPRIGHT.

WORK SAFELY

Start the truck and raise the lift cylinder until 4 x 4 posts can be placed under the inner and intermediate rails. A longer post is placed beneath the inner rail, since it extends higher than the intermediate rail.

Fig. 16367

Lower the lift cylinder until the rails make solid contact with the posts, and the intermediate rail chains become slack. Turn off the truck.

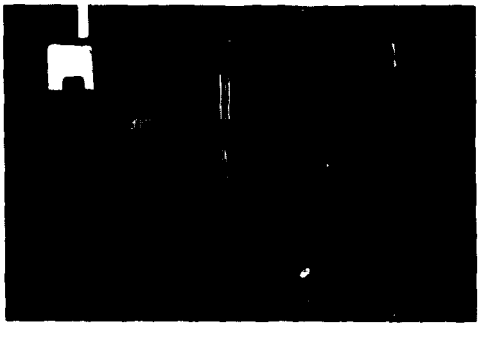

Fig. 16368

www.truck-freeworkshop.com/clark/

Remove the two-piece latch from the back of the inner rail tie bar.

Fig. 16369

This is done by removing an allen head set screw and pulling the two pieces of the latch apart.

Fig. 16370

On older uprights, the latch is disassembled by removing a cotter pin . . .

Fig. 16371

. . . driving out a roll pin . . .

Fig. 16372

www.truck-freeworkshop.com/clark/

. . . and then separating the halves of the latch.

Fig. 16373

Then remove the Iifting bracket or "moose horn" from the intermediate rail lower tie bar. This is done by removing 8 bolts. Note the position of any shims behind the lifting bracket and save them for replacement during re-assembly later.

Fig. 16374

Push the bracket down until It' s clear of the tie bar . . .

Fig. 16375

. . . turn it 180°...

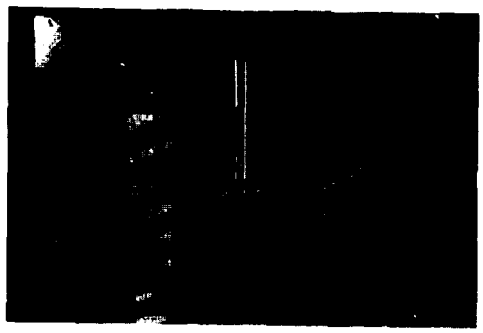

Fig. 16376

www.truck-freeworkshop.com/clark/

. . . and then push it down.

CAUTION

PUSH THE LIFTING BRACKET DOWN ALL THE WAY . . . IF IT ISN' T ALL THE WAY, HYDRAULIC PRESSURE WILL PUSH IT DOWN FORCEFULLY WHEN THE CYLINDER IS OPERATED.

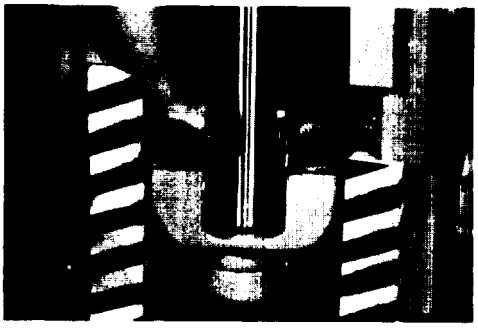

Fig. 16377

Now place a couple of sturdy wood blocks about 6" thick on the outer-rail upper tie bar. The blocks should be placed directly below the intermediate rail stop block.

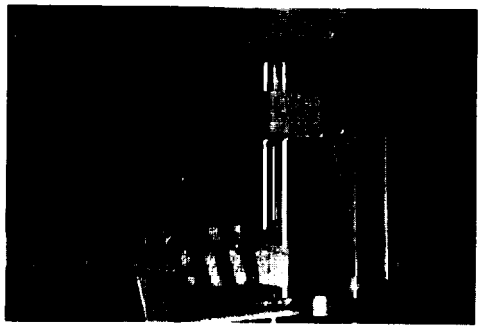

Fig. 16378

Then stand away from the upright, start the truck, and slowly raise the lift cylinder until the Inner and Intermediate rails are clear of the 4 x 4 posts. Remove the posts and . . .

Fig. 16379

. . . lower the lift cylinder until the intermediate rail stop block is seated firmly on the blocks.

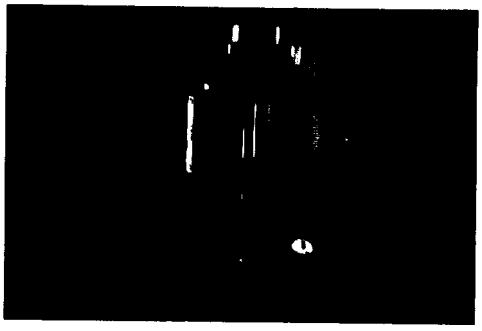

Fig. 16380

www.truck-freeworkshop.com/clark/

Continue to lower the lift cylinder until the lift cylinder is completely down. The inner rails will not lower further. Turn off the truck.

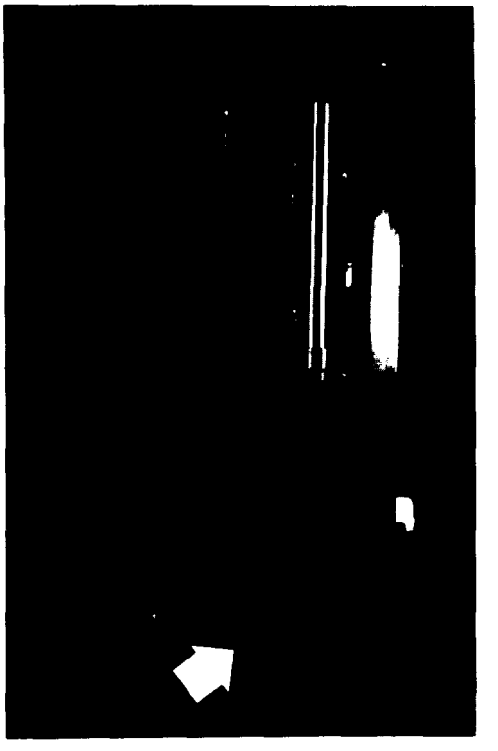

Fig. 16381

Rollers at the top of the intermediate rails, and at the bottom of the inner rails, are now exposed.

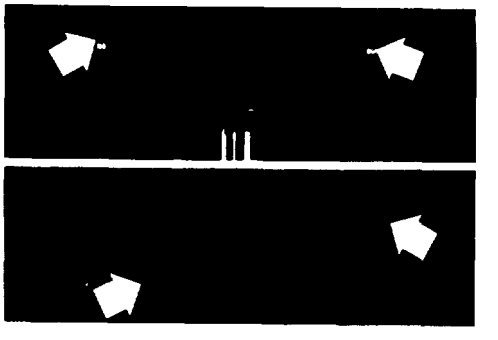

Fig. 16382

Remove the rollers one at a time at the bottom of the inner rails. Since we found the clearance between the inner rail bottom rollers and the intermediate rail to be 4/32nds of an inch, we will add two shims to each roller.

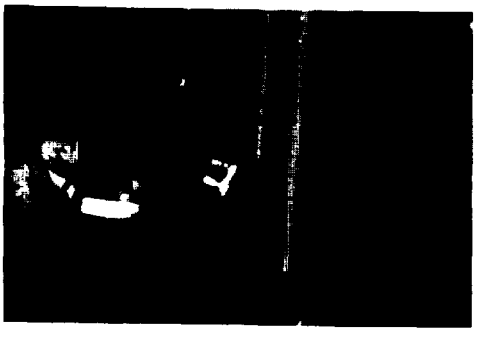

Fig. 16383

www.truck-freeworkshop.com/clark/

Here on your right we' re adding two shims . . .

Fig. 16384

. . . and removing the left roller for another two,

It' s important to keep track of the number of existing shims found on each roller. The total number of shims on each roller in the set should bee same.

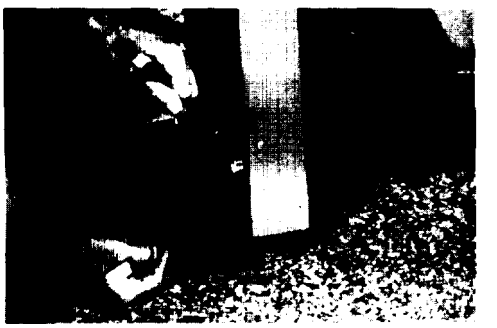

Fig. 16385

If there is an odd shim, it should be kept to one side; say the left side.

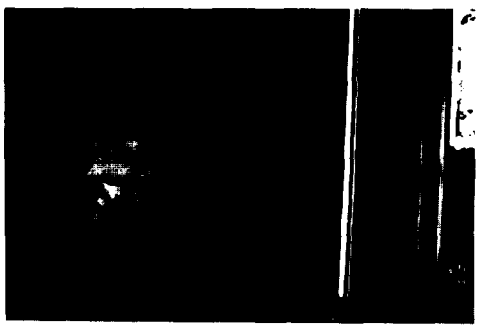

Fig. 16386

Moving now to the top set of rollers in the inner Intermediate rail set . . .

Fig. 16387

www.truck-freeworkshop.com/clark/

. . . our measurements Indicated a minimum clearance of 2/32nds of an inch. In removing the top intermediate rail rollers, we find two shims on the left and one on the right. In adding two shims, we' ll . . .

Fig. 16388

... have a total of 5 shims. Keeping the odd shim on the left gives three shims on the left and . . .

Fig. 16389

. . . two on the right. This is consistent with the procedure to keep the "extra" or odd shim on the left.

Fig. 16390

Having added the shims, inspect and replace the rollers.

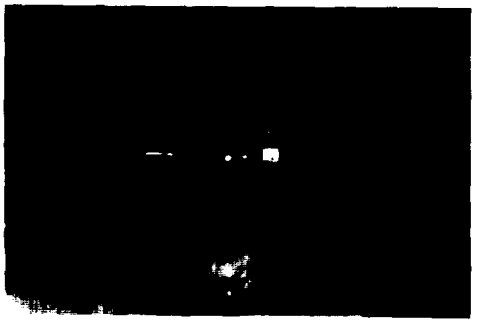

Fig. 16391

www.truck-freeworkshop.com/clark/

This completes the rail-to-roller adjustment of the inner rail/intermediate rail set,

Fig. 16392

We will now adjust the four rollers that work between outer and intermediate rails. Here' s the procedure for gaining access to the rollers between the outer and intermediate rails.

Fig. 16393

Start the truck and raise the lift cylinder until you' re able to remove the blocks from beneath the intermediate rail stop block.

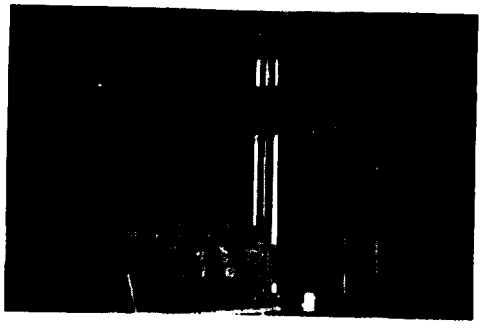

Fig. 16394

Continue to raise the lift cylinder until 4 x 4' s can be placed beneath the inner and intermediate rails. Longer posts are needed here. The rails should be blocked like this. Note that the inner rail is about one foot above the intermediate rail. There must be some slack in the Intermediate rail chains. Turn off the truck.

Fig. 16395

www.truck-freeworkshop.com/clark/

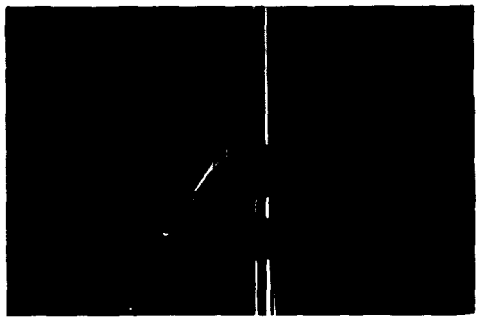

Fig. 16396

Working from a secure ladder or maintenance stand . . . remove the intermediate rail stop block by removing two bolts.

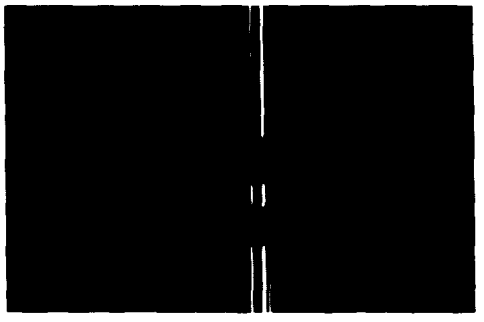

Fig. 16397

Then drape a service chain between the inner rail tie bar and the intermediate rail tie bar so that two separate loops are formed.

Fig. 16398

Pass the chain through the bend area of the intermediate rail tie bar. Use a chain with sufficient capacity to support the inner rails . . . but not so large that it won' t pass between the tie bars.

CAUTION

USE A SERVICE CHAIN WITH ENDS THAT CLOSE SECURELY. EITHER SNAP HOOKS OR SCREW CLEVICES WILL WORK FINE.

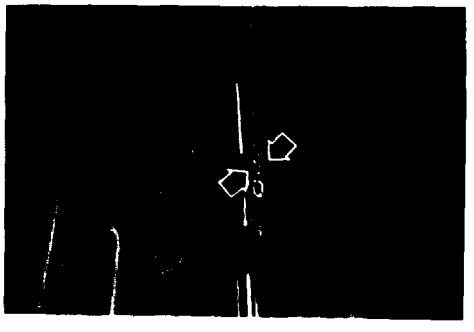

Fig. 16399

Now the intermediate rail chains can be removed. Be sure the chains are slack. Remove both chain retainers by removing the bolts at the center of the chain shives.

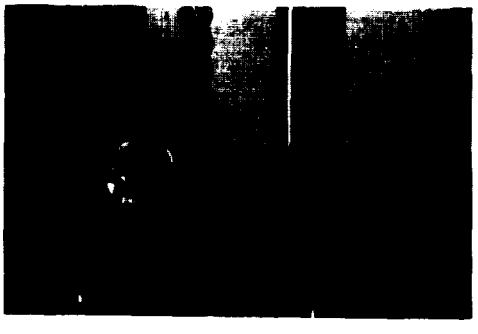

Fig. 16400

www.truck-freeworkshop.com/clark/

Then remove the chains at their anchor points on the outer rails.

Fig. 16401

Fig. 16402

Some uprights have their anchor plates welded onto the outer rails. To remove the chains on these models, cotter pins are removed from the first link on the chains.

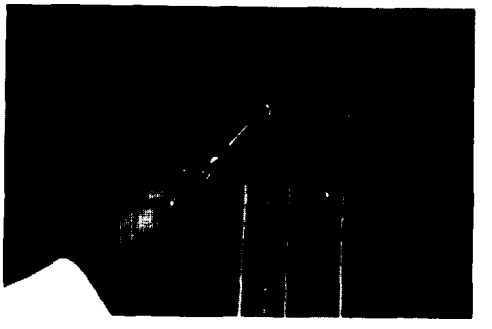

Fig. 16403

Drape the chains over the drive tires and coil them on the floor where they' ll be out of your way and away from dirt,

Fig. 16404

Then stand away from the upright, start the truck, and raise the . . .

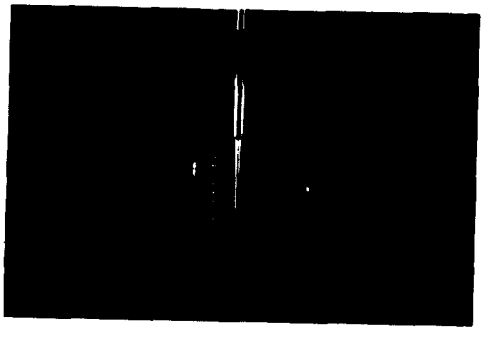

Fig. 16405

www.truck-freeworkshop.com/clark/

. . . lift cylinder until the posts can be removed.

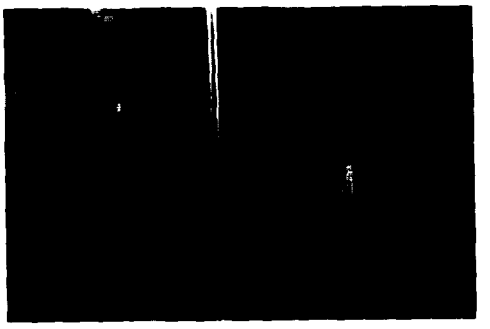

Fig. 16406

Lower the lift cylinder until the intermdiate ralis rest on the floor. Then place a 4 x 4 beneath the inner rail and lower the inner rail onto the post. Turn off the truck. This is the condition of the upright.

Fig. 16407

Intermediate rail chains are dropped neatly over the drive tires, We' ve used the inner rails to lower the Intermediate rails to the floor.

Fig. 16408

The roller sets at the bottom of the intermediate rails, and . . .

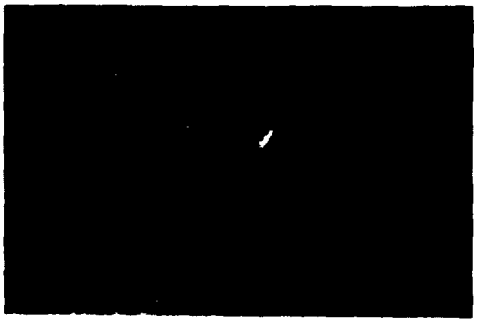

Fig. 16409

www.truck-freeworkshop.com/clark/

. . . at the top of the outer rails, are not exposed for shimming.

Fig. 16410

Remove the top rollers on the outer rails first. We find two shims behind each roller.

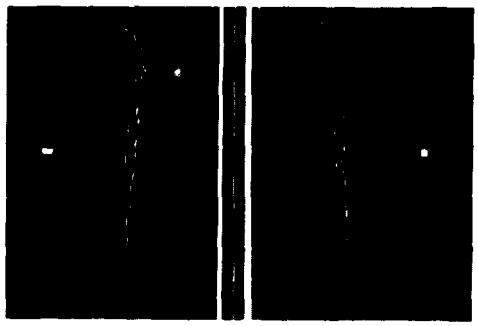

Fig. 16411

Since the total clearance was 4/32nds, we will add two shims, for a total of four, to each roller of the set . . . right . . .

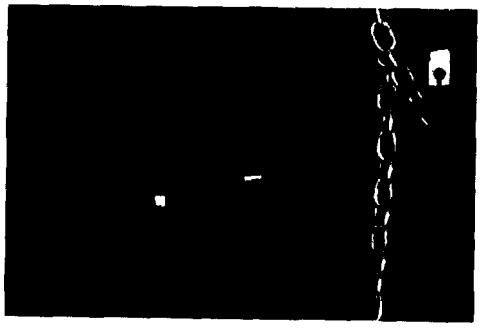

Fig. 16412

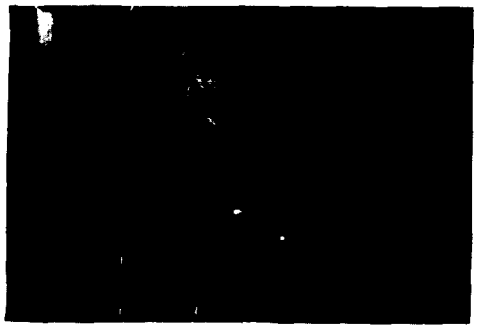

Fig. 16413

. . . and left. Inspect and re-install rollers.

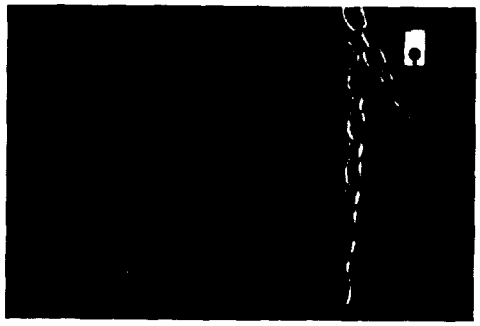

Fig. 16414

www.truck-freeworkshop.com/clark/

Moving to the lower set of rollers, we find no shims on the left side and one on the right side. Since our clearance was 3/32nds, we want to add three shims. We' ll have a total of four shims.

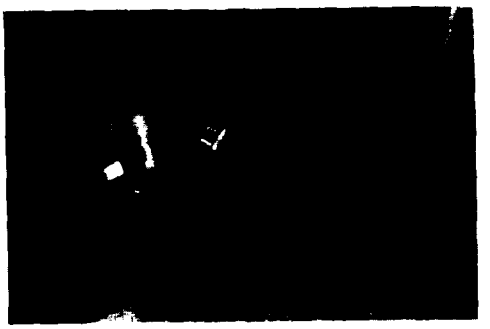

Fig. 16415

Splitting the difference gives two shims per side. Right ...

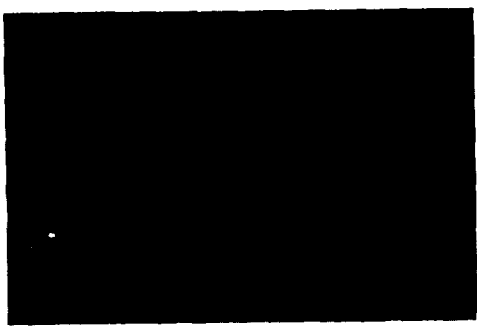

Fig. 16416

. . . and left. Inspect and replace the rollers by tapping them on with a soft faced hammer.

Fig. 16417

This completes the adjustment of all rollers on the triple stage upright. We' re ready for re-assembly. To do this, the truck is started and the ...

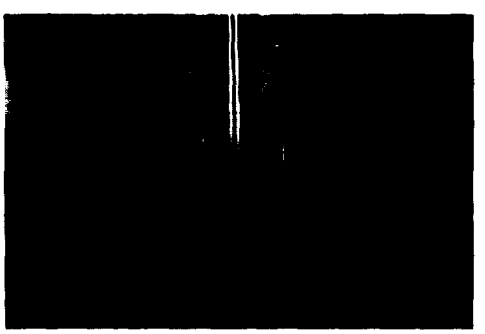

Fig. 16418

www.truck-freeworkshop.com/clark/

. . . lift cylinder is raised until the block beneath the inner rail can be removed.

Fig. 16419

The longer blocks that were used earlier are placed again beneath the inner and intermediate rails . . .

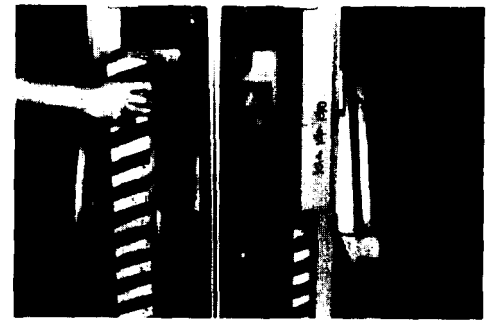

Fig. 16420

. . . so the upright looks like this. The truck is shut off.

Fig. 16421

The intermediate rail chains are re-installed at their anchor points on both sides of the outer rails ...

Fig. 16422

www.truck-freeworkshop.com/clark/

. . . and then the chain retainers are replaced.

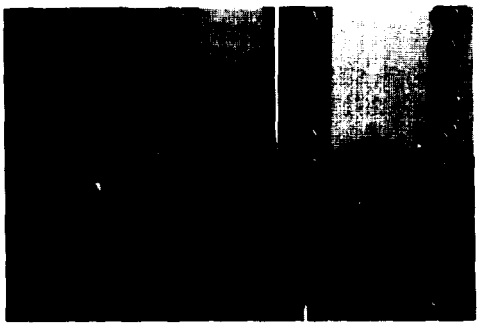

Fig. 16423

The service chain is removed.

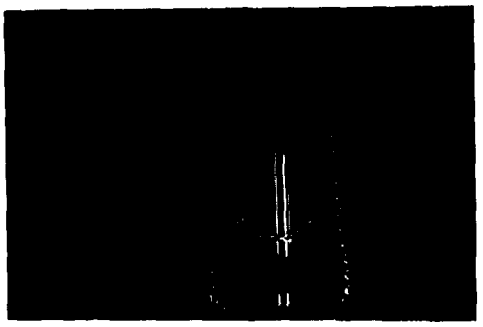

Fig. 16424

The Intermediate rail stop block is replaced . . .

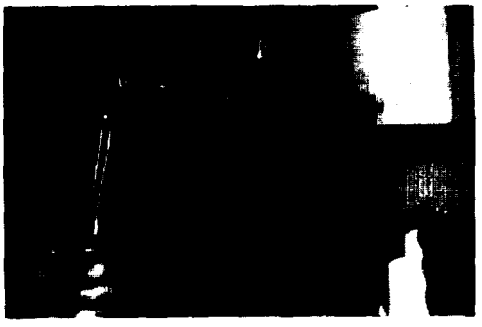

Fig. 16425

. . . and the latch on the Inner rail is replaced. Here the set screw on the current design is being tightened.

Fig. 16426

www.truck-freeworkshop.com/clark/

And the halves of the older style latch are being assembled.

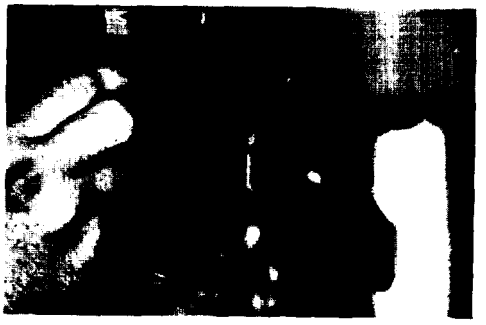

Fig. 16427

With the long blocks still in place, we' ll re-position the lifting bracket.

Fig. 16428

To do this we must hold the lift cylinder valve open. The engine is off.

Fig. 16429

Here is how we' ve propped the valve open.

CONTROLS VARY WITH DIFFERENT TRUCK MODELS. REFER TO THE OPERATORS INSTRUCTION MANUAL COVERING THE PARTICULAR MODEL TRUCK YOU ARE WORKING ON.

Fig. 16430

www.truck-freeworkshop.com/clark/

We can now pry the bracket up . . .

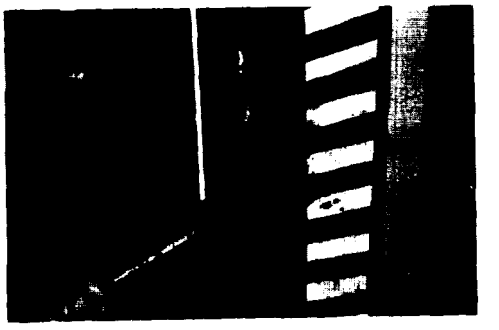

Fig. 16431

. . . and turn it around.

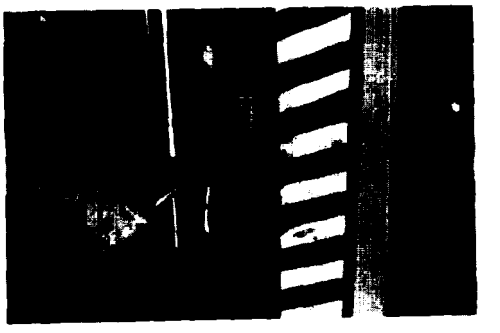

Fig. 16432

A short block is placed between the bracket and the cylinder base. Then standing away from the upright ...

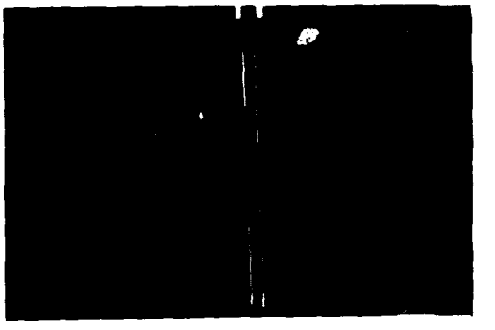

Fig. 16433

. . . start the truck and raise the lift cylinder. Remove the long blocks and . . .

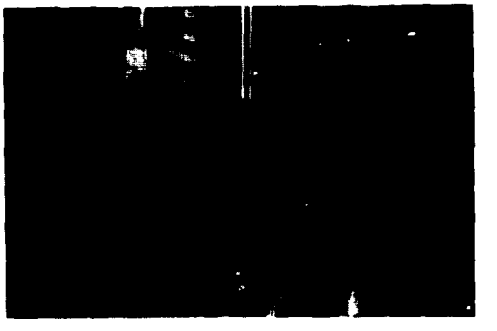

Fig, 16434

www.truck-freeworkshop.com/clark/

. . . position shorter blocks beneath the inner and intermediate rails.

Fig. 16435

Lower the cylinder until the bolt holes for the bracket are in line, Shut off the truck . . .

Fig, 16436

. . . and replace the 8 bolts of the lifting bracket . . .

Fig. 16437

. . . replacing any shims that were found during disassembly,

Tighten the bolts to the torque requirements listed in specifications found in GROUP 40 of this manual.

Fig. 16438

www.truck-freeworkshop.com/clark/

Start the truck and raise the cylinder and remove the posts beneath the rails . . .

Fig. 16439

. . . and the lifting bracket.

Fig. 16440

Lower the lift cylinder completely.

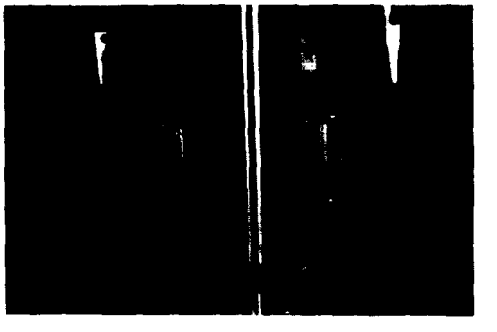

Fig. 16441

Remove blocks from steer wheels and drive the truck off the boards beneath the drive tires.

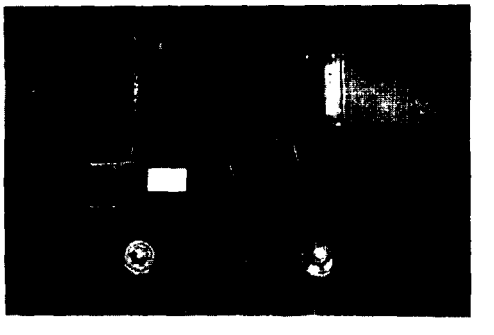

Fig. 16442

www.truck-freeworkshop.com/clark/

Replace the carriage by the procedure given in Section 10 in this manual.

Fig. 16443

When the carriage has been replaced, operate the upright and note unusual operation.

Make operational checks and load test the upright before placing the truck in service.

This completes the procedure for measuring rail-to-roller clearance and the adjustment of rail-to-to roller clearance.

Work safely.

Be sure to keep rails blocked during upright disassembly and re-assembly.

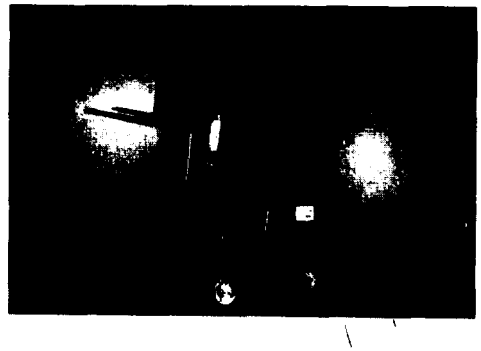

Fig. 16444

www.truck-freeworkshop.com/clark/

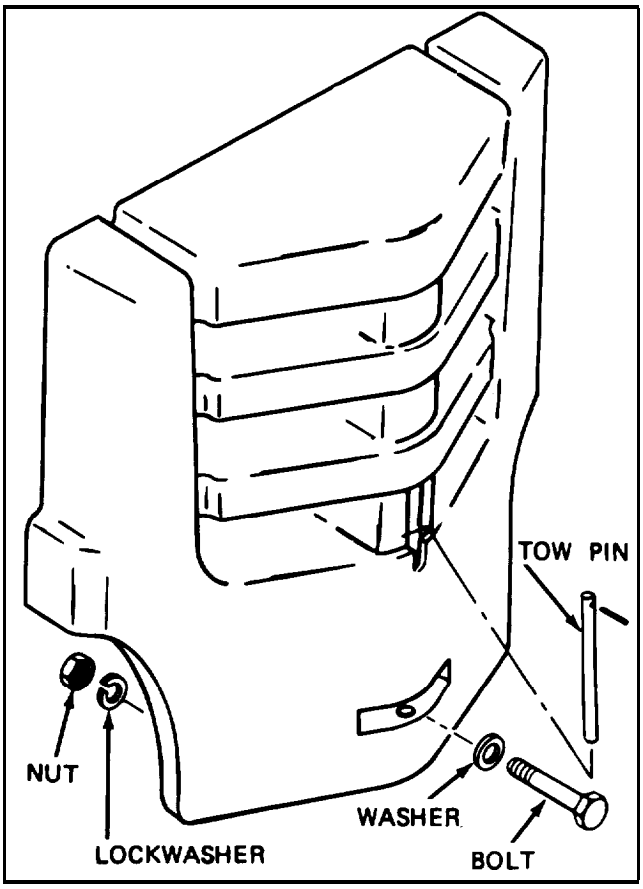

Figure 6-6. Counteweight

5-155. **COUNTERWEIGHT.** (See figure 6-6.)

5-156. **REMOVAL.**

a. Install a suitable chain hoist or other lifting device to a looped cable or to lifting eyes installed in or through the two bored holes in the upper rib of the counterweight.

WARNING

Counterweight weighs approximately one ton; use due safety precautions when removing or installing the counterweight.

b. Take slack from chain hoist, putting tension on counterweight.

c. Disconnect tail light wires from wiring harness.

d. Hold tow pin "up" and remove bolt, washer, lockwasher, and nut securing counterweight to vehicle frame.

e. Remove counterweight from vehicle by lifting weight off frame hooks and then driving vehicle forward.

5-127. INSTALLATIONS.

a. Raise counterweight to approximate mounting height with chain hoist. (Refer to paragraph 6-24 a above.)

b. Align rear of vehicle with counterweight. Back vehicle slowly until vehicle frame hooks are in slotted openings of counterweight.

c. Lower counterweight until weight rests on frame hooks.

d. Hold tow pin "up" and install mounting bolt, washer, lockwasher, and nut in slotted hole. Tighten securely.

www.truck-freeworkshop.com/clark/

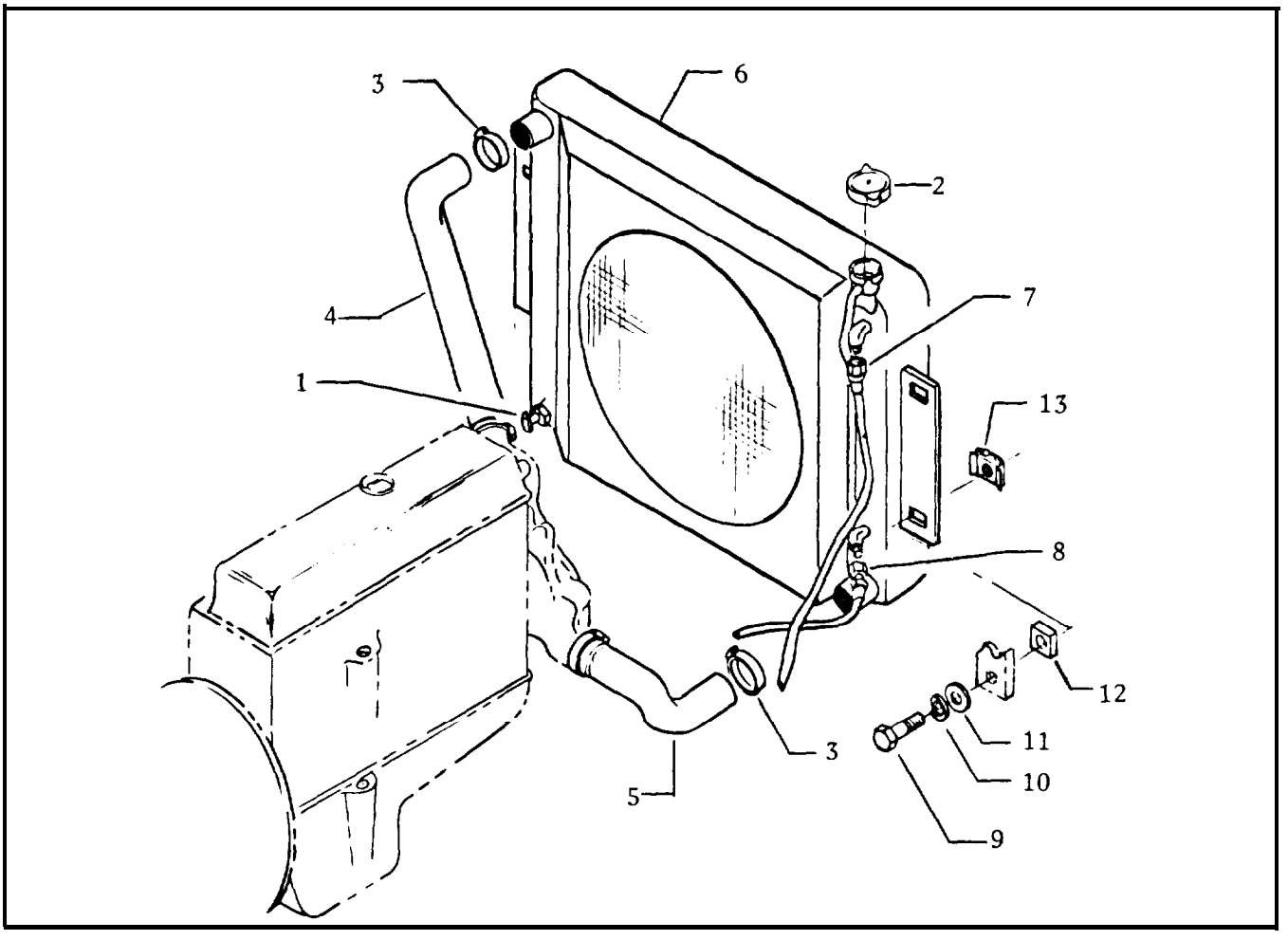

FIGURE 6-7 RADIATOR REMOVAL

1. Drain Cock
2. Radiator Cap
3. Hose Clamp
4. Upper Radiator Hose
5. Lower Radiator Hose
6. Radiator
7. Trans. Cooling Line
8. Trans. Cooling Line
9. Bolt
10. Lockwasher
11. Washer
12. Pad
13. Nut

5-158 RADIATOR

5-159 REMOVAL

a. Remove the Drivers Overhead Guard, by removing the fasteners that mount the Overhead Guard to the frame. (Refer to page 7-97 of parts manual). Using a suitable chain hoist, or other lifting device lift the Drivers Overhead Guard up and away from the machine.

b. Remove the Counterweight fasteners and Counterweight. (Refer to Section 5-155 page 5-194).

c. Remove the top hood fasteners and remove the hood.

www.truck-freeworkshop.com/clark/

d. Drain the radiator by opening the drain cock (Item 1 in fig. 6-7) and removing the radiator cap (Item 2 in fig. 6-7).

e. Loosen the clamps (Items 3 in fig. 6-7) that secure the upper and lower radiator hoses (Items 4 & 5 in fig, 6-7)

f. Place a drain pan under the radiator. Disconnect the transmission oil cooling lines (Items 7 & 8 in fig. 6-7) and plug lines and fittings in the radiator so contamination does not occure.

g. Remove the fasteners (Items 9 thru 12 in fig. 6-7) that secure the radiator to the frame, remove the radiator.

5-160. INSTALLATION

a. Position radiator onto the frame, install the fasteners that secure the radiator to the frame.

b. Remove the plugs in the transmission coolings lines and fittings in the radiator, install the transmission cooling lines onto the fittings in the radiator.

c. Connect the upper and lower radiator hose to the radiator and tighten the clamps.

d. Tighten the radiator drain cock.

e. Fill the cooling system with anti-freeze.

f. Install the top hood and its fasteners.

g. Install the counterweight (Refer to Section 5-155 page 5-194).

h. Install the Drivers Overhead Guard and its fasteners.

i. Run the engine until it reaches operating temperature. Chec.. the cooling system for leaks. Run t e truck a few feet forward or backwards under its own power, check the transmission oil level ; add oil if necessary.

www.truck-freeworkshop.com/clark/

Trouble-shooting

Hook Type Sideshift Carriage

PROBLEM	PROBABLE CAUSE	CORRECTIVE ACTION
Carriage fails to move when control lever is opened.	Insufficient hydraulic oil in supply tank.	Bring hydraulic oil supply to proper level.
	Insufficient hydraulic oil pressure.	Repair or replace hydraulic pump.
	Obstruction of flow in hydraulic line.	Remove obstruction.
	Over capacity load being handled.	Reduce load weight to that recommended for the carriage.
	Insufficient lubrication.	Lubricate top segments and heel rollers.
	Hydraulic pressure bypassing side shift cylinder piston packing.	Replace worn or damaged piston seals.
Heel rollers fail to turn.	Insufficient lubrication.	Lubricate all wear points.
Heel rollers fail to turn (con' t.)	Contamination.	Remove pin from roller and clean. Lubricate and reassemble.
	Flat surface worn on roller.	Replace roller assembly.
	Bent or damaged truck carriage.	Straighten or replace truck carriage.
Side shift cylinder leak.	Worn packing seals.	Replace cylinder packing.
	Damaged or nicked chrome finish on piston rod.	Polish the rod until the surface is smooth; if damage is deep, replace rod.
Excessive looseness of side shift carriage on truck carriage.	Worn bronze bearing segments.	Replace bronze bearing segments.
	Lower retaining hook loose or damaged.	Repair or replace the hook as indicated. Installation of new lower mounting hooks should be Positioned so there is 1/16 inch clearance between the bottom of the fork bar. This can be achieved by shims if necessary. Torque the hooks to 65 ft. lbs.

www.truck-freeworkshop.com/clark/

5-161 SIDE SHIFT CYLINDER

5-162 REMOVAL

a. Release the fork latches and remove the forks.

b. Remove the hydraulic line tie strap and remove the hydraulic lines (items 1 and 2 in fig. 6-8) away from the fittings in the cylinder.

C. Remove the cylinder anchor end nut (item 5 in fig. 6-8).

d. Remove the two cylinder rod end pin retainers and the one rod end pin (Items 6 and 7 in fig. 6-8).

e. Remove the cylinder (items 8 in fig. 6-8) from the carriage.

5-163 REPAIR

Should it be found the side shift cylinder is leaking, the cylinder packing must be replaced.

a. Remove the side shift cylinder as described in Section 5-162.

b. Place the cylinder in a vise or other suitable clamping device.

C. Refer to figure 6-9 for detailed parts identification and proceed as follows.

d. Remove the cylinder gland (Item 1 in fig. 6-9).

e. Remove the piston rod assembly (Item 2 in fig. 6-9). To remove the piston rod assembly, grab with hand and pull the assembly out away from the barrel.

f. Inspect the piston rod for damage or nicked chrome finish. Polish the rod until the surface is smooth; if damage is deep, replace the rod.

g. Remove the "O"-Ring and back-up ring from the Gland and Piston (Items 3 and 4 in fig. 6-9).

h. Remove the wiper and gland packing from Gland (Items 5 and 6 in fig. 6-9).

1. Install new packing and wiper into Gland.

j. Install new "O"-Ring and back-up ring on Gland and Piston. CAUTION: On Gland install Back-Up ring first then "O"-Ring, on Piston install "O"-Ring them Back-Up ring.

k. Install Piston Assembly into barrel. CAUTION: Make sure Piston Rod Assembly is free of all foreign material.

1. Install Gland into Barrel and tighten.

5-164 INSTALLATION

a. Refer to figure 6-8.

b. Install new "O"-Rings onto the fittings and install the fittings into the Side Shift Cylinder.

C. Install base end of cylinder in truck carriage cylinder anchor. Install rod end of cylinder in fork bar cylinder anchor.

d. Secure rod end with pin and cotter pins. Secure base end with nut. (Tighten nut snug then turn back 1/2 turn).

e. Connect the hydraulic hoses to the fittings in the cylinder and secure the hoses with the tie straps.

f. Install the forks and latch them.

www.truck-freeworkshop.com/clark/

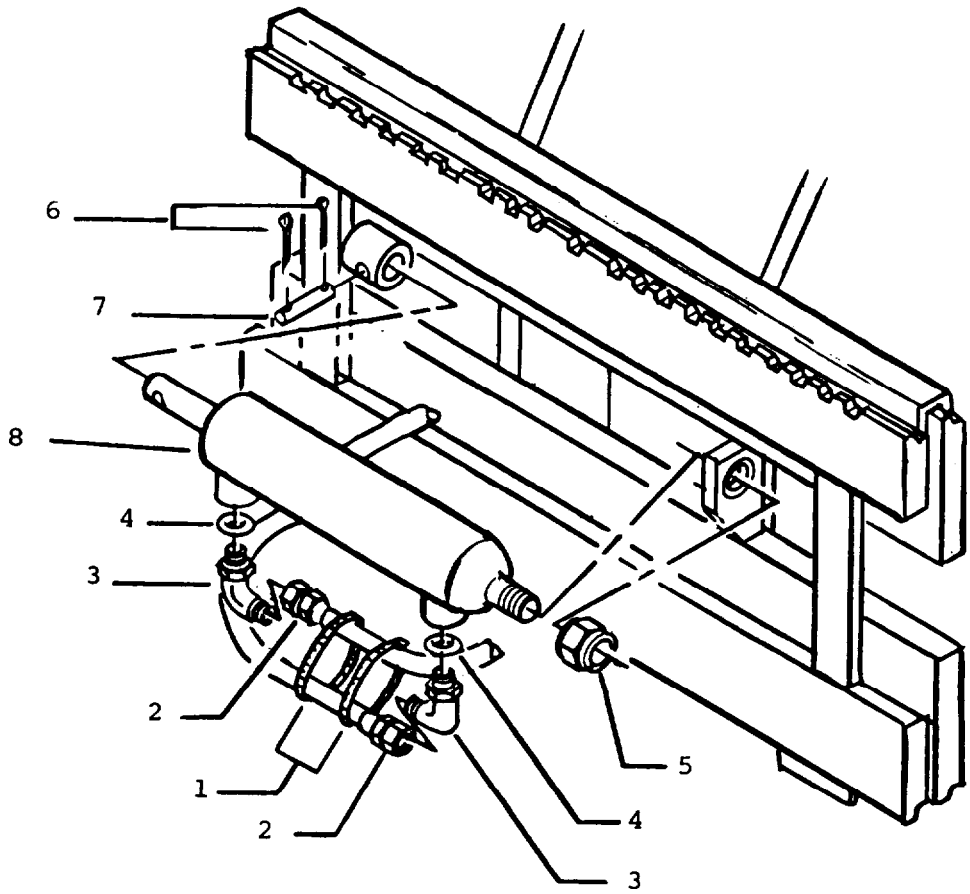

FIGURE 6-8

SIDE SHIFT CYLINDER REMOVAL

1. Tie strap
2. Hydraulic line
3. Fitting
4. "O"-Ring
5. Nut
6. Cotter pin
7. Pin
8. Side Shift Cylinder

www.truck-freeworkshop.com/clark/

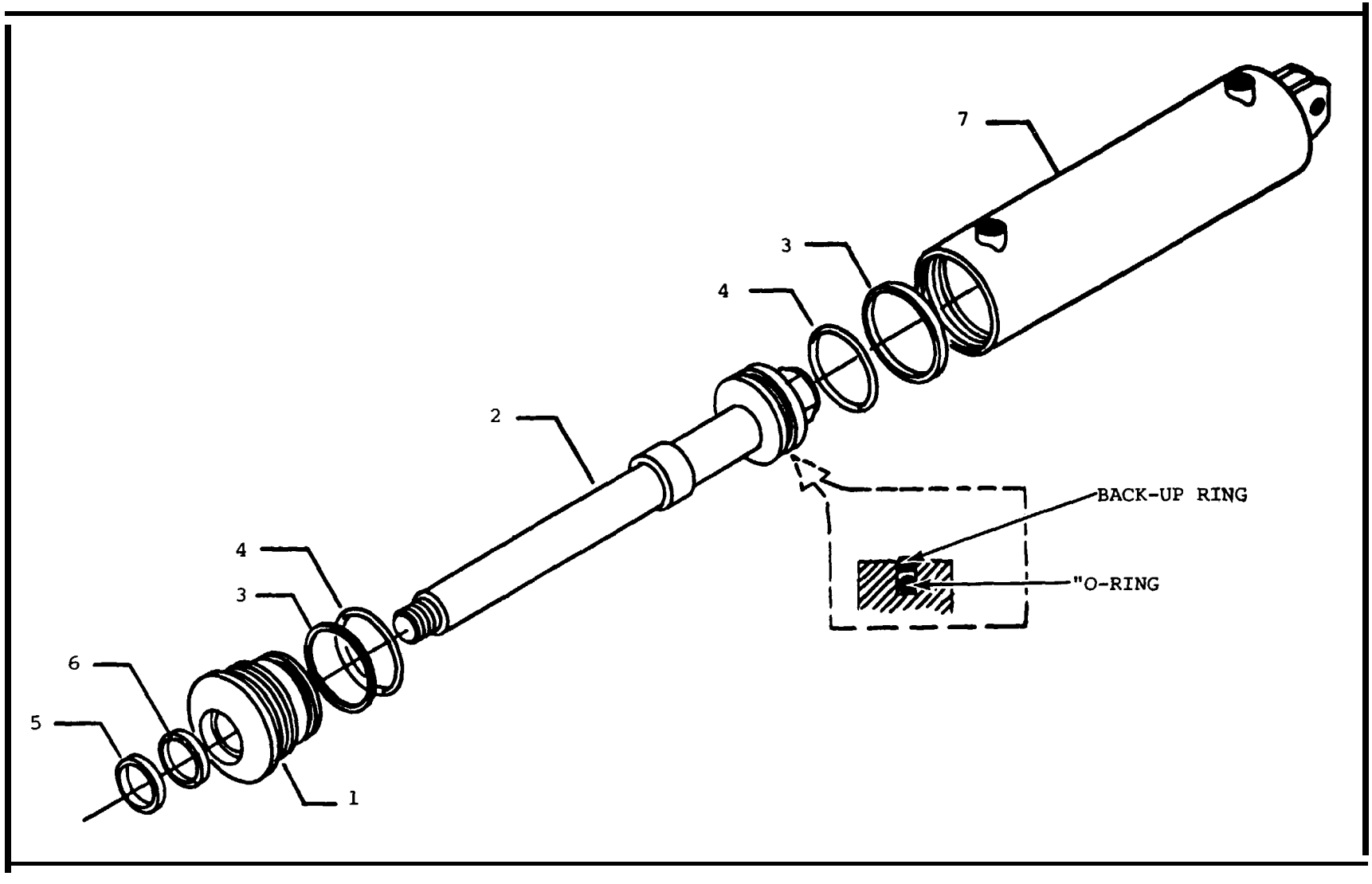

FIGURE 6-9 SIDE SHIFT CYLINDER

1. GLAND
2. PISTON ROD ASSY.
3. BACK-UP RING
4. "O"-RING
5. WIPER
6. GLAND PACKING
7. BARREL

www.truck-freeworkshop.com/clark/

TROUBLE	PROBABLE CAUSE	REMEDY
Oil leaks at either end of spool.	Defective “0” rings in valve body.	Replace "0" rings.
Spring-centered spools do not return to neutral.	Broken springs.	Replace springs.
	Foreign particles.	Clean system and valve
	Misalignment of operating linkage.	Check linkage for binding condition.
Detent type spools will not stay in detent position.	Worn detent.	Replace detent.
	Weak or broken detent spring.	Replace detent spring.
Jo motion, slow or jerky action of hydraulic system.	Relief valve not properly set, or stuck in base and/or worn.	Repair, clean and read just.
	Dirt or foreign particles lodged between relief valve control poppet and seat.	Disassemble, clean and reassemble.
	Spool not moved to full stroke.	Check travel.
No relief valve action (High Pressure).	Small particle of dirt plugging orifice in relief valve sub-assembly.	Remove relief valve and check hole. If blocked, clear hole.
Load will not hold.	Oil by-passing between spool and body.	Replace valve.
	Oil by-passing piston in cvlinder.	Repair or replace cylinder.
	Spool not centered.	Refer to above spool remedies.
Load drops when spool is moved from neutral to a power position.	Dirt or foreign particles lodged between check valve poppet and seat.	Disassemble, clean and reassemble.
	Scored or sticking check valve poppet.	Replace poppet.

www.truck-freeworkshop.com/clark/

5-165 INSPECTION AND MAINTENANCE

Periodic inspection of spool operation, oil condition and pressure connections saves time consuming breakdowns and unnecessary parts replacement.

a. All hydraulic connections must be tight. Loose connections not only allow leakage but also permit air to be drawn into the system resulting in noisy and erratic operation.

b. Spool should return to neutral automatically when control is released. If more force is necessary, the spool may be binding or control linkage may be faulty.

C. System filters and reservoir should be checked periodically for foreign particles. If excessive contamination is found, the system should be drained. The reservoir must be cleaned thoroughly before refilling.

5-166 OVERHAUL

During disassembly, give particular attention to identification and orientation of parts for reassembly. Spools are selectively fitted to valve bodies from which they were removed.

Figure 6-10 is an exploded view showing the proper relationship for reassembly. Refer to this figure in the procedures which follow.

5-167 DISSASSEMBLY

a. Controls - Be sure the unit is not subjected to pressure. Disconnect and cap all lines to the Aux Valve and disconnect linkage to the spool. Remove Auxiliary Valve from machine.

b. End Caps - Remove the snap ring (Item 1 in Fig. 6-10) which secures the spool and cap and remove the cap (Item 2 in Fig. 6-10).

C. Operating Spool - Slide the spool (Item 5 in Fig. 6-10) out of its bore from the cap end and remove the "o"-rings (Item 6 in Fig 6-10) from the valve body around the spool base. DO NOT remove the centering spring assembly (Item 4 in Fig. 6-10) unless it is necessary to replace it.

d. Check Valve - Remove the check valve plug (Item 7 in Fig 6-10). Remove the "o"-ring (Item 8 in Fig. 6-10). Remove the spring (Item 9 in Fig. 6-10) and poppet (Item 10 in Fig. 6-10) from the valve body.

e. Relief Valve - Remove the relief valve plug (Item 11 in Fig. 6-10). Remove the "o'-ring (Item 12 in Fig. 6-10). Remove the spring (Item 13 in Fig. 6-10) and relief valve (Item 14 in Fig. 6-10) from the valve body.

f. Valve Body - Remove all the plugs and "0"-ring from the blocked ports on the valve body.

5-168 CLEANING, INSPECTION AND REPAIR

a. Discard all old seals. Wash all parts in a clean mineral oil solvent and place them on a clean surface for inspection.

b. Carefully remove burrs by light stoning or lapping. Be certain there is no paint or burrs on matting surfaces of valve bodies. Check all parts for wear. Replace if necessary.

C. Inspect the valve spool and bores for burrs and scoring. If scoring is not deep enough to cause objectionable leakage, the surfaces can be stoned or polished with crocus cloth. If scoring is excessive, the valve body and spool must be replaced. Check the valve spool for freedom of movement in the base.

www.truck-freeworkshop.com/clark/

d. Check the relief valve for smooth movement in its bore. The Relief Valve should move by its own weight.

5-169 ASSEMBLY

NOTE

Coat all parts with clean hydraulic oil to facilitate reassembly and provide initial lubrication.

a. Valve Body - Install new "0"-rings on port plugs and plug the appropriate valve body ports (Refer to Fig. 6-10). Install plugs in cylinder "B" port, inlet port and cylinder "a" port).

b. Relief Valve - Install "o" ring on relief valve plug (Item 12 to 11 in Fig 6-10). Place relief valve assembly (Item 14 in Fig. 6-10) in its bore. Install spring and plug (Item 13 and 11) in its bore and tighten plug securely but DO NOT overtighten.

C. Check Valves - Install a new "0"-ring (item 8 in Fig. 6-10) on the check valve plug (Item 7 in Fig. 6-10) Place poppet (Item 10 in Fig. 6-10) and spring (Item 9 in Fig. 6-10) in the valve body and install the plug (Item 7 in Fig. 6-10).

d. Operating Spool. Install new "0"-rings (Item 6 in Fig. 6-10) in "0"-rings grooves in the valve body at each end of spool bore. Install spool (Item 5 in Fig. 6-10) in its base from cap end. Install end cap (Item 2 in Fig. 6-10) and end cap retainer (Item 1 in Fig. 6-10).

e. Install Aux. Valve assembly onto the machine. Remove the caps from the hydraulic lines and install the lines to the valve. Install linkage.

www.truck-freeworkshop.com/clark/

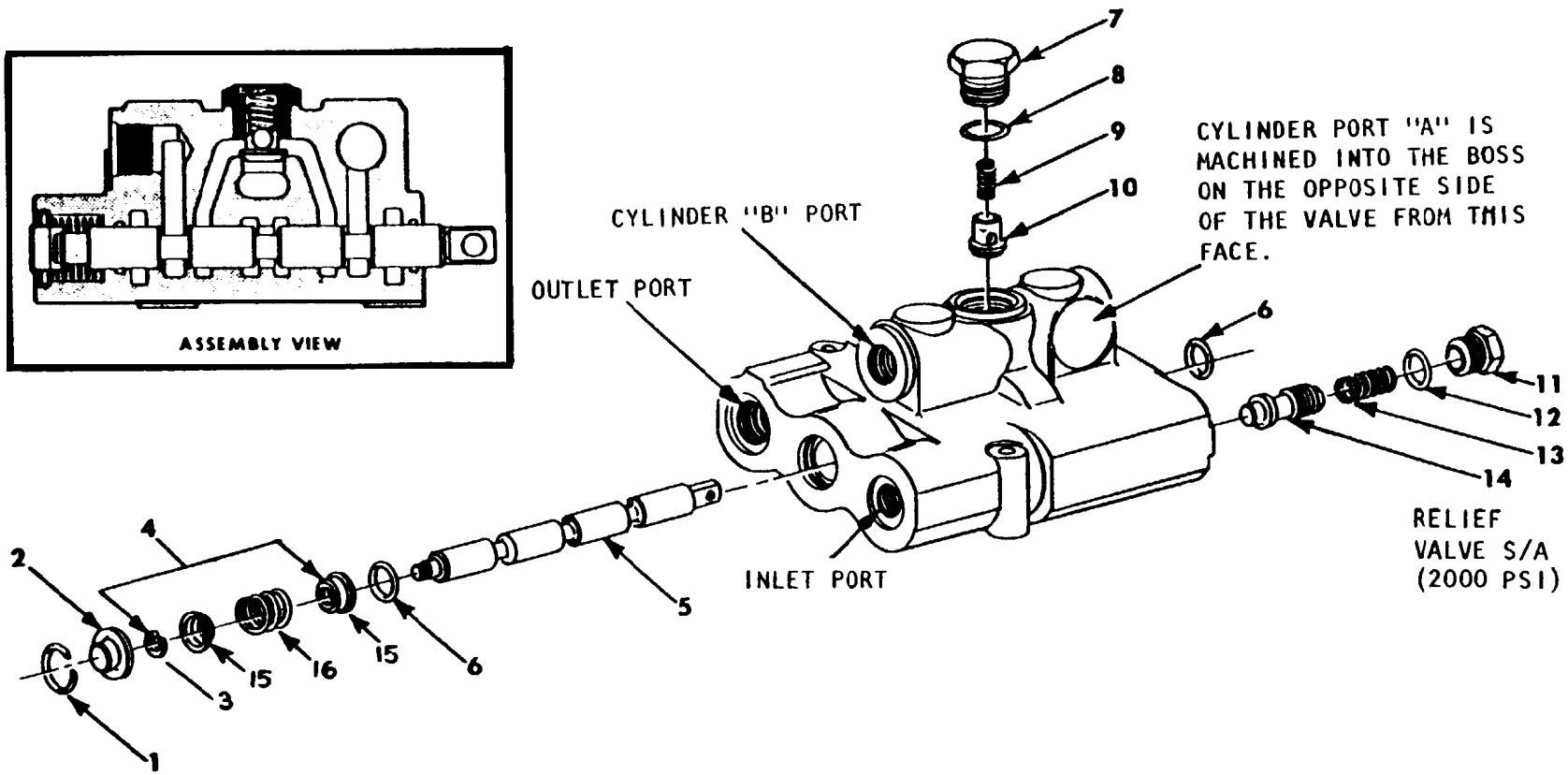

FIGURE 6-10.

1. SNAP RING
2. CAP
3. SNAP RING
4. CENTERING SPRING ASSEMBLY
5. SPOOL
6. "O" RING
7. PLUG
8. "O" RING
9. SPRING
10. POPPET
11. PLUG
12. "O" RING
13. SPRING
14. RELIEF VLAVE
15. SPRING COVER
16. SPRING

www.truck-freeworkshop.com/clark/

5-170. EXHAUST SYSTEM

5-171. REMOVAL (Refer to Figure 6-11)

a. Raise seat deck and open side hoods.

b. Remove the two nuts (Item 1) that mount the exhaust pipe to the manifold and remove the clamp (Item 2) that clamps the exhaust pipe (manifold end Item 3) and the exhaust pipe (muffler end Item 4) and remove the exhaust pipe (manifold end Item 3).

C. Remove the clamp (Item 5) that clamps the exhaust pipe (muffler end Item 4) to the muffler (Item 6) then remove the exhaust pipe (muffler end) (Item 4) by pulling up and out of the machine.

d. Turn the steering wheel all the way to the right and remove the capscrew, lockwasher and washer (Item 7) from the muffler mounting bracket (Item 9).

e. Turn the steering wheel all the way to the left, and remove the capscrew, lockwasher and washer (Item 8) from the muffler mounting bracket (Item 9).

f. After removing Items 7 and 8 the muffler will drop and can be removed from the right side of the machine.

g. Remove the clamp (Item 10) that clamps the tail pipe (Item 11) to the muffler (Item 6) and remove the tail pipe.

5-172. INSPECTION

a. Before removal of any of the exhaust system, inspect the entire system and remove only the parts that are leaking, for it is not necessary to remove the complete system.

5-173. INSTALLATION

a. Installation of the exhaust system is the reverse of removal.

b. When isntalling a new exhaust system use new clamps (Items 2, 5, and 10).

C. Before installing exhaust pipe (manifold end) Item 3) scrape away gasket (Item 12) from manifold and install a new gasket (Item 12)

d. Start engine and check for exhaust leaks.

5-174. GOVERNOR

5-175. REMOVAL

a. Remove air cleaner assembly and air cleaner hose.

b. Remove exhaust pipe (manifold end)

C. Remove accelerator return spring,

d. Remove oil line from timing cover to engine block.

e. Remove governor control spring and governor control linkage.

f. Remove the governor mounting fasteners.

g. Remove the governor from the machine.

5-176. INSPECTION

a. Inspect oil seal for leaks, replace if necessary.

b. Check running clearance in governor gear and shaft bushings (refer to Table 5, page 5-15). If found to be outside the limits replace governor.

www.truck-freeworkshop.com/clark/

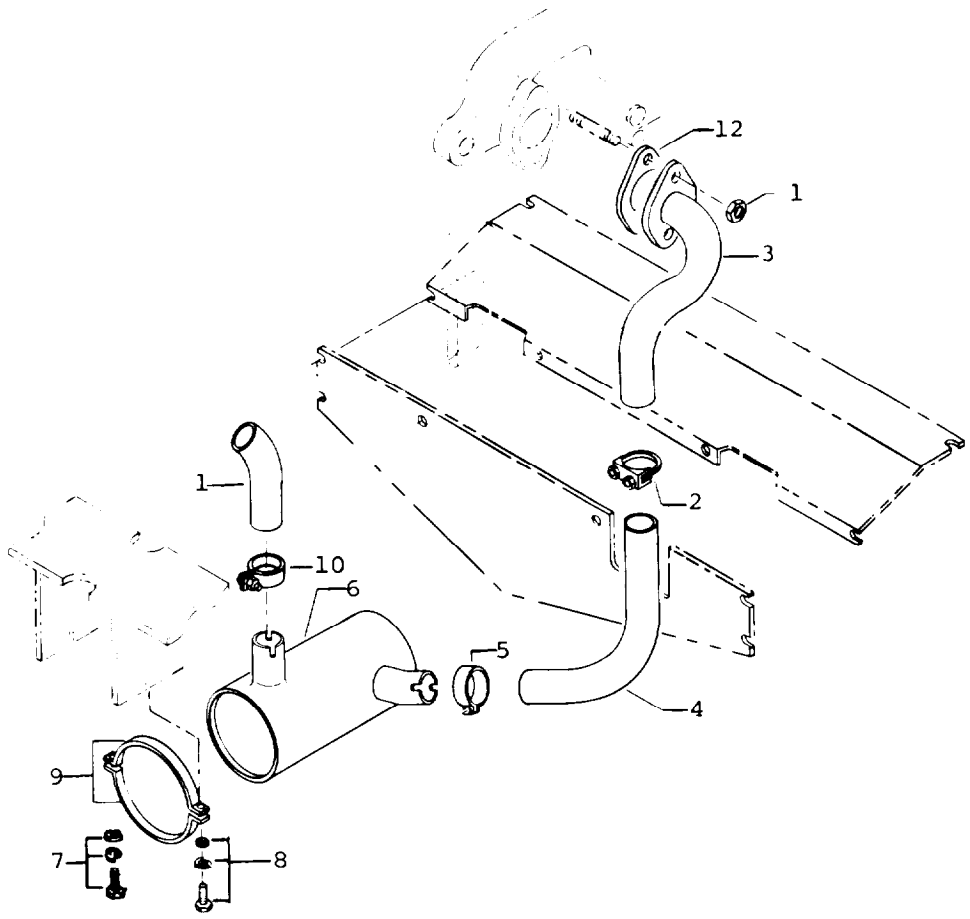

FIGURE 6-11. EXHAUST SYSTEM

1. NUT
2. CLAMP
3. EXHAUST PIPE (MANIFOLD END)
4. EXHAUST PIPE (MUFFLER END)
5. CLAMP
6. MUFFLER
7. CAPSCREW, LOCKWASHER, WASHER
8. CAPSCREW, LOCKWASHER, WASHER
9. CLAMP
10. CLAMP
11. TAIL PIPE
12. GASKET

5-177. INSTALLATION

a. Install governor into the engine timing cover and install the governor fasteners.

b. Install the governor control linkage and the governor control spring.

C. Install the oil line from the engine block to the timing cover.

d. Install accelerator return spring.

e. Remove the old gasket and install a new one on the exhaust manifold, then install the exhaust pipe (Manifold end).

f. Install the air cleaner hose and the air cleaner assembly.

www.truck-freeworkshop.com/clark/

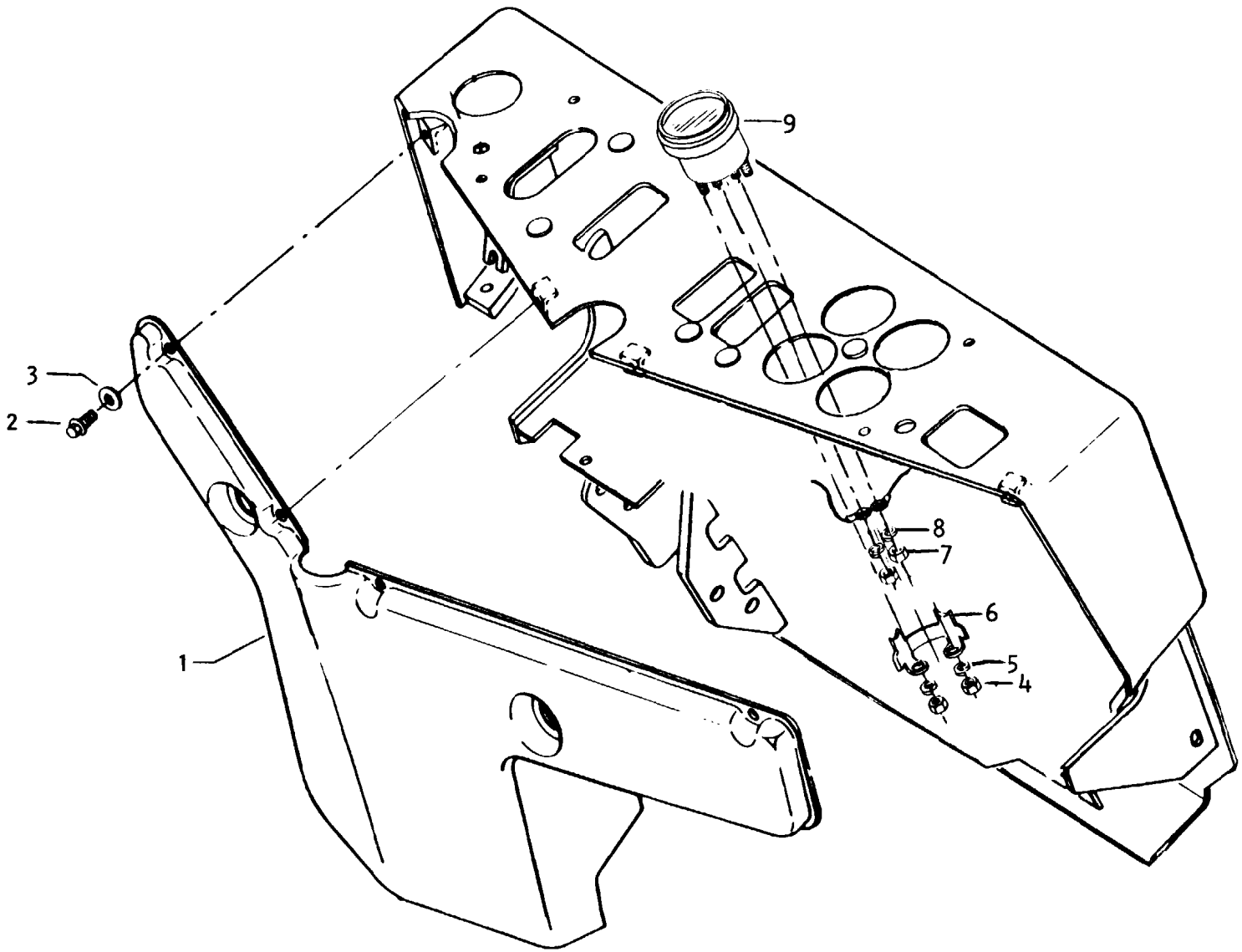

GAUGE REMOVAL 6-12

www.truck-freeworkshop.com/clark/

Legend for Figure 6-12

1. Lower Dash Panel
2. Capscrew
3. Lockwasher
4. Nut
5. Lockwasher
6. Bracket
7. Nut
8. Lockwasher
9. Gauge

5-178. GAUGE REMOVAL (Refer to Fig. 6-12 for Parts Identification).

If any instrument gauges are found inoperative (Refer to page 3-4 for gauge operation) remove gauge as follows:

a. Remove battery ground cable.

b. Remove lower dash panel fasteners (Items 2 & 3) and remove lower dash panel (Item 1) from machine.

C. Remove gauge bracket fasteners (Items 4 & 5) and bracket (Item 6) from underside of dash.

d. Remove terminal fasteners (Items 7 & 8) and wires from terminals. Lift gauge (Item 9) from top of dash.

5-179. GAUGE INSTALLATION.

a. Installation is the reverse of removal as outlined in Section 5-178.

b. Refer to wiring diagram (page 7-108) for correct wire location.

5-180. SEAT REMOVAL (Refer to Figure 6-13)

a. Raise seat support to full open position.

b. Remove heat shield (Item 6) from underside of seat support by removing 2 nuts, lockwashers, and washers (Items 9, 8, & 7) from the 1 right-hand seat adjustor mounting bolts (Item 3).

C. Remove 4 seat adjustor mounting bolts, lockwashers, and nuts (Items 2, 3, 4, & 5). Lift seat from machine.

5-181. SEAT INSPECTION

a. Inspect seat cushion and back rest for cuts, tears, or similar damage. Replace if necessary.

b. Inspect seat for loose or missing cushion or brackrest fasteners. Tighter or replace as necessary. (Refer to page 7-95 for upholstery mounting fasteners.

C. Inspect seat adjustors for loose or missing fasteners. Tighten or replace as necessary. (refer to page 7-95 for adjustor mounting fasteners.

d. Inspect both seat adjustor mechanisms for free movement and full travel Adjustors should travel a total of 4". Lubricate with MIL-L-10924 grease or replace as necessary.

e. Inspect adjusting lever on right hand adjustor for free operation. Lubricate if necessary with MIL-L-46152 oil. Also make sure adjustor locks securely into position when lever is released. If not, replace entire adjustor assembly. (Refer to page 7-95 for adjustor part numbers).

5-182. SEAT INSTALLATION

a. Install the 2 rear seat mounting bolts (1 eash of Items 2 & 3) through the rear holes of seat adjustors. NOTE: The longer bolts are used on the right hand adjustor to facilitate the installation of the heat shield (Item 6).

b. With the seat support raised to the full open position, set seat on seat support, inserting the two mounting bolts through the two rear mounting hole: in the seat support.

C. Install lockwashers and nuts (Items 4 & 5) on the two rear bolts. DO NOT tighten at this time.

www.truck-freeworkshop.com/clark/

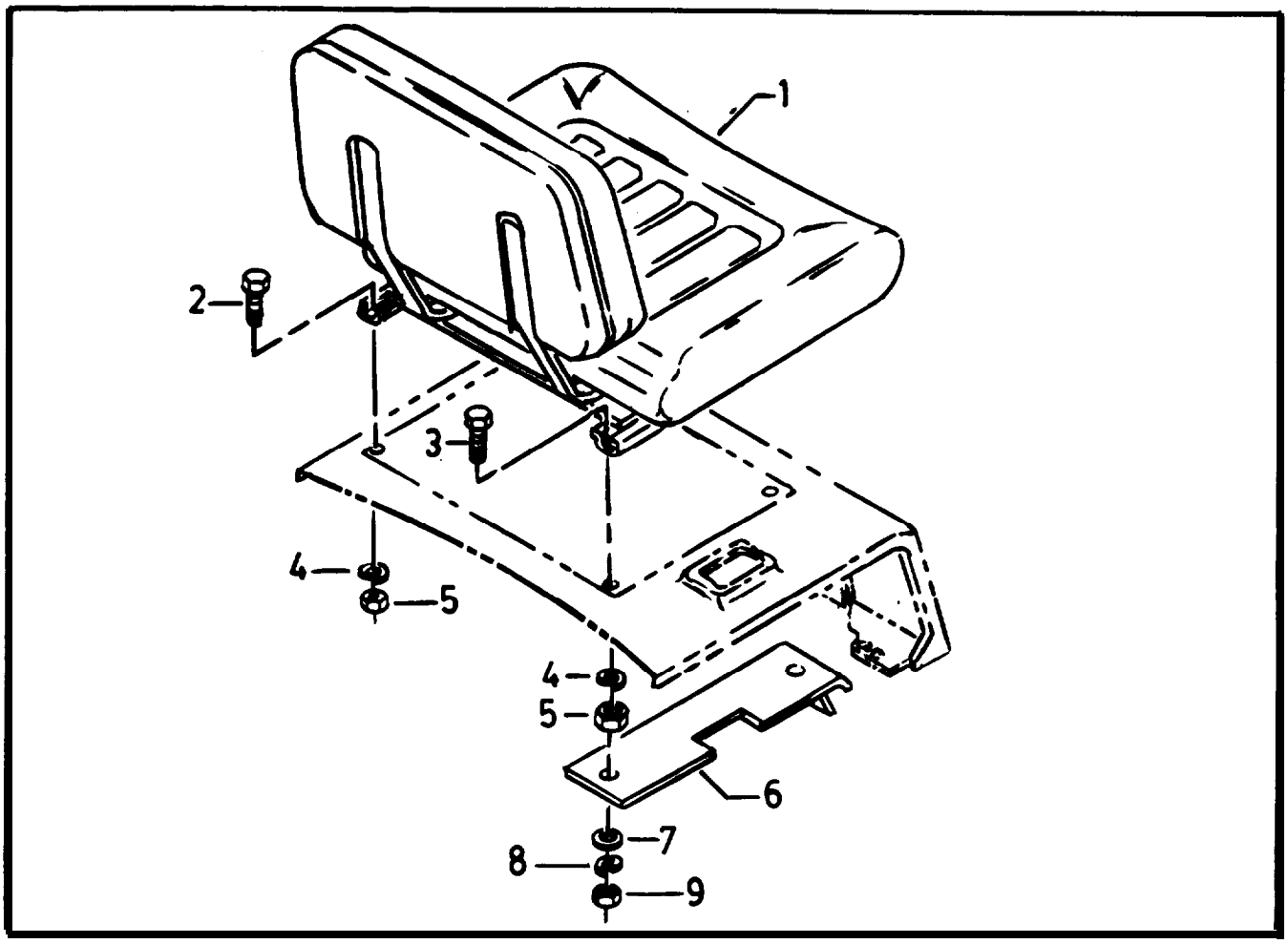

d. Adjust seat all the way to the rear. Insert 2 front seat mounting bolts (Items 2 & 3) through the front mounting holes in the adjustors - longer bolts on the right hand side - and through the mounting holes in the seat support. Install lockwashers and nuts (Items 4 & 5).

e. Tighten all 4 mounting bolts.

f. Place heat shield (Item 6) over longer bolts protruding under RH side of seat support. Install washers, lockwashers, and nuts (Items 7, 8, & 9) on mounting bolts and tighten.

g. Return seat support to a fully closed position.

www.truck-freeworkshop.com/clark/

5-183. STEER AXLE

5-184. REMOVAL & INSPECTION.

a. Remove the counterweight (Refer to page 5-194. Section 5-155)

b. using a 12 ton hydraulic jack and adaptor (part number of adaptors is 1801093) raise each side of the machine frame far enough so that the steer wheels clear the floor. Place heavy block under each side of the machine frame.

W A R N I N G

AFTER RAISING MACHINE AND BEFORE MAKING ANY ADJUSTMENT OR ADJUSTMENT CHECK, PLACE ADEQUATE (HEAVY) BLOCKING (SUFFICIENT ENOUGH TO SUPPORT THE WEIGHT OF THE MACHINE) UNDER BOTH SIDES OF THE FRAME, NOT UNDER THE COUNTERWEIGHT. THIS PREVENTS ACCIDENTAL LOWERING OR FALLING OF THE MACHINE, THUS PREVENTING PERSONAL INJURY TO MECHANIC OR BYSTANDERS.

C. Inspect knuckle for chucking by grasping the steer tire on top and bottom and try to tip steer tire and wheel assembly in and out. If any chucking is felt knuckle pin and bushings must be replaced. For replacement of knuckls and bushing refer to Section 5-185, paragraph A.

d. To remove steer axle, remove the cotter pin from the end of the ball socket on the end of the steer axle drag link, and loosen the plug in the ball socket far enough to remove the drag link from the steer axle ball stud.

e. Remove the steer axle drag link from the steer axle ball stud.

f. Position a floor jack under the center of the steer axle and raise jack high enough to support the steer axle weight.

g. Remove the four capscrews that fasten the steer axle to the silent blocks. After removing the capscrews the weight of the steer axle will fall onto the floor jack.

h. Lower the floor jack so that the steer wheels touch the floor and remove the floor jack. Roll the steer axle out from under the machine.

1. To inspect the spider for free play on the steer axle pin: Remove the tie rods from the spider and grasp hold of the spider to see if it turns freely and check to see if any chucking is felt!. If any resistance to movement or chucking is felt spider bearings must be replaced. For replacement of spider bearings refer to page 5-211 Section 5-186 paragraph b. Step 1.

5-185. DISASSEMBLY OF STEER AXLE COMPONENTS.

A. Knuckle

Step 1. Remove steer wheel and tire assembly.

Step 2. Remove tie rod end from knuckle.

Step 3. Remove upper and lower pin caps by driving down on center of caps with punch and hammer, until cap loosens from housing.

Step 4. Remove knuckle-pin lock-pin by driving out from rear of steer axle with drift and hammer.

Step 5. Drive knuckle pin down and out of steer axle and remove knuckle.

Step 6. Remove bushings from steer axle housing.

www.truck-freeworkshop.com/clark/

B. Spider

Step 1. Remove snap ring from top of spider and remove shim(s) then pull spider up and off from the steer axle pin.

Step 2. Remove seal and bearings from spider housing.

5-186. REASSEMBLY OF STEER AXLE COMPONENTS.

A. Knuckle

Step 1. Install new bushings from knuckle pin kit into steer axle.

Step 2. Hold knuckle in place and position new thrust bearing on top of knuckle.

Step 3. Align holes in steer axle knuckle pin from the top of steer axle.

Step 4. Pull up on knuckle and measure the distance between bottom of knuckle and top of steer axle lower knuckle housing. If this distance exceeds .022" knuckle pin must be removed and add one shim (part number of shim is 100194) between bottom of knuckle and top of lower steer axle knuckle housing.

Step 5. Align notch in knuckle pin with hole in knuckle and install new lock pin from front side of axle and tap into place with drift and hammer.

Step 6. Install new upper & lower expansion plugs into the steer axle knuckle housings. Tap on center of expansion plug until it flattens and locks into housing.

Step 7. Install the tie rod end into the knuckle and install the nut and torque to 68-82 -Et. lbs. then turn nut to next cotter slot and install cotter pin.

Step 8. Install steer wheel and tire assembly to the steer axle.

B. Spider

Step 1. Install new bearings and seals into the spider and install spider onto the steer axle pin.

Step 2. Install washer then snapring onto the steer axle pin. Measure distance between washer and snap ring, if distance exceeds .015 remove snap ring and add shim(s) 128517.

Step 3. Install tie rod end into the spider and install tie rod nut and torque to 68-82 ft. lbs. then turn nut to next cotter slot and install cotter pin.

5-187. STEER AXLE INSTALLATION

a. Before installing steer axle inspect both silent blocks for any deflection, if radial deflection exceeds .050 or axial deflection exceed .500 replace the silent blocks.

b. To replace the silent blocks proceed as follows:

Step 1. Remove cotter pin from nut and remove nut.

Step 2. Remove silent block and discard.

Step 3. Install new silent block and install nut and torque to 210-260 ft. lbs. install cotter pin.

C. Roll steer axle under the machine to its approximate position for mounting.

d. Position floor jack in center of steer axle and raise floor jack and at the same time aligning the steer axle to its mounting position.

www.truck-freeworkshop.com/clark/

e. Install the four capscrews that fasten the steer axle to the silent block and torque to 140 ft. lbs.

f. Remove the floor jack and install the drag link over the steer axle ball stud and tighten plug in the end of ball socket of the drag link. Install cotter pin.

g. Raise machine with 12 ton hydraulic jack and remove blocking. Lower machine to floor and grease steer axle assembly with grade NLG #1 per MS107B.

h. Install counterweight (refer to Section 5-157, page 5-194).

www.truck-freeworkshop.com/clark/

SECTION 7-1 ILLUSTRATED PARTS BREAKDOWN INDEX
THIS SECTION INCLUDES THE FOLLOWING PAGES

PART	PAGE
Accelerator Pedal and Linkage	7-25
Adjustable Headlamp	7-54
Air Cleaner	7-23
Alternator	7-53
Alternator Mounting	7-50
Auxiliary Valve	7-86
Auxiliary Valve Installation	7-116
Axle Adaptor and Differential	7-58
Axle End Assembly	7-59
Ball Socket Assembly	7-73
Brake Cylinder Mount	7-67
Brake Pedal and Linkage	7-66
Camshaft	7-10
Carburetor	7-30
Converter Pump	7-32
Cooling System	7-22
Crankcase	7-8
Crankcase Head	7-7
Crankcase Ventilation	7-114
Crankshaft	7-9
Data Plates and Decals	7-109
Directional Control Linkage	7-39
Distributor	7-49
Drive Wheels and Tires	7-68
Electric Assemblies Mounting	7-51
Engine Balancing System	7-13
Engine Mount	7-14
Engine Oil Filter	7-18
Engine Oil Lines	7-21
Engine Short Block and Engine Gasket Sets	7-5
Engine Sub-Assembly Mounting	7-4
Fan and Drive	7-19
Frame and Counterweight	7-102
Front End Cover	7-11
Front End Cover (continued)	7-12
Fuel Filter	7-28
Fuel Lines	7-27
Fuel Pump	7-26
Governor	7-15

PART	PAGE
Hose Adaptation For Devices	7-110
Hose Adaptation For Devices	7-111
Hydratork Transmission	7-34
Hydratork Transmission (cont' d)	7-41
Hydratork Transmission (cont' d)	7-42
Hydraulic Brake Lines	7-65
Hydraulic Pump	7-82
Hydraulic Pump Drive	7-80
Hydraulic Sump Filter	7-81
Hydraulic Tilt Lines	7-88
Hydraulic Valve	7-85
Hydraulic Valve	7-84
Hydraulic Valve Mounting	7-90
Inching Check Valve	7-64
Inching Master Cylinder	7-63
Instrument Panel	7.103
Lamp Installation	7-115
Lift Carriage Assembly	7-98
Lift Cylinder	7-96
Lift Cylinder Piping	7-97
Load Safety Rack-	7-100
Main Hydraulic and Lift Lines	7-89
Manifold	7-23
Master Cylinder	7-60
Muffler	7-24
Oil Pan	7-16
Oil Pump	7-17
Overhead Guard	7-106
Parking Brake	7-62
Parking Brake Linkage	7-70
Power Steering Cylinder	7-74
Power Steering Lines	7-77
Power Steering Pump	7-78
Seat	7-104
Seat Mounting	7-105
Sheave Carrier and Lift Chain	7-101
Sheet Metal	7-107
Sheet Metal (continued)	7-108
Side Shifter Components	7-113
Side Shifter Cylinder	7-112

www.truck-freeworkshop.com/clark/

SECTION 7-1 ILLUSTRATED PARTS BREAKDOWN INDEX
THIS SECTION INCLUDES THE FOLLOWING PAGES

PART	PAGE
Starter Motor	7-48
Steer Wheels and Tires	7-69
Steering Axle	7-75
Steering Axle (continued)	7-76
Steering Gear	7-71
Steering Linkage	7-72
Steering Pump Drive	7-79
Stop and Tail Light	7-55
Tilt Cylinder	7-91
Tilt Cylinder Mounting	7-92
Tilt Lock Valve	7-87
Torque Convertor	7-31
Transmission Clutch Pack	7-33
Transmission Clutch Pack	7-36
Transmission Control Cover	7-37

PART	PAGE
Transmission Control Cover	7-38
Transmission Cooling Lines	7-46
Transmission Fasteners	7-45
Transmission Mounting Parts	7-44
Transmission Oil Filter	7-47
Upright	7-93
Upright Support	7-99
Valve Control Linkage	7-85
Water Pump	7-26
Wheel Brake	7-61
Wiring Diagram	FO-1
Wiring Harness	7-56
Wiring Harness	7-57

www.truck-freeworkshop.com/clark/

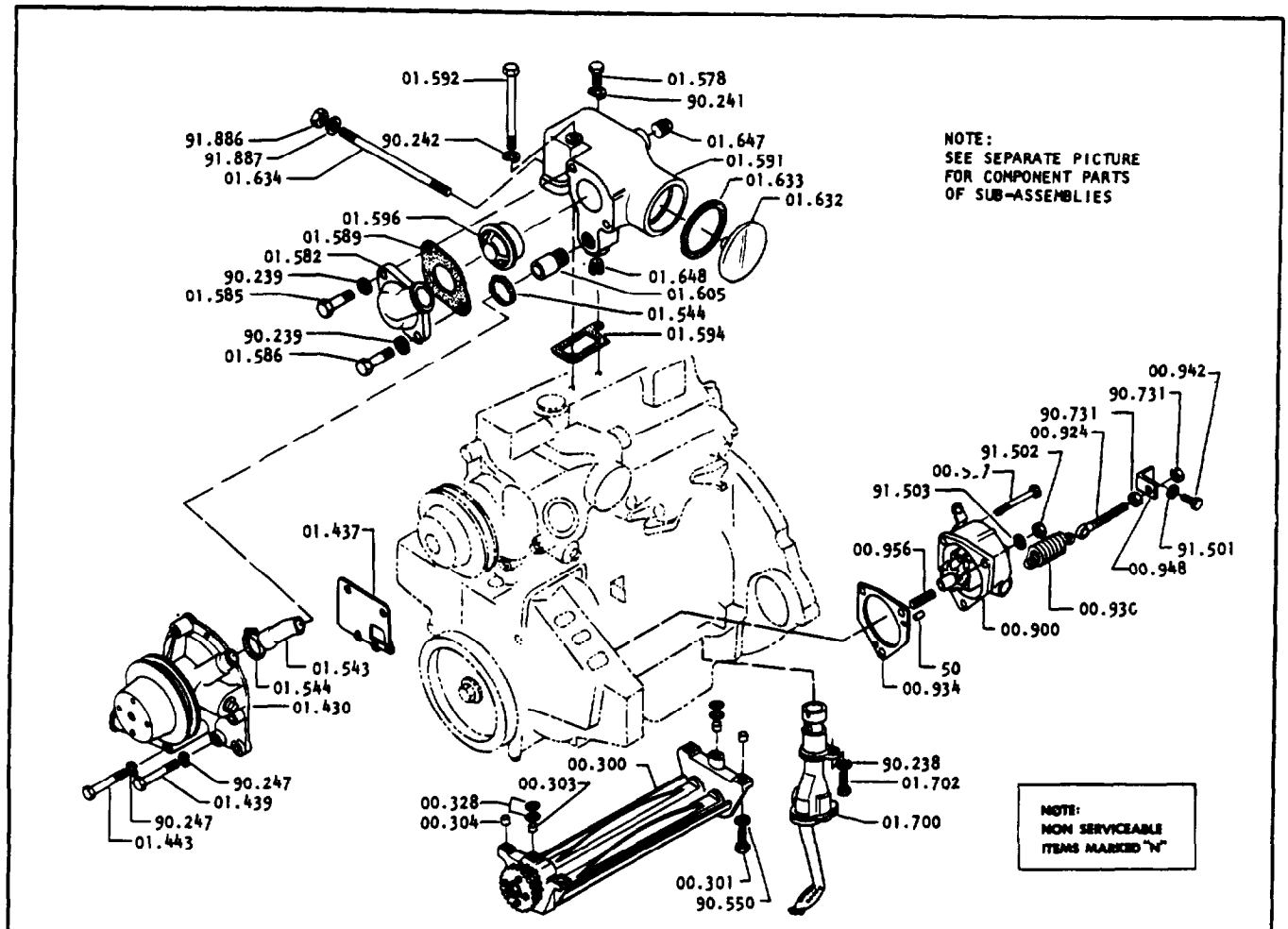

START -1-4560
END - AND ABOVE

ENGINE SUB-ASSEMBLY MOUNTING

2351514 ENGINE ASSEMBLY (CONTINUED)

01.592-1C656J	1	CAPSCREW
01.594-895389	1	GASKET
01.596-893051	1	THERMOSTAT
01.605-994722	1	ADAPTOR
01.632-890934	1	VAPORIZER HOLE COVER
01.633-890935	1	GASKET
01.634-661505	1	STUD
01.647-16F8	1	PLUG
01.648-16F8	1	PLUG
01.700-990315	1	OIL PUMP
01.702-1C622J	1	CAPSCREW
90.238-23E6	1	LOCKWASHER
90.239-23E6	2	LOCKWASHER
90.241-23E6	1	LOCKWASHER
90.242-23E6	1	LOCKWASHER
90.247-23E6	2	LOCKWASHER
90.550-890414	4	WASHER
90.731-61D4J	1	HEX NUT
91.501-23E6	1	LOCKWASHER
91.502-62D5J	2	HEX NUT
91.503-952779	3	WASHER
91.886-891069	1	HEX NUT
91.887-957225	1	WASHER

www.truck-freeworkshop.com/clark/

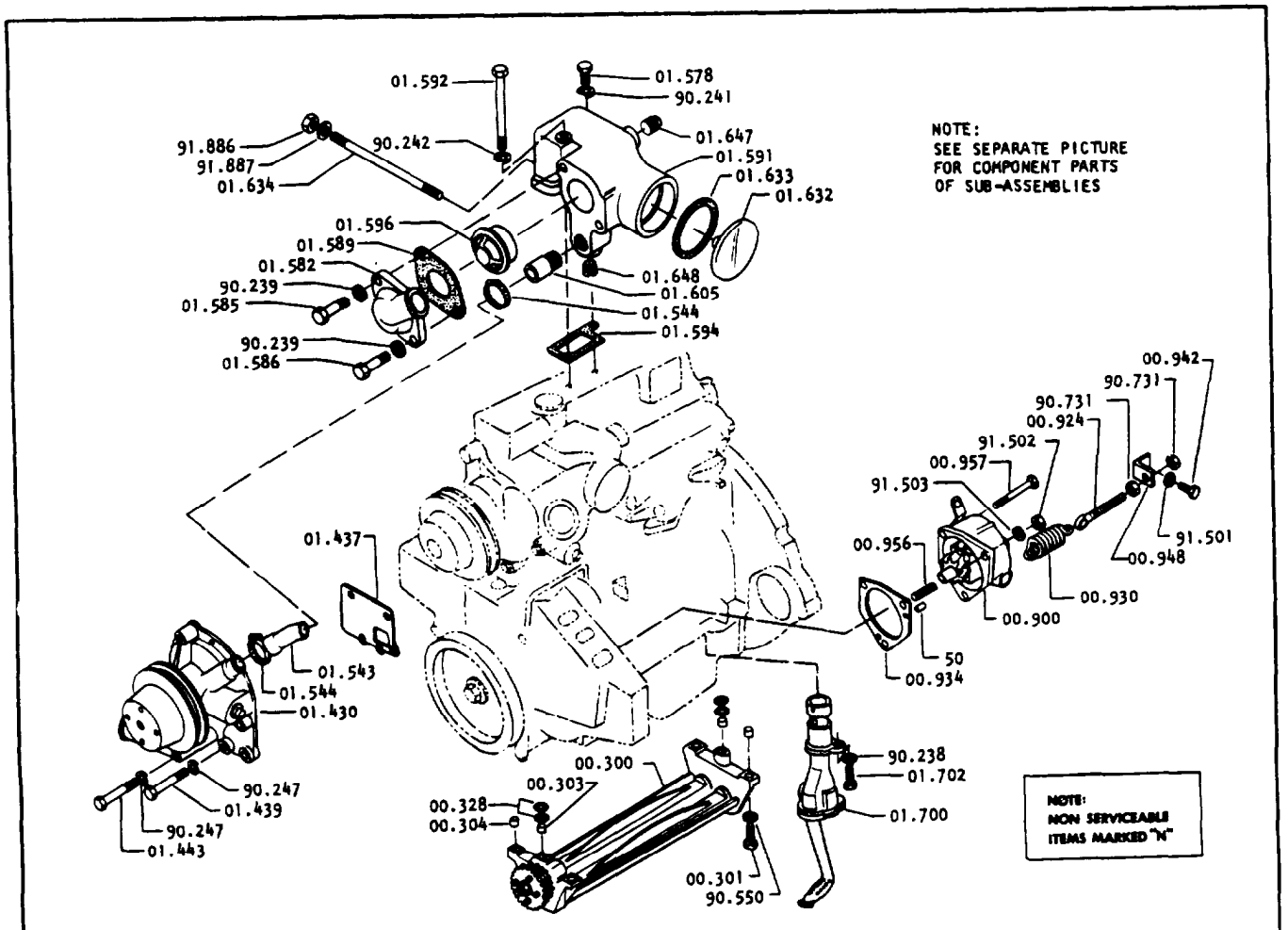

START -1-4560
END - AND ABOVE

ENGINE SUB-ASSEMBLY MOUNTING

2351514 ENGINE ASSEMBLY (CONTINUED)

00.300-993509	1	BALANCER ASSEMBLY
00.301-991328	4	CAPSCREW
00.303-990390	2	BALANCER OIL TUBE
00.304-990391	2	DOWEL RING
00.328-60K20008	4	OIL TUBE O-RING
00.900-993154	1	GOVERNOR ASSEMBLY
00.924-952775	1	EYE BOLT
00.930-890937	1	SPRING
00.934-952757	1	GASKET
00.942-1C612J	1	CAPSCREW
00.948-890941	1	SPRING BRACKET
00.956-1C548J	1	CAPSCREW
00.957-993581	1	STUD
01.430-906153	1	PUMP ASSEMBLY
01.437-890959	1	GASKET
01.439-1C640J	2	CAPSCREW
01.443-1C652J	2	CAPSCREW
01.543-999301	1	HOSE
01.544-994718	2	CLAMP
01.578-17C624J	1	CAPSCREW
01.582-995931	1	WATER OUTLET ELBOW
01.585-1C616J	1	CAPSCREW
01.586-17C630J	1	CAPSCREW
01.589-994719	1	GASKET
01.591-995932	1	THERMOSTAT HOUSING

www.truck-freeworkshop.com/clark/

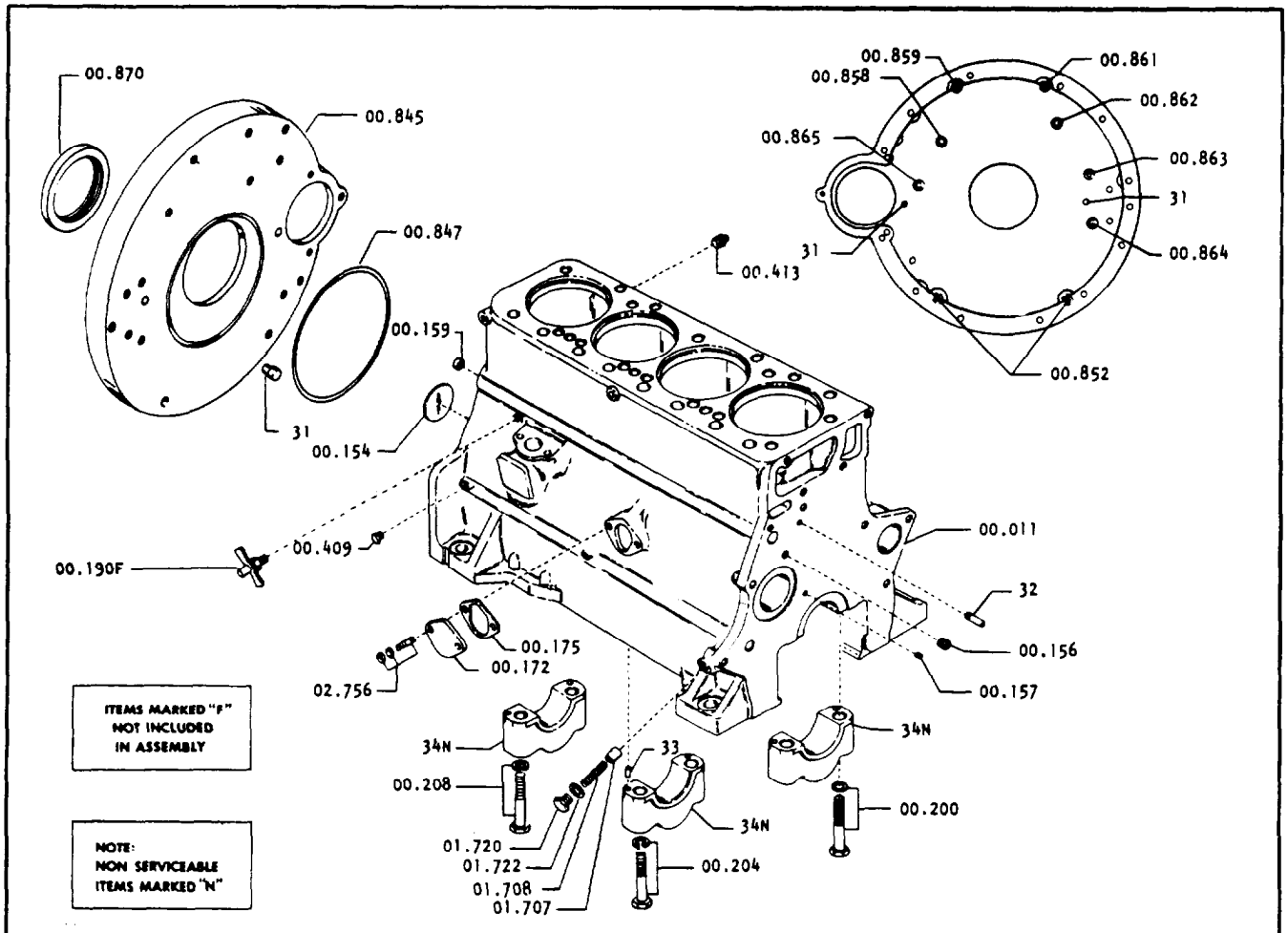

START -1-4560
END - AND ABOVE

CRANKCASE

2351514 ENGINE ASSEMBLY (CONTINUED)

00.011-990403	1	CRANKCASE (INCLUDES BLOCK & BEARING CAPS)
00.154-957229	1	BRASS EXPANSION PLUG
00.156-16F4	4	PIPE PLUG
00.157-16F2	1	PIPE PLUG
00.159-957230	1	CUP PLUG
00.172-898490	1	PUMP HOLE COVER
00.175-899584	1	COVER GASKET
00.190-72F2	1	DRAIN COCK
00.200-17C848	2	SCREW
00.200-23E8	2	LOCKWASHER
00.204-17C848	2	SCREW
00.204-23E8	2	LOCKWASHER
00.208-17C848	2	SCREW
00.208-23E8	2	LOCKWASHER
00.409-40K4	1	PIPE PLUG
00.413-40K8	1	PIPE PLUG
00.845-890610	1	FLYWHEEL HOUSING
00.847-890462	1	HOUSING O-RING
00.852-SEE OIL PAN BOLTS	2	PAN SCREW
00.858-1C616	1	HOUSING SCREW
00.858-957225	1	COPPER WASHER
00.859-1C616	1	HOUSING SCREW
00.859-957225	1	COPPER WASHER
00.861-1C616	1	HOUSING SCREW
00.861-23E6	1	LOCKWASHER
00.862-1C616	1	HOUSING SCREW
00.862-23E6	1	LOCKWASHER
00.863-1C616	1	HOUSING SCREW
00.863-23E6	1	LOCKWASHER
00.864-1C616	1	HOUSING SCREW
00.864-23E6	1	LOCKWASHER
00.865-1C616	1	HOUSING SCREW
00.865-957225	1	COPPER WASHER
00.870-895388	1	OIL SEAL
01.707-952719	1	PRESS REGULATING PISTON
01.708-952718	1	PISTON SPRING
01.720-952716	1	SPRING CAP
01.722-952717	1	GASKET
02.756-980884	2	STUD
02.756-952779	2	COPPER WASHER
02.756-62D5	2	NUT

www.truck-freeworkshop.com/clark/

GASKETS SETS FOR D176 WAUKESHA ENGINE

WAUKESHA NUMBER	CLARK PART NUMBER		
900-355	994724	(1)	ENGINE GASKET SET
B175	954573	(4)	
B2135	952779	(5)	WASHER
B2747	957223	(4)	WASHER
B8230	952717	(1)	COPPER GASKET
208712		(8)	VALVE STEM SEAL
180100	940778	(1)	CYL. HEAD GASKET
168921	890883	(1)	OIL PAN GASKET
73842	899584	(1)	GASKET
164011	890450	(1)	GASKET
168212	890953	(1)	GASKET
41283B	952757	(1)	GASKET
180040D	890978	(1)	GASKET
116383A	890965	(1)	GASKET
44932C	952795	(6)	GASKET
168145A	890947	(1)	GASKET
168720	890945	(1)	SEAL
168146A	990401	(1)	GASKET
152464G	906154	(1)	"0"-RING
168132	895388	(1)	SEAL
199548		(1)	GASKET
152311	890959	(1)	GASKET
73927	890935	(1)	GASKET
168149	895389	(1)	GASKET
199719	994719	(1)	GASKET
B8556	957225	(4)	WASHER
176412	942542	(1)	GASKET
176625	991868	(1)	GASKET
166580M	60K-20008	(4)	O-RING
199179	994010	(1)	O-RING
168135A		(1)	GASKET
199719	994719	(1)	GASKET

979-200	994725	(1)	VALVE GRIND GASKET SET
208712		(8)	VALVE STEM SEAL
180100	940778	(1)	GASKET
180040D	890978	(1)	GASKET
44932C	952795	(6)	GASKET
168149	895389	(1)	GASKET

www.truck-freeworkshop.com/clark/

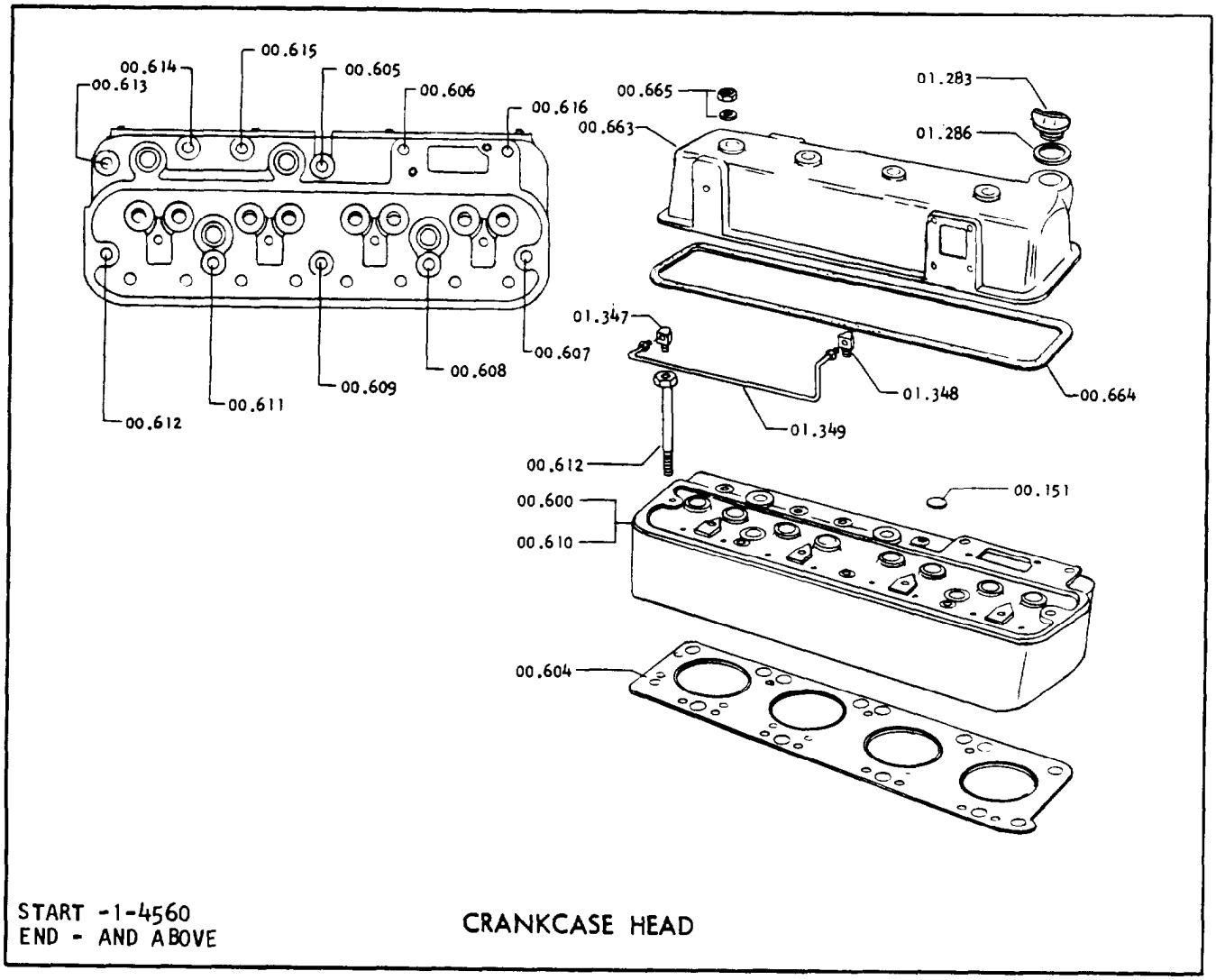

START -1-4560
END - AND ABOVE

CRANKCASE HEAD

2351514 ENGINE ASSEMBLY (CONTINUED)

00.151-SEE CAMSHAFT PICTURE (EXPANSION PLUG)

00.600-SEE CAMSHAFT PICTURE

00.604-940778	1	HEAD GASKET
00.605-952739	1	CAPSCREW
00.606-17C880	1	CAPSCREW
00.607-17C880	1	CAPSCREW
00.608-17C880	1	CAPSCREW
00.609-17C880	1	CAPSCREW

00.610-SEE CAMSHAFT PICTURE

00.611-17C880	1	CAPSCREW
00.612-952741	1	CAPSCREW
00.613-17C880	1	CAPSCREW
00.614-17C880	1	CAPSCREW
00.615-17C880	1	CAPSCREW
00.616-17C880	1	CAPSCREW
00.663-991867	1	ROCKER ARM COVER
00.664-890978	1	ROCKER COVER GASKET
00.665-62D6	4	ROCKER COVER NUT
00.665-957223	4	COPPER WASHER
01.283-957113	1	OIL FILLER CAP
01.286-942542	1	FILLER CAP GASKET
01.347-62F2	1	ELBOW
01.348-62F2	1	ELBOW
01.349-940774	1	OIL LINE

www.truck-freeworkshop.com/clark/

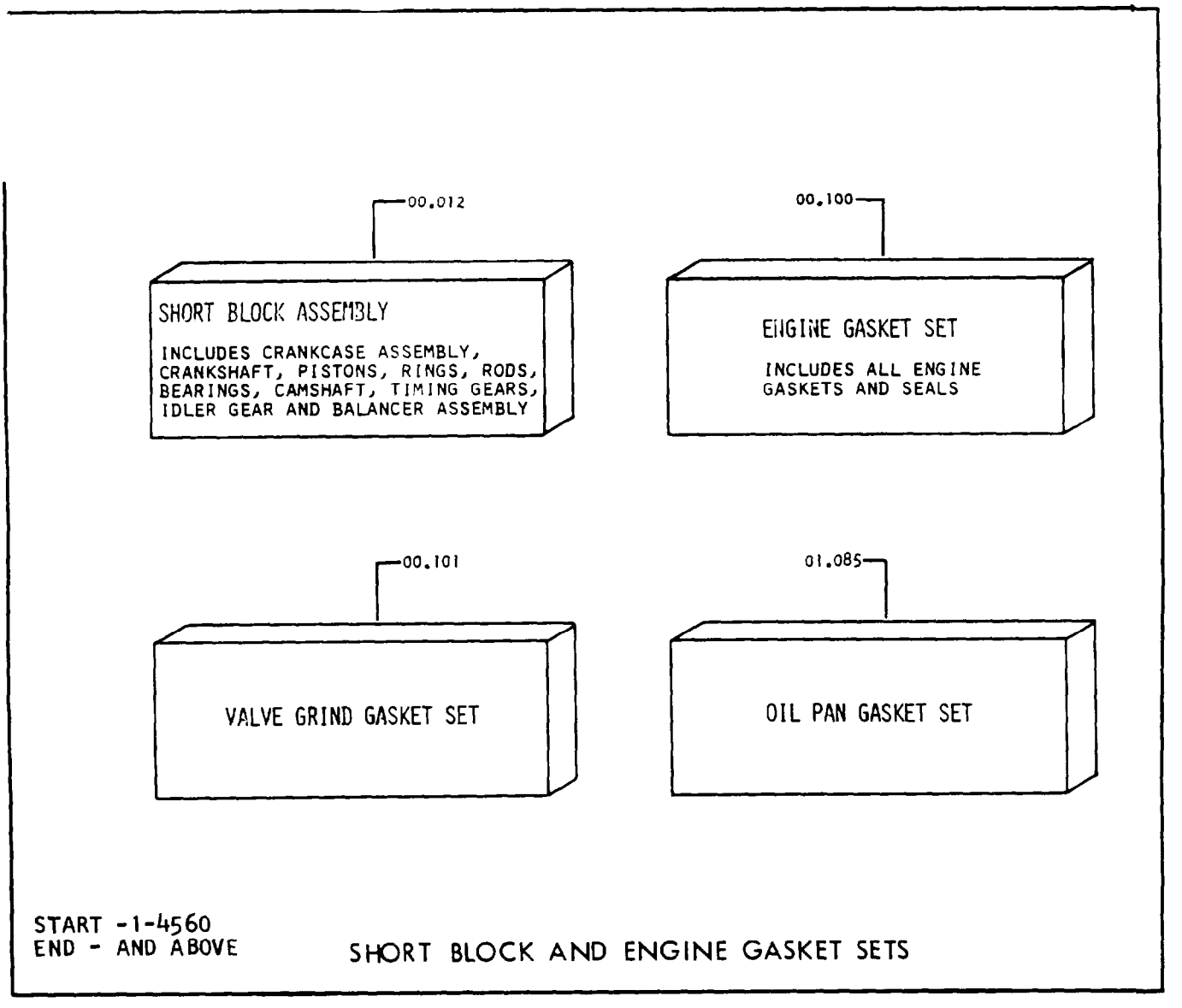

2351514 ENGINE ASSEMBLY

00.012-999279	1	SHORT BLOCK ASSEMBLY
00.100-994724	1	ENGINE GASKET SET
00.101-994725	1	VALVE GRIND GASKET SET
01.085-890883	1	OIL PAN GASKET SET

www.truck-freeworkshop.com/clark/

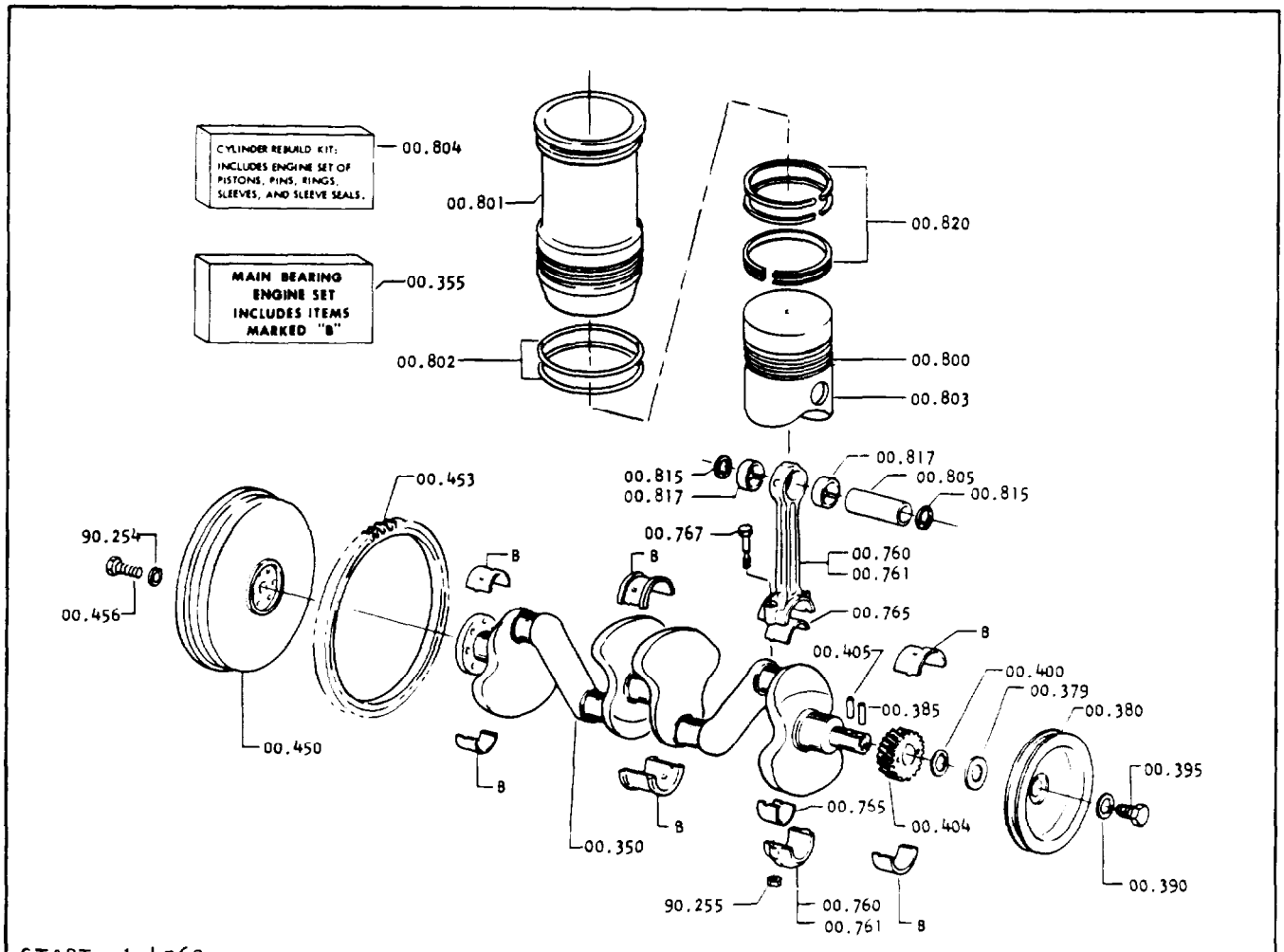

START -1-4560
END - AND ABOVE

CRANKSHAFT

2351514 ENGINE ASSEMBLY (CONTINUED)

00.350-905396	1	CRANKSHAFT
00.355-990308	1	MAIN BRG(ENG SET STD)
00.355- 990306	1	MAIN BRG(ENG SET.020)
00.355- 990304	1	MAIN BRG(ENG SET.040)
00.379-994727	1	WEAR SLEEVE
00.380-994728	1	CRANKSHAFT PULLEY
00.385-641924	1	ROLL PIN
00.390-991366	1	PULLEY WASHER
00.395-2C1216	1	CAPSCREW
00.400-890450	1	GASKET
00.404-990412	1	TIMING GEAR
00.405-641924	1	ROLL PIN
00.450-890474	1	FLYWHEEL & RING GEAR
00.453-890473	1	RING GEAR
00.456-18C722	6	CAPSCREW
00.760-995913	2	ROD ASSEM(CYL 2 & 4)
00.761-995913	2	ROD ASSEM(CYL 1 & 3)
00.765-994299	1	ROD BEARING(ENG SET STD)
00.765-995501	1	ROD BEARING(ENG SET.020)
00.765-995502	1	ROD BEARING(ENG SET.040)
00.767-996465	8	ROD CAP BOLT
00.800-994300	1	PIST & PIN(ENG SET STD)
00.801-994302	4	CYLINDER SLEEVE (ORDER SEALS ALSO)
00.802-958232	8	SLEEVE O-RING
00.803-1811351	4	PIST & PIN(1 CYL)
00.804-995445	1	CYLINDER REBUILD KIT
00.805-996466	1	PIST PIN (ENGINE SET)
00.815-995438	8	SNAP RING
00.817-995503	1	PIN BUSHING (ENG SET)
00.820-994732	1	PIST RING (ENG SET)
90.254-991831	6	WASHER
90.255-18D6	8	ROD CAP NUT

www.truck-freeworkshop.com/clark/

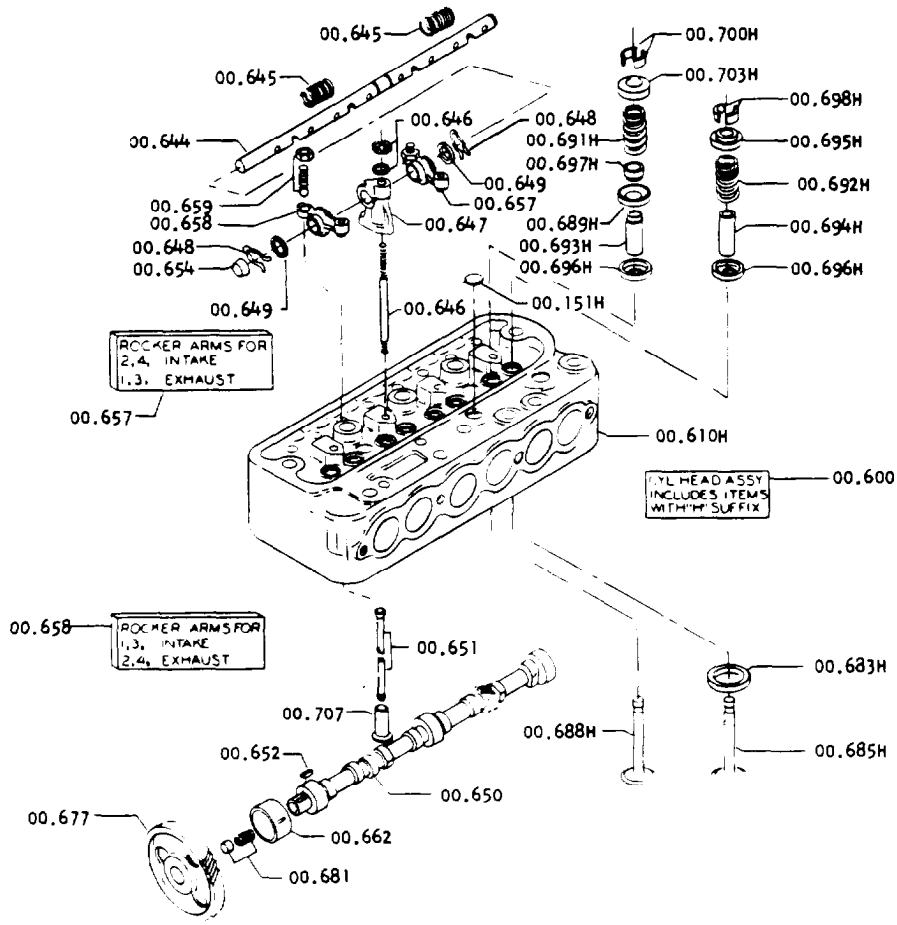

START -1-4560
END - AND ABOVE

CAMSHAFT

2351514 ENGINE ASSEMBLY (CONTINUED)

00.151-957239	5	EXPANSION PLUG
00.600-990314	1	HEAD ASSEMBLY
00.610-890979	1	CYLINDER HEAD (INCLUDES VALVE GUIDES & SEATS)
00.644-990400	1	ROCKER ARM TUBE
00.645-952725	2	SPRING
00.646-892182	4	STUD
00.646-890414	4	WASHER
00.646-876133	4	LOCK NUT
00.647-890412	4	SUPPORT
00.648-952727	4	HAIRPIN COTTER
00.649-952728	4	WASHER
00.650-890888	1	CAMSHAFT
00.651-890410	8	PUSH ROD
00.652-6J608	1	CAMSHAFT GEAR KEY
00.654-957294	2	TUBE CAP
00.657-952730	4	ROCKER ARM ASSEM(BUSHING NOT SERVICEABLE)
00.658-952729	4	ROCKER ARM ASSEM(BUSHING NOT SERVICEABLE)
00.659-957293	8	SCREW (SELF-LOCKING)
00.659-8D6	8	NUT
00.662-952711	1	BUSHING (FRONT ONLY)
00.677-890887	1	CAMSHAFT GEAR
00.681-952709	1	THRUST PLUNGER
00.681-952710	1	PLUNGER SPRING
00.683-890929	4	EXHAUST VALVE SEAT
00.685-890930	4	EXHAUST VALVE
00.688-890931	4	INTAKE VALVE
00.689-952735	4	SEAL RETAINER GUARD
00.691-895390	4	INTAKE VALVE SPRING
00.692-952745	4	EXHAUST VALVE
00.693-890927	4	INTAKE VALVE GUIDE
00.694-890928	4	EXHAUST VALVE GUIDE
00.695-890416	4	EXHAUST VALVE ROTATOR
00.696-890415	8	VALVE SPRING CUP
00.697-952734	4	VALVE SEAL
00.698-952732	8	EXHAUST VALVE LOCK
00.700-952732	8	INTAKE VALVE LOCK
00.703-952733	4	INTAKE SPRING SEAT
00.707-952707	8	VALVE LIFTER

www.truck-freeworkshop.com/clark/

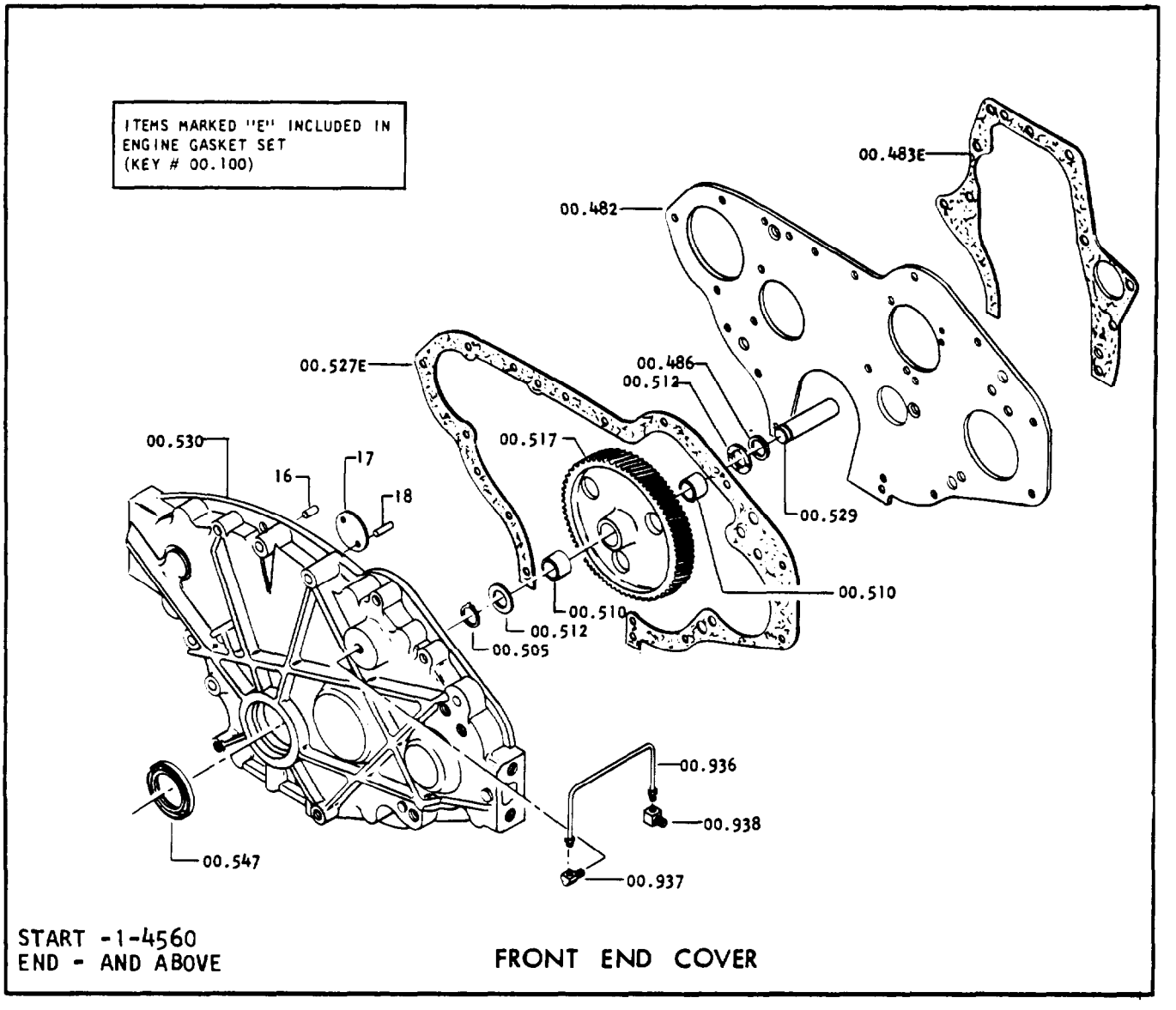

START -1-4560
END - AND ABOVE

FRONT END COVER

2351514 ENGINE ASSEMBLY (CONTINUED)

00.482-905247	1	BACKING PLATE
00.483-990401	1	BACKING PLATE GASKET
00.486-999170	1	SPACER
00.505-906026	1	SNAP RING
00.510-999172	2	BUSHING
00.512-999173	2	THRUST WASHER
00.517-999890	1	IDLER GEAR (INCLUDES BUSHING)
00.527-890947	1	GASKET
00.529-906027	1	IDLER GEAR SHAFT
00.530-995397	1	GEAR COVER
00.547-890945	1	SEAL
00.936-890950	1	OIL LINE
00.937-62F1	1	ELBOW
00.938-940891	1	TEE

www.truck-freeworkshop.com/clark/

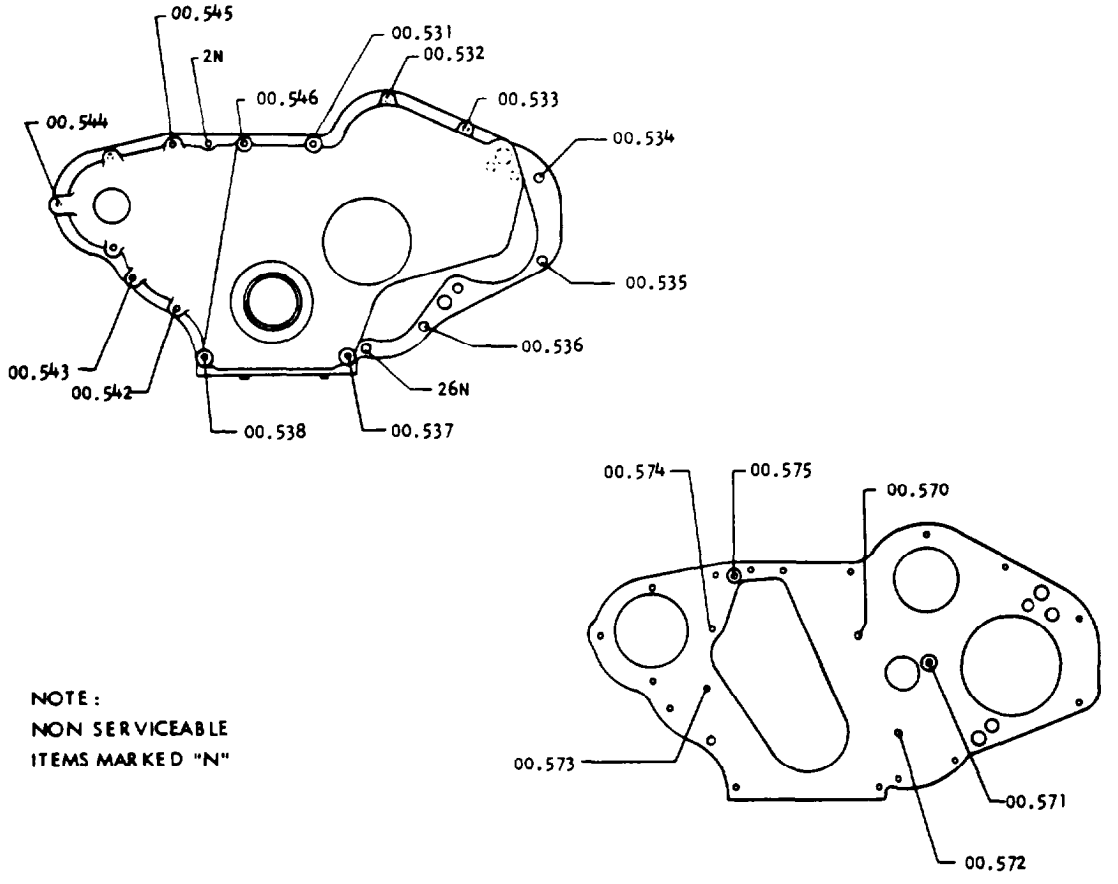

NOTE:
NON SERVICEABLE
ITEMS MARKED "N"

START -1-4560
END - AND ABOVE

FRONT END COVER

2351514 ENGINE ASSEMBLY (CONTINUED)

00.531-1C552	1	GEAR COVER BOLT
00.531-6E5	1	LOCKWASHER
00.532-1C516	1	GEAR COVER BOLT
00.532-23E5	1	LOCKWASHER
00.533-1C516	1	GEAR COVER BOLT
00.533-23E5	1	LOCKWASHER
00.534-1C516	1	GEAR COVER BOLT
00.534-23E5	1	LOCKWASHER
00.535-853097	1	GEAR COVER BOLT
00.536-1C516	1	GEAR COVER BOLT
00.536-23E5	1	LOCKWASHER
00.537-1C552	1	GEAR COVER BOLT
00.537-6E5	1	LOCKWASHER
00.538-1C552	1	GEAR COVER BOLT
00.538-6E5	1	LOCKWASHER
00.542-1C536	1	GEAR COVER BOLT
00.542-23E5	1	LOCKWASHER
00.543-1C536	1	GEAR COVER BOLT
00.543-23E5	1	LOCKWASHER
00.544-1C516	1	GEAR COVER BOLT
00.544-23E5	1	LOCKWASHER
00.545-1C536	1	GEAR COVER BOLT
00.545-23E5	1	LOCKWASHER
00.546-1C552	1	GEAR COVER BOLT
00.546-6E5	1	LOCKWASHER
00.570-1C512	1	BACKING PLATE BOLT
00.570-23E5	1	LOCKWASHER
00.571-7G512	1	BACKING PLATE BOLT
00.572-1C512	1	BACKING PLATE BOLT
00.572-23E5	1	LOCKWASHER
00.573-1C512	1	BACKING PLATE BOLT
00.573-23E5	1	LOCKWASHER
00.574-1C512	1	BACKING PLATE BOLT
00.574-23E5	1	LOCKWASHER
00.575-7G512	1	BACKING PLATE BOLT

www.truck-freeworkshop.com/clark/

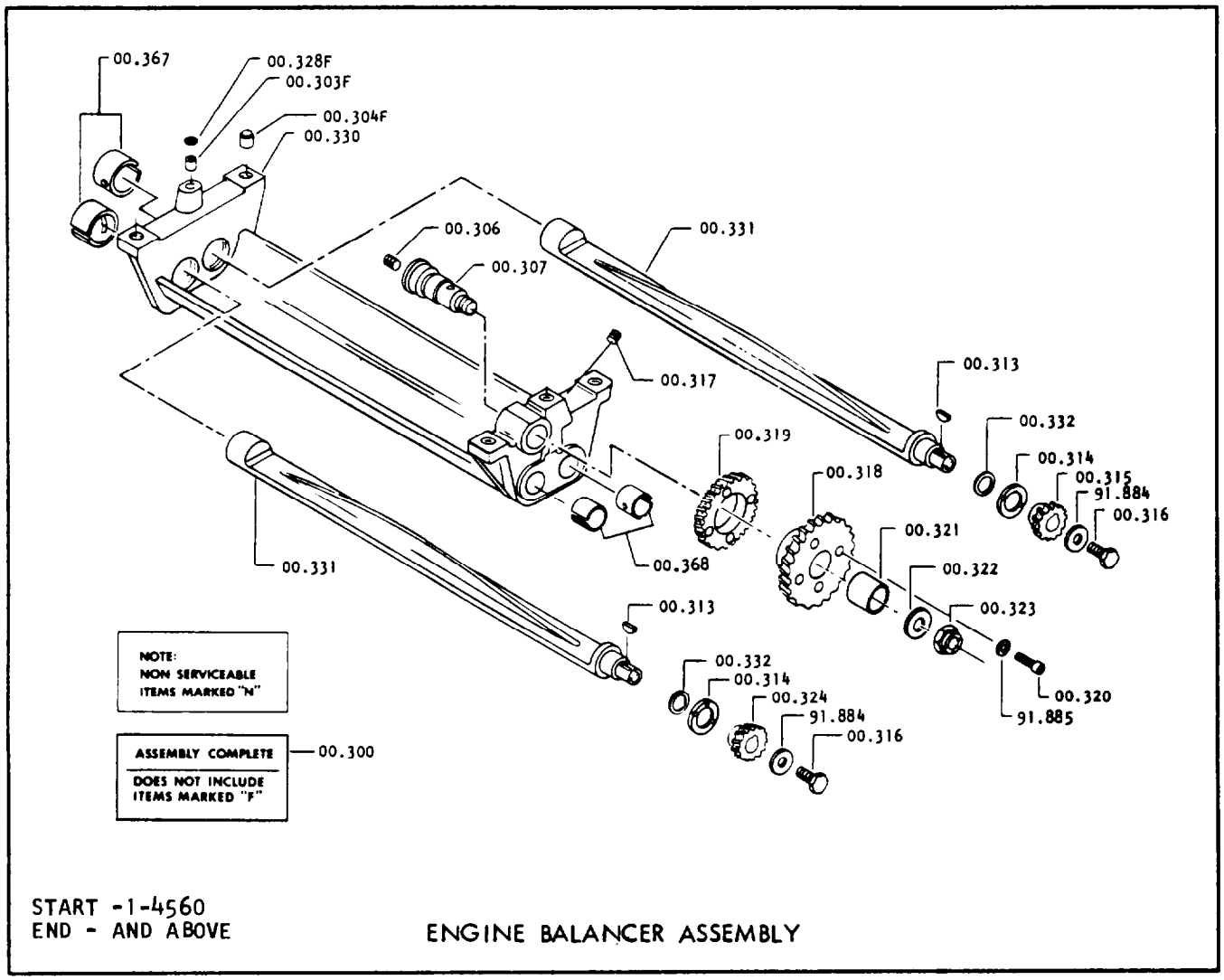

START -1-4560
END - AND ABOVE

ENGINE BALANCER ASSEMBLY

993509 ENGINE BALANCER ASSEMBLY

00.300-993509	1	ENGINE BALANCER ASSEMBLY
00.303-990390	2	BALANCER OIL TUBE
00.304-990391	2	DOWEL RING
00.306-16F2	1	PLUG
00.307-990392	1	SPINDLE
00.313-6J304	2	KEY
00.314-991090	2	WASHER
00.315-991091	1	GEAR
00.316-9C612J	2	BOLT
00.317-16F2	1	PLUG
00.318-‡991092	1	GEAR
FOR REPLACEMENT	SEE	BULL TI-1031-588
00.319-‡990396	1	GEAR
FOR REPLACEMENT	SEE	BULL TI-1031-588
00.320-22G1016J	4	BOLT
00.321-‡990397	1	BEARING
FOR REPLACEMENT	SEE	BULL TI-1031-588
00.322-990245	1	WASHER
00.323-351953	1	NUT
00.324-991093	1	GEAR
00.328-60K20008	1	O-RING
00.330-993553	1	FRAME
00.331-993554	2	WEIGHT
00.332-993555	2	SHIM (.0015" THICK)
00.332-993556	2	SHIM (.003" THICK)
00.332-993557	2	SHIM (.005" THICK)
00.367-996830	2	BEARING
00.368-996831	2	BEARING
91.884-551835	2	WASHER
91.885-23E10	4	LOCKWASHER

www.truck-freeworkshop.com/clark/

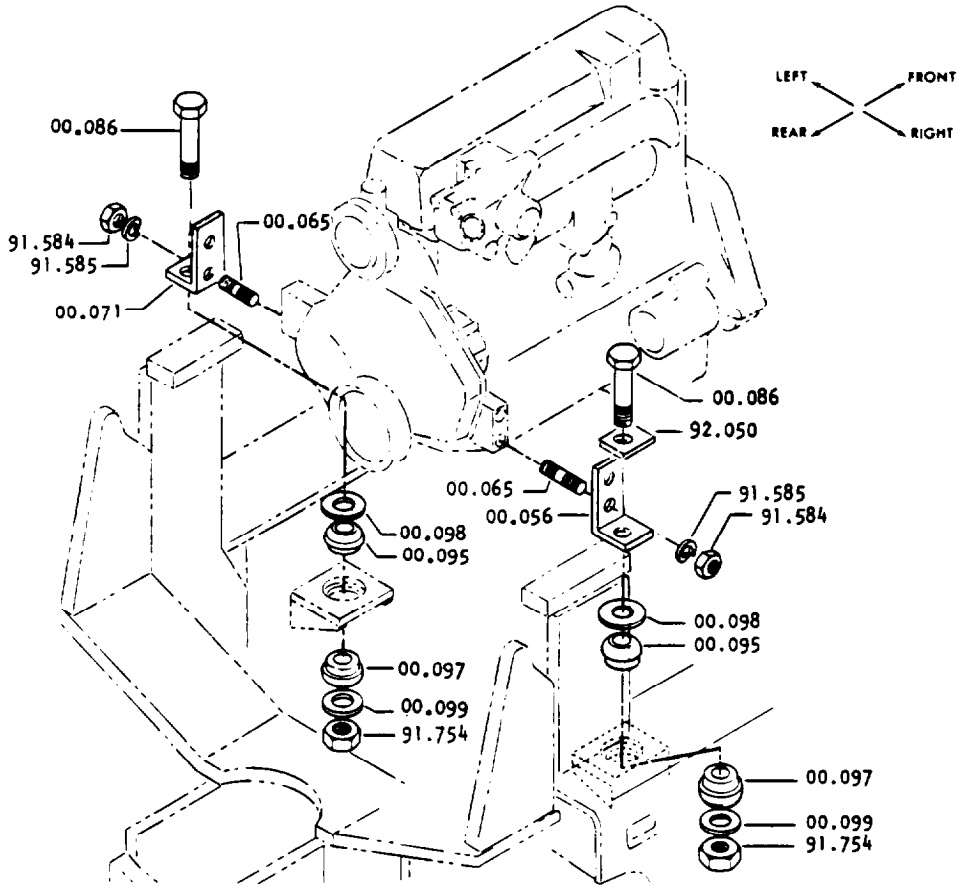

START -1-4560
END - AND ABOVE

ENGINE MOUNT

00-602 ENGINE MOUNT

00.056-1735818	1	ENGINE MOUNT (LH)
00.065-2304781	4	STUD
00.071-1735819	1	ENGINE MOUNT (RH)
00.086-2C1080	2	BOLT
00.095-1736789	2	DAMPENER
00.097-1736790	2	DAMPENER
00.098-1314190	2	WASHER
00.099-672163	2	WASHER
91.584-62D8	4	NUT
91.585-23E8	4	LOCKWASHER
91.754-60D10	2	NUT
92.050-1736991	1	SPACER

www.truck-freeworkshop.com/clark/

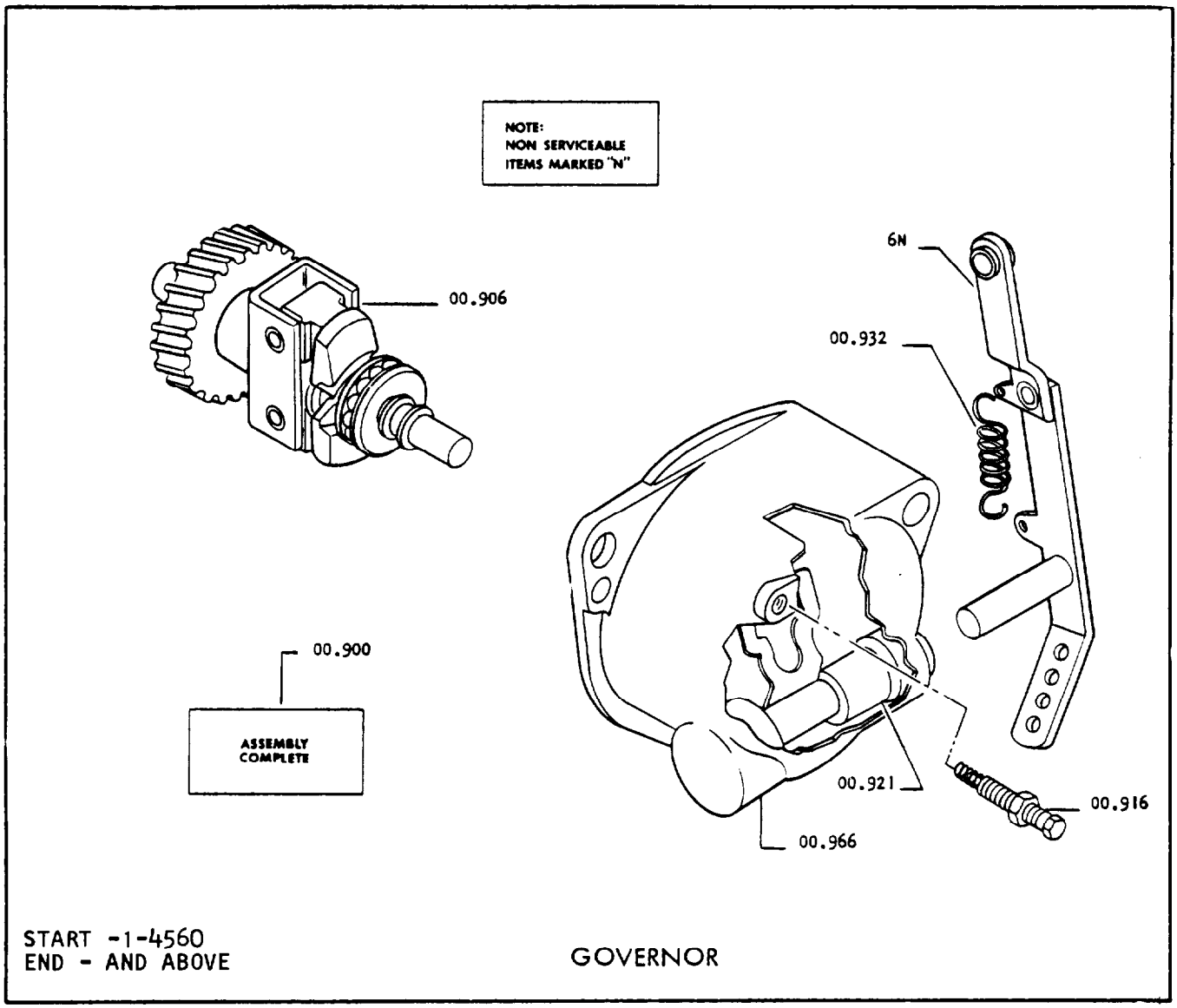

993154 GOVERNOR ASSEMBLY

00.900-993154	1	GOVERNOR ASSEMBLY
00.906-993154	1	SPIDER & SHAFT ASSEMBLY
00.916-905223	1	SETSCREW
00.921-897700	1	OIL SEAL
00.932-995566	1	AUXILIARY SPRING
00.966-993580	1	BODY ASSEMBLY

www.truck-freeworkshop.com/clark/

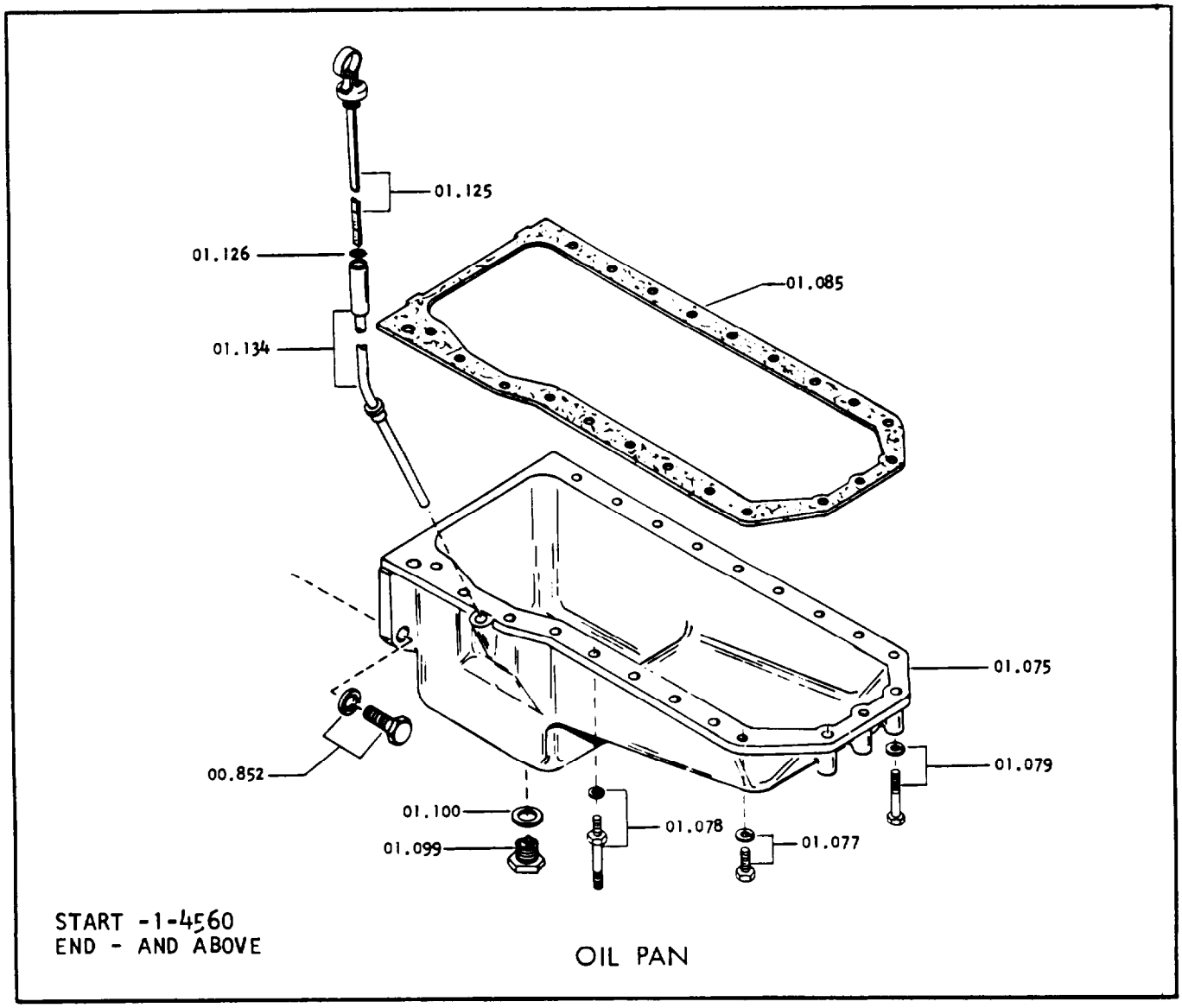

2351514 ENGINE ASSEMBLY (CONTINUED)

00.852-1C822	2	BOLT
00.852-23E8	2	LOCKWASHER
01.075-990299	1	OIL PAN
01.077-1C516	16	BOLT
01.077-23E5	16	LOCKWASHER
01.078-980899	2	STUD
01.078-23E5	2	LOCKWASHER
01.079-1C544	3	BOLT
01.079-23E5	3	LOCKWASHER
01.085-890883	1	OIL PAN GASKET
01.099-857712	1	DRAIN PLUG
01.100-954573	1	DRAIN PLUG GASKET
01.125-994009	1	DIPSTICK ASSEMBLY
01.126-994010	1	DIPSTICK O-RING
01.134-991830	1	DIPSTICK ADAPTOR

www.truck-freeworkshop.com/clark/

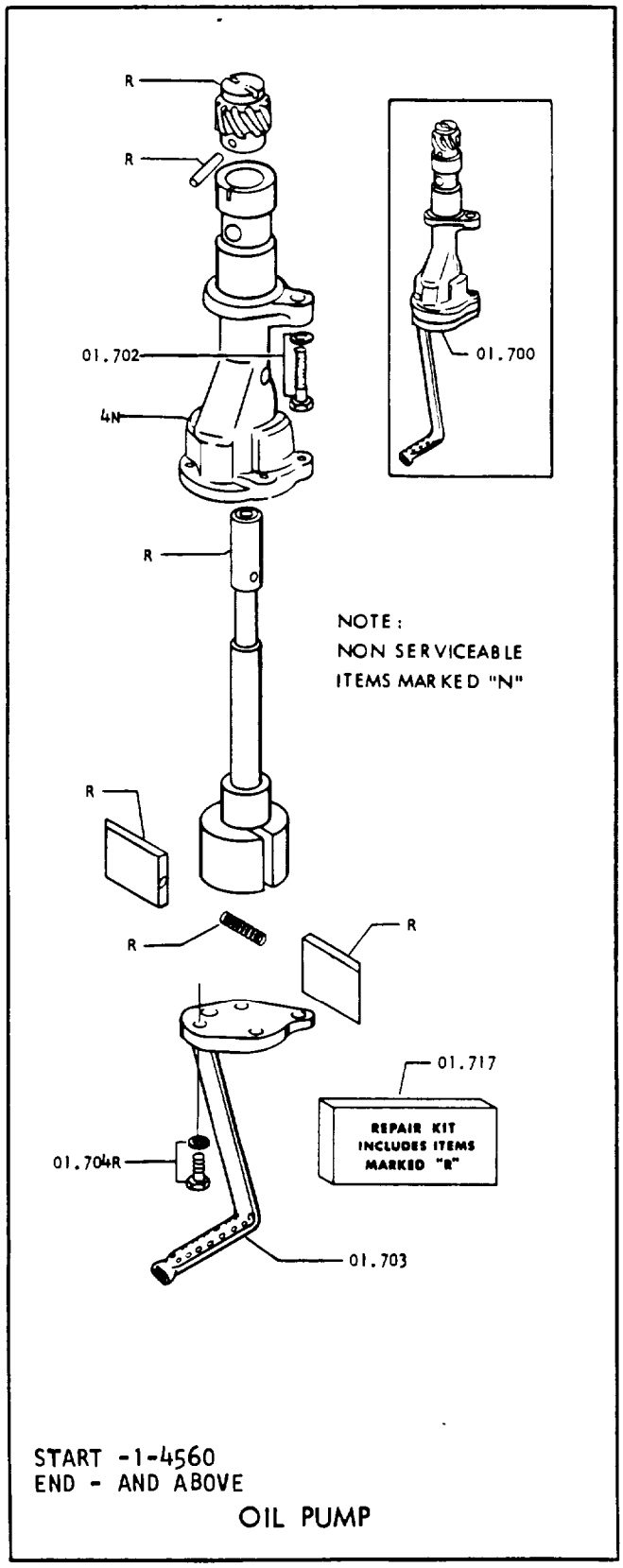

OIL PUMP

990315 OIL PUMP ASSEMBLY

01.700-990315	1	OIL PUMP ASSEMBLY
01.702-1C622	1	CAPSCREW
01.702-23E6	1	LOCKWASHER
01.703-990310	1	COVER & TUBE ASSEMBLY
01.704-1C512J	4	COVER BOLT
01.704-23E5	4	LOCKWASHER
01.717-990309	1	PUMP REPAIR KIT

www.truck-freeworkshop.com/clark/

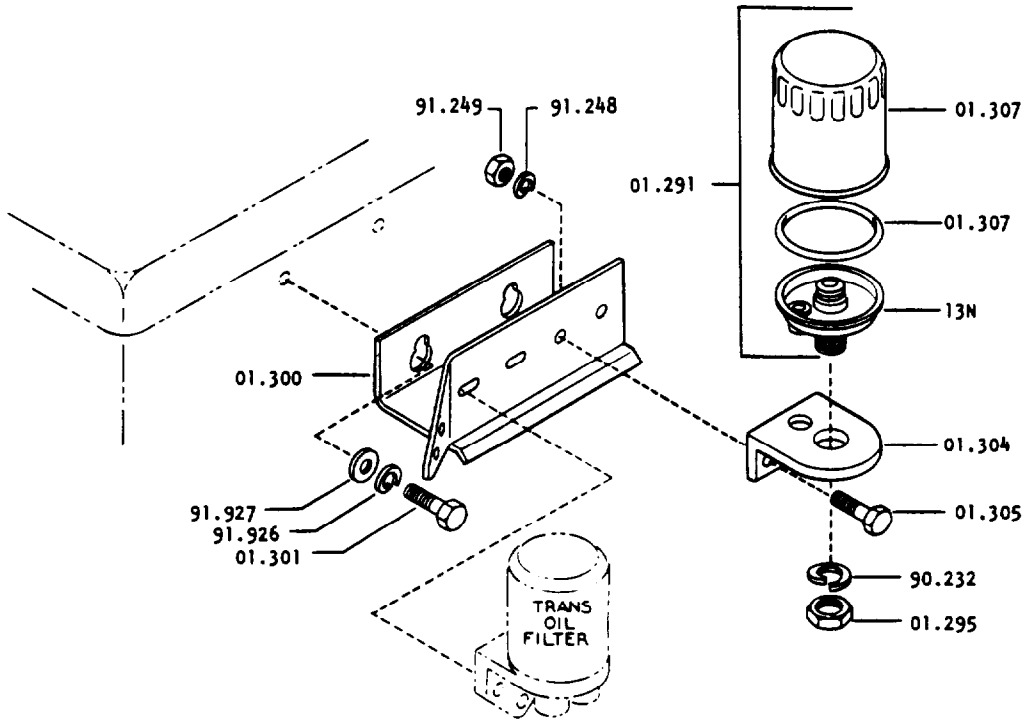

START -1-4560
END - AND ABOVE

ENGINE OIL FILTER

01-150 ENGINE OIL FILTER

01.291-1752522	1	ENGINE OIL FILTER
01.295-8D12	1	NUT
01.300-2358939	1	BRACKET
01.301-1C612	2	BOLT
01.304-1752520	1	BRACKET
01.305-1C514	2	BOLT
01.307-990936	1	CARTRIDGE & GASKET
90.232-6E12	1	LOCKWASHER
91.248-23E5	2	LOCKWASHER
91.249-61D5	2	NUT
91.926-23E6	2	LOCKWASHER
91.927-25E17	2	WASHER

www.truck-freeworkshop.com/clark/

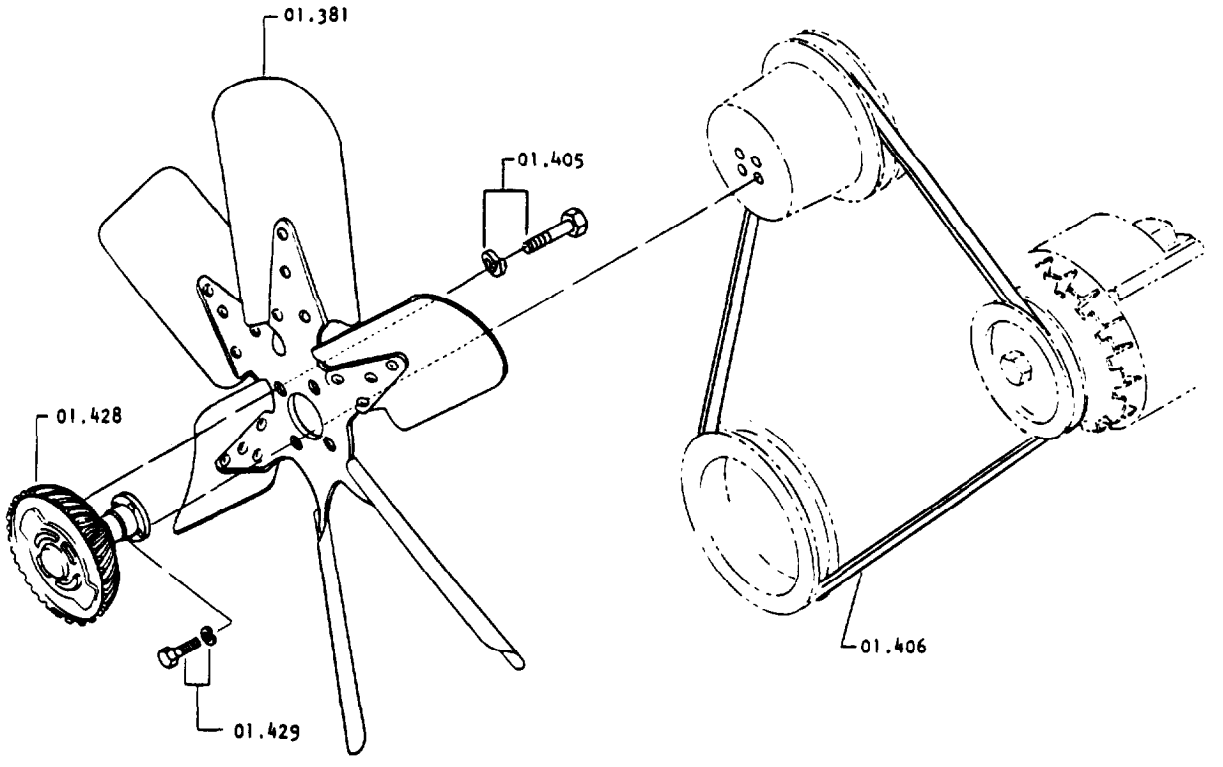

FAN AND DRIVE

01-191 FAN AND DRIVE

01.381-2328667	1	FAN BLADE
01.405-1C510	4	CAPSCREW
01.405-6E5	4	LOCKWASHER
01.406-1317741	1	FAN BELT (21.75")
01.428-2333211	1	FAN CONTROL CLUTCH
01.429-2C510	4	CAPSCREW
01.429-6E5	4	LOCKWASHER

www.truck-freeworkshop.com/clark/

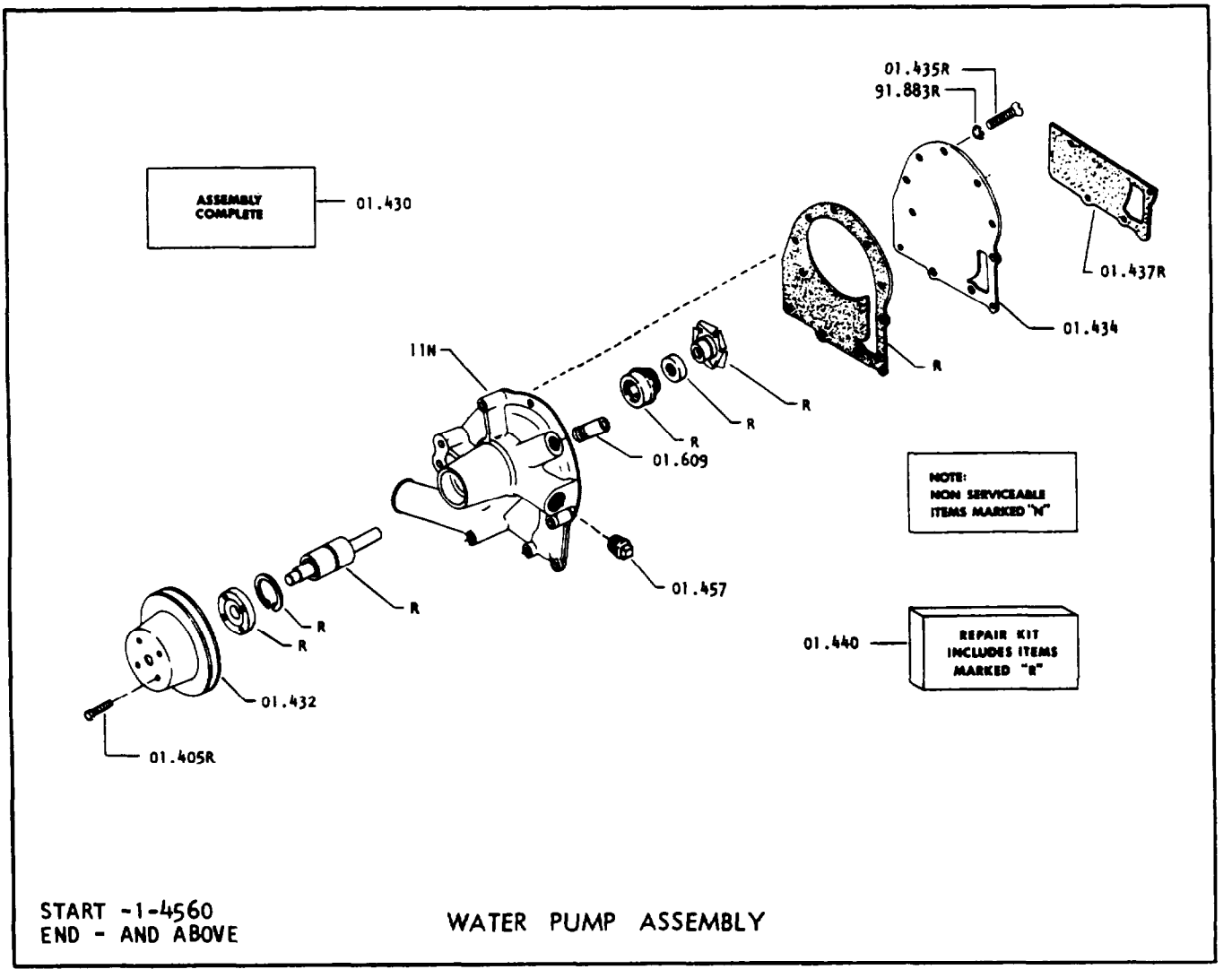

START -1-4560
END - AND ABOVE

WATER PUMP ASSEMBLY

995910 WATER PUMP ASSEMBLY

01.430-906153	1	WATER PUMP ASSEMBLY
01.405-2C508J	4	BOLT
01.432-994714	1	PULLEY
01.434-991087	1	COVER
01.435-7G408J	7	SCREW
01.437-890959	1	GASKET
01.440-906191	1	REPAIR KIT
01.457-40K8	2	PLUG
01.609-994722	2	FITTING
91.883-19E4	5	WASHER

www.truck-freeworkshop.com/clark/

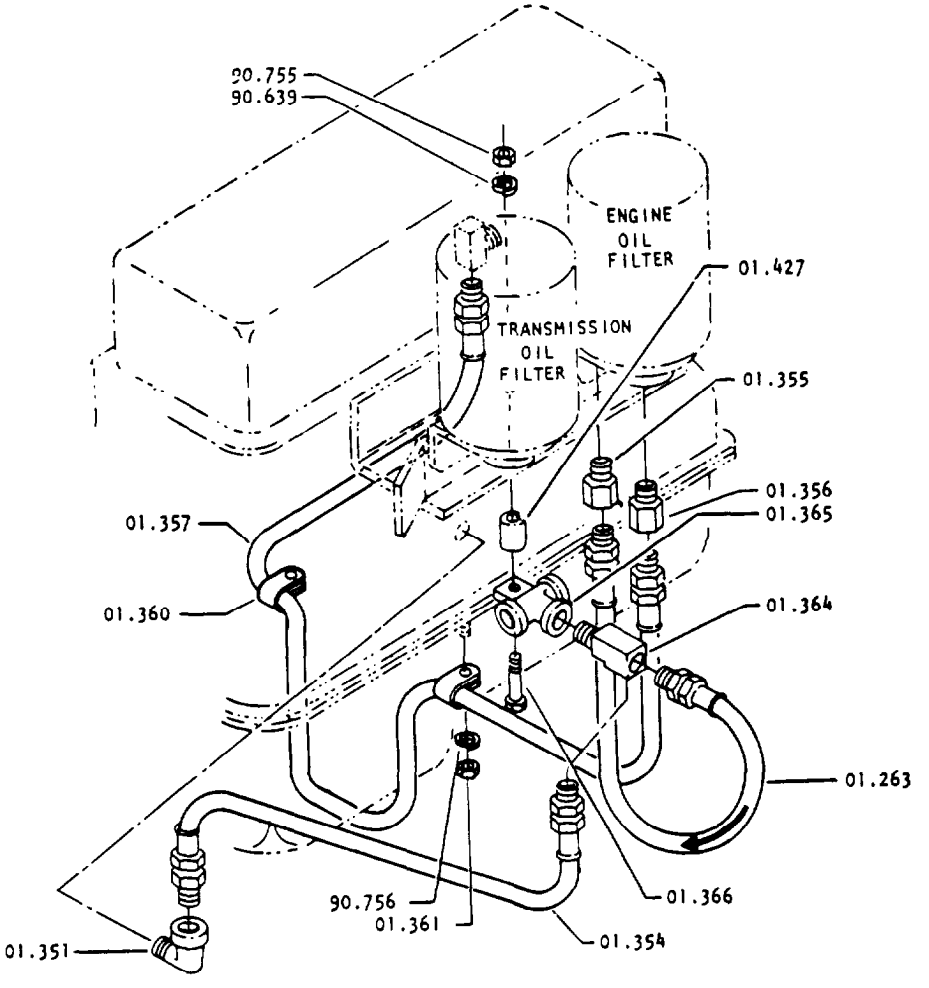

START -1-4560
END - AND ABOVE

ENGINE OIL LINES

01-539 ENGINE OIL LINES

01.263-8H1	1	HOSE ASSEMBLY
01.351-620558	1	ELBOW
01.354-8H3	1	HOSE ASSEMBLY
01.355-59F3	1	CONNECTOR
01.356-59F3	1	CONNECTOR
01.357-8H15	1	HOSE ASSEMBLY
01.360-30H26	2	CLIP
01.361-61D5	2	NUT
01.364-695695	1	TEE
01.365-1763634	1	TEE
01.366-1C640	1	BOLT
01.427-784941	1	SPACER
90.639-23E6	1	LOCKWASHER
90.755-61D6	1	NUT
90.756-23E5	2	LOCKWASHER

www.truck-freeworkshop.com/clark/

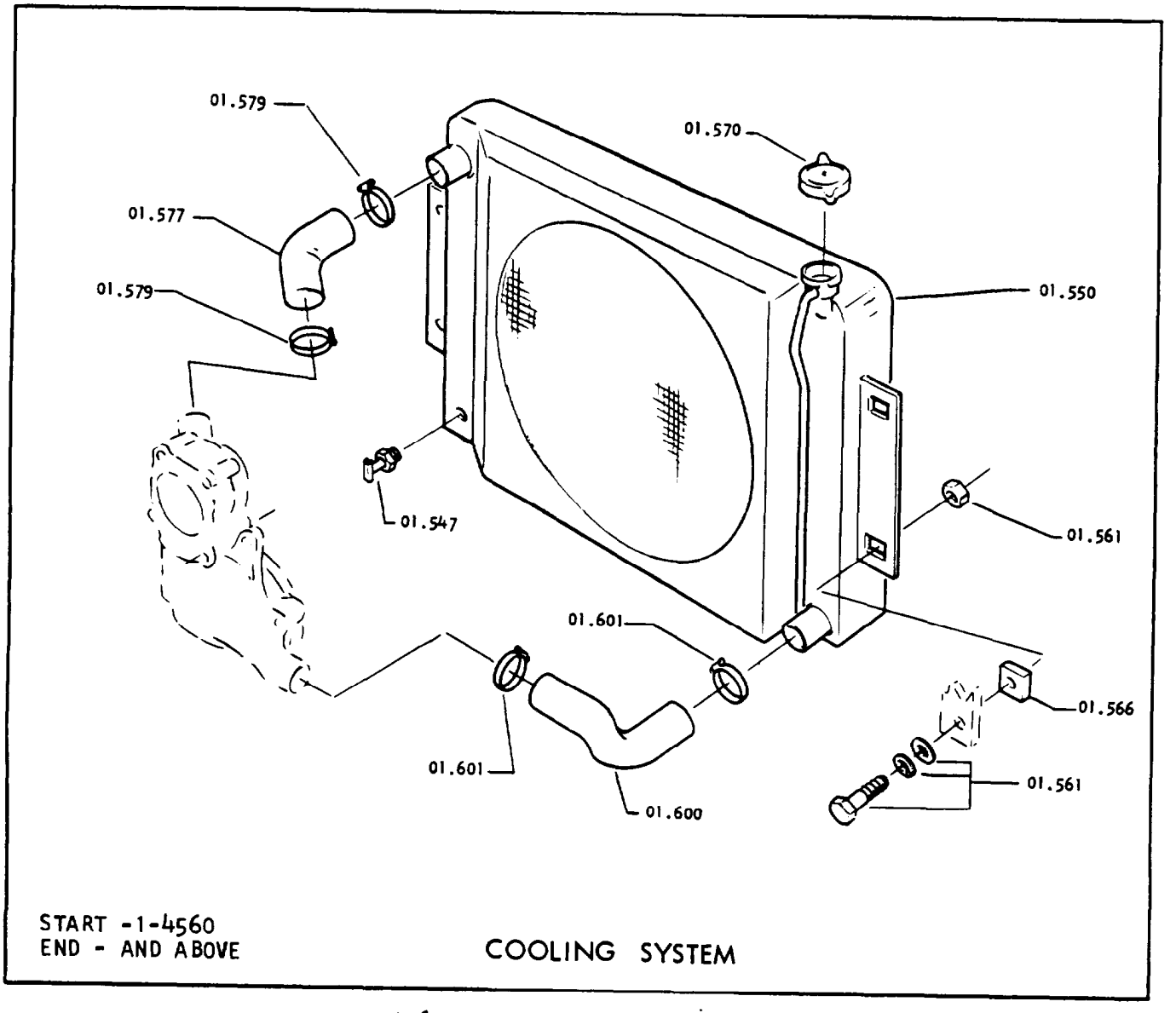

01-619 COOLING SYSTEM

01.547-1618561	1	DRAIN COCK
01.550-2326454	1	RADIATOR
01.561-1C620	4	BOLT
01.561-23E6	4	LOCKWASHER
01.561-25E6	4	WASHER
01.561-1618558	4	SELF ANCHORING NUT
01.566-2308056	4	PAD
01.570-525318	1	RADIATOR CAP
01.577-2332691	1	UPPER RADIATOR HOSE
01.579-42H28	2	CLAMP
01.600-1685065	1	LOWER RADIATOR HOSE
01.601-42H36	2	CLAMP

www.truck-freeworkshop.com/clark/

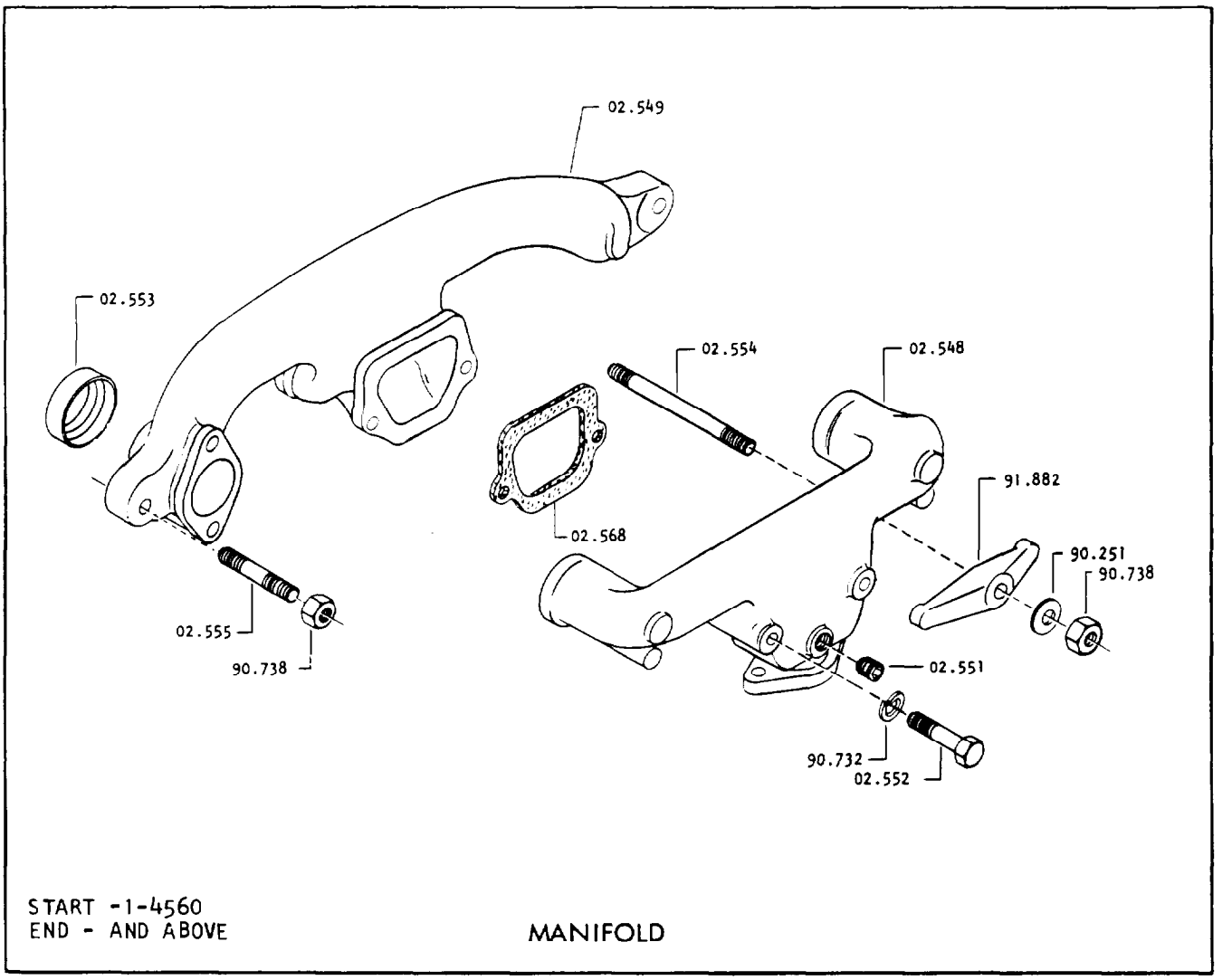

2351514 ENGINE ASSEMBLY (CONTINUED)

02.548-890963	1	INTAKE MANIFOLD
02.549-890964	1	EXHAUST MANIFOLD
02.551-16F4	1	PIPE PLUG
02.552-1C640	2	INTAKE TO EXHAUST BOLT
02.553-952795	6	MANIFOLD GASKETS
02.554-890997	2	MANIFOLD STUD
02.555-890995	2	MANIFOLD STUD
02.568-890965	1	INTAKE TO EXHAUST GASKET
90.251-864106	2	WASHER
90.732-23E6	2	LOCKWASHER
90.738-957280	4	NUT
91.882-940790	2	CLAMP

www.truck-freeworkshop.com/clark/

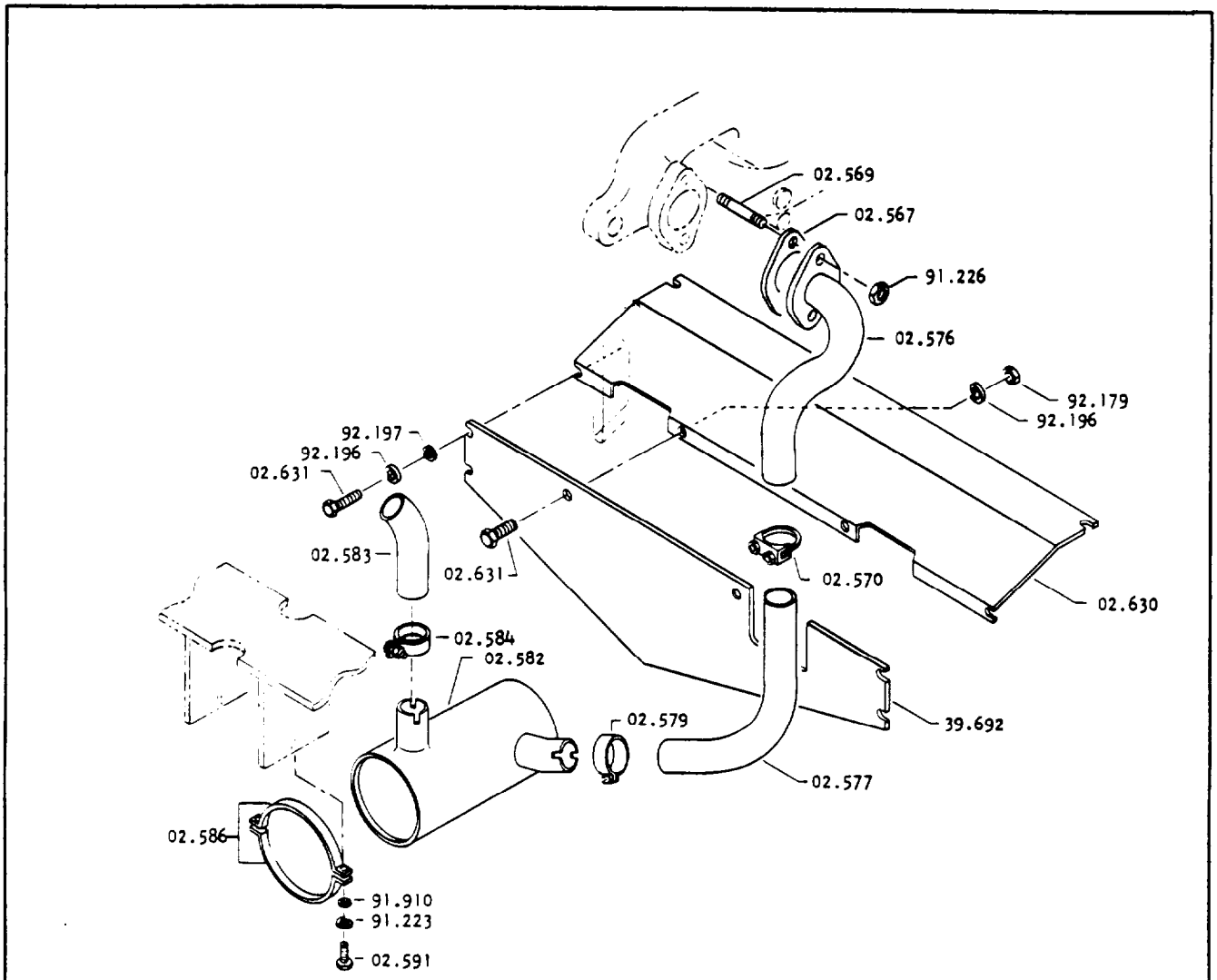

START -1-4560
END - AND ABOVE

EXHAUST SYSTEM

02-097 MUFFLER

02.567-1685085	1	GASKET
02.569-1722717	2	STUD
02.570-657904	1	CLAMP
02.576-1721237	1	EXHAUST PIPE (MANIFOLD END)
02.577-1685008	1	EXHAUST PIPE (MUFFLER END)
02.579-604231	1	CLAMP
02.582-1750988	1	MUFFLER
02.583-1751024	1	TAIL PIPE
02.584-604231	1	CLAMP
02.586-1721219	2	BRACKET
02.591-21C616	2	CAPSCREW
02.630-2324781	1	SHIELD
02.631-1C508	8	CAPSCREW
39.692-1753918	1	SHIELD
91.223-23E6	2	LOCKWASHER
91.266-957280	2	NUT
91.910-25E17	2	WASHER
92.179-1312080	2	NUT
92.196-23E5	8	LOCKWASHER
92.197-25E15	6	WASHER

www.truck-freeworkshop.com/clark/

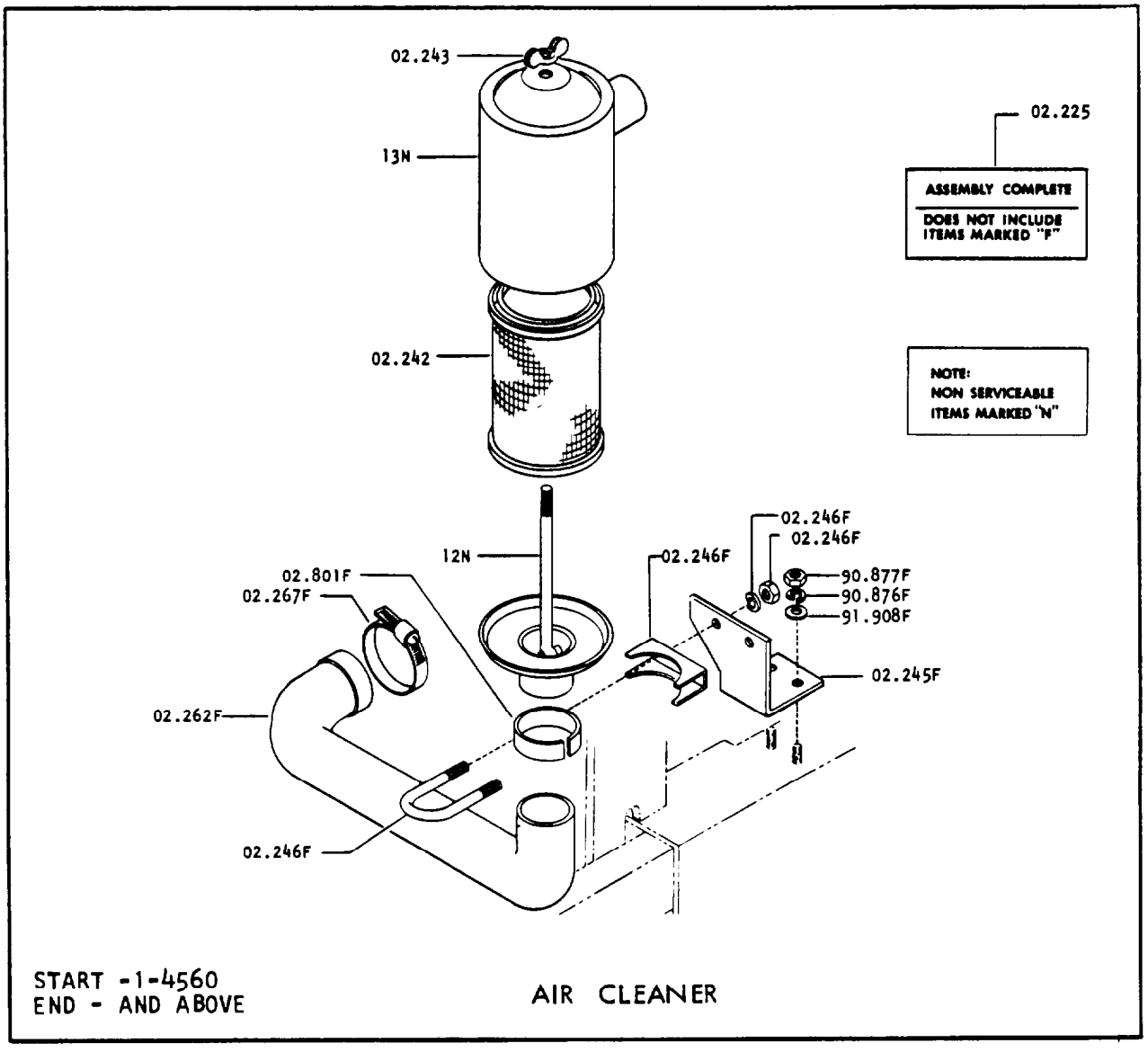

1721276 AIR CLEANER ASSEMBLY

02.225-1721276	1	AIR CLEANER ASSEMBLY
02.242-668788	1	ELEMENT & GASKET
02.243-883718	1	WING NUT
02.245-1704308	1	BRACKET
02.246-669016	1	CLAMP
02.262-2341636	1	HOSE
02.267-42H36	1	CLAMP
02.801-1704314	1	SLEEVE
90.876-23E5	2	LOCKWASHER
90.877-61D5	2	NUT
91.908-25E16	2	WASHER

www.truck-freeworkshop.com/clark/

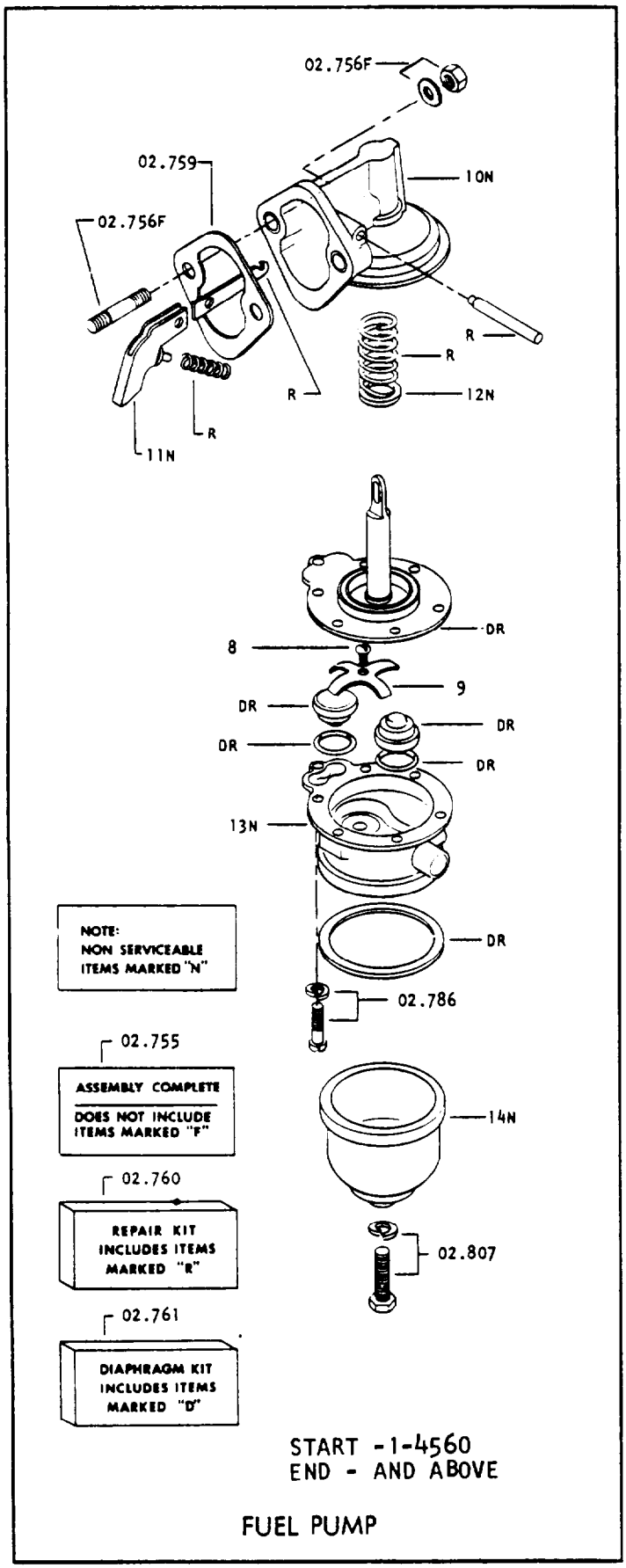

FUEL PUMP

1625352 FUEL PUMP ASSEMBLY

02.755-1625352	1	FUEL PUMP ASSEMBLY
02.756-980884	2	STUD
02.756-952759	2	WASHER
02.756-62D5	2	NUT
02.759-890490	1	GASKET
02.760-895887	1	REPAIR KIT
02.761-895888	1	DIAPHRAGM KIT
02.786-42G1010	6	SCREW
02.786-17E10	6	LOCKWASHER
02.807-32C406	1	BOLT

www.truck-freeworkshop.com/clark/

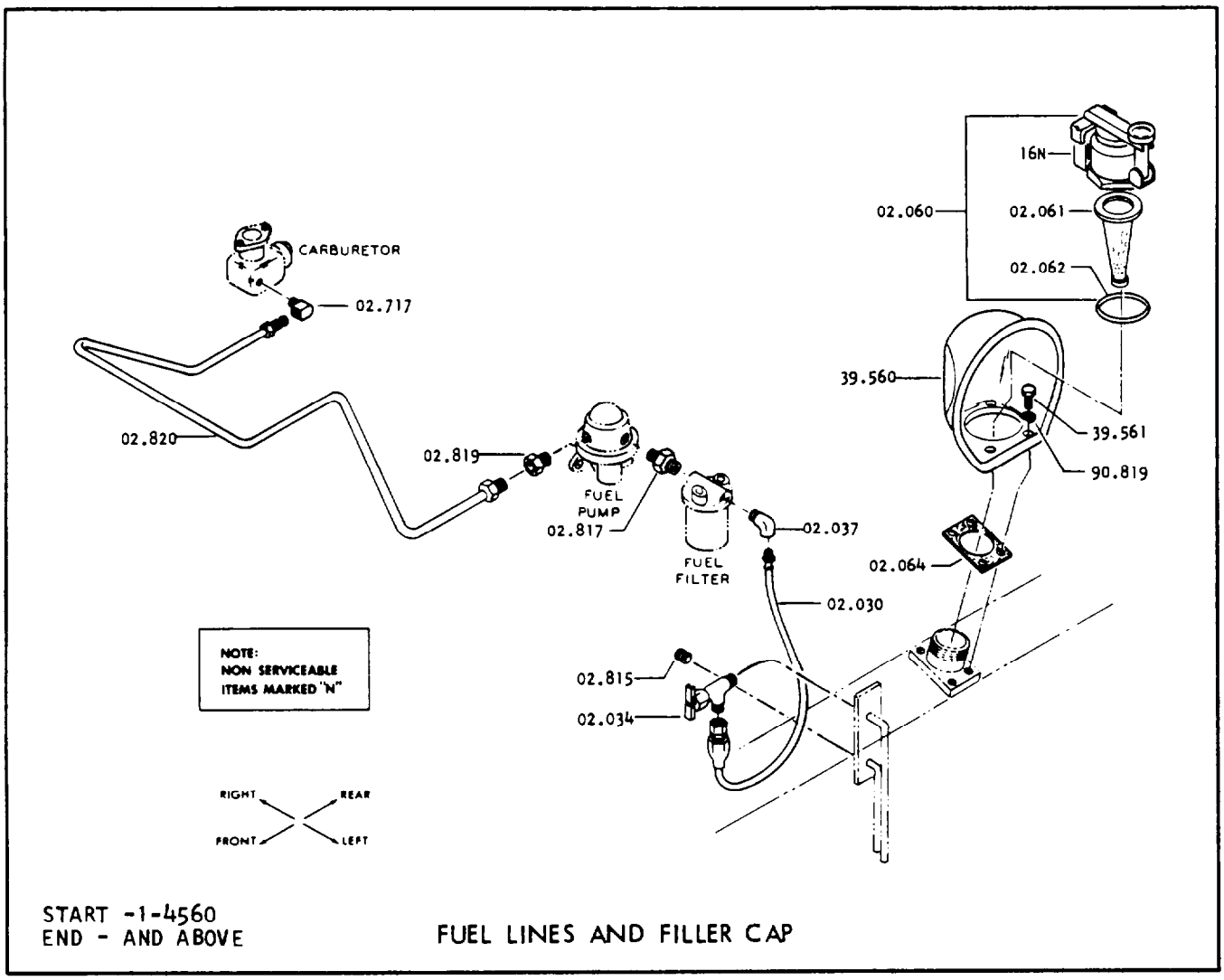

START -1-4560
END - AND ABOVE

FUEL LINES AND FILLER CAP

02-330 FUEL LINES AND FILLER CAP

02.030-2351591	1	HOSE
02.034-69F1	1	VALVE - 2 WAY
02.037-62F5	1	ELBOW
02.060-793560	1	FUEL CAP ASSEMBLY
02.061-862494	1	BAFFLE
02.062-25K40112	1	O-RING
02.064-1721287	1	GASKET
02.717-62F3	1	ELBOW
02.815-16F2	1	PLUG
02.817-1309991	1	CONNECTOR
02.819-59F3	1	ADAPTOR
02.820-2351589	1	TUBE
39.560-1727704	1	FILLER WELL
39.561-1C508	4	CAPSCREW
90.819-23E5	4	LOCKWASHER

www.truck-freeworkshop.com/clark/

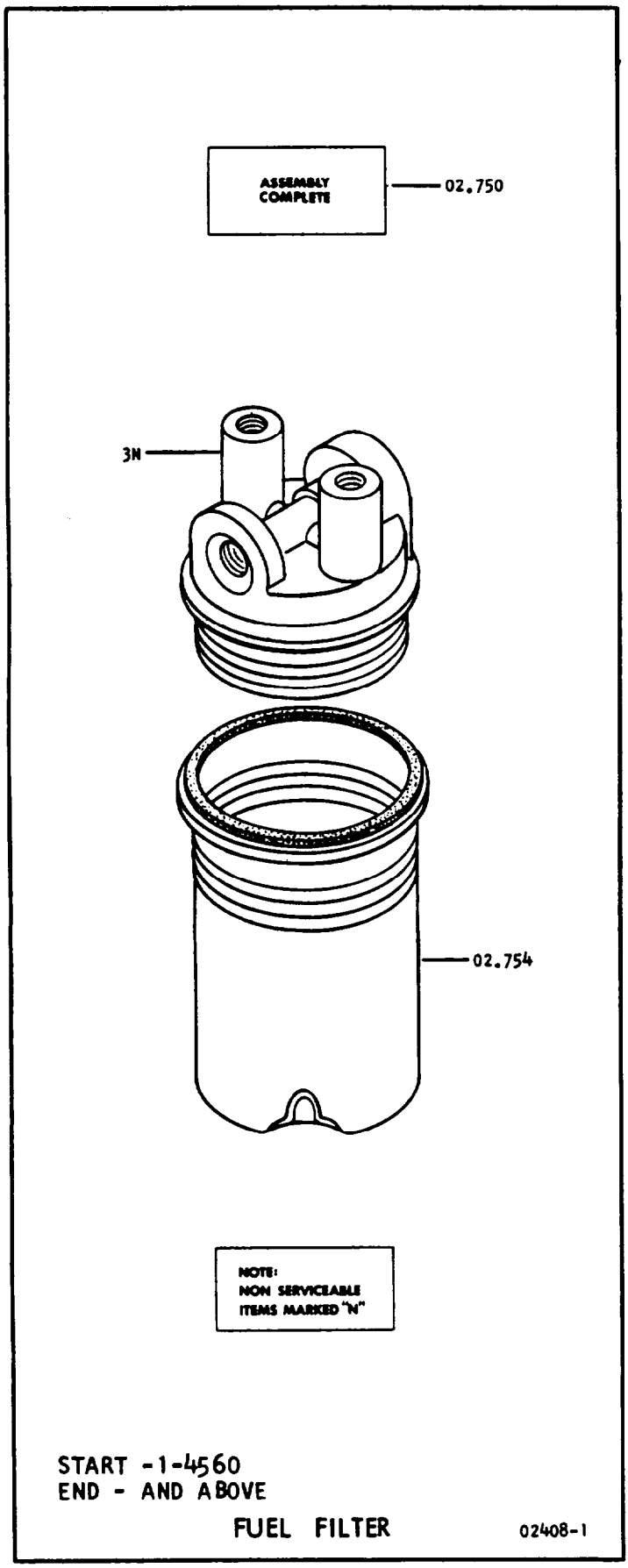

1830826 FUEL FILTER ASSEMBLY

02.750-1830826	1	FUEL FILTER ASSEMBL'
02.754-999478	1	ELEMENT

www.truck-freeworkshop.com/clark/

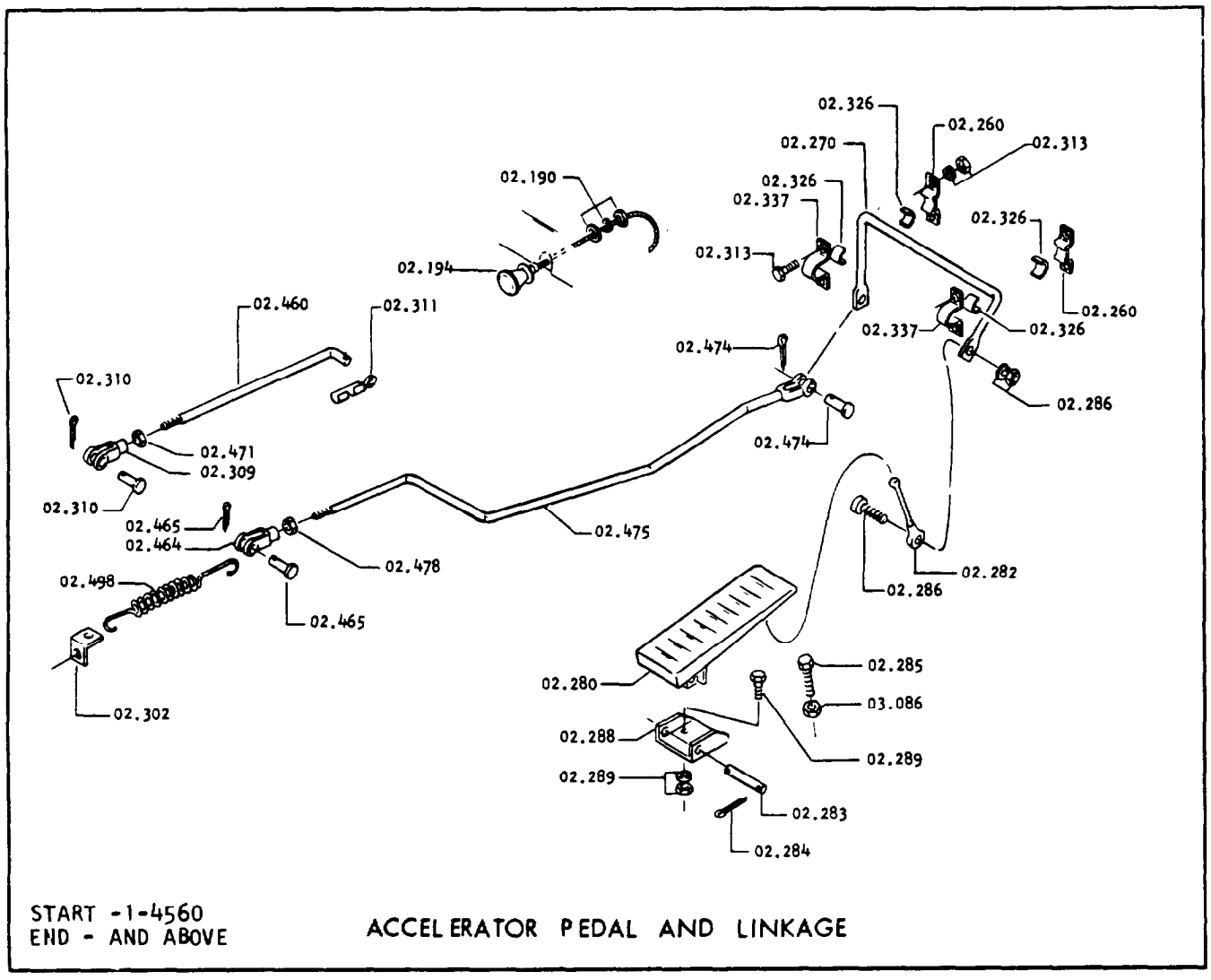

START -1-4560
END - AND ABOVE

ACCELERATOR PEDAL AND LINKAGE

02-839 ACCELERATOR PEDAL AND LINKAGE

02.190-25E17	1	WASHER
02.190-23E6	1	LOCKWASHER
02.190-8D6	1	NUT
02.194-2323884	1	CHOKE CONTR CABLE ASSEM
02.260-1778135	2	BRACKET
02.270-1799996	1	ACCELERATOR LEVER
02.280-1618462	1	ACCELERATOR PEDAL
02.282-1737669	1	PUSH ROD
02.283-1311294	1	PIN
02.284-1F316	1	COTTER
02.285-1C524	1	STOP
02.286-663957	1	CAPSCREW
02.288-1618463	1	BRACKET
02.289-1C410	2	BOLT
02.289-23E4	2	LOCKWASHER
02.289-61D4	2	NUT
02.302-1723973	1	BRACKET
02.309-2J4200	1	CLEVIS
02.310-1F208	1	COTTER
02.311-1300311	1	CLIP
02.313-46G1012	4	BOLT
02.313-17E10	4	LOCKWASHER
02.313-14D10	4	NUT
02.326-1784655	4	BEARING
02.337-1778134	2	BRACKET
02.460-1321085	1	ROD
02.464-2J4200	1	CLEVIS
02.465-4F4051	1	PIN
02.471-8D4	1	NUT
02.474-4F4051	1	PIN
02.475-1721265	1	ROD
02.478-8D4	1	NUT
02.498-1704264	1	SPRING
03.086-7D5	1	NUT

www.truck-freeworkshop.com/clark/

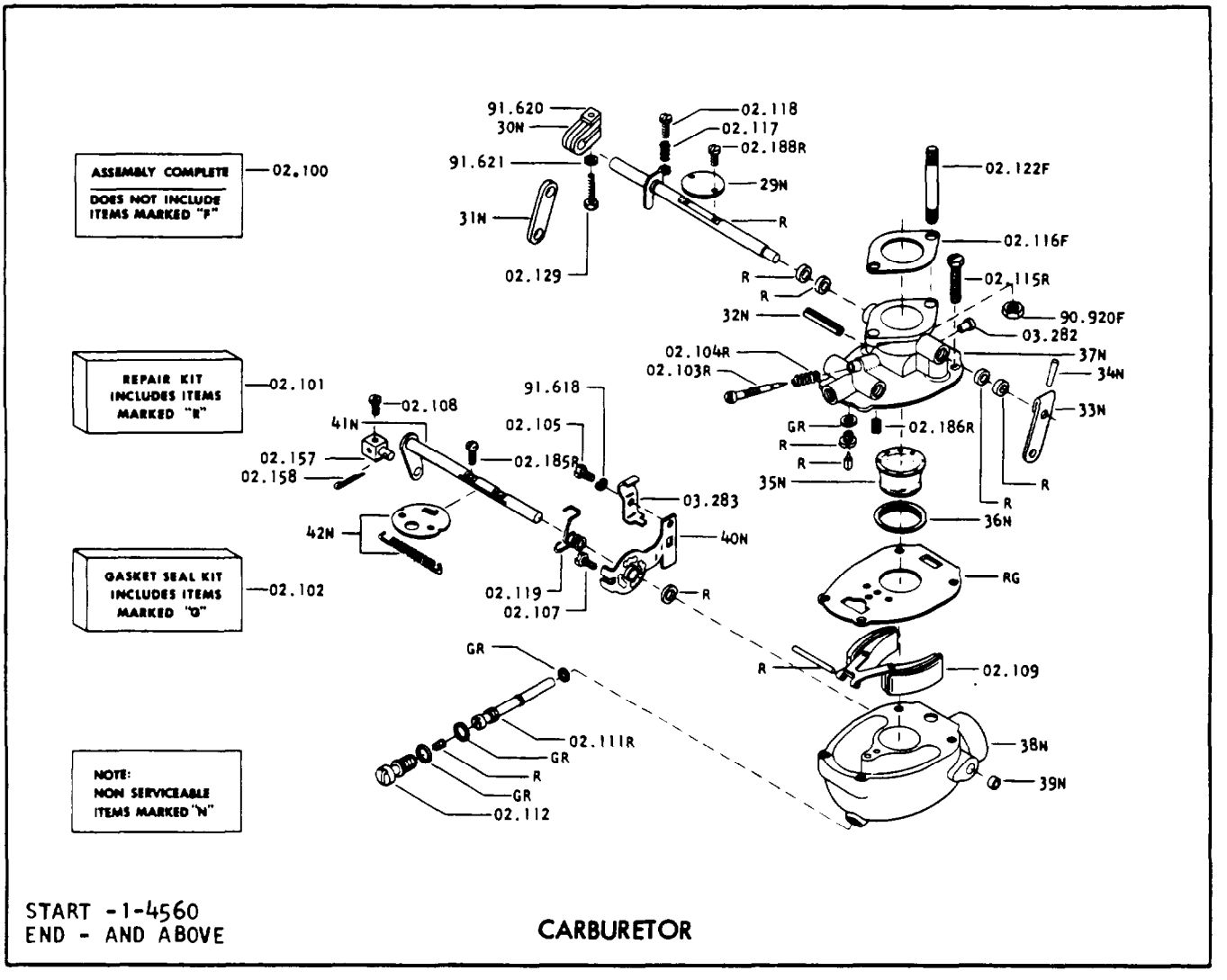

START -1-4560
END - AND ABOVE

CARBURETOR

2352593 CARBURETOR ASSEMBLY

02.100-2352593	1	CARBURETOR ASSEMBLY
02.101-999289	1	REPAIR KIT
02.102-1811097	1	GASKET KIT
02.103-999290	1	SCREW
02.104-999291	1	SPRING
02.105-45G806	1	SCREW
02.107-41G806	1	SCREW
02.108-41G805	1	SCREW
02.109-999292	1	FLOAT
02.111-999293	1	MAIN DISCHARGE JET
02.112-999294	1	PLUG
02.115-868630	4	SCREW
02.116-602327	1	GASKET
02.117-850687	1	SPRING
02.118-999295	1	SCREW
02.119-999296	1	SPRING
02.122-2360172	2	STUD
02.129-45G1012R	1	SCREW
02.157-850694	1	SWIVEL
02.158-850712	1	COTTER
02.185-868629	2	SCREW
02.186-879193	1	IDLE JET
02.188-868629	2	SCREW
03.282-867199	1	PLUG
03.283-856335	1	CLAMP
90.920-65D5	2	NUT
91.618-17E8	1	LOCKWASHER
91.620-990146	1	NUT
91.621-990908	1	WASHER

www.truck-freeworkshop.com/clark/

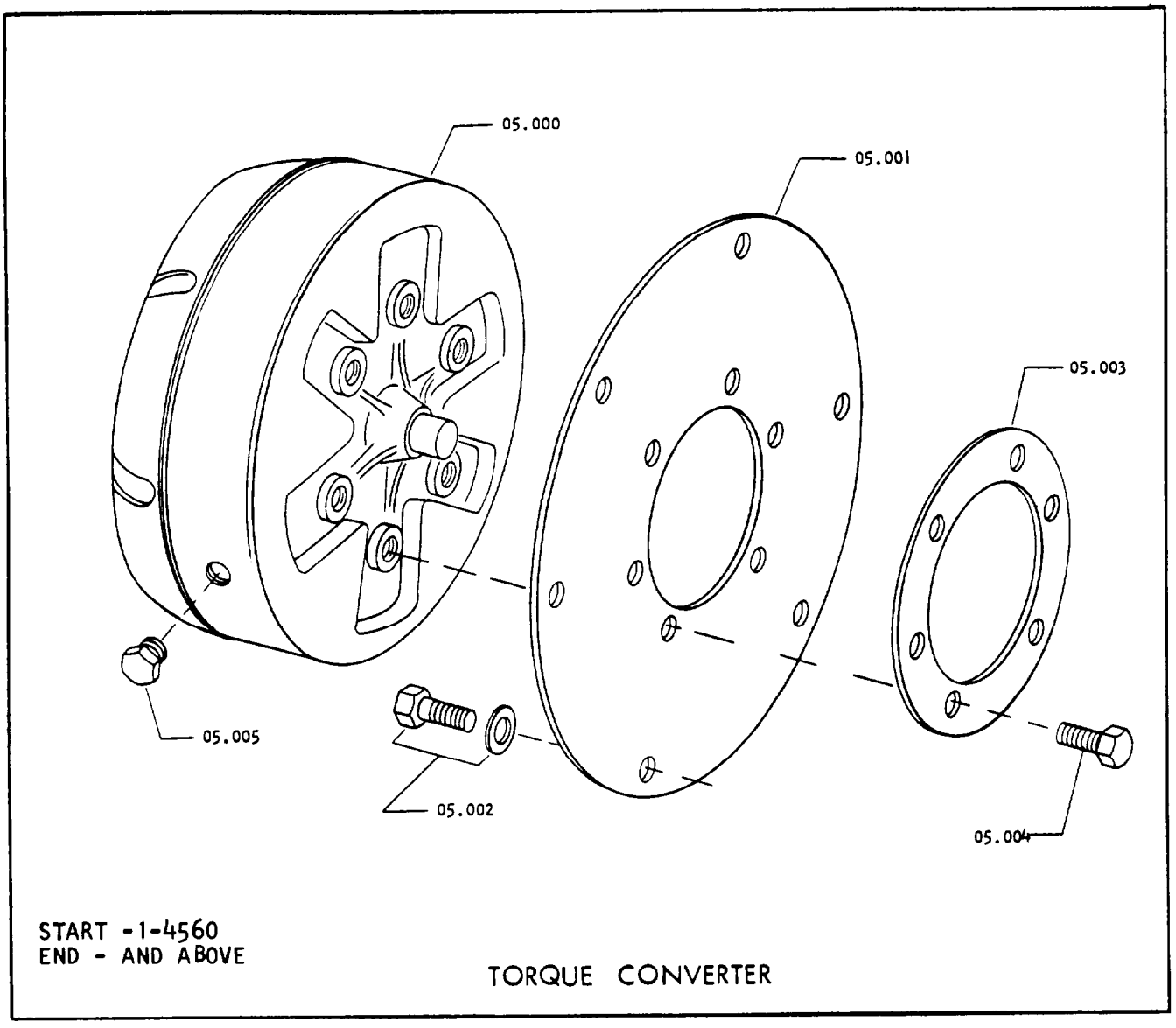

229252 TORQUE CONVERTER ASSEMBLY

05.000-229252	1	TORQUE CONVERTER ASSEMBLY
05.001-224338	1	DRIVE PLATE
05.002-29C510	6	CAPSCREW
05.002-757892	6	WASHER
05.003-224339	1	REINFORCING PLATE
05.004-30C608	6	CAPSCREW
05.005-850272	1	PLUG

www.truck-freeworkshop.com/clark/

THE COMPONENTS OF THIS CONVERTER CHARGING PUMP ARE NOT SERVICEABLE, REPLACE WITH A NEW PUMP,

START -1-4560
END - AND ABOVE

CONVERTER PUMP

450263 CONVERTER PUMP

29,300-450263	1	CONVERTER CHARGING PUMP

www.truck-freeworkshop.com/clark/

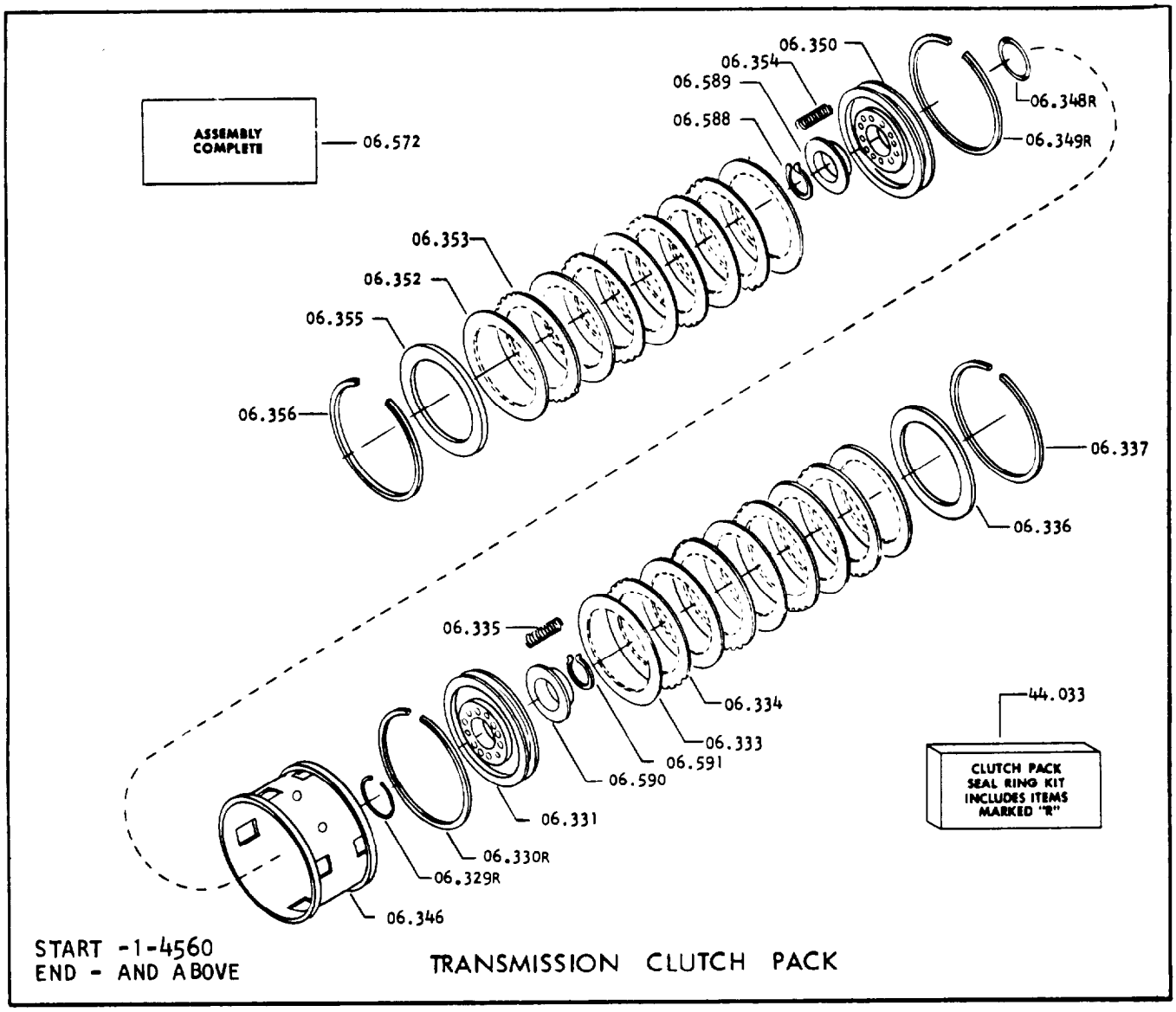

237038 CLUTCH PACK ASSEMBLY

06.572-237038	1	CLUTCH PACK ASSEMBLY
06.329-223570	1	PISTON SEAL RING
06.330-224281	1	PISTON SEAL RING
06.331-235972	1	PISTON
06.333-236989	5	DISC (INNER)
06.334-224246	4	DISC (OUTER)
06.335-235974	18	SPRING
06.336-236287	1	END PLATE
06.337-224300	1	SNAP RING
06.346-216519	1	HUB & DRUM ASSEMBLY
06.348-223570	1	PISTON SEAL RING
06.349-224281	1	PISTON SEAL RING
06.350-235972	1	PISTON
06.352-236989	5	DISC (INNER)
06.353-224246	4	DISC (OUTER)
06.354-235974	18	SPRING
06.355-236287	1	END PLATE
06.356-224300	1	SNAP RING
06.588-218374	1	SNAP RING
06.589-235973	1	SPRING SEAT
06.590-235973	1	SPRING SEAT
06.591-218374	1	SNAP RING
44.033-801975	1	SEAL RING KIT

www.truck-freeworkshop.com/clark/

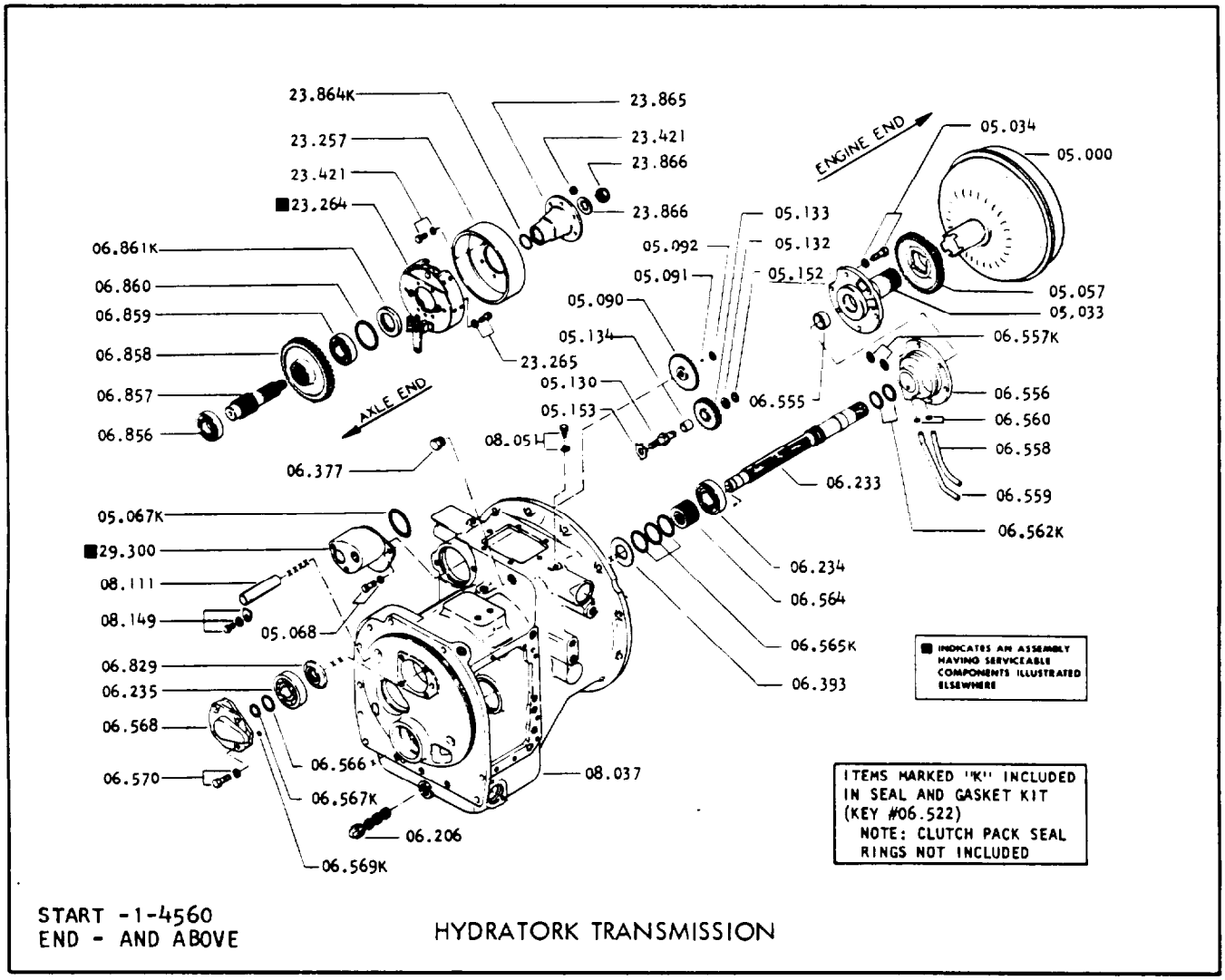

START -1-4560
END - AND ABOVE

HYDRATORK TRANSMISSION

285315 TRANSMISSION ASSEMBLY (CONTINUED)

05.000-229252	1	TORQUE CONVERTER
05.033-233324	1	STATOR SUPPORT
05.034-1C616	6	BOLT
05.034-23E6	6	LOCKWASHER
05.057-208791	1	GEAR (50 TEETH)
05.067-873297	1	O-RING
05.068-5C616	2	BOLT & LOCKWASHER
05.090-230562	1	GEAR
05.091-6J403	1	KEY
05.092-224095	1	SNAP RING
05.130-230397	1	IDLER SHAFT
05.132-230394	1	THRUST WASHER
05.133-230395	1	GEAR W/BEARING
05.134-763843	1	BEARING
05.152-784433	1	SNAP RING
05.153-230398	1	LOCK
06.206-226858	1	MAGNETIC PLUG
06.233-236273	1	INPUT SHAFT
06.234-225953	1	BEARING
06.235-224238	1	BEARING
06.377-16F12	1	PIPE PLUG
06.393-224250	1	THRUST WASHER
06.555-227047	1	BUSHING
06.556-216539	1	OIL DISTRIBUTOR
06.557-60K20018	2	O-RING
06.558-224327	1	"FORWARD" OIL TUBE
06.559-230739	1	"REVERSE" OIL TUBE
06.560-60K20012	4	O-RING
06.562-209304	2	O-RING

www.truck-freeworkshop.com/clark/

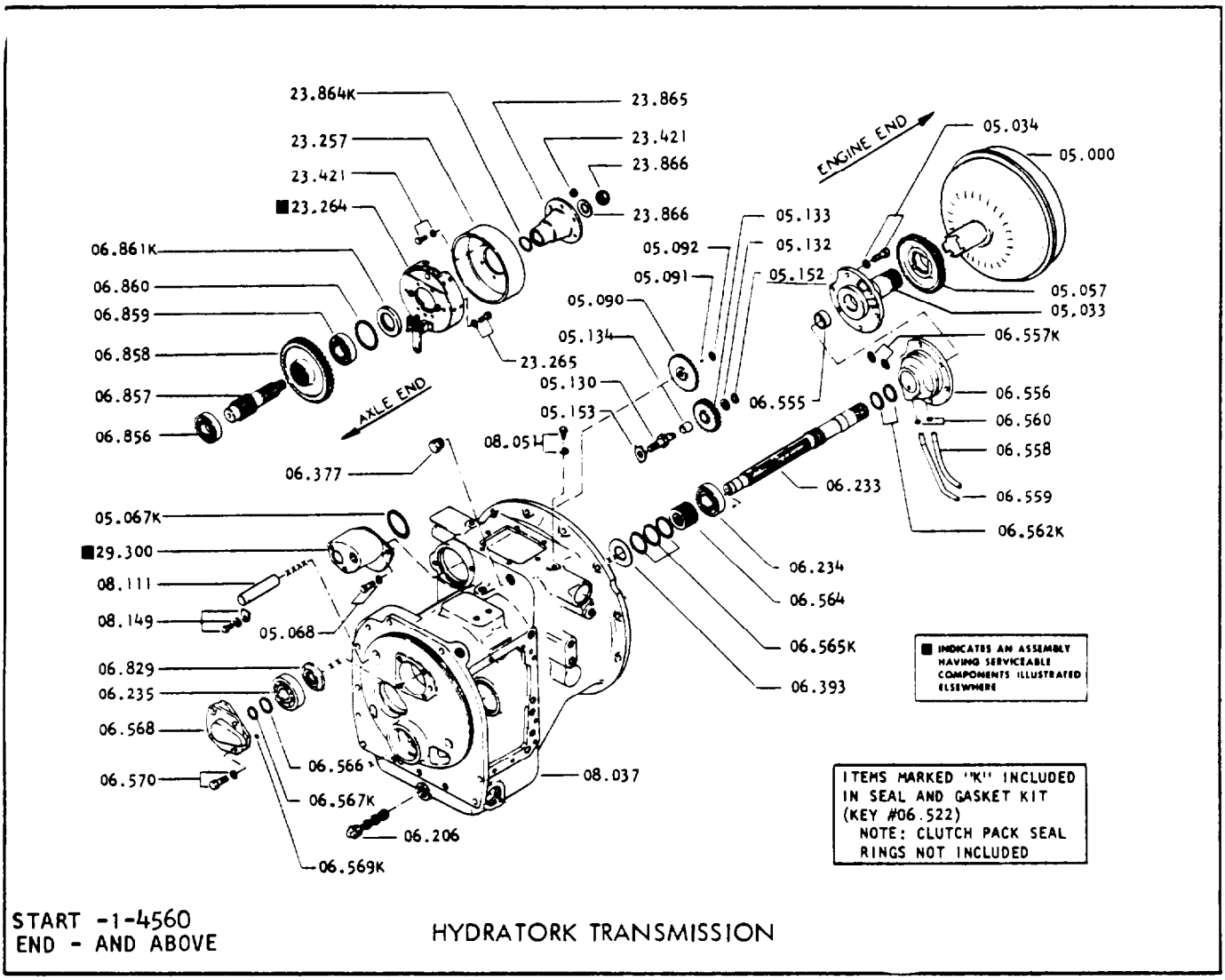

START -1-4560
END - AND ABOVE

HYDRATORK TRANSMISSION

285315 TRANSMISSION ASSEMBLY (CONTINUED)

06.564-216550	1	OIL SLEEVE
06.565-211616	3	O-RING
06.566-224230	1	SNAP RING
06.567-209791	1	O-RING
06.568-216399	1	BEARING CAP
06.570-1C616	4	BOLT
06.570-23E6	4	LOCKWASHER
06.829-227827	1	THRUST WASHER
06.856-853189	1	BEARING
06.857-230366	1	AUXILIARY SHAFT
06.858-230367	1	GEAR (43 TEETH)
06.859-853189	1	BEARING
06.860-223863	1	SNAP RING
06.861-225957	1	O-RING
08.037-235341	1	TRANSMISSION CASE
08.051-21C612	2	BOLT
08.051-23E6	2	LOCKWASHER
08.111-224269	1	REVERSE IDLER SHAFT
08.149-201929	1	LOCK PLATE
08.149-1C610	1	BOLT
08.149-23E6	1	LOCKWASHER
23.257-230365	1	BRAKE DRUM
23.264-232474	1	PARKING BRAKE ASSEM
23.265-1C512	6	BOLT
23.265-23E5	6	LOCKWASHER
23.421-1C512	6	BOLT
23.421-23E5	6	LOCKWASHER
23.864-60K20104	1	O-RING
23.865-230371	1	DRUM FLANGE
23.866-66D12	1	NUT
23.866-619034	1	WASHER
29.300-450263	1	CON/PUMP (NO SERVICEABLE COMPONENTS)

www.truck-freeworkshop.com/clark/

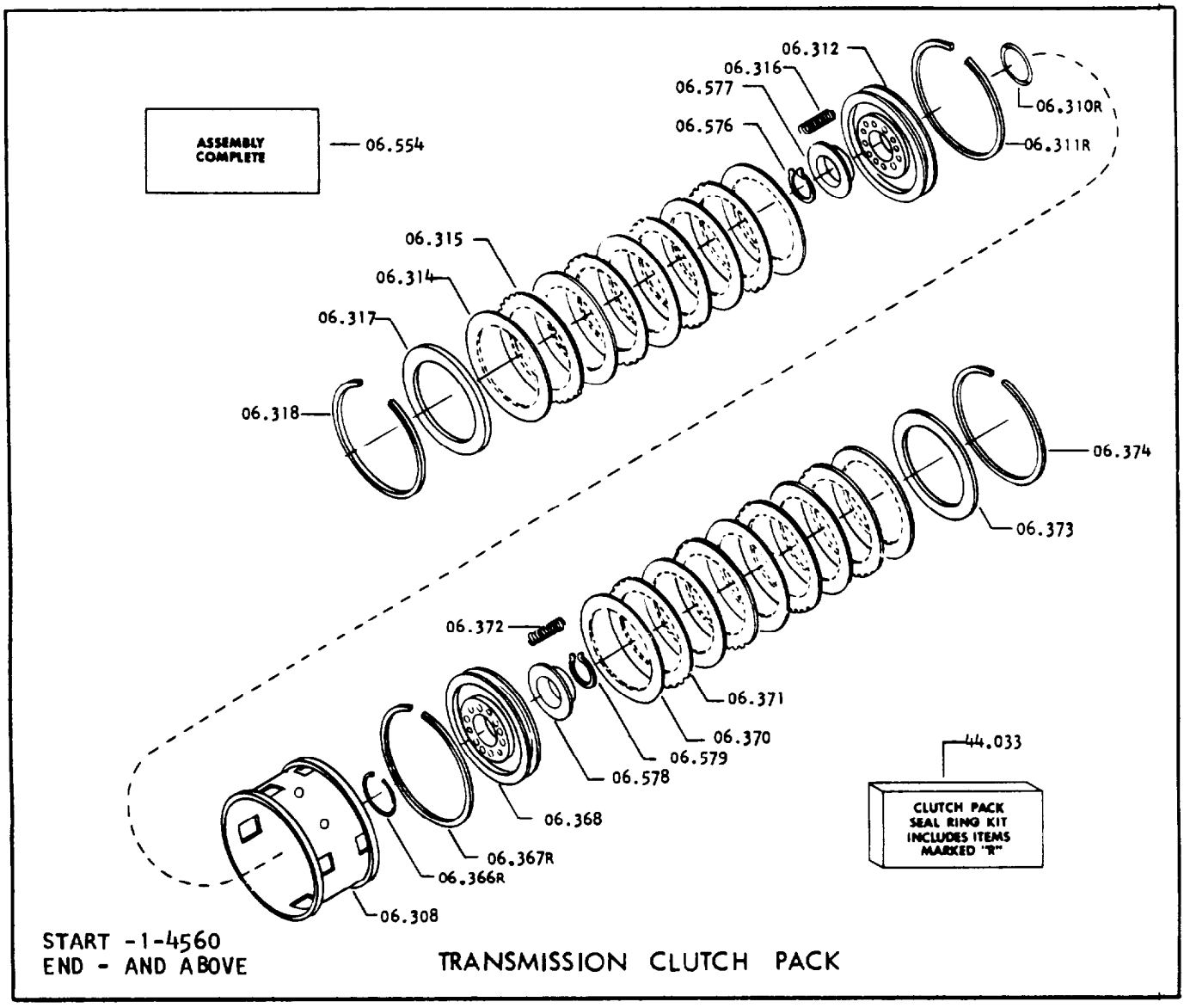

237038 CLUTCH PACK ASSEMBLY

06.554-237038	1	CLUTCH PACK ASSEMBLY
06.308-216519	1	HUB & DRUM ASSEMBLY
06.310-223570	1	PISTON SEAL RING
06.311-224281	1	PISTON SEAL RING
06.312-235972	1	PISTON
06.314-236989	5	DISC (INNER)
06.315-224246	4	DISC (OUTER)
06.316-235974	18	SPRING
06.317-236287	1	END PLATE
06.318-224300	1	SNAP RING
06.366-223570	1	PISTON SEAL RING
06.367-224281	1	PISTON SEAL RING
06.368-235972	1	PISTON
06.370-236989	5	DISC (INNER)
06.371-224246	4	DISC (OUTER)
06.372-235974	18	SPRING
06.373-236287	1	END PLATE
06.374-224300	1	SNAP RING
06.576-218374	1	SNAP RING
06.577-235973	1	SPRING RETAINER
06.578-235973	1	SPRING RETAINER
06.579-218374	1	SNAP RING
44.033-801975	1	SEAL RING KIT

www.truck-freeworkshop.com/clark/

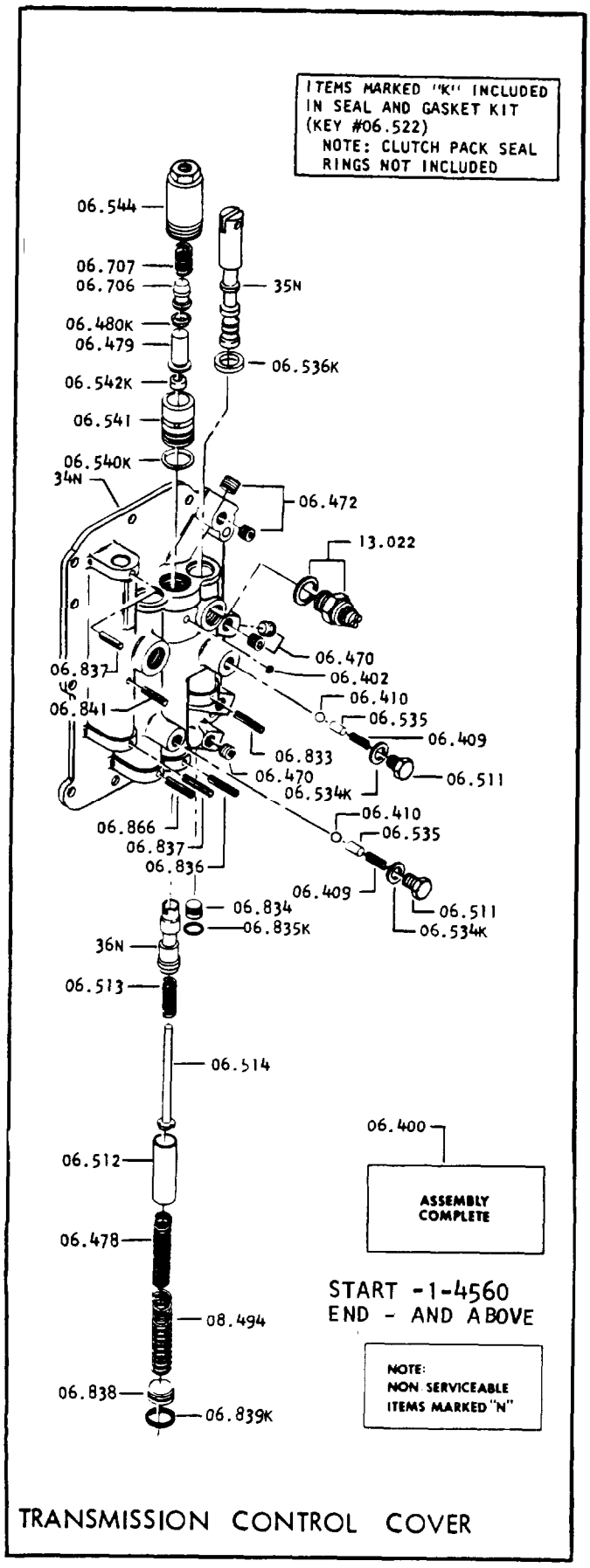

TRANSMISSION CONTROL COVER

237020 CONTROL COVER AND VALVE ASSEMBLY

06.400-237020	1	CONTROL COVER AND VALVE ASSEMBLY
06.402-135065	1	FILTER
06.409-216303	2	SPRING
06.410-10J12	2	BALL
06.470-16F2	8	PIPE - PLUG
06.472-16F4	2	PIPE - PLUG
06.478-236851	1	SPRING (INNER)
06.479-227491	1	PISTON
06.480-227881	1	SEAL
06.511-47K3	2	PLUG
06.512-217803	1	STOP
06.513-237096	1	SPRING
06.514-227987	1	ROD
06.534-91F3	2	O-RING
06.535-224913	2	PIN
06.536-224322	1	SEAL
06.540-25K20100	1	O-RING
06.541-227985	1	HOUSING & ROD SEAL
06.542-237698	1	SEAL
06.544-227984	1	INCHING PISTON HOUSING
06.706-233264	1	RETAINER PIN
06.707-227880	1	SPRING
06.833-300058	1	PIN
06.834-216469	1	STOP
06.835-25K30016	1	O-RING
06.836-300058	1	PIN
06.837-300058	2	PIN
06.838-217802	1	STOP
06.839-25K30022	1	O-RING
06.841-667449	1	PIN
06.866-300058	1	PIN
08.494-236850	1	SPRING (OUTER)
13.022-232566	1	SWITCH W/SHIM KIT

www.truck-freeworkshop.com/clark/

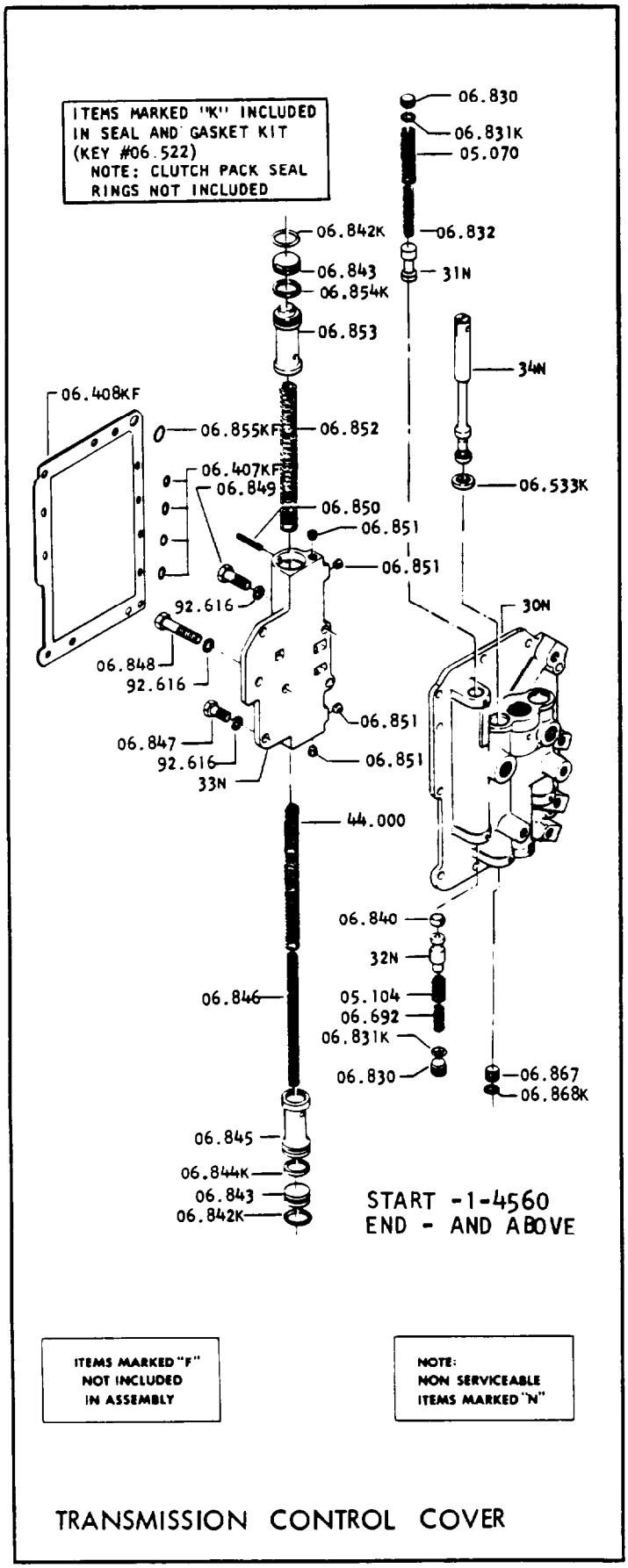

TRANSMISSION CONTROL COVER

237020 CONTROL COVER AND VALVE (CONTINUED)

05.070-232420	1	SPRING (OUTER)
05.104-237094	1	SPRING (OUTER)
06.407-60K30016	4	O-RING
06.408-224890	1	GASKET
06.533-224322	1	SEAL
06.692-237095	1	SPRING (INNER)
06.830-216469	2	STOP
06.831-25K30016	2	O-RING
06.832-232421	1	SPRING (INNER)
06.840-216471	1	STOP
06.842-25K40100	2	O-RING
06.843-801754	2	STOP
06.844-220596	1	PISTON RING
06.845-237021	1	PISTON
06.846-237024	1	SPRING (INNER)
06.847-1C614	3	CAPSCREW
06.848-1C632	1	CAPSCREW
06.849-1C620	2	CAPSCREW
06.850-300058	2	PIN
06.851-16F4	4	PIPE - PLUG
06.852-237022	1	SPRING (OUTER)
06.853-237021	1	PISTON
06.854-220596	1	PISTON RING
06.855-60K30020	1	O-RING
06.867-216469	1	STOP
06.868-25K30016	1	O-RING
44.000-237023	1	SPRING (INTERMEDIAT
92.616-23E6	6	LOCKWASHER

www.truck-freeworkshop.com/clark/

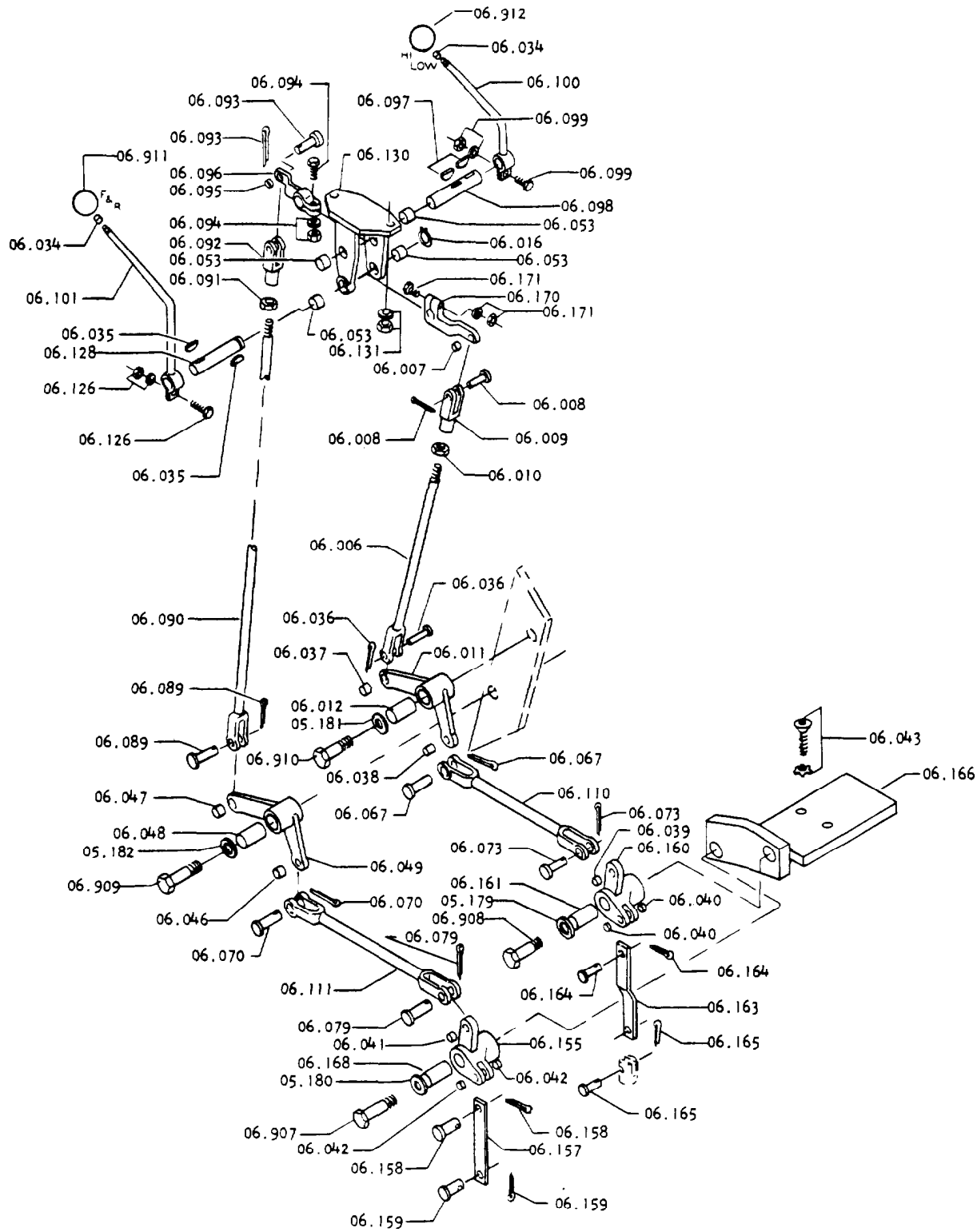

DIRECTIONAL CONTROL LINKAGE

www.truck-freeworkshop.com/clark/

06-418 DIRECTIONAL CONTROL LINKAGE

05.179-1300396	1	THRUST WASHER
05.180-1300396	1	THRUST WASHER
05.181-130096	1	THRUST WASHER
05.182-1300396	1	THRUST WASHER
06.006-713668	1	FWD & REV LINK
06.007-1318256	1	BUSHING
06.008-4F6106	1	ROD END PIN
06.008-1F312	1	COTTER
06.009-2J6208	1	FWD & REV LINK CLEVIS
06.010-8D6J	1	ROD END NUT
06.011-1689775	1	FWD & REV LEVER
06.012-1318257	1	BUSHING
06.016-799759	1	RETAINING RING
06.034-1311798	2	RING
06.035-6J404	2	KEY
06.036-4F6106	1	FWD & REV PIN
06.036-1F312	1	COTTER
06.037-1318256	1	LEVER BUSHING
06.038-1318256	1	LEVER BUSHING
06.039-1318256	1	BUSHING
06.040-1311668	2	BUSHING
06.041-1318256	1	BUSHING
06.042-1311668	2	BUSHING
06.043-9G816J	2	MTG BRACKET BOLT
06.043-20E8	2	LOCKWASHER
06.046-1318256	1	BUSHING
06.047-1318256	1	BUSHING
06.048-1318257	1	LEVER BUSHING
06.049-1689775	1	SPEED SEL LEVER
06.053-1311673	4	BRACKET BUSHING
06.067-4F6106	1	LINK PIN
06.067-lF312	1	COTTER
06.070-4F6106	1	LINK PIN
06.070-1F312	1	COTTER
06.073-4F6106	1	LINK PIN
06.073-1F312	1	COTTER
06.079-4F6106	1	PIN
06.079-1F312	1	COTTER
06.089-4F6106	1	PIN
06.089-1F312		COTTER
06.090-1318734	1	SPD SELECTOR LINK
06.091-8D6J	1	NUT
06.092-2J6208	1	CLEVIS
06.093-4F6106	1	LINK PIN
06.093-1F312	1	COTTER
06.094-2C524J	1	BOLT
06.094-23E6	1	LOCKWASHER
06.094-6205J	1	NUT
06.095-1318256	1	BUSHING
06.096-1625357	1	ARM W/BUSHING
06.097-6J404	2	SHAFT KEY
06.098-1625457	1	SHAFT
06.099-1C624	1	BOLT
06.099-23E6	1	LOCKWASHER
06.099-61D6J	1	NUT
06.100-1625354	1	SPD SEL LEVER
06.101-1721259	1	FWD & REV LEVER
06.110-1697899	1	FWD & REV LINK
06.111-1704250	1	SPEED LINK
06.126-1C624	1	LEVER BOLT
06.126-23E6	1	LOCKWASHER
06.126-61D6J	1	NUT
06.128-1721284	1	FWD & REV SHAFT
06.130-1625446	1	MOUNTING BRACKET
06.131-23E6	2	LOCKWASHER
06.131-61D6J	2	NUT
06.155-1689767	1	LEVER
06.157-1692547	1	SPD SELECTOR LINK
06.158-1311651	1	LINK PIN
06.158-1F210	1	COTTER
06.159-1311651	1	LINK PIN
06.159-1F210	1	COTTER
06.160-1689767	1	LEVER
06.161-1318257	1	BUSHING
06.163-1697896	1	LINK
06.164-1311651	1	LINK PIN
06.164-1F210	1	COTTER
06.165-1311651	1	PIN
06.165-1F210	1	COTTER
06.166-2311286	1	BRACKET
06.168-1318257	1	BUSHING
06.170-1704258	1	FWD & REV ARM
06.171-1C524J	1	BOLT
06.171-23E5	1	LOCKWASHER
06.171-61D5J	1	NUT
06.907-2321946	1	BOLT
06.908-2321946	1	BOLT
06.909-2321946	1	BOLT
06.910-2321946	1	BOLT
06.911-2314196	1	KNOB
06.912-2314196	1	KNOB

www.truck-freeworkshop.com/clark/

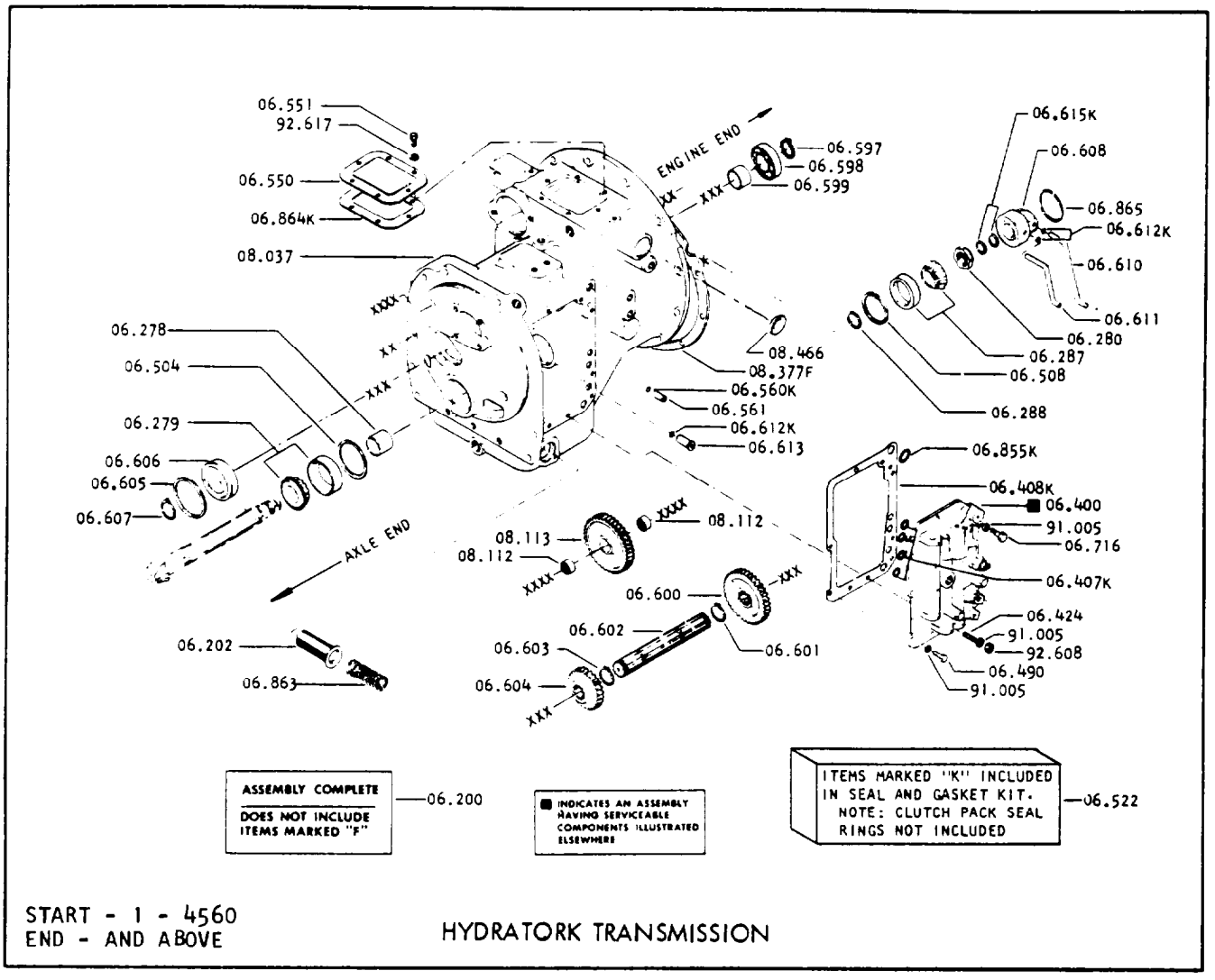

START - 1 - 4560
END - AND ABOVE

HYDRATORK TRANSMISSION

285315 TRANSMISSION ASSEMBLY (CONTINUED)

06.200-285315	1	TRANSMISSION ASSEMBLY
06.603-224035	1	SNAP RING
06.604-216398	1	GEAR (25 TEETH)
06.605-224288	1	SNAP RING
06.606-231396	1	BEARING
06.607-224036	1	SNAP RING
06.608-230415	1	OIL DISTIRBUTOR
06.610-230382	1	HIGH OIL TUBE
06.611-230383	1	LOW OIL TUBE
06.612-60K20012	4	O-RING
06.613-230384	2	OIL SLEEVE
06.615-230416	2	O-RING
06.716-1C628	1	CAPSCREW
06.855-60K30020	1	O-RING
06.863-230377	1	SUMP SPRING
06.864-201400	1	COVER GASKET
06.865-223862	1	SNAP RING
08.037-235341	1	TRANSMISSION CASE
08.112-791454	1	BEARING
08.113-228244	1	GEAR W/BEARING
08.377-1735979	1	GASKET
08.466-221397	2	PLUG
91.005-23E6	3	LOCKWASHER
92.608-62D6	2	NUT
92.617-23E6	8	LOCKWASHER

www.truck-freeworkshop.com/clark/

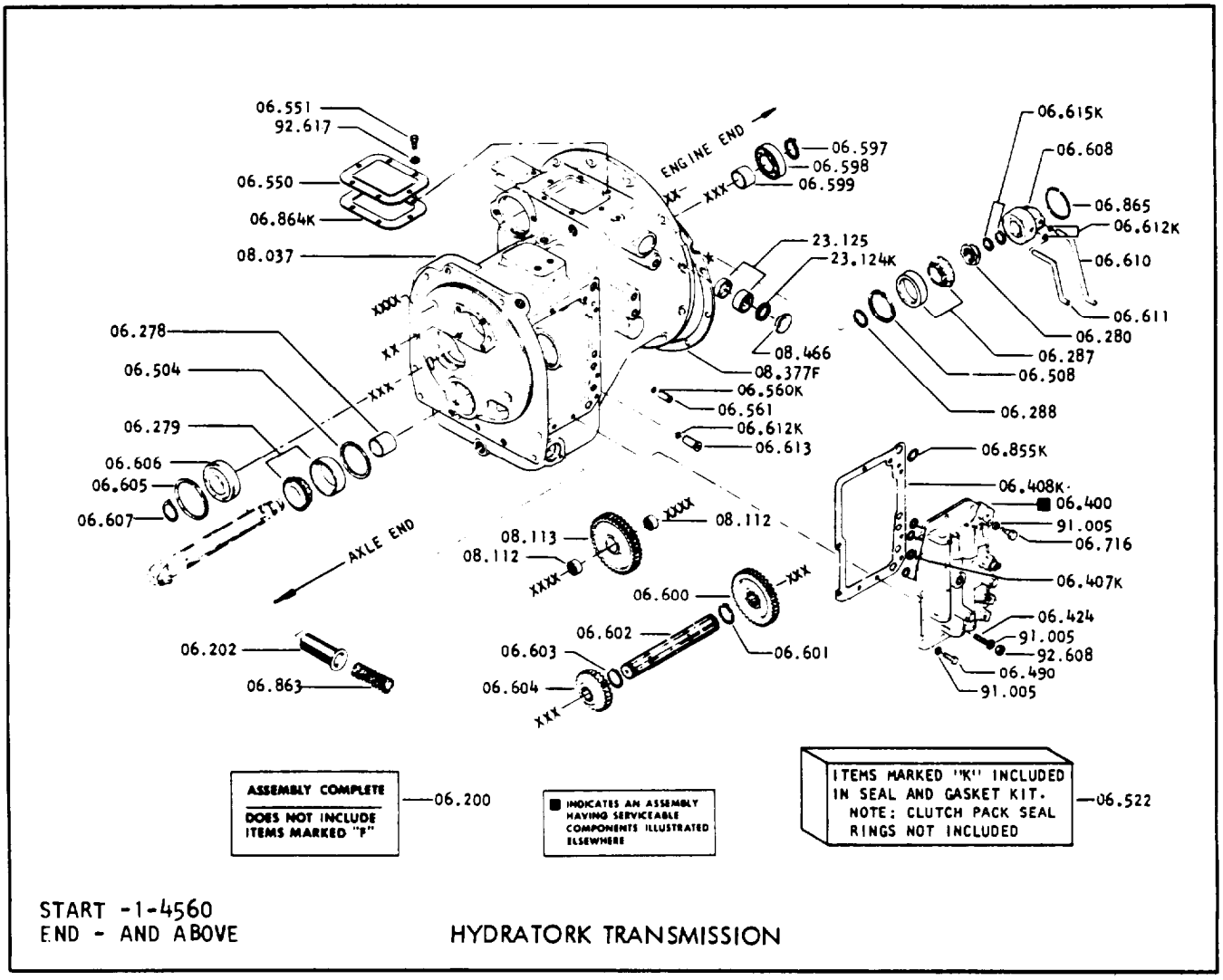

START -1-4560
END - AND ABOVE

HYDRATORK TRANSMISSION

285315 TRANSMISSION ASSEMBLY (CONTINUED)

06.200-285315	1	TRANSMISSION ASSEMBLY
06.202-230373	1	SUMP RETAINER
06.278-226170	1	SPACER
06.279-224289	1	BEARING
06.280-233893	1	NUT
06.287-224237	1	BEARING
06.288-801345	1	SHIM KIT
06.400-237020	1	CONTROL COVER ASSEM
06.407-60K30016	4	O-RING
06.408-224890	1	CONTROL COVER GASKET
06.424-207647	2	STUD
06.490-5C616	9	CAPSCREW
06.504-223968	1	SNAP RING
06.508-231558	1	SNAP RING
06.522-1811171	1	SEAL & GASKET KIT
06.550-201398	1	COVER
06.551-21C612	8	CAPSCREW
06.560-60K20012	4	O-RING
06.561-224297	2	OIL SLEEVE
06.597-224036	1	SNAP RING
06.598-225953	1	BEARING
06.599-224267	1	SPACER
06.600-216395	1	GEAR (36 TEETH)
06.601-224035	1	SNAP RING
06.602-224264	1	INTERMEDIATE SHAFT

www.truck-freeworkshop.com/clark/

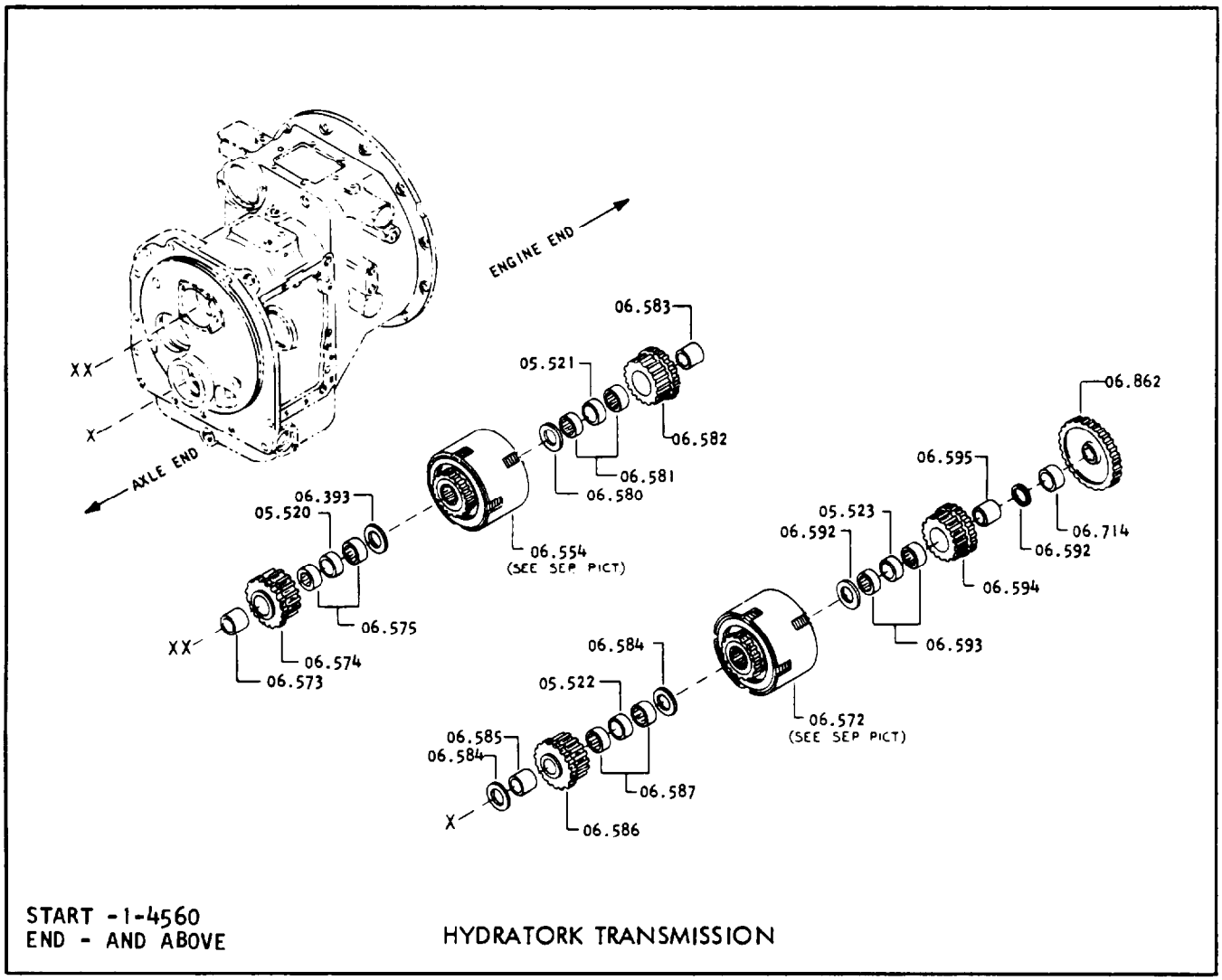

285315 TRANSMISSION ASSEMBLY (CONTINUED)

05.520-215765	1	SPACER
05.521-215765	1	SPACER
05.522-215765	1	SPACER
05.523-215765	1	SPACER
06.393-224250	1	WASHER
06.554-237038	1	CLUTCH PACK ASSEMBLY
06.572-237038	1	CLUTCH PACK ASSEMBLY
06.573-216551	1	INNER RACE
06.574-237069	1	GEAR W/BEARING (38 TEETH)
06.575-237173	2	ROLLER ASSEMBLY
06.580-224250	1	WASHER
06.581-237173	2	ROLLER ASSEMBLY
06.582-237071	1	GEAR W/BEARING (28 TEETH)
06.583-216551	1	INNER RACE
06.584-224250	2	WASHER
06.585-216551	1	INNER RACE
06.586-237069	1	GEAR W/BEARING (38 TEETH)
06.587-237173	2	ROLLER ASSEMBLY
06.592-224250	2	WASHER
06.593-237173	2	ROLLER ASSEMBLY
06.594-237071	1	GEAR W/BEARING (28 TEETH)
06.595-2 6551	1	INNER RACE
06.714-230418	1	SPACER
06.862-230417	1	GEAR (47 TEETH)

www.truck-freeworkshop.com/clark/

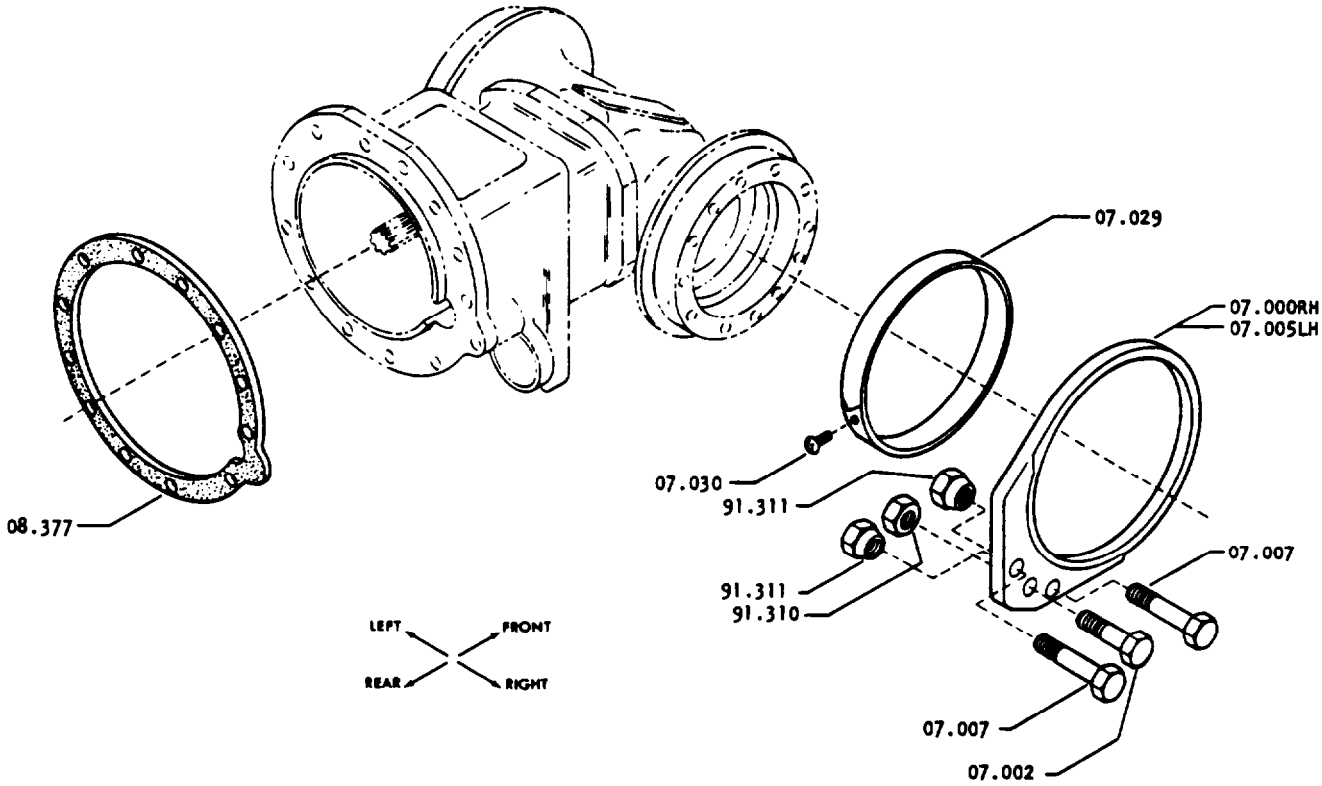

START - 1-4560
END - AND ABOVE

TRANSMISSION MOUNTING PARTS

07-002 TRANSMISSION MOUNTING PARTS

07.000-1685038	1	TRANS MOUNTING BRACKET (RH)
07.002-1314189	2	BOLT
07.005-1685039	1	TRANS MOUNTING BRACKET (LH)
07.007-18C1656	4	BOLT
07.029-1632295	2	BUSHING
07.030-1303368	2	SCREW
08.377-1735979	1	GASKET
91.310-64D16	2	NUT
91.311-667110	4	NUT

www.truck-freeworkshop.com/clark/

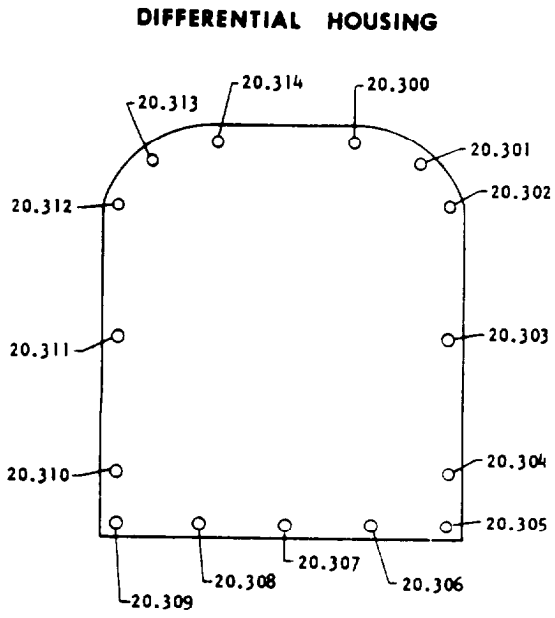

START -1-4560
END - AND ABOVE

TRANSMISSION FASTENERS 07061-2

285315 TRANSMISSION ASSEMBLY (CONTINUED)

20.300, 20.301, 20.302, 20.312, 20.313, 20.314

216555	6	STUD
23E8	6	LOCKWASHER
8D8	6	NUT

20.303, 20.304, 20.305, 20.309, 20.310, 20.311

1C822	6	BOLT
23E8	6	LOCKWASHER

20.306, 20.307, 20.308

206770	3	STUD
23E8	3	LOCKWASHER
8D8	3	NUT

www.truck-freeworkshop.com/clark/

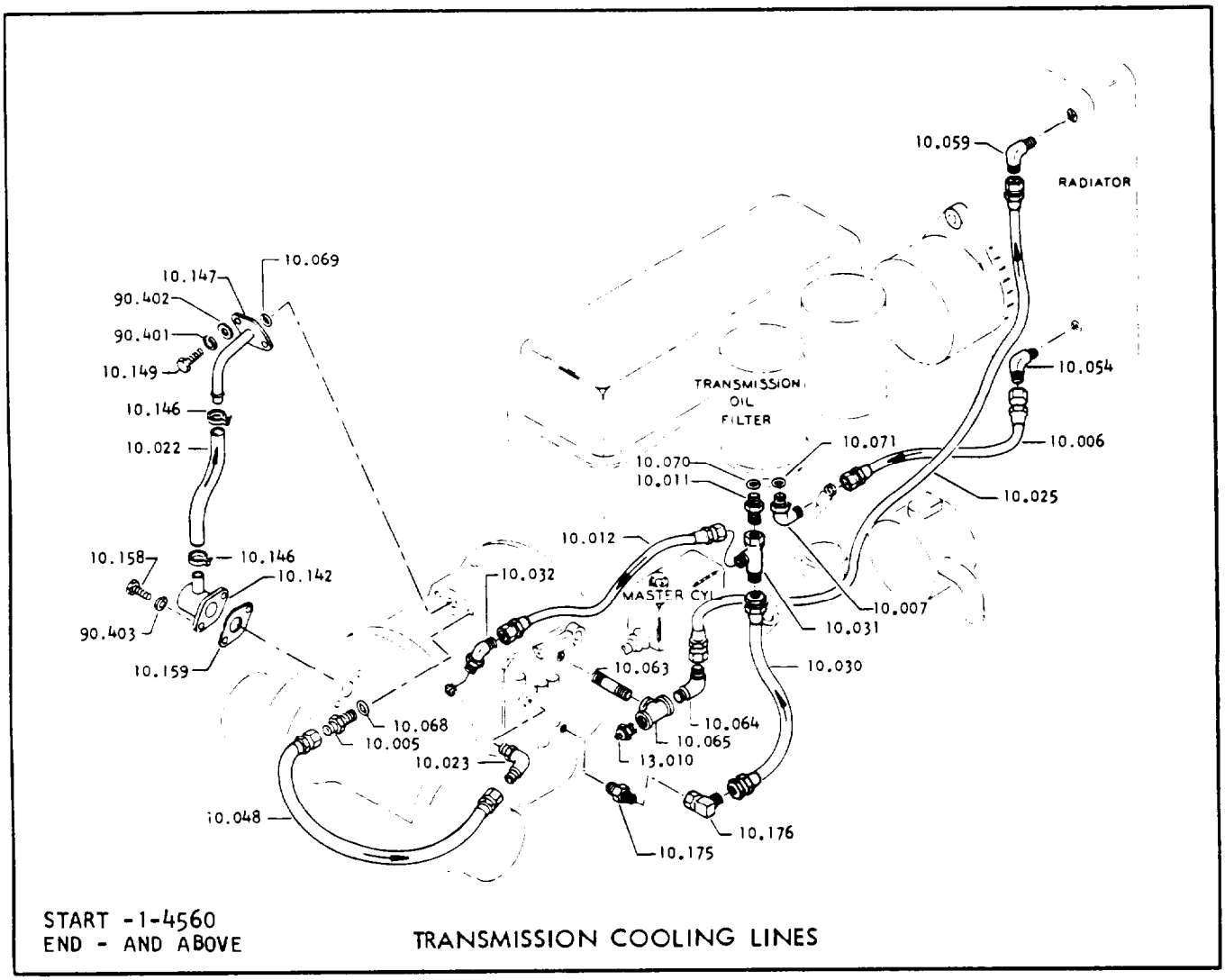

START -1-4560
END - AND ABOVE

TRANSMISSION COOLING LINES

10-038 TRANSMISSION COOLING LINES

10.005-15K6	1	CONNECTOR
10.006-1325553	1	HOSE ASSEMBLY
10.007-17K6	1	ELBOW
10.011-15K7	1	CONNECTOR
10.012-1326305	1	HOSE ASSEMBLY
10.022-1307059	14'	HOSE
10.023-662487	1	ELBOW
10.025-1325968	1	HOSE ASSEMBLY
10.030-2353602	1	HOSE ASSEMBLY
10.031-13K7	1	TEE
10.032-357348	1	ELBOW
10.048-1325552	1	HOSE ASSEMBLY
10.054-84F6	1	ELBOW
10.059-83F6	1	ELBOW
10.063-5K424	1	NIPPLE
10.064-84F6	1	ELBOW
10.065-20F16	1	TEE
10.068-91F6	1	O-RING
10.069-25K40100	1	O-RING
10.070-91F2	1	O-RING
10.071-91F6	1	O-RING
10.142-1797061	1	FLANGE-ELBOW
10.146-42H20	2	CLAMP
10.147-1797063	1	FLANGE-ELBOW
10.149-1C614	2	CAPSCREW
10.158-5C616	2	CAPSCREW
10.159-1745295	1	GASKET
10.175-799390	1	CONNECTOR
10.176-2353478	1	ELBOW
13.010-1513839	1	SWITCH
90.401-23E6	2	LOCKWASHER
90.402-25E17	2	WASHER
90.403-23E6	2	LOCKWASHER

www.truck-freeworkshop.com/clark/

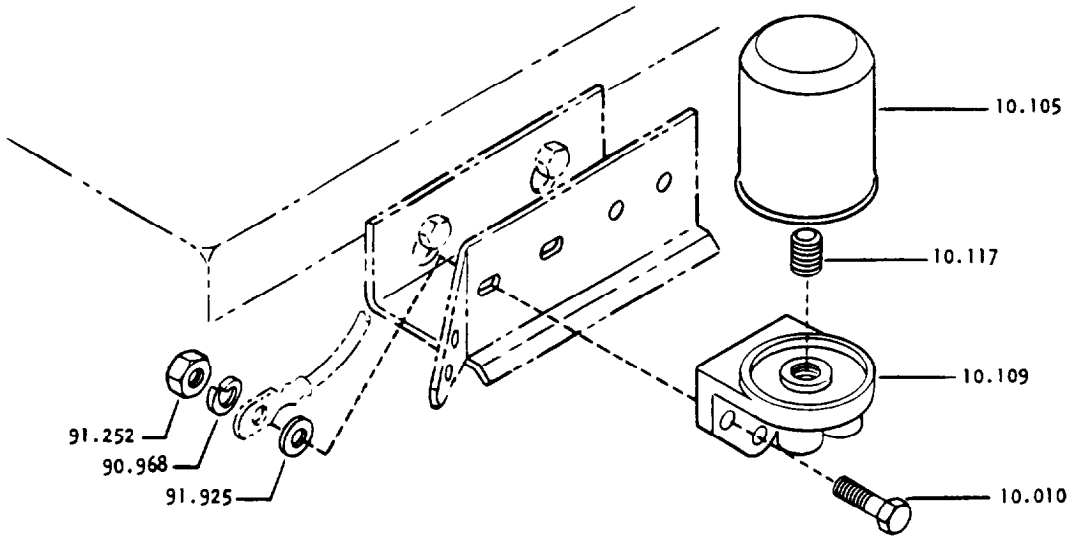

START -1-4560
END - AND ABOVE

TRANSMISSION OIL FILTER

10-106 TRANSMISSION OIL FILTER

10.010-1C520	3	BOLT
10.105-990937	1	TRANSMISSION OIL FILTER
10.109-2323941	1	BRACKET
10.117-2323942	1	CONNECTOR
90.968-23E5	3	LOCKWASHER
91.252-61D5	3	NUT
91.925-25E15	2	WASHER

www.truck-freeworkshop.com/clark/

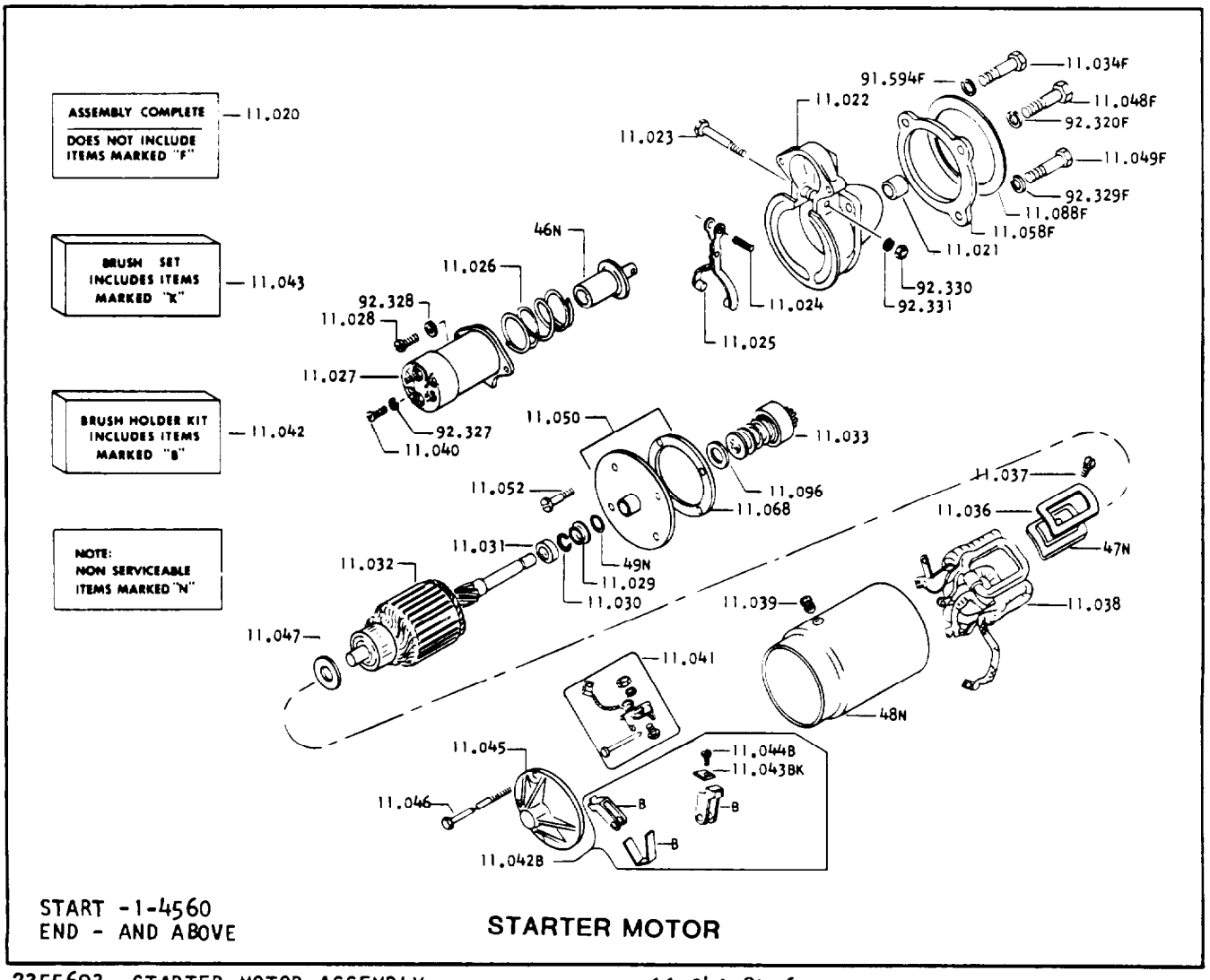

START -1-4560
END - AND ABOVE

STARTER MOTOR

2355693 STARTER MOTOR ASSEMBLY

11.020-2355693	1	STARTER MOTOR ASSEMBLY
11.021-850337	1	BUSHING
11.022-896125	1	HOUSING W/BUSHING
11.023-884576	1	BOLT
11.024-999472	1	PIN
11.025-896126	1	LEVER
11.026-888968	1	SPRING
11.027-884581	1	SWITCH
11.028-43G412J	2	SCREW
11.029-850363	1	COLLAR
11.030-942142	1	RETAINING RING
11.031-878608	1	COLLAR
11.032-891191	1	ARMATURE
11.033-887714	1	DRIVE ASSEMBLY
11.034-1C618	1	CAPSCREW
11.036-880601	4	INSULATOR
11.037-859377	4	SCREW
11.038-999458	1	COIL SET
11.039-999459	1	GROMMET
11.040-884572	1	SCREW
11.041-877650	2	BRUSH SUPPORT KIT
11.042-1810372	1	BRUSH HOLDER KIT
11.043-1810165	1	BRUSH SET
11.044-65G810GR	4	SCREW
11.045-999460	1	COMMUTATOR END FRAME
11.046-880609	2	CAPSCREW
11.047-863995	1	WASHER
11.048-1C618	1	CAPSCREW
11.049-1C618	1	CAPSCREW
11.050-891602	1	PLATE ASSEMBLY
11.052-999475	2	SCREW
11.058-741875	1	SPACER
11.068-991731	1	GASKET
11.088-391772	1	GASKET
11.096-878103	1	WASHER
91.594-23E6	1	LOCKWASHER
92.320-23E6	1	LOCKWASHER
92.327-15E10	1	LOCKWASHER
92.328-23E4	2	LOCKWASHER
92.329-23E6	1	LOCKWASHER
92.330-856357	1	NUT
92.331-23E5	1	LOCKWASHER

www.truck-freeworkshop.com/clark/

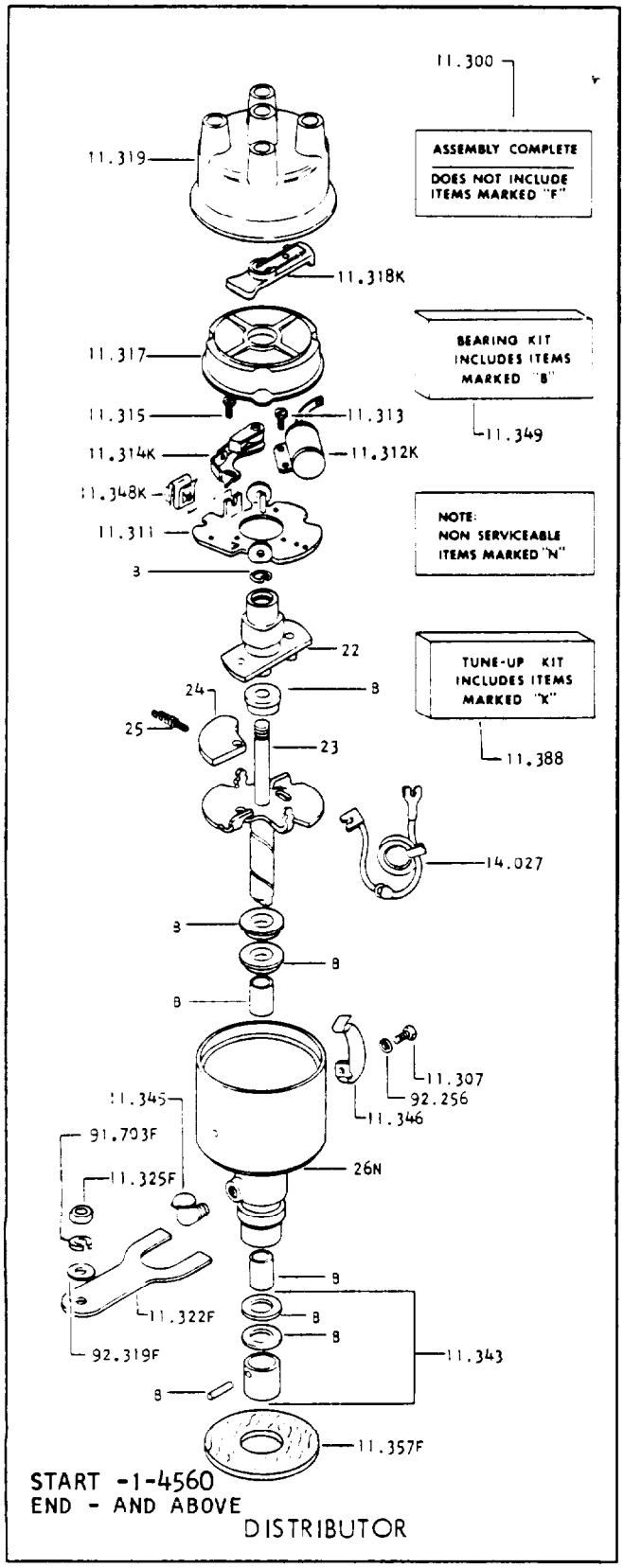

2351309 DISTRIBUTOR ASSEMBLY

11.300-2351309	1	DISTRIBUTOR ASSEMBLY
11.307-85G806	2	SCREW
11.311-998920	1	PLATE
11.312-860818	1	CONDENSER
11.313-41G602	1	SCREW
11.314-998922	1	CONTACT SET
11.315-41G803	1	SCREW
11.317-998600	1	COVER
11.318-998601	1	ROTOR
11.319-998602	1	CAP
11.322-898438	1	CLAMP
11.325-1C516	1	CAPSCREW
11.343-990789	1	COLLAR
11.345-998924	1	OILER
11.346-997575	1	SPRING PACKAGE
11.349-998925	1	BEARING KIT
11.357-953129	1	GASKET
11.388-1811063	1	TUNE-UP KIT
14.027-998926	1	LEAD WIRE
91.703-23E5	1	LOCKWASHER
92.256-17E8	2	LOCKWASHER
92.319-25E5	1	WASHER

www.truck-freeworkshop.com/clark/

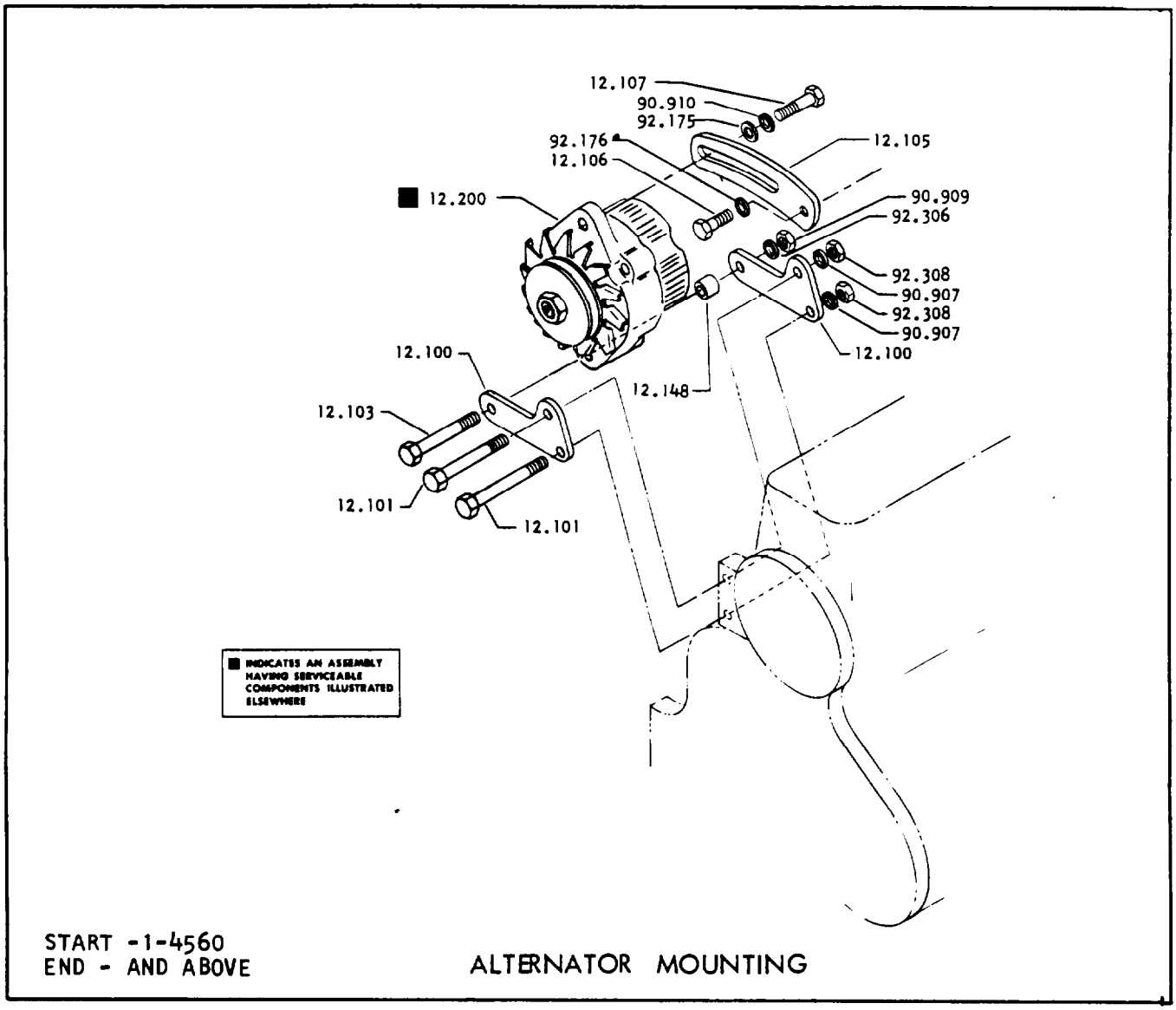

START -1-4560
END - AND ABOVE

ALTERNATOR MOUNTING

12-068 ALTERNATOR MOUNTING

12.100-1753668	2	BRACKET
12.101-1CM1090	2	BOLT
12.103-1CM1090	1	BOLT
12.105-2309891	1	BRACKET
12.106-1C616	1	CAPSCREW
12.107-1CM825	1	CAPSCREW
12.148-603985	1	SPACER
12.200-905949	1	ALTERNATOR ASSEMBLY
90.907-6EM100	2	LOCKWASHER
90.909-1DM10	1	NUT
90.910-23E5	1	LOCKWASHER
92.175-25E16	1	WASHER
92.176-23E6	1	LOCKWASHER
92.306-6EM100	1	LOCKWASHER
92.308-1DM10	2	NUT

www.truck-freeworkshop.com/clark/

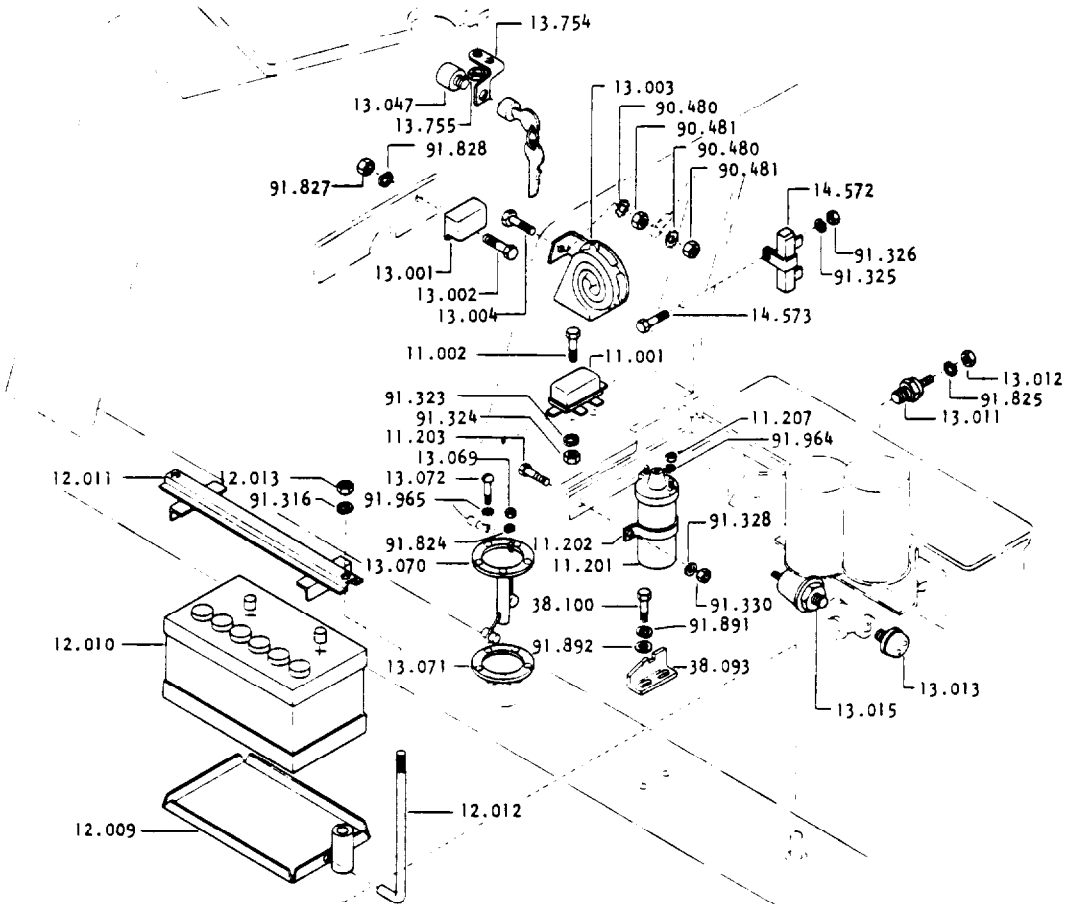

ELECTRICAL ASSEMBLIES MOUNTING

12-104 ELECTRICAL ASSEMBLIES MOUNTING

11.001-1513816	1	STARTER RELAY	13.001-733623	1	HORN RELAY
11.002-1C424	1	BOLT	13.002-1C414	1	BOLT
11.201-940104	1	COIL	13.003-1830006	1	HORN
11.202-897894	1	STRAP	13.004-1C416	1	BOLT
11.203-1C518	2	BOLT	13.011-551323	1	ENGINE TEMP SENDER
11.207-14D10	2	NUT	13.012-61D5	1	NUT
12.009-1765767	1	BATTERY SUPPORT	13.013-1618574	1	ENG OIL PRESS SENDER
12.010-1310115	1	BATTERY	13.015-1799452	1	PRESSURE SWITCH
12.011-1721234	1	HOLD DOWN CLAMP	13.047-2339413	1	IGNITION SWITCH
12.012-1320273	2	STUD	13.069-14D10	1	NUT
12.013-16D4	2	NUT	13.070-1723625	1	FUEL GAUGE SENDER

www.truck-freeworkshop.com/clark/

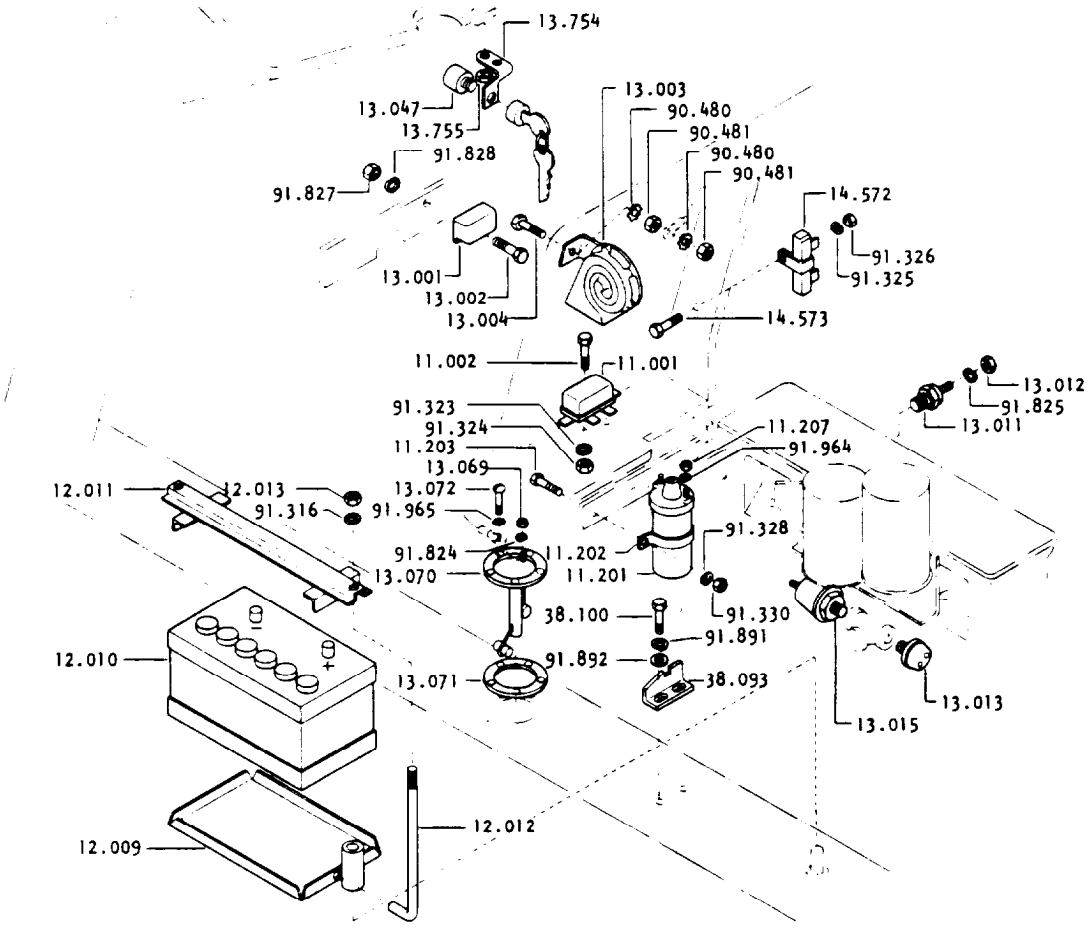

START - 1-4560
END - AND ABOVE

ELECTRICAL ASSEMBLIES MOUNTING

12-104 ELECTRICAL ASSEMBLIES MOUNTING (CONTINUED)

13.071-627982	1	GASKET
13.072-86G1006	5	SCREW
13.754-1692521	1	BRACKET
13.755-61D6	1	NUT
14.572-1706939	1	FIELD RESISTOR
14.573-1C424	1	BOLT
38.093-1758190	1	BATTERY SUPP STOP
38.100-1C610	2	CAPSCREW
90.480-6E4	2	LOCKWASHER
90.481-61D4	2	NUT
91.316-23E4	2	LOCKWASHER
91.323-23E4	1	LOCKWASHER
91.324-61D4	1	NUT
91.325-23E4	1	LOCKWASHER
91.326-61D4	1	NUT
91.328-23E5	2	LOCKWASHER
91.330-61D5	2	NUT
91.824-15E10	1	LOCKWASHER
91.825-15E10	1	LOCKWASHER
91.827-61D4	1	NUT
91.828-23E4	1	LOCKWASHER
91.891-23E6	1	LOCKWASHER
91.892-25E17	1	WASHER
91.964-15E10	2	LOCKWASHER
91.965-6E10	1	LOCKWASHER

www.truck-freeworkshop.com/clark/

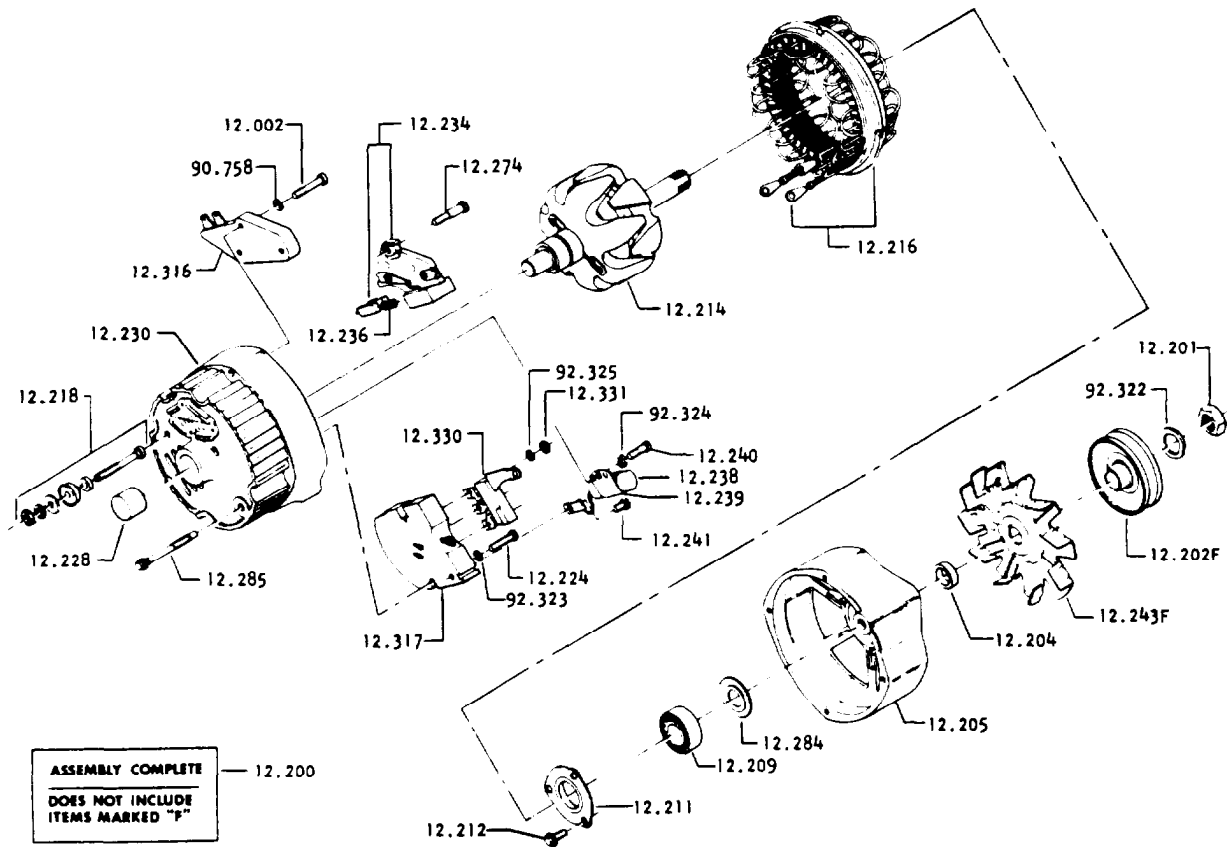

START -1-4560
END - AND ABOVE

ALTERNATOR

905949 ALTERNATOR ASSEMBLY

12.200-905949	1	ALTERNATOR ASSEMBLY
12.002-6511956	1	SCREW
12.201-859369	1	NUT
12.202-2338608	1	PULLEY
12.204-897459	1	COLLAR
12.205-905953	1	DRIVE END FRAME
12.209-999304	1	DRIVE END BEARING
12.211-897456	1	RETAINER PLATE
12.212-45G1008	3	SCREW
12.214-999305	1	ROTOR ASSEMBLY
12.216-999392	1	STATOR ASSEMBLY
12.218-905952	1	TERMINAL PACKAGE
12.224-994373	1	SCREW
12.228-994374	1	BEARING
12.230-905951	1	FRAME ASSEMBLY WITH BEARING
12.234-999307	1	BRUSH HOLDER WITH BRUSHES
12.236-899305	2	BRUSH SPRING
12.238-999308	1	CAPACITOR
12.239-886265	1	CAPACITOR BRACKET
12.240-994378	1	SCREW
12.241-994378	1	SCREW
12.243-992648	1	FAN
12.274-6511957	1	SCREW
12.284-993458	1	OIL SLINGER
12.285-897467	4	CAPSCREW
12.316-994381	1	VOLTAGE REGULATOR
12.317-995185	1	RECTIFIER ASSEMBLY
12.330-994383	1	DIODE TRIO
12.331-12D8	3	NUT
90.758-888505	1	LOCKWASHER
92.322-794584	1	SPRING WASHER
92.323-888505	1	LOCKWASHER
92.324-888505	1	LOCKWASHER
92.325-888505	3	LOCKWASHER

www.truck-freeworkshop.com/clark/

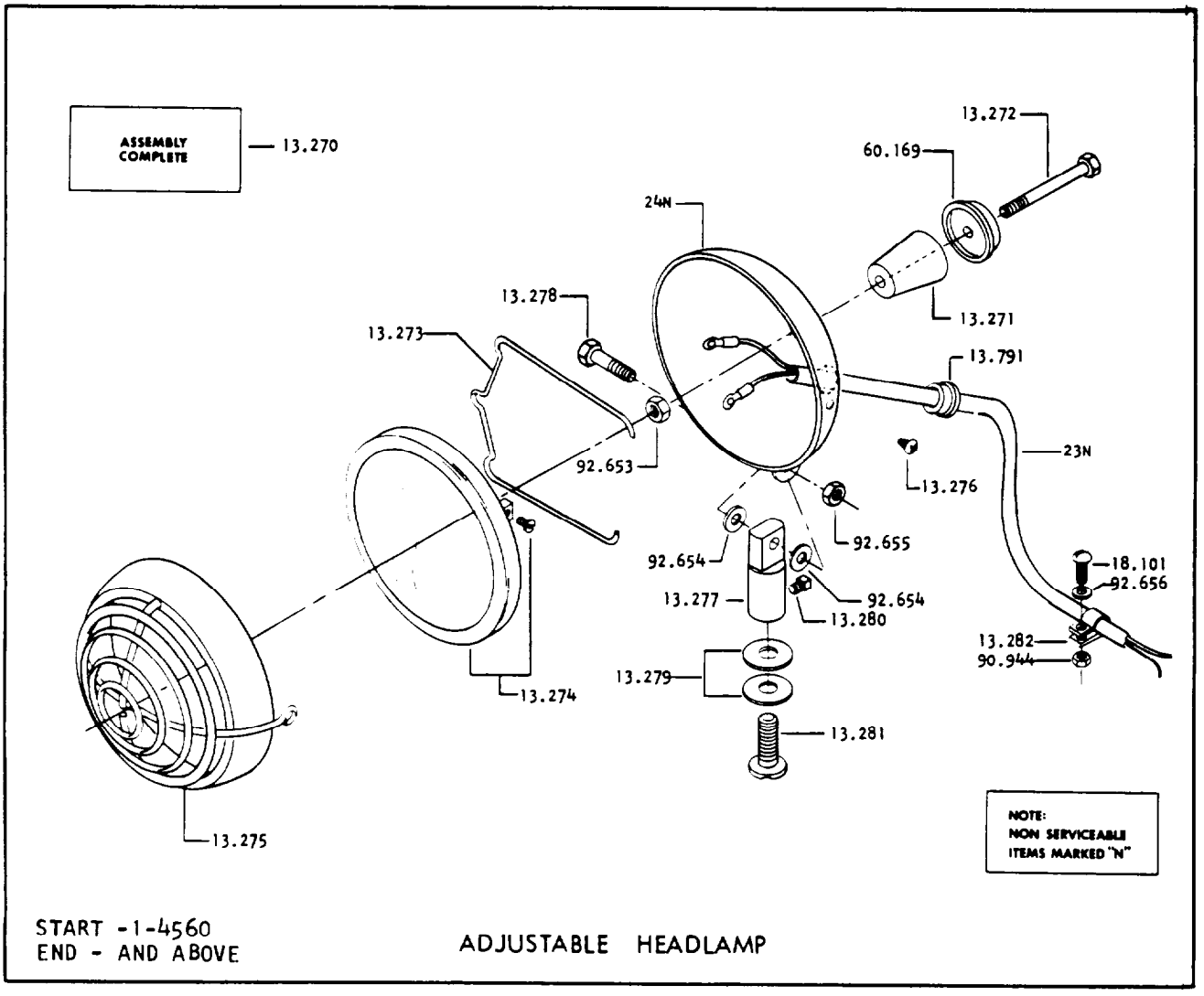

START -1-4560
END - AND ABOVE

ADJUSTABLE HEADLAMP

1721777 HEADLAMP ASSEMBLY (ADJUSTABLE)

13.270-1721777	1	HEADLAMP ASSEMBLY
13.271-999281	1	HANDLE
13.272-1C432	1	BOLT
13.273-893511	1	CLIP
13.274-877752	1	SEAL BEAM (12 VOLT)
13.275-980829	1	DOOR
13.276-32G812	2	SCREW
13.277-893513	1	SWIVEL
13.278-1C414	1	BOLT
13.279-893515	2	WASHER
13.280-36G1005	1	SETSCREW
13.281-89G614	1	SCREW
13.282-893516	1	CLIP
13.791-999254	1	BOOT
18.101-32G812	1	SCREW
60.169-999253	1	HANDLE CAP
90.944-12D8	1	NUT
92.653-17D1	1	NUT
92.654-893514	2	WASHER
92.655-17D1	1	NUT
92.656-25E10J	1	WASHER

www.truck-freeworkshop.com/clark/

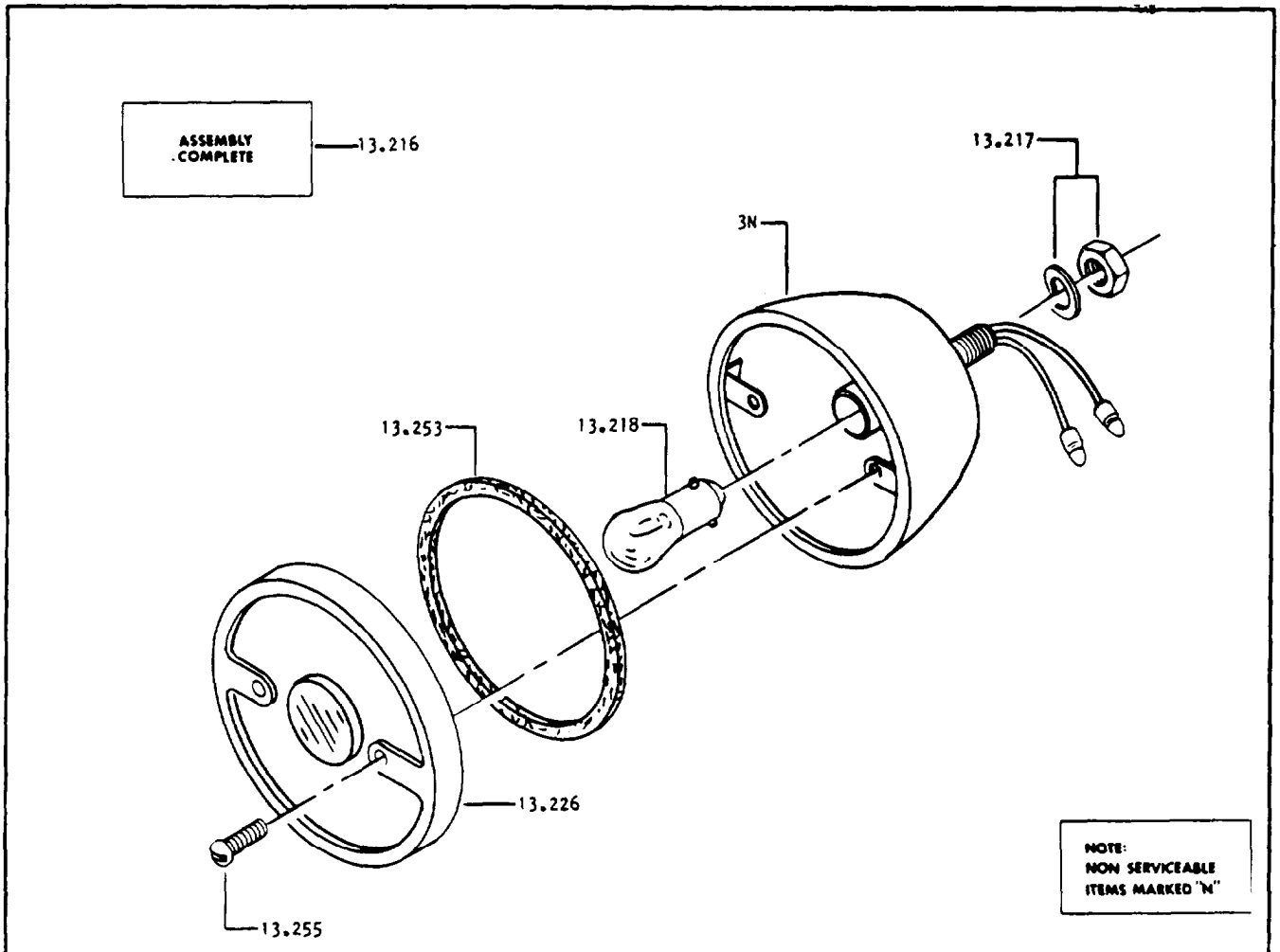

START -1-4560
END - AND ABOVE

STOP AND TAIL LAMP

1796980 STOP & TAIL LAMP ASSEMBLY

13.216-1796980	1	STOP & TAIL LAMP ASSEMBLY
13.217-23E4	2	LOCKWASHER
13.217-61D4	2	NUT
13.218-880690	1	BULB (12 VOLT)
13.226-991038	1	LENS
13.253-874968	1	GASKET
13.255-58G816	2	SCREW

www.truck-freeworkshop.com/clark/

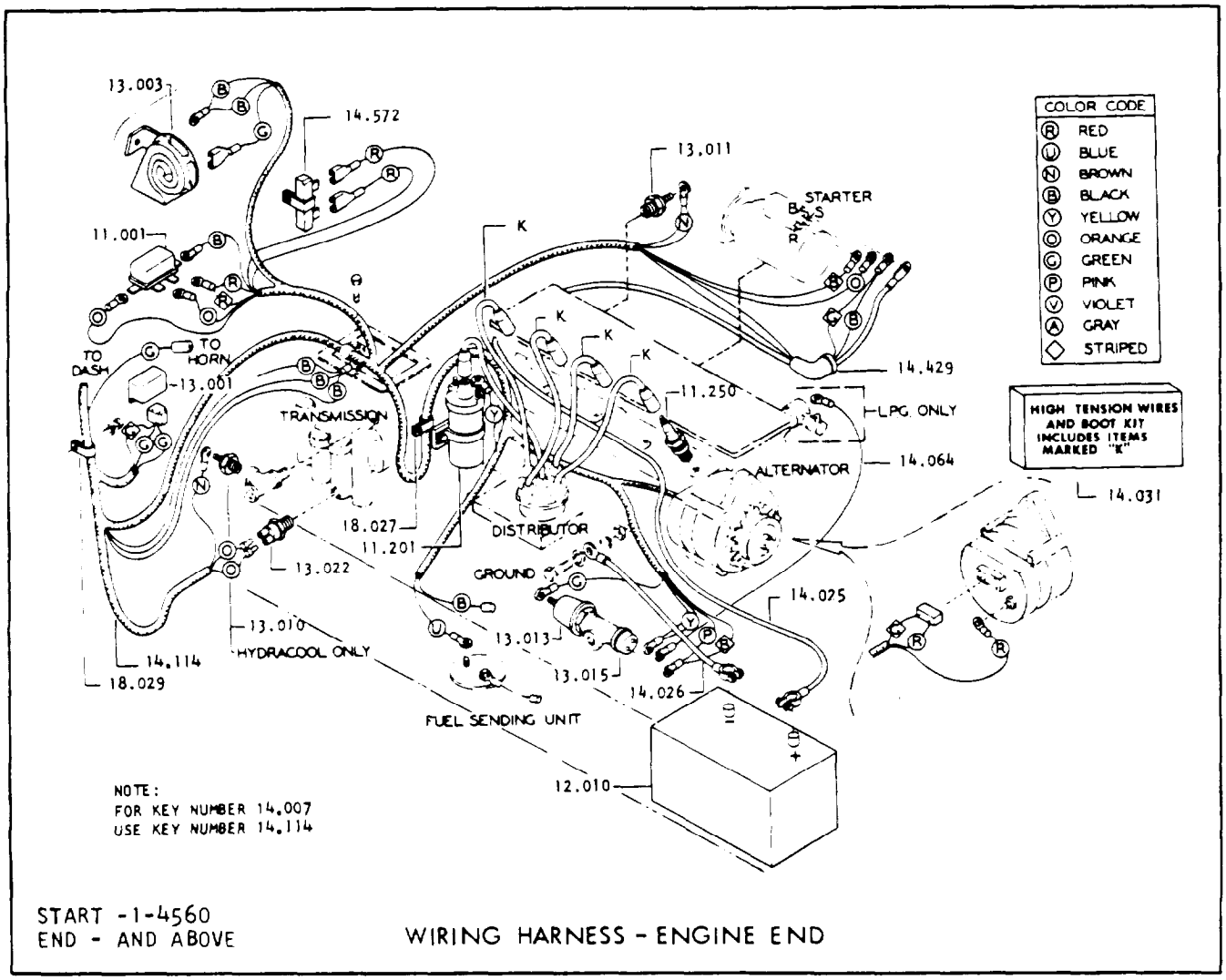

START -1-4560
END - AND ABOVE

WIRING HARNESS - ENGINE END

14-510 WIRING HARNESS - ENGINE END

11.001-1513816	1	STARTER RELAY
11.201-‡940104	1	COIL
FOR REPLACEMENT SEE BULL TI-1447-918		
11.250-890273	4	SPARK PLUG
12.010-1310115	1	BATTERY
13.001-733623	1	HORN RELAY
13.003-1830006	1	HORN
13.010-1513839	1	TRANSMISSION TEMPERATURE INDICATOR SENDER
13.011-551323	1	ENGINE TEMPERATURE SENDER
13.013-1618574	1	ENGINE OIL PRESSURE SENDER
13.015-‡1799452	1	PRESSURE SWITCH
FOR REPLACEMENT SEE BULL TI-1174-973		
13.022-1304790	1	NEUTRAL START SWITCH
14.025-2356052	1	BATTERY CABLE (POSTIVE)
14.026-2356061	1	BATT CABLE (GROUND)
14.031-1810436	1	HIGH TENSION WIRE & BOOT KIT
14.064-NOT USED		
14.114-2333648	1	WIRING HARNESS
14.429-639374	1	BOOT
14.572-1706939	1	ALTERNATOR FIELD RESISTOR
18.027-2330825	1	CLIP
18.029-30H43	1	CLIP

www.truck-freeworkshop.com/clark/

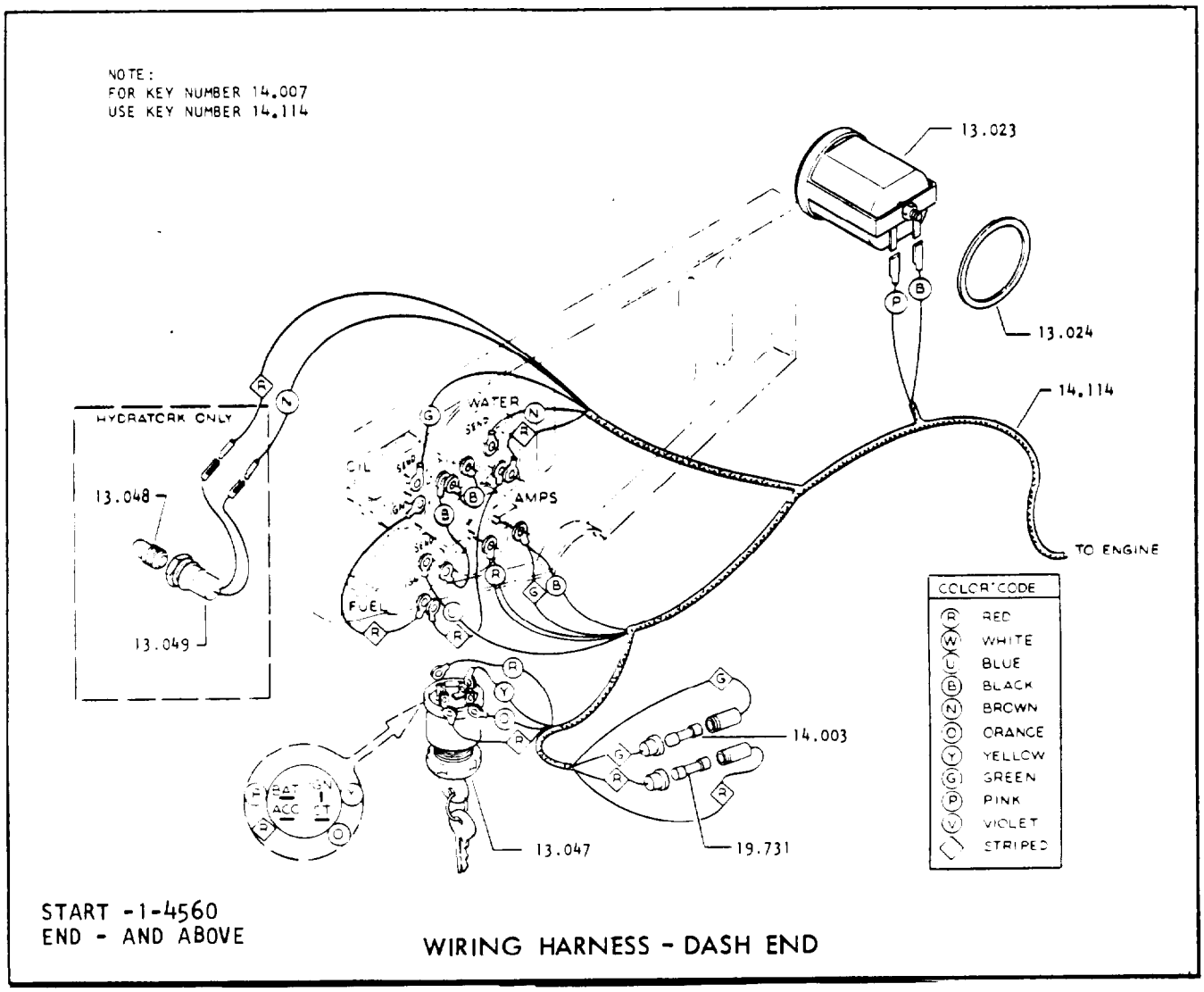

14-512 WIRING HARNESS - DASH END

13.023-1743826	1	Engine HOUR METER ASSEMBLY (Including Mounting Bracket Hardware and Wire Assembly) ENGINE HOUR METER NSN 6645-00-237-4433 P/N 1901995 (12603)
13-024-648556	1	GASKET
13.047-2339413	1	IGNITION SWITCH
13.048-2343175	1	LENS & HOLDER
13.049-775735	1	BULB
14.003-661556	1	HORN FUSE
14.114-2333648	1	WIRING HARNESS
19.731-661556	1	INSTRUMENT FUSE

www.truck-freeworkshop.com/clark/

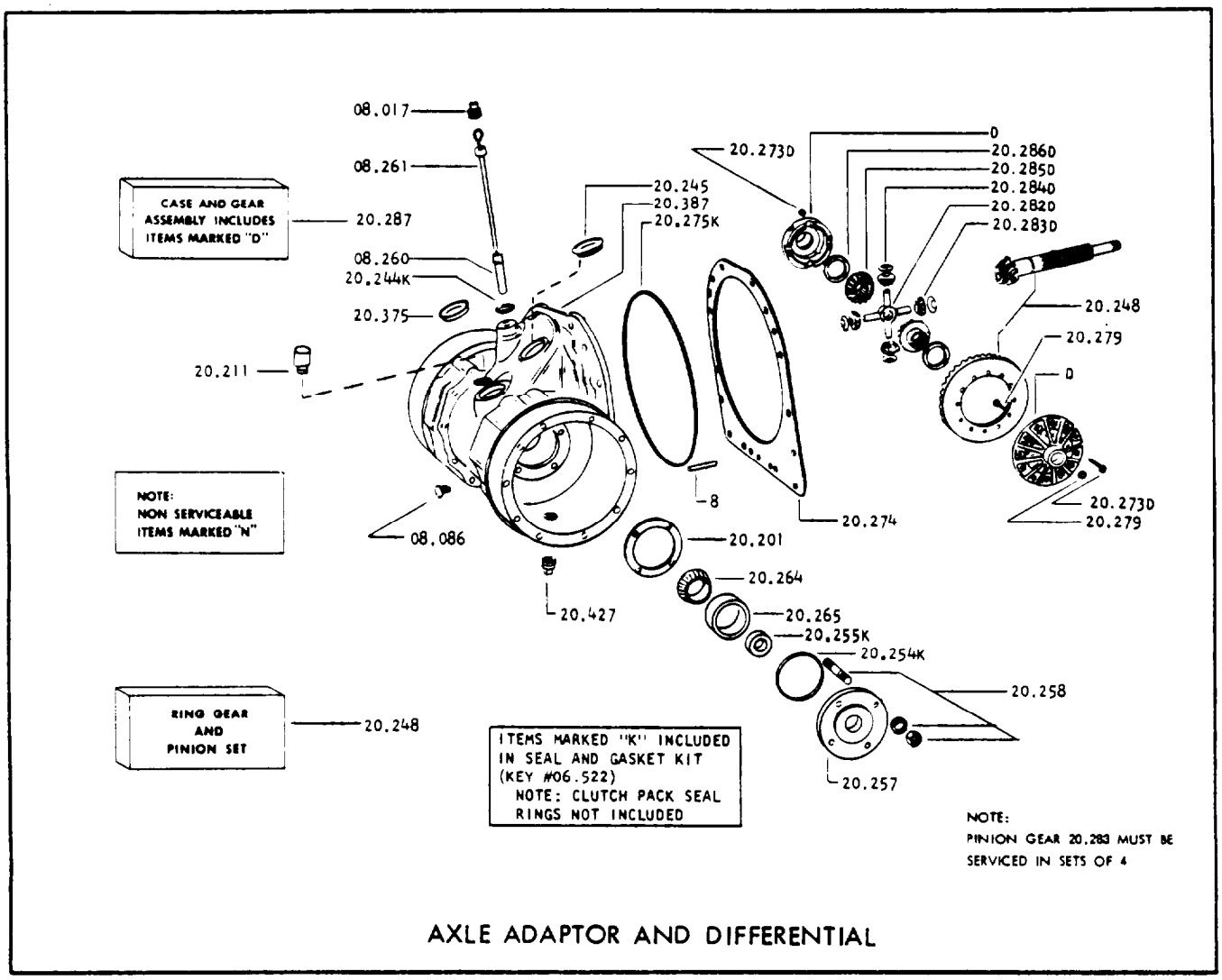

AXLE ADAPTOR AND DIFFERENTIAL

285315 TRANSMISSION ASSEMBLY (CONTINUED)

08.086-16F12	1	OIL LEVEL PLUG
08.260-230379	1	DIPSTICK TUBE
08.261-230380	1	DIPSTICK
20.201-801568	1	SHIM KIT
20.211-211433	1	BREATHER VENT
20.244-60K30022	1	DIPSTICK TUBE SEAL
20.245-218353	1	ACCESS HOLE COVER
20.248-235339	1	GEAR & PINION SET (35-8)
20.254-60K40308	2	BEARING CARRIER O-RING
20.255-209158	2	BEARING CARRIER SEAL
20.257-220564	2	BEARING CARRIER
20.258-207647	8	BEARING CARRIER STUD
20.258-23E6	8	LOCKWASHER
20.258-62D6J	8	NUT
20.264-713155	2	BEARING CONE
20.265-712512	2	BEARING CUP
20.273-206391	8	DIFFERENTIAL CASE BOLT
20.373-28H18	AR	LOCKWIRE
20.274-884050	1	HOUSING SHIM KIT
20.275-107348	1	HOUSING SEAL
20.279-206391	8	RING GEAR BOLT
20.279-28H18	AR	LOCKWIRE
20.282-226443	1	SPIDER
20.283-801534	4	SIDE PINION GEAR
20.284-226445	4	THRUST WASHER
20.285-226441	2	DIFFERENTIAL SIDE GEAR
20.286-226444	2	THRUST WASHER
20.287-226438	1	DIFF CASE & GEAR ASSEM
20.375-222418	1	INSPECTION PLUG
20.387-235344	1	DIFFERENTIAL HOUSING
20.427-215757	1	DRAIN PLUG

www.truck-freeworkshop.com/clark/

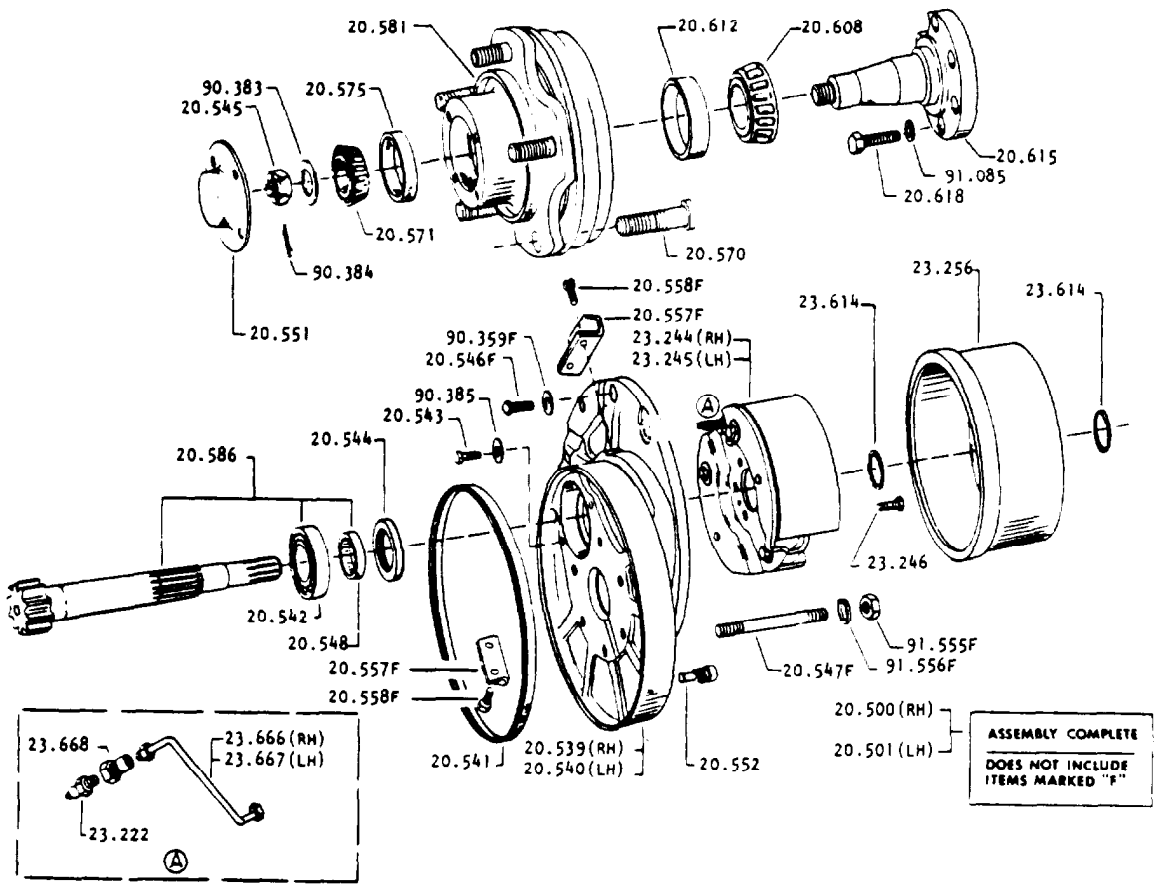

START - 1-4560
END - AND ABOVE

AXLE END ASSEMBLY

127088 AXLE END ASSEMBLY (RH)
127089 AXLE END ASSEMBLY (LH)

20.500-127088	1	AXLE END ASSEMBLY (RH)
20.501-127089	1	AXLE END ASSEMBLY (LH)
20.539-121845	1	SPINDLE SUPPORT (RH)
20.540-121845	1	SPINDLE SUPPORT (LH)
20.541-110222	2	SEAL
20.542-658019	2	SHAFT BEARING
20.543-1C610	4	CAPSCREW
20.544-112149	2	SHAFT SEAL
20.545-100575	2	NUT
20.546-17C824	20	BOLT
20.547-1734938	10	STUD
20.548-112148	2	SHAFT SLEEVE
20.551-111966	2	HUB CAP
20.552-110381	2	VENT
20.557-119920	4	DUST SHIELD
20.558-45G1208	8	CAPSCREW
20.570-126669	10	STUD
20.571-654044	2	BEARING CONE
20.575-654154	2	BEARING CUP
20.581-127092	2	HUB & CUP
20.586-126654	2	AXLE SHAFT ASSEMBLY
20.608-648334	2	BEARING CONE
20.612-658998	2	BEARING CUP
20.615-120960	2	SPINDLE
20.618-106546	12	CAPSCREW
23.222-641297	2	BLEEDER SCREW
23.244-124544	1	BRAKE ASSEMBLY (RH)
23.245-124544	1	BRAKE ASSEMBLY (LH)
23.246-109975	12	CAPSCREW
23.256-107224	2	BRAKE DRUM
23.614-659764	4	SNAP RING
23.666-119924	1	BLEEDER LINE (RH)
23.667-119927	1	BLEEDER LINE (LH)
23.668-121532	2	FITTING
90.359-23E8	10	LOCKWASHER
90.383-101158	2	WASHER
90.384-1F428	2	COTTER
90.385-25E17	4	WASHER
91.085-106547	12	WASHER
91.555-61D8	10	NUT
91.556-23E8	10	LOCKWASHER

www.truck-freeworkshop.com/clark/

www.truck-freeworkshop.com/clark/

Page 7-60 is rescinded.

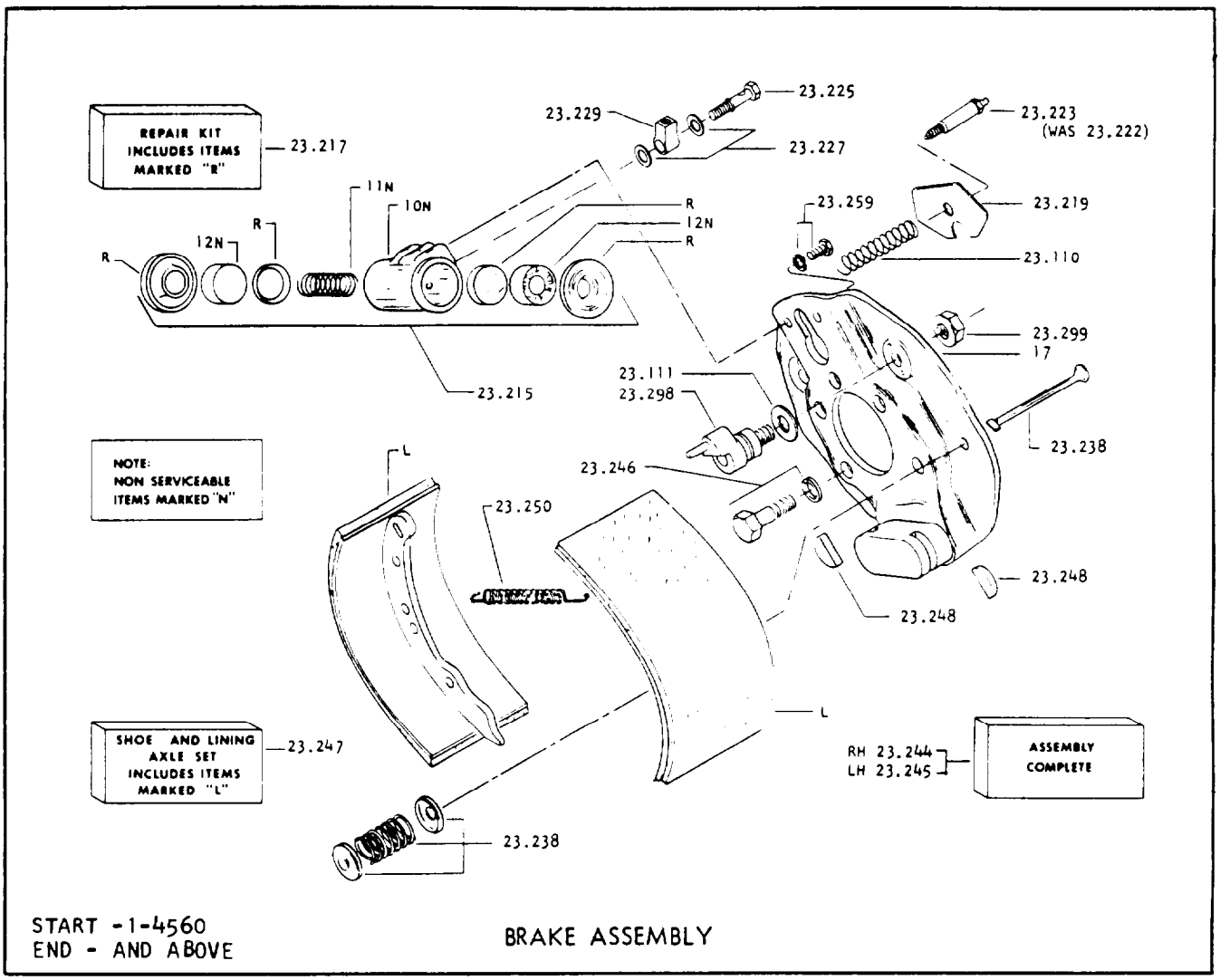

START -1-4560
END - AND ABOVE

BRAKE ASSEMBLY

124544 BRAKE ASSEMBLY (RH & LH)

23.244-124544	1	BRAKE ASSEMBLY (RH)
23.245-124544	1	BRAKE ASSEMBLY (LH)
23.110-NOT USED		
23.111-763403	4	ADJUSTOR WASHER
23.215- NOT USED		
23.217- NOT USED		
23.219-NOT USED		
23.223-SEE AXLE END	-	BLEEDER SCREW
23.225-107802	1	FITTING BOLT
23.227-615374	1	FITTING GASKET
23.229-107801	1	INLET FITTING
23.238-107327	2	GUIDE PIN
23.238-107328	2	GUIDE PIN SPRING
23.238-107330	4	SPRING RETAINER CUP
23.246-109975	6	CAPSCREW
23.246-23E5	6	LOCKWASHER
23.247-124552	1	SHOE & LINING AXLE SET
23.248-107325	2	SHOE ANCHOR KEY
23.250-120472	2	SHOE RETURN SPRING
23.259-1C410C	2	BOLT
23.259-23E4	2	LOCKWASHER
23.298-124551	1	BRAKE ADJUSTOR KIT
23.299-120101	2	ADJUSTOR NUT

www.truck-freeworkshop.com/clark/

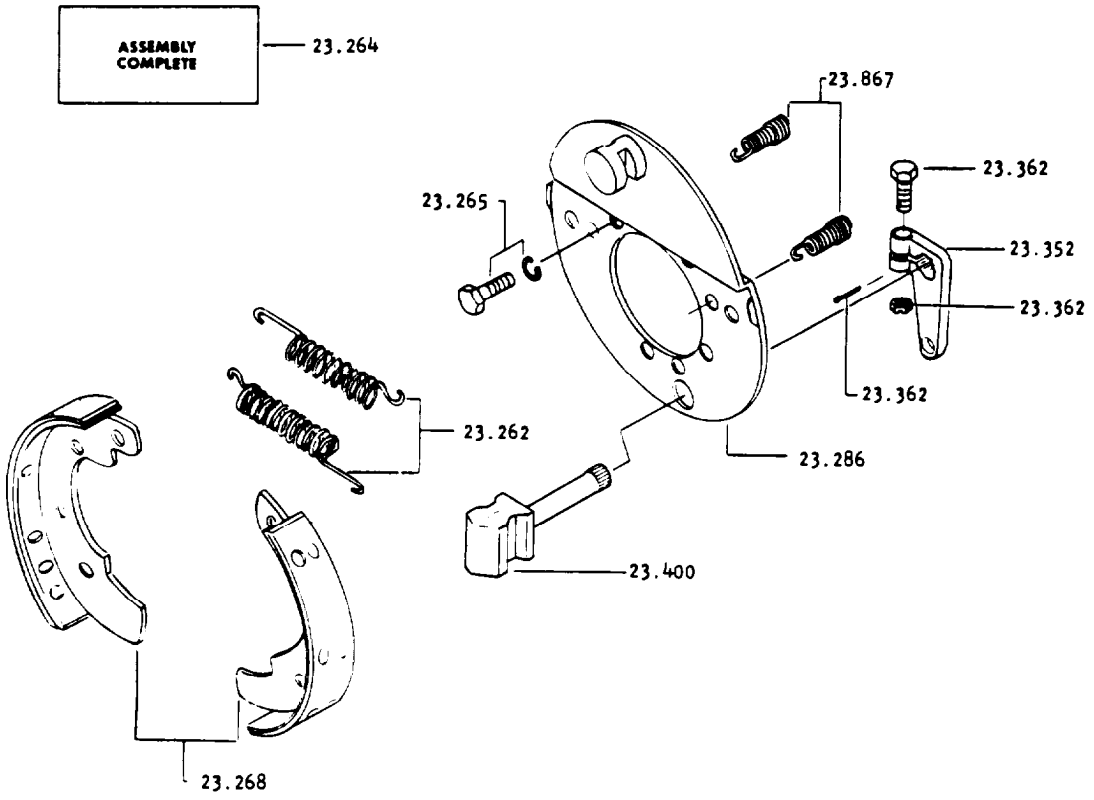

START -1-4560
END - AND ABOVE

PARKING BRAKE

232474 PARKING BRAKE ASSEMBLY

23.264-232474	1	PARKING BRAKE ASSEMBLY
23.262-990051	2	SPRING
23.265-1C512	6	CAPSCREW
23.265-23E5	6	LOCKWASHER
23.268-990047	1	BRAKE SHOE & LINING
23.286-990046	1	BACKING PLATE
23.352-992356	1	LEVER ASSEMBLY
23.362-990052	1	BOLT
23.362-4D4	1	NUT
23.362-25E21	1	WASHER
23.362-1F208	1	COTTER
23.400-990048	1	CAMSHAFT
23.867-990050	2	SPRING

www.truck-freeworkshop.com/clark/

www.truck-freeworkshop.com/clark/

Page 7-63 is rescinded.

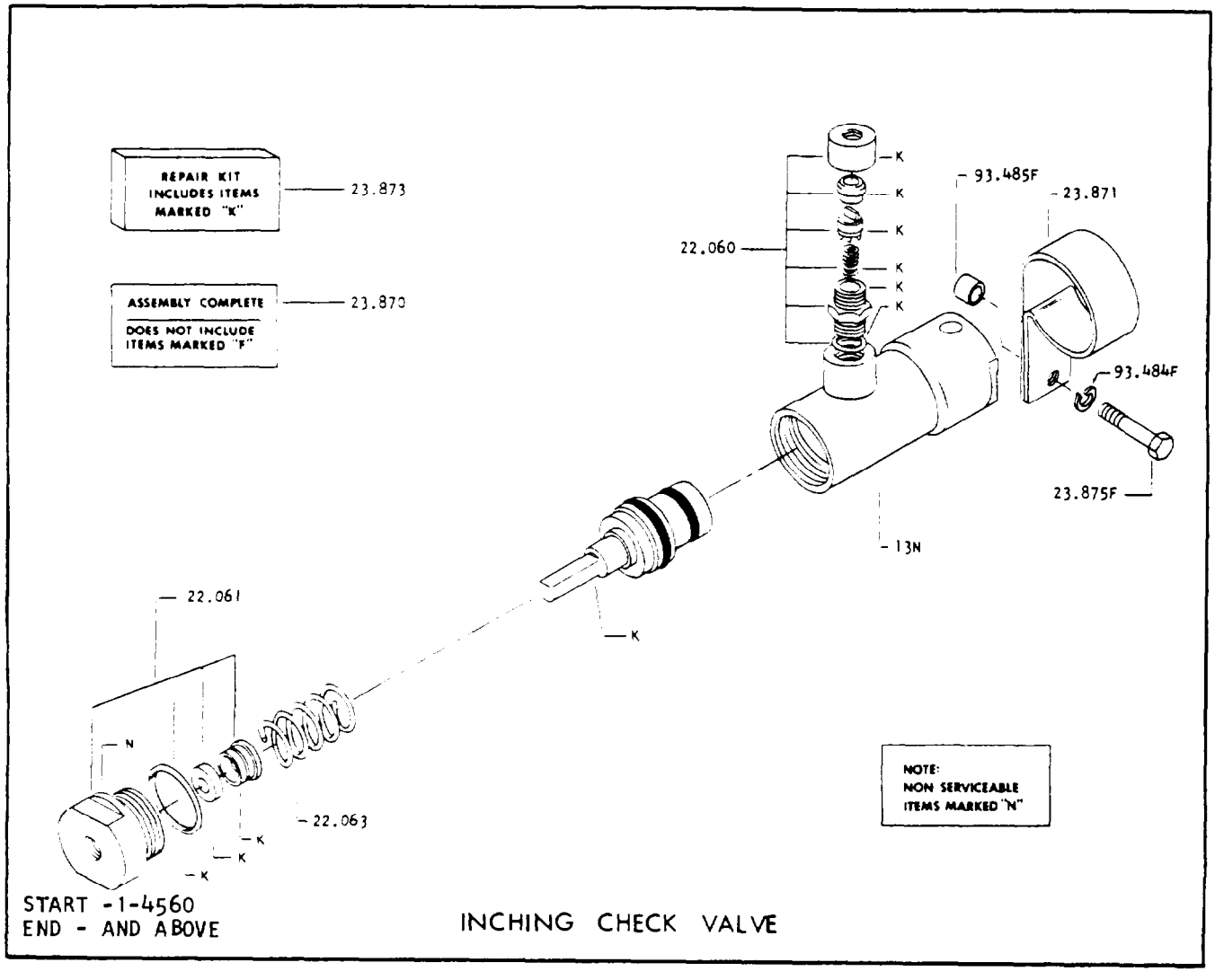

2351790 INCHING CHECK VALVE ASSEMBLY

23.870-2351790	1	INCHING CHECK VALVE ASSEMBLY
22.060-991057	1	RESIDUAL VALVE ASSEMBLY
22.061-998713	1	PLUG ASSEMBLY
22.063-993420	1	SPRING
23.871-993972	1	CLAMP
23.873-998712	1	REPAIR KIT
23.875-1C624	1	CAPSCREW
93.484-23E6	1	LOCKWASHER
93.485-1307121	1	SPACER

www.truck-freeworkshop.com/clark/

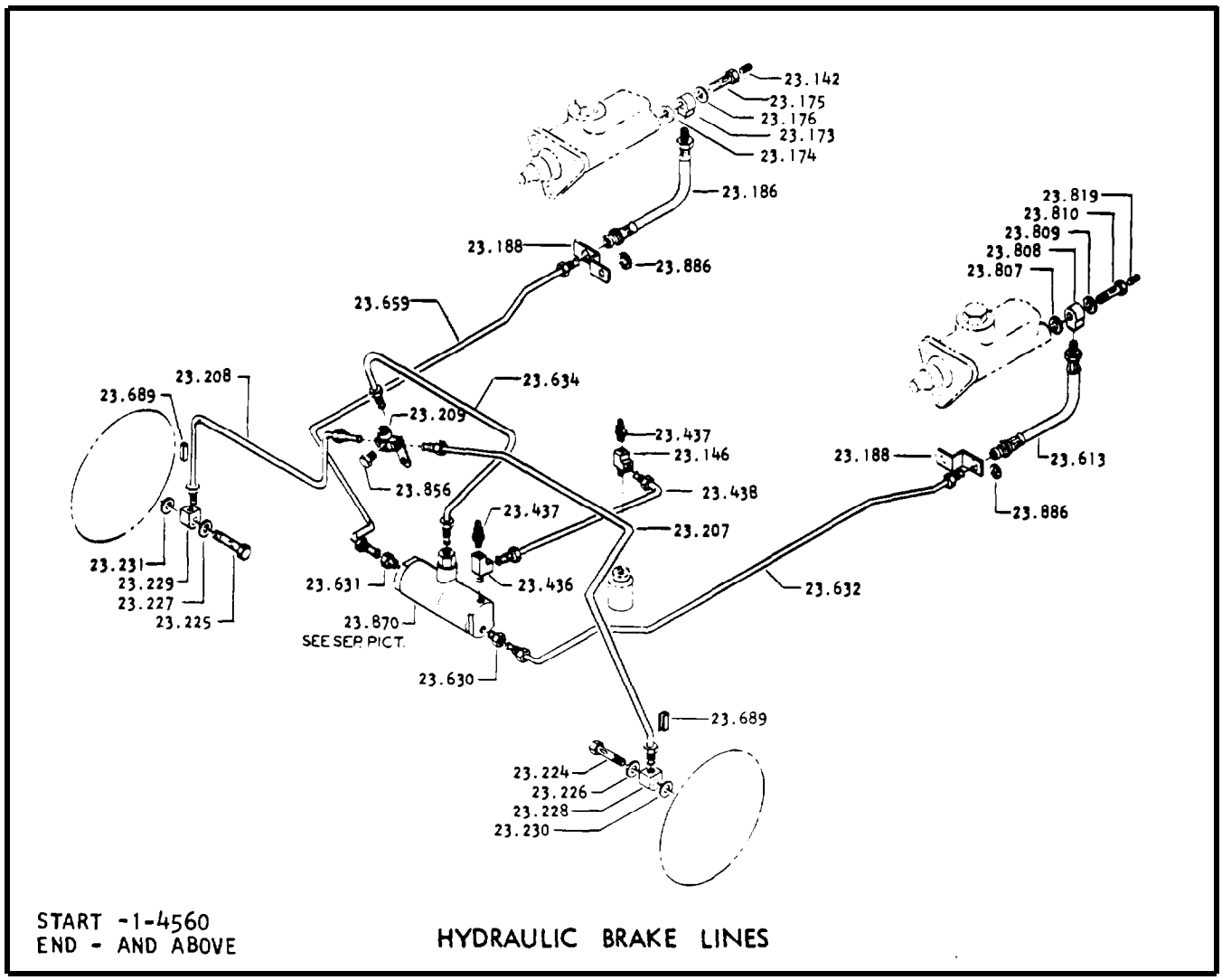

23-696 HYDRAULIC BRAKE LINES

23.142-16F2	1	PLUG
23.146-1309676	1	FITTING
23.173-859727	1	FITTING
23.174-613750	2	GASKET
223.175-620236	1	FITTING BOLT
23.176-620238	1	GASKET
23.186-430565	1	LINE
23.188-1719180	2	CLIP
23.207-1719179	1	LINE (LH)
23.208-1721252	1	LINE (RH)
23.209-1311480	1	TEE
23.224-107802	1	FITTING BOLT
23.225-107802	1	FITTING BOLT
23.226-615374	1	GASKET
23.227-615374	1	GASKET
23.228-107801	1	FITTING
23.229-107801	1	FITTING
23.230-615374	1	GASKET
23.231-615374	1	GASKET
23.436-1309676	1	FITTING
23.437-892250	2	BLEEDER
23.438-2352547	1	LINE
23.613-430565	1	LINE
23.630-59F2	1	FITTING
23.631-59F2	1	FITTING
23.632-1742408	1	LINE
23.634-1758173	1	LINE
23.659-1742407	2	LINE
23.689-1692507	2	DUST COVER
23.807-613750	1	GASKET
23.808-859727	1	FITTING
23.809-620238	1	GASKET
23.810-620236	1	FITTING BOLT
23.819-16F2	1	PLUG
23.856-41K2	1	PLUG
23.870-2351790	2	INCHING CK VALVE
23.886-799119	2	RETAINER

www.truck-freeworkshop.com/clark/

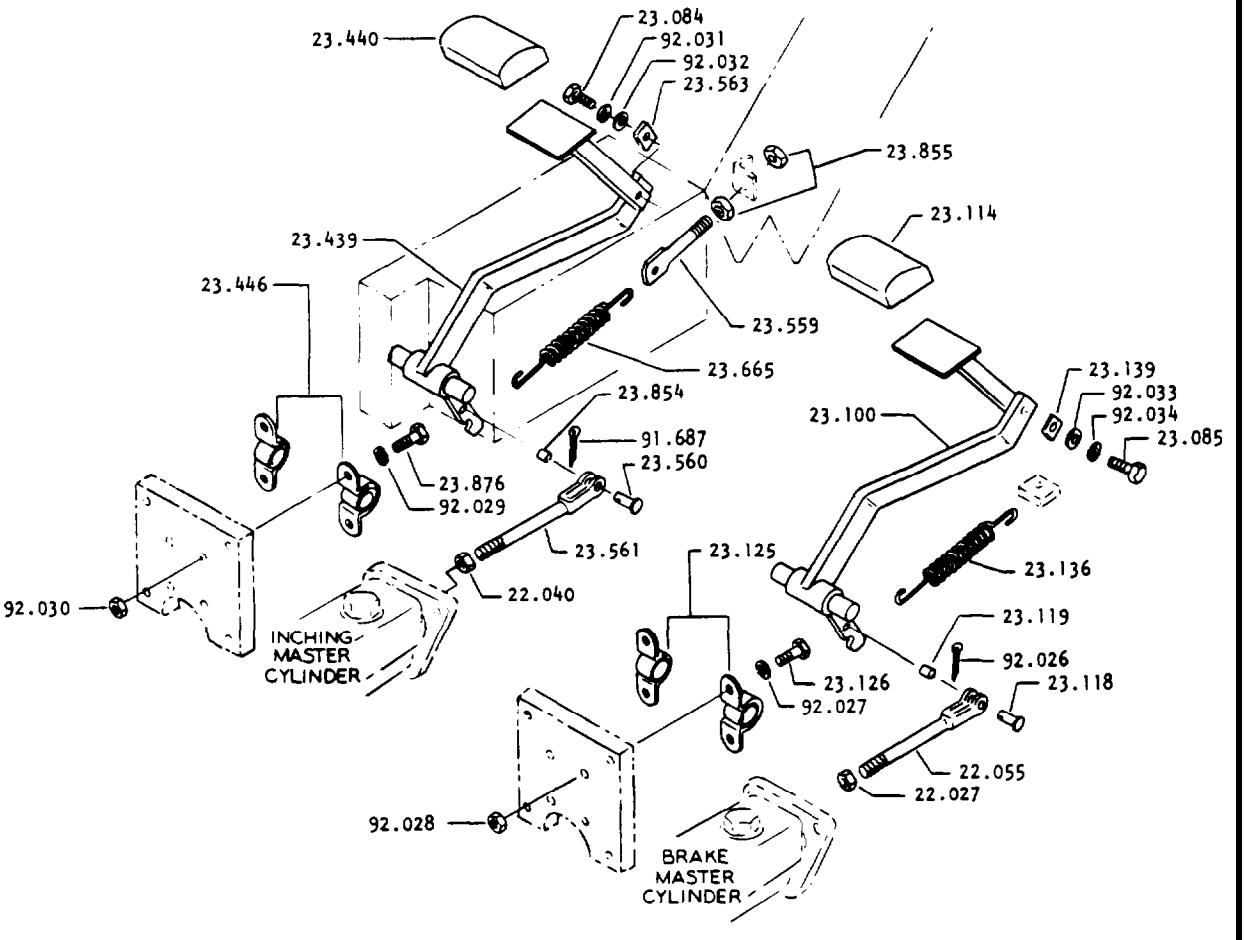

START -1-4560
END - AND ABOVE

BRAKE PEDAL AND LINKAGE

23-772 BRAKE PEDAL AND LINKAGE

22.027-8D7	1	NUT
22.040-8D7	1	NUT
22.055-1302813	1	ROD END
23.084-1C614	1	CAPSCREW
23.085-1C614	1	CAPSCREW
23.100-2348281	1	BRAKE PEDAL
23.114-1618250	1	PAD
23.118-4F7115	1	PIN
23.119-1311671	1	BUSHING
23.125-1625319	2	PILLOW BLOCK
23.126-1C628	4	BOLT
23.136-316480	1	SPRING
23.139-2308056	1	STOP
23.439-2347886	1	BRK INCHING PEDAL
23.440-1618250	1	PAD
23.446-1625319	2	PILLOW BLOCK
23.559-1304028	1	ANCHOR
23.560-4F7115	1	PIN
23.561-1302813	1	ROD END
23.563-2308056	1	STOP
23.665-2327985	1	SPRING
23.854-1311671	1	BUSHING
23.855-7D5	2	NUT
23.876-1C628	4	BOLT
91.687-1F312	1	COTTER
92.026-1F312	1	COTTER
92.027-23E6	4	LOCKWASHER
92.028-61D6	4	NUT
92.029-23E6	2	LOCKWASHER
92.030-61D6	2	NUT
92.031-23E6	1	LOCKWASHER
92.032-25E17	1	WASHER
92.033-25E17	1	WASHER
92.034-23E6	1	LOCKWASHER

www.truck-freeworkshop.com/clark/

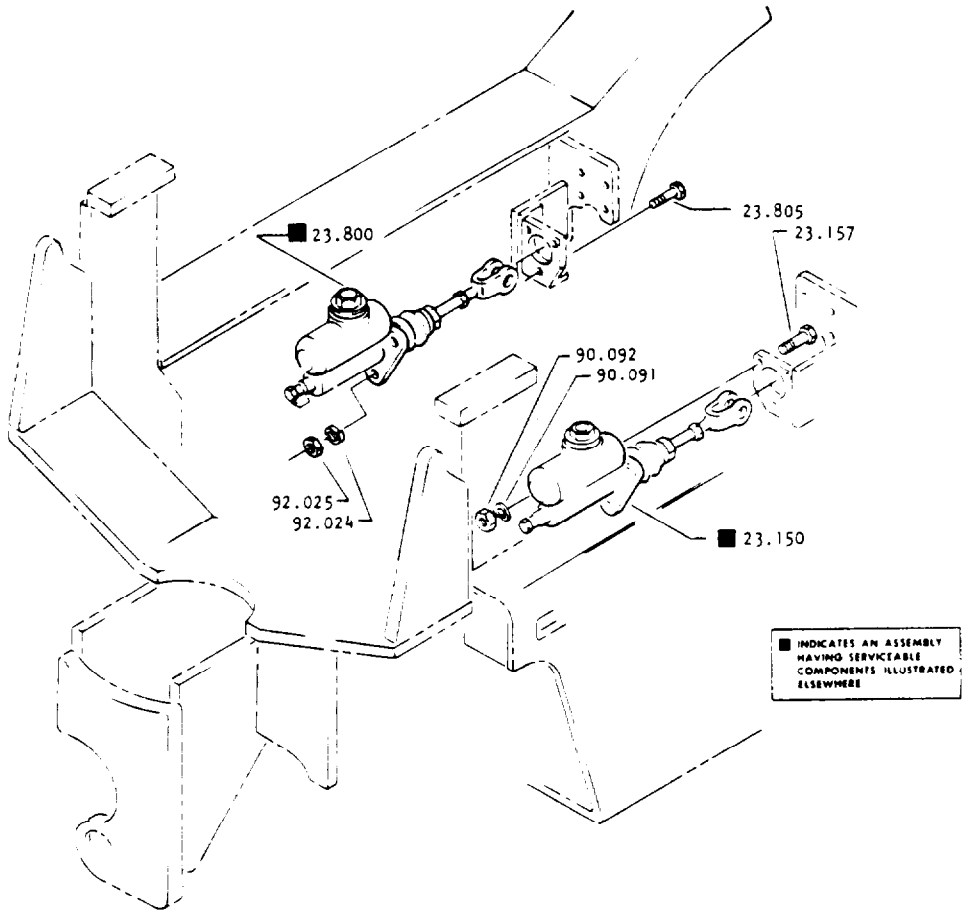

START -1-4560
END - AND ABOVE

MASTER CYLINDER MOUNTING

899499 BRAKE MASTER CYLINDER ASSEMBLY

23.150-899499	1	BRAKE MASTER CYLINDER ASSEMBLY
23.157-1C622	3	BOLT
23.800-899499	1	BRAKE INCHING MASTER CYLINDER
23.805-1C622	3	BOLT
90.091-23E6	3	LOCKWASHER
90.092-61D6	3	NUT
92.024-23E6	3	LOCKWASHER
92.025-61D6	3	NUT

www.truck-freeworkshop.com/clark/

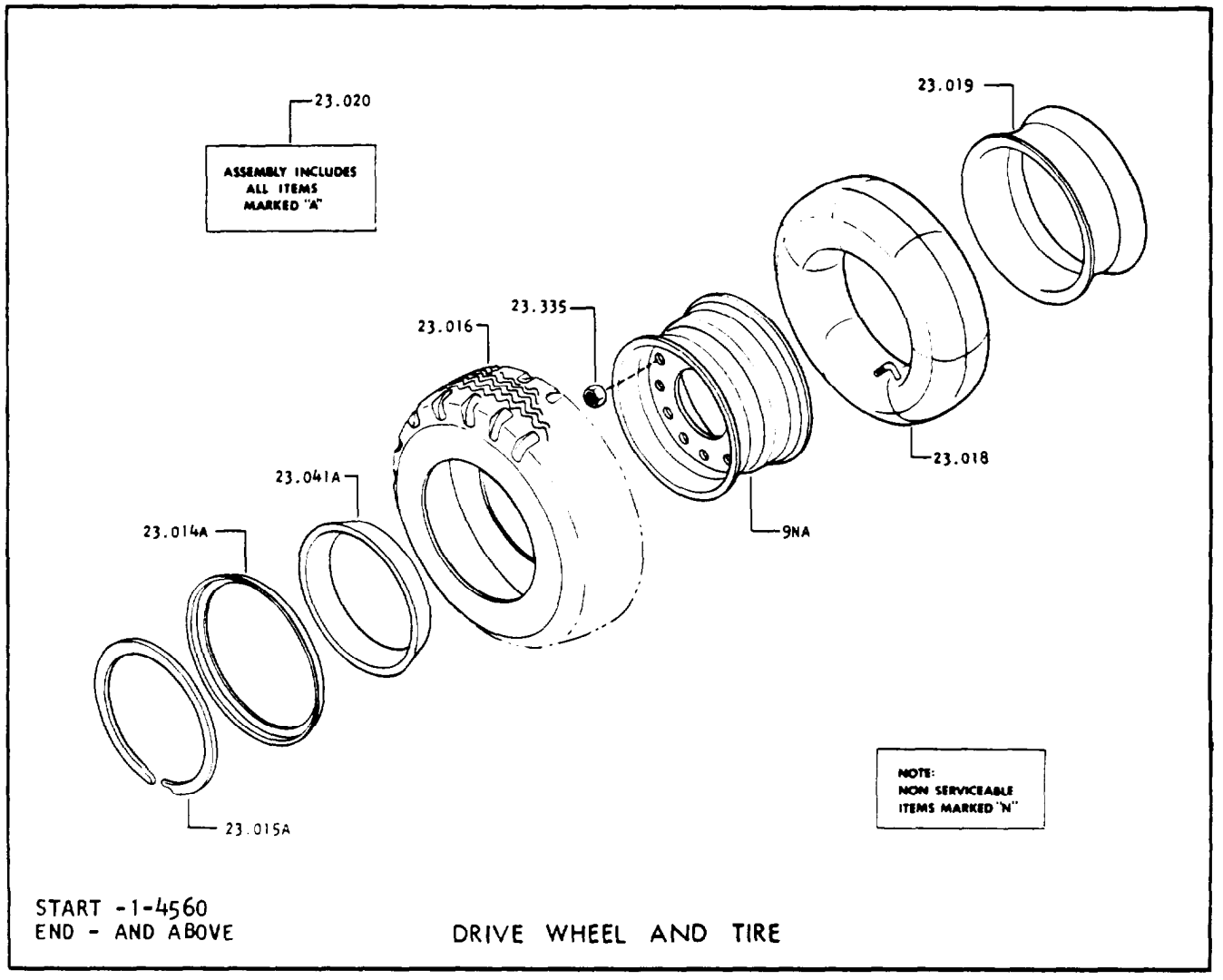

START -1-4560
END - AND ABOVE

DRIVE WHEEL AND TIRE

23-808 DRIVE WHEEL AND TIRE

23.014-890566	2	SIDE RING
23.015-890567	2	LOCK RING
23.016-1325757	2	DRIVE TIRE (7.00X12X12 PLY)
23.018-752453	2	TUBE
23.019-613096	2	FLAP
23.020-3491933	2	DRIVE WHEEL ASSEMBLY
23.041-890565	2	WEDGE RING
23.335-101364	10	NUT

www.truck-freeworkshop.com/clark/

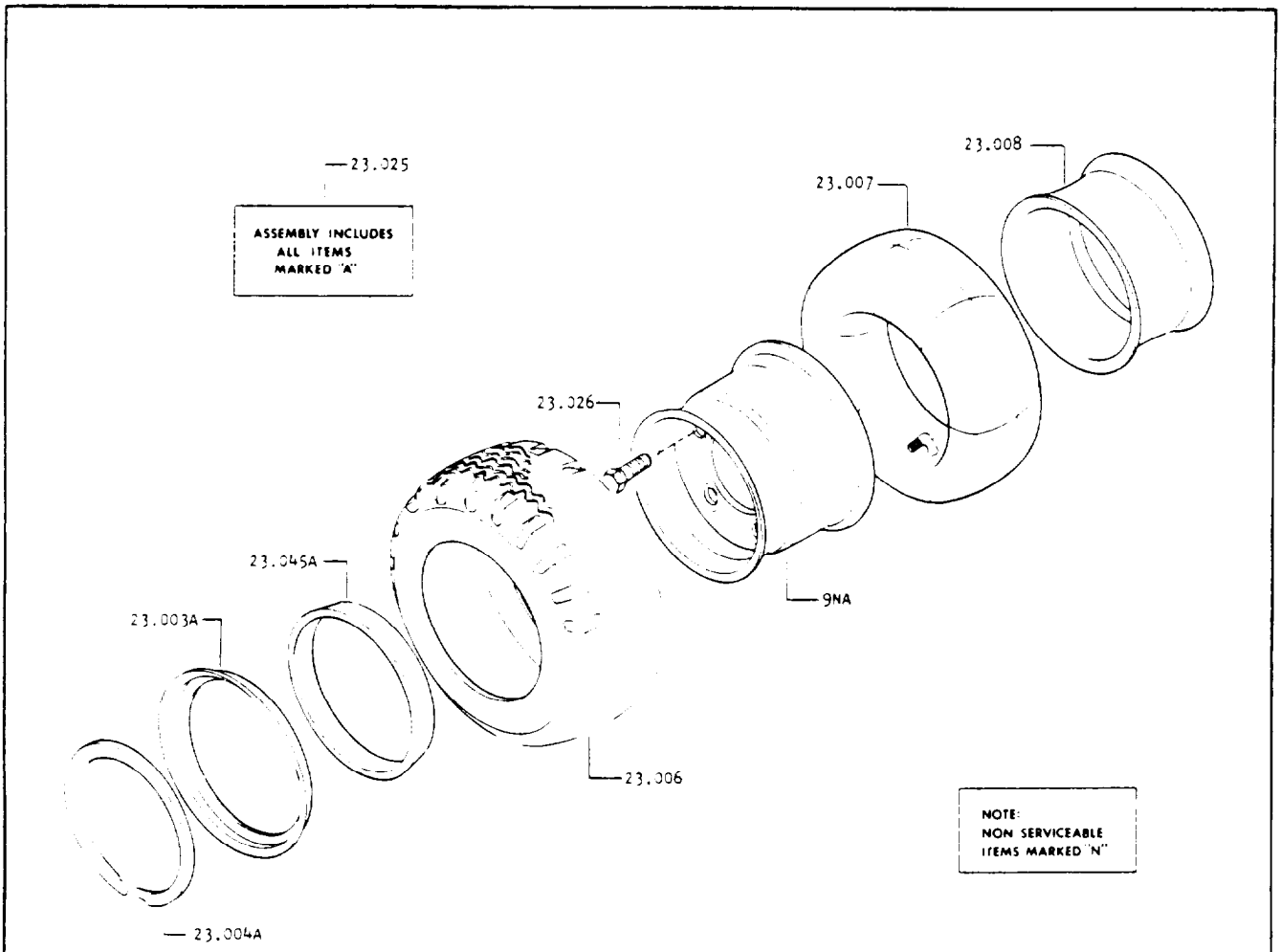

START -1-4560
END - AND ABOVE

STEER WHEEL AND TIRE

23-812 STEER WHEEL AND TIRE

23.003-890563	2	SIDE RING
23.004-890564	2	LOCK RING
23.006-712839	2	STEER TIRE (6.50X10X10 PLY)
23.007-1800421	2	TUBE
23.008-1323240	2	FLAP
23 025-3759225	2	STEER WHEEL ASSEMBLY
23.026-741556	12	BOLT
23.045-890562	2	WEDGE RING

www.truck-freeworkshop.com/clark/

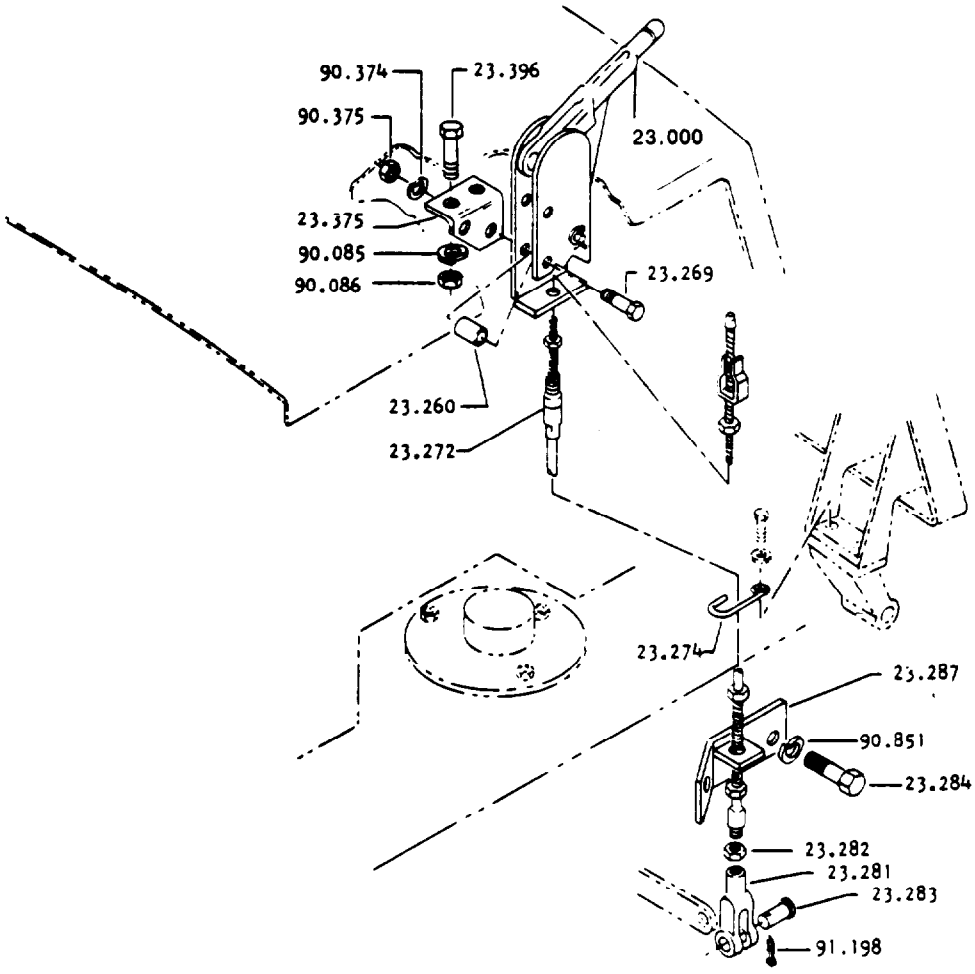

START -1-4560
END - AND ABOVE

PARKING BRAKE LINKAGE

TA502074

23-912 PARKING BRAKE LINKAGE

23.000-01100200	1	LEVER
23.260-1300065	1	SPACER
23.269-1C536	2	BOLT
23.272-1763662	1	CABLE
23.274-1778103	1	CLAMP
23.281-2J4200	1	CLEVIS
23.282-8D4	1	NUT
23.283-4F4051	1	PIN
23.284-1C616	2	CAPSCREW
23.287-1763528	1	BRACKET
23.375-1686549	1	BRACKET
23.376-1C516	2	BOLT
90.085-23E5	2	LOCKWASHER
90.086-61D5	2	NUT
90.374-23E5	2	LOCKWASHER
90.375-61D5	2	NUT
90.851-23E6	2	LOCKWASHER
91.198-1F210	1	COTTER

www.truck-freeworkshop.com/clark/

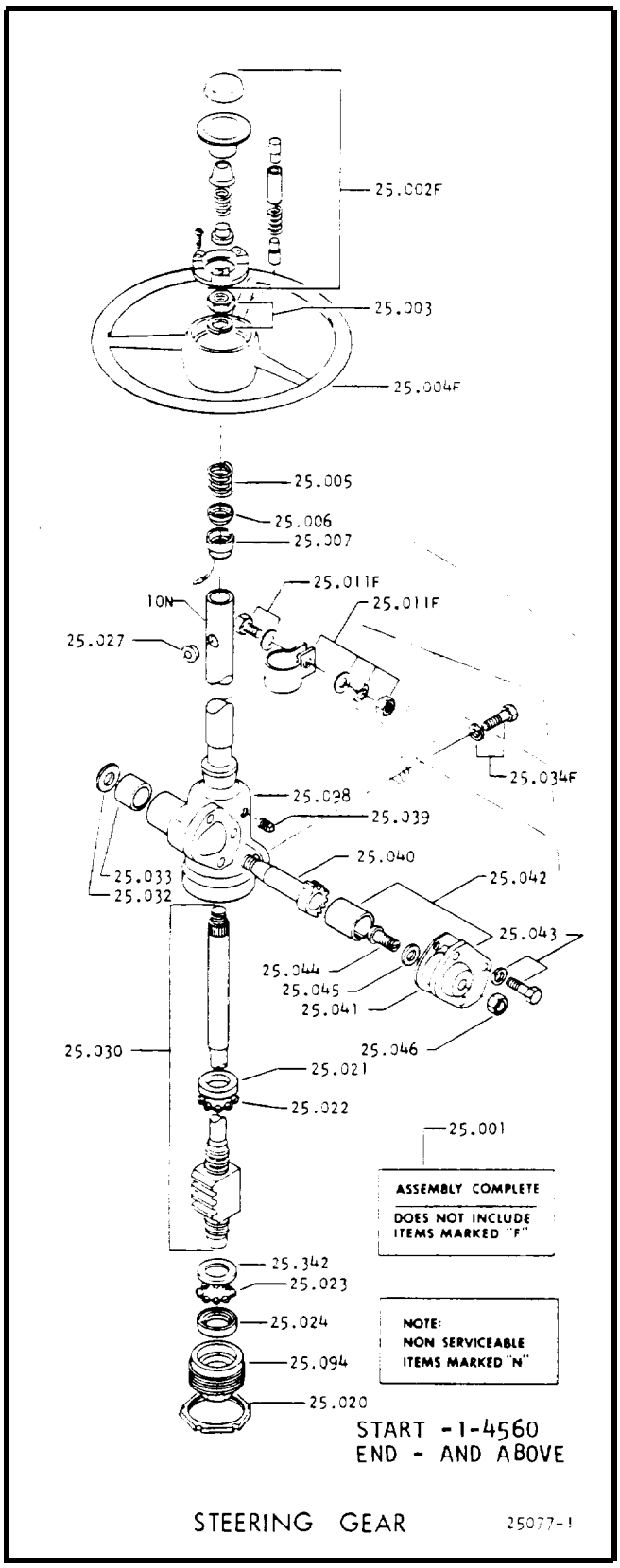

1618298 STEERING GEAR ASSEMBLY

	1	STEERING GEAR ASSEMBLY
	1	HORN BUTTON SET
	1	NUT
	1	WASHER
	1	STEERING HANDWHEEL
	1	SPRING
	1	SEAT
	1	BEARING ASSEMBLY
	1	BOLT
	2	WASHER
	1	CLAMP
	1	LOCKWASHER
	1	NUT
	1	NUT
	1	CUP
	1	BEARING
	1	BEARING
	1	CUP
	1	GROMMET
	1	SHAFT & BALL NUT
25.032-991735	1	SEAL
25.033-850063	2	BUSHING
25.034-1C716	3	CAPSCREW
25.034-23E7	3	LOCKWASHER
25.039-40K8	1	FILLER PLUG
25.040-898457	1	SHAFT & GEAR
25.041-898458	1	GASKET
25.042-898459	1	COVER & BUSHING
25.043-1C612	3	BOLT
25.043-23E6	3	LOCKWASHER
25.044-851770	1	ADJUSTOR
25.045-853187	* 1	SHIM KIT
25.046-8D7	1	NUT
25.094-898455	1	END COVER
25.098-898456	1	HOUSING, JACKET AND BUSHING
25.342-898461	1	RETAINER

www.truck-freeworkshop.com/clark/

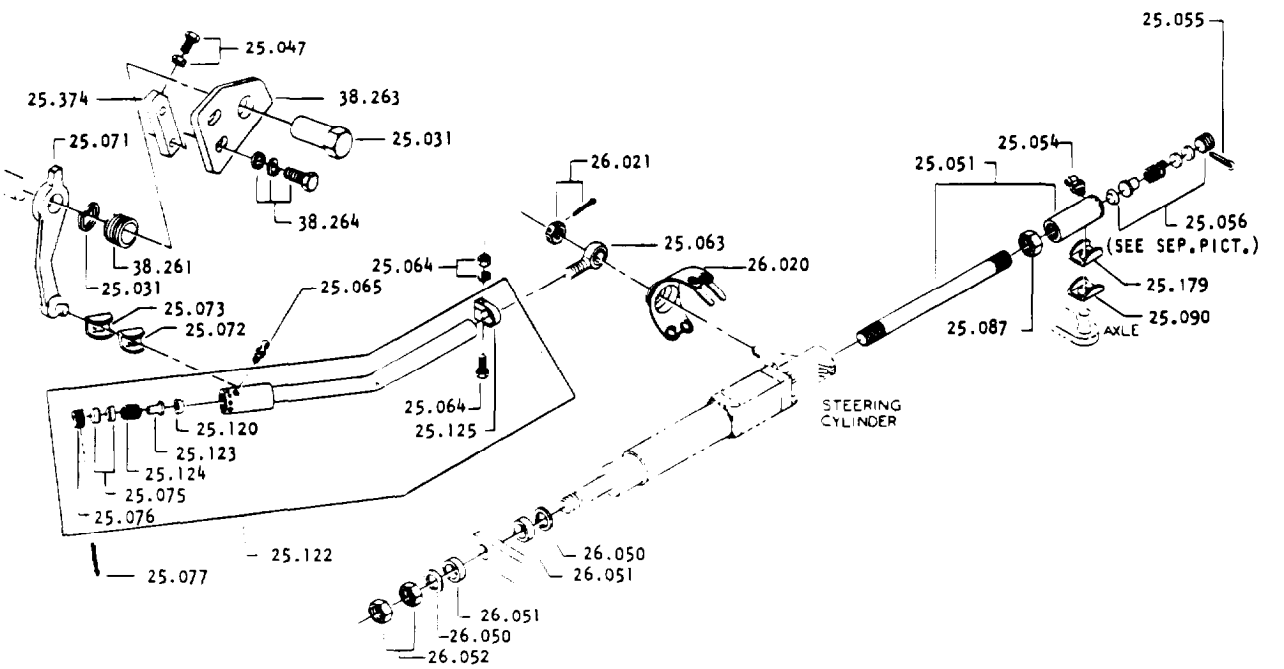

START - 1-4560
END - AND ABOVE

STEERING LINKAGE

25-177 SLEERING LINKAGE

25.031-1697860	1	NUT
25.031-23E14	1	LOCKWASHER
25.047-1305959	1	ADJUSTOR
25.047-7D8	2	NUT
25.051-1719187	1	DRAG LINK (STEER AXLE)
25.054-12H15	1	LUB FITTING
25.055-1F530	1	COTTER
25.056-894355	1	BALL SOCKET ASSEMBLY
25.063-1636426	1	ROD END
25.064-2C836	1	BOLT
25.064-23E8	1	LOCKWASHER
25.064-62D8	1	NUT
25.065-12H15	1	LUB FITTING
25.071-1636478	1	PITMAN ARM
25.072-635448	1	DUST COVER
25.073-635451	1	DUST COVER
25.075-604405	2	PRESSURE CUP
25.076-604406	1	PLUG
25.077-1F428	1	COTTER
25.087-8D22	1	NUT
25.090-635451	1	DUST COVER
25.120-634924	1	SEAT
25.122-1636454	1	DRAG LINK (PITMAN ARM)
25.123-106328	1	BUMPER
25.124-106329	1	SPRING
25.125-356057	1	CLAMP
25.179-635448	1	DUST COVER
25.374-2315068	1	BRACKET
26.020-782874	1	DUST COVER
26.021-4D14	1	NUT
26.021-1F428	1	COTTER
26.050-726958	2	WASHER
26.051-1614023	2	INSULATOR
26.052-852372	1	NUT
26.052-8D8	1	NUT
38.261-660231	1	BUSHING
38.263-1766527	1	BRACE
38.264-1C1032	2	CAPSCREW
38.264-23E10	2	LOCKWASHER
38.264-25E25	2	WASHER

www.truck-freeworkshop.com/clark/

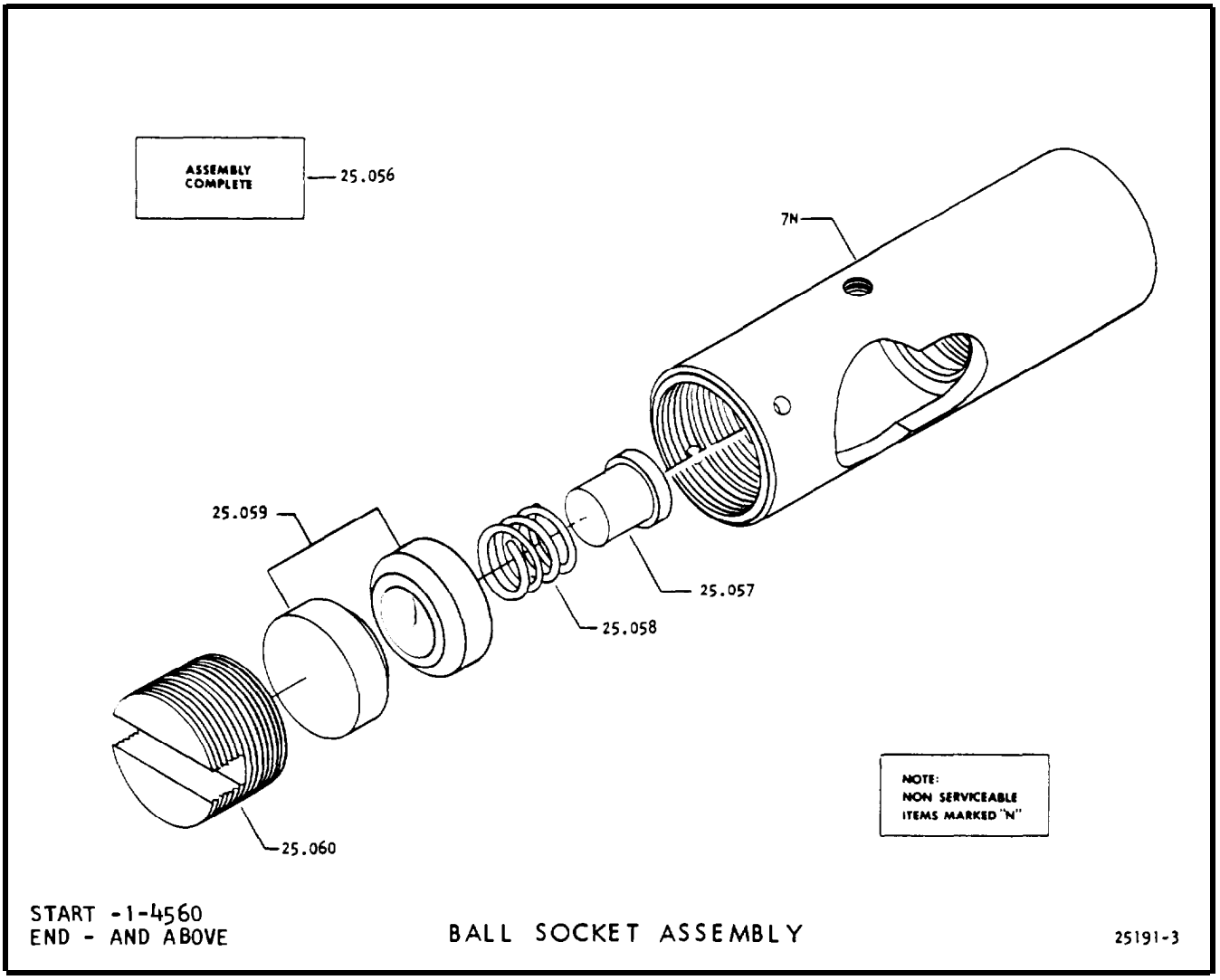

894355 BALL SOCKET ASSEMBLY

25.056-894355	1	BALL SOCKET ASSEMBLY
25.057-429224	1	SPRING GUIDE
25.058-429225	1	SPRING
25.059-429226	2	PRESSURE CUP
25.060-886331	1	PLUG

www.truck-freeworkshop.com/clark/

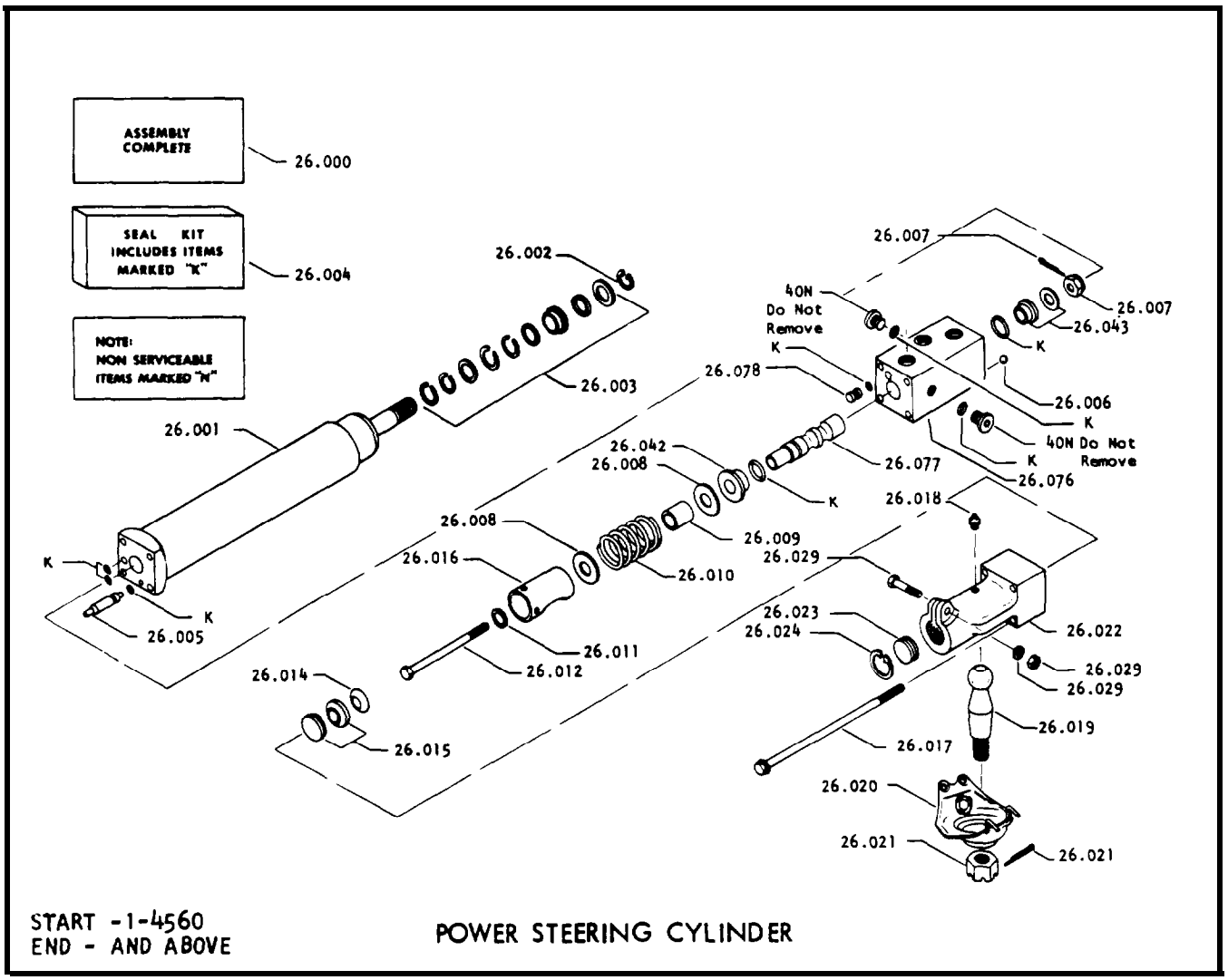

180040 POWER STEERING CYLINDER ASSEMBLY

26.000-180040	1	CYLINDER ASSEMBLY
26.001-135101	1	SUB-ASSEMBLY WITH ROD SEALS
26.002-755855	1	SNAP RING
26.003-136882	1	PISTON ROD SEAL KIT
26.004-136861	1	VALVE SEAL KIT
26.005-134455	1	CHECK VALVE
26.006-10J6	1	BALL
26.007-135059	1	SPOOL NUT
26.007-1F208J	1	COTTER
26.008-134060	2	WASHER
26.009-134059	1	SPACER
26.010-134116	1	SPRING
26.011-784057	1	WASHER
26.012-135058	1	BOLT
26.014-134076	1	SPRING WASHER
26.015-134055	2	BALL STUD SEAT
26.016-134054	1	SLEEVE
26.017-94G684J	4	CAPSCREW
26.018-952319	1	GREASE FITTING
26,019-134052	1	STUD
26.020-134070	1	SHIELD
26.021-4D14J	1	NUT
26.021-1F428J	1	COTTER
26.022-135076	1	BALL STUD HOUSING
26.023-134056	1	PLUG
26.024-134078	1	LOCK RING
26.029-18C628CR	1	BOLT
26.029-23E6	1	LOCKWASHER
26.029-64D6J	1	NUT
26.042-134289	1	SEAL RETAINER
26.043-136808	1	SEAL RETAINER KIT
26.076-136873	1	VALVE BODY KIT
26.077-134430	1	SPOOL

www.truck-freeworkshop.com/clark/

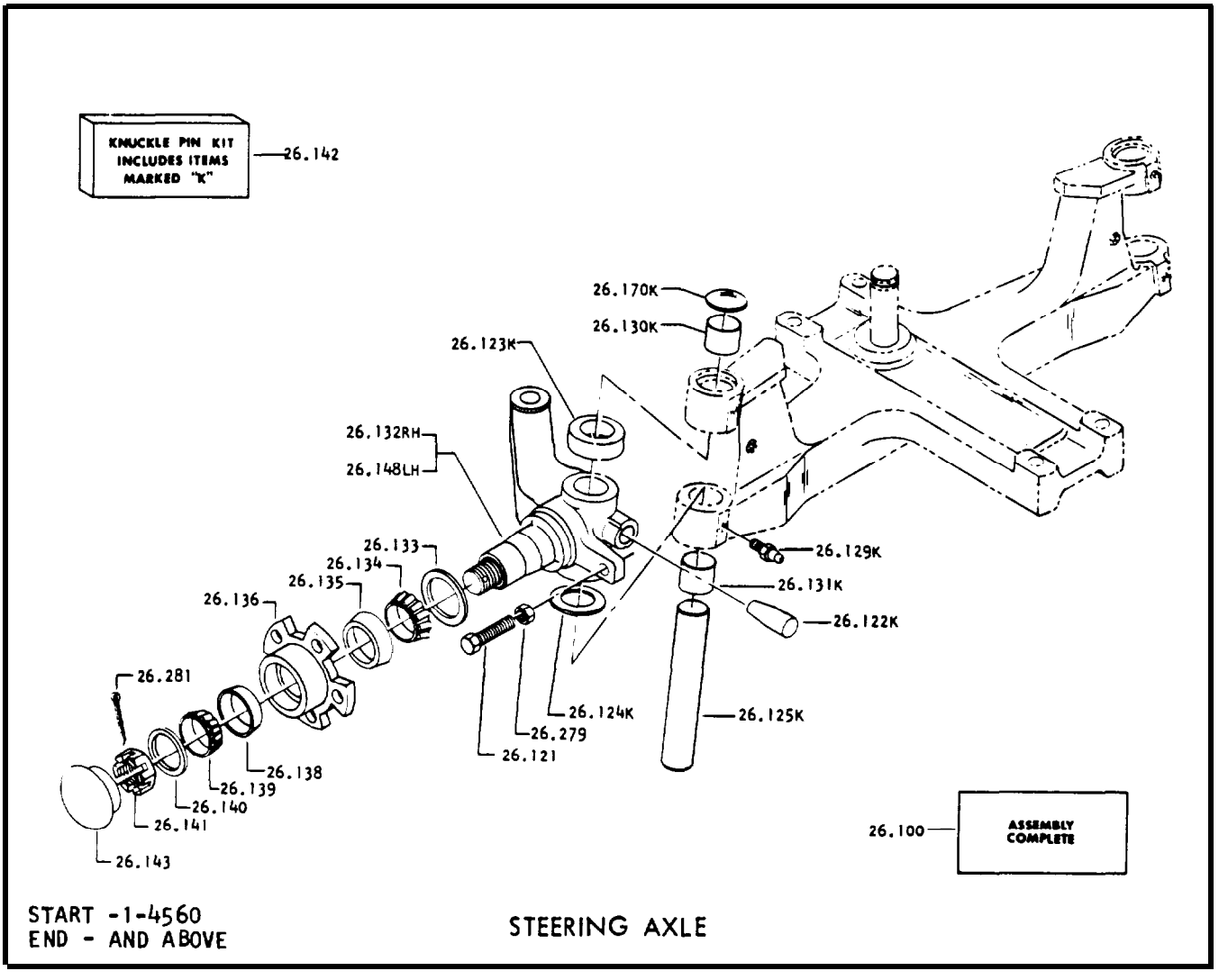

193348 STEERING AXLE ASSEMBLY (CONTINUED)

26.100-193348	1	STRG AXLE ASSEMBLY	26.135-654167	2	CUP
26.121-13G732C	2	SCREW	26.136-122354	2	HUB & CUP
26.122-108792	2	KEY	26.138-654162	2	CUP
26.123-10705	AR	BEARING	26.139-654134	2	CONE
26.124-100194	AR	SHIM	26.140-100588	2	WASHER
26.125-103890	2	GREASE FITTING	26.141-100575	9	NUT
26.129-11H15	4	FITTING	26.142-815984	2	KNUCKLE PIN KIT
26.130-654388	2	BEARING	26.143-122324	2	CAP
26.131-654388	2	KNUCKLE (RH)	26.148-129089	1	KNUCKLE
26.132-129088	1	KNUCKLE (RH)	26.170-12F108	4	EXPANSION PLUG
26.133-103861	2	SEAL	26.279-7D7J	2	NUT
26.134-654139	2	CONE	26.281-1F428J	2	COTTER

www.truck-freeworkshop.com/clark/

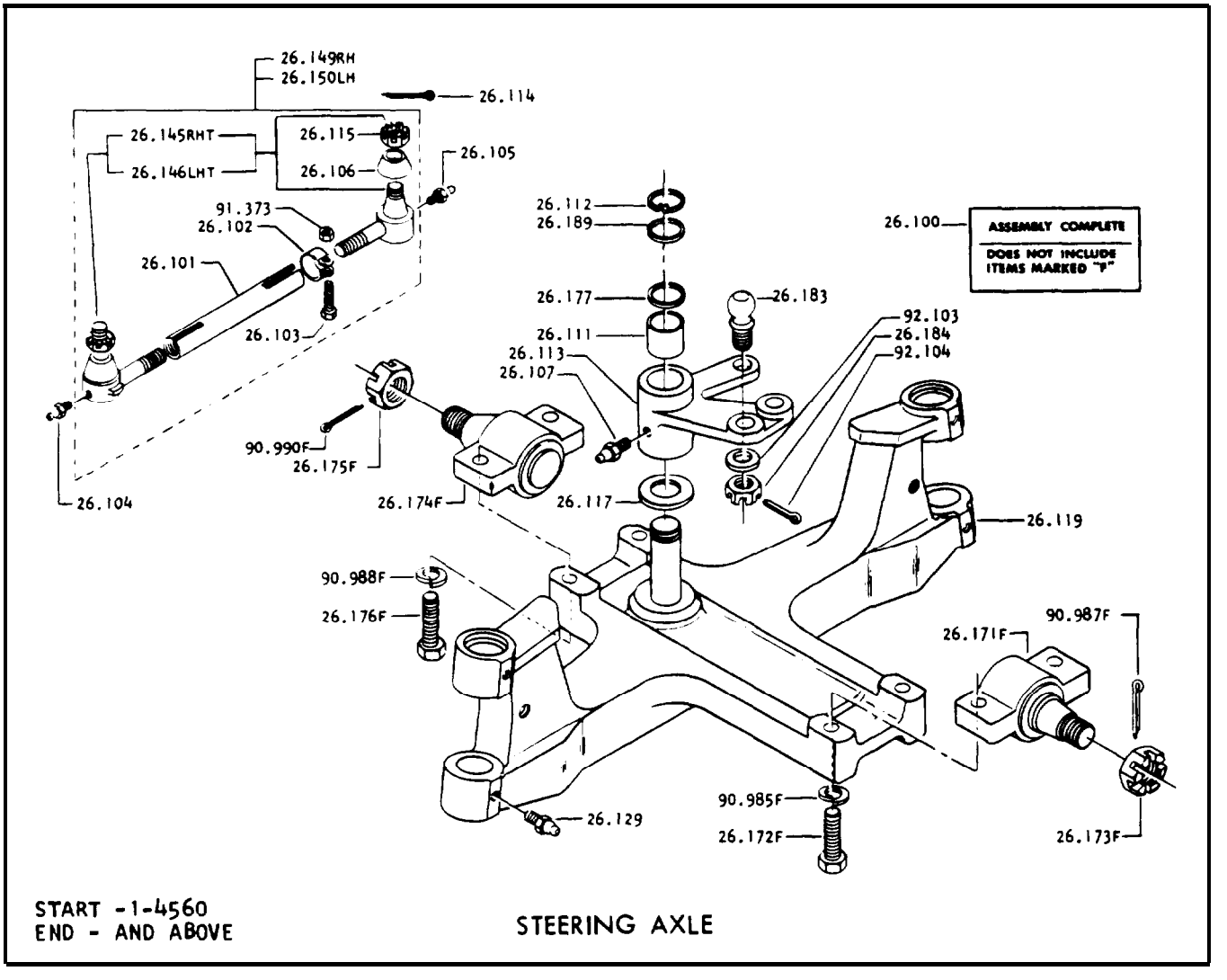

START -1-4560
END - AND ABOVE

STEERING AXLE

193348 STEERING AXLE ASSEMBLY (CONTINUED)

26.100-193348	1	STRG AXLE ASSEMBLY
26.101-107136	2	TIE ROD
26.102-103404	4	CLAMP
26.103-2C730	4	BOLT
26.104-12H15	2	LUB FITTING
26.105-10H25	2	LUB FITTING
26.106-111563	4	DUST COVER
26.107-10H25	1	LUB FITTING
26.111-128518	2	BEARING
26.112-663834	1	SNAP RING
26.113-128521	1	SPIDER
26.114-1F416	4	COTTER
26.115-4D10	4	NUT
26.117-128516	1	WASHER
26,119-128519	1	AXLE & BUSHING
26.129-11H15	4	LUB FITTING
26.145-103405	2	TIE ROD END (RH)
26.146-103406	2	TIE ROD END (LH)
26.149-120514	1	TIE ROD ASSEMBLY (RH)
26.150-120514	1	TIE ROD ASSEMBLY (LH)
26.171-1722071	1	SILENT BLOCK
26.172-2C1056	2	CAPSCREW
26.173-4D18	1	NUT
26.174-1722071	1	SILENT BLOCK
26.175-4D18	1	NUT
26.176-2C1056	2	CAPSCREW
26.177-128515	2	SEAL
26.183-122050	1	BALL STUD
26.184-122051	1	NUT
26.189-128517	AA	SHIM
90.985-23E10	2	LOCKWASHER
90.987-1F636	1	COTTER
90.988-23E10	2	LOCKWASHER
90.990-1F636	1	COTTER
91.373-86D7	4	NUT
92.103-104412	1	WASHER
92.104-1F416	1	COTTER

www.truck-freeworkshop.com/clark/

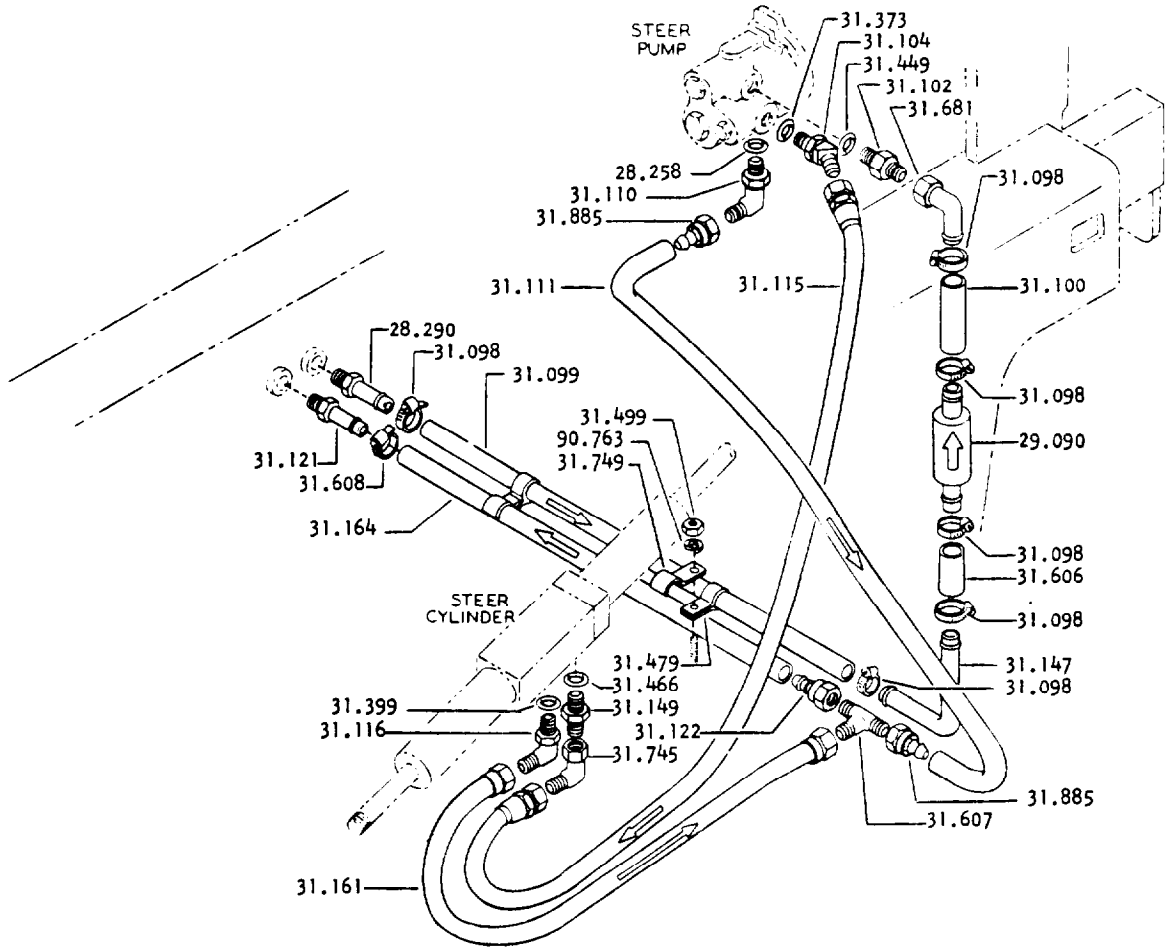

START -1-4560
END - AND ABOVE

POWER STEERING LINES

26-116 POWER STEERING LINES

28.258-91F7	1	O-RING
28.290-667289	1	CONNECTOR
29.090-1765756	1	STEEP PUMP FILTER
31.098-42H10	2	CLAMP
31.099-1307059	26"	HOSE
31.100-1307059	2.5"	HOSE
31.102-15K10	1	CONNECTOR
31.104-1307833	1	ELBOW
31.111-660408	1	ELBOW
31.111-17K7	23"	HOSE
31.115-656644	1	HOSE ASSEMBLY
31.116-17K6	1	ELBOW
31.121-66686	1	CONNECTOR
31.122-663264	1	HOSE COUPLING
31.147-2337313	1	TUBE
31.149-1303429	1	CONNECTOR
31.161-730086	1	HOSE ASSEMBLY
31.164-660408	18"	HOSE
31.373-91F5	1	O-RING
31.399-91F6	1	O-RING
31.449-91F10	1	O-RING
31.466-91F6	1	O-RING
31.479-6H21	2	CLIP
31.499-61D5	2	NUT
31.606-1307059	2.5"	HOSE
31.607-1316264	1	TEE
31.608-42H10	1	CLAMP
31.681-1300693	1	ELBOW
31.745-11K6	1	ELBOW
31.749-30H50	2	CLIP
31.885-663264	2	HOSE COUPLING
90.763-23E5	2	LOCKWASHER

www.truck-freeworkshop.com/clark/

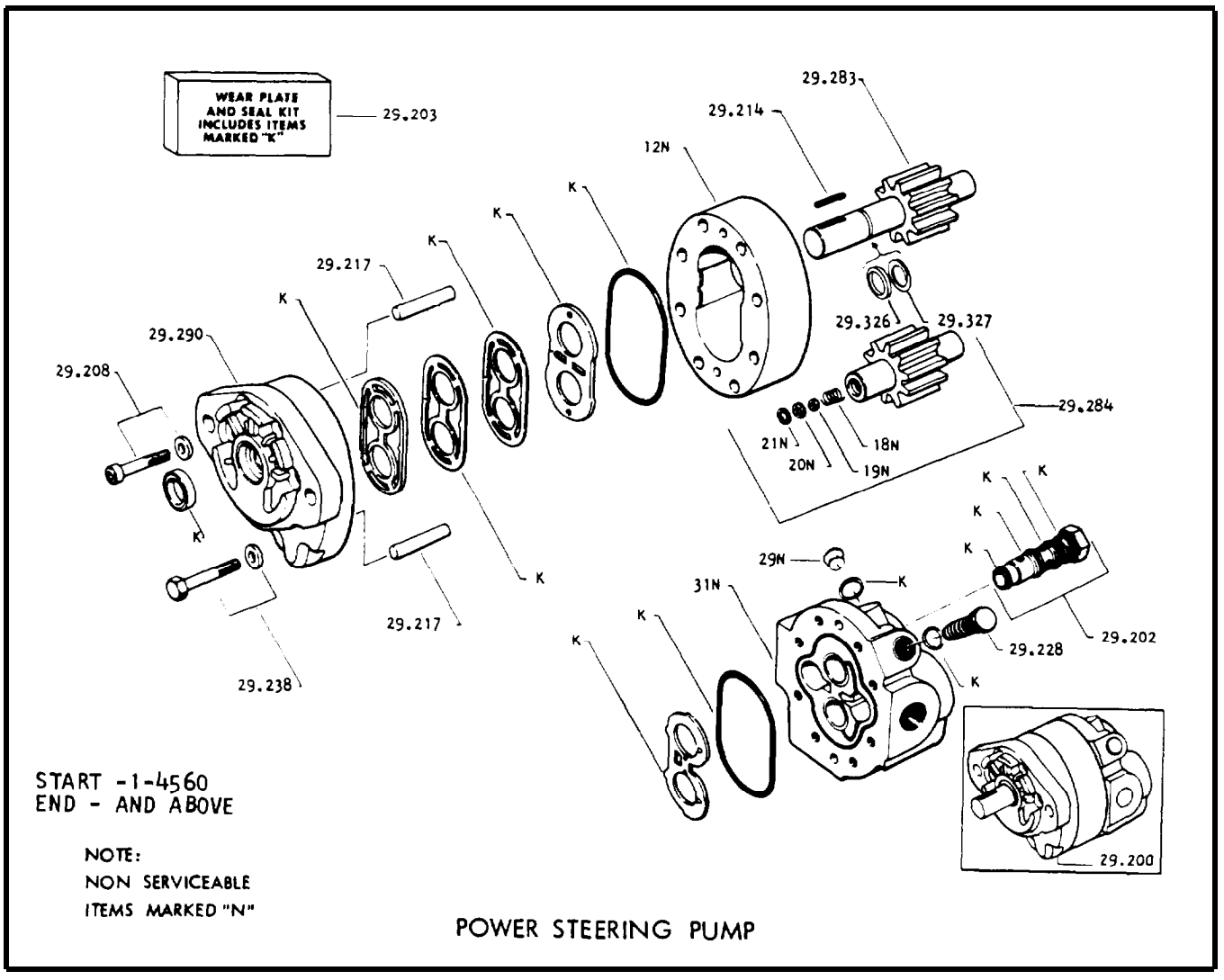

2316008 POWER STEERING PUMP ASSEMBLY

29.200-2316008	1	PWR STRG PUMP ASSEMBLY
29.202-993346	1	FLOW CONTROL VALVE
29.203-991988	1	WEAR PLATE & SEAL KIT
29.208-1C548J	2	COVER BOLT
29.208-784057	2	WASHER
29.214-6J605	1	PUMP SHAFT KEY
29.217-992214	2	COVER DOWEL
29.228-993347	1	RELIEF VALVE
29.238-1C536J	6	COVER BOLT
29.238-784057	6	WASHER
29.283-991990	1	GEAR & SHAFT ASSEMBLY (DRIVE)
29.284-991991	1	GEAR & SHAFT ASSEMBLY (DRIVE)
29.290-994274	1	COVER ASSEMBLY (SHAFT END)
29.326-991993	1	SNAP RING RETAINER
29.327-992215	1	SNAP RING

www.truck-freeworkshop.com/clark/

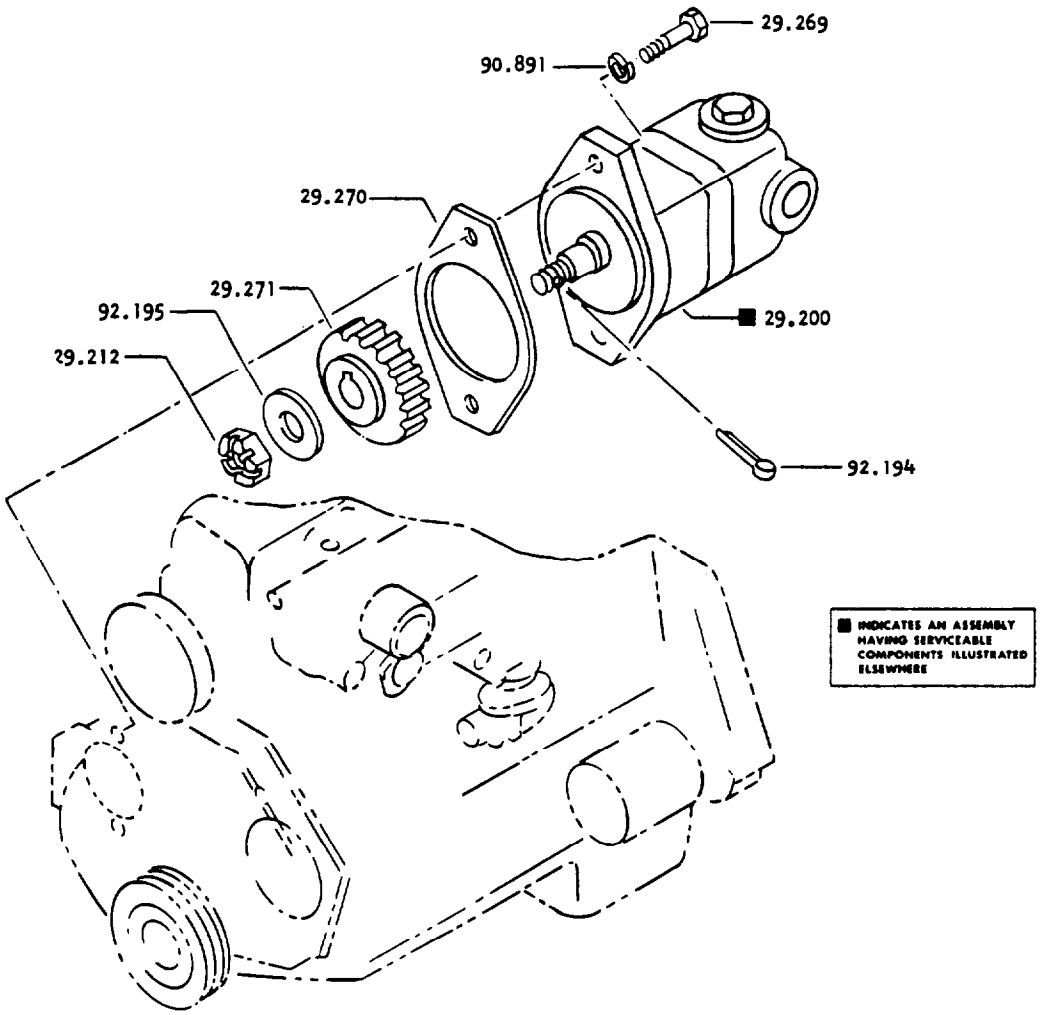

STEERING PUMP DRIVE

26-404 STEERING PUMP DRIVE

29.200-2316008	1	STEERING PUMP ASSEMBLY
29.212-4D8	1	NUT
29.269-1C624	2	CAPSCREW
29.270.618053	1	GASKET
29.271-1686577	1	GEAR
90.891-23E6	2	LOCKWASHER
92.194-1F320	1	COTTER
92.195-874606	1	WASHER

www.truck-freeworkshop.com/clark/

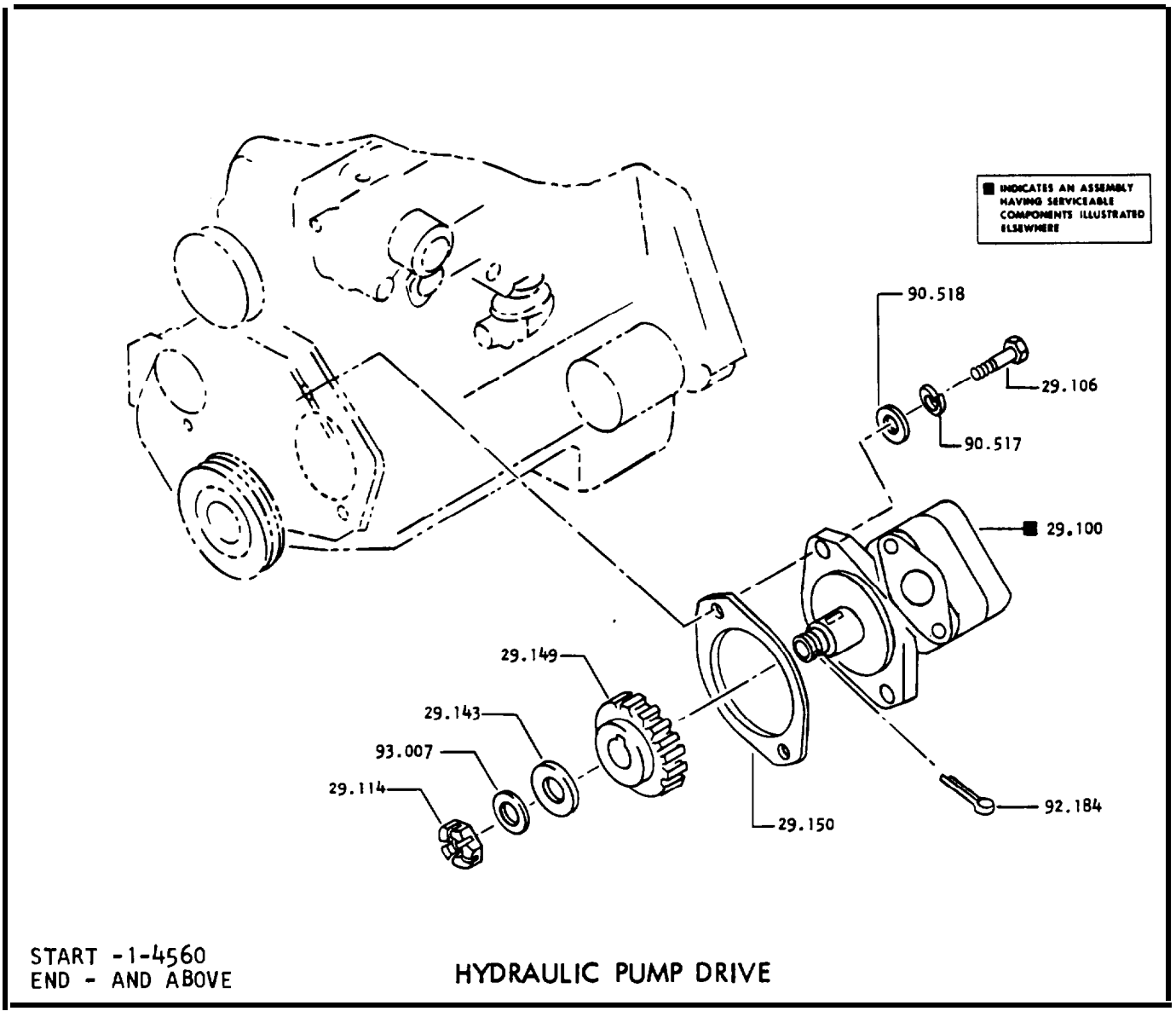

START -1-4560
END - AND ABOVE

HYDRAULIC PUMP DRIVE

29-052 HYDRAULIC PUMP DRIVE

29.100-2334954	1	HYDRAULIC PUMP ASSEMBLY
29.106-2C828	2	CAPSCREW
29.114-4D10	1	NUT
29.143-25E29	1	WASHER
29.149-2351512	1	GEAR
29.150-2351511	1	GASKET
90.517-23E8	2	LOCKWASHER
90.518-25E21	2	WASHER
92.184-1F422	1	COTTER
93.007-25E26	1	WASHER

www.truck-freeworkshop.com/clark/

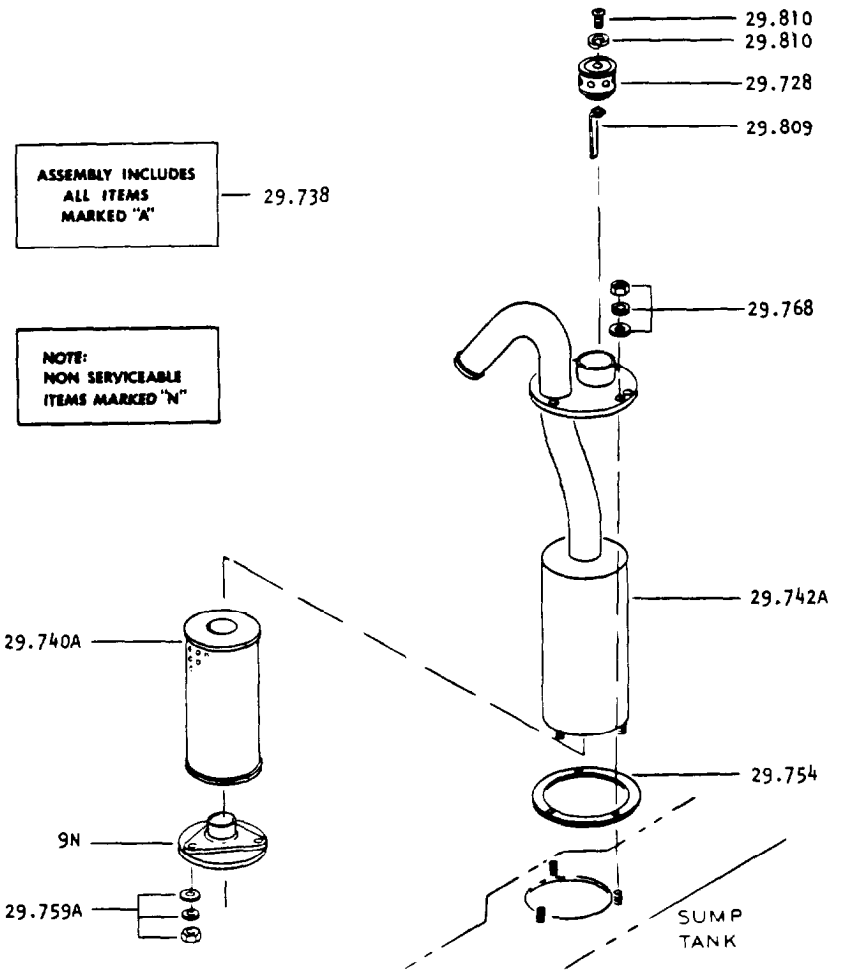

START -1-4560
END - AND ABOVE

HYDRAULIC SUMP FILTER

1799525 HYDRAULIC SUMP FILTER ASSEMBLY

29.738-1799525	1	HYDRAULIC SUMP FILTER
29.728-1779011	1	CAP
29.740-1810437	1	CARTRIDGE
29.742-1798012	1	COVER
29.754-1784651	1	GASKET
29.759-25E13	3	WASHER
29.759-23E4	3	LOCKWASHER
29.759-61D4	3	NUT
29.768-61D5	3	NUT
29.768-23E5	3	LOCKWASHER
29.768-25E16	3	WASHER
29.809-2304918	1	DIPSTICK
29.810-85G108	1	SCREW
29.810-15E10	1	LOCKWASHER

www.truck-freeworkshop.com/clark/

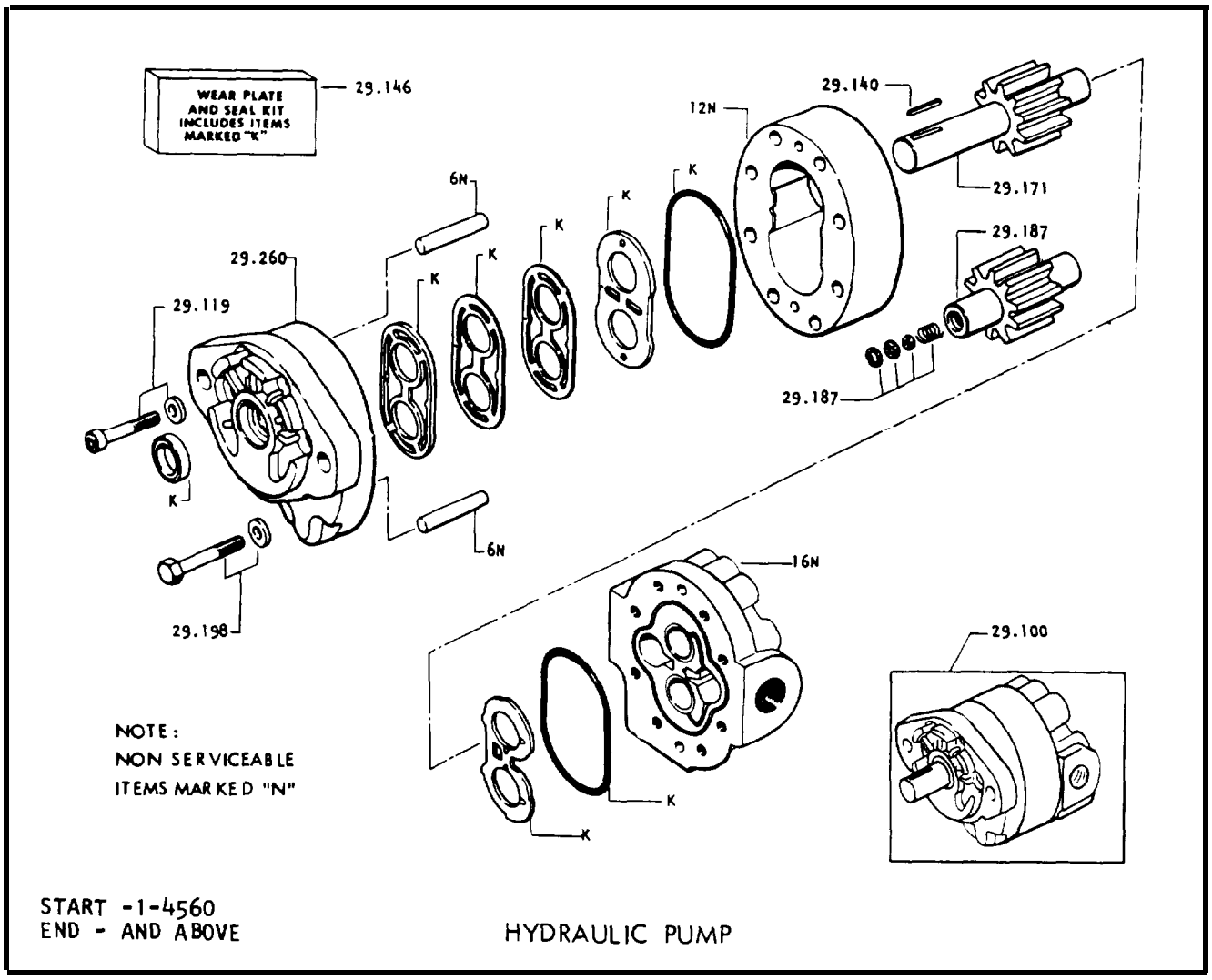

2334954 HYDRAULIC PUMP ASSEMBLY

29.100-2334954	1	HYDRAULIC PUMP ASSEMBLY
29.119-11G652J	4	BOLT
29.119-994580	4	WASHER
29.140-6J808	1	KEY
29.146-994472	1	WEAR PLATE & SEAL KIT
29.171-995953	1	GEAR & SHAFT
29.187-995954	1	IDLER GEAR ASSEMBLY
29.198-11G656J	4	BOLT
29.198-994580	4	WASHER
29.260-994583	1	COVER ASSEMBLY

www.truck-freeworkshop.com/clark/

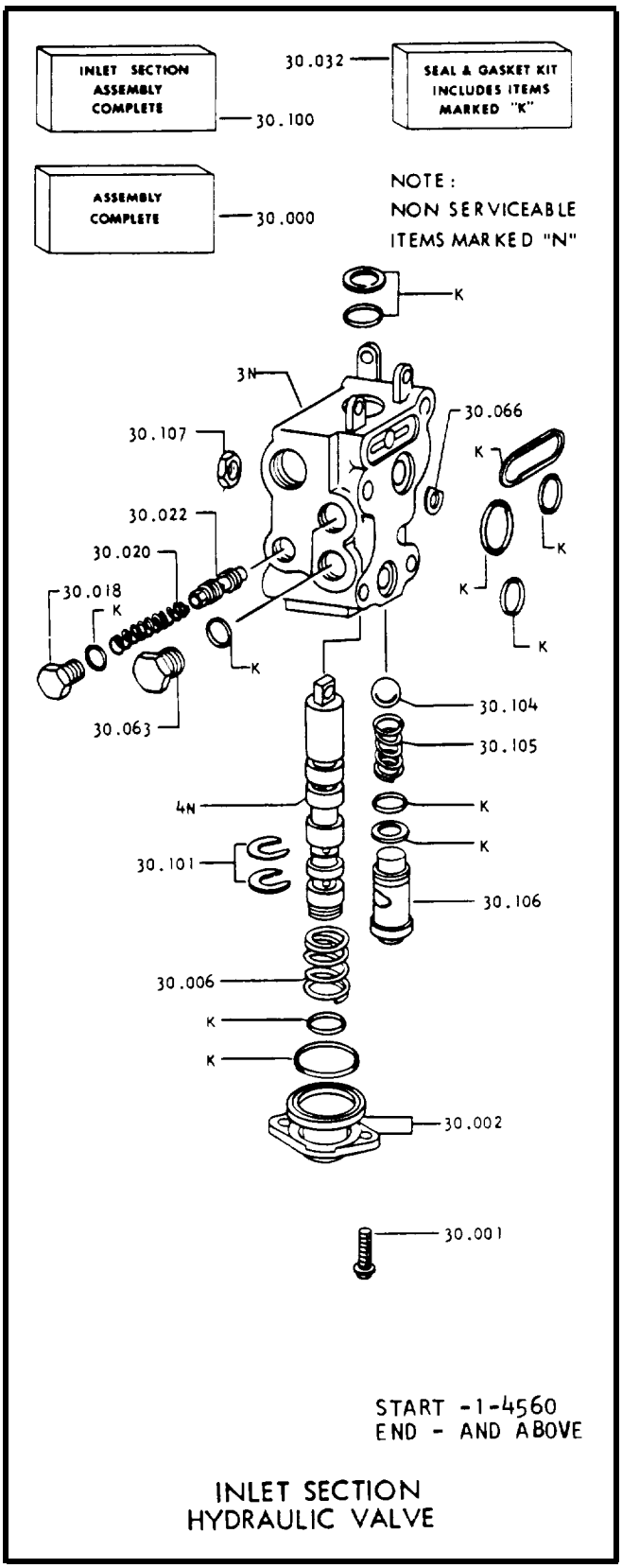

30.000-3734222	1	HYDRAULIC VALVE ASSEMBLY
30.100-905342	1	VALVE INLET SECTION
30.001-892923	2	SCREW
30.002-892924	1	RETAINER
30.002-892925	1	SLEEVE
30.006-888074	1	SPRING
30.018-24K6	1	PLUG
30.020-888140	1	SPRING
30.022-889001	1	RELIEF VALVE
30.032-892871	1	SEAL KIT
30.063-24K7	1	PLUG
30.066-896605	4	SHIM
30.101-892669	2	C-WASHER
30.104-10J20	1	BALL
30.105-888069	1	SPRING
30.106-888070	1	PLUG
30.107-61D6	4	NUT

www.truck-freeworkshop.com/clark/

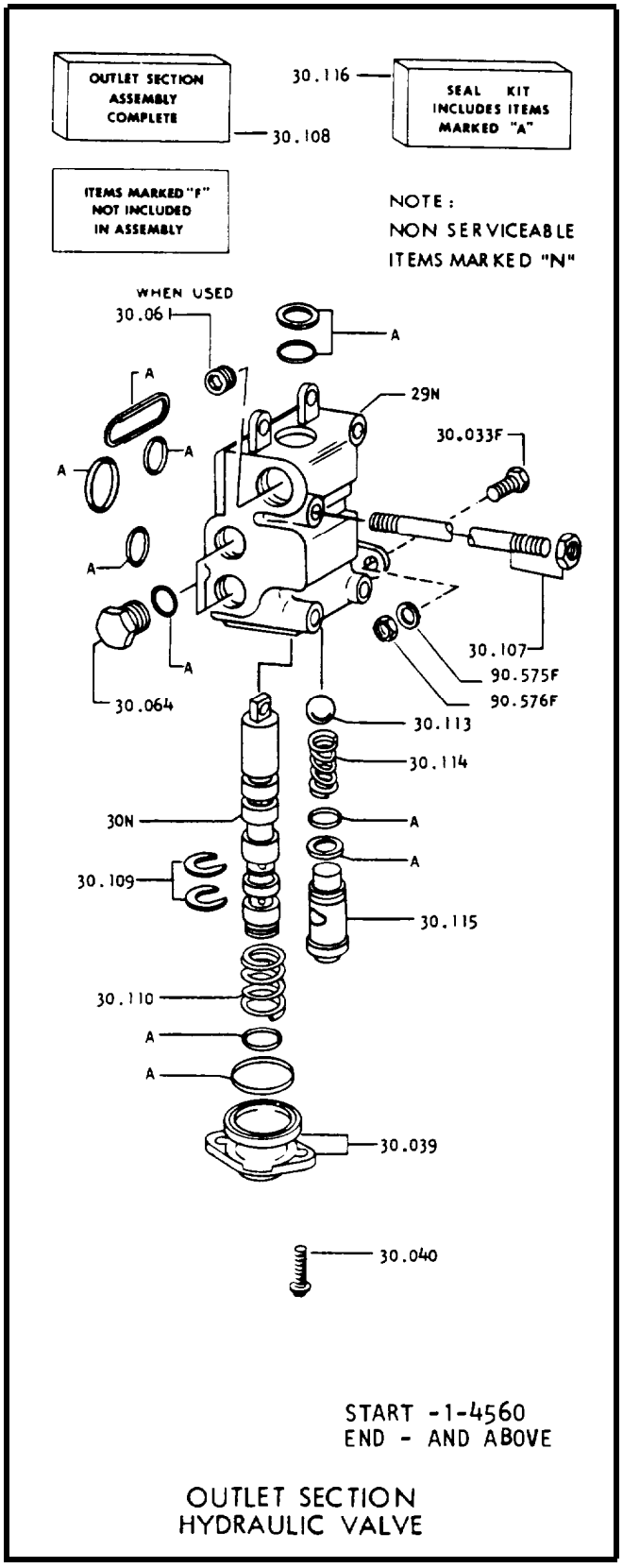

3734222 HYDRAULIC VALVE ASSEMBLY (CONTINUED)

30.108-990223	1	VALVE OUTLET SECTION
30.033-1C632	1	BOLT
30.039-892924	1	RETAINER
30.039-892925	1	SLEEVE
30.040-892923	2	SCREW
30.064- NOT USED		
30.107-1C688	4	BOLT
30.107-61D6	4	NUT
30.109-892669	2	C-WASHER
30.110-888074	1	SPRING
30.113-10J20	1	BALL
30.114-888069	1	SPRING
30.115-888070	1	PLUG
30.116-892871	1	SEAL KIT
90.575-23E6	1	LOCKWASHER
90.576-61D6	1	NUT

www.truck-freeworkshop.com/clark/

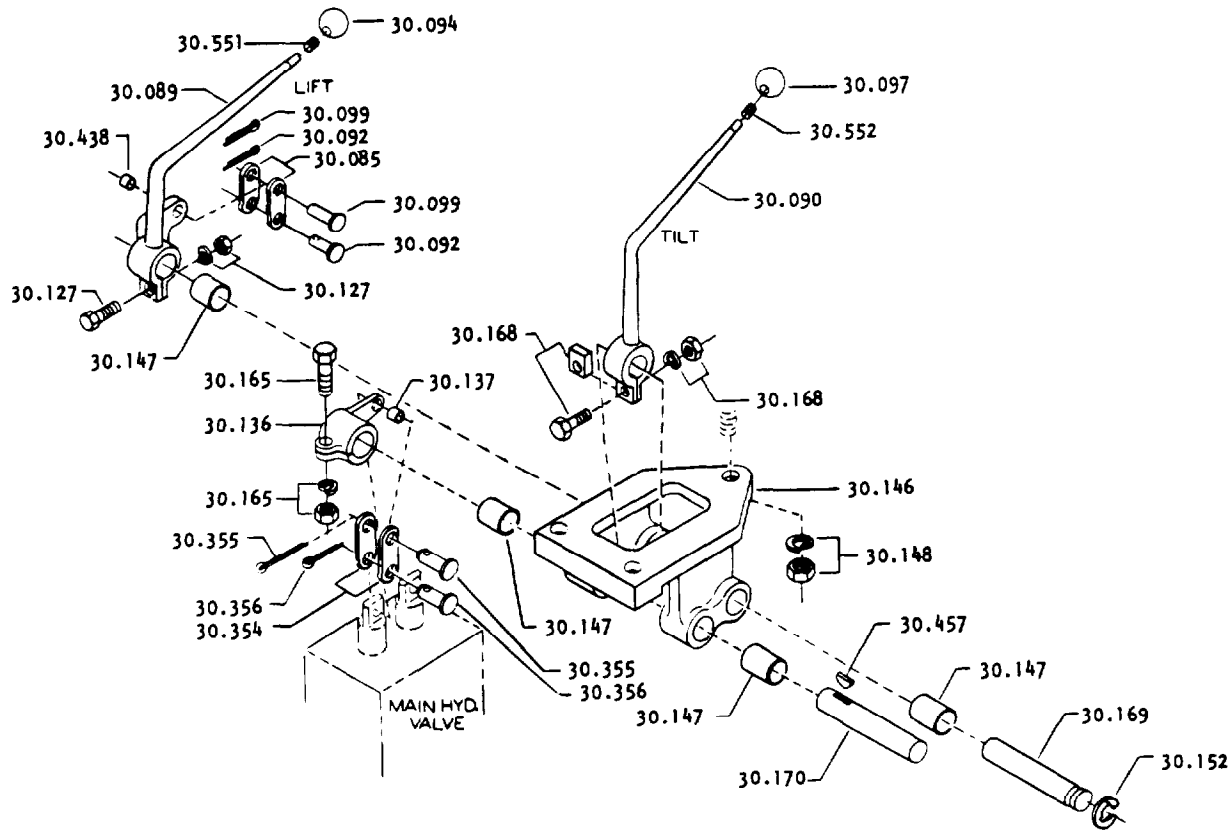

START -1-4560
END - AND ABOVE

VALVE CONTROL LINKAGE

30-095 VALVE CONTROL LINKAGE

30.085-1685098	2	LINK
30.089-2348889	1	LIFT CONTROL LEVER
30.090-1685092	1	TILT CONTROL LEVER
30.092-4F6106	1	PIN
30.092-1F310	1	COTTER PIN
30.094-2314196	1	KNOB
30.097-2314196	1	KNOB
30.099-4F6106	1	PIN
30.099-1F310	1	COTTER PIN
30.127-1C624	1	BOLT
30.127-23E6	1	LOCKWASHER
30.127-6106	1	NUT
30.136-2361633	1	BELLCRANK
30.137-1311669	1	BUSHING
30.146-1685097	1	BRACKET
30.147-664957	4	BUSHING
30.148-61D6	3	NUT
30.148-23E6	3	LOCKWASHER
30.152-799759	1	SNAP RING
30.165-1C522	1	BOLT
30.165-23E5	1	LOCKWASHER
30.165-6105	1	NUT
30.168-1C624	1	BOLT
30.168-1685096	1	LOCK PLATE
30.168-23E6	1	LOCKWASHER
30.168-61D6	1	NUT
30.169-1685911	1	PIVOT SHAFT
30.170-2332877	1	PIVOT SHAFT
30.354-1685098	2	LINK
30.355-4F6106	1	PIN
30.355-1F310	1	COTTER PIN
30.356-4F6106	1	PIN
30.356-1F310	1	COTTER PIN
30.438-1311669	1	BUSHING
30.457-5J406	1	KEY
30.551-1311798	1	SLEEVE
30.552-1311798	1	SLEEVE

www.truck-freeworkshop.com/clark/

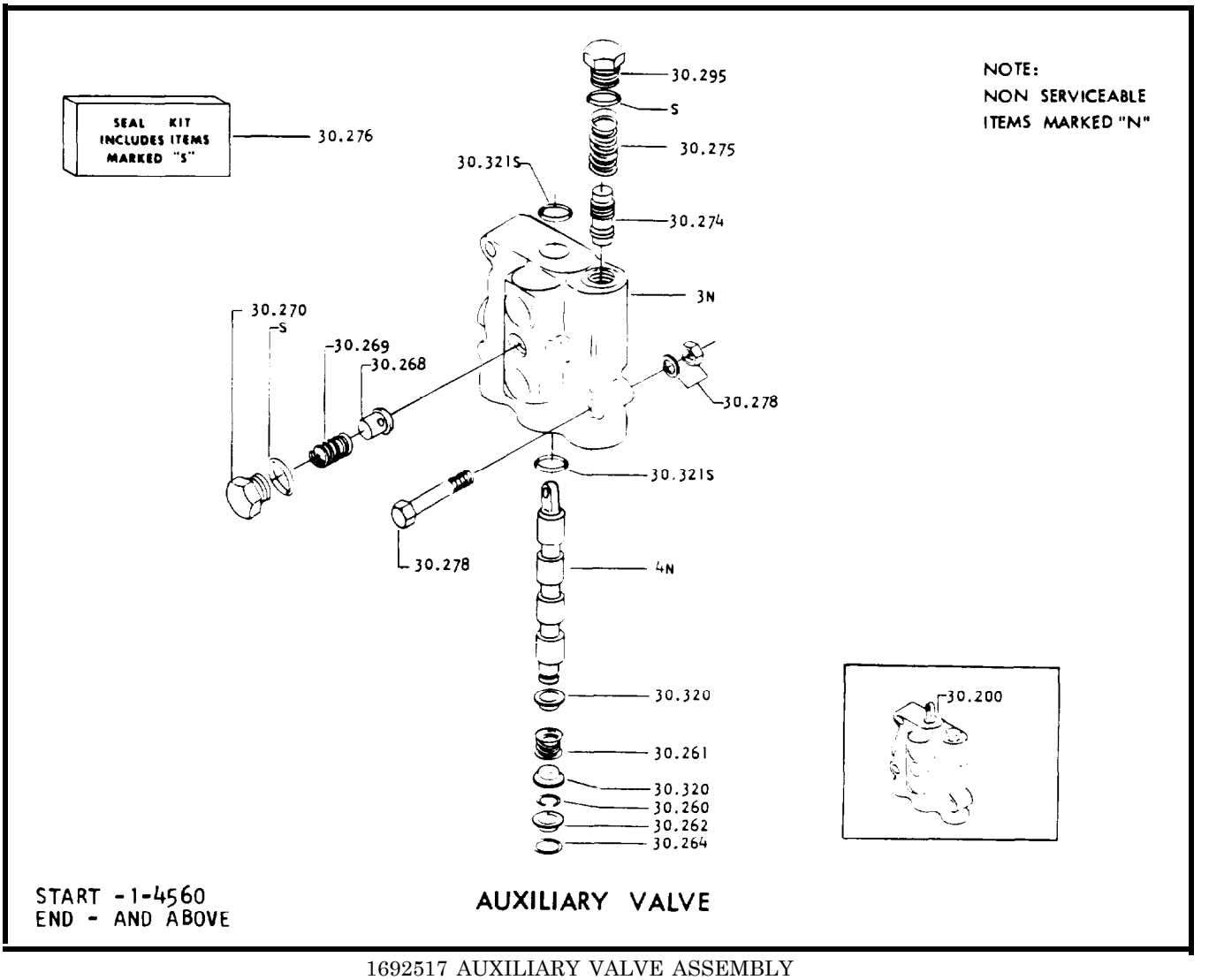

1692517 AUXILIARY VALVE ASSEMBLY

30.200-1692517	1	AUXILIARY VALVE ASSEMBLY
30.260-9J10	1	SNAP RING
30.261-990078	1	SPRING
30.262-990079	1	SPRING COVER
30.264-990080	1	SNAP RING
30.268-990081		CONE
30.269-990082	1	VALVE SPRING
30.270-990083	1	VALVE PLUG
30.274-888066	1	RELIEF VALVE ASSEMBLY
30.275-888140	1	SPRING
30.276-990076	1	SEAL KIT
30.278-1C540	2	BOLT
30.278-23E5	2	LOCKWASHER
30.278-61D5	2	NUT
30.295-24K6	1	PLUG & O-RING
30.320-990077	1	GUIDE
30.321-48K12	1	O-RING

www.truck-freeworkshop.com/clark/

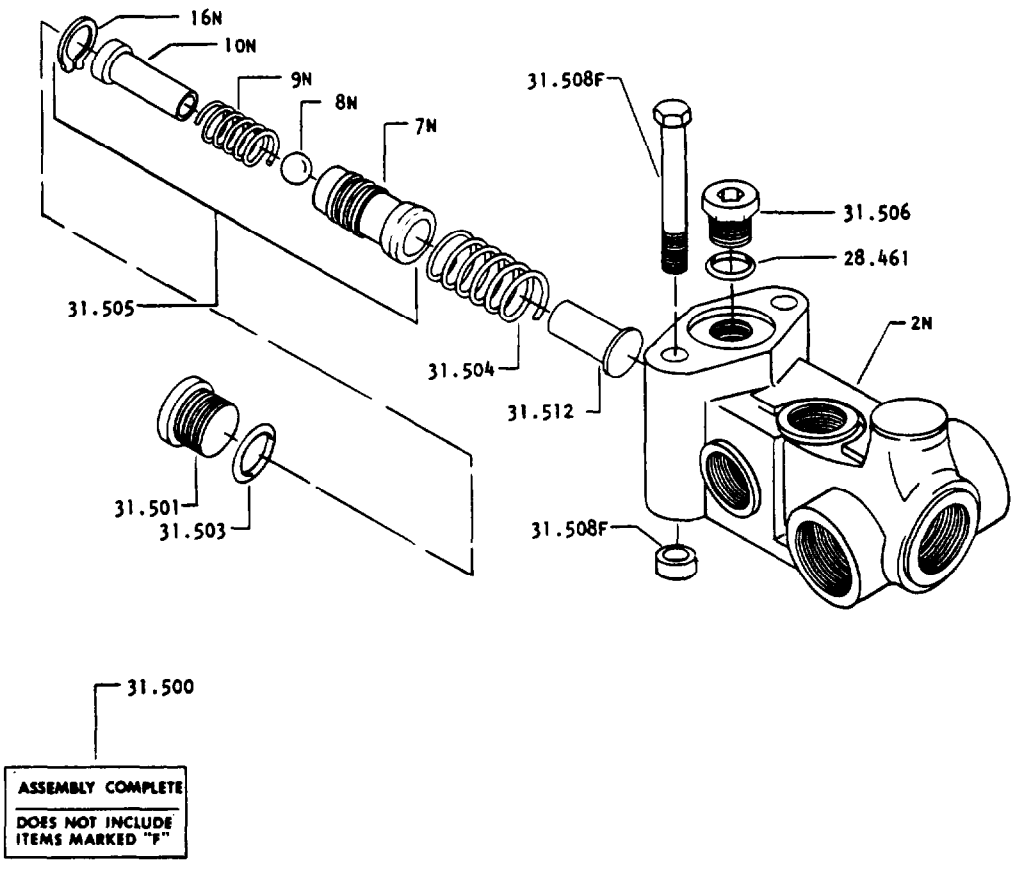

START -1-4560
END - AND ABOVE

TILT LOCK VALVE

233471 TILT LOCK VALVE ASSEMBLY

31.500-233471	1	TILT LOCK VALVE ASSEMBLY
28.461-91F3	1	PLUG O-RING
31.501-47K7	1	CAP & O-RING
31.503-91F7	1	O-RING
31.504-135013	1	SPRING
31.505-233467	1	SPOOL ASSEMBLY
31.506-47K3	1	PLUG & O-RING
31.508-1C640	2	CAPSCREW
31.508-23E6	2	LOCKWASHER
31.512-135049	1	SPOOL STOP

www.truck-freeworkshop.com/clark/

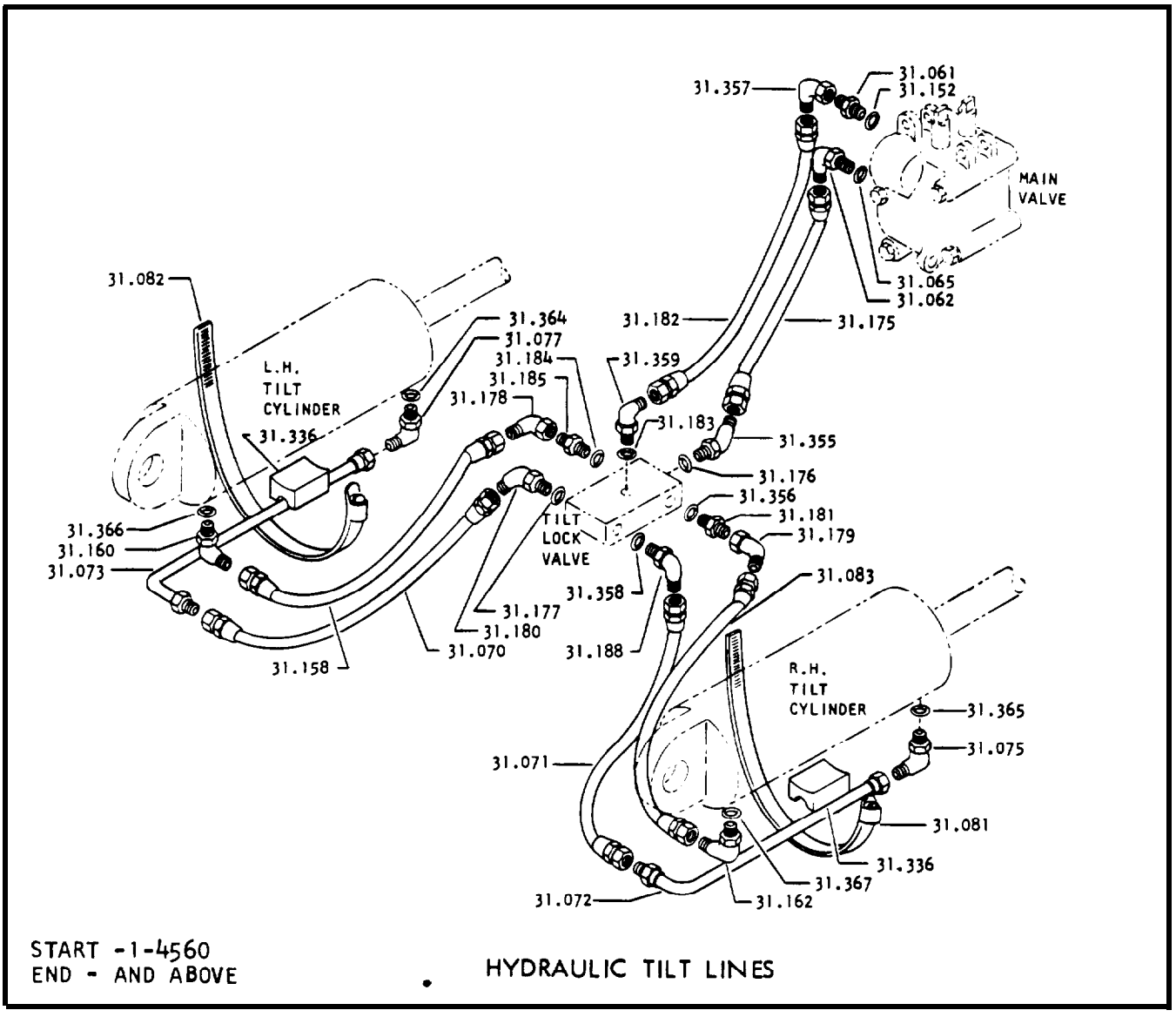

31-530 HYDRAULIC TILT LINES

31.061-1303429	1	CONNECTOR
31.062-17K6	1	ELBOW
31.065-91F6	1	O-RING
31.070-1302000	1	HOSE ASSEMBLY
31.071-1302000	1	HOSE ASSEMBLY
31.072-1723949	1	TUBE
31.073-1723949	1	TUBE
31.075-17K5	1	ELBOW
31.077-17K5	1	ELBOW
31.081-742733	1	CLAMP
31.082-742733	1	CLAMP
31.083-675092	1	HOSE ASSEMBLY
31.152-91F6	1	O-RING
31.158-675092	1	HOSE ASSEMBLY
31.160-17K5	1	ELBOW
31.162-17K5	1	ELBOW
31.175-1324818	1	HOSE ASSEMBLY
31.176-91F6	1	O-RING
31.177-91F5	1	O-RING
31.178-12K5	1	ELBOW
31.179-12K5	1	ELBOW
31.180-18K5	1	ELBOW
31.181-743108	1	CONNECTOR
31.182-656643	1	HOSE ASSEMBLY
31.183-91F6	1	O-RING
31.184-91F6	1	O-RING
31.185-743108	1	CONNECTOR
31.188-18K5	1	ELBOW
31.336-667297	2	SPACER
31.355-18K6	1	ELBOW
31.356-91F6	1	O-RING
31.357-11K6	1	ELBOW
31.358-91F5	1	O-RING
31.359-17K6	1	ELBOW
31.364-91F5	1	O-RING
31.365-91F5	1	O-RING
31.366-91F5	1	O-RING
31.367-91F5	1	O-RING

www.truck-freeworkshop.com/clark/

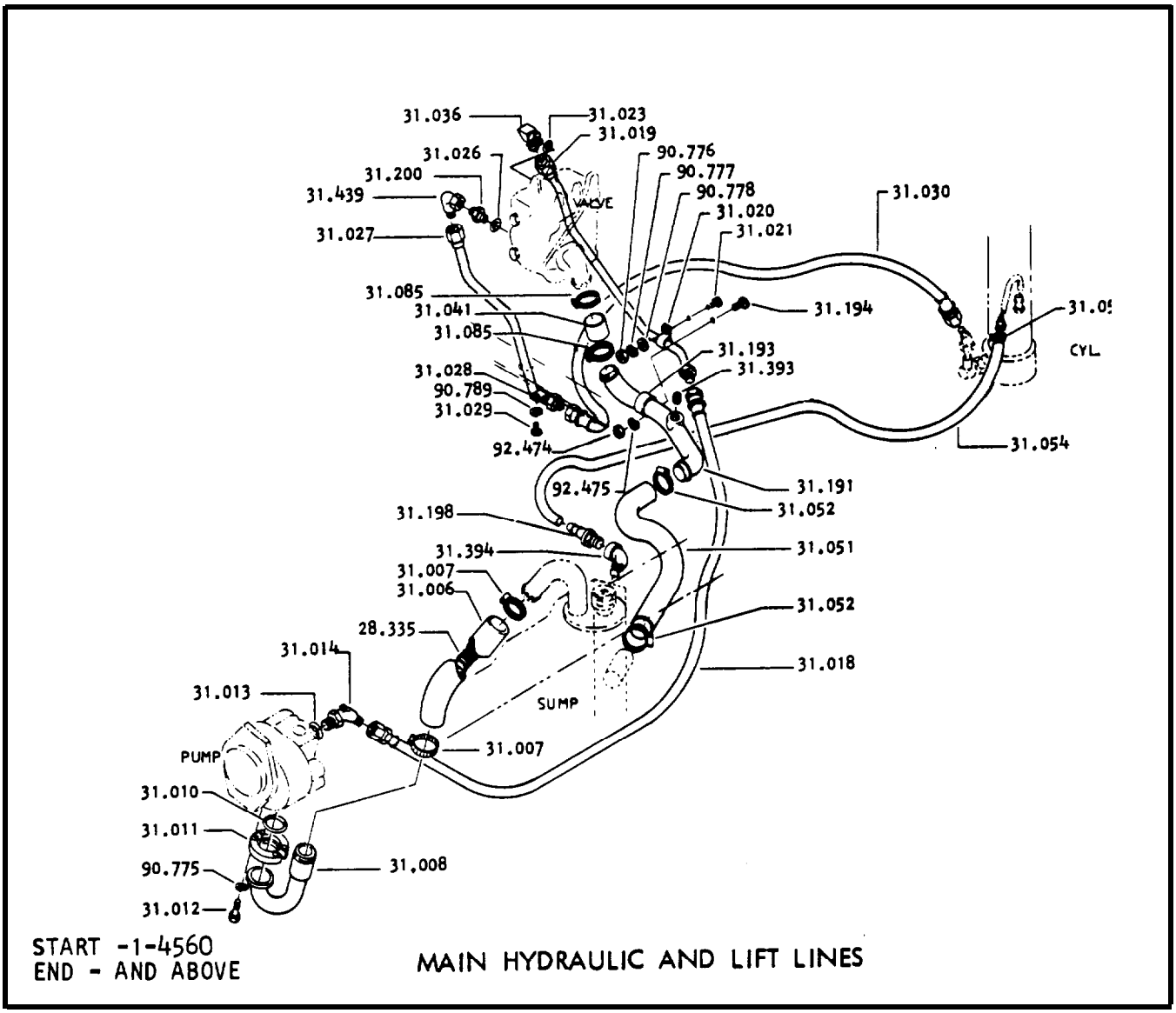

31-819 MAIN HYDRAULIC AND LIFT LINES

28.335-1301060	1	SPRING
31.006-1309037	10"	HOSE
31.007-42H32	2	CLAMP
31.008-2332872	1	TUBE
31.010-25K40116	1	O-RING
31.011-19J20	2	FLANGE
31.012-1C720	4	CAPSCREW
31.013-91F8	1	O-RING
31.014-1324212	1	ELBOW
31.018-1300917	1	HOSE ASSEMBLY
31.019-1723951	1	HOSE ASSEMBLY
31.020-30H45	1	CLIP
31.021-1C512	1	BOLT
31.023-91F8	1	O-RING
31.026.91F7	1	O-RING
31.027-1723950	1	HOSE ASSEMBLY
31.028-30H37	1	CLIP
31.029-1C512	1	CAPSCREW
31.030-660160	1	HOSE ASSEMBLY
31.036-17K8	1	ELBOW
31.041-763652	5"	HOSE
31.051-763652	24.5"	HOSE
31.052-42H28	2	CLAMP
31.054-660408	44"	HOSE
31.055-42H10	1	CLAMP
31.085-42H28	2	CLAMP
31.191-1704344	1	TUBE
31.193-6H34	1	CLAMP
31.194-1C612	1	BOLT
31.198-661676	1	CONNECTOR
31.200-15K7.	1	CONNECTOR
31.393-16F8	1	PLUG
31.394-NOT USED		
31.439-11K7	1	ELBOW
90.775-23E7	4	LOCKWASHER
90.776-61D5	1	NUT
90.777-23E5	1	LOCKWASHER
90.778-25E17	1	WASHER
90.789-23E5	1	LOCKWASHER
91.474-61D6	1	NUT
92.475-23E6	1	LOCKWASHER

www.truck-freeworkshop.com/clark/

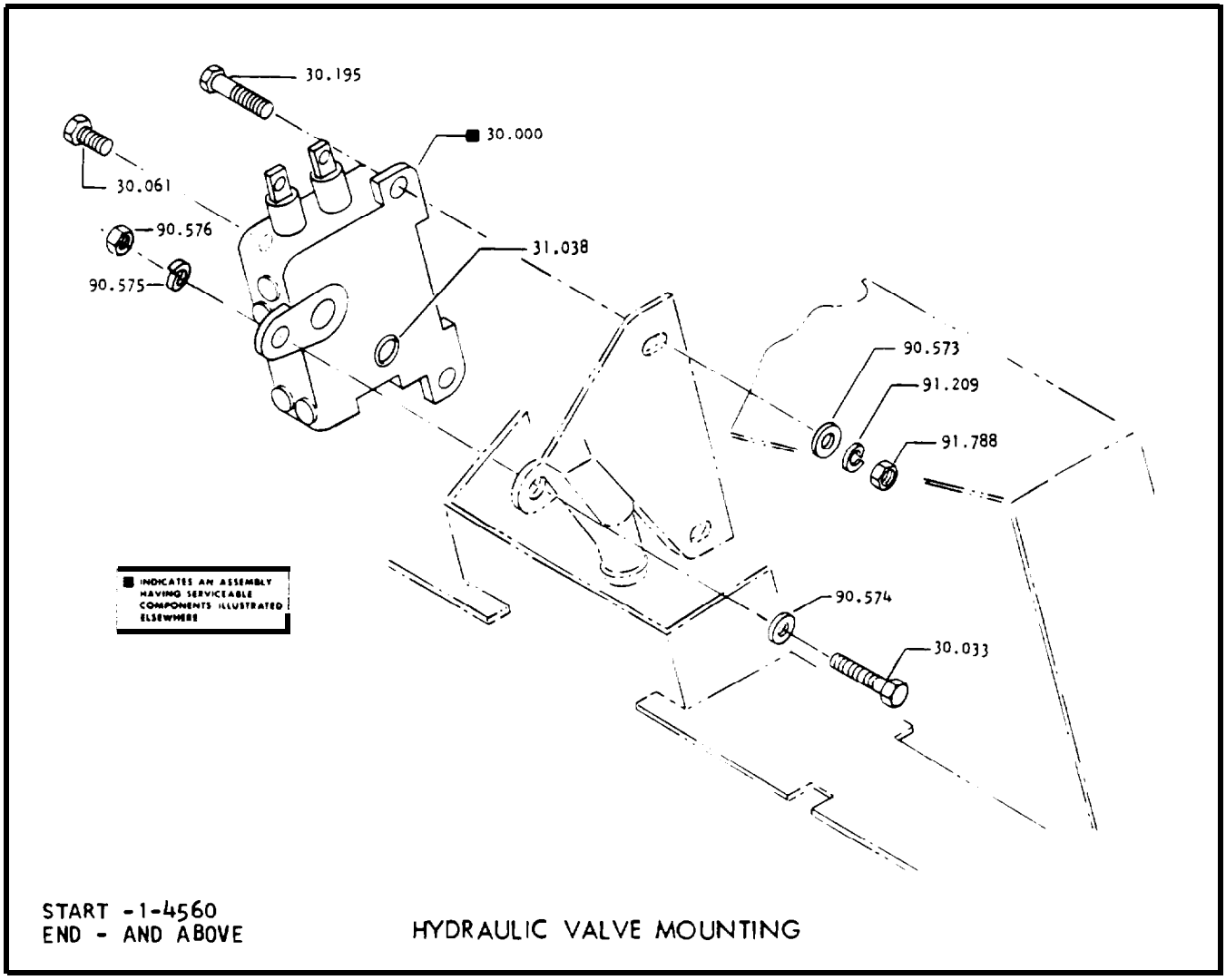

31-955 HYDRAULIC VALVE MOUNTING

30.000-3734222	1	HYDRAULIC VALVE ASSEMBLY
30.033-1C632	1	BOLT
30.061-24K7	1	PLUG
30.195-1C724	2	BOLT
31.038-25K40028	1	O-RING
90.573-25E19	2	WASHER
90.574-25E18	1	WASHER
90.575-23E6	1	LOCKWASHER
90.576-61D6	1	NUT
91.209-23E7	2	LOCKWASHER
91.788-61D7	2	NUT

www.truck-freeworkshop.com/clark/

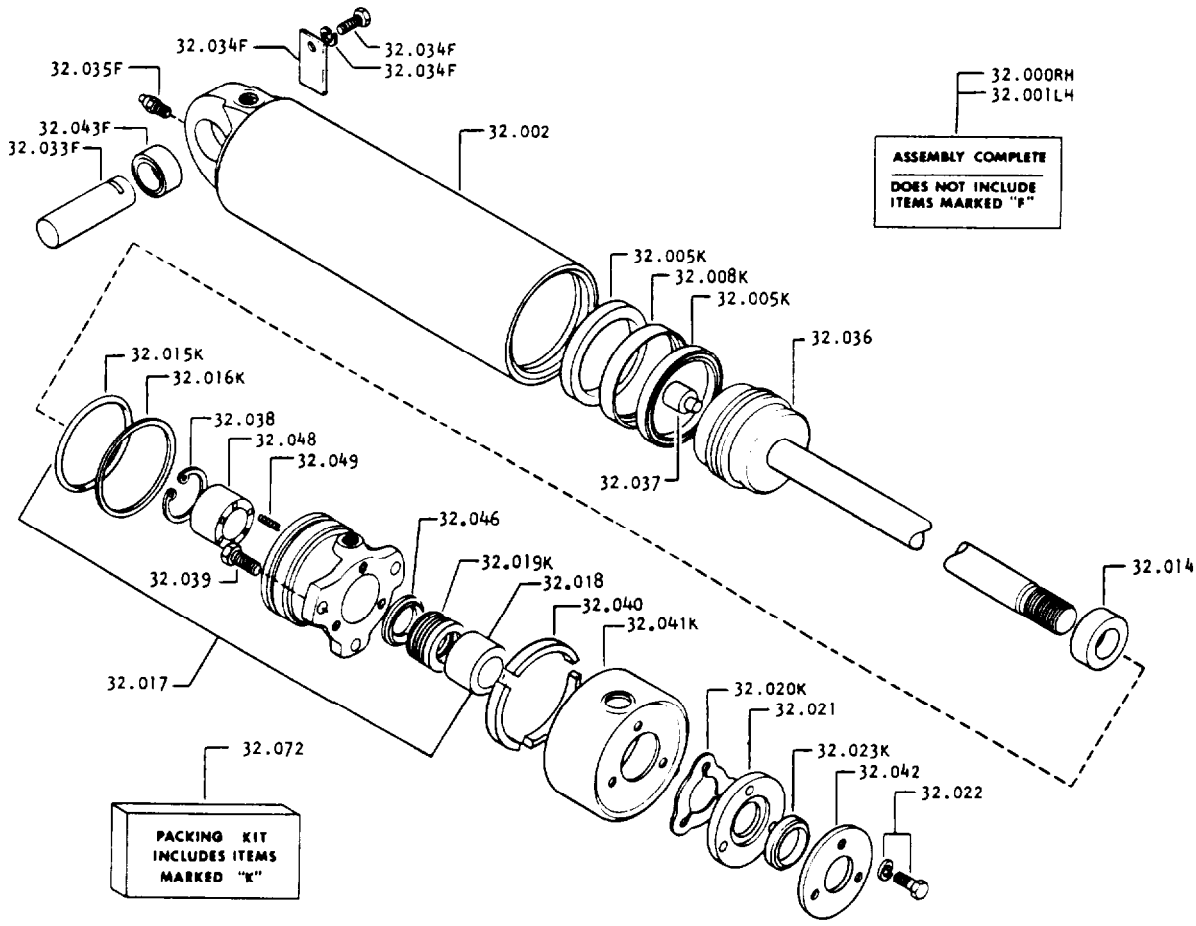

START -1-4560
END - AND ABOVE

TILT CYLINDER

1791918 TILT CYLINDER ASSEMBLY

32.000-1791918	1	TILT CYLINDER ASSEMBLY
32.001-1791918	1	TILT CYLINDER ASSEMBLY
32.002-100239	1	CYLINDER WELDED ASSEM
32.005-743810	2	U-CUP
32.008-757757	1	WEAR RING
32.014-1303779	1	FRONT SPACER
32.015-25K40324	1	O-RING
32.016-743816	1	BACK-UP RING
32.017-1742499	1	GLAND ASSEMBLY
32.018-1665682	1	BUSHING
32.019-1831042	1	GLAND PACKING SET
32.020-757762	4	SHIM
32.021-1636930	1	SHIM RETAINER
32.022-2C520J	3	CAPSCREW
32.022-23E5	3	LOCKWASHER
32.023-1657085	1	ROD WIPER
32.033-1758541	1	PIN
32.034-1C612	1	CAPSCREW
32.034-23E6	1	LOCKWASHER
32.034-719779	1	PLATE
32.035-10H25	1	LUB FITTING
32.036-1748592	1	ROD & PISTON ASSEMBLY
32.037-762609	1	REAR SPACER
32.038-507695	1	RETAINING RING
32.039-1636868	3	SPECIAL CAPSCREW
32.040-755626	3	RING SEGMENT
32.041-757766	1	BOOT
32.042-1636931	1	WIPER RETAINER
32.043-665199	1	BUSHING
32.046-1655983	1	ADAPTOR
32.048-1665681	1	SPRING RETAINER
32.049-1623399	6	PACKING SPRING
32.072-1811180	1	PACKING KIT

www.truck-freeworkshop.com/clark/

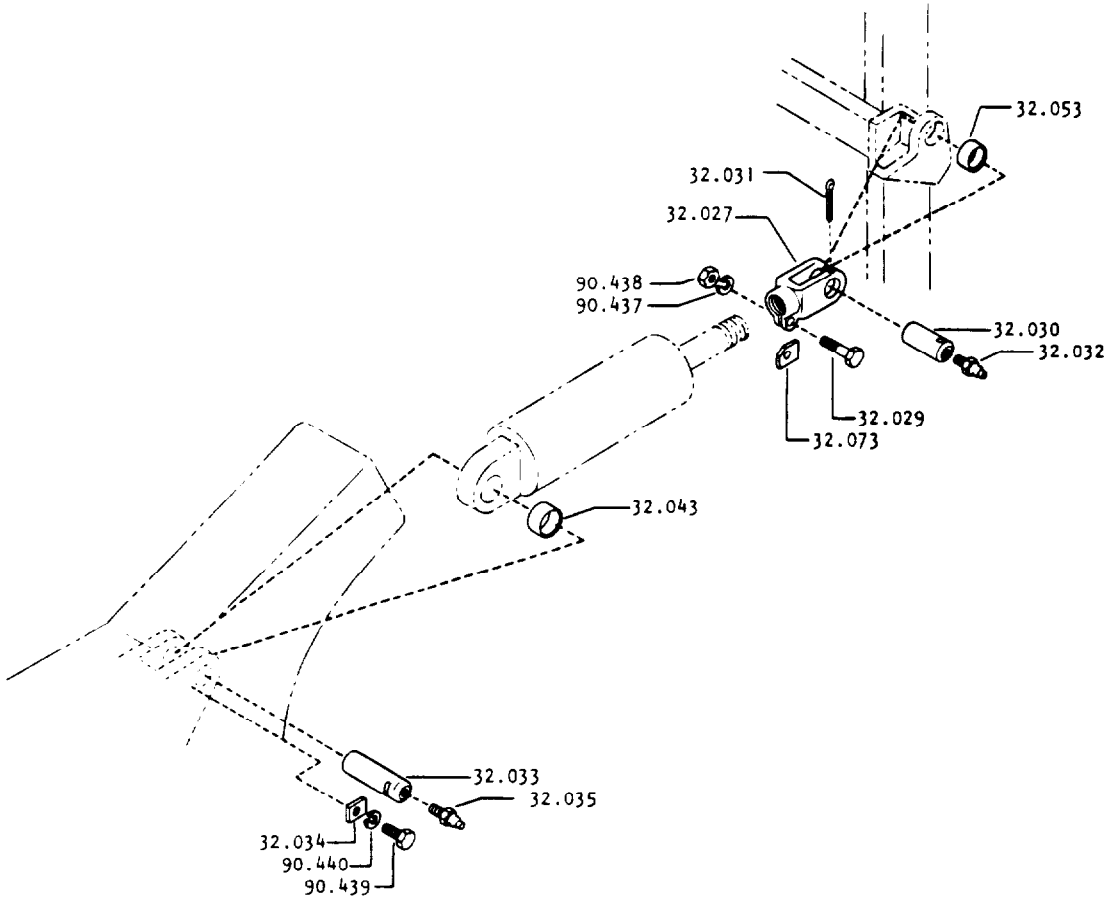

START -1-4560
END - AND ABOVE

TILT CYLINDER MOUNTING

32-058 TILT CYLINDER MOUNTING

32.027-1748527	2	ROD END
32.029-1C1044	2	BOLT
32.030-1758225	2	PIN
32.031-1F748	2	COTTER PIN
32.032-10H25	2	LUB FITTING
32.033-1758541	2	PIN
32.034-719779	1	PLATE
32.035-10H25	2	LUB FITTING
32.043-665199	2	BUSHING
32.053-1776027	2	BUSHING
32.073-1722564	2	PLATE
90.437-23E8	2	LOCKWASHER
90.438-61D10	2	NUT
90.439-1C612	2	CAPSCREW
90.440-23E6	2	LOCKWASHER

www.truck-freeworkshop.com/clark/

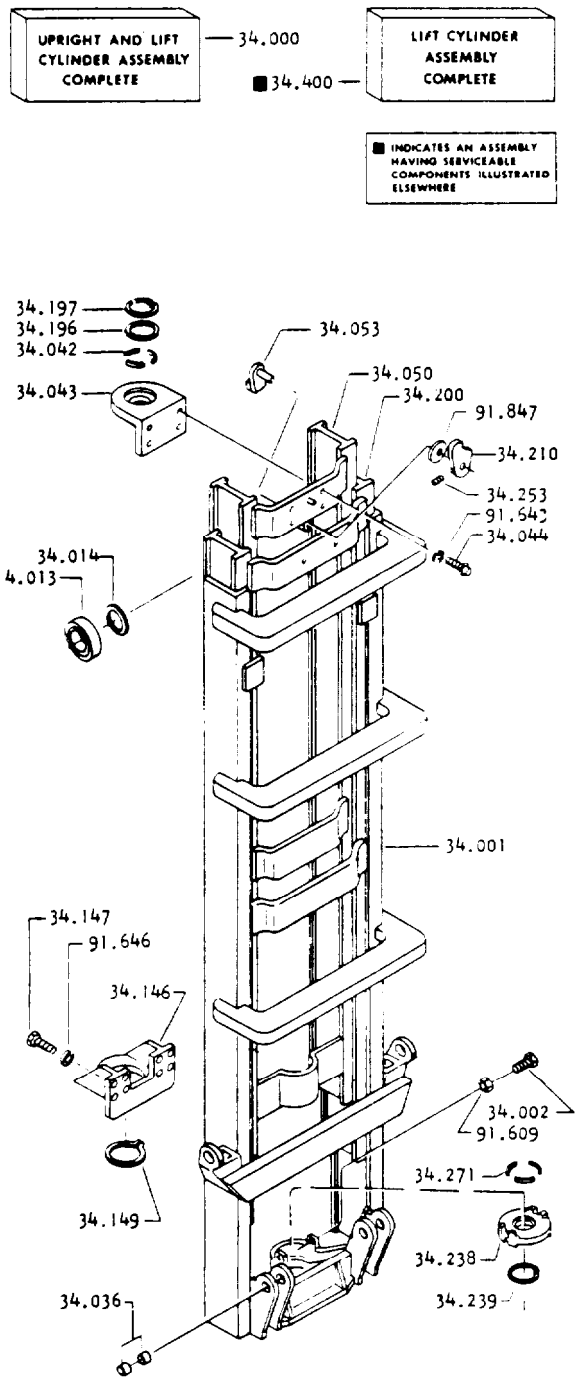

TRIPLE STAGE UPRIGHT

M0772 UPRIGHT ASSEMBLY

34.000-M0772	1	UPRIGHT ASSEMBLY
34.001-2340559	1	OUTER RAIL ASSEMBLY
34.002-2C614	2	BOLT
34.013-342957	8	ROLLER
34.014-662655	AR	SHIM
34.036-1301848	4	BEARING
34.042-1307092	3	SEGMENTED RING
34.043-1730241	1	BRACKET
34.044-93G1024	4	CAPSCREW
34.050-2354629	1	INNER RAIL ASSEMBLY
34.053-1782356	1	LEVER
34.146-1729407	1	BRACKET
34.147-2C824	8	CAPSCREW
34.149-1307921	1	SNAP RING
34.196-1642498	1	RING RETAINER
34.197-663823	1	SNAP RING
34.200-2357469	1	INTERMEDIATE RAIL ASSEM
34.210-1782354	1	LATCH
34.238-1783535	1	ADAPTOR
34.239-660516	1	SNAP RING
34.253-2304601	1	SETSCREW
34.271-1310527	3	SEGMENTED RING
34.400-2355448	1	LIFT CYLINDER ASSEMBLY
91.609-86D6	2	NUT
91.643-22E10	4	LOCKWASHER
91.646-23E8	8	LOCKWASHER
91.847-1321094	1	WASHER

www.truck-freeworkshop.com/clark/

MFH	34.001 OUTER RAIL ASSEMBLY	34.200 MIDDLE RAIL ASSEMBLY	34.050 INNER RAIL ASSEMBLY	34.101 LIFT CHAIN (1703719 BULK) (PICTCHES)	34.150 RAIL LIFT CHAIN (1703719 BULK) (PITCHES)
149	2340559	2357469	2354629	71	87

NUMBER OF PITCHES LISTED ABOVE IS FOR ONE CHAIN

NOTE - CHAIN REPAIR LINK IS 1315719

START -1-4560
END - AND ABOVE

www.truck-freeworkshop.com/clark/

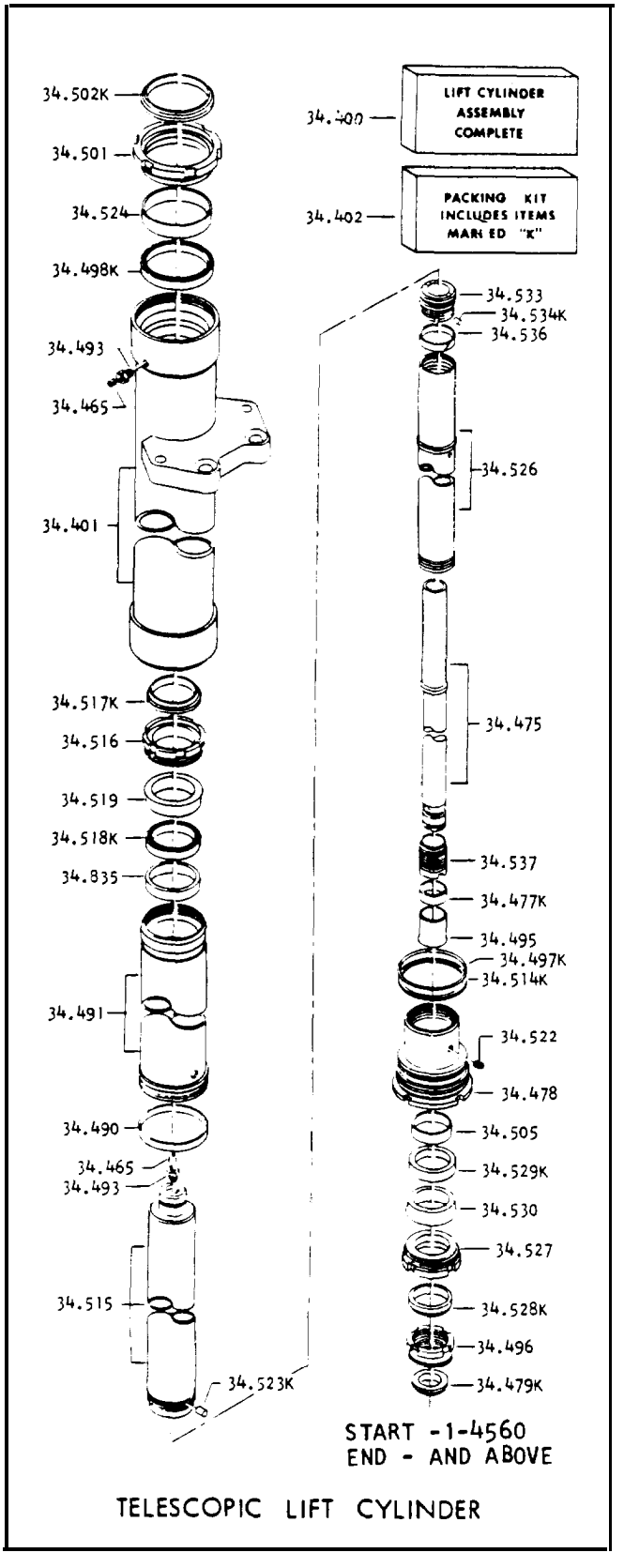

TELESCOPIC LIFT CYLINDER

2355448 LIFT CYLINDER ASSEMBLY

34.400-2355448	1	LIFT CYLINDER ASSEMBLY
34.401-2355201	1	BARREL
34.402-1811164	1	PACKING KIT
34.465-16G406	2	SETSCREW
34.475-1741259	1	FEED TUBE
34.477-1780360	1	U-CUP FEED TUBE)
34.478-2357020	1	GLAND INCLUDES BEARING)
34.479-1657088	1	WIPER (FEED TUBE)
34.490-2306714	1	WEAR RING
34.491-2354468	1	SHEAVE CARRIER ROD
34.493-393266	2	BLEEDER VALVE
34.495-2307536	1	ADAPTOR BUSHING
34.496-2306705	1	NUT
34.497-25K60416	1	O-RING (GLAND SEAL)
34.498-2307546	1	U-CUP (SHEAVE CARRIER ROD)
34.501-2306704	1	NUT (INCLUDES BEARING)
34.502-2306724	1	WIPER (SHEAVE CARRIER ROD)
34.505-2307544	1	BEARING
34.514-1320803	1	BACK-UP RING (GLAND SEAL)
34.515-2357301	1	INNER RAIL ROD
34.516-2307327	1	NUT
34.517-1743522	1	WIPER INNER RAIL ROD }
34.518-1780359	1	U-CUP INNER RAIL ROD }
34.519-2307538	1	ADAPTOR BUSHING
34.522-2357024	1	SETSCREW
34.523-662634	2	NYLON PLUG
34.524-2307543	1	BEARING
34.526-1626284	1	INTERMEDIATE RAIL ROD
34.527-2306706	1	NUT
34.528-1657095	1	WIPER (INTERMEDIATE RAIL ' ROD)
34.529-1780362	1	U-CUP (INTERMEDIATE RAIL-ROD)
34.530-2307537	1	ADAPTOR BUSHING
34.533-1626368	1	CAP (INTERMEDIATE RAIL ROD)
34.534-662634	2	NYLON PLUG
34.536-1626369	1	BEARING RING
34.537-2306708	1	BEARING
34.835-2307542	1	BEARING (INCLUDED IN SHEAVE CARRIER ROD

www.truck-freeworkshop.com/clark/

	34.400	34.401	34.475	34.491	34.515	34.526	
MFH	LIFT CYLINDER ASSEMBLY	BARREL	FEED TUBE	SHEAVE CARRIER ROD	INNER RAIL ROD	INTERMEDIATE RAIL ROD	MFH
149	2355448	2355201	1741259	2354468	2357301	1626284	149

START -1-4560
END - AND ABOVE

www.truck-freeworkshop.com/clark/

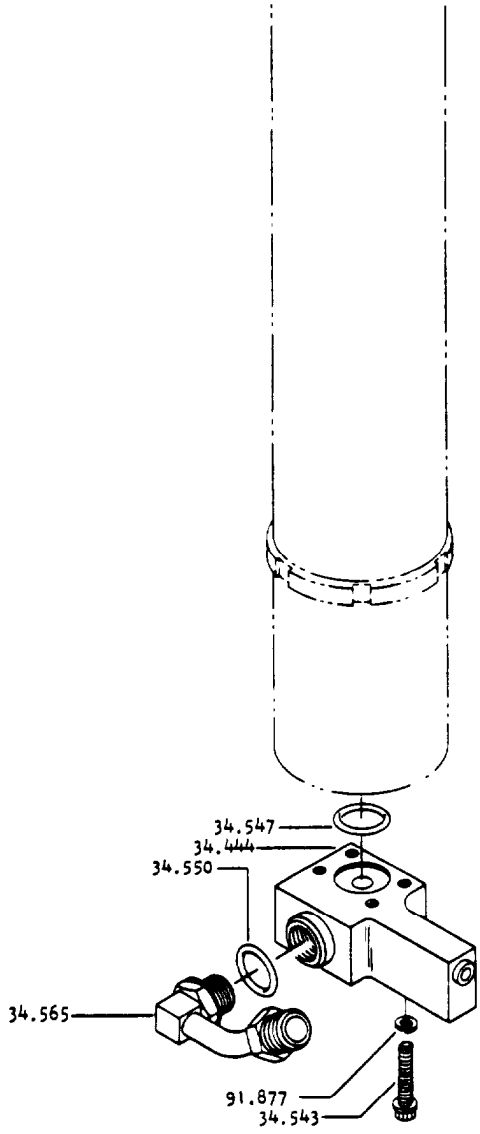

START -1-4560
END - AND ABOVE

LIFT CYLINDER PIPING

34.444-2330656	1	FLOW CONTROL VALVE
34.543-94G428	4	CAPSCREW
34.547-25K20022	1	O-RING
34.550-91F7	1	O-RING
34.565-1687951	1	ELBOW (INCLUDES O-RING)
91.877-22E4	4	LOCKWASHER

www.truck-freeworkshop.com/clark/

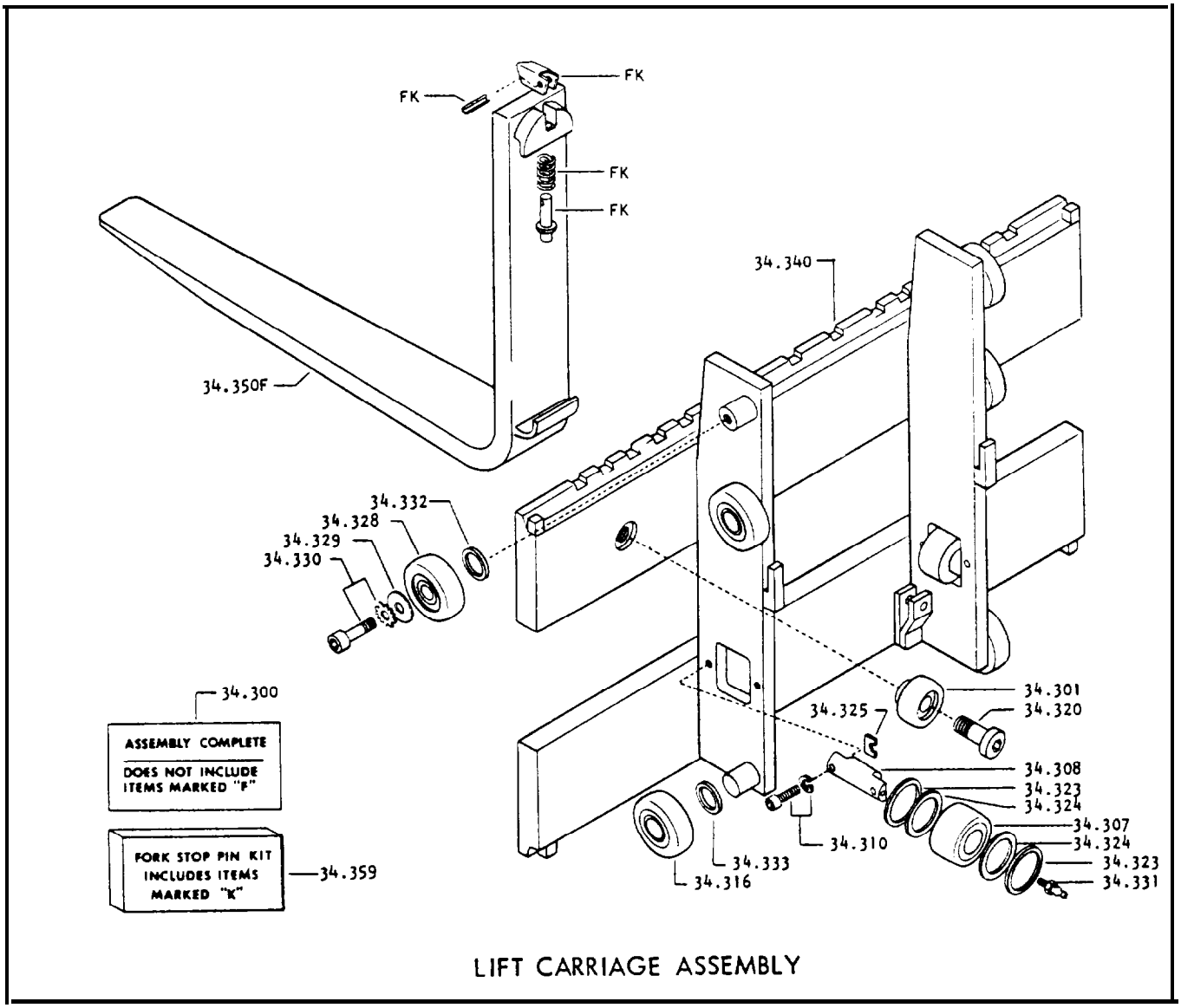

LIFT CARRIAGE ASSEMBLY

2355320 CARRIAGE ASSEMBLY

34.301-666354	2	THRUST WASHER
34.307-1300177	2	THRUST ROLLER
34.308-398453	2	SHAFT
34.310-74G624	4	CAPSCREW
34.310-8E6	4	LOCKWASHER
34.316-342957	4	ROLLER
34.320-1729514	2	SHAFT
34.323-763321	AR	SHIM
34.324-619038	4	SPACER
34.325-766423	AR	SHIM
34.328-342957	2	ROLLER
34.329-1725273	2	WASHER
34.330-96G616J	2	CAPSCREW
34.331-1301818	2	GREASE FITTING
34.332-662655	AR	SHIM
34.333-663655	AR	SHIM
34.350-1772340	2	FORK
34.359-1810138	2	FORK STOP PIN KIT

34.300 34.340

CARRIAGE ASSEMBLY COMPLETE	WELDED ASSEMBLY	FORK SPREAD	OVERALL WIDTH
2355320	2355191	39	41

www.truck-freeworkshop.com/clark/

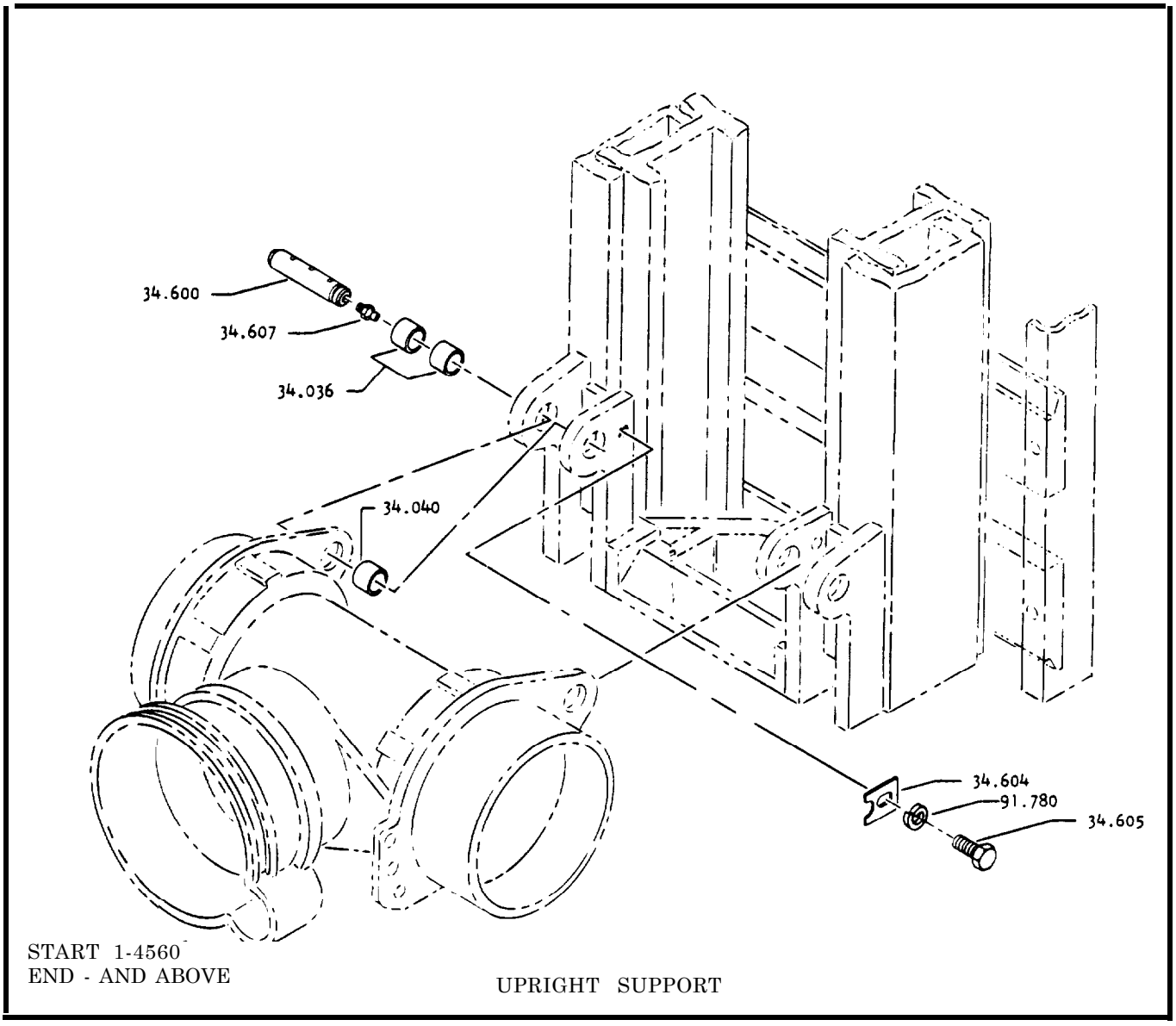

34-712 UPRIGHT SUPPORT

34.036-1301848	4	BUSHING
34.040-1301798	2	BUSHING
34.600-336347	2	SUPPORT SHAFT
34.604.794829	2	LOCK - PLATE
34.605-2C612	2	CAPSCREW
34.607-10H25	2	LUB FITTING
91.780-23E6	2	LOCKWASHER

www.truck-freeworkshop.com/clark/

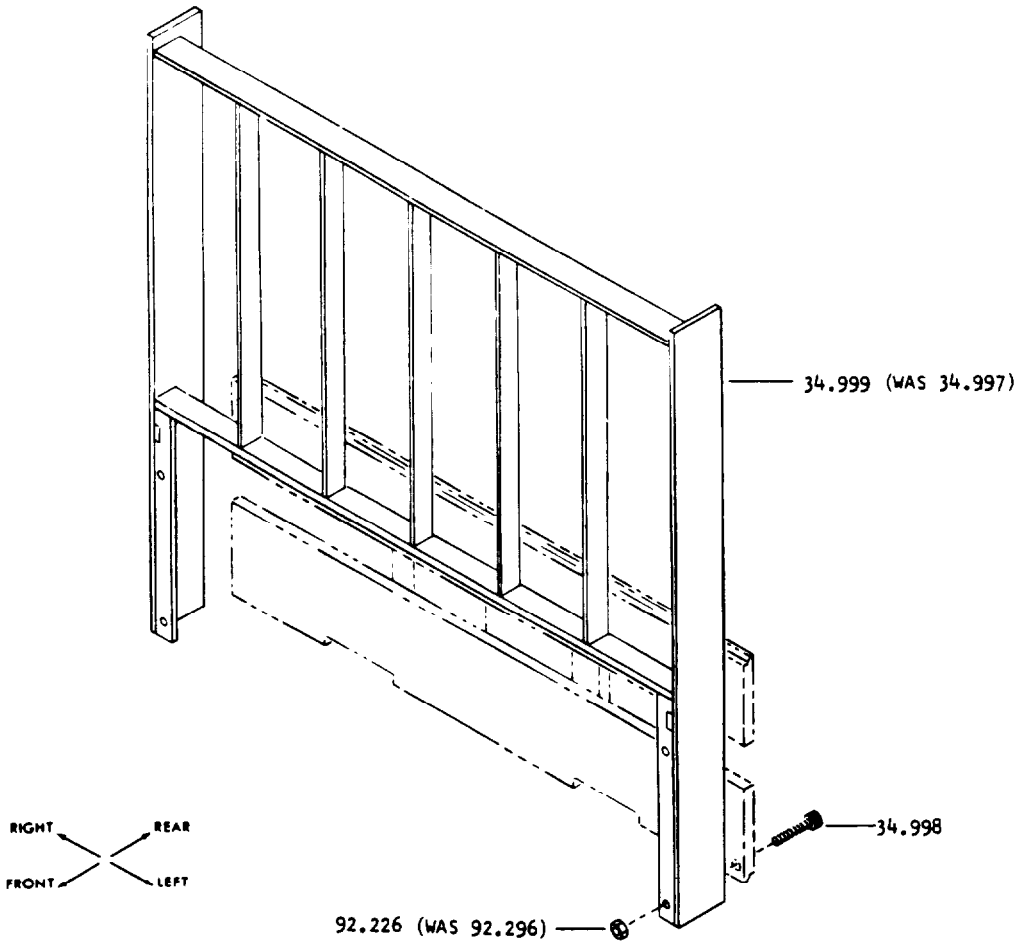

START -1-4560
END - AND ABOVE

LOAD SAFETY RACK

34-748 LOAD SAFETY RACK

34.998-93G632	4	BOLT
34.999-2344665	1	LOAD SAFETY RACK
92.226-2342129	4	NUT

www.truck-freeworkshop.com/clark/

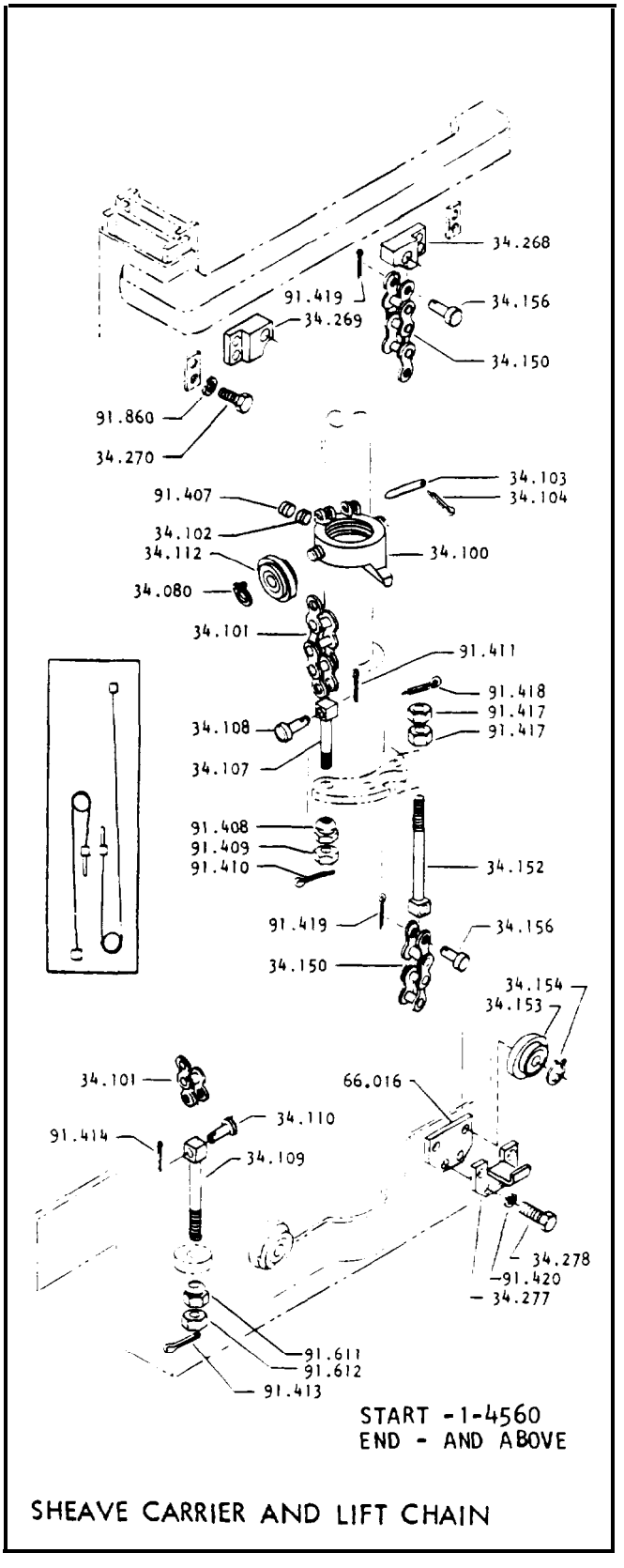

SHEAVE CARRIER AND LIFT CHAIN

34.080-659065	2	SNAP RING
34.100-2306721	1	PISTON HEAD
34.101-1703719	2	LIFT CHAIN (71 PITCHES)
34.102-156606	1	SETSCREW
34.103-1697965	2	SAFETY STOP
34.104-1F212	2	COTTER
34.107-1703720	2	ANCHOR - AT CYLINDER
34.108-1772171	2	PIN
34.109-2329841	2	ANCHOR - AT CARRIAGE
34.110-1772171	2	PIN
34.112-1692093	2	SHEAVE
34.150-1703719	2	LIFT CHAIN (87 PITCHES)
34.152-1703720	2	ANCHOR - AT CYLINDER
34.153-1692093	2	SHEAVE
34.154-659065	2	SNAP RING
34.156-1772171	4	PIN
34.268-1703991	1	ANCHOR - RH
34.269-1703992	1	ANCHOR - LH
34.270-2C1232	4	CAPSCREW
34.277-2340639	2	CHAIN RETAINER
34.278-1C512	4	CAPSCREW
66.016-1758622	2	BRACKET
91.407-1309436	1	LOCKSCREW
91.408-2360649	2	NUT - SPHERICAL FACE
91.409-62D10	2	NUT
91.410-1F416	2	COTTER
91.411-1F210	2	COTTER
91.413-1F416	2	COTTER
91.414-1F210	2	COTTER
91.417-62D10	4	NUT
91.418-1F416	2	COTTER
91.419-1F210	4	COTTER
91.420-23E5	4	LOCKWASHER
91.611-2360649	2	NUT - SPHERICAL FACE
91.612-62010	2	NUT
91.860-23E12	4	LOCKWASHER

www.truck-freeworkshop.com/clark/

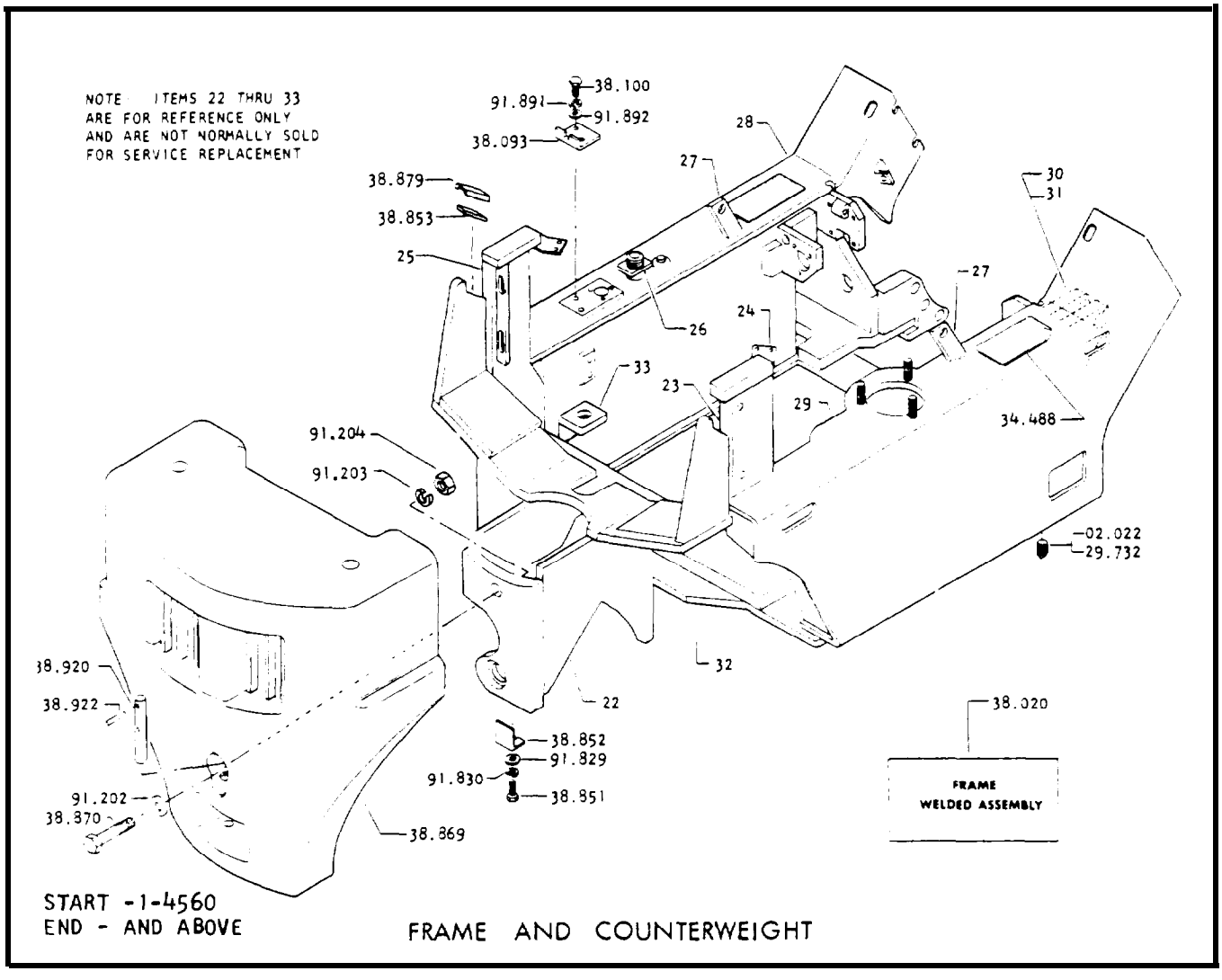

38-022 FRAME AND COUNTERWEIGHT

38.020-232809	1	FRAME
02.022-774563	1	PLUG
29.732-774563	1	PLUG
38.093-1758190	1	STOP
38.100-1C610	2	CAPSCREW
38.488-349679	2	PAD
38.851-1C820	1	CAPSCREW
38.852-1636498	1	SPACER
38.853-2352147	AR	BLOCK
38.869-1765748	1	COUNTERWEIGHT
38.870-15C16104	1	BOLT
38.879-2352148	AR	SHIM
38.920-1310401	1	COUPLER PIN
38.922-654722	1	COUPLER PIN CROSS PIN
91.202-1304106	1	WASHER
91.203-23E16	1	LOCKWASHER
91.204-61D16	1	NUT
91.829-25E21	1	WASHER
91.830-23E8	1	LOCKWASHER
91.891-23E6	2	LOCKWASHER
91.892-25E17	2	WASHER

www.truck-freeworkshop.com/clark/

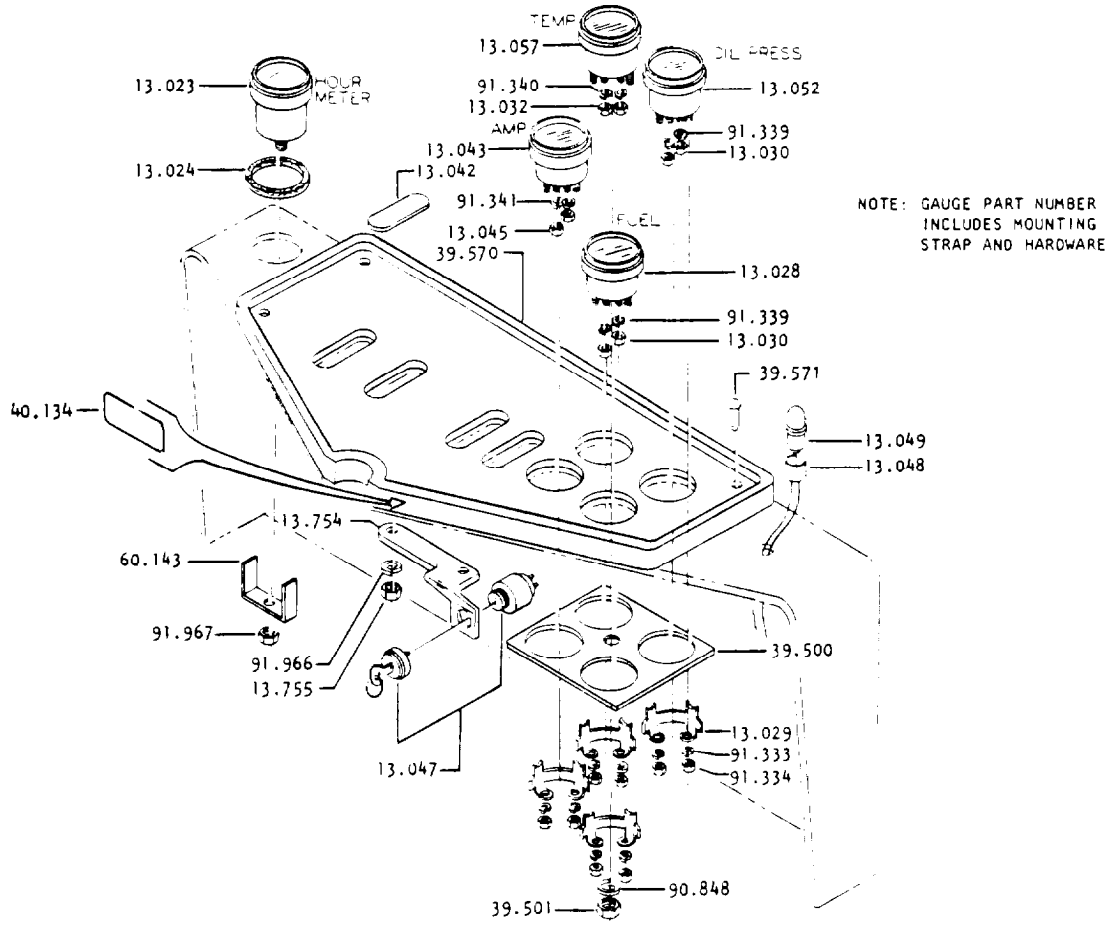

START -1-4560
END - AND ABOVE

INSTRUMENT PANEL

39-086 INSTRUMENT PANEL

13.023-1743826	1	ENGINE HOUR METER
13.024-648556	1	GASKET
13.028-947257	1	FUEL-GAUGE
13.029-1534136	1	STRAP
13.030-12D6	6	NUT
13.032-12D6	1	NUT
13.042-2349766	1	PLUG
13.043-949286	1	AMMETER
13.045-12D6	2	NUT
13.047-2339413	1	IGNITION SWITCH
13.048-2343175		LENS & HOLDER
13.049-775735	1	BULB
13.052-947248	1	ENGINE OIL PRESS GAUGE
13.057-947255	1	ENG TEMPERATURE GAUGE
13.754-1692521	1	BRACKET
13.755-61D6	1	NUT
39.500-1636487	1	INSTRUMENT PANEL
39.501-61D6	1	NUT
39.570-1689799	1	DASH COVER
39.571-646289	4	RIVET
40.134-2335281	1	DECAL
60.143-1743826	1	CLAMP (COMPONENT OF HOUR METER)
90.848-10E6	1	LOCKWASHER
91.333-17E10	8	LOCKWASHER
91.334-14D10	8	NUT
91.339-17E6	8	LOCKWASHER
91.340-17E6	3	LOCKWASHER
91.341-17E6	3	LOCKWASHER
91.966-23E6	2	LOCKWASHER
91.967-1743826	1	NUT (COMPONENT of HOUR METER)

www.truck-freeworkshop.com/clark/

START - 1-4560
END - AND ABOVE

SEAT ASSEMBLY

SEAT ASSEMBLY

39.719-995189	1	SEAT ASSEMBLY
37.204-995305	1	BACK CUSHION COVER
37.205-995286	1	LITERATURE TRAY
37.206-995287	1	LITERATURE HOLDER
39.720-995190	1	SEAT CUSHION
39.721-995191	1	SEAT BACK CUSHION
39.722-995306	1	SEAT FRAME ASSEMBLY
39.731-89G512	4	BACK CUSHION SCREW
90.650-89G410	4	SCREW
90.651-995289	4	WASHER
90.652-89G410	4	SCREW

www.truck-freeworkshop.com/clark/

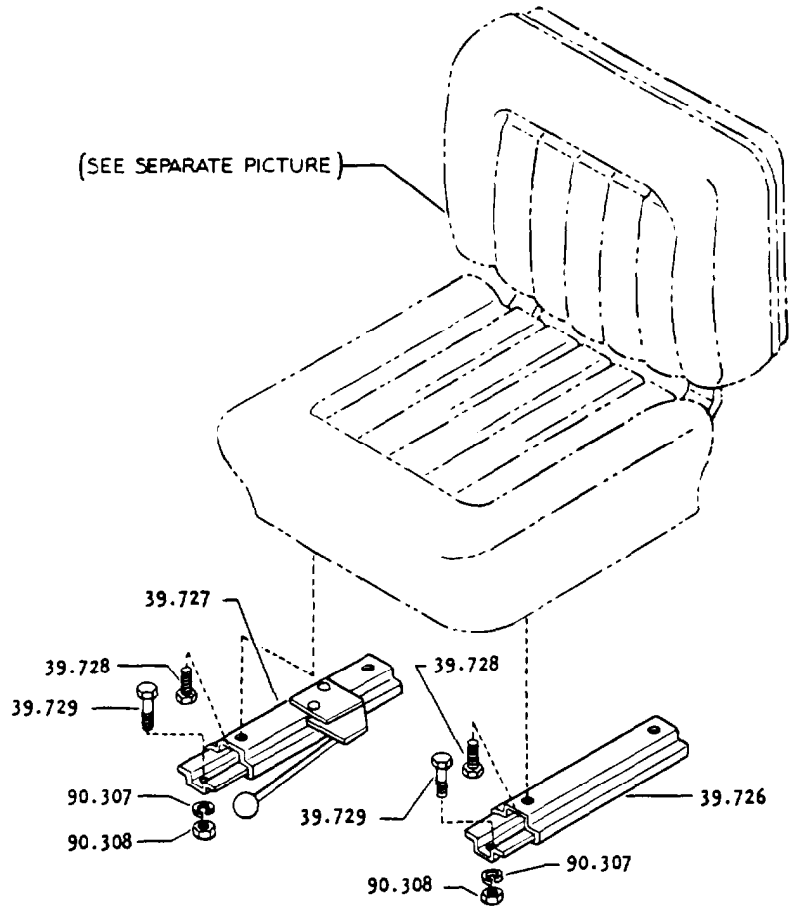

START -1-4560
AND - AND ABOVE

SEAT MOUNTING

39-173 SEAT MOUNTING

39.726-1649241	1	SEAT ADJUSTOR (LH)
39.727-995223	1	SEAT ADJUSTOR (RH)
39.728-43G516	4	CAPSCREW
39.729-1C520	4	BOLT
90.307-23E5	4	LOCKWASHER
90.308-61D5	4	NUT

www.truck-freeworkshop.com/clark/

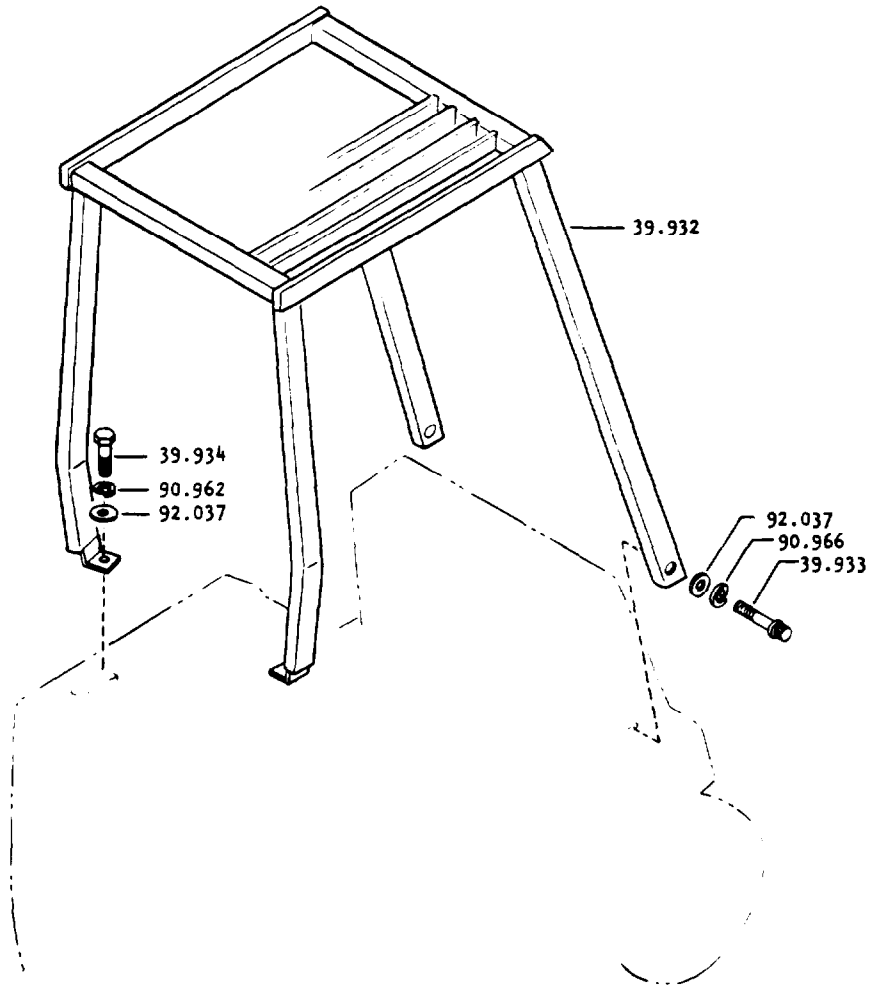

START -1-4560
END AND ABOVE

OVERHEAD GUARD

39-204 OVERHEAD GUARD

39.932-2353937	1	OVERHEAD GUARD
39.933-93G820	2	CAPSCREW
39.934-1C824	2	CAPSCREW
90.962-23E8	2	LOCKWASHER
90.966-23E8	2	LOCKWASHER
92.307-25E22	4	WASHER

www.truck-freeworkshop.com/clark/

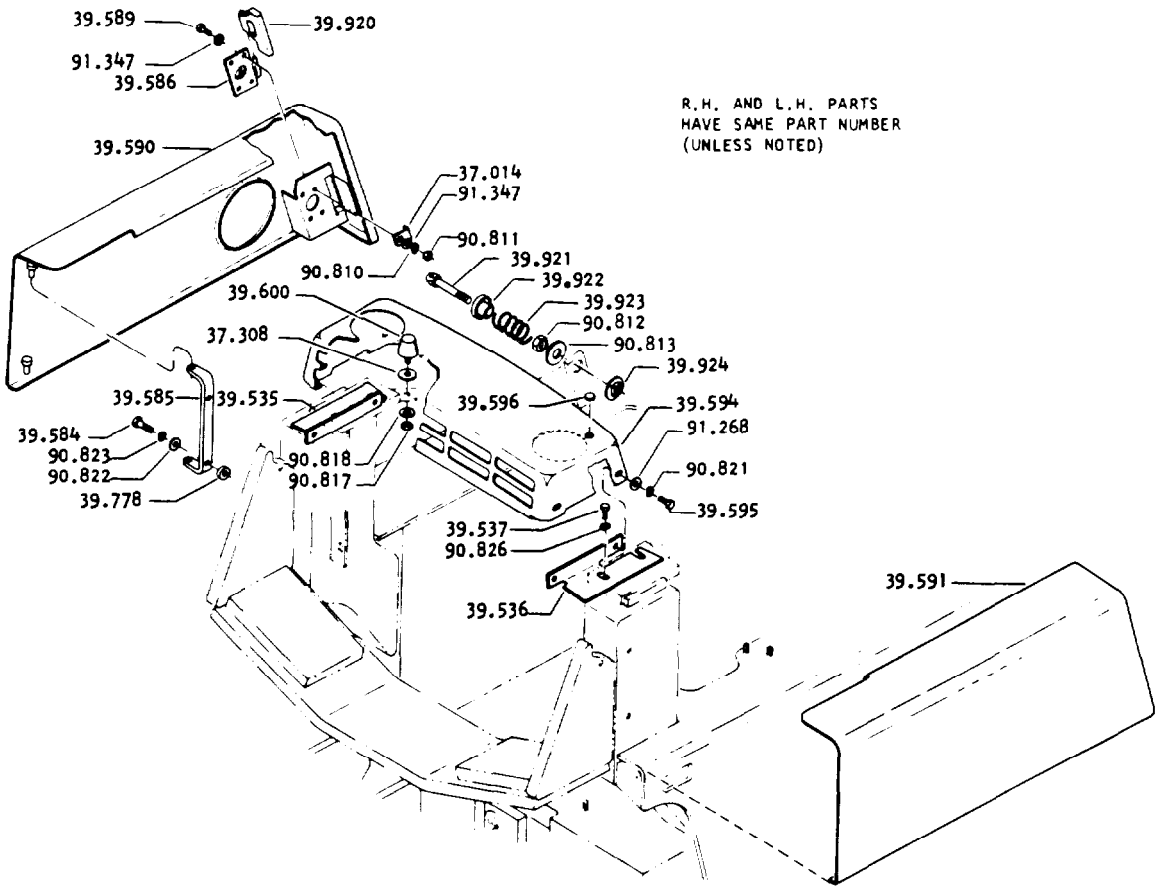

START -1-4560
END - AND ABOVE

SHEET METAL AND TRIM

39-493 SHEET METAL AND TRIM

37.014-1739534	2	CLIP
37.308-619021	2	SPACER
39.535-1719070	1	BRACKET (LH)
39.536-1719069	1	BRACKET (RH)
39.537-1C816	2	CAPSCREW
39.584-1C622	4	CAPSCREW
39.585-1618572	2	BRACKET
39.586-1704268	2	LATCH
39.589-1C512	8	BOLT
39.590-2353501	1	HOOD SIDE (LH)
39.591-2353500	1	HOOD SIDE (RH)
39.594-2327735	1	TOP HOOD (GAS & LPG)
39.595-1C412	4	CAPSCREW
39.596-773208	1	PLUG - BUTTON
39.600-610967	2	DAMPENER
39.778-635682	AR	SHIM
39.920-1704281	2	GRIP
39.921-990159	2	DOVE TAIL
39.922-990157	2	SPRING RETAINER
39.923-990155	2	SPRING
39.924-990158	2	NUT
90.810-23E5	8	LOCKWASHER
90.811-61D5	8	NUT
90.812-8D8	2	JAM NUT
90.813-990156	2	WASHER
90.817-7D5	2	NUT
90.818-9E5	2	LOCKWASHER
90.821-23E4	4	LOCKWASHER
90.822-25E18	4	WASHER
90.823-23E6	4	LOCKWASHER
90.826-23E8	2	LOCKWASHER
91.268-25E14	4	WASHER
91.347-25E16	10	WASHER

www.truck-freeworkshop.com/clark/

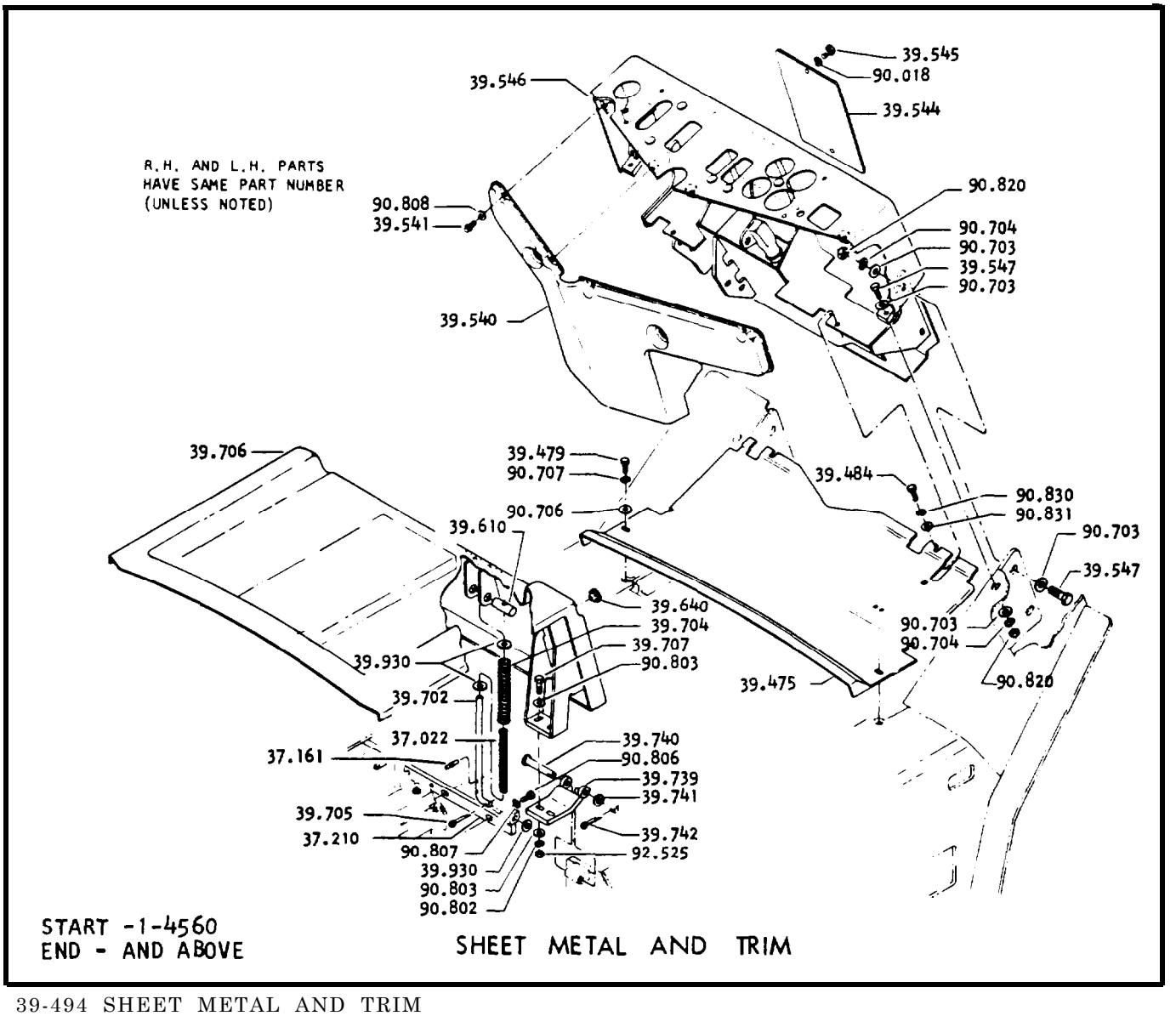

39-494 SHEET METAL AND TRIM

37.022-1725216	1	SPRING (INNER)
37.161-17J224	1	PIN
37.210-1784637	1	BRACKET
39.475-2353138	1	FLOOR PLATE (FRONT)
39.479-1C620	2	CAPSCREW
39.484-1C610	2	CAPSCREW
39.540-1797793	1	LOWER DASH PANEL
39.541-1307834	6	CAPSCREW
39.544-1636427	1	COVER
39.545-1C510	2	CAPSCREW
39.546-2314892	1	COWL ASSEMBLY
39.547-1C828	6	BOLT
39.610-1313106	1	PIN
39.640-742708	1	PLUG - BUTTON
39.702-1784638	1	HOOD PROP
39.704-1725238	1	SPRING
39.705-1F416J	1	COTTER
39.706-2341181	1	SEAT SUPPORT
39.707-1C628	4	BOLT
39.739-2335904	2	BRACKET
39.740-1324273	2	PIN
39.741-25E21	2	WASHER
39.742-1F414J	2	COTTER
39.930-1303141	2	WASHER
90.018-23E5	2	LOCKWASHER
90.703-25E21	12	WASHER
90.704-23E8	6	LOCKWASHER
90.706-25E17	4	WASHER
90.707-23E6	4	LOCKWASHER
90.802-23E6	4	LOCKWASHER
90.803-25E17	8	WASHER
90.806-1C616	2	CAPSCREW
90.807-23E6	2	LOCKWASHER
90.808-25E15	6	WASHER
90.820-61D8	6	NUT
90.830-23E6	4	LOCKWASHER
90.831-25E17	4	WASHER
92.525-61D6	4	NUT

www.truck-freeworkshop.com/clark/

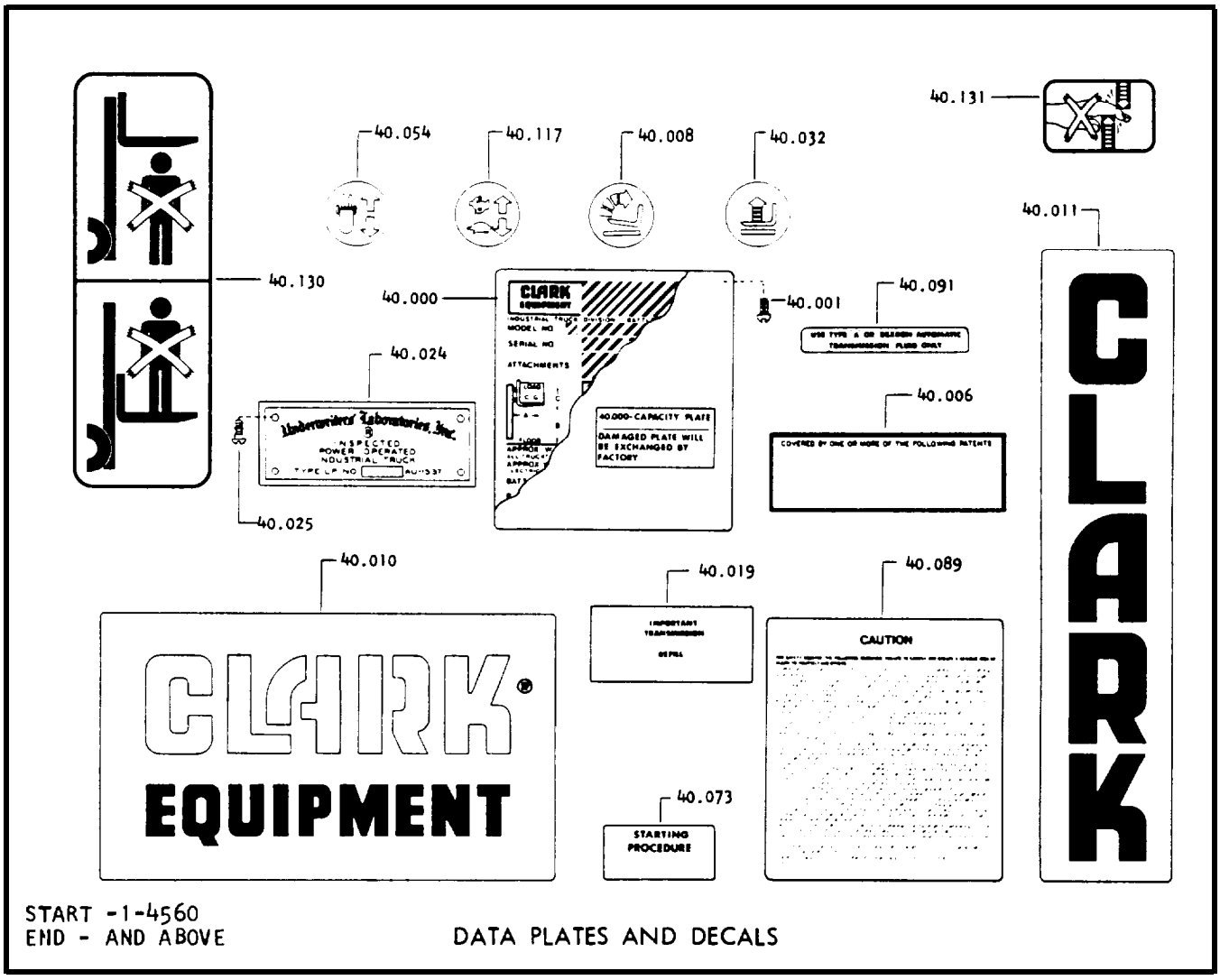

40-090 DATA PLATES AND DECALS

40.000-2315709	1	NAME PLATE
40.001-1751924	4	SCREW
40.006-1747706	1	DECAL - PATENT
40.008-2338780	1	DECAL - TILT
40.010-2348904	2	DECAL - LOGO - 3 INCH
40.011-2348904	2	DECAL - LOGO - 3 INCH
40.019-2350033	1	DECAL - TRANSMISSION CHECK
40.024-1781660	1	PLATE - UL CLASSIFICATION
40.025-1751924	1	SCREW
40.032-2338779	1	DECAL - LIFT
40.054-2338781	1	DECAL - FWD - REV
40.073-2360528	1	DECAL - STARTING PROCEDURE
40.089-1747702	1	INSTRUCTION SAFETY
40.091-2350158	1	DECAL - TRANSMISSION FLUID
40.117-2338782	1	DECAL - HI-LO
40.130-2349361	1	DECAL - CAUTION FORKS
40.131-2349998	1	DECAL - HANDS OFF

www.truck-freeworkshop.com/clark/

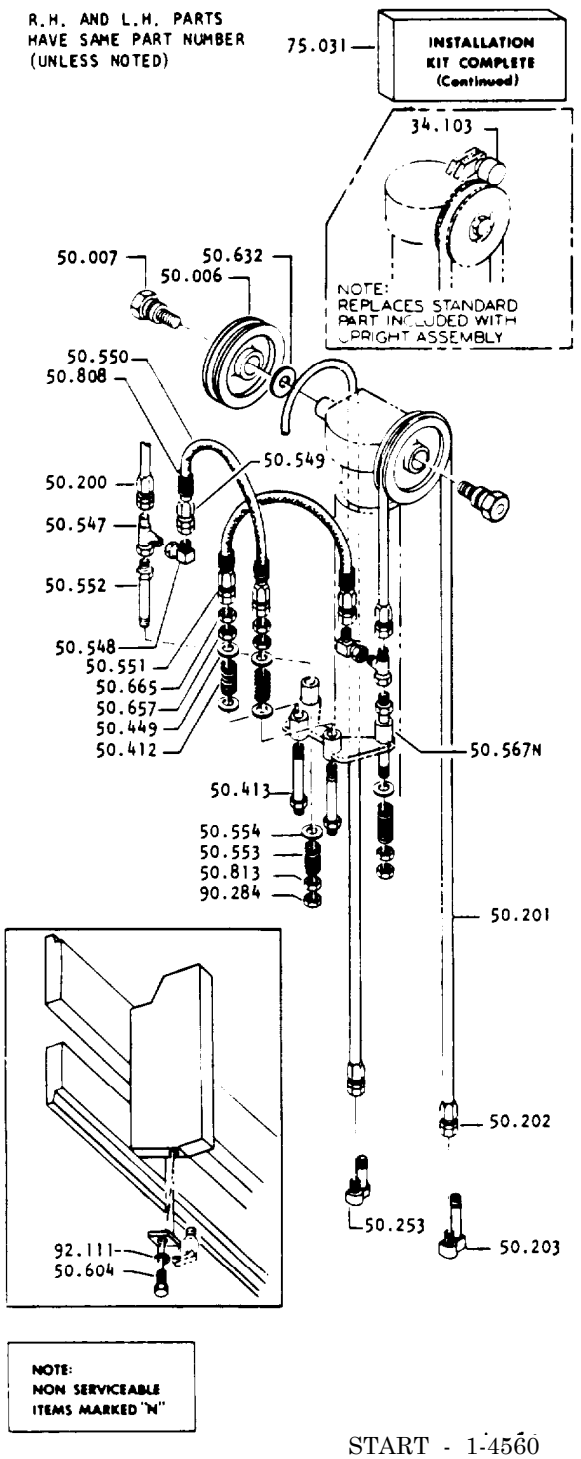

START - 1-4560
END - AND ABOVE

HOSE ADAPTATION FOR DEVICE

2354694 HOSE ADAPTATION KIT

75.031-2354694	1	HOSE ADAPTATION KIT
34.103-1782282	2	SAFETY STOP
50.006-2346459	2	UPPER SHEAVE
50.007-2345090	2	BOLT
50.200-1321839	2	HOSE COUPLING
50.201-1321835	AR	HOSE
50.202-1321839	2	HOSE COUPLING
50.203-2327930	1	JUNCTION BLOCK RH
50.253-2327933	1	JUNCTION BLOCK LH
50.412-1738792	2	SPRING
50.413-1773008	2	SLIDE TUBE CONNECTOR
50.449-1317240	4	WASHER
50.547-13K6	2	TEE
50.548-11K6	4	ELBOW
50.549-1321839	2	HOSE COUPLING
50.550-1321835	AR	HOSE
50.551-1321838	1	HOSE COUPLING
50.552-1757512	2	SLIDE TUBE CONNECTOR
50.553-1736548	2	SPRING
50.554-635682	2	WASHER
50.567 -NOT USED		
50.604-1C510	2	CAPSCREW
50.632-2354558	2	SPACER
50.657-86F5	2	NUT
50.665-86F5	2	NUT
50.808-1322554	4	SPRING
50.813-7D8	2	NUT
90.284-7D8	2	NUT
92.111-23E5	2	LOCKWASHER

www.truck-freeworkshop.com/clark/

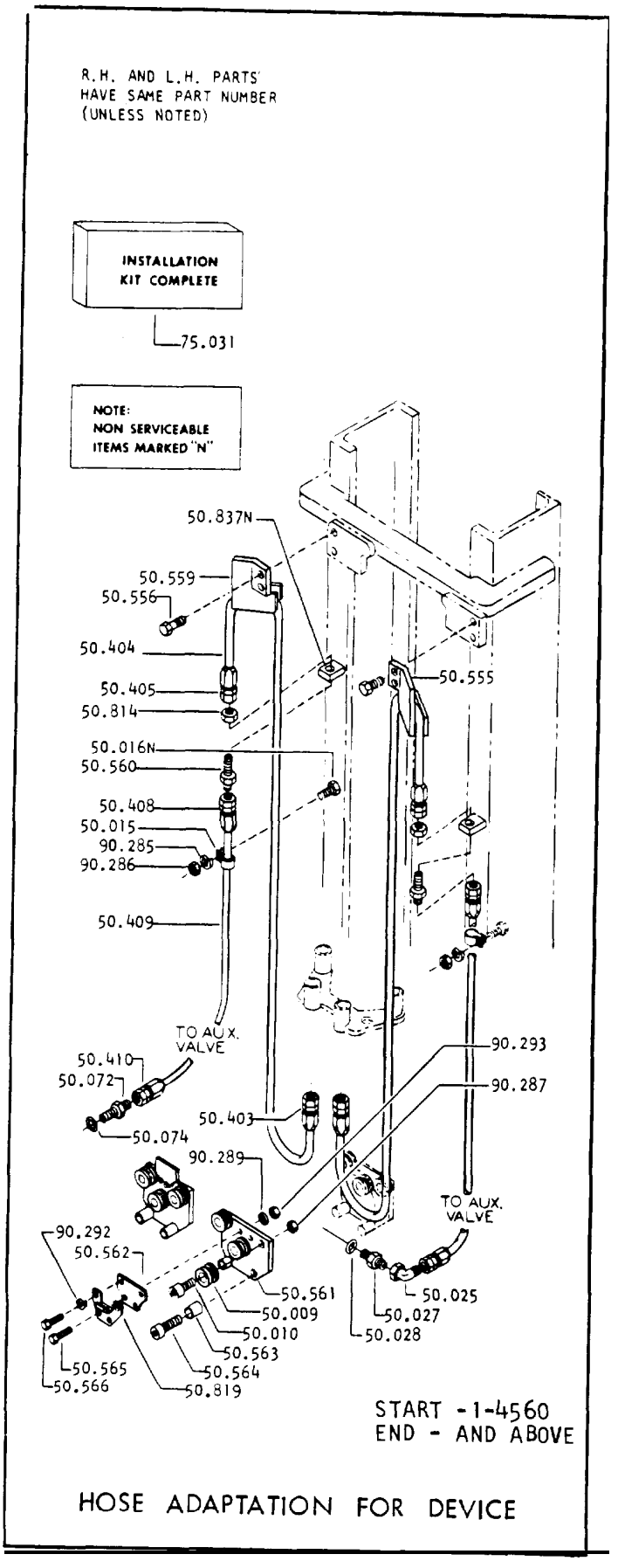

HOSE ADAPTATION FOR DEVICE

2354694 HOSE ADAPTATION

75.031-235469	1	HOSE ADAPTATION KIT
50.009-1758496	6	LOWER SHEAVE
50.010-1307967	6	BOLT
50.015-30H48	2	CLIP
50.016-1C512	2	BOLT
50.025-11K6	1	ELBOW
50.027-15K6	1	CONNECTOR
50.028-91F6	1	O-RING
50.072-15K6	1	CONNECTOR
50.074-91F6	1	O-RING'
50.403-1321839	2	HOSE COUPLING
50.404-1321835	2	HOSE
50.405-1321839	2	HOSE COUPLING
50.408-1321839	2	HOSE COUPLING
50.409-1321835	2	HOSE
50.410-1321839	2	HOSE COUPLING
50.555-1757490	1	GUIDE (RH)
50.556-2C1232	4	CAPSCREW
50.559-1757489	1	GUIDE (LH)
50.560-45K6	2	CONNECTOR
50.561-1757246	2	BRACKET
50.562-1758622	2	BRACKET
50.563-1740296	4	GUIDE
50.564-1307967	4	BOLT
50.565-1C512	4	BOLT
50.566-1C512	4	BOLT
50.814-86F6	2	NUT
50.819-2340639	2	BRACKET
50.837-1316008	2	ANCHOR
90.285-23ES	2	LOCKWASHER
90.286-61D5	2	NUT
90.287-61D4	6	NUT
90.289-23E5	4	LOCKWASHER
90.292-23E5	4	LOCKWASHER
90.293-7D5	4	NUT

www.truck-freeworkshop.com/clark/

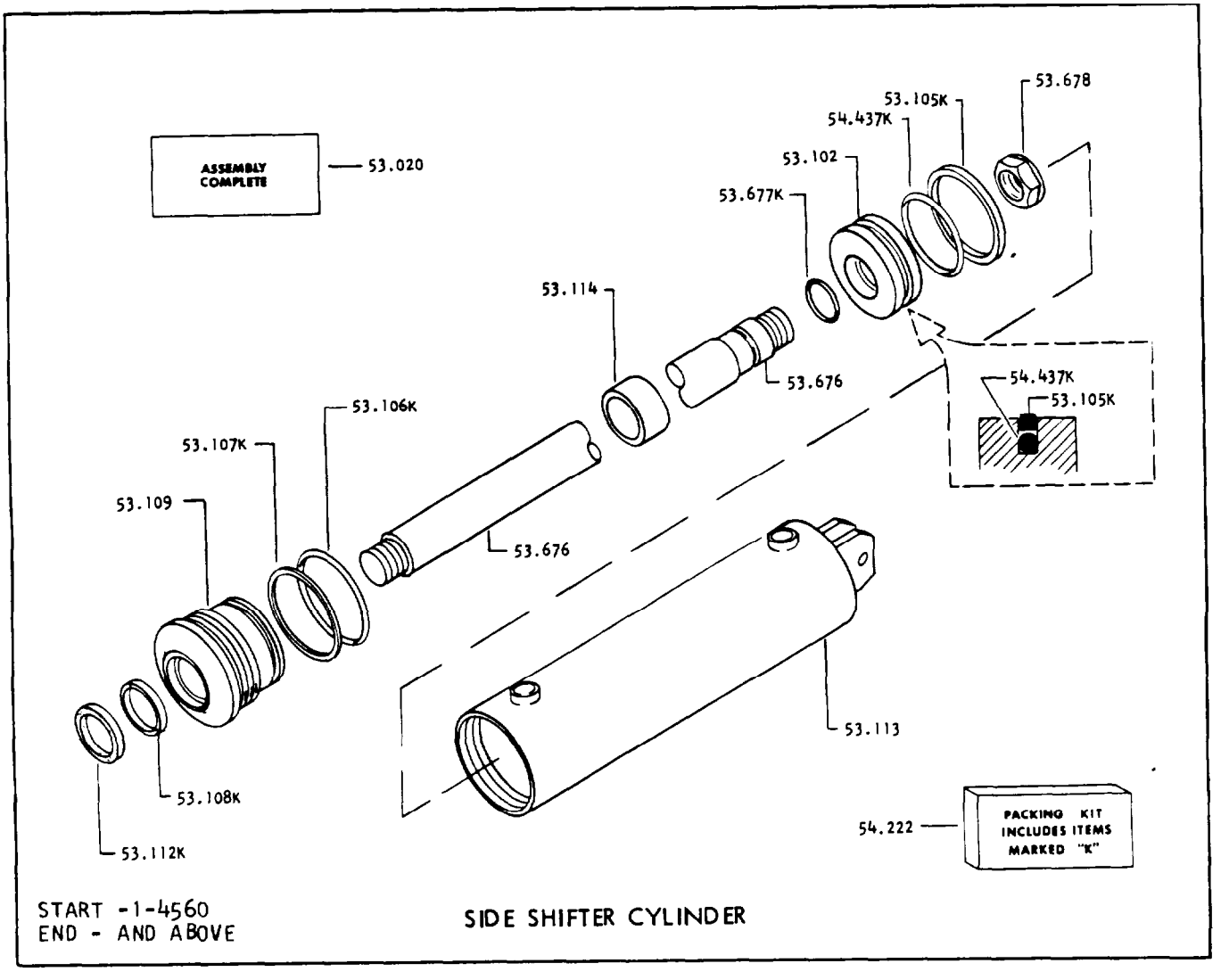

2329090 SIDE SHIFTER CYLINDER

53.020-2329090	1	SIDE SHIFTER CYLINDER ASSEMBLY
53.102-2328803	1	PISTON
53.105-2329062	1	PACKING
53.106-25K402000	1	O-RING
53.107-730965	1	BACK-UP RING
53.108-2324619	1	PACKING
53.109-2328972	1	GLAND
53.112-1657084	1	WIPER
53.113-2329095	1	CYLINDER BARREL
53.114-NOT USED		SPACER
53.676-2328970	1	PISTON ROD
53.677-25K30022	1	O-RING
53.678-66D4J	1	NUT
54.222-1811244	1	PACKING KIT
54.437-25K40128	1	O-RING

www.truck-freeworkshop.com/clark/

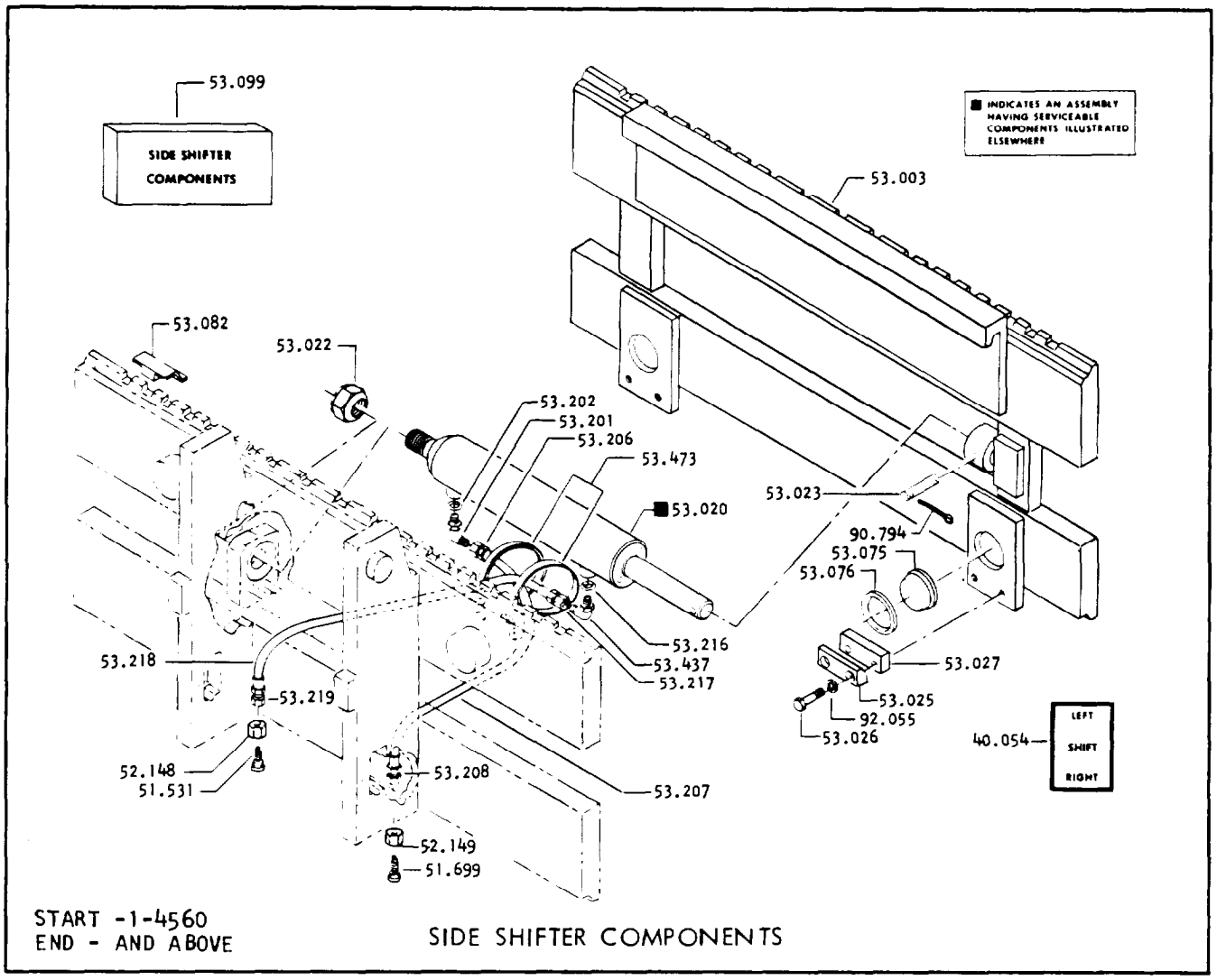

2355779 SIDE SHIFTER PACKAGE

53.099-2355779	1	SIDE SHIFTER PACKAGE
40.054-1747728	1	DECAL - SIDE SHIFT
51.531-9K1	1	ADAPTOR
51.699-9K1	1	ADAPTOR
52.148-80F5	1	NUT
52.149-80F5	1	NUT
53.003-2355785	1	FORK BAR WELDED ASSEM
53.020-2329090	1	SIDE SHIFT CYLINDER
53.022-70D20	1	NUT
53.023-2317678	1	PIN
53.025-2350388	2	RETAINER BLOCK
53.026-2C824	4	CAPSCREW
53.027-2350386	2	RECTANGULAR FLAT
53.075-2347662	2	LOWER BEARING
53.076-2347663	2	RETAINER
53.082-2350564	10	SLIDE PLATE
53.201-17K3	1	ELBOW
53.202-91F3	1	O-RING
53.206-1323045	1	HOSE COUPLING
53.207-1323044	AR	HOSE
53.208-1323045	1	HOSE COUPLING
53.216-91F3	1	O-RING
53.217-1323045	1	HOSE COUPLING
53.218-1323044	AR	HOSE
53.219-1323045	1	HOSE COUPLING ASSEMBLY
53.437-17K3	1	ELBOW
53.473-1715312	2	TIE STRAP
90.794-1F416	2	COTTER PIN
92.055-26E8	4	LOCKWASHER

www.truck-freeworkshop.com/clark/

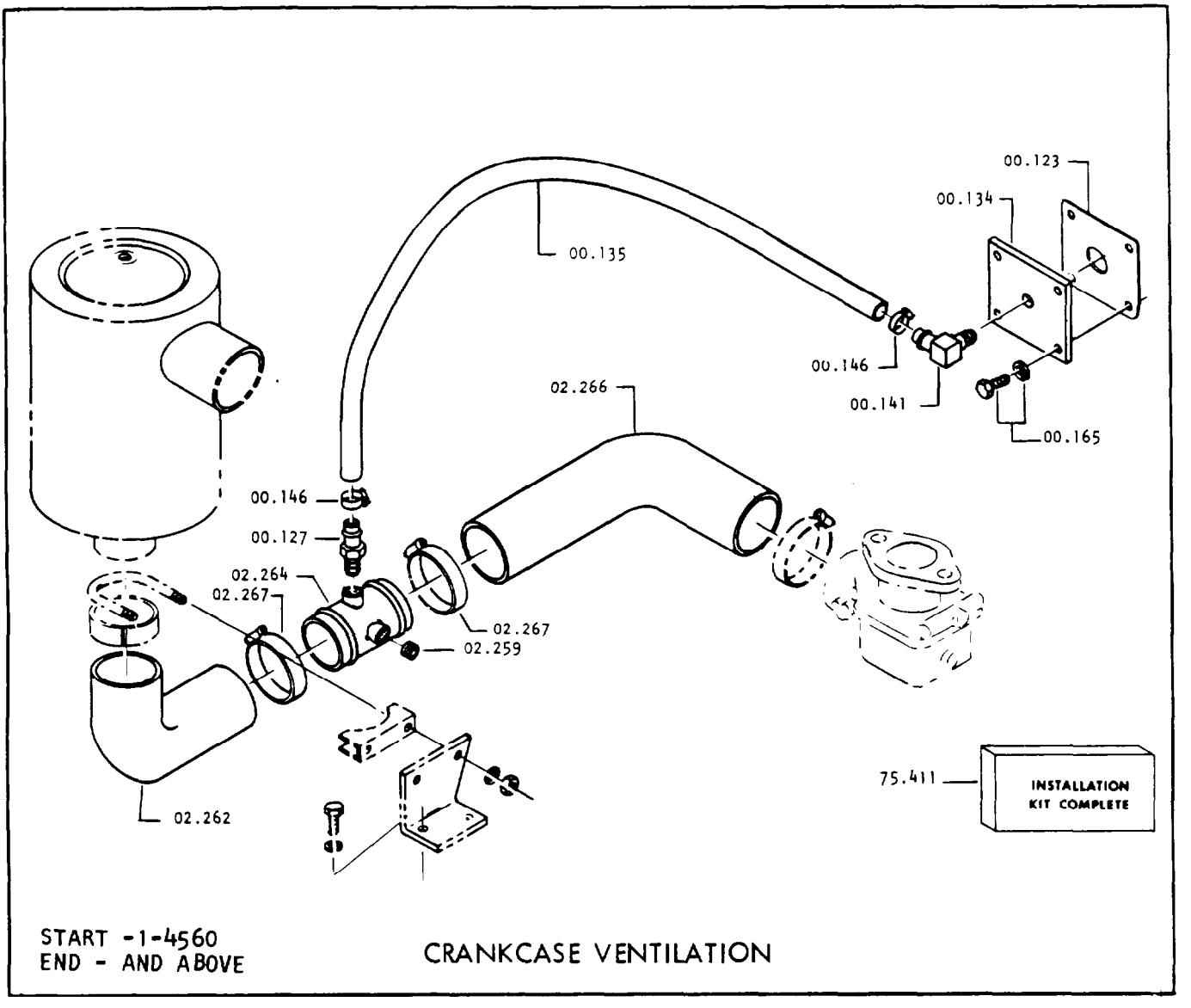

2343853 CRANKCASE VENTILATION KIT

75.411-2343853	1	CRANKCASE VENTILATION KIT
00.123-991868	1	GASKET
00.127-666864	1	CONNECTOR
00.134-1779629	1	COVER
00.135-656247	24"	HOSE
00.141-666839	1	ELBOW
00.146-42H10	2	CLAMP
00.165-1C412	4	CAPS CREW
00.165-23E4	4	LOCKWASHER
02.259-16F2	1	PIPE - PLUG
02.262-2343858	1	HOSE
02.264-2334529	1	TUBE
02.266-2343790	1	HOSE
02.267-42H36	2	CLAMP

www.truck-freeworkshop.com/clark/

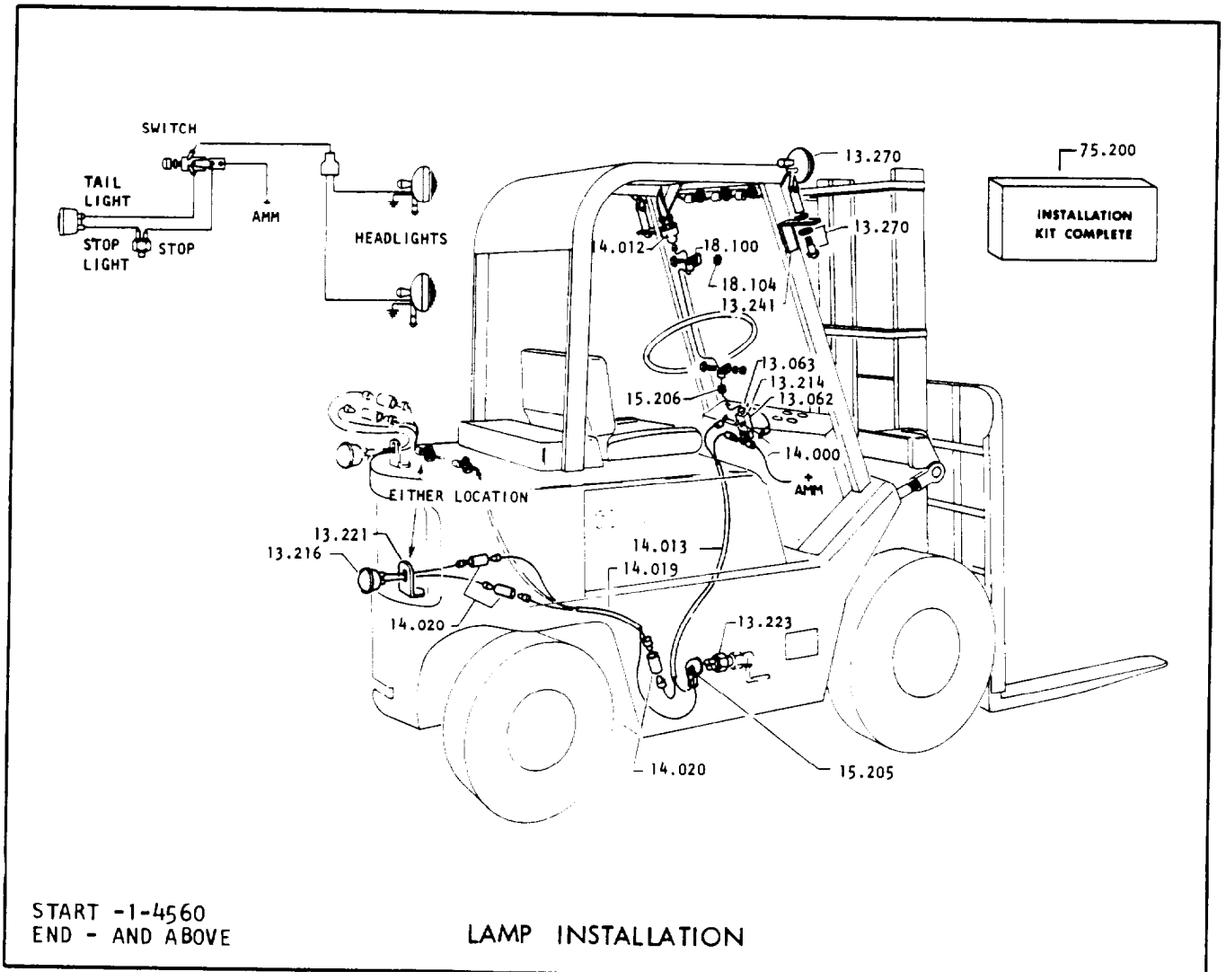

2339254 LIGHT INSTALLATION

75.200-2339254	1	LIGHT INSTALLATION
13.062-707688	1	LIGHT SWITCH
13.063-316484	1	KNOB
13.214-852372	1	NUT
13.216-1796980	1	STOP & TAIL LIGHT
13.221-1752531	1	BRACKET
13.223-620313	1	STOP LIGHT SWITCH
13.241-336570	1	BRACKET
13.270-1721777	1	ADJUSTABLE HEADLAMP
14.000-661271	1	WIRE ASSEMBLY
14.012-602335	1	CONNECTOR - 2 WAY
14.013-333814	AR	WIRE ASSEMBLY
14.019-333814	AR	WIRE ASSEMBLY
14.020-602355	3	CONNECTOR - 2 WAY
15.205-624425	1	BOOT
15.206-1010769	1	GROMMET
18.100-30H15	7	WIRE CLIP
18.104-61D5	7	NUT

www.truck-freeworkshop.com/clark/

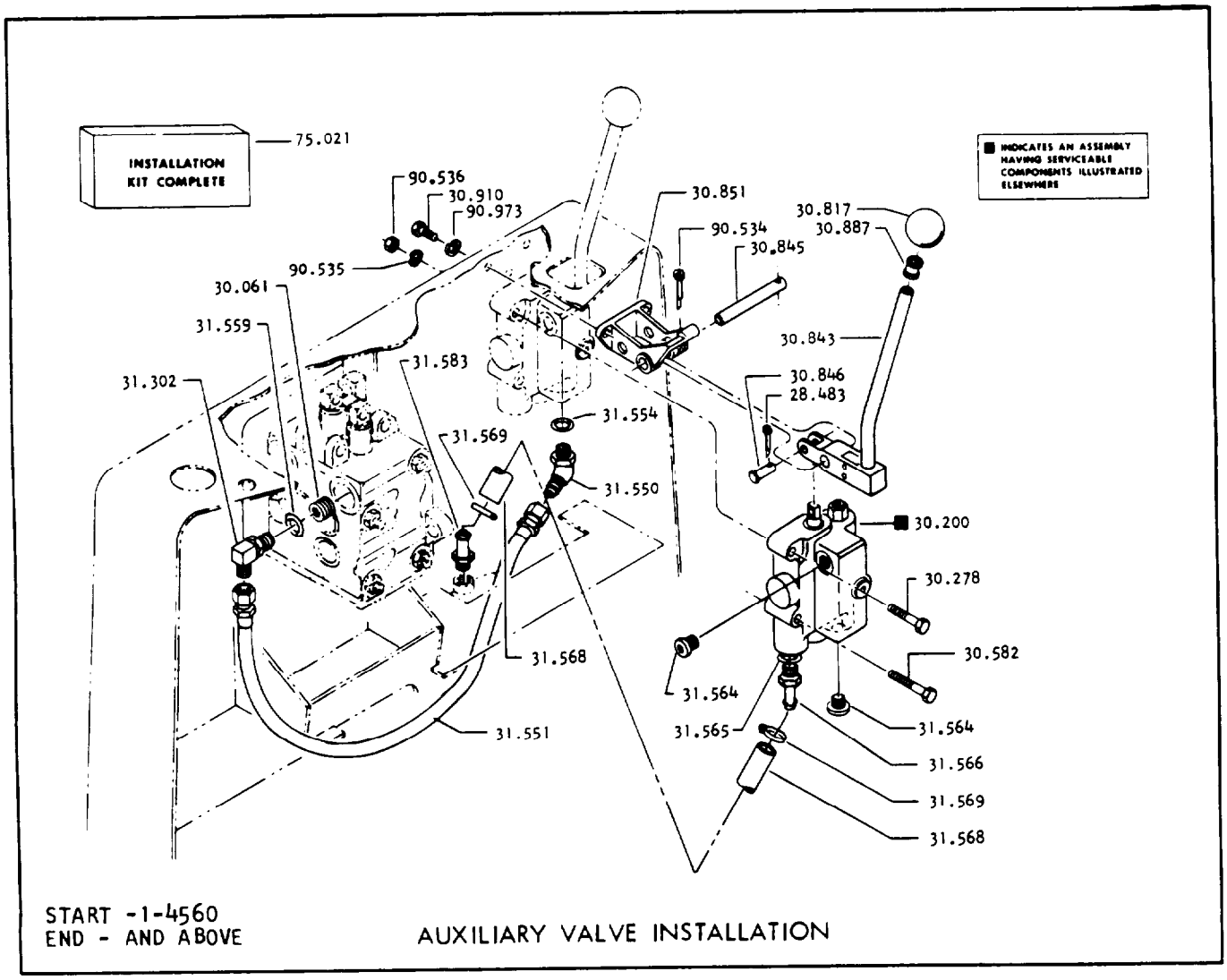

2362319 AUXILIARY VALVE INSTALLATION KIT

75.021-2362319	1	AUX VALVE INSTALL KIT
28.483-1F310	1	COTTER PIN
30.061-16F6	1	PIPE - PLUG
30.200-1692517	1	AUXILIARY VALVE ASSEM
30.278-1C532	1	BOLT
30.582-1C540	1	BOLT
30.817-1689758	1	KNOB
30.843-1763307	1	AUXILIARY LEVER
30.845-1316146	1	PIVOT PIN
30.846-4F5062	1	PIN
30.851-1759751	1	BRACKET
30.887-1307041	1	TOLERANCE RING
30.910-1C508	3	CAPSCREW
31.302-11K6	1	ELBOW
31.550-18K6	1	ELBOW
31.551-1326047	1	HOSE ASSEMBLY
31.554-91F6	1	O-RING
31.559-91F7	1	O-RING
31.564-47K6	2	PIPE - PLUG
31.565-91F	1	O-RING
31.566-1324753	1	ELBOW
31.568-743562	AR	HOSE
31.569-42H10	2	CLAMP
31.583-666854	1	CONNECTOR
90.534-1F420	1	COTTER PIN
90.535-23E5	3	LOCKWASHER
90.536-61D5	3	NUT
90.973-23E5	3	LOCKWASHER

www.truck-freeworkshop.com/clark/

NUMBERICAL INDEX

MFGR. NO.	VENDOR NO.	VENDOR CODE	MFGR. NO.	VENDOR NO.	VENDOR CODE
01100200		92867			
103405	L-18-SV-5000-Z11	59875		HM-89411	60038
103406	L-18-SV-148-A-95	81596		HM-89449	60038
103861	40101	59875	224339	X7-X-90	75958
106328	L-16-DE-39-X-1	59875	224388	246-10055	75958
106329	L-16-SP-5		225953	207-S	76062
107136	L-14-RT-514	59875	229252	F40-492	75958
107327	49627	63477	230365	322799	06848
107348	600207	81596	2309891	F401M-201	14351
107405	T-113	60038	2316008	H25-B1G2-FA17525A	45681
107801	FC-24200	63477	232474	324682	06848
107802	FC-24199	63477	2330656	2ZXP2192-103	96259
110222	2757-5036	73680	2334954	M07AB2J	45681
111563	L-16-VC-79	59875	2339413	LS-196-E	77326
111966	69020	99003	2351309	IBT-4105	19728
112149	451508-52	81596	2351790	06-460-015	40190
120514	L-18-VT-5067-A-11	59875	2352593	GLE-44	96152
121892	FD-73475	63477	2355693	1109090	16764
1300917	12C-12FJS-43	70434	316484	8157	13445
1302000	5F-6FJS-14.5	70434	351953	26729	64104
1304790		12603	3734222	CH11-N09-J22WDL-21	62983
1309676	550X3	79470			
1310115	1980035	16764	429224	L-19-DE-24	59875
1323240	10F-64	73842	429225	L-20-SP-31	59875
1325757	Group1/Type	81348	429226	L-20-HB-37	59875
1513816	C/7-12/F/F/LKR	16764	430565	F57819	63477
1513839	1513839	40152	525318	AAX-0613	78225
1618298	L43670	52788	551323	1513462	70040
1618574	5654782	70040	551835	169522	64104
1625352	RD-342	71425	604405	L-16-HB-29	59875
1649241	11800-500	40157	604406	L-17-HP-6	59875
1692093	C-2691	51588	613750	FC-602-F	63477
1692517	CMD12-P10-2000-10	62983	615374	FC-1511-B	63477
1706939	1970166	16764	620236	FC-3474	63477
1721276	173441	73370	620238	FC-603	63477
1721777	54-0072-00	78422	620313	4760	16764
1723625	6426401	70040	634924	L-16-DE-34	59875
1743826	15094-26	74400	641924	28619	64104
1750988	10748-A	76700	648334	387-A	60038
1752522	235116	73370	6511956	1876682	16764
1765756	C-6900	99537	6511957	1876681	16764
1779011	MA103	27469	654044	2793	60038
1799452	MI-1372-300 PSI	74400	654139	26882	60038
1800421	GP5/6.50-10/TR15	81348	654154	2720	60038
	CW/OFF Center		654162	15245	60038
1830006	A-27801	56118	654134	15123	60038
1830826	854568	70040	654167	26822	60038
209158	49505	76700	654388	SK-206-S	60380
211433	569022-03	31695	656247	6R1	70434
224237	CCNSISTS OF		656643	6F-8FJS-18	
	NEXT 2 ITEMS		656644	6F-8FJS-30	70434
	M88048	60038	658019	208-W	21335
224289	CONSIST OF	60038			
	NEXT 2 ITEMS				

www.truck-freeworkshop.com/clark/

NUMBERICAL INDEX

MFGR. NO	VENDOR NO.	VENDOR NO.
658998	382A	60038
659065	5100-156	79136
660160	8C-10FJS-22.5	70434
660408	1525-10	00624
661556	307014	75915
663264	33-4741-10S	00624
668788	150933	73370
712512	16284	60038
712839	1324185	12603
713155	16150	60038
733623	1116920	16764
730086	6N-8FJS-22	70434
733633	1116920	16764
743564	3219	24161
752453	45737	30076
763843	B-912	60380
775735	1891	24446
782874	L-20-H-124-A-1	59875
784057	34X144	45681
791454	B-148	60380
793560	12720	49234
794584	1941978	16764
850063	266316	52788
850337	1839345	16764
850363	1928023	16764
850757	264831	52788
851770	26678	52788
851860	187540	52788
853097	169619	64104
853187	266909	52788
853189	3206X1A	43334
857712	44504	64104
859369	1915172	16764
859727	FC-5733	63477
860818	1BB2042-SS-1	19728
876133	80107-D	64104
877752	54-0328-00	78422
878608	1928021	16764
880690	1176	24446
884581	1114458	16764
886265	1875627	16764
886331	L-21-HP-3	59875
887714	1952410	16764
888066	232799	62983
888069	223388	62983
888070	222640	62983

MFRG. NO.	VENDOR NO.	VENDOR NO.
888074	246632	62983
888140	259871	62983
888505	1847933	16764
888968	1958679	16764
889001	233019	62983
890273	18-Z8	19728
890410	180238-A	64104
890412	180068-F	64104
890414	B-6717	64104
890415	162406	64104
890416	166518	64104
890450	164011	64104
890462	152464-F	64104
890474	A-220113A	64104
890473	220075	64104
890490	FP-1156	71425
890562	3900	14765
890563	3842	14765
890564	3878	14765
890565	3880	14765
890566	3801	14765
890567	3851	14765
890610	A220257	64104
890883	168921	64104
890887	220026	64104
890888	220023	64104
890927	224509	64104
890928	180009-D	64104
890929	169577	64104
890930	190336-E	64104
890931	180336-C	64104
890934	A-167887	64104
890935	73927	64104
890937	27277-B-	64104
890941	168142-A	64104
890945	168720	64104
890947	168145-A	64104
890950	A-168435	64104
890959	152311	64104
890963	180341-C	64104
890964	220142	64104
890978	180040-0	64104
890979	C-220002-A	64104
891069	28481	64104
891191	1950307	16764
891602	1962602	16764
892182	176955	64104
892250	29-200-001	92865
892669	284156	62983
892871	922906	62983
892923	282027	62983

www.truck-freeworkshop.com/clark/

NUMBERICAL INDEX

MFGR. NO.	VENDOR NO.	VENDOR CODE	MFGR. NO.	VENDOR NO.	VENDOR CODE
892294	284154	62983	942542	176412	64104
892925	284155	62983	947257	6431140	70040
893051	1700-A2	77857	947248	6461897	70040
893513	54-0519-30	78422	947255	6489238	70040
894355	L20-SD750-A11	59875	949286	6473990	70040
895388	168132	64104	952707	180037	64104
895389	168149	64104	952709	76420	64104
895390	190035	64104	952710	74993	64104
895887	RD-387	71425	952711	160027-S	64104
895888	RD-388	71425	952716	150134	64104
896125	1966232	16764	952717	B-8230	64104
896126	1951567	16764	952718	118172	64104
896605	307198	62983	952719	150116	64104
897456	1971993	16764	952725	73888	64104
897457	1959991	16764	952727	76898	64104
897467	1956975	16764	952728	76899	64104
897700	D108-23	74465	952729	0180567-A	64104
898438	1960770	16764	952730	0180467-A	64104
898445	5690593	52788	952732	B-6466-A	64104
898447	5667628	52788	952733	76771	64104
898451	5676217	52788	952734	160115	64104
898452	5666683	52788	952735	160016	64104
898453	5666693	52788	952739	116777	64104
898454	5699338	52788	952741	116273	64104
898455	5666681	52788	952745	190235	64104
898456	5699333	52788	952757	41283-B	64104
898457	7812881	52788	952775	120475	64104
898458	5666734	52788	952779	B-2135	64104
898459	5666722	52788	952795	4493	64104
898461	5668489	52788	953129	116292	64104
898490	F600B-234	14351	954573	B-175	64104
899499	1964117	16764	957113	B-4296	64104
899499	FE-2775	63477	957223	B-2747	64104
			957225	B-8556	64104
899584	X-1698	14351	957229	3337	64104
905223	D164-397	74465	957230	120934	64104
905247	A220354-C	64104	957239	B-4171	64104
905342	CM11N09-J22W-21	62983	957294	B-2857	64104
905396	220511A	64104	958232	119563-B	64104
905949	1103060	16764	980829	54-0379-00	78422
905951	1974939	16764	980884	157472	64104
905952	1975471	16764	980899	154801-A	64104
905953	1974937	16764	990046	315932	06848
906026	16716041	64104	990047	3359574-10	06848
906027	167877-C	64104	990048	313015	06848
940104	1115066	16764	990050	311250	06848
940774	0-151103	64104	990051	313997	06848
9400778	180100	64104	990052	900882-K6	06848
940891	152868	64104	990076	923288	62983
942142	1928022	16764	990077	320473	62983

www.truck-freeworkshop.com/clark/

NUMBERICAL INDEX

MFGR. NO.	VENDOR NO.	VENDOR CODE	MFGR. NO.	VENDOR NO.	VENDOR CODE
990078	320786	62983	993154	A-220144	64104
990079	320973	62983	993346	715267	45681
990080	327926	62983	993347	695763-02	45681
990081	327382	62983	993420	32-660-052	96865
990082	320787	62983	993458	800832	16764
990083	324232	62983	993509	CA-169511-C	64104
990223	CM11N02-DL-21	62983	993553	A169511-C	64104
990245	169420B	64104	993554	169407-F	64104
990299	220214A	64104	993555	169680	64104
990304	K-918-274	64104	993579	220073	64104
990306	K-918-273	64104	993580	220144	64104
990308	918-272	64104	993581	177127	64104
990309	980-134	64104	994009	A199178	64104
990314	AC-220002-A	64104	994274	725321	45681
990315	T180180	64104	994299	910-231	64104
990390	169510	64104	994300	913-648	64104
990391	169529	64104	994302	220230	64104
990392	169414-A	64104	994373	1876668	16764
990396	169410-A	64104	994374	7451931	16764
990397	121029-A	64104	994378	1851612	16764
990400	A-180153-B	64104	994381	1116392	16764
990401	168146-A	64104	994383	1971528	16764
990403	A-220020-E	64104	994472	715567	45681
990412	220012-B	64104	994580	675418	45681
990789	P-90-749	19728	994583	705799	45681
990936	235114	73370	994714	220294	64104
990937	PH3381	73370	994718	41236G	64104
991038	56-0228-00	78422	994719	199719	64104
991057	28-080-001	92865	994722	73654X	64104
991087	220061-A	64104	994724	900-355	64104
991090	176365	64104	994725	979-200	64104
991091	169411-E	64104	994727	199451A	64104
991092	169409-B	64104	994728	A220295	64104
991093	169411-D	64104	994732	905-746	64104
991328	28474	64104	995185	1869573	16764
991366	169723	64104	995189	1000-00025	40157
991735	7801626	52788	995190	1000-00011	40157
991831	810245	64104	995191	1000-00021	40157
991867	176624	64104	995305	1000-00023	40157
991867	176624	64104	995306	1000-00002	40157
991868	176625	64104	995223	1000-00026	40157
991869	168191-A	64104	995397	A220545E	64104
991988	696173	45681	995438	37030	64104
991990	695652	45681	995455	930-602	64104
991991	695634	45681	995501	910-233	64104
991993	695901	45681	995502	910-234	64104
992214	117X176	45681	995503	912-2	64104
992215	695762	45681	995566	D110-51	74465
992356	324684	45681	995910	A220360	64104
992648	800594	16764	995913	A-220207	64104

www.truck-freeworkshop.com/clark/

MFGR. NO.	VENDOR NO.	VENDOR CODE
995914	960-215	64104
995931	220577	64104
995932	220178	64104
995953	745687	45681
995954	675191	45681
996465	B4858A	64104
996466	906-197	64104
996830	177032	64104
996831	177031	64104
997575	IBT-1007S	19728
998600	IBT-1059B	19728
998601	IGP-1016F	19728
998602	IBK-1009A	19728
998712	02-400-063	92865
998713	29-030-040	40190
998920	IBT-2004RCS	19728
998922	IBP-2040RA	19728
998925	90-353C	19728
999170	207867	64104
999172	207868	64104
999173	207865	64104
999253	54-0982-00	78422
999281	54-0983-00	78422
999289	286-1722	96152
999304	907998	16764
999305	1876163	16764
999307	801466	16764
999308	1971411	16764
999392	1894594	16764
999458	1974183	16764
999478	854569	70040
999890	A220015K	64104

www.truck-freeworkshop.com/clark/

www.truck-freeworkshop.com/clark/

SUPPLEMENTAL OPERATING, MAINTENANCE AND REPAIR PARTS INSTRUCTIONS FOR TRUCK, LIFT, FORK, PNEUMATIC TIRE GASOLINE ENGINE DRIVEN, 4,000-LB., 144-INCH LIFT, CLARK MODEL C500Y45 (NSN 3930-01-085-3767)

MHE

			Paragraph	Page
SECTION	I.	GENERAL		
		Purpose	1-1	[redacted]
		Scope	1-2	[redacted]
		Description	1-3	[redacted]
		Operationalconcept	1-4	[redacted]
		Procurement status	1-5	[redacted]
		Personnel and training	1-6	[redacted]
		Logistics assistance	1-7	[redacted]
		Warranty	1-8	[redacted]
SECTION	II.	MAINTENANCE		
		Maintenance concept	2-1	[redacted]
		Maintenance allocation chart (MAC)		
		Maintenance expenditure limits (MEL)		
		Reliability and maintainability (RAM)	2-2	[redacted]
		Modifications	2-3	[redacted]
		Equipment improvement recommendations (EIR)	2-4	[redacted]
		Equipment serviceability	2-5	[redacted]
		Shipment and storage	2-6	[redacted]
		Destruction to deny enemy use	2-7	[redacted]
		Basic issue items list (BIIL)	2-8	[redacted]
		Special tools and equipment	2-9	[redacted]
		Maintenance and operating supplies	2-10	[redacted]
		Maintenance forms and records	2-11	[redacted]
		Maintenance of new vehicle	2-12	[redacted]
		Preventive maintenance checks and services (PMCS)	2-13	[redacted]
SECTION	III.	REPAIR PARTS SUPPLY		
		General	3-1	[redacted]
		Prescribed load list (PLL)	3-2	[redacted]
		Authorized stockage list (ASL)	3-3	[redacted]
		Requisitioning repair parts	3-4	[redacted]
		Submitting requisitions	3-5	[redacted]
APPENDIX	A.	SPECIAL NOTES AND CORRECTIONS		A-1
	B.	WARRANTY GUIDELINES		B-1
	C.	MAC		C-1
	D.	MELCHART		D-1

www.truck-freeworkshop.com/clark/

		Paragraph	Page
E.	MAINTENANCE AND OPERATING SUPPLY LIST		XX
F.	PREVENTIVE MAINTENANCE CHECKS AND SERVICES		XX
G.	ASL/PLL		XX
H.	DISTRIBUTION CODES		XX
I.	FLOW OF REQUISITIONS & MATERIAL PARTS, NSN		XX
J.	FLOW OF REQUISITIONS & MATERIAL PARTS, NON-NSN		XX
K.	SAMPLE REQUISITIONING FORMATS		XX

www.truck-freeworkshop.com/clark/

THIS PAGE INTENTIONALLY LEFT BLANK

www.truck-freeworkshop.com/clark/

FORK LIFT TRUCK, CLARK MODEL C500Y45, NSN 3930-01-085-3767

www.truck-freeworkshop.com/clark/

SECTION I

GENERAL

1-1. Purpose.

To provide the user and support personnel supplemental maintenance and repair parts instructions (SOMARPI) applicable to the 4,000 lb. Clark model C500Y45 forklift truck.

1-2 Scope.

This SOMARPI applies to Department of the Army units, organizations and activities that use and/or support the truck, lift, fork, 4,000 lb., pneumatic tire, 144-inch lift height, NSN 3390-01-085-3767.

1-3 Description.

The 4,000 lb., gasoline engine driven, pneumatic tire forklift truck is manufactured by Clark Equipment Company, Battle Creek, Michigan. The truck is a front drive, rear steer vehicle with a lift height of 144 inches. It has a Hydratork power shift transmission, two speeds in both forward and reverse. The truck is equipped with hydraulic brakes on both drive wheels and a parking brake is mounted on the differential. It has a roller-type lift assembly with two independent lift chains. The control valve to operate the hydraulic lift and tilt cylinder is console mounted in front of the operator. A side shift capability is also present on the vehicle. The instrument panel includes: a gas gauge, oil pressure gauge, ammeter, water temperature gauge and a direct reading engine hourmeter. The vehicle has a 12-volt electrical system consisting of a heavy duty alternator, voltage regulator and starting motor. The truck is equipped with power steering. The truck has a four-cylinder Waukesha engine.

1-4. Operational Concept.

The 4,000 lb. Clark model C500Y45 is intended to be used for stacking, unstacking and moving cargo in and around warehouses, loading platforms and docks within the military supply system; also, for moving cargo in and out of highway trailers and railroad cars. Trucks are intended for operation over paved, semiprepared and other hard surfaces for short distances.

1-5 Procurement Status.

The procurement contract number is DAAE07-79-C-5856.

1-6 Personnel and Training.

a MOS Requirements. Qualitative and quantitative personnel requirements information (QQPRI) will be disseminated IAW AR 611-1. The following MOS's can operate and maintain the end item.

(1) *Operator.* 62F, 76V

(2) Organizational maintenance. 63B & 63G

(3) Direct and general support maintenance. 63B, 63G & 63H

b. Training.

(1) *New equipment training team (NETT). New* equipment training teams are available to major field commands. Request for NETT's should be forwarded to Commander, US Army Tank-Automotive Command, ATTN: DRSTA-MLT, Warren, MI 48090. Training teams should be requested only when trained personnel are not available in the command to operate and/or maintain the truck.

(2) New materiel introductory teams (NMIT): Major field commands requiring briefings to command staff and users should forward their requests to Commander, US Army Tank-Automotive Command, ATTN: DRSTA-MLT, Warren, MI 48090. Receiving commands are responsible for the itinerary of NMIT' s.

1.7 Logistics Assistance (AR 700-4).

US Army Tank-Automotive Command' s field maintenance technicians stationed at CONUS and OCONUS installations are available to furnish on-site training and/or technical assistance. Assistance can be obtained by contacting the appropriate logistics assistance office (LAO) listed in appendix B. AR 700-4.

1-8 Warranty.

See appendix B for warranty guidelines.

www.truck-freeworkshop.com/clark/

www.truck-freeworkshop.com/clark/

SECTION II

MAINTENANCE

2-1. Maintenance Concept.

a Maintenance operations. The 4,000-Lb. Clark model C500Y45 will not require special or new maintenance considerations. Maintenance operations can be accomplished within the current maintenance support concept for material handling equipment.

b. Nature and Extent of Maintenance.

(1) *Maintenance allocation chart (MAC).* Maintenance will be performed as necessary by the category indicated in the MAC (app. C) to retain and/or restore serviceability. Units may exceed their authorized scope and function in the MAC when approved by the appropriate commander.

(2) Operator maintenance. Operator maintenance is limited to daily preventive maintenance checks and routine servicing (app. F).

(3) Organizational maintenance. Organizational maintenance consists of scheduled preventive maintenance services, limited removal, minor repair and adjustments (app F).

(4) Direct support maintenance. Direct support maintenance consists of repairs on-site and for return to the user of the end item/assemblies which can be maintained efficiently with a minimum of tools and test equipment.

(5) General support maintenance. General sup port will overhaul and repair for return to stock items designated by the area support commander.

(6) Depot maintenance. There is no scheduled depot maintenance on the 4,000-lb. Clark model C500Y45.

c. Maintenance Expenditure Limit. The Maintenance expenditure limit is based on a life expectancy of 11 years. Limits on repair are based upon 50% replacement cost through the life expectancy of the end item (app. D).

2.2 Reliability and Maintainability.

Reliability and maintainability (RAM) will be assessed through the field evaluation of current users. Specific numerical RAM requirements or objectives are not established.

2.3 Modifications.

Modifications will be accomplished by the end item manufacturer after MERADCOM acceptance and TACOM approval.

2.4 Equipment Improvement Recommendations (EIR).

Equipment improvement recommendations will be submitted IAW DA Pam 738-750.

2.5 Equipment Serviceability.

For Equipment serviceability criteria, see appendix F.

2.6 Shipment and Storage.

a. Shipment and Storage. Refer to TB 740-97-2 for procedures covering preservation of equipment for shipment. General procedures for shipment are found in FM 55-15, with more specific information in TM 55-2200-001-12 for rail and TM 55-450 series for air transport.

b. Administrative Storage. Refer to TM 740-90-1 for instructions covering administrative storage of equipment.

c. Weight Classification. The weight classification of the end item is 8668 pounds.

2.7 Destruction To Deny Enemy Use.

Refer to TM 750-244-6 for instructions governing destruction of equipment to prevent enemy use.

2.8 Basic Issue Items List (BIIL).

Basic Issue Items are as listed:

SMR code	National Stock number	Description: Ref No. & MFG code	Description: Usable on code	Unit of measure	QTY auth
	7530-01-065-0166	Equipment Record Folder		ea.	1

www.truck-freeworkshop.com/clark/

2.9 Special Tools and Equipment.

Special tools and equipment are not required for the 4,000-lb. Clark model C500Y45.

2.10 Maintenance and Operating Supply List.

See appendix E for a list of maintenance and operating supplies required for initial operation.

2.11 Maintenance Forms and Records.

Operational, maintenance and historical forms/ records will be IAW DA Pam 738-750.

2.12 Maintenance of New Vehicle.

See Section II. Preparation For Use, page 2-1, in your technical manual.

NOTE

INSPECTION UPON DELIVERY

For your protection, make a thorough inspection of the vehicle immediately upon delivery. Notify the transit agent and have delivering carrier make a notation on the freight bill of lading AT ONCE

2.13 Preventive Maintenance Checks and Services.

See appendix F for preventive maintenance checks and services.

www.truck-freeworkshop.com/clark/

SECTION III

REPAIR PARTS SUPPLY

3.1 General.

a. The basic policies and procedures in AR 710-2 and AR 725-50 are generally applicable to repair parts management for material handling equipment (MHE) items.

b. Manufacturer's parts manuals are furnished with MHE items instead of Department of the Army repair parts and special tool list (RPSTL).

c. National stock numbers (NSNs) are initially assigned only to PLL/ASL parts, major assemblies and suggested repair parts. Additional NSNs are assigned by the supply support activities as de mands warrant.

d. Automated processing (AUTODIN) of Federal supply code manufacturer (FSCM) part number requistions, without edit for matching NSNs, is authorized.

e. Weapon system designator codes on part requisitions are not required.

f. Repair parts are available from commercial sources for units and may be purchased locally 1AW AR 710-2 and AR 735-110.

g. Initial prescribed load list (PLL) and authorized stockage list (ASL) will be distributed by the Tank-Automotive Command (TACOM), ATTN: DRSTA-MVM, Warren, MI 48090.

3.2 Prescribed Load List (PLL).

The PLL, distributed by TACOM, is an estimated 15 days' supply recommended for inital stockage at organizational maintenance. Management of PLL items will be governed by the provisions of AR 710-2 and local command procedures. A prepared list of PLL parts will be provided to OCONUS units before shipment of the end item. Selection of PLL parts for shipment to OCONUS units is based upon the receiving command's recommendations after their review of the TACOM prepared list. Organizations and activities in CONUS will establish PLL stocks through normal requisitioning process (app. G).

NOTE

Local purchase of repair is authorized 1AW AR 710-2 and AR 735-110.

3.3 Authorized Stockage List (ASL).

The ASL, distributed by TACOM, is an estimated 45 days' supply of repair parts for support units and activities. An initial list of ASL parts will be provided to designated support units (OCONUS) before shipment of the end items. The parts shipped will be selected according the recommendations of the receiving commands. Receiving commands will make their recommendations after review of the initial list distributed by TACOM. Support units and activities in CONUS will establish ASL stocks through the normal requisitioning process (app. G).

NOTE

Local purchase of repair parts is authorized IAW AR 710-2 and AR 735-110.

3.4 Requisitioning Repair Parts (MILSTRIP).

All MILSTRIP requisitions (DD Form 1348 series) prepared for repair parts support of MHE items will include the use of certain distribution and project codes.

a. Distribution Codes (App. H). The distribution code consists of a twopart field. The first part (card column 54) designates the control activity that should receive supply and shipping status of all requisitions. The second part (card columns 55-56) identifies the end item by the use of a weapons system designator code.

(1) CONUS customers will use code "F" in card column 54. OCONUS customers will use the ap propriate code from appendix P, paragraph P-3, AR 725-50. (See appendix H for distribution codes.)

(2) The weapons system designator code for the 4,000-lb. Clark model C500Y45 is *not applicable.* Card columns 55 and 56 will be left blank on all requisitions for parts to support the designated end item.

b. Project Codes. Direct support system (DSS) project codes (FM 38-725) are no longer mandatory and are being phased out. However, CONUS and OCONUS customers, submitting non-NSN part number requisitions to the Defense Construction Supply Center (DCSC-routing identifier code-"S9C"), will use MHE project codes "JZM" (OCONUS) and "BGX" (CONUS) in card columns 57-59.

3.5 Submitting Requisitions.

Requisitions for NSN parts will be forwarded through the Defense Automated Addressing System (DAAS) to the Managing Supply Support Activity (app. I). Requisitions for non-NSN parts

www.truck-freeworkshop.com/clark/

will be forwarded through DAAS to the Defense Construction Supply Center (DCSC) (app. J). Sample formats for requisitioning are found in app. K.

NOTE

When the manufacturer' s part number and Federal supply code for manufacturer (FSCM) exceed the space in card columns 8 through 22 of A02/AOB requisitions, prepare an A05/AOE requisition (DD Form 1348-6) and mail it to: Commander, Defense Construction Supply Center, ATTN: DCSC-OSR, Columbus, Ohio 43215.

www.truck-freeworkshop.com/clark/

APPENDIX A

SPECIAL NOTES AND CORRECTION

The package guard (backrest) should be removed prior to the loading or unloading of mil-van containers, inclosed highway trailers or rail cars, when it is determined that the package guard may interfere with the roof of the container, trailer or rail car when engaging 2nd tier pallets. The package guard should be reinstalled upon completion of these container operations.

www.truck-freeworkshop.com/clark/

www.truck-freeworkshop.com/clark/

APPENDIX B

WARRANTY GUIDELINES

1. The warranty period is 15 months from date of acceptance or 1500 hours of operation, whichever occurs first. Further, if the Government, prior to placing vehicles in service, elects to place quantities of such newly delivered vehicles in Government depot storage, the warranty period on these vehicles, which are stored, will not begin to run until each vehicle is withdrawn from Government storage or until six months from date of acceptance, whichever occurs first. The warranty applies to all supplies furnished under the contract.

NOTE

Date of acceptance is on vehicle data plate.

2. The manufacturer's warranty is described in the operator's manual and on a decal located behind the driver's seat. "Any defects in material or workmanship, under normal use and service for a period of 15 months from date of acceptance or 1500 vehicle operating hours, whichever may occur first, should be reported to the local dealer and/or the Government Contract Administration Section."

3. If a Clark service agency is not available, CONUS units should notify the National Maintenance Point (NMP) by telephone, AUTOVON 273-33631338913395. OCONUS units should follow warranty reporting procedures in DA Pam 738-750.

4. *All Warranty Claims,* whether they are settled locally with a manufacturer's representative or processed through normal Army maintenance support channels, must be reported to: US Army Tank-Automotive Command, ATTN: AMSTA-MVM, Warren, MI 48397-5000.

5. Listed below is the current authorized Clark dealers for OCONUS units:

NOTE

This list is provided as a guide.

GROSSAUHEIM
KAISERSLAUTERN
FRANKFURT MAIN
KORNWESTHEIM
GIESSEN
BAUMHOLDER
KAEFERTAL
BAD KREUZNACH
FREUDENHEIM

DEALER: CLARK VERKAUF UND SERVICE GMBH
OTTO-HAHN.STR.9
6070 LANGEN/HESSEN

FUERTH
VILSECK
WUERZBURG

DEALER: CLARK VERKAUF UND SERVICE GMBH
VIRNSBERGERSTRASSE 18
8500 NUERNBERG

AUGSBURG

DEALER: CLARK VERKAUF UND SERVICE GMBH
LUDWIGSFELDER STRASSE 272
8000 MUENCHEN 50

BERLIN

DEALER: FIRMA DIPL. INC. M. WEYER
SCHOTTMUELLERSTRASSE 90
1000 BERLIN 37

BREMERHAVEN

DEALER: GERHARD WIESE
BAUMSTRASSE 68
2000 BREMEN

STUTTGART

DEALER: HANS J. GRUNEWALD
LAGER-UND FOERDERTECHNIK
POSTFACH 4147
INDUSTRIEGELAENDE BONLANDEN
7024 FILDERSTADT 4 (STUTTGART)

www.truck-freeworkshop.com/clark/

www.truck-freeworkshop.com/clark/

APPENDIX C

MAINTENANCE ALLOCATION CHART

FOR

TRUCK, FORKLIFT, GED, SRT, 4,000-LB. CAPACITY, CLARK MODEL C500Y45

Section I. INTRODUCTION

1. General.

This maintenance allocation chart (MAC) designates responsibility for performance of maintenance functions to specific maintenance categories.

2. Maintenance Functions.

Maintenance functions are as follows:

a. Inspect. To determine the serviceability of an item by comparing its physical, mechanical and/or electrical characteristics with established standards through examination.

b. Test. To verify serviceability and detect incipient failures by measuring the mechanical or electrical characteristics of an item and comparing those characteristics with prescribed standards.

c. Service. Operations required periodically to keep an item in proper operating condition; i.e., to clean (decontaminate), to preserve, to drain, to paint or to replenish fuel, lubricants, hydraulic fluids or compressed air supplies.

d. Adjust. To maintain, within prescribed limits, by bringing into proper or exact position or by setting the operating characteristic to specified parameters.

e. Align To adjust specified variable elements of an item to bring about optimum or desired performance.'

f. Calibrate. To determine and cause corrections to be made or to be adjusted on instruments or test measuring and diagnostic equipment used in precision measurement. Consists of comparisons of two instruments, one of which is a certified standard of known accuracy, to detect and adjust any discrepancy in the accuracy of the instrument being compared.

g. Install. The act of emplacing, seating or fixing into position an item, part or module (component or assembly) in a manner to allow the proper functioning of an equipment or system.

h. Replace. The act of substituting a serviceable like type part, subassembly or module (component or assembly) for an unserviceable counterpart.

i. Repair. The application of maintenance services or other maintenance actions to restore serviceability to an item by correcting specific damage, fault, malfunction or failure in a part, subassembly, module (component or assembly), end item or system.

j. Overhaul. That maintenance effort (service/action) necessary to restore an item to a completely serviceable/operational condition as prescribed by maintenance standards (i.e., DMWR) in appropriate technical publications. Overhaul is normally the highest degree of maintenance performed by the Army. Overhaul does not normally return an item to like new condition.

k. Rebuild. Consists of those services/actions necessary for the restoration of unserviceable equipment to a like new condition in accordance with original maunfacturing standards. Rebuild is the highest degree of materiel maintenance applied to Army-equipment. The rebuild operation includes the act of returning to zero those age measurements (hours/miles, etc.) considered in classifying Army equipment/components.

3. Column Entries.

Columns used in the MAC are explained below:

a. Column *l-Group Number.* Column One (1) lists group numbers from TB 750-93-1, the purpose of which is to identify components, assemblies, subassemblies and modules with their next higher assemblies.

b. Column 2-Component/Assembly. Column Two (2) contains the noun names of components, assemblies, subassemblies and modules for which maintenance is authorized.

c. Column 3-Maintenance Functions. Column Three (3) lists the functions to be performed on the

www.truck-freeworkshop.com/clark/

item listed in column 2.

d. Column 4-Maintenance Category. Column Four (4) specifies, by the listing of a "work time" figure in the appropriate sub column(s), the lowest level of maintenance authorized to perform the function listed in column 3. This numeric figure represents the active time required to perform that maintenance function at the indicated category of maintenance. The number of man hours specified by the "work time" figure represents the average time required to restore an item (assembly, subassembly, component, module, end item or system) to a serviceable condition umder typical field operating conditions. This time includes preparation time, troubleshooting time and quality assurance/quality control time in addition to the time required to perform the specific tasks identified for the maintenance functions authorized in the MAC.

e. Column 5-TOOLS and Equipment. Column Five (5) specifies by code, those common tools sets (not individual tools) and special tools, test and support equipment required to perform the designated function.

www.truck-freeworkshop.com/clark/

Section II. MAINTENANCE ALLOCATION CHART

(1) Group number	(2) Component assembly	(3) Maintenance function	(4) Maintenance level C	O	F	H	D	(5) Tools and equipment	(6) Remarks
01	Engine								
0100	Engine Assembly	Service	0.1					1-11	
		Replace			6.0				
		Repair				12.0			
		Overhaul				28.0			
0101	Block, Short Assembly	Replace			12.0			1--11	
		Repair				20.0			
	Cylinder Head	Replace			3.0			1-11	
		Repair				4.5			
0102	Crankshaft	Replace				13.0		1-11	
		Repair				15.0			
	Gear, Crankshaft	Replace			13.0			1-11	
0103	Flywheel Assembly	Replace			13.0			1-11	
	Gear, Ring	Replace			13.0			1-11	
0104	Piston, Connecting Rods, Sleeves	Replace				9.5		1-11	
0105	Valves (Exhaust & Intake)	Adjust		1.5				1-4	
		Replace			6.0			1-11	
	Camshaft	Replace			12.0			1-11	
0106	Oil Pump	Replace			4.5			1-11	
		Repair				6.0		1-11	
	Oil Filter	Replace		0.5				1-4	
	Oil Pan	Replace			4.0			1-11	
0108	Manifold Intake	Replace		1.0				1-4	
	Exhaust	Replace		1.0					
03	Fuel System								
0301	Carburetor	Adjust		0.3				1-4	
		Replace		1.0				1-4	
		Repair			2.0			1-11	
0302	Fuel Pump	Test		0.3				1-4	
		Replace		1.0				1-4	
	Lines, Fittings & Hoses	Replace		0.7				1-4	
0304	Air Cleaner & Indicator	Service	0.1	0.2				1-4	
		Replace		1.0				1-4	
0306	Fuel Tank	Service	0.2						
		Repair			4.0			1-11	
	Fuel Lines & Fittings	Replace		0.5				1-4	
0309	Filter Fuel	Replace		0.8				1-4	
0312	Accelerator, Throttle Controls	Replace		1.5				1-4	
04	Exhaust System								
0401	Muffler	Replace		1.0				1-4	
	Exhaust Pipe	Replace		1.0				1-4	
05	Cooling System								
0501	Radiator	Service	0.2	0.3				1-4	
		Replace		1.4				1-4	
		Repair		3.0				1-11	
0503	Thermostat	Test		1.5				1-4	
		Replace		1.6				1-4	
	Hoses. Upper & Lower	Replace		1.5				1-4	
0504	Water Pump Assembly	Replace		1.5				1-4	
		Overhaul			2.5			1-11	
0505	Fan, Assembly	Replace		1.2				1-4	
	Fan Belt	Replace		0.7				1-4	
06	Electrical System								
	Alternator	Test		0.2				1-4	
		Replace		1.5				1-4	
		Repair			1.5			1-11	
	Regulator	Replace			1.0			1-11	

www.truck-freeworkshop.com/clark/

(1) Group number	(2) Component assembly	(3) Maintenance function	(4) Maintenance level C	O	F	H	D	(5) Tools and equipment	(6) Remarks
0603	Starter Motor	Test		0.3				1-4	
		Replace		1.0				1-4	
		Repair			1.8			1-11	
	Switch, Starter Ignition	Replace		0.4				1-4	
0605	Distributor Assembly	Adjust		0.5				1-4	
		Replace		1.5				1-4	
	Ignition Coil	Replace		0.4				1-4	
	wiring	Replace		0.4				1-4	
	Spark Plugs	Replace		0.5				1-4	
0607	Instrument Panel	Replace		1.8				1-4	
		Repair			1.6			1-11	
	Hourmeter	Replace		0.6				1-4	
	Ammeter	Replace		0.6				1-4	
	Gauge, Oil Pressure	Replace		1.0				1-4	
	Gauge, Water Temp.	Replace		0.6				1-4	
	Gauge, Fuel	Replace		0.6				1-4	
0608	Switch, Light	Replace		0.5				1-4	
	Box, Fuse	Replace		0.6				1-4	
0609	Lights, Headlights & Taillights	Replace		0.4				1-4	
0610	Sending Unit (Fuel, Oil & Temp)	Replace		1.0				1-4	
0611	Horn, Relay & Wiring	Test		0.2				1-4	
		Replace		1.0				1-4	
0612	Battery	Service	0.2						
		Test		0.3				1-4	
		Replace		0.7				1-4	
		DX			1.0			1-11	
07	Transmission								
	Transmission Shafts & Gears	Replace				12.0		1-11	
0708	Torque Converter & Drive Plate	Replace			9.0			1-11	
0710	Transmission Assembly	Service		0.7				1-4	
		Test			1.0			1-11	
		Replace			8.0			1-11	
		Repair				12.0		1-11	
		Overhaul				16.0		1-11	
0713	Transmission Clutch Forward & Reverse	Replace				12.0		1-11	
		Overhaul				14.0		1-11	
0714	Transmission Control Valve	Replace				3.0		1-11	
		Repair				5.5		1-11	
0714	Transmission Shift Levers & Linkage	Adjust		0.5				1-4	
		Replace			1.0			1-4	
0721	Oil Filter. Transmission	Replace		0.4				1-4	
10	Front Axle (Drive)								
1000	Front Axle Assembly	Service		0.3				1-4	
		Replace				4.0		1-11	
		Repair				8.0		1-11	
	Spindle, Axle	Replace			1.0			1-11	
	Axle Shaft	Replace			1.5			1-11	
	Bearings & Seals Axle Shaft	Replace				3.5		1-11	
	Axle Adapter	Replace				6.0		1-11	
	Differential Assembly	Repair				8.5		1-11	
	Ring Gear & Pinion	Replace			20.0			1-11	
	Pinion Seal & Bearings	Replace			8.0			1-11	
11	Rear Axle (Steering)								
1100	Rear Axle Assembly	Service		0.5				1-4	
		Replace			4.0			1-11	
		Repair			5.5			1-11	
		Adjust		0.8					
	Spindle, Right or Left	Service		0.3				1-4	
		Replace			2.0			1-11	
	Axle King Pin & Needle Bearings	Service		0.3				1-4	
		Replace			2.0			1-11	

www.truck-freeworkshop.com/clark/

(1) Group number	(2) Component assembly	(3) Maintenance function	(4) Maintenance level C	O	F	H	D	(5) Tools and equipment	(6) Remarks
	Pivot Arm & Bearings	Service		0.3				1-4	
		Replace			2.0				
	Axle Mounting, Trunnion Bearings & Housing	Service		0.5				1-4	
		Replace			2.5			1-11	
	Tie Rods, Right & Left	Adjust		0.4				1-4	
		Replace			1.5			1-11	
		Service		0.3					
12	Brakes								
1201	Hand Brakes, Lever & Linkage	Adjust		0.6				1-4	
		Service		0.4				1-4	
		Replace			1.5			1-11	
	Parking Brake	Replace			1.5			1-11	
		Repair			2.5			1-11	
1202	Service Brake	Service		2.0				1-4	
		Replace			4.0			1-11	
		Repair			5.0			1-11	
1204	Hydraulic Brake System	Service		0.3				1-4	
	Master Cylinder	Replace		1.5				1-4	
	Wheel Cylinder	Replace			2.0			1-11	
1206	Brake Pedal & Linkage	Replace		1.0				1-4	
	Linkage	Repair		0.8				1-4	
13	Wheels								
1311	Wheel Assembly	Replace		2.0				1-4	
	Bearings & Seals	Replace		2.5				1-4	
1313	Tires, Pneumatic W/Tube	Inspect	0.1						
		Service	0.2						
		Replace		0.5					
		DX			1.0				
14	Steering								
1407	Steering Wheel	Replace		0.5				1-4	
	Steering Column & Shaft	Replace			2.5			1-11	
	Steering Cylinder	Service		0.5				1-4	
		Replace			3.0			1-11	
		Repair			4.5			1-11	
1411	Hoses. Lines & Fittings	Replace			1.0			1-11	
		Repair			1.7			1-11	
	Hydraulic Filter Assembly	Replace		0.3				1-4	
	Hydraulic Filter Element	Replace		0.3				1-4	
1412	Hydraulic Cylinder	Replace		3.0				1-4	
		Repair			4.5			1-11	
1414	Steering Control Valve	Replace			3.5			1-11	
18	Body, Cab, Hood & Hull								
1801	Overhead Guard	Replace		1.5				1-4	
		Repair			1.5			1-12	
	Body Panel & Hoods	Replace		0.5				1-4	
		Repair			1.5			1-12	
1806	Seat Cushions	Adjust							
		Replace		0.5				1-4	
		Repair			0.7			1-11	
24	Hydraulic Lift Compartment								
2401	Hydraulic Pump	Test			0.2			1-11	
		Replace			1.5			1-11	
		Repair				3.0		1-11	
2402	Hydraulic Control Valve	Replace			2.0			1-11	
		Repair			3.0			1-11	
2403	Hydraulic Control Levers & Linkage	Replace		1.0				1-4	
		Repair			2.0			1-11	
2404	Hydraulic Tilt Cylinder	Replace			1.5			1-11	
		Repair			3.0			1-11	

www.truck-freeworkshop.com/clark/

(1) Group number	(2) Component assembly	(3) Maintenance function	(4) Maintenance level C	O	F	H	D	(5) Tools and equipment	(6) Remarks
2405	Lift Cylinder	Replace			3.5			1-11	
		Repair				5.5		1-11	
	Mast&Carriage Assembly	Service		0.3				1-4	
		Adjust		0.4				1-4	
		Replace			3.0			1-12	
		Repair			4.5			1-12	
2406	Hydraulic Lines & Fittings	Replace			2.0			1-11	
2407	Side Shift Cylinder	Replace			1.0			1-11	
		Repair			2.0			1-11	
2408	Oil Reservoir	Service	0.1	0.3				1-4	
		Replace			2.5			1-11	

☆U.S. GOVERNMENT PRINTING OFFICE: 1990 743-024/00181

www.truck-freeworkshop.com/clark/

Section III. TOOL AND TEST EQUIPMENT

REQUIREMENTS

Tool or test equipment reference code	Maintenance category	Nomenclature	National/NATO stock number	Line item number
	UNLESS OTHERWIDE NOTED. ALL MAINTENANCE FUNCTIONS CAN BE ACCOMPLISHED WITH THE THE TOOLS CONTAINED IN THE FOLLOWING COMMON TOOL SETS			
1	0,F,H	Tool Kit, General Mechanic Auto; SC-5180-90-CL-N26	5180-00-177-7033	W33094
2	0,F,H	Shop Equipment, Auto Maint At Repair: Org Maint Common No. 1-Less Power; SC 4910-95-CL-A74	4910-00-754-0654	W32593
3	O,F,H	Shop Equipment, Auto Maint & Repair: Org Maid Supplemental No. 1--Less Power; SC 4910-00-95-CL-A73	4910-00-754-0653	W32867
4	O,F,H	Shop Equipment, Auto Maint & Repair Org Common No. 2--Less Power; SC 4910-95-CL-A72	4910-00-754-0650	W32730
5	F,H	Shop Set, Fuel & Electrical Systems, FM Basic-Less Power; SC 4910-95-CL-A01	4910-00-754-0714	T30414
6	F,H	Shop Set, Auto Maint & Repair, FM Basic-Less Power; SC 4910-95-CL-A31	4910-00-754-0705	T24660
7	F,H	Shop Equipment, Auto Maint & Repair: FM Supplemental No. 1-Less Power; SC 4910-95-CL-A62	4910-00-754-0706	T24519
8.	F,H	Shop Equipment, Welding: FM; SC 3470-90-CL-A08	3470-00-357-7268	T16714
9.	F,H	Tool Kit, Master Mechanics; SC 5180-90-CL-N04	5180-00-699-5273	W45080
10.	F,H	Too1 Kit, Welders; SC 5180-90-CL-N39	5180-00-754-0661	W58075

www.truck-freeworkshop.com/clark/

www.truck-freeworkshop.com/clark/

Section IV. REMARKS

Reference codes	Remarks
NONE	NONE

www.truck-freeworkshop.com/clark/

www.truck-freeworkshop.com/clark/

APPENDIX D

MAINTENANCE EXPENDITURE LIMITS

NSN	Item identification	Production year	Years of life expectancy	Repair limitations	
				50%	30%
3830-01-085-3767	Truck, Lift, Fork, Gasoline Engine Driven, 4,000-lb. Capacity, 144" Lift. MHE 243	1980	11	1987	1991

www.truck-freeworkshop.com/clark/

www.truck-freeworkshop.com/clark/

APPENDIX E

MAINTENANCE AND OPERATING SUPPLY LIST

Nomenclature:	Make:	Model:
Truck. Lift, Fork, 4K. GED, PT 144" Lift	Clark	C500Y45

MFR part No.:	NSN:	Serial No. Range:
	3930-01-085-3767	Y355-1 thru 196-4560

Component Application	MFR part no. or Nat' l Stock No.	Description	Qty Req F/Initial OPN	F/8 HRS OPN	Notes
Engine	9150-00-186-6668	OE/HDO-10 (5 gal)	5 qts		SEE ATTACHED SHEET
	9150-00-189-6728	OE/HDO-10 (55 gal)			
	9150-00-188-9858	OE/HDO-30 (5 gal)			
	9150-00-188-9859	OE/HDO-30 (55 gal,			
Fuel Tank	9130-00-264-6218	Bulk, Regular Grade	5 gal	8 gal	
Radiator	6850-00-243-1992	Water Antifreeze (1 gal)	None		
Hydraulic Brake	9150-00-252-6375	HBA	None		
Differential	9150-01-035-5395	MIL-L-2105C 80W190 (5 gal)	None		
	9150-01-035-5395	MIL-L-2105C 85W/140 (5 gal)	None		
	9150-01-035-5391	MIL-L-2105C 75W (5 gal)	None		
Transmission	*See Engine	OE/HDO-10	None		
Hydraulic System	*See Engine	OE/HDO-10	None		
Lubrication Fittings	9150-00-190-0907	GAA (35 lb. can)	None	As Req	
Electrolyte	6810-00-249-9354	Sulfuric Acid, Electrolyte	None		

www.truck-freeworkshop.com/clark/

Lubricants	Capacity	Expected Temperatures			Intervals
		Above 32 F Above 0 C	+40 F to −10 F +5 C to −23 C	0 F to −65 F −18 C to −50C	
OE/HDO OIL, Engine, Heavy Duty		OE/HDO 10	OE/HDO 10	OE/HDO 10	Intervals given in hours of normal operation.
Oil can points					
Hydraulic reservoir	8gals (30L)				
Engine crankcase (see note 4)	4qts (3.8L)	OE/HDO 30	OE/HDO 20	OE/HDO 20	
Transmission (see note 5)	11qts (10.4L)	OE/HDO 10	OE/HDO 10	OE/HDO 10	
GO-LUBRICATING OIL, Gear		GO 85W/140	GO 80W/90	GO 75W	
Drive axle	5pts (2.3L)				
GOS-LUBRICATING OIL. Gear, Sub-zero		ALL TEMPERATURES			
GAA-GREASE, Automotive & Artillery					
HBA-Hydraulic Fluid					
Brake Master Cylinder	3pts (1.4L)				

NOTES:

1. *For Operation of Equipment in Protected Cold Temperatures Below -10F.* Remove lubricants prescribed in the key for temperatures above - 10F. Relubricate with lubricants specified in the key for temperatures below .- 10F (- 18 C).

2 *Oil Can Points.* Every 50 hours lubricate the accelerator and parking brake linkage, mast interlock, control valve linkage. pins and clevises and all exposed adjusting threads with OE/HDO.

3. *Wheel Bearing and Bull Gears.* Every 500 hours remove wheels, clean and inspect all parts, replace damaged or worn parts, repack bearings, and then reassemble. Fill bull gear spaces to three fourths height of teeth with grease GAA.

4. *Engine Crankcase.* Capacity 5 qts (4.7L) when oil filter in replaced.

5. *Transmission/Axle Adapter.* Capacity 12 qts (11.4L) when filter is replaced.

6. *Lubricants.* The following is a list of lubricants with the Military Symbols and applicable. Specification Numbers: OE/HDOMIL-L-2104C, GO MIL-L-2105C. HBA MIL-H-5606, GAA MIL-G-10924.

www.truck-freeworkshop.com/clark/

APPENDIX F

PREVENTIVE MAINTENANCE CHECKS AND SERVICES

Section I. OPERATOR/CREW PMCS

1. Do your before (B) PREVENTIVE MAINTENANCE just before you operate the vehicle. Pay attention to the CAUTIONS AND WARNINGS.
2. Do your (D) PREVENTIVE MAINTENANCE during operation. (During operation means to monitor the forklift and its related component systems while they are actually being operated).
3. Do your after (A) PREVENTIVE MAINTENANCE right after operating the vehicle. Pay attention to the CAUTIONS and WARNINGS.
4. Do your weekly (W) PREVENTIVE MAINTENANCE weekly.
5. Do your monthly (M) PREVENTIVE MAINTENANCE once a month.
6. If something doesn' t work, troubleshoot it with the instructions in your commercial manual or notify your supervisor.
7. Always do your PREVENTIVE MAINTENANCE in the same order so it gets to be a habit. Once you' ve had some practice, you' ll spot anything wrong in a hurry.
8. If anything looks wrong and you can' t fix it, write it on your DA Form *2404*. If you find something seriously wrong, report it to organizational maintenance RIGHT NOW.
9. When you do your PREVENTIVE MAINTENANCE, take along the tools you will need to make all the checks. Take along a rag, you' ll always need at least one.

WARNING

Dry cleaning solvent, used to clean parts is potentially dangerous to personnel and property. Do not use near open flame or excessive heat. Flash point of this solvent is 138°F.

A-Keep it clean: Dirt, grease, oil, and debris only get in the way and may cover up a serious problem. Clean as you work and as needed. Use dry cleaning solvent (SD-2) on all metal surfaces. Use soap and water when you clean rubber or plastic material.

B--Bolts, nuts and screws: Check them all for ob vious looseness, missing, bent or broken condition. You can' t try them all with a tool, of course, but look for chipped paint, bare metal, or rust around bolt heads. If you find one you think it loose, tighten it, or report it to organizational maintenance if you cannot tighten it.

C-Welds: Look for loose or chipped paint, rust or gaps where parts are welded together. If you find a bad weld, report it to organizational maintenance.

D-Electric wires and connectors: Look for cracked or broken insulation, bare wires, and loose or broken connectors. Tighten loose connectors and make sure the wires are in good shape.

E-Hoses and fluid lines: Look for wear, damage and leaks and make sure clamps and fittings are tight. Wet spots show leaks, of course. But a stain around a fitting or connector can mean a leak. If a leak comes from a loose fitting or connector, tighten it. If something is broken or worn out, report it to organizational maintenance.

10. It is necessary for you to know how fluid leakage affects the status of your vehicle. The following are definitions of the types/classes of leakage you need to know to be able to determine the status of your vehicle. Learn, then be familiar with them and REMEMBER-WHEN IN DOUBT, NOTIFY YOUR SUPERVISOR!

Leakage definitions for crew/operator PMCS

Class I	Seepage of fluid (as indicated by wetness or discoloration) not great enough to form drops.
Class II	Leakage of fluid great enough to form drops but not enough to cause drops to drip from item being checked/in-*spected*.
Class III	Leakage of fluid great enough to form drops that fall from the item being checked/inspected.

CAUTION

Equipment operation is allowable with minor leakages (class I OR II). of course, consideration must be given to the fluid capacity in the item/system being checked/inspected. When in doubt, notify your supervisor.

When operating with class I OR II leaks, continue to check fluid levels as required in your PMCS.

Class I I I leaks should be reported to your supervisor.

www.truck-freeworkshop.com/clark/

www.truck-freeworkshop.com/clark/

Operator Crew Preventive Maintenance Checks and Services
B-Before D-During A-After W-Weekly M-Monthly

Item No.	Interval B	Interval D	Interval A	Interval W	Interval D	*Item to be Inspected* Procedure: Check for and have repaired, filled or adjusted as needed	Equipment is not ready/ available if:
						IMPORTANT: Perform Weekly as well as before operations PMCS if: 1. You are the assigned operator and have not operated the item since the last weekly. 2. You are operating the item for the first time.	
1						EXTERIOR OF VEHICLE	
	•					*a.* Check for leaks or appearance of leaks.	Class I I I leaks or any fuel leaks.
	•					*b.* Visually check overhead guard for obvious cracks in web.	Obvious cracks in welds.
2	•					HYDRAULIC RESERVOIR Check reservoir oil level, add oil if necessary to bring level up to full mark on dipstick, when mast is lowered and all cylinders retracted.	
3	•					TIRES Check tires for wear and correct pressure (100 psi).	Tire is flat, unserviceable.
4				•		RADIATOR Check radiator and fill if necessary to marker tab (add 50/50 mixture of water and antifreeze) (reference TB 750-651).	
5	•					ENGINE OIL LEVEL Check oil dipstick, add oil, if needed, to raise level to full mark.	
6	•					AIR CLEANER Check element to insure it is clean, if not, have organizational replace it.	Element is missing or damaged.
7		•				HORN Check horn by pressing button.	
8		•				BRAKES Check that brakes stop truck.	Service brake will not stop truck.
9		•				STEERING Check that truck steers free and easy.	Steering sticks or truck is hard to steer.
10		•				ACCELERATOR Check that the accelerator goes smoothly.	Pedal sticks.
11		•				LIFT LEVER Check that lifting and lowering is smooth.	Lifting or lowering jerky or uncontrollable.
12		•				TILT LEVER Check that forward and backward tilt is smooth and immediate.	Tilt does not operate.
13		•				SIDE SHIFT LEVER Check that shift operates.	
14		•				LIGHTS Check that lights are working.	
15						INSTRUMENT PANEL READINGS	
		•				*a.* Oil pressure gauge-20 to 60 psi at normal operating speeds.	Gauge registers less than 5 psi.
		•				*b.* Ammeter-registers slight (+) charge at above idle speed.	Continuous high rate of charge or discharge *or* erratic.
		•				c. Water temperature-170°-210° after 10 minutes of operation.	Registers in red portion of gauge.

www.truck-freeworkshop.com/clark/

Operator/Crew Preventive Maintenance Checks and Services-Continued
B-Before D-During A-After W-Weekly M-Monthly

Item No.	Interval					Item to be inspected Procedure: Check for and have repaired, fiied or Adjusted as needed	Equipment is not ready/ available if:
	B	D	A	W	M		
16				•		BATTERY Inspect for electrolyte level, add distilled water if required (reference TM 9-6140-200-14).	Battery cracked or discharged.
17				•		RADIATOR ENGINE COMPARTMENT Inspect/clean air passages.	

www.truck-freeworkshop.com/clark/

Section II. ORGANIZATIONAL PMCS

1. Do your (Q) PREVENTIVE MAINTENANCE once each 3 months.
2. Do your (S) PREVENTIVE MAINTENANCE once each 6 months.
3. Do your (A) PREVENTIVE MAINTENANCE once each year.
4. Do your (B) PREVENTIVE MAINTENANCE once each two years.
5. Do your (H) PREVENTIVE MAINTENANCE at the hour interval listed.
6. Do your (MI) PREVENTIVE MAINTENANCE when the mileage of the vehicle reaches the amount listed.
7. If something doesn't work, troubleshoot it with the instructions in your commercial manual or notify your supervisor.
8. Always do your PREVENTIVE MAINTENANCE in the same order so it gets to be a habit. Once you've had some practice, you'll spot anything wrong in a hurry.
9. If anything looks wrong and you can't fix it, write it on your DA Form 2404. If you find something seriously wrong, report it to direct support maintenance RIGHT NOW.
10. When you do your PREVENTIVE MAINTENANCE, take along the tools you will need to make all the checks. Take along a rag, you'll always need at least one.

WARNING

Dry cleaning solvent, used to clean parts is potentially dangerous to personnel and property. Do not use near open flame or excessive heat. Flash point of this solvent is 138°F.

A-Keep it clean: Dirt, grease, oil, and debris only get in the way and may cover up a serious problem. Clean as you work and as needed. Use dry cleaning solvent (SD-2) on all metal surfaces. Use soap and water when you clean rubber or plastic material.

B-Bolts, nuts, and screws: Check them all for oh vious looseness, missing, bent or broken condition. You can't try them all with a tool, of course, but look for chipped paint, bare metal, or rust around bold heads. If you find one you think is loose, tighten it, or report it to direct support maintenance if you can not tighten it.

C-Welds: Look for loose or chipped paint, rust or gaps where parts are welded together. If you find a bad weld, report it to direct support maintenance.

D-Electric wires and connectors: Look for cracked or broken insulation, bare wire, and loose or broken connectors. Tighten loose connectors and make sure the wires are in good shape.

E-Hoses and fluid lines: Look for wear, damage and leaks and make sure clamps and fittings are tight. Wet spots show leaks, of course, but a stain around a fitting or connector can mean a leak. If a leak comes from a loose fitting or connector, tighten it. If something is broken or worn out, report it to direct support maintenance.

11. It is necessary for you to know how fluid leakage affects the status of your vehicle. The following are definitions of the types/classes of leakage you need to know to be able to determine the status of your vehicle. Learn, then be familiar with them and REMEMBER-WHEN IN DOUBT, NOTIFY YOUR SUPERVISOR!

Leakage definitions for organizational PMCS

Class I	Seepage of fluid (as indicated by wetness or discoloration) not great enough to form drops.
class II	Leakage of fluid great enough to form drops but not enough to cause drops to drip from item being checked/inspected.
Class III	Leakage of fluid great to form drops that fall from the item being checked/inspected.

CAUTION

Equipment operation is allowable with minor leakages (class I or II). Of course, consideration must be given to the fluid capacity in the item/system being checked/inspected. When in doubt, notify your supervisor.

When operating with class I or II leaks, continue to check fluid levels as required in your PMCS.

Class III leaks should be reported you your supervisor or direct support.

www.truck-freeworkshop.com/clark/

Organizational Preventive Maintenance Checks and Services

Q-Quarterly *S-Semiannually* A-Annually B-Biennially H-Hours *M-Miles*

Item No.	Interval						Item to be Inspected Procedure: Check for and have repaired, filled, or adjusted as needed
							NOTE Perform operator/crew PMCS prior to or in conjunction with organizational PMCS *if:* *a.* There is a delay between the daily operation of the equipment and the organizational PMCS. *b.* Regular operator is not assisting/participating.
1					100		MAST ASSEMBLY *a.* Lubricate sliding and roller contact surfaces. *b.* Clean and inspect lift chains for bent or cracked links. Check adjustment and lubricate.
2					100		BATTERY Inspect/service electrolyte level and charge as required (specific gravity above 1.250 with electrolyte at 80°F). Check that cables are secure and clean (reference TM 9-6140-200-14).
3					100		ENGINE *a.* Drain engine oil, replace oil filter and refii with five quarts (app. E). *b.* Check fan belt tension-1/2" to 3/4" deflection at point halfway between fan and alternator pulleys with about 10 lbs. applied force.
4					100		TRANSMISSION Check fluid level in transmission on dipstick located under the floor plate. Engine must be running at idle with transmission in neutral. Add transmission fluid to bring level up to full mark on dipstick. Do not overfill.
5					100		DRIVE AXLE Check and clean breather located *on* housing.
6					200		TRANSMISSION OIL FILTER Replace. Check for leaks.
7					200		HYDRAULIC OIL RESERVOIR Clean sump filler cap, replace if damaged.
8					200		BRAKE MASTER CYLINDER Check fluid level and add if necessary to bring level within 3/8" of top edge.
9					200		MAST ASSEMBLY *a.* Check for side play of fork carriage and check chain adjustment if it is not level. *b.* Remove lift chains, clean and inspect for wear and broken or cracked links. Repair, install. adjust, and lubricate.
10					400		FUEL FILTER Replace filter.
11					400		ENGINE *a.* Replace distributor points (set contact point gap at 0.021"). *b.* RepIace spark plugs (set plug gap at 0.025"). *c.* Remove and clean/replace PCV valve. *d.* Engine compression at each tuneup should not vary by more than 15 psi amongst the cylinders (approximately 140 psi).
12					500		HOSES, TUBES AND FITTINGS Inspect, replace or have replaced, if necessary, correct any leaks that are evident.
13					500		WHEELS *a.* Clean and lubricate steer wheel bearings (repack when brake shoes are replaced). *b.* Inspect and replace as necessary the brake shoes, turn cylinder if required (not to exceed 0.100).
14							ELECTRICAL SYSTEM Check tightness of terminals, wires, cables, and electrical components.
15					500		BRAKE PEDAL Adjust, pedal should not reach floorboard when depressed.
16					500		TRANSMISSION Drain fluid and refill.
17					500		CONTROL VALVE Check linkage.

www.truck-freeworkshop.com/clark/

Organizational *Preventive* Maintenance *Checks and Services-Continued*

Q-Quarterly S-Semiannually A- Annually B-Biennially H-Hours M-Miles

Item No.	Interval						Item to be Inspected Procedure: Check for and have repaired, filled, or adjusted as needed
	Q	S	A	B	H	MI	
18					500		PARKING BRAKE Check and adjust as necessary.
19					1000		HYDRAULIC OIL FILTER Replace. Check for leaks.
20					1000		HYDRAULIC OIL RESERVOIR Drain hydraulic oil. flush and refill.
21					1000		COOLING SYSTEM Drain fluid, flush and refill.

www.truck-freeworkshop.com/clark/

www.truck-freeworkshop.com/clark/

APPENDIX G

PRESCRIBED LOAD LIST/AUTHORIZED STOCKAGE LIST

Item: Truck, Forklift, 4,000 Lb., GED, PT
Contract No.: DAAE07-79-C-5856
Contractor: Clark Equipment Company, Battle Creek. MI
Quantity: 196 each
Previous Procurements:

Contractor	Quantity	Year
Baker	77	FY64
Towmotor	626	FY64
Towmotor	99	FY65
Baker	136	TY70
Baker	437	FY71
Towmotor	40	FY72
Allis Chalmers	180	FY76

MGR	NSN	Part number	FSCM	Part description	U/M	PLL 1-5	ASL 1-5	unit Price
G O	6240-00-836-2079	54-0328-00	78422	Light, Sealed Beam	Ea	1	2	1.51
		877752	12603					
S9G	6240-00-155-7900	1176	24446	Bulb, Stop Light	Ea	1	2	.26
		880690	12603					
S9C	2920-00-018-5500	UD-16	11583					
		18-Z8	19728	Spark Plug	Ea	4	16	.82
		890273	12603					
S9C	2520-00-217-5492	1810437	12603	Cartridge, Filter Hyd	Ea	1	1	3.75
S9C	3030-01-997-6709	1317741	12603	Belt, Fan	Ea	1	2	7.20
S9C	2940-00-852-3743	150933	73370	Element, Air	Ea	1	5	3.46
		CA70PL	73370	Cleaner				
		668788	12603					
S9C	2920-01-097-0423	1811063	12603	Kit, Eng Tune Up	Ea	2	5	6.45
S9C	2920-01-049-9513	lBK-1009A	19728	Cap, Distributor	Ea	0	2	12.64
		998602	12603					
S9C	2940-00-892-6214	235114	73370	Filter, Eng Oil	Ea	3	6	1.43
		PB50	73370					
		990936	12603					
S9C	2940-00-986-0276	PH3381	73370	Filter, Transmission	Ea	2	6	.95
		PHBA	73370					
		990937	12603					
S9C	5920-00-280-4007	307014	75915	Fuse	Ea	8	24	.04
		661556	12603					

NOTE
The above NSNs are all SMR coded "PAOZZ".

www.truck-freeworkshop.com/clark/

APPENDIX H

DISTRIBUTION CODES

1. Card Columns 55 and 56

Leave blank.

2. Card Column

CONUS customers will use "F" in column 54. OCONUS customers will use the appropriate code below (extracted from app. P, para P-3, AR 725-50, 29 Aug 75, including all changes).

Code	*Activity*
B	US Army Security Assistance Center New Cumberland Army Depot New Cumberland, PA 17070 (For transceiver and mail)
D	US Army Electronics Materiel Readiness Activity Vint Hill Farms Station Warrenton. VA 22186
E	US Army Troop Support and Aviation Materiel Readiness Command 4300 Goodfellow Blvd St. Louis, MO 63120
F	US Army Logistics Control Activity Presidio of San Francisco, CA 94129
H	US Army Support Command, Hawaii (USASCH) For Shafter, HI 96858
I	US Army Troop Support and Aviation Materiel Readiness Command 4396 Goodfellow Blvd St. Louis, MO 63120
J	US Army Garrison-Honshu DIO, Installation Supply Activity Sagami, Japan APO San Francisco 96343
K	US Army Inventory Management Center Camp Henry, Taegu, Korea APO San Francisco 96212
L	US Army Missile Materiel Readiness Command ATTN: DRSMI-SSP Huntsville, AL 35898
M	US Army Troop Support Agency European Field Office Zweibruecken. Germany APO New York 09502
P	US Army Communications and Electronics Materiel Readiness Command ATTN: Dir of Materiel Management For Monmouth, NJ 07703
Q	Theater Army Materiel Management Center (200th) ATTN: AEAGD-MMC-IS Zweibruecken, Germany APO New York 09052
S	US Army Armament Materiel Readiness Command Rock Island, IL 61202
T	2d Support Center (MMC) Fort Bragg, NC 28307
U	US Army Medical Materiel Agency Frederick, MD 21701
V	9th Logistics Center (MM)SUPCOM Bldg. 3004, Panzer Kaserne D-6750 Kaiser slautern, Germany APO New York 09325
W	US Army Materiel Management Center 19th Service Co. 3d Support Command Frankfurt, Germany APO New York 09757
X	US Army 800th Material Management Center 2d Support Command (Corps) Nellingen, Germany APO New York 09160
Y	US Army Tank-Automotive Materiel Reediness Command Warren, MI 48090
Z	Director for Inventory Control US Army Medical Materiel Center, Europe Pirmasens, Germany APO New York 09133

www.truck-freeworkshop.com/clark/

www.truck-freeworkshop.com/clark/

APPENDIX I

FLOW OF REQUISITIONS AND MATERIEL CHE PARTS (NSN)

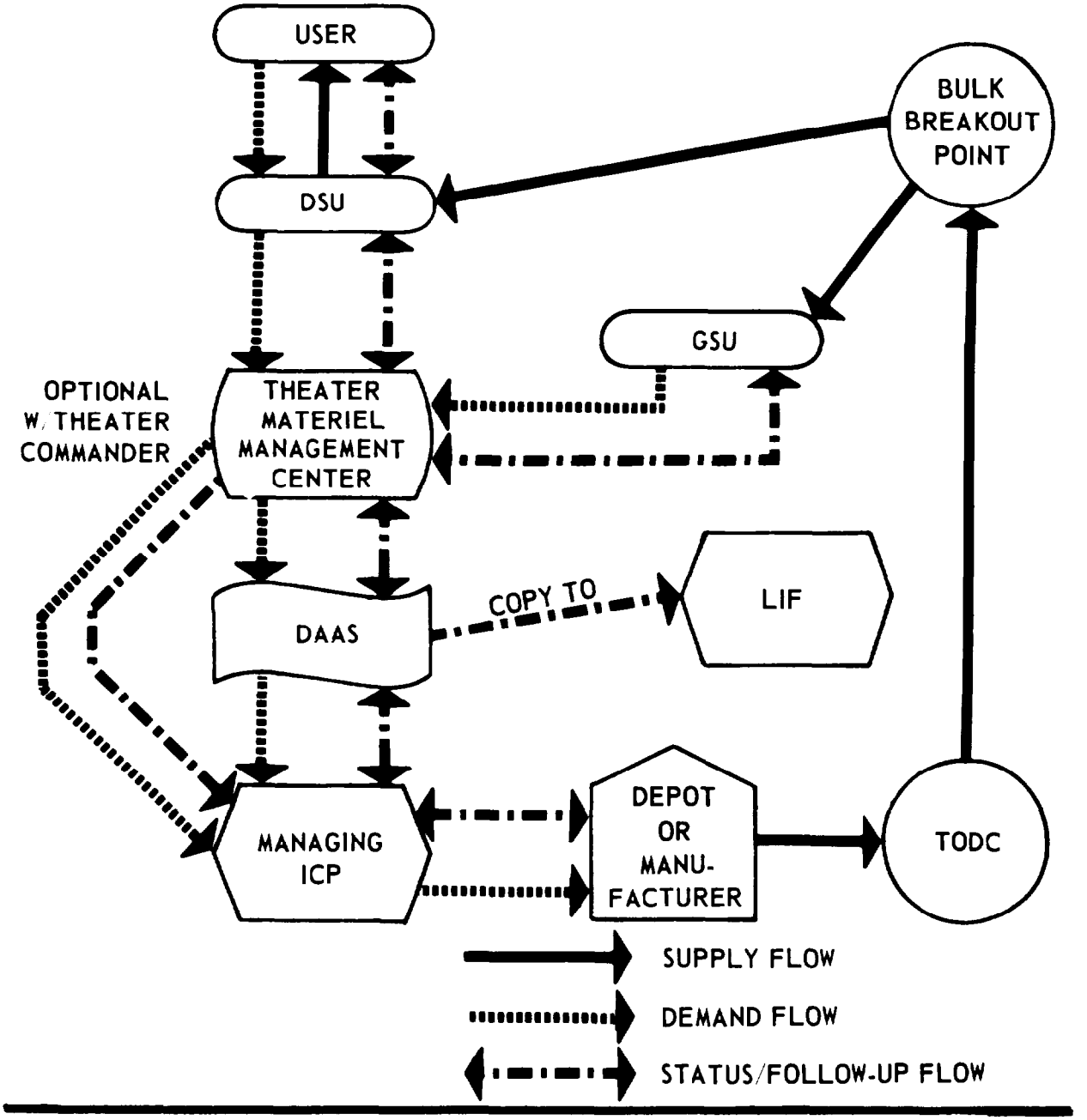

TA 126332

www.truck-freeworkshop.com/clark/

www.truck-freeworkshop.com/clark/

APPENDIX J

FLOW OF REQUISITIONS AND MATERIEL CHE PARTS (NON-NSN)

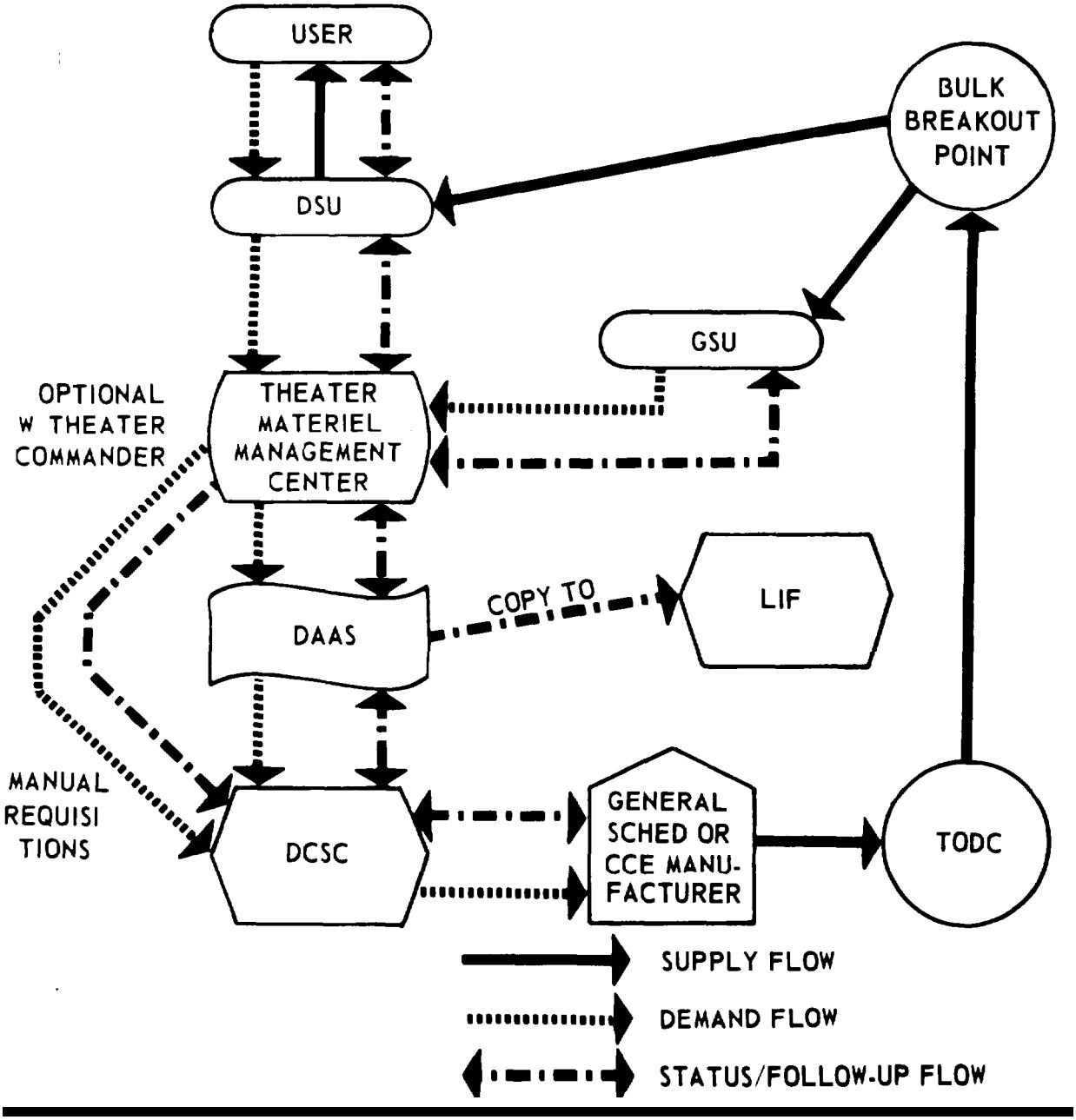

TA 126333

www.truck-freeworkshop.com/clark/

www.truck-freeworkshop.com/clark/

APPENDIX K

SAMPLE FORMAT - MILSTRIP REQUISITION FOR CHE (NSN)

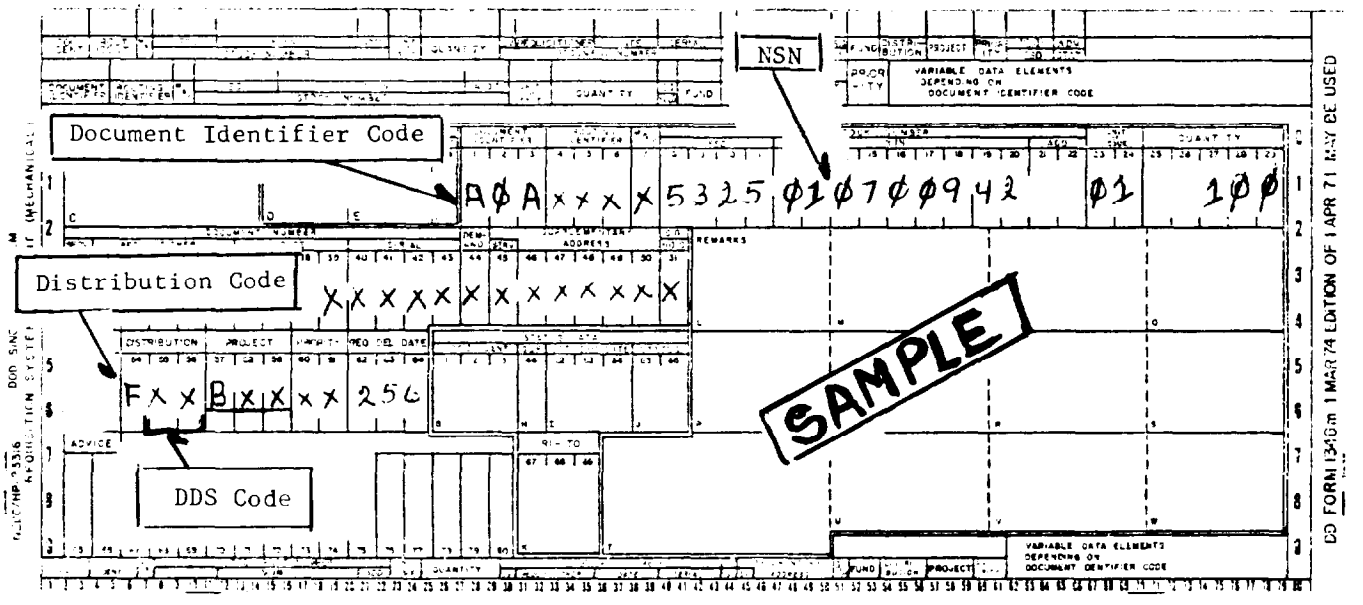

CARD COLUMN	DESCRIPTION OF DATA	MANDATORY ENTRY FOR CCE
1-3	Document Identifier Code	A0A - CONUS A01 - Overseas
4-6	Routing Identifier Code	
7	Media/Status Code	
8-22	NSN	
23-24	Unit of Issue	
25-29	Quantity	
30-43	Document Number	
44	Demand Code	
45-50	Supplementary Address	
51	Signal Code	
52-53	Fund Code	
54-56	Distribution Code CC-54	**"F" for CONUS; see AR 725-50 for OCONUS**
	CC-55-56	**Weapon System Code (DSS) Code**
57-59	Project Code	
60-61	Priority Code	
62-64	Required Delivery Date	
65-66	Advice Code	

TA 126334

www.truck-freeworkshop.com/clark/

Card Column	Description of Data	Mandatory Entry , CHE/MHE
67-69	Blank	
70	Identification Code Applicable to Entry in cc 71-80 A - Technical Order or Technical Manual B - End Item Identification C - Noun Description D - Drawing or Specification No.	
71-80	Reference Identification	Identification of Reference Specified in cc 70

www.truck-freeworkshop.com/clark/

SAMPLE FORMAT - MILSTRIP REQUISITION FOR CHE (NON-NSN)

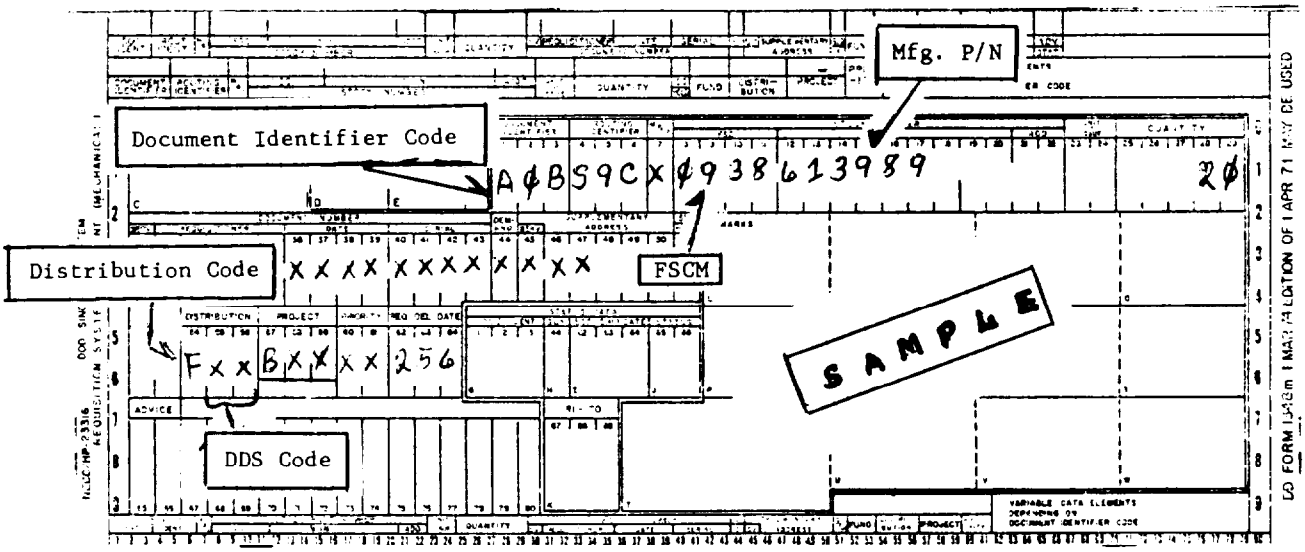

CARD COLUMN	DESCRIPTION OF DATA	MANDATORYENTRY FOR CCE
1-3	Document Identifier Code	A0B - CONUS A02 - Overseas
4-6	Routing Identifier Code	Always S9C
7	Media/Status Code	
8-22	FSCM and Part Number	
23-24	Unit of Issue	
25-29	Quantity	
30-43	Document Number	
44	Demand Code	
45-50	Supplementary Address	
51	Signal Code	
52-53	Fund Code	
54-56	Distribution Code CC-54	"F" for CONUS; see AR 725-50 for OCONUS
	CC-55-56	Weapon System Code
57-59	Project Code	CCE (DSS) Code
60-61	Priority Code	
62-64	Required Delivery Date	
65-66	Advice Code	

TA 1126335

www.truck-freeworkshop.com/clark/

Card Column	Description of Data	Mandatory Entry, CHE/MHE
67-69	Blank	
70	Identification Code Applicable to Entry in cc 71-80 A - Technical Order or Technical Manual B - End Item Identification C - Noun Description D - Drawing or Specification No.	
71-80	Reference Identification	Identification of Reference Specified in cc 70

www.truck-freeworkshop.com/clark/

SAMPLE FORMAT - MILSTRIP REQUISITION FOR MHE/CCE (NON-NSN) (MANUAL)

Document Identifier Code

DDS Code

Distribution Code

FSCM

Mfg. P/N

DOCUMENT IDENTIFIER	ROUTING IDENTIFIER	M&S	MANUFACTURER'S CODE AND PART NUMBER (FSCM / PART NUMBER)	UNIT OF ISSUE	QUANTITY	DOCUMENT NUMBER (SERV / REQUISITIONER / DATE / SERIAL)
A0E	S9C			01	01	XXXXXXXXXXXXXXX

DISTRIBUTION CODE	PROJECT CODE	PRIORITY	REQUIRED DELIVERY DATE	ADVICE CODE	BLANK	REJECT CODE (FOR USE BY SUPPLY SOURCE ONLY)
FBHBGW	XX	357	X	X		

FICATION DATA

1. MANUFACTURER'S CODE & PART NO. (Card Columns 8 thru 22): 1108 956518

2. MANUFACTURER'S NAME: Caterpillar Tractor Co.

3. MANUFACTURER'S CATALOG IDENTIFICATION AND DATE: Form UGE08905 Sept 1974

4. TECHNICAL ORDER NUMBER:

5. TECHNICAL MANUAL NUMBER: TM 5-2410-234-24P

NAME OF ITEM REQUESTED: ssembly

7. DESCRIPTION OF ITEM REQUESTE: Gauge Assy p/o group gauge

7a. COLOR: N/A

7b. SIZE: N/A

8. END ITEM APPLICA OF SUPPLY

8a. MAKE: Caterpillar

8b. MODEL NUMBER: D8K

8c. SERIES: 8S-8

8d. SERIAL NUMBER: 1752

9. REQUISITIONER (Clear Text Name and Address)

10. REMARKS

SAMPLE

FOLD LINE

DD FORM 1 APR 77 1348-6 EDITION OF 1 MAR 74 MAY BE USED UNTIL EXHAUSTED

NON-NSN REQUISITION (MANUAL)

TA 126336

www.truck-freeworkshop.com/clark/

INSTRUCTIONS

This form will only be used in those cases where the manufacturer's code and part number exceed the spaces allocated in card columns 8 - 22 of the requisition.

CARD COLUMN	DESCRIPTION OF DATA	MANDATORY ENTRY FOR CHE/MHE
1-3	Document Identifier Code	A0E - CONUS A05 - OVERSEAS
4-6	Routing Identifier Code	Always S9C
7	Media Status Code	
8-22	FSCM and Part Number	Leave Blank Enter in Block 1 Under Identification Data
23-24	Unit of Issue	
25-29	Quantity	
30-43	Document Number	
44	Demand Code	
45-50	Supplementary Address	
51	Siqnal Code	
52-53	Fund Code	
54-56	Distribution Code cc 54	"F" for CONUS. (See AR 725-50 for OVERSEAS.
	CC-55-56-	Leave Blank
57-59	Project Code	CONUS - BGX OCONUS - JZM
60-61	Priority Code	
62-64	Required Delivery Date	
65-66	Advice Code	
67-80		Blank

IDENTIFICATION DATA - Lower half of DD Form 1348-6, complete blocks 1 thru 9.

www.truck-freeworkshop.com/clark/

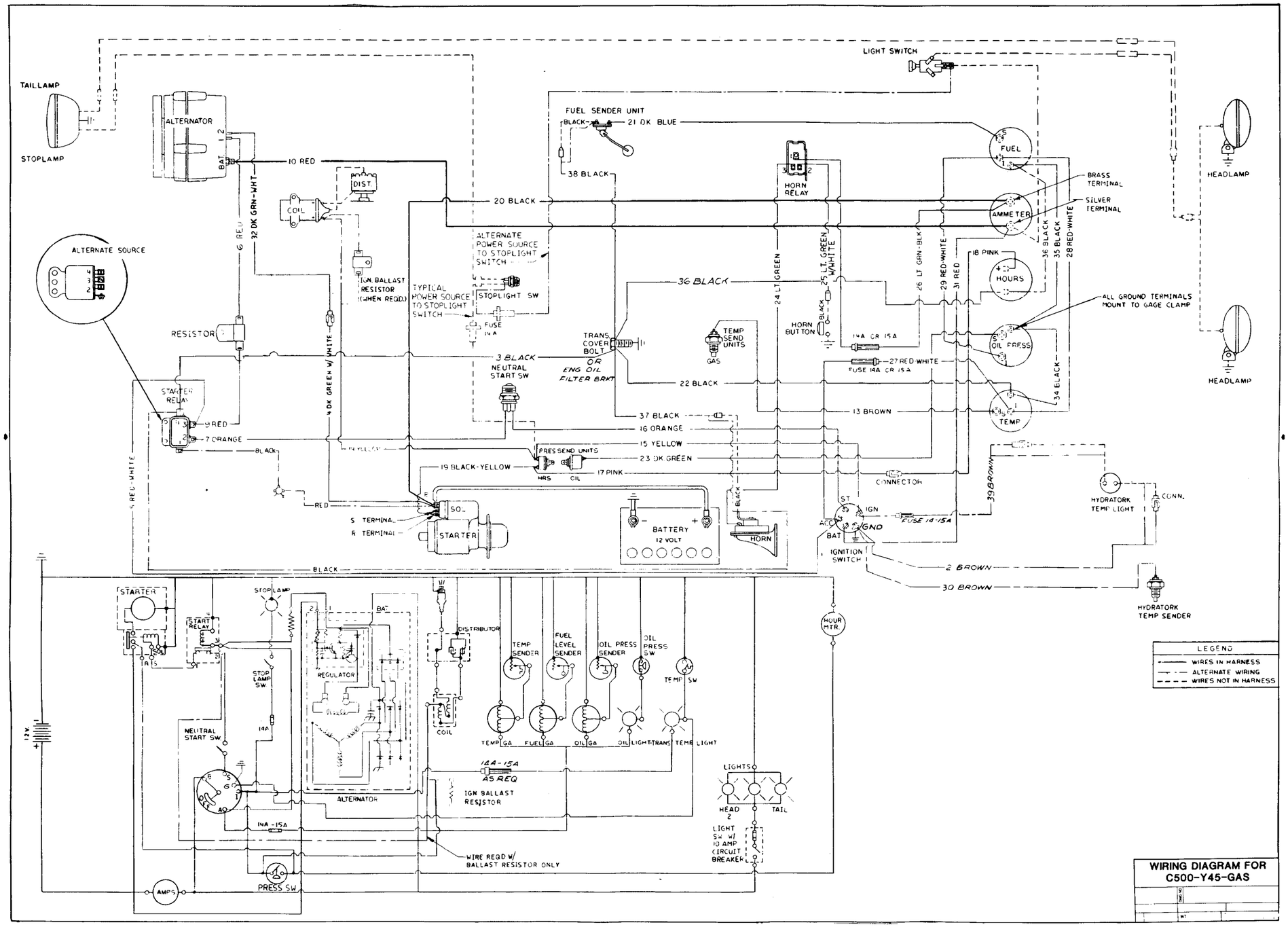

FO-1. Wiring diagram.

www.truck-freeworkshop.com/clark/

By Order of the Secretary of the Army:

E. C. MEYER
General, United States Army
Chief of Staff

Official :

ROBERT M. JOYCE
Brigadier General, United States Army
The Adjutant General

Distribution:
To be distributed in accordance with DA Form 12-25A, direct support and general support maintenance requirements for truck, forklift.

* U.S. GOVERNMENT PRINTING OFFICE: 1981-750-002/1201

www.truck-freeworkshop.com/clark/

www.truck-freeworkshop.com/clark/

RECOMMENDED CHANGES TO EQUIPMENT TECHNICAL PUBLICATIONS

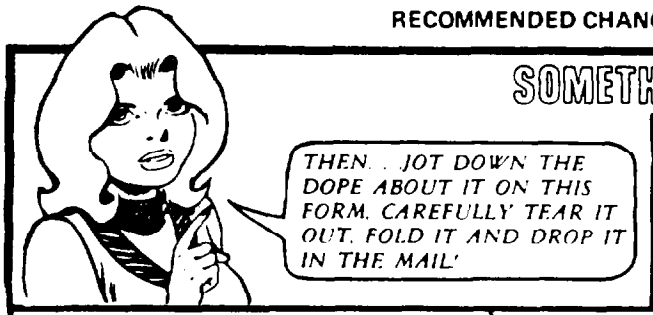

SOMETHING WRONG WITH THIS PUBLICATION?

FROM (PRINT YOUR UNIT'S COMPLETE ADDRESS)
Your mailing address

DATE SENT
Date you fill out this form

PUBLICATION NUMBER	PUBLICATION DATE	PUBLICATION TITLE
TM 10-XXXX-XXX-XX	Date of Pub	TITLE OF PUB

BE EXACT PIN-POINT WHERE IT IS				IN THIS SPACE TELL WHAT IS WRONG AND WHAT SHOULD BE DONE ABOUT IT:
PAGE NO	PARA-GRAPH	FIGURE NO	TABLE NO	
8		2		Item 10. Change illustration. Reason: Ground wire not shown.
10			5	Item 3. The NSN and P/N are not listed on the AMDF nor the MCRL. Request correct NSN and P/N be furnished.
12	c(10)			In line 2 change "7693462" to 7694362. Reason: Typographical error.
14	d			Subparagraphs (9) and (10) should be reversed. Reason: Wrong sequence of operations.

SAMPLE

PRINTED NAME, GRADE OR TITLE, AND TELEPHONE NUMBER
JOHN SMITH, CPT, AUTOVON 123-4554

SIGN HERE
John Smith

DA FORM 1 JUL 79 2028-2

PREVIOUS EDITIONS ARE OBSOLETE.

P.S.--IF YOUR OUTFIT WANTS TO KNOW ABOUT YOUR RECOMMENDATION MAKE A CARBON COPY OF THIS AND GIVE IT TO YOUR HEADQUARTERS

www.truck-freeworkshop.com/clark/

REVERSE OF DA FORM 2028-2

FILL IN YOUR UNIT'S ADDRESS

FOLD BACK

DEPARTMENT OF THE ARMY

OFFICIAL BUSINESS
PENALTY FOR PRIVATE USE $300

POSTAGE AND FEES PAID
DEPARTMENT OF THE ARMY
DOD 314

U.S. MAIL

TEAR ALONG PERFORATED LINE

Commander
US Army Tank-Automotive Command
ATTN: DRSTA-MB
Warren, MI 48090

www.truck-freeworkshop.com/clark/

RECOMMENDED CHANGES TO EQUIPMENT TECHNICAL PUBLICATIONS

SOMETHING WRONG WITH THIS PUBLICATION?

FROM: (PRINT YOUR UNIT'S COMPLETE ADDRESS)

DATE SENT

PUBLICATION NUMBER	PUBLICATION DATE	PUBLICATION TITLE
TM 10-3930-647-14&P	30 Oct 1981	TRUCK, FORKLIFT, 4000-LB

BE EXACT PIN-POINT WHERE IT IS

PAGE NO	PARA-GRAPH	FIGURE NO	TABLE NO

IN THIS SPACE TELL WHAT IS WRONG AND WHAT SHOULD BE DONE ABOUT IT:

PRINTED NAME, GRADE OR TITLE, AND TELEPHONE NUMBER

SIGN HERE

DA FORM 1 JUL 79 2028-2

PREVIOUS EDITIONS ARE OBSOLETE.

P.S.--IF YOUR OUTFIT WANTS TO KNOW ABOUT YOUR RECOMMENDATION MAKE A CARBON COPY OF THIS AND GIVE IT TO YOUR HEADQUARTERS

www.truck-freeworkshop.com/clark/

REVERSE OF DA FORM 2028-2

FILL IN YOUR UNIT'S ADDRESS

FOLD BACK

DEPARTMENT OF THE ARMY

OFFICIAL BUSINESS
PENALTY FOR PRIVATE USE $300

POSTAGE AND FEES PAID
DEPARTMENT OF THE ARMY
DOD 314

U.S. MAIL

TEAR ALONG PERFORATED LINE

Commander
US Army Tank-Automotive Command
ATTN: DRSTA-MB
Warren, MI 48090

www.truck-freeworkshop.com/clark/

RECOMMENDED CHANGES TO EQUIPMENT TECHNICAL PUBLICATIONS

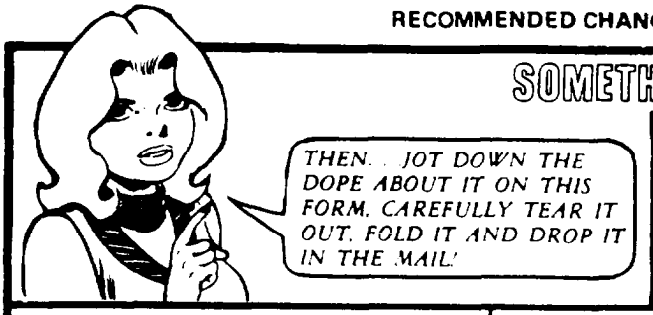

SOMETHING WRONG WITH THIS PUBLICATION?

FROM (PRINT YOUR UNIT'S COMPLETE ADDRESS)

DATE SENT

PUBLICATION NUMBER	PUBLICATION DATE	PUBLICATION TITLE
TM 10-3930-647-14&P	30 Oct 1981	TRUCK, FORKLIFT, 4000-LB

BE EXACT PIN-POINT WHERE IT IS

PAGE NO	PARA-GRAPH	FIGURE NO	TABLE NO

IN THIS SPACE TELL WHAT IS WRONG AND WHAT SHOULD BE DONE ABOUT IT:

PRINTED NAME, GRADE OR TITLE, AND TELEPHONE NUMBER

SIGN HERE

DA FORM 1 JUL 79 2028-2

PREVIOUS EDITIONS ARE OBSOLETE.

P.S.--IF YOUR OUTFIT WANTS TO KNOW ABOUT YOUR RECOMMENDATION MAKE A CARBON COPY OF THIS AND GIVE IT TO YOUR HEADQUARTERS

www.truck-freeworkshop.com/clark/

REVERSE OF DA FORM 2028-2

FILL IN YOUR UNIT'S ADDRESS

FOLD BACK

DEPARTMENT OF THE ARMY

OFFICIAL BUSINESS
PENALTY FOR PRIVATE USE $300

POSTAGE AND FEES PAID
DEPARTMENT OF THE ARMY
DOD 314

U.S. MAIL

TEAR ALONG PERFORATED LINE

Commander
US Army Tank-Automotive Command
ATTN: DRSTA-MB
Warren, MI 48090

www.truck-freeworkshop.com/clark/

RECOMMENDED CHANGES TO EQUIPMENT TECHNICAL PUBLICATIONS

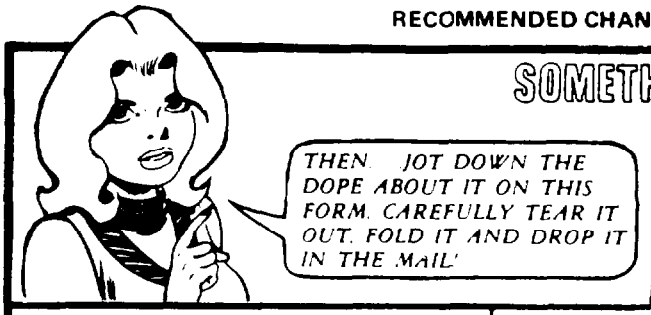

SOMETHING WRONG WITH THIS PUBLICATION?

FROM: (PRINT YOUR UNIT'S COMPLETE ADDRESS)

DATE SENT

PUBLICATION NUMBER	PUBLICATION DATE	PUBLICATION TITLE
TM 10-3930-647-14&P	30 Oct 1981	TRUCK, FORKLIFT, 4000-LB

BE EXACT PIN-POINT WHERE IT IS

PAGE NO	PARA-GRAPH	FIGURE NO	TABLE NO

IN THIS SPACE TELL WHAT IS WRONG AND WHAT SHOULD BE DONE ABOUT IT:

PRINTED NAME, GRADE OR TITLE, AND TELEPHONE NUMBER

SIGN HERE

DA FORM 1 JUL 79 2028-2

PREVIOUS EDITIONS ARE OBSOLETE.

P.S.--IF YOUR OUTFIT WANTS TO KNOW ABOUT YOUR RECOMMENDATION MAKE A CARBON COPY OF THIS AND GIVE IT TO YOUR HEADQUARTERS

www.truck-freeworkshop.com/clark/

REVERSE OF DA FORM 2028-2

FILL IN YOUR UNIT'S ADDRESS

FOLD BACK

DEPARTMENT OF THE ARMY

OFFICIAL BUSINESS
PENALTY FOR PRIVATE USE $300

POSTAGE AND FEES PAID
DEPARTMENT OF THE ARMY
DOD 314

U.S. MAIL

Commander
US Army Tank-Automotive Command
ATTN: DRSTA-MB
Warren, MI 48090

TEAR ALONG PERFORATED LINE

www.truck-freeworkshop.com/clark/

www.truck-freeworkshop.com/clark/

www.truck-freeworkshop.com/clark/

THE METRIC SYSTEM AND EQUIVALENTS

LINEAR MEASURE

1 Centimeter = 10 Millimeters = 0.01 Meters = 0.3937 Inches
1 Meter = 100 Centimeters = 1000 Millimeters = 39.37 Inches
1 Kilometer = 1000 Meters = 0.621 Miles

WEIGHTS

1 Gram = 0.001 Kilograms = 1000 Milligrams = 0.035 Ounces
1 Kilogram = 1000 Grams = 2.2 Lb
1 Metric Ton = 1000 Kilograms = 1 Megagram = 1.1 Short Tons

LIQUID MEASURE

1 Milliliter = 0.001 Liters = 0.0338 Fluid Ounces
1 Liter = 1000 Milliliters = 33.82 Fluid Ounces

SQUARE MEASURE

1 Sq Centimeter = 100 Sq Millimeters = 0.155 Sq Inches
1 Sq Meter = 10,000 Sq Centimeters = 10.76 Sq Feet
1 Sq Kilometer = 1,000,000 Sq Meters = 0.386 Sq Miles

CUBIC MEASURE

1 Cu Centimeter = 1000 Cu Millimeters = 0.06 Cu Inches
1 Cu Meter = 1,000,000 Cu Centimeters = 35.31 Cu Feet

TEMPERATURE

5/9 (^{0}F − 32) = ^{0}C
212^0 Fahrenheit is equivalent to 100^0 Celsius
90^0 Fahrenheit is equivalent to 32.2^0 Celsius
32^0 Fahrenheit is equivalent to 0^0 Celsius
9/5 C^0 + 32 = F^0

APPROXIMATE CONVERSION FACTORS

TO CHANGE	TO	MULTIPLY BY
Inches	Centimeters	2.540
Feet	Meters	0.305
Yards	Meters	0.914
Miles	Kilometers	1.609
Square Inches	Square Centimeters	6.451
Square Feet	Square Meters	0.093
Square Yards	Square Meters	0.836
Square Miles	Square Kilometers	2.590
Acres	Square Hectometers	0.405
Cubic Feet	Cubic Meters	0.028
Cubic Yards	Cubic Meters	0.765
Fluid Ounces	Milliliters	29.573
Pints	Liters	0.473
Quarts	Liters	0.946
Gallons	Liters	3.785
Ounces	Grams	28.349
Pounds	Kilograms	0.454
Short Tons	Metric Tons	0.907
Pound-Feet	Newton-Meters	1.356
Pounds per Square Inch	Kilopascals	6.895
Miles per Gallon	Kilometers per Liter	0.425
Miles per Hour	Kilometers per Hour	1.609

TO CHANGE	TO	MULTIPLY BY
Centimeters	Inches	0.394
Meters	Feet	3.280
Meters	Yards	1.094
Kilometers	Miles	0.621
Square Centimeters	Square Inches	0.155
Square Meters	Square Feet	10.764
Square Meters	Square Yards	1.196
Square Kilometers	Square Miles	0.386
Square Hectometers	Acres	2.471
Cubic Meters	Cubic Feet	35.315
Cubic Meters	Cubic Yards	1.308
Milliliters	Fluid Ounces	0.034
Liters	Pints	2.113
Liters	Quarts	1.057
Liters	Gallons	0.264
Grams	Ounces	0.035
Kilograms	Pounds	2.205
Metric Tons	Short Tons	1.102
Newton-Meters	Pound-Feet	0.738
Kilopascals	Pounds per Square Inch	0.145
Kilometers per Liter	Miles per Gallon	2.354
Kilometers per Hour	Miles per Hour	0.621

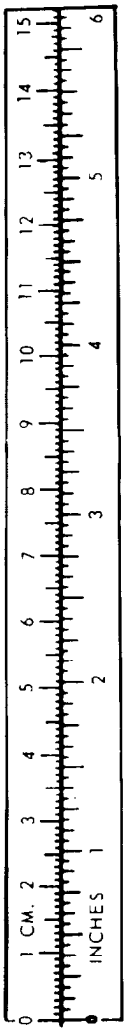

TA089991

www.truck-freeworkshop.com/clark/

PIN: 049900-002

www.truck-freeworkshop.com/clark/