https://truckmanualshub.com/

STRONG PARTNERS.
TOUGH TRUCKS.™

H360-36/48HD SERIES TECHNICAL GUIDE

WWW.HYSTER.COM

www.Manualslib.com

https://truckmanualshub.com/

H360-36/48HD DIMENSIONS

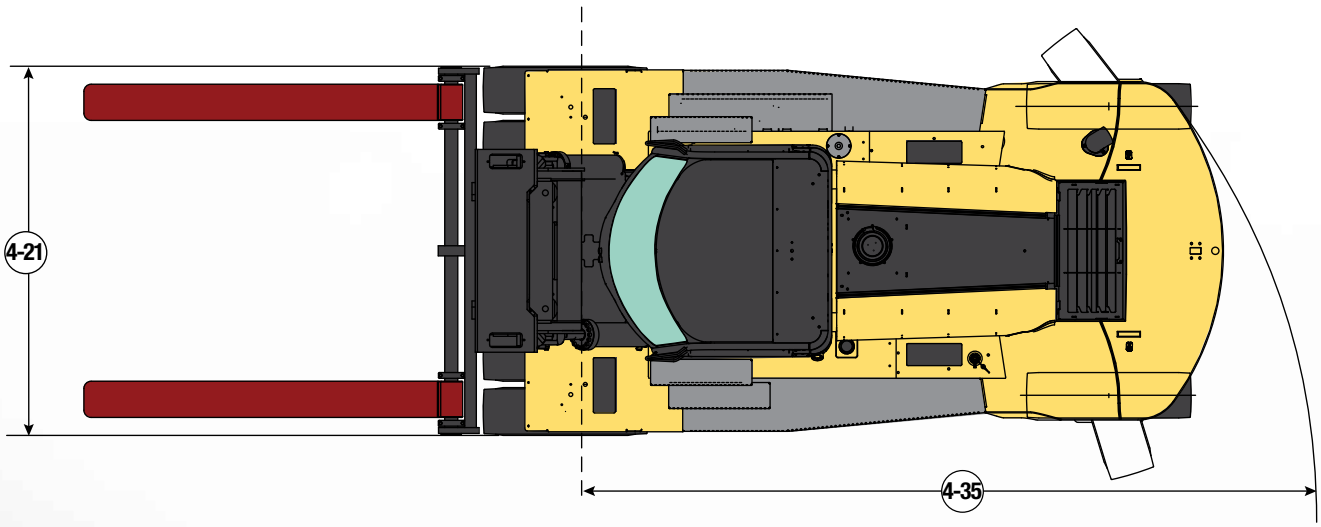

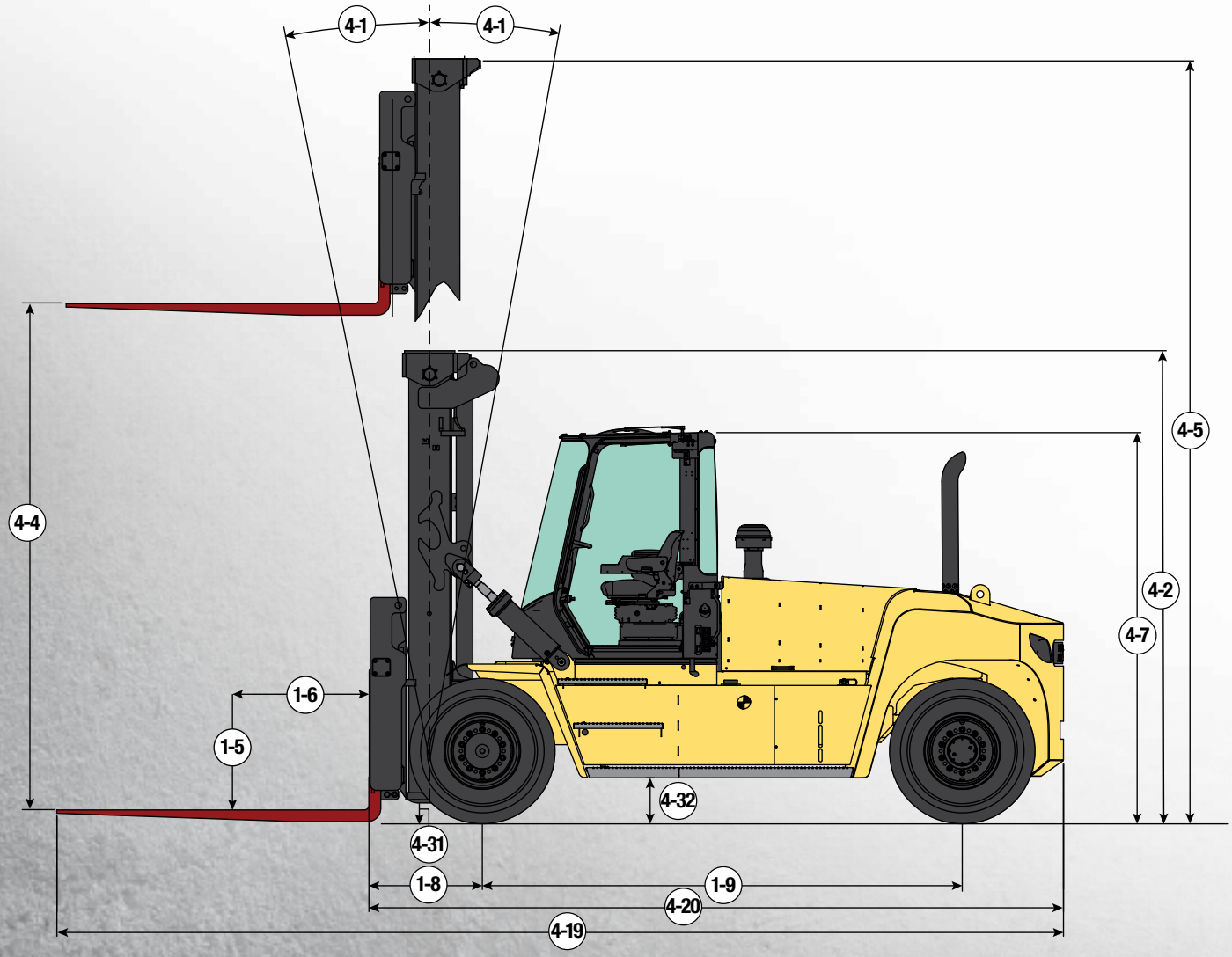

Circled dimensions correspond to the line numbers on the tabulated chart inside the Technical Guide. Dimensions are in inches (millimeters).

Downloaded from www.Manualslib.com manuals search engine

https://truckmanualshub.com/

H360-36/48HD SPECIFICATIONS

		Description		Units		English	Metric	English	Metric
GENERAL	1-1	Manufacturer				HYSTER	HYSTER	HYSTER	HYSTER
	1-2	Model designation				H360-36HD	H360-36HD	H360-48HD	H360-48HD
	1-5	Rated load capacity		lbs	kg	36,000	16,329	36,000	16,329
	1-6	Load center		in	mm	36	914	48	1219
	1-8	Load distance		in	mm	34.9	887	34.9	887
	1-9	Wheelbase		in	mm	148	3,750	148	3,750
WEIGHTS	2-1	Total truck weight without load		lbs	kg	47,186	21,403	50,493	22,903
	2-2a	Axle loading with load	front	lbs	kg	77,110	34,977	79,903	36,243
	2-2b		rear	lbs	kg	6,076	2,756	6,590	2,971
	2-3a	Axle loading without load	front	lbs	kg	23,817	10,803	23,683	10,742
	2-3b		rear	lbs	kg	23,369	10,600	26,809	12,160
WHEELS	3-1	Tire type				Pneumatic		Pneumatic	
	3-2	Tire size	front			12.00x20 Bias		12.00x20 Bias	
	3-3		rear			12.00x20 Bias		12.00x20 Bias	
DIMENSIONS	4-1	Mast tilt, forward / back		degrees		15 / 10		15 / 10	
	4-2	Height of mast lowered		in	mm	145	3,680	145	3,680
	4-3	Freelift (Top of Fork)		in	mm	0	0	0	0
	4-4	Lift height (Top of Fork)		in	mm	156	3,984	156	3,984
	4-5	Height of mast extended		in	mm	222	5,622	222	5,622
	4-7	Height to top of operator compartment		in	mm	120	3,054	120	3,054
	4-19	Overall length		in	mm	310	7,878	310	7,878
	4-20	Length to load face		in	mm	214	5,438	214	5,438
	4-21	Overall width over drive tires		in	mm	100	2,542	100	2,542
	4-22a	Fork	thickness	in	mm	3.9	100	3.9	100
	4-22b		width	in	mm	7.9	200	7.9	200
	4-22c		length	in	mm	96	2,440	96	2,440
	4-24	Carriage width		in	mm	100	2,540	100	2,540
	4-25a	Fork spread, min (in-in)		in	mm	9	235	9	235
	4-25b	Fork spread, max (out-out)		in	mm	94	2375	94	2375
	4-31	Ground clearance, under mast with load		in	mm	7	187	7	187
	4-32	Ground clearance, center of wheelbase		in	mm	14	368	14	368
	4-33	Minimum aisle width (add load length + clearance)		in	mm	236	5,984	236	5,984
	4-35	Outside turning radius		in	mm	205	5,199	205	5,199
MISC.	8-7	Hydraulic tank capacity		gal	l	42	160	42	160
	8-8	Fuel tank capacity		gal	l	54	206	54	206
	10-4	DEF tank capacity		gal	l	5.0	19.0	5.0	19.0
PERFORMANCE	**PERFORMANCE**			**WITH TIER 4 FINAL CUMMINS QSB 6.7L ENGINE**					
	5-1a	Travel speed	with load	mph	km/h	17	27	17	27
	5-1b		without load	mph	km/h	18	29	18	29
	5-2a	Lifting speed	with load	ft/min	m/s	77	0.39	77	0.39
	5-2b		without load	ft/min	m/s	87	0.44	87	0.44
	5-3a	Lowering speed	with load	ft/min	m/s	106	0.54	106	0.54
	5-3b		without load	ft/min	m/s	89	0.45	89	0.45
	5-6	Drawbar pull – Max		lbs	kN	26,700	119	26,500	119
	5-7	Gradeability – no load / rated load – 1 mph (1.6 km/h)		%		35/31	35/31	33/33	33/33
	PERFORMANCE			**WITH TIER 3 CUMMINS QSB 6.7L ENGINE**					
	5-1a	Travel speed	with load	mph	km/h	17	27	17	27
	5-1b		without load	mph	km/h	18	29	18	29
	5-2a	Lifting speed	with load	ft/min	m/s	67	0.34	67	0.34
	5-2b		without load	ft/min	m/s	87	0.44	87	0.44
	5-3a	Lowering speed	with load	ft/min	m/s	106	0.54	106	0.54
	5-3b		without load	ft/min	m/s	89	0.45	89	0.45
	5-6	Drawbar pull – Max		lbs	kN	24,500	113	24,300	113
	5-7	Gradeability – no load / rated load – 1 mph (1.6 km/h)		%		35/27	35/27	33/26	33/26

CERTIFICATION: These Hyster® lift trucks meet design specifications of Part II ANSI B56.1-1969, as required by OSHA Section 1910.178(a)(2) and also comply with Part III ANSI B56.1-revision in effect at time of manufacture. Certification of compliance with the applicable ANSI standards appears on the lift truck. Performance specifications are for a truck equipped as described under Standard Equipment on this Technical Guide. Performance specifications are affected by the condition of the vehicle and how it is equipped, as well as by the nature, condition of the operating area, proper service and maintenance of the vehicle. If these specifications are critical, the proposed application should be discussed with your dealer.

Downloaded from www.Manualslib.com manuals search engine

https://truckmanualshub.com/

H360-36/48HD SPECIFICATIONS

H360-36/48HD MAST DIMENSIONS							
4.4 Lift height (Top of Fork)		4.2 Mast Lowered Ht.		4.3 Freelift (Top of Fork)		4.5 Overall Extended Ht.	
in	mm	in	mm	in	mm	in	mm
2-STAGE NO FREE-LIFT (NO FL)							
156	3984	145	3680	0	0	222	5622
180	4594	157	3984	0	0	246	6232
212	5406	173	4390	0	0	278	7044
244	6219	189	4797	0	0	310	7858

POWERTRAINS		UNITS		TIER 4 FINAL		TIER 3	
1-3	Power type			Diesel		Diesel	
7-1	Engine Manufacturer / model			Cummins QSB 6.7L		Cummins QSB 6.7L	
7-1a	EPA Tier Compliance			Tier 4 Final		Tier 3	
7-2a	Engine power output - Rated	hp	kW	164	122	155	116
7-2b	Engine power output - Peak	hp	kW	168	125	155	116
7-3	Governed speed	rpm		2,300		2,300	
7-4	Number of cylinders / displacement	# / l		6/6.7L		6/6.7L	
7-5	Engine torque - Max	lb-ft	N-m	540	732	443	600
7-5a	Turbocharger	Type		Variable Geometry, Water Cooled		Wastegate	
7-8	Alternator output	Amps		120		120	
8-0	Transmission Manufacturer / model			ZF WG-161		ZF WG-161	
8-1	Transmission type & speeds			Powershift 3F x 3R		Powershift 3F x 3R	
7-10	Battery voltage, rated capacity	V / CCA		2 x 12 / 900		2 x 12 / 900	
7-10a	Drive Axle Manufacturer / model			Kessler D81		Kessler D81	
5-10	Service brake			Oil immersed (wet) disc		Oil immersed (wet) disc	
5-11	Park brake			Spring apply, dry disc		Spring apply, dry disc	
10-1	Working pressure for attachments	psi	Mpa	2,828	19.5	2,828	19.5
10-2	Oil flow for attachments	gpm	l/m	26.4	102	26.4	102

RATED CAPACITIES

NOTE: Higher capacity rated versions up to 40,000 lbs. at shorter load centers are available upon request on a custom basis. Please contact Hyster Company for details & SPED Quote.

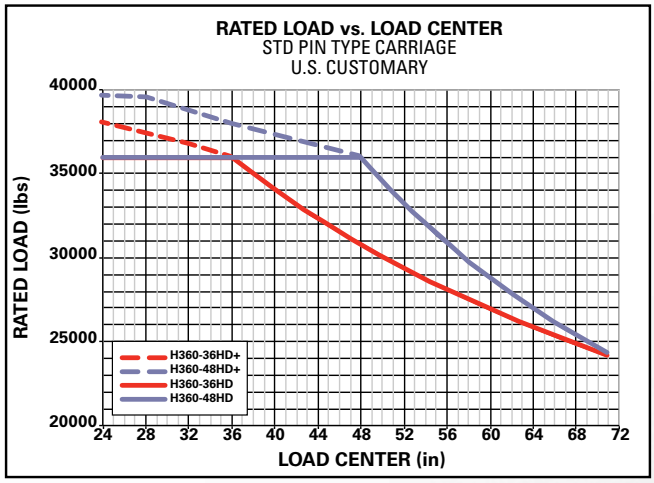

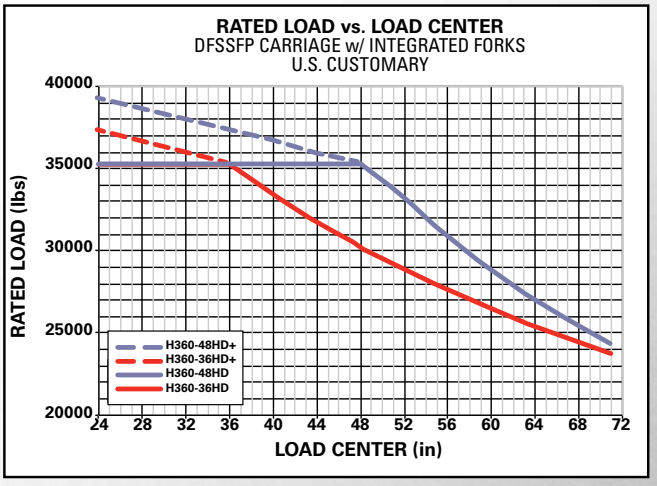

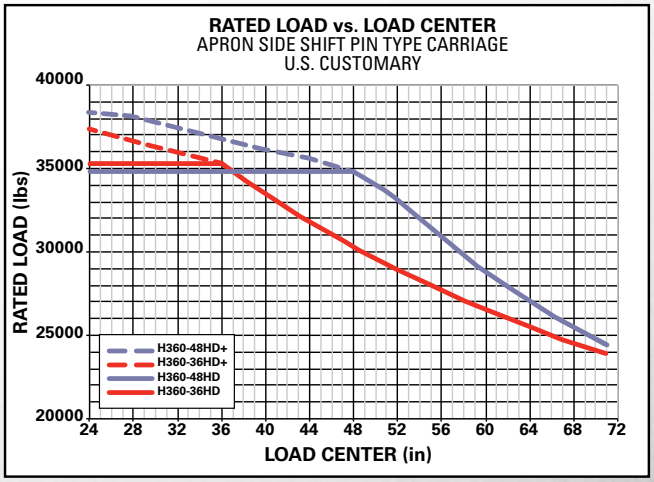

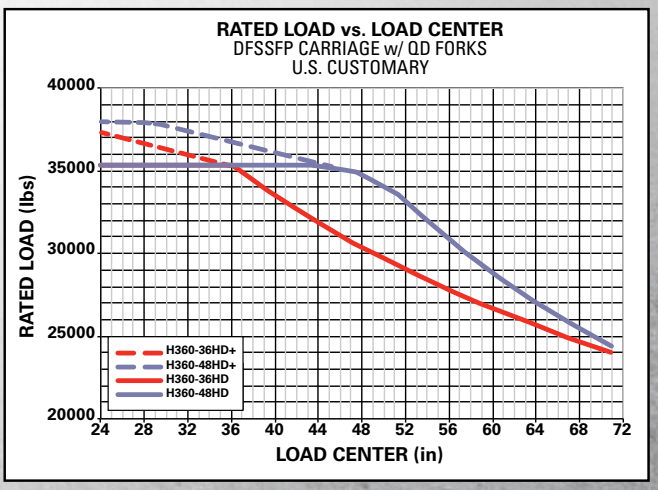

Model H360-36HD: 36,000 lbs. at 36" (16,329 kg at 914 mm) load center
Model H360-48HD: 36,000 lbs. at 48" (16,329 kg at 1220 mm) load center

Conversion Factor: *1.0" = 25.4 mm*
1 lb = 0.45 kg

Rated capacities are for trucks equipped with:

- 2-Stage mast to 156" (3984 mm) maximum fork height
- 100" (2540 mm) carriage width
- 96" (2440 mm) long forks

Contact your dealer for other capacity information.

Downloaded from www.Manualslib.com manuals search engine

https://truckmanualshub.com/

STANDARD FEATURES AND OPTIONS

MASTS
Masts with nested channels provide maximum visibility of the attachment and load. Mast channels, rollers, stub shafts and chain anchors are reinforced to provide good torsional rigidity. Oversized stub shafts are inset and double welded for good impact resistance. Chains designed on outside of mast to enhance visibility window.

CARRIAGES
Pin-type; integral pin-type fork positioner with simultaneous or individual fork control; pin-type integral sideshift; integral pin-type dual function sideshift fork positioner; apron style sideshift fork positioner with simultaneous or individual fork control.

Overall width is 100" (2540 mm) for the H360-36/48HD

Minimum inside-to-inside fork spacing - model and attachment dependent is 9" (235 mm)

Maximum outside-to-outside fork spacing - model and attachment dependent is 94" (2375 mm)

FORKS
Three kinds of forks are offered in two sizes.
i. PIN TYPE - STANDARD PROFILE available in:
– 96" long x 3.9" x 7.9" (2440mm x 100mm x 200mm)
– 96" long x 3.5" x 9.8" (2440mm x 90mm x 250mm)

ii. INTEGRAL PIN TYPE (FOR USE WITH DFSSFP) available in:
– 96" long x 3.9" x 7.9" (2440mm x 100mm x 200mm)
– 96" long x 3.5" x 9.8" (2440mm x 90mm x 250mm)

iii. QD HOOK TYPE (FOR USE WITH DFSSFP - QUICK DISCONNECT) available in:
– 96" long x 3.9" x 7.9" (2440mm x 100mm x 200mm)
– 96" long x 3.5" x 9.8" (2440mm x 90mm x 250mm)

STANDARD ENGINE - TIER 4 FINAL
QSB 6.7L 6 cylinder diesel engine delivers 164 hp (peak 168 hp) and 540 lb-ft of maximum torque. EPA Tier 4 Final compliant engine features cooled exhaust gas recirculation (EGR) technology with selective catalytic reduction (SCR); water-cooled variable geometry turbocharger with an integrated Diesel Exhaust Fluid (DEF) delivery system. Innovative selectable ECO performance modes offer excellent fuel economy and maximum productivity. Also includes:
- 120 amp alternator
- Viscous, on-demand cooling fan which saves fuel and reduces noise
- Low mount exhaust with diesel oxidation catalyst (DOC) and a diluter to reduce exhaust temperatures
- Requires ultra-low sulfur diesel fuel and low-ash oil
- Heavy duty spinner type Sy-Klone pre-cleaner center stacked for ease of service and enhanced visibility

TRANSMISSION
- ZF WG-161 three-speed, fully reversing powershift transmission produces smooth shifting, precise inching and fast acceleration
- 3 forward and 3 reverse gears
- Smooth fully automatic gear shift control
- Powershift transmission with proportional valves
- Inching electronically controlled
- Cushioned clutch lock-up provides smooth shifting and dampens drive line shock loads
- Simple push button calibration
- Transmission lock-out preventing high speed directional changes
- Transmission and engine powertrain protection for excessive engine coolant temperature, low engine oil pressure, and excessive engine inlet air temperatures

ELECTRICAL SYSTEM
- Sealed Deutsch connectors
- CANbus system for easy diagnostics of engine, transmission and hydraulics

HYDRAULIC SYSTEM
Hyster on-demand load sensing hydraulic system introduces an efficient way to meet truck's hydraulic load demands:
- Based on Variable Displacement Pump (VDP) technology
- Pump is only pumping when oil is needed
- Less heat is produced - oil and filters last longer. Hoses, seals, and components also wear less and last longer
- Engine runs quieter and at lower speeds, extending life of major components
- Leak free O-Ring Face Seal (ORFS) fittings standard throughout the truck
- Capable of more oil displacement even at low engine speeds

STEERING SYSTEM
- Designed for high loads and long life, the one piece axle frame carries the axle loads and provides mounting for the spindles and cylinder
- Axle spindles are supported by oil bathed wheel bearings and sealed to prevent contamination entry or loss of oil. This ensures that oil bearings are always lubricated and enhances overall durability of the axle spindles
- No steering linkage adjustments are required. Lubricating fittings on tie rod pins are the only regular maintenance points
- Load sensed steering provides low steering effort and good performance at all engine speeds
- Fully adjustable steering angle limiter with mechanical stops - reduces tire scrubbing
- Wheel hubs rotate on large tapered roller bearings
- Non-adjustable tie rod ends provide maximum life

DRIVE AXLE
- Rugged Kessler D81 drive axle features full-floating design

BRAKES
- Oil cooled wet disc brake system
- Designed for load capacities up to 40,000 lbs.
- Axle loads up to 540 kN (121,400 lbs)
- Bolt circle diameter 16.7 inches (425 mm)
- Park brake

OPERATOR AREA
- Ergonomically designed hydraulic controls and high/low range control lever are within easy reach
- Three steps and hand grips provide easy access to operator compartment
- Angled floor plate and pedals are positioned for operator comfort
- Telescopic, tilt steer column
- Supportive mechanical full-suspension seat adjusts 8 inches (200 mm) for operator comfort
- Several air suspension seat options are available
- Steel overhead guard frame provides maximum high-stacking visibility
- Operator Presence System (OPS) with complete hydraulic lock out requires the operator to be in the normal operating position before any travel or movement of the mast, tilt, carriage, and attachment can be initiated and that the travel or movement of the mast, tilt, carriage, and attachment is locked out when the operator leaves the seat for more than 2-3 seconds
- Optional light groups aid visibility in low-lighted areas. Light kits featuring innovative high-performance LED and halogen technology are available
- Optional ComforCabII features: tinted, curved glass; circulation fan; heater & defroster; electric wiper and windshield washer front, rear, top; intermittent front wiper; door retainer; 3 speed fan; 12-volt auxiliary power source; dome light, with many additional options to enhance comfort and productivity

Special attachments, equipment or accessories not listed above may be available through Applications Engineering for specific application requirements.

Downloaded from www.Manualslib.com manuals search engine

https://truckmanualshub.com/

STANDARD FEATURES AND OPTIONS

STANDARD EQUIPMENT

- 156" maximum fork height 2-stage mast with 145" overall lowered height
- 100" (2540mm) wide pin type carriage
- 96" long x 3.9" x 7.9" (2440mm x 100mm x 200mm) pin type forks
- Cummins QSB 6.7L Tier 4 Final engine
- Sy-Klone spinner type heavy duty air intake pre-cleaner
- Premium ZF WG161 3 speed autoshift transmission
- Kessler heavy duty planetary drive axle with wet disc brakes
- Powertrain Protection system for engine and transmission; high temperature or low oil pressure
- On-Demand load-sensing hydraulic system featuring Variable Displacement Pump technology (VDP)
- CANbus electrical control system for engine, transmission and hydraulics
- Low mount exhaust
- Low mount air intake
- 12.00 x 20 - 20PR bias high load pneumatic drive and steer tires
- Directional control lever with direction change interlock system
- UL Classification D
- Mast tilt: 15° fwd / 10° back
- Lockable battery disconnect switch
- Open operator compartment with integral overhead guard. Compartment includes: seat-side mini-lever hydraulic control; multifunction display panel; interior wide angle mirrors; handrails for operator entry and exit; telescoping & tilting steering column; floor mat; isolated mounting for low noise and vibration; 24-12V DC converter; full suspension vinyl seat with integrated, adjustable armrest and 2-point high visibility seat belt
- Operator restraint system
- Operator presence system
- Electric air horn (105 dBA)
- Audible backup alarm
- 24V electrical system
- Tilting operator compartment for service access – manual operation
- Light kit #1 - Rear: 2 LED stop, tail and back-up lights
- Steering angle limiter with mechanical stops
- Non-locking fuel cap
- Operator's manual

OPTIONAL EQUIPMENT

- Cummins QSB 6.7L Tier 3 engine*
- Masts - various lift heights available
- Sideshifting carriages and fork positioners
- Various fork options
- Various mast tilt ranges
- Multifunction joystick
- MONOTROL® pedal direction control with direction change interlock system
- Radial and pneumatic-shaped solid tires
- Enclosed cab, with or without air conditioning
- Multiple inside-cabin options
- Multiple seat options
- 3-point high visibility seat belts
- Powered tilting operator compartment for service access
- Visible alarm / amber strobe light
- Various high performance LED (light emitting diode) and halogen light kits available
- Lockable fuel cap
- High mount exhaust
- High mount air intake
- Hydraulic accumulator
- Various traction speed limiters
- Empty seat engine shutdown - adjustable from 3-15 minutes (preset to 15 minutes)
- Lifting eyes
- Steer wheel lug protection
- Engine block heater (110V or 230V)
- Front and rear mud flaps
- H-pattern wiper on front windshield
- Mechanical mast tilt indicator

** For Latin American markets only*

Hyster Company
P.O. Box 7006
Greenville, North Carolina
27835-7006
Part No. H360-36/48HD/TG
11/2017 Litho in U.S.A.

Visit us online at **www.hyster.com** or call us at **1-800-HYSTER-1**.

Hyster, , and STRONG PARTNERS. TOUGH TRUCKS. are registered trademarks in the United States and certain other jurisdictions. Cummins, ZF, Kessler and Sy-Klone are registered trademarks of their respective companies. Hyster products are subject to change without notice.

Trucks may be shown with optional equipment. © 2017 Hyster Company. All rights reserved.

Downloaded from www.Manualslib.com manuals search engine