https://truckmanualshub.com/

HUDDIG 1260D

HUDDIG

nualshub.com/

WITH TECHNOLOGY FROM THE FUTURE

The HUDDIG 1260D has inherited technology from the future. It is partially built using technology taken directly from our innovative Tigon Technology concept.
Among other things, the response time of the new control system in the HUDDIG 1260D is seven times faster than its predecessors and is constructed to remain at the forefront of developments for decades to come.
At Huddig, we constantly strive to exceed our customers' expectations. Both today, and in the future.

Allow us to present the HUDDIG 1260D.

https://truckmanualshub.com/

CITY

FLEXIBILITY IS ITS MIDDLE NAME

The new HUDDIG CITY 1260D thrives in urban environments. Using its fuelefficient EU Stage IV / EPA Tier 4 Final engine, this machine moves quickly and efficiently through the city. The HUDDIG CITY 1260D's flexibility makes it the perfect partner for working in urban environments and surroundings.

High hydraulic capacity and flexibility makes the machine multilateral for you, who works with varying missions.

https://truckmanualshub.com/

CITY

Even when space is tight, you can always work efficiently with a HUDDIG 1260D. It is flexible enough to work on park footpaths, city streets, residential areas or highways.

The HUDDIG 1260D is a backhoe loader that maintains the highest levels of quality down to the finest detail, making it extremely reliable – a machine that performs year after year. An efficient machine with a high level of operational reliability is the basis of a good overall economy.

HUDDIG CITY 1260D

- **EU Stage IV / EPA Tier 4 Final engine**
  Our new, more efficient engine meets all current environmental requirements.
- **Faster control system**
  Compared to previous models, the new control system responds seven times faster.
- **New main display**
  The new 10” touchscreen display provides the driver with a complete overview of their work.
- **Improved forward visibility**
  The exhaust pipe has been moved across to the right of the windscreen for improved forward visibility.
- **Superior hydraulics**
  Make it possible to carry out jobs requiring both strength and precision.
- **Flexibility in traffic**
  For quick and safe manoeuvring in trafficked environments.
- **Wide range of attachments**
  Thanks to its high-flow, fine-tuned hydraulics, the machine is capable of driving a large number of the attachments available on the market. This provides enormous flexibility and versatility.

The new EU Stage IV / EPA Tier 4 Final engine in the HUDDIG 1260D complies with all current environmental requirements and is both stronger and more fuel efficient than its predecessors. The exhaust pipe has been moved across to the right of the windscreen for improved forward visibility.

The large 10” TFT color touchscreen is logically positioned on the B-pillar and presents all important functions. This is where all fine adjustments are made to optimise the machine’s characteristics.

Your HUDDIG CITY 1260D can be equipped with a wide range of attachments that make your job easier and even more efficient. Quite simply, more tasks using the same machine.

https://truckmanualshub.com/

CABLE

THE MULTIPURPOSE MACHINE THAT HAS IT ALL

Huddig's machines have long been a favourite among line constructors for their functionality, flexibility and levels of equipment. We have now made the model even better. The new HUDDIG CABLE 1260D is the only machine you need to carry out line work and cable ploughing.

https://truckmanualshub.com/

CABLE

Using the HUDDIG 1260D, you can complete a wide range of tasks, irrespective of whether the cables are overhead or buried. Smart working demands a flexible machine that can be equipped with a wide range of different attachments.

With the HUDDIG 1260D, you can work in any weather and ground conditions. Waterlogged marshes, muddy fields or stony woodlands present no obstacle. This is a reliable machine that is capable of covering any type of terrain.

HUDDIG CABLE 1260D

- **EU Stage IV / EPA Tier 4 Final engine**
  Our new, more efficient engine meets all current environmental requirements.
- **Wide range of lifts**
  Our lift programme offers a wide range of options including LIFT 2000, LIFT 2200 and LIFT 2200 with LWI (Live-Line Work Insulator) for working on live cables.
- **Optional tracks**
  Operating with tracks provide you with the best possible traction on difficult terrain.
- **Upgraded cab**
  The driver environment has been optimised for a better overview and improved ergonomics.
- **Superior hydraulics**
  Make it possible to carry out jobs requiring both strength and precision.
- **Radio remote control**
  Allows the machine's functions to be controlled from outside the driver cab.

Our carefully selected range of lifts allow two people to work up to 21.5 metres above ground.

The machine cab on the HUDDIG 1260D has been updated in several respects to meet the demands and wishes of our customers.

With a HUDDIG 1260D, you can carry out all tasks required for line work.

https://truckmanualshub.com/

RAIL

WHEN WORK STAYS ON TRACK

Extreme working conditions and deadlines are a constant part of working on railways. This makes enormous demands on safety and efficiency. With the HUDDIG RAIL 1260D, you can work quickly and efficiently to complete the various tasks associated with track work.

https://truckmanualshub.com/

RAIL

The HUDDIG 1260D provides a system solution for railway track work that meets the highest regulatory requirements.

The HUDDIG 1260D gives you the ability to smoothly access and depart tracks, providing the greatest possible working efficiency – whether undertaking new construction or maintenance.

The HUDDIG 1260D can be equipped with a wide range of attachments to carry out the various tasks quickly and cost-effectively.

HUDDIG RAIL 1260D

- **Railway equipment**
  For rapid and safe movement. The road-rail HUDDIG 1260D with associated equipment is approved in accordance with EN 15746 and BVF 929.
- **Intelligent warning system**
  RCI (Rated Capacity Indicator) is our own integrated warning system that alerts the operator and automatically stops the backhoe when there is a risk of tipping.
- **Unique terrain characteristics**
  Its articulated centre pivot, large wheels and high ground clearance mean that the machine is quick and responsive when accessing and departing railway tracks.
- **HUDDIG LIFT**
  Space for two people up to a height of 20 metres.
- **Superior hydraulics**
  Make it possible to carry out jobs requiring both strength and precision.
- **Hydrostatic transmission**
  Provides even operation while maintaining traction.
- **Propulsion**
  HUDDIG 1260D is also available with propulsion, that can be run in both highrail and wheeldrive, 9A and 9C.

The machine can carry various types of equipment.

The machine is capable of quickly and efficiently accessing and departing railway tracks.

RCI alerts the operator and halts the backhoe in the event of a tipping risk.

https://truckmanualshub.com/

STANDARD EQUIPMENT

Cab
Tilting cab
Tinted glass
Opening safety glass sunroof
Be-Ge driver's seat
Opening side windows
Opening rear window
4 position mini joystick with backlit console
First-aid kit
Rear view mirrors, 2 interior, 2 exterior
Moulded floor mat
Fire extinguisher, 6 kg
Sun visors, front and rear
Glass-mounted GSM antenna
Automatic climate control
CD-player with radio, incl. 2 speakers
Engine/cab heater socket

Lighting
Working spotlights, 2 front and 2 rear
Rotating warning lamp with pivoted mounting
Automatic interior lighting
Automatic reversing lamp

Display
10" TFT colour touchscreen
Gauges integrated with display

Brake system
Dual-circuit brake system
Electrically operated parking brake
Automatic excavation brake

Combination valve
Electrohydraulic servo valve operated
Hydraulic tool mounting
Hydraulic tool lock loader
Transport position loader
Hose break valve boom and backhoe
Double-action hydraulic outlets
Load damping
3rd hydraulic function loader

Wheels
Trelleborg 620/60x34 heals

Buckets
Backhoe bucket G85 420 L
Grading bucket 2.60

Other
Double command
Main circuit breaker, automatic
Tool kit
Lockable tool box on front screen and behind the cab
Full-body skid plate
Electronic steering
4 pre-installed operating-mode settings
Mobile diagnostics
12V and 24V outlets
SMV or 50 km sign, class 2 or class 1
Heating system for hydraulic fluid
Hose break valves on support legs
Towing eye on support leg
100 Amp Generator
Fire protection inspected
Central lubrication ready

OPTIONAL EQUIPMENT

Performance enhancing
Hydraulic motor outlets in various versions
Double-acting hydraulic outlet in two versions
Shared quick coupling for tiltrotator
Piston rod cover
4th loader function
Raised cab
LED working lights in several packages
LED drivinglight
Wheel sets of several makes
Adaptive central lubrication
Extra reinforced skid plate
Converter mode
Air Sentry – water-separating respiratory filter
Bypass filter kit for working hydraulics
Boost hydraulics

Comfort
Be-Ge 7000 Air Vent with air suspension
Heated rear view mirrors
Sunshade
Head rest
Extra footstep
Fabric floor mat
Fuel filling pump, electric
Cruise Control
Webasto diesel heater, incl. GSM start

Safety and environment
Tool locks in various designs incl. safety bracket
Polycarbonate windscreens
Rotating LED warning lamp
Environmentally friendly oil

Other
7-pin towing connection
Tow hitch including pin
TMA ready
Loading box
Shovel and spike holder
Radio remote control
Railway equipment
Crane attachment in loader, incl. Palfinger crane18502SH
Lift programme; LIFT 2200, LIFT 2200 LWI, LIFT 2000, LIFT 1420
Track operation
Bucket range

HUDDIG 1260D

MAIN DIMENSIONS

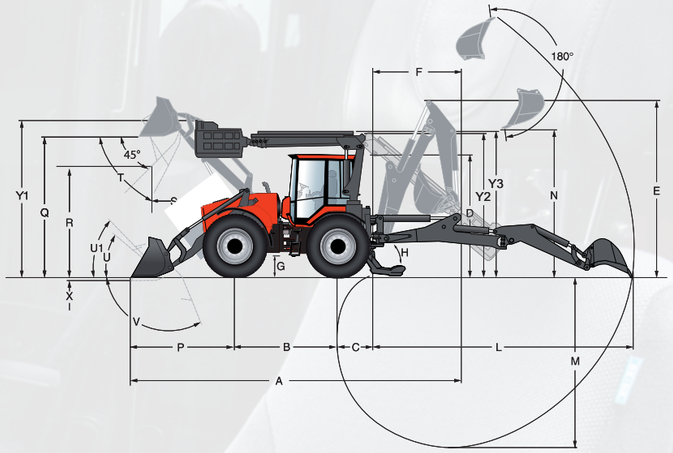

Dimensions with standard equipment

A	Transport length	8 630 mm
B	Wheelbase	2 600 mm
C	Backhoe overhang	1 100 mm
D	Height above cab	3 110 mm
E	Backhoe transport height	4 380 mm
F	Backhoe transport length	2 300 mm
G	Ground clearance	515 mm
H	Ground clearance angle, support legs	32°
I	Maximum width, support legs	3 700 mm
	Width support legs, parked position	2 460 mm
J	Width front bucket	2 600 mm
K	Width across wheels	2 600 mm
r1	Slew radius, outside of bucket	6 288 mm
r2	Slew radius, outside of wheels	5 760 mm

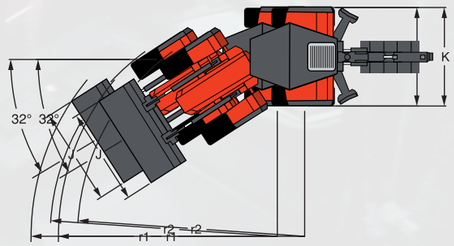

Backhoe unit

L	Reach	6 530 mm
M	Depth	4 900 mm
N	Load height	3 770 mm
O	Digging width	4 200 mm

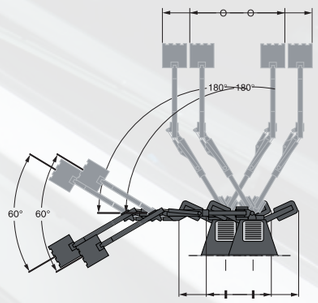

Front loader

P	Reach	2 630 mm
Q	Lifting height, grading bucket	3 500 mm
R	Load height, 45° tilted bucket	2 690 mm
S	Reach, 45° tilt angle	1 030 mm
T	Maximum tilt angle	63°
U	Load angle	40°
U1	Load angle in carrying position	46°
V	Tilt angle ground level	112°
X	Excavation depth	90 mm

Lift

Y1	Height to top of working platform in transport position	3 975 - 4 073 mm
Y2	Height to top of arm in folded down position	3 570 - 3 873 mm
Y3	Height to top of arm in transport position	3 840 - 4 003 mm

Weight

Grossweight with standard equipment incl. buckets	13 200 kg
Grossweight maximum	18 000 kg

https://truckmanualshub.com/

TECHNICAL DATA

Engine

Model	Cummins QSB 6,7 EU Steg IV / EPA Tier 4 Final
Type	6-cylinder, water cooled, turbocharged, charge air cooled, 4-stroke diesel engine. Firing order 1-5-3-6-2-4
Fuel	Diesel
Cylinder displacement	6,7 litres
Power output	116 kW (157 hp) @ 1900 rpm
Torque	662 Nm @ 1100 rpm

Transmission

Type	Hydrostatic with variable pump and motor, both axial piston type. Gearbox with Low and High range. Wheel axles with hub reduction.	
Hydrostat oil volumes	Tank 16 litres, total 25 litres	
Gearbox	ZF/2HL 290 Two ranges (high/low). Can be shifted during operation.	
Wheel axles	Conical angle gear with automatic laminated disc differential brake, planet gear hub reuction.	
Speed	Motor vehicle class 1	Low 0-10 km/h, High 0-40 km/h
	Motor vehicle class 2	Low 0-10 km/h, High 0-30 km/h

Brakes

Transport brakes	Dual circuit brake system with two accumulators. Wet disc brakes on all wheels, proportionally operated with hydraulic servo.
Auxiliary brakes	One of the two transport brake circuits, alt. parking brake.
Service brakes	Automatic application of transport brakes when the gear selector is in neutral position and the machine is stationary. (The automatic function can be disengaged).
Parking brake	Electrically operated laminated disc brake in the gearbox. (Mechanically negative braking effect.)

Wheels

Standard	Trelleborg (heals) 620/60x34	Width over wheels 2600 mm
Alternativ	Trelleborg (twin) 600/65x34 SB	Width over wheels 2600 mm
	Trelleborg (twin) TM2000 620/75x26	Width over wheels 2600 mm
	Nokian TRI HD 580/65x34	Width over wheels 2600 mm
	Nokian 600/65x34 SB	Width over wheels 2600 mm
	GoodYear GP-4D 23,5 R25	Width over wheels 2600 mm
	Alternative rims are available for machines with rail running equipment.	

Steering

Type	Hydrostatic frame pivot steering. Two double-acton hydraulic cylinders on the rear frame
Operating devices	Steering wheel: Manually operated Orbitrol with proportional function. Approx. 5,5 (2000°) turns between end positions. Joystick: Electrically operated valve with proportional function. The joystick function is also influenced by vehicle speed in that steering assist is reduced as speed increases.
Steering angle	± 32°
Frame oscillation	± 8°
Screen / display	10” TFT colour touch screen

HUDDIG 1260D

TECHNICAL DATA

Electrical system

System voltage	24 V
Alternator	Alternating current 100 A
Batteries	Two pcs, series connected 12 V, 100 Ah

Operating hydraulics

Type	Load sensing (LS) with two variable axial piston pumps.
Pump 1	Variable axial piston pump with displacement 60 cm³ mounted on the pump distribution box and supplying the following functions: - Orbitrol steering (prioritised) - Brake system (prioritised) - Loader unit - Backhoe unit - Joystick steering - Hydraulic motor outlet
Pump 2	Variable axial piston pump with 100 cm³ displacement, capacity controlled, mounted on the gearbox and supplying the following functions: - Loader unit - Backhoe unit - Hydraulic motor outlet
Max operating pressure	Standard 23 MPa (233 bar) / Boost 26 MPa (260 bar)
Nominal maximum flow	175 litres / min @ 1000 rpm 260 litres / min @ 1500 rpm 350 litres / min @ 2000 rpm
Double-acting outlet	1: max 50 l/min 2: max 90 l/min 3: max 90 l/min 4: max 90 l/min
Single-acting outlet	1: max 90 l/min 2: max 170 l/min @ >1000 rpm

Backhoe unit

Breakout force at bucket edge	103 kN(10300 kp)	Reach	6530 mm
Digging force at bucket pivot	63 kN (6300 kp)	Depth	4900 mm
Lifting power at max reach	19,1 kN (1910 kp)	Bucket angle	180°
Maximum slewing torque	37 kNm (3700 kpm)	Slewing angle	180°
Recommended bucket volume	350 - 450 liter		

Loader unit

Breakout force at bucket edge	60 kN (6000 kp)	Lifting height	3,5 m
Lifting force at full height	61,5 kN (6150 kp)	Breake angle at ground level	40°
Lifting force at ground level	55,0 kN (5500 kp)	Breake angle in carrying position	46°
Recommended bucket volume	1000 - 3000 liter	Tilt angle	63°

Pulling force

Low gear	112,9 kN
High gear	27,5 kN

Environmental conditions

Temperature range	Ambient air temperature -25°C till +46°C	
Noise	As per EG directive 2000/14/EG (eng 2000/14/EC)	
	- Measured sound power level	98 dB(A)
	- Guaranteed sound power level	101 dB(A)
	- Internal sound pressure level	69 dB(A), ISO 6396
Vibrations	As per EG directive 2002/44/EG (eng 2002/44/EC)	
	- Hand/Arm vibration level	<2,5 m/s² A(8), ISO 5349
	- Whole-body vibration level	<0,5 m/s² A(8), ISO 2631

https://truckmanualshub.com/

HUDDIG 1260D

huddig.com

facebok.com/huddig

linkedin.com/company/huddig-ab

youtube.com/huddig

instagram.com/huddigofficial

twitter.com/huddig

issuu.com/huddig

801526EN C