RESTRAINTS

TABLE OF CONTENTS

page

RESTRAINTS - ELECTRICAL DIAGNOSTICS 1

page

RESTRAINTS - SERVICE INFORMATION 245

RESTRAINTS - ELECTRICAL DIAGNOSTICS

TABLE OF CONTENTS

page

RESTRAINTS - ELECTRICAL DIAGNOSTICS
DIAGNOSIS AND TESTING
ACCELEROMETER 1 3
ACCELEROMETER 2 4
AIRBAG WARNING INDICATOR OPEN 5
AIRBAG WARNING INDICATOR SHORT 8
CALIBRATION MISMATCH 11
CLUSTER MESSAGE MISMATCH 12
DEPLOYMENT DATA RECORD FULL 14
DRIVER SEAT BELT TENSIONER CIRCUIT OPEN 15
DRIVER SEAT BELT TENSIONER CIRCUIT SHORT 20
DRIVER SEAT BELT TENSIONER SHORT TO BATTERY 24
DRIVER SEAT BELT TENSIONER SHORT TO GROUND 28
DRIVER SQUIB 1 CIRCUIT OPEN 32
DRIVER SQUIB 1 CIRCUIT SHORT 37
DRIVER SQUIB 1 SHORT TO BATTERY 42
DRIVER SQUIB 1 SHORT TO GROUND 47
DRIVER SQUIB 2 CIRCUIT OPEN 52
DRIVER SQUIB 2 CIRCUIT SHORT 57
DRIVER SQUIB 2 SHORT TO BATTERY 62
DRIVER SQUIB 2 SHORT TO GROUND 67
INTERNAL 1 72
INTERNAL 2 73
LEFT CURTAIN SQUIB 1 CIRCUIT OPEN . . . 74
LEFT CURTAIN SQUIB 1 CIRCUIT SHORT . . 79
LEFT CURTAIN SQUIB 1 SHORT TO BATTERY 84
LEFT CURTAIN SQUIB 1 SHORT TO GROUND 89
LEFT SIDE IMPACT SENSOR 1 INTERNAL 1 . 93
LOSS OF IGNITION RUN - START 99
LOSS OF IGNITION RUN ONLY 105
MISSING CURRENT VIN 110

page

MODULE NOT CONFIGURED FOR PAB OFF SWITCH 114
NO CLUSTER MESSAGE 118
NO LEFT SIDE IMPACT SENSOR 1 COMMUNICATION 120
NO PCI LOOPBACK 126
NO PCI TRANSMISSION 128
NO RIGHT SIDE IMPACT SENSOR 1 COMMUNICATION 130
OCCUPANT CLASSIFICATION MODULE CONFIGURATION MISMATCH 136
OUTPUT DRIVER 1 139
PASSENGER OFF INDICATOR CIRCUIT SHORT TO BATTERY 140
PASSENGER OFF INDICATOR CIRCUIT SHORT TO GROUND 145
PASSENGER AIRBAG ON-OFF SWITCH OPEN 150
PASSENGER AIRBAG ON-OFF SWITCH SHORT TO BATTERY 155
PASSENGER AIRBAG ON-OFF SWITCH SHORT TO GROUND 159
PASSENGER SEAT BELT TENSIONER CIRCUIT OPEN 163
PASSENGER SEAT BELT TENSIONER CIRCUIT SHORT 168
PASSENGER SEAT BELT TENSIONER SHORT TO BATTERY 172
PASSENGER SEAT BELT TENSIONER SHORT TO GROUND 176
PASSENGER SQUIB 1 CIRCUIT OPEN 180
PASSENGER SQUIB 1 CIRCUIT SHORT . . . 185
PASSENGER SQUIB 1 SHORT TO BATTERY 189
PASSENGER SQUIB 1 SHORT TO GROUND 193
PASSENGER SQUIB 2 CIRCUIT OPEN 197

PASSENGER SQUIB 2 CIRCUIT SHORT . . . 202
PASSENGER SQUIB 2 SHORT TO BATTERY 206
PASSENGER SQUIB 2 SHORT TO GROUND 210
RIGHT CURTAIN SQUIB 1 CIRCUIT OPEN . 214
RIGHT CURTAIN SQUIB 1 CIRCUIT SHORT . 219
RIGHT CURTAIN SQUIB 1 SHORT TO BATTERY 223
RIGHT CURTAIN SQUIB 1 SHORT TO GROUND 227
RIGHT SIDE IMPACT SENSOR 1 INTERNAL 1 231
STORED ENERGY FIRING 1 237
VEHICLE BODY STYLE MISMATCH 238
*AIRBAG INDICATOR ON WITHOUT ACTIVE TROUBLE CODES 242
*ORC VERIFICATION TEST - VER 1 243
SCHEMATICS AND DIAGRAMS 244

RESTRAINTS - ELECTRICAL DIAGNOSTICS

DIAGNOSIS AND TESTING

ACCELEROMETER 1

For a complete wiring diagram **Refer to Section 8W**.

- **When Monitored:**
  With the ignition on. The module's on board diagnostics continuously performs internal circuit tests.
- **Set Condition:**
  This DTC will set if the module identifies an out of range internal circuit.

Possible Causes
OCCUPANT RESTRAINT CONTROLLER

Diagnostic Test

1. DETERMINE ACTIVE OR STORED DTC

Turn the ignition on.

NOTE: Ensure the battery is fully charged.

NOTE: When reconnecting airbag system components the Ignition must be turned off and the Battery must be disconnected.

Select ACTIVE or STORED DTC

ORC - ACTIVE DTC
Go To 2

ORC - STORED DTC
Test Complete.

---

2. OCCUPANT RESTRAINT CONTROLLER (ORC)

WARNING: WARNING: TO AVOID PERSONAL INJURY OR DEATH, DISCONNECT THE BATTERY AND WAIT TWO MINUTES BEFORE PROCEEDING.

WARNING: WARNING: IF THE OCCUPANT RESTRAINT CONTROLLER IS DROPPED AT ANY TIME, IT MUST BE REPLACED. FAILURE TO TAKE THE PROPER PRECAUTIONS COULD RESULT IN ACCIDENTAL AIRBAG DEPLOYMENT AND PERSONAL INJURY OR DEATH.

View repair.

Repair
Replace the Occupant Restraint Controller (ORC) in accordance with the Service Information.
Perform ORC VERIFICATION TEST - VER 1.

ACCELEROMETER 2

For a complete wiring diagram **Refer to Section 8W**.

- **When Monitored:**
  With the ignition on. The module's on board diagnostics continuously performs internal circuit tests.
- **Set Condition:**
  This DTC will set if the module identifies an out of range internal circuit.

Possible Causes
OCCUPANT RESTRAINT CONTROLLER

Diagnostic Test

1. DETERMINE ACTIVE OR STORED DTC

Turn the ignition on.

NOTE: Ensure the battery is fully charged.

NOTE: When reconnecting airbag system components the Ignition must be turned off and the Battery must be disconnected.

Select ACTIVE or STORED DTC

ORC - ACTIVE DTC
Go To 2

ORC - STORED DTC
Test Complete.

---

2. OCCUPANT RESTRAINT CONTROLLER (ORC)

WARNING: WARNING: TO AVOID PERSONAL INJURY OR DEATH, DISCONNECT THE BATTERY AND WAIT TWO MINUTES BEFORE PROCEEDING.

WARNING: WARNING: IF THE OCCUPANT RESTRAINT CONTROLLER IS DROPPED AT ANY TIME, IT MUST BE REPLACED. FAILURE TO TAKE THE PROPER PRECAUTIONS COULD RESULT IN ACCIDENTAL AIRBAG DEPLOYMENT AND PERSONAL INJURY OR DEATH.

View repair.

Repair
Replace the Occupant Restraint Controller (ORC) in accordance with the Service Information.
Perform ORC VERIFICATION TEST - VER 1.

AIRBAG WARNING INDICATOR OPEN

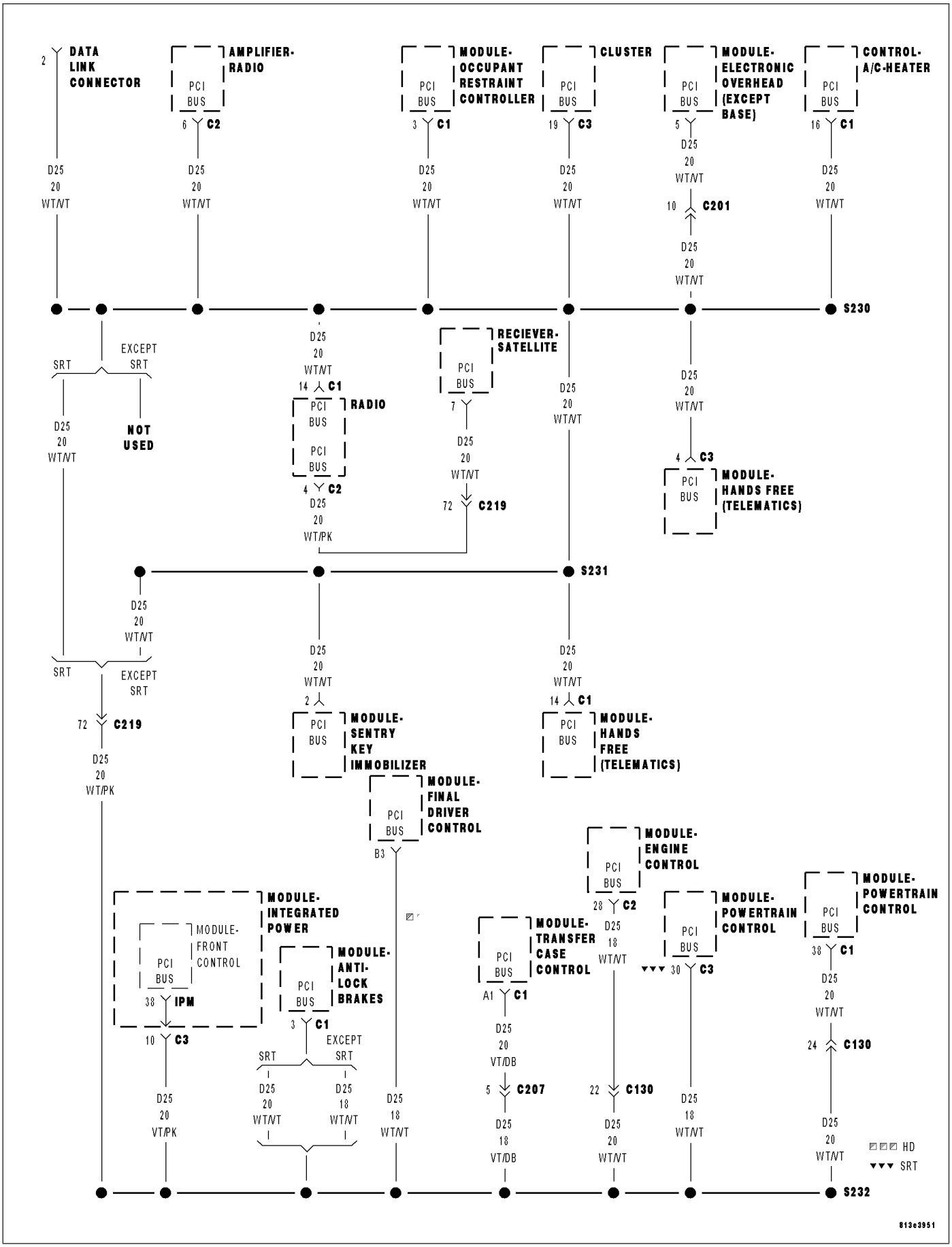

AIRBAG WARNING INDICATOR OPEN (CONTINUED)

For a complete wiring diagram **Refer to Section 8W**.

- **When Monitored:**
  With ignition on the Occupant Restraint Controller (ORC) monitors the PCI Bus for a message from the MIC containing the airbag warning indicator status. The ORC request the warning lamp status from the MIC once every second.
- **Set Condition:**
  This DTC will set immediately if the indicator status is OPEN.

Possible Causes
MIC, COMMUNICATION FAILURE
MIC, WARNING INDICATOR
ORC, WARNING INDICATOR CIRCUITS

Diagnostic Test

1. DETERMINE ACTIVE OR STORED DTC

Turn the ignition on.

NOTE: Ensure that the battery is fully charged.

NOTE: For the purpose of this test, the AECM and ORC modules will be referred to as an ORC.

NOTE: When reconnecting Airbag system components, the ignition must be turned off and the battery must be disconnected.

Select ACTIVE or STORED DTC:

ORC - ACTIVE DTC
Go To 2

ORC - STORED DTC
Go To 5

---

2. MIC COMMUNICATION FAILURE

With the DRBIII®, ensure PCI Bus communications with the Instrument Cluster.

Is the Instrument Cluster communicating on the PCI Bus?

Yes >> Go To 3

No >> (Refer to 8 - ELECTRICAL/ELECTRONIC CONTROL MODULES - DIAGNOSIS AND TESTING) for No Response diagnostic test procedures.
Perform ORC VERIFICATION TEST - VER 1.

AIRBAG WARNING INDICATOR OPEN (CONTINUED)

3. WARNING INDICATOR

With the DRBIII® select PASSIVE RESTRAINTS, AIRBAG, and MONITOR DISPLAY.

Using the DRBIII®, read the WARNING LAMP MONITOR screen.

Select the LAMP STATUS displayed on the DRB monitors screen.

Observe the Lamp Driver State and Actual Lamp State.

Is the LAMP DRIVER and ACTUAL LAMP STATE: OK?

Yes >> Go To 4

No >> Replace the Instrument Cluster in accordance with the Service Information.
Perform ORC VERIFICATION TEST - VER 1.

---

4. ORC, WARNING LAMP CIRCUIT

WARNING: WARNING: TO AVOID PERSONAL INJURY OR DEATH, TURN THE IGNITION OFF, DISCONNECT THE BATTERY AND WAIT TWO MINUTES BEFORE PROCEEDING.

WARNING: WARNING: IF THE OCCUPANT RESTRAINT CONTROLLER IS DROPPED AT ANY TIME, IT MUST BE REPLACED. FAILURE TO TAKE THE PROPER PRECAUTIONS COULD RESULT IN ACCIDENTAL AIRBAG DEPLOYMENT AND PERSONAL INJURY OR DEATH.

If there are no possible causes remaining, view repair.

Repair

Replace the Occupant Restraint Controller (ORC) in accordance with the Service Information.
Perform ORC VERIFICATION TEST - VER 1.

---

5. CHECKING STORED OR INTERMITTENT CODES

With the DRBIII®, record and erase all DTC's from all Airbag modules.

If equipped with Passenger Airbag On - Off switch, read the DTC's in all switch positions.

If any ACTIVE codes are present they must be resolved before diagnosing any stored codes.

WARNING: WARNING: TO AVOID PERSONAL INJURY OR DEATH, TURN THE IGNITION OFF, DISCONNECT THE BATTERY AND WAIT TWO MINUTES BEFORE PROCEEDING.

Using the wiring diagram/schematic as a guide, inspect the wiring and connectors.

Look for chaffed, pierced, pinched, or partially broken wires and broken, bent, pushed out, spread, corroded, or contaminated terminals.

The following additional checks may assist you in identifying a possible intermittent problem.

Reconnect any disconnected components and harness connector.

WARNING: WARNING: TO AVOID PERSONAL INJURY OR DEATH, TURN THE IGNITION ON, THEN RECONNECT THE BATTERY.

With the DRBIII®, monitor active codes as you work through the following steps.

WARNING: WARNING: TO AVOID PERSONAL INJURY OR DEATH, MAINTAIN A SAFE DISTANCE FROM ALL AIRBAGS WHILE PERFORMING THE FOLLOWING STEPS.

Wiggle the wiring harness and connectors of the related airbag circuit or component.

If codes are related to the Driver Airbag circuits, rotate the steering wheel from stop to stop.

If only stored codes return continue the test until the problem area has been isolated.

In the previous steps you have attempted to recreate the conditions responsible for setting active DTC in question.

Are any ACTIVE DTCs present?

Yes >> Select the appropriate diagnostic procedure from the Table of Contents in this section.

No >> No problem found at this time. Erase all codes before returning vehicle to customer.

AIRBAG WARNING INDICATOR SHORT

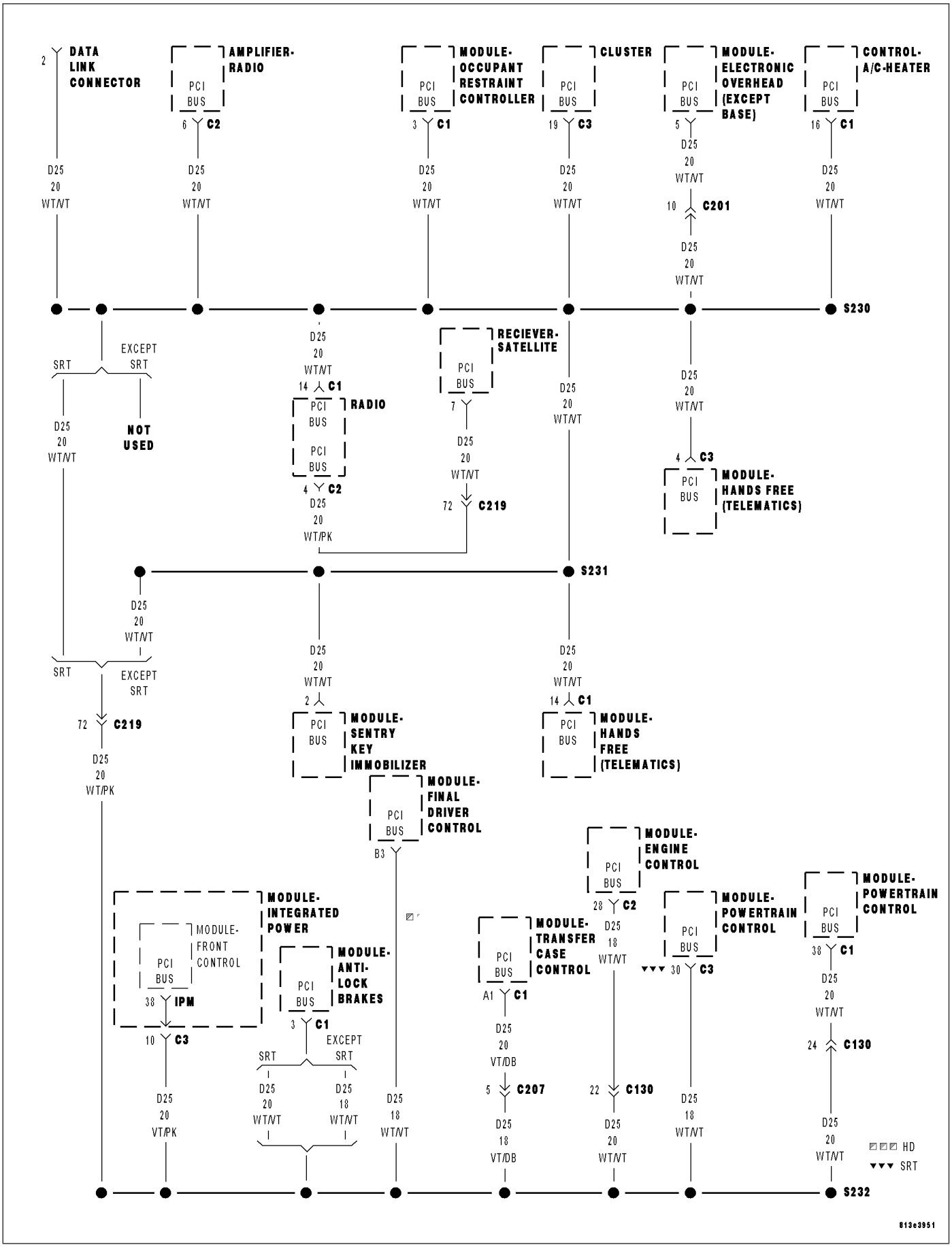

AIRBAG WARNING INDICATOR SHORT (CONTINUED)

For a complete wiring diagram **Refer to Section 8W**.

- **When Monitored:**
  With ignition on the Occupant Restraint Controller (ORC) monitors the PCI Bus for a message from the MIC containing the airbag warning indicator status. The ORC request the warning lamp status from the MIC once every second.
- **Set Condition:**
  This DTC will set immediately if the indicator status is SHORT.

Possible Causes
MIC, COMMUNICATION FAILURE
MIC, WARNING INDICATOR
ORC, WARNING INDICATOR CIRCUITS

Diagnostic Test

1. DETERMINE ACTIVE OR STORED DTC

Turn the ignition on.

NOTE: Ensure that the battery is fully charged.

NOTE: For the purpose of this test, the AECM and ORC modules will be referred to as an ORC.

NOTE: When reconnecting Airbag system components, the ignition must be turned off and the battery must be disconnected.

Select ACTIVE or STORED DTC:

ORC - ACTIVE DTC
Go To 2

ORC - STORED DTC
Go To 5

---

2. MIC COMMUNICATION FAILURE

With the DRBIII®, ensure PCI Bus communications with the Instrument Cluster.

Is the Instrument Cluster communicating on the PCI Bus?

Yes >> Go To 3

No >> (Refer to 8 - ELECTRICAL/ELECTRONIC CONTROL MODULES - DIAGNOSIS AND TESTING) for No Response diagnostic test procedures.
Perform ORC VERIFICATION TEST - VER 1.

AIRBAG WARNING INDICATOR SHORT (CONTINUED)

3. WARNING INDICATOR

With the DRBIII® select PASSIVE RESTRAINTS, AIRBAG, and MONITOR DISPLAY.

Using the DRBIII®, read the WARNING LAMP MONITOR screen.

Select the LAMP STATUS displayed on the DRB monitors screen.

Observe the Lamp Driver State and Actual Lamp State.

Is the LAMP DRIVER and ACTUAL LAMP STATE: OK?

Yes >> Go To 4

No >> Replace the Instrument Cluster in accordance with the Service Information.
Perform ORC VERIFICATION TEST - VER 1.

---

4. ORC, WARNING LAMP CIRCUIT

WARNING: WARNING: TO AVOID PERSONAL INJURY OR DEATH, TURN THE IGNITION OFF, DISCONNECT THE BATTERY AND WAIT TWO MINUTES BEFORE PROCEEDING.

WARNING: WARNING: IF THE OCCUPANT RESTRAINT CONTROLLER IS DROPPED AT ANY TIME, IT MUST BE REPLACED. FAILURE TO TAKE THE PROPER PRECAUTIONS COULD RESULT IN ACCIDENTAL AIRBAG DEPLOYMENT AND PERSONAL INJURY OR DEATH.

If there are no possible causes remaining, view repair.

Repair

Replace the Occupant Restraint Controller (ORC) in accordance with the Service Information.
Perform ORC VERIFICATION TEST - VER 1.

---

5. CHECKING STORED OR INTERMITTENT CODES

With the DRBIII®, record and erase all DTC's from all Airbag modules.

If equipped with Passenger Airbag On - Off switch, read the DTC's in all switch positions.

If any ACTIVE codes are present they must be resolved before diagnosing any stored codes.

WARNING: WARNING: TO AVOID PERSONAL INJURY OR DEATH, TURN THE IGNITION OFF, DISCONNECT THE BATTERY AND WAIT TWO MINUTES BEFORE PROCEEDING.

Using the wiring diagram/schematic as a guide, inspect the wiring and connectors.

Look for chaffed, pierced, pinched, or partially broken wires and broken, bent, pushed out, spread, corroded, or contaminated terminals.

The following additional checks may assist you in identifying a possible intermittent problem.

Reconnect any disconnected components and harness connector.

WARNING: WARNING: TO AVOID PERSONAL INJURY OR DEATH, TURN THE IGNITION ON, THEN RECONNECT THE BATTERY.

With the DRBIII®, monitor active codes as you work through the following steps.

WARNING: WARNING: TO AVOID PERSONAL INJURY OR DEATH, MAINTAIN A SAFE DISTANCE FROM ALL AIRBAGS WHILE PERFORMING THE FOLLOWING STEPS.

Wiggle the wiring harness and connectors of the related airbag circuit or component.

If codes are related to the Driver Airbag circuits, rotate the steering wheel from stop to stop.

If only stored codes return continue the test until the problem area has been isolated.

In the previous steps you have attempted to recreate the conditions responsible for setting active DTC in question.

Are any ACTIVE DTCs present?

Yes >> Select the appropriate diagnostic procedure from the Table of Contents in this section.

No >> No problem found at this time. Erase all codes before returning vehicle to customer.

CALIBRATION MISMATCH

- **When Monitored:**
  With the Ignition on.
- **Set Condition:**
  This DTC will be set when the VIN stored in the PCM does not match the VIN stored in the Occupant Restraint Controller (ORC).

Possible Causes
INCORRECT PCM
OCCUPANT RESTRAINT CONTROLLER (ORC)

Diagnostic Test

1. VERIFY THAT THE DTC IS ACTIVE

Turn the ignition on.

With the scan tool, read ORC DTCs.

NOTE: Ensure the battery is fully charged.

NOTE: When reconnecting Airbag system components, the ignition must be turned off and the battery must be disconnected.

Does the scan tool display active: CALIBRATION MISMATCH?

Yes >> Go To 2

No >> Test Complete.

---

2. CHECK VIN IN PCM

With the scan tool compare the VIN that is programmed into the PCM to the VIN stored in the ORC.

Does the VIN programmed into the PCM match the VIN stored in the ORC?

Yes >> Go To 3

No >> Replace and program the Powertrain Control Module in accordance with the service information. Ensure the PCM is replaced with the correct vehicle line PCM.
Perform POWERTRAIN VERIFICATION TEST.

---

3. REPLACE THE OCCUPANT RESTRAINT CONTROLLER

WARNING: To avoid personal injury or death, turn the ignition off, disconnect the battery and wait two minutes before proceeding.

WARNING: If the occupant restraint controller is dropped at any time, it must be replaced. Failure to take the proper precautions can result in accidental airbag deployment and personal injury or death.

View repair.

Repair

Replace the Occupant Restraint Controller in accordance with the service information.
Perform the ORC VERIFICATION TEST-VER 1.

CLUSTER MESSAGE MISMATCH

For a complete wiring diagram **Refer to Section 8W**.

- **When Monitored:**
  After the Instrument Cluster bulb check is completed, the ORC compares the lamp request by the ORC (On or Off) and the Lamp On request by the Instrument Cluster (On or Off) bus messages. Each message is transmitted one time per second or when a change in the lap state occurs.
- **Set Condition:**
  If the lamp request by the ORC (On or Off), and the Lamp On by the Instrument Cluster (On or Off), messages do not match, this code will set.

Possible Causes
OCCUPANT RESTRAINT CONTROLLER, INSTRUMENT CLUSTER MESSAGE MISMATCH
INSTRUMENT CLUSTER
OCCUPANT RESTRAINT CONTROLLER

Diagnostic Test

1. CHECK FOR AN ACTIVE DTC

NOTE: Ensure the battery is fully charged.

NOTE: When reconnecting Airbag system components, the ignition must be turned off and the battery must be disconnected.

Turn the ignition on, then off, and then on again.

With the scan tool, read Occupant Restraint Controller (ORC) DTCs.

Select DTC type.

Active
Go To 2

Stored
Go To 5

---

2. CHECK FOR ACTIVE INSTRUMENT CLUSTER DTCs

With the scan tool, read Instrument Cluster DTCs.

Does the scan tool display any active Instrument Cluster DTCs?

Yes >> (Refer to 8 - ELECTRICAL/INSTRUMENT CLUSTER - DIAGNOSIS AND TESTING) for the diagnostic test procedures.
Perform the ORC VERIFICATION TEST-VER 1.

No >> Go To 3

CLUSTER MESSAGE MISMATCH (CONTINUED)

3. CHECK THE ORC AND INSTRUMENT CLUSTER FOR LAMP STATUS

With the scan tool view the Instrument Cluster Data Display.

Cycle the ignition key and observe the SRS Indicator Lamp Request status (Set/Not Set) during the Instrument Cluster bulb check.

With the scan tool view the ORC Data Display.

Cycle the ignition key and observe the SRS Indicator Lamp Status (Lamp On/Lamp Off) during the Instrument Cluster bulb check.

Did the Data Display information match the operation of the lamp?

Yes >> Go To 4

No >> Replace the Instrument Cluster in accordance with the service information.
Perform the ORC VERIFICATION TEST-VER 1.

---

4. REPLACE THE OCCUPANT RESTRAINT CONTROLLER

WARNING: To avoid personal injury or death, turn the ignition off, disconnect the battery and wait two minutes before proceeding.

WARNING: If the Occupant Restraint Controller is dropped at any time, it must be replaced. Failure to take the proper precautions could result in accidental airbag deployment and personal injury or death.

If there are no possible causes remaining, view repair.

Repair

Replace the Occupant Restraint Controller in accordance with the service information.
Perform the ORC VERIFICATION TEST-VER 1.

---

5. TEST FOR INTERMITTENT CONDITION

With the scan tool, record and erase all DTCs from all Airbag modules.

If any ACTIVE codes are present they must be resolved before diagnosing any stored codes.

WARNING: To avoid personal injury or death, turn the ignition off, disconnect the battery and wait two minutes before proceeding.

Using the wiring diagram/schematic as a guide, inspect the wiring and connectors.

Look for chaffed, pierced, pinched, or partially broken wires and broken, bent, pushed out, spread, corroded, or contaminated terminals.

The following additional checks may assist you in identifying a possible intermittent problem.

Reconnect any disconnected components and harness connector.

WARNING: To avoid personal injury or death, turn the ignition on, then reconnect the battery.

With the scan tool, monitor active codes as you work through the following steps.

WARNING: To avoid personal injury or death, maintain a safe distance from all airbags while performing the following steps.

Wiggle the wiring harness and connectors of the related airbag circuit or component.

If codes are related to the Driver Airbag circuits, rotate the steering wheel from stop to stop.

If only stored codes return, continue the test until the problem area has been isolated.

In the previous steps you have attempted to recreate the conditions responsible for setting the active DTC in question.

Does the scan tool display any ACTIVE DTCs?

Yes >> Select appropriate symptom from Symptom List.

No >> No problem found at this time. Erase all codes before returning vehicle to customer.

DEPLOYMENT DATA RECORD FULL

For a complete wiring diagram **Refer to Section 8W**.

- **When Monitored:**
  With the ignition on. The module's on board diagnostics continuously performs internal circuit tests.
- **Set Condition:**
  This DTC will set if the module identifies an out of range internal circuit.

Possible Causes
OCCUPANT RESTRAINT CONTROLLER

Diagnostic Test

1. CHECK FOR ACTIVE DTC

Turn the ignition on.
With the scan tool, read ORC DTCs.

Is the Deployment Data Record Full DTC active?

Yes >> Go To 2

No >> Test complete.

---

2. REPLACE THE OCCUPANT RESTRAINT CONTROLLER

WARNING: To avoid personal injury or death, turn the ignition off, disconnect the battery and wait two minutes before proceeding.

WARNING: If the occupant restraint controller is dropped at any time, it must be replaced. Failure to take the proper precautions can result in accidental airbag deployment and personal injury or death.

View repair.

Repair

Replace the Occupant Restraint Controller in accordance with the service information.
Perform the ORC VERIFICATION TEST-VER 1.

DRIVER SEAT BELT TENSIONER CIRCUIT OPEN

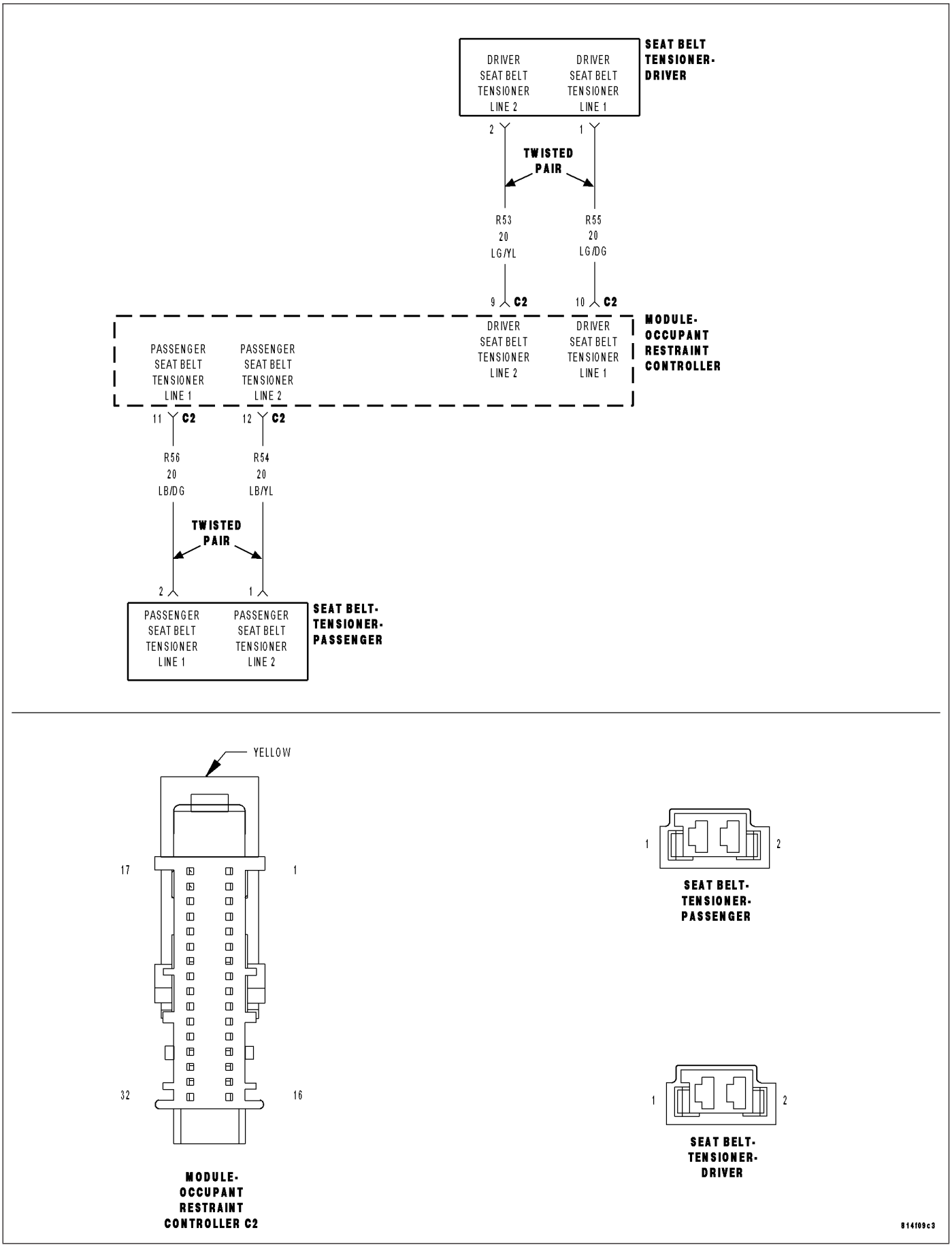

DRIVER SEAT BELT TENSIONER CIRCUIT OPEN (CONTINUED)

For the Air Bag System circuit diagram (Refer to 8 - ELECTRICAL/RESTRAINTS - SCHEMATICS AND DIAGRAMS).

For a complete wiring diagram **Refer to Section 8W**.

- **When Monitored:**
  With the ignition on, the Occupant Restraint Controller (ORC) monitors the resistance of the Driver Seat Belt Tensioner circuits.
- **Set Condition:**
  The ORC has detected an open or high resistance on the Driver Seat Belt Tensioner circuits.

Possible Causes
(R55) DRIVER SEAT BELT TENSIONER LINE 1 CIRCUIT OR (R53) DRIVER SEAT BELT TENSIONER LINE 2 CIRCUIT OPEN
DRIVER SEAT BELT PRETENSIONER
ORC

Diagnostic Test

1. DETERMINE ACTIVE OR STORED DTC

NOTE: Ensure the battery is fully charged.

NOTE: The scan tool, SRS Airbag Load Tool MRL 8443, and DVOM are required to perform the following test.

NOTE: When reconnecting airbag system components the Ignition must be turned off and the Battery must be disconnected.

Select Active or Stored DTC.

Is the DTC active or stored?

ORC - ACTIVE DTC
Go To 2

ORC - STORED DTC
Go To 6

DRIVER SEAT BELT TENSIONER CIRCUIT OPEN (CONTINUED)

2. CHECK FOR OPEN DRIVER SEAT BELT PRETENSIONER

WARNING: To avoid personal injury or death, turn the ignition off, disconnect the battery and wait two minutes before proceeding.
Disconnect the Driver Seat Belt Pretensioner connector.

NOTE: Check connectors - Clean and repair as necessary.
Connect the 8443 Load Tool and appropriate Jumper to the Driver Seat Belt Pretensioner connector.

WARNING: To avoid personal injury or death, turn the ignition on, then reconnect the battery.
With the scan tool, read the active ORC DTC's.

Does the scan tool display: DRIVER SEAT BELT TENSIONER CIRCUIT OPEN?

Yes >> Go To 3

No >> Replace the Driver Seat Belt Pretensioner in accordance with the Service Information.
Perform ORC VERIFICATION TEST - VER 1

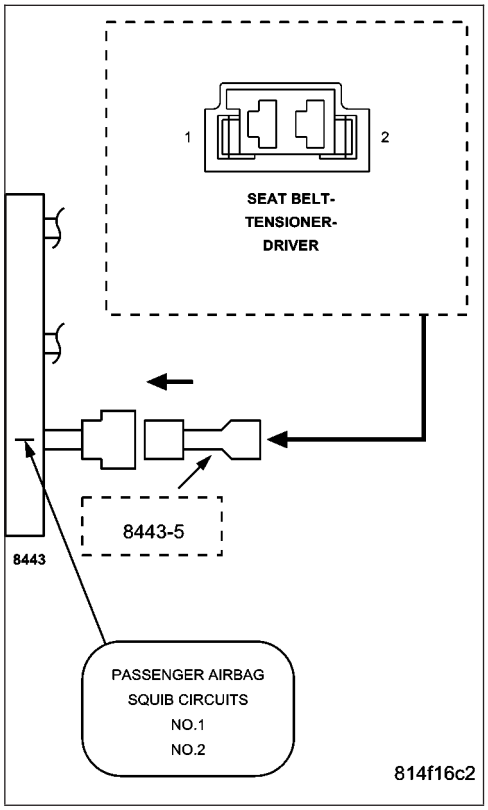

3. CHECK (R55) DRIVER SEAT BELT TENSIONER LINE 1 CIRCUIT FOR AN OPEN

WARNING: To avoid personal injury or death, turn the ignition off, disconnect the battery and wait two minutes before proceeding.
Disconnect the 8443 Load Tool and Jumper from the Driver Seat Belt Pretensioner connector.

Disconnect the ORC connectors.

NOTE: Check connectors - Clean and repair as necessary.
Connect the 8443 Load Tool ORC Adaptor to the ORC connector.

Measure the resistance of the (R55) Driver Seat Belt Tensioner Line 1 circuit between the Driver Seat Belt Pretensioner connector and the 8443 ORC Adaptor.

Is the resistance below 1.0 ohm?

Yes >> Go To 4

No >> Repair the (R55) Driver Seat Belt Tensioner Line 1 circuit for and open. Then Go To 4

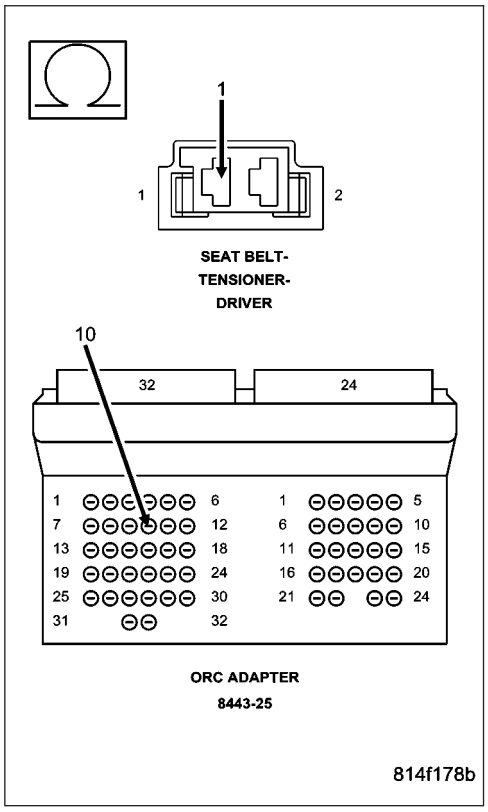

DRIVER SEAT BELT TENSIONER CIRCUIT OPEN (CONTINUED)

4. CHECK (R53) DRIVER SEAT BELT TENSIONER LINE 2 CIRCUIT FOR AN OPEN

Measure the resistance of the (R53) Driver Seat Belt Tensioner Line 2 circuit between the Driver Seat Belt Pretensioner connector and the 8443 ORC Adaptor.

Is the resistance below 1.0 ohm?

Yes >> Go To 5

No >> Repair the (R53) Driver Seat Belt Tensioner Line 2 circuit for and open.
Perform ORC VERIFICATION TEST - VER 1

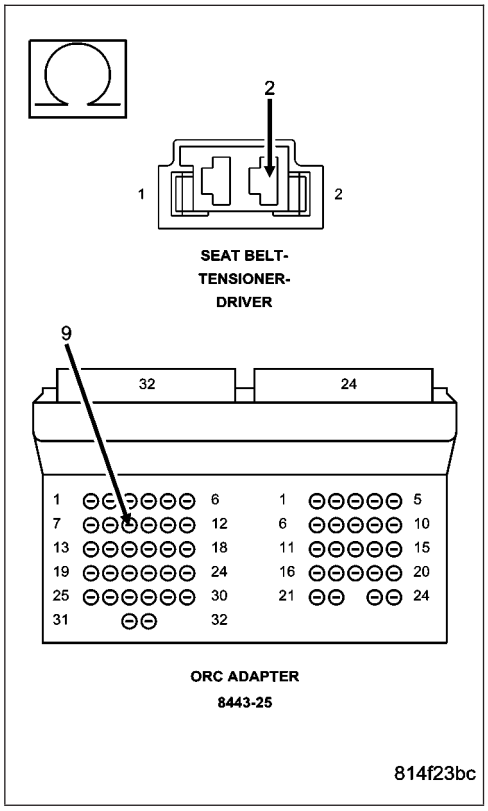

5. REPLACE THE ORC

WARNING: If the Occupant Restraint Controller (ORC) is dropped at any time, it must be replaced. Failure to take the proper precautions can result in accidental airbag deployment and personal injury or death.

NOTE: When reconnecting airbag system components the Ignition must be turned off and the Battery must be disconnected.

Repair

Replace the ORC in accordance with Service Information.
Perform ORC VERIFICATION TEST - VER 1

DRIVER SEAT BELT TENSIONER CIRCUIT OPEN (CONTINUED)

6. STORED ORC DTC

With the scan tool, record and erase all DTC's from all Airbag System Modules.

If any ACTIVE codes are present they must be resolved before diagnosing any stored codes.

WARNING: TO AVOID PERSONAL INJURY OR DEATH, TURN THE IGNITION OFF, DISCONNECT THE BATTERY AND WAIT TWO MINUTES BEFORE PROCEEDING.

Using the wiring diagram/schematic as a guide, inspect the wiring and connectors.

Look for chaffed, pierced, pinched, or partially broken wires and broken, bent, pushed out, spread, corroded, or contaminated terminals.

The following additional checks may assist you in identifying a possible intermittent problem.

Reconnect any disconnected components and harness connector.

WARNING: TO AVOID PERSONAL INJURY OR DEATH, TURN THE IGNITION ON, THEN RECONNECT THE BATTERY.

With the scan tool monitor active codes as you work through the following steps.

Wiggle the wiring harness and connectors of the related airbag circuit or component.

If codes are related to the Driver Airbag circuits, rotate the steering wheel from stop to stop.

If only stored codes return continue the test until the problem area has been isolated.

In the previous steps you have attempted to recreate the conditions responsible for setting active DTC in question.

Are any ACTIVE DTCs present?

Yes >> Select the appropriate diagnostic procedure from the Table of Contents in this section.

No >> No problem found at this time. Erase all codes before returning vehicle to customer.

DRIVER SEAT BELT TENSIONER CIRCUIT SHORT

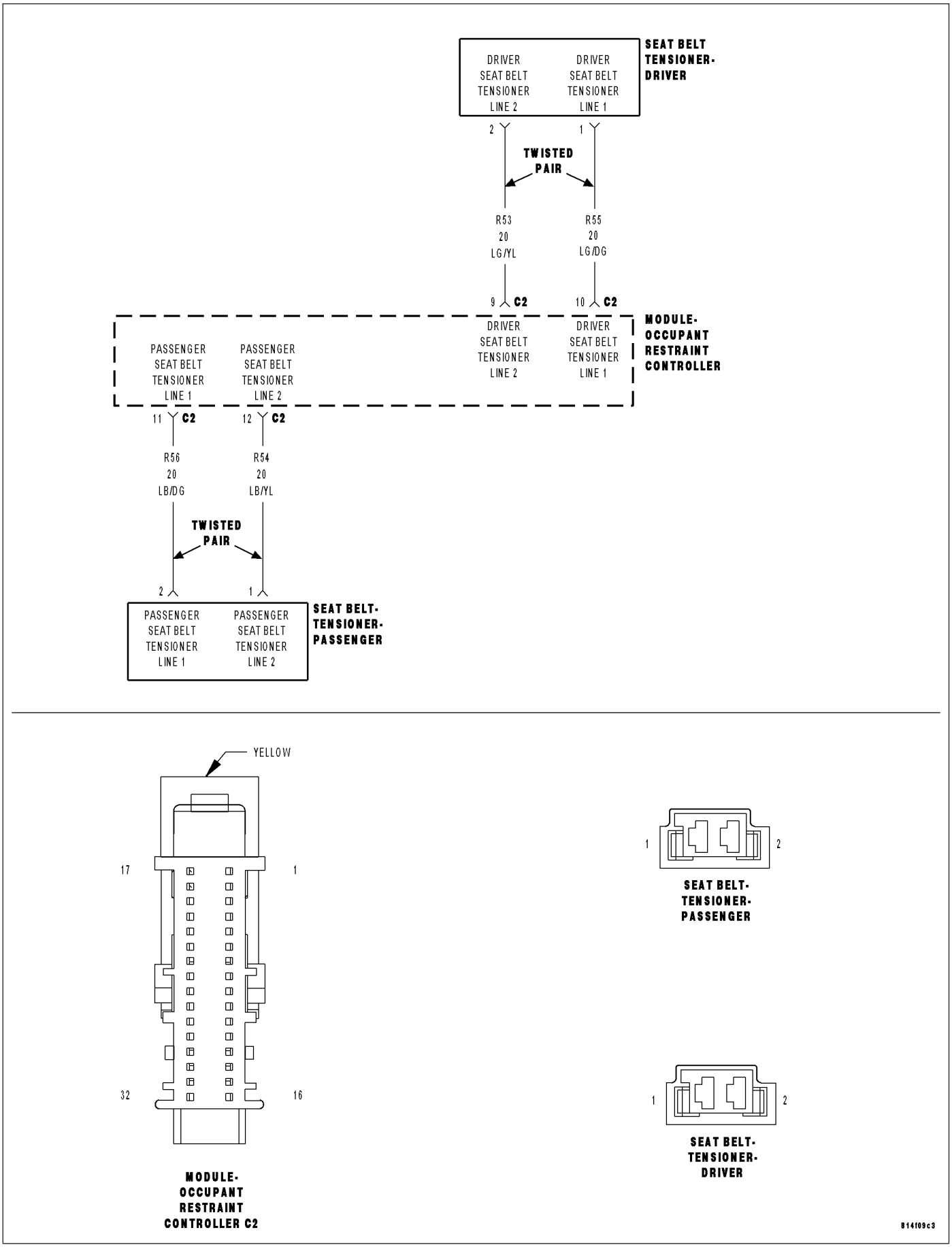

DRIVER SEAT BELT TENSIONER CIRCUIT SHORT (CONTINUED)

For the Air Bag System circuit diagram (Refer to 8 - ELECTRICAL/RESTRAINTS - SCHEMATICS AND DIAGRAMS).

For a complete wiring diagram **Refer to Section 8W**.

- **When Monitored:**
  With the ignition on, the Occupant Restraint Controller (ORC) monitors the resistance of the Driver Seat Belt Tensioner circuits.
- **Set Condition:**
  The ORC has detected low resistance between the Driver Seat Belt Tensioner circuits.

Possible Causes
(R55) DRIVER SEAT BELT TENSIONER LINE 1 CIRCUIT SHORTED TO (R53) DRIVER SEAT BELT TENSIONER LINE 2 CIRCUIT
DRIVER SEAT BELT PRETENSIONER
ORC

Diagnostic Test

1. SELECT ACTIVE OR STORED DTC

NOTE: Ensure the battery is fully charged.

NOTE: The scan tool, SRS Airbag Load Tool MRL 8443, and DVOM are required to perform the following test.

NOTE: When reconnecting airbag system components the Ignition must be turned off and the Battery must be disconnected.

Select Active or Stored DTC.

Is the DTC active or stored?

ORC - ACTIVE DTC
Go To 2

ORC - STORED DTC
Go To 5

DRIVER SEAT BELT TENSIONER CIRCUIT SHORT (CONTINUED)

2. CHECK FOR SHORTED DRIVER SEAT BELT PRETENSIONER

WARNING: To avoid personal injury or death, turn the ignition off, disconnect the battery and wait two minutes before proceeding.
Disconnect the Driver Seatbelt Pretensioner connector.

NOTE: Check connectors - Clean and repair as necessary.
Connect the 8443 Load Tool and appropriate Jumper to the Driver Seat Belt Pretensioner connector.

WARNING: To avoid personal injury or death, turn the ignition on then reconnect the battery.
With the scan tool, read the active ORC DTC's.

Does the scan tool display: DRIVER SEAT BELT TENSIONER CIRCUIT SHORT?

Yes >> Go To 3

No >> Replace the Driver Seat Belt Pretensioner in accordance with the Service Information.
Perform ORC VERIFICATION TEST - VER 1

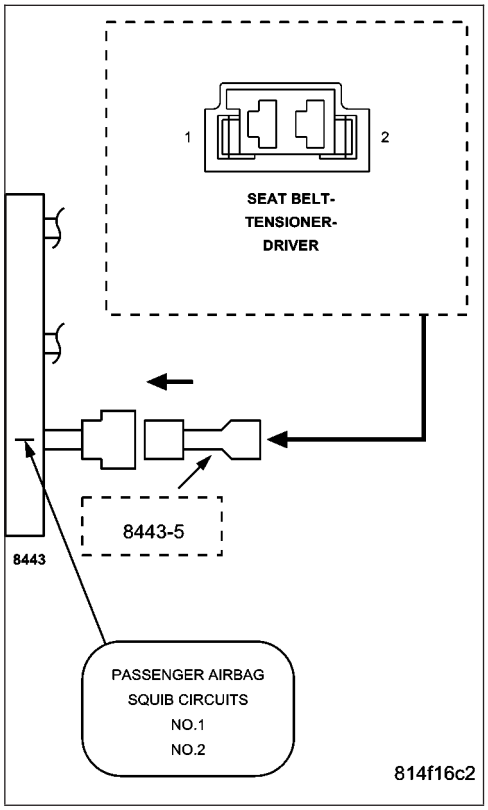

3. CHECK (R55) DRIVER SEAT BELT TENSIONER LINE 1 CIRCUIT FOR A SHORT TO (R53) DRIVER SEAT BELT TENSIONER LINE 2 CIRCUIT

WARNING: To avoid personal injury or death, turn the ignition off, disconnect the battery and wait two minutes before proceeding.
Disconnect the 8443 Load Tool and Jumper from the Driver Seat Belt Pretensioner connector.

Disconnect the ORC connectors.

NOTE: Check connectors - Clean and repair as necessary.
Connect the 8443 Load Tool ORC Adaptor to the ORC connector.

Measure the resistance between the (R55) Driver Seat Belt Tensioner Line 1 circuit and the (R53) Driver Seat Belt Tensioner Line 2 circuit at the Driver Seat Belt Pretensioner connector.

Is the resistance below 10K ohms?

Yes >> Repair the (R55) Driver Seat Belt Tensioner Line 1 circuit for a short to the (R53) Driver Seat Belt Tensioner Line 2 circuit.
Perform ORC VERIFICATION TEST - VER 1

No >> Go To 4

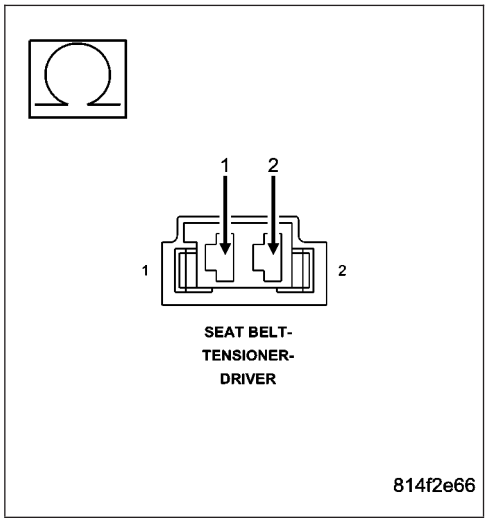

DRIVER SEAT BELT TENSIONER CIRCUIT SHORT (CONTINUED)

4. REPLACE THE ORC

WARNING: If the Occupant Restraint Controller (ORC) is dropped at any time, it must be replaced. Failure to take the proper precautions can result in accidental airbag deployment and personal injury or death.

NOTE: When reconnecting airbag system components the Ignition must be turned off and the Battery must be disconnected.

Repair

Replace the ORC in accordance with the Service Information.

Perform ORC VERIFICATION TEST - VER 1

---

5. STORED ORC DTC

With the scan tool, record and erase all DTC's from all Airbag System Modules.

If any ACTIVE codes are present they must be resolved before diagnosing any stored codes.

WARNING: To avoid personal injury or death, turn the ignition off, disconnect the battery and wait two minutes before proceeding.

Using the wiring diagram/schematic as a guide, inspect the wiring and connectors.

Look for chaffed, pierced, pinched, or partially broken wires and broken, bent, pushed out, spread, corroded, or contaminated terminals.

The following additional checks may assist you in identifying a possible intermittent problem.

Reconnect any disconnected components and harness connector.

WARNING: To avoid personal injury or death, turn the ignition on, then reconnect the battery.

With the scan tool monitor active codes as you work through the following steps.

Wiggle the wiring harness and connectors of the related airbag circuit or component.

If codes are related to the Driver Airbag circuits, rotate the steering wheel from stop to stop.

If only stored codes return continue the test until the problem area has been isolated.

In the previous steps you have attempted to recreate the conditions responsible for setting active DTC in question.

Are any ACTIVE DTC's present?

Yes >> Select the appropriate diagnostic procedure from the Table of Contents in this section.

No >> No problem found at this time. Erase all codes before returning vehicle to customer.

DRIVER SEAT BELT TENSIONER SHORT TO BATTERY

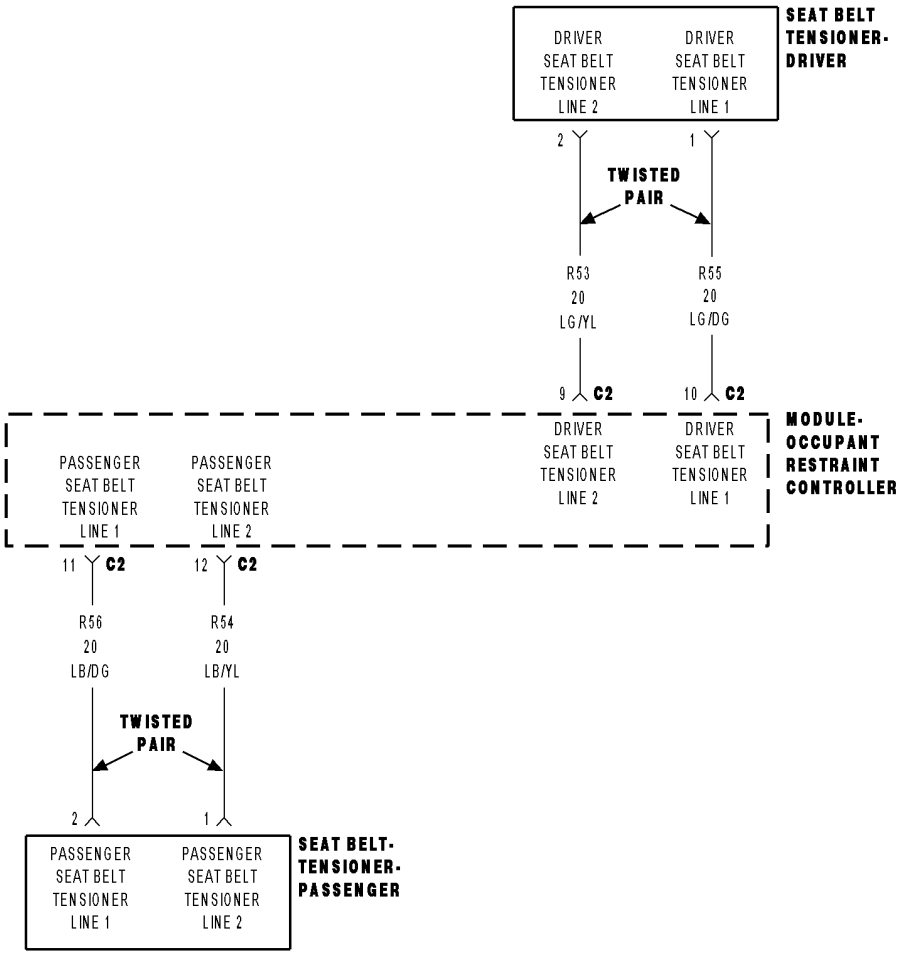

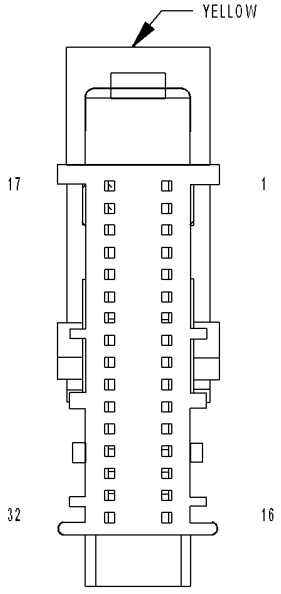

MODULE-OCCUPANT RESTRAINT CONTROLLER C2

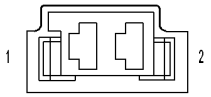

SEAT BELT-TENSIONER-PASSENGER

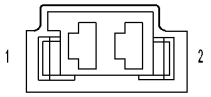

SEAT BELT-TENSIONER-DRIVER

814f09c3

DRIVER SEAT BELT TENSIONER SHORT TO BATTERY (CONTINUED)

For the Air Bag System circuit diagram (Refer to 8 - ELECTRICAL/RESTRAINTS - SCHEMATICS AND DIAGRAMS).

For a complete wiring diagram **Refer to Section 8W**.

- **When Monitored:**
  With the ignition on, the Occupant Restraint Controller (ORC) monitors the voltage on the Driver Seat Belt Tensioner circuits.
- **Set Condition:**
  The ORC detects voltage on the Driver Seat Belt Tensioner circuits.

Possible Causes
(R55) DRIVER SEAT BELT TENSIONER LINE 1 CIRCUIT OR (R53) DRIVER SEAT BELT TENSIONER LINE 2 CIRCUIT SHORTED TO BATTERY
DRIVER SEAT BELT PRETENSIONER
ORC

Diagnostic Test

1. DETERMINE ACTIVE OR STORED DTC

NOTE: Ensure the battery is fully charged.

NOTE: The scan tool, SRS Airbag Load Tool MRL 8443, and DVOM are required to perform the following test.

NOTE: When reconnecting airbag system components the Ignition must be turned off and the Battery must be disconnected.

Select Active or Stored DTC.

Is the DTC active or stored?

ORC - ACTIVE DTC
Go To 2

ORC - STORED DTC
Go To 5

DRIVER SEAT BELT TENSIONER SHORT TO BATTERY (CONTINUED)

2. CHECK FOR SHORTED DRIVER SEAT BELT PRETENSIONER

WARNING: To avoid personal injury or death, turn the ignition off, disconnect the battery and wait two minutes before proceeding.
Disconnect the Driver Seat Belt Pretensioner connector.

NOTE: Check connectors - Clean and repair as necessary.
Connect the 8443 Load Tool and appropriate Jumper to the Driver Seat Belt Pretensioner connector.

WARNING: To avoid personal injury or death, turn the ignition on, then reconnect the battery.
With the scan tool, read the active ORC DTC's.

Does the scan tool display: DRIVER SEAT BELT TENSIONER SHORT TO BATTERY?

Yes >> Go To 3

No >> Replace the Driver Seat Belt Pretensioner in accordance with the Service Information.
Perform ORC VERIFICATION TEST - VER 1

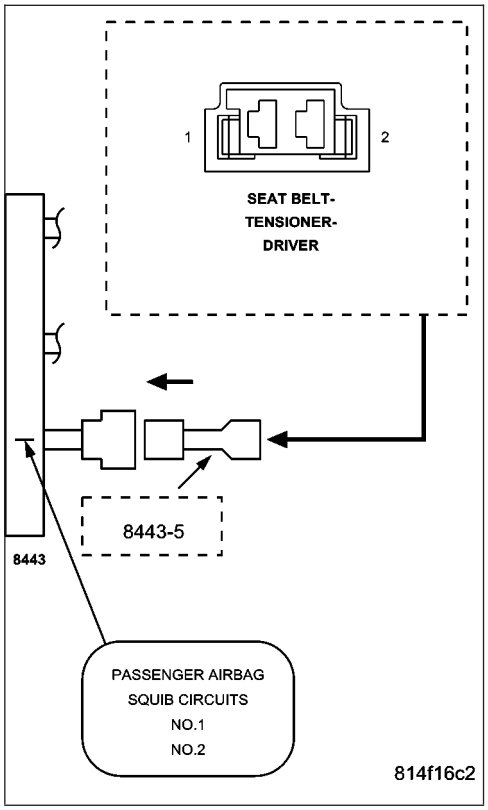

3. CHECK (R55) DRIVER SEAT BELT TENSIONER LINE 1 CIRCUIT AND (R53) DRIVER SEAT BELT TENSIONER LINE 2 CIRCUIT FOR A SHORT TO BATTERY

WARNING: To avoid personal injury or death, turn the ignition off, disconnect the battery and wait two minutes before proceeding.
Disconnect the 8443 Load Tool and Jumper from the Driver Seat Belt Pretensioner connector.

Disconnect the ORC connectors.

NOTE: Check connectors - Clean and repair as necessary.
Connect the 8443 Load Tool ORC Adaptor to the ORC connector.

Measure the voltage of the (R55) Driver Seat Belt Tensioner Line 1 circuit between the Driver Seat Belt Pretensioner connector and ground.

Measure the voltage of the (R53) Driver Seat Belt Tensioner Line 2 circuit between the Driver Seat Belt Pretensioner connector and ground.

Is there any voltage present on either circuit?

Yes >> Repair the Driver Seat Belt Tensioner circuits with voltage present for a short to battery.
Perform ORC VERIFICATION TEST - VER 1

No >> Go To 4

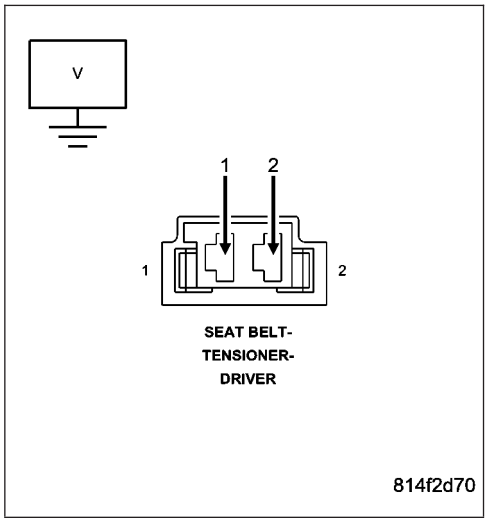

DRIVER SEAT BELT TENSIONER SHORT TO BATTERY (CONTINUED)

4. REPLACE THE ORC

WARNING: To avoid personal injury or death, turn the ignition off, disconnect the battery and wait two minutes before proceeding.

WARNING: If the Occupant Restraint Controller (ORC) is dropped at any time, it must be replaced. Failure to take the proper precautions can result in accidental airbag deployment and personal injury or death.

NOTE: When reconnecting airbag system components the Ignition must be turned off and the Battery must be disconnected.

Repair

Replace the ORC in accordance with the Service Information.

Perform ORC VERIFICATION TEST - VER 1

---

5. STORED ORC DTC

With the scan tool, record and erase all DTC's from all Airbag System Modules.

If any ACTIVE codes are present they must be resolved before diagnosing any stored codes.

WARNING: To avoid personal injury or death, turn the ignition off, disconnect the battery and wait two minutes before proceeding.

Using the wiring diagram/schematic as a guide, inspect the wiring and connectors.

Look for chaffed, pierced, pinched, or partially broken wires and broken, bent, pushed out, spread, corroded, or contaminated terminals.

The following additional checks may assist you in identifying a possible intermittent problem.

Reconnect any disconnected components and harness connector.

WARNING: To avoid personal injury or death, turn the ignition on, then reconnect the battery.

With the scan tool monitor active codes as you work through the following steps.

Wiggle the wiring harness and connectors of the related airbag circuit or component.

If codes are related to the Driver Airbag circuits, rotate the steering wheel from stop to stop.

If only stored codes return continue the test until the problem area has been isolated.

In the previous steps you have attempted to recreate the conditions responsible for setting active DTC in question.

Are any ACTIVE DTCs present?

Yes >> Select the appropriate diagnostic procedure from the Table of Contents in this section.

No >> No problem found at this time. Erase all codes before returning vehicle to customer.

DRIVER SEAT BELT TENSIONER SHORT TO GROUND

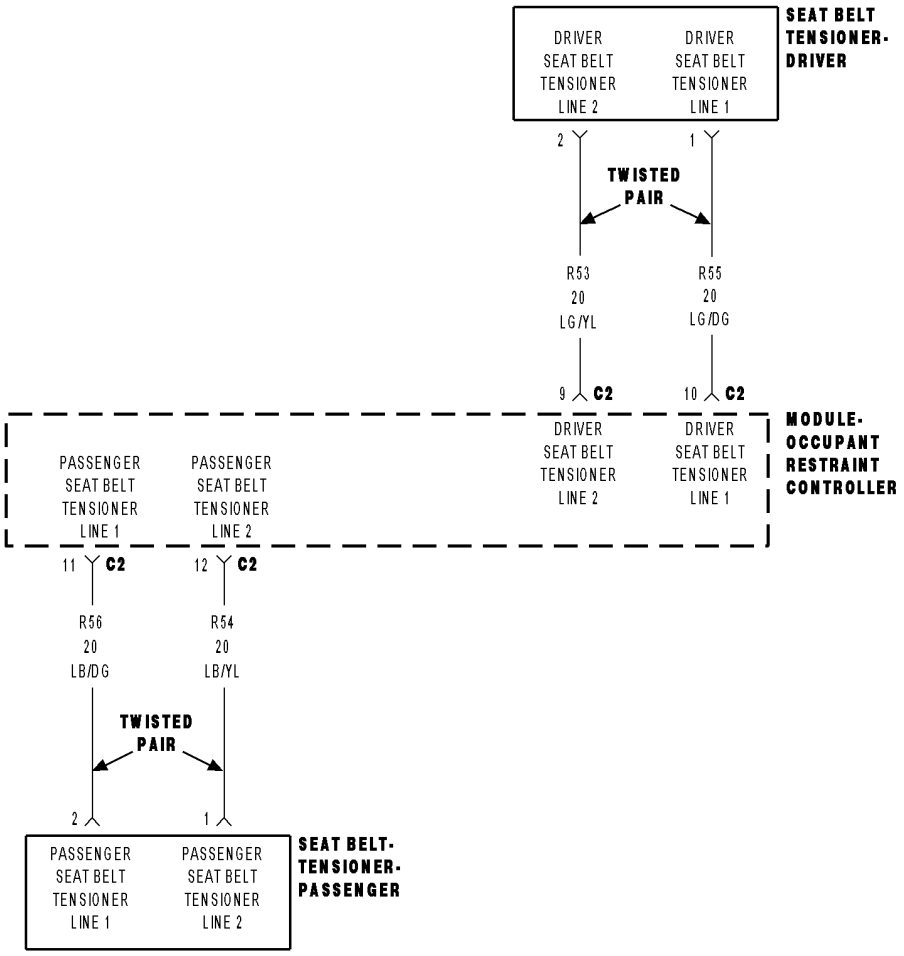

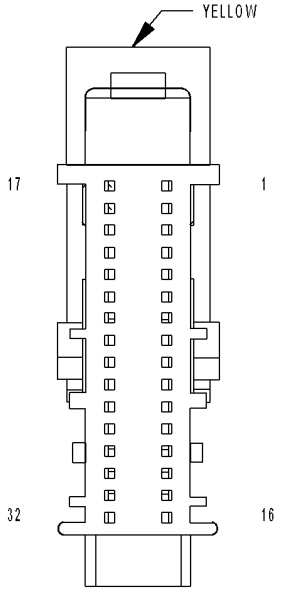

MODULE-OCCUPANT RESTRAINT CONTROLLER C2

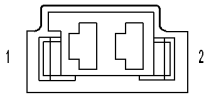

SEAT BELT-TENSIONER-PASSENGER

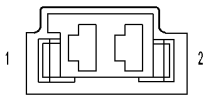

SEAT BELT-TENSIONER-DRIVER

814f09c3

DRIVER SEAT BELT TENSIONER SHORT TO GROUND (CONTINUED)

For the Air Bag System circuit diagram (Refer to 8 - ELECTRICAL/RESTRAINTS - SCHEMATICS AND DIAGRAMS).

For a complete wiring diagram **Refer to Section 8W**.

- **When Monitored:**
  With the ignition on, the Occupant Restraint Controller (ORC) monitors the resistance of the Driver Seat Belt Tensioner circuits.
- **Set Condition:**
  The ORC has detected low resistance on the Driver Seat Belt Tensioner circuits.

Possible Causes
(R55) DRIVER SEAT BELT TENSIONER LINE 1 CIRCUIT OR (R53) DRIVER SEAT BELT TENSIONER LINE 2 CIRCUIT SHORTED TO GROUND
DRIVER SEAT BELT PRETENSIONER
ORC

Diagnostic Test

1. DETERMINE ACTIVE OR STORED DTC

NOTE: Ensure the battery is fully charged.

NOTE: The scan tool, SRS Airbag Load Tool MRL 8443, and DVOM are required to perform the following test.

NOTE: When reconnecting airbag system components the Ignition must be turned off and the Battery must be disconnected.

Select Active or Stored DTC.

Is the DTC active or stored?

ORC - ACTIVE DTC
Go To 2

ORC - STORED DTC
Go To 5

DRIVER SEAT BELT TENSIONER SHORT TO GROUND (CONTINUED)

2. CHECK FOR SHORTED DRIVER SEAT BELT PRETENSIONER

WARNING: To avoid personal injury or death, turn the ignition off, disconnect the battery and wait two minutes before proceeding.
Disconnect the Driver Seat Belt Pretensioner connector.

NOTE: Check connectors - Clean and repair as necessary.
Connect the 8443 Load Tool and appropriate Jumper to the Driver Seat Belt Pretensioner connector.

WARNING: To avoid personal injury or death, turn the ignition on, then reconnect the battery.
With the scan tool, read the active ORC DTC's.

Does the scan tool display: DRIVER SEAT BELT TENSIONER SHORT TO GROUND?

Yes >> Go To 3

No >> Replace the Driver Seat Belt Pretensioner in accordance with the Service Information.
Perform ORC VERIFICATION TEST - VER 1

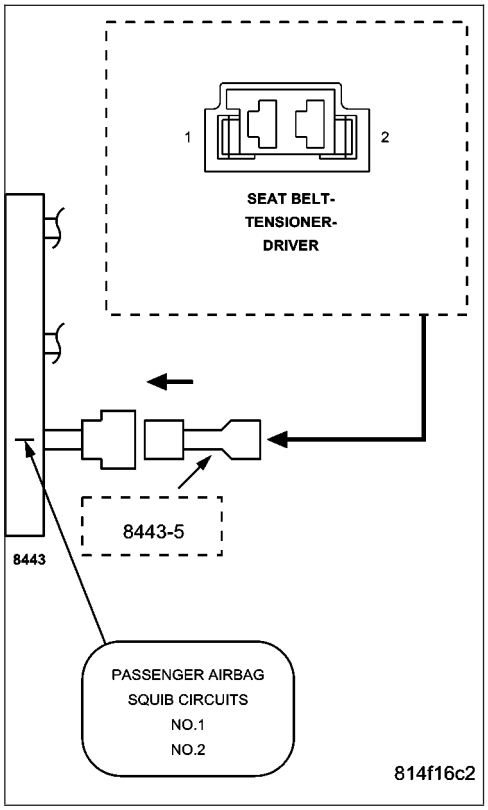

3. CHECK (R55) DRIVER SEAT BELT TENSIONER LINE 1 CIRCUIT AND (R53) DRIVER SEAT BELT TENSIONER LINE 2 CIRCUIT FOR A SHORT TO GROUND

WARNING: To avoid personal injury or death, turn the ignition off, disconnect the battery and wait two minutes before proceeding.
Disconnect the 8443 Load Tool and Jumper from the Driver Seat Belt Pretensioner connector.

Disconnect the ORC connectors.

NOTE: Check connectors - Clean and repair as necessary.
Connect the 8443 Load Tool ORC Adaptor to the ORC connector.

Measure the resistance of the (R55) Driver Seat Belt Tensioner Line 1 circuit between ground and the Driver Seat Belt Pretensioner connector.

Measure the resistance of the (R53) Driver Seat Belt Tensioner Line 2 circuit between ground and the Driver Seat Belt Pretensioner connector.

Is the resistance below 10K ohms on either circuit?

Yes >> Repair the Driver Seat Belt Tensioner circuits with a resistance below 10K ohms for a short to ground.
Perform ORC VERIFICATION TEST - VER 1

No >> Go To 4

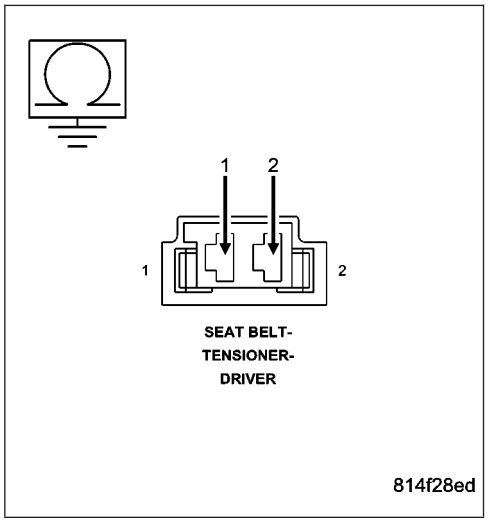

DRIVER SEAT BELT TENSIONER SHORT TO GROUND (CONTINUED)

4. REPLACE THE ORC

WARNING: If the Occupant Restraint Controller (ORC) is dropped at any time, it must be replaced. Failure to take the proper precautions can result in accidental airbag deployment and personal injury or death.

NOTE: When reconnecting airbag system components the Ignition must be turned off and the Battery must be disconnected.

Repair

Replace the ORC in accordance with the Service Information.

Perform ORC VERIFICATION TEST - VER 1

---

5. STORED ORC DTC

With the scan tool, record and erase all DTC's from all Airbag System Modules.

If any ACTIVE codes are present they must be resolved before diagnosing any stored codes.

WARNING: To avoid personal injury or death, turn the ignition off, disconnect the battery and wait two minutes before proceeding.

Using the wiring diagram/schematic as a guide, inspect the wiring and connectors.

Look for chaffed, pierced, pinched, or partially broken wires and broken, bent, pushed out, spread, corroded, or contaminated terminals.

The following additional checks may assist you in identifying a possible intermittent problem.

Reconnect any disconnected components and harness connector.

WARNING: To avoid personal injury or death, turn the ignition on, then reconnect the battery.

With the scan tool monitor active codes as you work through the following steps.

Wiggle the wiring harness and connectors of the related airbag circuit or component.

If codes are related to the Driver Airbag circuits, rotate the steering wheel from stop to stop.

If only stored codes return continue the test until the problem area has been isolated.

In the previous steps you have attempted to recreate the conditions responsible for setting active DTC in question.

Are any ACTIVE DTC's present?

Yes >> Select the appropriate diagnostic procedure from the Table of Contents in this section.

No >> No problem found at this time. Erase all codes before returning vehicle to customer.

DRIVER SQUIB 1 CIRCUIT OPEN

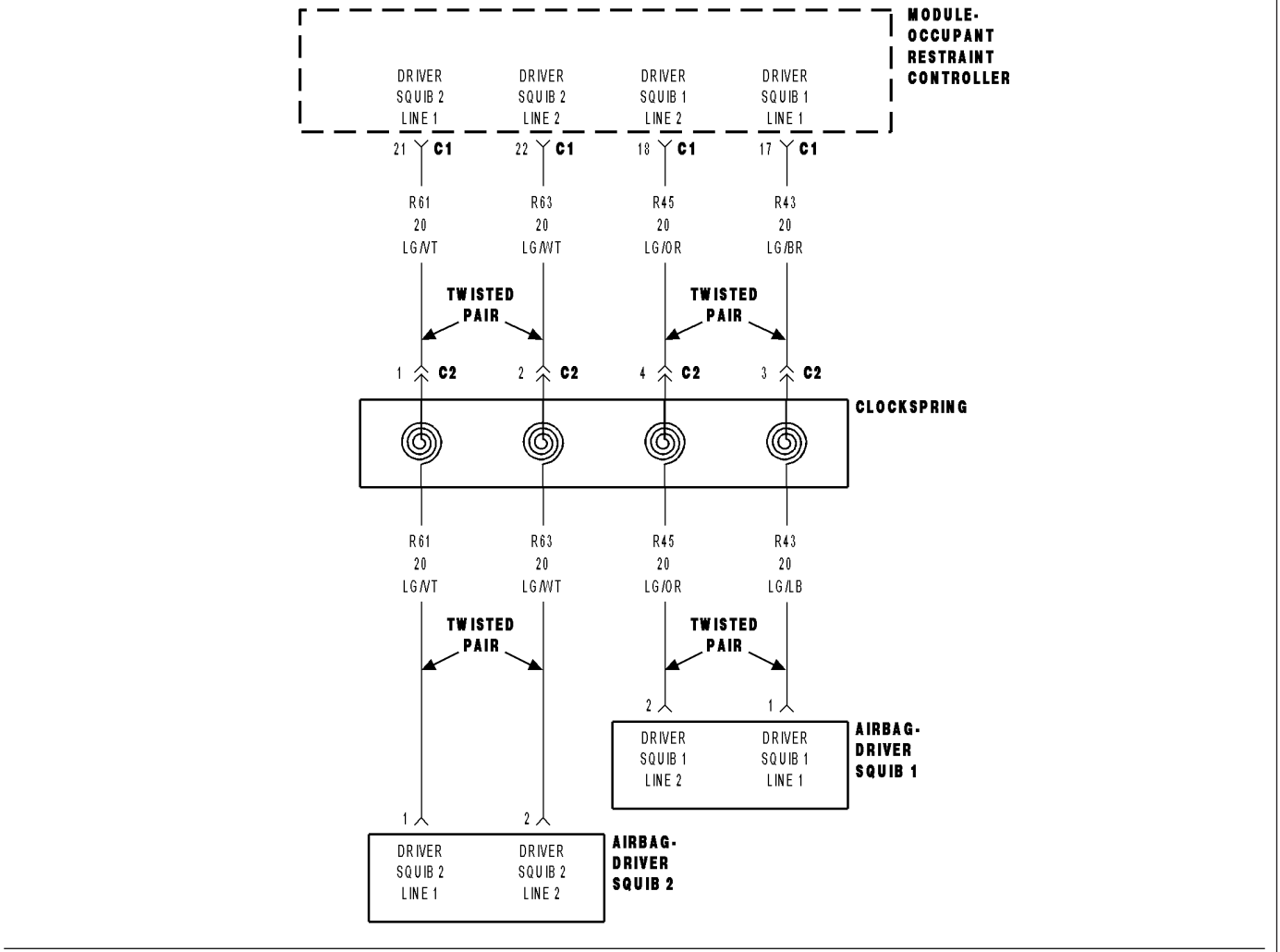

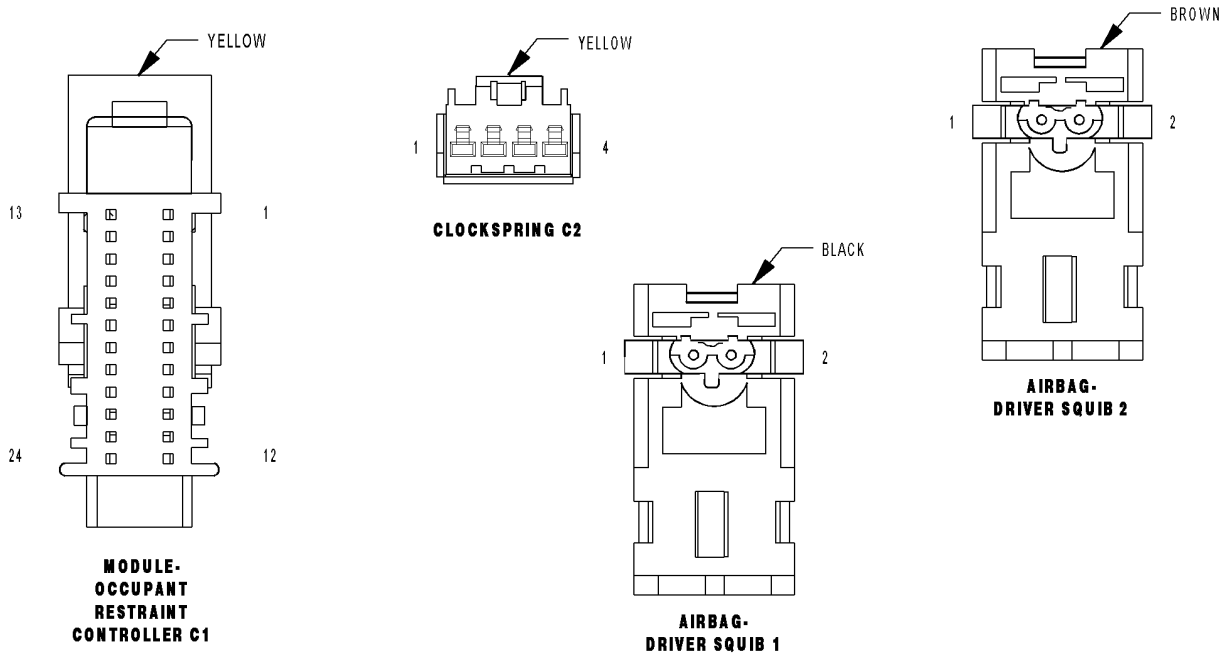

814ec6e6

DRIVER SQUIB 1 CIRCUIT OPEN (CONTINUED)

For the Air Bag System circuit diagram (Refer to 8 - ELECTRICAL/RESTRAINTS - SCHEMATICS AND DIAGRAMS).

For a complete wiring diagram **Refer to Section 8W**.

- **When Monitored:**
  With the ignition on, the Occupant Restraint Controller (ORC) monitors the resistance of the Driver Squib 1 circuits.
- **Set Condition:**
  The ORC has detected an open or high resistance on the Driver Squib 1 circuits.

Possible Causes
DRIVER SQUIB 1 LINE 2 CIRCUIT OPEN
DRIVER SQUIB 1 LINE 1 CIRCUIT OPEN
CLOCKSPRING
DRIVER AIRBAG
ORC

Diagnostic Test

1. DETERMINE ACTIVE OR STORED DTC

NOTE: Ensure the battery is fully charged.

NOTE: The scan tool, SRS Airbag Load Tool MRL 8443, and DVOM are required to perform the following test.

NOTE: When reconnecting airbag system components the Ignition must be turned off and the Battery must be disconnected.

Select Active or Stored DTC.

Is the DTC active or stored?

ORC - ACTIVE DTC
Go To 2

ORC - STORED DTC
Go To 7

DRIVER SQUIB 1 CIRCUIT OPEN (CONTINUED)

2. CHECK FOR OPEN SQUIB CIRCUITS IN DRIVER AIRBAG

WARNING: To avoid personal injury or death, turn the ignition off, disconnect the battery and wait two minutes before proceeding.
Disconnect the Driver Airbag Squib connectors.

WARNING: To avoid personal injury or death, do not place an intact undeployed airbag face down on a hard surface, the airbag will propel into the air if accidentally deployed.

NOTE: Check connectors - Clean and repair as necessary.
Connect the 8443 Load Tool and appropriate Jumper to the Driver Airbag Squib connectors.

WARNING: To avoid personal injury or death, turn the ignition on, then reconnect the battery.
With the scan tool, read the active ORC DTC's.

Does the scan tool display: DRIVER SQUIB 1 CIRCUIT OPEN?

Yes >> Go To 3

No >> Replace the Driver Airbag in accordance with the Service Information.
Perform ORC VERIFICATION TEST - VER 1

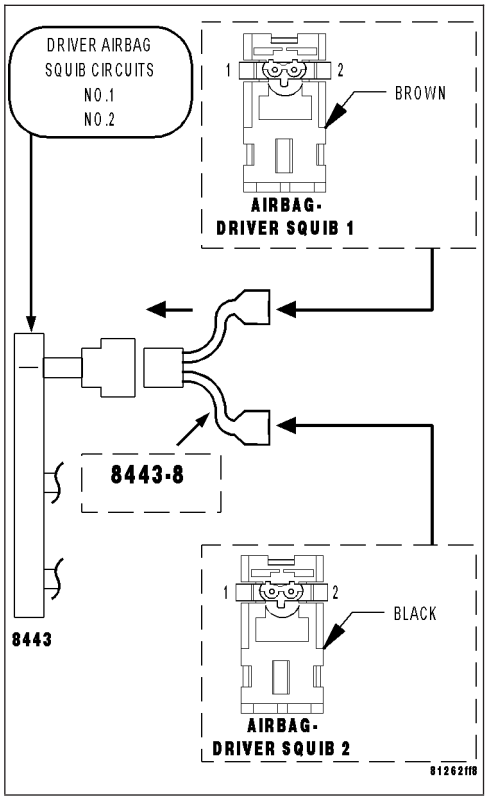

3. CHECK CLOCKSPRING SQUIB CIRCUITS FOR AN OPEN

WARNING: To avoid personal injury or death, turn the ignition off, disconnect the battery and wait two minutes before proceeding.
Disconnect the 8443 Load Tool and Jumper from the Driver Airbag Squib connectors.

Disconnect the Clockspring connector.

NOTE: Check connectors - Clean and repair as necessary.
Connect the 8443 Load Tool and appropriate Jumper to the Clockspring connector.

WARNING: To avoid personal injury or death, turn the ignition on, then reconnect the battery.
With the scan tool, read the active ORC DTC's.

Does the scan tool display: DRIVER SQUIB 1 CIRCUIT OPEN?

Yes >> Go To 4

No >> Replace the Clockspring in accordance with the Service Information.
Perform ORC VERIFICATION TEST - VER 1

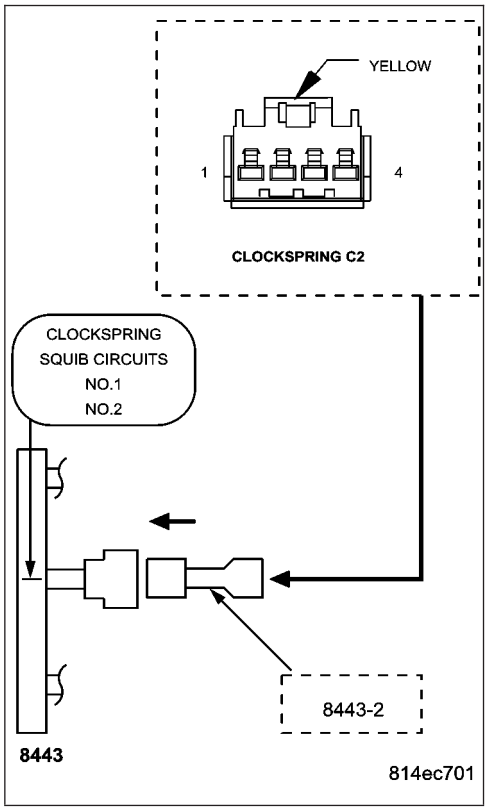

DRIVER SQUIB 1 CIRCUIT OPEN (CONTINUED)

4. CHECK DRIVER SQUIB 1 LINE 2 CIRCUIT FOR AN OPEN

WARNING: To avoid personal injury or death, turn the ignition off, disconnect the battery and wait two minutes before proceeding.

Disconnect the 8443 Load Tool and Jumper from the Clockspring connector.

Disconnect the ORC connectors.

NOTE: Check connectors - Clean and repair as necessary.

Connect the 8443 Load Tool ORC Adaptor to the ORC connector.

Measure the resistance of the Driver Squib 1 Line 2 circuit between the Clockspring connector and the ORC Load Tool Adaptor.

Is the resistance below 1.0 ohm?

Yes >> Go To 5

No >> Repair the Driver Squib 1 Line 2 circuit for an open. Then, Go To 5

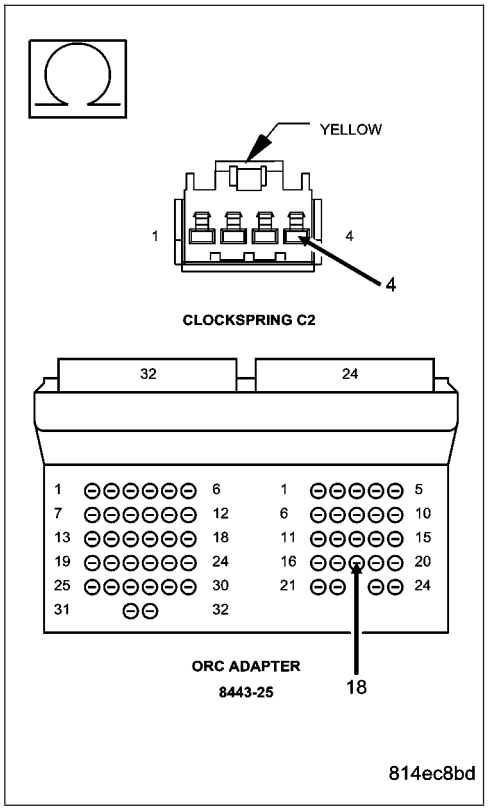

5. CHECK DRIVER SQUIB 1 LINE 1 CIRCUIT FOR AN OPEN

Measure the resistance of the Driver Squib 1 Line 1 circuit between the Clockspring connector and the ORC Load Tool Adaptor.

Is the resistance below 1.0 ohm?

Yes >> Go To 6

No >> Repair the Driver Squib 1 Line 1 circuit for an open. Perform ORC VERIFICATION TEST - VER 1

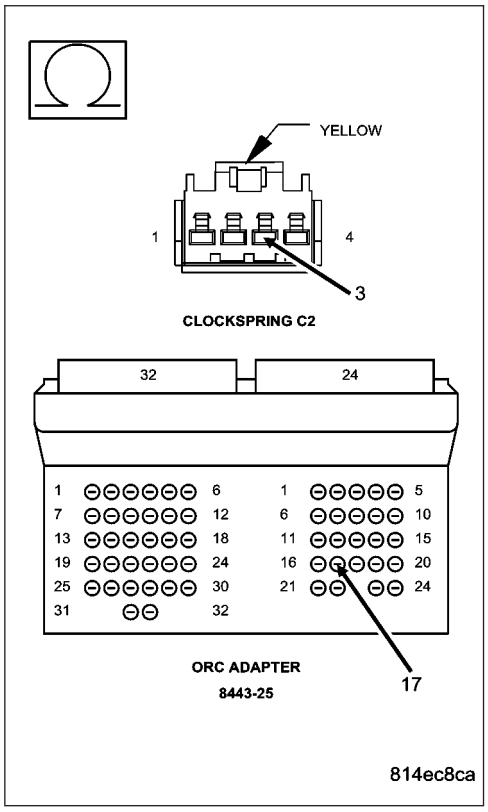

DRIVER SQUIB 1 CIRCUIT OPEN (CONTINUED)

6. REPLACE THE ORC

WARNING: If the Occupant Restraint Controller (ORC) is dropped at any time, it must be replaced. Failure to take the proper precautions can result in accidental airbag deployment and personal injury or death.

NOTE: When reconnecting airbag system components the Ignition must be turned off and the Battery must be disconnected.

Repair

Replace the ORC in accordance with the Service Information.

Perform ORC VERIFICATION TEST - VER 1

---

7. STORED ORC DTC

With the scan tool, record and erase all DTC's from all Airbag System Modules.

If any ACTIVE codes are present they must be resolved before diagnosing any stored codes.

WARNING: To avoid personal injury or death, turn the ignition off, disconnect the battery and wait two minutes before proceeding.

Using the wiring diagram/schematic as a guide, inspect the wiring and connectors.

Look for chaffed, pierced, pinched, or partially broken wires and broken, bent, pushed out, spread, corroded, or contaminated terminals.

The following additional checks may assist you in identifying a possible intermittent problem.

Reconnect any disconnected components and harness connector.

WARNING: To avoid personal injury or death, turn the ignition on, then reconnect the battery.

With the scan tool monitor active codes as you work through the following steps.

Wiggle the wiring harness and connectors of the related airbag circuit or component.

If codes are related to the Driver Airbag circuits, rotate the steering wheel from stop to stop.

If only stored codes return continue the test until the problem area has been isolated.

In the previous steps you have attempted to recreate the conditions responsible for setting active DTC in question.

Are any ACTIVE DTC's present?

Yes >> Select the appropriate diagnostic procedure from the Table of Contents in this section.

No >> No problem found at this time. Erase all codes before returning vehicle to customer.

DRIVER SQUIB 1 CIRCUIT SHORT

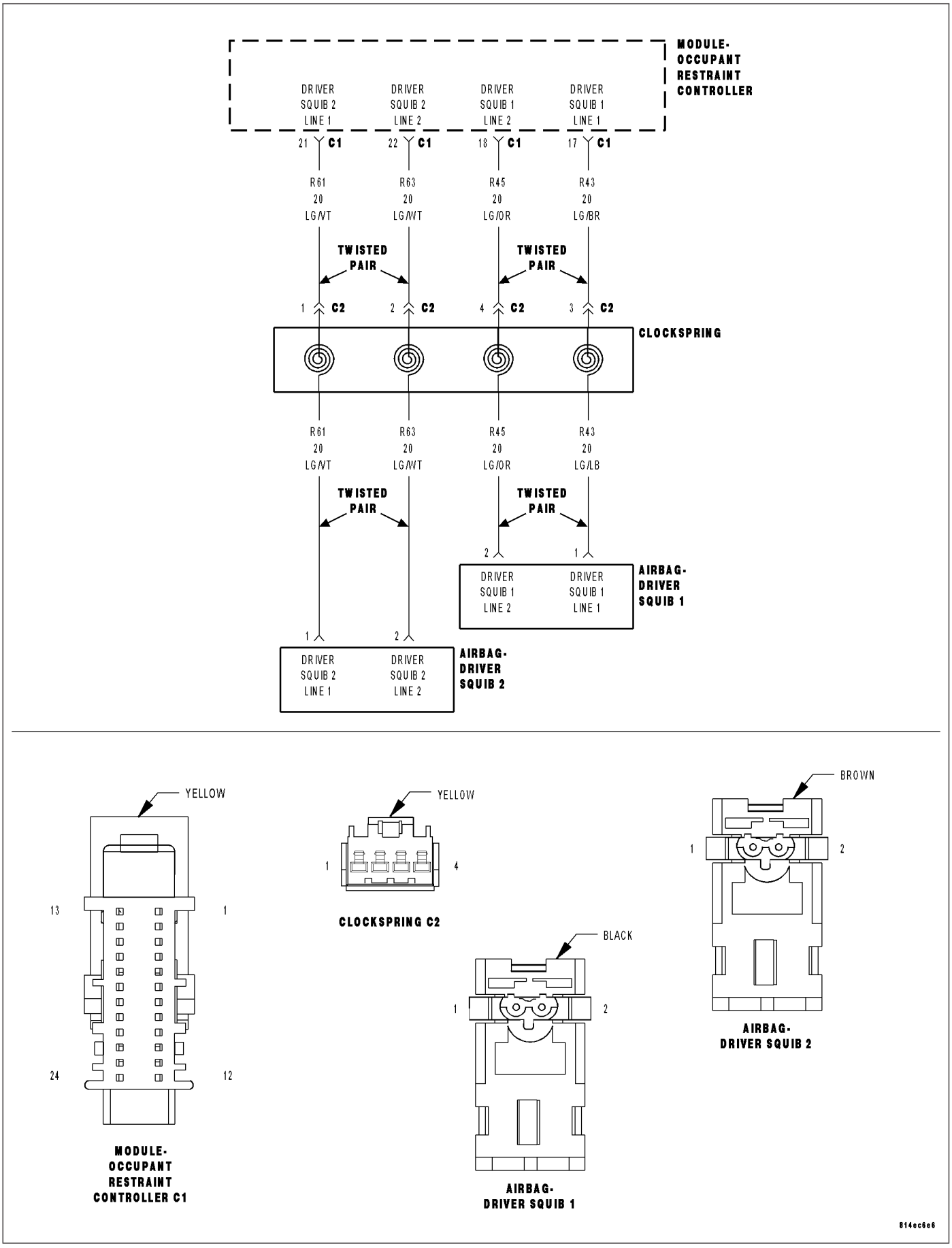

DRIVER SQUIB 1 CIRCUIT SHORT (CONTINUED)

For the Air Bag System circuit diagram (Refer to 8 - ELECTRICAL/RESTRAINTS - SCHEMATICS AND DIAGRAMS).

For a complete wiring diagram **Refer to Section 8W**.

- **When Monitored:**
  With the ignition on, the Occupant Restraint Controller (ORC) monitors the resistance of the Driver Squib 1 circuits.
- **Set Condition:**
  The ORC has detected low resistance between the Driver Squib 1 circuits.

Possible Causes
DRIVER SQUIB 1 LINE 2 CIRCUIT SHORTED TO DRIVER SQUIB 1 LINE 1 CIRCUIT
CLOCKSPRING
DRIVER AIRBAG
ORC

Diagnostic Test

1. DETERMINE ACTIVE OR STORED DTC

NOTE: Ensure the battery is fully charged.

NOTE: The scan tool, SRS Airbag Load Tool MRL 8443, and DVOM are required to perform the following test.

NOTE: When reconnecting airbag system components the Ignition must be turned off and the Battery must be disconnected.

Select Active or Stored DTC.

Is the DTC active or stored?

ORC - ACTIVE DTC
Go To 2

ORC - STORED DTC
Go To 6

DRIVER SQUIB 1 CIRCUIT SHORT (CONTINUED)

2. CHECK FOR SHORTED SQUIB CIRCUITS IN DRIVER AIRBAG

WARNING: To avoid personal injury or death, turn the ignition off, disconnect the battery and wait two minutes before proceeding.

WARNING: To avoid personal injury or death, do not place an intact undeployed airbag face down on a hard surface, the airbag will propel into the air if accidentally deployed.

Disconnect the Driver Airbag Squib connectors.

NOTE: Check connectors - Clean and repair as necessary.

Connect the 8443 Load Tool and appropriate Jumper to the Driver Airbag Squib connectors.

WARNING: To avoid personal injury or death, turn the ignition on, then reconnect the battery.

With the scan tool, read the active ORC DTC's.

Does the scan tool display: DRIVER SQUIB 1 CIRCUIT SHORT?

Yes >> Go To 3

No >> Replace the Driver Airbag in accordance with the Service Information.
Perform ORC VERIFICATION TEST - VER 1

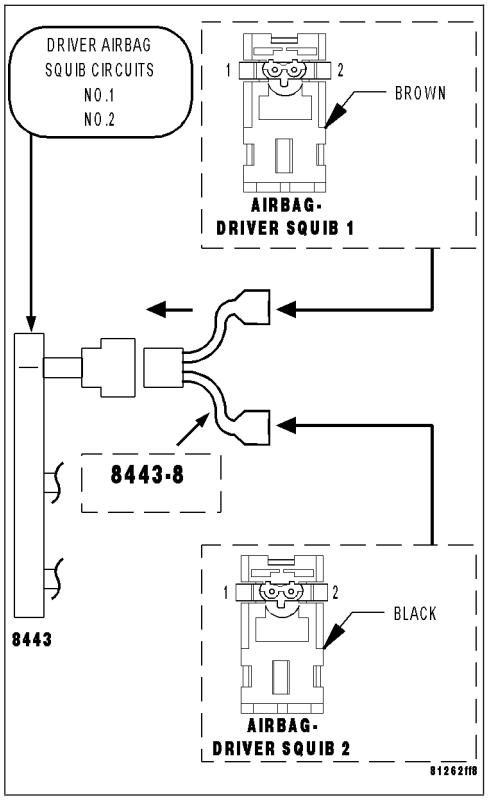

3. CHECK CLOCKSPRING SQUIB CIRCUITS FOR A SHORT TOGETHER

WARNING: To avoid personal injury or death, turn the ignition off, disconnect the battery and wait two minutes before proceeding.

Disconnect the 8443 Load Tool ORC from the Driver Airbag Squib connectors.

Disconnect the Clockspring connector.

NOTE: Check connectors - Clean and repair as necessary.

Connect the 8443 Load Tool and appropriate Jumper to the Clockspring connector.

WARNING: To avoid personal injury or death, turn the ignition on, then reconnect the battery.

With the scan tool, read the active ORC DTC's.

Does the scan tool display: DRIVER SQUIB 1 CIRCUIT SHORT?

Yes >> Go To 4

No >> Replace the Clockspring in accordance with the Service Information.
Perform ORC VERIFICATION TEST - VER 1

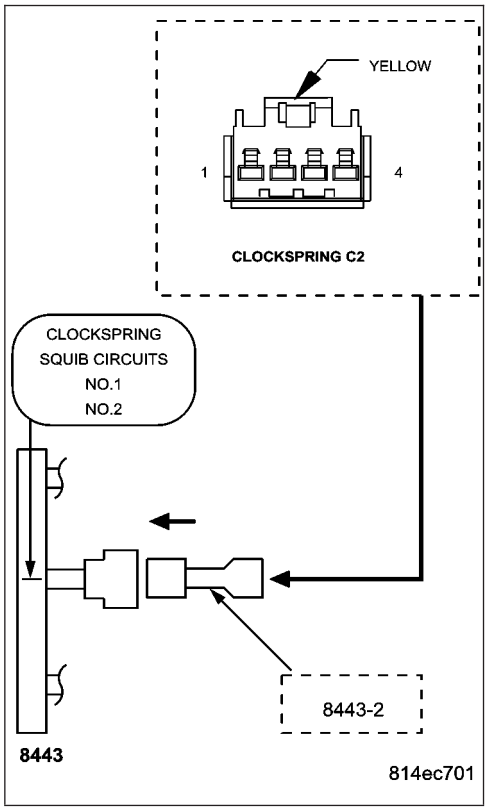

DRIVER SQUIB 1 CIRCUIT SHORT (CONTINUED)

4. CHECK DRIVER SQUIB 1 LINE 2 CIRCUIT FOR A SHORT TO DRIVER SQUIB 1 LINE 1 CIRCUIT

WARNING: To avoid personal injury or death, turn the ignition off, disconnect the battery and wait two minutes before proceeding.

Disconnect the 8443 Load Tool and Jumper from the Clockspring connector.

Disconnect the ORC connectors.

NOTE: Check connectors - Clean and repair as necessary.

Connect the 8443 Load Tool ORC Adaptor to the ORC connector.

Measure the resistance between the Driver Squib 1 Line 2 circuit and the Driver Squib 1 Line 1 circuit at the Clockspring connector.

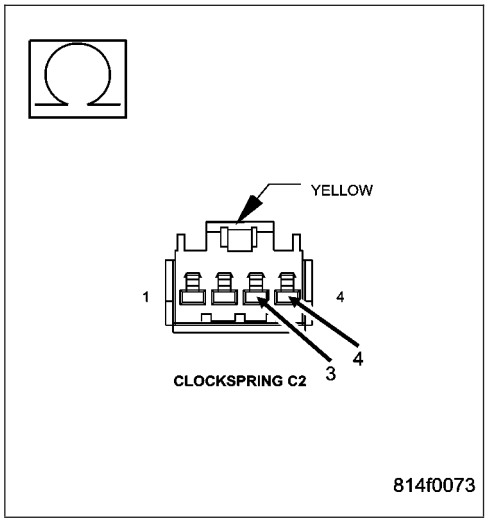

Is the resistance below 10K ohms?

Yes >> Repair the Driver Squib 1 Line 2 circuit for a short to the Driver Squib 1 Line 1 circuit.
Perform ORC VERIFICATION TEST - VER 1

No >> Go To 5

---

5. REPLACE THE ORC

WARNING: If the Occupant Restraint Controller (ORC) is dropped at any time, it must be replaced. Failure to take the proper precautions can result in accidental airbag deployment and personal injury or death.

NOTE: When reconnecting airbag system components the Ignition must be turned off and the Battery must be disconnected.

Repair

Replace the ORC in accordance with the Service Information.
Perform ORC VERIFICATION TEST - VER 1

DRIVER SQUIB 1 CIRCUIT SHORT (CONTINUED)

6. STORED ORC DTC

With the scan tool, record and erase all DTC's from all Airbag System Modules.

If any ACTIVE codes are present they must be resolved before diagnosing any stored codes.

WARNING: To avoid personal injury or death, turn the ignition off, disconnect the battery and wait two minutes before proceeding.

Using the wiring diagram/schematic as a guide, inspect the wiring and connectors.

Look for chaffed, pierced, pinched, or partially broken wires and broken, bent, pushed out, spread, corroded, or contaminated terminals.

The following additional checks may assist you in identifying a possible intermittent problem.

Reconnect any disconnected components and harness connector.

WARNING: To avoid personal injury or death, turn the ignition on, then reconnect the battery.

With the scan tool monitor active codes as you work through the following steps.

Wiggle the wiring harness and connectors of the related airbag circuit or component.

If codes are related to the Driver Airbag circuits, rotate the steering wheel from stop to stop.

If only stored codes return continue the test until the problem area has been isolated.

In the previous steps you have attempted to recreate the conditions responsible for setting active DTC in question.

Are any ACTIVE DTCs present?

Yes >> Select the appropriate diagnostic procedure from the Table of Contents in this section.

No >> No problem found at this time. Erase all codes before returning vehicle to customer.

DRIVER SQUIB 1 SHORT TO BATTERY

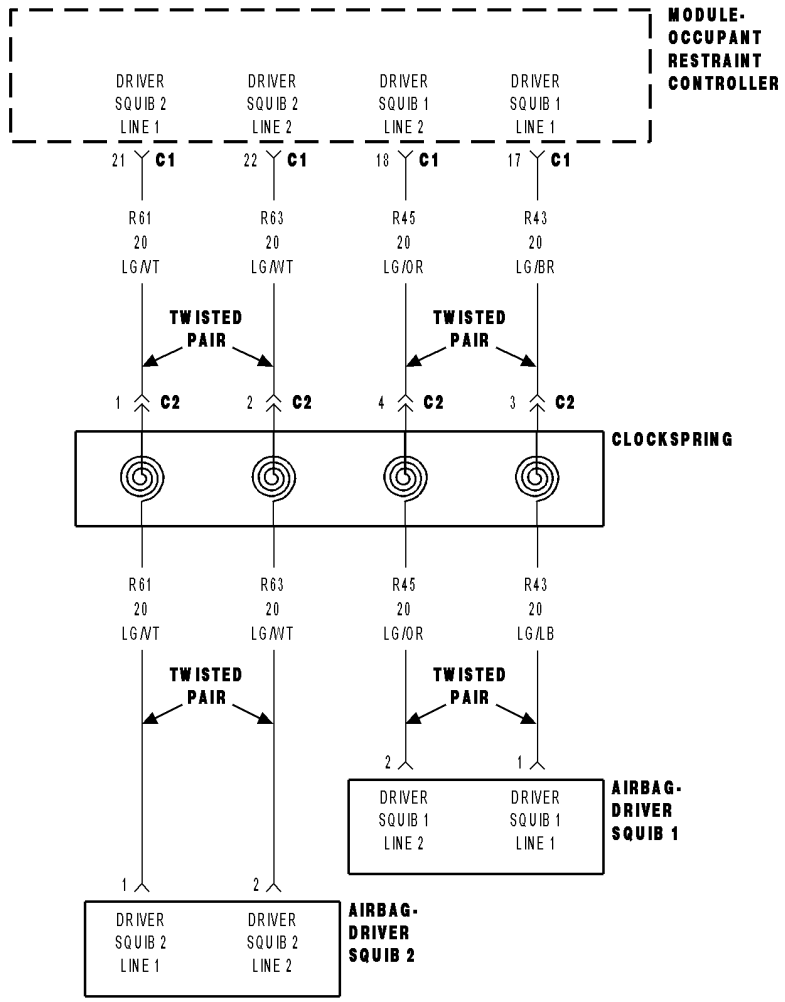

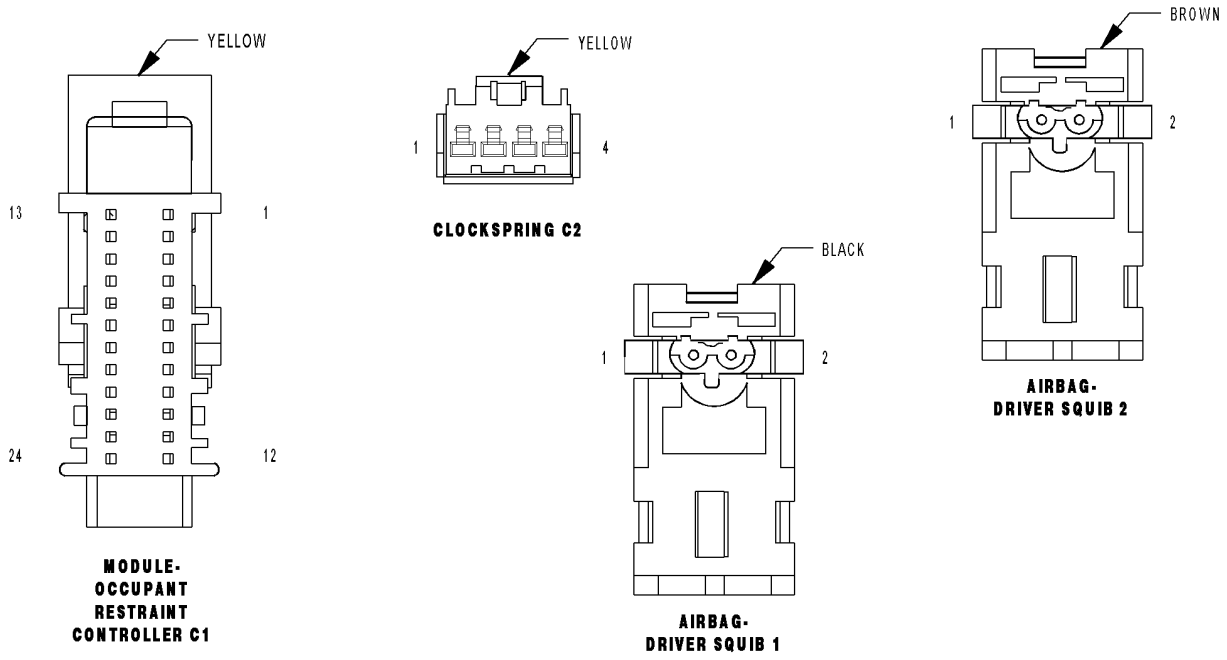

814ec6e6

DRIVER SQUIB 1 SHORT TO BATTERY (CONTINUED)

For the Air Bag System circuit diagram (Refer to 8 - ELECTRICAL/RESTRAINTS - SCHEMATICS AND DIAGRAMS).

For a complete wiring diagram **Refer to Section 8W**.

- **When Monitored:**
  With the ignition on, the Occupant Restraint Controller (ORC) monitors the voltage on the Driver Squib 1 circuits.
- **Set Condition:**
  The ORC has detected voltage on the Driver Squib 1 circuits.

Possible Causes
DRIVER SQUIB 1 LINE 2 CIRCUIT OR DRIVER SQUIB 1 LINE 1 CIRCUIT SHORTED TO BATTERY
CLOCKSPRING
DRIVER AIRBAG
ORC

Diagnostic Test

1. DETERMINE ACTIVE OR STORED DTC

NOTE: Ensure the battery is fully charged.

NOTE: The scan tool, SRS Airbag Load Tool MRL 8443, and DVOM are required to perform the following test.

NOTE: When reconnecting airbag system components the Ignition must be turned off and the Battery must be disconnected.

Select Active or Stored DTC.

Is the DTC active or stored?

ORC - ACTIVE DTC
Go To 2

ORC - STORED DTC
Go To 6

DRIVER SQUIB 1 SHORT TO BATTERY (CONTINUED)

2. CHECK FOR SHORTED SQUIB CIRCUITS IN DRIVER AIRBAG

WARNING: To avoid personal injury or death, turn the ignition off, disconnect the battery and wait two minutes before proceeding.
Disconnect the Driver Airbag Squib connectors.

WARNING: To avoid personal injury or death, do not place an intact undeployed airbag face down on a hard surface, the airbag will propel into the air if accidentally deployed.

NOTE: Check connectors - Clean and repair as necessary.
Connect the 8443 Load Tool and appropriate Jumper to the Driver Airbag Squib connectors.

WARNING: To avoid personal injury or death, turn the ignition on, then reconnect the battery.
With the scan tool, read the active ORC DTC's.

Does the scan tool display: DRIVER SQUIB 1 SHORT TO BATTERY?

Yes >> Go To 3

No >> Replace the Driver Airbag in accordance with the Service Information.
Perform ORC VERIFICATION TEST - VER 1

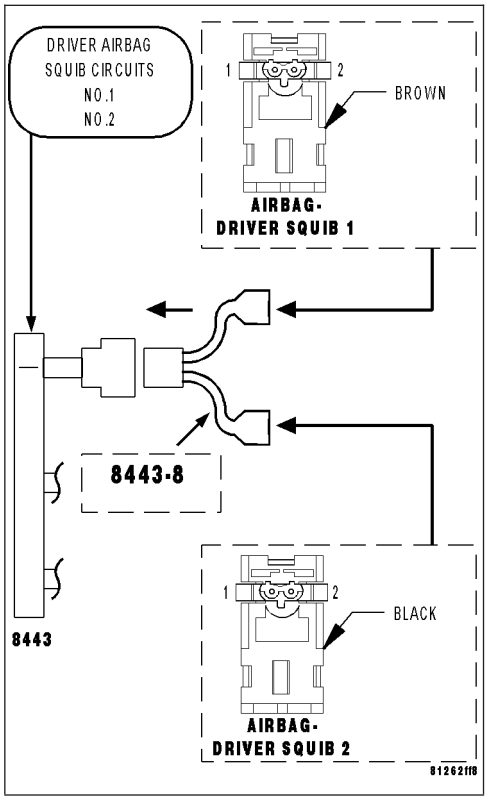

3. CHECK CLOCKSPRING SQUIB CIRCUITS FOR A SHORT TO BATTERY

WARNING: To avoid personal injury or death, turn the ignition off, disconnect the battery and wait two minutes before proceeding.
Disconnect the 8443 Load Tool and Jumper from the Driver Airbag Squib connectors.

Disconnect the Clockspring connector.

NOTE: Check connectors - Clean and repair as necessary.
Connect the 8443 Load Tool and appropriate Jumper to the Clockspring connector.

WARNING: To avoid personal injury or death, turn the ignition on, then reconnect the battery.
With the scan tool, read the active ORC DTC's.

Does the scan tool display: DRIVER SQUIB 1 SHORT TO BATTERY?

Yes >> Go To 4

No >> Replace the Clockspring in accordance with the Service Information.
Perform ORC VERIFICATION TEST - VER 1

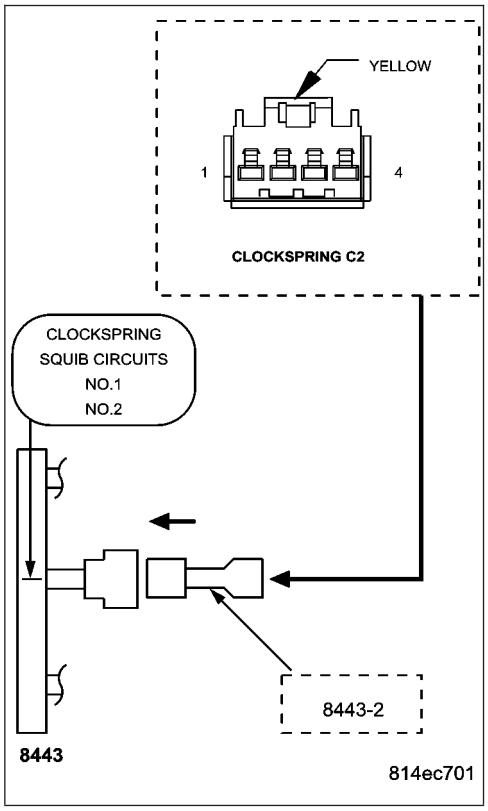

DRIVER SQUIB 1 SHORT TO BATTERY (CONTINUED)

4. CHECK DRIVER SQUIB 1 LINE 2 CIRCUIT AND DRIVER SQUIB 1 LINE 1 CIRCUIT FOR A SHORT TO BATTERY

WARNING: To avoid personal injury or death, turn the ignition off, disconnect the battery and wait two minutes before proceeding.
Disconnect the 8443 Load Tool and Jumper from the Clockspring connector.

Disconnect the ORC connectors.

NOTE: Check connectors - Clean and repair as necessary.
Connect the 8443 Load Tool ORC Adaptor to the ORC connector.

WARNING: To avoid personal injury or death, turn the ignition on, then reconnect the battery.
Measure the voltage of the Driver Squib 1 Line 2 circuit between the Clockspring connector and ground.

Measure the voltage of the Driver Squib 1 Line 1 circuit between the Clockspring connector and ground.

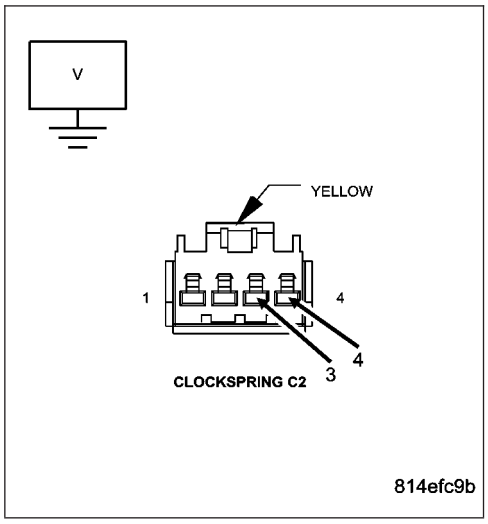

Is there any voltage present for either measurement?

Yes >> Repair the Driver Squib 1 circuits with voltage present for a short to Battery.
Perform ORC VERIFICATION TEST - VER 1

No >> Go To 5

---

5. REPLACE THE ORC

WARNING: To avoid personal injury or death, turn the ignition off, disconnect the battery and wait two minutes before proceeding.

WARNING: If the Occupant Restraint Controller (ORC) is dropped at any time, it must be replaced. Failure to take the proper precautions can result in accidental airbag deployment and personal injury or death.

NOTE: When reconnecting airbag system components the Ignition must be turned off and the Battery must be disconnected.

Repair

Replace the ORC in accordance with the Service Information.
Perform ORC VERIFICATION TEST - VER 1

DRIVER SQUIB 1 SHORT TO BATTERY (CONTINUED)

6. STORED ORC DTC

With the scan tool, record and erase all DTC's from all Airbag System Modules.

If any ACTIVE codes are present they must be resolved before diagnosing any stored codes.

WARNING: To avoid personal injury or death, turn the ignition off, disconnect the battery and wait two minutes before proceeding.

Using the wiring diagram/schematic as a guide, inspect the wiring and connectors.

Look for chaffed, pierced, pinched, or partially broken wires and broken, bent, pushed out, spread, corroded, or contaminated terminals.

The following additional checks may assist you in identifying a possible intermittent problem.

Reconnect any disconnected components and harness connector.

WARNING: To avoid personal injury or death, turn the ignition on, then reconnect the battery.

With the scan tool monitor active codes as you work through the following steps.

Wiggle the wiring harness and connectors of the related airbag circuit or component.

If codes are related to the Driver Airbag circuits, rotate the steering wheel from stop to stop.

If only stored codes return continue the test until the problem area has been isolated.

In the previous steps you have attempted to recreate the conditions responsible for setting active DTC's in question.

Are any ACTIVE DTC's present?

Yes >> Select the appropriate diagnostic procedure from the Table of Contents in this section.

No >> No problem found at this time. Erase all codes before returning vehicle to customer.

DRIVER SQUIB 1 SHORT TO GROUND

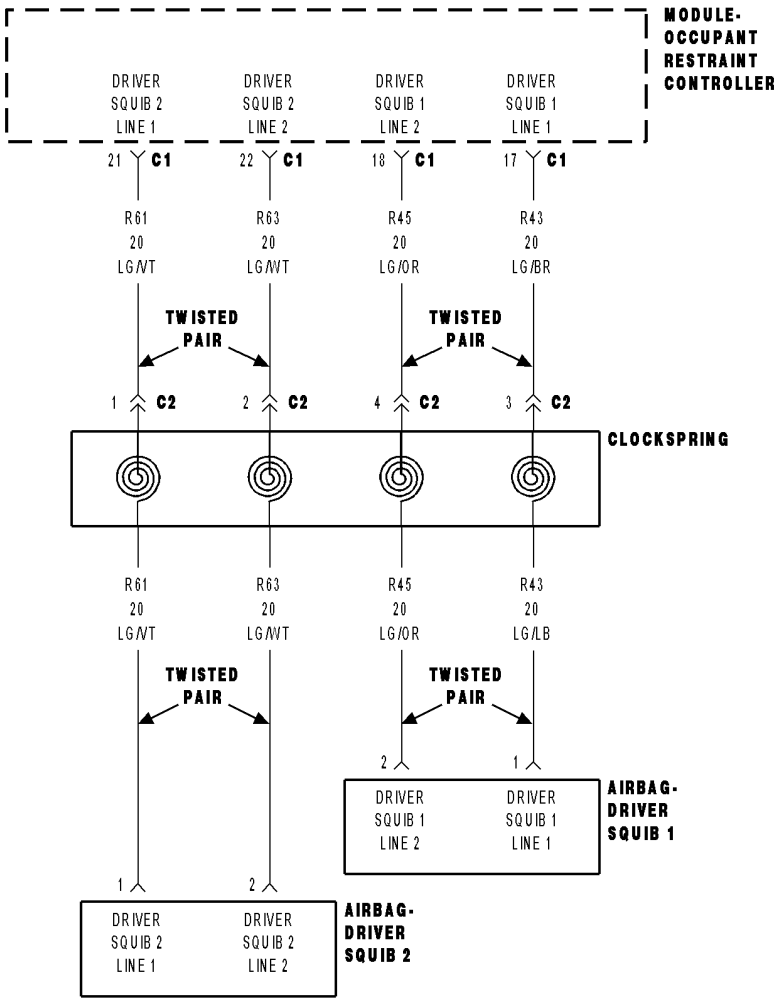

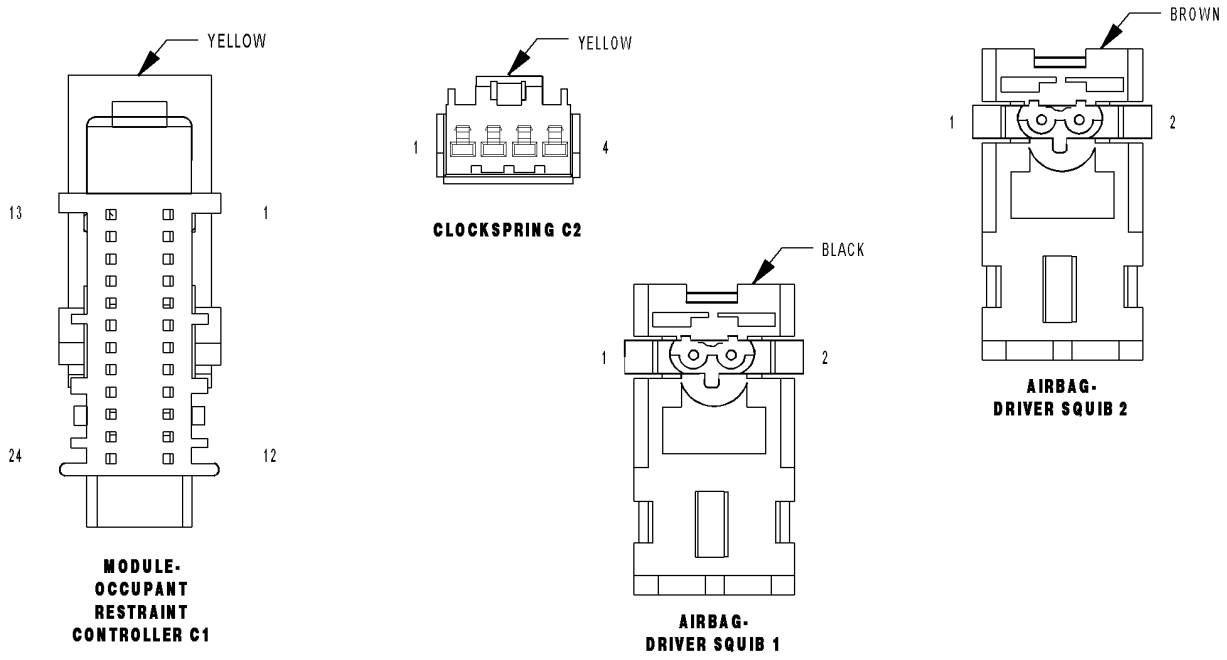

814ec6e6

DRIVER SQUIB 1 SHORT TO GROUND (CONTINUED)

For the Air Bag System circuit diagram (Refer to 8 - ELECTRICAL/RESTRAINTS - SCHEMATICS AND DIAGRAMS).

For a complete wiring diagram **Refer to Section 8W**.

- **When Monitored:**
  With the ignition on, the Occupant Restraint Controller (ORC) monitors the resistance of the Driver Squib 1 circuits.
- **Set Condition:**
  The ORC has detected low resistance on the Driver Squib 1 circuits.

Possible Causes
DRIVER SQUIB 1 LINE 2 CIRCUIT OR DRIVER SQUIB 1 LINE 1 CIRCUIT SHORTED TO GROUND
CLOCKSPRING
DRIVER AIRBAG
ORC

Diagnostic Test

1. DETERMINE ACTIVE OR STORED DTC

NOTE: Ensure the battery is fully charged.

NOTE: The scan tool, SRS Airbag Load Tool MRL 8443, and DVOM are required to perform the following test.

NOTE: When reconnecting airbag system components the Ignition must be turned off and the Battery must be disconnected.

Select Active or Stored DTC.

Is the DTC active or stored?

ORC - ACTIVE DTC
Go To 2

ORC - STORED DTC
Go To 6

DRIVER SQUIB 1 SHORT TO GROUND (CONTINUED)

2. CHECK FOR SHORTED SQUIB CIRCUITS IN DRIVER AIRBAG

WARNING: To avoid personal injury or death, turn the ignition off, disconnect the battery and wait two minutes before proceeding.
Disconnect the Driver Airbag Squib connectors.

WARNING: To avoid personal injury or death, do not place an intact undeployed airbag face down on a hard surface, the airbag will propel into the air if accidentally deployed.

NOTE: Check connectors - Clean and repair as necessary.
Connect the 8443 Load Tool and appropriate Jumper to the Driver Airbag Squib connectors.

WARNING: To avoid personal injury or death, turn the ignition on, then reconnect the battery.
With the scan tool, read the active ORC DTC's.

Does the scan tool display: DRIVER SQUIB 1 SHORT TO GROUND?

Yes >> Go To 3

No >> Replace the Driver Airbag in accordance with the Service Information.
Perform ORC VERIFICATION TEST - VER 1

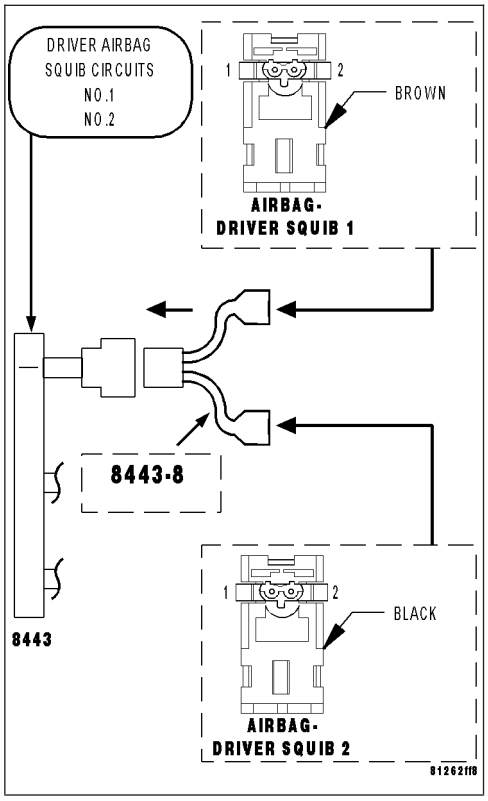

3. CHECK CLOCKSPRING SQUIB CIRCUITS FOR A SHORT TO GROUND

WARNING: To avoid personal injury or death, turn the ignition off, disconnect the battery and wait two minutes before proceeding.
Disconnect the 8443 Load Tool Jumper from the Driver Airbag Squib connectors.

Disconnect the Clockspring connector.

NOTE: Check connectors - Clean and repair as necessary.
Connect the 8443 Load Tool and appropriate Jumper to the Clockspring connector.

WARNING: To avoid personal injury or death, turn the ignition on, then reconnect the battery.
With the scan tool, read the active ORC DTC's.

Does the scan tool display: DRIVER SQUIB 1 SHORT TO GROUND?

Yes >> Go To 4

No >> Replace the Clockspring in accordance with the Service Information.
Perform ORC VERIFICATION TEST - VER 1

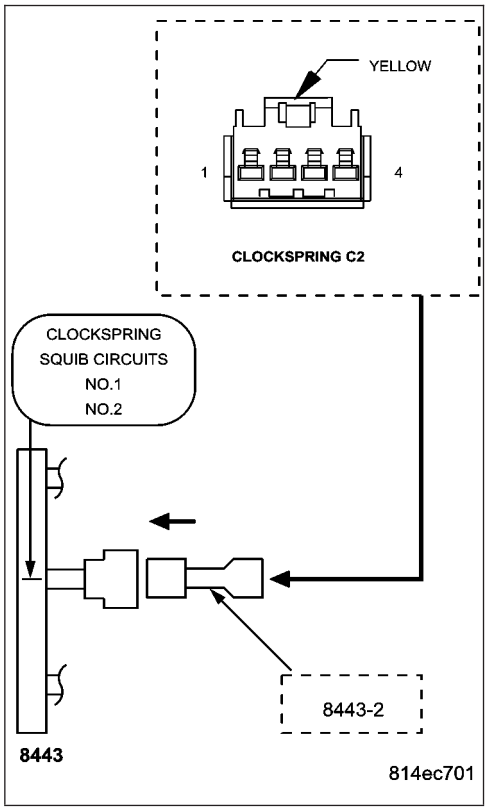

DRIVER SQUIB 1 SHORT TO GROUND (CONTINUED)

4. CHECK DRIVER SQUIB 1 LINE 2 CIRCUIT AND DRIVER SQUIB 1 LINE 1 CIRCUIT FOR A SHORT TO GROUND

WARNING: To avoid personal injury or death, turn the ignition off, disconnect the battery and wait two minutes before proceeding.

Disconnect the 8443 Load Tool and Jumper from the Clockspring connector.

Disconnect the ORC connectors.

NOTE: Check connectors - Clean and repair as necessary.

Connect the 8443 Load Tool ORC Adaptor to the ORC connector.

Measure the resistance of the Driver Squib 1 Line 2 circuit between ground and the Clockspring connector.

Measure the resistance of the Driver Squib 1 Line 1 circuit between ground and the Clockspring connector.

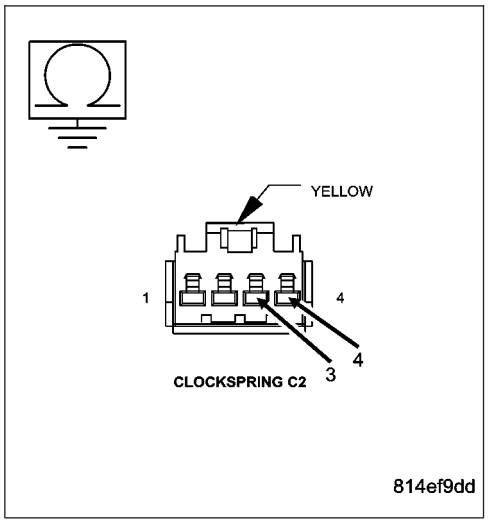

Is the resistance below 10K ohms for either measurement?

Yes >> Repair the Driver Squib 1 circuits with a resistance below 10K ohms for a short to ground.
Perform ORC VERIFICATION TEST - VER 1

No >> Go To 5

---

5. REPLACE THE ORC

WARNING: If the Occupant Restraint Controller (ORC) is dropped at any time, it must be replaced. Failure to take the proper precautions can result in accidental airbag deployment and personal injury or death.

NOTE: When reconnecting airbag system components the Ignition must be turned off and the Battery must be disconnected.

Repair

Replace the ORC in accordance with the Service Information.
Perform ORC VERIFICATION TEST - VER 1

DRIVER SQUIB 1 SHORT TO GROUND (CONTINUED)

6. STORED ORC DTC

With the scan tool, record and erase all DTC's from all Airbag System Modules.

If any ACTIVE codes are present they must be resolved before diagnosing any stored codes.

WARNING: To avoid personal injury or death, turn the ignition off, disconnect the battery and wait two minutes before proceeding.

Using the wiring diagram/schematic as a guide, inspect the wiring and connectors.

Look for chaffed, pierced, pinched, or partially broken wires and broken, bent, pushed out, spread, corroded, or contaminated terminals.

The following additional checks may assist you in identifying a possible intermittent problem.

Reconnect any disconnected components and harness connector.

WARNING: To avoid personal injury or death, turn the ignition on, then reconnect the battery.

With the scan tool monitor active codes as you work through the following steps.

Wiggle the wiring harness and connectors of the related airbag circuit or component.

If codes are related to the Driver Airbag circuits, rotate the steering wheel from stop to stop.

If only stored codes return continue the test until the problem area has been isolated.

In the previous steps you have attempted to recreate the conditions responsible for setting active DTC in question.

Are any ACTIVE DTCs present?

Yes >> Select the appropriate diagnostic procedure from the Table of Contents in this section.

No >> No problem found at this time. Erase all codes before returning vehicle to customer.

DRIVER SQUIB 2 CIRCUIT OPEN

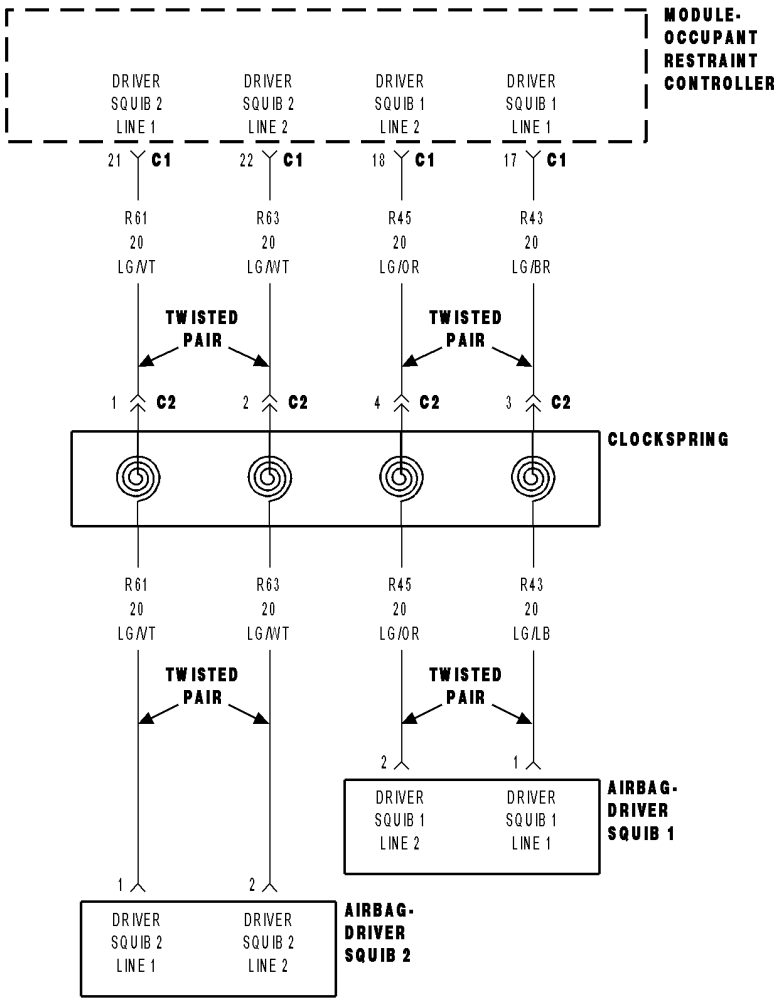

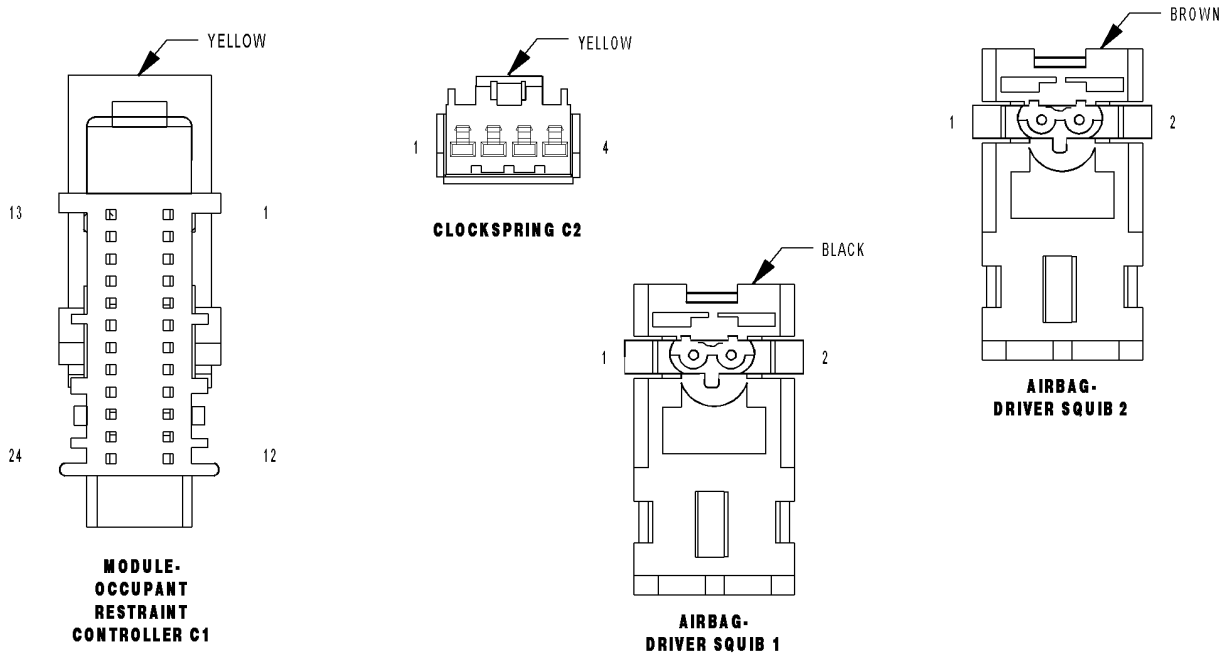

814ec6e6

DRIVER SQUIB 2 CIRCUIT OPEN (CONTINUED)

For the Air Bag System circuit diagram (Refer to 8 - ELECTRICAL/RESTRAINTS - SCHEMATICS AND DIAGRAMS).

For a complete wiring diagram **Refer to Section 8W**.

- **When Monitored:**
  With the ignition on, the Occupant Restraint Controller (ORC) monitors the resistance of the Driver Squib 2 circuits.
- **Set Condition:**
  The ORC has detected an open or high resistance on the Driver Squib 2 circuits.

Possible Causes
DRIVER SQUIB 2 LINE 1 CIRCUIT OPEN
DRIVER SQUIB 2 LINE 2 CIRCUIT OPEN
CLOCKSPRING
DRIVER AIRBAG
ORC

Diagnostic Test

1. DETERMINE ACTIVE OR STORED DTC

NOTE: Ensure the battery is fully charged.

NOTE: The scan tool, SRS Airbag Load Tool MRL 8443, and DVOM are required to perform the following test.

NOTE: When reconnecting airbag system components the Ignition must be turned off and the Battery must be disconnected.

Select Active or Stored DTC.

Is the DTC active or stored?

ORC - ACTIVE DTC
Go To 2

ORC - STORED DTC
Go To 7

DRIVER SQUIB 2 CIRCUIT OPEN (CONTINUED)

2. CHECK FOR OPEN SQUIB CIRCUITS IN DRIVER AIRBAG

WARNING: To avoid personal injury or death, turn the ignition off, disconnect the battery and wait two minutes before proceeding.
Disconnect the Driver Airbag Squib connectors.

WARNING: To avoid personal injury or death, do not place an intact undeployed airbag face down on a hard surface, the airbag will propel into the air if accidentally deployed.

NOTE: Check connectors - Clean and repair as necessary.
Connect the 8443 Load Tool and appropriate Jumper to the Driver Airbag Squib connectors.

WARNING: To avoid personal injury or death, turn the ignition on, then reconnect the battery.
With the scan tool, read the active ORC DTC's.

Does the scan tool display: DRIVER SQUIB 2 CIRCUIT OPEN?

Yes >> Go To 3

No >> Replace the Driver Airbag in accordance with the Service Information.
Perform ORC VERIFICATION TEST - VER 1

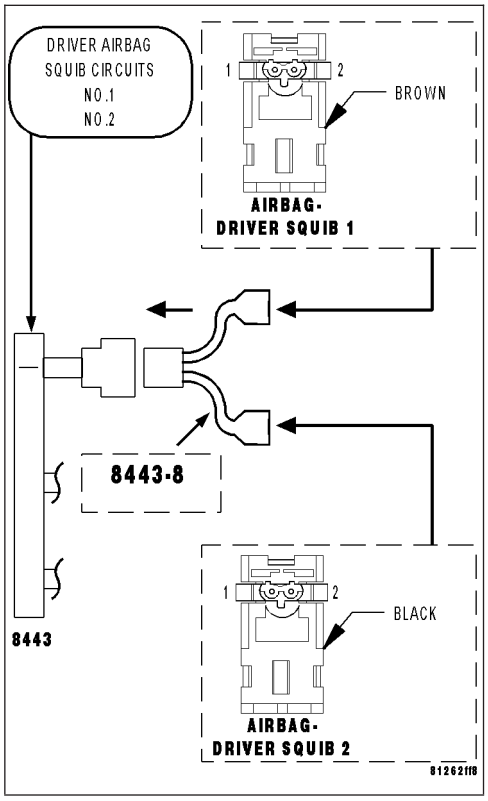

3. CHECK CLOCKSPRING SQUIB CIRCUITS FOR AN OPEN

WARNING: To avoid personal injury or death, turn the ignition off, disconnect the battery and wait two minutes before proceeding.
Disconnect the 8443 Load Tool and Jumper from the Driver Airbag Squib connectors.

Disconnect the Clockspring connector.

NOTE: Check connectors - Clean and repair as necessary.
Connect the 8443 Load Tool and appropriate Jumper to the Clockspring connector.

WARNING: To avoid personal injury or death, turn the ignition on, then reconnect the battery.
With the scan tool, read the active ORC DTC's.

Does the scan tool display: DRIVER SQUIB 2 CIRCUIT OPEN?

Yes >> Go To 4

No >> Replace the Clockspring in accordance with the Service Information.
Perform ORC VERIFICATION TEST - VER 1

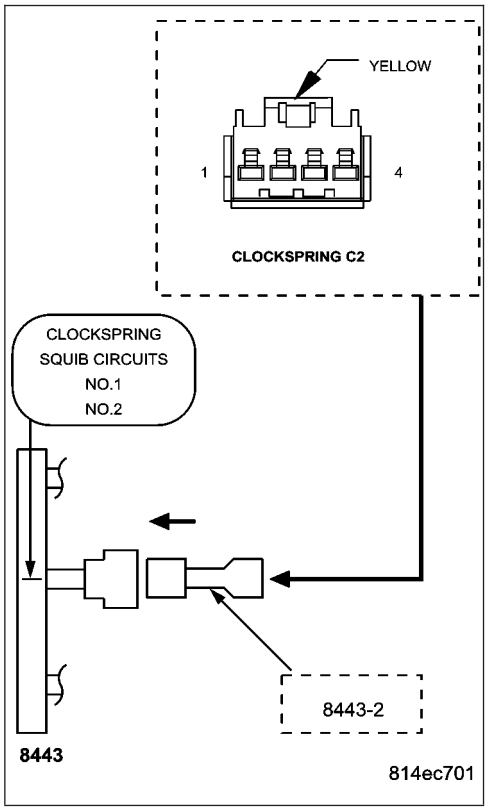

DRIVER SQUIB 2 CIRCUIT OPEN (CONTINUED)

4. CHECK DRIVER SQUIB 2 LINE 1 CIRCUIT FOR AN OPEN

WARNING: To avoid personal injury or death, turn the ignition off, disconnect the battery and wait two minutes before proceeding.

Disconnect the 8443 Load Tool and Jumper from the Clockspring connector.

Disconnect the ORC connectors.

NOTE: Check connectors - Clean and repair as necessary.

Connect the 8443 Load Tool ORC Adaptor to the ORC connector.

Measure the resistance of the Driver Squib 2 Line 1 circuit between the Clockspring connector and the ORC Load Tool Adaptor.

Is the resistance below 1.0 ohm?

Yes >> Go To 5

No >> Repair the Driver Squib 2 Line 1 circuit for an open. Then, Go To 5
Perform ORC VERIFICATION TEST - VER 1

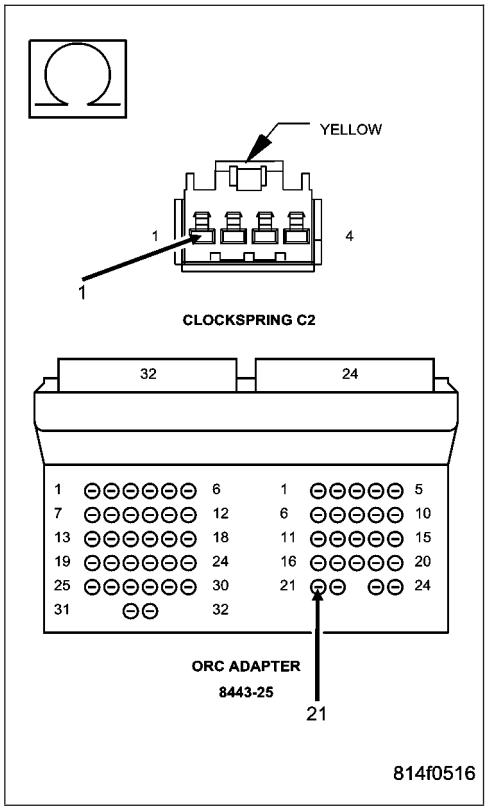

5. CHECK DRIVER SQUIB 2 LINE 2 CIRCUIT FOR AN OPEN

Measure the resistance of the Driver Squib 2 Line 2 circuit between the Clockspring connector and the ORC Load Tool Adaptor.

Is the resistance below 1.0 ohm?

Yes >> Go To 6

No >> Repair the Driver Squib 2 Line 2 circuit for an open.
Perform ORC VERIFICATION TEST - VER 1

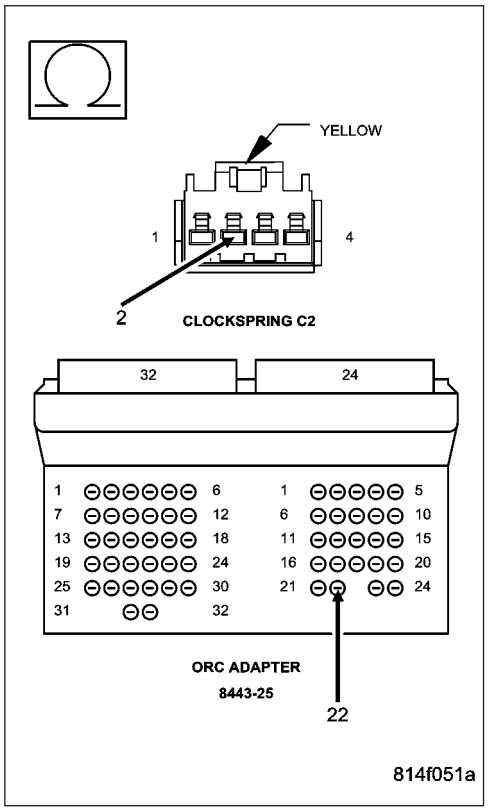

DRIVER SQUIB 2 CIRCUIT OPEN (CONTINUED)

6. REPLACE THE ORC

WARNING: If the Occupant Restraint Controller (ORC) is dropped at any time, it must be replaced. Failure to take the proper precautions can result in accidental airbag deployment and personal injury or death.

NOTE: When reconnecting airbag system components the Ignition must be turned off and the Battery must be disconnected.

Repair

Replace the ORC in accordance with the Service Information.

Perform ORC VERIFICATION TEST - VER 1

---

7. STORED ORC DTC

With the scan tool, record and erase all DTC's from all Airbag System Modules.

If any ACTIVE codes are present they must be resolved before diagnosing any stored codes.

WARNING: To avoid personal injury or death, turn the ignition off, disconnect the battery and wait two minutes before proceeding.

Using the wiring diagram/schematic as a guide, inspect the wiring and connectors.

Look for chaffed, pierced, pinched, or partially broken wires and broken, bent, pushed out, spread, corroded, or contaminated terminals.

The following additional checks may assist you in identifying a possible intermittent problem.

Reconnect any disconnected components and harness connector.

WARNING: To avoid personal injury or death, turn the ignition on, then reconnect the battery.

With the scan tool monitor active codes as you work through the following steps.

Wiggle the wiring harness and connectors of the related airbag circuit or component.

If codes are related to the Driver Airbag circuits, rotate the steering wheel from stop to stop.

If only stored codes return continue the test until the problem area has been isolated.

In the previous steps you have attempted to recreate the conditions responsible for setting active DTC in question.

Are any ACTIVE DTC's present?

Yes >> Select the appropriate diagnostic procedure from the Table of Contents in this section.

No >> No problem found at this time. Erase all codes before returning vehicle to customer.

DRIVER SQUIB 2 CIRCUIT SHORT

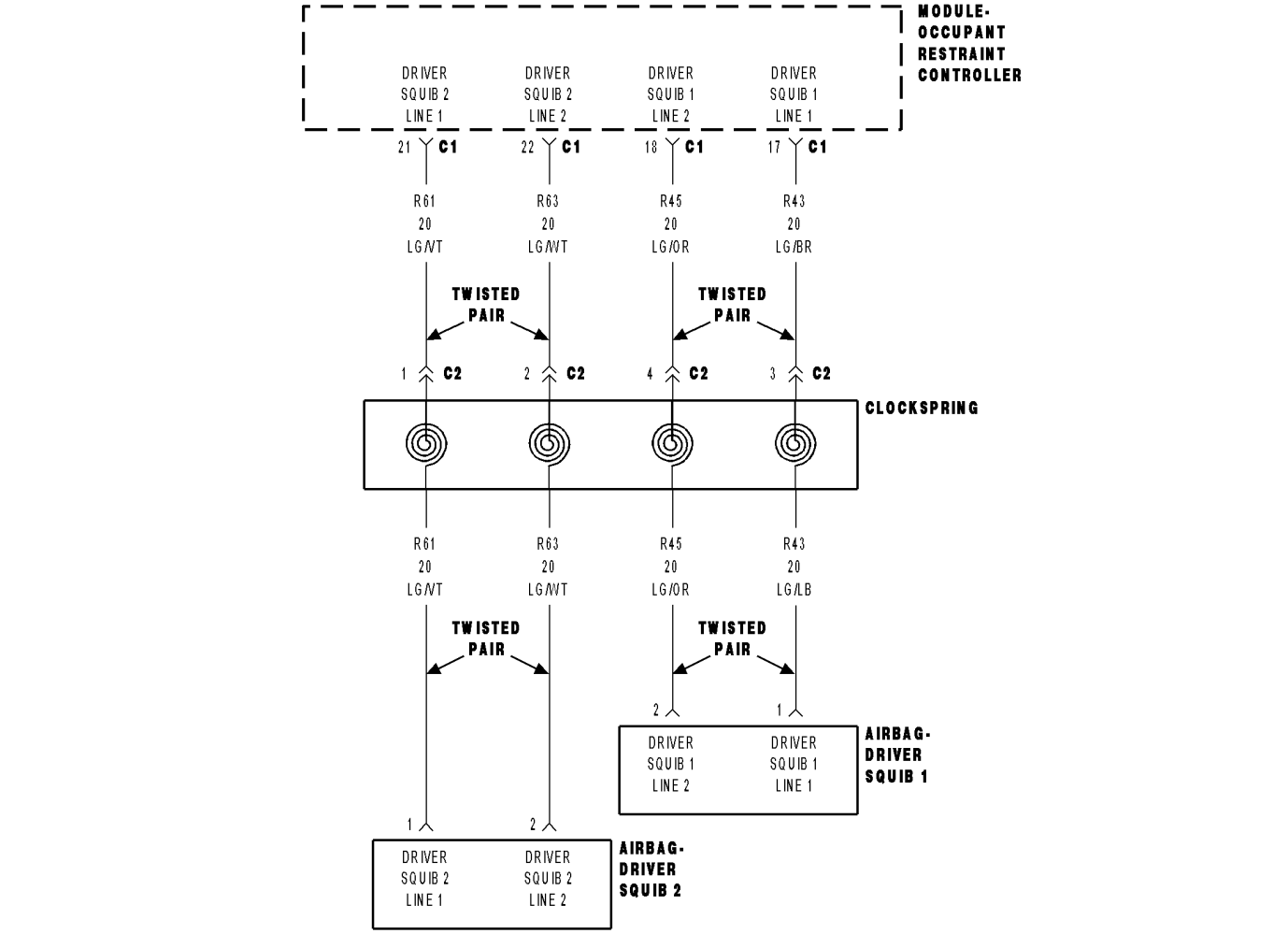

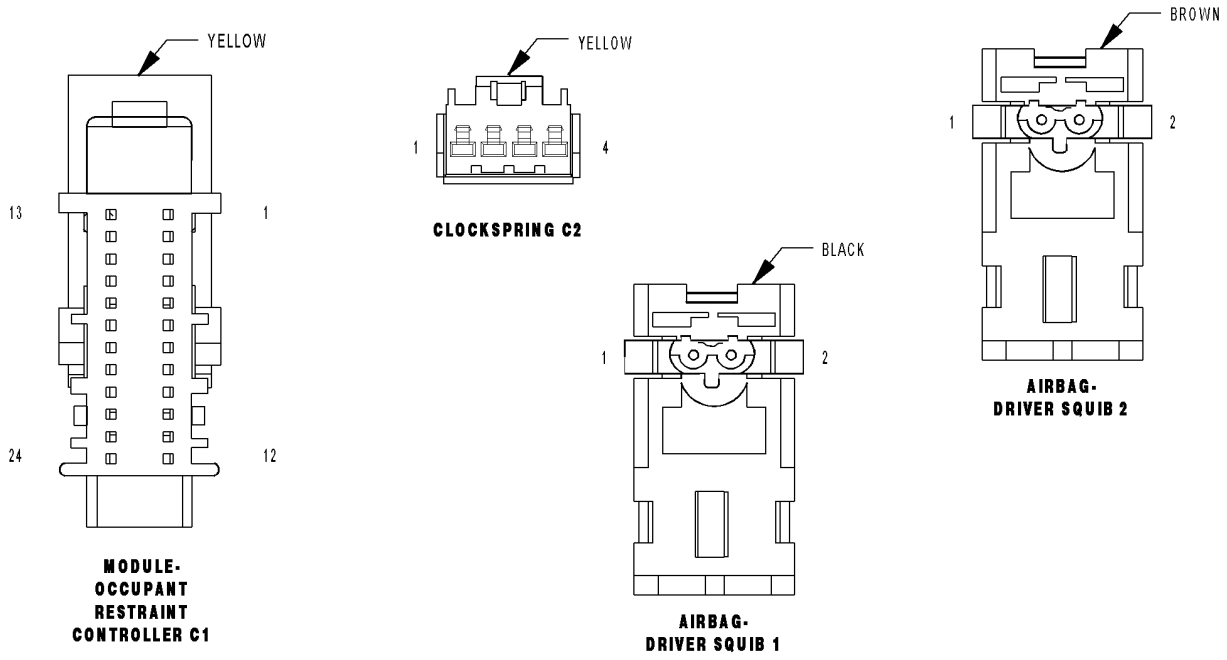

814ec6e6

DRIVER SQUIB 2 CIRCUIT SHORT (CONTINUED)

For the Air Bag System circuit diagram (Refer to 8 - ELECTRICAL/RESTRAINTS - SCHEMATICS AND DIAGRAMS).

For a complete wiring diagram **Refer to Section 8W**.

- **When Monitored:**
  With the ignition on, the Occupant Restraint Controller (ORC) monitors the resistance of the Driver Squib 2 circuits.
- **Set Condition:**
  The ORC has detected low resistance between the Driver Squib 2 circuits.

Possible Causes
DRIVER SQUIB 2 LINE 1 CIRCUIT SHORTED TO DRIVER SQUIB 2 LINE 2 CIRCUIT
CLOCKSPRING
DRIVER AIRBAG
ORC

Diagnostic Test

1. DETERMINE ACTIVE OR STORED DTC

NOTE: Ensure the battery is fully charged.

NOTE: The Scan Tool, SRS Airbag Load Tool MRL 8443 and DVOM are required to perform the following test.

NOTE: When reconnecting airbag system components the Ignition must be turned off and the Battery must be disconnected.

Select Active or Stored DTC.

Is the DTC active or stored?

ORC - ACTIVE DTC
Go To 2

ORC - STORED DTC
Go To 6

DRIVER SQUIB 2 CIRCUIT SHORT (CONTINUED)

2. CHECK FOR SHORTED SQUIB CIRCUITS IN DRIVER AIRBAG

WARNING: To avoid personal injury or death, turn the ignition off, disconnect the battery and wait two minutes before proceeding.

WARNING: To avoid personal injury or death, do not place an intact undeployed airbag face down on a hard surface, the airbag will propel into the air if accidentally deployed.

Disconnect the Driver Airbag Squib connectors.

NOTE: Check connectors - Clean and repair as necessary.

Connect the 8443 Load Tool and appropriate Jumper to the Driver Airbag Squib connectors.

WARNING: To avoid personal injury or death, turn the ignition on, then reconnect the battery.

With the scan tool, read the active ORC DTC's.

Does the scan tool display: DRIVER SQUIB 2 CIRCUIT SHORT?

Yes >> Go To 3

No >> Replace the Driver Airbag in accordance with the Service Information.
Perform ORC VERIFICATION TEST - VER 1

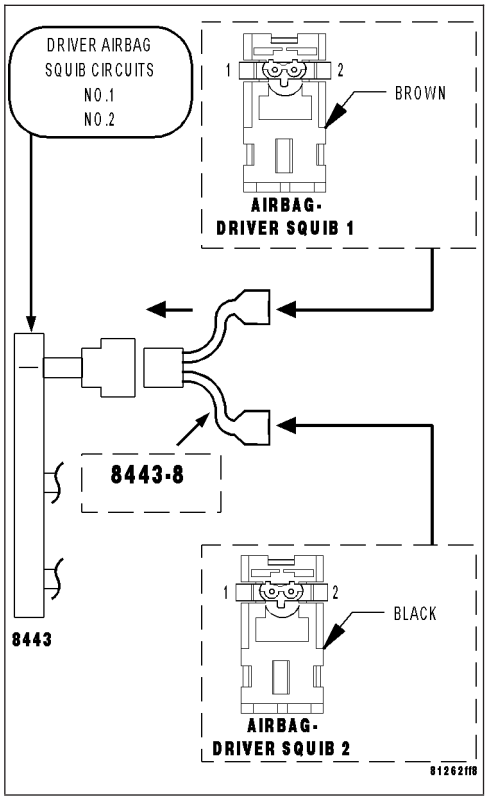

3. CHECK CLOCKSPRING SQUIB CIRCUITS FOR A SHORT TOGETHER

WARNING: To avoid personal injury or death, turn the ignition off, disconnect the battery and wait two minutes before proceeding.

Disconnect the 8443 Load Tool ORC from the Driver Airbag Squib connectors.

Disconnect the Clockspring connector.

NOTE: Check connectors - Clean and repair as necessary.

Connect the 8443 Load Tool and appropriate Jumper to the Clockspring connector.

WARNING: To avoid personal injury or death, turn the ignition on, then reconnect the battery.

With the scan tool, read the active ORC DTC's.

Does the scan tool display: DRIVER SQUIB 2 CIRCUIT SHORT?

Yes >> Go To 4

No >> Replace the Clockspring in accordance with the Service Information.
Perform ORC VERIFICATION TEST - VER 1

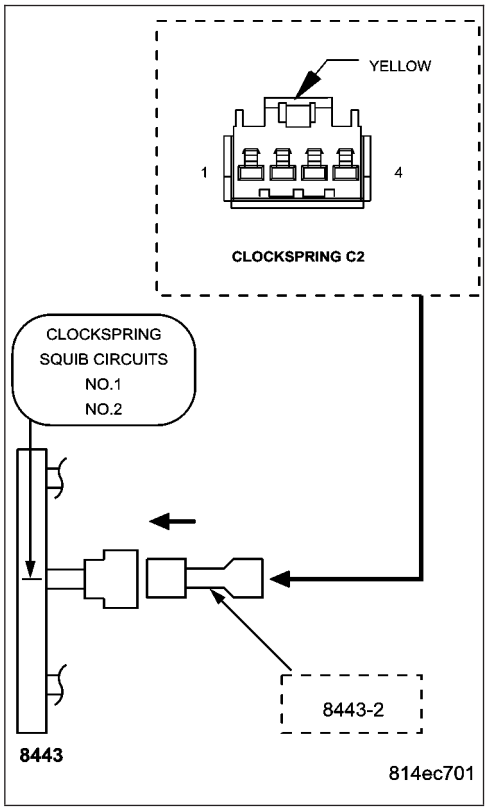

DRIVER SQUIB 2 CIRCUIT SHORT (CONTINUED)

4. CHECK DRIVER SQUIB 2 LINE 1 CIRCUIT FOR A SHORT TO DRIVER SQUIB 2 LINE 2 CIRCUIT

WARNING: To avoid personal injury or death, turn the ignition off, disconnect the battery and wait two minutes before proceeding.

Disconnect the 8443 Load Tool and Jumper from the Clockspring connector.

Disconnect the ORC connectors.

NOTE: Check connectors - Clean and repair as necessary.

Connect the 8443 Load Tool ORC Adaptor to the ORC connector.

Measure the resistance between the Driver Squib 2 Line 1 circuit and the Driver Squib 2 Line 2 circuit at the Clockspring connector.

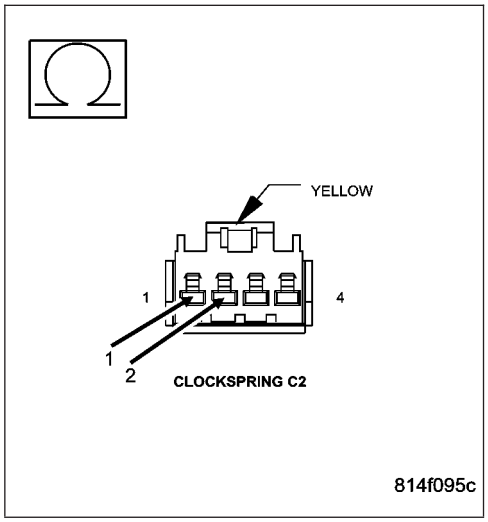

Is the resistance below 10K ohms?

Yes >> Repair the Driver Squib 2 Line 1 circuit for a short to the Driver Squib 2 Line 2 circuit.
Perform ORC VERIFICATION TEST - VER 1

No >> Go To 5

---

5. REPLACE THE ORC

WARNING: If the Occupant Restraint Controller (ORC) is dropped at any time, it must be replaced. Failure to take the proper precautions can result in accidental airbag deployment and personal injury or death.

NOTE: When reconnecting airbag system components the Ignition must be turned off and the Battery must be disconnected.

Repair

Replace the ORC in accordance with the Service Information.
Perform ORC VERIFICATION TEST - VER 1

DRIVER SQUIB 2 CIRCUIT SHORT (CONTINUED)

6. STORED ORC DTC

With the scan tool, record and erase all DTC's from all Airbag System Modules.

If any ACTIVE codes are present they must be resolved before diagnosing any stored codes.

WARNING: To avoid personal injury or death, turn the ignition off, disconnect the battery and wait two minutes before proceeding.

Using the wiring diagram/schematic as a guide, inspect the wiring and connectors.

Look for chaffed, pierced, pinched, or partially broken wires and broken, bent, pushed out, spread, corroded, or contaminated terminals.

The following additional checks may assist you in identifying a possible intermittent problem.

Reconnect any disconnected components and harness connector.

WARNING: To avoid personal injury or death, turn the ignition on, then reconnect the battery.

With the scan tool monitor active codes as you work through the following steps.

Wiggle the wiring harness and connectors of the related airbag circuit or component.

If codes are related to the Driver Airbag circuits, rotate the steering wheel from stop to stop.

If only stored codes return continue the test until the problem area has been isolated.

In the previous steps you have attempted to recreate the conditions responsible for setting active DTC in question.

Are any ACTIVE DTCs present?

Yes >> Select the appropriate diagnostic procedure from the Table of Contents in this section.

No >> No problem found at this time. Erase all codes before returning vehicle to customer.

DRIVER SQUIB 2 SHORT TO BATTERY

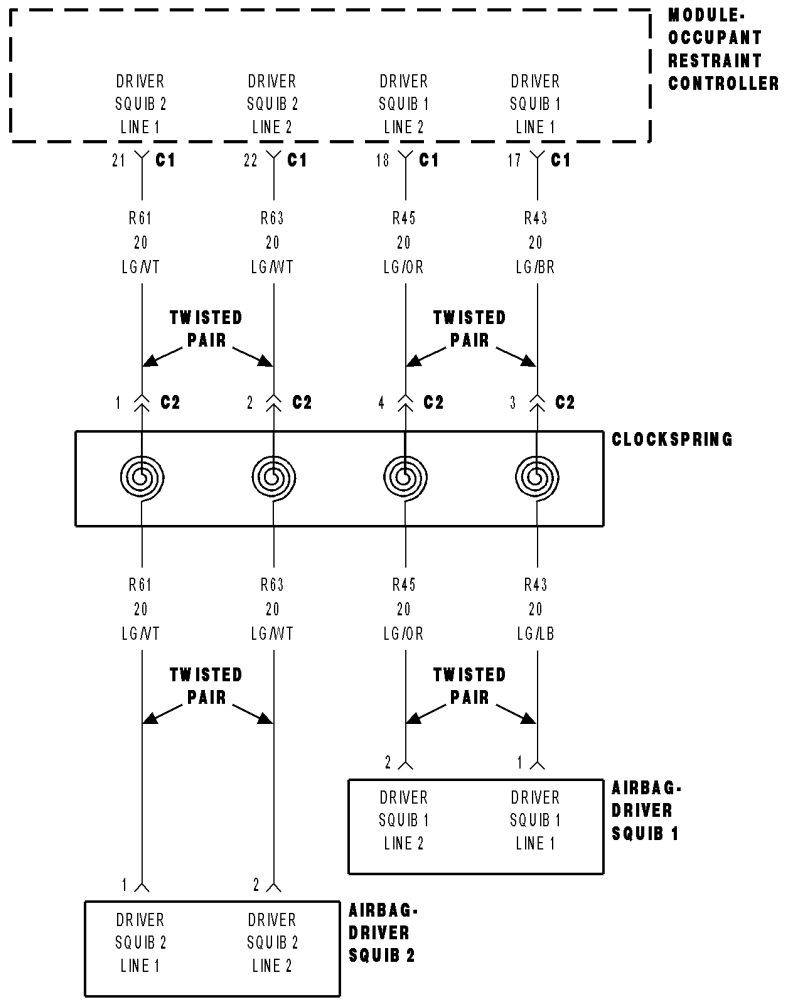

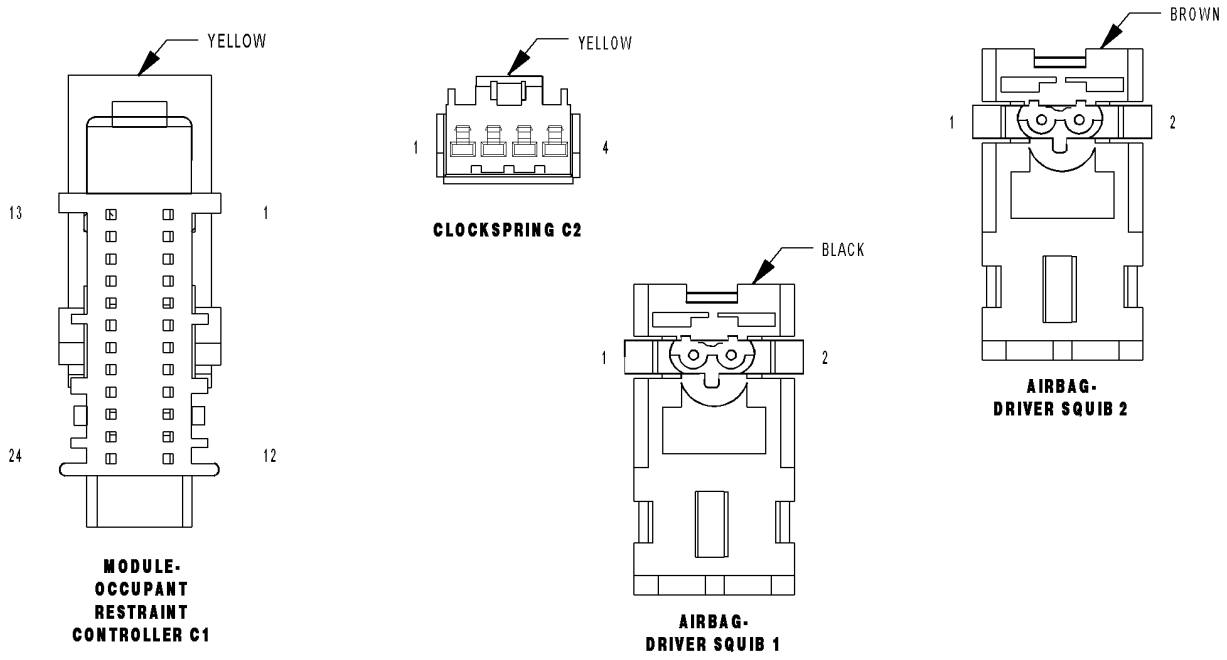

814ec6e6

DRIVER SQUIB 2 SHORT TO BATTERY (CONTINUED)

For the Air Bag System circuit diagram (Refer to 8 - ELECTRICAL/RESTRAINTS - SCHEMATICS AND DIAGRAMS).

For a complete wiring diagram **Refer to Section 8W**.

- **When Monitored:**
  With the ignition on, the Occupant Restraint Controller (ORC) monitors the voltage on the Driver Squib 2 circuits.
- **Set Condition:**
  The ORC has detected voltage on the Driver Squib 2 circuits.

Possible Causes
DRIVER SQUIB 2 LINE 1 CIRCUIT OR DRIVER SQUIB 2 LINE 2 CIRCUIT SHORTED TO BATTERY
CLOCKSPRING
DRIVER AIRBAG
ORC

Diagnostic Test

1. DETERMINE ACTIVE OR STORED DTC

NOTE: Ensure the battery is fully charged.

NOTE: The Scan Tool, SRS Airbag Load Tool MRL 8443 and DVOM are required to perform the following test.

NOTE: When reconnecting airbag system components the Ignition must be turned off and the Battery must be disconnected.

Select Active or Stored DTC.

Is the DTC active or stored?

ORC - ACTIVE DTC
Go To 2

ORC - STORED DTC
Go To 6

DRIVER SQUIB 2 SHORT TO BATTERY (CONTINUED)

2. CHECK FOR SHORTED SQUIB CIRCUITS IN DRIVER AIRBAG

WARNING: To avoid personal injury or death, turn the ignition off, disconnect the battery and wait two minutes before proceeding.
Disconnect the Driver Airbag Squib connectors.

WARNING: To avoid personal injury or death, do not place an intact undeployed airbag face down on a hard surface, the airbag will propel into the air if accidentally deployed.

NOTE: Check connectors - Clean and repair as necessary.
Connect the 8443 Load Tool and appropriate Jumper to the Driver Airbag Squib connectors.

WARNING: To avoid personal injury or death, turn the ignition on, then reconnect the battery.
With the scan tool, read the active ORC DTC's.

Does the scan tool display: DRIVER SQUIB 2 SHORT TO BATTERY?

Yes >> Go To 3

No >> Replace the Driver Airbag in accordance with the Service Information.
Perform ORC VERIFICATION TEST - VER 1

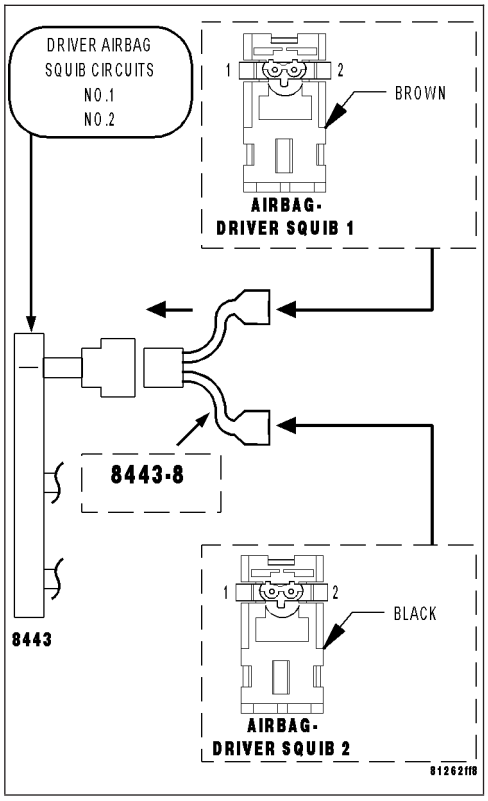

3. CHECK CLOCKSPRING SQUIB CIRCUITS FOR A SHORT TO BATTERY

WARNING: To avoid personal injury or death, turn the ignition off, disconnect the battery and wait two minutes before proceeding.
Disconnect the 8443 Load Tool and Jumper from the Driver Airbag Squib connectors.

Disconnect the Clockspring connector.

NOTE: Check connectors - Clean and repair as necessary.
Connect the 8443 Load Tool and appropriate Jumper to the Clockspring connector.

WARNING: To avoid personal injury or death, turn the ignition on, then reconnect the battery.
With the scan tool, read the active ORC DTC's.

Does the scan tool display: DRIVER SQUIB 2 SHORT TO BATTERY?

Yes >> Go To 4

No >> Replace the Clockspring in accordance with the Service Information.
Perform ORC VERIFICATION TEST - VER 1

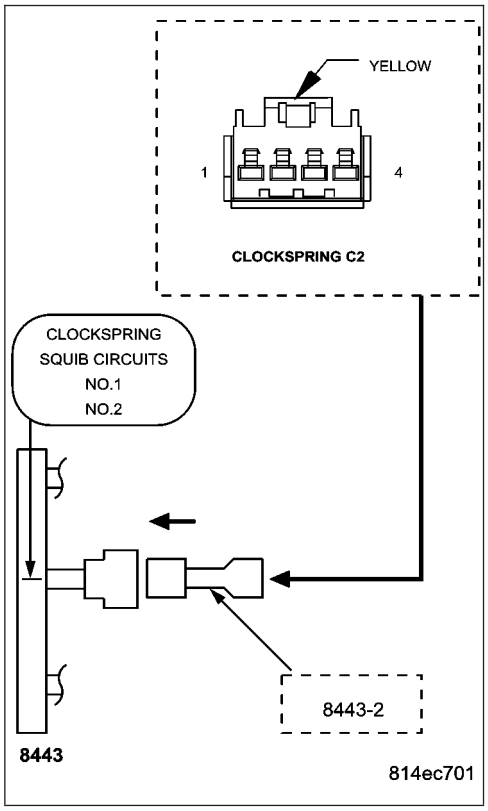

DRIVER SQUIB 2 SHORT TO BATTERY (CONTINUED)

4. CHECK DRIVER SQUIB 2 LINE 1 CIRCUIT AND DRIVER SQUIB 2 LINE 2 CIRCUIT FOR A SHORT TO BATTERY

WARNING: To avoid personal injury or death, turn the ignition off, disconnect the battery and wait two minutes before proceeding.
Disconnect the 8443 Load Tool and Jumper from the Clockspring connector.

Disconnect the ORC connectors.

NOTE: Check connectors - Clean and repair as necessary.
Connect the 8443 Load Tool ORC Adaptor to the ORC C2 connector.

WARNING: To avoid personal injury or death, turn the ignition on, then reconnect the battery.
Measure the voltage of the Driver Squib 2 Line 1 circuit between the Clockspring connector and ground.

Measure the voltage of the Driver Squib 2 Line 2 circuit between the Clockspring connector and ground.

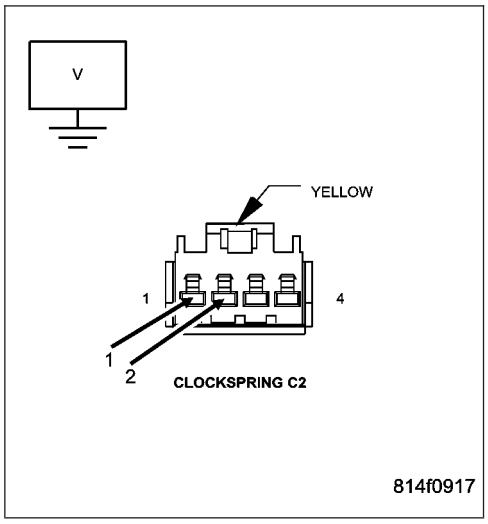

Is there any voltage present for either measurement?

Yes >> Repair the Driver Squib 2 circuits with voltage present for a short to Battery.
Perform ORC VERIFICATION TEST - VER 1

No >> Go To 5

---

5. REPLACE THE ORC

WARNING: To avoid personal injury or death, turn the ignition off, disconnect the battery and wait two minutes before proceeding.

WARNING: If the Occupant Restraint Controller (ORC) is dropped at any time, it must be replaced. Failure to take the proper precautions can result in accidental airbag deployment and personal injury or death.

NOTE: When reconnecting airbag system components the Ignition must be turned off and the Battery must be disconnected.

Repair

Replace the ORC in accordance with the Service Information.
Perform ORC VERIFICATION TEST - VER 1

DRIVER SQUIB 2 SHORT TO BATTERY (CONTINUED)

6. STORED ORC DTC

With the scan tool, record and erase all DTC's from all Airbag System Modules.

If any ACTIVE codes are present they must be resolved before diagnosing any stored codes.

WARNING: To avoid personal injury or death, turn the ignition off, disconnect the battery and wait two minutes before proceeding.

Using the wiring diagram/schematic as a guide, inspect the wiring and connectors.

Look for chaffed, pierced, pinched, or partially broken wires and broken, bent, pushed out, spread, corroded, or contaminated terminals.

The following additional checks may assist you in identifying a possible intermittent problem.

Reconnect any disconnected components and harness connector.

WARNING: To avoid personal injury or death, turn the ignition on, then reconnect the battery.

With the scan tool monitor active codes as you work through the following steps.

Wiggle the wiring harness and connectors of the related airbag circuit or component.

If codes are related to the Driver Airbag circuits, rotate the steering wheel from stop to stop.

If only stored codes return continue the test until the problem area has been isolated.

In the previous steps you have attempted to recreate the conditions responsible for setting active DTC's in question.

Are any ACTIVE DTC's present?

Yes >> Select the appropriate diagnostic procedure from the Table of Contents in this section.

No >> No problem found at this time. Erase all codes before returning vehicle to customer.

DRIVER SQUIB 2 SHORT TO GROUND

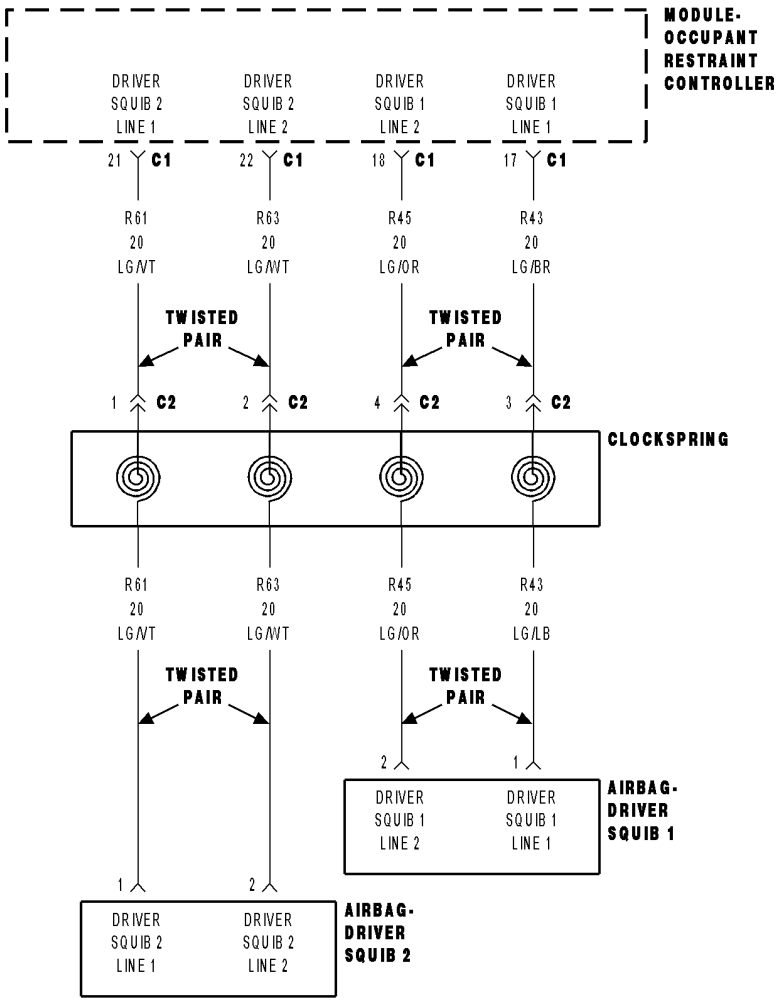

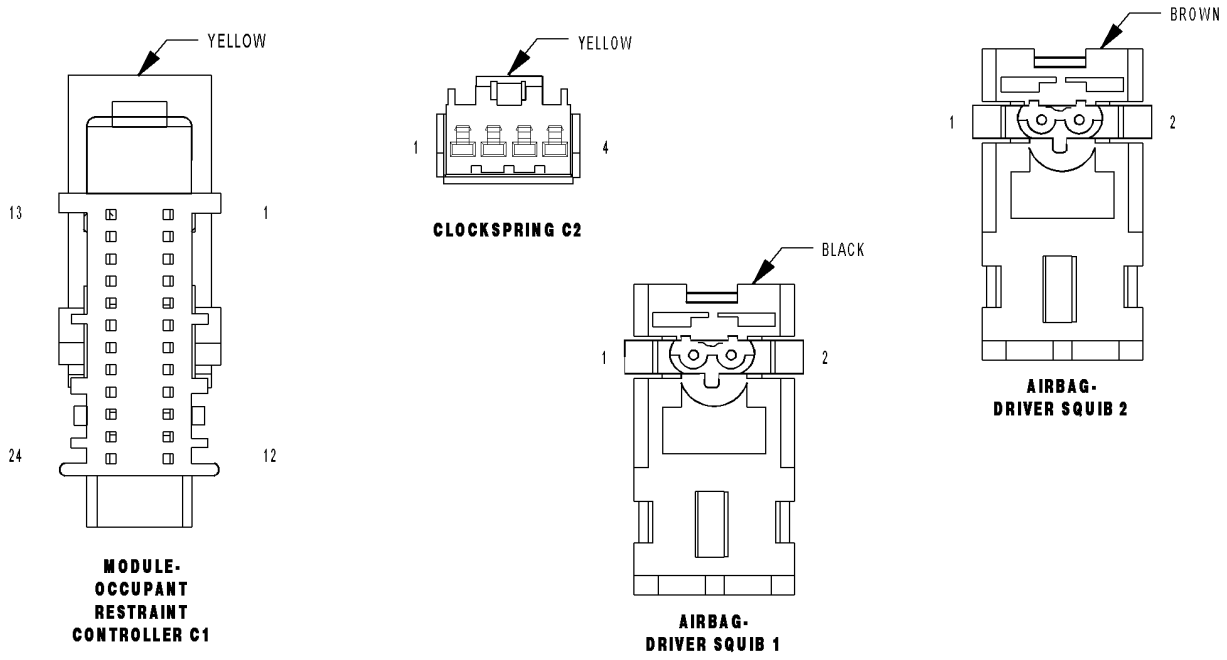

814ec6e6

DRIVER SQUIB 2 SHORT TO GROUND (CONTINUED)

For the Air Bag System circuit diagram (Refer to 8 - ELECTRICAL/RESTRAINTS - SCHEMATICS AND DIAGRAMS).

For a complete wiring diagram **Refer to Section 8W**.

- **When Monitored:**
  With the ignition on, the Occupant Restraint Controller (ORC) monitors the resistance of the Driver Squib 2 circuits.
- **Set Condition:**
  The ORC has detected low resistance on the Driver Squib 2 circuits.

Possible Causes
DRIVER SQUIB 2 LINE 1 CIRCUIT OR DRIVER SQUIB 2 LINE 2 CIRCUIT SHORTED TO GROUND
CLOCKSPRING
DRIVER AIRBAG
ORC

Diagnostic Test

1. DETERMINE ACTIVE OR STORED DTC

NOTE: Ensure the battery is fully charged.

NOTE: The scan tool, SRS Airbag Load Tool MRL 8443, and DVOM are required to perform the following test.

NOTE: When reconnecting airbag system components the Ignition must be turned off and the Battery must be disconnected.

Select Active or Stored DTC.

Is the DTC active or stored?

ORC - ACTIVE DTC
Go To 2

ORC - STORED DTC
Go To 6

DRIVER SQUIB 2 SHORT TO GROUND (CONTINUED)

2. CHECK FOR SHORTED SQUIB CIRCUITS IN DRIVER AIRBAG

WARNING: To avoid personal injury or death, turn the ignition off, disconnect the battery and wait two minutes before proceeding.
Disconnect the Driver Airbag Squib connectors.

WARNING: To avoid personal injury or death, do not place an intact undeployed airbag face down on a hard surface, the airbag will propel into the air if accidentally deployed.

NOTE: Check connectors - Clean and repair as necessary.
Connect the 8443 Load Tool and appropriate Jumper to the Driver Airbag Squib connectors.

WARNING: To avoid personal injury or death, turn the ignition on, then reconnect the battery.
With the scan tool, read the active ORC DTC's.

Does the scan tool display: DRIVER SQUIB 2 SHORT TO GROUND?

Yes >> Go To 3

No >> Replace the Driver Airbag in accordance with the Service Information.
Perform ORC VERIFICATION TEST - VER 1

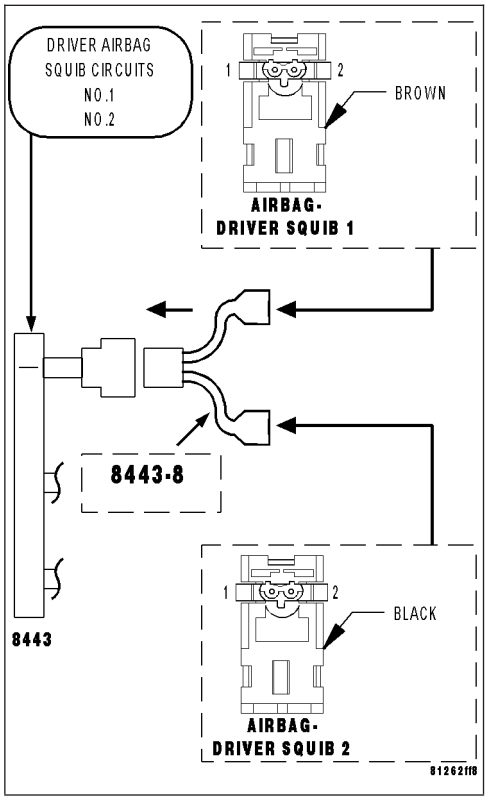

DRIVER SQUIB 2 SHORT TO GROUND (CONTINUED)

3. CHECK CLOCKSPRING SQUIB CIRCUITS FOR A SHORT TO GROUND

WARNING: To avoid personal injury or death, turn the ignition off, disconnect the battery and wait two minutes before proceeding.
Disconnect the 8443 Load Tool Jumper from the Driver Airbag Squib connectors.

Disconnect the Clockspring connector.

NOTE: Check connectors - Clean and repair as necessary.
Connect the 8443 Load Tool and appropriate Jumper to the Clockspring connector.

WARNING: To avoid personal injury or death, turn the ignition on, then reconnect the battery.
With the scan tool, read the active ORC DTC's.

Does the scan tool display: DRIVER SQUIB 2 SHORT TO GROUND?

Yes >> Go To 4

No >> Replace the Clockspring in accordance with the Service Information.
Perform ORC VERIFICATION TEST - VER 1

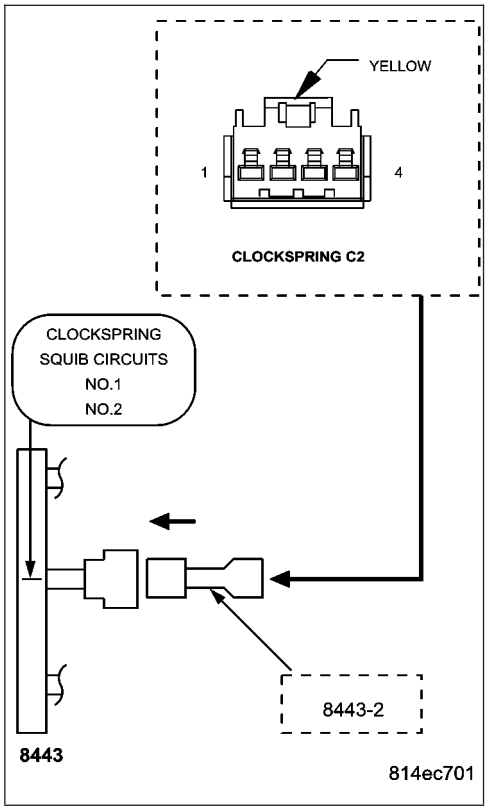

4. CHECK DRIVER SQUIB 2 LINE 1 CIRCUIT AND DRIVER SQUIB 2 LINE 2 CIRCUIT FOR A SHORT TO GROUND

WARNING: To avoid personal injury or death, turn the ignition off, disconnect the battery and wait two minutes before proceeding.
Disconnect the 8443 Load Tool and Jumper from the Clockspring connector.

Disconnect the ORC connectors.

NOTE: Check connectors - Clean and repair as necessary.
Connect the 8443 Load Tool ORC Adaptor to the ORC connector.

Measure the resistance of the Driver Squib 2 Line 1 circuit between ground and the Clockspring connector.

Measure the resistance of the Driver Squib 2 Line 2 circuit between ground and the Clockspring connector.

Is the resistance below 10K ohms for either measurement?

Yes >> Repair the Driver Squib 2 circuits with a resistance below 10K ohms for a short to ground.
Perform ORC VERIFICATION TEST - VER 1

No >> Go To 5

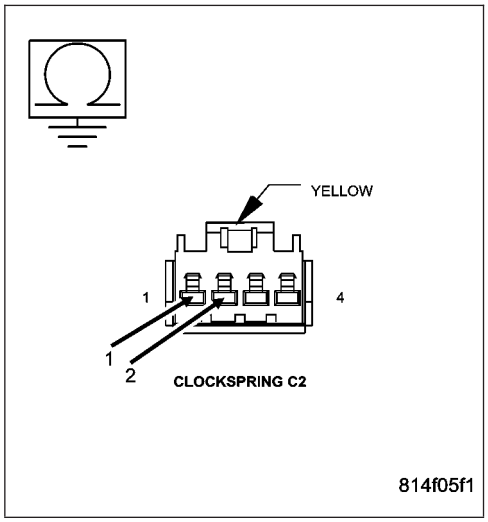

DRIVER SQUIB 2 SHORT TO GROUND (CONTINUED)

5. REPLACE THE ORC

WARNING: If the Occupant Restraint Controller (ORC) is dropped at any time, it must be replaced. Failure to take the proper precautions can result in accidental airbag deployment and personal injury or death.

NOTE: When reconnecting airbag system components the Ignition must be turned off and the Battery must be disconnected.

Repair

Replace the ORC in accordance with the Service Information.

Perform ORC VERIFICATION TEST - VER 1

---

6. STORED ORC DTC

With the scan tool, record and erase all DTC's from all Airbag System Modules.

If any ACTIVE codes are present they must be resolved before diagnosing any stored codes.

WARNING: To avoid personal injury or death, turn the ignition off, disconnect the battery and wait two minutes before proceeding.

Using the wiring diagram/schematic as a guide, inspect the wiring and connectors.

Look for chaffed, pierced, pinched, or partially broken wires and broken, bent, pushed out, spread, corroded, or contaminated terminals.

The following additional checks may assist you in identifying a possible intermittent problem.

Reconnect any disconnected components and harness connector.

WARNING: To avoid personal injury or death, turn the ignition on, then reconnect the battery.

With the scan tool monitor active codes as you work through the following steps.

Wiggle the wiring harness and connectors of the related airbag circuit or component.

If codes are related to the Driver Airbag circuits, rotate the steering wheel from stop to stop.

If only stored codes return continue the test until the problem area has been isolated.

In the previous steps you have attempted to recreate the conditions responsible for setting active DTC in question.

Are any ACTIVE DTCs present?

Yes >> Select the appropriate diagnostic procedure from the Table of Contents in this section.

No >> No problem found at this time. Erase all codes before returning vehicle to customer.

INTERNAL 1

For a complete wiring diagram **Refer to Section 8W**.

- **When Monitored:**
  With the ignition on. The module's on board diagnostics continuously performs internal circuit tests.
- **Set Condition:**
  This DTC will set if the module identifies an out of range internal circuit.

Possible Causes
OCCUPANT RESTRAINT CONTROLLER

Diagnostic Test

1. REPLACE OCCUPANT RESTRAINT CONTROLLER

Turn the ignition on.

With the scan tool, erase and read ORC DTCs.

WARNING: To avoid personal injury or death, turn the ignition off, disconnect the battery and wait two minutes before proceeding.

WARNING: If the Occupant Restraint Controller is dropped at any time, it must be replaced. Failure to take proper precautions could result in accidental airbag deployment and personal injury or death.

When this code is set, view repair.

Repair

Replace the Occupant Restraint Controller in accordance with the Service Information.

Perform the ORC VERIFICATION TEST-VER. 1.

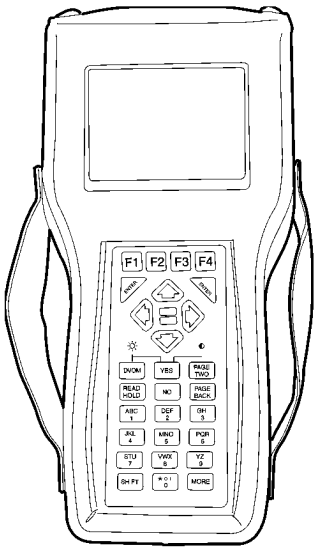

8136f94b

INTERNAL 2

For a complete wiring diagram **Refer to Section 8W**.

- **When Monitored:**
  With the ignition on. The module's on board diagnostics continuously performs internal circuit tests.
- **Set Condition:**
  This DTC will set if the module identifies an out of range internal circuit.

Possible Causes
OCCUPANT RESTRAINT CONTROLLER

Diagnostic Test

1. REPLACE OCCUPANT RESTRAINT CONTROLLER

Turn the ignition on.

With the scan tool, erase and read ORC DTCs.

WARNING: To avoid personal injury or death, turn the ignition off, disconnect the battery and wait two minutes before proceeding.

WARNING: If the Occupant Restraint Controller is dropped at any time, it must be replaced. Failure to take proper precautions could result in accidental airbag deployment and personal injury or death.

When this code is set, view repair.

Repair

Replace the Occupant Restraint Controller in accordance with the Service Information.

Perform the ORC VERIFICATION TEST-VER. 1.

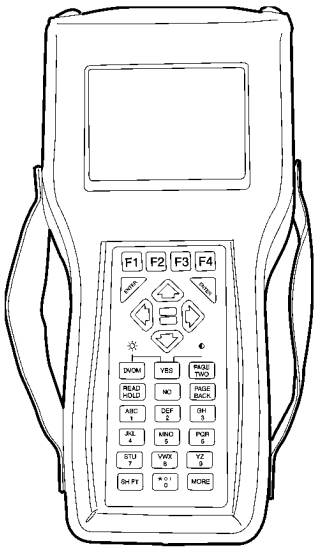

8136f94b

LEFT CURTAIN SQUIB 1 CIRCUIT OPEN

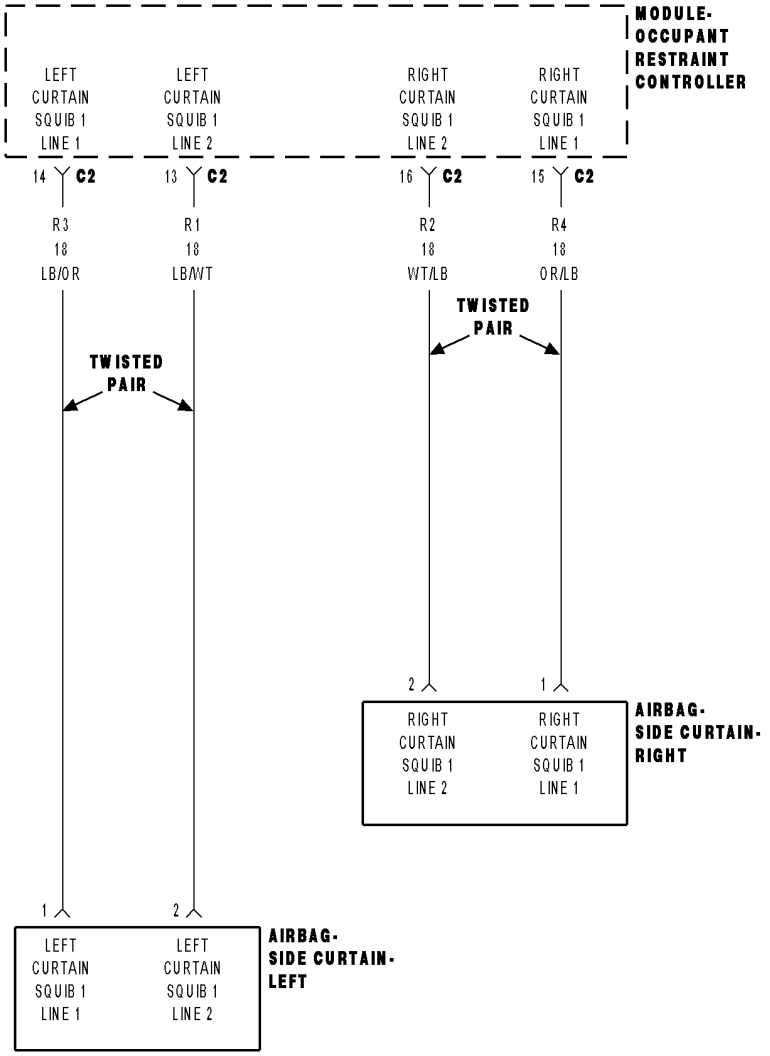

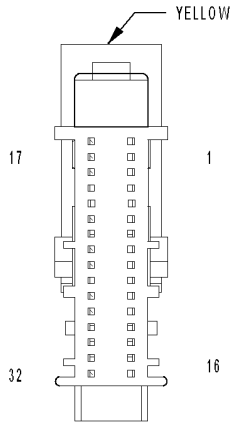

MODULE-
OCCUPANT
RESTRAINT
CONTROLLER C2

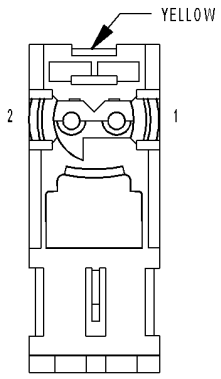

AIRBAG-
SIDE
CURTAIN-
RIGHT

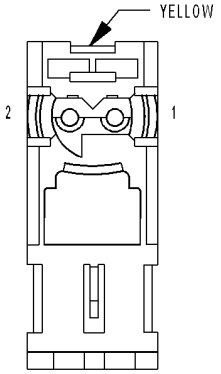

AIRBAG-
SIDE
CURTAIN-
LEFT

814f2ea2

LEFT CURTAIN SQUIB 1 CIRCUIT OPEN (CONTINUED)

For the Air Bag System circuit diagram (Refer to 8 - ELECTRICAL/RESTRAINTS - SCHEMATICS AND DIAGRAMS).

For a complete wiring diagram **Refer to Section 8W**.

- **When Monitored:**
  With the ignition on, the Occupant Restraint Controller (ORC) monitors the resistance of the Left Curtain Squib 1 circuits.
- **Set Condition:**
  The ORC has detected an open or high resistance on the Left Curtain Squib 1 circuits.

Possible Causes
(R3) LEFT CURTAIN SQUIB 1 LINE 1 CIRCUIT OPEN
(R1) LEFT CURTAIN SQUIB 1 LINE 2 CIRCUIT OPEN
LEFT SIDE CURTAIN AIRBAG
ORC

Diagnostic Test

1. DETERMINE ACTIVE OR STORED DTC

NOTE: Ensure the battery is fully charged.

NOTE: The scan tool, SRS Airbag Load Tool MRL 8443, and DVOM are required to perform the following test.

NOTE: When reconnecting airbag system components the Ignition must be turned off and the Battery must be disconnected.

Select Active or Stored DTC.

Is the DTC active or stored?

ORC - ACTIVE DTC
Go To 2

ORC - STORED DTC
Go To 6

LEFT CURTAIN SQUIB 1 CIRCUIT OPEN (CONTINUED)

2. CHECK FOR OPEN SQUIB CIRCUITS IN LEFT SIDE CURTAIN AIRBAG

WARNING: To avoid personal injury or death, turn the ignition off, disconnect the battery and wait two minutes before proceeding.
Disconnect the Left Side Curtain Airbag connector.

WARNING: To avoid personal injury or death, do not place an intact undeployed curtain airbag face down on a hard surface, the airbag will propel into the air if accidentally deployed.

NOTE: Check connectors - Clean and repair as necessary.
Connect the 8443 Load Tool and appropriate Jumper to the Left Side Curtain Airbag connector.

WARNING: To avoid personal injury or death, turn the ignition on, then reconnect the battery.
With the scan tool, read the active ORC DTC's.

Does the scan tool display: LEFT CURTAIN SQUIB 1 CIRCUIT OPEN?

Yes >> Go To 3

No >> Replace the Left Side Curtain Airbag in accordance with the Service Information.
Perform ORC VERIFICATION TEST - VER 1

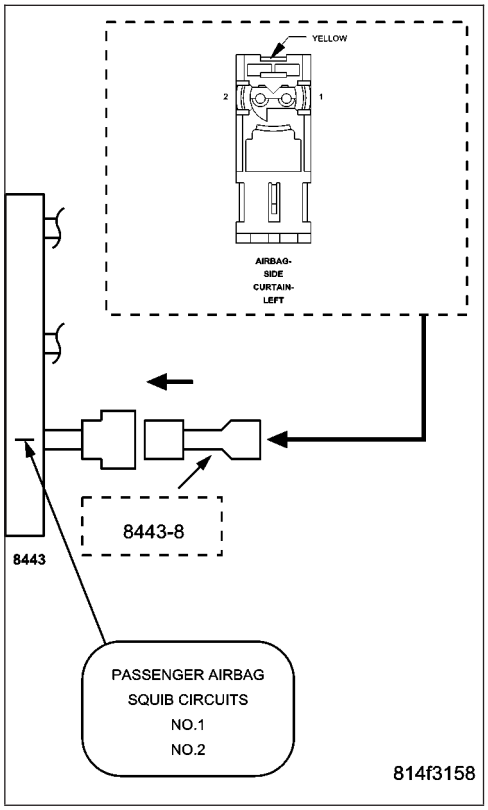

3. CHECK (R3) LEFT CURTAIN SQUIB 1 LINE 1 CIRCUIT FOR AN OPEN

WARNING: To avoid personal injury or death, turn the ignition off, disconnect the battery and wait two minutes before proceeding.
Disconnect the 8443 Load Tool and Jumper from the Left Side Curtain Airbag connector.

Disconnect the ORC connectors.

NOTE: Check connectors - Clean and repair as necessary.
Connect the 8443 Load Tool ORC Adaptor to the ORC connector.

Measure the resistance of the (R3) Left Curtain Squib 1 Line 1 circuit between the Left Side Curtain Airbag connector and the Load Tool ORC Adaptor.

Is the resistance below 1.0 ohm?

Yes >> Go To 4

No >> Repair the (R3) Left Curtain Squib 1 Line 1 circuit for an open. Then, Go To 4

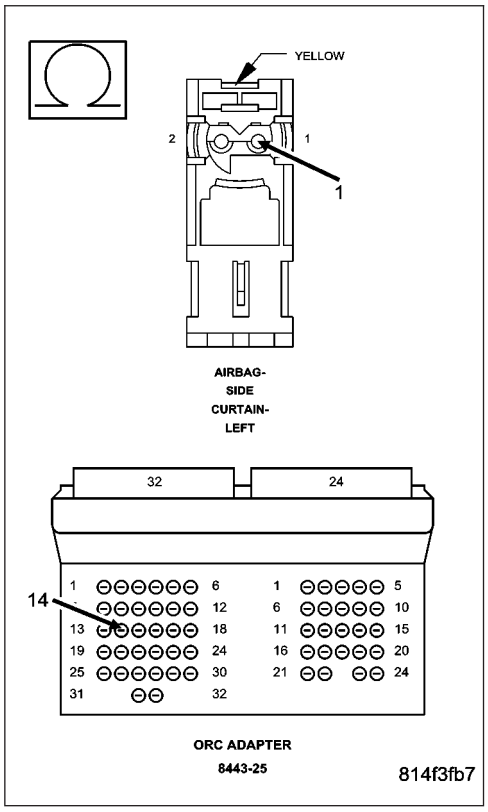

LEFT CURTAIN SQUIB 1 CIRCUIT OPEN (CONTINUED)

4. CHECK (R1) LEFT CURTAIN SQUIB 1 LINE 2 CIRCUIT FOR AN OPEN

Measure the resistance of the (R1) Left Curtain Squib 1 Line 2 circuit between the Left Side Curtain Airbag connector and the Load Tool ORC Adaptor.

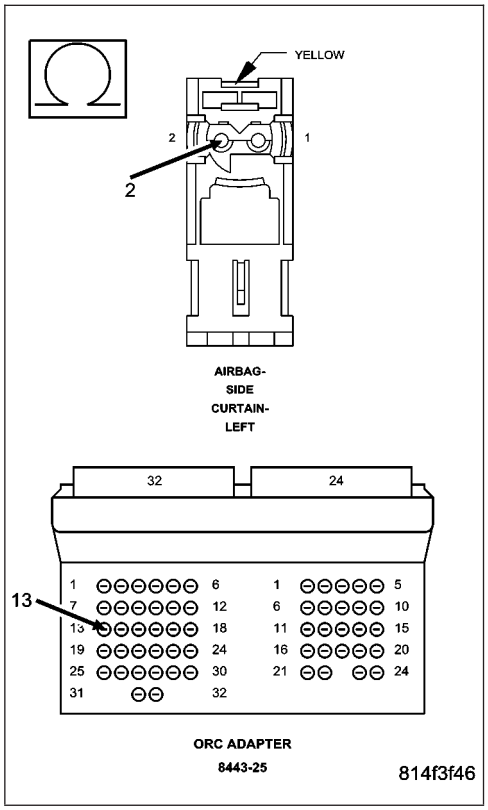

Is the resistance below 1.0 ohm?

Yes >> Go To 5

No >> Repair the (R1) Left Curtain Squib 1 Line 2 circuit for an open.
Perform ORC VERIFICATION TEST - VER 1

---

5. REPLACE THE ORC

WARNING: If the Occupant Restraint Controller (ORC) is dropped at any time, it must be replaced. Failure to take the proper precautions can result in accidental airbag deployment and personal injury or death.

NOTE: When reconnecting airbag system components the Ignition must be turned off and the Battery must be disconnected.

Repair

Replace the ORC in accordance with the Service Information.
Perform ORC VERIFICATION TEST - VER 1

LEFT CURTAIN SQUIB 1 CIRCUIT OPEN (CONTINUED)

6. STORED ORC DTC

With the scan tool, record and erase all DTC's from all Airbag System Modules.

If any ACTIVE codes are present they must be resolved before diagnosing any stored codes.

WARNING: To avoid personal injury or death, turn the ignition off, disconnect the battery and wait two minutes before proceeding.

Using the wiring diagram/schematic as a guide, inspect the wiring and connectors.

Look for chaffed, pierced, pinched, or partially broken wires and broken, bent, pushed out, spread, corroded, or contaminated terminals.

The following additional checks may assist you in identifying a possible intermittent problem.

Reconnect any disconnected components and harness connector.

WARNING: To avoid personal injury or death, turn the ignition on, then reconnect the battery.

With the scan tool monitor active codes as you work through the following steps.

Wiggle the wiring harness and connectors of the related airbag circuit or component.

If codes are related to the Driver Airbag circuits, rotate the steering wheel from stop to stop.

If only stored codes return continue the test until the problem area has been isolated.

In the previous steps you have attempted to recreate the conditions responsible for setting active DTC in question.

Are any ACTIVE DTCs present?

Yes >> Select the appropriate diagnostic procedure from the Table of Contents in this section.

No >> No problem found at this time. Erase all codes before returning vehicle to customer.

LEFT CURTAIN SQUIB 1 CIRCUIT SHORT

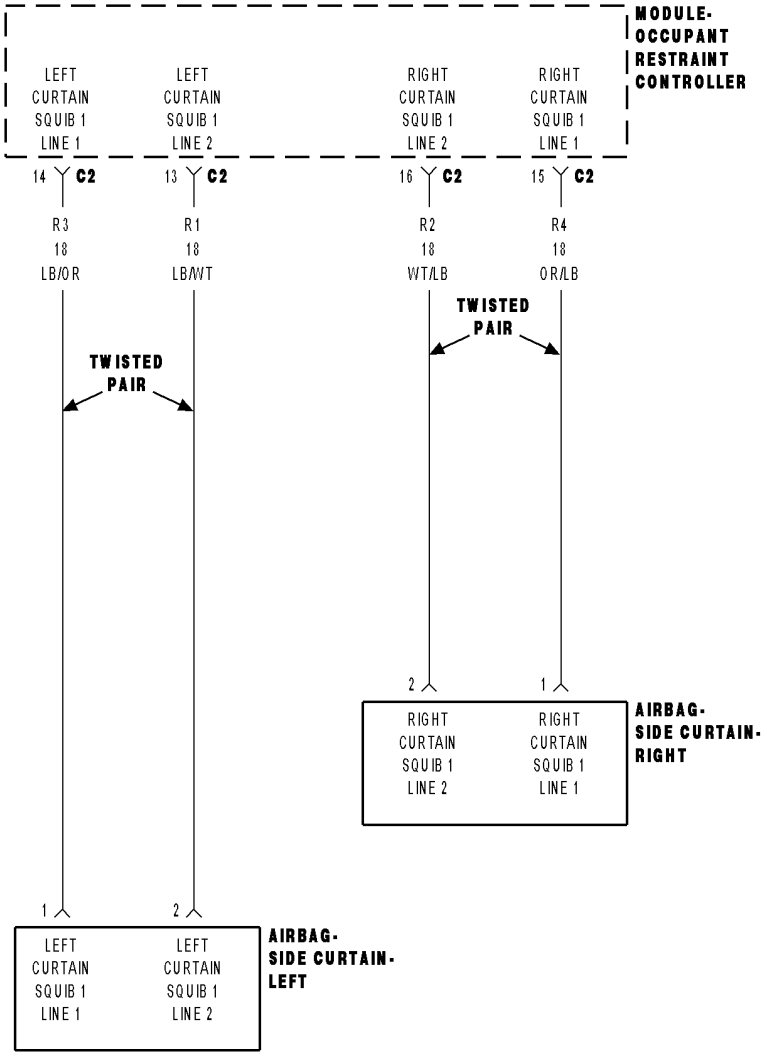

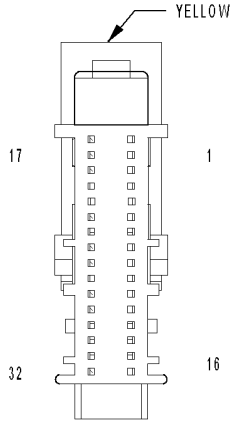

MODULE-
OCCUPANT
RESTRAINT
CONTROLLER C2

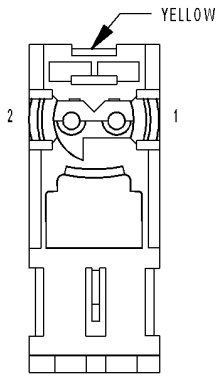

AIRBAG-
SIDE
CURTAIN-
RIGHT

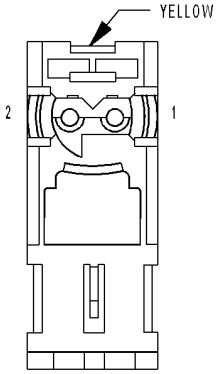

AIRBAG-
SIDE
CURTAIN-
LEFT

814f2ea2

LEFT CURTAIN SQUIB 1 CIRCUIT SHORT (CONTINUED)

For the Air Bag System circuit diagram (Refer to 8 - ELECTRICAL/RESTRAINTS - SCHEMATICS AND DIAGRAMS).

For a complete wiring diagram **Refer to Section 8W**.

- **When Monitored:**
  With the ignition on, the Occupant Restraint Controller (ORC) monitors the resistance of the Left Curtain Squib 1 circuits.
- **Set Condition:**
  The ORC has detected low resistance between the Left Curtain Squib 1 circuits.

Possible Causes
(R3) LEFT CURTAIN SQUIB 1 LINE 1 CIRCUIT SHORTED TO (R1) LEFT CURTAIN SQUIB 1 LINE 2 CIRCUIT
LEFT SIDE CURTAIN AIRBAG
ORC

Diagnostic Test

1. DETERMINE ACTIVE OR STORED DTC

NOTE: Ensure the battery is fully charged.

NOTE: The scan tool, SRS Airbag Load Tool MRL 8443, and DVOM are required to perform the following test.

NOTE: When reconnecting airbag system components the Ignition must be turned off and the Battery must be disconnected.

Select Active or Stored DTC.

Is the DTC active or stored?

ORC - ACTIVE DTC
Go To 2

ORC - STORED DTC
Go To 5

LEFT CURTAIN SQUIB 1 CIRCUIT SHORT (CONTINUED)

2. CHECK FOR SHORTED SQUIB CIRCUITS IN LEFT SIDE CURTAIN AIRBAG

WARNING: To avoid personal injury or death, turn the ignition off, disconnect the battery and wait two minutes before proceeding.
Disconnect the Left Side Curtain Airbag connector.

WARNING: To avoid personal injury or death, do not place an intact undeployed curtain airbag face down on a hard surface, the airbag will propel into the air if accidentally deployed.

NOTE: Check connectors - Clean and repair as necessary.
Connect the 8443 Load Tool and appropriate Jumper to the Left Side Curtain Airbag connector.

WARNING: To avoid personal injury or death, turn the ignition on, then reconnect the battery.
With the scan tool, read the active ORC DTC's.

Does the scan tool display: LEFT CURTAIN SQUIB 1 CIRCUIT SHORT?

Yes >> Go To 3

No >> Replace the Left Side Curtain Airbag in accordance with the Service Information.
Perform ORC VERIFICATION TEST - VER 1

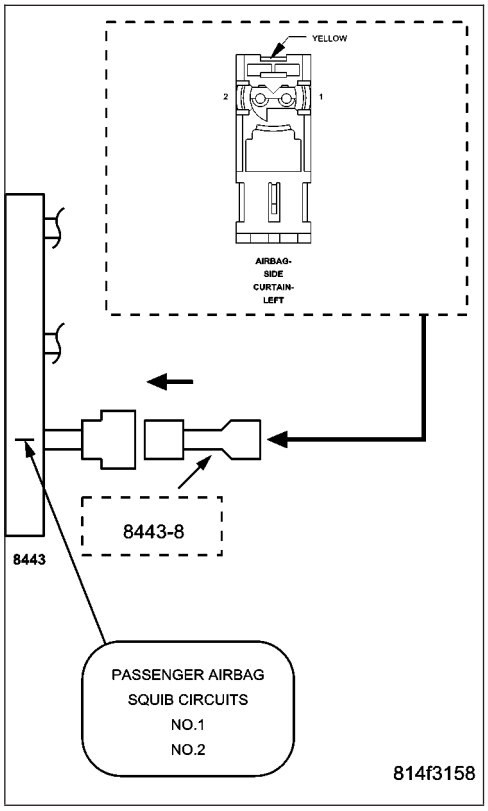

LEFT CURTAIN SQUIB 1 CIRCUIT SHORT (CONTINUED)

3. CHECK (R3) LEFT CURTAIN SQUIB 1 LINE 1 CIRCUIT FOR A SHORT TO (R1) LEFT CURTAIN SQUIB 1 LINE 2 CIRCUIT

WARNING: To avoid personal injury or death, turn the ignition off, disconnect the battery and wait two minutes before proceeding.
Disconnect the 8443 Load Tool and Jumper from the Left Side Curtain Airbag connector.

Disconnect the ORC connectors.

NOTE: Check connectors - Clean and repair as necessary.
Connect the 8443 Load Tool ORC Adaptor to the ORC connector.

Measure the resistance between the (R3) Left Curtain Squib 1 Line 1 circuit and the (R1) Left Curtain Squib 1 Line 2 circuit at the Left Side Curtain Airbag connector.

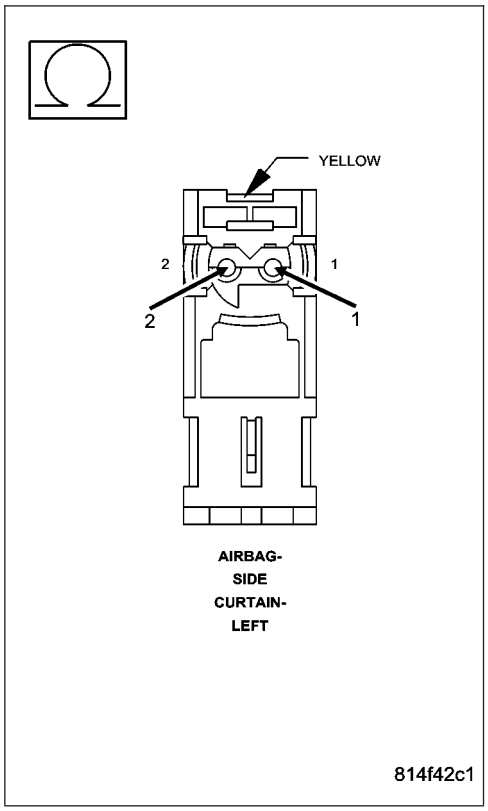

Is the resistance below 10K ohms?

Yes >> Repair the (R3) Left Curtain Squib 1 Line 1 circuit for a short to the (R1) Left Curtain Squib 1 Line 2 circuit.
Perform ORC VERIFICATION TEST - VER 1

No >> Go To 4

4. REPLACE THE ORC

WARNING: If the Occupant Restraint Controller (ORC) is dropped at any time, it must be replaced. Failure to take the proper precautions can result in accidental airbag deployment and personal injury or death.

NOTE: When reconnecting airbag system components the Ignition must be turned off and the Battery must be disconnected.

Repair

Replace the ORC in accordance with the Service Information.
Perform ORC VERIFICATION TEST - VER 1

LEFT CURTAIN SQUIB 1 CIRCUIT SHORT (CONTINUED)

5. STORED ORC DTC

With the scan tool, record and erase all DTC's from all Airbag System Modules.

If any ACTIVE codes are present they must be resolved before diagnosing any stored codes.

WARNING: To avoid personal injury or death, turn the ignition off, disconnect the battery and wait two minutes before proceeding.

Using the wiring diagram/schematic as a guide, inspect the wiring and connectors.

Look for chaffed, pierced, pinched, or partially broken wires and broken, bent, pushed out, spread, corroded, or contaminated terminals.

The following additional checks may assist you in identifying a possible intermittent problem.

Reconnect any disconnected components and harness connector.

WARNING: To avoid personal injury or death, turn the ignition on, then reconnect the battery.

With the scan tool monitor active codes as you work through the following steps.

Wiggle the wiring harness and connectors of the related airbag circuit or component.

If codes are related to the Driver Airbag circuits, rotate the steering wheel from stop to stop.

If only stored codes return continue the test until the problem area has been isolated.

In the previous steps you have attempted to recreate the conditions responsible for setting active DTC in question.

Are any ACTIVE DTC's present?

Yes >> Select the appropriate diagnostic procedure from the Table of Contents in this section.

No >> No problem found at this time. Erase all codes before returning vehicle to customer.

LEFT CURTAIN SQUIB 1 SHORT TO BATTERY

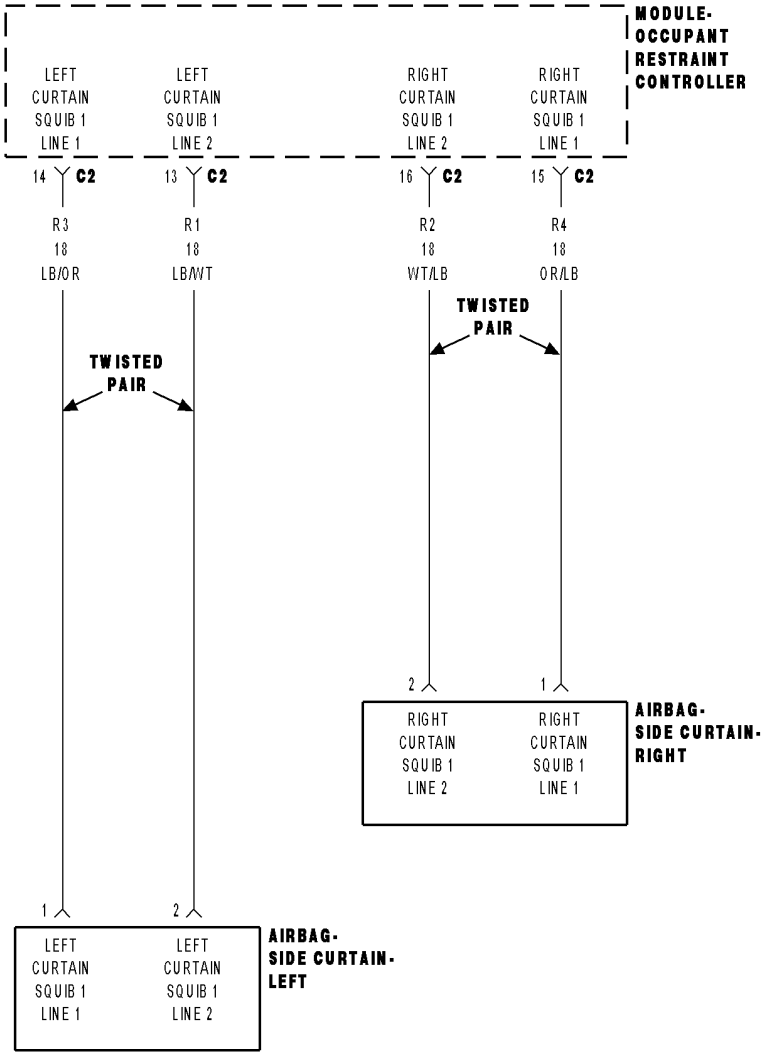

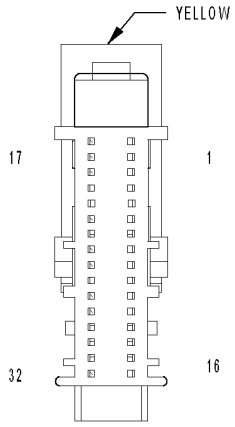

MODULE-
OCCUPANT
RESTRAINT
CONTROLLER C2

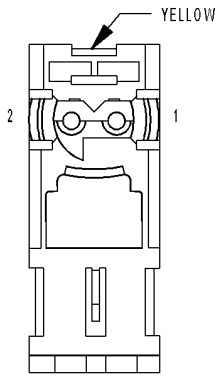

AIRBAG-
SIDE
CURTAIN-
RIGHT

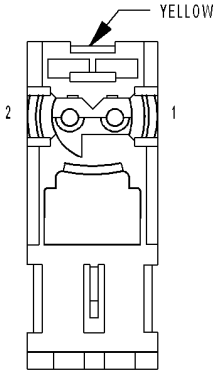

AIRBAG-
SIDE
CURTAIN-
LEFT

814f2ea2

LEFT CURTAIN SQUIB 1 SHORT TO BATTERY (CONTINUED)

For the Air Bag System circuit diagram (Refer to 8 - ELECTRICAL/RESTRAINTS - SCHEMATICS AND DIAGRAMS).

For a complete wiring diagram **Refer to Section 8W**.

- **When Monitored:**
  With the ignition on, the Occupant Restraint Controller (ORC) monitors the voltage on the Left Curtain Squib 1 circuits.
- **Set Condition:**
  The ORC has detected voltage on the Left Curtain Squib 1 circuits.

Possible Causes
(R3) LEFT CURTAIN SQUIB 1 LINE 1 CIRCUIT OR (R1) LEFT CURTAIN SQUIB 1 LINE 2 CIRCUIT SHORTED TO BATTERY
LEFT SIDE CURTAIN AIRBAG
ORC

Diagnostic Test

1. DETERMINE ACTIVE OR STORED DTC

NOTE: Ensure the battery is fully charged.

NOTE: The scan tool, SRS Airbag Load Tool MRL 8443, and DVOM are required to perform the following test.

NOTE: When reconnecting airbag system components the Ignition must be turned off and the Battery must be disconnected.

Select Active or Stored DTC.

Is the DTC active or stored?

ORC - ACTIVE DTC
Go To 2

ORC - STORED DTC
Go To 5

LEFT CURTAIN SQUIB 1 SHORT TO BATTERY (CONTINUED)

2. CHECK FOR SHORTED SQUIB CIRCUITS IN LEFT SIDE CURTAIN AIRBAG

WARNING: To avoid personal injury or death, turn the ignition off, disconnect the battery and wait two minutes before proceeding.
Disconnect the Left Side Curtain Airbag connector.

WARNING: To avoid personal injury or death, do not place an intact undeployed curtain airbag face down on a hard surface, the airbag will propel into the air if accidentally deployed.

NOTE: Check connectors - Clean and repair as necessary.
Connect the 8443 Load Tool and appropriate Jumper to the Left Side Curtain Airbag connector.

WARNING: To avoid personal injury or death, turn the ignition on, then reconnect the battery.
With the scan tool, read the active ORC DTC's.

Does the scan tool display: LEFT CURTAIN SQUIB 1 SHORT TO BATTERY?

Yes >> Go To 3

No >> Replace the Left Side Curtain Airbag in accordance with the Service Information.
Perform ORC VERIFICATION TEST - VER 1

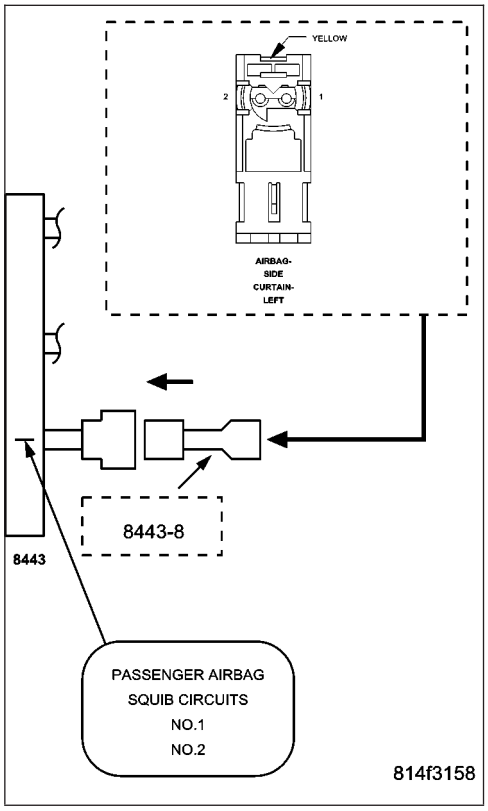

LEFT CURTAIN SQUIB 1 SHORT TO BATTERY (CONTINUED)

3. CHECK (R3) LEFT CURTAIN SQUIB 1 LINE 1 CIRCUIT AND (R1) LEFT CURTAIN SQUIB 1 LINE 2 CIRCUIT FOR A SHORT TO BATTERY

WARNING: To avoid personal injury or death, turn the ignition off, disconnect the battery and wait two minutes before proceeding.

Disconnect the 8443 Load Tool and Jumper from the Left Side Curtain Airbag connector.

Disconnect the ORC connectors.

NOTE: Check connectors - Clean and repair as necessary.

Connect the 8443 Load Tool ORC Adaptor to the ORC connector.

Measure the voltage of the (R3) Left Curtain Squib 1 Line 1 circuit between the Left Side Curtain Airbag connector and ground.

Measure the voltage of the (R1) Left Curtain Squib 1 Line 2 circuit between the Left Side Curtain Airbag connector and ground.

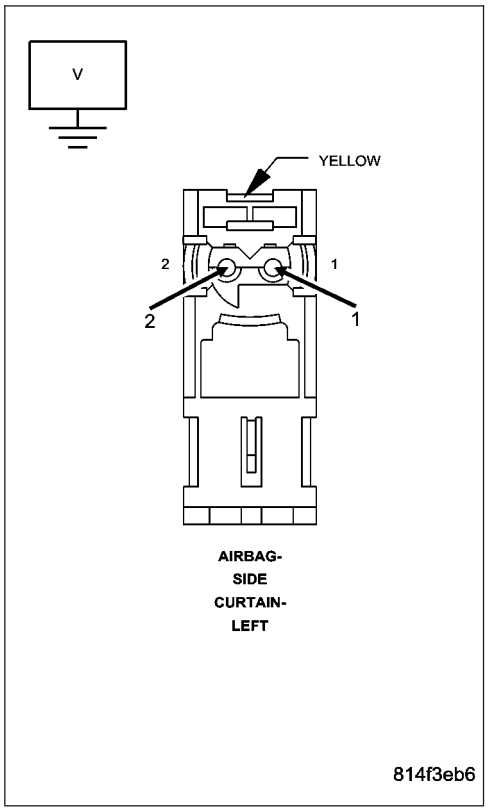

Is there any voltage present on either circuit?

Yes >> Repair the Left Curtain Squib 1 circuits with voltage present for a short to battery.
Perform ORC VERIFICATION TEST - VER 1

No >> Go To 4

---

4. REPLACE THE ORC

WARNING: To avoid personal injury or death, turn the ignition off, disconnect the battery and wait two minutes before proceeding.

WARNING: If the Occupant Restraint Controller (ORC) is dropped at any time, it must be replaced. Failure to take the proper precautions can result in accidental airbag deployment and personal injury or death.

NOTE: When reconnecting airbag system components the Ignition must be turned off and the Battery must be disconnected.

Repair

Replace the ORC in accordance with the Service Information.
Perform ORC VERIFICATION TEST - VER 1

LEFT CURTAIN SQUIB 1 SHORT TO BATTERY (CONTINUED)

5. STORED ORC DTC

With the scan tool, record and erase all DTC's from all Airbag System Modules.

If any ACTIVE codes are present they must be resolved before diagnosing any stored codes.

WARNING: To avoid personal injury or death, turn the ignition off then disconnect the battery and wait two minutes before proceeding.

Using the wiring diagram/schematic as a guide, inspect the wiring and connectors.

Look for chaffed, pierced, pinched, or partially broken wires and broken, bent, pushed out, spread, corroded, or contaminated terminals.

The following additional checks may assist you in identifying a possible intermittent problem.

Reconnect any disconnected components and harness connector.

WARNING: To avoid personal injury or death, turn the ignition on, then reconnect the battery.

With the scan tool monitor active codes as you work through the following steps.

Wiggle the wiring harness and connectors of the related airbag circuit or component.

If codes are related to the Driver Airbag circuits, rotate the steering wheel from stop to stop.

If only stored codes return continue the test until the problem area has been isolated.

In the previous steps you have attempted to recreate the conditions responsible for setting active DTC in question.

Are any ACTIVE DTCs present?

Yes >> Select the appropriate diagnostic procedure from the Table of Contents in this section.

No >> No problem found at this time. Erase all codes before returning vehicle to customer.

LEFT CURTAIN SQUIB 1 SHORT TO GROUND

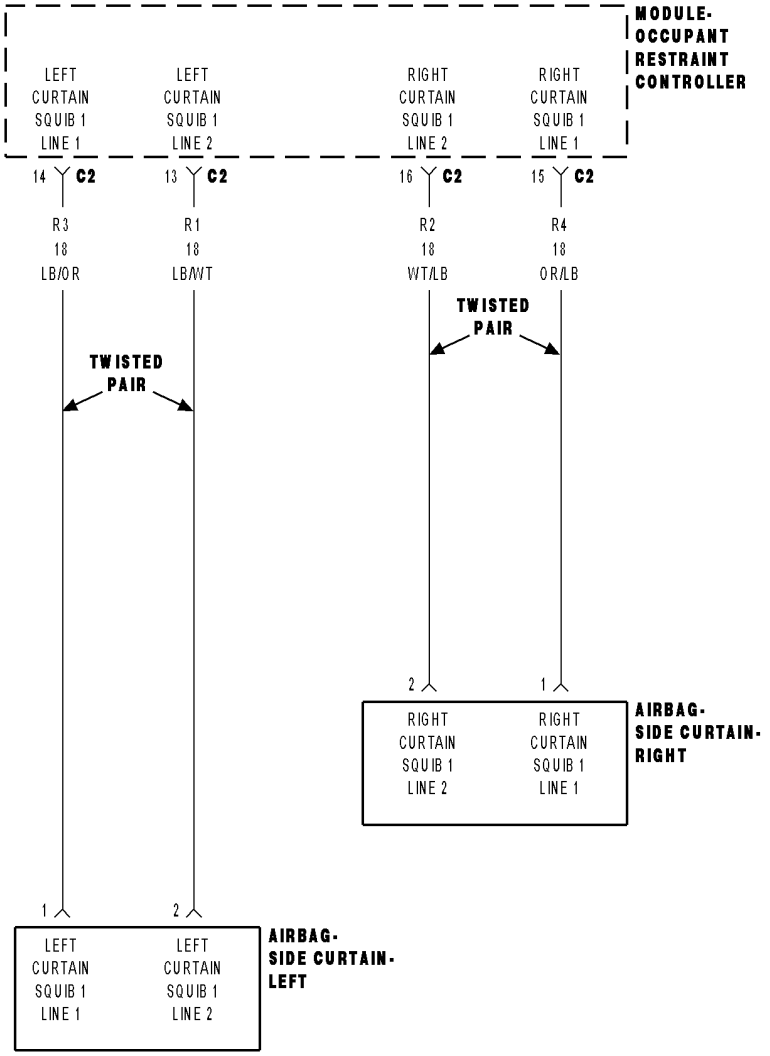

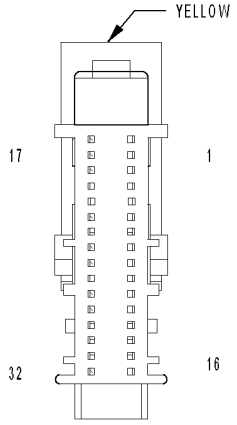

MODULE-
OCCUPANT
RESTRAINT
CONTROLLER C2

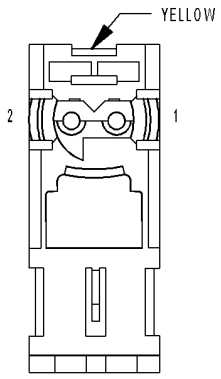

AIRBAG-
SIDE
CURTAIN-
RIGHT

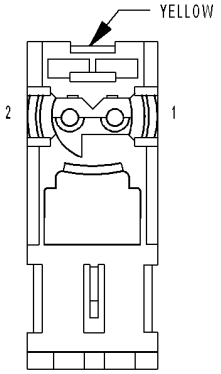

AIRBAG-
SIDE
CURTAIN-
LEFT

814f2ea2

LEFT CURTAIN SQUIB 1 SHORT TO GROUND (CONTINUED)

For the Air Bag System circuit diagram (Refer to 8 - ELECTRICAL/RESTRAINTS - SCHEMATICS AND DIAGRAMS).

For a complete wiring diagram **Refer to Section 8W**.

- **When Monitored:**
  With the ignition on, the Occupant Restraint Controller (ORC) monitors the resistance of the Left Curtain Squib 1 circuits.
- **Set Condition:**
  The ORC has detected low resistance of the Left Curtain Squib 1 circuits.

Possible Causes
(R3) LEFT CURTAIN SQUIB 1 LINE 1 CIRCUIT OR (R1) LEFT CURTAIN SQUIB 1 LINE 2 CIRCUIT SHORTED TO GROUND
LEFT SIDE CURTAIN AIRBAG
ORC

Diagnostic Test

1. DETERMINE ACTIVE OR STORED DTC

NOTE: Ensure the battery is fully charged.

NOTE: The scan tool, SRS Airbag Load Tool MRL 8443, and DVOM are required to perform the following test.

NOTE: When reconnecting airbag system components the Ignition must be turned off and the Battery must be disconnected.

Select Active or Stored DTC.

Is the DTC active or stored?

ORC - ACTIVE DTC
Go To 2

ORC - STORED DTC
Go To 5

LEFT CURTAIN SQUIB 1 SHORT TO GROUND (CONTINUED)

2. CHECK FOR SHORTED SQUIB CIRCUITS IN LEFT SIDE CURTAIN AIRBAG

WARNING: To avoid personal injury or death, turn the ignition off, disconnect the battery and wait two minutes before proceeding.
Disconnect the Left Side Curtain Airbag connector.

WARNING: To avoid personal injury or death, do not place an intact undeployed curtain airbag face down on a hard surface, the airbag will propel into the air if accidentally deployed.

NOTE: Check connectors - Clean and repair as necessary.
Connect the 8443 Load Tool and appropriate Jumper to the Left Side Curtain Airbag connector.

WARNING: To avoid personal injury or death, turn the ignition on, then reconnect the battery.
With the scan tool, read the active ORC DTC's.

Does the scan tool display: LEFT CURTAIN SQUIB 1 SHORT TO GROUND?

Yes >> Go To 3

No >> Replace the Left Side Curtain Airbag in accordance with the Service Information.
Perform ORC VERIFICATION TEST - VER 1

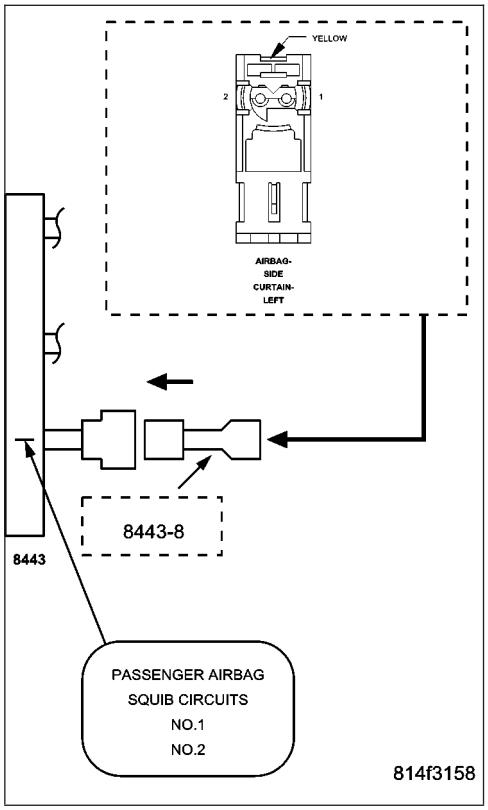

3. CHECK (R3) LEFT CURTAIN SQUIB 1 LINE 1 CIRCUIT AND (R1) LEFT CURTAIN SQUIB 1 LINE 2 CIRCUIT FOR A SHORT TO GROUND

WARNING: To avoid personal injury or death, turn the ignition off, disconnect the battery and wait two minutes before proceeding.
Disconnect the 8443 Load Tool and Jumper from the Left Side Curtain Airbag connector.

Disconnect the ORC connectors.

NOTE: Check connectors - Clean and repair as necessary.
Connect the 8443 Load Tool ORC Adaptor to the ORC connector.

Measure the resistance of the (R3) Left Curtain Squib 1 Line 1 circuit between ground and the Left Side Curtain Airbag connector.

Measure the resistance of the (R1) Left Curtain Squib 1 Line 2 circuit between ground and the Left Side Curtain Airbag connector.

Is the resistance below 10K ohms on either circuit?

Yes >> Repair the Left Curtain Squib 1 circuits with a resistance below 10K ohms for a short to ground.
Perform ORC VERIFICATION TEST - VER 1

No >> Go To 4

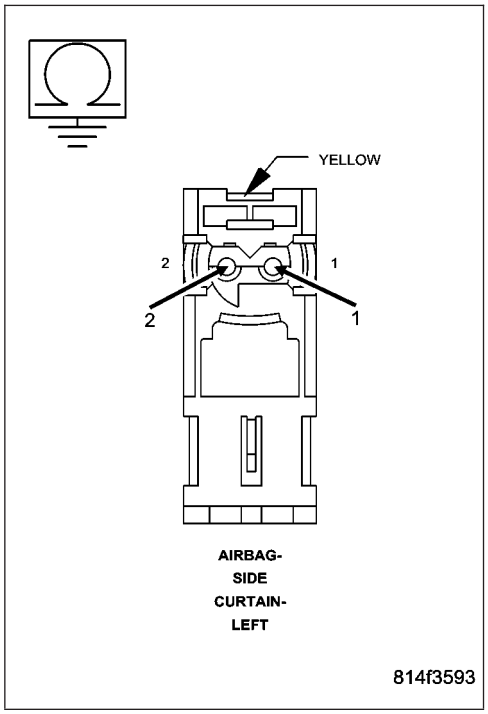

LEFT CURTAIN SQUIB 1 SHORT TO GROUND (CONTINUED)

4. REPLACE THE ORC

WARNING: If the Occupant Restraint Controller (ORC) is dropped at any time, it must be replaced. Failure to take the proper precautions can result in accidental airbag deployment and personal injury or death.

NOTE: When reconnecting airbag system components the Ignition must be turned off and the Battery must be disconnected.

Repair

Replace the ORC in accordance with the Service Information.

Perform ORC VERIFICATION TEST - VER 1

---

5. STORED ORC DTC

With the scan tool, record and erase all DTC's from all Airbag System Modules.

If any ACTIVE codes are present they must be resolved before diagnosing any stored codes.

WARNING: To avoid personal injury or death, turn the ignition off, disconnect the battery and wait two minutes before proceeding.

Using the wiring diagram/schematic as a guide, inspect the wiring and connectors.

Look for chaffed, pierced, pinched, or partially broken wires and broken, bent, pushed out, spread, corroded, or contaminated terminals.

The following additional checks may assist you in identifying a possible intermittent problem.

Reconnect any disconnected components and harness connector.

WARNING: To avoid personal injury or death, turn the ignition on, then reconnect the battery.

With the scan tool monitor active codes as you work through the following steps.

Wiggle the wiring harness and connectors of the related airbag circuit or component.

If codes are related to the Driver Airbag circuits, rotate the steering wheel from stop to stop.

IF only stored codes return continue the test until the problem area has been isolated.

In the previous steps you have attempted to recreate the conditions responsible for setting active DTC in question.

Are any ACTIVE DTC's present?

Yes >> Select the appropriate diagnostic procedure from the Table of Contents in this section.

No >> No problem found at this time. Erase all codes before returning vehicle to customer.

LEFT SIDE IMPACT SENSOR 1 INTERNAL 1

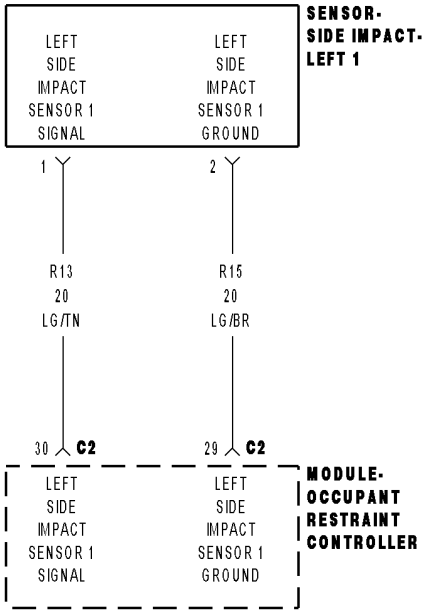

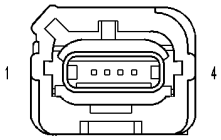

SENSOR-SIDE
IMPACT-LEFT 1

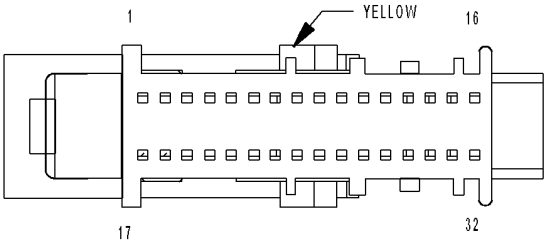

MODULE-
OCCUPANT
RESTRAINT
CONTROLLER C2

8147f770

LEFT SIDE IMPACT SENSOR 1 INTERNAL 1 (CONTINUED)

For the Airbag System circuit diagram (Refer to 8 - ELECTRICAL/RESTRAINTS - SCHEMATICS AND DIAGRAMS).

For a complete wiring diagram **Refer to Section 8W**.

- **When Monitored:**
  The Occupant Restraint Controller (ORC) continuously communicates with the Left Side Impact Sensor 1 over the sensor signal circuit. The sensor communication and on board diagnostics are powered by the ORC signal.
- **Set Condition:**
  This code will set, if the ORC and the Left Side Impact Sensor 1 do not establish and maintain valid data communications.

Possible Causes
(R13) LEFT SIDE IMPACT SENSOR 1 SIGNAL CIRCUIT SHORTED TO BATTERY
(R13) LEFT SIDE IMPACT SENSOR 1 SIGNAL CIRCUIT SHORTED TO GROUND
(R13, R15) LEFT SIDE IMPACT SENSOR 1 CIRCUITS SHORTED TOGETHER
(R15) LEFT SIDE IMPACT SENSOR 1 GROUND CIRCUIT OPEN
(R13) LEFT SIDE IMPACT SENSOR 1 SIGNAL CIRCUIT OPEN
ORC, LEFT SIDE IMPACT SENSOR 1

Diagnostic Test

1. VERIFY THAT DTC LEFT SIDE IMPACT SENSOR 1 INTERNAL 1 IS ACTIVE

NOTE: Ensure the battery is fully charged.

NOTE: When reconnecting Airbag system components, the ignition must be turned off and the battery must be disconnected.

Turn the ignition on.

With the scan tool, read ORC DTCs.

Does the scan tool display active: LEFT SIDE IMPACT SENSOR 1 INTERNAL 1?

Yes >> Go To 2

No >> Go To 9

LEFT SIDE IMPACT SENSOR 1 INTERNAL 1 (CONTINUED)

2. CHECK THE (R13, R15) LEFT SIDE IMPACT SENSOR 1 SIGNAL AND GROUND CIRCUITS FOR A SHORT TO BATTERY

WARNING: To avoid personal injury or death, turn the ignition off, disconnect the battery and wait two minutes before proceeding.
Disconnect the Left side Impact Sensor 1 connector.

Disconnect the ORC connector.

WARNING: To avoid personal injury or death, turn the ignition on, then reconnect the battery.
Measure the voltage of the (R13) Left Side Impact Sensor 1 Signal circuit and (R15) Left Side Impact Sensor 1 Ground circuit at the Left Side Impact Sensor 1 connector and ground.

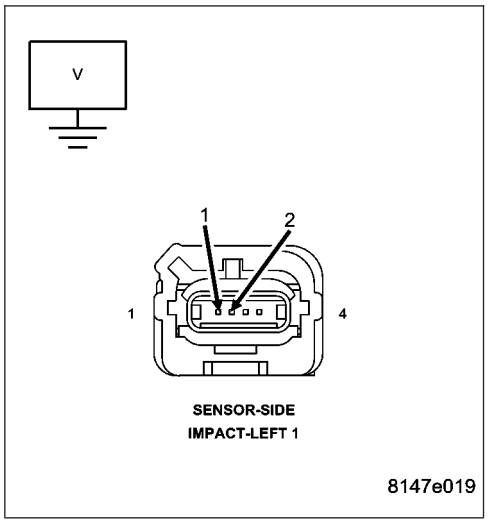

Is there any voltage present?

Yes >> Repair the (R13, R15) Left Side Impact Sensor 1 circuits for a short to battery.
Perform the ORC VERIFICATION TEST - VER 1.

No >> Go To 3

3. CHECK THE (R13) LEFT SIDE IMPACT SENSOR 1 SIGNAL CIRCUIT FOR A SHORT TO GROUND

WARNING: To avoid personal injury or death, turn ignition on, then reconnect the battery.
Measure the resistance of the (R13) Left Side Impact Sensor 1 Signal circuit between the Left Side Impact Sensor 1 connector and ground.

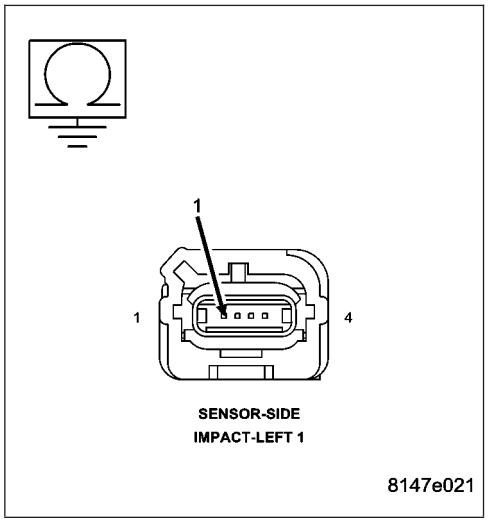

Is the resistance below 100K ohms?

Yes >> Repair the (R13) Left Side Impact Sensor 1 Signal circuit for a short to ground.
Perform the ORC VERIFICATION TEST - VER 1.

No >> Go To 4

LEFT SIDE IMPACT SENSOR 1 INTERNAL 1 (CONTINUED)

4. CHECK THE (R13, R15) LEFT SIDE IMPACT SENSOR CIRCUITS FOR A SHORT TOGETHER

Measure the resistance between the (R13) Left Side Impact Sensor 1 Signal circuit and (R15) Left Side Impact Sensor 1 Ground circuit at the Left Side Impact Sensor 1 connector.

Is the resistance below 100K ohms?

Yes >> Repair the (R13, R15) Left Side Impact Sensor 1 circuits shorted together.
Perform the ORC VERIFICATION TEST - VER 1.

No >> Go To 5

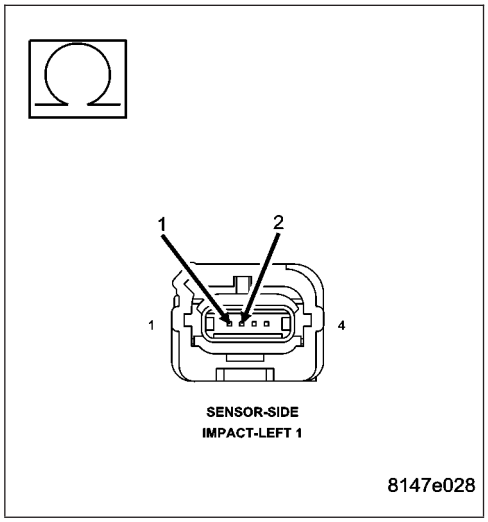

5. CHECK THE (R15) LEFT SIDE IMPACT SENSOR 1 GROUND CIRCUIT FOR AN OPEN OR HIGH RESISTANCE

Connect the 8443 Load Tool ORC Adaptor to the Occupant Control Module connector.

Measure the resistance of the (R15) Left Side Impact Sensor 1 Ground circuit between the Left Side Impact Sensor 1 connector and the 8443 Load Tool ORC Adaptor.

Is the resistance below 1 ohm?

Yes >> Go To 6

No >> Repair the (R15) Left Side Impact Sensor 1 Ground circuit for an open or high resistance.
Perform the ORC VERIFICATION TEST - VER 1.

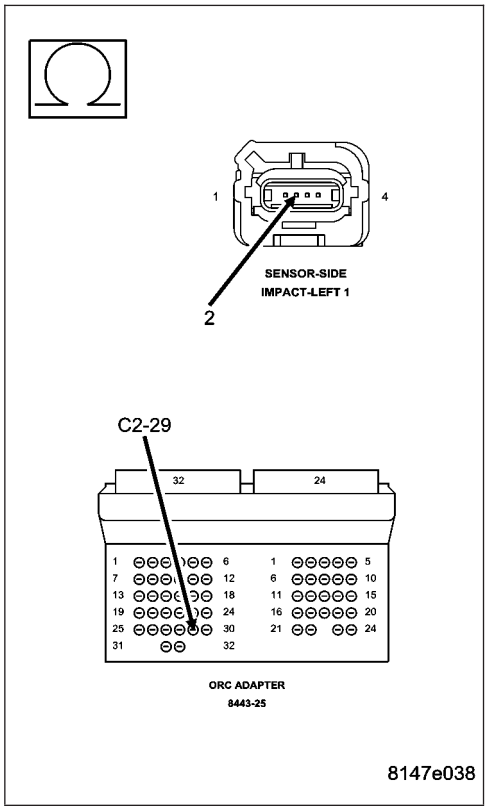

LEFT SIDE IMPACT SENSOR 1 INTERNAL 1 (CONTINUED)

6. CHECK THE (R13) LEFT SIDE IMPACT SENSOR 1 CIRCUIT FOR AN OPEN OR HIGH RESISTANCE

Measure the resistance of the (R13) Left Side Impact Sensor 1 Signal circuit between the Left Side Impact Sensor 1 connector and the 8443 Load Tool ORC Adaptor.

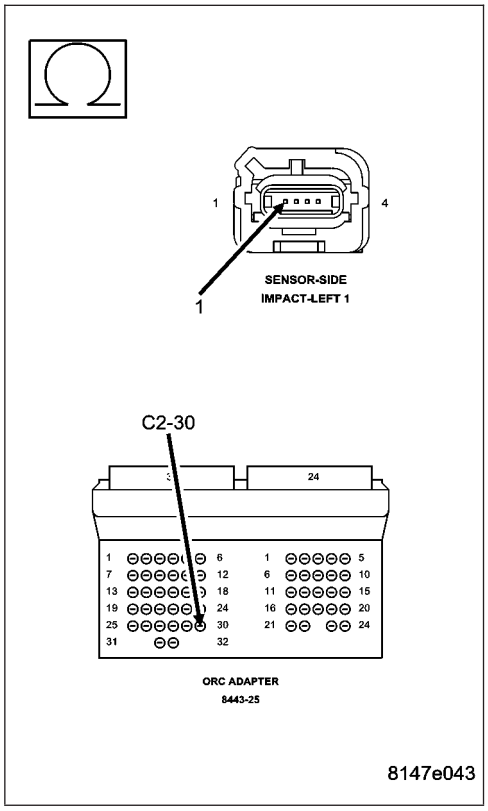

Is the resistance below 1 ohm?

Yes >> Go To 7

No >> Repair the (R13) Left Side Impact Sensor 1 Signal circuit for an open or high resistance.
Perform the ORC VERIFICATION TEST - VER 1.

---

7. CHECK OPERATION OF THE LEFT SIDE IMPACT SENSOR 1

Replace the Left Side Impact Sensor 1.

Reconnect the vehicle body harness to the impact sensor.

Remove any special tools or jumper wires and reconnect all previously disconnected components - except the Battery.

WARNING: To avoid personal injury or death, turn the ignition on, then reconnect the battery.

Connect the scan tool to the Data Link Connector - use the most current software available.

Use the scan tool and erase the stored codes in all airbag system modules.

Turn the Ignition Off, and wait 15 seconds before turning the Ignition On.

Wait one minute, and read active codes and if there are none present read the stored codes.

Did DTC reset and is it active?

Yes >> Go To 8

No >> Repair is complete.
Perform the ORC VERIFICATION TEST - VER 1.

LEFT SIDE IMPACT SENSOR 1 INTERNAL 1 (CONTINUED)

8. REPLACE THE OCCUPANT RESTRAINT CONTROLLER

WARNING: To avoid personal injury or death, turn the ignition off, disconnect the battery and wait two minutes before proceeding.

WARNING: If the occupant restraint controller is dropped at any time, it must be replaced. Failure to take the proper precautions could result in accidental airbag deployment and personal injury or death.

If there are no possible causes remaining, view repair.

Repair

Replace the Occupant Restraint Controller in accordance with Service Instructions.

Perform the ORC VERIFICATION TEST - VER 1.

---

9. TEST FOR AN INTERMITTENT CONDITION

With the scan tool, record and erase all DTC's from all Airbag modules.

If any ACTIVE codes are present they must be resolved before diagnosing any stored codes.

WARNING: To avoid personal injury or death, turn the ignition off, disconnect the battery and wait two minutes before proceeding.

Using the wiring diagram/schematic as a guide, inspect the wiring and connectors.

Look for chaffed, pierced, pinched, or partially broken wires and broken, bent, pushed out, spread, corroded, or contaminated terminals.

The following additional checks may assist you in identifying a possible intermittent problem.

Reconnect any disconnected components and harness connector.

WARNING: To avoid personal injury or death, turn the ignition on, then reconnect the battery.

With the scan tool monitor active codes as you work through the following steps.

WARNING: To avoid personal injury or death, maintain a safe distance from all airbags while performing the following steps.

Wiggle the wiring harness and connectors of the related airbag circuit or component.

If codes are related to the Driver Airbag circuits, rotate the steering wheel from stop to stop.

If only stored codes return continue the test until the problem area has been isolated.

In the previous steps you have attempted to recreate the conditions responsible for setting active DTC in question.

Are any ACTIVE DTCs present?

Yes >> Select the appropriate symptom from Symptom List.

No >> No problem found at this time. Erase all codes before returning vehicle to customer.

LOSS OF IGNITION RUN - START

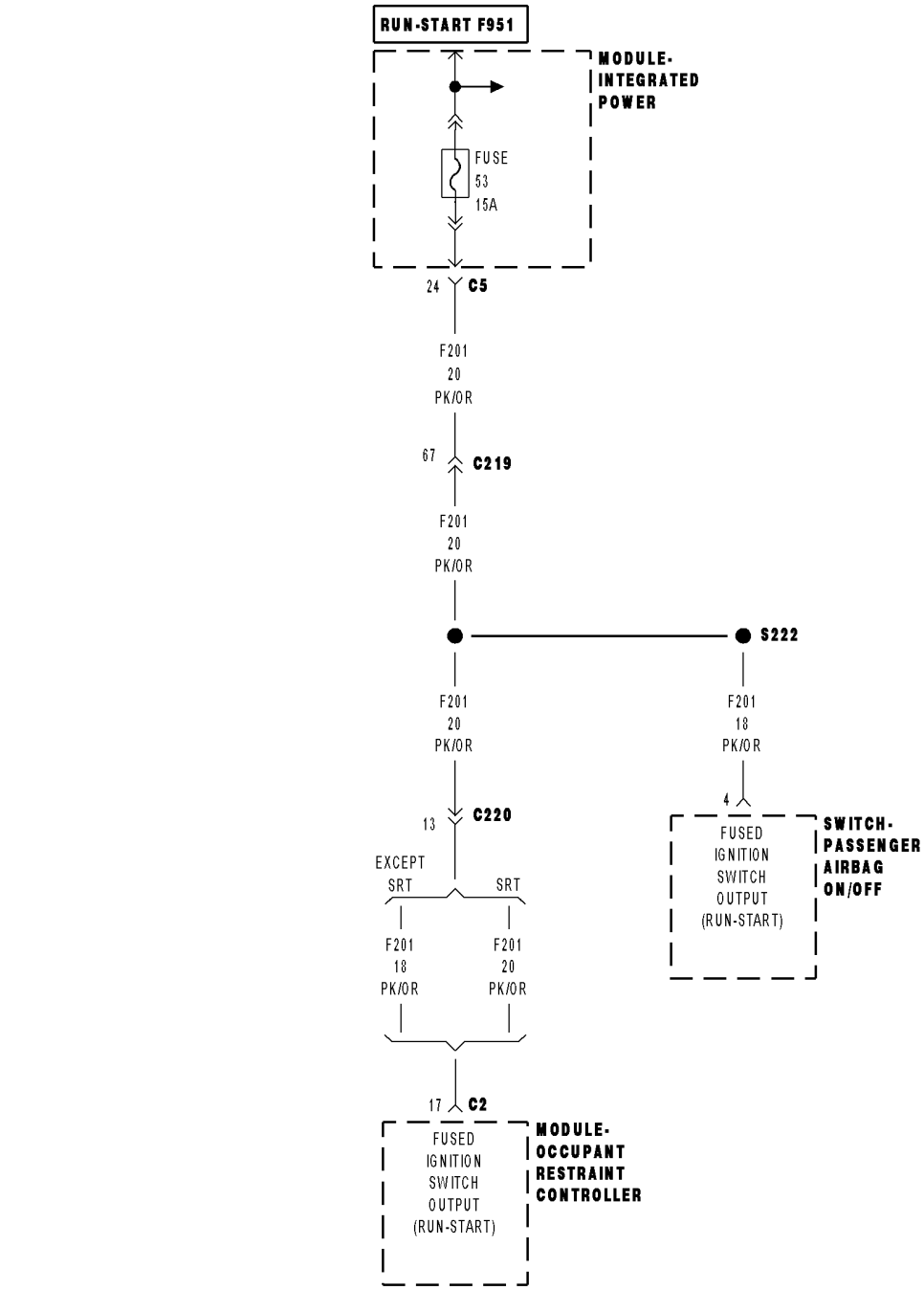

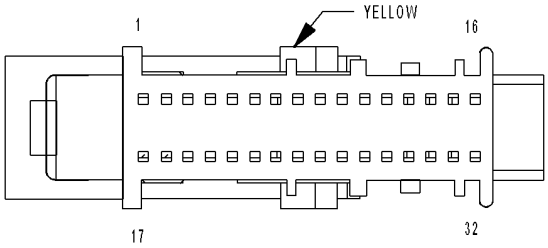

MODULE-
OCCUPANT
RESTRAINT
CONTROLLER C2

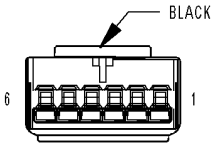

SWITCH-PASSENGER
AIRBAG ON/OFF

8149057b

LOSS OF IGNITION RUN - START (CONTINUED)

For the Airbag System circuit diagram (Refer to 8 - ELECTRICAL/RESTRAINTS - SCHEMATICS AND DIAGRAMS).

For a complete wiring diagram **Refer to Section 8W**.

- **When Monitored:**
  With the ignition in the Run-Start position the Occupant Restraint Controller (ORC) monitors the (F201) Fused Ignition Switch Output (Run-Start) circuit for proper system voltage.
- **Set Condition:**
  If the voltage on the (F201) Fused Ignition Switch Output (Run-Start) circuit drops below approximately 4.5 volts, the code will set.

Possible Causes
(F201) FUSED IGNITION SWITCH OUTPUT (RUN-START) SHORTED TO GROUND
(F201) FUSED IGNITION SWITCH OUTPUT (RUN-START) CIRCUIT OPEN
(F951) IGNITION SWITCH OUTPUT CIRCUIT OPEN
AIRBAG RUN-START CIRCUIT FUSE OPEN
PAB ON - OFF SWITCH SHORTED TO GROUND
ORC, FUSED IGNITION OUTPUT (RUN-START) CIRCUIT SHORTED TO GROUND
ORC, FUSED IGNITION OUTPUT (RUN-START) CIRCUIT OPEN

Diagnostic Test

1. DETERMINE ACTIVE OR STORED DTC

Turn the ignition on.

NOTE: Ensure that the battery is fully charged.

NOTE: For the purpose of this test, the AECM and ACM modules will be referred to as an ORC.

NOTE: When reconnecting Airbag system components, the ignition must be turned off and the battery must be disconnected.

Select ACTIVE or STORED DTC:

ORC - ACTIVE DTC
Go To 2

ORC - STORED DTC
Go To 10

---

2. CHECKING AIRBAG RUN-START CIRCUIT FUSE

Turn the ignition off.

Remove and inspect the Airbag Run-Start circuit fuse.

NOTE: Check connectors - Clean and repair as necessary.

Is the fuse open?

Yes >> Go To 3

No >> Go To 7

LOSS OF IGNITION RUN - START (CONTINUED)

3. CHECKING (F201) FUSED IGNITION SWITCH OUTPUT (RUN-START) CIRCUIT RESISTANCE

WARNING: TO AVOID PERSONAL INJURY OR DEATH, TURN THE IGNITION OFF, DISCONNECT THE BATTERY AND WAIT TWO MINUTES BEFORE PROCEEDING.

Measure the resistance of the (F201) Fused Ignition Switch Output (Run-Start) circuit between ground and the Airbag Run-Start fuse terminal (output side).

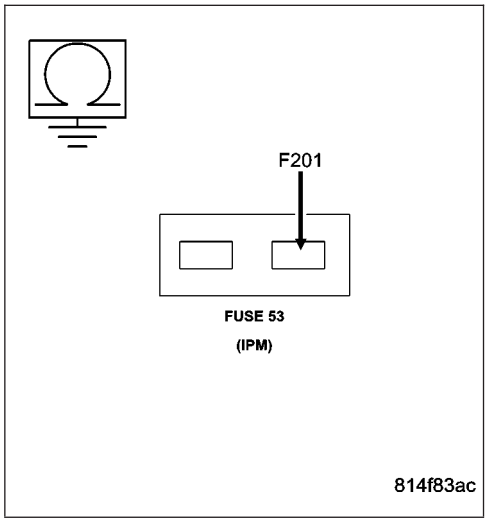

Is the resistance below 100.0 ohms?

Yes >> Go To 4

No >> Using the wiring diagram/schematic as a guide, inspect the related wiring and connectors. Look for chaffed, pierced, pinched, or partially broken wires and broken, bent, pushed out, spread, corroded, or contaminated terminals. Replace the Airbag Run-Start circuit fuse.
Perform ORC VERIFICATION TEST - VER 1.

---

4. CHECKING EQUIPMENT

Is this vehicle equipped with a Passenger Airbag On - Off Indicator?

Yes >> Go To 5

No >> Go To 6

---

5. PAB ON - OFF SWITCH SHORTED TO GROUND

Disconnect the Passenger Airbag On - Off Switch.

NOTE: Check connectors - Clean and repair as necessary.

Measure the resistance of the (F201) Fused Ignition Switch Output (Run-Start) circuit between ground and the Passenger Airbag On - Off Switch connector.

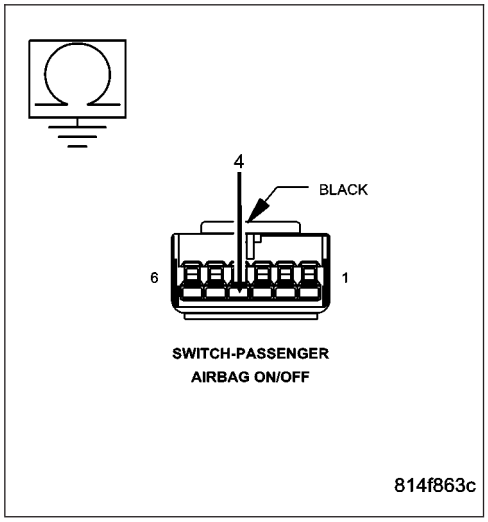

Is the resistance below 100.0 ohms?

Yes >> Go To 6

No >> Replace the Passenger Airbag On - Off Switch and the Airbag Run-Start circuit fuse in accordance with the Service Information.
Perform ORC VERIFICATION TEST - VER 1.

LOSS OF IGNITION RUN - START (CONTINUED)

6. (F201) FUSED IGNITION SWITCH OUTPUT (RUN-START) CIRCUIT SHORTED TO GROUND

WARNING: IF THE OCCUPANT RESTRAINT CONTROLLER IS DROPPED AT ANY TIME, IT MUST BE REPLACED. FAILURE TO TAKE THE PROPER PRECAUTIONS COULD RESULT IN ACCIDENTAL AIRBAG DEPLOYMENT AND PERSONAL INJURY OR DEATH.

Disconnect the Occupant Restraint Controller C2 connector.

NOTE: Check connectors - Clean and repair as necessary.

Connect the appropriate Load Tool Adaptor to the Occupant Restraint Controller connector.

Measure the resistance of the (F201) Fused Ignition Switch Output (Run-Start) circuit between ground and the ORC Adapter.

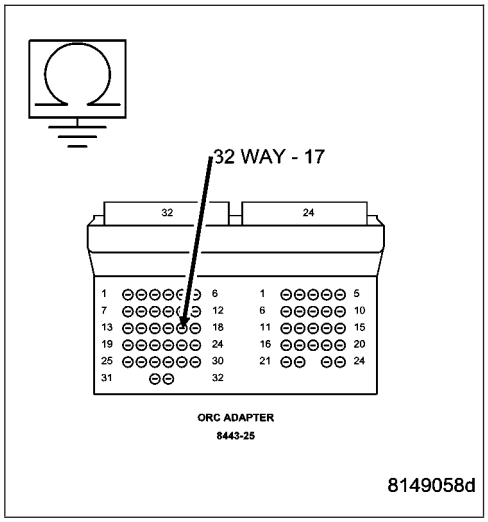

Is the resistance below 100.0 ohms?

Yes >> Repair the (F201) Fused Ignition Switch Output (Run-Start) circuit for a short to ground. Then, replace the Airbag Run-Start circuit fuse.
Perform ORC VERIFICATION TEST - VER 1.

No >> Replace the Occupant Restraint Controller (ORC) and the Airbag Run-Start fuse in accordance with the Service Information.
Perform ORC VERIFICATION TEST - VER 1.

7. (F951) IGNITION SWITCH OUTPUT CIRCUIT OPEN

Turn the ignition on.

Measure the voltage of the (F951) Ignition Switch Output circuit at the Airbag Run-Start circuit fuse terminal (input side).

NOTE: Reinstall the fuse after performing this test.

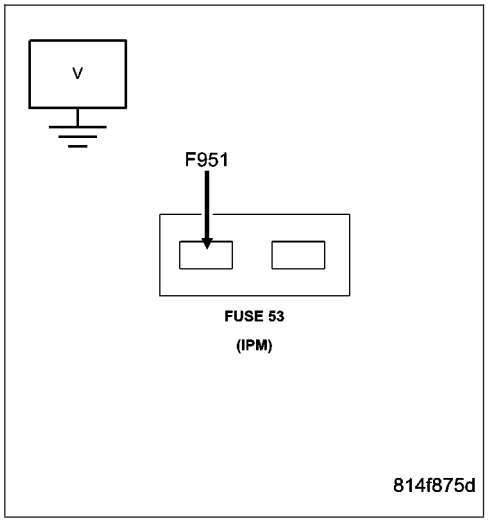

Is the voltage above approximately 6.0 volts?

Yes >> Go To 8

No >> Repair the (F951) Ignition Switch Output circuit for an open. Then, reinstall the Airbag Run-Start circuit fuse.
Perform ORC VERIFICATION TEST - VER 1.

LOSS OF IGNITION RUN - START (CONTINUED)

8. (F201) FUSED IGNITION SWITCH OUTPUT (RUN-START) CIRCUIT OPEN

WARNING: TO AVOID PERSONAL INJURY OR DEATH, TURN THE IGNITION OFF, DISCONNECT THE BATTERY AND WAIT TWO MINUTES BEFORE PROCEEDING.

WARNING: IF THE OCCUPANT RESTRAINT CONTROLLER IS DROPPED AT ANY TIME, IT MUST BE REPLACED. FAILURE TO TAKE THE PROPER PRECAUTIONS COULD RESULT IN ACCIDENTAL AIRBAG DEPLOYMENT AND PERSONAL INJURY OR DEATH.
Disconnect the Occupant Restraint Controller C2 connector.

NOTE: Check connectors - Clean and repair as necessary.
Connect the appropriate Load Tool Adaptor to the Occupant Restraint Controller connector.

NOTE: If not done so previously, reinstall the Airbag Run-Start circuit fuse.

WARNING: TO AVOID PERSONAL INJURY OR DEATH, TURN THE IGNITION ON, THEN RECONNECT THE BATTERY.
Measure the voltage of the (F201) Fused Ignition Switch Output (Run-Start) Circuit.

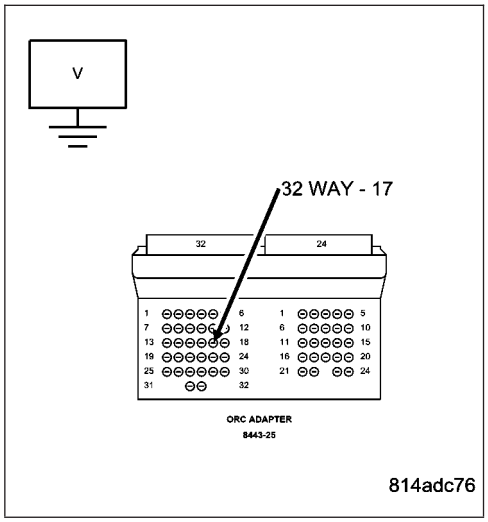

Is the voltage above approximately 4.5 volts?

Yes >> Go To 9

No >> Repair (F201) Fused Ignition Switch Output (Run-Start) circuit for an open.
Perform ORC VERIFICATION TEST - VER 1.

---

9. ORC, FUSED IGNITION OUTPUT (RUN-START) CIRCUIT OPEN

WARNING: TO AVOID PERSONAL INJURY OR DEATH, TURN THE IGNITION OFF, DISCONNECT THE BATTERY AND WAIT TWO MINUTES BEFORE PROCEEDING.

WARNING: IF THE OCCUPANT RESTRAINT CONTROLLER IS DROPPED AT ANY TIME, IT MUST BE REPLACED. FAILURE TO TAKE THE PROPER PRECAUTIONS COULD RESULT IN ACCIDENTAL AIRBAG DEPLOYMENT AND PERSONAL INJURY OR DEATH.

If there are no possible causes remaining, view repair.

Repair

Replace the Occupant Restraint Controller (ORC) in accordance with the Service Information.
Perform ORC VERIFICATION TEST - VER 1.

LOSS OF IGNITION RUN - START (CONTINUED)

10. CHECKING STORED OR INTERMITTENT CODES

With the DRBIII®, record and erase all DTC's from all Airbag modules.

If equipped with Passenger Airbag On - Off switch, read the DTC's in all switch positions.

If any ACTIVE codes are present they must be resolved before diagnosing any stored codes.

WARNING: TO AVOID PERSONAL INJURY OR DEATH, TURN THE IGNITION OFF, DISCONNECT THE BATTERY AND WAIT TWO MINUTES BEFORE PROCEEDING.

Using the wiring diagram/schematic as a guide, inspect the wiring and connectors.

Look for chaffed, pierced, pinched, or partially broken wires and broken, bent, pushed out, spread, corroded, or contaminated terminals.

The following additional checks may assist you in identifying a possible intermittent problem.

Reconnect any disconnected components and harness connector.

WARNING: TO AVOID PERSONAL INJURY OR DEATH, TURN THE IGNITION ON, THEN RECONNECT THE BATTERY.

With the DRBIII®, monitor active codes as you work through the following steps.

WARNING: TO AVOID PERSONAL INJURY OR DEATH, MAINTAIN A SAFE DISTANCE FROM ALL AIRBAGS WHILE PERFORMING THE FOLLOWING STEPS.

Wiggle the wiring harness and connectors of the related airbag circuit or component.

If codes are related to the Driver Airbag circuits, rotate the steering wheel from stop to stop.

If only stored codes return continue the test until the problem area has been isolated.

In the previous steps you have attempted to recreate the conditions responsible for setting active DTC in question.

Are any ACTIVE DTCs present?

Yes >> Select the appropriate diagnostic procedure from the Table of Contents in this section.

No >> No problem found at this time. Erase all codes before returning vehicle to customer.

LOSS OF IGNITION RUN ONLY

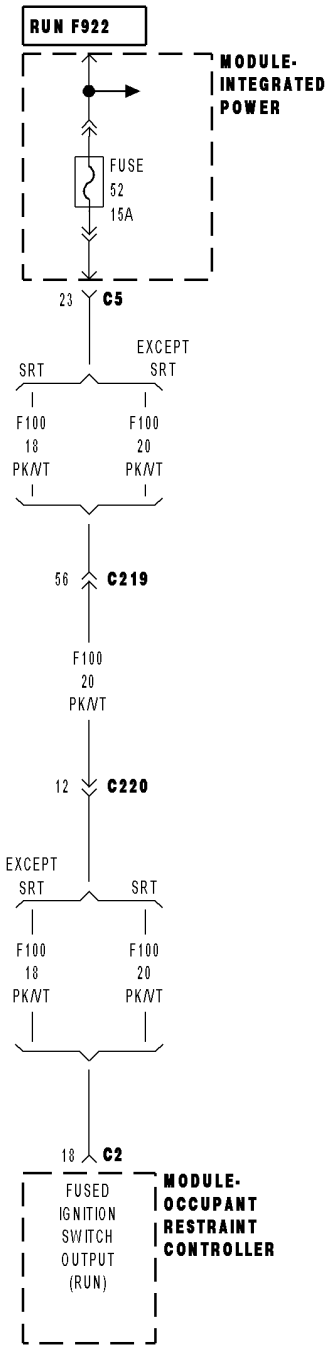

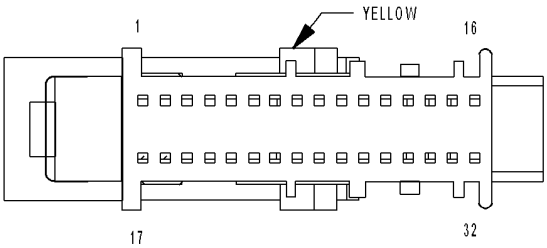

MODULE-
OCCUPANT
RESTRAINT
CONTROLLER C2

8148fe8c

LOSS OF IGNITION RUN ONLY (CONTINUED)

For the Airbag System circuit diagram (Refer to 8 - ELECTRICAL/RESTRAINTS - SCHEMATICS AND DIAGRAMS).

For a complete wiring diagram **Refer to Section 8W**.

- **When Monitored:**
  With the ignition in the Run position the Occupant Restraint Controller (ORC) monitors the (F100) Fused Ignition Switch Output (Run) circuit for proper system voltage.
- **Set Condition:**
  If the voltage on the (F100) Fused Ignition Switch Output (Run) circuit drops below 6.0 volts, the code will set.

Possible Causes
(F100) FUSED IGNITION SWITCH OUTPUT (RUN) CIRCUIT SHORTED TO GROUND
IGNITION SWITCH OUTPUT (RUN) CIRCUIT OPEN
(F100) FUSED IGNITION SWITCH OUTPUT (RUN) CIRCUIT OPEN
AIRBAG RUN ONLY CIRCUIT FUSE OPEN
ORC, FUSED IGNITION SWITCH OUTPUT (RUN) CIRCUIT SHORTED TO GROUND
ORC, FUSED IGNITION SWITCH OUTPUT (RUN) CIRCUIT OPEN

Diagnostic Test

1. DETERMINE ACTIVE OR STORED DTC

Turn the ignition on.

NOTE: Ensure that the battery is fully charged.

NOTE: For the purpose of this test, the AECM and ACM modules will be referred to as an ORC.

NOTE: When reconnecting Airbag system components, the ignition must be turned off and the battery must be disconnected.

Select ACTIVE or STORED DTC:

ORC - ACTIVE DTC:
Go To 2

ORC - STORED DTC
Go To 9

---

2. CHECKING AIRBAG RUN ONLY CIRCUIT FUSE

Turn the ignition off.

Remove and inspect the Airbag Run Only circuit fuse.

NOTE: Check connectors - Clean and repair as necessary.

Is the fuse open?

Yes >> Go To 3

No >> Go To 6

LOSS OF IGNITION RUN ONLY (CONTINUED)

3. CHECKING (F100) FUSED IGNITION SWITCH OUTPUT (RUN) CIRCUIT RESISTANCE

WARNING: TO AVOID PERSONAL INJURY OR DEATH, TURN THE IGNITION OFF, DISCONNECT THE BATTERY AND WAIT TWO MINUTES BEFORE PROCEEDING.

Measure the resistance of the (F100) Fused Ignition Switch Output (Run) circuit between ground and the Airbag Run Only circuit fuse terminal (output side).

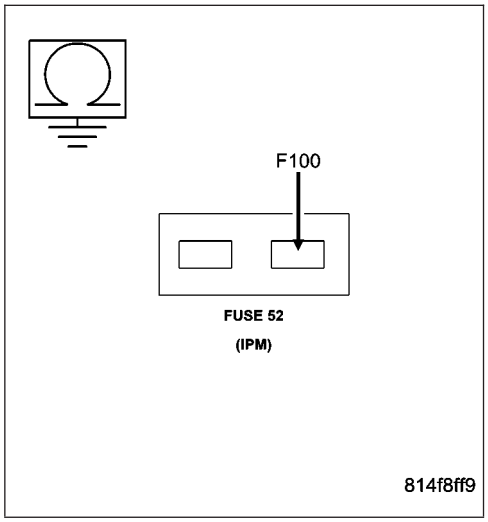

Is the resistance below 100.0 ohms?

Yes >> Go To 4

No >> Using the wiring diagram/schematic as a guide, inspect the related wiring and connectors. Look for chaffed, pierced, pinched, or partially broken wires and broken, bent, pushed out, spread, corroded, or contaminated terminals. Replace the Airbag Run Only circuit fuse.

Perform ORC VERIFICATION TEST - VER 1.

4. (F100) FUSED IGNITION SWITCH OUTPUT (RUN) CIRCUIT SHORTED TO GROUND

Disconnect the Occupant Restraint Controller C2 connector.

NOTE: Check connectors - Clean and repair as necessary.

Connect the appropriate Load Tool Adaptor to the Occupant Restraint Controller connector.

Measure the resistance of the (F100) Fused Ignition Switch Output (Run) circuit between ground and the ORC Adapter.

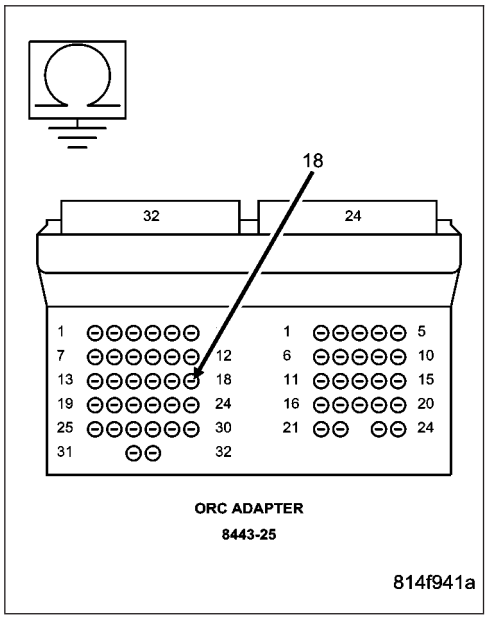

Is the resistance below 100.0 ohms?

Yes >> Repair the (F100) Fused Ignition Switch Output (Run) circuit for a short to ground. Then, replace the Airbag Run Only circuit fuse.

Perform ORC VERIFICATION TEST - VER 1.

No >> Go To 5

5. ORC, FUSED IGNITION SWITCH OUTPUT (RUN) CIRCUIT SHORTED TO GROUND

WARNING: WARNING: IF THE OCCUPANT RESTRAINT CONTROLLER IS DROPPED AT ANY TIME, IT MUST BE REPLACED. FAILURE TO TAKE THE PROPER PRECAUTIONS COULD RESULT IN ACCIDENTAL AIRBAG DEPLOYMENT AND PERSONAL INJURY OR DEATH.

If there are no possible causes remaining, view repair.

Repair

Replace the Occupant Restraint Controller (ORC) and the Airbag Run Only circuit fuse in accordance with the Service Information.

Perform ORC VERIFICATION TEST - VER 1.

LOSS OF IGNITION RUN ONLY (CONTINUED)

6. IGNITION SWITCH OUTPUT (RUN) CIRCUIT OPEN

Turn the ignition on.

Measure the voltage of the Ignition Switch Output (Run) circuit at the Airbag Run Only circuit fuse terminal (input side).

NOTE: Reinstall the fuse after performing this test.

Is the voltage above approximately 6.0 volts?

Yes >> Go To 7

No >> Repair the Ignition Switch Output Run circuit for an open. Then, reinstall the Airbag Run Only circuit fuse. Perform ORC VERIFICATION TEST - VER 1.

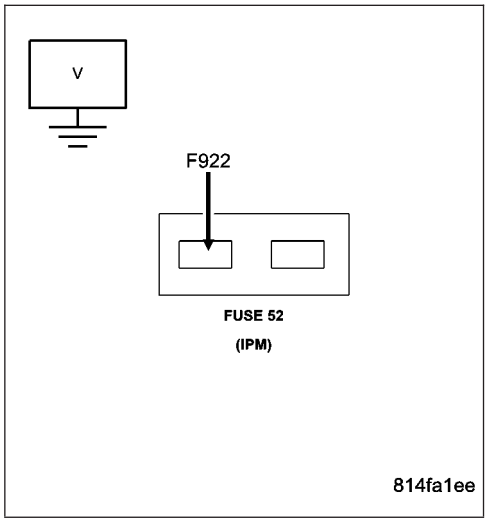

7. (F100) FUSED IGNITION SWITCH OUTPUT (RUN) CIRCUIT OPEN

WARNING: TO AVOID PERSONAL INJURY OR DEATH, TURN THE IGNITION OFF, DISCONNECT THE BATTERY AND WAIT TWO MINUTES BEFORE PROCEEDING.

Disconnect the Occupant Restraint Controller C2 connector.

NOTE: Check connectors - Clean and repair as necessary.

Connect the appropriate Load Tool Adaptor to the Occupant Restraint Controller connector.

NOTE: If not done so previously, reinstall the Airbag Run Only circuit fuse.

WARNING: TO AVOID PERSONAL INJURY OR DEATH, TURN THE IGNITION ON, THEN RECONNECT THE BATTERY.

Measure the voltage of the (F100) Fused Ignition Switch Output (Run) Only circuit.

Is the voltage above approximately 6.0 volts?

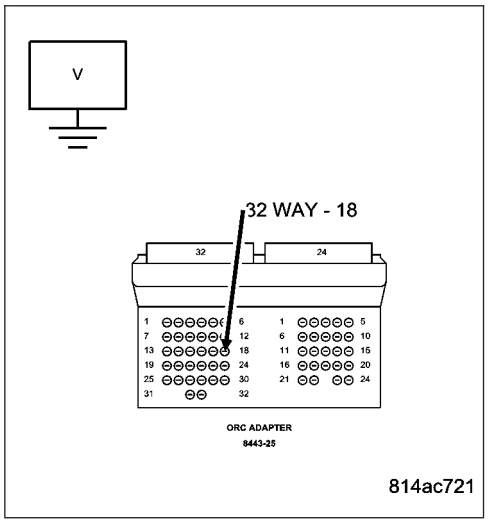

Yes >> Go To 8

No >> Repair the (F100) Fused Ignition Switch Output (Run) circuit for an open or high resistance. Perform ORC VERIFICATION TEST - VER 1.

LOSS OF IGNITION RUN ONLY (CONTINUED)

8. ORC, FUSED IGNITION SWITCH OUTPUT (RUN) CIRCUIT OPEN

WARNING: TO AVOID PERSONAL INJURY OR DEATH, TURN THE IGNITION OFF, DISCONNECT THE BATTERY AND WAIT TWO MINUTES BEFORE PROCEEDING.

WARNING: WARNING: IF THE OCCUPANT RESTRAINT CONTROLLER IS DROPPED AT ANY TIME, IT MUST BE REPLACED. FAILURE TO TAKE THE PROPER PRECAUTIONS COULD RESULT IN ACCIDENTAL AIRBAG DEPLOYMENT AND PERSONAL INJURY OR DEATH.

If there are no possible causes remaining, view repair.

Repair

Replace the Occupant Restraint Controller (ORC) in accordance with the Service Information.

Perform ORC VERIFICATION TEST - VER 1.

---

9. CHECKING STORED OR INTERMITTENT CODES

With the Scan Tool, record and erase all DTC's from all Airbag modules.

If equipped with Passenger Airbag On - Off switch, read the DTC's in all switch positions.

If any ACTIVE codes are present they must be resolved before diagnosing any stored codes.

WARNING: TO AVOID PERSONAL INJURY OR DEATH, TURN THE IGNITION OFF, DISCONNECT THE BATTERY AND WAIT TWO MINUTES BEFORE PROCEEDING.

Using the wiring diagram/schematic as a guide, inspect the wiring and connectors.

Look for chaffed, pierced, pinched, or partially broken wires and broken, bent, pushed out, spread, corroded, or contaminated terminals.

The following additional checks may assist you in identifying a possible intermittent problem.

Reconnect any disconnected components and harness connector.

WARNING: TO AVOID PERSONAL INJURY OR DEATH, TURN THE IGNITION ON, THEN RECONNECT THE BATTERY.

With the Scan Tool, monitor active codes as you work through the following steps.

WARNING: TO AVOID PERSONAL INJURY OR DEATH, MAINTAIN A SAFE DISTANCE FROM ALL AIRBAGS WHILE PERFORMING THE FOLLOWING STEPS.

Wiggle the wiring harness and connectors of the related airbag circuit or component.

If codes are related to the Driver Airbag circuits, rotate the steering wheel from stop to stop.

If only stored codes return continue the test until the problem area has been isolated.

In the previous steps you have attempted to recreate the conditions responsible for setting active DTC in question.

Are any ACTIVE DTCs present?

Yes >> Select the appropriate diagnostic procedure from the Table of Contents in this section.

No >> No problem found at this time. Erase all codes before returning vehicle to customer.

MISSING CURRENT VIN

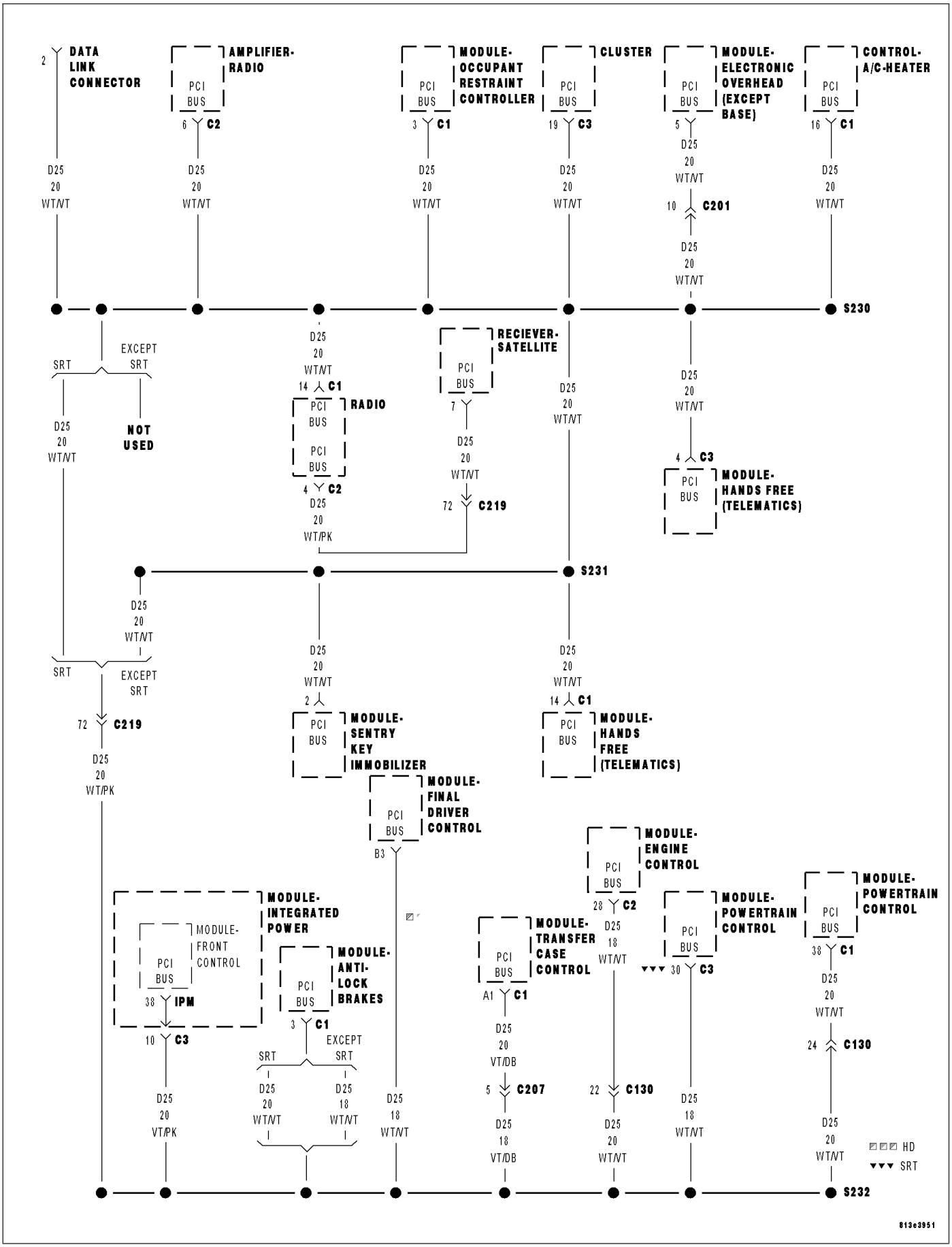

MISSING CURRENT VIN (CONTINUED)

For the Air Bag System circuit diagram (Refer to 8 - ELECTRICAL/RESTRAINTS - SCHEMATICS AND DIAGRAMS).

For a complete wiring diagram **Refer to Section 8W**.

- **When Monitored:**
  During power-up, the Occupant Restraint Controller (ORC) monitors the PCI Bus for the VIN message.
- **Set Condition:**
  This code will set if the VIN data received does not match the stored VIN data.

Possible Causes
PCM, COMMUNICATION FAILURE
PCM, INCORRECT OR MISSING VIN
OCCUPANT RESTRAINT CONTROLLER (ORC)

Diagnostic Test

1. DETERMINE ACTIVE OR STORED DTC

Turn the ignition on.

NOTE: Ensure the battery is fully charged.

NOTE: For the purpose of this test, the ACM and AECM modules will be referred to as an ORC.

NOTE: When reconnecting Airbag system components, the ignition must be turned off and the battery must be disconnected.

Select ACTIVE or STORED DTC:

ORC - ACTIVE DTC
Go To 2

ORC - STORED DTC
Go To 5

---

2. PCM, COMMUNICATION FAILURE

With the Scan Tool, ensure that the PCM is Active on the Bus.

Is the PCM Active on the Bus?

Yes >> Go To 3

No >> (Refer to 8 - ELECTRICAL/ELECTRONIC CONTROL MODULES - DIAGNOSIS AND TESTING) for No Response diagnostic test procedures.
Perform ORC VERIFICATION TEST - VER 1.

MISSING CURRENT VIN (CONTINUED)

3. PCM, INCORRECT OR MISSING VIN

With the Scan Tool select ENGINE, MISCELLANEOUS, MISC FUNCTION, and then CHECK VIN to read the Vehicle Identification Number in the Powertrain Control Module.

Compare the VIN displayed on the Scan Tool screen and the Vehicle VIN plate.

Does the VIN plate and the PCM VIN match?

Yes >> Go To 4

No >> Replace and program the Powertrain Control Module in accordance with the Service Information. Perform POWERTRAIN VERIFICATION TEST. (Refer to 9 - ENGINE - DIAGNOSIS AND TESTING). Perform ORC VERIFICATION TEST - VER 1.

---

4. OCCUPANT RESTRAINT CONTROLLER (ORC)

WARNING: TO AVOID PERSONAL INJURY OR DEATH, TURN THE IGNITION OFF, DISCONNECT THE BATTERY AND WAIT TWO MINUTES BEFORE PROCEEDING.

WARNING: IF THE OCCUPANT RESTRAINT CONTROLLER IS DROPPED AT ANY TIME, IT MUST BE REPLACED. FAILURE TO TAKE THE PROPER PRECAUTIONS COULD RESULT IN ACCIDENTAL AIRBAG DEPLOYMENT AND PERSONAL INJURY OR DEATH.

NOTE: When reconnecting airbag system components the Ignition must be turned off and the Battery must be disconnected.

If there are no possible causes remaining, view repair.

Repair

Replace the Occupant Restraint Controller (ORC) in accordance with the Service Information.

Perform ORC VERIFICATION TEST - VER 1.

MISSING CURRENT VIN (CONTINUED)

5. CHECKING STORED OR INTERMITTENT CODES

With the Scan Tool, record and erase all DTC's from all Airbag modules.

If equipped with Passenger Airbag On - Off switch, read the DTC's in all switch positions.

If any ACTIVE codes are present they must be resolved before diagnosing any stored codes.

WARNING: TO AVOID PERSONAL INJURY OR DEATH, TURN THE IGNITION OFF, DISCONNECT THE BATTERY AND WAIT TWO MINUTES BEFORE PROCEEDING.

Using the wiring diagram/schematic as a guide, inspect the wiring and connectors.

Look for chaffed, pierced, pinched, or partially broken wires and broken, bent, pushed out, spread, corroded, or contaminated terminals.

The following additional checks may assist you in identifying a possible intermittent problem.

Reconnect any disconnected components and harness connector.

WARNING: TO AVOID PERSONAL INJURY OR DEATH, TURN THE IGNITION ON, THEN RECONNECT THE BATTERY.

With the Scan Tool, monitor active codes as you work through the following steps.

WARNING: TO AVOID PERSONAL INJURY OR DEATH, MAINTAIN A SAFE DISTANCE FROM ALL AIRBAGS WHILE PERFORMING THE FOLLOWING STEPS.

Wiggle the wiring harness and connectors of the related airbag circuit or component.

If codes are related to the Driver Airbag circuits, rotate the steering wheel from stop to stop.

If only stored codes return continue the test until the problem area has been isolated.

In the previous steps you have attempted to recreate the conditions responsible for setting active DTC in question.

Does the scan tool display any ACTIVE DTCs?

Yes >> Select the appropriate diagnostic procedure from the Table of Contents in this section.

No >> No problem found at this time. Erase all codes before returning vehicle to customer.

MODULE NOT CONFIGURED FOR PAB OFF SWITCH

For the Air Bag System circuit diagram (Refer to 8 - ELECTRICAL/RESTRAINTS - SCHEMATICS AND DIAGRAMS).

For a complete wiring diagram **Refer to Section 8W**.

- **When Monitored:**
  When the Occupant Restraint Controller (ORC) is not configured for a Passenger Airbag ON - OFF switch, the ORC monitors the Passenger Airbag On - Off Switch inputs to determine if a switch is present.
- **Set Condition:**
  The code will set, if the ORC is not configured for a Passenger Airbag ON - OFF switch but detects that a switch is connected to the module.

Possible Causes
ORC NOT CONFIGURED FOR PAB ON - OFF SWITCH
(G104) PAB INDICATOR DRIVER CIRCUIT SHORTED TO GROUND
(R106) PAB MUX SWITCH SENSE CIRCUIT SHORTED TO GROUND
(R106) PAB MUX SWITCH SENSE CIRCUIT SHORTED TO (R104) PAB MUX SWITCH RETURN CIRCUIT
OCCUPANT RESTRAINT CONTROLLER (ORC)

Diagnostic Test

1. DETERMINE ACTIVE OR STORED DTC

Turn the ignition on.

NOTE: Ensure that the battery is fully charged.

NOTE: For the purpose of this test, the AECM and ACM modules will be referred to as an ORC.

NOTE: When reconnecting Airbag system components, the ignition must be turned off and the battery must be disconnected.

SELECT ACTIVE or STORED DTC:

ORC - ACTIVE DTC
Go To 2

ORC - STORED DTC
Go To 9

---

2. CHECKING EQUIPMENT

Inspect the vehicle for a Passenger Airbag On - Off Switch located in the center of the instrument panel.

Is this vehicle equipped with a Passenger Airbag On - Off Switch?

Yes >> Go To 3

No >> Go To 4

MODULE NOT CONFIGURED FOR PAB OFF SWITCH (CONTINUED)

3. ORC NOT CONFIGURED FOR PAB ON - OFF SWITCH

Select Restraints, Airbag, and then Miscellaneous from the DRBIII® menu.

Follow DRBIII® instructions to verify PAB On - Off Switch configuration.

Does the DRBIII® indicate that the ORC is configured for a PAB On - Off Switch?

Yes >> Go To 8

No >> Follow the DRBIII® instructions to configure the Occupant Restraint Controller to support the Passenger Airbag Switch On - Off Switch.
Perform ORC VERIFICATION TEST - VER 1.

---

4. VERIFY CIRCUITS

Inspect vehicle for Passenger Airbag On - Off Switch wiring at the ORC connector.

NOTE: Some vehicles may have the wiring for the Passenger Airbag On - Off Switch but have no switch.

Is this vehicle equipped with Passenger Airbag On - Off Switch wiring?

Yes >> Go To 5

No >> Go To 8

---

5. (G104) PAB INDICATOR DRIVER CIRCUIT SHORTED TO GROUND

WARNING: TO AVOID PERSONAL INJURY OR DEATH, TURN THE IGNITION OFF, DISCONNECT THE BATTERY AND WAIT TWO MINUTES BEFORE PROCEEDING.

Disconnect the Occupant Restraint Controller C1 connector.

NOTE: Check connectors - Clean and repair as necessary.

WARNING: IF THE OCCUPANT RESTRAINT CONTROLLER IS DROPPED AT ANY TIME, IT MUST BE REPLACED. FAILURE TO TAKE THE PROPER PRECAUTIONS COULD RESULT IN ACCIDENTAL AIRBAG DEPLOYMENT AND PERSONAL INJURY OR DEATH.

Connect the appropriate Load Tool Adaptor to the Occupant Restraint Controller connector.

Measure the resistance of the (G104) Passenger Airbag Indicator Driver circuit between ground and the ORC Adaptor.

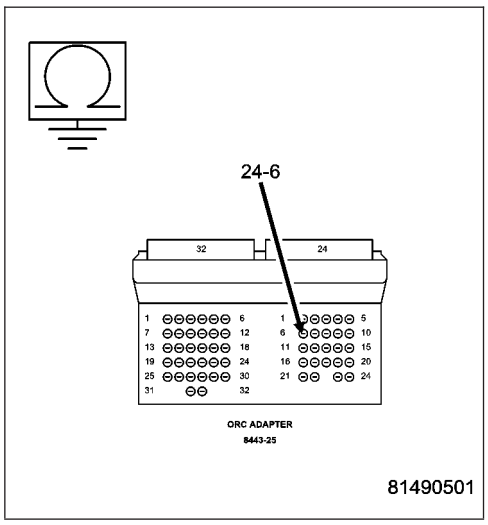

Is the resistance below 10K ohms?

Yes >> Repair the (G104) Passenger Airbag Indicator Driver circuit for a short to ground.
Perform ORC VERIFICATION TEST - VER 1.

No >> Go To 6

MODULE NOT CONFIGURED FOR PAB OFF SWITCH (CONTINUED)

6. (R106) PAB MUX SWITCH SENSE CIRCUIT SHORTED TO GROUND

Measure the resistance of the (R106) Passenger Airbag MUX Switch Sense circuit between ground and the ORC Adaptor.

Is the resistance below 10K ohms?

Yes >> Repair the (R106) Passenger Airbag MUX Switch Sense circuit for a short to ground.
Perform ORC VERIFICATION TEST - VER 1.

No >> Go To 7

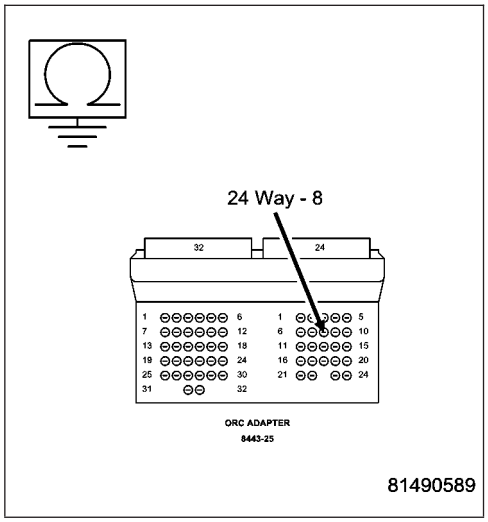

7. (R106) PAB MUX SWITCH SENSE CIRCUIT SHORTED TO (R104) PAB MUX SWITCH RETURN CIRCUIT

Measure the resistance between the (R106) Passenger Airbag MUX Switch Sense circuit and the (R104) Passenger Airbag MUX Switch Return circuit at the ORC Adaptor.

Is the resistance below 10K ohms?

Yes >> Repair the (R106) Passenger Airbag MUX Switch Sense circuit for a short to the (R104) Passenger Airbag MUX Switch Return circuit
Perform ORC VERIFICATION TEST - VER 1.

No >> Go To 8

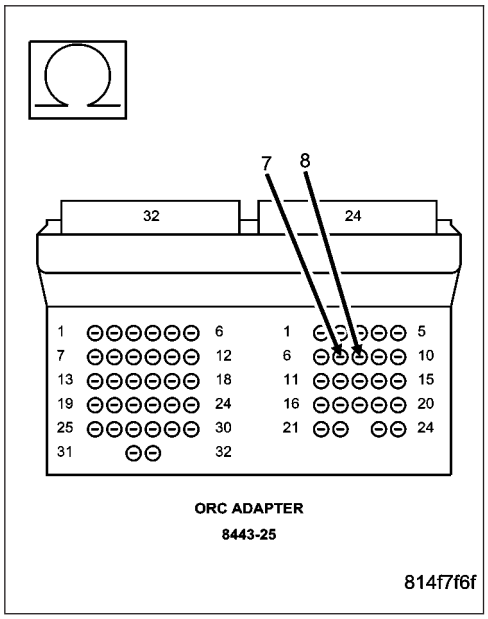

MODULE NOT CONFIGURED FOR PAB OFF SWITCH (CONTINUED)

8. OCCUPANT RESTRAINT CONTROLLER (ORC)

WARNING: TO AVOID PERSONAL INJURY OR DEATH, TURN THE IGNITION OFF, DISCONNECT THE BATTERY AND WAIT TWO MINUTES BEFORE PROCEEDING.

WARNING: IF THE OCCUPANT RESTRAINT CONTROLLER IS DROPPED AT ANY TIME, IT MUST BE REPLACED. FAILURE TO TAKE THE PROPER PRECAUTIONS COULD RESULT IN ACCIDENTAL AIRBAG DEPLOYMENT AND PERSONAL INJURY OR DEATH.

If there are no possible causes remaining, view repair.

Repair

Replace the Occupant Restraint Controller (ORC) in accordance with the Service Information.

Perform ORC VERIFICATION TEST - VER 1.

---

9. CHECKING STORED OR INTERMITTENT CODES

With the scan tool, record and erase all DTC's from all Airbag Modules.

If any ACTIVE codes are present they must be resolved before diagnosing any stored codes.

WARNING: To avoid personal injury or death, turn the ignition off, disconnect the battery and wait two minutes before proceeding.

Using the wiring diagram/schematic as a guide, inspect the wiring and connectors.

Look for chaffed, pierced, pinched, or partially broken wires and broken, bent, pushed out, spread, corroded, or contaminated terminals.

The following additional checks may assist you in identifying a possible intermittent problem.

Reconnect any disconnected components and harness connector.

WARNING: To avoid personal injury or death, turn the ignition on, then reconnect the battery.

With the scan tool monitor active codes as you work through the following steps.

WARNING: To avoid personal injury or death, maintain a safe distance from all airbags while performing the following steps.

Wiggle the wiring harness and connectors of the related airbag circuit or component.

If codes are related to the Driver Airbag circuits, rotate the steering wheel from stop to stop.

If only stored codes return continue the test until the problem area has been isolated.

In the previous steps you have attempted to recreate the conditions responsible for setting active DTC in question.

Are any ACTIVE DTCs present?

Yes >> Select the appropriate diagnostic procedure from the Table of Contents in this section.

No >> No problem found at this time. Erase all codes before returning vehicle to customer.

NO CLUSTER MESSAGE

For a complete wiring diagram **Refer to Section 8W**.

- **When Monitored:**
  With the ignition on, the ORC monitors the bus for a message from the MIC containing the airbag warning indicator status. The MIC transmits the message one time at ignition on, lamp state change, or in response to the ORC message.
- **Set Condition:**
  If the MIC message is not received for 10 consecutive seconds, the code will set.

Possible Causes
MIC COMMUNICATION FAILURE
ORC, NO CLUSTER MESSAGE
STORED CODE OR INTERMITTENT CONDITION
ACTIVE CODE PRESENT

Diagnostic Test

1. DETERMINE ACTIVE OR STORED DTC

Turn the ignition on.

Ensure the battery is fully charged.

NOTE: NOTE: When reconnecting Airbag system components, the ignition must be turned off and the battery must be disconnected.

SELECT ACTIVE or STORED DTC:

ACM - ACTIVE DTC
Go To 2

ACM - STORED DTC
Go To 4

---

2. ATTEMPT TO COMMUNICATE WITH THE CLUSTER

Turn the ignition on.

With the DRBIII®, attempt to communicate with the Custer.

Was the DRB able to communicate with the Cluster?

Yes >> Go To 3

No >> (Refer to 8 - ELECTRICAL/ELECTRONIC CONTROL MODULES - DIAGNOSIS AND TESTING) for No Response diagnostic test procedures.

---

3. REPLACE THE OCCUPANT RESTRAINT CONTROLLER

WARNING: To avoid personal injury or death, turn the ignition off, disconnect the battery and wait two minutes before proceeding.

WARNING: If the Occupant Restraint Controller is dropped at any time, it must be replaced. Failure to take the proper precautions could result in accidental airbag deployment and personal injury or death.

If there are no possible causes remaining, view repair.

Repair

Replace the Occupant Restraint Controller in accordance with the service information.

Perform the ORC VERIFICATION TEST - VER 1.

NO CLUSTER MESSAGE (CONTINUED)

4. CHECKING STORED OR INTERMITTENT CODES

Using the wiring diagram/schematic as a guide, inspect the wiring and connectors.

Look for chaffed, pierced, pinched, or partially broken wires and broken, bent, pushed out, spread, corroded, or contaminated terminals.

The following additional checks may assist you in identifying a possible intermittent problem.

Reconnect any disconnected components and harness connector.

WARNING: WARNING: TO AVOID PERSONAL INJURY OR DEATH, TURN THE IGNITION ON, THEN RECONNECT THE BATTERY.

With the DRBIII® monitor active codes as you work through the following steps.

WARNING: WARNING: TO AVOID PERSONAL INJURY OR DEATH, MAINTAIN A SAFE DISTANCE FROM ALL AIRBAGS WHILE PERFORMING THE FOLLOWING STEPS.

Wiggle the wiring harness and connectors of the related airbag circuit or component.

If codes are related to the Driver Airbag circuits, rotate the steering wheel from stop to stop.

IF only stored codes return continue the test until the problem area has been isolated

In the previous steps you have attempted to recreate the conditions responsible for setting active DTC in question.

Are any ACTIVE DTCs present?

Yes >> Select appropriate symptom from Symptom List.

No >> No problem found at this time. Erase all codes before returning vehicle to customer.

NO LEFT SIDE IMPACT SENSOR 1 COMMUNICATION

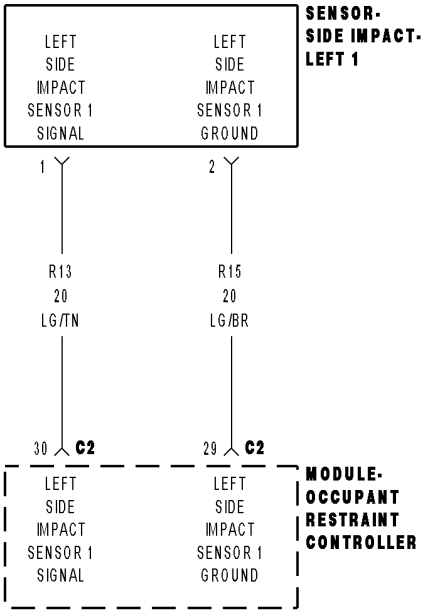

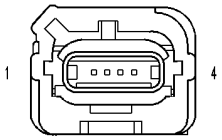

SENSOR-SIDE
IMPACT-LEFT 1

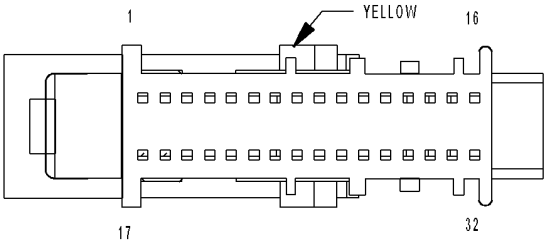

MODULE-
OCCUPANT
RESTRAINT
CONTROLLER C2

8147f770

NO LEFT SIDE IMPACT SENSOR 1 COMMUNICATION (CONTINUED)

For the Airbag System circuit diagram (Refer to 8 - ELECTRICAL/RESTRAINTS - SCHEMATICS AND DIAGRAMS).

For a complete wiring diagram **Refer to Section 8W**.

- **When Monitored:**
  The Occupant Restraint Controller (ORC) continuously communicates with the Left Side Impact Sensor 1 over the sensor signal circuit. The sensor communication and on board diagnostics are powered by the ORC signal.
- **Set Condition:**
  This code will set, if the ORC and the Left Side Impact Sensor 1 do not establish and maintain valid data communications.

Possible Causes
(R13) LEFT SIDE IMPACT SENSOR 1 SIGNAL CIRCUIT SHORTED TO BATTERY
(R13) LEFT SIDE IMPACT SENSOR 1 SIGNAL CIRCUIT SHORTED TO GROUND
(R13, R15) LEFT SIDE IMPACT SENSOR 1 CIRCUITS SHORTED TOGETHER
(R15) LEFT SIDE IMPACT SENSOR 1 GROUND CIRCUIT OPEN
(R13) LEFT SIDE IMPACT SENSOR 1 SIGNAL CIRCUIT OPEN
ORC, LEFT SIDE IMPACT SENSOR 1

Diagnostic Test

1. VERIFY THAT DTC NO LEFT SIDE IMPACT SENSOR 1 COMMUNICATION IS ACTIVE

NOTE: Ensure the battery is fully charged.

NOTE: When reconnecting Airbag system components, the ignition must be turned off and the battery must be disconnected.

Turn the ignition on.

With the scan tool, read ORC DTCs.

Does the scan tool display active: NO LEFT SIDE IMPACT SENSOR 1 COMMUNICATION?

Yes >> Go To 2

No >> Go To 9

NO LEFT SIDE IMPACT SENSOR 1 COMMUNICATION (CONTINUED)

2. CHECK THE (R13, R15) LEFT SIDE IMPACT SENSOR 1 SIGNAL AND GROUND CIRCUITS FOR A SHORT TO BATTERY

WARNING: To avoid personal injury or death, turn the ignition off, disconnect the battery and wait two minutes before proceeding.
Disconnect the Left front Impact Sensor 1 connector.

Disconnect the ORC connector.

WARNING: To avoid personal injury or death, turn the ignition on, then reconnect the battery.
Measure the voltage of the (R13) Left Side Impact Sensor 1 Signal circuit and (R15) Left Side Impact Sensor 1 Ground circuit at the Left Side Impact Sensor 1 connector and ground.

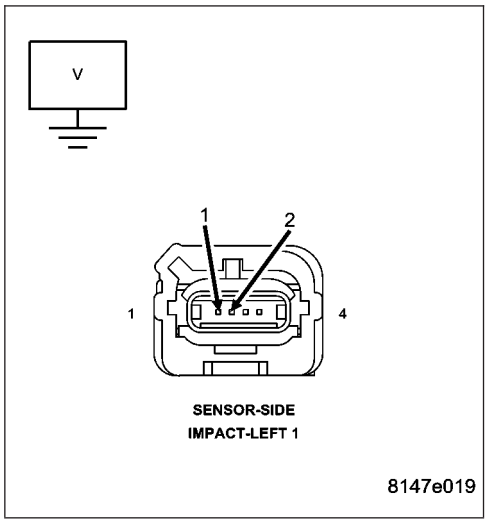

Is there any voltage present?

Yes >> Repair the (R13, R15) Left Side Impact Sensor 1 circuits for a short to battery.
Perform the ORC VERIFICATION TEST - VER 1.

No >> Go To 3

3. CHECK THE (R13) LEFT SIDE IMPACT SENSOR 1 SIGNAL CIRCUIT FOR A SHORT TO GROUND

WARNING: To avoid personal injury or death, turn ignition on, then reconnect the battery.
Measure the resistance of the (R13) Left Side Impact Sensor 1 Signal circuit between the Left Side Impact Sensor 1 connector and ground.

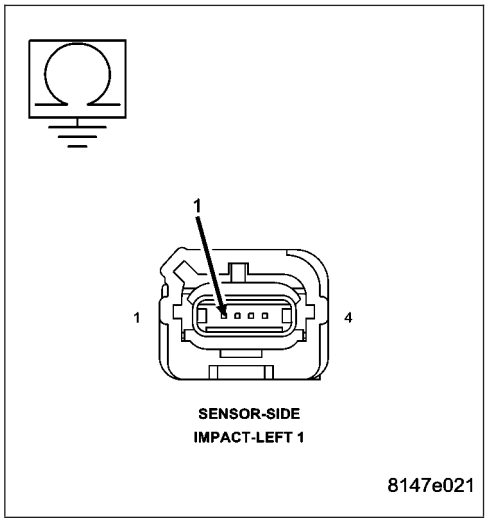

Is the resistance below 100K ohms?

Yes >> Repair the (R13) Left Side Impact Sensor 1 Signal circuit for a short to ground.
Perform the ORC VERIFICATION TEST - VER 1.

No >> Go To 4

NO LEFT SIDE IMPACT SENSOR 1 COMMUNICATION (CONTINUED)

4. CHECK THE (R13, R15) LEFT SIDE IMPACT SENSOR CIRCUITS FOR A SHORT TOGETHER

Measure the resistance between the (R13) Left Side Impact Sensor 1 Signal circuit and (R15) Left Side Impact Sensor 1 Ground circuit at the Left Side Impact Sensor 1 connector.

Is the resistance below 100K ohms?

Yes >> Repair the (R13, R15) Left Side Impact Sensor 1 circuits shorted together.
Perform the ORC VERIFICATION TEST - VER 1.

No >> Go To 5

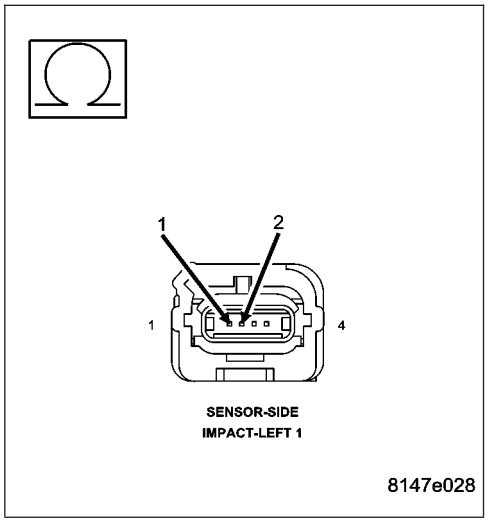

5. CHECK THE (R15) LEFT SIDE IMPACT SENSOR 1 GROUND CIRCUIT FOR AN OPEN OR HIGH RESISTANCE

Connect the 8443 Load Tool ORC Adaptor to the Occupant Controller Module connector.

Measure the resistance of the (R15) Left Side Impact Sensor 1 Ground circuit between the Left Side Impact Sensor 1 connector and the 8443 Load Tool ORC Adaptor.

Is the resistance below 1 ohm?

Yes >> Go To 6

No >> Repair the (R15) Left Side Impact Sensor 1 Ground circuit for an open or high resistance.
Perform the ORC VERIFICATION TEST - VER 1.

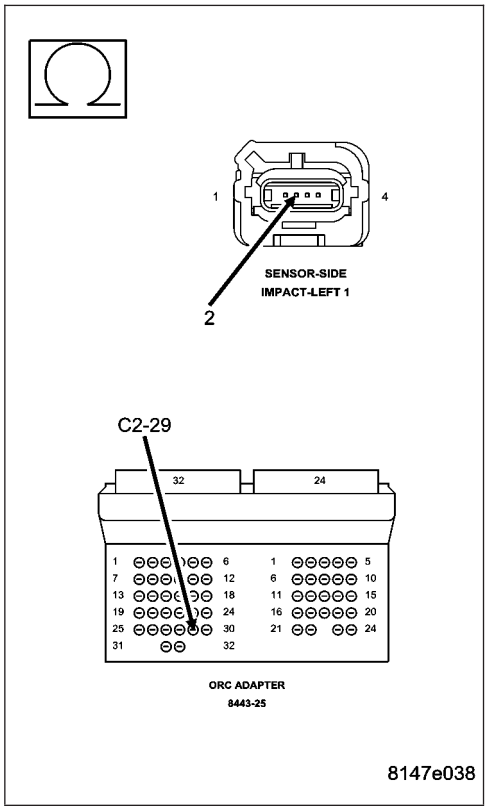

NO LEFT SIDE IMPACT SENSOR 1 COMMUNICATION (CONTINUED)

6. CHECK THE (R13) LEFT SIDE IMPACT SENSOR 1 SIGNAL CIRCUIT FOR AN OPEN OR HIGH RESISTANCE

Measure the resistance of the (R13) Left Side Impact Sensor 1 Signal circuit between the Left Side Impact Sensor 1 connector and the 8443 Load Tool ORC Adaptor.

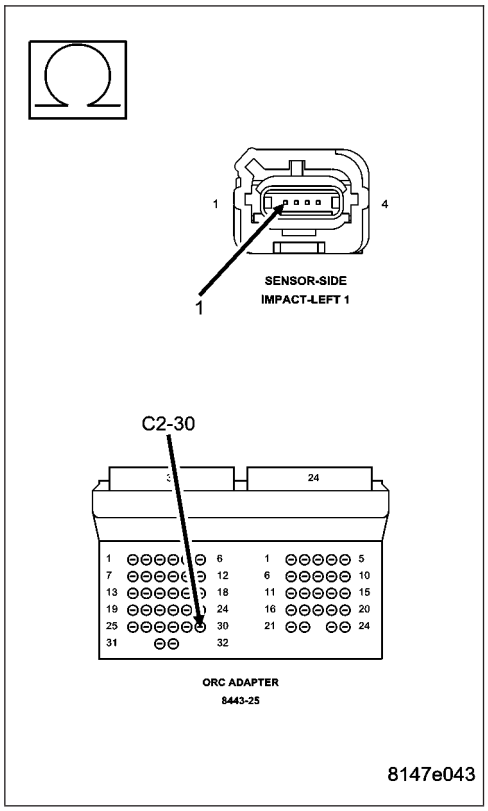

Is the resistance below 1 ohm?

Yes >> Go To 7

No >> Repair the (R13) Left Side Impact Sensor 1 Signal circuit for an open or high resistance.
Perform the ORC VERIFICATION TEST - VER 1.

---

7. CHECK OPERATION OF THE LEFT SIDE IMPACT SENSOR 1

Replace the Left Side Impact Sensor 1.

Reconnect the vehicle body harness to the impact sensor.

Remove any special tools or jumper wires and reconnect all previously disconnected components - except the Battery.

WARNING: To avoid personal injury or death, turn the ignition on, then reconnect the battery.

Connect the scan tool to the Data Link Connector - use the most current software available.

Use the scan tool and erase the stored codes in all airbag system modules.

Turn the Ignition Off, and wait 15 seconds before turning the Ignition On.

Wait one minute, and read active codes and if there are none present read the stored codes.

Did this DTC reset and is it active?

Yes >> Go To A 8

No >> Repair is complete.
Perform the ORC VERIFICATION TEST - VER 1.

NO LEFT SIDE IMPACT SENSOR 1 COMMUNICATION (CONTINUED)

8. REPLACE THE OCCUPANT RESTRAINT CONTROLLER

WARNING: To avoid personal injury or death, turn the ignition off, disconnect the battery and wait two minutes before proceeding.

WARNING: If the occupant restraint controller is dropped at any time, it must be replaced. Failure to take the proper precautions can result in accidental airbag deployment and personal injury or death.

If there are no possible causes remaining, view repair.

Repair

Replace the Occupant Restraint Controller in accordance with Service Instructions.

Perform the ORC VERIFICATION TEST - VER 1.

---

9. TEST FOR AN INTERMITTENT CONDITION

With the scan tool, record and erase all DTC's from all Airbag modules.

If any ACTIVE codes are present they must be resolved before diagnosing any stored codes.

WARNING: To avoid personal injury or death, turn the ignition off, disconnect the battery and wait two minutes before proceeding.

Using the wiring diagram/schematic as a guide, inspect the wiring and connectors.

Look for chaffed, pierced, pinched, or partially broken wires and broken, bent, pushed out, spread, corroded, or contaminated terminals.

The following additional checks may assist you in identifying a possible intermittent problem.

Reconnect any disconnected components and harness connector.

WARNING: To avoid personal injury or death, turn the ignition on, then reconnect the battery.

With the scan tool monitor active codes as you work through the following steps.

WARNING: To avoid personal injury or death, maintain a safe distance from all airbags while performing the following steps.

Wiggle the wiring harness and connectors of the related airbag circuit or component.

If codes are related to the Driver Airbag circuits, rotate the steering wheel from stop to stop.

If only stored codes return continue the test until the problem area has been isolated.

In the previous steps you have attempted to recreate the conditions responsible for setting active DTC in question.

Are any ACTIVE DTCs present?

Yes >> Select the appropriate symptom from Symptom List.

No >> No problem found at this time. Erase all codes before returning vehicle to customer.

NO PCI LOOPBACK

For the Air Bag System circuit diagram (Refer to 8 - ELECTRICAL/RESTRAINTS - SCHEMATICS AND DIAGRAMS).

For a complete wiring diagram **Refer to Section 8W**.

- **When Monitored:**
  With the ignition on and the module transmitting information on the BUS.
- **Set Condition:**
  The code will set immediately if the on-board diagnostic cannot detect the module transmitting information on the BUS. NOTE: Any Bus Failure may cause a stored code to set.

Possible Causes
OCCUPANT RESTRAINT CONTROLLER (ORC)

Diagnostic Test

1. DETERMINE ACTIVE OR STORED DTC

Turn the ignition on.

NOTE: Ensure the battery is fully charged.

NOTE: When reconnecting airbag system components the Ignition must be turned off and the Battery must be disconnected.

Select ACTIVE or STORED DTC

ORC - ACTIVE DTC
Go To 2

ORC - STORED DTC
Go To 3

---

2. OCCUPANT RESTRAINT CONTROLLER (ORC)

WARNING: WARNING: TO AVOID PERSONAL INJURY OR DEATH, DISCONNECT THE BATTERY AND WAIT TWO MINUTES BEFORE PROCEEDING.

WARNING: WARNING: IF THE OCCUPANT RESTRAINT CONTROLLER IS DROPPED AT ANY TIME, IT MUST BE REPLACED. FAILURE TO TAKE THE PROPER PRECAUTIONS COULD RESULT IN ACCIDENTAL AIRBAG DEPLOYMENT AND PERSONAL INJURY OR DEATH.

If there are no possible causes remaining, view repair.

Repair
Replace the Occupant Restraint Controller (ORC) in accordance with the Service Information.
Perform ORC VERIFICATION TEST - VER 1.

NO PCI LOOPBACK (CONTINUED)

3. CHECKING STORED OR INTERMITTENT CODES

With the DRBIII®, record and erase all DTC's from all Airbag modules.

If equipped with Passenger Airbag On - Off switch, read the DTC's in all switch positions.

If any ACTIVE codes are present they must be resolved before diagnosing any stored codes.

WARNING: WARNING: TO AVOID PERSONAL INJURY OR DEATH, TURN THE IGNITION OFF, DISCONNECT THE BATTERY AND WAIT TWO MINUTES BEFORE PROCEEDING.

Using the wiring diagram/schematic as a guide, inspect the wiring and connectors.

Look for chaffed, pierced, pinched, or partially broken wires and broken, bent, pushed out, spread, corroded, or contaminated terminals.

The following additional checks may assist you in identifying a possible intermittent problem.

Reconnect any disconnected components and harness connector.

WARNING: WARNING: TO AVOID PERSONAL INJURY OR DEATH, TURN THE IGNITION ON, THEN RECONNECT THE BATTERY.

With the DRBIII®, monitor active codes as you work through the following steps.

WARNING: WARNING: TO AVOID PERSONAL INJURY OR DEATH, MAINTAIN A SAFE DISTANCE FROM ALL AIRBAGS WHILE PERFORMING THE FOLLOWING STEPS.

Wiggle the wiring harness and connectors of the related airbag circuit or component.

If codes are related to the Driver Airbag circuits, rotate the steering wheel from stop to stop.

If only stored codes return continue the test until the problem area has been isolated.

In the previous steps you have attempted to recreate the conditions responsible for setting active DTC in question.

Are any ACTIVE DTCs present?

Yes >> Select the appropriate diagnostic procedure from the Table of Contents in this section.

No >> No problem found at this time. Erase all codes before returning vehicle to customer.

NO PCI TRANSMISSION

For the Air Bag System circuit diagram (Refer to 8 - ELECTRICAL/RESTRAINTS - SCHEMATICS AND DIAGRAMS).

For a complete wiring diagram **Refer to Section 8W**.

- **When Monitored:**
  With the ignition on and the module transmitting information on the BUS.
- **Set Condition:**
  The code will set immediately if the on-board diagnostic cannot detect the module transmitting information on the BUS. NOTE: Any Bus Failure may cause a stored code to set.

Possible Causes
OCCUPANT RESTRAINT CONTROLLER (ORC)

Diagnostic Test

1. DETERMINE ACTIVE OR STORED DTC

Turn the ignition on.

NOTE: Ensure the battery is fully charged.

NOTE: When reconnecting airbag system components the Ignition must be turned off and the Battery must be disconnected.

Select ACTIVE or STORED DTC

ORC - ACTIVE DTC
Go To 2

ORC - STORED DTC
Go To 3

---

2. OCCUPANT RESTRAINT CONTROLLER (ORC)

WARNING: WARNING: TO AVOID PERSONAL INJURY OR DEATH, DISCONNECT THE BATTERY AND WAIT TWO MINUTES BEFORE PROCEEDING.

WARNING: WARNING: IF THE OCCUPANT RESTRAINT CONTROLLER IS DROPPED AT ANY TIME, IT MUST BE REPLACED. FAILURE TO TAKE THE PROPER PRECAUTIONS COULD RESULT IN ACCIDENTAL AIRBAG DEPLOYMENT AND PERSONAL INJURY OR DEATH.

If there are no possible causes remaining, view repair.

Repair
Replace the Occupant Restraint Controller (ORC) in accordance with the Service Information.
Perform ORC VERIFICATION TEST - VER 1.

NO PCI TRANSMISSION (CONTINUED)

3. CHECKING STORED OR INTERMITTENT CODES

With the DRBIII®, record and erase all DTC's from all Airbag modules.

If equipped with Passenger Airbag On - Off switch, read the DTC's in all switch positions.

If any ACTIVE codes are present they must be resolved before diagnosing any stored codes.

WARNING: WARNING: TO AVOID PERSONAL INJURY OR DEATH, TURN THE IGNITION OFF, DISCONNECT THE BATTERY AND WAIT TWO MINUTES BEFORE PROCEEDING.

Using the wiring diagram/schematic as a guide, inspect the wiring and connectors.

Look for chaffed, pierced, pinched, or partially broken wires and broken, bent, pushed out, spread, corroded, or contaminated terminals.

The following additional checks may assist you in identifying a possible intermittent problem.

Reconnect any disconnected components and harness connector.

WARNING: WARNING: TO AVOID PERSONAL INJURY OR DEATH, TURN THE IGNITION ON, THEN RECONNECT THE BATTERY.

With the DRBIII®, monitor active codes as you work through the following steps.

WARNING: WARNING: TO AVOID PERSONAL INJURY OR DEATH, MAINTAIN A SAFE DISTANCE FROM ALL AIRBAGS WHILE PERFORMING THE FOLLOWING STEPS.

Wiggle the wiring harness and connectors of the related airbag circuit or component.

If codes are related to the Driver Airbag circuits, rotate the steering wheel from stop to stop.

If only stored codes return continue the test until the problem area has been isolated.

In the previous steps you have attempted to recreate the conditions responsible for setting active DTC in question.

Are any ACTIVE DTCs present?

Yes >> Select the appropriate diagnostic procedure from the Table of Contents in this section.

No >> No problem found at this time. Erase all codes before returning vehicle to customer.

NO RIGHT SIDE IMPACT SENSOR 1 COMMUNICATION

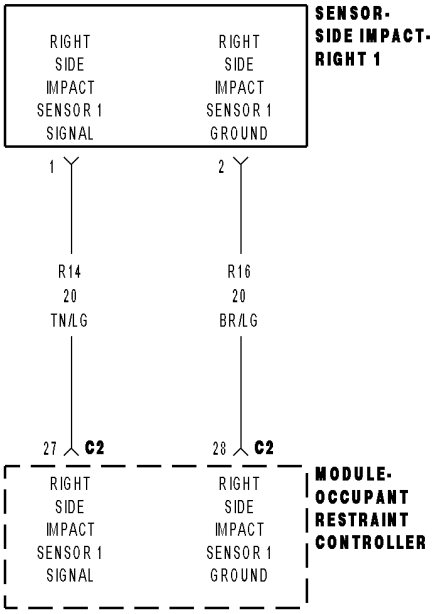

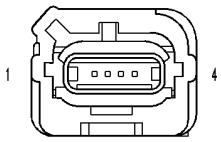

SENSOR-SIDE
IMPACT-RIGHT 1

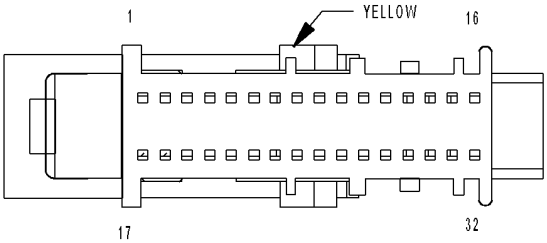

MODULE-
OCCUPANT
RESTRAINT
CONTROLLER C2

814716c5

NO RIGHT SIDE IMPACT SENSOR 1 COMMUNICATION (CONTINUED)

For the Airbag System circuit diagram (Refer to 8 - ELECTRICAL/RESTRAINTS - SCHEMATICS AND DIAGRAMS).

For a complete wiring diagram **Refer to Section 8W**.

- **When Monitored:**
  The Occupant Restraint Controller (ORC) continuously communicates with the Right Side Impact Sensor 1 over the sensor signal circuit. The sensor communication and on board diagnostics are powered by the ORC signal.
- **Set Condition:**
  This code will set, if the ORC and the Right Side Impact Sensor 1 do not establish and maintain valid data communications.

Possible Causes
(R14) RIGHT SIDE IMPACT SENSOR 1 SIGNAL CIRCUIT SHORTED TO BATTERY
(R14) RIGHT SIDE IMPACT SENSOR 1 SIGNAL CIRCUIT SHORTED TO GROUND
(R14, R16) RIGHT SIDE IMPACT SENSOR 1 CIRCUITS SHORTED TOGETHER
(R16) RIGHT SIDE IMPACT SENSOR 1 GROUND CIRCUIT OPEN
(R14) RIGHT SIDE IMPACT SENSOR 1 SIGNAL CIRCUIT OPEN
ORC, RIGHT SIDE IMPACT SENSOR 1

Diagnostic Test

1. VERIFY THAT DTC NO RIGHT SIDE IMPACT SENSOR 1 COMMUNICATION

NOTE: Ensure the battery is fully charged.

NOTE: When reconnecting Airbag system components, the ignition must be turned off and the battery must be disconnected.

Turn the ignition on.

With the scan tool, read ORC DTCs.

Does the scan tool display active: No Right Side impact Sensor 1 Communication?

Yes >> Go To 2

No >> Go To 9

NO RIGHT SIDE IMPACT SENSOR 1 COMMUNICATION (CONTINUED)

2. CHECK THE (R14, R16) RIGHT SIDE IMPACT SENSOR 1 SIGNAL AND GROUND CIRCUITS FOR A SHORT TO BATTERY

WARNING: To avoid personal injury or death, turn the ignition off, disconnect the battery and wait two minutes before proceeding.
Disconnect the Right side Impact Sensor 1 connector.

Disconnect the ORC connector.

WARNING: To avoid personal injury or death, turn the ignition on, then reconnect the battery.
Measure the voltage of the (R14) Right Side Impact Sensor 1 Signal circuit and (R16) Right Side Impact Sensor 1 Ground circuit at the Right Side Impact Sensor 1 connector and ground.

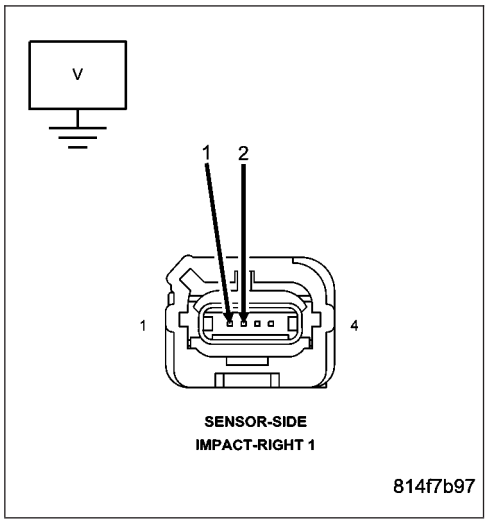

Is there any voltage present?

Yes >> Repair the (R14, R16) Right Side Impact Sensor 1 circuits for a short to battery.
Perform the ORC VERIFICATION TEST - VER 1.

No >> Go To 3

3. CHECK THE (R14) RIGHT SIDE IMPACT SENSOR 1 SIGNAL CIRCUIT FOR A SHORT TO GROUND

WARNING: To avoid personal injury or death, turn ignition on, then reconnect the battery.
Measure the resistance of the (R14) Right Side Impact Sensor 1 Signal circuit between the Right Side Impact Sensor 1 connector and ground.

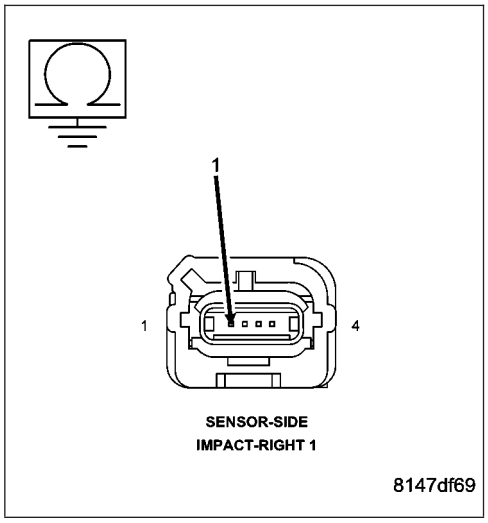

Is the resistance below 100K ohms?

Yes >> Repair the (R14) Right Side Impact Sensor 1 Signal circuit for a short to ground.
Perform the ORC VERIFICATION TEST - VER 1.

No >> Go To 4

NO RIGHT SIDE IMPACT SENSOR 1 COMMUNICATION (CONTINUED)

4. CHECK THE (R14, R16) RIGHT SIDE IMPACT SENSOR CIRCUITS FOR A SHORT TOGETHER

Measure the resistance between the (R14) Right Side Impact Sensor 1 Signal circuit and (R16) Right Side Impact Sensor 1 Ground circuit at the Right Side Impact Sensor 1 connector.

Is the resistance below 100K ohms?

Yes >> Repair the (R14, R16) Right Side Impact Sensor 1 circuits shorted together.
Perform the ORC VERIFICATION TEST - VER 1.

No >> Go To 5

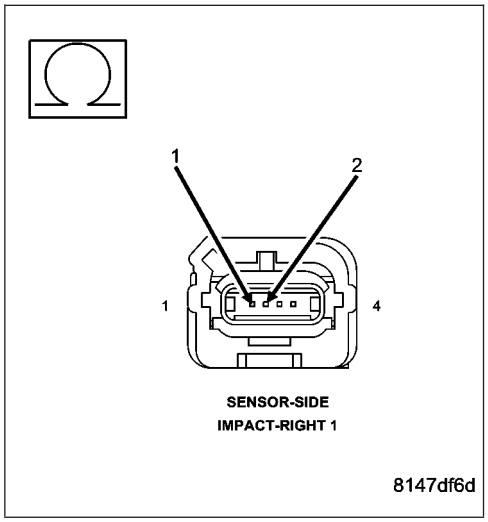

5. CHECK THE (R16) RIGHT SIDE IMPACT SENSOR 1 GROUND CIRCUIT FOR AN OPEN OR HIGH RESISTANCE

Connect the 8443 Load Tool ORC Adaptor to the Occupant Control Module connector.

Measure the resistance of the (R16) Right Side Impact Sensor 1 Ground circuit between the Right Side Impact Sensor 1 connector and the 8443 Load Tool ORC Adaptor.

Is the resistance below 1 ohm?

Yes >> Go To 6

No >> Repair the (R16) Right Side Impact Sensor 1 Ground circuit for an open or high resistance.
Perform the ORC VERIFICATION TEST - VER 1.

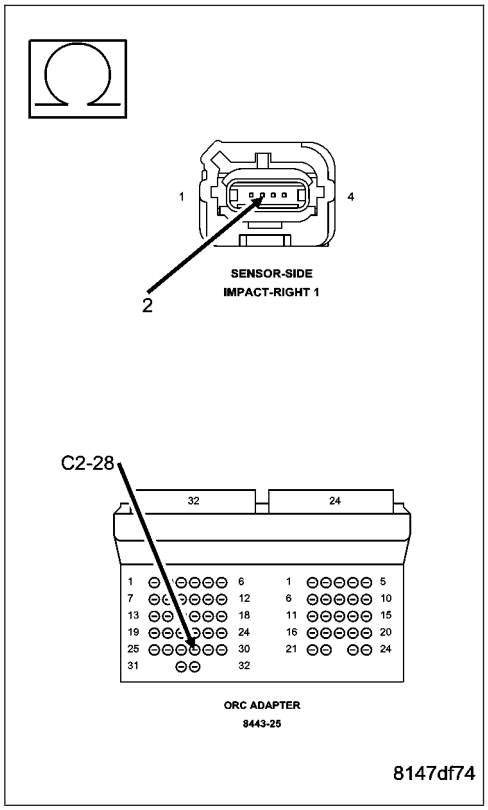

NO RIGHT SIDE IMPACT SENSOR 1 COMMUNICATION (CONTINUED)

6. CHECK THE (R14) RIGHT SIDE IMPACT SENSOR 1 CIRCUIT FOR AN OPEN OR HIGH RESISTANCE

Measure the resistance of the (R14) Right Side Impact Sensor 1 Signal circuit between the Right Side Impact Sensor 1 connector and the 8443 Load Tool ORC Adaptor.

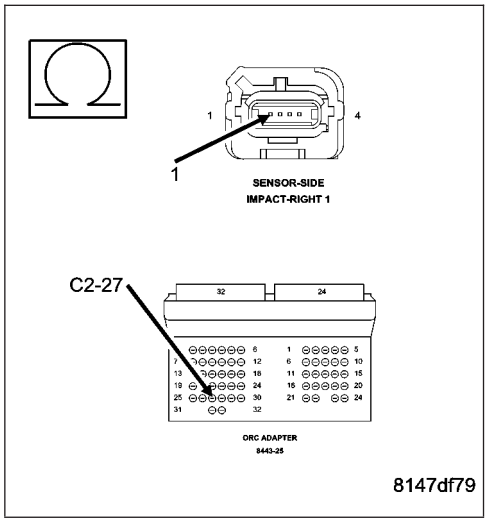

Is the resistance below 1 ohm?

Yes >> Go To 7

No >> Repair the (R14) Right Side Impact Sensor 1 Signal circuit for an open or high resistance.
Perform the ORC VERIFICATION TEST - VER 1.

---

7. CHECK OPERATION OF THE RIGHT SIDE IMPACT SENSOR 1

Replace the Right Side Impact Sensor 1.

Reconnect the vehicle body harness to the impact sensor.

Remove any special tools or jumper wires and reconnect all previously disconnected components - except the Battery.

WARNING: To avoid personal injury or death, turn the ignition on, then reconnect the battery.

Connect the scan tool to the Data Link Connector - use the most current software available.

Use the scan tool and erase the stored codes in all airbag system modules.

Turn the Ignition Off, and wait 15 seconds before turning the Ignition On.

Wait one minute, and read active codes and if there are none present read the stored codes.

Did DTC reset and is it active?

Yes >> Go To 8

No >> Repair is complete.
Perform the ORC VERIFICATION TEST - VER 1.

---

8. REPLACE THE OCCUPANT RESTRAINT CONTROLLER

WARNING: To avoid personal injury or death, turn the ignition off, disconnect the battery and wait two minutes before proceeding.

WARNING: If the occupant restraint controller is dropped at any time, it must be replaced. Failure to take the proper precautions could result in accidental airbag deployment and personal injury or death.

If there are no possible causes remaining, view repair.

Repair

Replace the Occupant Restraint Controller in accordance with Service Instructions.
Perform the ORC VERIFICATION TEST - VER 1.

NO RIGHT SIDE IMPACT SENSOR 1 COMMUNICATION (CONTINUED)

9. TEST FOR AN INTERMITTENT CONDITION

With the scan tool, record and erase all DTC's from all Airbag modules.

If any ACTIVE codes are present they must be resolved before diagnosing any stored codes.

WARNING: To avoid personal injury or death, turn the ignition off, disconnect the battery and wait two minutes before proceeding.

Using the wiring diagram/schematic as a guide, inspect the wiring and connectors.

Look for chaffed, pierced, pinched, or partially broken wires and broken, bent, pushed out, spread, corroded, or contaminated terminals.

The following additional checks may assist you in identifying a possible intermittent problem.

Reconnect any disconnected components and harness connector.

WARNING: To avoid personal injury or death, turn the ignition on, then reconnect the battery.

With the scan tool monitor active codes as you work through the following steps.

WARNING: To avoid personal injury or death, maintain a safe distance from all airbags while performing the following steps.

Wiggle the wiring harness and connectors of the related airbag circuit or component.

If codes are related to the Driver Airbag circuits, rotate the steering wheel from stop to stop.

If only stored codes return continue the test until the problem area has been isolated.

In the previous steps you have attempted to recreate the conditions responsible for setting active DTC in question.

Are any ACTIVE DTCs present?

Yes >> Select the appropriate symptom from Symptom List.

No >> No problem found at this time. Erase all codes before returning vehicle to customer.

OCCUPANT CLASSIFICATION MODULE CONFIGURATION MISMATCH

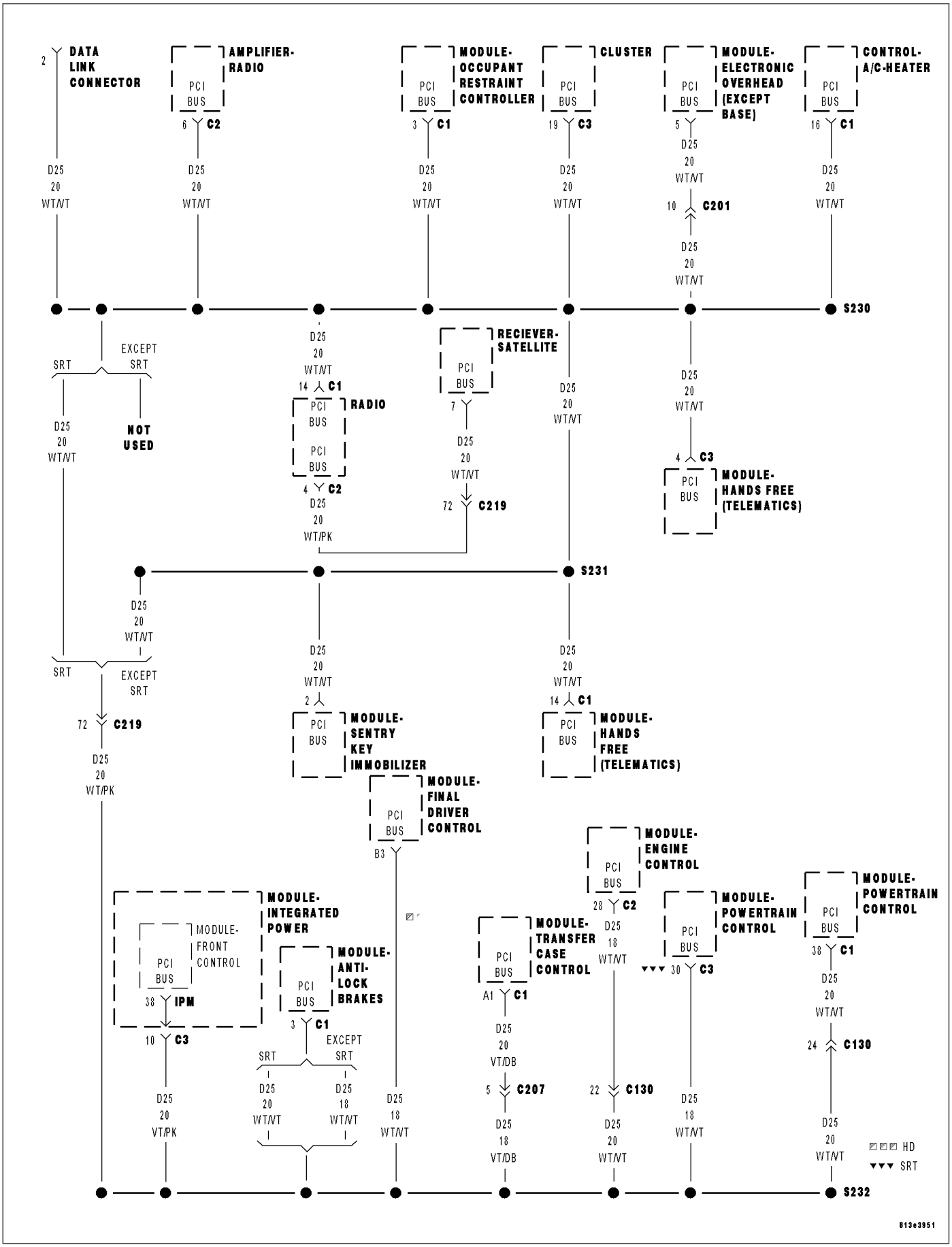

OCCUPANT CLASSIFICATION MODULE CONFIGURATION MISMATCH (CONTINUED)

For the Air Bag System circuit diagram (Refer to 8 - ELECTRICAL/RESTRAINTS - SCHEMATICS AND DIAGRAMS).

For a complete wiring diagram **Refer to Section 8W**.

- **When Monitored:**
  At ignition on, the Occupant Restraint Controller (ORC) monitors the PCI Bus for the Occupant Classification Module (OCM) messages and then compares the messages to the known configuration.
- **Set Condition:**
  This code will set if the ORC is not configured for Passenger Only OCM and OCM messages are being broadcast on the PCI Bus.

Possible Causes
PCM, INCORRECT VIN
OCCUPANT RESTRAINT CONTROLLER (ORC)

Diagnostic Test

1. DETERMINE ACTIVE OR STORED DTC

Turn the ignition on.

NOTE: Ensure the battery is fully charged.

NOTE: For the purpose of this test, the ACM and AECM modules will be referred to as an ORC.

NOTE: When reconnecting Airbag system components, the ignition must be turned off and the battery must be disconnected.

Select ACTIVE or STORED DTC:

ORC - ACTIVE DTC
Go To 2

ORC - STORED DTC
Go To 4

---

2. PCM, INCORRECT VIN

With the Scan Tool select ENGINE, MISCELLANEOUS, MISC FUNCTION, and then CHECK VIN to read the Vehicle Identification Number in the Powertrain Control Module.

Compare the VIN displayed on the Scan Tool screen and the Vehicle VIN plate.

Does the VIN plate and the PCM VIN match?

Yes >> Go To 3

No >> Replace and program the Powertrain Control Module in accordance with the Service Information.
Perform POWERTRAIN VERIFICATION TEST. (Refer to 9 - ENGINE - DIAGNOSIS AND TESTING).
Perform ORC VERIFICATION TEST - VER 1.

OCCUPANT CLASSIFICATION MODULE CONFIGURATION MISMATCH (CONTINUED)

3. OCCUPANT RESTRAINT CONTROLLER (ORC)

WARNING: TO AVOID PERSONAL INJURY OR DEATH, TURN THE IGNITION OFF, DISCONNECT THE BATTERY AND WAIT TWO MINUTES BEFORE PROCEEDING.

WARNING: IF THE OCCUPANT RESTRAINT CONTROLLER IS DROPPED AT ANY TIME, IT MUST BE REPLACED. FAILURE TO TAKE THE PROPER PRECAUTIONS COULD RESULT IN ACCIDENTAL AIRBAG DEPLOYMENT AND PERSONAL INJURY OR DEATH.

NOTE: When reconnecting airbag system components the Ignition must be turned off and the Battery must be disconnected.

If there are no possible causes remaining, view repair.

Repair

Replace the Occupant Restraint Controller (ORC) in accordance with the Service Information.

Perform ORC VERIFICATION TEST - VER 1.

---

4. CHECKING STORED OR INTERMITTENT CODES

With the Scan Tool, record and erase all DTC's from all Airbag modules.

If equipped with Passenger Airbag On - Off switch, read the DTC's in all switch positions.

If any ACTIVE codes are present they must be resolved before diagnosing any stored codes.

WARNING: TO AVOID PERSONAL INJURY OR DEATH, TURN THE IGNITION OFF, DISCONNECT THE BATTERY AND WAIT TWO MINUTES BEFORE PROCEEDING.

Using the wiring diagram/schematic as a guide, inspect the wiring and connectors.

Look for chaffed, pierced, pinched, or partially broken wires and broken, bent, pushed out, spread, corroded, or contaminated terminals.

The following additional checks may assist you in identifying a possible intermittent problem.

Reconnect any disconnected components and harness connector.

WARNING: TO AVOID PERSONAL INJURY OR DEATH, TURN THE IGNITION ON, THEN RECONNECT THE BATTERY.

With the Scan Tool, monitor active codes as you work through the following steps.

WARNING: TO AVOID PERSONAL INJURY OR DEATH, MAINTAIN A SAFE DISTANCE FROM ALL AIRBAGS WHILE PERFORMING THE FOLLOWING STEPS.

Wiggle the wiring harness and connectors of the related airbag circuit or component.

If codes are related to the Driver Airbag circuits, rotate the steering wheel from stop to stop.

If only stored codes return continue the test until the problem area has been isolated.

In the previous steps you have attempted to recreate the conditions responsible for setting active DTC in question.

Does the scan tool display any ACTIVE DTCs?

Yes >> Select the appropriate diagnostic procedure from the Table of Contents in this section.

No >> No problem found at this time. Erase all codes before returning vehicle to customer.

OUTPUT DRIVER 1

For a complete wiring diagram **Refer to Section 8W**.

- **When Monitored:**
  With the ignition on. The module's on board diagnostics continuously performs internal circuit tests.
- **Set Condition:**
  This DTC will set if the module identifies an out of range internal circuit.

Possible Causes
OCCUPANT RESTRAINT CONTROLLER

Diagnostic Test

1. REPLACE OCCUPANT RESTRAINT CONTROLLER

Turn the ignition on.

With the scan tool, erase and read ORC DTCs.

WARNING: To avoid personal injury or death, turn the ignition off, disconnect the battery and wait two minutes before proceeding.

WARNING: If the Occupant Restraint Controller is dropped at any time, it must be replaced. Failure to take proper precautions can result in accidental airbag deployment and personal injury or death.

When this code is set, view repair.

Repair

Replace the Occupant Restraint Controller in accordance with the Service Information.

Perform the ORC VERIFICATION TEST-VER. 1

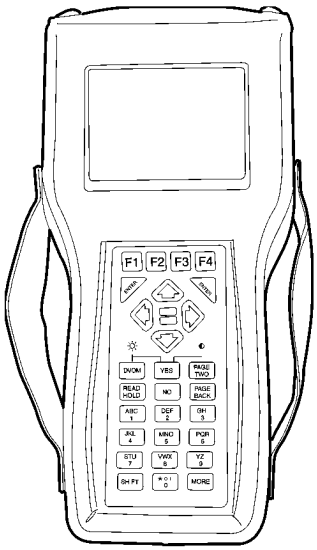

8136f94b

PASSENGER OFF INDICATOR CIRCUIT SHORT TO BATTERY

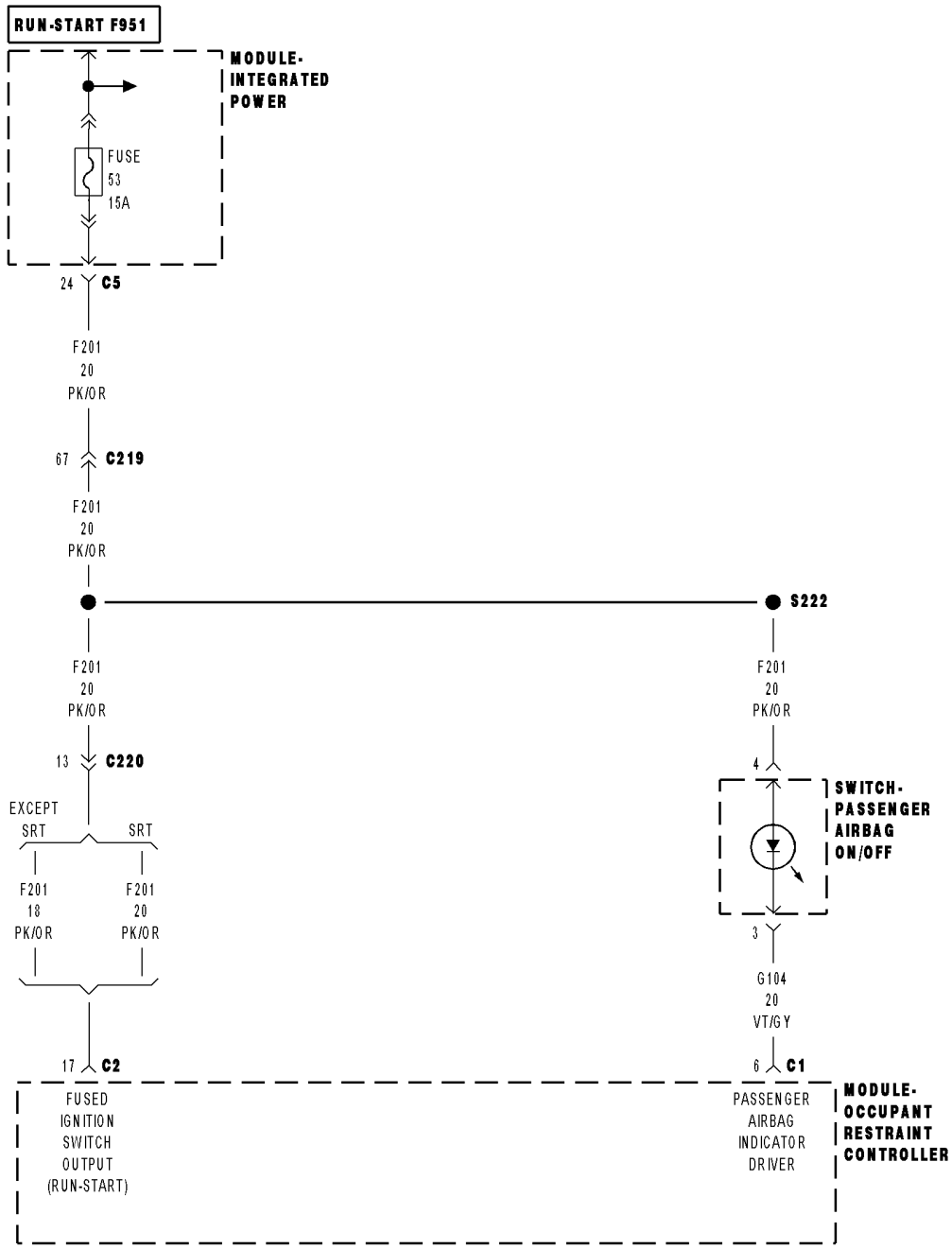

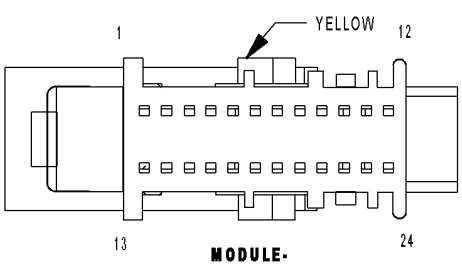

MODULE-
OCCUPANT
RESTRAINT
CONTROLLER C1

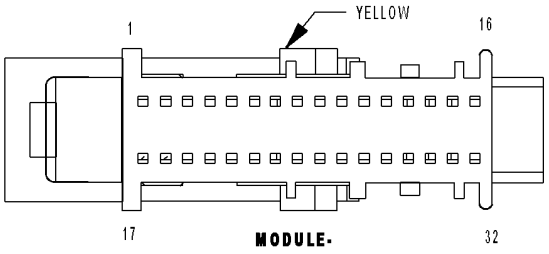

MODULE-
OCCUPANT
RESTRAINT
CONTROLLER C2

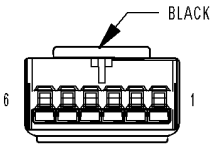

SWITCH-PASSENGER
AIRBAG ON/OFF

81490413

PASSENGER OFF INDICATOR CIRCUIT SHORT TO BATTERY (CONTINUED)

For the Air Bag System circuit diagram (Refer to 8 - ELECTRICAL/RESTRAINTS - SCHEMATICS AND DIAGRAMS).

For a complete wiring diagram **Refer to Section 8W**.

- **When Monitored:**
  When the ignition is on, the Occupant Restraint Controller (ORC) monitors the (G104) Passenger Airbag Indicator Driver circuit for voltage.
- **Set Condition:**
  The code will set if the ORC senses battery voltage on the (G104) Passenger Airbag Indicator Driver circuit.

Possible Causes
ORC IMPROPERLY CONFIGURED FOR PAB ON - OFF SWITCH
(G104) PAB INDICATOR DRIVER CIRCUIT SHORTED TO BATTERY
(G104) PAB INDICATOR DRIVER CIRCUIT SHORTED TO (F201) FUSED IGNITION SWITCH OUTPUT (RUN-START) CIRCUIT
PAB ON - OFF INDICATOR SHORTED
ORC, PAB INDICATOR DRIVER CIRCUIT SHORTED TO BATTERY

Diagnostic Test

1. DETERMINE ACTIVE OR STORED DTC

Turn the ignition on.

NOTE: Ensure that the battery is fully charged.

NOTE: For the purpose of this test, the AECM and ACM modules will be referred to as an ORC.

NOTE: When reconnecting Airbag system components, the ignition must be turned off and the battery must be disconnected.

SELECT ACTIVE or STORED DTC:

ORC - ACTIVE DTC
Go To 2

ORC - STORED DTC
Go To 7

---

2. CHECKING EQUIPMENT

Is this vehicle equipped with a Passenger Airbag On - Off Switch?

Yes >> Go To 3

No >> With the Scan Tool in MISCELLANEOUS re-configure the ORC for NO AIRBAG ON/OFF SWITCH. Perform ORC VERIFICATION TEST - VER 1.

PASSENGER OFF INDICATOR CIRCUIT SHORT TO BATTERY (CONTINUED)

3. PAB ON - OFF INDICATOR SHORTED

WARNING: TO AVOID PERSONAL INJURY OR DEATH, TURN THE IGNITION OFF, DISCONNECT THE BATTERY AND WAIT TWO MINUTES BEFORE PROCEEDING.

Disconnect the Passenger Airbag On - Off Switch.

NOTE: Check connectors - Clean and repair as necessary.

Measure the PAB On - Off Switch resistance between terminals 3 and 4.

Is the resistance below 14.0 ohms?

Yes >> Go To 4

No >> Replace the Passenger Airbag On - Off Switch in accordance with the Service Information. Perform ORC VERIFICATION TEST - VER 1.

---

4. (G104) PAB INDICATOR DRIVER CIRCUIT SHORTED TO BATTERY

Disconnect the Occupant Restraint Controller C1 connector.

NOTE: Check connectors - Clean and repair as necessary.

WARNING: IF THE OCCUPANT RESTRAINT CONTROLLER IS DROPPED AT ANY TIME, IT MUST BE REPLACED. FAILURE TO TAKE THE PROPER PRECAUTIONS COULD RESULT IN ACCIDENTAL AIRBAG DEPLOYMENT AND PERSONAL INJURY OR DEATH.

WARNING: TO AVOID PERSONAL INJURY OR DEATH, TURN THE IGNITION ON, THEN RECONNECT THE BATTERY.

Measure the voltage of the (G104) Passenger Airbag Indicator Driver circuit.

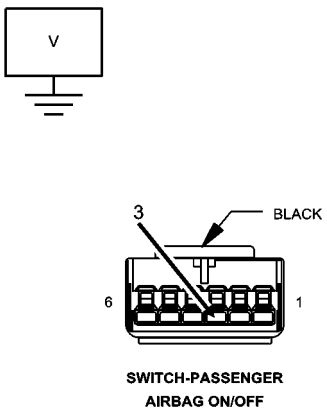

Is there any voltage present?

Yes >> Go To 5

No >> Go To 6

PASSENGER OFF INDICATOR CIRCUIT SHORT TO BATTERY (CONTINUED)

5. (G104) PAB INDICATOR DRIVER CIRCUIT SHORTED TO (F201) FUSED IGNITION SWITCH OUTPUT (RUN-START) CIRCUIT

WARNING: TO AVOID PERSONAL INJURY OR DEATH, TURN THE IGNITION OFF, DISCONNECT THE BATTERY AND WAIT TWO MINUTES BEFORE PROCEEDING.

Remove the (F201) Fused Ignition Switch Output (Run-Start) circuit fuse.

WARNING: TO AVOID PERSONAL INJURY OR DEATH, TURN THE IGNITION ON, THEN RECONNECT THE BATTERY.

Measure the voltage of the (G104) Passenger Airbag Indicator Driver circuit.

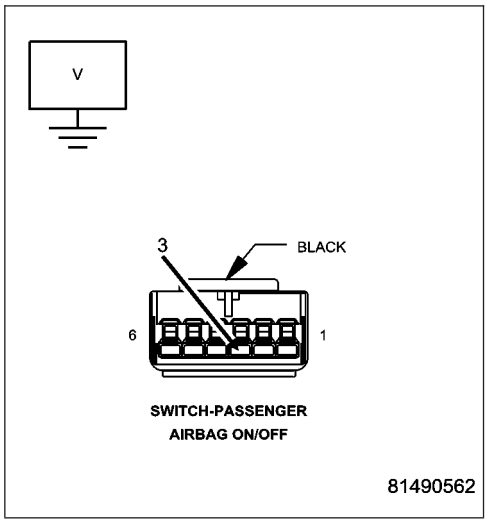

Is there any voltage present?

Yes >> Repair the (G104) Passenger Airbag Indicator Driver circuit for a short to battery.
Perform ORC VERIFICATION TEST - VER 1.

No >> Repair the (G104) Passenger Airbag Indicator Driver circuit for a short to the (F201) Fused ignition Switch Output (Run-Start) circuit.
Perform ORC VERIFICATION TEST - VER 1.

---

6. ORC, PAB INDICATOR DRIVER CIRCUIT SHORTED TO BATTERY

WARNING: TO AVOID PERSONAL INJURY OR DEATH, TURN THE IGNITION OFF, DISCONNECT THE BATTERY AND WAIT TWO MINUTES BEFORE PROCEEDING.

WARNING: IF THE OCCUPANT RESTRAINT CONTROLLER IS DROPPED AT ANY TIME, IT MUST BE REPLACED. FAILURE TO TAKE THE PROPER PRECAUTIONS COULD RESULT IN ACCIDENTAL AIRBAG DEPLOYMENT AND PERSONAL INJURY OR DEATH.

If there are no possible causes remaining, view repair.

Repair

Replace the Occupant Restraint Controller (ORC) in accordance with the Service Information.
Perform ORC VERIFICATION TEST - VER 1.

PASSENGER OFF INDICATOR CIRCUIT SHORT TO BATTERY (CONTINUED)

7. CHECKING STORED OR INTERMITTENT CODES

With the Scan Tool, record and erase all DTC's from all Airbag modules.

If equipped with Passenger Airbag On - Off switch, read the DTC's in all switch positions.

If any ACTIVE codes are present they must be resolved before diagnosing any stored codes.

WARNING: TO AVOID PERSONAL INJURY OR DEATH, TURN THE IGNITION OFF, DISCONNECT THE BATTERY AND WAIT TWO MINUTES BEFORE PROCEEDING.

Using the wiring diagram/schematic as a guide, inspect the wiring and connectors.

Look for chaffed, pierced, pinched, or partially broken wires and broken, bent, pushed out, spread, corroded, or contaminated terminals.

The following additional checks may assist you in identifying a possible intermittent problem.

Reconnect any disconnected components and harness connector.

WARNING: TO AVOID PERSONAL INJURY OR DEATH, TURN THE IGNITION ON, THEN RECONNECT THE BATTERY.

With the Scan Tool, monitor active codes as you work through the following steps.

WARNING: TO AVOID PERSONAL INJURY OR DEATH, MAINTAIN A SAFE DISTANCE FROM ALL AIRBAGS WHILE PERFORMING THE FOLLOWING STEPS.

Wiggle the wiring harness and connectors of the related airbag circuit or component.

If codes are related to the Driver Airbag circuits, rotate the steering wheel from stop to stop.

If only stored codes return continue the test until the problem area has been isolated.

In the previous steps you have attempted to recreate the conditions responsible for setting active DTC in question.

Are any ACTIVE DTCs present?

Yes >> Select the appropriate diagnostic procedure from the Table of Contents in this section.

No >> No problem found at this time. Erase all codes before returning vehicle to customer.

PASSENGER OFF INDICATOR CIRCUIT SHORT TO GROUND

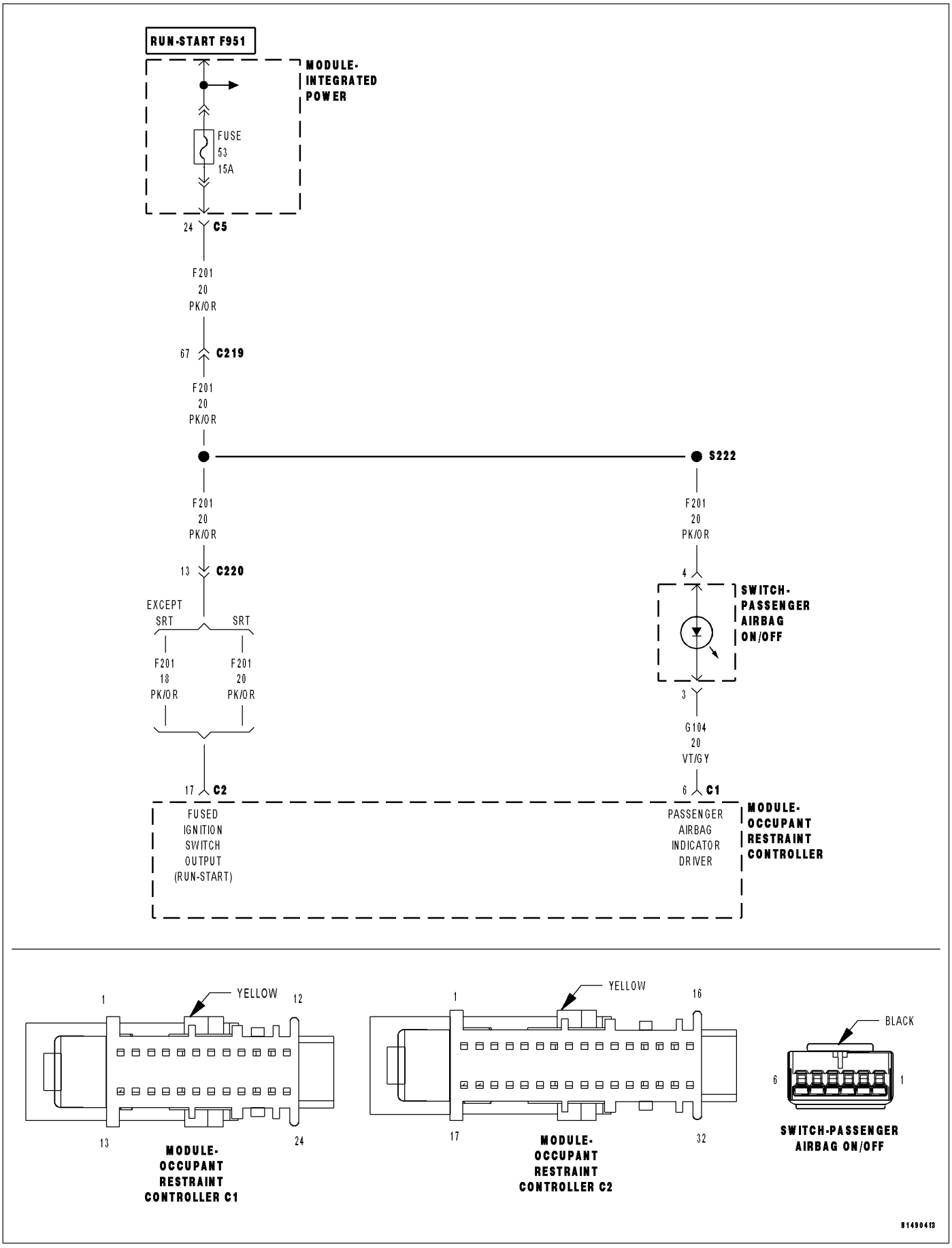

PASSENGER OFF INDICATOR CIRCUIT SHORT TO GROUND (CONTINUED)

For the Air Bag System circuit diagram (Refer to 8 - ELECTRICAL/RESTRAINTS - SCHEMATICS AND DIAGRAMS).

For a complete wiring diagram **Refer to Section 8W**.

- **When Monitored:**
  When the ignition is on, the Occupant Restraint Controller (ORC) monitors the (G104) Passenger Airbag Indicator Driver circuit for voltage.
- **Set Condition:**
  The code will set if the ORC cannot detect voltage on the (G104) Passenger Airbag Indicator Driver circuit.

Possible Causes
ACTIVE ACM RUN - START CODES
ORC IMPROPERLY CONFIGURED FOR PAB ON - OFF SWITCH
PAB ON - OFF SWITCH DISCONNECTED
(F201) FUSED IGNITION SWITCH OUTPUT (RUN-START) CIRCUIT OPEN
(G104) PAB INDICATOR DRIVER CIRCUIT OPEN
(G104) PAB INDICATOR DRIVER CIRCUIT SHORTED TO GROUND
PAB ON - OFF INDICATOR OPEN
ORC, PAB ON - OFF INDICATOR CIRCUIT OPEN
ORC, PAB ON - OFF INDICATOR CIRCUIT SHORTED TO GROUND

Diagnostic Test

1. DETERMINE ACTIVE OR STORED DTC

Turn the ignition on.

NOTE: Ensure that the battery is fully charged.

NOTE: For the purpose of this test, the AECM and ORC modules will be referred to as an ORC.

NOTE: When reconnecting Airbag system components, the ignition must be turned off and the battery must be disconnected.

SELECT ACTIVE or STORED DTC:

ORC - ACTIVE DTC
Go To 2

ORC - STORED DTC
Go To 10

---

2. ACTIVE ORC RUN - START CODES

With the Scan Tool, read active Occupant Restraint Controller DTC's.

Does the Scan Tool display: LOSS OF IGNITION RUN - START?

Yes >> Diagnose and repair the DTC. Refer to the Table of Contents in this Section for a complete list of Restraint System DTCs.

No >> Go To 3

PASSENGER OFF INDICATOR CIRCUIT SHORT TO GROUND (CONTINUED)

3. CHECKING EQUIPMENT

Is this vehicle equipped with a Passenger Airbag On - Off Switch?

Yes >> Go To 4

No >> With the Scan Tool in MISCELLANEOUS re-configure the ORC for NO AIRBAG ON/OFF SWITCH. Perform ORC VERIFICATION TEST - VER 1.

---

4. SWITCH DISCONNECTED

Turn the ignition off.

Gain access to the Passenger Airbag On - Off Switch connector.

Is the Passenger Airbag On - Off Switch connected to the dash harness?

Yes >> Go To 5

No >> Connect the Passenger Airbag On - Off switch to the dash harness connector. Perform ORC VERIFICATION TEST - VER 1.

---

5. (F201) FUSED IGNITION SWITCH OUTPUT (RUN-START) CIRCUIT OPEN

WARNING: TO AVOID PERSONAL INJURY OR DEATH, TURN IGNITION OFF, DISCONNECT THE BATTERY AND WAIT TWO MINUTES BEFORE PROCEEDING.

Disconnect the Passenger Airbag On - Off Switch.

NOTE: Check connectors - Clean and repair as necessary.

WARNING: TO AVOID PERSONAL INJURY OR DEATH, TURN IGNITION ON, THEN RECONNECT THE BATTERY.

Measure the voltage of the (F201) Fused Ignition Switch Output (Run-Start) circuit.

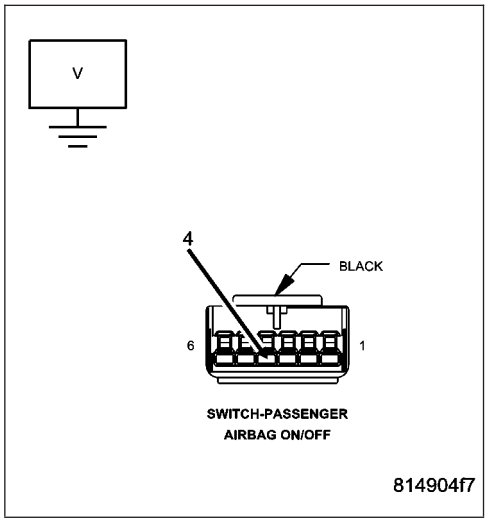

Is the voltage above 10.0 volts?

Yes >> Go To 6

No >> Repair the (F201) Fused ignition Switch Output (Run-Start) circuit for an open. Perform ORC VERIFICATION TEST - VER 1.

---

6. PAB ON - OFF INDICATOR OPEN

WARNING: TO AVOID PERSONAL INJURY OR DEATH, TURN IGNITION OFF, DISCONNECT THE BATTERY AND WAIT TWO MINUTES BEFORE PROCEEDING.

NOTE: Check connectors - Clean and repair as necessary.

Measure the PAB On - Off Switch resistance between terminals 3 and 4.

Is the resistance approximately 14 ohms?

Yes >> Go To 7

No >> Replace the Passenger Airbag ON - OFF Switch in accordance with the service information. Perform ORC VERIFICATION TEST - VER 1.

PASSENGER OFF INDICATOR CIRCUIT SHORT TO GROUND (CONTINUED)

7. (G104) PAB INDICATOR DRIVER CIRCUIT OPEN

Disconnect the Occupant Restraint Controller C1 connector

NOTE: Check connectors - Clean and repair as necessary.

WARNING: IF THE OCCUPANT RESTRAINT CONTROLLER IS DROPPED AT ANY TIME, IT MUST BE REPLACED. FAILURE TO TAKE THE PROPER PRECAUTIONS COULD RESULT IN ACCIDENTAL AIRBAG DEPLOYMENT AND PERSONAL INJURY OR DEATH.

Connect the appropriate Load Tool Adaptor to the Occupant Restraint Controller connector.

Measure the resistance of the (G104) Passenger Airbag Indicator Driver circuit between the 8443–25 ORC Adaptor and the PAB On - Off Switch connector.

Is the resistance below 5.0 ohms?

Yes >> Go To 8

No >> Repair the (G104) Passenger Airbag Indicator Driver circuit for an open.
Perform ORC VERIFICATION TEST - VER 1.

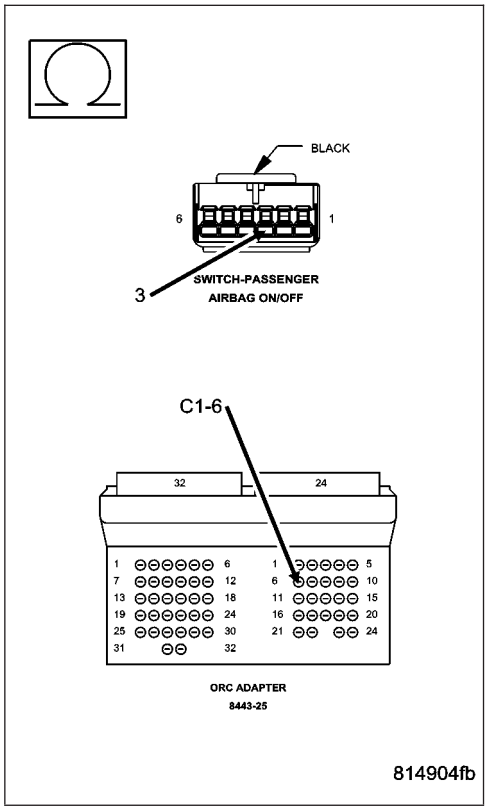

8. (G104) PAB INDICATOR DRIVER CIRCUIT SHORTED TO GROUND

Measure the resistance of the (G104) Passenger Airbag Indicator Driver circuit between ground and the 8443–25 ORC Adaptor.

Is the resistance below 10K ohms?

Yes >> Repair the (G104) Passenger Airbag Indicator Driver circuit for a short to ground.
Perform ORC VERIFICATION TEST - VER 1.

No >> Go To 9

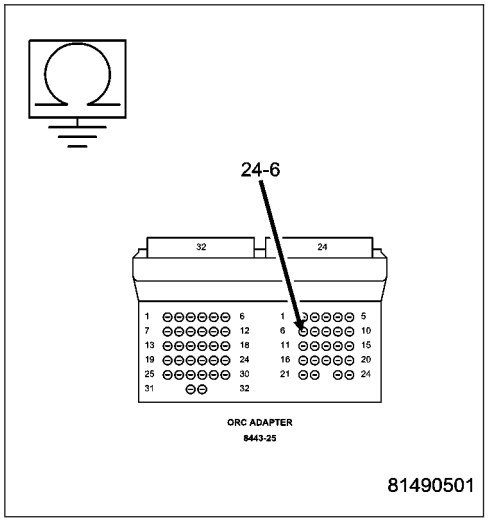

PASSENGER OFF INDICATOR CIRCUIT SHORT TO GROUND (CONTINUED)

9. ORC, PAB ON - OFF INDICATOR CIRCUIT OPEN OR SHORTED TO GROUND

Reconnect the Passenger Airbag On - Off Switch.

WARNING: IF THE OCCUPANT RESTRAINT CONTROLLER IS DROPPED AT ANY TIME, IT MUST BE REPLACED. FAILURE TO TAKE THE PROPER PRECAUTIONS COULD RESULT IN ACCIDENTAL AIRBAG DEPLOYMENT AND PERSONAL INJURY OR DEATH.

If there are no possible causes remaining, view repair.

Repair

Replace the Occupant Restraint Controller in accordance with the Service Information.

Perform ORC VERIFICATION TEST - VER 1.

---

10. CHECKING STORED OR INTERMITTENT CODES

With the Scan Tool, record and erase all DTC's from all Airbag modules.

If equipped with Passenger Airbag On - Off switch, read the DTC's in all switch positions.

If any ACTIVE codes are present they must be resolved before diagnosing any stored codes.

WARNING: TO AVOID PERSONAL INJURY OR DEATH, TURN THE IGNITION OFF, DISCONNECT THE BATTERY AND WAIT TWO MINUTES BEFORE PROCEEDING.

Using the wiring diagram/schematic as a guide, inspect the wiring and connectors.

Look for chaffed, pierced, pinched, or partially broken wires and broken, bent, pushed out, spread, corroded, or contaminated terminals.

The following additional checks may assist you in identifying a possible intermittent problem.

Reconnect any disconnected components and harness connector.

WARNING: TO AVOID PERSONAL INJURY OR DEATH, TURN THE IGNITION ON, THEN RECONNECT THE BATTERY.

With the Scan Tool, monitor active codes as you work through the following steps.

WARNING: TO AVOID PERSONAL INJURY OR DEATH, MAINTAIN A SAFE DISTANCE FROM ALL AIRBAGS WHILE PERFORMING THE FOLLOWING STEPS.

Wiggle the wiring harness and connectors of the related airbag circuit or component.

If codes are related to the Driver Airbag circuits, rotate the steering wheel from stop to stop.

If only stored codes return continue the test until the problem area has been isolated.

In the previous steps you have attempted to recreate the conditions responsible for setting active DTC in question.

Are any ACTIVE DTCs present?

Yes >> Select the appropriate diagnostic procedure from the Table of Contents in this section.

No >> No problem found at this time. Erase all codes before returning vehicle to customer.

PASSENGER AIRBAG ON-OFF SWITCH OPEN

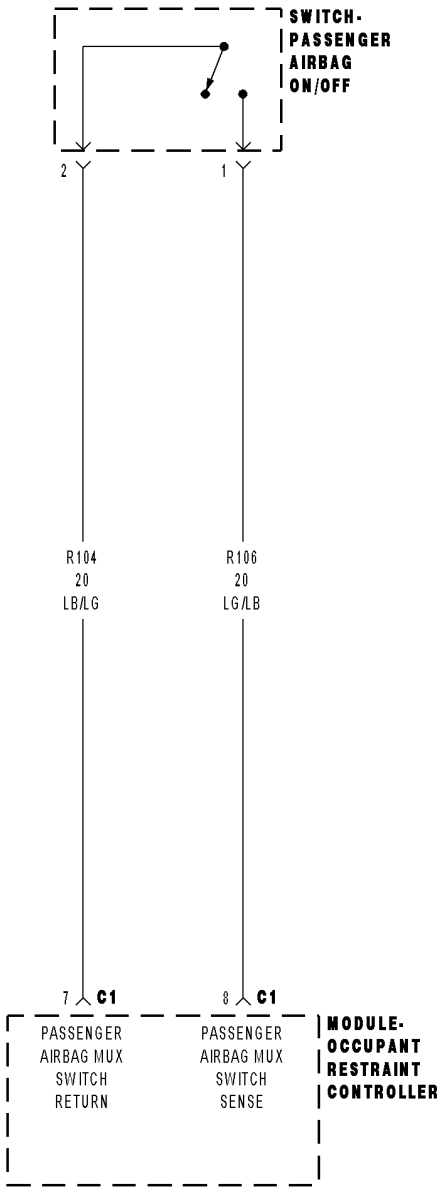

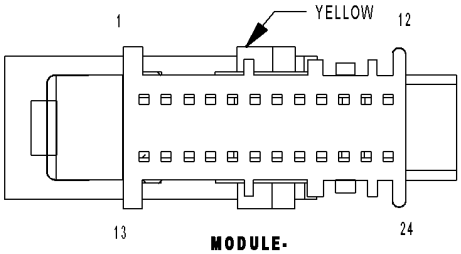

MODULE-
OCCUPANT
RESTRAINT
CONTROLLER C1

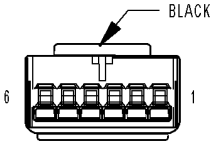

SWITCH-PASSENGER
AIRBAG ON/OFF

81490591

PASSENGER AIRBAG ON-OFF SWITCH OPEN (CONTINUED)

For the Air Bag System circuit diagram (Refer to 8 - ELECTRICAL/RESTRAINTS - SCHEMATICS AND DIAGRAMS).

For a complete wiring diagram **Refer to Section 8W**.

- **When Monitored:**
  When the ignition is on, the (R106) Passenger Airbag MUX Switch Sense circuit supplies a 3 to 10 ms pulse every 100 ms across the On or Off switch resistor to the (R104) Passenger Airbag MUX Switch Return circuit.
- **Set Condition:**
  The code will set if the Occupant Restraint Controller (ORC) senses an open or high resistance on the (R106) Passenger Airbag MUX Switch Sense circuit or (R104) Passenger Airbag MUX Switch Return circuit.

Possible Causes
PAB ON - OFF SWITCH DISCONNECTED
ORC IMPROPERLY CONFIGURED FOR PAB ON - OFF SWITCH
(R106) PAB MUX SWITCH SENSE CIRCUIT OPEN
(R104) PAB MUX SWITCH RETURN CIRCUIT OPEN
PAB ON - OFF SWITCH OPEN
ORC, PAB ON - OFF SWITCH CIRCUIT OPEN

Diagnostic Test

1. DETERMINE ACTIVE OR STORED DTC

Turn the ignition on.

NOTE: Ensure that the battery is fully charged.

NOTE: For the purpose of this test, the AECM and ACM modules will be referred to as an ORC.

NOTE: When reconnecting Airbag system components, the ignition must be turned off and the battery must be disconnected.

SELECT ACTIVE or STORED DTC:

ORC - ACTIVE DTC
Go To 2

ORC - STORED DTC
Go To 8

---

2. CHECKING EQUIPMENT

Is this vehicle equipped with a Passenger Airbag On - Off Switch?

Yes >> Go To 3

No >> With the Scan Tool in MISCELLANEOUS re-configure the ORC for NO AIRBAG ON/OFF SWITCH. Perform ORC VERIFICATION TEST - VER 1.

PASSENGER AIRBAG ON-OFF SWITCH OPEN (CONTINUED)

3. SWITCH DISCONNECTED

Turn the ignition off.

Gain access to the Passenger Airbag On - Off Switch connector.

Is the Passenger Airbag On - Off Switch connected to the dash harness?

Yes >> Go To 4

No >> Connect the Passenger Airbag On - Off switch to the dash harness connector.
Perform ORC VERIFICATION TEST - VER 1.

---

4. PAB ON - OFF SWITCH OPEN

WARNING: TO AVOID PERSONAL INJURY OR DEATH, TURN THE IGNITION OFF, DISCONNECT THE BATTERY AND WAIT TWO MINUTES BEFORE PROCEEDING.

Disconnect the Passenger Airbag On - Off Switch.

NOTE: Check connectors - Clean and repair as necessary.

Measure the PAB On - Off Switch resistance between terminals 1 and 2 in both switch positions.

The switch resistance specifications are: ON position = 175.0 to 190.0 ohms and OFF position = 820.0 to 870.0 ohms.

Is the resistance within the range specified for both switch positions?

Yes >> Go To 5

No >> Replace the Passenger Airbag ON - OFF Switch in accordance with the service information.
Perform ORC VERIFICATION TEST - VER 1.

---

5. (R106) PAB MUX SWITCH SENSE CIRCUIT OPEN

Disconnect the Occupant Restraint Controller C1 connector.

NOTE: Check connectors - Clean and repair as necessary.

WARNING: IF THE OCCUPANT RESTRAINT CONTROLLER IS DROPPED AT ANY TIME, IT MUST BE REPLACED. FAILURE TO TAKE THE PROPER PRECAUTIONS COULD RESULT IN ACCIDENTAL AIRBAG DEPLOYMENT AND PERSONAL INJURY OR DEATH.

Connect the appropriate Load Tool Adaptor to the Occupant Restraint Controller connector.

Measure the resistance of the (R106) Passenger Airbag MUX Switch Sense circuit between the ORC Adaptor and the PAB On - Off Switch connector.

Is the resistance below 5.0 ohms?

Yes >> Go To 6

No >> Repair the (R106) Passenger Airbag MUX Switch Sense circuit for an open.
Perform ORC VERIFICATION TEST - VER 1.

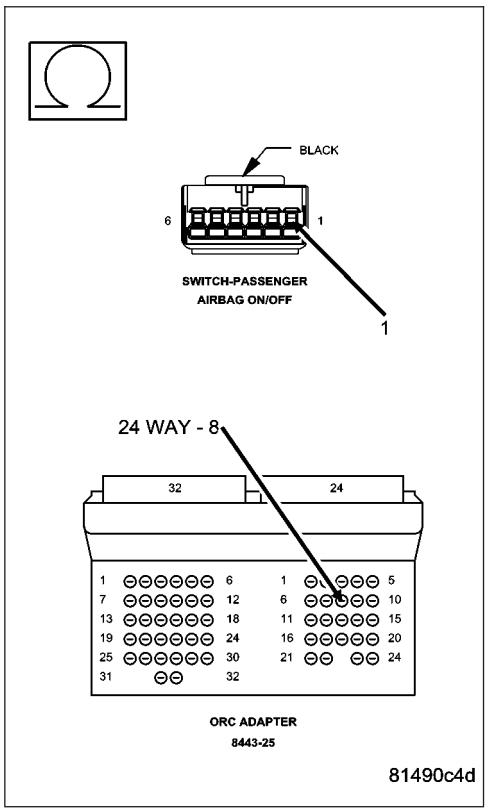

PASSENGER AIRBAG ON-OFF SWITCH OPEN (CONTINUED)

6. (R104) PAB MUX SWITCH RETURN CIRCUIT OPEN

Measure the resistance of the (R104) Passenger Airbag MUX Switch Return circuit between the ORC Adaptor and the PAB On - Off Switch connector.

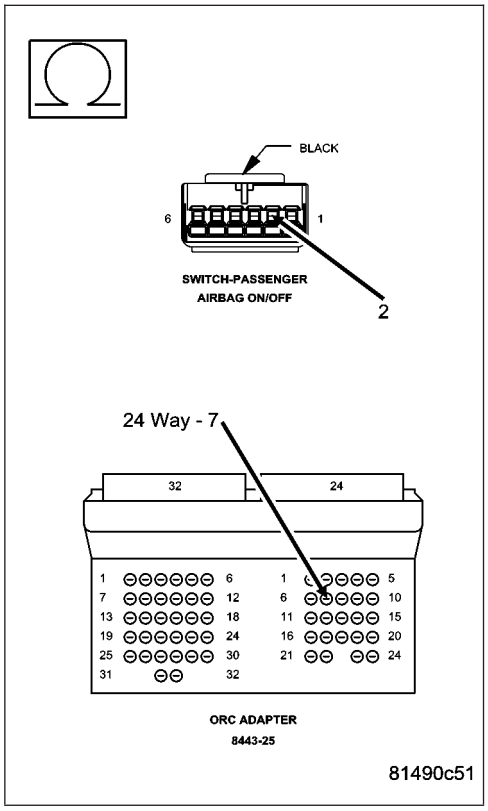

Is the resistance below 5.0 ohms?

Yes >> Go To 7

No >> Repair the (R104) Passenger Airbag MUX Switch Return circuit for an open.
Perform ORC VERIFICATION TEST - VER 1.

---

7. ORC, PAB ON - OFF SWITCH CIRCUIT OPEN

WARNING: IF THE OCCUPANT RESTRAINT CONTROLLER IS DROPPED AT ANY TIME, IT MUST BE REPLACED. FAILURE TO TAKE THE PROPER PRECAUTIONS COULD RESULT IN ACCIDENTAL AIRBAG DEPLOYMENT AND PERSONAL INJURY OR DEATH.

If there are no possible causes remaining, view repair.

Repair:

Replace the Occupant Restraint Controller (ORC) in accordance with the Service Information.
Perform ORC VERIFICATION TEST - VER 1.

PASSENGER AIRBAG ON-OFF SWITCH OPEN (CONTINUED)

8. CHECKING STORED OR INTERMITTENT CODES

With the Scan Tool, record and erase all DTC's from all Airbag modules.

If equipped with Passenger Airbag On - Off switch, read the DTC's in all switch positions.

If any ACTIVE codes are present they must be resolved before diagnosing any stored codes.

WARNING: TO AVOID PERSONAL INJURY OR DEATH, TURN THE IGNITION OFF, DISCONNECT THE BATTERY AND WAIT TWO MINUTES BEFORE PROCEEDING.

Using the wiring diagram/schematic as a guide, inspect the wiring and connectors.

Look for chaffed, pierced, pinched, or partially broken wires and broken, bent, pushed out, spread, corroded, or contaminated terminals.

The following additional checks may assist you in identifying a possible intermittent problem.

Reconnect any disconnected components and harness connector.

WARNING: TO AVOID PERSONAL INJURY OR DEATH, TURN THE IGNITION ON, THEN RECONNECT THE BATTERY.

With the Scan Tool, monitor active codes as you work through the following steps.

WARNING: TO AVOID PERSONAL INJURY OR DEATH, MAINTAIN A SAFE DISTANCE FROM ALL AIRBAGS WHILE PERFORMING THE FOLLOWING STEPS.

Wiggle the wiring harness and connectors of the related airbag circuit or component.

If codes are related to the Driver Airbag circuits, rotate the steering wheel from stop to stop.

If only stored codes return continue the test until the problem area has been isolated.

In the previous steps you have attempted to recreate the conditions responsible for setting active DTC in question.

Are any ACTIVE DTCs present?

Yes >> Select the appropriate diagnostic procedure from the Table of Contents in this section.

No >> No problem found at this time. Erase all codes before returning vehicle to customer.

PASSENGER AIRBAG ON-OFF SWITCH SHORT TO BATTERY

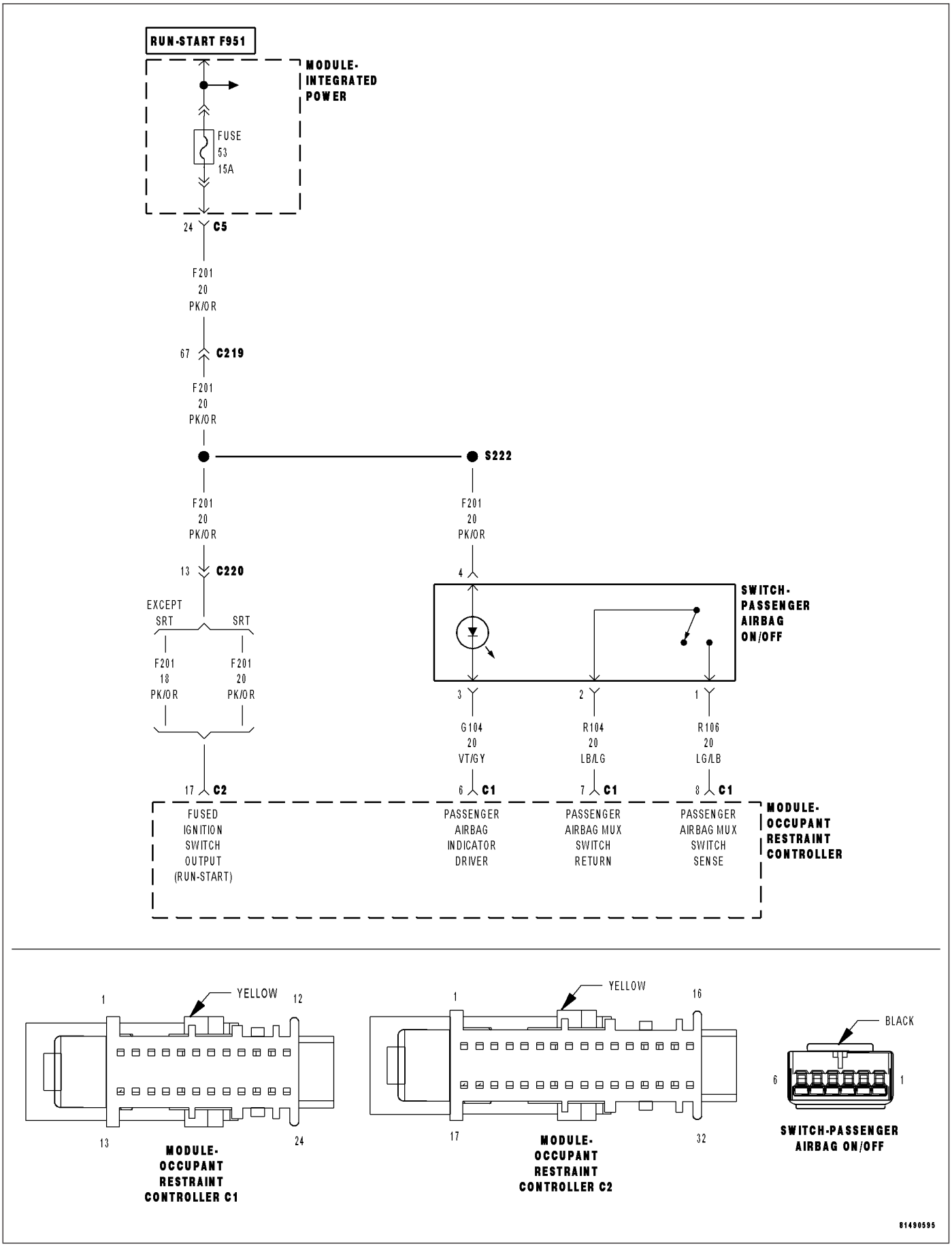

PASSENGER AIRBAG ON-OFF SWITCH SHORT TO BATTERY (CONTINUED)

For the Air Bag System circuit diagram (Refer to 8 - ELECTRICAL/RESTRAINTS - SCHEMATICS AND DIAGRAMS).

For a complete wiring diagram **Refer to Section 8W**.

- **When Monitored:**
  When the ignition is on, the (R106) Passenger Airbag MUX Switch Sense circuit supplies a 3 to 10 ms pulse every 100 ms across the On or Off switch resister to the (R104) Passenger Airbag MUX switch return circuit. Once the code is active, the Occupant Restraint Controller (ORC) will disable the indicator for the duration of the ignition cycle.
- **Set Condition:**
  The code will set if the ORC senses constant voltage over approximately 4.0 volts on the Passenger Airbag MUX Switch circuits.

Possible Causes
ORC IMPROPERLY CONFIGURED FOR PAB ON - OFF SWITCH
(R106) PAB MUX SWITCH SENSE CIRCUIT SHORTED TO BATTERY
(R104) PAB MUX SWITCH RETURN CIRCUIT SHORTED TO BATTERY
PAB ON - OFF SWITCH SHORTED
ORC, PAB ON - OFF SWITCH CIRCUIT SHORTED TO BATTERY

Diagnostic Test

1. DETERMINE ACTIVE OR STORED DTC

Turn the ignition on.

NOTE: Ensure the battery is fully charged.

NOTE: For the purpose of this test, the AECM and ACM modules will be referred to as an ORC.

NOTE: When reconnecting Airbag system components, the ignition must be turned off and the battery must be disconnected.

SELECT ACTIVE or STORED DTC:

ORC - ACTIVE DTC
Go To 2

ORC - STORED DTC
Go To 7

---

2. CHECKING EQUIPMENT

Is this vehicle equipped with a Passenger Airbag On - Off Switch?

Yes >> Go To 3

No >> With the Scan Tool in MISCELLANEOUS re-configure the ORC for NO AIRBAG ON/OFF SWITCH. Perform ORC VERIFICATION TEST - VER 1.

PASSENGER AIRBAG ON-OFF SWITCH SHORT TO BATTERY (CONTINUED)

3. PAB ON - OFF SWITCH SHORTED

WARNING: TO AVOID PERSONAL INJURY OR DEATH, TURN THE IGNITION OFF, DISCONNECT THE BATTERY AND WAIT TWO MINUTES BEFORE PROCEEDING.

Disconnect the Passenger Airbag On - Off Switch.

NOTE: Check connectors - Clean and repair as necessary.

Measure the PAB On - Off Switch resistance between terminals 1 and 4.

Measure the PAB On - Off Switch resistance between terminals 2 and 4.

Is the resistance below 10K ohms on either test?

Yes >> Replace the Passenger Airbag ON - OFF Switch in accordance with the service information.
Perform ORC VERIFICATION TEST - VER 1.

No >> Go To 4

---

4. PAB ON - OFF SWITCH SHORTED

Measure the PAB On - Off Switch resistance between terminals 1 and 2 in both switch positions.

The switch resistance specifications are: ON position = 175.0 to 190.0 ohms and OFF position = 820.0 to 870.0 ohms.

Is the resistance within the range specified for both switch positions?

Yes >> Go To 5

No >> Replace the Passenger Airbag ON - OFF Switch in accordance with the service information.
Perform ORC VERIFICATION TEST - VER 1.

---

5. (R106) PAB MUX SWITCH SENSE CIRCUIT / (R104) PAB MUX SWITCH RETURN CIRCUIT SHORTED TO BATTERY

Disconnect the Occupant Restraint Controller C1 connector.

NOTE: Check connectors - Clean and repair as necessary.

WARNING: IF THE OCCUPANT RESTRAINT CONTROLLER IS DROPPED AT ANY TIME, IT MUST BE REPLACED. FAILURE TO TAKE THE PROPER PRECAUTIONS COULD RESULT IN ACCIDENTAL AIRBAG DEPLOYMENT AND PERSONAL INJURY OR DEATH.

WARNING: TO AVOID PERSONAL INJURY OR DEATH, TURN THE IGNITION ON, THEN RECONNECT THE BATTERY.

Measure the voltage of the (R106) Passenger Airbag MUX Switch Sense circuit.

Measure the voltage of the (R104) Passenger Airbag MUX Switch Return circuit.

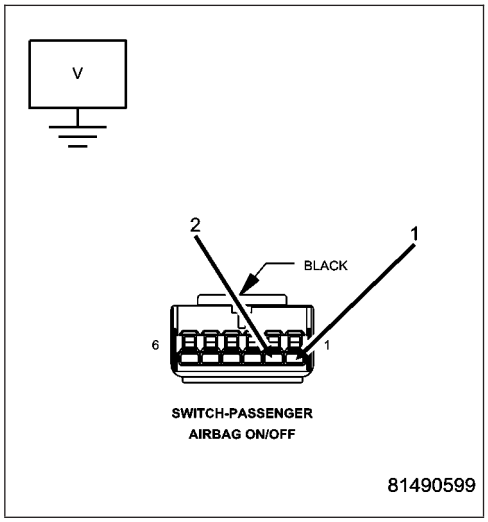

Is there any voltage on either circuit?

Yes >> Repair all circuits with voltage present for a short to battery.
Perform ORC VERIFICATION TEST - VER 1.

No >> Go To 6

PASSENGER AIRBAG ON-OFF SWITCH SHORT TO BATTERY (CONTINUED)

6. ORC, PAB ON - OFF SWITCH CIRCUIT SHORTED TO BATTERY

WARNING: TO AVOID PERSONAL INJURY OR DEATH, TURN THE IGNITION OFF, DISCONNECT THE BATTERY AND WAIT TWO MINUTES BEFORE PROCEEDING.

WARNING: IF THE OCCUPANT RESTRAINT CONTROLLER IS DROPPED AT ANY TIME, IT MUST BE REPLACED. FAILURE TO TAKE THE PROPER PRECAUTIONS COULD RESULT IN ACCIDENTAL AIRBAG DEPLOYMENT AND PERSONAL INJURY OR DEATH.

If there are no possible causes remaining, view repair.

Repair:

Replace the Occupant Restraint Controller (ORC) in accordance with the Service Information.

Perform ORC VERIFICATION TEST - VER 1.

---

7. CHECKING STORED OR INTERMITTENT CODES

With the Scan Tool, record and erase all DTC's from all Airbag modules.

If equipped with Passenger Airbag On - Off switch, read the DTC's in all switch positions.

If any ACTIVE codes are present they must be resolved before diagnosing any stored codes.

WARNING: TO AVOID PERSONAL INJURY OR DEATH, TURN THE IGNITION OFF, DISCONNECT THE BATTERY AND WAIT TWO MINUTES BEFORE PROCEEDING.

Using the wiring diagram/schematic as a guide, inspect the wiring and connectors.

Look for chaffed, pierced, pinched, or partially broken wires and broken, bent, pushed out, spread, corroded, or contaminated terminals.

The following additional checks may assist you in identifying a possible intermittent problem.

Reconnect any disconnected components and harness connector.

WARNING: TO AVOID PERSONAL INJURY OR DEATH, TURN THE IGNITION ON, THEN RECONNECT THE BATTERY.

With the Scan Tool, monitor active codes as you work through the following steps.

WARNING: TO AVOID PERSONAL INJURY OR DEATH, MAINTAIN A SAFE DISTANCE FROM ALL AIRBAGS WHILE PERFORMING THE FOLLOWING STEPS.

Wiggle the wiring harness and connectors of the related airbag circuit or component.

If codes are related to the Driver Airbag circuits, rotate the steering wheel from stop to stop.

If only stored codes return continue the test until the problem area has been isolated.

In the previous steps you have attempted to recreate the conditions responsible for setting active DTC in question.

Are any ACTIVE DTCs present?

Yes >> Select the appropriate diagnostic procedure from the Table of Contents in this section.

No >> No problem found at this time. Erase all codes before returning vehicle to customer.

PASSENGER AIRBAG ON-OFF SWITCH SHORT TO GROUND

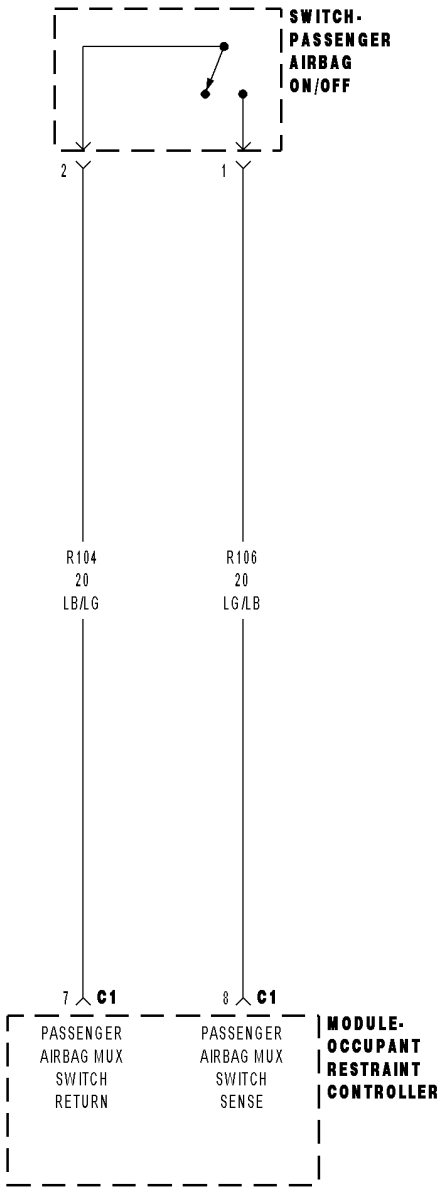

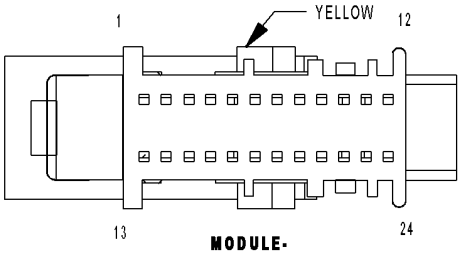

MODULE-
OCCUPANT
RESTRAINT
CONTROLLER C1

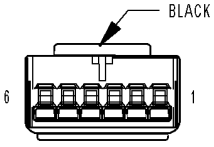

SWITCH-PASSENGER
AIRBAG ON/OFF

81490591

PASSENGER AIRBAG ON-OFF SWITCH SHORT TO GROUND (CONTINUED)

For the Air Bag System circuit diagram (Refer to 8 - ELECTRICAL/RESTRAINTS - SCHEMATICS AND DIAGRAMS).

For a complete wiring diagram **Refer to Section 8W**.

- **When Monitored:**
  When the ignition is on, the (R106) Passenger Airbag MUX Switch Sense circuit supplies a 3 to 10 ms pulse every 100 ms across the On or Off switch resistor to the (R104) Passenger Airbag MUX switch return circuit.
- **Set Condition:**
  The code will set if the Occupant Restraint Controller (ORC) senses low resistance on the (R106) Passenger Airbag MUX Switch Sense circuit.

Possible Causes
ORC IMPROPERLY CONFIGURED FOR PAB ON - OFF SWITCH
(R106) PAB MUX SWITCH SENSE CIRCUIT SHORTED TO GROUND
PAB ON - OFF SWITCH SHORTED
ORC, PAB ON - OFF SWITCH CIRCUIT SHORTED TO GROUND

Diagnostic Test

1. DETERMINE ACTIVE OR STORED DTC

Turn the ignition on.

NOTE: Ensure that the battery is fully charged.

NOTE: For the purpose of this test, the AECM and ACM modules will be referred to as an ORC.

NOTE: When reconnecting Airbag system components, the ignition must be turned off and the battery must be disconnected.

SELECT ACTIVE or STORED DTC:

ORC - ACTIVE DTC
Go To 2

ORC - STORED DTC
Go To 7

---

2. CHECKING EQUIPMENT

Is this vehicle equipped with a Passenger Airbag On - Off Switch?

Yes >> Go To 3

No >> With the Scan Tool in MISCELLANEOUS re-configure the ORC for NO AIRBAG ON/OFF SWITCH. Perform ORC VERIFICATION TEST - VER 1.

PASSENGER AIRBAG ON-OFF SWITCH SHORT TO GROUND (CONTINUED)

3. PAB ON - OFF SWITCH SHORTED

WARNING: TO AVOID PERSONAL INJURY OR DEATH, TURN THE IGNITION OFF, DISCONNECT THE BATTERY AND WAIT TWO MINUTES BEFORE PROCEEDING.

Disconnect the Passenger Airbag On - Off Switch.

NOTE: Check connectors - Clean and repair as necessary.

Measure the PAB On - Off Switch resistance between terminals 1 and 3.

Measure the PAB On - Off Switch resistance between terminals 2 and 3.

Is the resistance below 10K ohms on either test?

Yes >> Replace the Passenger Airbag ON - OFF Switch in accordance with the service information.
Perform ORC VERIFICATION TEST - VER 1.

No >> Go To 4

---

4. PAB ON - OFF SWITCH SHORTED

Measure the PAB On - Off Switch resistance between terminals 1 and 2 in both switch positions.

The switch resistance specifications are: ON position = 175.0 to 190.0 ohms and OFF position = 820.0 870.0 ohms.

Is the resistance within the range specified for both switch positions?

Yes >> Go To 5

No >> Replace the Passenger Airbag ON - OFF Switch in accordance with the service information.
Perform ORC VERIFICATION TEST - VER 1.

---

5. (R106) PAB MUX SWITCH SENSE CIRCUIT SHORTED TO GROUND

Disconnect the Occupant Restraint Controller C1 connector.

NOTE: Check connectors - Clean and repair as necessary.

WARNING: IF THE OCCUPANT RESTRAINT CONTROLLER IS DROPPED AT ANY TIME, IT MUST BE REPLACED. FAILURE TO TAKE THE PROPER PRECAUTIONS COULD RESULT IN ACCIDENTAL AIRBAG DEPLOYMENT AND PERSONAL INJURY OR DEATH.

Connect the appropriate Load Tool Adaptor to the Occupant Restraint Controller connector.

Measure the resistance of the (R106) Passenger Airbag MUX Switch Sense circuit between ground and the ORC Adaptor.

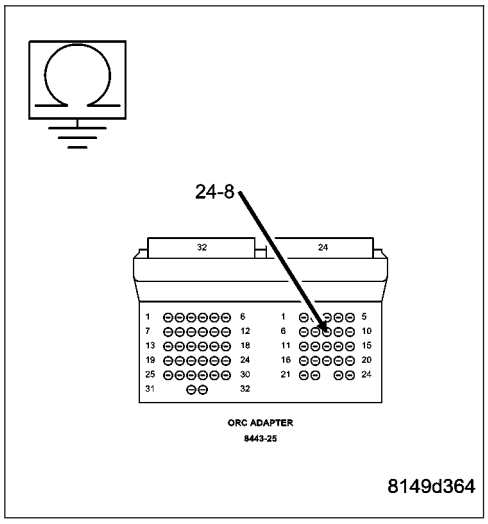

Is the resistance below 10K ohms?

Yes >> Repair the (R106) Passenger Airbag MUX Switch Sense circuit for a short to ground.
Perform ORC VERIFICATION TEST - VER 1.

No >> Go To 6

PASSENGER AIRBAG ON-OFF SWITCH SHORT TO GROUND (CONTINUED)

6. ORC, PAB ON - OFF SWITCH CIRCUIT SHORTED TO GROUND

WARNING: IF THE OCCUPANT RESTRAINT CONTROLLER IS DROPPED AT ANY TIME, IT MUST BE REPLACED. FAILURE TO TAKE THE PROPER PRECAUTIONS COULD RESULT IN ACCIDENTAL AIRBAG DEPLOYMENT AND PERSONAL INJURY OR DEATH.

If there are no possible causes remaining, view repair.

Repair:

Replace the Occupant Restraint Controller (ORC) in accordance with the Service Information.

Perform ORC VERIFICATION TEST - VER 1.

---

7. CHECKING STORED OR INTERMITTENT CODES

With the Scan Tool, record and erase all DTC's from all Airbag modules.

If equipped with Passenger Airbag On - Off switch, read the DTC's in all switch positions.

If any ACTIVE codes are present they must be resolved before diagnosing any stored codes.

WARNING: TO AVOID PERSONAL INJURY OR DEATH, TURN THE IGNITION OFF, DISCONNECT THE BATTERY AND WAIT TWO MINUTES BEFORE PROCEEDING.

Using the wiring diagram/schematic as a guide, inspect the wiring and connectors.

Look for chaffed, pierced, pinched, or partially broken wires and broken, bent, pushed out, spread, corroded, or contaminated terminals.

The following additional checks may assist you in identifying a possible intermittent problem.

Reconnect any disconnected components and harness connector.

WARNING: TO AVOID PERSONAL INJURY OR DEATH, TURN THE IGNITION ON, THEN RECONNECT THE BATTERY.

With the Scan Tool, monitor active codes as you work through the following steps.

WARNING: TO AVOID PERSONAL INJURY OR DEATH, MAINTAIN A SAFE DISTANCE FROM ALL AIRBAGS WHILE PERFORMING THE FOLLOWING STEPS.

Wiggle the wiring harness and connectors of the related airbag circuit or component.

If codes are related to the Driver Airbag circuits, rotate the steering wheel from stop to stop.

If only stored codes return continue the test until the problem area has been isolated.

In the previous steps you have attempted to recreate the conditions responsible for setting active DTC in question.

Are any ACTIVE DTCs present?

Yes >> Select the appropriate diagnostic procedure from the Table of Contents in this section.

No >> No problem found at this time. Erase all codes before returning vehicle to customer.

PASSENGER SEAT BELT TENSIONER CIRCUIT OPEN

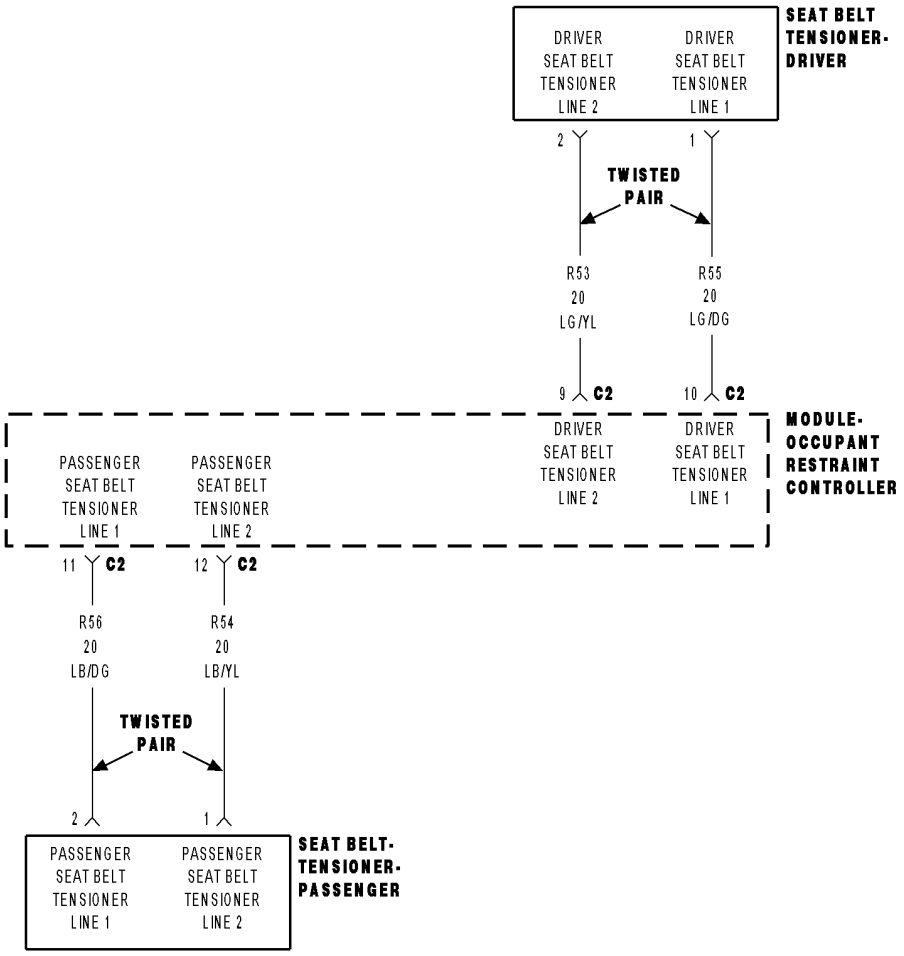

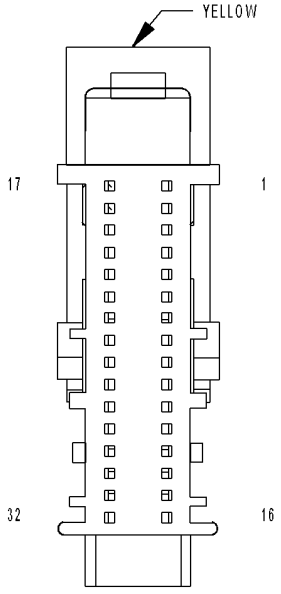

MODULE-OCCUPANT RESTRAINT CONTROLLER C2

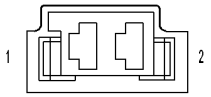

SEAT BELT-TENSIONER-PASSENGER

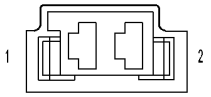

SEAT BELT-TENSIONER-DRIVER

814f09c3

PASSENGER SEAT BELT TENSIONER CIRCUIT OPEN (CONTINUED)

For the Air Bag System circuit diagram (Refer to 8 - ELECTRICAL/RESTRAINTS - SCHEMATICS AND DIAGRAMS).

For a complete wiring diagram **Refer to Section 8W**.

- **When Monitored:**
  With the ignition on, the Occupant Restraint Controller (ORC) monitors the resistance of the Passenger Seat Belt Tensioner circuits.
- **Set Condition:**
  The ORC has detected an open or high resistance on the Passenger Seat Belt Tensioner circuits.

Possible Causes
(R56) PASSENGER SEAT BELT TENSIONER LINE 1 CIRCUIT OR (R54) PASSENGER SEAT BELT TENSIONER LINE 2 CIRCUIT OPEN
PASSENGER SEAT BELT PRETENSIONER
ORC

Diagnostic Test

1. DETERMINE ACTIVE OR STORED DTC

NOTE: Ensure the battery is fully charged.

NOTE: The scan tool, SRS Airbag Load Tool MRL 8443, and DVOM are required to perform the following test.

NOTE: When reconnecting airbag system components the Ignition must be turned off and the Battery must be disconnected.

Select Active or Stored DTC.

Is the DTC active or stored?

ORC - ACTIVE DTC
Go To 2

ORC - STORED DTC
Go To 6

PASSENGER SEAT BELT TENSIONER CIRCUIT OPEN (CONTINUED)

2. CHECK FOR OPEN PASSENGER SEAT BELT PRETENSIONER

WARNING: To avoid personal injury or death, turn the ignition off, disconnect the battery and wait two minutes before proceeding.
Disconnect the Passenger Seat Belt Pretensioner connector.

NOTE: Check connectors - Clean and repair as necessary.
Connect the 8443 Load Tool and appropriate Jumper to the Passenger Seat Belt Pretensioner connector.

WARNING: To avoid personal injury or death, turn the ignition on, then reconnect the battery.
With the scan tool, read the active ORC DTC's.

Does the scan tool display: PASSENGER SEAT BELT TENSIONER CIRCUIT OPEN?

Yes >> Go To 3

No >> Replace the Passenger Seat Belt Pretensioner in accordance with the Service Information.
Perform ORC VERIFICATION TEST - VER 1

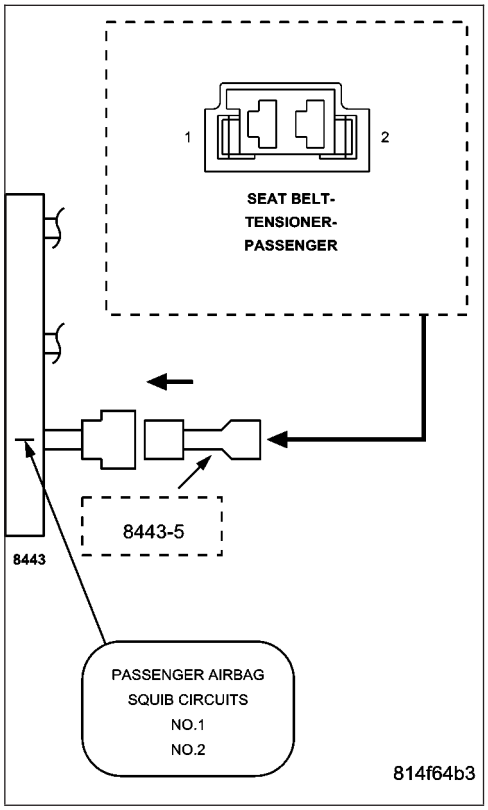

3. CHECK (R56) PASSENGER SEAT BELT TENSIONER LINE 1 CIRCUIT FOR AN OPEN

WARNING: To avoid personal injury or death, turn the ignition off, disconnect the battery and wait two minutes before proceeding.
Disconnect the 8443 Load Tool and Jumper from the Passenger Seat Belt Pretensioner connector.

Disconnect the ORC connectors.

NOTE: Check connectors - Clean and repair as necessary.
Connect the 8443 Load Tool ORC Adaptor to the ORC C1 connector.

Measure the resistance of the (R56) Passenger Seat Belt Tensioner Line 1 circuit between the Passenger Seat Belt Pretensioner connector and the 8443 ORC Adaptor.

Is the resistance below 1.0 ohm?

Yes >> Go To 4

No >> Repair the (R56) Passenger Seat Belt Tensioner Line 1 circuit for an open. Then Go To 4

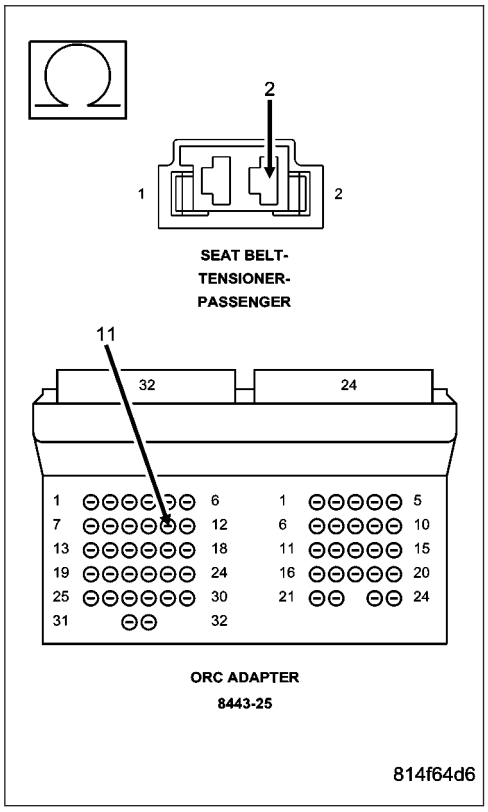

PASSENGER SEAT BELT TENSIONER CIRCUIT OPEN (CONTINUED)

4. CHECK (R54) PASSENGER SEAT BELT TENSIONER LINE 2 CIRCUIT FOR AN OPEN

Measure the resistance of the (R54) Passenger Seat Belt Tensioner Line 2 circuit between the Passenger Seat Belt Pretensioner connector and the 8443 ORC Adaptor.

Is the resistance below 1.0 ohm?

Yes >> Go to 5

No >> Repair the (R54) Passenger Seat Belt Tensioner Line 2 circuit for an open.
Perform ORC VERIFICATION TEST - VER 1

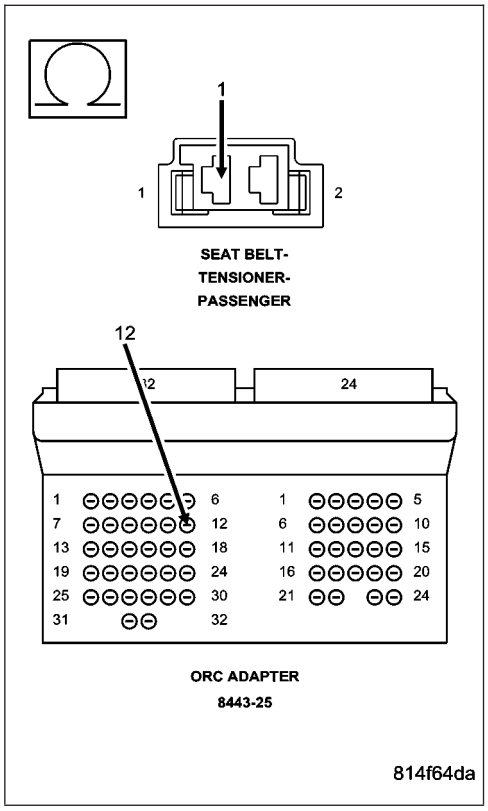

5. REPLACE THE ORC

WARNING: If the Occupant Restraint Controller (ORC) is dropped at any time, it must be replaced. Failure to take the proper precautions can result in accidental airbag deployment and personal injury or death.

NOTE: When reconnecting airbag system components the Ignition must be turned off and the Battery must be disconnected.

Repair

Replace the ORC in accordance with Service Information.
Perform ORC VERIFICATION TEST - VER 1

PASSENGER SEAT BELT TENSIONER CIRCUIT OPEN (CONTINUED)

6. STORED ORC DTC

With the scan tool, record and erase all DTC's from all Airbag System Modules.

If any ACTIVE codes are present they must be resolved before diagnosing any stored codes.

WARNING: To avoid personal injury or death, turn the ignition off, disconnect the battery and wait two minutes before proceeding.

Using the wiring diagram/schematic as a guide, inspect the wiring and connectors.

Look for chaffed, pierced, pinched, or partially broken wires and broken, bent, pushed out, spread, corroded, or contaminated terminals.

The following additional checks may assist you in identifying a possible intermittent problem.

Reconnect any disconnected components and harness connector.

WARNING: To avoid personal injury or death, turn the ignition on, then reconnect the battery.

With the scan tool monitor active codes as you work through the following steps.

Wiggle the wiring harness and connectors of the related airbag circuit or component.

If codes are related to the Driver Airbag circuits, rotate the steering wheel from stop to stop.

If only stored codes return continue the test until the problem area has been isolated.

In the previous steps you have attempted to recreate the conditions responsible for setting active DTC in question.

Are any ACTIVE DTCs present?

Yes >> Select the appropriate diagnostic procedure from the Table of Contents in this section.

No >> No problem found at this time. Erase all codes before returning vehicle to customer.

PASSENGER SEAT BELT TENSIONER CIRCUIT SHORT

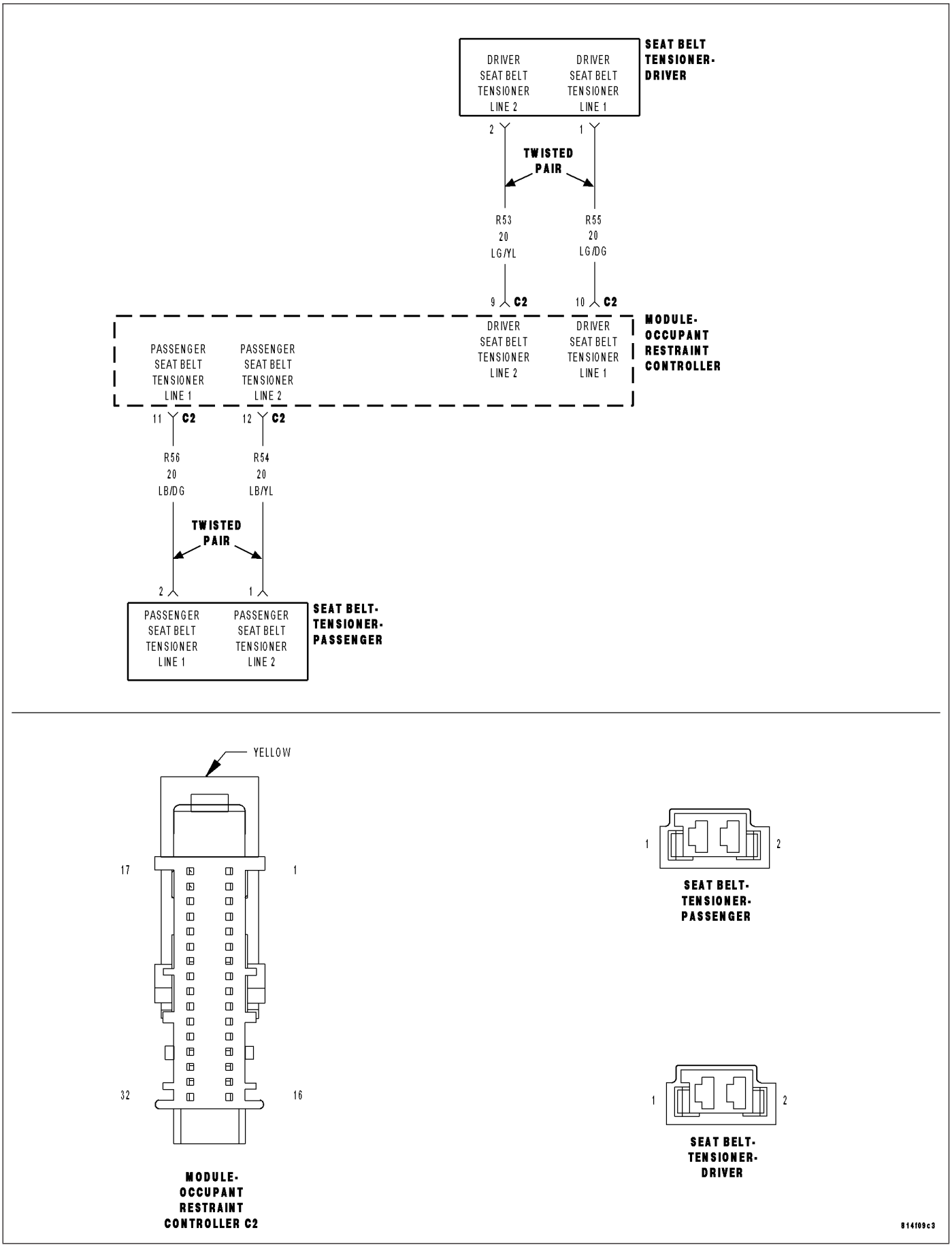

PASSENGER SEAT BELT TENSIONER CIRCUIT SHORT (CONTINUED)

For the Air Bag System circuit diagram (Refer to 8 - ELECTRICAL/RESTRAINTS - SCHEMATICS AND DIAGRAMS).

For a complete wiring diagram **Refer to Section 8W**.

- **When Monitored:**
  With the ignition on, the Occupant Restraint Controller (ORC) monitors the resistance of the Passenger Seat Belt Tensioner circuits.
- **Set Condition:**
  The ORC has detected low resistance between the Passenger Seat Belt Tensioner circuits.

Possible Causes
(R56) PASSENGER SEAT BELT TENSIONER LINE 1 CIRCUIT SHORTED TO (R54) PASSENGER SEAT BELT TENSIONER LINE 2 CIRCUIT
PASSENGER SEAT BELT PRETENSIONER
ORC

Diagnostic Test

1. DETERMINE ACTIVE OR STORED DTC

NOTE: Ensure the battery is fully charged.

NOTE: The scan tool, SRS Airbag Load Tool MRL 8443, and DVOM are required to perform the following test.

NOTE: When reconnecting airbag system components the Ignition must be turned off and the Battery must be disconnected.

Select Active or Stored DTC.

Is the DTC active or stored?

ORC - ACTIVE DTC
Go To 2

ORC - STORED DTC
Go To 5

PASSENGER SEAT BELT TENSIONER CIRCUIT SHORT (CONTINUED)

2. CHECK FOR SHORTED PASSENGER SEAT BELT PRETENSIONER

WARNING: To avoid personal injury or death, turn the ignition off, disconnect the battery and wait two minutes before proceeding.
Disconnect the Passenger Seat Belt Pretensioner connector.

NOTE: Check connectors - Clean and repair as necessary.
Connect the 8443 Load Tool and appropriate Jumper to the Passenger Seat Belt Pretensioner connector.

WARNING: To avoid personal injury or death, turn the ignition on then reconnect the battery.
With the scan tool, read the active ORC DTC's.

Does the scan tool display: PASSENGER SEAT BELT TENSIONER CIRCUIT SHORT?

Yes >> Go To 3

No >> Replace the Passenger Seat Belt Pretensioner in accordance with the Service Information.
Perform ORC VERIFICATION TEST - VER 1

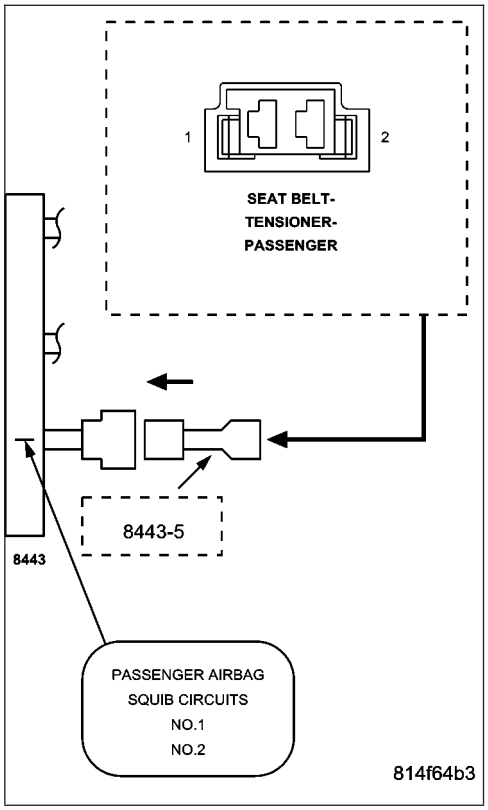

3. CHECK (R56) PASSENGER SEAT BELT TENSIONER LINE 1 CIRCUIT FOR A SHORT TO THE (R54) PASSENGER SEAT BELT TENSIONER LINE 2 CIRCUIT

WARNING: To avoid personal injury or death, turn the ignition off, disconnect the battery and wait two minutes before proceeding.
Disconnect the 8443 Load Tool and Jumper from the Passenger Seat Belt Pretensioner connector.

Disconnect the ORC connectors.

NOTE: Check connectors - Clean and repair as necessary.
Connect the 8443 Load Tool ORC Adaptor to the ORC connector.

Measure the resistance between the (R56) Passenger Seat Belt Tensioner Line 1 circuit and the (R54) Passenger Seat Belt Tensioner Line 2 circuit at the Passenger Seat Belt Pretensioner connector.

Is the resistance below 10K ohms?

Yes >> Repair the (R56) Passenger Seat Belt Tensioner Line 1 circuit for a short to the (R54) Passenger Seat Belt Tensioner Line 2 circuit.
Perform ORC VERIFICATION TEST - VER 1

No >> Go to 4

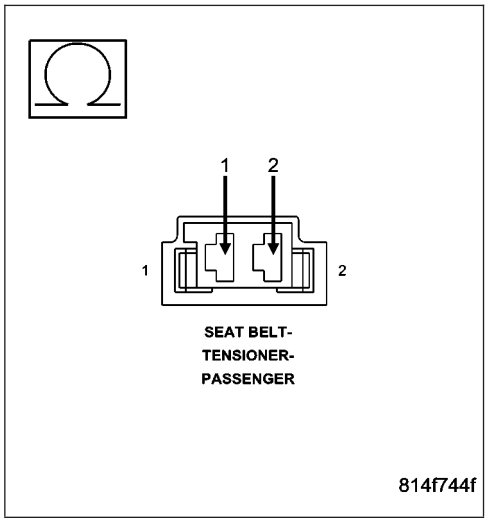

PASSENGER SEAT BELT TENSIONER CIRCUIT SHORT (CONTINUED)

4. REPLACE THE ORC

WARNING: If the Occupant Restraint Controller (ORC) is dropped at any time, it must be replaced. Failure to take the proper precautions can result in accidental airbag deployment and personal injury or death.

NOTE: When reconnecting airbag system components the Ignition must be turned off and the Battery must be disconnected.

Repair

Replace the ORC in accordance with the Service Information.

Perform ORC VERIFICATION TEST - VER 1

---

5. STORED ORC DTC

With the scan tool, record and erase all DTC's from all Airbag System Modules.

If any ACTIVE codes are present they must be resolved before diagnosing any stored codes.

WARNING: To avoid personal injury or death, turn the ignition off, disconnect the battery and wait two minutes before proceeding.

Using the wiring diagram/schematic as a guide, inspect the wiring and connectors.

Look for chaffed, pierced, pinched, or partially broken wires and broken, bent, pushed out, spread, corroded, or contaminated terminals.

The following additional checks may assist you in identifying a possible intermittent problem.

Reconnect any disconnected components and harness connector.

WARNING: To avoid personal injury or death, turn the ignition on, then reconnect the battery.

With the scan tool monitor active codes as you work through the following steps.

Wiggle the wiring harness and connectors of the related airbag circuit or component.

If codes are related to the Driver Airbag circuits, rotate the steering wheel from stop to stop.

If only stored codes return continue the test until the problem area has been isolated.

In the previous steps you have attempted to recreate the conditions responsible for setting active DTC in question.

Are any ACTIVE DTC's present?

Yes >> Select the appropriate diagnostic procedure from the Table of Contents in this section.

No >> No problem found at this time. Erase all codes before returning vehicle to customer.

PASSENGER SEAT BELT TENSIONER SHORT TO BATTERY

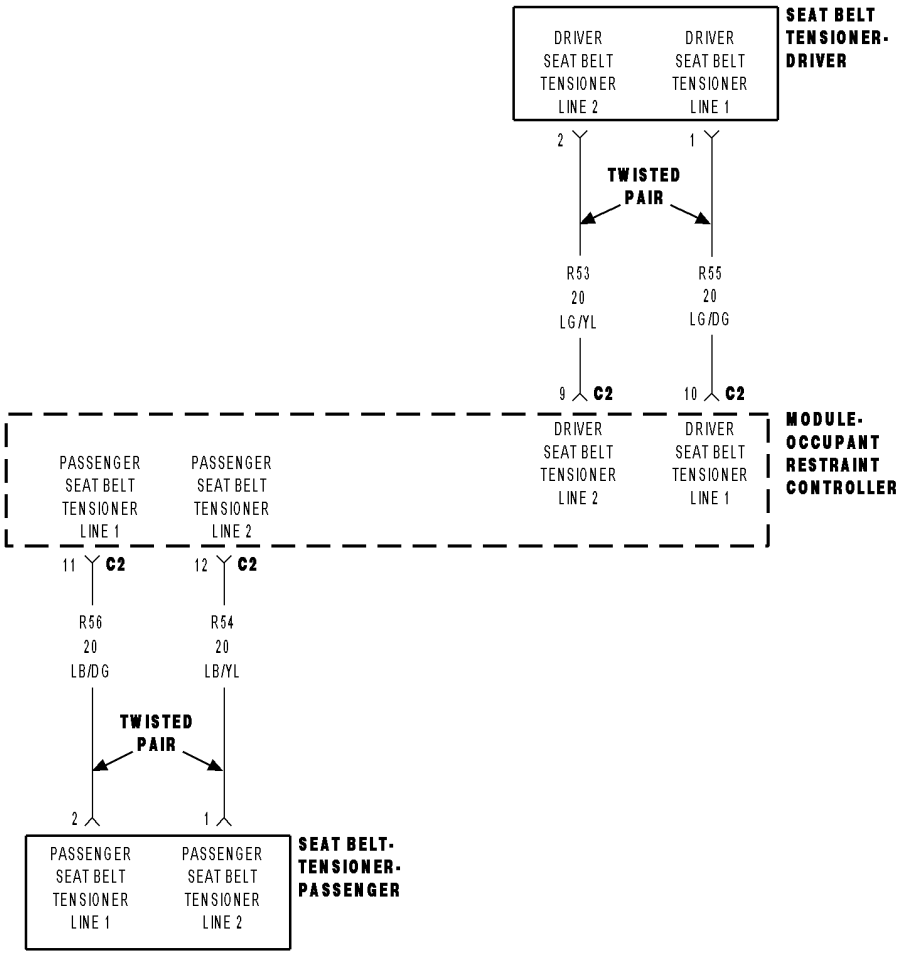

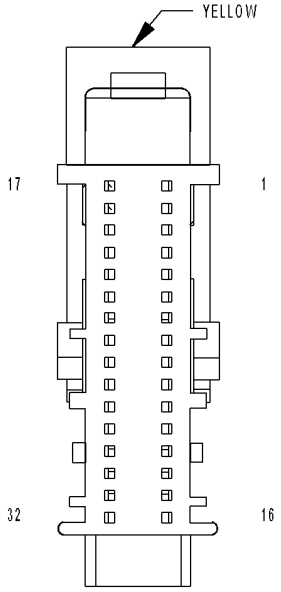

MODULE-OCCUPANT RESTRAINT CONTROLLER C2

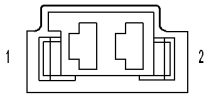

SEAT BELT-TENSIONER-PASSENGER

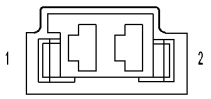

SEAT BELT-TENSIONER-DRIVER

814f09c3

PASSENGER SEAT BELT TENSIONER SHORT TO BATTERY (CONTINUED)

For the Air Bag System circuit diagram (Refer to 8 - ELECTRICAL/RESTRAINTS - SCHEMATICS AND DIAGRAMS).

For a complete wiring diagram **Refer to Section 8W**.

- **When Monitored:**
  With the ignition on, the Occupant Restraint Controller (ORC) monitors the voltage on the Passenger Seat Belt Tensioner circuits.
- **Set Condition:**
  The ORC detects voltage on the Passenger Seat Belt Tensioner circuits.

Possible Causes
(R56) PASSENGER SEAT BELT TENSIONER LINE 1 CIRCUIT OR (R54) PASSENGER SEAT BELT TENSIONER LINE 2 CIRCUIT SHORTED TO BATTERY
PASSENGER SEAT BELT PRETENSIONER
ORC

Diagnostic Test

1. DETERMINE ACTIVE OR STORED DTC

NOTE: Ensure the battery is fully charged.

NOTE: The scan tool, SRS Airbag Load Tool MRL 8443, and DVOM are required to perform the following test.

NOTE: When reconnecting airbag system components the Ignition must be turned off and the Battery must be disconnected.

Select Active or Stored DTC.

Is the DTC active or stored?

ORC - ACTIVE DTC
Go To 2

ORC - STORED DTC
Go To 5

PASSENGER SEAT BELT TENSIONER SHORT TO BATTERY (CONTINUED)

2. CHECK FOR SHORTED PASSENGER SEAT BELT PRETENSIONER

WARNING: To avoid personal injury or death, turn the ignition off, disconnect the battery and wait two minutes before proceeding.
Disconnect the Passenger Seat Belt Pretensioner connector.

NOTE: Check connectors - Clean and repair as necessary.
Connect the 8443 Load Tool and appropriate Jumper to the Passenger Seat Belt Pretensioner connector.

WARNING: To avoid personal injury or death, turn the ignition on, then reconnect the battery.
With the scan tool, read the active ORC DTC's.

Does the scan tool display: PASSENGER SEAT BELT TENSIONER SHORT TO BATTERY?

Yes >> Go To 3

No >> Replace the Passenger Seat Belt Pretensioner in accordance with the Service Information.
Perform ORC VERIFICATION TEST - VER 1

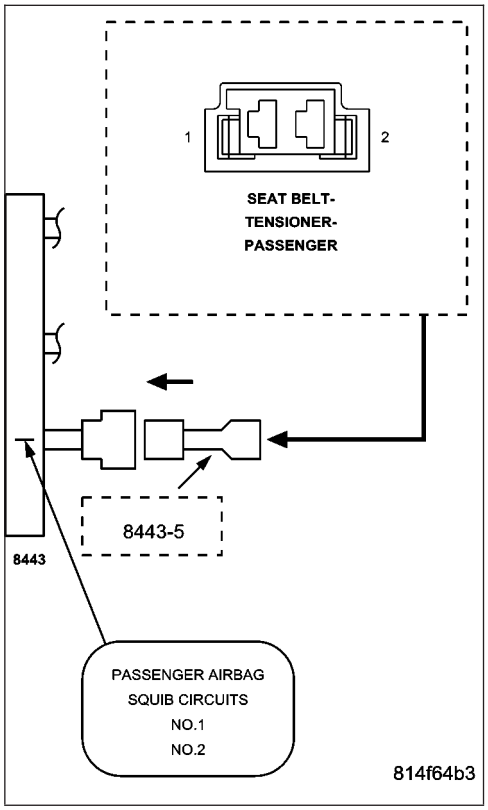

3. CHECK (R56) PASSENGER SEAT BELT TENSIONER LINE 1 CIRCUIT AND (R54) PASSENGER SEAT BELT TENSIONER LINE 2 CIRCUIT FOR A SHORT TO BATTERY

WARNING: To avoid personal injury or death, turn the ignition off, disconnect the battery and wait two minutes before proceeding.
Disconnect the 8443 Load Tool and Jumper from the Passenger Seat Belt Pretensioner connector.

Disconnect the ORC connectors.

NOTE: Check connectors - Clean and repair as necessary.
Connect the 8443 Load Tool ORC Adaptor to the ORC connector.

WARNING: To avoid personal injury or death, turn the ignition on, then reconnect the battery.
Measure the voltage of the (R56) Passenger Seat Belt Tensioner Line 1 circuit between the Passenger Seat Belt Pretensioner connector and ground.

Measure the voltage of the (R54) Passenger Seat Belt Tensioner Line 2 circuit between the Passenger Seat Belt Pretensioner connector and ground.

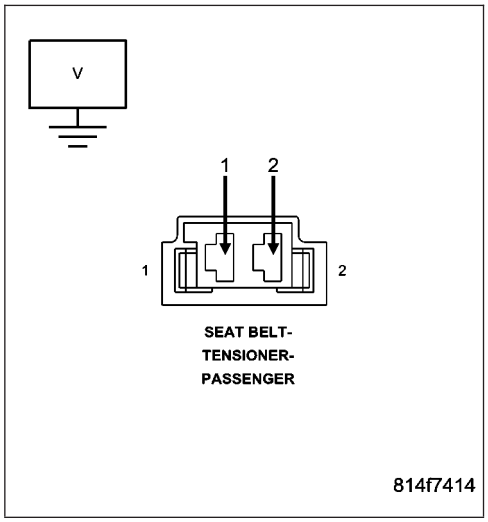

Is there any voltage present on either circuit?

Yes >> Repair the Passenger Seat Belt Tensioner circuits with voltage present for a short to battery.
Perform ORC VERIFICATION TEST - VER 1

No >> Go To 4

PASSENGER SEAT BELT TENSIONER SHORT TO BATTERY (CONTINUED)

4. OCCUPANT RESTRAINT CONTROLLER

WARNING: To avoid personal injury or death, turn the ignition off, disconnect the battery and wait two minutes before proceeding.

WARNING: If the Occupant Restraint Controller (ORC) is dropped at any time, it must be replaced. Failure to take the proper precautions can result in accidental airbag deployment and personal injury or death.

NOTE: When reconnecting airbag system components the Ignition must be turned off and the Battery must be disconnected.

Repair

Replace the ORC in accordance with the Service Information.

Perform ORC VERIFICATION TEST - VER 1

---

5. STORED ORC DTC

With the scan tool, record and erase all DTC's from all Airbag System Modules.

If any ACTIVE codes are present they must be resolved before diagnosing any stored codes.

WARNING: To avoid personal injury or death, turn the ignition off, disconnect the battery and wait two minutes before proceeding.

Using the wiring diagram/schematic as a guide, inspect the wiring and connectors.

Look for chaffed, pierced, pinched, or partially broken wires and broken, bent, pushed out, spread, corroded, or contaminated terminals.

The following additional checks may assist you in identifying a possible intermittent problem.

Reconnect any disconnected components and harness connector.

WARNING: To avoid personal injury or death, turn the ignition on, then reconnect the battery.

With the scan tool monitor active codes as you work through the following steps.

Wiggle the wiring harness and connectors of the related airbag circuit or component.

If codes are related to the Driver Airbag circuits, rotate the steering wheel from stop to stop.

If only stored codes return continue the test until the problem area has been isolated.

In the previous steps you have attempted to recreate the conditions responsible for setting active DTC in question.

Are any ACTIVE DTCs present?

Yes >> Select the appropriate diagnostic procedure from the Table of Contents in this section.

No >> No problem found at this time. Erase all codes before returning vehicle to customer

---

PASSENGER SEAT BELT TENSIONER SHORT TO GROUND

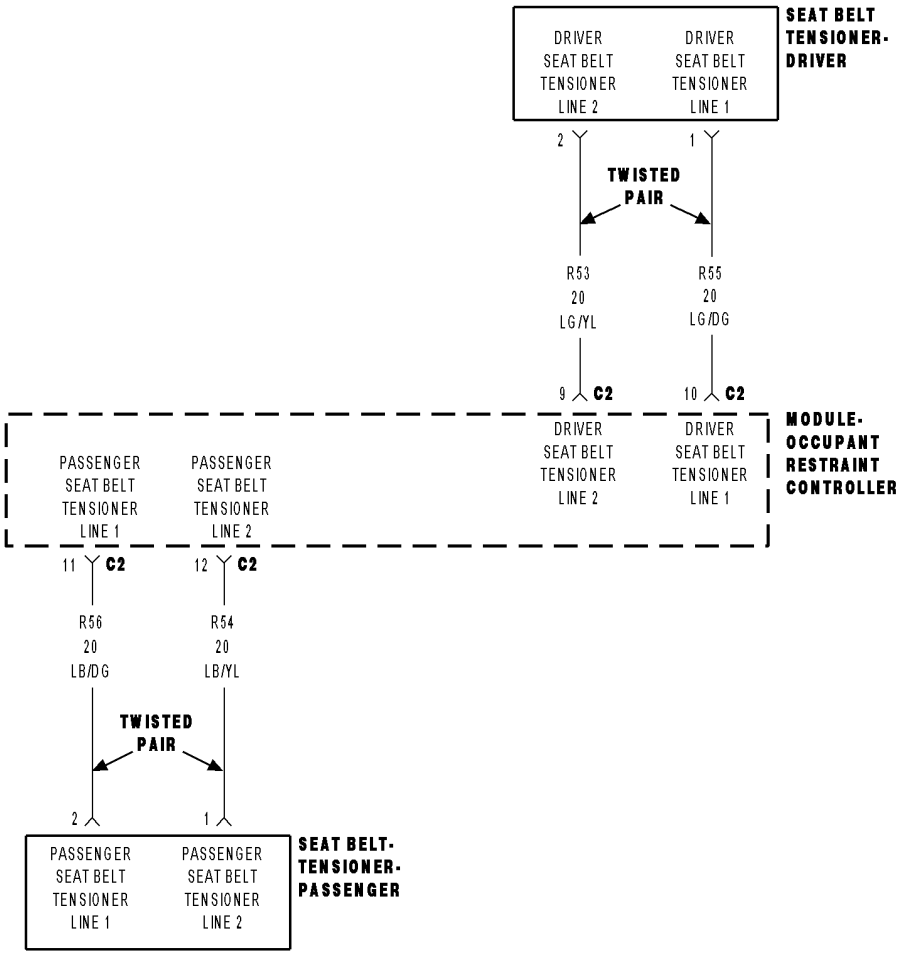

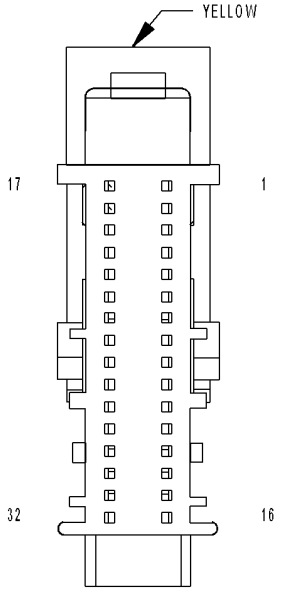

MODULE- OCCUPANT RESTRAINT CONTROLLER C2

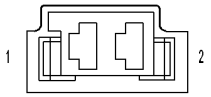

SEAT BELT- TENSIONER- PASSENGER

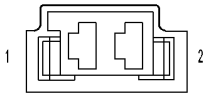

SEAT BELT- TENSIONER- DRIVER

814f09c3

PASSENGER SEAT BELT TENSIONER SHORT TO GROUND (CONTINUED)

For the Air Bag System circuit diagram (Refer to 8 - ELECTRICAL/RESTRAINTS - SCHEMATICS AND DIAGRAMS).

For a complete wiring diagram **Refer to Section 8W**.

- **When Monitored:**
  With the ignition on, the Occupant Restraint Controller (ORC) monitors the resistance of the Passenger Seat Belt Tensioner circuits.
- **Set Condition:**
  The ORC has detected low resistance on the Passenger Seat Belt Tensioner circuits.

Possible Causes
(R56) PASSENGER SEAT BELT TENSIONER LINE 1 CIRCUIT OR (R54) PASSENGER SEAT BELT TENSIONER LINE 2 CIRCUIT SHORTED TO GROUND
PASSENGER SEAT BELT PRETENSIONER
ORC

Diagnostic Test

1. DETERMINE ACTIVE OR STORED DTC

NOTE: Ensure the battery is fully charged.

NOTE: The scan tool, SRS Airbag Load Tool MRL 8443, and DVOM are required to perform the following test.

NOTE: When reconnecting airbag system components the Ignition must be turned off and the Battery must be disconnected.

Select Active or Stored DTC.

Is the DTC active or stored?

ORC - ACTIVE DTC
Go To 2

ORC - STORED DTC
Go To 5

PASSENGER SEAT BELT TENSIONER SHORT TO GROUND (CONTINUED)

2. CHECK FOR SHORTED PASSENGER SEAT BELT PRETENSIONER

WARNING: To avoid personal injury or death, turn the ignition off, disconnect the battery and wait two minutes before proceeding.
Disconnect the Passenger Seat Belt Pretensioner connector.

NOTE: Check connectors - Clean and repair as necessary.
Connect the 8443 Load Tool and appropriate Jumper to the Passenger Seat Belt Pretensioner connector.

WARNING: To avoid personal injury or death, turn the ignition on, then reconnect the battery.
With the scan tool, read the active ORC DTC's.

Does the scan tool display: PASSENGER SEAT BELT TENSIONER SHORT TO GROUND?

Yes >> Go To 3

No >> Replace the Passenger Seat Belt Pretensioner in accordance with the Service Information.
Perform ORC VERIFICATION TEST - VER 1

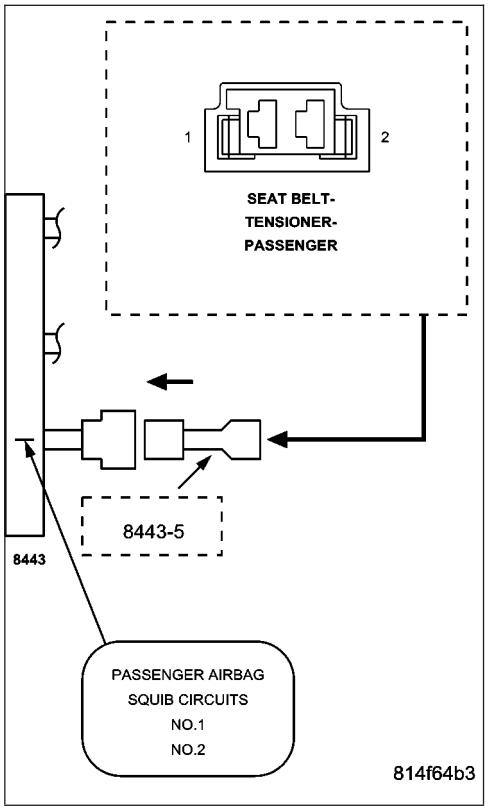

3. CHECK (R56) PASSENGER SEAT BELT TENSIONER LINE 1 CIRCUIT AND (R54) PASSENGER SEAT BELT TENSIONER LINE 2 CIRCUIT FOR A SHORT TO GROUND

WARNING: To avoid personal injury or death, turn the ignition off, disconnect the battery and wait two minutes before proceeding.
Disconnect the 8443 Load Tool and Jumper from the Passenger Seat Belt Pretensioner connector.

Disconnect the ORC connectors.

NOTE: Check connectors - Clean and repair as necessary.
Connect the 8443 Load Tool ORC Adaptor to the ORC connector.

Measure the resistance of the (R56) Passenger Seat Belt Tensioner Line 1 circuit between ground and the Passenger Seat Belt Pretensioner connector.

Measure the resistance of the (R54) Passenger Seat Belt Tensioner Line 2 circuit between ground and the Passenger Seat Belt Pretensioner connector.

Is the resistance below 10K ohms on either circuit?

Yes >> Repair the Passenger Seat Belt Tensioner circuits with a resistance below 10k ohms for a short to ground.
Perform ORC VERIFICATION TEST - VER 1

No >> Go To 4

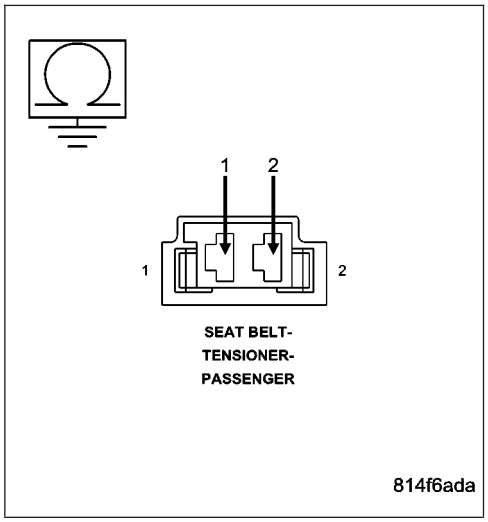

PASSENGER SEAT BELT TENSIONER SHORT TO GROUND (CONTINUED)

4. REPLACE THE ORC

WARNING: If the Occupant Restraint Controller (ORC) is dropped at any time, it must be replaced. Failure to take the proper precautions can result in accidental airbag deployment and personal injury or death.

NOTE: When reconnecting airbag system components the Ignition must be turned off and the Battery must be disconnected.

Repair

Replace the ORC in accordance with the Service Information.

Perform ORC VERIFICATION TEST - VER 1

---

5. STORED ORC DTC

With the scan tool, record and erase all DTC's from all Airbag System Modules.

If any ACTIVE codes are present they must be resolved before diagnosing any stored codes.

WARNING: To avoid personal injury or death, turn the ignition off, disconnect the battery and wait two minutes before proceeding.

Using the wiring diagram/schematic as a guide, inspect the wiring and connectors.

Look for chaffed, pierced, pinched, or partially broken wires and broken, bent, pushed out, spread, corroded, or contaminated terminals.

The following additional checks may assist you in identifying a possible intermittent problem.

Reconnect any disconnected components and harness connector.

WARNING: To avoid personal injury or death, turn the ignition on, then reconnect the battery.

With the scan tool monitor active codes as you work through the following steps.

Wiggle the wiring harness and connectors of the related airbag circuit or component.

If codes are related to the Driver Airbag circuits, rotate the steering wheel from stop to stop.

If only stored codes return continue the test until the problem area has been isolated.

In the previous steps you have attempted to recreate the conditions responsible for setting active DTC in question.

Are any ACTIVE DTC's present?

Yes >> Select the appropriate diagnostic procedure from the Table of Contents in this section.

No >> No problem found at this time. Erase all codes before returning vehicle to customer.

PASSENGER SQUIB 1 CIRCUIT OPEN

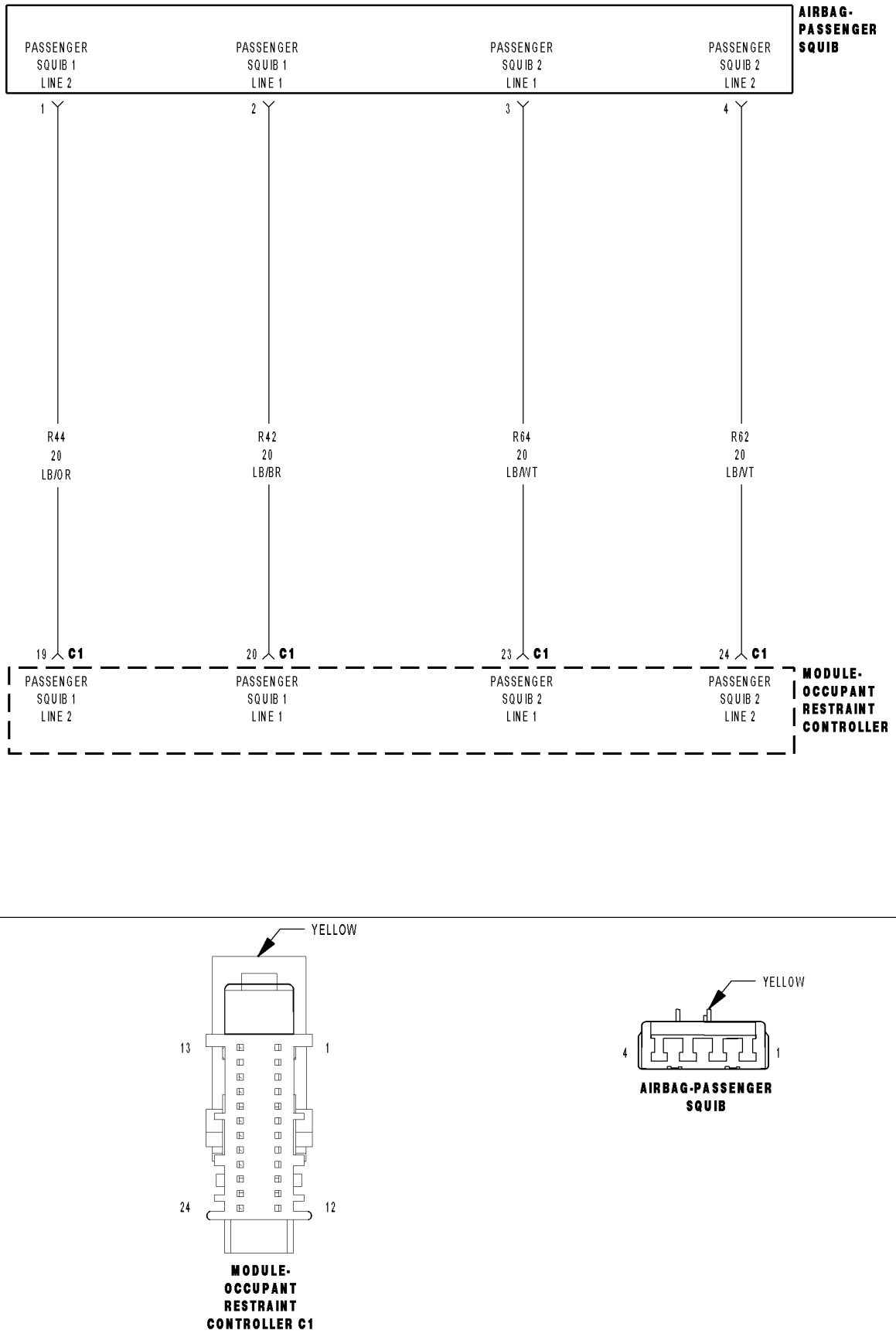

PASSENGER SQUIB 1 CIRCUIT OPEN (CONTINUED)

For the Air Bag System circuit diagram (Refer to 8 - ELECTRICAL/RESTRAINTS - SCHEMATICS AND DIAGRAMS).

For a complete wiring diagram **Refer to Section 8W**.

- **When Monitored:**
  With the ignition on, the Occupant Restraint Controller (ORC) monitors the resistance of the Passenger Squib 1 circuits.
- **Set Condition:**
  The ORC has detected an open or high resistance on the Passenger Squib 1 circuits.

Possible Causes
PASSENGER SQUIB 1 LINE 2 CIRCUIT OPEN
PASSENGER SQUIB 1 LINE 1 CIRCUIT OPEN
PASSENGER AIRBAG
ORC

Diagnostic Test

1. DETERMINE ACTIVE OR STORED DTC

NOTE: Ensure the battery is fully charged.

NOTE: The scan tool, SRS Airbag Load Tool MRL 8443, and DVOM are required to perform the following test.

NOTE: When reconnecting airbag system components the Ignition must be turned off and the Battery must be disconnected.

Select Active or Stored DTC.

Is the DTC active or stored?

ORC - ACTIVE DTC
Go To 2

ORC - STORED DTC
Go To 6

PASSENGER SQUIB 1 CIRCUIT OPEN (CONTINUED)

2. CHECK FOR OPEN SQUIB CIRCUITS IN PASSENGER AIRBAG

WARNING: To avoid personal injury or death, turn the ignition off, disconnect the battery and wait two minutes before proceeding.
Disconnect the Passenger Airbag Squib connector.

NOTE: Check connectors - Clean and repair as necessary.
Connect the 8443 Load Tool to the Passenger Airbag Squib connector.

WARNING: To avoid personal injury or death, turn the ignition on, then reconnect the battery.
With the scan tool, read the active ORC DTC's.

Does the scan tool display: PASSENGER SQUIB 1 CIRCUIT OPEN?

Yes >> Go To 3

No >> Replace the Passenger Airbag in accordance with the Service Information.
Perform ORC VERIFICATION TEST - VER 1

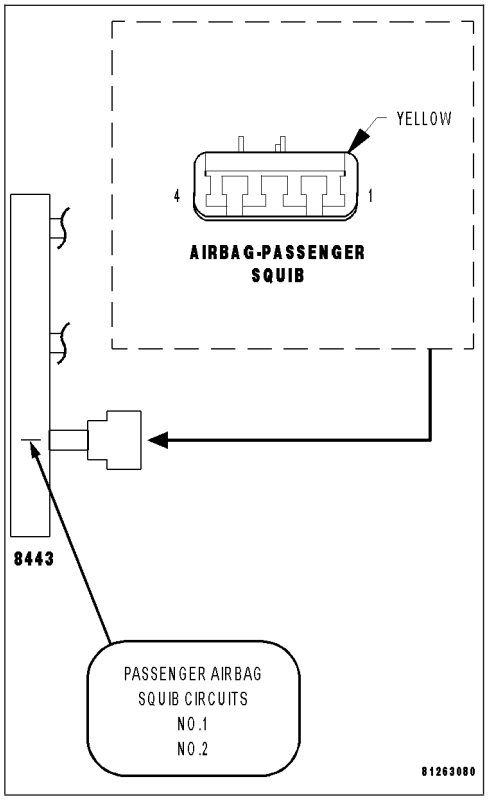

3. CHECK PASSENGER SQUIB 1 LINE 2 CIRCUIT FOR AN OPEN

WARNING: To avoid personal injury or death, turn the ignition off, disconnect the battery and wait two minutes before proceeding.
Disconnect the 8443 Load Tool from the Passenger Airbag Squib connector.

Disconnect the ORC connectors.

NOTE: Check connectors - Clean and repair as necessary.
Connect the 8443 Load Tool ORC Adaptor to the ORC connector.

Measure the resistance of the Passenger Squib 1 Line 2 circuit between the Passenger Airbag Squib connector and the 8443 ORC Adaptor.

Is the resistance below 1.0 ohm?

Yes >> Go To 4

No >> Repair the Passenger Squib 1 Line 2 circuit for and open. Then, Go To 4

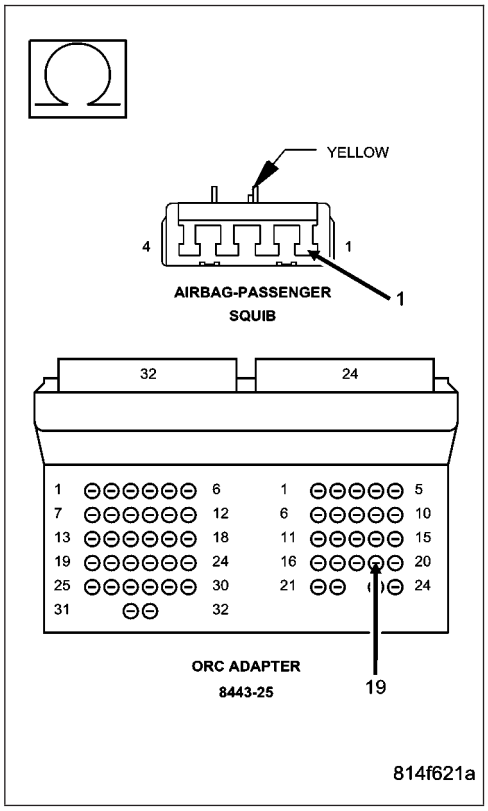

PASSENGER SQUIB 1 CIRCUIT OPEN (CONTINUED)

4. CHECK PASSENGER SQUIB 1 LINE 1 CIRCUIT FOR AN OPEN

Measure the resistance of the Passenger Squib 1 Line 1 circuit between the Passenger Airbag Squib connector and the 8443 ORC Adaptor.

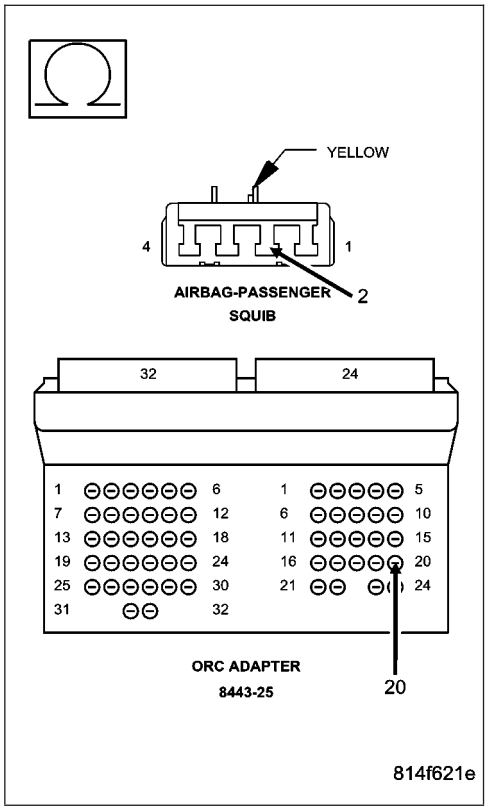

Is the resistance below 1.0 ohm?

Yes >> Go To 5

No >> Repair the Passenger Squib 1 Line 1 circuit for an open. Perform ORC VERIFICATION TEST - VER 1

---

5. REPLACE THE ORC

WARNING: If the Occupant Restraint Controller (ORC) is dropped at any time, it must be replaced. Failure to take the proper precautions can result in accidental airbag deployment and personal injury or death.

NOTE: When reconnecting airbag system components the Ignition must be turned off and the Battery must be disconnected.

If there are no possible causes remaining, view repair.

Repair

Replace the ORC in accordance with the Service Information.
Perform ORC VERIFICATION TEST - VER 1

PASSENGER SQUIB 1 CIRCUIT OPEN (CONTINUED)

6. STORED ORC DTC

With the scan tool, record and erase all DTC's from all Airbag System Modules.

If any ACTIVE codes are present they must be resolved before diagnosing any stored codes.

WARNING: To avoid personal injury or death, turn the ignition off, disconnect the battery and wait two minutes before proceeding.

Using the wiring diagram/schematic as a guide, inspect the wiring and connectors.

Look for chaffed, pierced, pinched, or partially broken wires and broken, bent, pushed out, spread, corroded, or contaminated terminals.

The following additional checks may assist you in identifying a possible intermittent problem.

Reconnect any disconnected components and harness connector.

WARNING: To avoid personal injury or death, turn the ignition on, then reconnect the battery.

With the scan tool monitor active codes as you work through the following steps.

Wiggle the wiring harness and connectors of the related airbag circuit or component.

If codes are related to the Driver Airbag circuits, rotate the steering wheel from stop to stop.

If only stored codes return continue the test until the problem area has been isolated.

In the previous steps you have attempted to recreate the conditions responsible for setting active DTC in question.

Are any ACTIVE DTCs present?

Yes >> Select the appropriate diagnostic procedure from the Table of Contents in this section.

No >> No problem found at this time. Erase all codes before returning vehicle to customer.

PASSENGER SQUIB 1 CIRCUIT SHORT

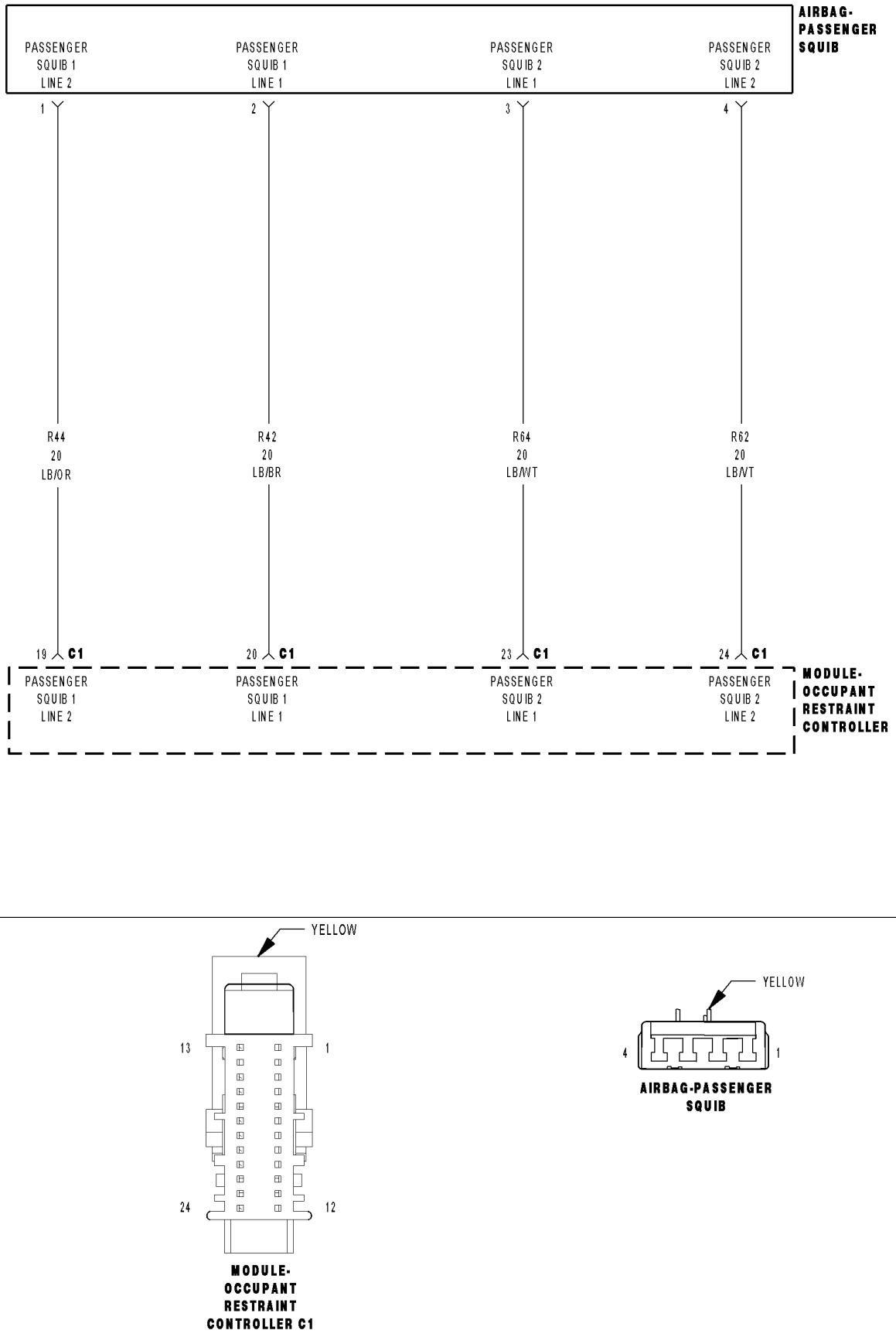

PASSENGER SQUIB 1 CIRCUIT SHORT (CONTINUED)

For the Air Bag System circuit diagram (Refer to 8 - ELECTRICAL/RESTRAINTS - SCHEMATICS AND DIAGRAMS).

For a complete wiring diagram **Refer to Section 8W**.

- **When Monitored:**
  With the ignition on, the Occupant Restraint Controller (ORC) monitors the resistance of the Passenger Squib 1 circuits.
- **Set Condition:**
  The ORC has detected low resistance between the Passenger Squib 1 circuits.

Possible Causes
PASSENGER SQUIB 1 LINE 2 CIRCUIT SHORTED TO PASSENGER SQUIB 1 LINE 1 CIRCUIT
PASSENGER AIRBAG
ORC

Diagnostic Test

1. DETERMINE ACTIVE OR STORED DTC

NOTE: Ensure the battery is fully charged.

NOTE: The scan tool, SRS Airbag Load Tool MRL 8443, and DVOM are required to perform the following test.

NOTE: When reconnecting airbag system components the Ignition must be turned off and the Battery must be disconnected.

Select Active or Stored DTC.

Is the DTC active or stored?

ORC - ACTIVE DTC
Go To 2

ORC - STORED DTC
Go To 5

PASSENGER SQUIB 1 CIRCUIT SHORT (CONTINUED)

2. CHECK FOR SHORTED SQUIB CIRCUITS IN PASSENGER AIRBAG

WARNING: To avoid personal injury or death, turn the ignition off, disconnect the battery and wait two minutes before proceeding.
Disconnect the Passenger Airbag Squib connector.

NOTE: Check connectors - Clean and repair as necessary.
Connect the 8443 Load Tool to the Passenger Airbag Squib connector.

WARNING: To avoid personal injury or death, turn the ignition on, then reconnect the battery.
With the scan tool, read the active ORC DTC's.

Does the scan tool display: PASSENGER SQUIB 1 CIRCUIT SHORT?

Yes >> Go To 3

No >> Replace the Passenger Airbag in accordance with the Service Information.
Perform ORC VERIFICATION TEST - VER 1

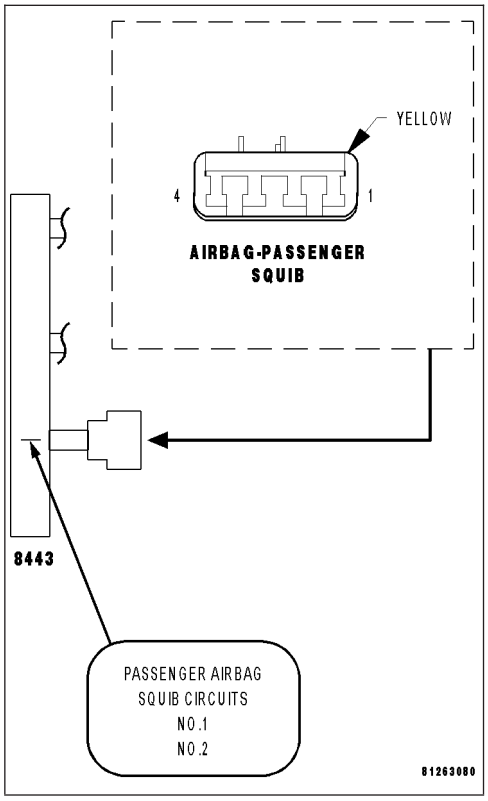

3. CHECK PASSENGER SQUIB 1 LINE 2 CIRCUIT FOR A SHORT TO PASSENGER SQUIB 1 LINE 1 CIRCUIT

WARNING: To avoid personal injury or death, turn the ignition off, disconnect the battery and wait two minutes before proceeding.
Disconnect the 8443 Load Tool from the Passenger Airbag Squib connector.

Disconnect the ORC connectors.

NOTE: Check connectors - Clean and repair as necessary.
Connect the 8443 Load Tool ORC Adaptor to the ORC connector.

Measure the resistance between the Passenger Squib 1 Line 2 circuit and the Passenger Squib 1 Line 1 circuit at the Passenger Airbag Squib connector.

Is the resistance below 10K ohms?

Yes >> Repair the Passenger Squib 1 Line 2 circuit for a short to the Passenger Squib 1 Line 1 circuit.
Perform ORC VERIFICATION TEST - VER 1

No >> Go To 4

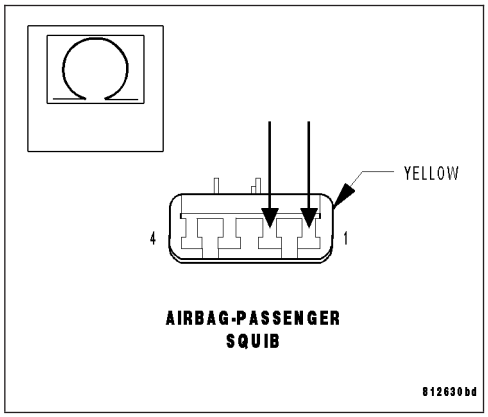

PASSENGER SQUIB 1 CIRCUIT SHORT (CONTINUED)

4. REPLACE THE ORC

WARNING: If the Occupant Restraint Controller (ORC) is dropped at any time, it must be replaced. Failure to take the proper precautions can result in accidental airbag deployment and personal injury or death.

NOTE: When reconnecting airbag system components the Ignition must be turned off and the Battery must be disconnected.

Repair

Replace the ORC in accordance with the Service Information.

Perform ORC VERIFICATION TEST - VER 1

---

5. STORED ORC DTC

With the scan tool, record and erase all DTC's from all Airbag System Modules.

If any ACTIVE codes are present they must be resolved before diagnosing any stored codes.

WARNING: To avoid personal injury or death, turn the ignition off, disconnect the battery and wait two minutes before proceeding.

Using the wiring diagram/schematic as a guide, inspect the wiring and connectors.

Look for chaffed, pierced, pinched, or partially broken wires and broken, bent, pushed out, spread, corroded, or contaminated terminals.

The following additional checks may assist you in identifying a possible intermittent problem.

Reconnect any disconnected components and harness connector.

WARNING: To avoid personal injury or death, turn the ignition on, then reconnect the battery.

With the scan tool monitor active codes as you work through the following steps.

Wiggle the wiring harness and connectors of the related airbag circuit or component.

If codes are related to the Driver Airbag circuits, rotate the steering wheel from stop to stop.

If only stored codes return continue the test until the problem area has been isolated.

In the previous steps you have attempted to recreate the conditions responsible for setting active DTC in question.

Are any ACTIVE DTC's present?

Yes >> Select the appropriate diagnostic procedure from the Table of Contents in this section.

No >> No problem found at this time. Erase all codes before returning vehicle to customer.

PASSENGER SQUIB 1 SHORT TO BATTERY

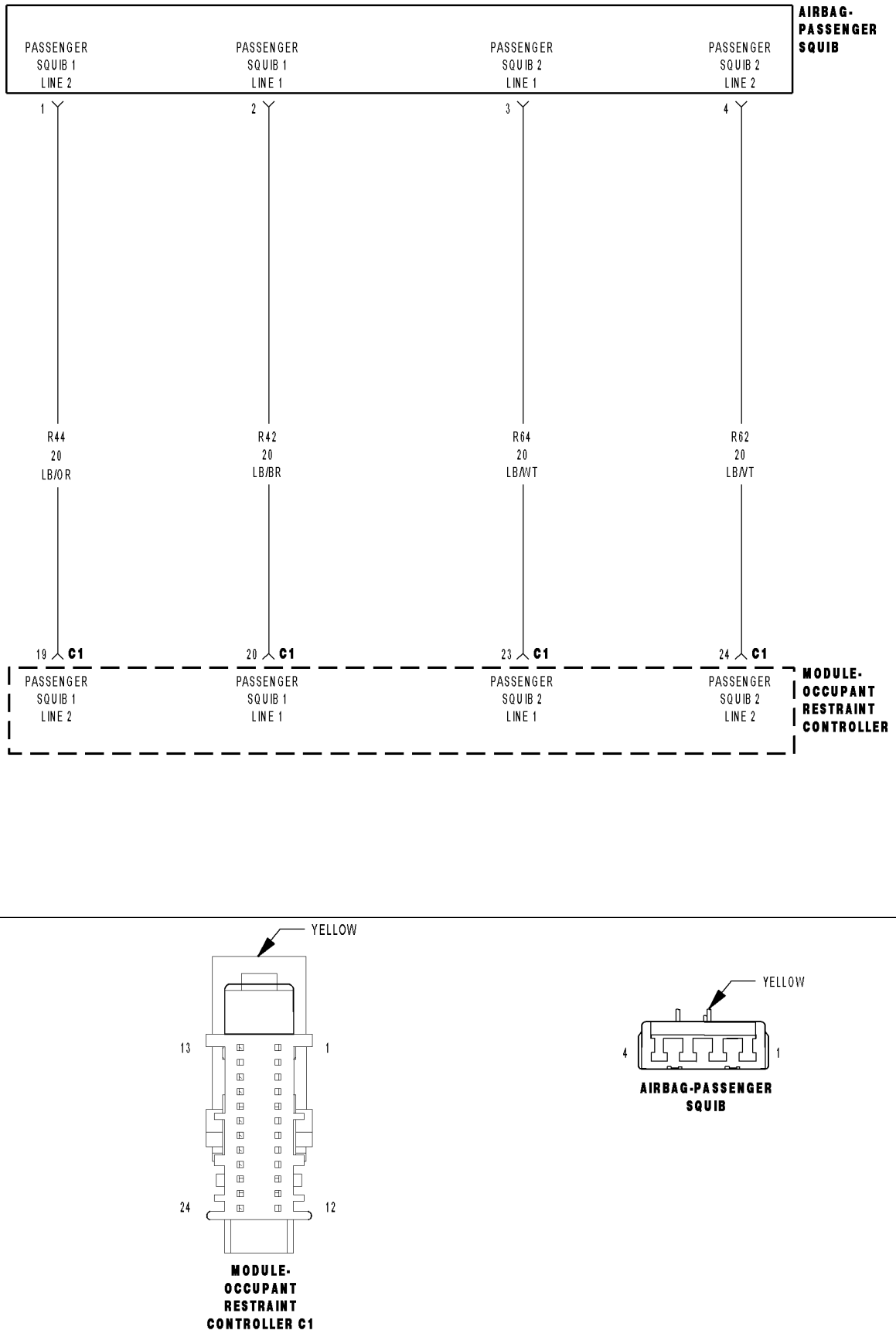

PASSENGER SQUIB 1 SHORT TO BATTERY (CONTINUED)

For the Air Bag System circuit diagram (Refer to 8 - ELECTRICAL/RESTRAINTS - SCHEMATICS AND DIAGRAMS).

For a complete wiring diagram **Refer to Section 8W**.

- **When Monitored:**
  With the ignition on, the Occupant Restraint Controller (ORC) monitors the voltage on the Passenger Squib 1 circuits.
- **Set Condition:**
  When the ORC has detected voltage on the Passenger Squib 1 circuits.

Possible Causes
PASSENGER SQUIB 1 LINE 2 CIRCUIT OR PASSENGER SQUIB 1 LINE 1 CIRCUIT SHORTED TO BATTERY
PASSENGER AIRBAG
ORC

Diagnostic Test

1. DETERMINE ACTIVE OR STORED DTC

NOTE: Ensure the battery is fully charged.

NOTE: The scan tool, SRS Airbag Load Tool MRL 8443, and DVOM are required to perform the following test.

NOTE: When reconnecting airbag system components the Ignition must be turned off and the Battery must be disconnected.

Select Active or Stored DTC.

Is the DTC active or stored?

ORC - ACTIVE DTC
Go To 2

ORC - STORED DTC
Go To 5

PASSENGER SQUIB 1 SHORT TO BATTERY (CONTINUED)

2. CHECK FOR SHORTED SQUIB CIRCUITS IN PASSENGER AIRBAG

WARNING: To avoid personal injury or death, turn the ignition off, disconnect the battery and wait two minutes before proceeding.
Disconnect the Passenger Airbag Squib connector.

WARNING: To avoid personal injury or death, do not place an intact undeployed airbag face down on a hard surface, the airbag will propel into the air if accidentally deployed.

NOTE: Check connectors - Clean and repair as necessary.
Connect the 8443 Load Tool to the Passenger Airbag Squib connector.

WARNING: To avoid personal injury or death, turn the ignition on, then reconnect the battery.
With the scan tool, read the active ORC DTC's.

Does the scan tool display: PASSENGER SQUIB 1 SHORT TO BATTERY?

Yes >> Go To 3

No >> Replace the Passenger Airbag in accordance with the Service Information.
Perform ORC VERIFICATION TEST - VER 1

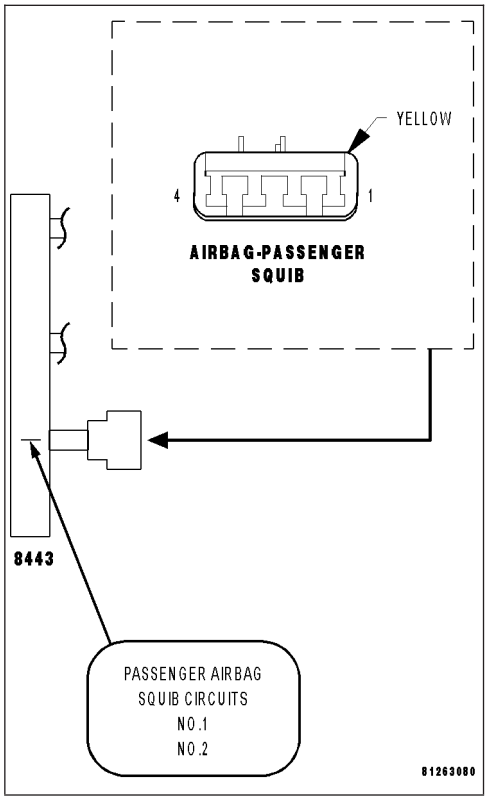

3. CHECK PASSENGER SQUIB 1 LINE 2 CIRCUIT AND PASSENGER SQUIB 1 LINE 1 CIRCUIT FOR A SHORT TO BATTERY

WARNING: To avoid personal injury or death, turn the ignition off, disconnect the battery and wait two minutes before proceeding.
Disconnect the 8443 Load Tool from the Passenger Airbag Squib connector.

Disconnect the ORC connectors.

NOTE: Check connectors - Clean and repair as necessary.
Connect the 8443 Load Tool ORC Adaptor to the ORC connector.

Measure the voltage of the Passenger Squib 1 Line 2 circuit between the Passenger Airbag Squib connector and ground.

Measure the voltage of the Passenger Squib 1 Line 1 circuit between the Passenger Airbag Squib connector and ground.

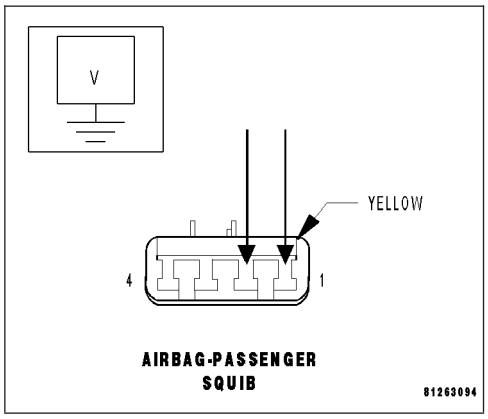

Is there any voltage present on either circuit?

Yes >> Repair the Passenger Squib 1 circuits with voltage present for a short to battery.
Perform ORC VERIFICATION TEST - VER 1

No >> Go To 4

PASSENGER SQUIB 1 SHORT TO BATTERY (CONTINUED)

4. REPLACE THE ORC

WARNING: To avoid personal injury or death, turn the ignition off, disconnect the battery and wait two minutes before proceeding.

WARNING: If the Occupant Restraint Controller (ORC) is dropped at any time, it must be replaced. Failure to take the proper precautions can result in accidental airbag deployment and personal injury or death.

NOTE: When reconnecting airbag system components the Ignition must be turned off and the Battery must be disconnected.

Repair

Replace the ORC in accordance with the Service Information.

Perform ORC VERIFICATION TEST - VER 1

---

5. STORED ORC DTC

With the scan tool, record and erase all DTC's from all Airbag System Modules.

If any ACTIVE codes are present they must be resolved before diagnosing any stored codes.

WARNING: To avoid personal injury or death, turn the ignition off, disconnect the battery and wait two minutes before proceeding.

Using the wiring diagram/schematic as a guide, inspect the wiring and connectors.

Look for chaffed, pierced, pinched, or partially broken wires and broken, bent, pushed out, spread, corroded, or contaminated terminals.

The following additional checks may assist you in identifying a possible intermittent problem.

Reconnect any disconnected components and harness connector.

WARNING: To avoid personal injury or death, turn the ignition on, then reconnect the battery.

With the scan tool monitor active codes as you work through the following steps.

Wiggle the wiring harness and connectors of the related airbag circuit or component.

If codes are related to the Driver Airbag circuits, rotate the steering wheel from stop to stop.

If only stored codes return continue the test until the problem area has been isolated.

In the previous steps you have attempted to recreate the conditions responsible for setting active DTC in question.

Are any ACTIVE DTCs present?

Yes >> Select the appropriate diagnostic procedure from the Table of Contents in this section.

No >> No problem found at this time. Erase all codes before returning vehicle to customer.

PASSENGER SQUIB 1 SHORT TO GROUND

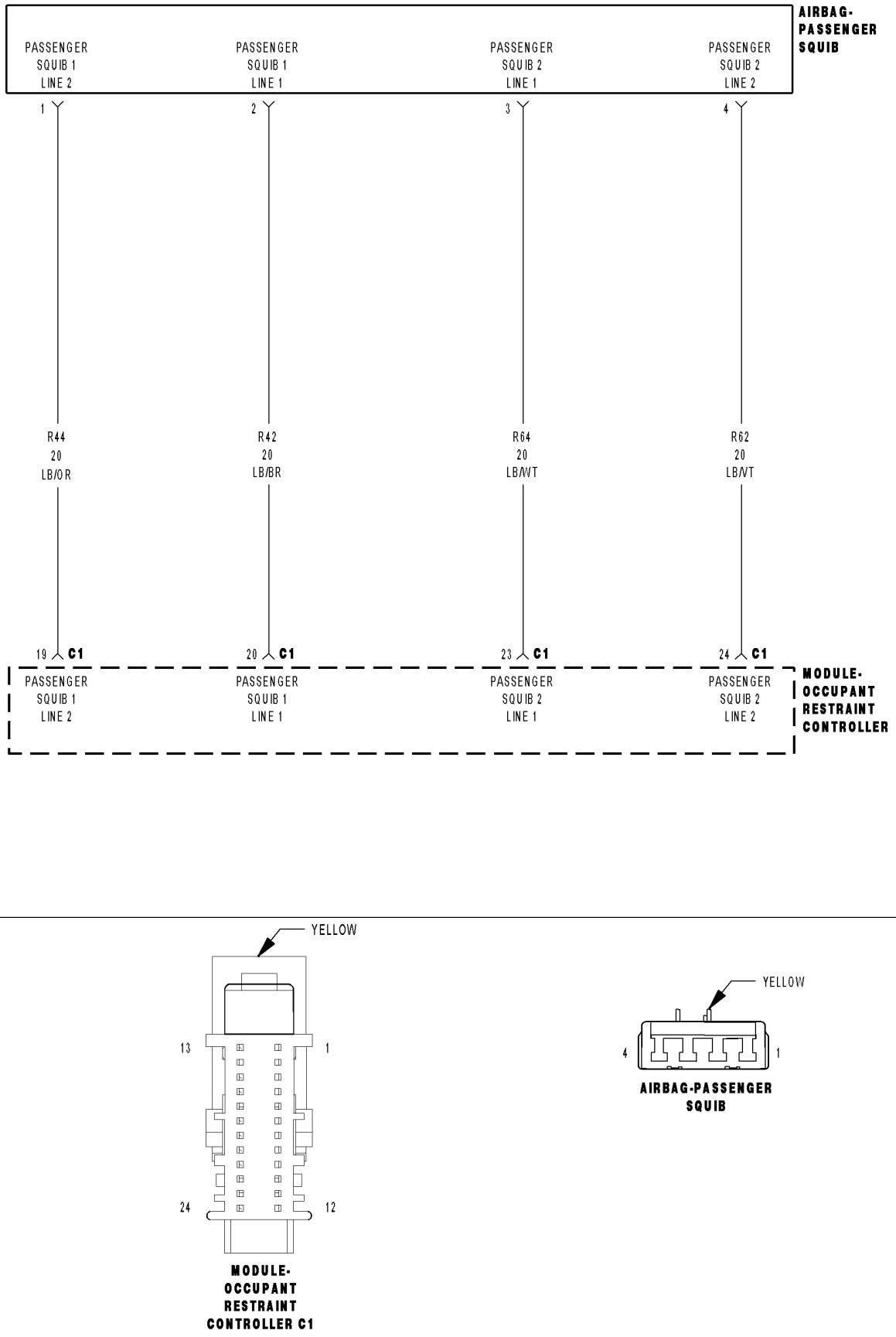

PASSENGER SQUIB 1 SHORT TO GROUND (CONTINUED)

For the Air Bag System circuit diagram (Refer to 8 - ELECTRICAL/RESTRAINTS - SCHEMATICS AND DIAGRAMS).

For a complete wiring diagram **Refer to Section 8W**.

- **When Monitored:**
  With the ignition on, the Occupant Restraint Controller (ORC) monitors the resistance of the Passenger Squib 1 circuits.
- **Set Condition:**
  The ORC has detected low resistance on the Passenger Squib 1 circuits.

Possible Causes
PASSENGER SQUIB 1 LINE 2 CIRCUIT OR PASSENGER SQUIB 1 LINE 1 CIRCUIT SHORTED TO GROUND
PASSENGER AIRBAG
ORC

Diagnostic Test

1. DETERMINE ACTIVE OR STORED DTC

NOTE: Ensure the battery is fully charged.

NOTE: The scan tool, SRS Airbag Load Tool MRL 8443, and DVOM are required to perform the following test.

NOTE: When reconnecting airbag system components the Ignition must be turned off and the Battery must be disconnected.

Select Active or Stored DTC.

Is the DTC active or stored?

ORC - ACTIVE DTC
Go To 2

ORC - STORED DTC
Go To 5

PASSENGER SQUIB 1 SHORT TO GROUND (CONTINUED)

2. CHECK FOR SHORTED SQUIB CIRCUITS IN PASSENGER AIRBAG

WARNING: To avoid personal injury or death, turn the ignition off, disconnect the battery and wait two minutes before proceeding.
Disconnect the Passenger Airbag Squib connector.

WARNING: To avoid personal injury or death, do not place an intact undeployed airbag face down on a hard surface, the airbag will propel into the air if accidentally deployed.

NOTE: Check connectors - Clean and repair as necessary.
Connect the 8443 Load Tool to the Passenger Airbag Squib connector.

WARNING: To avoid personal injury or death, turn the ignition on, then reconnect the battery.
With the scan tool, read the active ORC DTC's.

Does the scan tool display: PASSENGER SQUIB 1 SHORT TO GROUND?

Yes >> Go To 3

No >> Replace the Passenger Airbag in accordance with the Service Information.
Perform ORC VERIFICATION TEST - VER 1

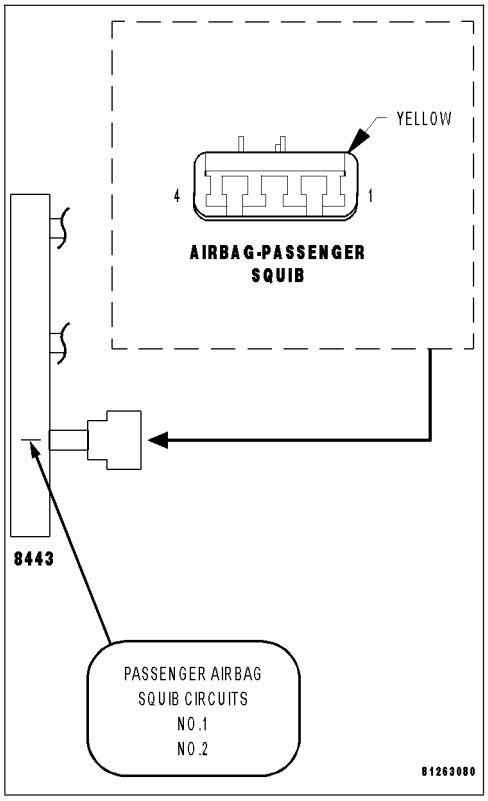

3. CHECK PASSENGER SQUIB 1 LINE 2 CIRCUIT AND PASSENGER SQUIB 1 LINE 1 CIRCUIT FOR A SHORT TO GROUND

WARNING: To avoid personal injury or death, turn the ignition off, disconnect the battery and wait two minutes before proceeding.
Disconnect the 8443 Load Tool from the Passenger Airbag Squib connector.

Disconnect the ORC connectors.

NOTE: Check connectors - Clean and repair as necessary.
Connect the 8443 Load Tool ORC Adaptor to the ORC connector.

Measure the resistance of the Passenger Squib 1 Line 2 circuit between ground and the Passenger Airbag Squib connector.

Measure the resistance of the Passenger Squib 1 Line 1 circuit between ground and the Passenger Airbag Squib connector.

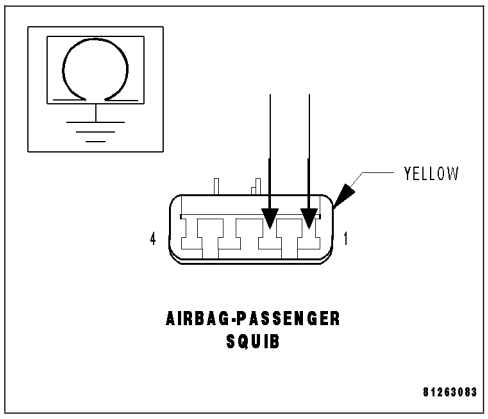

Is the resistance below 10K ohms on either circuit?

Yes >> Repair the Passenger Squib 1 circuits with a resistance below 10K ohms for a short to ground.
Perform ORC VERIFICATION TEST - VER 1

No >> Go To 4

PASSENGER SQUIB 1 SHORT TO GROUND (CONTINUED)

4. REPLACE THE ORC

WARNING: If the Occupant Restraint Controller (ORC) is dropped at any time, it must be replaced. Failure to take the proper precautions can result in accidental airbag deployment and personal injury or death.

NOTE: When reconnecting airbag system components the Ignition must be turned off and the Battery must be disconnected.

Repair

Replace the ORC in accordance with the Service Information.

Perform ORC VERIFICATION TEST - VER 1

---

5. STORED ORC DTC

With the scan tool, record and erase all DTC's from all Airbag System Modules.

If any ACTIVE codes are present they must be resolved before diagnosing any stored codes.

WARNING: To avoid personal injury or death, turn the ignition off, disconnect the battery and wait two minutes before proceeding.

Using the wiring diagram/schematic as a guide, inspect the wiring and connectors.

Look for chaffed, pierced, pinched, or partially broken wires and broken, bent, pushed out, spread, corroded, or contaminated terminals.

The following additional checks may assist you in identifying a possible intermittent problem.

Reconnect any disconnected components and harness connector.

WARNING: To avoid personal injury or death, turn the ignition on, then reconnect the battery.

With the scan tool monitor active codes as you work through the following steps.

Wiggle the wiring harness and connectors of the related airbag circuit or component.

If codes are related to the Driver Airbag circuits, rotate the steering wheel from stop to stop.

If only stored codes return continue the test until the problem area has been isolated.

In the previous steps you have attempted to recreate the conditions responsible for setting active DTC in question.

Are any ACTIVE DTC's present?

Yes >> Select the appropriate diagnostic procedure from the Table of Contents in this section.

No >> No problem found at this time. Erase all codes before returning vehicle to customer.

PASSENGER SQUIB 2 CIRCUIT OPEN

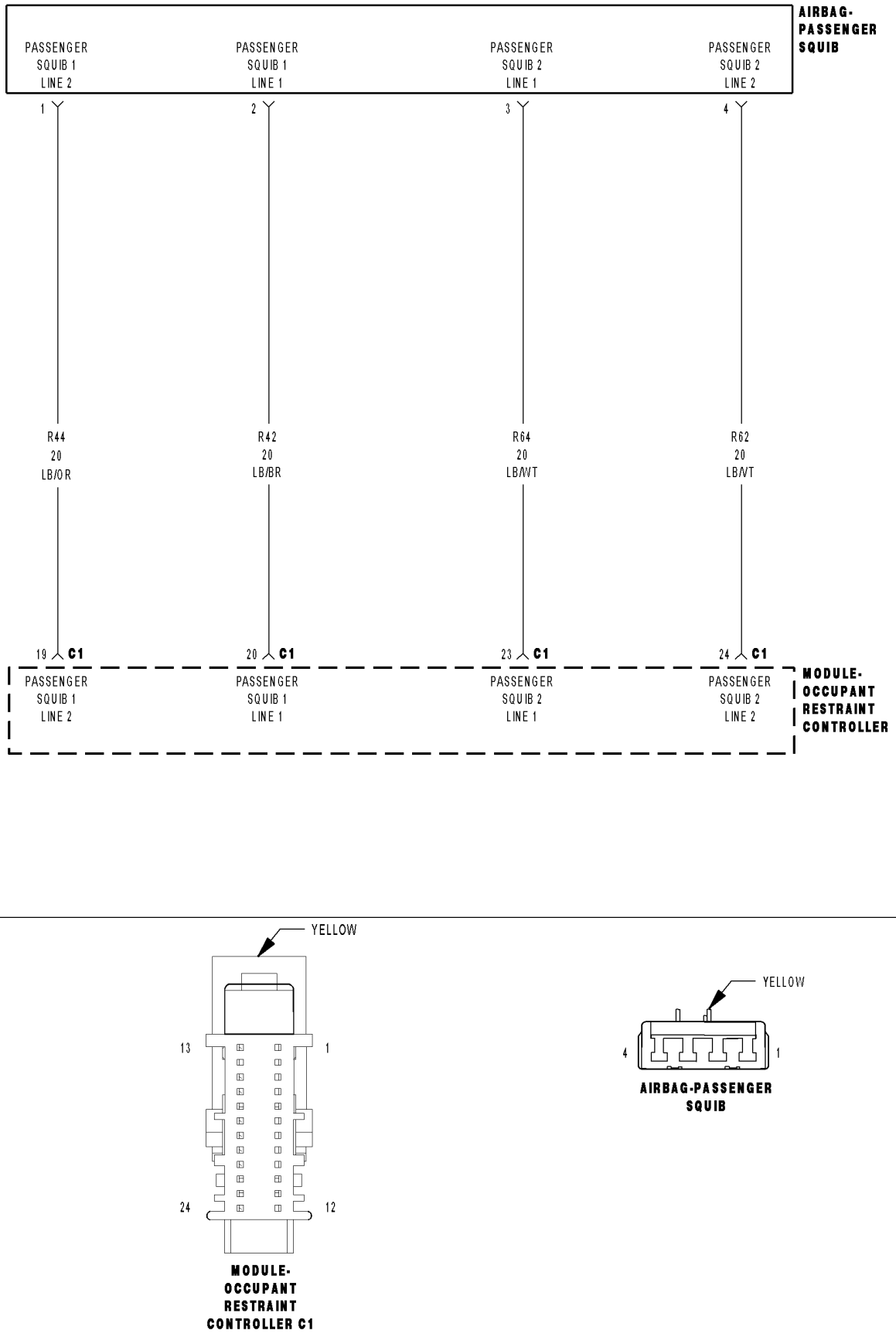

PASSENGER SQUIB 2 CIRCUIT OPEN (CONTINUED)

For the Air Bag System circuit diagram (Refer to 8 - ELECTRICAL/RESTRAINTS - SCHEMATICS AND DIAGRAMS).

For a complete wiring diagram **Refer to Section 8W**.

- **When Monitored:**
  With the ignition on, the Occupant Restraint Controller (ORC) monitors the resistance of the Passenger Squib 2 circuits.
- **Set Condition:**
  The ORC has detected an open or high resistance on the Passenger Squib 2 circuits.

Possible Causes
(R64) PASSENGER SQUIB 2 LINE 1 CIRCUIT OPEN
(R62) PASSENGER SQUIB 2 LINE 2 CIRCUIT OPEN
PASSENGER AIRBAG
ORC

Diagnostic Test

1. DETERMINE ACTIVE OR STORED DTC

NOTE: Ensure the battery is fully charged.

NOTE: The scan tool, SRS Airbag Load Tool MRL 8443, and DVOM are required to perform the following test.

NOTE: When reconnecting airbag system components the Ignition must be turned off and the Battery must be disconnected.

Select Active or Stored DTC.

Is the DTC active or stored?

ORC - ACTIVE DTC
Go To 2

ORC - STORED DTC
Go To 6

PASSENGER SQUIB 2 CIRCUIT OPEN (CONTINUED)

2. CHECK FOR OPEN SQUIB CIRCUITS IN PASSENGER AIRBAG

WARNING: To avoid personal injury or death, turn the ignition off, disconnect the battery and wait two minutes before proceeding.
Disconnect the Passenger Airbag Squib connector.

WARNING: To avoid personal injury or death, do not place an intact undeployed airbag face down on a hard surface, the airbag will propel into the air if accidentally deployed.

NOTE: Check connectors - Clean and repair as necessary.
Connect the 8443 Load Tool to the Passenger Airbag Squib connector.

WARNING: To avoid personal injury or death, turn the ignition on, then reconnect the battery.
With the scan tool, read the active ORC DTC's.

Does the scan tool display: PASSENGER SQUIB 2 CIRCUIT OPEN?

Yes >> Go To 3

No >> Replace the Passenger Airbag in accordance with the Service Information.
Perform ORC VERIFICATION TEST - VER 1

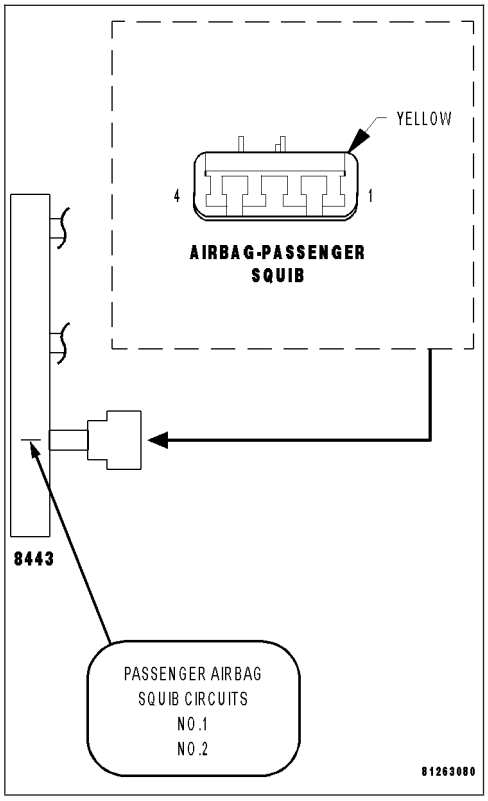

3. CHECK (R64) PASSENGER SQUIB 2 LINE 1 CIRCUIT FOR AN OPEN

WARNING: To avoid personal injury or death, turn the ignition off, disconnect the battery and wait two minutes before proceeding.
Disconnect the 8443 Load Tool from the Passenger Airbag Squib connector.

Disconnect the ORC connectors.

NOTE: Check connectors - Clean and repair as necessary.
Connect the 8443 Load Tool ORC Adaptor to the ORC connector.

Measure the resistance of the (R64) Passenger Squib 2 Line 1 circuit between the Passenger Airbag Squib connector and the 8443 Load Tool ORC Adaptor.

Is the resistance below 1.0 ohm?

Yes >> Go to 4

No >> Repair the (R64) Passenger Squib 2 Line 1 circuit for an open. Then, Go To 4

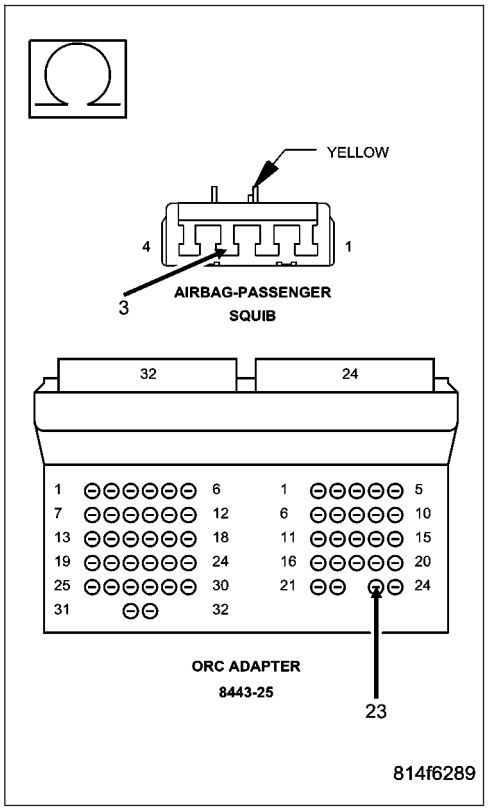

PASSENGER SQUIB 2 CIRCUIT OPEN (CONTINUED)

4. CHECK (R62) PASSENGER SQUIB 2 LINE 2 CIRCUIT FOR AN OPEN

Measure the resistance of the (R62) Passenger Squib 2 Line 2 circuit between the Passenger Airbag Squib connector and the 8443 Load Tool ORC Adaptor.

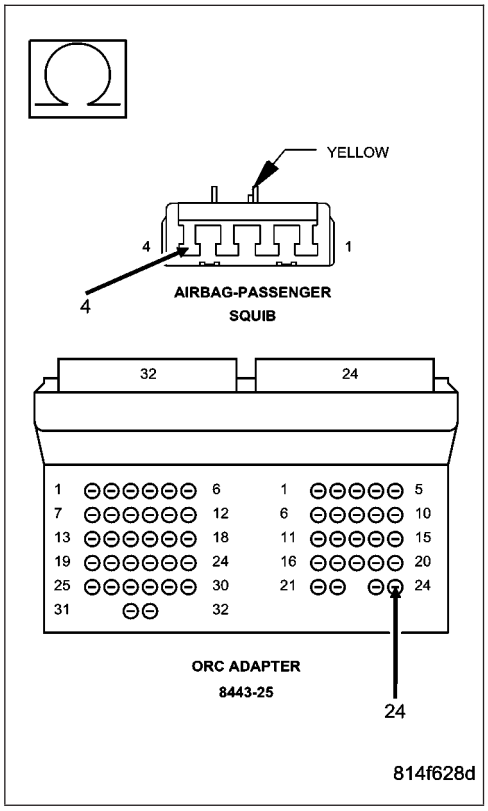

Is the resistance below 1.0 ohm?

Yes >> Go To 5

No >> Repair the (R62) Passenger Squib 2 Line 2 circuit for an open.
Perform ORC VERIFICATION TEST - VER 1

5. REPLACE THE ORC

WARNING: If the Occupant Restraint Controller (ORC) is dropped at any time, it must be replaced. Failure to take the proper precautions can result in accidental airbag deployment and personal injury or death.

NOTE: When reconnecting airbag system components the Ignition must be turned off and the Battery must be disconnected.

Repair

Replace the ORC in accordance with the Service Information.
Perform ORC VERIFICATION TEST - VER 1

PASSENGER SQUIB 2 CIRCUIT OPEN (CONTINUED)

6. STORED ORC DTC

With the scan tool, record and erase all DTC's from all Airbag System Modules.

If any ACTIVE codes are present they must be resolved before diagnosing any stored codes.

WARNING: To avoid personal injury or death, turn the ignition off, disconnect the battery and wait two minutes before proceeding.

Using the wiring diagram/schematic as a guide, inspect the wiring and connectors.

Look for chaffed, pierced, pinched, or partially broken wires and broken, bent, pushed out, spread, corroded, or contaminated terminals.

The following additional checks may assist you in identifying a possible intermittent problem.

Reconnect any disconnected components and harness connector.

WARNING: To avoid personal injury or death, turn the ignition on, then reconnect the battery.

With the scan tool monitor active codes as you work through the following steps.

Wiggle the wiring harness and connectors of the related airbag circuit or component.

If codes are related to the Passenger Airbag circuits, rotate the steering wheel from stop to stop.

If only stored codes return continue the test until the problem area has been isolated.

In the previous steps you have attempted to recreate the conditions responsible for setting active DTC in question.

Are any ACTIVE DTCs present?

Yes >> Select the appropriate diagnostic procedure from the Table of Contents in this section.

No >> No problem found at this time. Erase all codes before returning vehicle to customer.

PASSENGER SQUIB 2 CIRCUIT SHORT

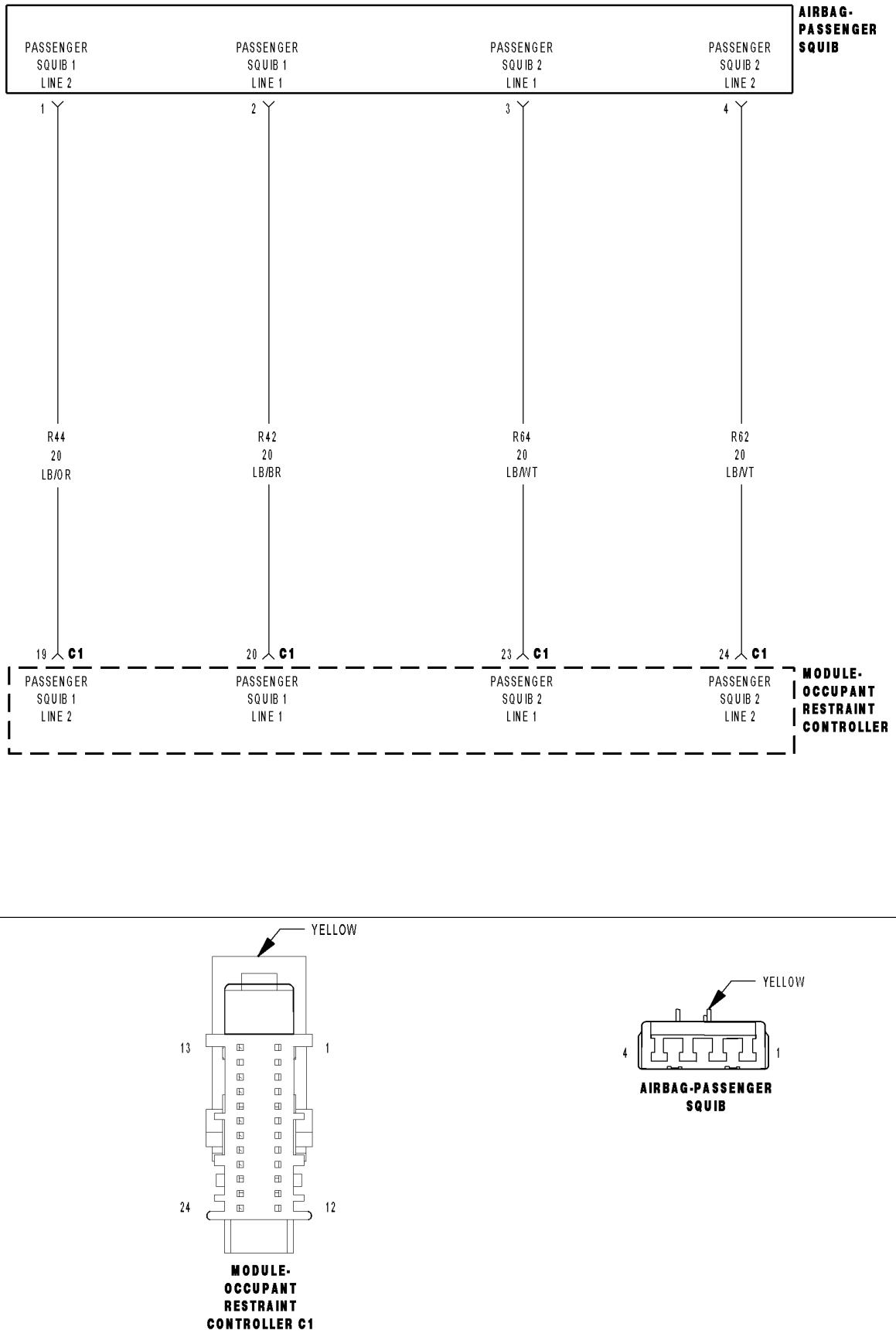

PASSENGER SQUIB 2 CIRCUIT SHORT (CONTINUED)

For the Air Bag System circuit diagram (Refer to 8 - ELECTRICAL/RESTRAINTS - SCHEMATICS AND DIAGRAMS).

For a complete wiring diagram **Refer to Section 8W**.

- **When Monitored:**
  With the ignition on, the Occupant Restraint Controller (ORC) monitors the resistance of the Passenger Squib 2 circuits.
- **Set Condition:**
  The ORC has detected low resistance between the Passenger Squib 2 circuits.

Possible Causes
(R64) PASSENGER SQUIB 2 LINE 1 CIRCUIT SHORTED TO (R62) PASSENGER SQUIB 2 LINE 2 CIRCUIT
PASSENGER AIRBAG
ORC

Diagnostic Test

1. DETERMINE ACTIVE OR STORED DTC

NOTE: Ensure the battery is fully charged.

NOTE: The scan tool, SRS Airbag Load Tool MRL 8443, and DVOM are required to perform the following test.

NOTE: When reconnecting airbag system components the Ignition must be turned off and the Battery must be disconnected.

Select Active or Stored DTC.

Is the DTC active or stored?

ORC - ACTIVE DTC
Go To 2

ORC - STORED DTC
Go To 5

PASSENGER SQUIB 2 CIRCUIT SHORT (CONTINUED)

2. CHECK FOR SHORTED SQUIB CIRCUITS IN PASSENGER AIRBAG

WARNING: To avoid personal injury or death, turn the ignition off, disconnect the battery and wait two minutes before proceeding.
Disconnect the Passenger Airbag Squib connector.

WARNING: To avoid personal injury or death, do not place an intact undeployed airbag face down on a hard surface, the airbag will propel into the air if accidentally deployed.

NOTE: Check connectors - Clean and repair as necessary.
Connect the 8443 Load Tool to the Passenger Airbag Squib connector.

WARNING: To avoid personal injury or death, turn the ignition on, then reconnect the battery
With the scan tool, read the active ORC DTC's.

Does the scan tool display: PASSENGER SQUIB 2 CIRCUIT SHORT?

Yes >> Go To 3

No >> Replace the Passenger Airbag in accordance with the Service Information.
Perform ORC VERIFICATION TEST - VER 1

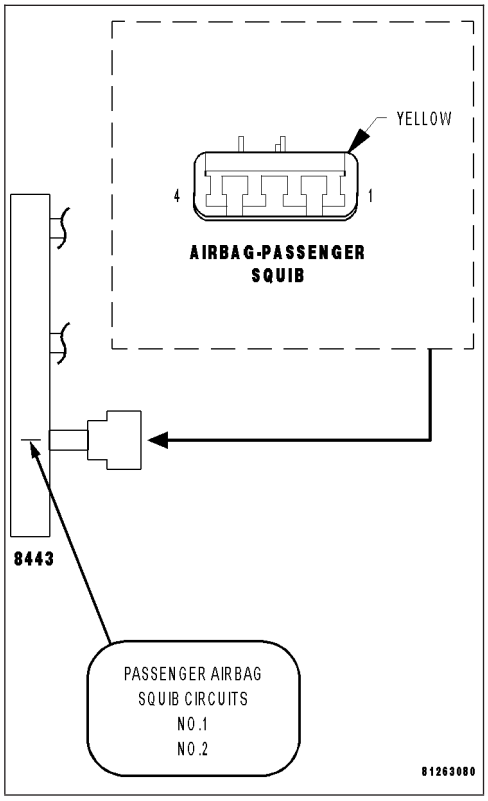

3. CHECK (R64) PASSENGER SQUIB 2 LINE 1 CIRCUIT FOR A SHORT TO (R62) PASSENGER SQUIB 2 LINE 2 CIRCUIT

WARNING: To avoid personal injury or death, turn the ignition off, disconnect the battery and wait two minutes before proceeding.
Disconnect the 8443 Load Tool from the Passenger Airbag Squib connector.

Disconnect the ORC connectors.

NOTE: Check connectors - Clean and repair as necessary.
Connect the 8443 Load Tool ORC Adaptor to the ORC connector.

Measure the resistance between the (R64) Passenger Squib 2 Line 1 circuit and the (R62) Passenger Squib 2 Line 2 circuit at the Passenger Airbag Squib connector.

Is the resistance below 10K ohms?

Yes >> Repair the (R64) Passenger Squib 2 Line 1 circuit for a short to the (R62) Passenger Squib 2 Line 2 circuit.
Perform ORC VERIFICATION TEST - VER 1

No >> Go to 4

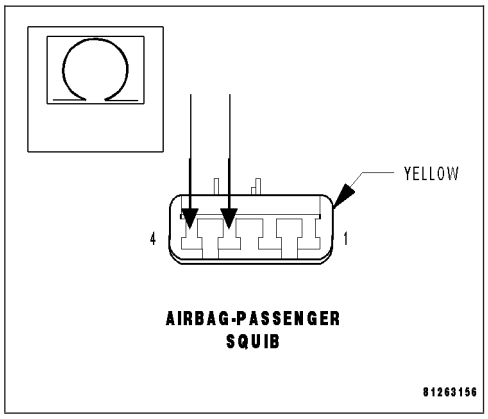

PASSENGER SQUIB 2 CIRCUIT SHORT (CONTINUED)

4. REPLACE THE ORC

WARNING: If the Occupant Restraint Controller (ORC) is dropped at any time, it must be replaced. Failure to take the proper precautions can result in accidental airbag deployment and personal injury or death.

NOTE: When reconnecting airbag system components the Ignition must be turned off and the Battery must be disconnected.

Repair

Replace the ORC in accordance with the Service Information.

Perform ORC VERIFICATION TEST - VER 1

---

5. STORED ORC DTC

With the scan tool, record and erase all DTC's from all Airbag System Modules.

If any ACTIVE codes are present they must be resolved before diagnosing any stored codes.

WARNING: To avoid personal injury or death, turn the ignition off, disconnect the battery and wait two minutes before proceeding.

Using the wiring diagram/schematic as a guide, inspect the wiring and connectors.

Look for chaffed, pierced, pinched, or partially broken wires and broken, bent, pushed out, spread, corroded, or contaminated terminals.

The following additional checks may assist you in identifying a possible intermittent problem.

Reconnect any disconnected components and harness connector.

WARNING: To avoid personal injury or death, turn the ignition on, then reconnect the battery.

With the scan tool monitor active codes as you work through the following steps.

Wiggle the wiring harness and connectors of the related airbag circuit or component.

If codes are related to the Driver Airbag circuits, rotate the steering wheel from stop to stop.

If only stored codes return continue the test until the problem area has been isolated.

In the previous steps you have attempted to recreate the conditions responsible for setting active DTC in question.

Are any ACTIVE DTCs present?

Yes >> Select the appropriate diagnostic procedure from the Table of Contents in this section.

No >> No problem found at this time. Erase all codes before returning vehicle to customer.

PASSENGER SQUIB 2 SHORT TO BATTERY

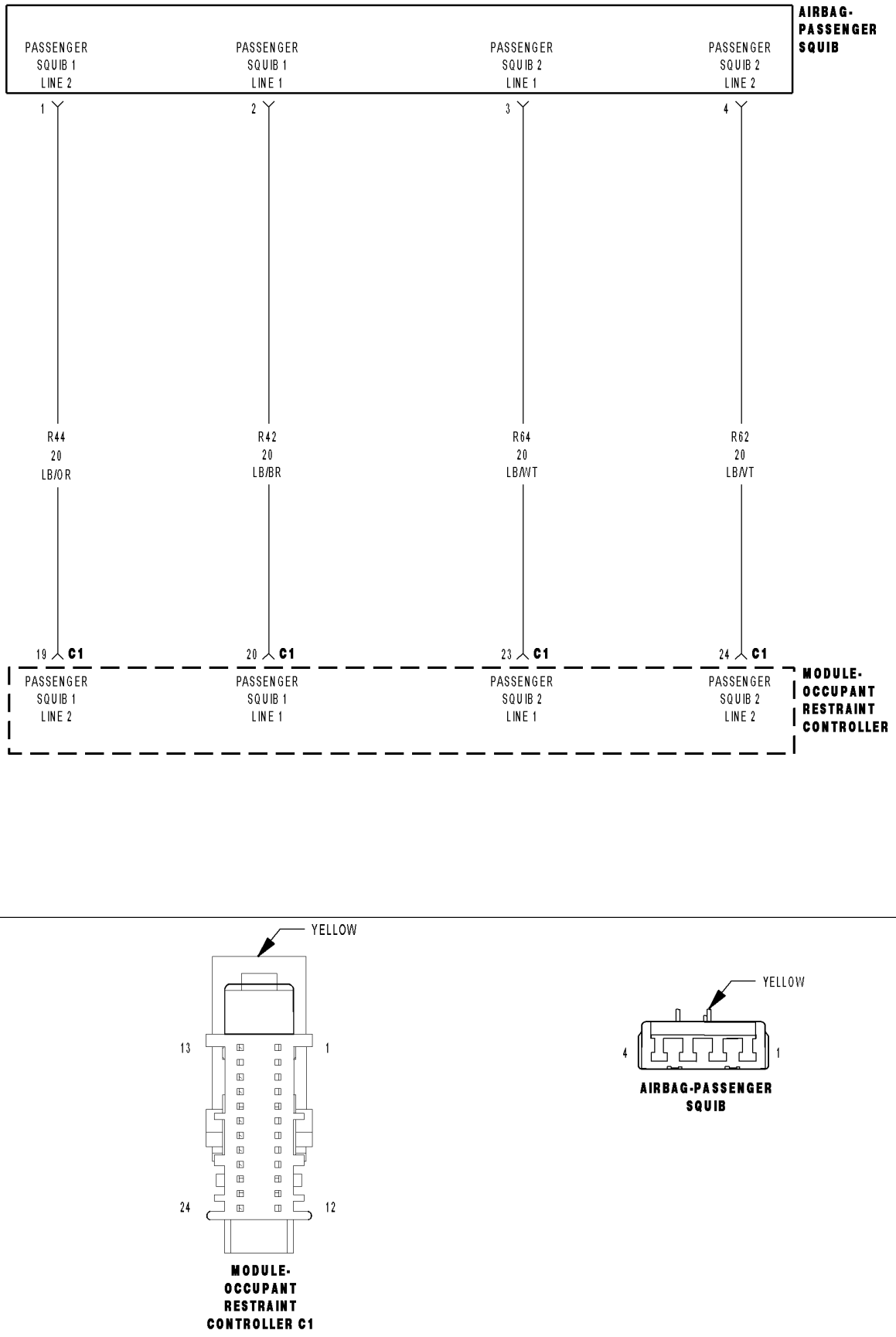

PASSENGER SQUIB 2 SHORT TO BATTERY (CONTINUED)

For the Air Bag System circuit diagram (Refer to 8 - ELECTRICAL/RESTRAINTS - SCHEMATICS AND DIAGRAMS).

For a complete wiring diagram **Refer to Section 8W**.

- **When Monitored:**
  With the ignition on, the Occupant Restraint Controller (ORC) monitors the voltage of the Passenger Squib 2 circuits.
- **Set Condition:**
  The ORC has detected voltage on the Passenger Squib 2 circuits.

Possible Causes
(R64) PASSENGER SQUIB 2 LINE 1 CIRCUIT OR (R62) PASSENGER SQUIB 2 LINE 2 CIRCUIT SHORTED TO BATTERY
PASSENGER AIRBAG
ORC

Diagnostic Test

1. DETERMINE ACTIVE OR STORED DTC

NOTE: Ensure the battery is fully charged.

NOTE: The scan tool, SRS Airbag Load Tool MRL 8443, and DVOM are required to perform the following test.

NOTE: When reconnecting airbag system components the Ignition must be turned off and the Battery must be disconnected.

Select Active or Stored DTC.

Is the DTC active or stored?

ORC - ACTIVE DTC
Go To 2

ORC - STORED DTC
Go To 5

PASSENGER SQUIB 2 SHORT TO BATTERY (CONTINUED)

2. CHECK FOR SHORTED SQUIB CIRCUITS IN PASSENGER AIRBAG

WARNING: To avoid personal injury or death, turn the ignition off, disconnect the battery and wait two minutes before proceeding.
Disconnect the Passenger Airbag Squib connector.

WARNING: To avoid personal injury or death, do not place an intact undeployed airbag face down on a hard surface, the airbag will propel into the air if accidentally deployed.

NOTE: Check connectors - Clean and repair as necessary.
Connect the 8443 Load Tool to the Passenger Airbag Squib connector.

WARNING: To avoid personal injury or death, turn the ignition on, then reconnect the battery.
With the scan tool, read the active ORC DTC's.

Does the scan tool display: PASSENGER SQUIB 2 SHORT TO BATTERY?

Yes >> Go To 3

No >> Replace the Passenger Airbag in accordance with the Service Information.
Perform ORC VERIFICATION TEST - VER 1

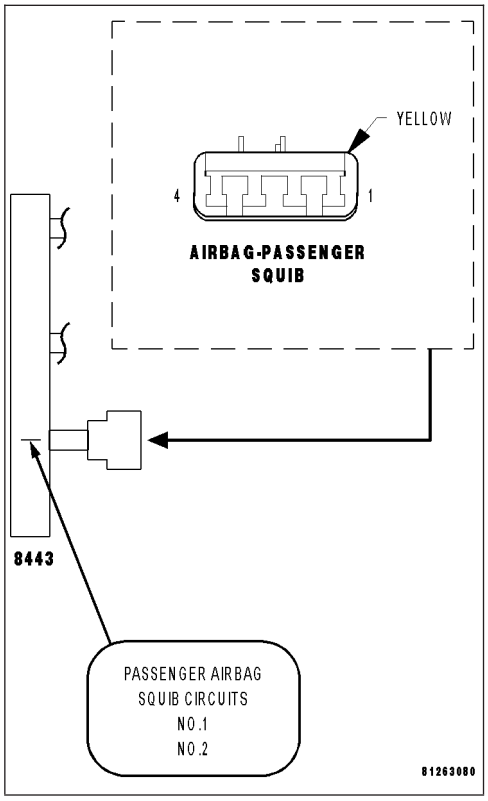

3. CHECK (R64) PASSENGER SQUIB 2 LINE 1 CIRCUIT AND (R62) PASSENGER SQUIB 2 LINE 2 CIRCUIT FOR A SHORT TO BATTERY

WARNING: To avoid personal injury or death, turn the ignition off, disconnect the battery and wait two minutes before proceeding.
Disconnect the 8443 Load Tool from the Passenger Airbag Squib connector.

Disconnect the ORC connectors.

NOTE: Check connectors - Clean and repair as necessary.
Connect the 8443 Load Tool ORC Adaptor to the ORC connector.

Measure the voltage of the (R64) Passenger Squib 2 Line 1 circuit between the Passenger Airbag Squib connector and ground.

Measure the voltage of the (R62) Passenger Squib 2 Line 2 circuit between the Passenger Airbag Squib connector and ground.

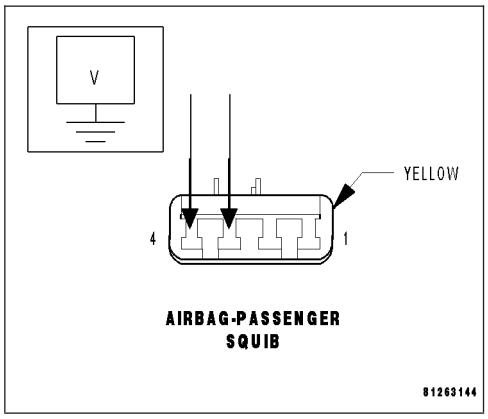

Is there any voltage present on either circuit?

Yes >> Repair the Passenger Squib 2 circuits with voltage present for a short to battery.
Perform ORC VERIFICATION TEST - VER 1

No >> Go To 4

PASSENGER SQUIB 2 SHORT TO BATTERY (CONTINUED)

4. REPLACE THE ORC

WARNING: To avoid personal injury or death, turn the ignition off, disconnect the battery and wait two minutes before proceeding.

WARNING: If the Occupant Restraint Controller (ORC) is dropped at any time, it must be replaced. Failure to take the proper precautions can result in accidental airbag deployment and personal injury or death.

NOTE: When reconnecting airbag system components the Ignition must be turned off and the Battery must be disconnected.

Repair

Replace the ORC in accordance with the Service Information.

Perform ORC VERIFICATION TEST - VER 1

---

5. STORED ORC DTC

With the scan tool, record and erase all DTC's from all Airbag System Modules.

If any ACTIVE codes are present they must be resolved before diagnosing any stored codes.

WARNING: To avoid personal injury or death, turn the ignition off, disconnect the battery and wait two minutes before proceeding.

Using the wiring diagram/schematic as a guide, inspect the wiring and connectors.

Look for chaffed, pierced, pinched, or partially broken wires and broken, bent, pushed out, spread, corroded, or contaminated terminals.

The following additional checks may assist you in identifying a possible intermittent problem.

Reconnect any disconnected components and harness connector.

WARNING: To avoid personal injury or death, turn the ignition on, then reconnect the battery.

With the scan tool monitor active codes as you work through the following steps.

Wiggle the wiring harness and connectors of the related airbag circuit or component.

If codes are related to the Driver Airbag circuits, rotate the steering wheel from stop to stop.

If only stored codes return continue the test until the problem area has been isolated.

In the previous steps you have attempted to recreate the conditions responsible for setting active DTC in question.

Are any ACTIVE DTCs present?

Yes >> Select the appropriate diagnostic procedure from the Table of Contents in this section.

No >> No problem found at this time. Erase all codes before returning vehicle to customer.

PASSENGER SQUIB 2 SHORT TO GROUND

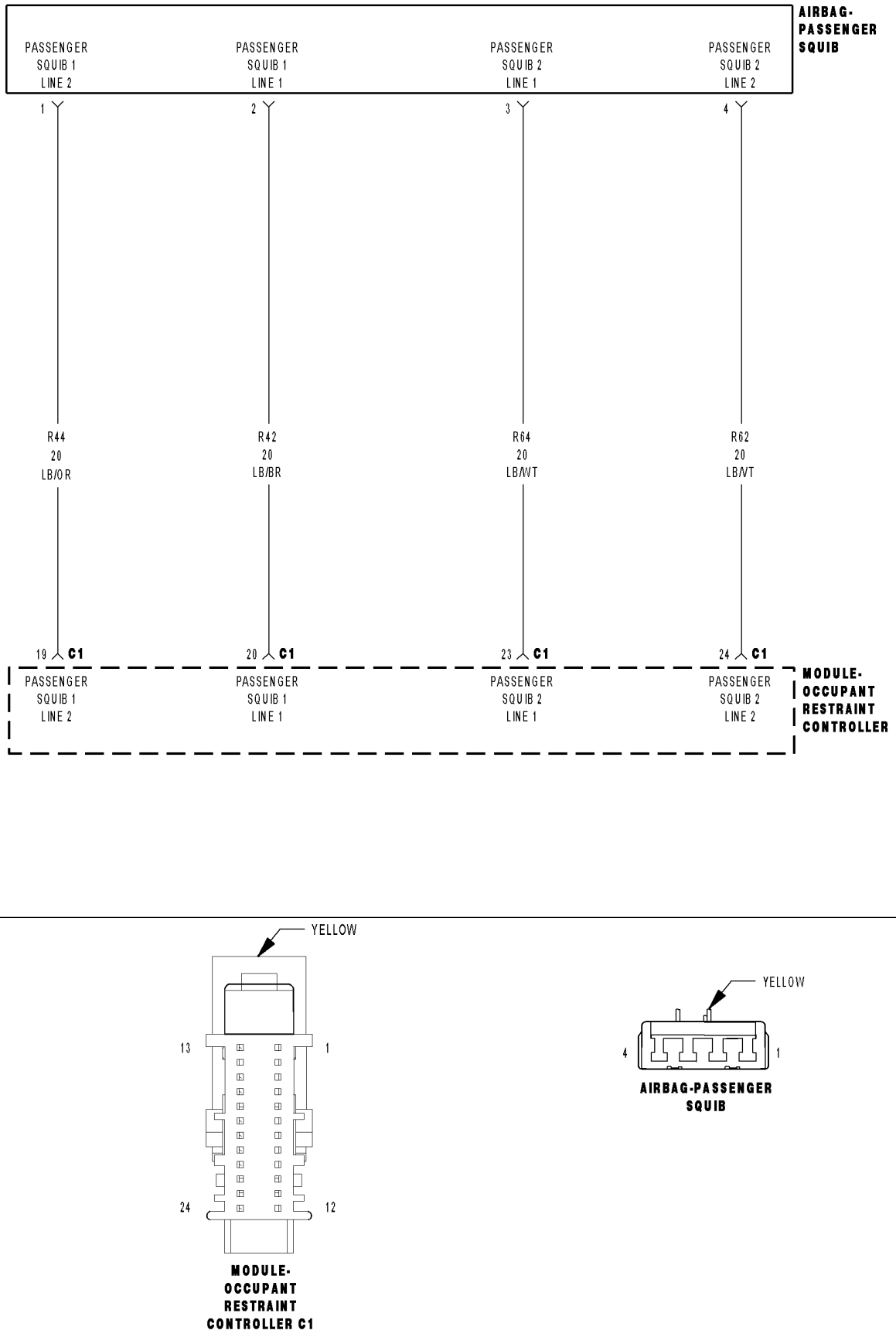

PASSENGER SQUIB 2 SHORT TO GROUND (CONTINUED)

For the Air Bag System circuit diagram (Refer to 8 - ELECTRICAL/RESTRAINTS - SCHEMATICS AND DIAGRAMS).

For a complete wiring diagram **Refer to Section 8W**.

- **When Monitored:**
  With the ignition on, the Occupant Restraint Controller (ORC) monitors the resistance of the Passenger Squib 2 circuits.
- **Set Condition:**
  The ORC has detected low resistance on the Passenger Squib 2 circuits.

Possible Causes
(R64) PASSENGER SQUIB 2 LINE 1 CIRCUIT OR (R62) PASSENGER SQUIB 2 LINE 2 CIRCUIT SHORTED TO GROUND
PASSENGER AIRBAG
ORC

Diagnostic Test

1. DETERMINE ACTIVE OR STORED DTC

NOTE: Ensure the battery is fully charged.

NOTE: The scan tool, SRS Airbag Load Tool MRL 8443, and DVOM are required to perform the following test.

NOTE: When reconnecting airbag system components the Ignition must be turned off and the Battery must be disconnected.

Select Active or Stored DTC.

Is the DTC active or stored?

ORC - ACTIVE DTC
Go To 2

ORC - STORED DTC
Go To 5

PASSENGER SQUIB 2 SHORT TO GROUND (CONTINUED)

2. CHECK FOR SHORTED SQUIB CIRCUITS IN PASSENGER AIRBAG

WARNING: To avoid personal injury or death, turn the ignition off, disconnect the battery and wait two minutes before proceeding.
Disconnect the Passenger Airbag Squib connector.

WARNING: To avoid personal injury or death, do not place an intact undeployed airbag face down on a hard surface, the airbag will propel into the air if accidentally deployed.

NOTE: Check connectors - Clean and repair as necessary.
Connect the 8443 Load Tool to the Passenger Airbag Squib connector.

WARNING: To avoid personal injury or death, turn the ignition on, then reconnect the battery.
With the scan tool, read the active ORC DTC's.

Does the scan tool display: PASSENGER SQUIB 2 SHORT TO GROUND?

Yes >> Go To 3

No >> Replace the Passenger Airbag in accordance with the Service Information.
Perform ORC VERIFICATION TEST - VER 1

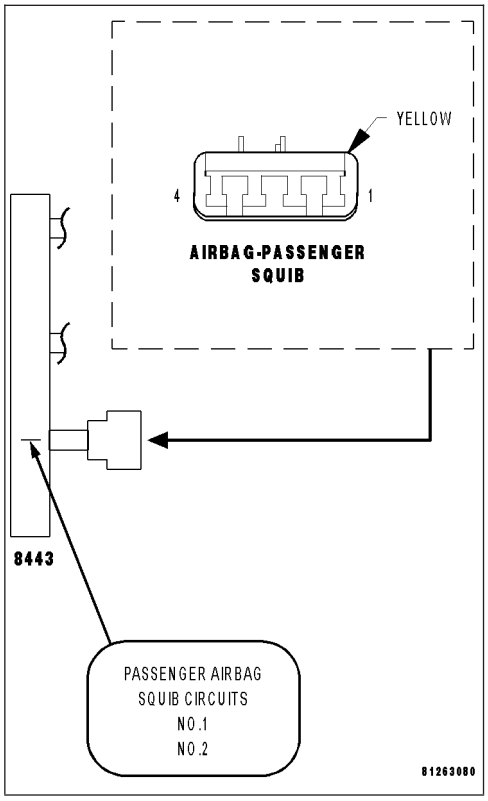

3. CHECK (R64) PASSENGER SQUIB 2 LINE 1 CIRCUIT AND (R62) PASSENGER SQUIB 2 LINE 2 CIRCUIT FOR A SHORT TO GROUND

WARNING: To avoid personal injury or death, turn the ignition off, disconnect the battery and wait two minutes before proceeding.
Disconnect the 8443 Load Tool from the Passenger Airbag Squib connector.

Disconnect the ORC connectors.

NOTE: Check connectors - Clean and repair as necessary.
Connect the 8443 Load Tool ORC Adaptor to the ORC connector.

Measure the resistance of the (R64) Passenger Squib 2 Line 1 circuit between ground and the Passenger Airbag Squib connector.

Measure the resistance of the (R62) Passenger Squib 2 Line 2 circuit between ground and the Passenger Airbag Squib connector.

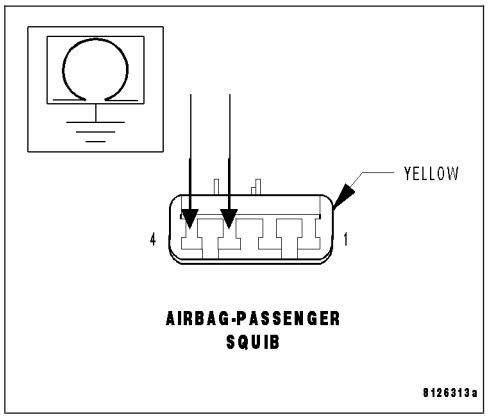

Is the resistance below 10K ohms on either circuit?

Yes >> Repair the Passenger Squib 2 circuits with a resistance below 10K ohms for a short to ground.
Perform ORC VERIFICATION TEST - VER 1

No >> Go To 4

PASSENGER SQUIB 2 SHORT TO GROUND (CONTINUED)

4. REPLACE THE ORC

WARNING: If the Occupant Restraint Controller (ORC) is dropped at any time, it must be replaced. Failure to take the proper precautions can result in accidental airbag deployment and personal injury or death.

NOTE: When reconnecting airbag system components the Ignition must be turned off and the Battery must be disconnected.

Repair

Replace the ORC in accordance with the Service Information.

Perform ORC VERIFICATION TEST - VER 1

---

5. STORED ORC DTC

With the scan tool, record and erase all DTC's from all Airbag System Modules.

If any ACTIVE codes are present they must be resolved before diagnosing any stored codes.

WARNING: To avoid personal injury or death, turn the ignition off, disconnect the battery and wait two minutes before proceeding.

Using the wiring diagram/schematic as a guide, inspect the wiring and connectors.

Look for chaffed, pierced, pinched, or partially broken wires and broken, bent, pushed out, spread, corroded, or contaminated terminals.

The following additional checks may assist you in identifying a possible intermittent problem.

Reconnect any disconnected components and harness connector.

WARNING: To avoid personal injury or death, turn the ignition on, then reconnect the battery.

With the scan tool monitor active codes as you work through the following steps.

Wiggle the wiring harness and connectors of the related airbag circuit or component.

If codes are related to the Driver Airbag circuits, rotate the steering wheel from stop to stop.

If only stored codes return continue the test until the problem area has been isolated.

In the previous steps you have attempted to recreate the conditions responsible for setting active DTC in question.

Are any ACTIVE DTCs present?

Yes >> Select the appropriate diagnostic procedure from the Table of Contents in this section.

No >> No problem found at this time. Erase all codes before returning vehicle to customer.

RIGHT CURTAIN SQUIB 1 CIRCUIT OPEN

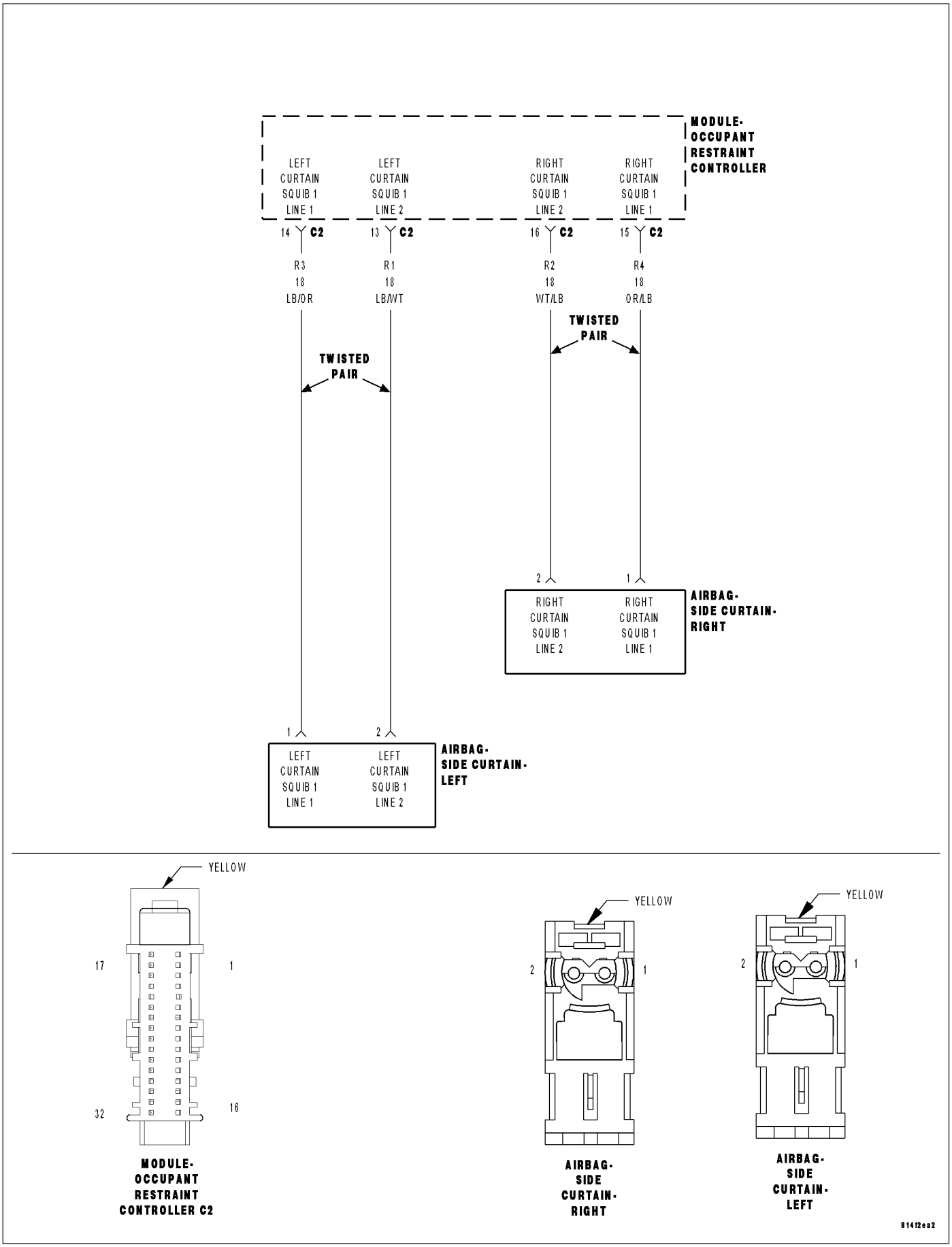

RIGHT CURTAIN SQUIB 1 CIRCUIT OPEN (CONTINUED)

For the Air Bag System circuit diagram (Refer to 8 - ELECTRICAL/RESTRAINTS - SCHEMATICS AND DIAGRAMS).

For a complete wiring diagram **Refer to Section 8W**.

- **When Monitored:**
  With the ignition on, the Occupant Restraint Controller (ORC) monitors the resistance of the Right Curtain Squib 1 circuits.
- **Set Condition:**
  When the ORC has detects an open or high resistance on the Right Curtain Squib 1 circuits.

Possible Causes
(R4) RIGHT CURTAIN SQUIB 1 LINE 1 CIRCUIT OPEN
(R2) RIGHT CURTAIN SQUIB 1 LINE 2 CIRCUIT OPEN
RIGHT SIDE CURTAIN AIRBAG
ORC

Diagnostic Test

1. DETERMINE ACTIVE OR STORED DTC

NOTE: Ensure the battery is fully charged.

NOTE: The scan tool, SRS Airbag Load Tool MRL 8443, and DVOM are required to perform the following test.

NOTE: When reconnecting airbag system components the Ignition must be turned off and the Battery must be disconnected.

Select Active or Stored DTC.

Is the DTC active or stored?

ORC - ACTIVE DTC
Go To 2

ORC - STORED DTC
Go To 6

RIGHT CURTAIN SQUIB 1 CIRCUIT OPEN (CONTINUED)

2. CHECK FOR OPEN SQUIB CIRCUITS IN RIGHT SIDE CURTAIN AIRBAG

WARNING: To avoid personal injury or death, turn the ignition off, disconnect the battery and wait two minutes before proceeding.
Disconnect the Right Side Curtain Airbag connector.

WARNING: To avoid personal injury or death, do not place an intact uncoupled curtain airbag face down on a hard surface, the airbag will propel into the air if accidentally deployed.

NOTE: Check connectors - Clean and repair as necessary.
Connect the 8443 Load Tool and appropriate Jumper to the Right Side Curtain Airbag connector.

WARNING: To avoid personal injury or death, turn the ignition on, then reconnect the battery.
With the scan tool, read the active ORC DTC's.

Does the scan tool display: RIGHT CURTAIN SQUIB 1 CIRCUIT OPEN?

Yes >> Go to 3

No >> Replace the Right Side Curtain Airbag in accordance with the Service Information.
Perform ORC VERIFICATION TEST - VER 1

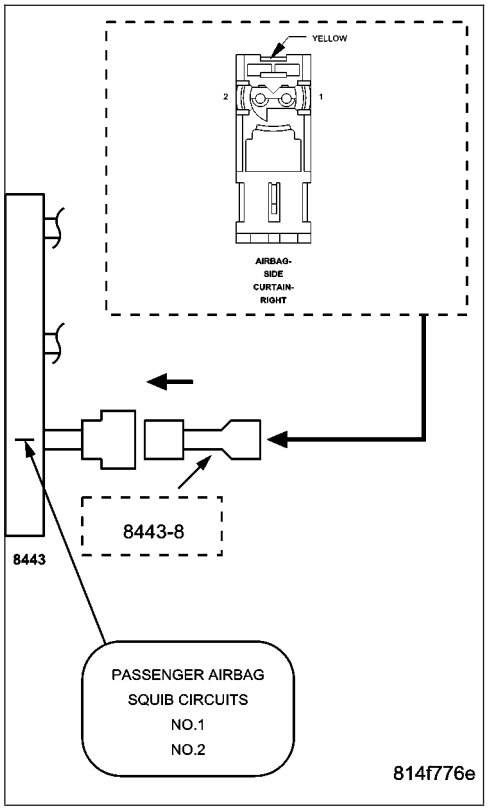

3. CHECK (R4) RIGHT CURTAIN SQUIB 1 LINE 1 CIRCUIT FOR AN OPEN

WARNING: To avoid personal injury or death, turn the ignition off, disconnect the battery and wait two minutes before proceeding.
Disconnect the 8443 Load Tool and Jumper from the Right Side Curtain Airbag connector.

Disconnect the ORC connectors.

NOTE: Check connectors - Clean and repair as necessary.
Connect the 8443 Load Tool ORC Adaptor to the ORC connector.

Measure the resistance of the (R4) Right Curtain Squib 1 Line 1 circuit between the Right Side Curtain Airbag connector and the 8443 ORC Adaptor.

Is the resistance below 1.0 ohm?

Yes >> Go To 4

No >> Repair the (R4) Right Curtain Squib 1 Line 1 circuit for an open. Then, Go To 4

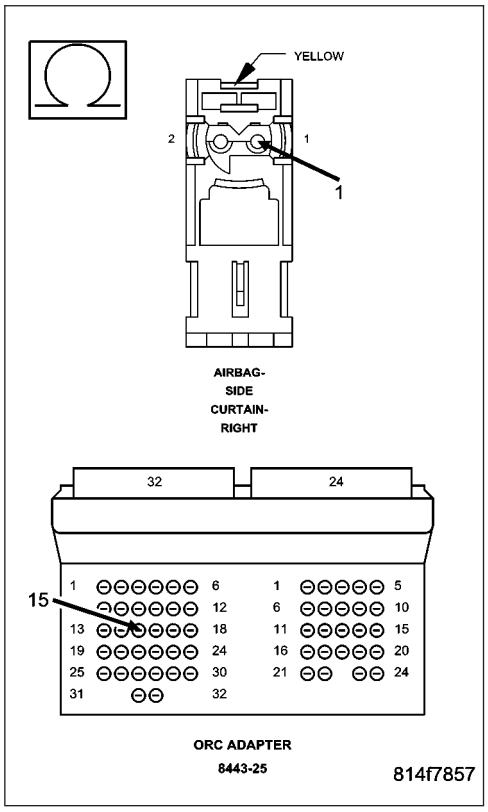

RIGHT CURTAIN SQUIB 1 CIRCUIT OPEN (CONTINUED)

4. CHECK (R2) RIGHT CURTAIN SQUIB 1 LINE 2 CIRCUIT FOR AN OPEN

Measure the resistance of the (R2) Right Curtain Squib 1 Line 2 circuit between the Right Side Curtain Airbag connector and the 8443 ORC Adaptor.

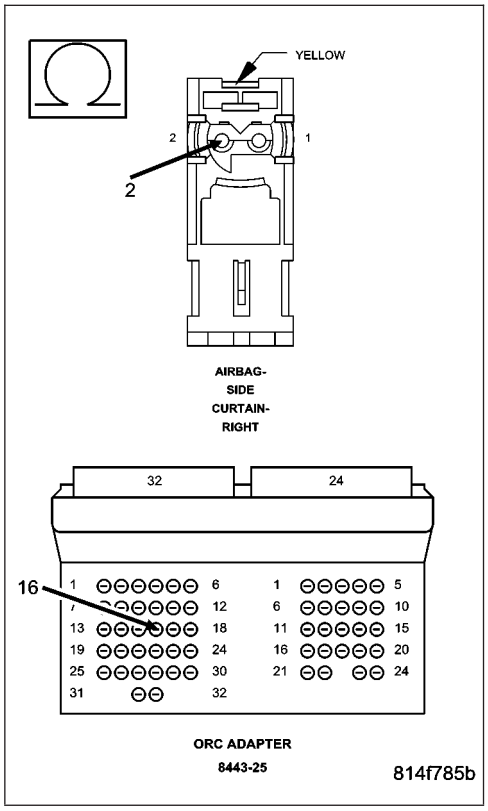

Is the resistance below 1.0 ohm?

Yes >> Go To 5

No >> Repair the (R2) Right Curtain Squib 1 Line 2 circuit for an open.
Perform ORC VERIFICATION TEST - VER 1

---

5. REPLACE THE ORC

WARNING: If the Occupant Restraint Controller (ORC) is dropped at any time, it must be replaced. Failure to take the proper precautions can result in accidental airbag deployment and personal injury or death.

NOTE: When reconnecting airbag system components the Ignition must be turned off and the Battery must be disconnected.

Repair

Replace the ORC in accordance with the Service Information.
Perform ORC VERIFICATION TEST - VER 1

RIGHT CURTAIN SQUIB 1 CIRCUIT OPEN (CONTINUED)

6. STORED ORC DTC

With the scan tool, record and erase all DTC's from all Airbag System Modules.

If any ACTIVE codes are present they must be resolved before diagnosing any stored codes.

WARNING: To avoid personal injury or death, turn the ignition off, disconnect the battery and wait two minutes before proceeding.

Using the wiring diagram/schematic as a guide, inspect the wiring and connectors.

Look for chaffed, pierced, pinched, or partially broken wires and broken, bent, pushed out, spread, corroded, or contaminated terminals.

The following additional checks may assist you in identifying a possible intermittent problem.

Reconnect any disconnected components and harness connector.

WARNING: To avoid personal injury or death, turn the ignition on, then reconnect the battery.

With the scan tool monitor active codes as you work through the following steps.

Wiggle the wiring harness and connectors of the related airbag circuit or component.

If codes are related to the Driver Airbag circuits, rotate the steering wheel from stop to stop.

If only stored codes return continue the test until the problem area has been isolated.

In the previous steps you have attempted to recreate the conditions responsible for setting active DTC in question.

Are any ACTIVE DTCs present?

Yes >> Select the appropriate diagnostic procedure from the Table of Contents in this section.

No >> No problem found at this time. Erase all codes before returning vehicle to customer.

RIGHT CURTAIN SQUIB 1 CIRCUIT SHORT

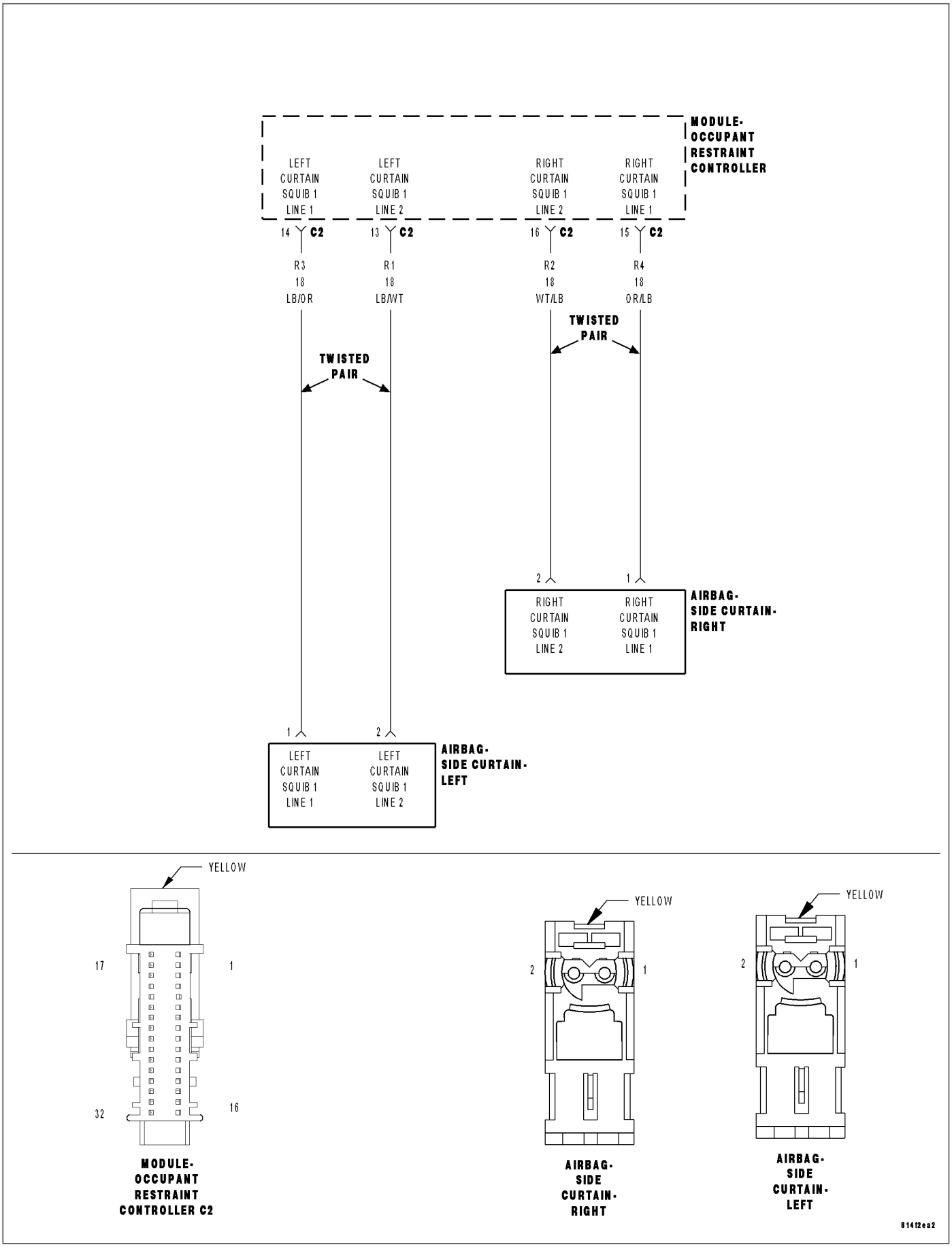

RIGHT CURTAIN SQUIB 1 CIRCUIT SHORT (CONTINUED)

For the Air Bag System circuit diagram (Refer to 8 - ELECTRICAL/RESTRAINTS - SCHEMATICS AND DIAGRAMS).

For a complete wiring diagram **Refer to Section 8W**.

- **When Monitored:**
  With the ignition on, the Occupant Restraint Controller (ORC) monitors the resistance of the Right Curtain Squib 1 circuits.
- **Set Condition:**
  The ORC has detected low resistance between the Right Curtain Squib 1 circuits.

Possible Causes
(R4) RIGHT CURTAIN SQUIB 1 LINE 1 CIRCUIT SHORTED TO (R2) RIGHT CURTAIN SQUIB 1 LINE 2 CIRCUIT
RIGHT SIDE CURTAIN AIRBAG
ORC

Diagnostic Test

1. DETERMINE ACTIVE OR STORED DTC

NOTE: Ensure the battery is fully charged.

NOTE: The scan tool, SRS Airbag Load Tool MRL 8443, and DVOM are required to perform the following test.

NOTE: When reconnecting airbag system components the Ignition must be turned off and the Battery must be disconnected.

Select Active or Stored DTC.

Is the DTC active or stored?

ORC - ACTIVE DTC
Go To 2

ORC - STORED DTC
Go To 5

RIGHT CURTAIN SQUIB 1 CIRCUIT SHORT (CONTINUED)

2. CHECK FOR SHORTED SQUIB CIRCUITS IN RIGHT SIDE CURTAIN AIRBAG

WARNING: To avoid personal injury or death, turn the ignition off, disconnect the battery and wait two minutes before proceeding.
Disconnect the Right Side Curtain Airbag connector.

WARNING: To avoid personal injury or death, do not place an intact uncoupled curtain airbag face down on a hard surface, the airbag will propel into the air if accidentally deployed.

NOTE: Check connectors - Clean and repair as necessary.
Connect the 8443 Load Tool and appropriate Jumper to the Right Side Curtain Airbag connector.

WARNING: To avoid personal injury or death, turn the ignition on, then reconnect the battery.
With the scan tool, read the active ORC DTC's.

Does the scan tool display: RIGHT CURTAIN SQUIB 1 CIRCUIT SHORT?

Yes >> Go to 3

No >> Replace the Right Side Curtain Airbag in accordance with the Service Information.
Perform ORC VERIFICATION TEST - VER 1

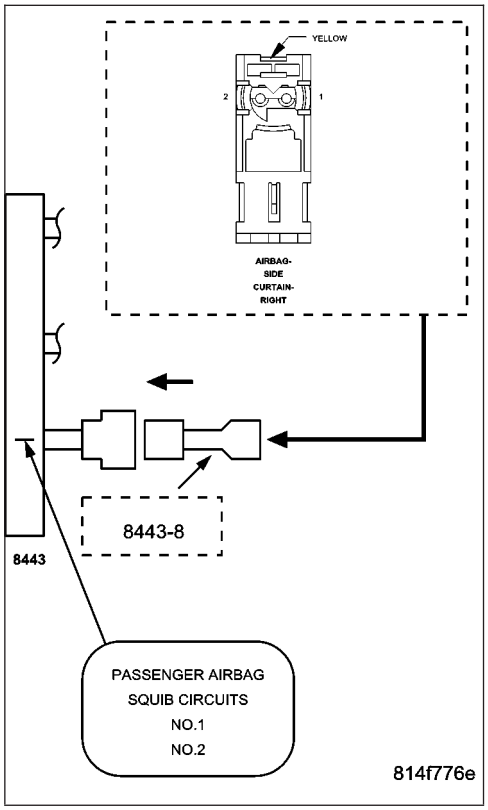

3. CHECK (R4) RIGHT CURTAIN SQUIB 1 LINE 1 CIRCUIT FOR A SHORT TO (R2) RIGHT CURTAIN SQUIB 1 LINE 2 CIRCUIT

WARNING: To avoid personal injury or death, turn the ignition off, disconnect the battery and wait two minutes before proceeding.
Disconnect the 8443 Load Tool and Jumper from the Right Side Curtain Airbag connector.

Disconnect the ORC connectors.

NOTE: Check connectors - Clean and repair as necessary.
Connect the 8443 Load Tool ORC Adaptor to the ORC connector.

Measure the resistance between the (R4) Right Curtain Squib 1 Line 1 circuit and the (R2) Right Curtain Squib 1 Line 2 circuit at the Right Side Curtain Airbag connector.

Is the resistance below 10K ohms?

Yes >> Repair the (R4) Right Curtain Squib 1 Line 1 circuit for a short to the (R2) Right Curtain Squib 1 Line 2 circuit.
Perform ORC VERIFICATION TEST - VER 1

No >> Go to 4

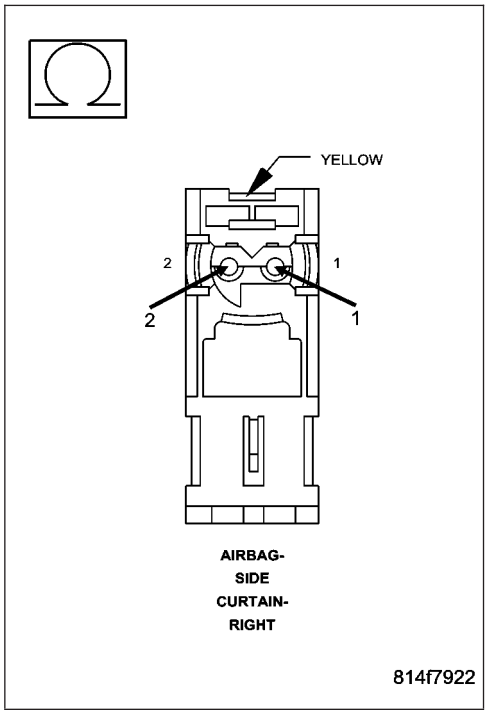

RIGHT CURTAIN SQUIB 1 CIRCUIT SHORT (CONTINUED)

4. REPLACE THE ORC

WARNING: If the Occupant Restraint Controller (ORC) is dropped at any time, it must be replaced. Failure to take the proper precautions can result in accidental airbag deployment and personal injury or death.

NOTE: When reconnecting airbag system components the Ignition must be turned off and the Battery must be disconnected.

Repair

Replace the ORC in accordance with the Service Information.

Perform ORC VERIFICATION TEST - VER 1

---

5. STORED ORC DTC

With the scan tool, record and erase all DTC's from all Airbag System Modules.

If any ACTIVE codes are present they must be resolved before diagnosing any stored codes.

WARNING: To avoid personal injury or death, turn the ignition off, disconnect the battery and wait two minutes before proceeding.

Using the wiring diagram/schematic as a guide, inspect the wiring and connectors.

Look for chaffed, pierced, pinched, or partially broken wires and broken, bent, pushed out, spread, corroded, or contaminated terminals.

The following additional checks may assist you in identifying a possible intermittent problem.

Reconnect any disconnected components and harness connector.

WARNING: To avoid personal injury or death, turn the ignition on, then reconnect the battery.

With the scan tool monitor active codes as you work through the following steps.

Wiggle the wiring harness and connectors of the related airbag circuit or component.

If codes are related to the Driver Airbag circuits, rotate the steering wheel from stop to stop.

If only stored codes return continue the test until the problem area has been isolated.

In the previous steps you have attempted to recreate the conditions responsible for setting active DTC in question.

Are any ACTIVE DTC's present?

Yes >> Select the appropriate diagnostic procedure from the Table of Contents in this section.

No >> No problem found at this time. Erase all codes before returning vehicle to customer.

RIGHT CURTAIN SQUIB 1 SHORT TO BATTERY

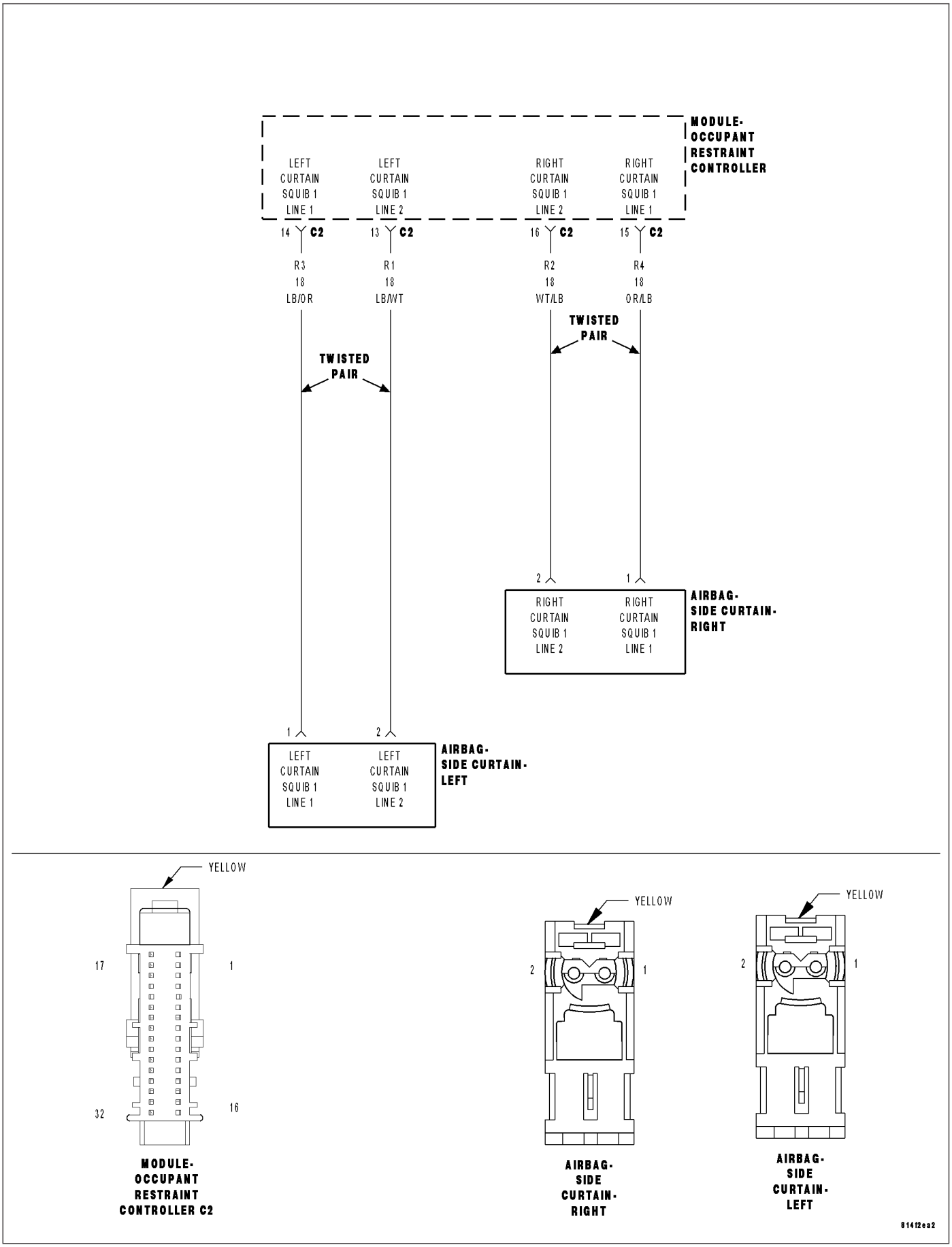

RIGHT CURTAIN SQUIB 1 SHORT TO BATTERY (CONTINUED)

For the Air Bag System circuit diagram (Refer to 8 - ELECTRICAL/RESTRAINTS - SCHEMATICS AND DIAGRAMS).

For a complete wiring diagram **Refer to Section 8W**.

- **When Monitored:**
  With the ignition on, the Occupant Restraint Controller (ORC) monitors the voltage on the Right Curtain Squib 1 circuits.
- **Set Condition:**
  When the ORC detects voltage on the Right Curtain Squib 1 circuits.

Possible Causes
(R4) RIGHT CURTAIN SQUIB 1 LINE 1 CIRCUIT OR (R2) RIGHT CURTAIN SQUIB 1 LINE 2 CIRCUIT SHORTED TO BATTERY
RIGHT SIDE CURTAIN AIRBAG
ORC

Diagnostic Test

1. DETERMINE ACTIVE OR STORED DTC

NOTE: Ensure the battery is fully charged.

NOTE: The scan tool, SRS Airbag Load Tool MRL 8443, and DVOM are required to perform the following test.

NOTE: When reconnecting airbag system components the Ignition must be turned off and the Battery must be disconnected.

Select Active or Stored DTC.

Is the DTC active or stored?

ORC - ACTIVE DTC
Go To 2

ORC - STORED DTC
Go To 5

RIGHT CURTAIN SQUIB 1 SHORT TO BATTERY (CONTINUED)

2. CHECK FOR SHORTED SQUIB CIRCUITS IN RIGHT SIDE CURTAIN AIRBAG

WARNING: To avoid personal injury or death, turn the ignition off, disconnect the battery and wait two minutes before proceeding.
Disconnect the Right Side Curtain Airbag connector.

WARNING: To avoid personal injury or death, do not place an intact uncoupled curtain airbag face down on a hard surface, the airbag will propel into the air if accidentally deployed.

NOTE: Check connectors - Clean and repair as necessary.
Connect the 8443 Load Tool and appropriate Jumper to the Right Side Curtain Airbag connector.

WARNING: To avoid personal injury or death, turn the ignition on, then reconnect the battery.
With the scan tool, read the active ORC DTC's.

Does the scan tool display: RIGHT CURTAIN SQUIB 1 SHORT TO BATTERY?

Yes >> Go To 3

No >> Replace the Right Side Curtain Airbag in accordance with the Service Information.
Perform ORC VERIFICATION TEST - VER 1

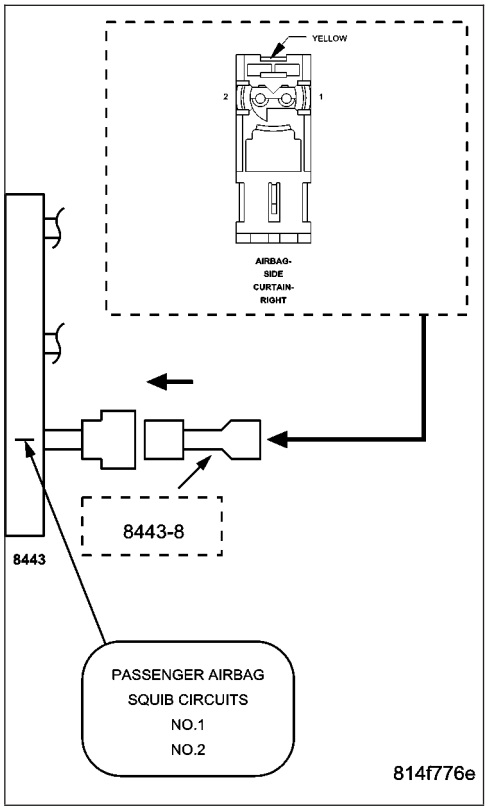

3. CHECK (R4) RIGHT CURTAIN SQUIB 1 LINE 1 CIRCUIT AND (R2) RIGHT CURTAIN SQUIB 1 LINE 2 CIRCUIT FOR A SHORT TO BATTERY

WARNING: To avoid personal injury or death, turn the ignition off, disconnect the battery and wait two minutes before proceeding.
Disconnect the 8443 Load Tool and Jumper from the Right Side Curtain Airbag connector.

Disconnect the ORC connectors.

NOTE: Check connectors - Clean and repair as necessary.
Connect the 8443 Load Tool ORC Adaptor to the ORC connector.

Measure the voltage of the (R4) Right Curtain Squib 1 Line 1 circuit between the Right Side Curtain Airbag connector and ground.

Measure the voltage of the (R2) Right Curtain Squib 1 Line 2 circuit between the Right Side Curtain Airbag connector and ground.

Is there any voltage present on either circuit?

Yes >> Repair the Right Curtain Squib 1 circuits with voltage present for a short to battery.
Perform ORC VERIFICATION TEST - VER 1

No >> Go to 4

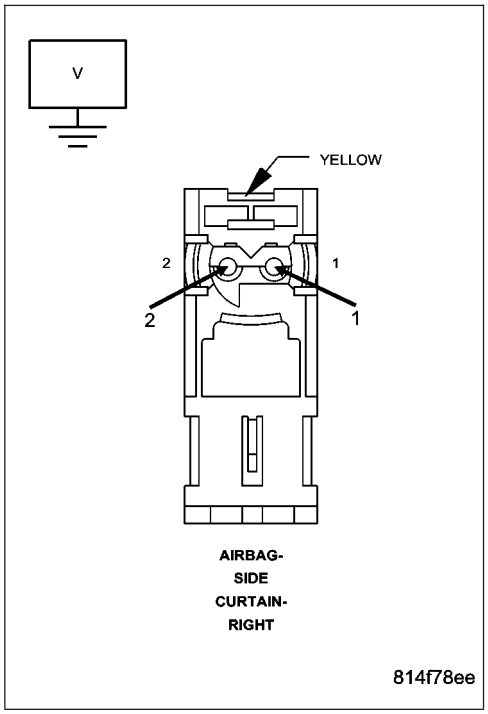

RIGHT CURTAIN SQUIB 1 SHORT TO BATTERY (CONTINUED)

4. REPLACE THE ORC

WARNING: To avoid personal injury or death, turn the ignition off, disconnect the battery and wait two minutes before proceeding.

WARNING: If the Occupant Restraint Controller (ORC) is dropped at any time, it must be replaced. Failure to take the proper precautions can result in accidental airbag deployment and personal injury or death.

NOTE: When reconnecting airbag system components the Ignition must be turned off and the Battery must be disconnected.

Repair

Replace the ORC in accordance with the Service Information.

Perform ORC VERIFICATION TEST - VER 1

---

5. STORED ORC DTC

With the scan tool, record and erase all DTC's from all Airbag System Modules.

If any ACTIVE codes are present they must be resolved before diagnosing any stored codes.

WARNING: To avoid personal injury or death, turn the ignition off, disconnect the battery and wait two minutes before proceeding.

Using the wiring diagram/schematic as a guide, inspect the wiring and connectors.

Look for chaffed, pierced, pinched, or partially broken wires and broken, bent, pushed out, spread, corroded, or contaminated terminals.

The following additional checks may assist you in identifying a possible intermittent problem.

Reconnect any disconnected components and harness connector.

WARNING: To avoid personal injury or death, turn the ignition on, then reconnect the battery.

With the scan tool monitor active codes as you work through the following steps.

Wiggle the wiring harness and connectors of the related airbag circuit or component.

If codes are related to the Driver Airbag circuits, rotate the steering wheel from stop to stop.

If only stored codes return continue the test until the problem area has been isolated.

In the previous steps you have attempted to recreate the conditions responsible for setting active DTC in question.

Are any ACTIVE DTCs present?

Yes >> Select the appropriate diagnostic procedure from the Table of Contents in this section.

No >> No problem found at this time. Erase all codes before returning vehicle to customer

---

RIGHT CURTAIN SQUIB 1 SHORT TO GROUND

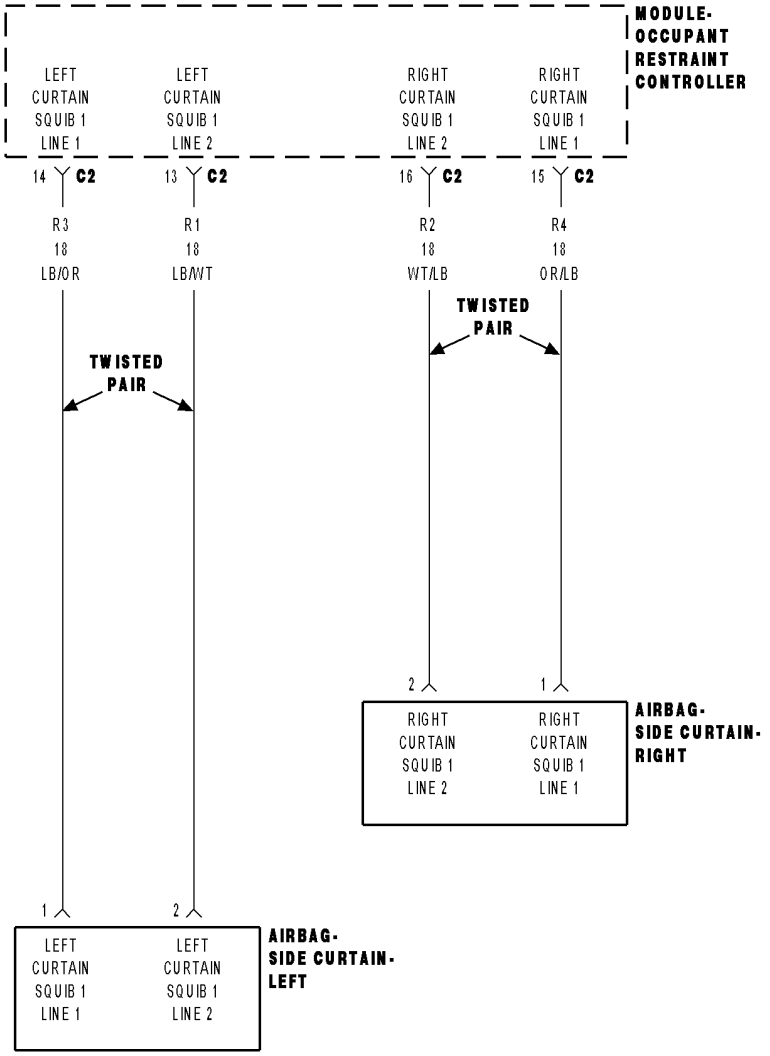

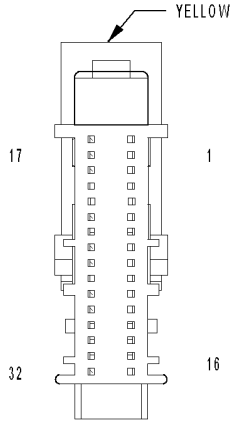

MODULE-
OCCUPANT
RESTRAINT
CONTROLLER C2

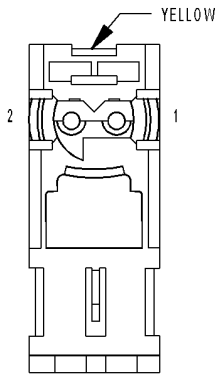

AIRBAG-
SIDE
CURTAIN-
RIGHT

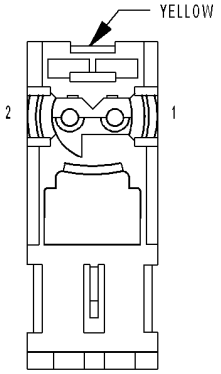

AIRBAG-
SIDE
CURTAIN-
LEFT

814f2ea2

RIGHT CURTAIN SQUIB 1 SHORT TO GROUND (CONTINUED)

For the Air Bag System circuit diagram (Refer to 8 - ELECTRICAL/RESTRAINTS - SCHEMATICS AND DIAGRAMS).

For a complete wiring diagram **Refer to Section 8W**.

- **When Monitored:**
  With the ignition on, the Occupant Restraint Controller (ORC) monitors the resistance of the Right Curtain Squib 1 circuits.
- **Set Condition:**
  The ORC has detected low resistance on the Right Curtain Squib 1 circuits.

Possible Causes
(R4) RIGHT CURTAIN SQUIB 1 LINE 1 CIRCUIT OR (R2) RIGHT CURTAIN SQUIB 1 LINE 2 CIRCUIT SHORTED TO GROUND
RIGHT SIDE CURTAIN AIRBAG
ORC

Diagnostic Test

1. DETERMINE ACTIVE OR STORED DTC

NOTE: Ensure the battery is fully charged.

NOTE: The scan tool, SRS Airbag Load Tool MRL 8443, and DVOM are required to perform the following test.

NOTE: When reconnecting airbag system components the Ignition must be turned off and the Battery must be disconnected.

Select Active or Stored DTC.

Is the DTC active or stored?

ORC - ACTIVE DTC
Go To 2

ORC - STORED DTC
Go To 5

RIGHT CURTAIN SQUIB 1 SHORT TO GROUND (CONTINUED)

2. CHECK FOR SHORTED SQUIB CIRCUITS IN RIGHT SIDE CURTAIN AIRBAG

WARNING: To avoid personal injury or death, turn the ignition off, disconnect the battery and wait two minutes before proceeding.
Disconnect the Right Side Curtain Airbag connector.

WARNING: To avoid personal injury or death, do not place an intact undeployed curtain airbag face down on a hard surface, the airbag will propel into the air if accidentally deployed.

NOTE: Check connectors - Clean and repair as necessary.
Connect the 8443 Load Tool and appropriate Jumper to the Right Side Curtain Airbag connector.

WARNING: To avoid personal injury or death, turn the ignition on, then reconnect the battery.
With the scan tool, read the active ORC DTC's.

Does the scan tool display: RIGHT CURTAIN SQUIB 1 SHORT TO GROUND?

Yes >> Go To 3

No >> Replace the Right Side Curtain Airbag in accordance with the Service Information.
Perform ORC VERIFICATION TEST - VER 1

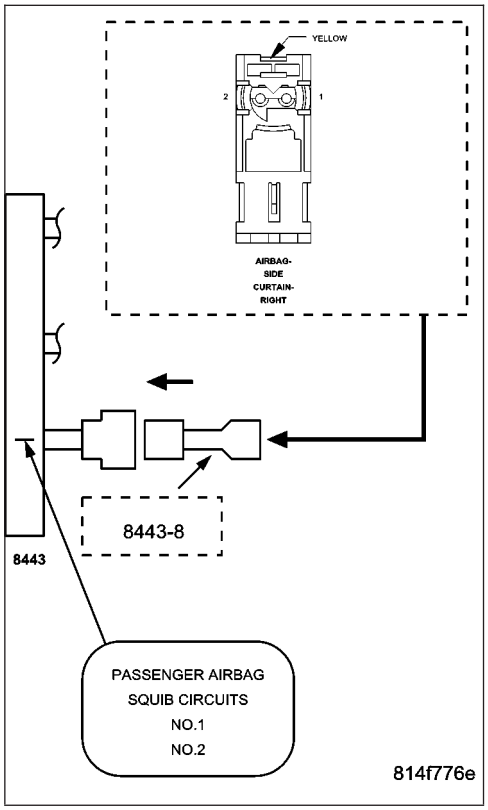

3. CHECK (R4) RIGHT CURTAIN SQUIB 1 LINE 1 CIRCUIT AND (R2) RIGHT CURTAIN SQUIB 1 LINE 2 CIRCUIT FOR A SHORT TO GROUND

WARNING: To avoid personal injury or death, turn the ignition off, disconnect the battery and wait two minutes before proceeding.
Disconnect the 8443 Load Tool and Jumper from the Right Side Curtain Airbag connector.

Disconnect the ORC connectors.

NOTE: Check connectors - Clean and repair as necessary.
Connect the 8443 Load Tool ORC Adaptor to the ORC connector.

Measure the resistance of the (R4) Right Curtain Squib 1 Line 1 circuit between ground and the Right Side Curtain Airbag connector.

Measure the resistance of the (R2) Right Curtain Squib 1 Line 2 circuit between ground and the Right Side Curtain Airbag connector.

Is the resistance below 10K ohms on either circuit?

Yes >> Repair the Right Curtain Squib 1 circuits with a resistance below 10K ohms for a short to ground.
Perform ORC VERIFICATION TEST - VER 1

No >> Go to 4

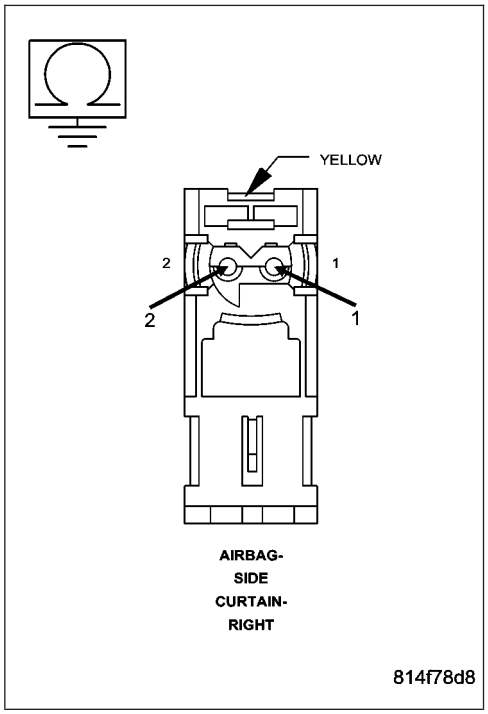

RIGHT CURTAIN SQUIB 1 SHORT TO GROUND (CONTINUED)

4. REPLACE THE ORC

WARNING: If the Occupant Restraint Controller (ORC) is dropped at any time, it must be replaced. Failure to take the proper precautions can result in accidental airbag deployment and personal injury or death.

NOTE: When reconnecting airbag system components the Ignition must be turned off and the Battery must be disconnected.

Repair

Replace the ORC in accordance with the Service Information.

Perform ORC VERIFICATION TEST - VER 1

---

5. STORED ORC DTC

With the scan tool, record and erase all DTC's from all Airbag System Modules.

If any ACTIVE codes are present they must be resolved before diagnosing any stored codes.

WARNING: To avoid personal injury or death, turn the ignition off, disconnect the battery and wait two minutes before proceeding.

Using the wiring diagram/schematic as a guide, inspect the wiring and connectors.

Look for chaffed, pierced, pinched, or partially broken wires and broken, bent, pushed out, spread, corroded, or contaminated terminals.

The following additional checks may assist you in identifying a possible intermittent problem.

Reconnect any disconnected components and harness connector.

WARNING: To avoid personal injury or death, turn the ignition on, then reconnect the battery.

With the scan tool monitor active codes as you work through the following steps.

Wiggle the wiring harness and connectors of the related airbag circuit or component.

If codes are related to the Driver Airbag circuits, rotate the steering wheel from stop to stop.

If only stored codes return continue the test until the problem area has been isolated.

In the previous steps you have attempted to recreate the conditions responsible for setting active DTC in question.

Are any ACTIVE DTC's present?

Yes >> Select the appropriate diagnostic procedure from the Table of Contents in this section.

No >> No problem found at this time. Erase all codes before returning vehicle to customer.

RIGHT SIDE IMPACT SENSOR 1 INTERNAL 1

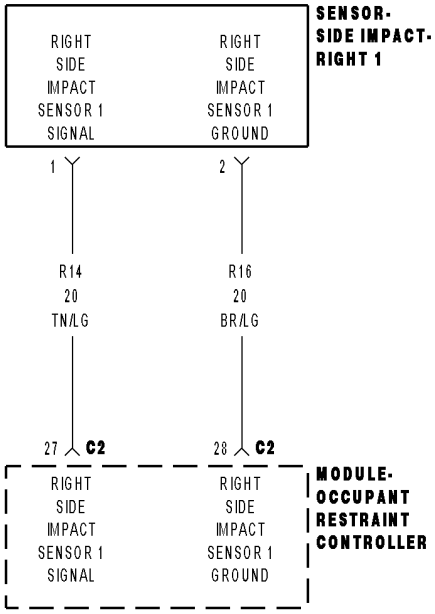

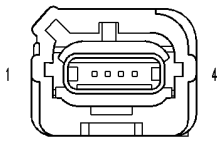

SENSOR-SIDE
IMPACT-RIGHT 1

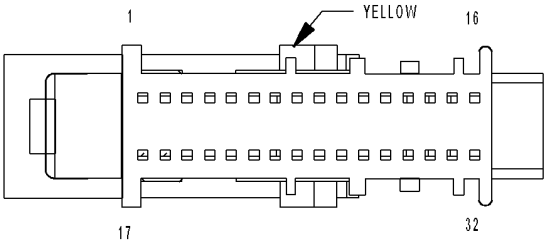

MODULE-
OCCUPANT
RESTRAINT
CONTROLLER C2

814716c5

RIGHT SIDE IMPACT SENSOR 1 INTERNAL 1 (CONTINUED)

For the Airbag System circuit diagram (Refer to 8 - ELECTRICAL/RESTRAINTS - SCHEMATICS AND DIAGRAMS).

For a complete wiring diagram **Refer to Section 8W**.

- **When Monitored:**
  The Occupant Restraint Controller (ORC) continuously communicates with the Right Side Impact Sensor 1 over the sensor signal circuit. The sensor communication and on board diagnostics are powered by the ORC signal.
- **Set Condition:**
  This code will set, if the ORC and the Right Side Impact Sensor 1 do not establish and maintain valid data communications.

Possible Causes
(R14) RIGHT SIDE IMPACT SENSOR 1 SIGNAL CIRCUIT SHORTED TO BATTERY
(R14) RIGHT SIDE IMPACT SENSOR 1 SIGNAL CIRCUIT SHORTED TO GROUND
(R14, R16) RIGHT SIDE IMPACT SENSOR 1 CIRCUITS SHORTED TOGETHER
(R16) RIGHT SIDE IMPACT SENSOR 1 GROUND CIRCUIT OPEN
(R14) RIGHT SIDE IMPACT SENSOR 1 SIGNAL CIRCUIT OPEN
ORC, RIGHT SIDE IMPACT SENSOR 1

Diagnostic Test

1. VERIFY THAT DTC RIGHT SIDE IMPACT SENSOR 1 INTERNAL 1 IS ACTIVE

NOTE: Ensure the battery is fully charged.

NOTE: When reconnecting Airbag system components, the ignition must be turned off and the battery must be disconnected.

Turn the ignition on.

With the scan tool, read ORC DTCs.

Does the scan tool display active: RIGHT SIDE IMPACT SENSOR 1 INTERNAL 1?

Yes >> Go To 2

No >> Go To 9

RIGHT SIDE IMPACT SENSOR 1 INTERNAL 1 (CONTINUED)

2. CHECK THE (R14, R16) RIGHT SIDE IMPACT SENSOR 1 SIGNAL AND GROUND CIRCUITS FOR A SHORT TO BATTERY

WARNING: To avoid personal injury or death, turn the ignition off, disconnect the battery and wait two minutes before proceeding.
Disconnect the Right side Impact Sensor 1 connector.

Disconnect the ORC connector.

WARNING: To avoid personal injury or death, turn the ignition on, then reconnect the battery.
Measure the voltage of the (R14) Right Side Impact Sensor 1 Signal circuit and (R16) Right Side Impact Sensor 1 Ground circuit at the Right Side Impact Sensor 1 connector and ground.

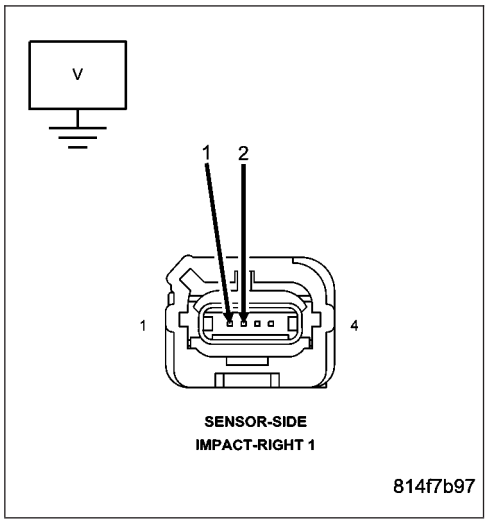

Is there any voltage present?

Yes >> Repair the (R14, R16) Right Side Impact Sensor 1 circuits for a short to battery.
Perform the ORC VERIFICATION TEST - VER 1.

No >> Go To 3

3. CHECK THE (R14) RIGHT SIDE IMPACT SENSOR 1 SIGNAL CIRCUIT FOR A SHORT TO GROUND

WARNING: To avoid personal injury or death, turn ignition on, then reconnect the battery.
Measure the resistance of the (R14) Right Side Impact Sensor 1 Signal circuit between the Right Side Impact Sensor 1 connector and ground.

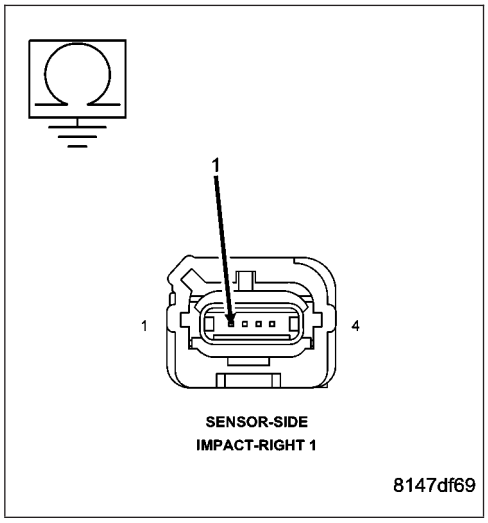

Is the resistance below 100K ohms?

Yes >> Repair the (R14) Right Side Impact Sensor 1 Signal circuit for a short to ground.
Perform the ORC VERIFICATION TEST - VER 1.

No >> Go To 4

RIGHT SIDE IMPACT SENSOR 1 INTERNAL 1 (CONTINUED)

4. CHECK THE (R14, R16) RIGHT SIDE IMPACT SENSOR CIRCUITS FOR A SHORT TOGETHER

Measure the resistance between the (R14) Right Side Impact Sensor 1 Signal circuit and (R16) Right Side Impact Sensor 1 Ground circuit at the Right Side Impact Sensor 1 connector.

Is the resistance below 100K ohms?

Yes >> Repair the (R14, R16) Right Side Impact Sensor 1 circuits shorted together.
Perform the ORC VERIFICATION TEST - VER 1.

No >> Go To 5

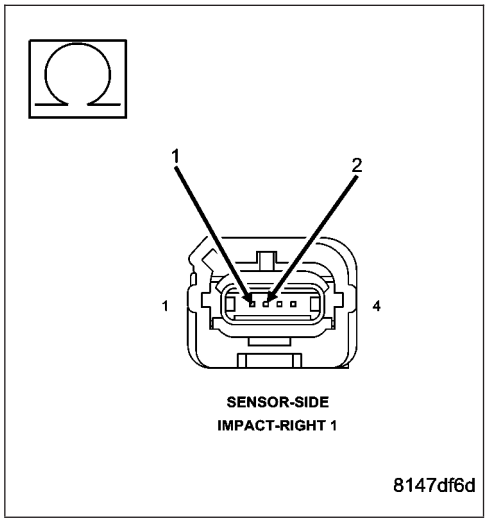

5. CHECK THE (R16) RIGHT SIDE IMPACT SENSOR 1 GROUND CIRCUIT FOR AN OPEN OR HIGH RESISTANCE

Connect the 8443 Load Tool ORC Adaptor to the Occupant Control Module connector.

Measure the resistance of the (R16) Right Side Impact Sensor 1 Ground circuit between the Right Side Impact Sensor 1 connector and the 8443 Load Tool ORC Adaptor.

Is the resistance below 1 ohm?

Yes >> Go To 6

No >> Repair the (R16) Right Side Impact Sensor 1 Ground circuit for an open or high resistance.
Perform the ORC VERIFICATION TEST - VER 1.

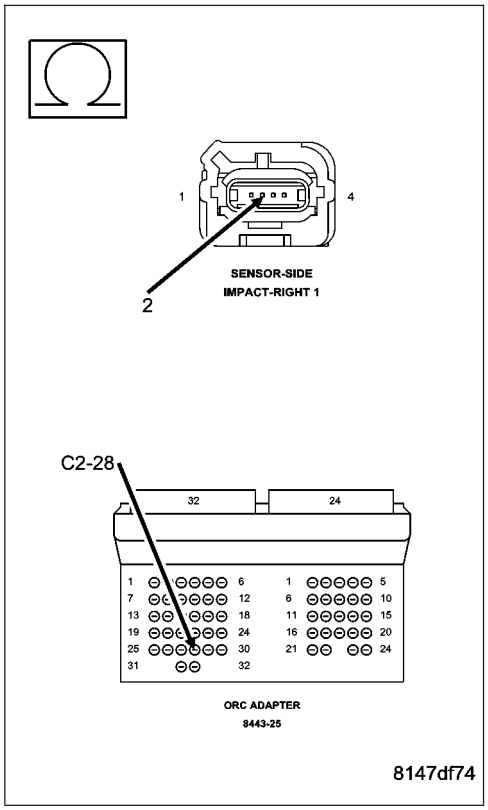

RIGHT SIDE IMPACT SENSOR 1 INTERNAL 1 (CONTINUED)

6. CHECK THE (R14) RIGHT SIDE IMPACT SENSOR 1 CIRCUIT FOR AN OPEN OR HIGH RESISTANCE

Measure the resistance of the (R14) Right Side Impact Sensor 1 Signal circuit between the Right Side Impact Sensor 1 connector and the 8443 Load Tool ORC Adaptor.

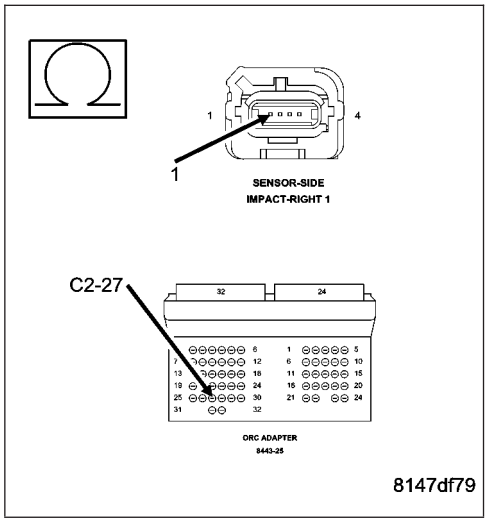

Is the resistance below 1 ohm?

Yes >> Go To 7

No >> Repair the (R14) Right Side Impact Sensor 1 Signal circuit for an open or high resistance.
Perform the ORC VERIFICATION TEST - VER 1.

---

7. CHECK OPERATION OF THE RIGHT SIDE IMPACT SENSOR 1

Replace the Right Side Impact Sensor 1.

Reconnect the vehicle body harness to the impact sensor.

Remove any special tools or jumper wires and reconnect all previously disconnected components - except the Battery.

WARNING: To avoid personal injury or death, turn the ignition on, then reconnect the battery.

Connect the scan tool to the Data Link Connector - use the most current software available.

Use the scan tool and erase the stored codes in all airbag system modules.

Turn the Ignition Off, and wait 15 seconds before turning the Ignition On.

Wait one minute, and read active codes and if there are none present read the stored codes.

Did DTC reset and is it active?

Yes >> Go To 8

No >> Repair is complete.
Perform the ORC VERIFICATION TEST - VER 1.

---

8. REPLACE THE OCCUPANT RESTRAINT CONTROLLER

WARNING: To avoid personal injury or death, turn the ignition off, disconnect the battery and wait two minutes before proceeding.

WARNING: If the occupant restraint controller is dropped at any time, it must be replaced. Failure to take the proper precautions could result in accidental airbag deployment and personal injury or death.

If there are no possible causes remaining, view repair.

Repair

Replace the Occupant Restraint Controller in accordance with Service Instructions.
Perform the ORC VERIFICATION TEST - VER 1.

RIGHT SIDE IMPACT SENSOR 1 INTERNAL 1 (CONTINUED)

9. TEST FOR AN INTERMITTENT CONDITION

With the scan tool, record and erase all DTC's from all Airbag modules.

If any ACTIVE codes are present they must be resolved before diagnosing any stored codes.

WARNING: To avoid personal injury or death, turn the ignition off, disconnect the battery and wait two minutes before proceeding.

Using the wiring diagram/schematic as a guide, inspect the wiring and connectors.

Look for chaffed, pierced, pinched, or partially broken wires and broken, bent, pushed out, spread, corroded, or contaminated terminals.

The following additional checks may assist you in identifying a possible intermittent problem.

Reconnect any disconnected components and harness connector.

WARNING: To avoid personal injury or death, turn the ignition on, then reconnect the battery.

With the scan tool monitor active codes as you work through the following steps.

WARNING: To avoid personal injury or death, maintain a safe distance from all airbags while performing the following steps.

Wiggle the wiring harness and connectors of the related airbag circuit or component.

If codes are related to the Driver Airbag circuits, rotate the steering wheel from stop to stop.

If only stored codes return continue the test until the problem area has been isolated.

In the previous steps you have attempted to recreate the conditions responsible for setting active DTC in question.

Are any ACTIVE DTCs present?

Yes >> Select the appropriate symptom from Symptom List.

No >> No problem found at this time. Erase all codes before returning vehicle to customer.

STORED ENERGY FIRING 1

For a complete wiring diagram **Refer to Section 8W**.

- **When Monitored:**
  With the ignition on. The module's on board diagnostics continuously performs internal circuit tests.
- **Set Condition:**
  This DTC will set if the module identifies an out of range internal circuit.

Possible Causes
OCCUPANT RESTRAINT CONTROLLER

Diagnostic Test

1. REPLACE OCCUPANT RESTRAINT CONTROLLER

Turn the ignition on.

With the scan tool, erase and read ORC DTCs.

WARNING: To avoid personal injury or death, turn the ignition off, disconnect the battery and wait two minutes before proceeding.

WARNING: If the Occupant Restraint Controller is dropped at any time, it must be replaced. Failure to take proper precautions can result in accidental airbag deployment and personal injury or death.

When this code is set, view repair.

Repair

Replace the Occupant Restraint Controller in accordance with the Service Information.

Perform the ORC VERIFICATION TEST-VER. 1.

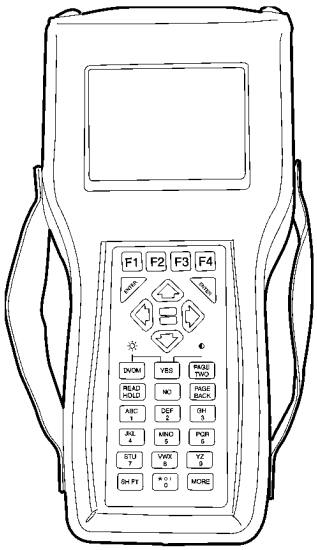

8136f94b

VEHICLE BODY STYLE MISMATCH

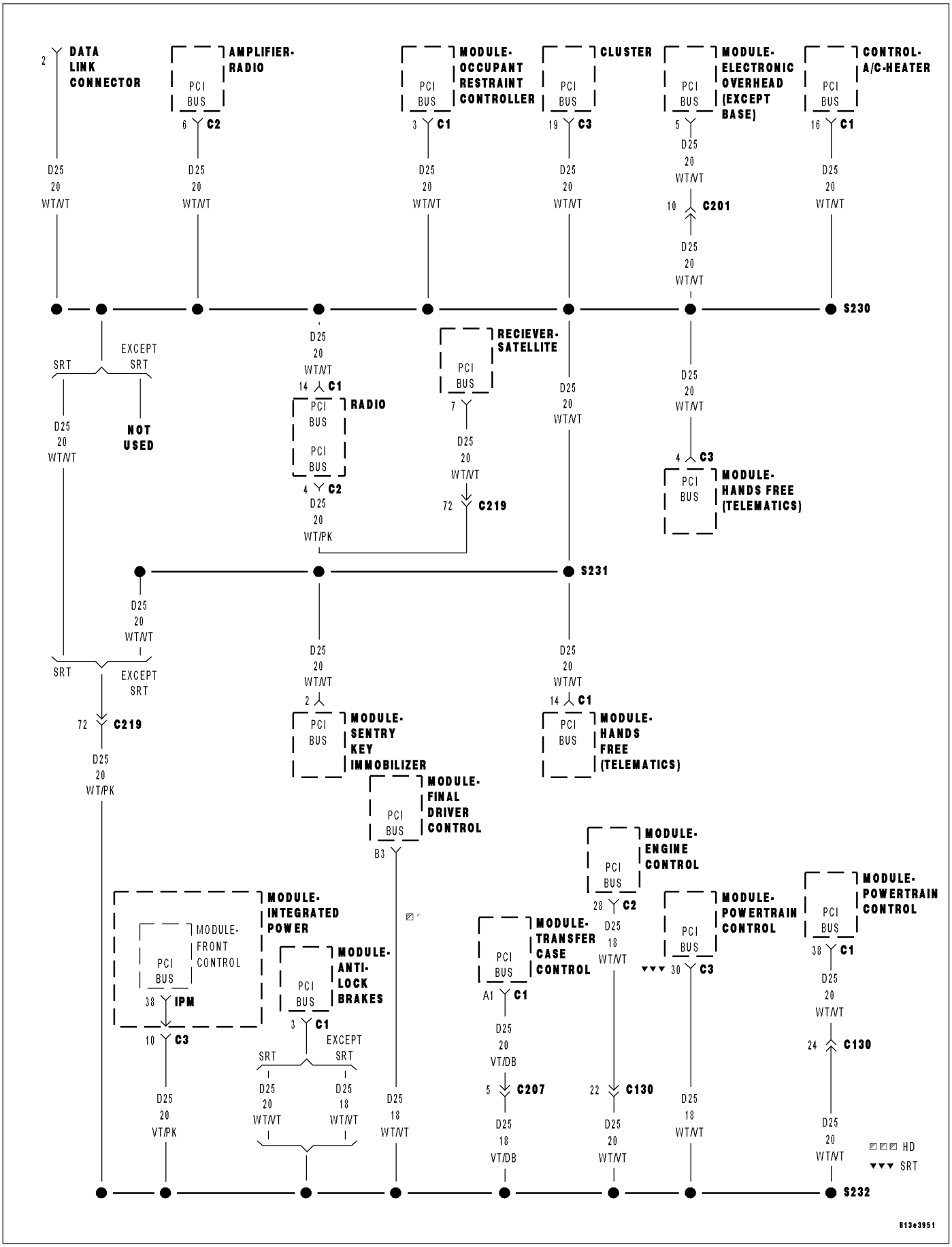

VEHICLE BODY STYLE MISMATCH (CONTINUED)

For the Air Bag System circuit diagram (Refer to 8 - ELECTRICAL/RESTRAINTS - SCHEMATICS AND DIAGRAMS).

For a complete wiring diagram **Refer to Section 8W**.

- **When Monitored:**
  When the ignition is on, the Occupant Restraint Controller (ORC) monitors the PCI Bus for the vehicle body style message from the Powertrain Control Module (PCM).
- **Set Condition:**
  With ignition on, If the ORC does not receive the vehicle Body Style messages on the bus the code will set.

Possible Causes
PCM, COMMUNICATION FAILURE
PCM, INCORRECT OR MISSING VIN
PCM, INCORRECT OR MISSING VEHICLE BODY STYLE MESSAGE
ORC, VEHICLE BODY STYLE MISMATCH

Diagnostic Test

1. DETERMINE ACTIVE OR STORED DTC

Turn the ignition on.

NOTE: Ensure the battery is fully charged.

NOTE: For the purpose of this test, the ACM and AECM modules will be referred to as an ORC.

NOTE: When reconnecting Airbag system components, the ignition must be turned off and the battery must be disconnected.

Select ACTIVE or STORED DTC:

ORC - ACTIVE DTC
Go To 2

ORC - STORED DTC
Go To 6

---

2. PCM, COMMUNICATION FAILURE

With the Scan Tool, ensure that the PCM is Active on the Bus.

Is the PCM Active on the Bus?

Yes >> Go To 3

No >> (Refer to 8 - ELECTRICAL/ELECTRONIC CONTROL MODULES - DIAGNOSIS AND TESTING) for No Response diagnostic test procedures.
Perform ORC VERIFICATION TEST - VER 1.

VEHICLE BODY STYLE MISMATCH (CONTINUED)

3. PCM, INCORRECT OR MISSING VIN

With the Scan Tool select ENGINE, MISCELLANEOUS, MISC FUNCTION, and then CHECK VIN to read the Vehicle Identification Number in the Powertrain Control Module.

Compare the VIN displayed on the Scan Tool screen and the Vehicle VIN plate.

Does the VIN plate and the PCM VIN match?

Yes >> Go To 4

No >> Replace and program the Powertrain Control Module in accordance with the Service Information. Perform POWERTRAIN VERIFICATION TEST. (Refer to 9 - ENGINE - DIAGNOSIS AND TESTING). Perform ORC VERIFICATION TEST - VER 1.

---

4. PCM, INCORRECT OR MISSING VEHICLE BODY STYLE MESSAGE

With the Scan Tool, select the PCI BUS INFO to view the Body Style from PCM.

Does the Scan Tool show the correct Body Style?

Yes >> Go To 5

No >> Replace and program the Powertrain Control Module in accordance with the Service Information. Perform POWERTRAIN VERIFICATION TEST. (Refer to 9 - ENGINE - DIAGNOSIS AND TESTING). Perform ORC VERIFICATION TEST - VER 1.

---

5. ORC, VEHICLE BODY STYLE MISMATCH

WARNING: TO AVOID PERSONAL INJURY OR DEATH, TURN THE IGNITION OFF, DISCONNECT THE BATTERY AND WAIT TWO MINUTES BEFORE PROCEEDING.

WARNING: IF THE OCCUPANT RESTRAINT CONTROLLER IS DROPPED AT ANY TIME, IT MUST BE REPLACED. FAILURE TO TAKE THE PROPER PRECAUTIONS COULD RESULT IN ACCIDENTAL AIRBAG DEPLOYMENT AND PERSONAL INJURY OR DEATH.

NOTE: When reconnecting airbag system components the Ignition must be turned off and the Battery must be disconnected.

If there are no possible causes remaining, view repair.

Repair

Replace the Occupant Restraint Controller (ORC) in accordance with the Service Information. Perform ORC VERIFICATION TEST - VER 1.

VEHICLE BODY STYLE MISMATCH (CONTINUED)

6. CHECKING STORED OR INTERMITTENT CODES

With the Scan Tool, record and erase all DTC's from all Airbag modules.

If equipped with Passenger Airbag On - Off switch, read the DTC's in all switch positions.

If any ACTIVE codes are present they must be resolved before diagnosing any stored codes.

WARNING: TO AVOID PERSONAL INJURY OR DEATH, TURN THE IGNITION OFF, DISCONNECT THE BATTERY AND WAIT TWO MINUTES BEFORE PROCEEDING.

Using the wiring diagram/schematic as a guide, inspect the wiring and connectors.

Look for chaffed, pierced, pinched, or partially broken wires and broken, bent, pushed out, spread, corroded, or contaminated terminals.

The following additional checks may assist you in identifying a possible intermittent problem.

Reconnect any disconnected components and harness connector.

WARNING: TO AVOID PERSONAL INJURY OR DEATH, TURN THE IGNITION ON, THEN RECONNECT THE BATTERY.

With the Scan Tool, monitor active codes as you work through the following steps.

WARNING: TO AVOID PERSONAL INJURY OR DEATH, MAINTAIN A SAFE DISTANCE FROM ALL AIRBAGS WHILE PERFORMING THE FOLLOWING STEPS.

Wiggle the wiring harness and connectors of the related airbag circuit or component.

If codes are related to the Driver Airbag circuits, rotate the steering wheel from stop to stop.

If only stored codes return continue the test until the problem area has been isolated.

In the previous steps you have attempted to recreate the conditions responsible for setting active DTC in question.

Does the scan tool display any ACTIVE DTCs?

Yes >> Select the appropriate diagnostic procedure from the Table of Contents in this section.

No >> No problem found at this time. Erase all codes before returning vehicle to customer.

*AIRBAG INDICATOR ON WITHOUT ACTIVE TROUBLE CODES

For a complete wiring diagram **Refer to Section 8W**.

Possible Causes
AIRBAG WARNING INDICATOR ON WITHOUT ACTIVE TROUBLE CODES
INSTRUMENT CLUSTER PROBLEMS

Diagnostic Test

1. AIRBAG WARNING INDICATOR ON WITHOUT ACTIVE TROUBLE CODES

NOTE: Ensure the battery is fully charged.
Turn the ignition on.
Make sure that all active DTC's have been repaired before performing this procedure.
With the DRBIII® read the WARNING LAMP STATES.

With no active DTCs, Does the LAMP REQ by ACM monitor show ON?

Yes >> Go To 2

No >> (Refer to 8 - ELECTRICAL/INSTRUMENT CLUSTER - DIAGNOSIS AND TESTING) for problems related to Instrument Cluster.
Perform ORC VERIFICATION TEST - VER 1.

---

2. REPLACE THE ORC

WARNING: If the Occupant Restraint Controller (ORC) is dropped at any time, it must be replaced. Failure to take the proper precautions can result in accidental airbag deployment and personal injury or death.

NOTE: When reconnecting airbag system components the Ignition must be turned off and the Battery must be disconnected.

Repair

Replace the ORC in accordance with the Service Information.
Perform ORC VERIFICATION TEST - VER 1

NOTE: When reconnecting Airbag system components, the ignition must be turned off and the battery must be disconnected.

---

*ORC VERIFICATION TEST - VER 1

For a complete wiring diagram **Refer to Section 8W**.

1. *ORC VERIFICATION TEST - VER 1

1. Remove any special tools or jumper wires and reconnect all previously disconnected components - except the Battery.

WARNING: TO AVOID PERSONAL INJURY OR DEATH, TURN THE IGNITION ON THEN RECONNECT THE BATTERY.

2. Connect the scan tool to the Data Link Connector - use the most current software available.
3. With the scan tool to erase stored DTCs in all airbag system modules.
4. Turn the ignition off, and wait 15 seconds, then turn the ignition on.
5. Wait one minute, and read active codes and if there are none present read the stored codes.
6. Note: If equipped with Airbag On - Off switch, read the DTC's in all switch positions.
7. Note: Read the DTC's in all airbag system related modules.
8. If the scan tool shows any active or stored codes, return to the Table of Contents and follow path specified for that trouble code. If no active or stored codes are present, the repair is complete.

Are any DTC's present or is the original condition still present?

Yes >> Repair is not complete, refer to appropriate symptom list.

No >> Repair is complete.

SCHEMATICS AND DIAGRAMS

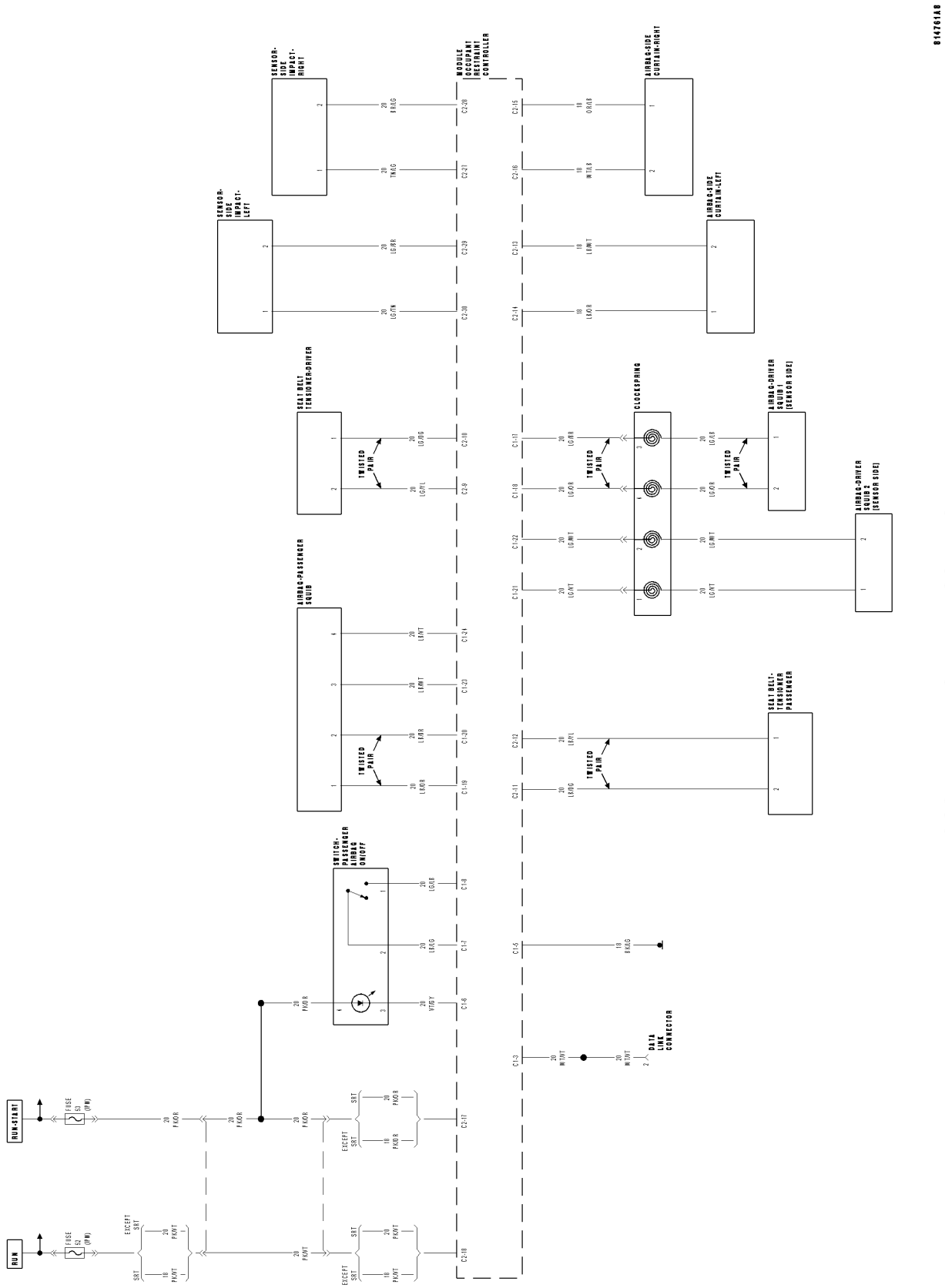

RESTRAINTS - SERVICE INFORMATION

TABLE OF CONTENTS

page

RESTRAINTS - SERVICE INFORMATION
DESCRIPTION 246
OPERATION 249
WARNING
WARNINGS - RESTRAINT SYSTEM 250
DIAGNOSIS AND TESTING
SUPPLEMENTAL RESTRAINT SYSTEM 251
STANDARD PROCEDURE
HANDLING NON-DEPLOYED
SUPPLEMENTAL RESTRAINTS 251
SERVICE AFTER A SUPPLEMENTAL
RESTRAINT DEPLOYMENT 251
SUPPLEMENTAL RESTRAINTS
VERIFICATION TEST 254
MODULE-OCCUPANT RESTRAINT CONTROLLER
DESCRIPTION 255
OPERATION 255
REMOVAL
MODULE 257
COVER 257
INSTALLATION
MODULE 258
COVER 259
CHILD RESTRAINT ANCHOR
DESCRIPTION 260
OPERATION 262
REMOVAL - TETHER STRAP 262
INSTALLATION - TETHER STRAP 263
CLOCKSPRING
DESCRIPTION 264
OPERATION 264
STANDARD PROCEDURE
CLOCKSPRING CENTERING 265
REMOVAL 266
INSTALLATION 267
AIR BAG-SIDE CURTAIN
DESCRIPTION 269
OPERATION 270
REMOVAL 270
INSTALLATION 271
AIR BAG-DRIVER
DESCRIPTION 272
OPERATION 273
REMOVAL 274
DISASSEMBLY 275
ASSEMBLY 276
INSTALLATION 278
SENSOR-SIDE IMPACT
DESCRIPTION 280
OPERATION 280
REMOVAL
STANDARD CAB 280
QUAD CAB 281
INSTALLATION
STANDARD CAB 282
QUAD CAB 283
SWITCH-PASSENGER AIRBAG DISARM
DESCRIPTION 284
OPERATION 285
REMOVAL 285
INSTALLATION 286
AIR BAG-PASSENGER
DESCRIPTION 286
OPERATION 288
REMOVAL 288
INSTALLATION 289
SEAT BELT
REMOVAL - FRONT CENTER 291
INSTALLATION - FRONT CENTER 291
SEAT BELT BUCKLE
REMOVAL
FRONT OUTBOARD 292
FRONT CENTER & CENTER ANCHOR 293
REAR CENTER & LEFT OUTBOARD 294
REAR CENTER ANCHOR & RIGHT
OUTBOARD 295
INSTALLATION
FRONT OUTBOARD 296
FRONT CENTER & CENTER ANCHOR 297
REAR CENTER & LEFT OUTBOARD 298
REAR CENTER ANCHOR & RIGHT
OUTBOARD 299
SEAT BELT & RETRACTOR
DESCRIPTION - AUTOMATIC LOCKING
RETRACTOR 301
OPERATION - AUTOMATIC LOCKING
RETRACTOR 301
REMOVAL
FRONT CENTER 301
FRONT OUTBOARD - STANDARD CAB 303
FRONT OUTBOARD - QUAD CAB 304
REAR CENTER 306
REAR OUTBOARD 307
INSTALLATION
FRONT CENTER 308
FRONT OUTBOARD - STANDARD CAB 309
FRONT OUTBOARD - QUAD CAB 311
REAR CENTER 313
REAR OUTBOARD 314
SWITCH-SEAT BELT DRIVER
DESCRIPTION 315

OPERATION 316
DIAGNOSIS AND TESTING
SEAT BELT SWITCH 316
SEAT BELT-TENSIONER
DESCRIPTION 317
OPERATION 317
SEAT BELT TENSION REDUCER
DESCRIPTION 318
OPERATION 318
DIAGNOSIS AND TESTING
SEAT BELT TENSION REDUCER 318
SEAT BELT TURNING LOOP ADJUSTER
REMOVAL 319
INSTALLATION 320

RESTRAINTS - SERVICE INFORMATION

DESCRIPTION

An occupant restraint system is standard factory-installed safety equipment on this model. Available occupant restraints for this model include both active and passive types. Active restraints are those which require the vehicle occupants to take some action to employ, such as fastening a seat belt; while passive restraints require no action by the vehicle occupants to be employed.

ACTIVE RESTRAINTS

The active restraints for this model include:

- **Front Seat Belts** - Both outboard front seating positions are equipped with three-point seat belt systems employing a lower B-pillar mounted inertia latch-type emergency locking retractor, height-adjustable upper B-pillar mounted turning loops, a fixed lower seat belt anchor secured to the lower B-pillar (standard cab) or floor panel adjacent to the B-pillar (quad cab), and a traveling end-release seat belt buckle secured to the inboard seat track. The driver side retractor for standard cab models includes an electrically actuated seat belt tension reducer. The passenger side front seat retractor for all models is also switchable from an emergency locking retractor to an automatic locking retractor. The front seat belt buckle for the driver side of all models includes an integral seat belt switch that detects whether its seat belt has been fastened. The center front seating position for standard cab models is also equipped with a three-point seat belt employing a floor panel mounted inertia latch-type retractor, a routing bracket and bezel near the top of the cab back panel, and two fixed end-release buckles secured to the center seat cushion frame. The center front seating position for quad cab models is equipped with a fixed lap belt and an end-release buckle secured to the center seat cushion frame.
- **Rear Seat Belts** - All three rear seating positions are equipped with three-point seat belt systems. The outboard seating position belts employ a lower C-pillar mounted inertia latch-type emergency locking retractor, a fixed position upper C-pillar mounted turning loop, and a fixed lower seat belt anchor secured to the lower C-pillar. The rear seat center seating position belt has a rear floor panel mounted inertia latch-type emergency locking retractor and a routing bracket and bezel on the top of the cab back panel. The end-release buckle units for the right outboard seating position and the center seating position lower anchor are integral to the center retractor mounting bracket on the rear floor panel. The end-release buckle units for the center and left outboard seating positions are individually secured to the rear floor panel on models with the standard equipment rear bench seat, or secured with the rear seat mounting hardware on models with the optional 60/40 split rear bench seat.
- **Child Restraint Anchors** - All standard cab models are equipped with two, fixed-position, child seat upper tether anchors that are integral to the upper cab back panel reinforcement and concealed behind individual trim cover and bezel units that are integral to the cab back trim panel. All quad cab models are equipped with three child seat upper tether anchor straps that are secured to the upper cab back panel reinforcement, behind the upright rear seat back. Two lower anchors are also provided for the front outboard seating position of standard cab models, and for each rear outboard seating position on quad cab models. These lower anchors are accessed from the front of the seat where the seat back meets the seat cushion. The child seat tether and lower anchors for the front seat are deleted on quad cab models.

PASSIVE RESTRAINTS

The passive restraints available for this model include the following:

- **Dual Front Airbags** - Multistage driver and front passenger airbags are available for this model. This airbag system is a passive, inflatable, Supplemental Restraint System (SRS) and vehicles with this equipment can be readily identified by the “SRS - AIRBAG” logo molded into the driver airbag trim cover in the center of the steering wheel and also into the passenger airbag door on the instrument panel above the glove box. Vehicles with the airbag system can also be identified by the airbag indicator, which will illuminate in the instrument cluster for about six seconds as a bulb test each time the ignition switch is turned to the On position. A pyrotechnic-type seat belt tensioner is integral to the front outboard seat belt retractors mounted on each lower B-pillar of all models equipped with dual front airbags.
- **Side Curtain Airbags** - Optional side curtain airbags are available for this model when it is also equipped with dual front airbags. This airbag system is a passive, inflatable, Supplemental Restraint System (SRS) and vehicles with this equipment can be readily identified by a molded identification trim button with the “SRS - AIRBAG” logo located on the headliner above each B-pillar.

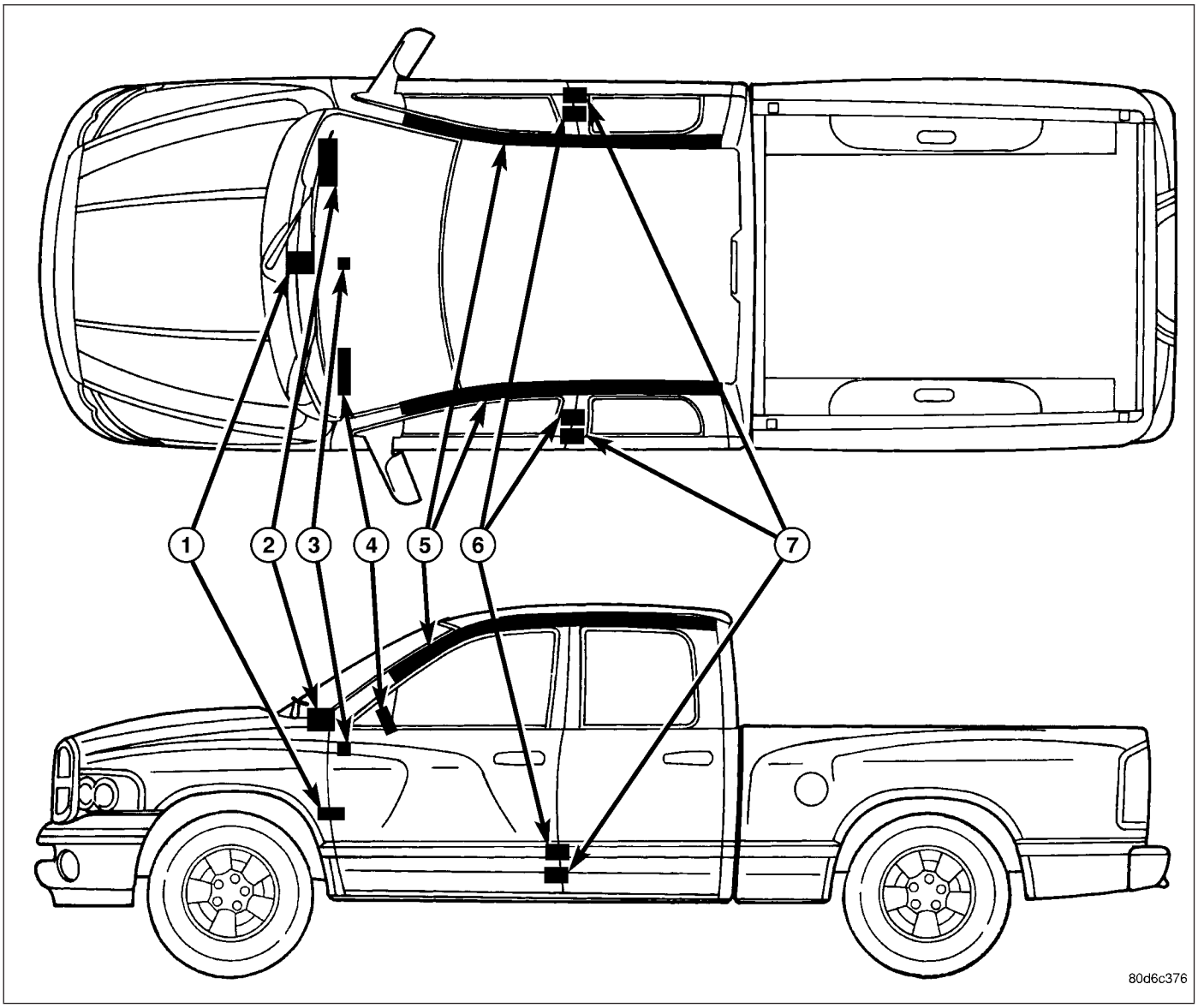

The supplemental restraint system includes the following major components, which are described in further detail elsewhere in this service information:

- **Airbag Control Module (1)** - The Airbag Control Module (ACM) is also sometimes referred to as the Occupant Restraint Controller (ORC). The ACM is located on a mount on the floor panel transmission tunnel, below the center of the instrument panel.
- **Airbag Indicator** - The airbag indicator is integral to the ElectroMechanical Instrument Cluster (EMIC), which is located on the instrument panel in front of the driver.
- **Clockspring** - The clockspring is located near the top of the steering column, directly beneath the steering wheel.
- **Driver Airbag (4)** - The driver airbag is located in the center of the steering wheel, beneath the driver airbag trim cover.
- **Driver Knee Blocker** - The driver knee blocker is a structural unit secured to the back side of and integral to the instrument panel steering column opening cover.
- **Passenger Airbag (2)** - The passenger airbag is located on the instrument panel, beneath the passenger airbag door on the instrument panel above the glove box on the passenger side of the vehicle.
- **Passenger Airbag On/Off Switch (3)** - Standard cab models without a rear seat are equipped with a passenger airbag on/off switch, which is located on the right side of the instrument panel center bezel.
- **Passenger Knee Blocker** - The passenger knee blocker is a structural reinforcement that is integral to and concealed within the glove box door.
- **Seat Belt Tensioner (7)** - The seat belt tensioner is integral to the front outboard seat belt retractor units on vehicles equipped with dual front airbags.

- **Side Impact Sensor (6)** - Two side impact sensors are used on vehicles equipped with the optional side curtain airbags, one left side and one right side. One sensor is located behind the B-pillar trim near the base of each B-pillar.
- **Side Curtain Airbag (5)** - In vehicles equipped with this option, a side curtain airbag is located on each inside roof side rail above the headliner, and extends from the A-pillar to the B-pillar on standard cab models, and from the A-pillar to the C-pillar on quad cab models.

The ACM and the EMIC each contain a microprocessor and programming that allow them to communicate with each other using the Programmable Communications Interface (PCI) data bus. This method of communication is used by the ACM for control of the airbag indicator in the EMIC on all models equipped with dual front airbags. (Refer to 8 - ELECTRICAL/ELECTRONIC CONTROL MODULES/COMMUNICATION - DESCRIPTION).

Hard wired circuitry connects the supplemental restraint system components to each other through the electrical system of the vehicle. These hard wired circuits are integral to several wire harnesses, which are routed throughout the vehicle and retained by many different methods. These circuits may be connected to each other, to the vehicle electrical system, and to the supplemental restraint system components through the use of a combination of soldered splices, splice block connectors, and many different types of wire harness terminal connectors and insulators. Refer to the appropriate wiring information. The wiring information includes wiring diagrams, proper wire and connector repair procedures, further details on wire harness routing and retention, as well as pin-out and location views for the various wire harness connectors, splices and grounds.

OPERATION

ACTIVE RESTRAINTS

The primary passenger restraints in this or any other vehicle are the standard equipment factory-installed seat belts and child restraint anchors. Seat belts and child restraint anchors are referred to as an active restraint because the vehicle occupants are required to physically fasten and properly adjust these restraints in order to benefit from them. See the owner's manual in the vehicle glove box for more information on the features, use and operation of all of the factory-installed active restraints.

PASSIVE RESTRAINTS

The passive restraints are referred to as a supplemental restraint system because they were designed and are intended to enhance the protection for the occupants of the vehicle **only** when used in conjunction with the seat belts. They are referred to as passive restraints because the vehicle occupants are not required to do anything to make them operate; however, the vehicle occupants must be wearing their seat belts in order to obtain the maximum safety benefit from the factory-installed supplemental restraint system.

The supplemental restraint system electrical circuits are continuously monitored and controlled by a microprocessor and software contained within the Airbag Control Module (ACM). An airbag indicator in the ElectroMechanical Instrument Cluster (EMIC) illuminates for about six seconds as a bulb test each time the ignition switch is turned to the On or Start positions. Following the bulb test, the airbag indicator is turned on or off by the ACM to indicate the status of the supplemental restraint system. If the airbag indicator comes on at any time other than during the bulb test, it indicates that there is a problem in the supplemental restraint system electrical circuits. Such a problem may cause airbags not to deploy when required, or to deploy when not required.

Deployment of the supplemental restraints depends upon the angle and severity of an impact. Deployment is not based upon vehicle speed; rather, deployment is based upon the rate of deceleration as measured by the forces of gravity (G force) upon the impact sensors. When an impact is severe enough, the microprocessor in the ACM signals the inflator of the appropriate airbag units to deploy their airbag cushions. The outboard front seat belt tensioners are provided with a deployment signal by the ACM in conjunction with the front airbags.

During a frontal vehicle impact, the knee blockers work in concert with properly fastened and adjusted seat belts to restrain both the driver and the front seat passenger in the proper position for an airbag deployment. The knee blockers also absorb and distribute the crash energy from the driver and the front seat passenger to the structure of the instrument panel. The seat belt tensioners remove the slack from the outboard front seat belts to provide further assurance that the driver and front seat passenger are properly positioned and restrained for an airbag deployment.

Typically, the vehicle occupants recall more about the events preceding and following a collision than they do of an airbag deployment itself. This is because the airbag deployment and deflation occur very rapidly. In a typical 48 kilometer-per-hour (30 mile-per-hour) barrier impact, from the moment of impact until the airbags are fully inflated

takes about 40 milliseconds. Within one to two seconds from the moment of impact, the airbags are almost entirely deflated. The times cited for these events are approximations, which apply only to a barrier impact at the given speed. Actual times will vary somewhat, depending upon the vehicle speed, impact angle, severity of the impact, and the type of collision.

When the ACM monitors a problem in any of the supplemental restraint system circuits or components, including the seat belt tensioners, it stores a fault code or Diagnostic Trouble Code (DTC) in its memory circuit and sends an electronic message to the EMIC to turn on the airbag indicator. Proper testing of the supplemental restraint system components, the Programmable Communications Interface (PCI) data bus, the electronic message inputs to and outputs from the EMIC or the ACM, as well as the retrieval or erasure of a DTC from the ACM or EMIC requires the use of a diagnostic scan tool. Refer to the appropriate diagnostic information.

See the owner's manual in the vehicle glove box for more information on the features, use and operation of all of the factory-installed passive restraints.

WARNING

WARNINGS - RESTRAINT SYSTEM

WARNING: To avoid personal injury or death, during and following any seat belt or child restraint anchor service, carefully inspect all seat belts, buckles, mounting hardware, retractors, tether straps, and anchors for proper installation, operation, or damage. Replace any belt that is cut, frayed, or torn. Straighten any belt that is twisted. Tighten any loose fasteners. Replace any belt that has a damaged or inoperative buckle or retractor. Replace any belt that has a bent or damaged latch plate or anchor plate. Replace any child restraint anchor or the unit to which the anchor is integral that has been bent or damaged. Never attempt to repair a seat belt or child restraint component. Always replace damaged or faulty seat belt and child restraint components with the correct, new and unused replacement parts listed in the DaimlerChrysler Mopar Parts Catalog.

WARNING: To avoid personal injury or death, on vehicles equipped with airbags, disable the supplemental restraint system before attempting any steering wheel, steering column, airbag, seat belt tensioner, impact sensor, or instrument panel component diagnosis or service. Disconnect and isolate the battery negative (ground) cable, then wait two minutes for the system capacitor to discharge before performing further diagnosis or service. This is the only sure way to disable the supplemental restraint system. Failure to take the proper precautions could result in accidental airbag deployment.

WARNING: To avoid personal injury or death on vehicles equipped with airbags, before performing any welding operations disconnect and isolate the battery negative (ground) cable and disconnect all wire harness connectors from the Airbag Control Module (ACM). Failure to take the proper precautions could result in accidental airbag deployment and other possible damage to the supplemental restraint system circuits and components.

WARNING: To avoid personal injury or death, do not attempt to dismantle an airbag unit or tamper with its inflator. Do not puncture, incinerate, or bring into contact with electricity. Do not store at temperatures exceeding 93° C (200° F). An airbag inflator unit may contain sodium azide and potassium nitrate. These materials are poisonous and extremely flammable. Contact with acid, water, or heavy metals may produce harmful and irritating gases (sodium hydroxide is formed in the presence of moisture) or combustible compounds. An airbag inflator unit may also contain a gas canister pressurized to over 2500 psi.

WARNING: To avoid personal injury or death, when handling a seat belt tensioner retractor, proper care should be exercised to keep fingers out from under the retractor cover and away from the seat belt webbing where it exits from the retractor cover.

WARNING: To avoid personal injury or death, replace all restraint system components only with parts specified in the DaimlerChrysler Mopar Parts Catalog. Substitute parts may appear interchangeable, but internal differences may result in inferior occupant protection.

WARNING: To avoid personal injury or death, the fasteners, screws, and bolts originally used for the restraint system components must never be replaced with any substitutes. These fasteners have special coatings and are specifically designed for the restraint system. Any time a new fastener is needed, replace it with the correct fasteners provided in the service package or specified in the DaimlerChrysler Mopar Parts Catalog.

WARNING: To avoid personal injury or death, when a steering column has an airbag unit attached, never place the column on the floor or any other surface with the steering wheel or airbag unit face down.

DIAGNOSIS AND TESTING

SUPPLEMENTAL RESTRAINT SYSTEM

Proper diagnosis and testing of the supplemental restraint system components, the Programmable Communications Interface (PCI) data bus, the data bus electronic message inputs to and outputs from the ElectroMechanical Instrument Cluster (EMIC), the Airbag Control Module (ACM), as well as the retrieval or erasure of a Diagnostic Trouble Code (DTC) from the ACM requires the use of a diagnostic scan tool. Refer to the appropriate diagnostic information.

WARNING: To avoid personal injury or death, on vehicles equipped with airbags, disable the supplemental restraint system before attempting any steering wheel, steering column, airbag, seat belt tensioner, impact sensor, or instrument panel component diagnosis or service. Disconnect and isolate the battery negative (ground) cable, then wait two minutes for the system capacitor to discharge before performing further diagnosis or service. This is the only sure way to disable the supplemental restraint system. Failure to take the proper precautions could result in accidental airbag deployment.

STANDARD PROCEDURE

HANDLING NON-DEPLOYED SUPPLEMENTAL RESTRAINTS

At no time should any source of electricity be permitted near the inflator on the back of a non-deployed airbag or seat belt tensioner. When carrying a non-deployed airbag, the trim cover or airbag cushion side of the unit should be pointed away from the body to minimize injury in the event of an accidental deployment. If the airbag unit is placed on a bench or any other surface, the trim cover or airbag cushion side of the unit should be face up to minimize movement in the event of an accidental deployment.

When handling a non-deployed seat belt tensioner, take proper care to keep fingers out from under the retractor cover and away from the seat belt webbing where it exits from the retractor cover. In addition, the supplemental restraint system should be disarmed whenever any steering wheel, steering column, seat belt tensioner, airbag, impact sensor, or instrument panel components require diagnosis or service. Failure to observe this warning could result in accidental airbag deployment and possible personal injury.

All damaged, faulty or non-deployed airbags and seat belt tensioners which are replaced on vehicles are to be handled and disposed of properly. If an airbag or seat belt tensioner unit is faulty or damaged and non-deployed, refer to the Hazardous Substance Control System for proper disposal. Dispose of all non-deployed and deployed airbags and seat belt tensioners in a manner consistent with state, provincial, local and federal regulations.

SUPPLEMENTAL RESTRAINT STORAGE

Airbags and seat belt tensioners must be stored in their original, special container until they are used for service. Also, they must be stored in a clean, dry environment; away from sources of extreme heat, sparks, and high electrical energy. Always place or store any airbag on a surface with its trim cover or airbag cushion side facing up, to minimize movement in case of an accidental deployment.

SERVICE AFTER A SUPPLEMENTAL RESTRAINT DEPLOYMENT

Any vehicle which is to be returned to use following a supplemental restraint deployment, must have the deployed restraints replaced. In addition, if the driver airbag has been deployed, the clockspring must be replaced. If the passenger airbag is deployed, the passenger airbag door must be replaced. The seat belt tensioners are deployed by the same signal that deploys the driver and passenger airbags and must also be replaced if either front airbag has been deployed. If a side curtain airbag has been deployed, the complete airbag unit, the headliner, as well as

the upper A, B, and C-pillar trim must be replaced. These components are not intended for reuse and will be damaged or weakened as a result of a supplemental restraint deployment, which may or may not be obvious during a visual inspection.

On vehicles with an optional sunroof, the sunroof drain tubes and hoses must be closely inspected following a side curtain airbag deployment. It is also critical that the mounting surfaces and/or mounting brackets for the Airbag Control Module (ACM) and the side impact sensors be closely inspected and restored to their original conditions following any vehicle impact damage. Because the ACM and each impact sensor are used by the supplemental restraint system to monitor or confirm the direction and severity of a vehicle impact, improper orientation or insecure fastening of these components may cause airbags not to deploy when required, or to deploy when not required.

All other vehicle components should be closely inspected following any supplemental restraint deployment, but are to be replaced only as required by the extent of the visible damage incurred.

AIRBAG SQUIB STATUS

Multistage airbags with multiple initiators (squibs) must be checked to determine that all squibs were used during the deployment event. The driver and passenger airbags in this model are deployed by electrical signals generated by the Airbag Control Module (ACM) through the driver or passenger squib 1 and squib 2 circuits to the two initiators in the airbag inflators. Typically, both initiators are used and all potentially hazardous chemicals are burned during an airbag deployment event. However, it is possible for only one initiator to be used due to an airbag system fault; therefore, it is always necessary to confirm that both initiators have been used in order to avoid the improper handling or disposal of potentially live pyrotechnic or hazardous materials. The following procedure should be performed using a diagnostic scan tool to verify the status of both airbag squibs before either deployed airbag is removed from the vehicle for disposal.

CAUTION: Deployed front airbags having two initiators (squibs) in the airbag inflator may or may not have live pyrotechnic material within the inflator. Do not dispose of these airbags unless you are sure of complete deployment. Refer to the Hazardous Substance Control System for proper disposal procedures. Dispose of all non-deployed and deployed airbags and seat belt tensioners in a manner consistent with state, provincial, local, and federal regulations.

1. Be certain that the diagnostic scan tool contains the latest version of the proper diagnostic software. Connect the scan tool to the 16-way Data Link Connector (DLC). The DLC is located on the driver side lower edge of the instrument panel, outboard of the steering column.
2. Turn the ignition switch to the On position.
3. Using the scan tool, read and record the active (current) Diagnostic Trouble Code (DTC) data.

Using the active DTC information, refer to the **Airbag Squib Status** table to determine the status of both driver and/or passenger airbag squibs.

AIRBAG SQUIB STATUS		
IF THE ACTIVE DTC IS:	**CONDITIONS**	**SQUIB STATUS**
Driver or Passenger Squib 1 open Driver or Passenger Squib 2 open	**AND** the stored DTC minutes for both Driver or Passenger squibs are within 15 minutes of each other	Both Squib 1 and 2 were used.
Driver or Passenger Squib 1 open Driver or Passenger Squib 2 open	**AND** the stored DTC minutes for Driver or Passenger Squib 2 open is GREATER than the stored DTC minutes for Driver or Passenger Squib 1 by 15 minutes or more	Squib 1 was used; Squib 2 is live.
Driver or Passenger Squib 1 open Driver or Passenger Squib 2 open	**AND** the stored DTC minutes for Driver or Passenger Squib 1 open is GREATER than the stored DTC minutes for Driver or Passenger Squib 2 by 15 minutes or more	Squib 1 is live; Squib 2 was used.
Driver or Passenger Squib 1 open	**AND** Driver or Passenger Squib 2 open is NOT an active code	Squib 1 was used; Squib 2 is live.
Driver or Passenger Squib 2 open	**AND** Driver or Passenger Squib 1 open is NOT an active code	Squib 1 is live; Squib 2 was used.

NOTE: If none of the Driver or Passenger Squib 1 or 2 open are active codes, the status of the airbag squibs is unknown. In this case the airbag should be handled and disposed of as if the squibs were both live.

CLEANUP PROCEDURE

Following a supplemental restraint deployment, the vehicle interior will contain a powdery residue. This residue consists primarily of harmless particulate by-products of the small pyrotechnic charge that initiates the propellant used to deploy a supplemental restraint. However, this residue may also contain traces of sodium hydroxide powder, a chemical by-product of the propellant material that is used to generate the inert gas that inflates the airbag. Since sodium hydroxide powder can irritate the skin, eyes, nose, or throat, be certain to wear safety glasses, rubber gloves, and a long-sleeved shirt during cleanup.

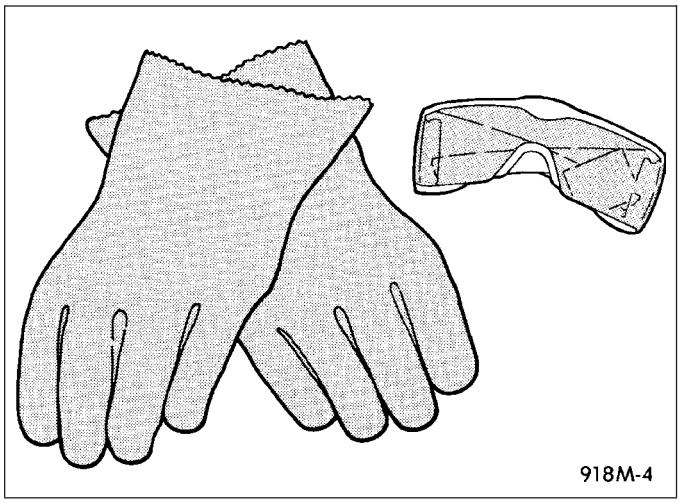

WARNING: To avoid personal injury or death, if you experience skin irritation during cleanup, run cool water over the affected area. Also, if you experience irritation of the nose or throat, exit the vehicle for fresh air until the irritation ceases. If irritation continues, see a physician.

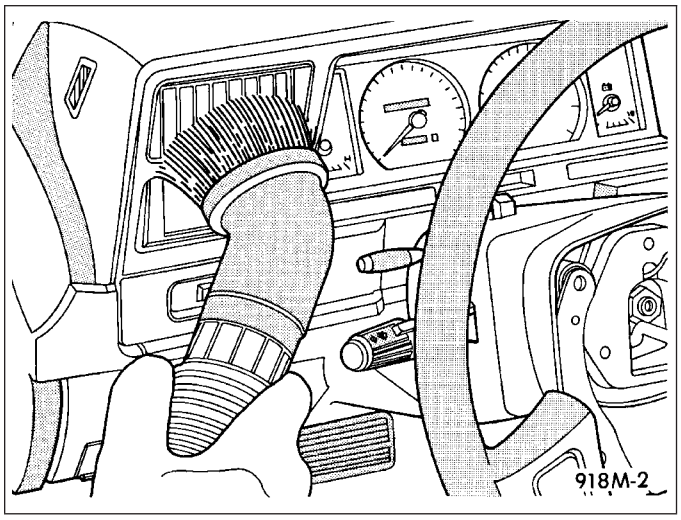

1. Begin the cleanup by using a vacuum cleaner to remove any residual powder from the vehicle interior. Clean from outside the vehicle and work your way inside, so that you avoid kneeling or sitting on a non-cleaned area.
2. Be certain to vacuum the heater and air conditioning outlets as well. Run the heater and air conditioner blower on the lowest speed setting and vacuum any powder expelled from the outlets.

CAUTION: Deployed front airbags having two initiators (squibs) in the airbag inflator may or may not have live pyrotechnic material within the inflator. Do not dispose of these airbags unless you are sure of complete deployment. Refer to AIRBAG SQUIB STATUS . All damaged, faulty, or non-deployed supplemental restraints which are replaced on vehicles are to be handled and disposed of properly. If an airbag or seat belt tensioner unit is faulty or damaged and non-deployed, refer to the Hazardous Substance Control System for proper disposal. Be certain to dispose of all non-deployed and deployed supplemental restraints in a manner consistent with state, provincial, local and federal regulations.

3. Next, remove the deployed supplemental restraints from the vehicle. Refer to the appropriate service removal procedures.
4. You may need to vacuum the interior of the vehicle a second time to recover all of the powder.

SUPPLEMENTAL RESTRAINTS VERIFICATION TEST

NOTE: The following procedure should be performed using a diagnostic scan tool to verify proper supplemental restraint system operation following the service or replacement of any supplemental restraint system component.

WARNING: To avoid personal injury or death, on vehicles equipped with airbags, disable the supplemental restraint system before attempting any steering wheel, steering column, airbag, seat belt tensioner, impact sensor, or instrument panel component diagnosis or service. Disconnect and isolate the battery negative (ground) cable, then wait two minutes for the system capacitor to discharge before performing further diagnosis or service. This is the only sure way to disable the supplemental restraint system. Failure to take the proper precautions could result in accidental airbag deployment.

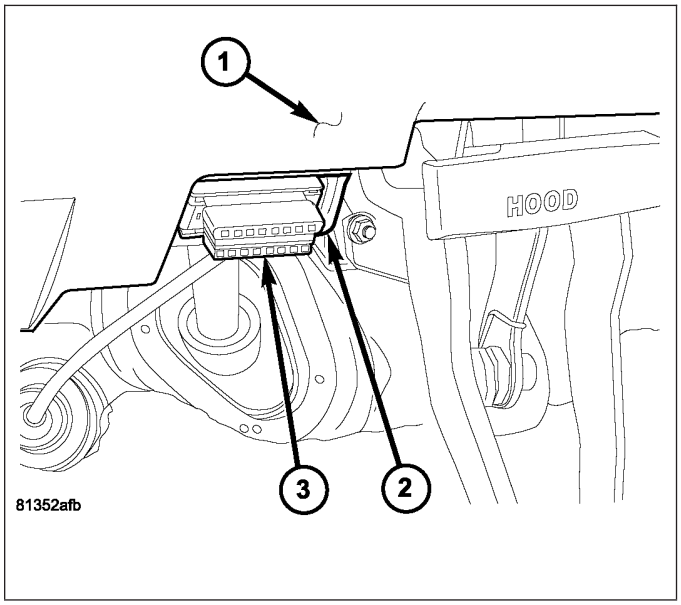

1. During the following test, the battery negative cable remains disconnected and isolated, as it was during the supplemental restraint system component removal and installation procedures.
2. Be certain that the diagnostic scan tool contains the latest version of the proper diagnostic software. Connect the scan tool to the 16-way Data Link Connector (DLC) (1). The DLC is located on the driver side lower edge of the instrument panel (2), outboard of the steering column.
3. Turn the ignition switch to the On position and exit the vehicle with the scan tool.
4. Check to be certain that nobody is in the vehicle, then reconnect the battery negative cable.
5. Using the scan tool, read and record the active (current) Diagnostic Trouble Code (DTC) data.
6. Next, use the scan tool to read and record any stored (historical) DTC data.

7. If any DTC is found in Step 5 or Step 6, refer to the appropriate diagnostic information.
8. Use the scan tool to erase the stored DTC data. If any problems remain, the stored DTC data will not erase. Refer to the appropriate diagnostic information to diagnose any stored DTC that will not erase. If the stored DTC information is successfully erased, go to Step 9.
9. Turn the ignition switch to the Off position for about fifteen seconds, and then back to the On position. Observe the airbag indicator in the instrument cluster. It should illuminate for six to eight seconds, and then go out. This indicates that the supplemental restraint system is functioning normally and that the repairs are complete. If the airbag indicator fails to light, or lights and stays on, there is still an active supplemental restraint system fault or malfunction. Refer to the appropriate diagnostic information to diagnose the problem.

MODULE-OCCUPANT RESTRAINT CONTROLLER

DESCRIPTION

The Airbag Control Module (ACM) (1) is also sometimes referred to as the Occupant Restraint Controller (ORC). The ACM is located below the instrument panel center stack in the passenger compartment of the vehicle, where it is secured by three screws to a stamped steel mounting bracket welded onto the top of the floor panel transmission tunnel just forward of the instrument panel center support bracket. Concealed within a hollow in the center of the die cast aluminum ACM housing is the electronic circuitry of the ACM which includes a microprocessor, an electronic impact sensor, an electronic safing sensor, and an energy storage capacitor. A stamped metal cover plate is secured to the bottom of the ACM housing with four screws to enclose and protect the internal electronic circuitry and components.

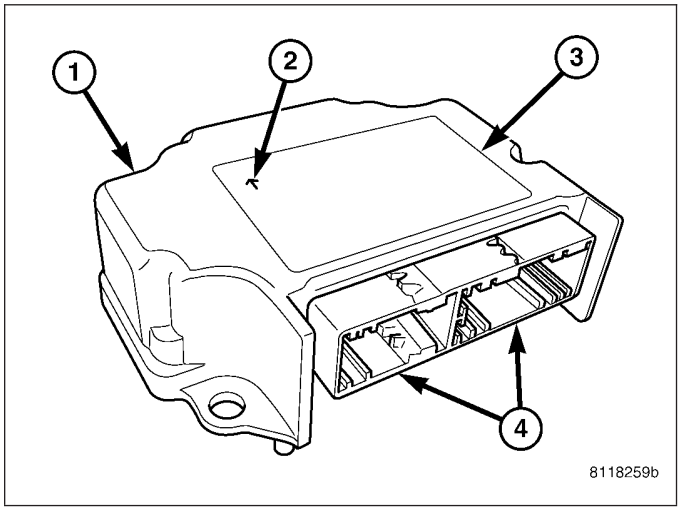

An arrow (2) printed on the label (3) on the top of the ACM housing provides a visual verification of the proper orientation of the unit, and should always be pointed toward the front of the vehicle. The ACM housing has integral mounting flanges on three corners. The mounting flange to the left of the connector receptacle has an integral locating pin on its lower surface. Both left side flanges have round mounting holes, while the flange on the right side has a slotted mounting hole. A molded plastic electrical connector (4) with two receptacles, one containing twenty-four terminal pins and the other containing thirty-two terminal pins, exits the rearward facing side of the ACM housing. These terminal pins connect the ACM to the vehicle electrical system through two dedicated take outs and connectors of the instrument panel wire harness.

The impact sensor and safing sensor internal to the ACM are calibrated for the specific vehicle, and are only serviced as a unit with the ACM. In addition, there are unique versions of the ACM for light and heavy-duty models, and for vehicles with or without the optional side curtain airbags. The ACM cannot be repaired or adjusted and, if damaged or faulty, it must be replaced.

OPERATION

The microprocessor in the Airbag Control Module (ACM) contains the supplemental restraint system logic circuits and controls all of the supplemental restraint system components. The ACM uses On-Board Diagnostics (OBD) and can communicate with other electronic modules in the vehicle as well as with the diagnostic scan tool using the Programmable Communications Interface (PCI) data bus network. This method of communication is used for control of the airbag indicator in the ElectroMechanical Instrument Cluster (EMIC) and for supplemental restraint system diagnosis and testing through the 16-way data link connector located on the driver side lower edge of the instrument panel. (Refer to 8 - ELECTRICAL/INSTRUMENT CLUSTER/AIRBAG INDICATOR - OPERATION).

The ACM microprocessor continuously monitors all of the supplemental restraint system electrical circuits to determine the system readiness. If the ACM detects a monitored system fault, it sets an active and stored Diagnostic

Trouble Code (DTC) and sends electronic messages to the EMIC over the PCI data bus to turn on the airbag indicator. An active fault only remains for the duration of the fault, or in some cases for the duration of the current ignition switch cycle, while a stored fault causes a DTC to be stored in memory by the ACM. For some DTCs, if a fault does not recur for a number of ignition cycles, the ACM will automatically erase the stored DTC. For other internal faults, the stored DTC is latched forever.

In standard cab models, the ACM also monitors a resistor multiplexed input from the passenger airbag on/off switch and provides a control output for the Off indicator in the switch through a passenger airbag indicator driver circuit. If the passenger airbag on/off switch is set to the Off position, the ACM turns on the passenger airbag on/off switch Off indicator and will internally disable the passenger airbag from being deployed. The ACM also turns on the on/off switch Off indicator for about seven seconds each time the ignition switch is turned to the On position as a bulb test. Following the bulb test, the ACM controls the status of the Off indicator based upon the resistance of the input from the on/off switch. The ACM will also set and/or store a DTC for faults it detects in the passenger airbag on/off switch circuits, and will turn on the airbag indicator in the EMIC if a fault has been detected.

The ACM receives battery current through two circuits; a fused ignition switch output (run) circuit through a fuse in the Integrated Power Module (IPM), and a fused ignition switch output (run-start) circuit through a second fuse in the IPM. The ACM receives ground through a ground circuit and take out of the instrument panel wire harness. This take out has a single eyelet terminal connector that is secured by a ground screw to the instrument panel structural support. These connections allow the ACM to be operational whenever the ignition switch is in the Start or On positions.

The ACM also contains an energy-storage capacitor. When the ignition switch is in the Start or On positions, this capacitor is continually being charged with enough electrical energy to deploy the supplemental restraint components for up to one second following a battery disconnect or failure. The purpose of the capacitor is to provide backup supplemental restraint system protection in case there is a loss of battery current supply to the ACM during an impact.

Two sensors are contained within the ACM, an electronic impact sensor and a safing sensor. The electronic impact sensors are accelerometers that sense the rate of vehicle deceleration, which provide verification of the direction and severity of an impact. On models equipped with optional side curtain airbags, the ACM also monitors inputs from two remote side impact sensors located within both the left and right B-pillars to control deployment of the side curtain airbag units.

The safing sensor is an electronic accelerometer sensor within the ACM that provides an additional logic input to the ACM microprocessor. The safing sensor is used to verify the need for a supplemental restraint deployment by detecting impact energy of a lesser magnitude than that of the primary electronic impact sensors, and must exceed a safing threshold in order for the airbags to deploy. Vehicles equipped with optional side curtain airbags feature a second safing sensor within the ACM to provide confirmation to the ACM microprocessor of side impact forces. This second safing sensor is a bi-directional unit that detects impact forces from either side of the vehicle.

Pre-programmed decision algorithms in the ACM microprocessor determine when the deceleration rate as signaled by the impact sensors and the safing sensors indicate an impact that is severe enough to require supplemental restraint system protection and, based upon the severity of the monitored impact and the status of the passenger airbag on/off switch input, determines the level of front airbag deployment force required for each front seating position. When the programmed conditions are met, the ACM sends the proper electrical signals to deploy the dual multistage front airbags at the programmed force levels, the front seat belt tensioners and, if the vehicle is so equipped, either side curtain airbag unit. For vehicles equipped with the passenger airbag on/off switch, the passenger front airbag and seat belt tensioner will be deployed by the ACM only if enabled by the switch (passenger airbag on/off switch indicator Off) at the time of the impact.

The hard wired inputs and outputs for the ACM may be diagnosed and tested using conventional diagnostic tools and methods. However, conventional diagnostic methods will not prove conclusive in the diagnosis of the ACM, the PCI data bus network, or the electronic message inputs to and outputs from the ACM. The most reliable, efficient, and accurate means to diagnose the ACM, the PCI data bus, and the electronic message inputs to and outputs from the ACM requires the use of a diagnostic scan tool. Refer to the appropriate diagnostic information.

REMOVAL

MODULE

WARNING: To avoid personal injury or death, on vehicles equipped with airbags, disable the supplemental restraint system before attempting any steering wheel, steering column, airbag, seat belt tensioner, impact sensor, or instrument panel component diagnosis or service. Disconnect and isolate the battery negative (ground) cable, then wait two minutes for the system capacitor to discharge before performing further diagnosis or service. This is the only sure way to disable the supplemental restraint system. Failure to take the proper precautions could result in accidental airbag deployment.

WARNING: To avoid personal injury or death, never strike or drop the airbag control module, as it can damage the impact sensor or affect its calibration. The airbag control module contains the impact sensor, which enables the system to deploy the supplemental restraints. If an airbag control module is accidentally dropped during service, the module must be scrapped and replaced with a new unit. Failure to observe this warning could result in accidental, incomplete, or improper supplemental restraint deployment.

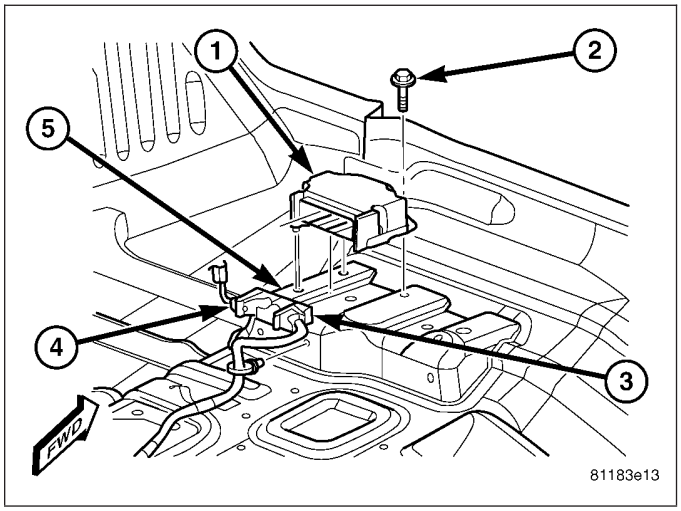

1. Disconnect and isolate the battery negative cable. Wait two minutes for the system capacitor to discharge before further service.
2. On models with a manual transmission, remove the floor console from the top of the floor panel transmission tunnel. (Refer to 23 - BODY/INTERIOR/FLOOR CONSOLE - REMOVAL).
3. On models with an automatic transmission, remove the ACM cover from the instrument panel. (Refer to 8 - ELECTRICAL/RESTRAINTS/ACM COVER - REMOVAL).
4. Reach through the rearward facing opening below the instrument panel center stack support bracket on the top of the floor panel transmission tunnel to access and disconnect the two wire harness connectors (3 & 4) for the Airbag Control Module (ACM) (1) from the ACM connector receptacles located on the rearward facing side of the module. To disconnect the wire harness connectors from the ACM, depress the release tab and lift the lever arm on each connector.
5. From the left side of the floor panel transmission tunnel, reach behind the module to access and loosen the screw (2) that secures the right side of the ACM to the bracket (5) on the floor panel transmission tunnel. Loosen the screw about 7 millimeters (0.25 inch).
6. From the left side of the floor panel transmission tunnel, remove the two screws that secure the left side of the ACM to the bracket on the floor panel transmission tunnel.
7. Still working from the left side of the floor panel transmission tunnel, lift the ACM upward far enough to disengage the locating pin on the bottom of the ACM mounting flange from the locating hole in the mounting bracket, then slide the ACM toward the left far enough to disengage the slotted hole in the right ACM mounting flange from under the head of the previously loosened right mounting screw.
8. Remove the ACM from the left side of the floor panel transmission tunnel.

COVER

WARNING: To avoid personal injury or death, on vehicles equipped with airbags, disable the supplemental restraint system before attempting any steering wheel, steering column, airbag, seat belt tensioner, impact sensor, or instrument panel component diagnosis or service. Disconnect and isolate the battery negative (ground) cable, then wait two minutes for the system capacitor to discharge before performing further diagnosis or service. This is the only sure way to disable the supplemental restraint system. Failure to take the proper precautions could result in accidental airbag deployment.

NOTE: The Airbag Control Module (ACM) cover is used only on models with an automatic transmission. Models with a manual transmission require that the floor console be removed to access the ACM for service. (Refer to 23 - BODY/INTERIOR/FLOOR CONSOLE - REMOVAL).

1. Disconnect and isolate the battery negative cable. Wait two minutes for the system capacitor to discharge before further service.
2. Using a trim stick or another suitable wide flat-bladed tool, gently pry each side of the ACM cover (2) away from the instrument panel at each side of the center bracket on the floor panel transmission tunnel far enough to disengage the two snap clip retainers from the instrument panel receptacles (1).
3. Remove the ACM cover from the instrument panel.

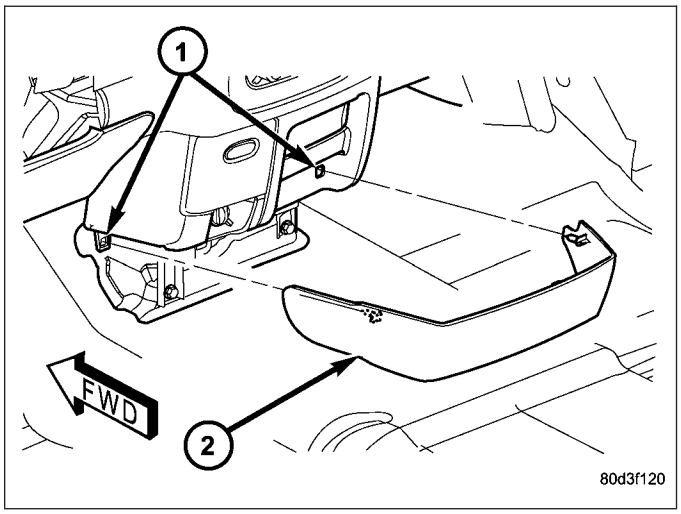

INSTALLATION

MODULE

WARNING: To avoid personal injury or death, on vehicles equipped with airbags, disable the supplemental restraint system before attempting any steering wheel, steering column, airbag, seat belt tensioner, impact sensor, or instrument panel component diagnosis or service. Disconnect and isolate the battery negative (ground) cable, then wait two minutes for the system capacitor to discharge before performing further diagnosis or service. This is the only sure way to disable the supplemental restraint system. Failure to take the proper precautions could result in accidental airbag deployment.

WARNING: To avoid personal injury or death, never strike or drop the airbag control module, as it can damage the impact sensor or affect its calibration. The airbag control module contains the impact sensor, which enables the system to deploy the supplemental restraints. If an airbag control module is accidentally dropped during service, the module must be scrapped and replaced with a new unit. Failure to observe this warning could result in accidental, incomplete, or improper supplemental restraint deployment.

1. Position the Airbag Control Module (ACM) (1) to the left side of the floor panel transmission tunnel near the ACM bracket (5). When the ACM is correctly positioned, the arrow on the ACM label will be pointed forward in the vehicle.
2. From the left side of the floor panel transmission tunnel, slide the ACM toward the right far enough to engage the slotted hole in the right ACM mounting flange under the head of the previously loosened right mounting screw (2), then engage the locating pin on the bottom of the left ACM mounting flange into the locating hole in the bracket.
3. Still working from the left side of the floor panel transmission tunnel, install and tighten the two screws that secure the left ACM mounting flanges to the bracket that is welded onto the floor panel transmission tunnel. Tighten the screws to 12 N·m (9 ft. lbs.).

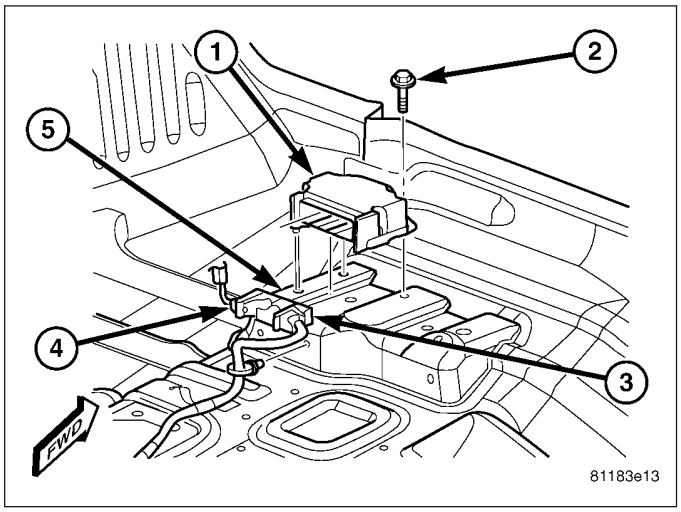

4. From the left side of the floor panel transmission tunnel, reach behind the module to access and tighten the screw that secures the right side of the ACM to the bracket on the floor panel transmission tunnel. Tighten the screw to 12 N·m (9 ft. lbs.).
5. Reach through the rearward facing opening below the instrument panel center stack support bracket on the top of the floor panel transmission tunnel to access and reconnect the two wire harness connectors (3 & 4) for the ACM to the ACM connector receptacle located on the rearward facing side of the module. Be certain that the latches on the connectors are each fully engaged.
6. On models with an automatic transmission, reinstall the ACM cover onto the instrument panel. (Refer to 8 - ELECTRICAL/RESTRAINTS/ACM COVER - INSTALLATION).
7. On models with a manual transmission, reinstall the floor console onto the top of the floor panel transmission tunnel. (Refer to 23 - BODY/INTERIOR/FLOOR CONSOLE - INSTALLATION).
8. Do not reconnect the battery negative cable at this time. The supplemental restraint system verification test procedure should be performed following service of any supplemental restraint system component. (Refer to 8 - ELECTRICAL/RESTRAINTS - STANDARD PROCEDURE - VERIFICATION TEST).

COVER

WARNING: To avoid personal injury or death, on vehicles equipped with airbags, disable the supplemental restraint system before attempting any steering wheel, steering column, airbag, seat belt tensioner, impact sensor, or instrument panel component diagnosis or service. Disconnect and isolate the battery negative (ground) cable, then wait two minutes for the system capacitor to discharge before performing further diagnosis or service. This is the only sure way to disable the supplemental restraint system. Failure to take the proper precautions could result in accidental airbag deployment.

NOTE: The Airbag Control Module (ACM) cover is used only on models with an automatic transmission. Models with a manual transmission require that the floor console be reinstalled following ACM service. (Refer to 23 - BODY/INTERIOR/FLOOR CONSOLE - INSTALLATION).

1. Position the ACM cover (2) to the instrument panel.
2. Align the snap clip retainer on each side of the ACM cover with the instrument panel receptacle (1) at each side of the center bracket on the floor panel transmission tunnel.
3. Using hand pressure, press firmly and evenly on the outside of the ACM cover over each snap clip retainer location until each retainer is fully engaged in its instrument panel receptacle.
4. Reconnect the battery negative cable.

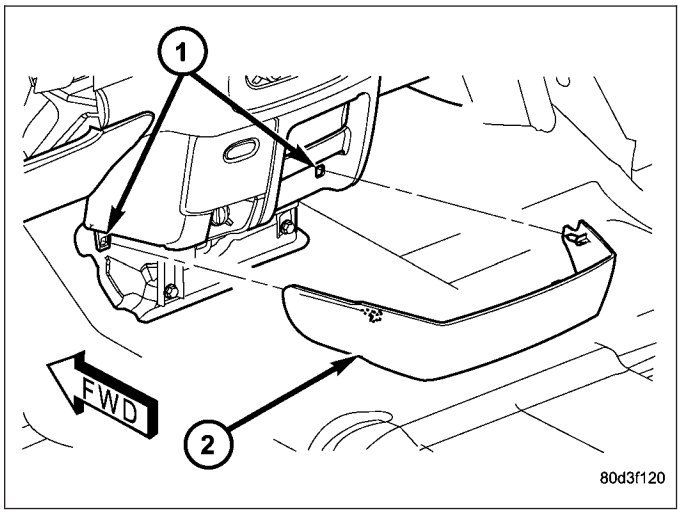

CHILD RESTRAINT ANCHOR

DESCRIPTION

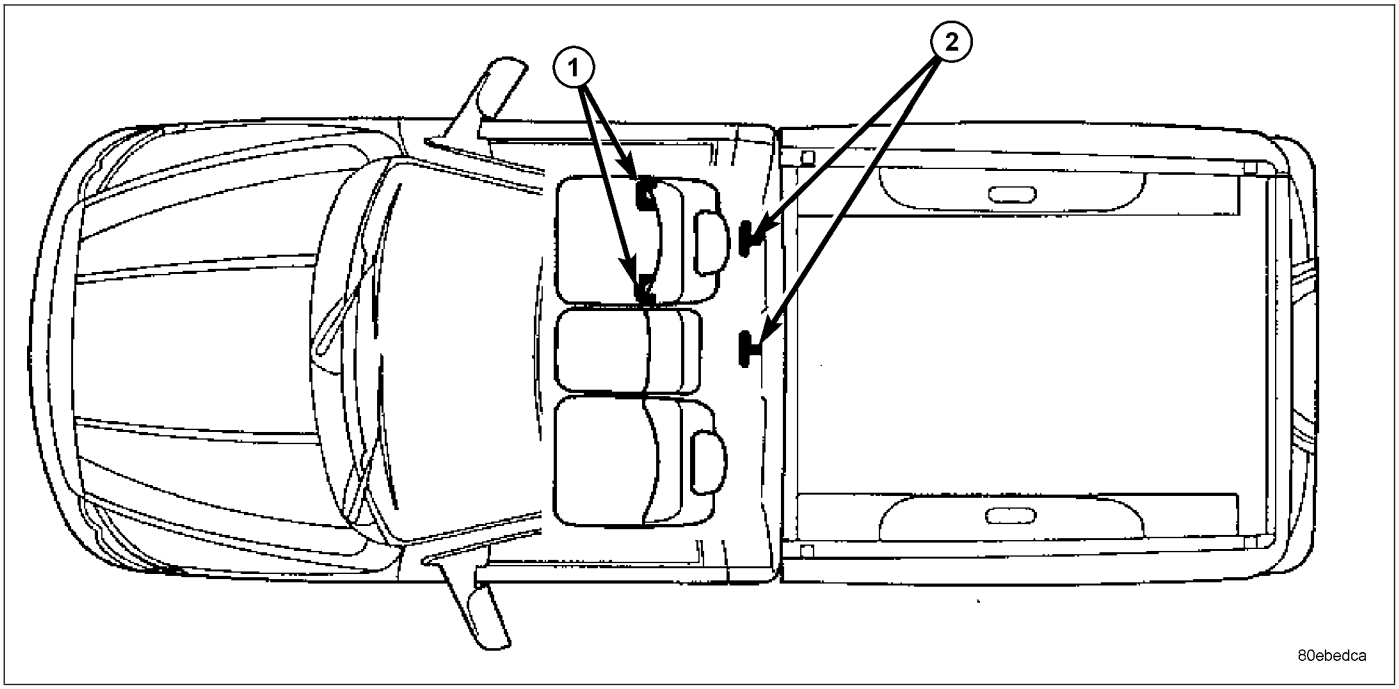

This model is equipped with a Lower Anchors and Tether for CHildren, or LATCH child restraint anchorage system. The LATCH system provides for the installation of suitable child restraints in certain seating positions without using the standard equipment seat belt provided for that seating position. Standard cab models are equipped with a fixed-position child restraint upper tether anchor for the front center and outboard seating positions (2), and child restraint lower anchors for the front outboard seating position (1).

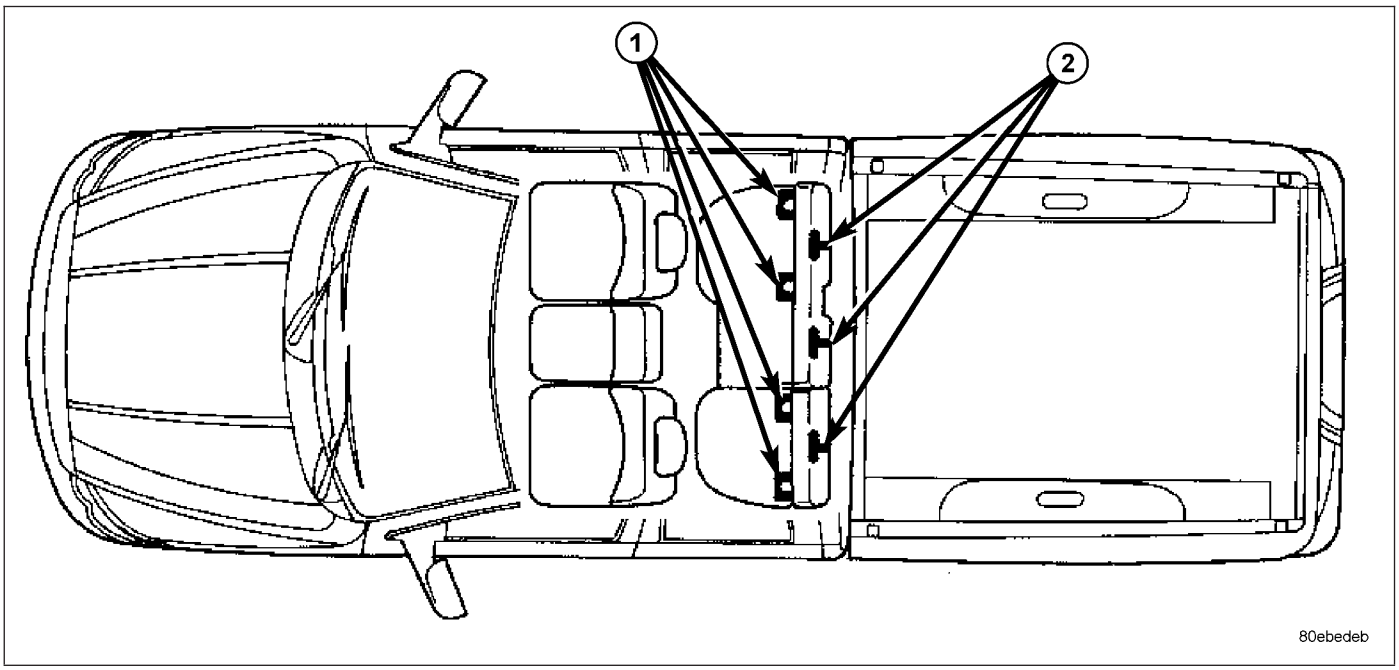

Quad cab models are equipped with a fixed-position child restraint upper tether anchor strap for the rear center and both rear outboard seating positions (2), and child restraint lower anchors for both rear outboard seating positions (1). All front seat child restraint anchors are deleted on quad cab models.

The two upper tether anchors (3) for standard cab models are integral to the upper cab back panel reinforcement and are concealed behind individual trim cover and bezel units (1) that are integral to the cab back trim panel (2). These upper tether anchors cannot be adjusted or repaired and, if faulty or damaged, they must be replaced as a unit with the upper cab back panel reinforcement. The upper tether anchor trim covers and bezels are serviced as a unit with the cab back trim panel.

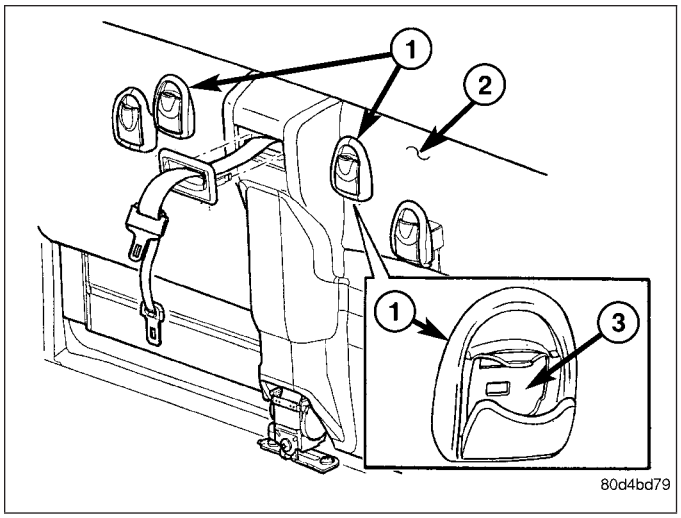

The three upper tether anchor straps (1) for quad cab models are secured to the upper cab back panel (2) reinforcement with screws (3). These anchor straps are concealed behind the upright rear seat back. The upper tether anchor straps are available for individual service replacement.

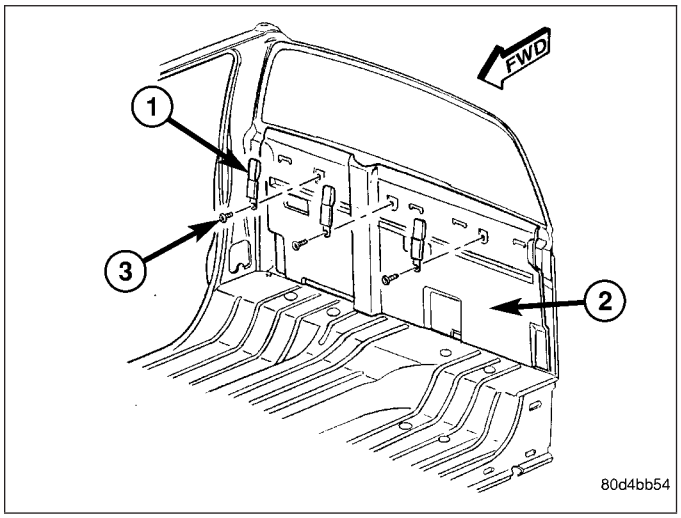

The lower anchors (2) for all models are integral to their respective front or rear seat cushion frame. Round markers (3) with an imprinted child seat icon on the standard cab front seat back trim cover helps identify the anchor locations for that application because they may be otherwise difficult to see with the seat back in the upright position. These lower anchors are each constructed from round steel bar stock that is formed into a U-shape, then securely welded at each end to the seat cushion frame. They are each accessed from the front of their respective seats, at each side where the seat back meets the seat cushion. These lower anchors cannot be adjusted or repaired and, if faulty or damaged, they must be replaced as a unit with the seat cushion frame.

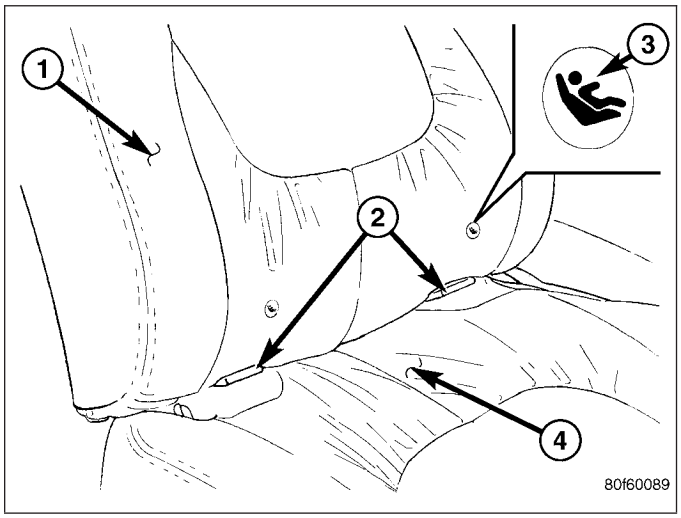

On quad cab models, if the rear seat lower anchors (2) have been bent or broken as a result of a vehicle collision, the latch for the affected rear seat cushion frame unit must also be replaced.

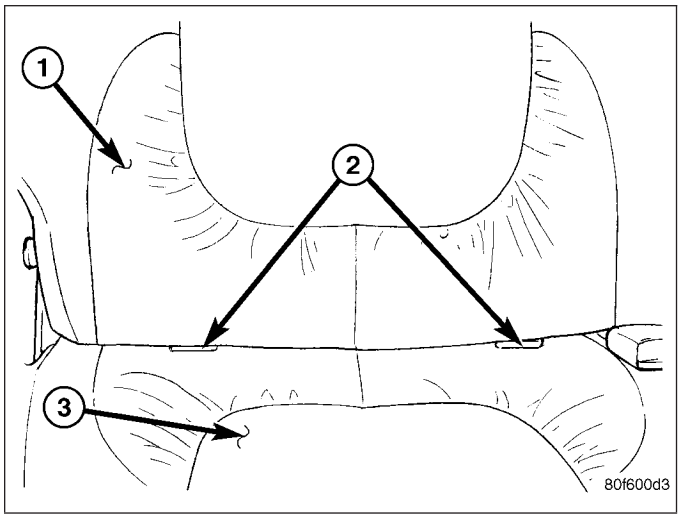

WARNING: During and following any seat belt or child restraint anchor service, carefully inspect all seat belts, buckles, mounting hardware, retractors, tether straps, and anchors for proper installation, operation, or damage. Replace any belt that is cut, frayed, or torn. Straighten any belt that is twisted. Tighten any loose fasteners. Replace any belt that has a damaged or inoperative buckle or retractor. Replace any belt that has a bent or damaged latch plate or anchor plate. Replace any child restraint anchor or the unit to which the anchor is integral that has been bent or damaged. Never attempt to repair a seat belt or child restraint component. Always replace damaged or faulty seat belt and child restraint components with the correct, new and unused replacement parts listed in the DaimlerChrysler Mopar Parts Catalog.

OPERATION

See the owner's manual in the vehicle glove box for more information on the proper use of all of the factory-installed child restraint anchors.

REMOVAL - TETHER STRAP

WARNING: To avoid personal injury or death, during and following any seat belt or child restraint anchor service, carefully inspect all seat belts, buckles, mounting hardware, retractors, tether straps, and anchors for proper installation, operation, or damage. Replace any belt that is cut, frayed, or torn. Straighten any belt that is twisted. Tighten any loose fasteners. Replace any belt that has a damaged or inoperative buckle or retractor. Replace any belt that has a bent or damaged latch plate or anchor plate. Replace any child restraint anchor or the unit to which the anchor is integral that has been bent or damaged. Never attempt to repair a seat belt or child restraint component. Always replace damaged or faulty seat belt and child restraint components with the correct, new and unused replacement parts listed in the DaimlerChrysler Mopar Parts Catalog.

NOTE: The following procedure applies only to the rear seat upper child tether straps used on quad cab models. The child restraint anchors used in other models and locations are integral to other components and cannot be serviced separately.

1. Remove the rear seat from the vehicle. (Refer to 23 - BODY/SEATS/SEAT - REAR - REMOVAL).
2. Remove the screw (3) that secures the child tether strap (1) to the upper cab back panel (2) reinforcement.
3. Remove the child tether strap from the upper cab back panel reinforcement.

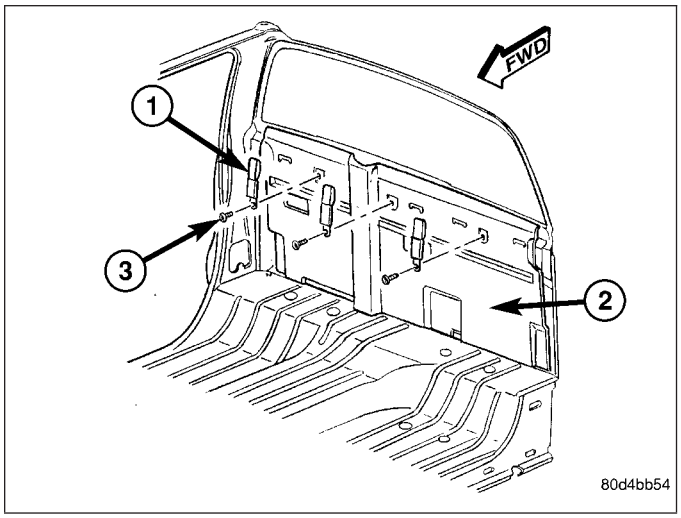

INSTALLATION - TETHER STRAP

WARNING: To avoid personal injury or death, during and following any seat belt or child restraint anchor service, carefully inspect all seat belts, buckles, mounting hardware, retractors, tether straps, and anchors for proper installation, operation, or damage. Replace any belt that is cut, frayed, or torn. Straighten any belt that is twisted. Tighten any loose fasteners. Replace any belt that has a damaged or inoperative buckle or retractor. Replace any belt that has a bent or damaged latch plate or anchor plate. Replace any child restraint anchor or the unit to which the anchor is integral that has been bent or damaged. Never attempt to repair a seat belt or child restraint component. Always replace damaged or faulty seat belt and child restraint components with the correct, new and unused replacement parts listed in the DaimlerChrysler Mopar Parts Catalog.

NOTE: The following procedure applies only to the rear seat upper child tether straps used on quad cab models. The child restraint anchors used in other models and locations are integral to other components and cannot be serviced separately.

1. Position the child tether strap (1) onto the cab back panel (2) upper reinforcement.
2. Install and tighten the screw (3) that secures the child tether strap to the upper cab back panel reinforcement. Tighten the screw to 14 N·m (10 ft. lbs.).
3. Reinstall the rear seat into the vehicle. (Refer to 23 - BODY/SEATS/SEAT - REAR - INSTALLATION).

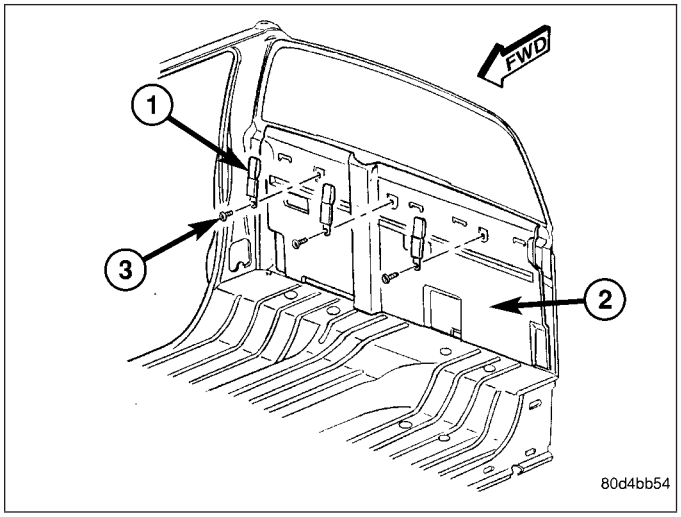

CLOCKSPRING

DESCRIPTION

The clockspring assembly is secured with two screws onto the multi-function switch mounting housing near the top of the steering column behind the steering wheel. The clockspring consists of a flat, round molded plastic case (8) with a stubby tail that hangs below the steering column. The tail contains two connector receptacles that face toward the instrument panel. Within the plastic case is a spool-like molded plastic rotor (10) with a large exposed hub. The upper surface of the rotor hub has a large center hole, two large flats, an engagement dowel with a yellow rubber boot (7), two short pigtail wires with connectors (1), and two connector receptacles (5) that face toward the steering wheel.

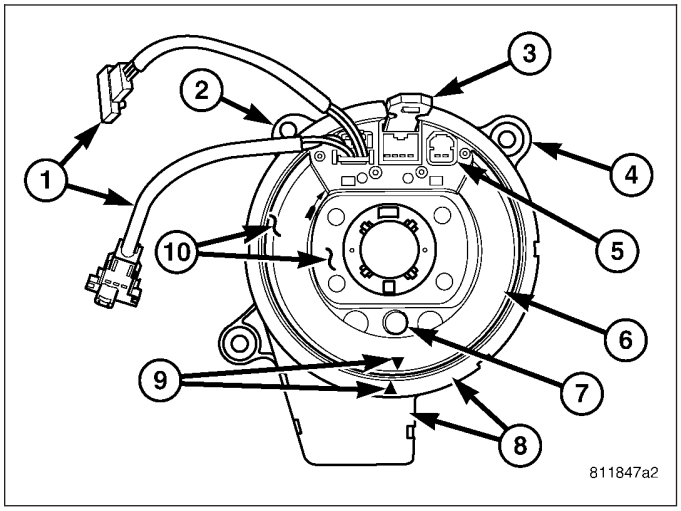

The lower surface of the rotor hub has a molded plastic turn signal cancel cam (3) with two lobes that is keyed to the rotor and is secured there with four integral snap features. Within the plastic case and wound around the rotor spool is a long ribbon-like tape that consists of several thin copper wire leads sandwiched between two thin plastic membranes. The outer end of the tape terminates at the connector receptacles (4) that face the instrument panel, while the inner end of the tape terminates at the pigtail wires and connector receptacles on the hub of the clockspring rotor that face the steering wheel.

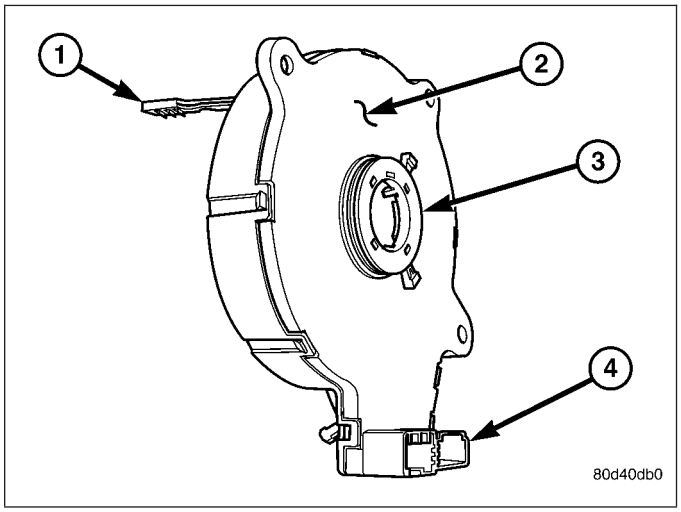

Service replacement clocksprings are shipped pre-centered and with a molded plastic locking pin (1) that snaps into a receptacle on the rotor and is engaged between two tabs on the upper surface of the rotor case. The locking pin secures the centered clockspring rotor to the clockspring case during shipment and handling, but must be removed from the clockspring after it is installed on the steering column. (Refer to 8 - ELECTRICAL/RESTRAINTS/CLOCKSPRING - STANDARD PROCEDURE - CLOCKSPRING CENTERING).

The clockspring cannot be repaired. If the clockspring is faulty, damaged, or if the driver airbag has been deployed, the clockspring must be replaced.

OPERATION

The clockspring is a mechanical electrical circuit component that is used to provide continuous electrical continuity between the fixed instrument panel wire harness and the electrical components mounted on or in the rotating steering wheel. On this model the rotating electrical components include the driver airbag, the horn switch, the speed control switches, and the remote radio switches, if the vehicle is so equipped. The clockspring case is positioned and secured to the multi-function switch mounting housing near the top of the steering column. The connector receptacles on the tail of the fixed clockspring case connect the clockspring to the vehicle electrical system through two take outs with connectors from the instrument panel wire harness.

The clockspring rotor is movable and is keyed by an engagement dowel that is molded onto the rotor hub between two fins that are cast into the lower surface of the steering wheel armature. A yellow rubber boot is installed over the engagement dowel to eliminate contact noise between the dowel and the steering wheel. The two lobes on the turn signal cancel cam on the lower surface of the clockspring rotor hub contact a turn signal cancel actuator of the multi-function switch to provide automatic turn signal cancellation.

Two short, yellow-sleeved pigtail wires on the upper surface of the clockspring rotor connect the clockspring to the driver airbag, while a steering wheel wire harness connects the two connector receptacles on the upper surface of the clockspring rotor to the horn switch feed pigtail wire connector and, if the vehicle is so equipped, to the optional speed control and remote radio switches on the steering wheel.

Like the clockspring in a timepiece, the clockspring tape has travel limits and can be damaged by being wound too tightly during full stop-to-stop steering wheel rotation. To prevent this from occurring, the clockspring is centered when it is installed on the steering column. Centering the clockspring indexes the clockspring tape to the movable steering components so that the tape can operate within its designed travel limits. However, if the clockspring is removed from the steering column or if the steering shaft is disconnected from the steering gear, the clockspring spool can change position relative to the movable steering components. The clockspring must be re-centered following completion of this service or the tape may be damaged.

Service replacement clocksprings are shipped pre-centered and with a plastic locking pin installed. This locking pin should not be removed until the clockspring has been installed on the steering column. If the locking pin is removed before the clockspring is installed on a steering column, the clockspring centering procedure must be performed. (Refer to 8 - ELECTRICAL/RESTRAINTS/CLOCKSPRING - STANDARD PROCEDURE - CLOCKSPRING CENTERING).

STANDARD PROCEDURE

CLOCKSPRING CENTERING

WARNING: To avoid personal injury or death, on vehicles equipped with airbags, disable the supplemental restraint system before attempting any steering wheel, steering column, airbag, seat belt tensioner, impact sensor, or instrument panel component diagnosis or service. Disconnect and isolate the battery negative (ground) cable, then wait two minutes for the system capacitor to discharge before performing further diagnosis or service. This is the only sure way to disable the supplemental restraint system. Failure to take the proper precautions could result in accidental airbag deployment.

NOTE: Before starting this procedure, be certain to turn the steering wheel until the front wheels are in the straight-ahead position.

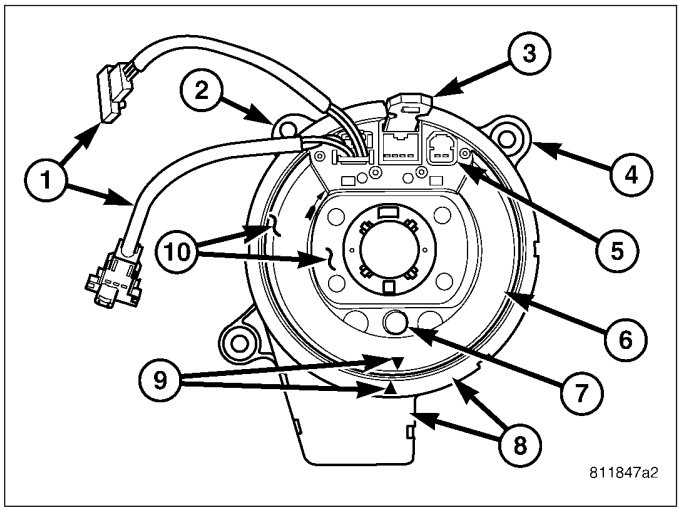

1. Place the front wheels in the straight-ahead position.
2. Remove the clockspring from the steering column. (Refer to 8 - ELECTRICAL/RESTRAINTS/CLOCKSPRING - REMOVAL).
3. Rotate the clockspring rotor (10) clockwise to the end of its travel. **Do not apply excessive torque.**
4. From the end of the clockwise travel, rotate the rotor about two and one-half turns counterclockwise. The engagement dowel and yellow rubber boot (7) should end up at the bottom, and the arrows on the clockspring rotor and case (9) should be in alignment.
5. The clockspring is now centered. Secure the clockspring rotor to the clockspring case to maintain clockspring centering until it is reinstalled on the steering column.
6. The front wheels should still be in the straight-ahead position. Reinstall the clockspring onto the steering column. (Refer to 8 - ELECTRICAL/RESTRAINTS/CLOCKSPRING - INSTALLATION).

REMOVAL

WARNING: To avoid personal injury or death, on vehicles equipped with airbags, disable the supplemental restraint system before attempting any steering wheel, steering column, airbag, seat belt tensioner, impact sensor, or instrument panel component diagnosis or service. Disconnect and isolate the battery negative (ground) cable, then wait two minutes for the system capacitor to discharge before performing further diagnosis or service. This is the only sure way to disable the supplemental restraint system. Failure to take the proper precautions could result in accidental airbag deployment.

NOTE: Before starting this procedure, be certain to turn the steering wheel until the front wheels are in the straight-ahead position.

1. Place the front wheels in the straight ahead position.
2. Disconnect and isolate the battery negative cable.
3. Remove the driver airbag from the steering wheel. (Refer to 8 - ELECTRICAL/RESTRAINTS/DRIVER AIRBAG - REMOVAL).
4. Disconnect the steering wheel wire harness connectors from the upper clockspring connector receptacles.

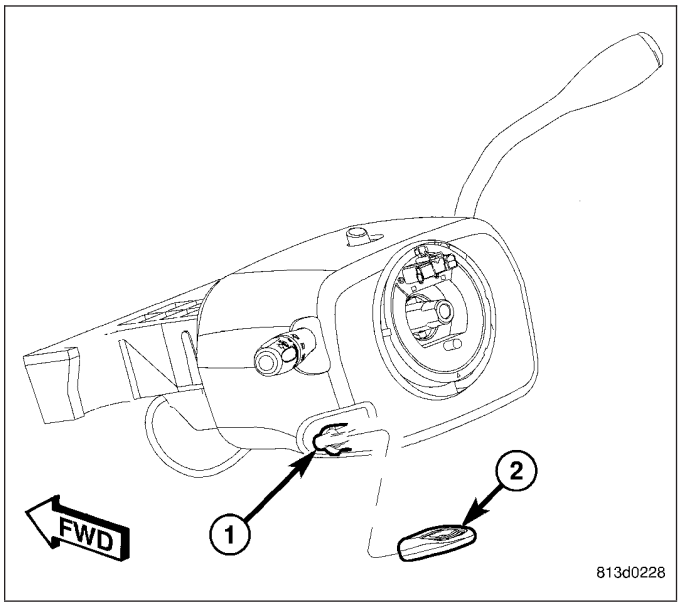

CAUTION: Be certain that the screws that secure the steering wheel puller to the steering wheel are fully engaged in the steering wheel armature without passing through the steering wheel and damaging the clockspring.

5. Remove the steering wheel from the steering column. (Refer to 19 - STEERING/COLUMN/STEERING WHEEL - REMOVAL).
6. Remove the steering column opening cover from the instrument panel. (Refer to 23 - BODY/INSTRUMENT PANEL/STEERING COLUMN OPENING COVER - REMOVAL).
7. Grasp the tilt steering column knob (2) firmly and pull it straight rearward to remove it from the tilt adjuster lever (1) on the left side of the column.

8. From below the steering column, remove the two outboard screws that secure the upper column shroud (1) to the lower shroud (3).
9. Using hand pressure, push gently inward on both sides of the upper shroud near the parting line between the upper and lower shrouds to release the snap features that secure it to the lower shroud.
10. Remove the upper shroud from the lower shroud and the steering column.
11. Remove the one center screw that secures the lower shroud to the steering column (4).
12. Remove the lower shroud from the steering column.

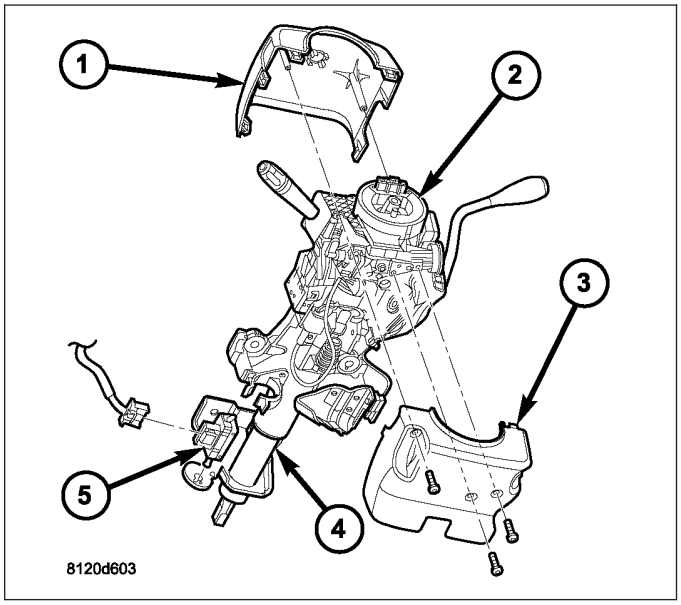

13. Disconnect the two instrument panel wire harness connectors from the two connector receptacles located below the steering column on the back of the clockspring housing.

14. Remove the two screws (3) that secure the clockspring to the multi-function switch mounting housing.
15. Remove the clockspring from the multi-function switch mounting housing. The clockspring cannot be repaired. It must be replaced if faulty or damaged, or if the driver airbag has been deployed.
16. If the removed clockspring is to be reused, be certain to secure the clockspring rotor to the clockspring case to maintain clockspring centering until it is reinstalled on the steering column. If clockspring centering is not maintained, the clockspring must be centered again before it is reinstalled. (Refer to 8 - ELECTRICAL/RESTRAINTS/CLOCKSPRING - STANDARD PROCEDURE - CLOCKSPRING CENTERING).

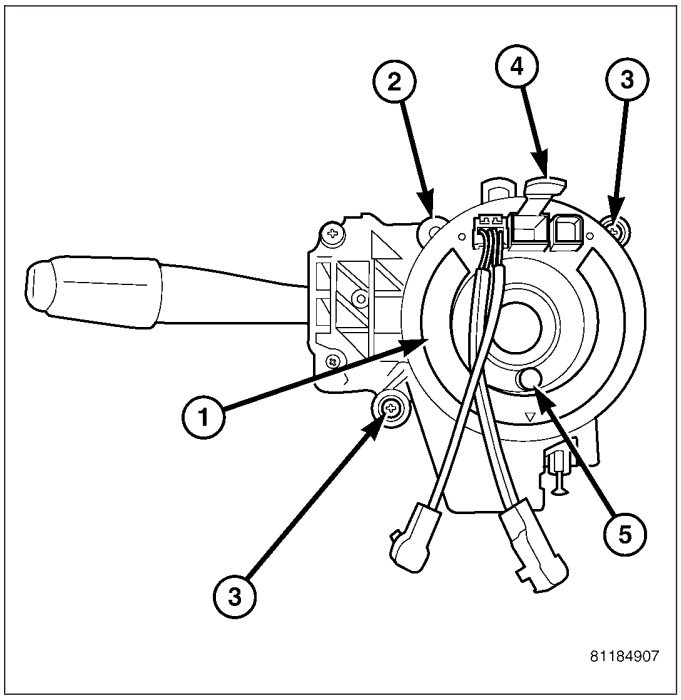

INSTALLATION

WARNING: To avoid personal injury or death, on vehicles equipped with airbags, disable the supplemental restraint system before attempting any steering wheel, steering column, airbag, seat belt tensioner, impact sensor, or instrument panel component diagnosis or service. Disconnect and isolate the battery negative (ground) cable, then wait two minutes for the system capacitor to discharge before performing further diagnosis or service. This is the only sure way to disable the supplemental restraint system. Failure to take the proper precautions could result in accidental airbag deployment.

CAUTION: If the clockspring is not properly centered in relation to the steering wheel, steering shaft and steering gear, it may be damaged. (Refer to 8 - ELECTRICAL/RESTRAINTS/CLOCKSPRING - STANDARD PROCEDURE - CLOCKSPRING CENTERING). Service replacement clocksprings are shipped pre-centered and with a locking pin installed. This locking pin should not be removed until the clockspring has been installed on the steering column. If the locking pin is removed before the clockspring is installed on a steering column, the clockspring centering procedure must be performed.

NOTE: Before starting this procedure, be certain that the front wheels are still in the straight-ahead position.

1. While holding the centered clockspring rotor and case stationary in relation to each other, carefully slide the clockspring down over the steering column upper shaft.
2. Align and seat the hole in the locating tab (2) on the clockspring case over the locating pin on the multi-function switch mounting housing.
3. Install and tighten the two screws (3) that secure the clockspring to the multi-function switch mounting housing. Tighten the screws to 2 N·m (20 in. lbs.).
4. Reconnect the two instrument panel wire harness connectors to the two connector receptacles located below the steering column on the back of the clockspring housing.

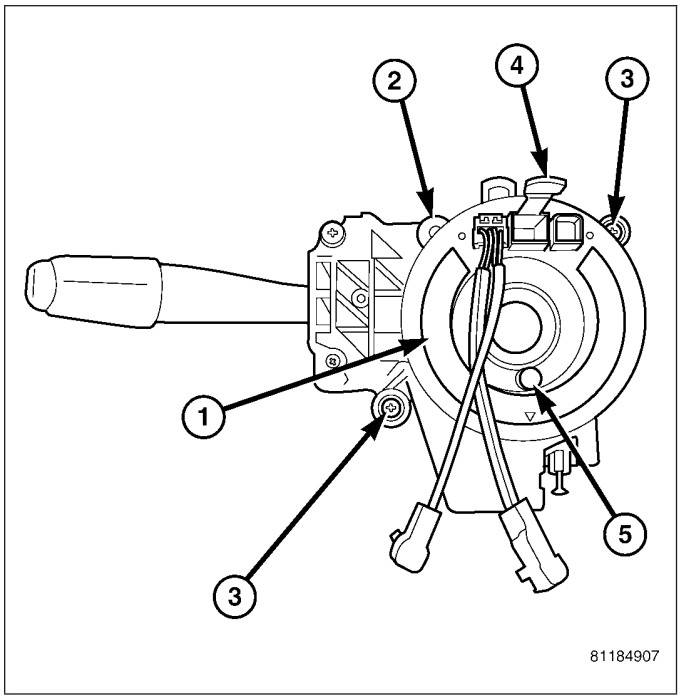

5. Position the lower shroud (3) onto the steering column (4).
6. From below the steering column, install and tighten the one center screw that secures the lower shroud to the steering column lock housing. Tighten the screw to 2 N·m (20 in. lbs.).
7. Position the upper shroud (1) onto the steering column over the lower shroud. If the vehicle is equipped with an automatic transmission, be certain to engage the gearshift lever gap hider into the openings in the right side of the upper and lower shroud halves.
8. Align the snap features on the upper shroud with the receptacles on the lower shroud and apply hand pressure to snap them together.
9. Install and tighten the two outboard screws that secure the upper shroud to the lower shroud. Tighten the screws to 2 N·m (20 in. lbs.).

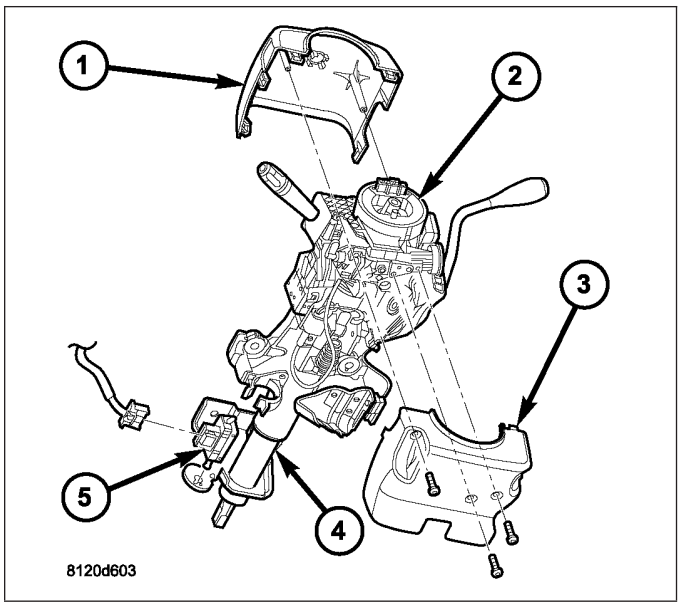

10. Align the tilt steering column knob (2) with the tilt adjuster lever (1) on the left side of the steering column and use hand pressure to snap it back into place.
11. Reinstall the steering column opening cover onto the instrument panel. (Refer to 23 - BODY/INSTRUMENT PANEL/STEERING COLUMN OPENING COVER - INSTALLATION).
12. If a new clockspring has been installed, remove the plastic locking pin that is securing the clockspring rotor to the clockspring case to maintain clockspring centering.

NOTE: When reinstalling the steering wheel, be certain to index the yellow rubber booted engagement dowel on the upper surface of the clockspring rotor between the two fins cast into the lower surface of the steering wheel armature hub.

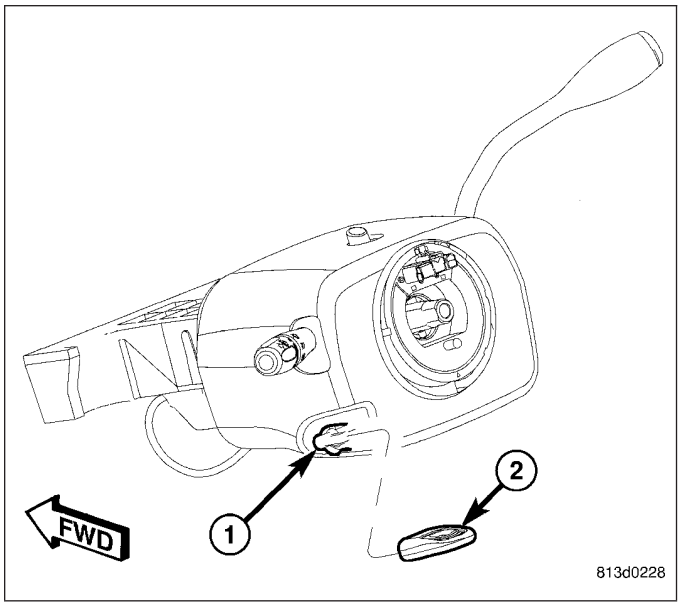

13. Reinstall the steering wheel onto the steering column. (Refer to 19 - STEERING/COLUMN/STEERING WHEEL - INSTALLATION).
14. Reconnect the steering wheel wire harness connectors to the upper clockspring connector receptacles. Be certain that the steering wheel wire harness is routed between the steering wheel back trim cover and the steering wheel armature.
15. Reinstall the driver airbag onto the steering wheel. (Refer to 8 - ELECTRICAL/RESTRAINTS/DRIVER AIRBAG - INSTALLATION).
16. Reconnect the battery negative cable.

AIR BAG-SIDE CURTAIN

DESCRIPTION

Optional side curtain airbags are available for this model when it is also equipped with dual front airbags. These airbags are passive, inflatable, Supplemental Restraint System (SRS) components, and vehicles with this equipment can be readily identified by a molded identification trim button with the “SRS - AIRBAG” logo located on the headliner above each A-pillar, or above each B-pillar on quad cab models. This system is designed to reduce injuries to the vehicle occupants in the event of a side impact collision.

Vehicles equipped with side curtain airbags have two individually controlled curtain airbag units. These airbag units are concealed and mounted above the headliner where they are each secured to one of the roof side rails (5). Each folded airbag cushion is contained within a long extruded plastic channel (8) that extends along the roof rail from the A-pillar (6) at the front of the vehicle to just behind the B-pillar (2) on standard cab models, and to just behind the C-pillar (2) on quad cab models.

A long tether (7) extends down the A-pillar from the front of the airbag cushion, where it is retained to the pillar with plastic push-in routing clips and it is secured to the base of the A-pillar near the belt line with a screw.

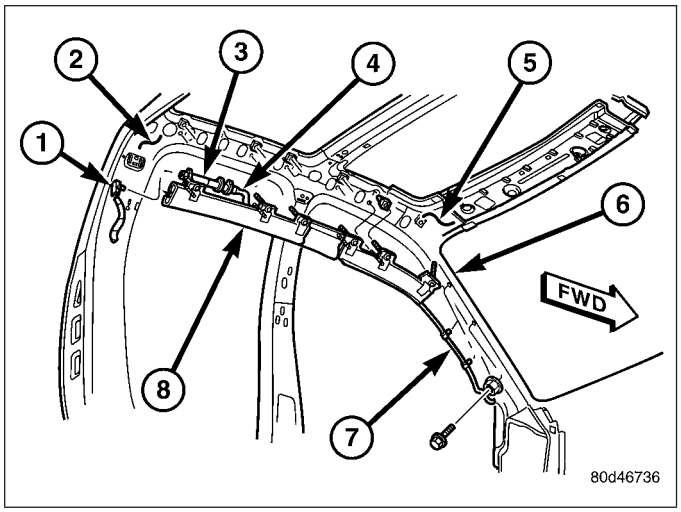

The hybrid-type inflator (3) for each airbag is secured to the roof rail at the rear of the airbag unit behind the B-pillar (standard cab) or C-pillar (quad cab), and is connected to the airbag cushion by a long tubular manifold (4). The inflator bracket and the extruded airbag cushion channel are located with plastic push-in fasteners to the roof rail, then secured with screws to spring nuts located in the roof rail.

A two-wire take out of the body wire harness with a keyed and latched connector insulator (1) on the B-pillar (standard cab) or C-pillar (quad cab) connects directly to an integral receptacle on the inflator initiator. The body wire harness connects the airbag unit to the Airbag Control Module (ACM).

The side curtain airbag unit cannot be adjusted or repaired and must be replaced if deployed, faulty, or in any way damaged. Once a side curtain airbag has been deployed, the complete airbag unit, the headliner, the upper A, B, and C-pillar trim, and all other visibly damaged components must be replaced.

OPERATION

Each side curtain airbag is deployed individually by an electrical signal generated by the Airbag Control Module (ACM) to which it is connected through left or right curtain airbag line 1 and line 2 (or squib) circuits. The hybrid-type inflator assembly for each airbag contains a small canister of highly compressed inert gas. When the ACM sends the proper electrical signal to the airbag inflator, the electrical energy creates enough heat to ignite chemical pellets within the inflator.

Once ignited, these chemicals burn rapidly and produce the pressure necessary to rupture a containment disk in the inert gas canister. The inflator and inert gas canister are sealed and connected to a tubular manifold so that all of the released gas is directed into the folded curtain airbag cushion, causing the cushion to inflate. As the airbag cushion inflates it will drop down from the roof rail between the edge of the headliner and the side glass/body pillars to form a curtain-like cushion to protect the vehicle occupants during a side impact collision.

The front tether keeps the front portion of the side curtain bag taut, thus ensuring that the bag will deploy in the proper position. Following the airbag deployment, the airbag cushion quickly deflates by venting the inert gas through the loose weave of the cushion fabric, and the deflated cushion hangs down loosely from the roof rail.

REMOVAL

WARNING: To avoid personal injury or death, on vehicles equipped with airbags, disable the supplemental restraint system before attempting any steering wheel, steering column, airbag, seat belt tensioner, impact sensor, or instrument panel component diagnosis or service. Disconnect and isolate the battery negative (ground) cable, then wait two minutes for the system capacitor to discharge before performing further diagnosis or service. This is the only sure way to disable the supplemental restraint system. Failure to take the proper precautions could result in accidental airbag deployment.

WARNING: To avoid personal injury or death, when removing a deployed airbag, rubber gloves, eye protection, and a long-sleeved shirt should be worn. There may be deposits on the airbag unit and other interior surfaces. In large doses, these deposits may cause irritation to the skin and eyes.

WARNING: To avoid personal injury or death, use extreme care to prevent any foreign material from entering the side curtain airbag, or becoming entrapped between the side curtain airbag cushion and the headliner. Failure to observe this warning could result in occupant injuries upon airbag deployment.

NOTE: The following procedure is for replacement of a faulty or damaged side curtain airbag. If the airbag is faulty or damaged, but not deployed, review the recommended procedures for handling non-deployed supplemental restraints. (Refer to 8 - ELECTRICAL/RESTRAINTS - STANDARD PROCEDURE - HANDLING NON-DEPLOYED SUPPLEMENTAL RESTRAINTS). If the side curtain airbag has been deployed, review the recommended procedures for service after a supplemental restraint deployment before removing the airbag from the vehicle. (Refer to 8 - ELECTRICAL/RESTRAINTS - STANDARD PROCEDURE - SERVICE AFTER A SUPPLEMENTAL RESTRAINT DEPLOYMENT).

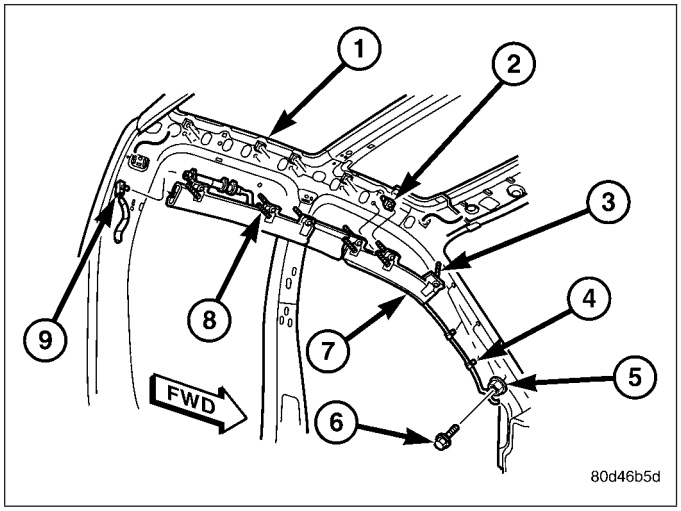

1. Disconnect and isolate the battery negative cable. Wait two minutes for the system capacitor to discharge before further service.
2. Remove the headliner from the vehicle. (Refer to 23 - BODY/INTERIOR/HEADLINER - REMOVAL).
3. Remove the screw (6) that secures the side curtain airbag tether retainer (5) to the base of the A-pillar near the belt line.
4. Disengage the two side curtain airbag tether plastic retainer clips (4) from the A-pillar.
5. Disconnect the body wire harness connector for the side curtain airbag (9) from the connector receptacle at the back of the airbag inflator.
6. Remove the four screws (standard cab) or six screws (quad cab) (3) that secure the side curtain airbag inflator and manifold tube brackets to the spring nuts (2) in the roof rail (1).
7. Grasp the extruded plastic side curtain airbag channel firmly and pull it straight away from the roof rail far enough to disengage all three (standard cab) or five (quad cab) plastic push-in fasteners (8) that secure it.
8. Remove the side curtain airbag (7) from the vehicle as a unit.

INSTALLATION

WARNING: To avoid personal injury or death, on vehicles equipped with airbags, disable the supplemental restraint system before attempting any steering wheel, steering column, airbag, seat belt tensioner, impact sensor, or instrument panel component diagnosis or service. Disconnect and isolate the battery negative (ground) cable, then wait two minutes for the system capacitor to discharge before performing further diagnosis or service. This is the only sure way to disable the supplemental restraint system. Failure to take the proper precautions could result in accidental airbag deployment.

WARNING: To avoid personal injury or death, when removing a deployed airbag, rubber gloves, eye protection, and a long-sleeved shirt should be worn. There may be deposits on the airbag unit and other interior surfaces. In large doses, these deposits may cause irritation to the skin and eyes.

WARNING: To avoid personal injury or death, use extreme care to prevent any foreign material from entering the side curtain airbag, or becoming entrapped between the side curtain airbag cushion and the headliner. Failure to observe this warning could result in occupant injuries upon airbag deployment.

NOTE: The following procedure is for replacement of a faulty or damaged side curtain airbag. If the airbag is faulty or damaged, but not deployed, review the recommended procedures for handling non-deployed supplemental restraints. (Refer to 8 - ELECTRICAL/RESTRAINTS - STANDARD PROCEDURE - HANDLING NON-DEPLOYED SUPPLEMENTAL RESTRAINTS). If the side curtain airbag has been deployed, review the recommended procedures for service after a supplemental restraint deployment before removing the airbag from the vehicle. (Refer to 8 - ELECTRICAL/RESTRAINTS - STANDARD PROCEDURE - SERVICE AFTER A SUPPLEMENTAL RESTRAINT DEPLOYMENT).

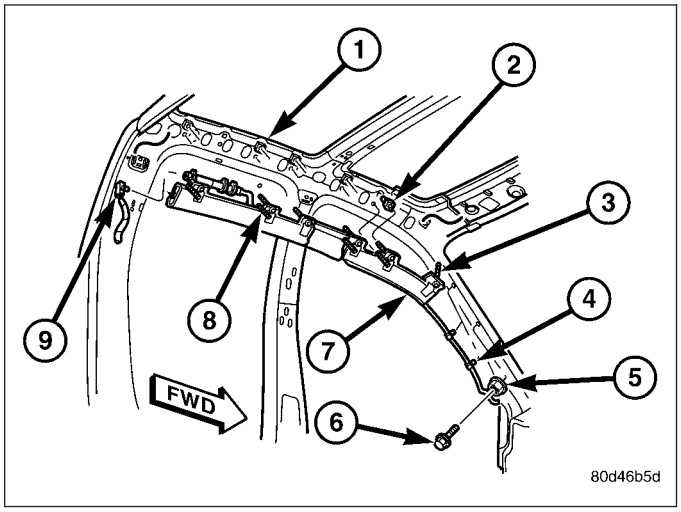

1. Check to be certain that the four (standard cab) or six (quad cab) spring nuts (2) that secure the side curtain airbag inflator and manifold tube brackets are properly installed and in good condition in the roof rail (1).
2. Position the side curtain airbag (7) into the vehicle as a unit.
3. Align all three (standard cab) or five (quad cab) plastic push-in fasteners (8) that secure the extruded plastic side curtain airbag channel with their holes in the roof side rail and push them straight into the roof rail until they are fully seated.
4. Working from the rear of the vehicle to the front, install and tighten the four screws (standard cab) or six screws (quad cab) (3) that secure the side curtain airbag inflator and manifold tube brackets to the nuts in the roof rail. Tighten the screws to 5 N·m (40 in. lbs.).
5. Reconnect the body wire harness connector for the side curtain airbag (9) to the connector receptacle at the back of the airbag inflator. Be certain the connector is fully engaged and latched.
6. Engage the two side curtain airbag tether plastic retainer clips (4) into the A-pillar.
7. Install and tighten the screw (6) that secures the side curtain airbag tether retainer (5) to the base of the A-pillar near the belt line. Tighten the screw to 6 N·m (55 in. lbs.).
8. Reinstall the headliner into the vehicle. (Refer to 23 - BODY/INTERIOR/HEADLINER - INSTALLATION).
9. Do not reconnect the battery negative cable at this time. The supplemental restraint system verification test procedure should be performed following service of any supplemental restraint system component. (Refer to 8 - ELECTRICAL/RESTRAINTS - STANDARD PROCEDURE - VERIFICATION TEST).

AIR BAG-DRIVER

DESCRIPTION

The color-keyed, injection molded, thermoplastic driver airbag protective trim cover (2) is the most visible part of the driver airbag. The driver airbag is located in the center of the steering wheel (1), where it is secured with two screws to the armature of the four-spoke steering wheel. All models have a chrome Dodge Ram emblem in the center of the trim cover. Concealed beneath the driver airbag trim cover are the horn switch, the folded airbag cushion, the airbag cushion retainer, the airbag housing, the airbag inflator, and the retainers that secure the inflator to the airbag

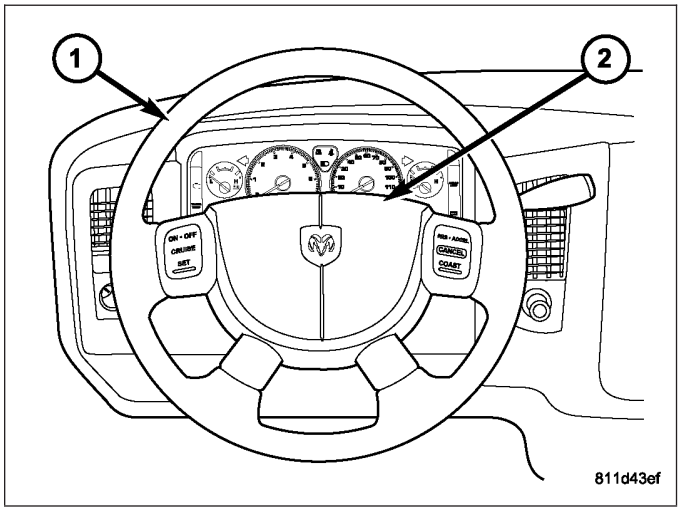

housing.

The airbag cushion, housing (5), and inflator (3) are secured within an integral receptacle molded into the back of the trim cover (4). The four vertical walls of this receptacle have a total of twelve small windows with blocking tabs that are engaged by twelve hook formations around the perimeter of the airbag housing. Each hook is inserted through one of the windows and the blocking tab in each window keeps the hook properly engaged with the trim cover, locking the trim cover securely into place on the airbag housing.

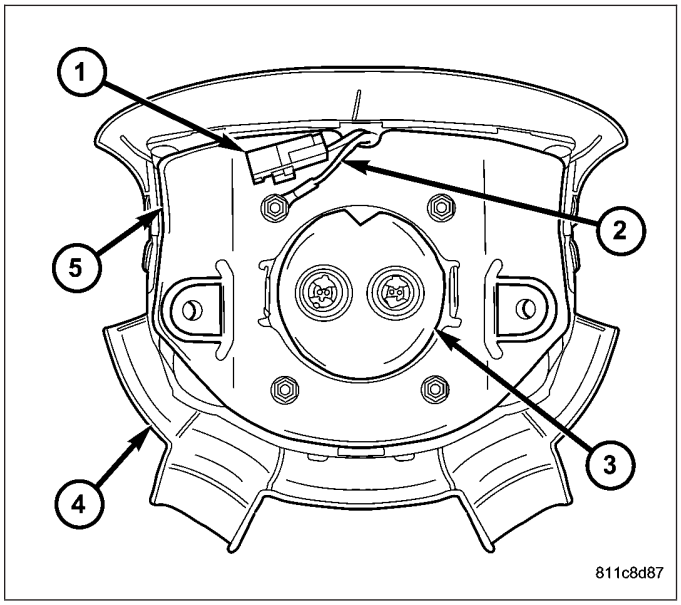

The resistive membrane-type horn switch is secured with heat stakes to the inside surface of the driver airbag trim cover, between the trim cover and the folded airbag cushion. The horn switch ground pigtail wire has an eyelet terminal connector that is captured beneath a flanged nut on the upper right inflator mounting stud on the back of the housing. The horn switch feed pigtail wire has a black, molded plastic insulator (1) that is secured by an integral retainer in a locator hole near the upper right corner of the airbag housing and is connected to the vehicle electrical system through a dedicated take out and connector of the steering wheel wire harness. Both horn switch wires are routed through an integral notch in the center of the upper edge of the airbag housing stamping.

The airbag used in this model is a multistage, Next Generation-type that complies with revised federal airbag standards to deploy with less force than those used in some prior models. A 71 centimeter (28 inch) diameter, radial deploying fabric cushion with internal tethers is used. The airbag inflator is a dual-initiator, non-azide, pyrotechnic-type unit with four mounting studs and is secured to the stamped metal airbag housing by four flanged hex nuts. Two keyed and color-coded connector receptacles on the driver airbag inflator connect the two inflator initiators to the vehicle electrical system through two yellow-jacketed, two-wire pigtail harnesses of the clockspring.

The driver airbag unit cannot be repaired, and must be replaced if deployed or in any way damaged. The driver airbag trim cover and horn switch unit may be disassembled from the driver airbag unit, and is available for separate service replacement.

OPERATION

The multistage driver airbag is deployed by electrical signals generated by the Airbag Control Module (ACM) through the driver airbag squib 1 and squib 2 circuits to the two initiators in the airbag inflator. By using two initiators, the airbag can be deployed at multiple levels of force. The force level is controlled by the ACM to suit the monitored impact conditions by providing one of three delay intervals between the electrical signals provided to the two initiators. The longer the delay between these signals, the less forcefully the airbag will deploy.

When the ACM sends the proper electrical signals to each initiator, the electrical energy generates enough heat to initiate a small pyrotechnic charge which, in turn ignites chemical pellets within the inflator. Once ignited, these chemical pellets burn rapidly and produce a large quantity of inert gas. The inflator is sealed to the back of the airbag housing and a diffuser in the inflator directs all of the inert gas into the airbag cushion, causing the cushion to inflate. As the cushion inflates, the driver airbag trim cover will split at predetermined breakout lines, then fold back out of the way along with the horn switch unit. Following an airbag deployment, the airbag cushion quickly deflates by venting the inert gas towards the instrument panel through vent holes within the fabric used to construct the back (steering wheel side) panel of the airbag cushion.

Some of the chemicals used to create the inert gas may be considered hazardous while in their solid state before they are burned, but they are securely sealed within the airbag inflator. Typically, both initiators are used and all potentially hazardous chemicals are burned during an airbag deployment event. However, it is possible for only one initiator to be used during a deployment due to an airbag system fault; therefore, it is necessary to always confirm that both initiators have been used in order to avoid the improper disposal of potentially live pyrotechnic or hazardous materials. (Refer to 8 - ELECTRICAL/RESTRAINTS - STANDARD PROCEDURE - SERVICE AFTER A SUPPLEMENTAL RESTRAINT DEPLOYMENT).

The inert gas that is produced when the chemicals are burned is harmless. However, a small amount of residue from the burned chemicals may cause some temporary discomfort if it contacts the skin, eyes, or breathing passages. If skin or eye irritation is noted, rinse the affected area with plenty of cool, clean water. If breathing passages are irritated, move to another area where there is plenty of clean, fresh air to breath. If the irritation is not alleviated by these actions, contact a physician.

REMOVAL

WARNING: To avoid personal injury or death, on vehicles equipped with airbags, disable the supplemental restraint system before attempting any steering wheel, steering column, airbag, seat belt tensioner, impact sensor, or instrument panel component diagnosis or service. Disconnect and isolate the battery negative (ground) cable, then wait two minutes for the system capacitor to discharge before performing further diagnosis or service. This is the only sure way to disable the supplemental restraint system. Failure to take the proper precautions could result in accidental airbag deployment.

WARNING: To avoid personal injury or death, when removing a deployed airbag, rubber gloves, eye protection, and a long-sleeved shirt should be worn. There may be deposits on the airbag cushion and other interior surfaces. In large doses, these deposits may cause irritation to the skin and eyes.

NOTE: The following procedure is for replacement of a faulty or damaged driver airbag. If the airbag is faulty or damaged, but not deployed, review the recommended procedures for handling non-deployed supplemental restraints. (Refer to 8 - ELECTRICAL/RESTRAINTS - STANDARD PROCEDURE - HANDLING NON-DEPLOYED SUPPLEMENTAL RESTRAINTS). If the driver airbag has been deployed, review the recommended procedures for service after a supplemental restraint deployment before removing the airbag from the vehicle. (Refer to 8 - ELECTRICAL/RESTRAINTS - STANDARD PROCEDURE - SERVICE AFTER A SUPPLEMENTAL RESTRAINT DEPLOYMENT).

1. Disconnect and isolate the battery negative cable. Wait two minutes for the system capacitor to discharge before further service.
2. From the underside of the steering wheel, remove the two screws (3) that secure the driver airbag (1) to the steering wheel armature (2).

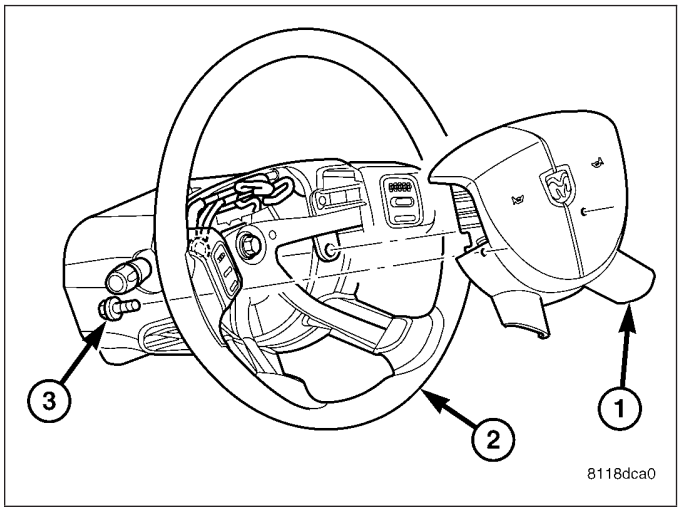

CAUTION: Do not pull on the horn switch feed pigtail wire to disengage the connector from the driver airbag housing or to disconnect the horn switch to steering wheel wire harness connection. Improper pulling on this pigtail wire or connection can result in damage to the horn switch membrane or feed circuit.

3. Pull the driver airbag (1) away from the steering wheel far enough to access the three electrical connections on the back of the airbag housing.
4. Disconnect the steering wheel wire harness connector for the horn switch (2) from the horn switch feed pigtail wire connector (4), which is located on the back of the driver airbag housing.

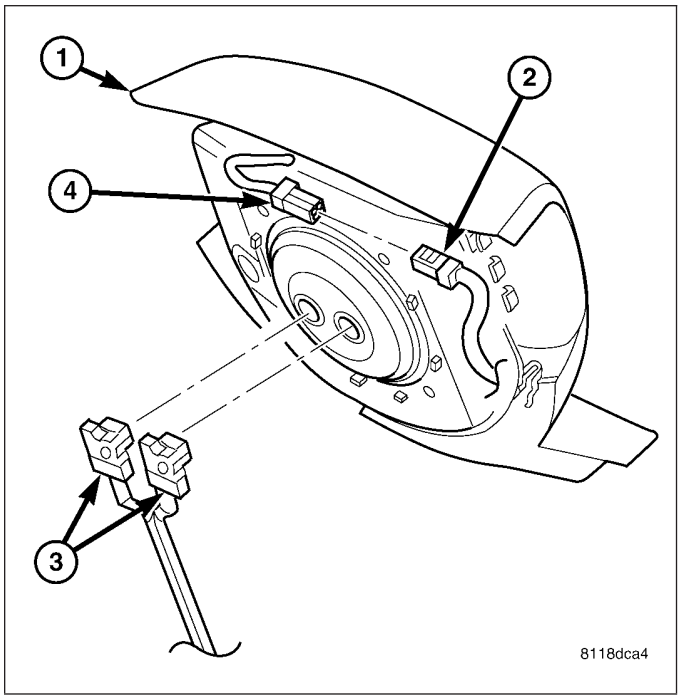

CAUTION: Do not pull on the clockspring pigtail wires or pry on the connector insulator to disengage the connector from the driver airbag inflator connector receptacle. Improper removal of these pigtail wires and their connector insulators can result in damage to the airbag circuits or connector insulators.

5. The clockspring driver airbag pigtail wire connectors (3) are secured by integral latches to the airbag inflator connector receptacles, which are located on the back of the driver airbag housing. Depress the latches on each side of the connector insulator and pull the insulators straight out from the airbag inflator to disconnect them from the connector receptacles.
6. Remove the driver airbag from the steering wheel.
7. If the driver airbag has been deployed, the clockspring must be replaced. (Refer to 8 - ELECTRICAL/RESTRAINTS/CLOCKSPRING - REMOVAL).

DISASSEMBLY

WARNING: To avoid personal injury or death, on vehicles equipped with airbags, disable the supplemental restraint system before attempting any steering wheel, steering column, airbag, seat belt tensioner, impact sensor, or instrument panel component diagnosis or service. Disconnect and isolate the battery negative (ground) cable, then wait two minutes for the system capacitor to discharge before performing further diagnosis or service. This is the only sure way to disable the supplemental restraint system. Failure to take the proper precautions could result in accidental airbag deployment.

WARNING: To avoid personal injury or death, service of this unit should be performed only by DaimlerChrysler-trained and authorized dealer service technicians. Failure to take the proper precautions or to follow the proper procedures could result in accidental, incomplete, or improper airbag deployment and possible occupant injuries.

WARNING: To avoid personal injury or death, use extreme care to prevent any foreign material from entering the driver airbag, or becoming entrapped between the driver airbag cushion and the driver airbag trim cover. Failure to observe this warning could result in occupant injuries upon airbag deployment.

WARNING: To avoid personal injury or death, the driver airbag trim cover must never be painted. Replacement trim covers are serviced in the original colors. Paint may change the way in which the material of the trim cover responds to an airbag deployment. Failure to observe this warning could result in occupant injuries upon airbag deployment.

NOTE: The following procedures can be used to replace the driver airbag trim cover and horn switch unit for service. If the driver airbag is faulty or deployed, the entire driver airbag, trim cover and horn switch must be replaced as a unit.

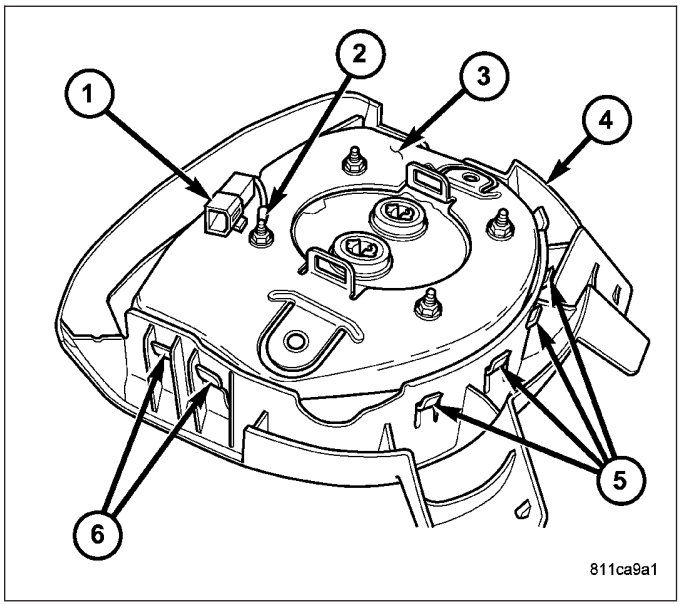

1. Disconnect and isolate the battery negative cable. Wait two minutes for the system capacitor to discharge before further service.
2. Remove the driver airbag from the steering wheel (Refer to 8 - ELECTRICAL/RESTRAINTS/DRIVER AIRBAG - REMOVAL).
3. Place the driver airbag on a suitable clean and dry work surface with the trim cover facing down. If the trim cover will be reused, be certain to take the proper precautions to prevent the trim cover from receiving cosmetic damage during the following procedures.
4. Carefully pry the horn switch feed pigtail wire connector (1) away from the back of the driver airbag housing (3) far enough to disengage the integral connector retainer from the locator hole just above the upper right inflator mounting stud.
5. Remove the nut that secures the horn switch ground pigtail wire eyelet terminal (2) to the upper right inflator stud on the back of the driver airbag housing.
6. Remove the horn switch ground pigtail wire eyelet terminal from the upper right inflator stud on the back of the driver airbag housing.
7. Disengage each of the twelve hooks (5 and 6) of the airbag housing from the twelve windows in the vertical walls of the trim cover (4), one wall at a time. Start by disengaging the upper wall, then do each of the two side walls, and finish with the lower wall. To disengage the hooks, use hand pressure to push the adjacent edge of the airbag housing firmly and evenly downward into the trim cover receptacle, while at the same time pushing outward on the upper edge of the receptacle wall.
8. With all of the hooks disengaged, lift the housing, inflator, and cushion as a unit from the receptacle on the back of the driver airbag trim cover.

ASSEMBLY

WARNING: To avoid personal injury or death, on vehicles equipped with airbags, disable the supplemental restraint system before attempting any steering wheel, steering column, airbag, seat belt tensioner, impact sensor, or instrument panel component diagnosis or service. Disconnect and isolate the battery negative (ground) cable, then wait two minutes for the system capacitor to discharge before performing further diagnosis or service. This is the only sure way to disable the supplemental restraint system. Failure to take the proper precautions could result in accidental airbag deployment.

WARNING: To avoid personal injury or death, service of this unit should be performed only by DaimlerChrysler-trained and authorized dealer service technicians. Failure to take the proper precautions or to follow the proper procedures could result in accidental, incomplete, or improper airbag deployment and possible occupant injuries.

WARNING: To avoid personal injury or death, use extreme care to prevent any foreign material from entering the driver airbag, or becoming entrapped between the driver airbag cushion and the driver airbag trim cover. Failure to observe this warning could result in occupant injuries upon airbag deployment.

WARNING: To avoid personal injury or death, the driver airbag trim cover must never be painted. Replacement trim covers are serviced in the original colors. Paint may change the way in which the material of the trim cover responds to an airbag deployment. Failure to observe this warning could result in occupant injuries upon airbag deployment.

NOTE: The following procedures can be used to replace the driver airbag trim cover and horn switch unit for service. If the driver airbag is faulty or deployed, the entire driver airbag, trim cover and horn switch must be replaced as a unit.

1. Place the driver airbag on a suitable work surface with the airbag cushion facing up.
2. Fold the two flaps (1) of cushion material up around the sides and over the top of the airbag cushion retainer strap (2).
3. Position the new driver airbag trim cover over the airbag cushion, then push the receptacle of the trim cover down evenly over the cushion. Be certain that the cushion material flaps remain oriented over the cushion retainer strap as they were in Step 2.
4. Turn the driver airbag and the new driver airbag trim cover over as a unit, and place the unit on a suitable clean and dry work surface with the airbag cushion facing down. Be certain to take the proper precautions to prevent the trim cover from receiving cosmetic damage during the following procedures.

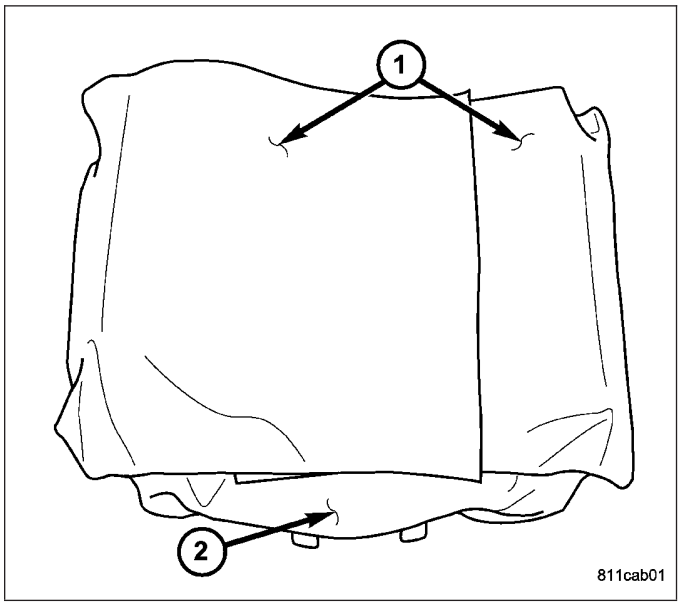

5. Be certain that the horn switch feed and ground pigtail wires are routed through the clearance notch at the top of the airbag housing (3), between the housing and the upper vertical wall of the trim cover receptacle.
6. Work around the perimeter of the unit engaging each of the twelve hooks (5 and 6) on the driver airbag housing through the windows in the walls of the trim cover receptacle.
7. Install the horn switch ground pigtail wire eyelet terminal (2) over the upper right inflator stud on the back of the driver airbag housing.
8. Install and tighten the nut that secures the horn switch ground pigtail wire eyelet terminal to the upper right inflator stud on the back of the driver airbag housing. Tighten the nut to 7 N·m (65 in. lbs.).
9. Using hand pressure, push the integral retainer of the horn switch feed pigtail wire connector (1) into the locator hole just above the upper right inflator mounting stud on the back of the airbag housing.

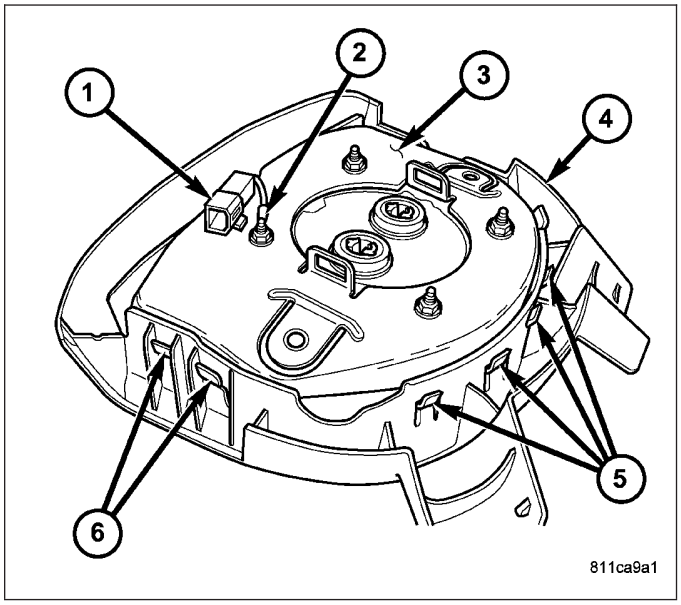

10. After the driver airbag has been assembled, try pulling the trim cover and the airbag housing away from each other. This action will fully seat the edges of the windows into the cradles of the hooks.

11. Before reinstalling the airbag onto the steering wheel, check that the blocking tab (1) in each of the trim cover windows is oriented over the airbag housing hook (4) as shown.
12. Reinstall the driver airbag onto the steering wheel (Refer to 8 - ELECTRICAL/RESTRAINTS/ DRIVER AIRBAG - INSTALLATION).

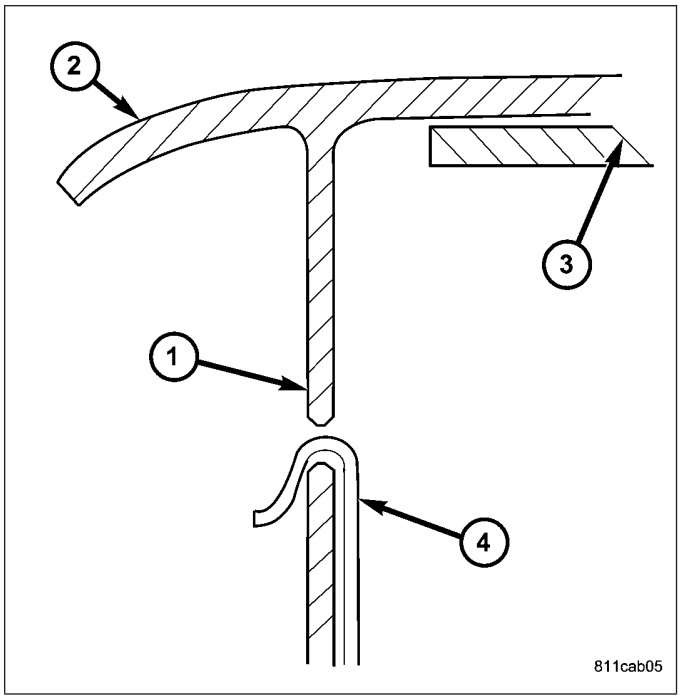

INSTALLATION

WARNING: To avoid personal injury or death, on vehicles equipped with airbags, disable the supplemental restraint system before attempting any steering wheel, steering column, airbag, seat belt tensioner, impact sensor, or instrument panel component diagnosis or service. Disconnect and isolate the battery negative (ground) cable, then wait two minutes for the system capacitor to discharge before performing further diagnosis or service. This is the only sure way to disable the supplemental restraint system. Failure to take the proper precautions could result in accidental airbag deployment.

WARNING: To avoid personal injury or death, use extreme care to prevent any foreign material from entering the driver airbag, or becoming entrapped between the driver airbag cushion and the driver airbag trim cover. Failure to observe this warning could result in occupant injuries upon airbag deployment.

WARNING: To avoid personal injury or death, the driver airbag trim cover must never be painted. Replacement airbags are serviced with trim covers in the original colors. Paint may change the way in which the material of the trim cover responds to an airbag deployment. Failure to observe this warning could result in occupant injuries upon airbag deployment.

NOTE: The following procedure is for replacement of a faulty or damaged driver airbag. If the airbag is faulty or damaged, but not deployed, review the recommended procedures for handling non-deployed supplemental restraints. (Refer to 8 - ELECTRICAL/RESTRAINTS - STANDARD PROCEDURE - HANDLING NON-DEPLOYED SUPPLEMENTAL RESTRAINTS). If the driver airbag has been deployed, review the recommended procedures for service after a supplemental restraint deployment before removing the airbag from the vehicle. (Refer to 8 - ELECTRICAL/RESTRAINTS - STANDARD PROCEDURE - SERVICE AFTER A SUPPLEMENTAL RESTRAINT DEPLOYMENT).

1. Position the driver airbag (1) close enough to the steering wheel to reconnect the three electrical connections on the back of the airbag housing.
2. When installing the driver airbag, reconnect the two clockspring driver airbag pigtail wire connectors (3) to the airbag inflator connector receptacles by pressing straight in on the connector. Be certain to engage each keyed and color-coded connector to the matching connector receptacle. You can be certain that each connector is fully engaged in its receptacle by listening carefully for a distinct, audible click as the connector latches snap into place.
3. Reconnect the steering wheel wire harness connector (2) for the horn switch to the horn switch feed pigtail wire connector (4), which is located on the back of the driver airbag housing.

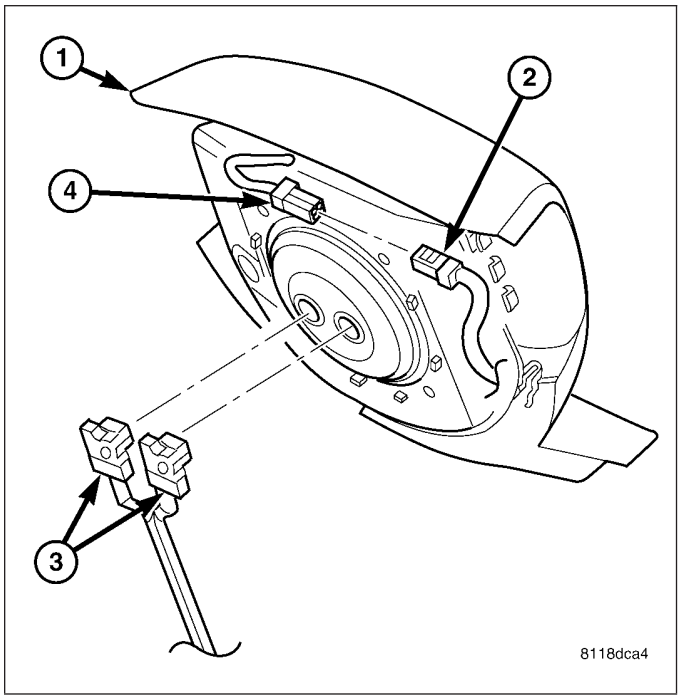

4. Carefully position the driver airbag (1) in the steering wheel (2). Be certain that the clockspring pigtail wires and the steering wheel wire harness in the steering wheel hub area are not pinched between the driver airbag and the steering wheel armature.
5. From the underside of the steering wheel, install and tighten the two screws (3) that secure the driver airbag to the steering wheel armature. Tighten the screws to 10 N·m (90 in. lbs.).
6. Do not reconnect the battery negative cable at this time. The supplemental restraint system verification test procedure should be performed following service of any supplemental restraint system component. (Refer to 8 - ELECTRICAL/RESTRAINTS - STANDARD PROCEDURE - VERIFICATION TEST).

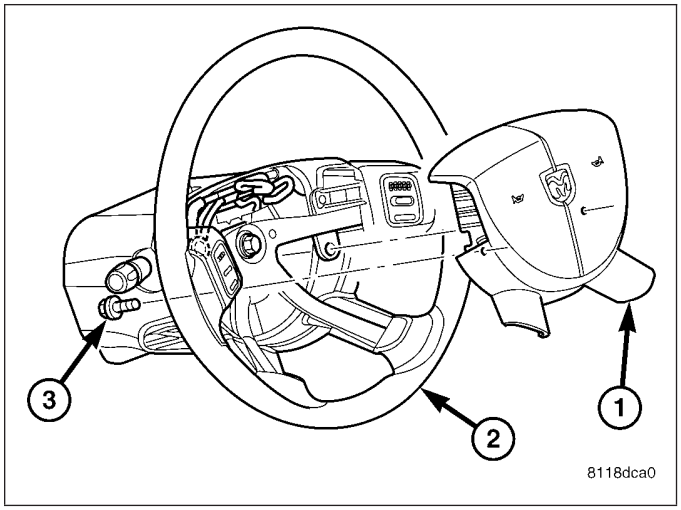

SENSOR-SIDE IMPACT

DESCRIPTION

Two side impact sensors (1) are used on this model when it is equipped with the optional side curtain airbags, one each for the left and right sides of the vehicle. These sensors are mounted remotely from the bi-directional safing sensor that is internal to the Airbag Control Module (ACM). Each side impact sensor is secured with a nut within the right or left B-pillar just above the front seat belt retractors and behind the lower B-pillar trim within the passenger compartment. The sensor housing has an integral connector receptacle (2), an integral mounting stud (3), and an integral anti-rotation pin.

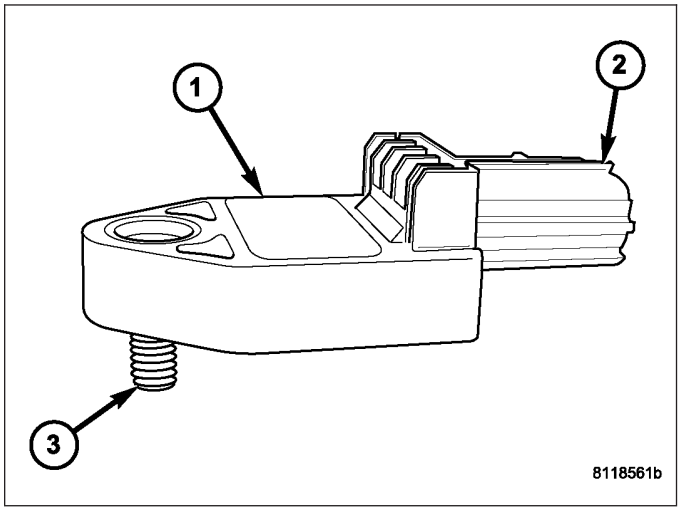

The right and left side impact sensors are identical in construction and calibration. A cavity in the center of the molded black plastic impact sensor housing contains the electronic circuitry of the sensor which includes an electronic communication chip and an electronic impact sensor. Potting material fills the cavity to seal and protect the internal electronic circuitry and components. The side impact sensors are each connected to the vehicle electrical system through a dedicated take out and connector of the body wire harness.

The side impact sensors cannot be repaired or adjusted and, if damaged or faulty, they must be replaced.

OPERATION

The side impact sensors are electronic accelerometers that sense the rate of vehicle deceleration, which provides verification of the direction and severity of an impact. Each sensor also contains an electronic communication chip that allows the unit to communicate the sensor status as well as sensor fault information to the microprocessor in the Airbag Control Module (ACM).

The ACM microprocessor continuously monitors all of the side passive restraint system electrical circuits to determine the system readiness. If the ACM detects a monitored system fault, it sets a Diagnostic Trouble Code (DTC) and controls the airbag indicator operation accordingly. The impact sensors each receive battery current and ground through dedicated left and right sensor plus and minus circuits from the ACM. The impact sensors and the ACM communicate by modulating the voltage in the sensor plus circuit.

The hard wired circuits between the side impact sensors and the ACM may be diagnosed and tested using conventional diagnostic tools and procedures. However, conventional diagnostic methods will not prove conclusive in the diagnosis of the ACM, the impact sensors, or the electronic message inputs to or outputs from the impact sensors. The most reliable, efficient, and accurate means to diagnose the impact sensors, the ACM, and the electronic message communication between the sensors and the ACM requires the use of a diagnostic scan tool. Refer to the appropriate diagnostic information.

REMOVAL

STANDARD CAB

WARNING: To avoid personal injury or death, on vehicles equipped with airbags, disable the supplemental restraint system before attempting any steering wheel, steering column, airbag, seat belt tensioner, impact sensor, or instrument panel component diagnosis or service. Disconnect and isolate the battery negative (ground) cable, then wait two minutes for the system capacitor to discharge before performing further diagnosis or service. This is the only sure way to disable the supplemental restraint system. Failure to take the proper precautions could result in accidental airbag deployment.

WARNING: To avoid personal injury or death, never strike or drop the side impact sensor, as it can damage the impact sensor or affect its calibration. The side impact sensor enables the system to deploy the side curtain airbags. If an impact sensor is accidentally dropped during service, the sensor must be scrapped and replaced with a new unit. Failure to observe this warning could result in accidental, incomplete, or improper supplemental restraint deployment.

1. Adjust the driver or passenger side front seat to its most forward position for easiest access to the B-pillar trim.
2. Disconnect and isolate the battery negative cable. Wait two minutes for the system capacitor to discharge before further service.
3. Remove the front outboard seat belt and retractor from the inside of the B-pillar. (Refer to 8 - ELECTRICAL/RESTRAINTS/FRONT OUTBOARD SEAT BELT & RETRACTOR - REMOVAL - STANDARD CAB).
4. Remove the nut (4) that secures the stud of the side impact sensor (1) to the inner B-pillar.
5. Reach through the retractor mounting hole (3) in the inner B-pillar to access the side impact sensor and disengage the anti-rotation pin and mounting stud from the holes in the inner B-pillar.
6. Pull the side impact sensor out of the B-pillar far enough to access and disconnect the body wire harness connector (2) from the sensor connector receptacle.
7. Remove the sensor from the B-pillar.

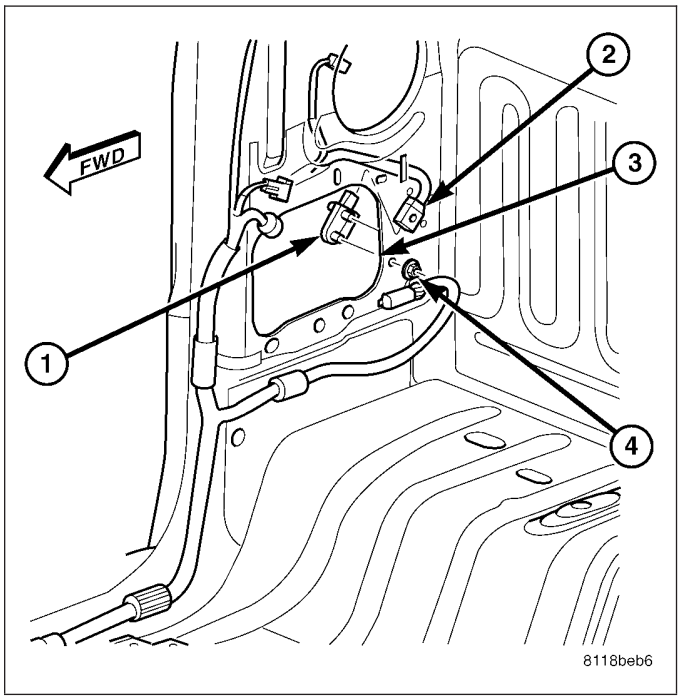

QUAD CAB

WARNING: To avoid personal injury or death, on vehicles equipped with airbags, disable the supplemental restraint system before attempting any steering wheel, steering column, airbag, seat belt tensioner, impact sensor, or instrument panel component diagnosis or service. Disconnect and isolate the battery negative (ground) cable, then wait two minutes for the system capacitor to discharge before performing further diagnosis or service. This is the only sure way to disable the supplemental restraint system. Failure to take the proper precautions could result in accidental airbag deployment.

WARNING: To avoid personal injury or death, never strike or drop the side impact sensor, as it can damage the impact sensor or affect its calibration. The side impact sensor enables the system to deploy the side curtain airbags. If an impact sensor is accidentally dropped during service, the sensor must be scrapped and replaced with a new unit. Failure to observe this warning could result in accidental, incomplete, or improper supplemental restraint deployment.

1. Adjust the front seat to its most forward position for easiest access to the B-pillar trim.
2. Disconnect and isolate the battery negative cable. Wait two minutes for the system capacitor to discharge before further service.
3. Remove the nut (3) that secures the stud of the side impact sensor (2) to the inner B-pillar (1).
4. Reach through the large hole above the retractor mounting hole in the inner B-pillar to access the side impact sensor and disengage the anti-rotation pin and mounting stud from the holes in the inner B-pillar.
5. Pull the side impact sensor out through the large hole in the B-pillar far enough to access and disconnect the body wire harness connector (4) from the sensor connector receptacle.
6. Remove the side impact sensor from the B-pillar.

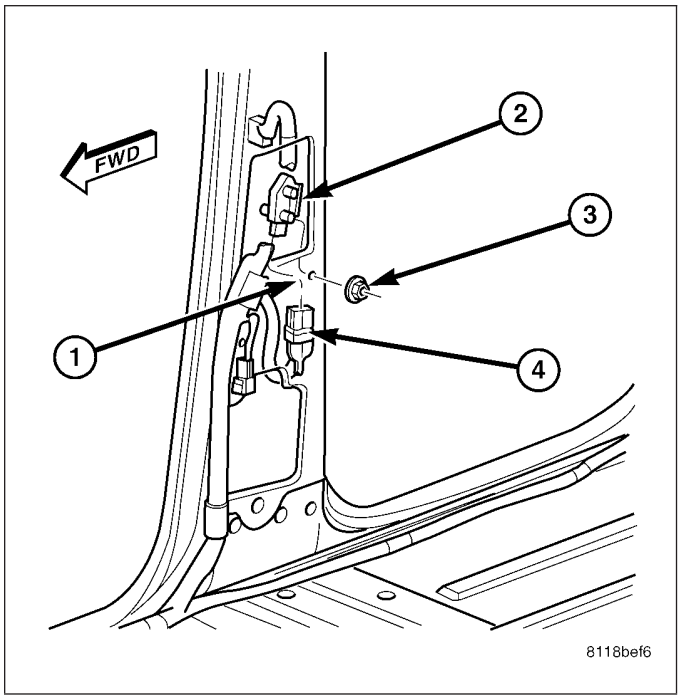

INSTALLATION

STANDARD CAB

WARNING: To avoid personal injury or death, on vehicles equipped with airbags, disable the supplemental restraint system before attempting any steering wheel, steering column, airbag, seat belt tensioner, impact sensor, or instrument panel component diagnosis or service. Disconnect and isolate the battery negative (ground) cable, then wait two minutes for the system capacitor to discharge before performing further diagnosis or service. This is the only sure way to disable the supplemental restraint system. Failure to take the proper precautions could result in accidental airbag deployment.

WARNING: To avoid personal injury or death, never strike or drop the side impact sensor, as it can damage the impact sensor or affect its calibration. The side impact sensor enables the system to deploy the side curtain airbags. If an impact sensor is accidentally dropped during service, the sensor must be scrapped and replaced with a new unit. Failure to observe this warning could result in accidental, incomplete, or improper supplemental restraint deployment.

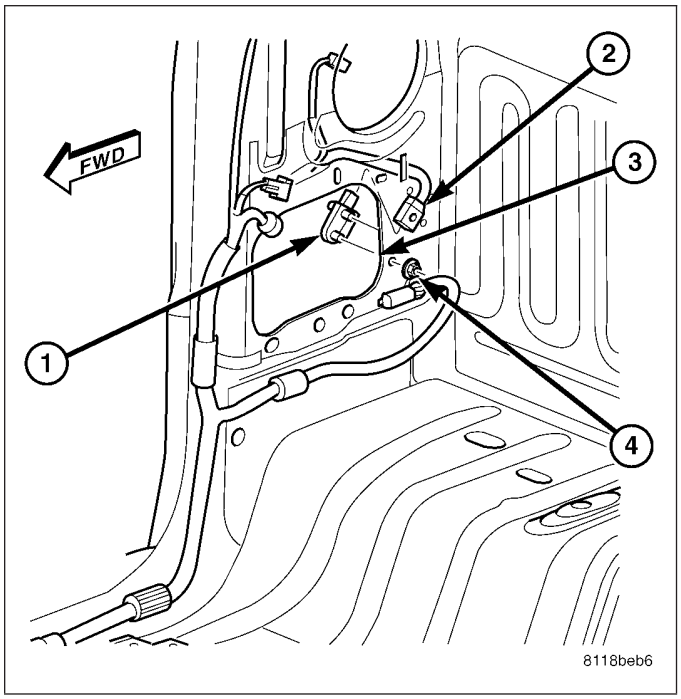

1. Position the side impact sensor (1) to the retractor mounting hole (3) in the inner B-pillar.
2. Reconnect the body wire harness connector (2) to the sensor connector receptacle.
3. Reach through the retractor mounting hole in the inner B-pillar to position and engage the anti-rotation pin and the stud on the side impact sensor to the locating slot and mounting hole from the inside of the B-pillar.
4. Install and tighten the nut (4) that secures the side impact sensor stud to the inner B-pillar. Tighten the nut to 8 N·m (70 in. lbs.).
5. Reinstall the front outboard seat belt and retractor to the inside of the B-pillar. (Refer to 8 - ELECTRICAL/RESTRAINTS/FRONT OUTBOARD SEAT BELT & RETRACTOR - INSTALLATION - STANDARD CAB).
6. Do not reconnect the battery negative cable at this time. The supplemental restraint system verification test procedure should be performed following service of any supplemental restraint system component. (Refer to 8 - ELECTRICAL/RESTRAINTS - STANDARD PROCEDURE - VERIFICATION TEST).

QUAD CAB

WARNING: To avoid personal injury or death, on vehicles equipped with airbags, disable the supplemental restraint system before attempting any steering wheel, steering column, airbag, seat belt tensioner, impact sensor, or instrument panel component diagnosis or service. Disconnect and isolate the battery negative (ground) cable, then wait two minutes for the system capacitor to discharge before performing further diagnosis or service. This is the only sure way to disable the supplemental restraint system. Failure to take the proper precautions could result in accidental airbag deployment.

WARNING: To avoid personal injury or death, never strike or drop the side impact sensor, as it can damage the impact sensor or affect its calibration. The side impact sensor enables the system to deploy the side curtain airbags. If an impact sensor is accidentally dropped during service, the sensor must be scrapped and replaced with a new unit. Failure to observe this warning could result in accidental, incomplete, or improper supplemental restraint deployment.

1. Position the side impact sensor (2) to the large hole above the retractor mounting hole in the inner B-pillar (1).
2. Reconnect the body wire harness connector (4) to the sensor connector receptacle.
3. Reach through the large hole above the retractor mounting hole in the inner B-pillar to position and engage the anti-rotation pin and the stud on the side impact sensor to the locating slot and mounting hole from the inside of the B-pillar.
4. Install and tighten the nut (3) that secures the side impact sensor stud to the inner B-pillar. Tighten the nut to 8 N·m (70 in. lbs.).
5. Do not reconnect the battery negative cable at this time. The supplemental restraint system verification test procedure should be performed following service of any supplemental restraint system component. (Refer to 8 - ELECTRICAL/RESTRAINTS - STANDARD PROCEDURE - VERIFICATION TEST).

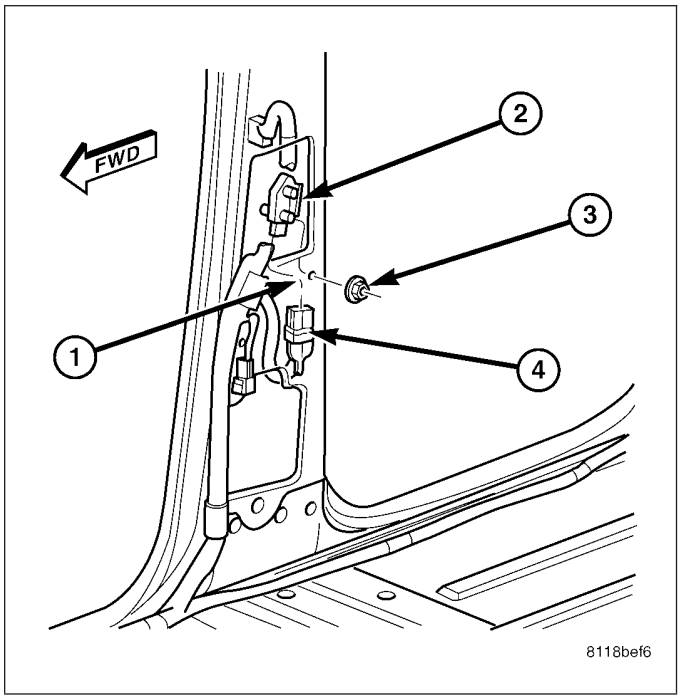

SWITCH-PASSENGER AIRBAG DISARM

DESCRIPTION

The passenger airbag on/off switch (1) is standard equipment on all standard cab versions of this model when they are equipped with the dual front airbag system. This switch is a two-position, resistor multiplexed switch with a single integral red Light-Emitting Diode (LED), and a non-coded key cylinder-type actuator. The switch is located in the lower right corner of instrument panel center bezel, near the center of instrument panel to make the Off indicator (3) visible to all front seat occupants.

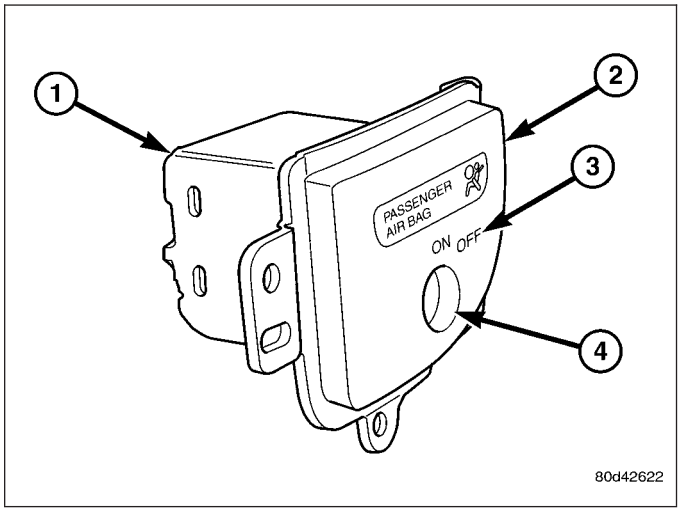

When the switch is in its installed position, the only components visible through the dedicated opening of the cluster bezel are the switch face plate (2) and nomenclature, and the key cylinder actuator (4). The ″Off″ position of the switch is illuminated when this switch position is selected, while the “On” position of the switch is designated by text imprinted upon the face plate of the switch, but is not illuminated. The remainder of the switch is concealed behind the switch face plate and the instrument panel center bezel.

The passenger airbag on/off switch housing is constructed of molded plastic and has three integral mounting tabs. These mounting tabs are used to secure the switch to the back of the molded plastic switch face plate with three small screws. The molded plastic face plate also has three integral mounting tabs that are used to secure the switch and face plate unit to the instrument panel center bezel with three additional screws.

A molded plastic connector receptacle on the back of the switch housing connects the switch to the vehicle electrical system through a dedicated take out and connector of the instrument panel wire harness. The molded plastic harness connector insulator is keyed and latched to ensure proper and secure switch electrical connections. The passenger airbag on/off switch cannot be adjusted or repaired and, if faulty or damaged, the switch must be replaced.

OPERATION

The passenger airbag on/off switch allows the customer to turn the passenger airbag function On or Off to accommodate certain uses of the right front seating position where airbag protection may not be desired. See the owner's manual in the vehicle glove box for specific recommendations on when to enable or disable the passenger airbag. The Off indicator of the switch will be illuminated whenever the switch is turned to the Off position and the ignition switch is in the On position.

The ignition key is the only key or object that should ever be inserted into the key cylinder actuator of the switch. The on/off switch requires only a partial key insertion to fully depress a spring-loaded locking plunger. The spring-loaded locking plunger prevents the user from leaving the key in the switch. The key will be automatically ejected when force is not applied. To actuate the passenger airbag on/off switch, insert the ignition key into the switch key actuator far enough to fully depress the plunger, then rotate the actuator to the desired switch position.

When the switch key actuator is rotated to its clockwise stop (the key actuator slot will be aligned with the Off indicator), the Off indicator is illuminated and the passenger airbag is disabled. When the switch is rotated to its counterclockwise stop (the key actuator slot will be in a vertical position), the Off indicator will be extinguished and the passenger airbag is enabled.

The passenger airbag on/off switch connects one of two internal resistors in series between the passenger airbag mux switch sense and passenger airbag mux switch return circuits of the Airbag Control Module (ACM). The ACM continually monitors the resistance in these circuits to determine the switch position that has been selected.

When the switch is in the Off position, the ACM provides a ground input to the switch through the passenger airbag indicator driver circuit, which energizes the Light-Emitting Diode (LED) that illuminates the Off indicator of the switch. The ACM will also illuminate the Off indicator of the switch for about seven seconds each time the ignition switch is turned to the On position as a bulb test.

The ACM will store a Diagnostic Trouble Code (DTC) for any fault it detects in the passenger airbag on/off switch or Off indicator circuits, and will illuminate the airbag indicator in the instrument cluster if a fault is detected. For proper diagnosis of the passenger airbag on/off switch or the ACM, a diagnostic scan tool is required. Refer to the appropriate diagnostic information.

REMOVAL

WARNING: To avoid personal injury or death, on vehicles equipped with airbags, disable the supplemental restraint system before attempting any steering wheel, steering column, airbag, seat belt tensioner, impact sensor, or instrument panel component diagnosis or service. Disconnect and isolate the battery negative (ground) cable, then wait two minutes for the system capacitor to discharge before performing further diagnosis or service. This is the only sure way to disable the supplemental restraint system. Failure to take the proper precautions could result in accidental airbag deployment.

1. Disconnect and isolate the battery negative cable. Wait two minutes for the system capacitor to discharge before further service.
2. Remove the center bezel (1) from the instrument panel. (Refer to 23 - BODY/INSTRUMENT PANEL/ INSTRUMENT PANEL CENTER BEZEL - REMOVAL).
3. From the back of the center bezel, remove the three screws (2) that secure the passenger airbag on/off switch and face plate unit (3) to the back of the bezel.
4. Remove the passenger airbag on/off switch and face plate from the center bezel as a unit.

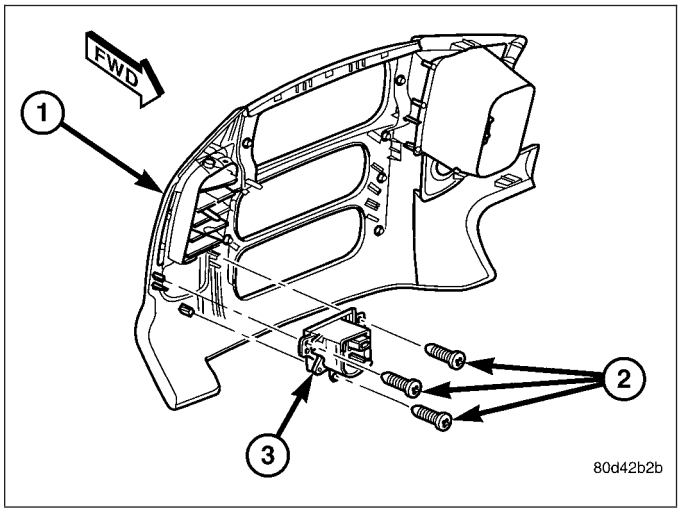

INSTALLATION

WARNING: To avoid personal injury or death, on vehicles equipped with airbags, disable the supplemental restraint system before attempting any steering wheel, steering column, airbag, seat belt tensioner, impact sensor, or instrument panel component diagnosis or service. Disconnect and isolate the battery negative (ground) cable, then wait two minutes for the system capacitor to discharge before performing further diagnosis or service. This is the only sure way to disable the supplemental restraint system. Failure to take the proper precautions could result in accidental airbag deployment.

1. Position the passenger airbag on/off switch and face plate unit (3) to the back of the center bezel (1).
2. Install and tighten the three screws (2) that secure the passenger airbag on/off switch face plate to the back of the center bezel. Tighten the screws to 2 N·m (17 in. lbs.).
3. Reinstall the center bezel onto the instrument panel. (Refer to 23 - BODY/INSTRUMENT PANEL/ INSTRUMENT PANEL CENTER BEZEL - INSTALLATION).
4. Do not reconnect the battery negative cable at this time. The supplemental restraint system verification test procedure should be performed following service of any supplemental restraint system component. (Refer to 8 - ELECTRICAL/RESTRAINTS - STANDARD PROCEDURE - VERIFICATION TEST).

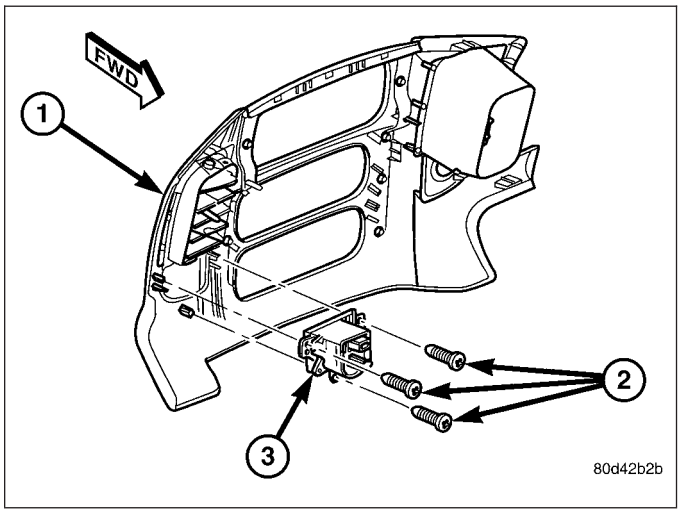

AIR BAG-PASSENGER

DESCRIPTION

The rearward facing surface of the injection molded, thermoplastic passenger airbag door (1) is the most visible part of the passenger airbag. The passenger airbag door is located above the glove box opening on the instrument panel in front of the front seat passenger seating position.

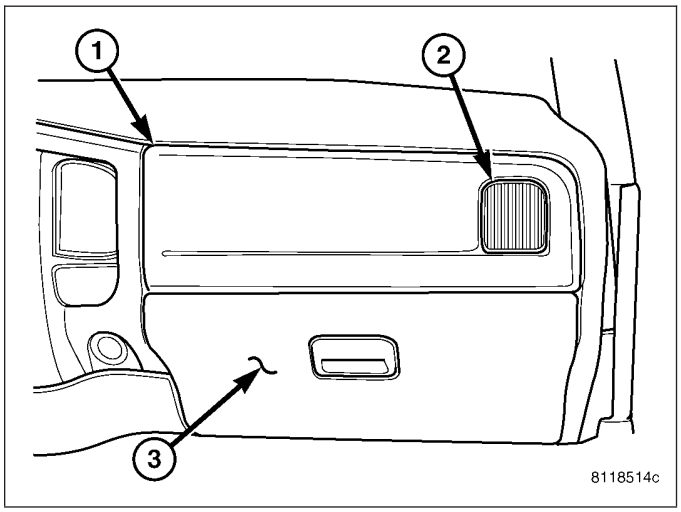

SRT-10 models also have a unique instrument panel trim bezel (3) with the SRT-10 logo secured to the lower edge of the airbag door (1).

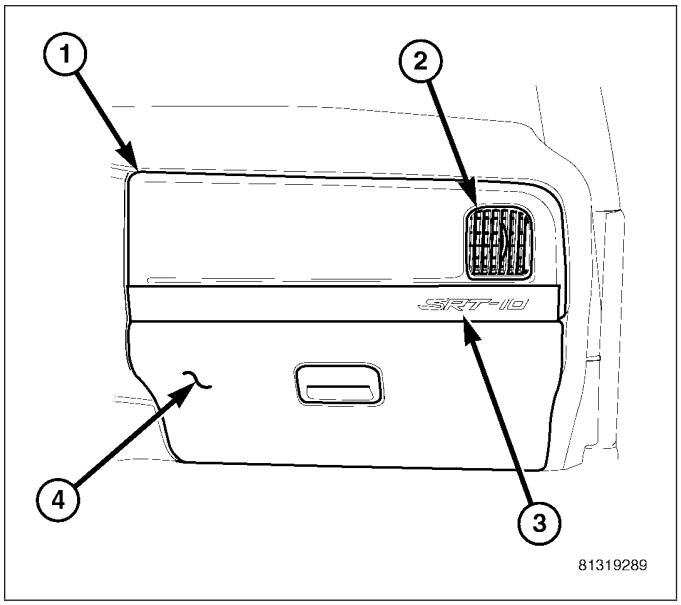

The upper and outboard edges of the airbag door (1) are secured with seven integral snap features (3) to the instrument panel base trim, while two screws secure the integral inboard mounting flange to the base trim, and four screws secure the lower mounting flange to the upper glove box opening reinforcement integral to the instrument panel structural support. The passenger airbag door includes an air conditioning panel outlet and housing (2). The panel outlet housing features four snap features that secure it to the back of the airbag door and a mounting tab that is also secured with one screw to the upper glove box opening reinforcement.

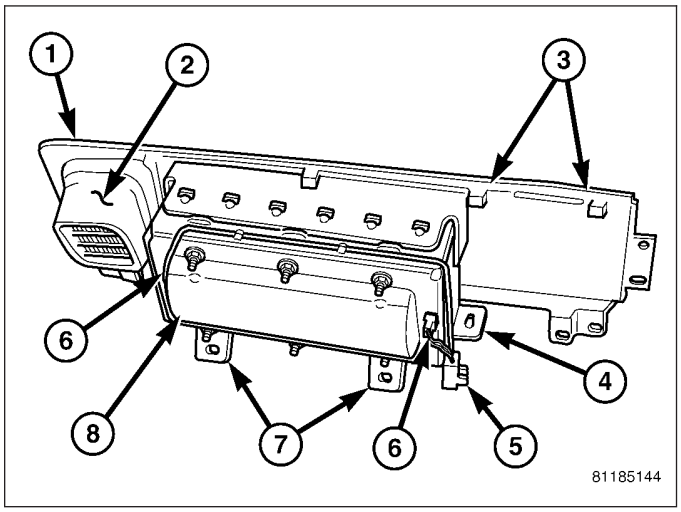

Located behind the passenger airbag door within the instrument panel is the passenger airbag unit. The passenger airbag housing (8) fits into a molded receptacle on the back of the airbag door, where six stamped hook formations on the upper and lower edges of the airbag housing are engaged in six small window openings on the upper and lower flanges of the receptacle to secure the airbag door to the airbag housing. The inboard airbag door fasteners and mounting flange are concealed beneath the instrument panel center bezel, while the lower fasteners and mounting flange are concealed beneath the instrument panel lower surround. The passenger airbag unit is secured by four screws through two front (7) and two rear (4) brackets integral to the base of the airbag housing to the instrument panel structural support.

The passenger airbag unit used in this model is a multistage, Next Generation-type that complies with revised federal airbag standards to deploy with less force than those used in some prior models. The passenger airbag unit consists of a stamped and welded metal housing, the airbag cushion, the airbag inflator initiators (6), and a stamped metal airbag and inflator retainer plate that is secured to the airbag housing with six studs and nuts. The airbag housing contains the airbag inflator and the folded airbag cushion. An approximately 80 centimeter (31.5 inch) wide by 90 centimeter (35.5 inch) high rectangular fabric cushion is used.

The airbag inflator is a non-azide, pyrotechnic-type unit that is secured to and sealed within the airbag housing. A short four-wire pigtail harness with a keyed, yellow connector insulator (5) connects the two inflator initiators to the vehicle electrical system through a dedicated take out and connector of the instrument panel wire harness.

The passenger airbag includes the airbag door, the panel outlet housing and for SRT-10 models only, the instrument panel trim bezel. This unit cannot be repaired, and must be replaced if deployed, faulty, or in any way damaged.

OPERATION

The multistage passenger airbag is deployed by electrical signals generated by the Airbag Control Module (ACM) through the passenger airbag squib 1 and squib 2 circuits to the two initiators in the airbag inflator. By using two initiators, the airbag can be deployed at multiple levels of force. The force level is controlled by the ACM to suit the monitored impact conditions by providing one of four delay intervals between the electrical signals provided to the two initiators. The longer the delay between these signals, the less forcefully the airbag will deploy.

When the ACM sends the proper electrical signals to each initiator, the electrical energy generates enough heat to initiate a small pyrotechnic charge which, in turn ignites chemical pellets within the inflator. Once ignited, these chemical pellets burn rapidly and produce a large quantity of inert gas. The inflator is sealed to the airbag cushion and a diffuser in the inflator directs all of the inert gas into the airbag cushion, causing the cushion to inflate. As the cushion inflates, the passenger airbag door will split at predetermined tear seam lines concealed on the inside surface of the door, then the door will pivot up over the top of the instrument panel and out of the way. Following an airbag deployment, the airbag cushion quickly deflates by venting the inert gas through vent holes within the fabric used to construct the back (instrument panel side) of the airbag cushion.

Typically, both initiators are used during an airbag deployment event. However, it is possible for only one initiator to be used during a deployment due to an airbag system fault; therefore, it is necessary to always confirm that both initiators have been used in order to avoid the improper disposal of potentially live pyrotechnic materials. (Refer to 8 - ELECTRICAL/RESTRAINTS - STANDARD PROCEDURE - SERVICE AFTER A SUPPLEMENTAL RESTRAINT DEPLOYMENT).

REMOVAL

WARNING: To avoid personal injury or death, on vehicles equipped with airbags, disable the supplemental restraint system before attempting any steering wheel, steering column, airbag, seat belt tensioner, impact sensor, or instrument panel component diagnosis or service. Disconnect and isolate the battery negative (ground) cable, then wait two minutes for the system capacitor to discharge before performing further diagnosis or service. This is the only sure way to disable the supplemental restraint system. Failure to take the proper precautions could result in accidental airbag deployment.

WARNING: To avoid personal injury or death, when removing a deployed airbag, rubber gloves, eye protection, and a long-sleeved shirt should be worn. There may be deposits on the airbag unit and other interior surfaces. In large doses, these deposits may cause irritation to the skin and eyes.

NOTE: The following procedure is for replacement of a faulty or damaged passenger airbag. If the airbag is faulty or damaged, but not deployed, review the recommended procedures for handling non-deployed supplemental restraints. (Refer to 8 - ELECTRICAL/RESTRAINTS - STANDARD PROCEDURE - HANDLING NON-DEPLOYED SUPPLEMENTAL RESTRAINTS). If the passenger airbag has been deployed, review the recommended procedures for service after a supplemental restraint deployment before removing the airbag from the vehicle. (Refer to 8 - ELECTRICAL/RESTRAINTS - STANDARD PROCEDURE - SERVICE AFTER A SUPPLEMENTAL RESTRAINT DEPLOYMENT).

1. Disconnect and isolate the battery negative cable. Wait two minutes for the system capacitor to discharge before further service.
2. Remove the lower surround from the instrument panel. (Refer to 23 - BODY/INSTRUMENT PANEL/ LOWER SURROUND - REMOVAL).
3. Remove the screw (2) that secures the mounting tab of the panel outlet housing to the upper glove box opening reinforcement (3).
4. Remove the six screws (4) that secure the inboard and lower flanges of the passenger airbag door (1) to the instrument panel.

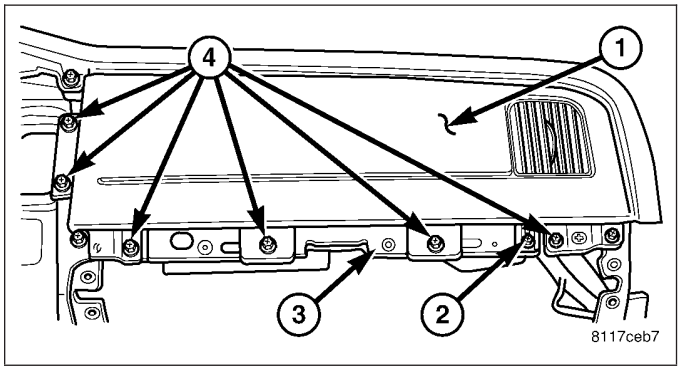

5. Reach through and above the glove box opening to access and remove the two screws (4) that secure the passenger airbag rear brackets to the upper glove box opening reinforcement (2).
6. Reach through and above the glove box opening to access and remove the two screws (3) that secure the passenger airbag front brackets to the instrument panel structural support.

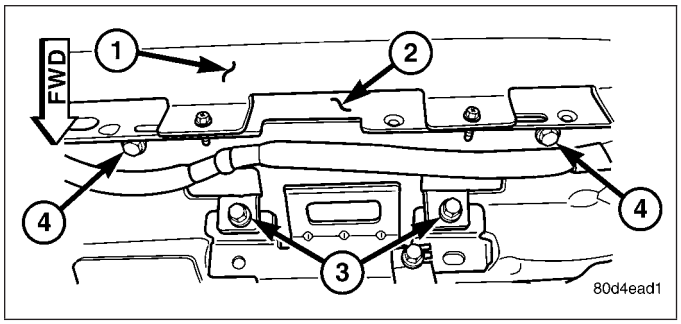

7. Using a trim stick (1) or another suitable wide flat-bladed tool, gently pry the upper and outboard edges of the passenger airbag door (2) away from the instrument panel (3) far enough to disengage the seven snap features on the door from the receptacles in the instrument panel base trim.
8. Pull the passenger airbag housing and door unit straight back from the instrument panel far enough to access the instrument panel wire harness take out and connector for the airbag located on the inboard side of the airbag housing.
9. Disconnect the passenger airbag pigtail wire connector from the instrument panel wire harness connector for the airbag. To disconnect the connector:
   a. Slide the red Connector Position Assurance (CPA) lock on the connector toward the side of the connector.
   b. Depress the connector latch tab and pull the two halves of the connector straight away from each other.
10. Remove the passenger airbag and airbag door from the instrument panel as a unit.

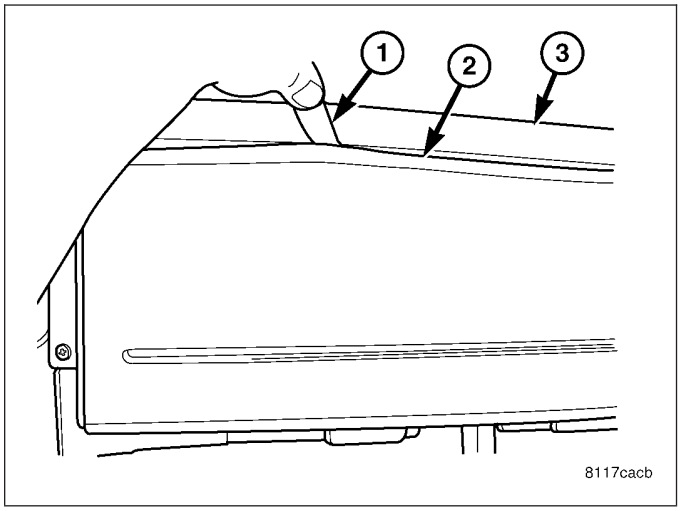

INSTALLATION

WARNING: To avoid personal injury or death, on vehicles equipped with airbags, disable the supplemental restraint system before attempting any steering wheel, steering column, airbag, seat belt tensioner, impact sensor, or instrument panel component diagnosis or service. Disconnect and isolate the battery negative (ground) cable, then wait two minutes for the system capacitor to discharge before performing further diagnosis or service. This is the only sure way to disable the supplemental restraint system. Failure to take the proper precautions could result in accidental airbag deployment.

WARNING: To avoid personal injury or death, when removing a deployed airbag, rubber gloves, eye protection, and a long-sleeved shirt should be worn. There may be deposits on the airbag unit and other interior surfaces. In large doses, these deposits may cause irritation to the skin and eyes.

WARNING: To avoid personal injury or death, the passenger airbag door must never be painted. Replacement passenger airbag units are serviced with doors in the original colors. Paint may change the way in which the material of the airbag door responds to an airbag deployment. Failure to observe this warning could result in occupant injuries upon airbag deployment.

WARNING: To avoid personal injury or death, the trim bezel on the lower edge of the passenger airbag door on SRT-10 models must never be removed or transferred to another passenger airbag door. Replacement passenger airbag units are serviced with doors that include a replacement trim bezel. Failure to observe this warning could result in trim bezel separation and occupant injuries upon airbag deployment.

WARNING: To avoid personal injury or death, use extreme care to prevent any foreign material from entering the passenger airbag, or becoming entrapped between the passenger airbag cushion and the passenger airbag door. Failure to observe this warning could result in occupant injuries upon airbag deployment.

NOTE: The following procedure is for replacement of a faulty or damaged passenger airbag. If the airbag is faulty or damaged, but not deployed, review the recommended procedures for handling non-deployed supplemental restraints. (Refer to 8 - ELECTRICAL/RESTRAINTS - STANDARD PROCEDURE - HANDLING NON-DEPLOYED SUPPLEMENTAL RESTRAINTS). If the passenger airbag has been deployed, review the recommended procedures for service after a supplemental restraint deployment before removing the airbag from the vehicle. (Refer to 8 - ELECTRICAL/RESTRAINTS - STANDARD PROCEDURE - SERVICE AFTER A SUPPLEMENTAL RESTRAINT DEPLOYMENT).

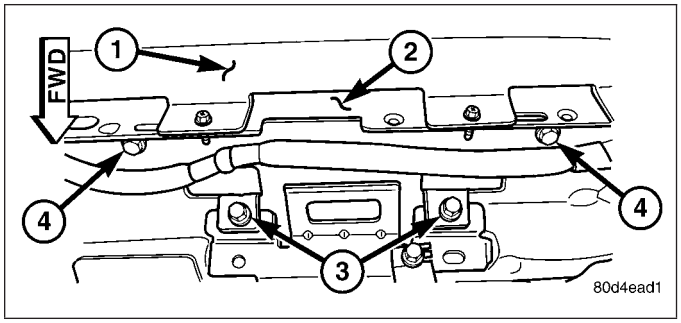

1. Carefully position the passenger airbag and airbag door (1) to the instrument panel as a unit.
2. Reconnect the passenger airbag pigtail wire connector to the instrument panel wire harness connector for the airbag. This connector is secured to the inboard side of the airbag housing. **Be certain that the latch on the connector and the red Connector Position Assurance (CPA) lock are each fully engaged.**
3. Position the passenger airbag housing and door unit into the instrument panel.
4. Using hand pressure, press firmly and evenly over each of the seven snap features on the upper and outboard edges of the passenger airbag door until they snap into their receptacles in the instrument panel base trim.
5. Reach through and above the glove box opening to install and tighten the two screws (3) that secure the passenger airbag front brackets to the instrument panel structural support. Tighten the screws to 6 N·m (55 in. lbs.).
6. Reach through and above the glove box opening to install and tighten the two screws (4) that secure the passenger airbag rear brackets to the upper glove box opening reinforcement (2). Tighten the screws to 6 N·m (55 in. lbs.).

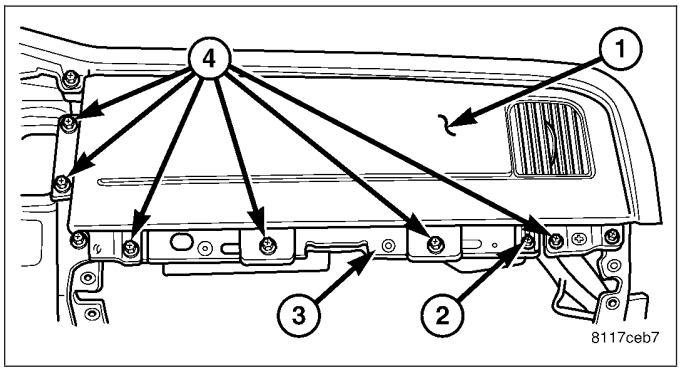

7. Install and tighten the six screws (4) that secure the inboard and lower flanges of the passenger airbag door (1) to the instrument panel. Tighten the screws to 2 N·m (20 in. lbs.).
8. Install and tighten the screw (2) that secures the mounting tab of the panel outlet housing to the upper glove box opening reinforcement (3). Tighten the screw to 2 N·m (20 in. lbs.).
9. Reinstall the lower surround onto the instrument panel. (Refer to 23 - BODY/INSTRUMENT PANEL/ LOWER SURROUND - INSTALLATION).
10. Do not reconnect the battery negative cable at this time. The supplemental restraint system verification test procedure should be performed following service of any supplemental restraint system component. (Refer to 8 - ELECTRICAL/RESTRAINTS - STANDARD PROCEDURE - VERIFICATION TEST).

SEAT BELT

REMOVAL - FRONT CENTER

WARNING: To avoid personal injury or death, during and following any seat belt or child restraint anchor service, carefully inspect all seat belts, buckles, mounting hardware, retractors, tether straps, and anchors for proper installation, operation, or damage. Replace any belt that is cut, frayed, or torn. Straighten any belt that is twisted. Tighten any loose fasteners. Replace any belt that has a damaged or inoperative buckle or retractor. Replace any belt that has a bent or damaged latch plate or anchor plate. Replace any child restraint anchor or the unit to which the anchor is integral that has been bent or damaged. Never attempt to repair a seat belt or child restraint component. Always replace damaged or faulty seat belt and child restraint components with the correct, new and unused replacement parts listed in the DaimlerChrysler Mopar Parts Catalog.

NOTE: A fixed position front center seat belt buckle is located on the left side of the front center seat section (20 percent) used on all models. Standard cab models also have a unique fixed position black, keyed front center seat belt lower anchor buckle for the three-point center seat belt lower anchor located on the right side of the front center seat section. The following procedure also applies to the fixed position front center seat lap belt located on the right side of the front center seat section of all quad cab models. The three-point front center seat belt and retractor unit is only used on standard cab models. (Refer to 8 - ELECTRICAL/RESTRAINTS/FRONT CENTER SEAT BELT & RETRACTOR - REMOVAL).

1. Move the adjacent right or left front outboard seat section (40 percent) to its most forward position for easiest access to the front center seat belt buckle, lap belt lower anchor, or unique black, keyed front center seat belt lower anchor buckle (1).
2. From behind the front seat, remove the screw (5) that secures the front center seat belt buckle, lap belt lower anchor, or unique black, keyed front center seat belt lower anchor buckle to the center seat support bracket (3).
3. From the front of the front seat, reach between the center seat cushion (6) and the adjacent right or left front outboard seat cushion to access and remove the front center seat belt buckle, lap belt unit, or unique black, keyed front center seat belt lower anchor buckle through the elastic strap (2) on the side of the center seat cushion.
4. Remove the front center seat belt buckle, lap belt unit, or unique black, keyed front center seat belt lower anchor buckle from the front seat.

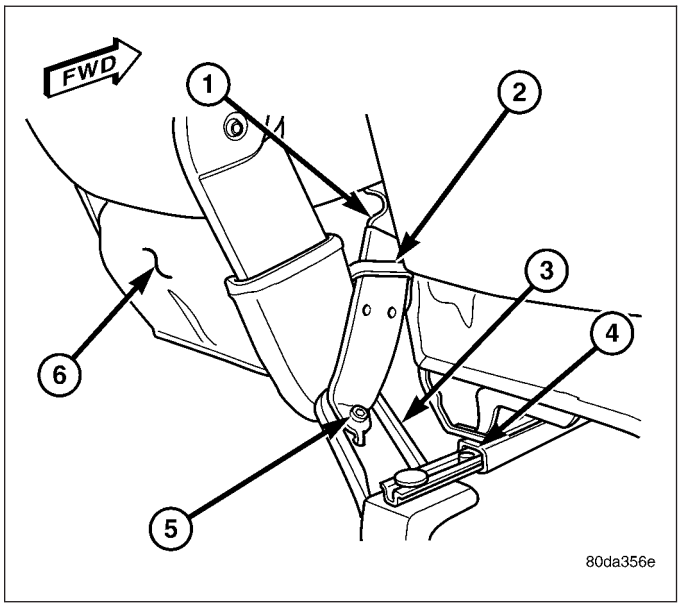

INSTALLATION - FRONT CENTER

WARNING: To avoid personal injury or death, during and following any seat belt or child restraint anchor service, carefully inspect all seat belts, buckles, mounting hardware, retractors, tether straps, and anchors for proper installation, operation, or damage. Replace any belt that is cut, frayed, or torn. Straighten any belt that is twisted. Tighten any loose fasteners. Replace any belt that has a damaged or inoperative buckle or retractor. Replace any belt that has a bent or damaged latch plate or anchor plate. Replace any child restraint anchor or the unit to which the anchor is integral that has been bent or damaged. Never attempt to repair a seat belt or child restraint component. Always replace damaged or faulty seat belt and child restraint components with the correct, new and unused replacement parts listed in the DaimlerChrysler Mopar Parts Catalog.

NOTE: A fixed position front center seat belt buckle is located on the left side of the front center seat section (20 percent) used on all models. Standard cab models also have a unique fixed position black, keyed front center seat belt lower anchor buckle for the three-point center seat belt lower anchor located on the right side of the front center seat section. The following procedure also applies to the fixed position front center seat lap belt located on the right side of the front center seat section of all quad cab models. The three-point front center seat belt and retractor unit is only used on standard cab models. (Refer to 8 - ELECTRICAL/RESTRAINTS/FRONT CENTER SEAT BELT & RETRACTOR - INSTALLATION).

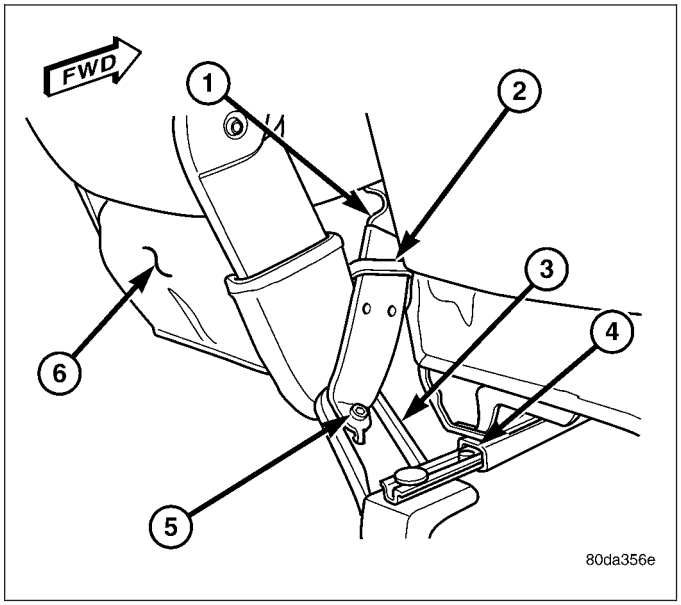

1. From the front of the front seat, position the front center seat belt buckle, lap belt unit, or unique black, keyed front center seat belt lower anchor buckle (1) between the center seat cushion (6) and the adjacent right or left front outboard seat cushion.
2. From the front of the front seat, reach between the center seat cushion and the adjacent right or left front outboard seat cushion to route the front center seat belt buckle, lap belt unit lower anchor, or unique black, keyed front center seat belt lower anchor buckle through the elastic strap (2) on the side of the center seat cushion.
3. From behind the front seat, position the front center seat belt buckle, lap belt lower anchor, or unique black, keyed front center seat belt lower anchor buckle to the center seat support bracket (3). Be certain to engage the anti-rotation tab on the buckle or belt anchor into the corresponding hole in the center seat support bracket.
4. Install and tighten the screw (5) that secures the front center seat belt buckle, lap belt lower anchor, or unique black, keyed front center seat belt lower anchor buckle to the center seat support bracket. Tighten the screw to 40 N·m (29 ft. lbs.).
5. Move the adjacent right or left front outboard seat section (40 percent) back to its rearward position.

SEAT BELT BUCKLE

REMOVAL

FRONT OUTBOARD

WARNING: To avoid personal injury or death, during and following any seat belt or child restraint anchor service, carefully inspect all seat belts, buckles, mounting hardware, retractors, tether straps, and anchors for proper installation, operation, or damage. Replace any belt that is cut, frayed, or torn. Straighten any belt that is twisted. Tighten any loose fasteners. Replace any belt that has a damaged or inoperative buckle or retractor. Replace any belt that has a bent or damaged latch plate or anchor plate. Replace any child restraint anchor or the unit to which the anchor is integral that has been bent or damaged. Never attempt to repair a seat belt or child restraint component. Always replace damaged or faulty seat belt and child restraint components with the correct, new and unused replacement parts listed in the DaimlerChrysler Mopar Parts Catalog.

NOTE: A traveling front outboard seat belt buckle is located on the inboard side of each front outboard seat section (40 percent) used on all models. The seat belt buckle on the driver's side front seat for all models also includes a seat belt switch. (Refer to 8 - ELECTRICAL/RESTRAINTS/SEAT BELT SWITCH - DESCRIPTION).

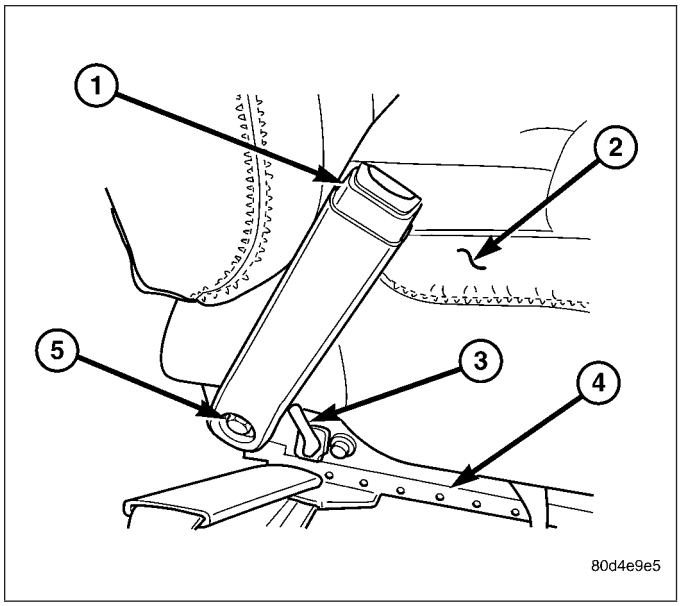

1. Move the right or left front outboard seat section (2) to its most rearward position and tilt the seat back forward for easiest access to the front outboard seat belt buckle lower anchor.
2. For easiest access to the front outboard seat belt buckle lower anchor on standard cab models, also move the outboard seat section opposite the side from which the buckle is to be removed to its most forward position and tilt the seat back forward.
3. On standard cab models only, remove the stowage tray from the rear floor panel behind the seat. (Refer to 23 - BODY/INTERIOR/REAR FLOOR STOWAGE TRAY - REMOVAL).
4. From behind the front seat on the driver side only, disconnect the seat belt switch pigtail wire (3) connector from the seat wire harness take out and connector for the switch located below the inboard edge of the driver side inboard seat track (4) just forward of the buckle lower anchor.
5. From behind the front seat, remove the screw (5) that secures the front outboard seat belt buckle (1) lower anchor to the bracket on the inboard seat track.
6. From the front of the front seat, reach between the center seat cushion and the adjacent right or left front outboard seat cushion to access and remove the front outboard seat belt buckle from the seat.

FRONT CENTER & CENTER ANCHOR

WARNING: To avoid personal injury or death, during and following any seat belt or child restraint anchor service, carefully inspect all seat belts, buckles, mounting hardware, retractors, tether straps, and anchors for proper installation, operation, or damage. Replace any belt that is cut, frayed, or torn. Straighten any belt that is twisted. Tighten any loose fasteners. Replace any belt that has a damaged or inoperative buckle or retractor. Replace any belt that has a bent or damaged latch plate or anchor plate. Replace any child restraint anchor or the unit to which the anchor is integral that has been bent or damaged. Never attempt to repair a seat belt or child restraint component. Always replace damaged or faulty seat belt and child restraint components with the correct, new and unused replacement parts listed in the DaimlerChrysler Mopar Parts Catalog.

NOTE: A fixed position front center seat belt buckle is located on the left side of the front center seat section (20 percent) used on all models. Standard cab models also have a unique fixed position black, keyed front center seat belt lower anchor buckle for the three-point center seat belt lower anchor located on the right side of the front center seat section. The following procedure also applies to the fixed position front center seat lap belt located on the right side of the front center seat section of all quad cab models. The three-point front center seat belt and retractor unit is only used on standard cab models. (Refer to 8 - ELECTRICAL/RESTRAINTS/FRONT CENTER SEAT BELT & RETRACTOR - REMOVAL).

1. Move the adjacent right or left front outboard seat section (40 percent) to its most forward position for easiest access to the front center seat belt buckle, lap belt lower anchor, or unique black, keyed front center seat belt lower anchor buckle (1).
2. From behind the front seat, remove the screw (5) that secures the front center seat belt buckle, lap belt lower anchor, or unique black, keyed front center seat belt lower anchor buckle to the center seat support bracket (3).
3. From the front of the front seat, reach between the center seat cushion (6) and the adjacent right or left front outboard seat cushion to access and remove the front center seat belt buckle, lap belt unit, or unique black, keyed front center seat belt lower anchor buckle through the elastic strap (2) on the side of the center seat cushion.
4. Remove the front center seat belt buckle, lap belt unit, or unique black, keyed front center seat belt lower anchor buckle from the front seat.

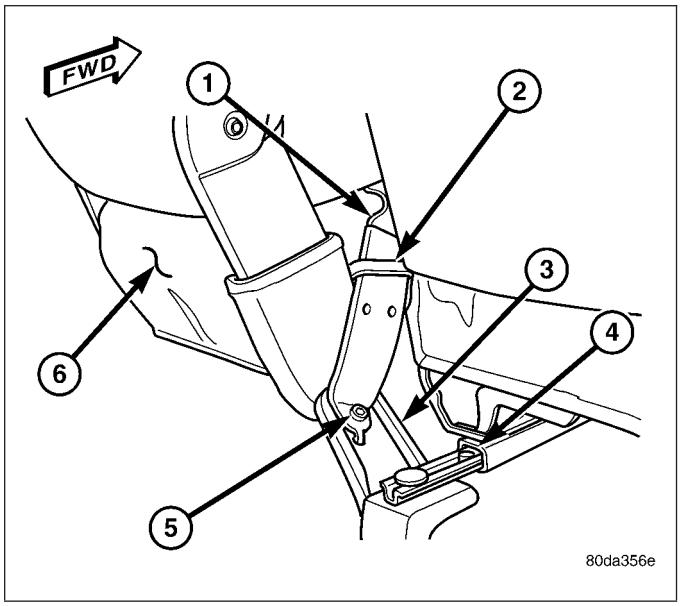

REAR CENTER & LEFT OUTBOARD

WARNING: To avoid personal injury or death, during and following any seat belt or child restraint anchor service, carefully inspect all seat belts, buckles, mounting hardware, retractors, tether straps, and anchors for proper installation, operation, or damage. Replace any belt that is cut, frayed, or torn. Straighten any belt that is twisted. Tighten any loose fasteners. Replace any belt that has a damaged or inoperative buckle or retractor. Replace any belt that has a bent or damaged latch plate or anchor plate. Replace any child restraint anchor or the unit to which the anchor is integral that has been bent or damaged. Never attempt to repair a seat belt or child restraint component. Always replace damaged or faulty seat belt and child restraint components with the correct, new and unused replacement parts listed in the DaimlerChrysler Mopar Parts Catalog.

1. Lift up the rear seat cushion into its stowed position against the rear seat back.
2. Remove the screw (3) that secures either the center (5) or the left outboard (4) occupant buckle unit to the rear floor panel (7) near the base of the cab back panel (1). On models with the optional 60/40 split rear bench, the screw that secures the buckle unit also secures one of the rear seat mounting brackets to the rear floor panel.
3. Remove the center or the left outboard occupant buckle unit from the rear floor panel or from the rear seat mounting bracket.

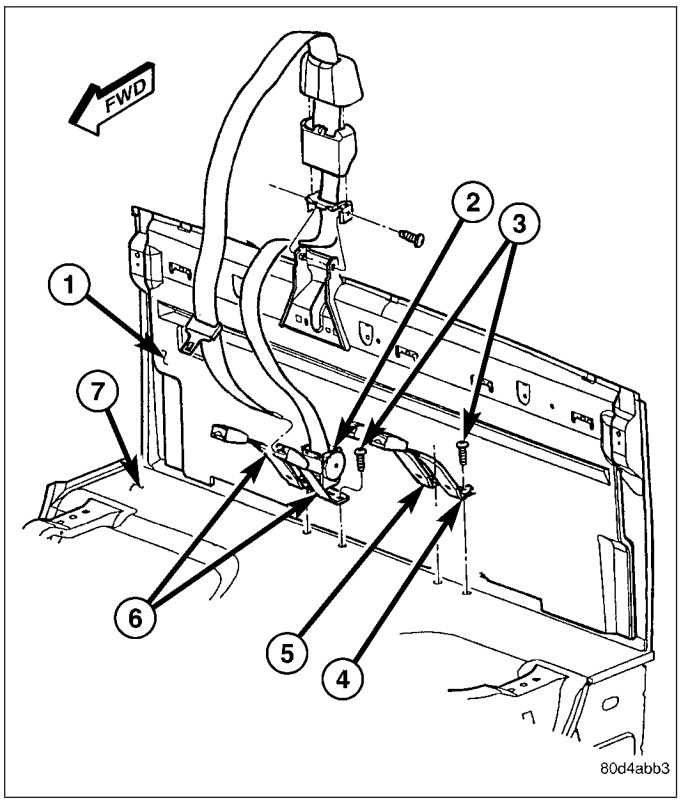

REAR CENTER ANCHOR & RIGHT OUTBOARD

WARNING: To avoid personal injury or death, during and following any seat belt or child restraint anchor service, carefully inspect all seat belts, buckles, mounting hardware, retractors, tether straps, and anchors for proper installation, operation, or damage. Replace any belt that is cut, frayed, or torn. Straighten any belt that is twisted. Tighten any loose fasteners. Replace any belt that has a damaged or inoperative buckle or retractor. Replace any belt that has a bent or damaged latch plate or anchor plate. Replace any child restraint anchor or the unit to which the anchor is integral that has been bent or damaged. Never attempt to repair a seat belt or child restraint component. Always replace damaged or faulty seat belt and child restraint components with the correct, new and unused replacement parts listed in the DaimlerChrysler Mopar Parts Catalog.

NOTE: The unique black, keyed center seat belt lower anchor buckle and the right outboard occupant buckle are serviced as a unit with their mounting bracket. The rear center seat belt retractor is also secured to the mounting bracket with these two buckles, but can be removed from the mounting bracket and is serviced separately from the two buckles. (Refer to 8 - ELECTRICAL/RESTRAINTS/REAR CENTER SEAT BELT & RETRACTOR - REMOVAL).

1. Reach between the rear seat cushion and the rear seat back to access and unbuckle the rear center seat belt lower anchor latch plate from the unique black, keyed lower anchor center buckle (5). Use an ignition key or a small screwdriver to depress the small white release button on the anchor buckle.
2. Remove the rear seat from the vehicle. On models with the optional 60/40 split rear bench, only the 60 percent section (right side) of the rear seat must be removed. (Refer to 23 - BODY/SEATS/SEAT - REAR - REMOVAL).
3. Remove the screw (6) that secures the rear center seat belt retractor (3) to the center anchor and right outboard occupant buckles (1) and mounting bracket (4) unit on the rear floor panel near the cab back panel.
4. Remove the rear center seat belt retractor from the center anchor/right outboard occupant buckle and mounting bracket unit.

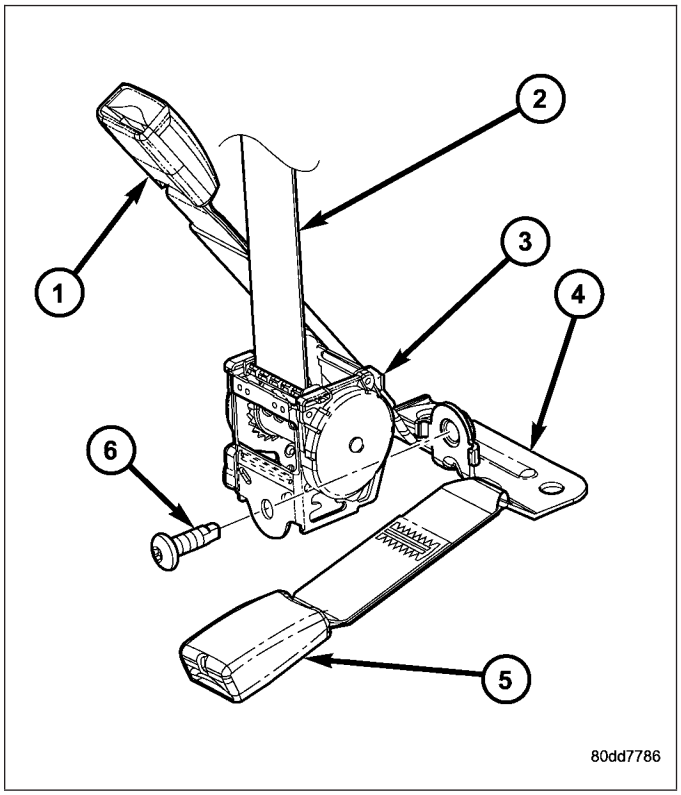

5. Remove the two screws (3) that secure the center anchor/right outboard occupant buckles and mounting bracket unit to the rear floor panel (7) near the base of the cab back panel (1).
6. Remove the center anchor/right outboard occupant buckles and mounting bracket unit from the rear floor panel.

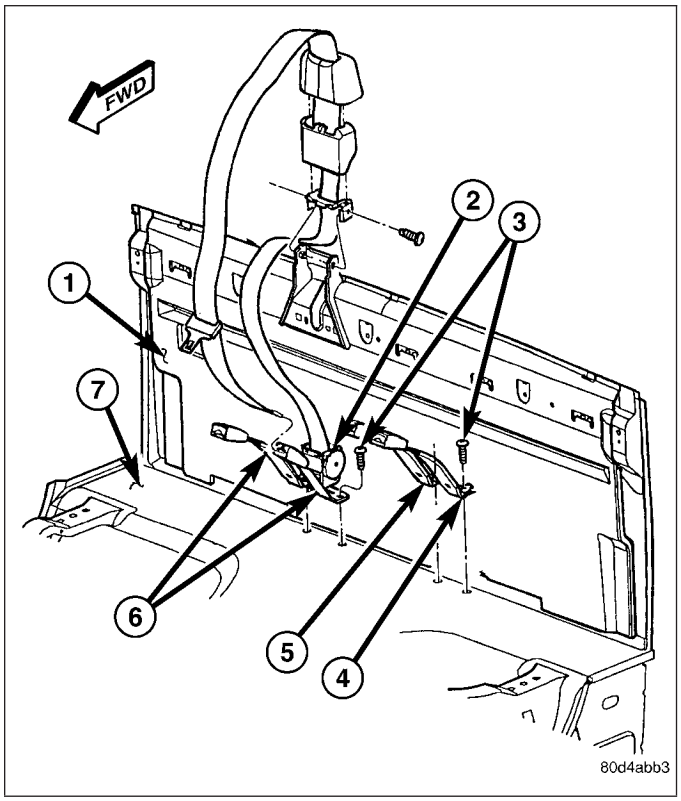

INSTALLATION

FRONT OUTBOARD

WARNING: To avoid personal injury or death, during and following any seat belt or child restraint anchor service, carefully inspect all seat belts, buckles, mounting hardware, retractors, tether straps, and anchors for proper installation, operation, or damage. Replace any belt that is cut, frayed, or torn. Straighten any belt that is twisted. Tighten any loose fasteners. Replace any belt that has a damaged or inoperative buckle or retractor. Replace any belt that has a bent or damaged latch plate or anchor plate. Replace any child restraint anchor or the unit to which the anchor is integral that has been bent or damaged. Never attempt to repair a seat belt or child restraint component. Always replace damaged or faulty seat belt and child restraint components with the correct, new and unused replacement parts listed in the DaimlerChrysler Mopar Parts Catalog.

NOTE: A traveling front outboard seat belt buckle is located on the inboard side of each front outboard seat section (40 percent) used on all models. The seat belt buckle on the driver's side front seat for all models also includes a seat belt switch. (Refer to 8 - ELECTRICAL/RESTRAINTS/SEAT BELT SWITCH - DESCRIPTION).

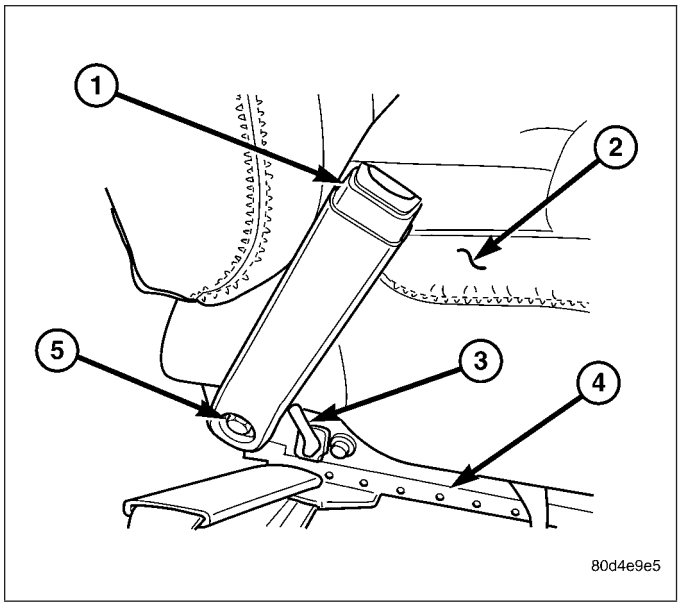

1. From the front of the front seat, reach between the center seat cushion and the adjacent right or left front outboard seat cushion (2) to position the front outboard seat belt buckle (1) to the seat. Be certain to engage the anti-rotation tab on the buckle anchor into the corresponding hole in the inboard seat track bracket.
2. From behind the front seat, install and tighten the screw (5) that secures the front outboard seat belt buckle lower anchor to the bracket on the inboard seat track (4). Tighten the screw to 25 N·m (18 ft. lbs.).
3. From behind the front seat on the driver side only, reconnect the seat belt switch pigtail wire (3) connector to the seat wire harness take out and connector for the switch located below the inboard edge of the driver side inboard seat track just forward of the buckle lower anchor.
4. On standard cab models only, reinstall the stowage tray onto the rear floor panel behind the seat. (Refer to 23 - BODY/INTERIOR/REAR FLOOR STOWAGE TRAY - INSTALLATION).
5. On standard cab models, move the outboard seat section opposite the side from which the buckle was replaced to its most rearward position and tilt the seat back to its upright position.

FRONT CENTER & CENTER ANCHOR

WARNING: To avoid personal injury or death, during and following any seat belt or child restraint anchor service, carefully inspect all seat belts, buckles, mounting hardware, retractors, tether straps, and anchors for proper installation, operation, or damage. Replace any belt that is cut, frayed, or torn. Straighten any belt that is twisted. Tighten any loose fasteners. Replace any belt that has a damaged or inoperative buckle or retractor. Replace any belt that has a bent or damaged latch plate or anchor plate. Replace any child restraint anchor or the unit to which the anchor is integral that has been bent or damaged. Never attempt to repair a seat belt or child restraint component. Always replace damaged or faulty seat belt and child restraint components with the correct, new and unused replacement parts listed in the DaimlerChrysler Mopar Parts Catalog.

NOTE: A fixed position front center seat belt buckle is located on the left side of the front center seat section (20 percent) used on all models. Standard cab models also have a unique fixed position black, keyed front center seat belt lower anchor buckle for the three-point center seat belt lower anchor located on the right side of the front center seat section. The following procedure also applies to the fixed position front center seat lap belt located on the right side of the front center seat section of all quad cab models. The three-point front center seat belt and retractor unit is only used on standard cab models. (Refer to 8 - ELECTRICAL/RESTRAINTS/FRONT CENTER SEAT BELT & RETRACTOR - INSTALLATION).

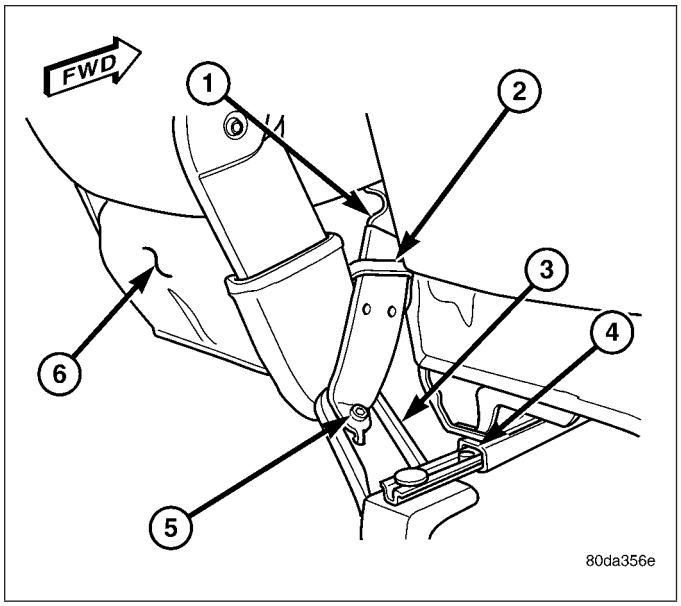

1. From the front of the front seat, position the front center seat belt buckle, lap belt unit, or unique black, keyed front center seat belt lower anchor buckle (1) between the center seat cushion (6) and the adjacent right or left front outboard seat cushion.
2. From the front of the front seat, reach between the center seat cushion and the adjacent right or left front outboard seat cushion to route the front center seat belt buckle, lap belt unit lower anchor, or unique black, keyed front center seat belt lower anchor buckle through the elastic strap (2) on the side of the center seat cushion.
3. From behind the front seat, position the front center seat belt buckle, lap belt lower anchor, or unique black, keyed front center seat belt lower anchor buckle to the center seat support bracket (3). Be certain to engage the anti-rotation tab on the buckle or belt anchor into the corresponding hole in the center seat support bracket.
4. Install and tighten the screw (5) that secures the front center seat belt buckle, lap belt lower anchor, or unique black, keyed front center seat belt lower anchor buckle to the center seat support bracket. Tighten the screw to 40 N·m (29 ft. lbs.).
5. Move the adjacent right or left front outboard seat section (40 percent) back to its rearward position.

REAR CENTER & LEFT OUTBOARD

WARNING: To avoid personal injury or death, during and following any seat belt or child restraint anchor service, carefully inspect all seat belts, buckles, mounting hardware, retractors, tether straps, and anchors for proper installation, operation, or damage. Replace any belt that is cut, frayed, or torn. Straighten any belt that is twisted. Tighten any loose fasteners. Replace any belt that has a damaged or inoperative buckle or retractor. Replace any belt that has a bent or damaged latch plate or anchor plate. Replace any child restraint anchor or the unit to which the anchor is integral that has been bent or damaged. Never attempt to repair a seat belt or child restraint component. Always replace damaged or faulty seat belt and child restraint components with the correct, new and unused replacement parts listed in the DaimlerChrysler Mopar Parts Catalog.

1. Position the center (5) or the left outboard (4) occupant buckle unit onto the rear floor panel (7) or onto the rear seat mounting bracket near the base of the cab back panel (1). On models with the optional 60/40 split rear bench, the screw that secures the buckle unit also secures one of the rear seat mounting brackets to the rear floor panel.
2. Install and tighten the screw (3) that secures the center or the left outboard occupant buckle unit to the rear floor panel. Tighten the screw to 40 N·m (29 ft. lbs.).
3. Lower the rear seat cushion back to its normal seating position.

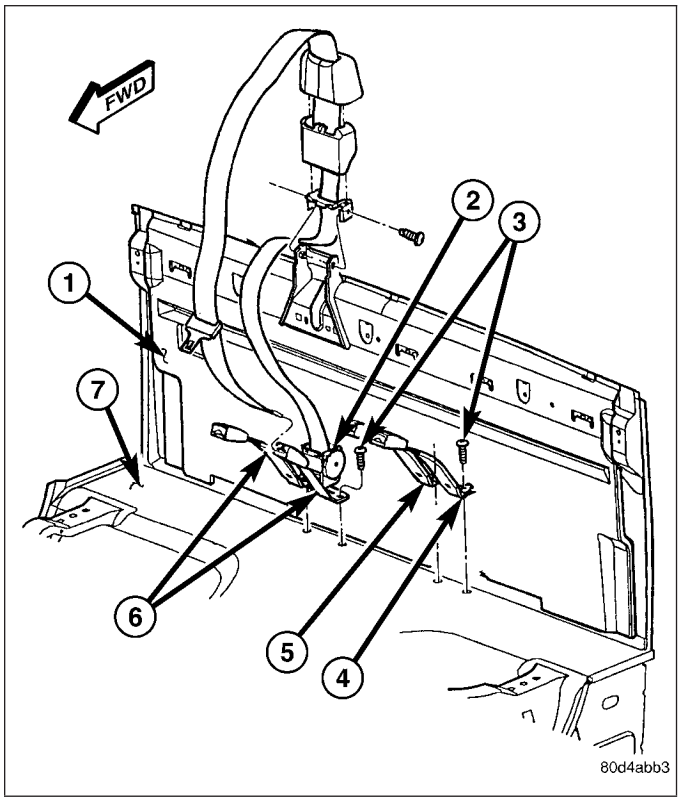

REAR CENTER ANCHOR & RIGHT OUTBOARD

WARNING: To avoid personal injury or death, during and following any seat belt or child restraint anchor service, carefully inspect all seat belts, buckles, mounting hardware, retractors, tether straps, and anchors for proper installation, operation, or damage. Replace any belt that is cut, frayed, or torn. Straighten any belt that is twisted. Tighten any loose fasteners. Replace any belt that has a damaged or inoperative buckle or retractor. Replace any belt that has a bent or damaged latch plate or anchor plate. Replace any child restraint anchor or the unit to which the anchor is integral that has been bent or damaged. Never attempt to repair a seat belt or child restraint component. Always replace damaged or faulty seat belt and child restraint components with the correct, new and unused replacement parts listed in the DaimlerChrysler Mopar Parts Catalog.

NOTE: The unique black, keyed center seat belt lower anchor buckle and the right outboard occupant buckle are serviced as a unit with their mounting bracket. The rear center seat belt retractor is also secured to the mounting bracket with these two buckles, but can be removed from the mounting bracket and is serviced separately from the two buckles. (Refer to 8 - ELECTRICAL/RESTRAINTS/REAR CENTER SEAT BELT & RETRACTOR - INSTALLATION).

1. Position the center anchor and right outboard occupant buckles and mounting bracket unit (6) onto the rear floor panel (7) near the base of the cab back panel (1).
2. Install and tighten the two screws (3) that secure the center anchor and right outboard occupant buckles and mounting bracket unit to the rear floor panel. Tighten the screws to 40 N·m (29 ft. lbs.).

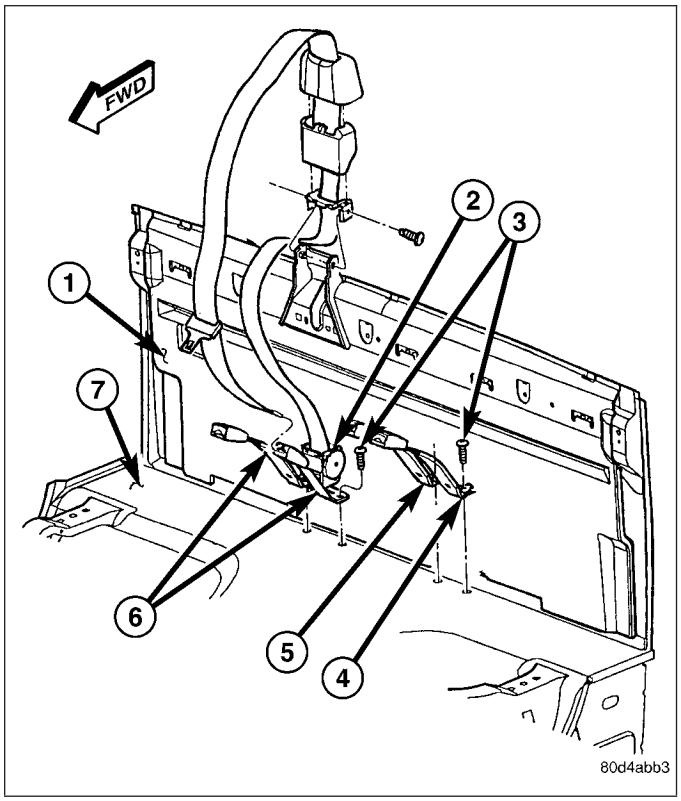

3. Position the rear center seat belt retractor (3) onto the center anchor (5) and right outboard (1) occupant buckles and mounting bracket (4) unit.
4. Install and tighten the screw (6) that secures the rear center seat belt retractor to the center anchor and right outboard occupant buckles and mounting bracket unit. Tighten the screw to 40 N·m (29 ft. lbs.).
5. Reinstall the rear seat into the vehicle. On models with the optional 60/40 split rear bench, only the 60 percent section (right side) of the rear seat must be reinstalled. (Refer to 23 - BODY/SEATS/SEAT - REAR - INSTALLATION).
6. Reach between the rear seat cushion and the rear seat back to access and buckle the rear center seat belt lower anchor latch plate to the unique black, keyed lower anchor buckle.

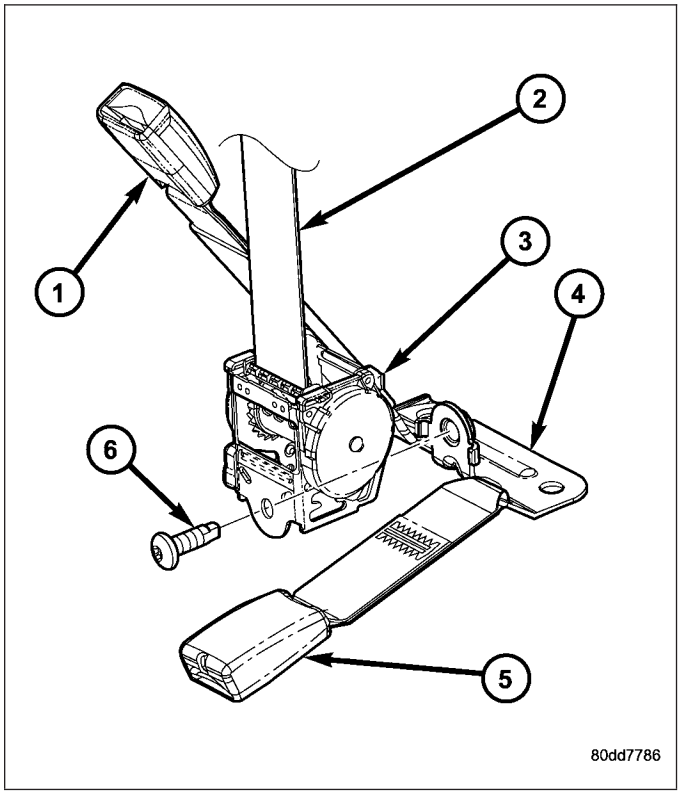

SEAT BELT & RETRACTOR

DESCRIPTION - AUTOMATIC LOCKING RETRACTOR

The seat belt retractors used in all seating positions include an inertia-type, emergency locking mechanism (7) as standard equipment. However, the retractor locking mechanism for the passenger side front seating position is mechanically switchable from an emergency locking retractor to an automatic locking retractor. The primary function of this feature is to securely accommodate a child seat in the passenger side front seating position of the vehicle without the need for a self-cinching seat belt tip half latch plate unit or another supplemental device that would be required to prevent the seat belt webbing from unwinding freely from the retractor spool of an inertia-type emergency locking retractor mechanism.

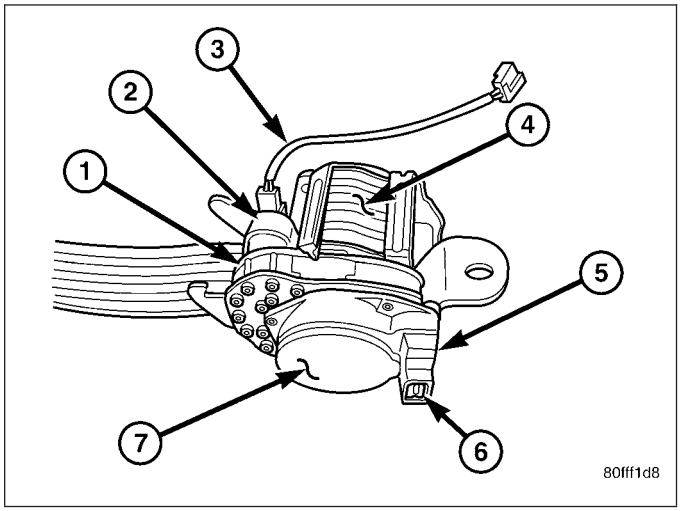

The automatic locking mechanism is integral to the passenger side front seat belt and retractor unit and is concealed beneath a molded plastic cover located on the same side of the retractor spool as the seat belt tensioner housing. The retractor is secured to the inner B-pillar on the right side of the vehicle and is concealed beneath the molded plastic inner B-pillar trim. The automatic locking mechanism cannot be adjusted or repaired and, if faulty or damaged, the entire passenger side front seat belt and retractor unit must be replaced.

OPERATION - AUTOMATIC LOCKING RETRACTOR

The automatic locking mode of the retractor is engaged and the retractor is switched from operating as a standard inertia-type emergency locking retractor by first buckling the combination lap and shoulder belt buckle. Then grasp the shoulder belt and pull all of the webbing out of the retractor. Once all of the belt webbing is extracted from the spool, the retractor will automatically become engaged in the pre-locked automatic locking mode and will make an audible clicking or ratcheting sound as the shoulder belt is allowed to retract to confirm that the automatic locking mode is now engaged. Once the automatic locking mode is engaged, the retractor will remain locked and the belt will remain tight around whatever it is restraining.

The retractor is returned to standard emergency locking mode by unbuckling the combination lap and shoulder belt buckle and allowing the belt webbing to be almost fully retracted onto the retractor spool. The emergency locking mode is confirmed by the absence of the audible clicking or ratcheting sound as the belt webbing retracts. This mode will allow the belt to unwind from and wind onto the retractor spool freely unless and until a predetermined inertia load is sensed, or until the retractor is again switched to the automatic locking mode.

REMOVAL

FRONT CENTER

WARNING: To avoid personal injury or death, during and following any seat belt or child restraint anchor service, carefully inspect all seat belts, buckles, mounting hardware, retractors, tether straps, and anchors for proper installation, operation, or damage. Replace any belt that is cut, frayed, or torn. Straighten any belt that is twisted. Tighten any loose fasteners. Replace any belt that has a damaged or inoperative buckle or retractor. Replace any belt that has a bent or damaged latch plate or anchor plate. Replace any child restraint anchor or the unit to which the anchor is integral that has been bent or damaged. Never attempt to repair a seat belt or child restraint component. Always replace damaged or faulty seat belt and child restraint components with the correct, new and unused replacement parts listed in the DaimlerChrysler Mopar Parts Catalog.

NOTE: A front center seat belt and retractor is used only on standard cab models. Quad cab models have a lap belt in the front center seating position. (Refer to 8 - ELECTRICAL/RESTRAINTS/FRONT CENTER SEAT BELT - REMOVAL).

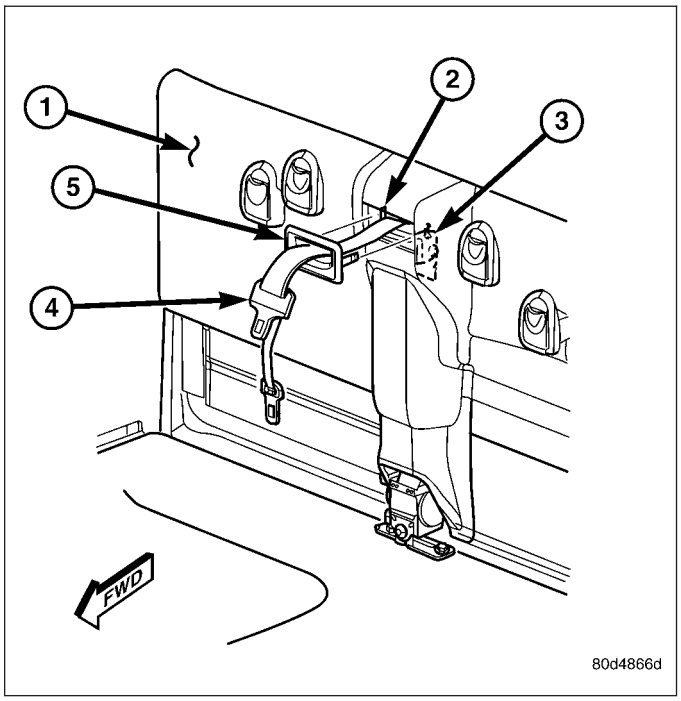

1. Reach between the center of the front seat cushion and front seat back to access and unbuckle the front center seat belt lower anchor latch plate from the unique black, keyed lower anchor buckle. Use an ignition key or a small screwdriver to depress the small white release button on the anchor buckle.
2. Move the front seat to its most forward position for easiest access to the front center seat belt and retractor unit.
3. Remove the stowage tray from the rear floor panel behind the seat. (Refer to 23 - BODY/INTERIOR/ REAR FLOOR STOWAGE TRAY - REMOVAL).
4. Using a trim stick or another suitable wide flat-bladed tool, gently pry at each side of the front center seat belt bezel (5) on the cab back trim panel (1) to release the snap features that secure the bezel to the panel.
5. Remove the bezel from the webbing of the front center seat belt (4).
6. Remove the trim from the cab back panel. (Refer to 23 - BODY/INTERIOR/REAR CAB BACK PANEL TRIM - REMOVAL).

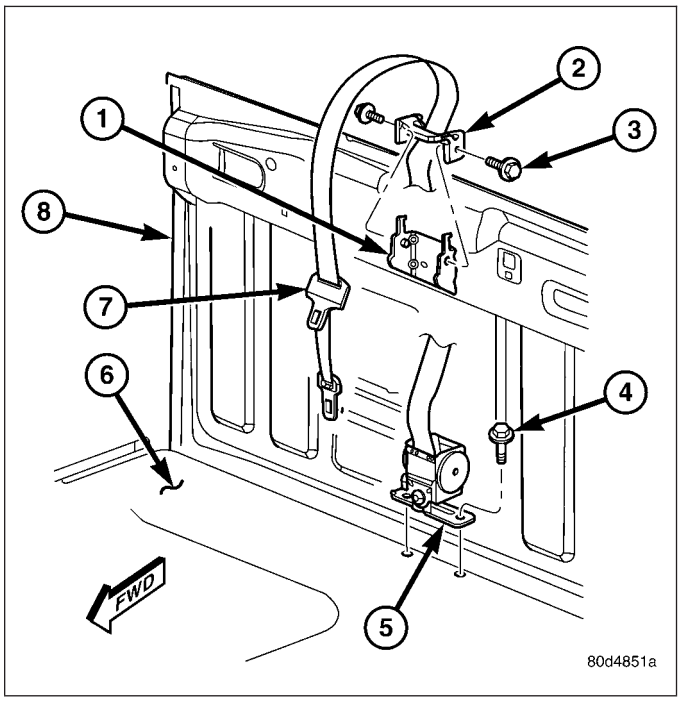

7. Remove the two screws (3) that secure the belt bracket (2) of the front center seat belt (7) to the body bracket (1) on the upper cab back panel (8) reinforcement.
8. Remove the belt bracket of the front center seat belt from the body bracket on the upper cab back panel reinforcement.
9. Remove the two screws (4) that secure the front center seat belt retractor bracket (5) to the floor panel (6) near the base of the cab back panel.
10. Remove the front center seat belt and retractor unit from the floor panel.

FRONT OUTBOARD - STANDARD CAB

The seat belt retractor on the driver's side of standard cab models only includes a tension reducer. (Refer to 8 - ELECTRICAL/RESTRAINTS/SEAT BELT TENSION REDUCER - DESCRIPTION). The seat belt retractor on the passenger's side of all models includes a switchable automatic locking mechanism. (Refer to 8 - ELECTRICAL/RESTRAINTS/AUTOMATIC LOCKING RETRACTOR - DESCRIPTION).

WARNING: To avoid personal injury or death, on vehicles equipped with airbags, disable the supplemental restraint system before attempting any steering wheel, steering column, airbag, seat belt tensioner, impact sensor, or instrument panel component diagnosis or service. Disconnect and isolate the battery negative (ground) cable, then wait two minutes for the system capacitor to discharge before performing further diagnosis or service. This is the only sure way to disable the supplemental restraint system. Failure to take the proper precautions could result in accidental airbag deployment.

WARNING: To avoid personal injury or death, during and following any seat belt or child restraint anchor service, carefully inspect all seat belts, buckles, mounting hardware, retractors, tether straps, and anchors for proper installation, operation, or damage. Replace any belt that is cut, frayed, or torn. Straighten any belt that is twisted. Tighten any loose fasteners. Replace any belt that has a damaged or inoperative buckle or retractor. Replace any belt that has a bent or damaged latch plate or anchor plate. Replace any child restraint anchor or the unit to which the anchor is integral that has been bent or damaged. Never attempt to repair a seat belt or child restraint component. Always replace damaged or faulty seat belt and child restraint components with the correct, new and unused replacement parts listed in the DaimlerChrysler Mopar Parts Catalog.

NOTE: The following procedure is for replacement of a faulty or damaged front outboard seat belt and retractor unit, which includes a seat belt tensioner for this model. (Refer to 8 - ELECTRICAL/RESTRAINTS/SEAT BELT TENSIONER - DESCRIPTION). The only component of this seat belt and retractor unit that is available for individual service replacement is the plastic web stop button that prevents the latch plate from falling to the floor while in the stored position. Refer to the instructions supplied with the service kit for the proper web stop button replacement procedures.

NOTE: If the seat belt or retractor is faulty or damaged, but the seat belt tensioner is not deployed, review the recommended procedures for handling non-deployed supplemental restraints. (Refer to 8 - ELECTRICAL/RESTRAINTS - STANDARD PROCEDURE - HANDLING NON-DEPLOYED SUPPLEMENTAL RESTRAINTS). If the seat belt tensioner has been deployed, review the recommended procedures for service after a supplemental restraint deployment before removing the front outboard seat belt and retractor from the vehicle. (Refer to 8 - ELECTRICAL/RESTRAINTS - STANDARD PROCEDURE - SERVICE AFTER A SUPPLEMENTAL RESTRAINT DEPLOYMENT).

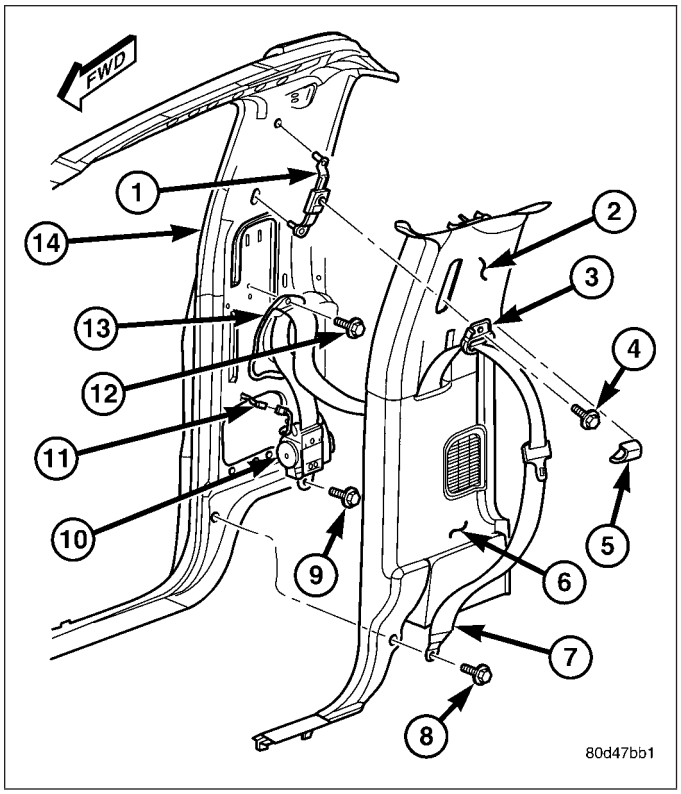

1. Move the front seat to its most forward position for easiest access to the lower seat belt anchor (7) and the B-pillar trim.
2. Disconnect and isolate the battery negative cable. Wait two minutes for the system capacitor to discharge before further service.
3. Remove the stowage tray from the rear floor panel behind the seat. (Refer to 23 - BODY/INTERIOR/ REAR FLOOR STOWAGE TRAY - REMOVAL).
4. Remove the screw (8) that secures the lower seat belt anchor to the lower inner B-pillar (14).
5. Remove the lower seat belt anchor from the lower inner B-pillar.
6. Unsnap and remove the trim cover (5) from the front outboard seat belt turning loop (3) to access the screw (4) that secures the turning loop to the height adjuster (1) on the upper inner B-pillar. Discard the removed turning loop trim cover as it is not intended for reuse.
7. Remove the screw that secures the seat belt turning loop to the height adjuster.
8. Remove the seat belt turning loop from the height adjuster.
9. Remove the upper (2) and lower (6) trim from the inner B-pillar. (Refer to 23 - BODY/INTERIOR/B-PILLAR UPPER TRIM - REMOVAL) and (Refer to 23 - BODY/INTERIOR/B-PILLAR LOWER TRIM - REMOVAL).
10. Remove the screw (12) that secures the seat belt web guide (13) to the inner B-pillar near the belt line.
11. Remove the seat belt web guide from the inner B-pillar.
12. On the driver side only, disconnect the body wire harness take out and white connector from the connector receptacle for the seat belt tension reducer located near the bottom of the retractor (10).
13. Disengage the seat belt tensioner pigtail wire retainer from the hole in the inner B-pillar sheet metal.
14. Disconnect the yellow seat belt tensioner pigtail wire connector from the body wire harness take out and connector (11) for the tensioner.
15. Remove the screw (9) that secures the lower retractor bracket to the lower inner B-pillar below the retractor mounting hole.
16. Disengage the hooks on the upper retractor bracket from the slots in the lower inner B-pillar above the retractor mounting hole.
17. Remove the front outboard seat belt and retractor from the retractor mounting hole in the lower inner B-pillar.

FRONT OUTBOARD - QUAD CAB

The seat belt retractor on the passenger's side of all models includes a switchable automatic locking mechanism. (Refer to 8 - ELECTRICAL/RESTRAINTS/AUTOMATIC LOCKING RETRACTOR - DESCRIPTION).

WARNING: To avoid personal injury or death, on vehicles equipped with airbags, disable the supplemental restraint system before attempting any steering wheel, steering column, airbag, seat belt tensioner, impact sensor, or instrument panel component diagnosis or service. Disconnect and isolate the battery negative (ground) cable, then wait two minutes for the system capacitor to discharge before performing further diagnosis or service. This is the only sure way to disable the supplemental restraint system. Failure to take the proper precautions could result in accidental airbag deployment.

WARNING: To avoid personal injury or death, during and following any seat belt or child restraint anchor service, carefully inspect all seat belts, buckles, mounting hardware, retractors, tether straps, and anchors for proper installation, operation, or damage. Replace any belt that is cut, frayed, or torn. Straighten any belt that is twisted. Tighten any loose fasteners. Replace any belt that has a damaged or inoperative buckle or retractor. Replace any belt that has a bent or damaged latch plate or anchor plate. Replace any child restraint anchor or the unit to which the anchor is integral that has been bent or damaged. Never attempt to repair a seat belt or child restraint component. Always replace damaged or faulty seat belt and child restraint components with the correct, new and unused replacement parts listed in the DaimlerChrysler Mopar Parts Catalog.

NOTE: The following procedure is for replacement of a faulty or damaged front outboard seat belt and retractor unit, which includes a seat belt tensioner for this model. (Refer to 8 - ELECTRICAL/RESTRAINTS/ SEAT BELT TENSIONER - DESCRIPTION). The only component of this seat belt and retractor unit that is available for individual service replacement is the plastic web stop button that prevents the latch plate from falling to the floor while in the stored position. Refer to the instructions supplied with the service kit for the proper web stop button replacement procedures.

NOTE: If the seat belt or retractor is faulty or damaged, but the seat belt tensioner is not deployed, review the recommended procedures for handling non-deployed supplemental restraints. (Refer to 8 - ELECTRICAL/RESTRAINTS - STANDARD PROCEDURE - HANDLING NON-DEPLOYED SUPPLEMENTAL RESTRAINTS). If the seat belt tensioner has been deployed, review the recommended procedures for service after a supplemental restraint deployment before removing the front outboard seat belt and retractor from the vehicle. (Refer to 8 - ELECTRICAL/RESTRAINTS - STANDARD PROCEDURE - SERVICE AFTER A SUPPLEMENTAL RESTRAINT DEPLOYMENT).

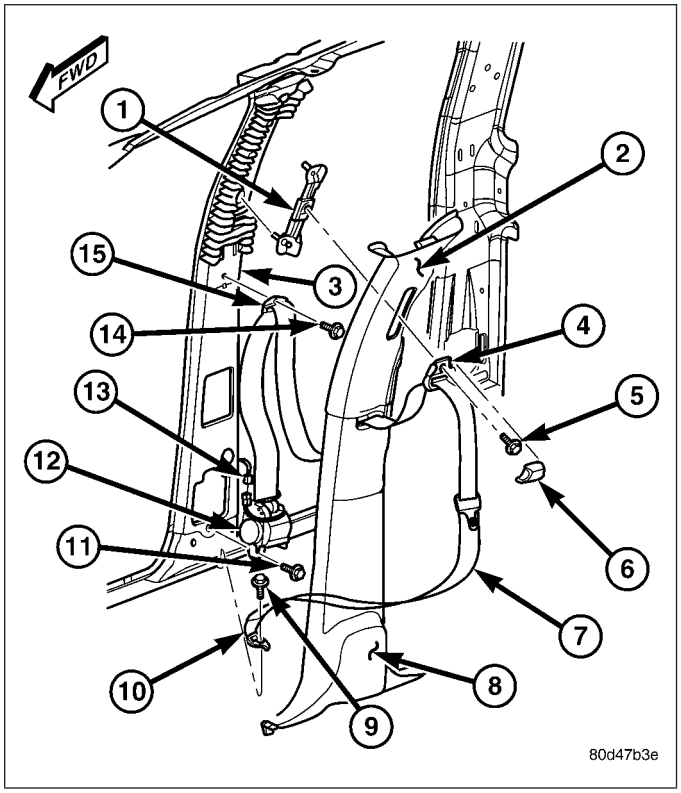

1. Move the front seat to its most forward position for easiest access to the lower seat belt anchor (10) and the B-pillar trim.
2. Disconnect and isolate the battery negative cable. Wait two minutes for the system capacitor to discharge before further service.
3. Remove the screw (9) that secures the lower seat belt anchor to the floor panel near the base of the inner B-pillar (3).
4. Remove the lower seat belt anchor from the floor panel near the base of the inner B-pillar.
5. Unsnap and remove the trim cover (6) from the front outboard seat belt turning loop (4) to access the screw (5) that secures the turning loop to the height adjuster (1) on the upper inner B-pillar. Discard the removed turning loop trim cover as it is not intended for reuse.
6. Remove the screw that secures the seat belt turning loop to the height adjuster.
7. Remove the seat belt turning loop from the height adjuster.
8. Remove the upper (2) and lower (8) trim from the inner B-pillar. (Refer to 23 - BODY/INTERIOR/B-PILLAR UPPER TRIM - REMOVAL) and (Refer to 23 - BODY/INTERIOR/B-PILLAR LOWER TRIM - REMOVAL).
9. Remove the screw (14) that secures the seat belt web guide (15) to the inner B-pillar near the belt line.
10. Remove the seat belt web guide from the inner B-pillar.
11. Disengage the seat belt tensioner pigtail wire retainer from the hole in the inner B-pillar sheet metal.
12. Disconnect the yellow seat belt tensioner pigtail wire connector from the body wire harness take out and connector (13) for the tensioner.

13. Remove the screw (11) that secures the lower retractor (12) bracket to the lower inner B-pillar below the retractor mounting hole.
14. Disengage the hooks on the upper retractor bracket from the slots in the lower inner B-pillar above the retractor mounting hole.
15. Remove the front outboard seat belt and retractor from the retractor mounting hole in the lower inner B-pillar.

REAR CENTER

WARNING: To avoid personal injury or death, during and following any seat belt or child restraint anchor service, carefully inspect all seat belts, buckles, mounting hardware, retractors, tether straps, and anchors for proper installation, operation, or damage. Replace any belt that is cut, frayed, or torn. Straighten any belt that is twisted. Tighten any loose fasteners. Replace any belt that has a damaged or inoperative buckle or retractor. Replace any belt that has a bent or damaged latch plate or anchor plate. Replace any child restraint anchor or the unit to which the anchor is integral that has been bent or damaged. Never attempt to repair a seat belt or child restraint component. Always replace damaged or faulty seat belt and child restraint components with the correct, new and unused replacement parts listed in the DaimlerChrysler Mopar Parts Catalog.

NOTE: The rear center seat belt retractor is secured with a single screw to a mounting bracket that includes the unique black, keyed center seat belt lower anchor buckle and the right outboard occupant buckle, but can be removed from the mounting bracket and is serviced separately from the two buckles. The center anchor buckle and the right outboard occupant buckle are serviced as a unit with their mounting bracket. (Refer to 8 - ELECTRICAL/RESTRAINTS/REAR SEAT BELT BUCKLE - REMOVAL - CENTER ANCHOR & RIGHT OUTBOARD).

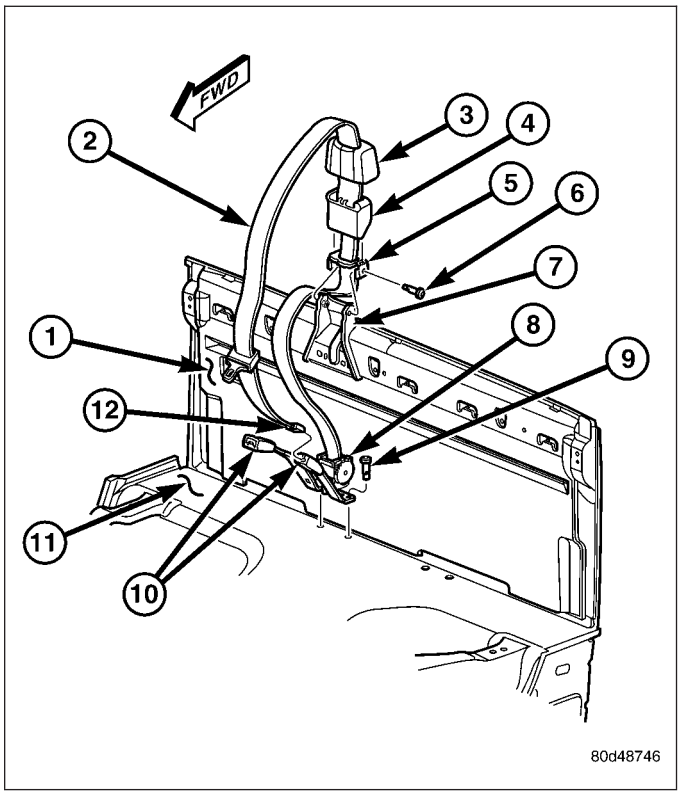

1. Reach between the rear seat cushion and the rear seat back to access and unbuckle the center seat belt lower anchor latch plate (12) from the unique black, keyed center lower anchor buckle (10). Use an ignition key or a small screwdriver to depress the small white release button on the anchor buckle.
2. Remove the rear seat from the vehicle. On models with the optional 60/40 split rear bench, only the 60 percent section (right side) of the rear seat must be removed. (Refer to 23 - BODY/SEATS/SEAT - REAR - REMOVAL).
3. Lift upward on the forward edge of the rear center seat belt bezel (3) at the top of the cab back panel (1) to release the snap features that secure the bezel to the belt bracket (5).
4. Remove the bezel from the webbing of the rear center seat belt (2).
5. Lift the rear center seat belt cover (4) off of the belt bracket at the top of the cab back panel and remove the cover from the webbing of the rear center seat belt.
6. Remove the two screws (6) that secure the belt bracket of the rear center seat belt to the body bracket (7) on the upper cab back panel reinforcement.
7. Remove the belt bracket of the rear center seat belt from the body bracket.

8. Remove the screw (6) that secures the rear center seat belt retractor (3) to the center anchor (5) and right outboard occupant (1) buckles and mounting bracket (4) unit on the rear floor panel near the cab back panel.
9. Remove the rear center seat belt retractor from the center anchor and right outboard occupant buckles and mounting bracket unit.
10. Remove the rear center seat belt and retractor unit from the vehicle.

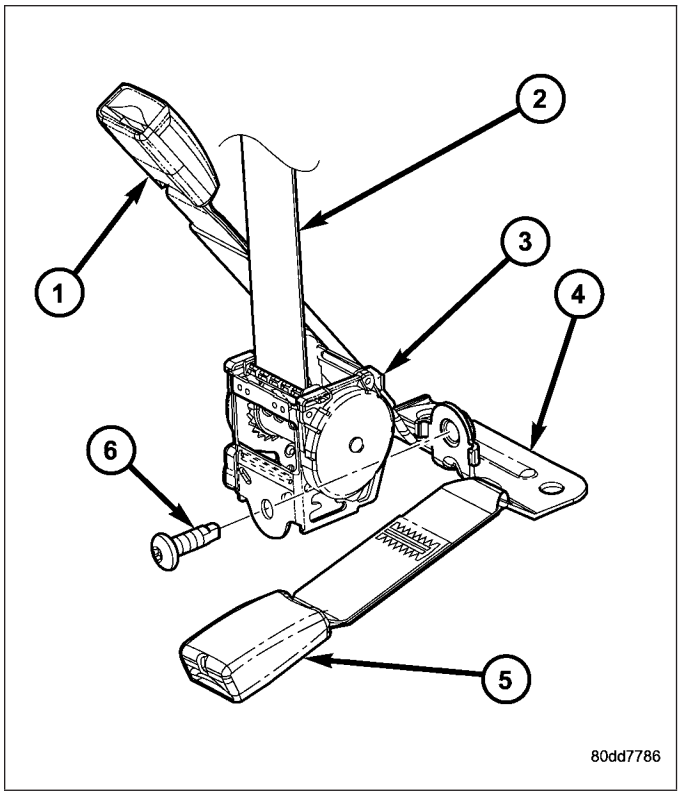

REAR OUTBOARD

WARNING: To avoid personal injury or death, during and following any seat belt or child restraint anchor service, carefully inspect all seat belts, buckles, mounting hardware, retractors, tether straps, and anchors for proper installation, operation, or damage. Replace any belt that is cut, frayed, or torn. Straighten any belt that is twisted. Tighten any loose fasteners. Replace any belt that has a damaged or inoperative buckle or retractor. Replace any belt that has a bent or damaged latch plate or anchor plate. Replace any child restraint anchor or the unit to which the anchor is integral that has been bent or damaged. Never attempt to repair a seat belt or child restraint component. Always replace damaged or faulty seat belt and child restraint components with the correct, new and unused replacement parts listed in the DaimlerChrysler Mopar Parts Catalog.

NOTE: The only component of this seat belt and retractor unit that is available for individual service replacement is the plastic web stop button that prevents the latch plate from falling to the floor while in the stored position. Refer to the instructions supplied with the service kit for the proper web stop button replacement procedures.

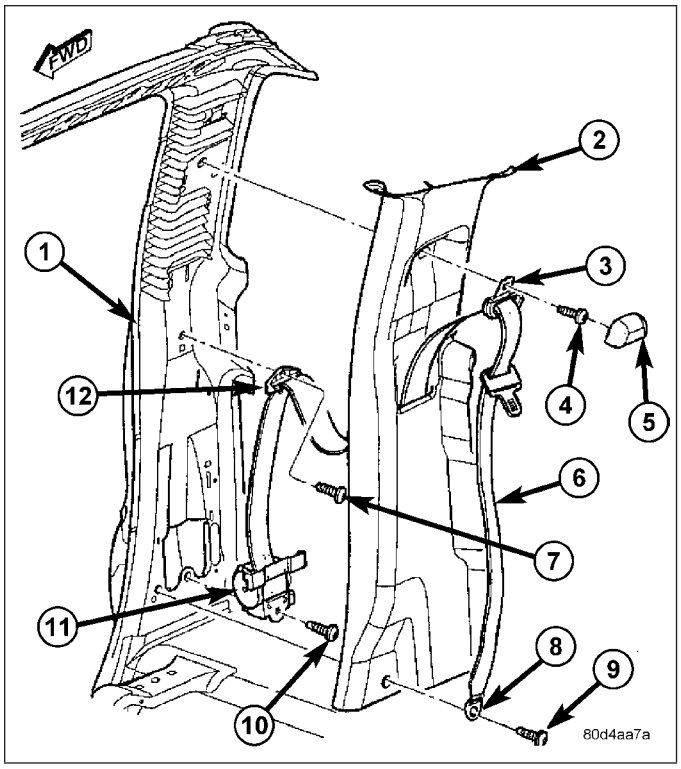

1. Remove the rear seat from the vehicle. (Refer to 23 - BODY/SEATS/SEAT - REAR - REMOVAL).
2. Remove the screw (9) that secures the lower seat belt anchor (8) to the base of the inner C-pillar (1).
3. Remove the lower seat belt anchor from the base of the inner C-pillar.
4. Unsnap and remove the trim cover (5) from the rear outboard seat belt turning loop (3) to access the screw (4) that secures the turning loop to the upper inner C-pillar. Discard the removed turning loop trim cover as it is not intended for reuse.
5. Remove the screw that secures the seat belt turning loop to the C-pillar.
6. Remove the seat belt turning loop from the upper inner C-pillar.
7. Remove the upper and lower trim (2) from the inner C-pillar. (Refer to 23 - BODY/INTERIOR/C-PILLAR UPPER TRIM - REMOVAL) and (Refer to 23 - BODY/INTERIOR/C-PILLAR LOWER TRIM - REMOVAL).
8. Remove the screw (7) that secures the seat belt web guide (12) to the inner C-pillar near the belt line.
9. Remove the seat belt web guide from the inner C-pillar.
10. Remove the screw (10) that secures the lower retractor bracket (11) to the lower inner C-pillar below the retractor mounting hole.
11. Disengage the hook on the upper retractor bracket from the slot in the lower inner C-pillar above the retractor mounting hole.
12. Remove the rear outboard seat belt and retractor from the retractor mounting hole in the lower inner C-pillar.

INSTALLATION

FRONT CENTER

WARNING: To avoid personal injury or death, during and following any seat belt or child restraint anchor service, carefully inspect all seat belts, buckles, mounting hardware, retractors, tether straps, and anchors for proper installation, operation, or damage. Replace any belt that is cut, frayed, or torn. Straighten any belt that is twisted. Tighten any loose fasteners. Replace any belt that has a damaged or inoperative buckle or retractor. Replace any belt that has a bent or damaged latch plate or anchor plate. Replace any child restraint anchor or the unit to which the anchor is integral that has been bent or damaged. Never attempt to repair a seat belt or child restraint component. Always replace damaged or faulty seat belt and child restraint components with the correct, new and unused replacement parts listed in the DaimlerChrysler Mopar Parts Catalog.

NOTE: A front center seat belt and retractor is used only on standard cab models. Quad cab models have a lap belt in the front center seating position. (Refer to 8 - ELECTRICAL/RESTRAINTS/FRONT CENTER SEAT BELT - INSTALLATION).

1. Position the front center seat belt and retractor unit (5) to the floor panel (6) at the base of the cab back panel (8) to the right of center.
2. Install and tighten the two screws (4) that secure the front center seat belt retractor bracket to the floor panel near the base of the cab back panel. Tighten the screws to 40 N·m (29 ft. lbs.).
3. Position the belt bracket (2) of the front center seat belt (7) to the body bracket (1) on the upper cab back panel reinforcement.
4. Install and tighten the two screws (3) that secure the belt bracket of the front center seat belt to the body bracket on the upper cab back panel reinforcement. Tighten the screws to 20 N·m (15 ft. lbs.).

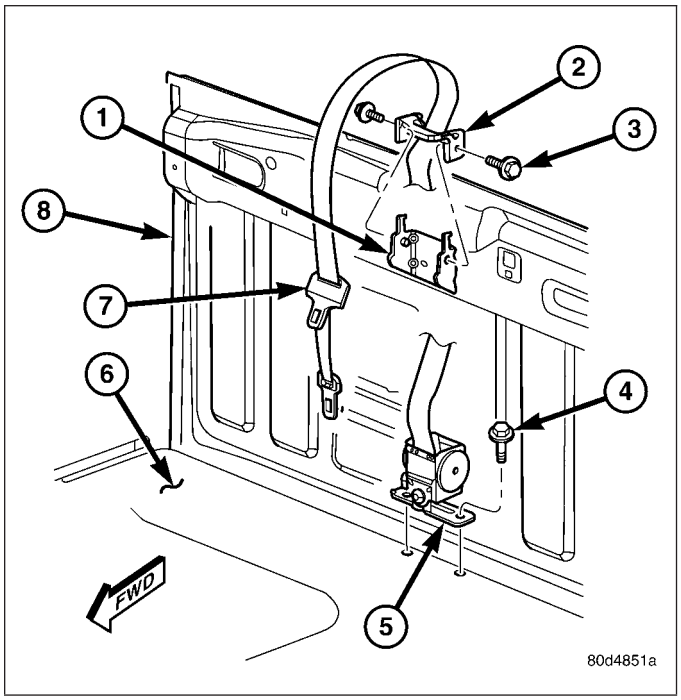

5. Reinstall the trim (1) onto the cab back panel. (Refer to 23 - BODY/INTERIOR/REAR CAB BACK PANEL TRIM - INSTALLATION).
6. Route the webbing of the front center seat belt (4) through the bezel (5) and position the bezel to the belt opening near the top of the cab back trim panel.
7. Using hand pressure, press firmly and evenly on each side of the front center seat belt bezel until it snaps into place on the cab back trim panel.
8. Reinstall the stowage tray onto the rear floor panel behind the seat. (Refer to 23 - BODY/INTERIOR/REAR FLOOR STOWAGE TRAY - INSTALLATION).
9. Move the front seat back to its rearward position.
10. Reach between the center of the front seat cushion and front seat back to access and buckle the front center seat belt lower anchor latch plate to the unique black, keyed lower anchor buckle.

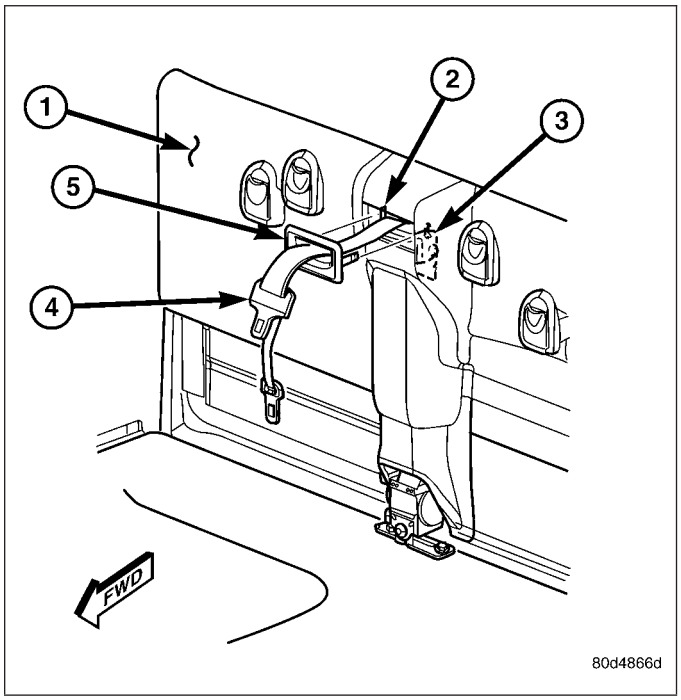

FRONT OUTBOARD - STANDARD CAB

The seat belt retractor on the driver's side of standard cab models only also includes a tension reducer. (Refer to 8 - ELECTRICAL/RESTRAINTS/SEAT BELT TENSION REDUCER - DESCRIPTION). The seat belt retractor on the passenger's side of all models includes a switchable automatic locking mechanism. (Refer to 8 - ELECTRICAL/RESTRAINTS/AUTOMATIC LOCKING RETRACTOR - DESCRIPTION).

WARNING: To avoid personal injury or death, on vehicles equipped with airbags, disable the supplemental restraint system before attempting any steering wheel, steering column, airbag, seat belt tensioner, impact sensor, or instrument panel component diagnosis or service. Disconnect and isolate the battery negative (ground) cable, then wait two minutes for the system capacitor to discharge before performing further diagnosis or service. This is the only sure way to disable the supplemental restraint system. Failure to take the proper precautions could result in accidental airbag deployment.

WARNING: To avoid personal injury or death, during and following any seat belt or child restraint anchor service, carefully inspect all seat belts, buckles, mounting hardware, retractors, tether straps, and anchors for proper installation, operation, or damage. Replace any belt that is cut, frayed, or torn. Straighten any belt that is twisted. Tighten any loose fasteners. Replace any belt that has a damaged or inoperative buckle or retractor. Replace any belt that has a bent or damaged latch plate or anchor plate. Replace any child restraint anchor or the unit to which the anchor is integral that has been bent or damaged. Never attempt to repair a seat belt or child restraint component. Always replace damaged or faulty seat belt and child restraint components with the correct, new and unused replacement parts listed in the DaimlerChrysler Mopar Parts Catalog.

NOTE: The following procedure is for replacement of a faulty or damaged front outboard seat belt and retractor unit, which includes a seat belt tensioner for this model. (Refer to 8 - ELECTRICAL/RESTRAINTS/ SEAT BELT TENSIONER - DESCRIPTION). The only component of this seat belt and retractor unit that is available for individual service replacement is the plastic web stop button that prevents the latch plate from falling to the floor while in the stored position. Refer to the instructions supplied with the service kit for the proper web stop button replacement procedures.

NOTE: If the seat belt or retractor is faulty or damaged, but the seat belt tensioner is not deployed, review the recommended procedures for handling non-deployed supplemental restraints. (Refer to 8 - ELECTRICAL/RESTRAINTS - STANDARD PROCEDURE - HANDLING NON-DEPLOYED SUPPLEMENTAL RESTRAINTS). If the seat belt tensioner has been deployed, review the recommended procedures for service after a supplemental restraint deployment before removing the front outboard seat belt and retractor from the vehicle. (Refer to 8 - ELECTRICAL/RESTRAINTS - STANDARD PROCEDURE - SERVICE AFTER A SUPPLEMENTAL RESTRAINT DEPLOYMENT).

1. Position the front outboard seat belt and retractor (10) to the retractor mounting hole in the lower inner B-pillar (14).
2. Engage the hooks on the upper retractor bracket into the slots in the lower inner B-pillar above the retractor mounting hole.
3. Install and tighten the screw (9) that secures the lower retractor bracket to the lower inner B-pillar below the retractor mounting hole. Tighten the screw to 40 N·m (29 ft. lbs.).
4. Reconnect the yellow seat belt tensioner pigtail wire connector to the body wire harness take out and connector (11) for the tensioner.
5. Engage the seat belt tensioner pigtail wire retainer into the hole in the inner B-pillar sheet metal.
6. On the driver side only, reconnect the body wire harness take out and white connector to the seat belt tension reducer connector receptacle near the bottom of the retractor.
7. Position the seat belt web guide (13) to its mounting location on the inner B-pillar near the belt line.

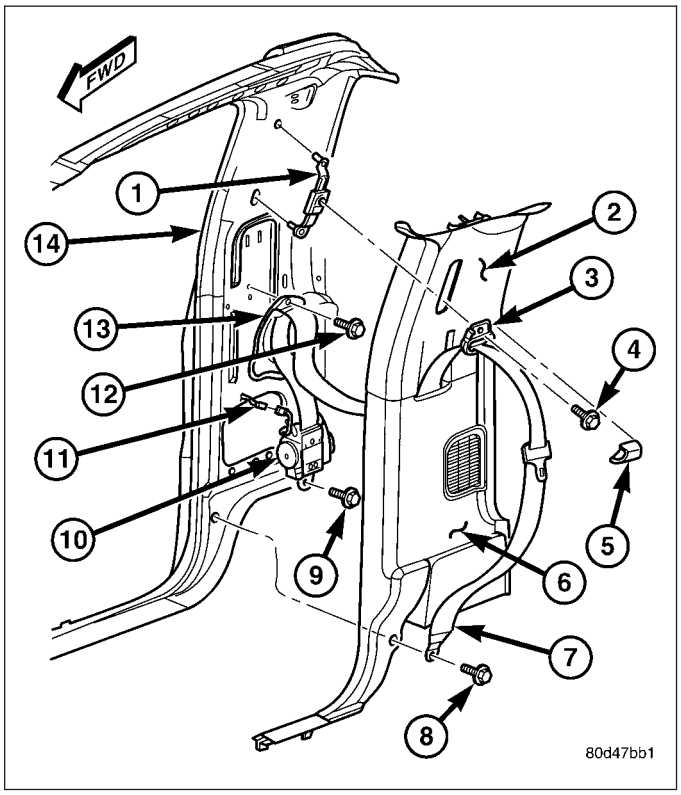

8. Install and tighten the screw (12) that secures the seat belt web guide to the inner B-pillar. Tighten the screw to 2 N·m (20 in. lbs.).
9. Reinstall the upper (2) and lower (6) trim onto the inner B-pillar. (Refer to 23 - BODY/INTERIOR/B-PILLAR UPPER TRIM - INSTALLATION) and (Refer to 23 - BODY/INTERIOR/B-PILLAR LOWER TRIM - INSTALLATION).
10. Position the seat belt turning loop (3) onto the height adjuster (1) on the upper inner B-pillar.
11. Install and tighten the screw (4) that secures the seat belt turning loop to the height adjuster. Tighten the screw to 40 N·m (29 ft. lbs.).
12. Engage the lower snap features of the new trim cover (5) over the front outboard seat belt turning loop and, using hand pressure, press firmly and evenly on the top of the trim cover until it snaps into place.
13. Position the lower seat belt anchor (7) to the lower inner B-pillar.
14. Install and tighten the screw (8) that secures the lower seat belt anchor to the B-pillar. Tighten the screw to 40 N·m (29 ft. lbs.).
15. Reinstall the stowage tray onto the rear floor panel behind the seat. (Refer to 23 - BODY/INTERIOR/REAR FLOOR STOWAGE TRAY - INSTALLATION).
16. Do not reconnect the battery negative cable at this time. The supplemental restraint system verification test procedure should be performed following service of any supplemental restraint system component. (Refer to 8 - ELECTRICAL/RESTRAINTS - STANDARD PROCEDURE - VERIFICATION TEST).
17. Move the front seat back to its rearward position.

FRONT OUTBOARD - QUAD CAB

The seat belt retractor on the passenger's side of all models includes a switchable automatic locking mechanism. (Refer to 8 - ELECTRICAL/RESTRAINTS/AUTOMATIC LOCKING RETRACTOR - DESCRIPTION).

WARNING: To avoid personal injury or death, on vehicles equipped with airbags, disable the supplemental restraint system before attempting any steering wheel, steering column, airbag, seat belt tensioner, impact sensor, or instrument panel component diagnosis or service. Disconnect and isolate the battery negative (ground) cable, then wait two minutes for the system capacitor to discharge before performing further diagnosis or service. This is the only sure way to disable the supplemental restraint system. Failure to take the proper precautions could result in accidental airbag deployment.

WARNING: To avoid personal injury or death, during and following any seat belt or child restraint anchor service, carefully inspect all seat belts, buckles, mounting hardware, retractors, tether straps, and anchors for proper installation, operation, or damage. Replace any belt that is cut, frayed, or torn. Straighten any belt that is twisted. Tighten any loose fasteners. Replace any belt that has a damaged or inoperative buckle or retractor. Replace any belt that has a bent or damaged latch plate or anchor plate. Replace any child restraint anchor or the unit to which the anchor is integral that has been bent or damaged. Never attempt to repair a seat belt or child restraint component. Always replace damaged or faulty seat belt and child restraint components with the correct, new and unused replacement parts listed in the DaimlerChrysler Mopar Parts Catalog.

NOTE: The following procedure is for replacement of a faulty or damaged front outboard seat belt and retractor unit, which includes a seat belt tensioner for this model. (Refer to 8 - ELECTRICAL/RESTRAINTS/SEAT BELT TENSIONER - DESCRIPTION). The only component of this seat belt and retractor unit that is available for individual service replacement is the plastic web stop button that prevents the latch plate from falling to the floor while in the stored position. Refer to the instructions supplied with the service kit for the proper web stop button replacement procedures.

NOTE: If the seat belt or retractor is faulty or damaged, but the seat belt tensioner is not deployed, review the recommended procedures for handling non-deployed supplemental restraints. (Refer to 8 - ELECTRICAL/RESTRAINTS - STANDARD PROCEDURE - HANDLING NON-DEPLOYED SUPPLEMENTAL RESTRAINTS). If the seat belt tensioner has been deployed, review the recommended procedures for service after a supplemental restraint deployment before removing the front outboard seat belt and retractor from the vehicle. (Refer to 8 - ELECTRICAL/RESTRAINTS - STANDARD PROCEDURE - SERVICE AFTER A SUPPLEMENTAL RESTRAINT DEPLOYMENT).

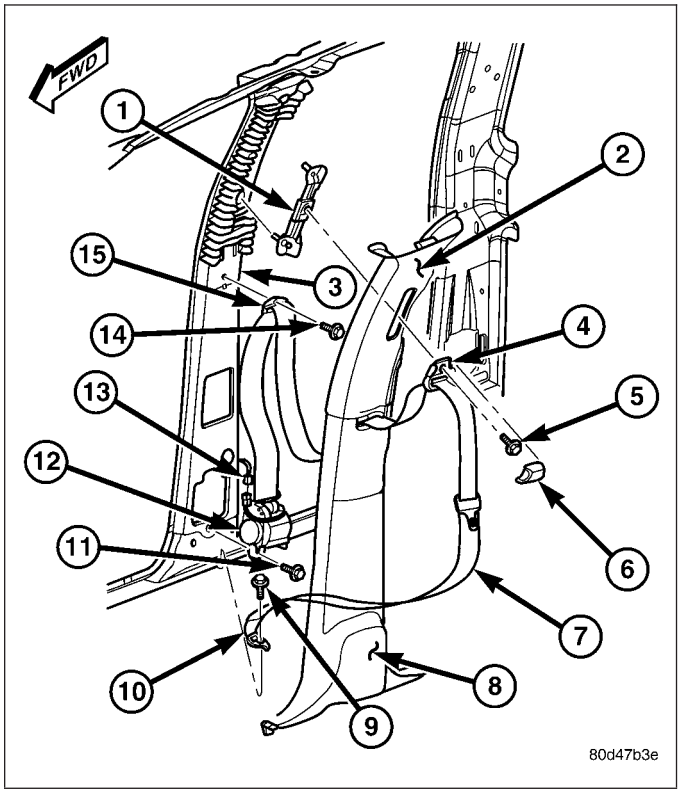

1. Position the front outboard seat belt and retractor (12) to the retractor mounting hole in the lower inner B-pillar (3).
2. Engage the hooks on the upper retractor bracket into the slots in the lower inner B-pillar above the retractor mounting hole.
3. Install and tighten the screw (11) that secures the lower retractor bracket to the lower inner B-pillar below the retractor mounting hole. Tighten the screw to 40 N·m (29 ft. lbs.).
4. Reconnect the yellow seat belt tensioner pigtail wire connector to the body wire harness take out and connector (13) for the tensioner.
5. Engage the seat belt tensioner pigtail wire retainer into the hole in the inner B-pillar sheet metal.
6. Position the seat belt web guide (15) to its mounting location on the inner B-pillar near the belt line.
7. Install and tighten the screw (14) that secures the seat belt web guide to the inner B-pillar. Tighten the screw to 2 N·m (20 in. lbs.).
8. Reinstall the upper (2) and lower (8) trim onto the inner B-pillar. (Refer to 23 - BODY/INTERIOR/B-PILLAR UPPER TRIM - INSTALLATION) and (Refer to 23 - BODY/INTERIOR/B-PILLAR LOWER TRIM - INSTALLATION).
9. Position the seat belt turning loop (4) onto the height adjuster (1) on the upper inner B-pillar.
10. Install and tighten the screw (5) that secures the seat belt turning loop to the height adjuster. Tighten the screw to 40 N·m (29 ft. lbs.).
11. Engage the lower snap features of the new trim cover (6) over the front outboard seat belt turning loop and, using hand pressure, press firmly and evenly on the top of the trim cover until it snaps into place.
12. Position the lower seat belt anchor (10) to the floor panel near the base of the inner B-pillar.
13. Install and tighten the screw (9) that secures the lower seat belt anchor to the floor panel near the base of the inner B-pillar. Tighten the screw to 40 N·m (29 ft. lbs.).
14. Do not reconnect the battery negative cable at this time. The supplemental restraint system verification test procedure should be performed following service of any supplemental restraint system component. (Refer to 8 - ELECTRICAL/RESTRAINTS - STANDARD PROCEDURE - VERIFICATION TEST).
15. Move the front seat back to its rearward position.

REAR CENTER

WARNING: To avoid personal injury or death, during and following any seat belt or child restraint anchor service, carefully inspect all seat belts, buckles, mounting hardware, retractors, tether straps, and anchors for proper installation, operation, or damage. Replace any belt that is cut, frayed, or torn. Straighten any belt that is twisted. Tighten any loose fasteners. Replace any belt that has a damaged or inoperative buckle or retractor. Replace any belt that has a bent or damaged latch plate or anchor plate. Replace any child restraint anchor or the unit to which the anchor is integral that has been bent or damaged. Never attempt to repair a seat belt or child restraint component. Always replace damaged or faulty seat belt and child restraint components with the correct, new and unused replacement parts listed in the DaimlerChrysler Mopar Parts Catalog.

NOTE: The rear center seat belt retractor is secured with a single screw to a mounting bracket that includes the unique black, keyed center seat belt lower anchor buckle and the right outboard occupant buckle, but can be removed from the mounting bracket and is serviced separately from the two buckles. The center anchor buckle and the right outboard occupant buckle are serviced as a unit with their mounting bracket. (Refer to 8 - ELECTRICAL/RESTRAINTS/REAR SEAT BELT BUCKLE - INSTALLATION - CENTER ANCHOR & RIGHT OUTBOARD).

1. Position the rear center seat belt and retractor unit (3) onto the center anchor (5) and right outboard occupant (1) buckles and mounting bracket (4) unit on the rear floor panel near the base of the cab back panel.
2. Install and tighten the screw (6) that secures the rear center seat belt retractor bracket to the center anchor and right outboard occupant buckles and mounting bracket unit. Tighten the screw to 40 N·m (29 ft. lbs.).

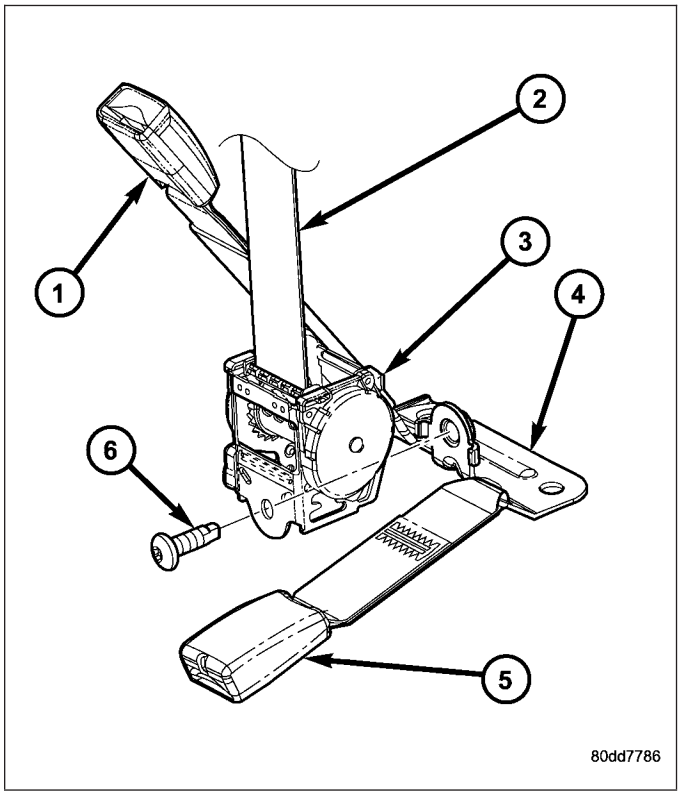

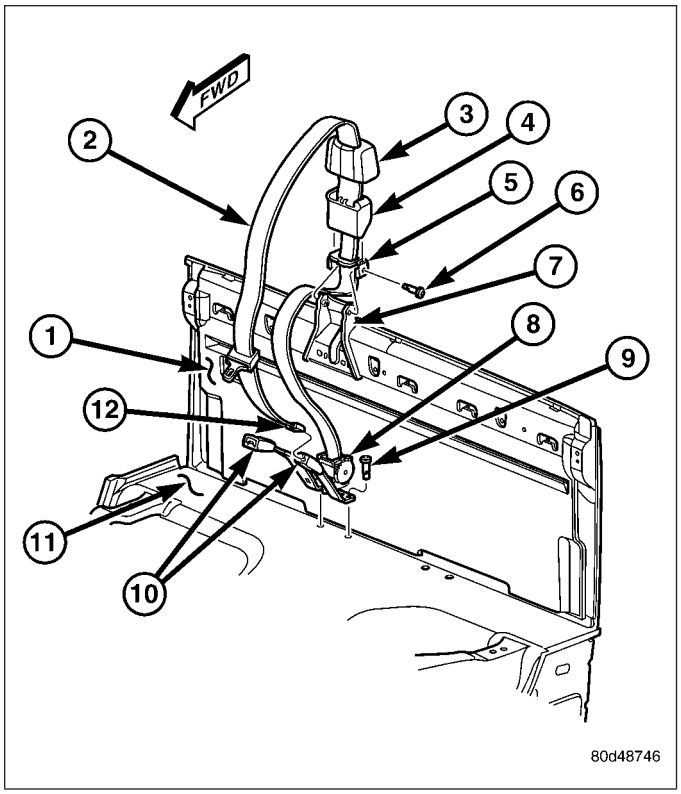

3. Position the belt bracket (5) of the rear center seat belt (2) onto the body bracket (7) on the upper cab back panel (1) reinforcement.
4. Install and tighten the two screws (6) that secure the belt bracket of the rear center seat belt to the body bracket. Tighten the screws to 20 N·m (15 ft. lbs.).
5. Lift the webbing of the rear center seat belt and slide the cover (4) over the belt bracket at the top of the cab back panel until it is fully seated.
6. Route the rear center seat belt bezel (3) over the webbing of the rear center seat belt.
7. Position the rear center seat belt bezel over the cover and belt bracket at the top of the cab back panel and engage the rearward snap features of the bezel with the belt bracket. Using hand pressure, press firmly and evenly downward on the front of the bezel until it snaps into place over the cover and belt bracket.
8. Reinstall the rear seat into the vehicle. On models with the optional 60/40 split rear bench, only the 60 percent section (right side) of the rear seat must be reinstalled. (Refer to 23 - BODY/SEATS/SEAT - REAR - INSTALLATION).
9. Reach between the rear seat cushion and the rear seat back to buckle the rear center seat belt lower anchor latch plate (12) to the unique black, keyed center lower anchor buckle.

REAR OUTBOARD

WARNING: To avoid personal injury or death, during and following any seat belt or child restraint anchor service, carefully inspect all seat belts, buckles, mounting hardware, retractors, tether straps, and anchors for proper installation, operation, or damage. Replace any belt that is cut, frayed, or torn. Straighten any belt that is twisted. Tighten any loose fasteners. Replace any belt that has a damaged or inoperative buckle or retractor. Replace any belt that has a bent or damaged latch plate or anchor plate. Replace any child restraint anchor or the unit to which the anchor is integral that has been bent or damaged. Never attempt to repair a seat belt or child restraint component. Always replace damaged or faulty seat belt and child restraint components with the correct, new and unused replacement parts listed in the DaimlerChrysler Mopar Parts Catalog.

NOTE: The only component of this seat belt and retractor unit that is available for individual service replacement is the plastic web stop button that prevents the latch plate from falling to the floor while in the stored position. Refer to the instructions supplied with the service kit for the proper web stop button replacement procedures.

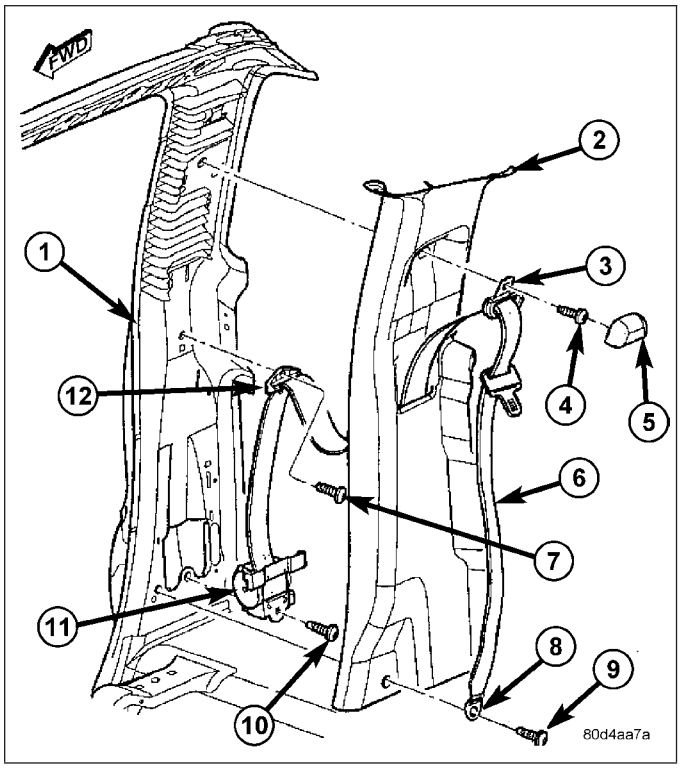

1. Position the rear outboard seat belt and retractor (11) to the retractor mounting hole in the lower inner C-pillar (1).
2. Engage the hook on the upper retractor bracket into the slot in the lower inner C-pillar above the retractor mounting hole.
3. Install and tighten the screw (10) that secures the lower retractor bracket to the lower inner C-pillar below the retractor mounting hole. Tighten the screw to 40 N·m (29 ft. lbs.).
4. Position the seat belt web guide (12) to the inner C-pillar near the belt line.
5. Install and tighten the screw (7) that secures the seat belt web guide to the inner C-pillar. Tighten the screw to 2 N·m (20 in. lbs.).
6. Reinstall the upper and lower trim (2) onto the inner C-pillar. (Refer to 23 - BODY/INTERIOR/C-PILLAR UPPER TRIM - INSTALLATION) and (Refer to 23 - BODY/INTERIOR/C-PILLAR LOWER TRIM - INSTALLATION).
7. Position the seat belt turning loop (3) onto the upper inner C-pillar.
8. Install and tighten the screw (4) that secures the seat belt turning loop to the C-pillar. Tighten the screw to 40 N·m (29 ft. lbs.).
9. Engage the lower snap features of the new trim cover (5) over the rear outboard seat belt turning loop and, using hand pressure, press firmly and evenly on the top of the trim cover until it snaps into place.
10. Position the lower seat belt anchor (8) to the base of the inner C-pillar.
11. Install and tighten the screw (9) that secures the lower seat belt anchor to the base of the inner C-pillar. Tighten the screw to 40 N·m (29 ft. lbs.).
12. Reinstall the rear seat into the vehicle. (Refer to 23 - BODY/SEATS/SEAT - REAR - INSTALLATION).

SWITCH-SEAT BELT DRIVER

DESCRIPTION

The seat belt switch is a small, normally open, single pole, single throw, leaf contact, momentary switch. Only one seat belt switch is installed in the vehicle, and it is integral to the buckle of the driver side front seat belt buckle-half, located on the inboard side of the driver side front seat track (4). The seat belt switch is connected to the vehicle electrical system through a two-wire pigtail wire (3) and connector on the seat belt buckle-half (1), which is connected to a wire harness connector and take out of the seat wire harness routed beneath the driver side front seat cushion (2) in the passenger compartment.

The seat belt switch cannot be adjusted or repaired and, if faulty or damaged, the entire driver side front seat belt buckle-half unit must be replaced.

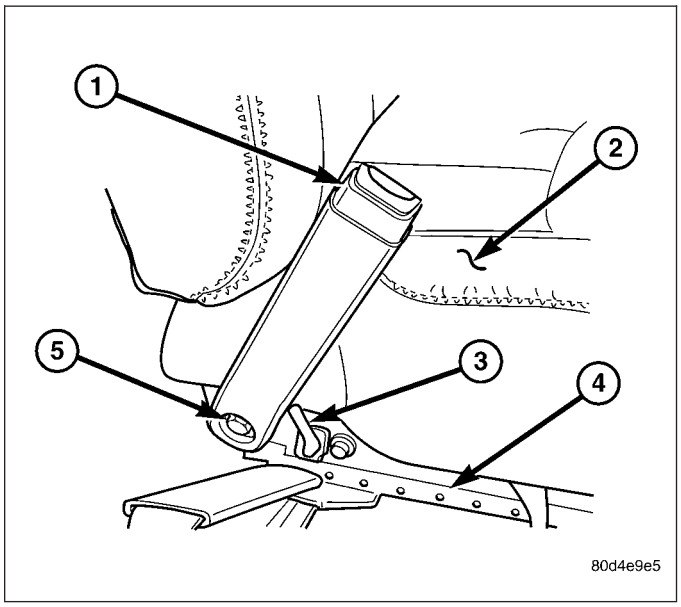

OPERATION

The seat belt switch is designed to control a path to ground for the seat belt switch sense input of the ElectroMechanical Instrument Cluster (EMIC). When the driver side front seat belt tip-half is inserted into the seat belt buckle, the switch closes the path to ground; and, when the driver side front seat belt tip-half is removed from the seat belt buckle, the switch opens the ground path. The switch is actuated by the latch mechanism within the seat belt buckle.

The seat belt switch is connected in series between ground and the seat belt switch sense input of the instrument cluster. The seat belt switch receives ground at all times through its pigtail wire connection to the seat wire harness from a take out of the body wire harness. An eyelet terminal connector on the body wire harness ground take out is secured beneath a ground screw on the left cowl side inner panel, beneath the instrument panel. The seat belt switch may de diagnosed using conventional diagnostic tools and methods.

DIAGNOSIS AND TESTING

SEAT BELT SWITCH

Refer to the appropriate wiring information. The wiring information includes wiring diagrams, proper wire and connector repair procedures, details of wire harness routing and retention, connector pin-out information and location views for the various wire harness connectors, splices and grounds.

WARNING: To avoid personal injury or death, on vehicles equipped with airbags, disable the supplemental restraint system before attempting any steering wheel, steering column, airbag, seat belt tensioner, impact sensor, or instrument panel component diagnosis or service. Disconnect and isolate the battery negative (ground) cable, then wait two minutes for the system capacitor to discharge before performing further diagnosis or service. This is the only sure way to disable the supplemental restraint system. Failure to take the proper precautions could result in accidental airbag deployment.

1. Disconnect and isolate the battery negative cable. Disconnect the seat belt switch pigtail wire connector from the seat wire harness connector for the seat belt switch on the inboard side of the driver side front seat forward of the seat belt buckle-half anchor. Check for continuity between the seat belt switch sense circuit and the ground circuit cavities of the seat belt switch pigtail wire connector. There should be continuity with the seat belt buckled, and no continuity with the seat belt unbuckled. If OK, go to Step 2. If not OK, replace the faulty front seat belt buckle-half assembly.
2. Check for continuity between the ground circuit cavity in the seat wire harness connector for the seat belt switch and a good ground. There should be continuity. If OK, go to Step 3. If not OK, repair the open ground circuit to ground (G301) as required.
3. Remove the instrument cluster from the instrument panel. Check for continuity between the seat belt switch sense circuit cavity of the seat wire harness connector for the seat belt switch and a good ground. There should be no continuity. If OK, go to Step 4. If not OK, repair the shorted seat belt switch sense circuit between the seat belt switch and the instrument cluster as required.
4. Check for continuity between the seat belt switch sense circuit cavities of the seat wire harness connector for the seat belt switch and the instrument panel wire harness connector (Connector C2) for the instrument cluster. There should be continuity. If OK, test and replace the faulty instrument cluster as required. (Refer to 8 - ELECTRICAL/INSTRUMENT CLUSTER - DIAGNOSIS AND TESTING). If not OK, repair the open seat belt switch sense circuit between the seat belt switch and the instrument cluster as required.

SEAT BELT-TENSIONER

DESCRIPTION

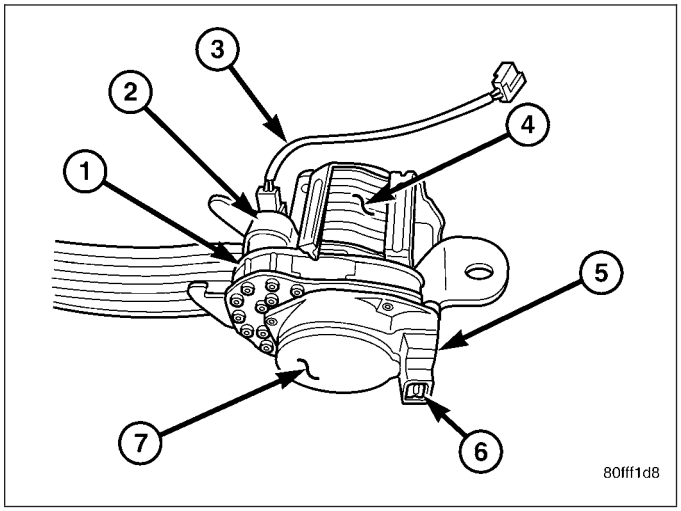

Front outboard seating position seat belt tensioners supplement the driver and passenger airbags for all versions of this model. The seat belt tensioner is integral to the front outboard seat belt and retractor units, which are secured to the inner B-pillar on the right and left sides of the vehicle. The retractor is concealed beneath the molded plastic inner B-pillar trim.

The seat belt tensioner consists primarily of a die cast aluminum tensioner housing or chamber (1), a mechanical clutch unit, a tape-like metal strip, a pair of cutters, a pyrotechnically activated gas generator (2), and a short pigtail wire (3). All of these components are located on one side of the retractor spool on the outside of the retractor housing. The seat belt tensioners are controlled by the Airbag Control Module (ACM) and are connected to the vehicle electrical system through a dedicated take out of the body wire harness by a keyed and latching molded plastic connector insulator to ensure a secure connection.

The seat belt tensioners cannot be repaired and, if faulty or damaged, the entire outboard front seat belt and retractor unit must be replaced. If the front airbags have been deployed, the seat belt tensioners have also been deployed. The seat belt tensioners are not intended for reuse and must be replaced following any front airbag deployment. A locked retractor that will not allow the seat belt webbing to be retracted or extracted is a sure indication that the seat belt tensioner has been deployed and requires replacement. (Refer to 8 - ELECTRICAL/RESTRAINTS/FRONT OUTBOARD SEAT BELT & RETRACTOR - REMOVAL).

OPERATION

The seat belt tensioners are deployed in conjunction with the dual front airbags by a signal generated by the Airbag Control Module (ACM) through the driver or passenger seat belt tensioner line 1 and line 2 (or squib) circuits. When the ACM sends the proper electrical signal to the tensioners, the electrical energy generates enough heat to initiate a small pyrotechnic gas generator.

The gas generator is installed at the top of the tensioner housing which contains a long metal tape that is routed through two chambers within the housing. Each end of the tape is wound around the outer sleeve of a mechanical clutch mechanism secured to one end of the torsion bar upon which the retractor spool is secured. As the gas expands, it is directed against the metal tape within the two chambers of the housing causing the tape to unwind from the clutch sleeve. As the clutch rotates it engages the torsion bar, which drives the seat belt retractor spool causing the slack to be removed from the seat belt.

Once a seat belt tensioning sequence has been completed, the forward momentum of the occupant results in deformation of the torsion bar. As the torsion bar deforms it allows the seat belt webbing to unwind from the retractor spool, which causes the metal tape to be wound back onto the clutch sleeve until it is pulled tight against two cutter blades within the housing, which immediately cut the metal tape.

Removing excess slack from the seat belt not only keeps the occupant properly positioned for an airbag deployment following a frontal impact of the vehicle, but also helps to reduce injuries that the occupant might experience in these situations as a result of a harmful contact with the steering wheel, steering column, instrument panel and/or windshield. Also, the torsion bar is designed to deform in order to control the loading being applied to the occupant by the seat belt during a frontal impact, further reducing the potential for occupant injuries.

The ACM monitors the condition of the seat belt tensioners through circuit resistance, and will illuminate the airbag indicator in the ElectroMechanical Instrument Cluster (EMIC) and store a Diagnostic Trouble Code (DTC) for any fault that is detected. For proper diagnosis of the seat belt tensioners, a diagnostic scan tool is required. Refer to the appropriate diagnostic information.

SEAT BELT TENSION REDUCER

DESCRIPTION

A seat belt tension reducer (5) is standard equipment for the driver side front outboard seat belt on standard cab versions of this model. The tension reducer is integral to the driver side front outboard seat belt and retractor unit, which is secured to the inner B-pillar on the left side of the vehicle. The retractor is concealed beneath the molded plastic inner B-pillar trim.

The seat belt tension reducer consists primarily of a 12-volt Direct Current (DC) solenoid and an integral connector receptacle (6) that is located on the forward facing end housing of the retractor. The seat belt tension reducer is controlled by a battery current output of the ignition switch and a ground path provided by the seat belt switch, and is connected to the vehicle electrical system through a dedicated take out of the body wire harness by a keyed and latching molded plastic connector insulator to ensure a secure connection.

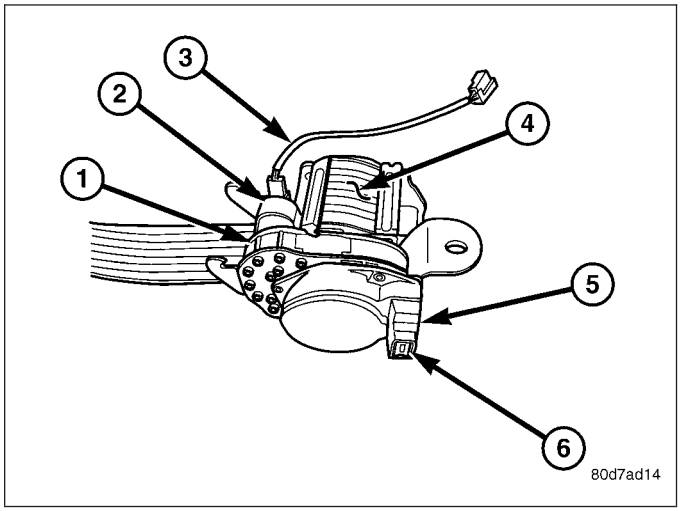

The seat belt tension reducer cannot be repaired and, if faulty or damaged, the entire driver side front outboard seat belt and retractor unit must be replaced. (Refer to 8 - ELECTRICAL/RESTRAINTS/FRONT OUTBOARD SEAT BELT & RETRACTOR - REMOVAL).

OPERATION

The seat belt tension reducer is controlled by a ground signal received from the seat belt switch on the seat belt switch sense circuit and a battery current signal received from the ignition switch on the fused ignition switch output (run-accessory) circuit. When the seat belt switch is closed (the driver side front seat belt is fastened) and the ignition switch is in the On or Accessory positions, the seat belt tension reducer solenoid is energized.

When the solenoid is energized, it actuates a mechanism within the driver side front outboard seat belt retractor to reduce the normal recoil spring tension exerted by the retractor spool, which is designed to reel in the seat belt webbing onto the spool. When the driver side seat belt is unbuckled or if the ignition switch is turned to any position except On or Accessory, the tension reducer solenoid is de-energized and the normal recoil spring tension of the retractor is restored.

The action of the seat belt tension reducer results in improved seat belt comfort for the driver. Reducing the seat belt retractor recoil spring tension is desirable on standard cab models of this vehicle and not on the quad cab model due to the different mounting position required for the seat belt turning loop on the B-pillar relative to the driver's seat position on the standard cab model. The seat belt tension reducer may be diagnosed using conventional diagnostic tools and methods.

DIAGNOSIS AND TESTING

SEAT BELT TENSION REDUCER

Refer to the appropriate wiring information. The wiring information includes wiring diagrams, proper wire and connector repair procedures, details of wire harness routing and retention, connector pin-out information and location views for the various wire harness connectors, splices and grounds.

WARNING: To avoid personal injury or death, on vehicles equipped with airbags, disable the supplemental restraint system before attempting any steering wheel, steering column, airbag, seat belt tensioner, impact sensor, or instrument panel component diagnosis or service. Disconnect and isolate the battery negative (ground) cable, then wait two minutes for the system capacitor to discharge before performing further diagnosis or service. This is the only sure way to disable the supplemental restraint system. Failure to take the proper precautions could result in accidental airbag deployment.

1. Disconnect and isolate the battery negative cable. Disconnect the body wire harness connector for the seat belt tension reducer from the tension reducer connector receptacle on the driver side front outboard seat belt and retractor unit. Using an ohmmeter, measure the resistance between the seat belt switch sense circuit terminal pin and the fused ignition switch output (run-accessory) circuit terminal pin in the tension reducer connector receptacle on the retractor. Resistance through the tension reducer solenoid coil should be 53 ohms at 20° C (68° F). If OK, go to Step 2. If not OK, replace the faulty driver side front outboard seat belt and retractor unit.
2. Check for continuity between the seat belt switch sense circuit cavity of the body wire harness connector for the seat belt tension reducer and a good ground. There should be continuity with the driver side front seat belt buckled, and no continuity with the driver side front seat belt unbuckled. If OK, go to Step 3. If not OK, repair the shorted or open seat belt switch sense circuit between the tension reducer and the seat belt switch as required.
3. Reconnect the battery negative cable. Check for battery current at the fused ignition switch output (run-accessory) circuit of the body wire harness connector for the seat belt tension reducer. There should be battery current with the ignition switch in the On or Accessory positions, and no battery current with the ignition switch in any other position. If not OK, repair the shorted or open fused ignition switch output (run-accessory) circuit between the tension reducer and the ignition switch as required.

SEAT BELT TURNING LOOP ADJUSTER

REMOVAL

WARNING: To avoid personal injury or death, during and following any seat belt or child restraint anchor service, carefully inspect all seat belts, buckles, mounting hardware, retractors, tether straps, and anchors for proper installation, operation, or damage. Replace any belt that is cut, frayed, or torn. Straighten any belt that is twisted. Tighten any loose fasteners. Replace any belt that has a damaged or inoperative buckle or retractor. Replace any belt that has a bent or damaged latch plate or anchor plate. Replace any child restraint anchor or the unit to which the anchor is integral that has been bent or damaged. Never attempt to repair a seat belt or child restraint component. Always replace damaged or faulty seat belt and child restraint components with the correct, new and unused replacement parts listed in the DaimlerChrysler Mopar Parts Catalog.

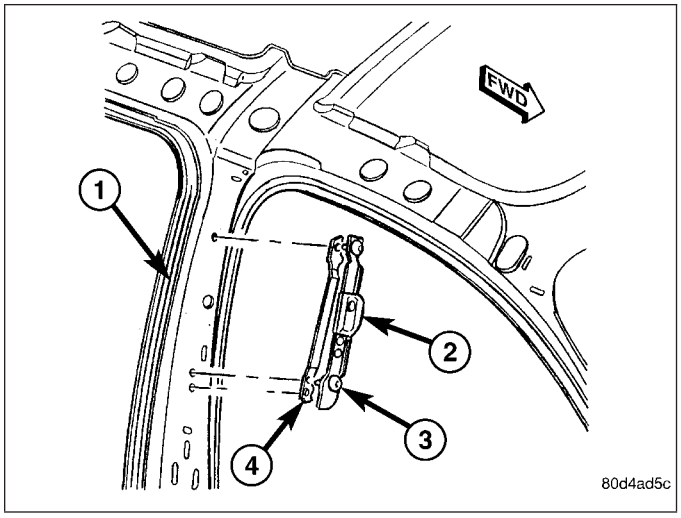

1. Unsnap and remove the trim cover from the front outboard seat belt turning loop to access the screw that secures the turning loop to the height adjuster (2) on the upper inner B-pillar (1). Discard the removed turning loop trim cover as it is not intended for reuse.
2. Remove the screw that secures the seat belt turning loop to the height adjuster.
3. Remove the front seat belt turning loop from the height adjuster.
4. Remove the upper trim from the inner B-pillar. (Refer to 23 - BODY/INTERIOR/B-PILLAR UPPER TRIM - REMOVAL).
5. Loosen the two screws (3) that secure the seat belt turning loop height adjuster far enough to remove the adjuster from the upper B-pillar.
6. Disengage the tab near the lower end of the seat belt turning loop height adjuster from the slot in the sheet metal and remove the adjuster from the inner B-pillar.

INSTALLATION

WARNING: To avoid personal injury or death, during and following any seat belt or child restraint anchor service, carefully inspect all seat belts, buckles, mounting hardware, retractors, tether straps, and anchors for proper installation, operation, or damage. Replace any belt that is cut, frayed, or torn. Straighten any belt that is twisted. Tighten any loose fasteners. Replace any belt that has a damaged or inoperative buckle or retractor. Replace any belt that has a bent or damaged latch plate or anchor plate. Replace any child restraint anchor or the unit to which the anchor is integral that has been bent or damaged. Never attempt to repair a seat belt or child restraint component. Always replace damaged or faulty seat belt and child restraint components with the correct, new and unused replacement parts listed in the DaimlerChrysler Mopar Parts Catalog.

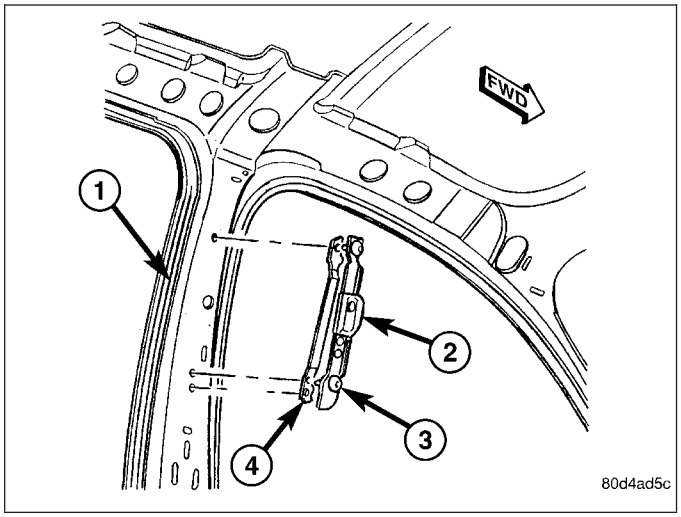

1. Position the front seat belt turning loop adjuster (2) to the inner B-pillar (1).
2. Engage the tab near the lower end of the seat belt turning loop height adjuster into the slot in the sheet metal of the inner B-pillar.
3. Hand tighten the lower of the two screws (3) that secure the seat belt turning loop height adjuster to the upper B-pillar far enough to keep the tab on the lower end of the adjuster engaged in the B-pillar slot.
4. Install the upper screw that secures the seat belt turning loop height adjuster to the upper B-pillar, then tighten both the upper and lower screws to 40 N·m (29 ft. lbs.).
5. Reinstall the upper trim onto the inside of the B-pillar. (Refer to 23 - BODY/INTERIOR/B-PILLAR UPPER TRIM - INSTALLATION).
6. Position the seat belt turning loop onto the height adjuster on the upper inner B-pillar.
7. Install and tighten the screw that secures the seat belt turning loop to the height adjuster. Tighten the screw to 40 N·m (29 ft. lbs.).
8. Engage the lower snap features of the new trim cover over the front outboard seat belt turning loop and, using hand pressure, press firmly and evenly on the top of the trim cover until it snaps into place.