View thousands of Crane Specifications on FreeCraneSpecs.com
https://truckmanualshub.com/

TADANO

ALL TERRAIN CRANE

ATF 220G-5

220 METRISCHE TONNEN TRAGLAST / 220 METRIC TON CAPACITY

ALL TERRAIN CRANE

View thousands of Crane Specifications on FreeCraneSpecs.com
https://truckmanualshub.com/

TADANO

ATF 220G-5

Maße (mm)
Dimensions (mm)
Dimensiones (mm)

385/95 R 25
(14.00 R 25)

DIN / ISO / EN

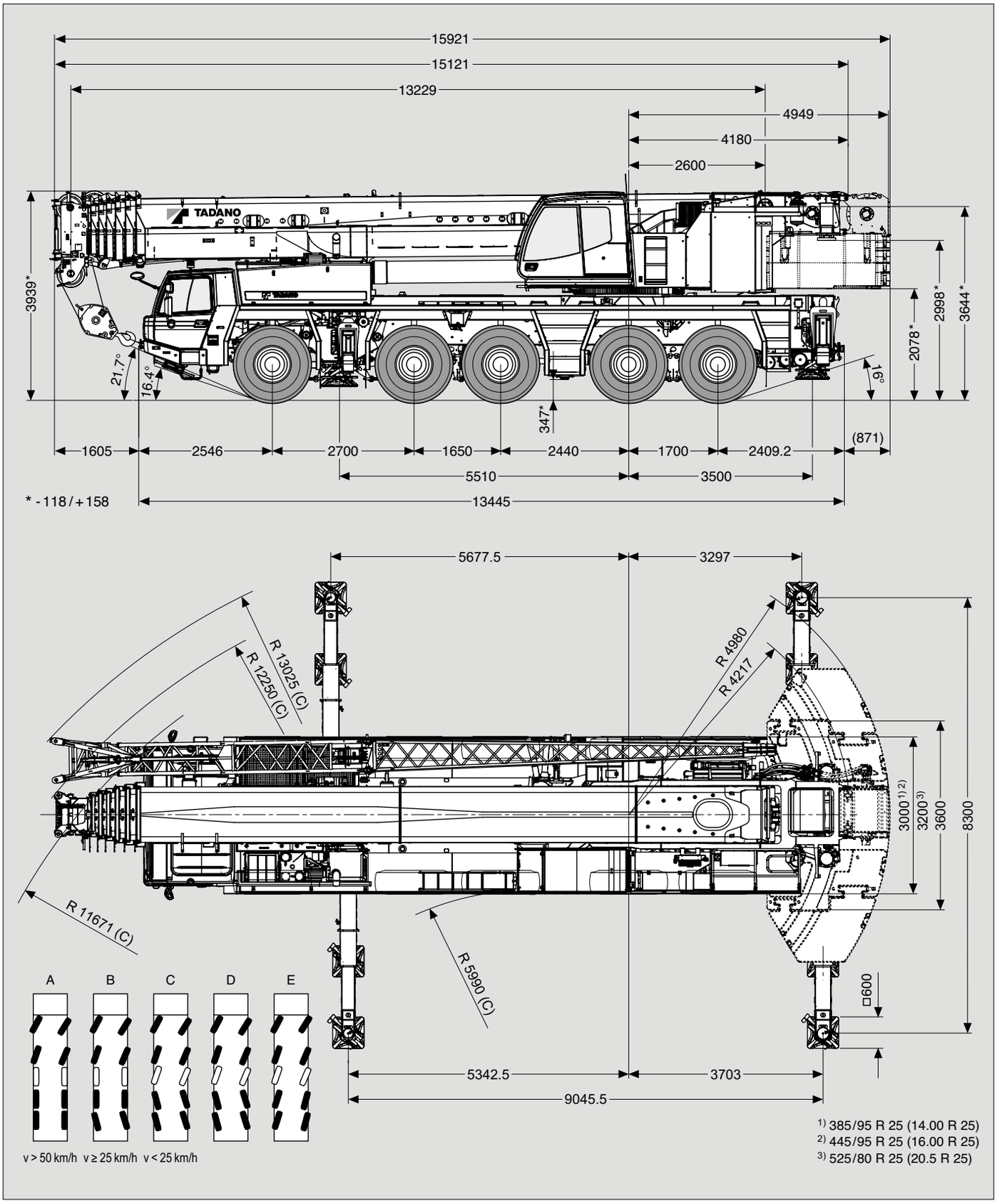

Änderungen vorbehalten / Subject to change without prior notice / Cette documentation est modifiable sans préavis / Sujeto a cambios sin previo aviso

View thousands of Crane Specifications on FreeCraneSpecs.com
https://truckmanualshub.com/

TADANO

ATF 220G-5

Gewichte / Geschwindigkeiten
Weights / Working speeds
Poids / Vitesses
Pesos / Velocidades de trabajo

Achse /Axle Essieu / Eje	1	2	3	4	5	Gesamtgewicht / Total weight Poids total / Peso total
(t)	12	12	12	12	12	60

Traglast / Lifting capacity / Force de levage / Capacidad de elevación	Rollen / Sheaves Pulies / Poleas	Stränge / Parts of line Brins / Ramales de cable	Gewicht / Weight Poid / Peso
151.1 t (Typ / Type / Typo 160)*	9	16	1600 kg
123.9 t (Typ / Type / Typo 125)*	7	13	1350 kg
77.4 t (Typ / Type / Typo 80)*	5	8	1150 kg
58.4 t (Typ / Type / Typo 63)*	3	6	850 kg
58.4 t (Typ / Type / Typo 63)	3	6	850 kg
29.4 t (Typ / Type / Typo 32)	1	3	450 kg
10 t (Typ / Type / Typo 10)	–	1	300 kg

** Doppelhaken*
** Rams horn*
** Moufle avec crochet marin*
** Gancho doble*

V+

	1	2	3	4	5	6	7	8	9	10	11	12	13	14	15	16	R1	R2	
385/95 R 25 (14.00 R 25)	2	3	3	4	5	6	7	8	10	13	15	19	22	27	32	39	3	3	69%*
km/h	5	6	8	9	11	14	16	20	24	29	35	43	52	62	74	85	6	7	52%
445/95 R 25 (16.00 R 25)	3	3	4	4	5	7	8	9	11	14	17	20	24	30	35	42	3	3	61%*
km/h	6	7	8	10	12	15	18	21	26	31	38	46	56	68	80	85	6	7	47%

** Mit Geländeübersetzung*
** Off road range*
** Avec mode tout terrain*
** Con transmisión todo terreno*

V+	Stufenlos Infinitely variable Progressivement variable Infinitamente variable		Seil Rope Câble Cable	Max. Seilzug Max. single line pull Effort maxi au brin simple Trio máximo por ramal
1	0 - 128 m/min	für einfachen Strang single line au brin simple ramal simple	21 mm / 320 m	98 kN
2	0 - 128 m/min	für einfachen Strang single line au brin simple ramal simple	21 mm / 320 m	98 kN
360°	0 - 1.2 min $^{-1}$			
	-1.5° – + 84°	ca. 50 s approx. 50 s env. 50 s aproximadamente 50 s		
	13.2 m – 68.0 m	ca. 500 s approx. 500 s env. 500 s aproximadamente 500 s		

View thousands of Crane Specifications on FreeCraneSpecs.com
https://truckmanualshub.com/

TADANO

ATF 220G-5

Hubhöhen
Lifting heights
Hauteurs de levage
Alturas de elevación

8.3 m | 360° | 71t | DIN/ISO/EN

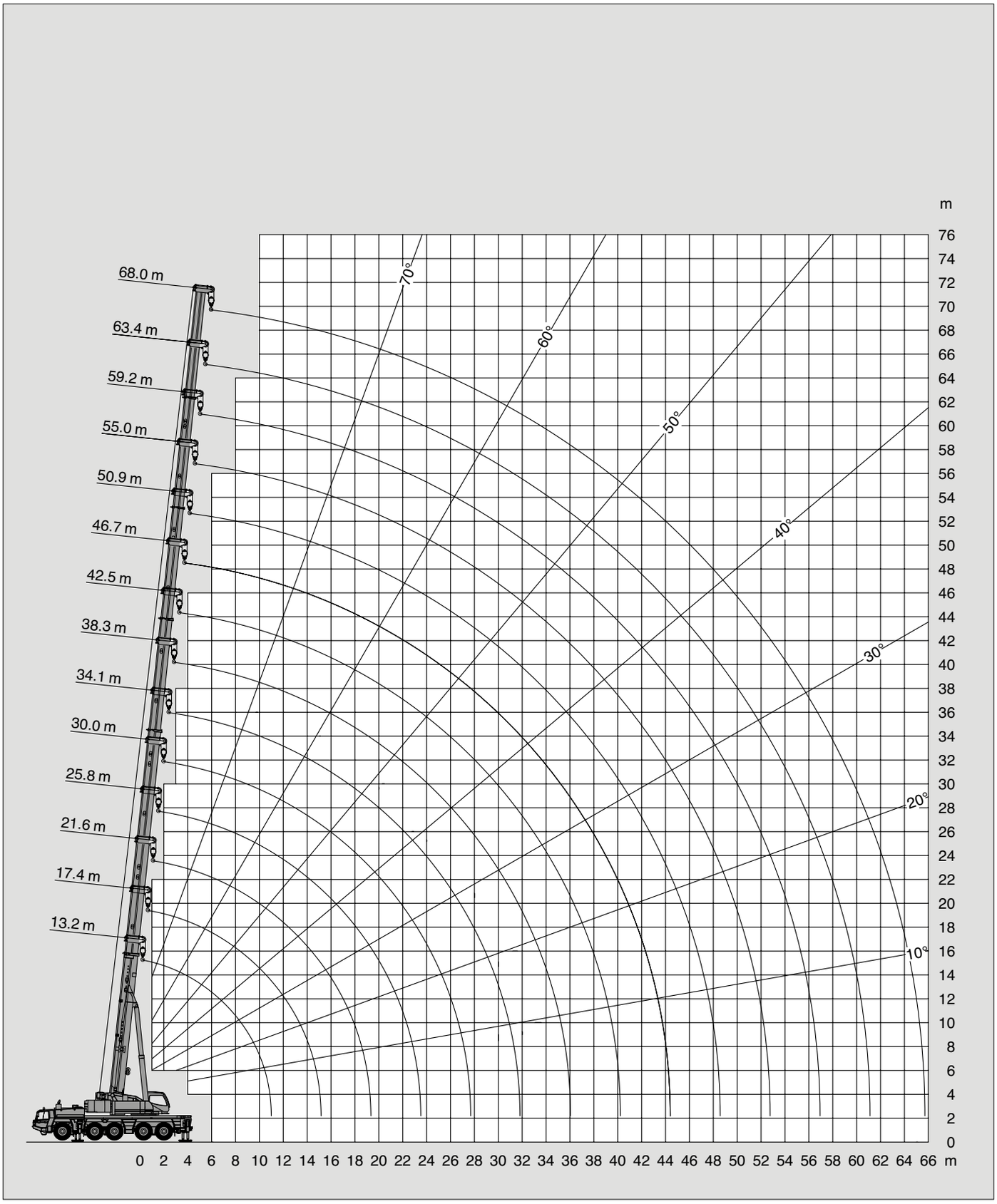

View thousands of Crane Specifications on FreeCraneSpecs.com
https://truckmanualshub.com/

TADANO

ATF 220G-5

Tragfähigkeiten
Lifting capacities
Capacités de levage
Capacidades de elevación

8.3 m | 360° | 71 t | DIN / ISO / EN

m	13.2 m*	13.2 m	17.4 m	21.6 m	25.8 m	30.0 m	34.1 m	38.3 m	42.5 m	46.7 m	50.9 m	55.0 m	59.2 m	63.4 m	68.0 m
2.5	220.0**														
3.0	180.0**	176.5**	140.0**	140.0**	114.0**										
3.5	169.5**	160.0**	140.0**	140.0**	114.0**	90.5									
4.0	160.0**	150.5**	140.0**	140.0**	108.5	90.5									
4.5	150.5**	138.0**	137.5**	136.5**	103.5	90.5	70.0								
5.0	135.5**	127.0**	126.5**	126.0**	103.0	87.0	70.0	54.5							
6.0	112.5	109.0	109.0	108.0	103.0	79.8	70.0	54.5	43.5						
7.0	96.3	95.5	95.1	94.2	94.9	77.5	66.2	54.5	43.5	34.5					
8.0	83.6	83.6	83.2	82.4	83.0	77.5	61.2	54.5	43.5	34.5	28.5				
9.0	73.5	73.5	73.1	72.2	72.8	73.6	58.0	52.0	43.4	34.5	28.5	23.0			
10.0	65.4	65.4	64.9	64.0	64.6	65.4	58.0	48.9	41.4	34.5	28.5	23.0	18.8		
11.0			58.2	57.4	57.9	58.6	56.7	45.7	39.4	34.1	28.5	23.0	18.8	15.0	
12.0			52.6	51.8	52.3	53.0	54.0	42.8	37.6	32.6	28.3	23.0	18.8	15.0	13.8
14.0			43.9	43.1	43.6	44.3	45.1	40.0	35.6	30.0	26.8	22.8	18.8	15.0	13.8
16.0				36.6	37.0	37.7	38.5	37.3	32.4	28.5	24.9	21.8	18.8	15.0	13.8
18.0				31.6	31.9	32.6	33.4	34.1	29.3	26.4	23.1	20.4	18.3	15.0	13.4
20.0					27.5	28.3	30.4	30.0	26.8	24.5	21.5	19.1	17.2	15.0	13.1
22.0					23.7	26.2	27.0	26.2	24.6	22.9	20.1	17.8	16.2	14.8	12.8
24.0						24.1	23.7	22.9	22.1	21.2	18.8	16.7	15.2	14.0	12.5
26.0						21.5	21.0	20.2	19.4	19.2	17.6	15.7	14.4	13.3	12.2
28.0							18.7	17.9	17.2	17.0	16.6	14.8	13.6	12.6	11.4
30.0							16.8	16.0	16.2	15.1	15.2	14.0	12.8	11.9	10.6
32.0								14.4	15.0	13.4	13.6	13.2	12.1	11.3	9.9
34.0								13.0	13.6	12.0	12.5	12.5	11.5	10.8	9.3
36.0									12.4	11.5	12.0	11.2	10.9	10.2	8.7
38.0									11.3	11.0	10.9	10.1	10.4	9.8	8.2
40.0										10.6	9.9	9.3	9.4	9.3	7.7
42.0										9.8	9.0	8.7	8.6	8.5	7.3
44.0										8.1	8.3	8.2	7.9	8.0	6.8
46.0											7.6	7.6	7.5	7.5	6.4
48.0											7.0	7.0	7.1	6.8	6.1
50.0												6.4	6.7	6.2	5.7
52.0												5.9	6.2	5.7	5.4
54.0													5.7	5.2	5.1
56.0													5.3	4.7	4.7
58.0														4.3	4.2
60.0														3.9	3.9
62.0															3.5
64.0															3.2

** Nach hinten / * Over rear / * A l'arrière / * Sobre la parte trasera*
*** Mit Zusatzhubausrüstung / ** With additional lifting equipment / ** Avec équipement supplémentaire / ** Con equipo adicional*

View thousands of Crane Specifications on FreeCraneSpecs.com
https://truckmanualshub.com/

TADANO

ATF 220G-5

Tragfähigkeiten
Lifting capacities
Capacités de levage
Capacidades de elevación

8.3 m | 360° | 47t | DIN / ISO / EN

m	13.2 m*	13.2 m	17.4 m	21.6 m	25.8 m	30.0 m	34.1 m	38.3 m	42.5 m	46.7 m	50.9 m	55.0 m	59.2 m	63.4 m	68.0 m
3.0	180.0**	174.5**	140.0**	140.0**	114.0**										
3.5	169.5**	157.0**	140.0**	140.0**	114.0**	90.5									
4.0	154.0**	142.5**	140.0**	140.0**	108.5	90.5									
4.5	137.0**	130.0**	130.0**	129.0**	103.5	90.5	70.0								
5.0	123.0**	119.5**	119.5**	118.5**	103.0	87.0	70.0	54.5							
6.0	102.0	102.0	102.0	101.0	101.5	79.8	70.0	54.5	43.5						
7.0	86.6	86.6	86.2	85.4	86.0	77.5	66.2	54.5	43.5	34.5					
8.0	74.7	74.7	74.3	73.5	74.1	74.9	61.2	54.5	43.5	34.5	28.5				
9.0	65.5	65.5	65.1	64.3	64.9	65.6	58.0	52.0	43.4	34.5	28.5	23.0			
10.0	58.2	58.2	57.7	56.9	57.5	58.2	58.0	48.9	41.4	34.5	28.5	23.0	18.8		
11.0			51.7	50.8	51.4	52.1	52.7	45.7	39.4	34.1	28.5	23.0	18.8	15.0	
12.0			46.5	45.4	46.2	47.0	47.2	42.8	37.6	32.6	28.3	23.0	18.8	15.0	13.8
14.0			36.0	34.8	35.6	36.5	38.7	38.6	35.6	30.0	26.8	22.8	18.8	15.0	13.8
16.0				28.3	30.2	32.5	32.2	31.4	30.6	28.5	24.9	21.8	18.8	15.0	13.8
18.0				26.2	27.4	27.1	26.8	26.0	25.2	25.0	23.1	20.4	18.3	15.0	13.4
20.0					23.3	23.1	22.7	21.9	21.4	20.9	21.1	19.1	17.2	15.0	13.1
22.0					20.2	19.9	19.5	18.7	19.4	17.7	17.9	17.8	16.2	14.8	12.8
24.0						17.4	16.9	16.1	16.8	15.4	15.9	15.7	15.2	14.0	12.5
26.0						15.3	14.8	14.0	14.7	14.6	14.4	14.2	14.0	13.3	12.2
28.0							13.1	12.3	13.0	13.4	12.6	12.8	12.4	12.6	11.4
30.0							11.6	10.8	11.5	11.9	11.2	11.4	11.7	11.1	10.6
32.0								9.6	10.2	10.6	10.5	10.8	10.4	9.8	9.8
34.0								8.8	9.6	9.7	9.8	9.7	9.3	8.7	8.7
36.0									9.1	9.1	9.2	8.8	8.3	7.7	7.7
38.0									8.7	8.5	8.3	7.9	7.4	6.9	6.8
40.0										7.8	7.5	7.1	6.6	6.1	6.1
42.0										7.1	6.8	6.4	6.0	5.4	5.4
44.0										6.6	6.2	5.8	5.3	4.8	4.8
46.0											5.7	5.2	4.8	4.2	4.2
48.0											5.2	4.7	4.3	3.7	3.7
50.0												4.3	3.8	3.3	3.2
52.0												3.9	3.4	2.8	2.8
54.0													3.0	2.5	2.4
56.0													2.7	2.1	2.1
58.0														1.8	1.7
60.0														1.5	1.4
62.0															1.2
64.0															0.9

** Nach hinten / * Over rear / * A l'arrière / * Sobre la parte trasera*
*** Mit Zusatzhubausrüstung / ** With additional lifting equipment / ** Avec équipement supplémentaire / ** Con equipo adicional*

Änderungen vorbehalten / Subject to change without prior notice / Cette documentation est modifiable sans préavis / Sujeto a cambios sin previo aviso

View thousands of Crane Specifications on FreeCraneSpecs.com
https://truckmanualshub.com/

TADANO

ATF 220G-5

Tragfähigkeiten
Lifting capacities
Capacités de levage
Capacidades de elevación

8.3 m | 360° | 35t | DIN / ISO / EN

m	13.2 m*	13.2 m	17.4 m	21.6 m	25.8 m	30.0 m	34.1 m	38.3 m	42.5 m	46.7 m	50.9 m	55.0 m	59.2 m	63.4 m	68.0 m
3.0	180.0**	169.5**	140.0**	140.0	114.0**										
3.5	166.5**	152.5**	140.0**	140.0**	114.0**	90.5									
4.0	146.0**	138.0**	138.0**	137.0**	108.5	90.5									
4.5	130.0**	126.0**	125.5**	124.5**	103.5	90.5	70.0								
5.0	117.0**	115.5**	115.0**	114.0**	103.0	87.0	70.0	54.5							
6.0	96.4	96.4	96.0	95.1	95.8	79.8	70.0	54.5	43.5						
7.0	81.4	81.4	81.0	80.2	80.8	77.5	66.2	54.5	43.5	34.5					
8.0	70.2	70.2	69.8	68.9	69.5	68.1	61.2	54.5	43.5	34.5	28.5				
9.0	61.5	61.5	61.0	60.2	59.9	58.2	57.0	52.0	43.4	34.5	28.5	23.0			
10.0	53.9	53.9	53.1	51.8	51.7	50.6	49.8	46.8	41.4	34.5	28.5	23.0	18.8		
11.0			44.8	43.5	44.4	44.5	44.0	43.5	39.4	34.1	28.5	23.0	18.8	15.0	
12.0			38.4	37.2	38.0	39.9	41.5	39.1	36.8	32.6	28.3	23.0	18.8	15.0	13.8
14.0			29.7	31.2	33.4	33.3	33.0	32.1	30.2	29.1	26.8	22.8	18.8	15.0	13.8
16.0				26.9	27.2	26.9	26.6	25.7	24.9	24.4	23.9	21.8	18.8	15.0	13.8
18.0				22.4	22.5	22.3	21.9	21.1	21.9	20.1	20.3	20.2	18.3	15.0	13.4
20.0					19.1	18.8	18.4	17.6	18.4	17.4	17.7	17.3	17.2	15.0	13.1
22.0					16.4	16.1	15.7	14.9	15.6	16.1	15.3	15.5	14.9	14.8	12.8
24.0						13.9	13.5	12.7	13.4	13.9	13.5	13.7	13.7	13.1	12.5
26.0						12.2	11.9	11.3	12.2	12.8	12.6	12.3	11.9	11.3	11.3
28.0							11.2	10.5	11.4	11.5	11.2	10.8	10.3	9.8	9.7
30.0							10.7	9.9	10.4	10.2	9.9	9.5	9.0	8.5	8.4
32.0								9.3	9.3	9.0	8.8	8.4	7.9	7.4	7.3
34.0								8.5	8.4	8.1	7.8	7.4	6.9	6.4	6.3
36.0									7.5	7.2	7.0	6.5	6.1	5.5	5.5
38.0									6.8	6.5	6.2	5.8	5.3	4.8	4.7
40.0										5.8	5.5	5.1	4.6	4.1	4.1
42.0										5.2	5.0	4.5	4.0	3.5	3.5
44.0										4.8	4.4	4.0	3.5	3.0	2.9
46.0											3.9	3.5	3.0	2.5	2.4
48.0											3.5	3.1	2.6	2.0	2.0
50.0												2.7	2.2	1.6	1.6
52.0												2.3	1.8	1.3	1.2
54.0													1.5		
56.0													1.3		

** Nach hinten / * Over rear / * A l'arrière / * Sobre la parte trasera*
*** Mit Zusatzhubausrüstung / ** With additional lifting equipment / ** Avec équipement supplémentaire / ** Con equipo adicional*

View thousands of Crane Specifications on FreeCraneSpecs.com
https://truckmanualshub.com/

TADANO

ATF 220G-5

Tragfähigkeiten
Lifting capacities
Capacités de levage
Capacidades de elevación

8.3 m | 360° | 23.5t | DIN / ISO / EN

m	13.2 m*	13.2 m	17.4 m	21.6 m	25.8 m	30.0 m	34.1 m	38.3 m	42.5 m	46.7 m	50.9 m	55.0 m	59.2 m	63.4 m	68.0 m
3.0	180.0**	164.5**	140.0**	140.0**	114.0**										
3.5	158.0**	147.5**	140.0**	140.0**	114.0**	90.5									
4.0	138.5**	133.5**	133.0**	132.0**	108.5	90.5									
4.5	123.0**	121.5**	121.0**	120.0**	103.5	90.5	70.0								
5.0	110.0	110.0	110.0	109.0	103.0	87.0	70.0	54.5							
6.0	90.5	90.5	90.2	88.8	83.1	77.5	70.0	54.5	43.5						
7.0	76.4	76.4	76.0	69.9	66.3	63.5	58.7	54.5	43.5	34.5					
8.0	65.6	65.6	62.6	57.0	54.6	52.8	51.6	47.9	43.5	34.5	28.5				
9.0	53.0	53.0	52.2	47.7	46.0	45.5	46.6	43.5	39.2	34.5	28.5	23.0			
10.0	43.5	43.5	42.7	40.6	41.6	43.0	40.7	38.0	35.5	33.9	28.5	23.0	18.8		
11.0			35.8	36.9	39.7	37.9	36.0	33.6	31.4	30.0	28.5	23.0	18.8	15.0	
12.0			32.0	34.8	35.1	33.8	32.1	30.0	28.4	26.8	26.0	23.0	18.8	15.0	13.8
14.0			25.8	26.9	27.1	26.9	26.1	24.3	24.4	21.7	21.4	20.9	18.8	15.0	13.8
16.0				21.5	21.8	21.5	21.2	20.0	20.3	19.9	18.8	18.4	17.2	15.0	13.8
18.0				17.7	17.9	17.6	17.3	16.4	17.1	17.4	16.9	16.6	15.0	14.6	13.4
20.0					15.6	14.6	14.7	14.3	15.3	15.7	15.1	14.3	13.4	12.4	12.0
22.0					13.3	12.3	13.6	13.1	13.6	13.3	13.1	12.3	11.5	10.6	10.3
24.0						11.4	11.8	11.8	11.6	11.4	11.2	10.7	10.0	9.1	8.8
26.0						10.1	10.3	10.2	10.1	9.8	9.6	9.1	8.6	7.8	7.6
28.0							9.0	8.9	8.7	8.5	8.3	7.8	7.3	6.7	6.5
30.0							7.9	7.8	7.6	7.4	7.1	6.7	6.2	5.6	5.6
32.0								6.8	6.7	6.4	6.2	5.8	5.3	4.7	4.7
34.0								6.1	5.9	5.6	5.4	4.9	4.5	3.9	3.9
36.0									5.2	4.9	4.7	4.2	3.8	3.2	3.2
38.0									4.6	4.3	4.0	3.6	3.1	2.6	2.5
40.0										3.8	3.5	3.0	2.6	2.0	2.0
42.0										3.3	3.0	2.6	2.1	1.5	1.5
44.0										2.9	2.6	2.1	1.7	1.1	1.1
46.0											2.2	1.7	1.3		
48.0											1.9	1.4			

** Nach hinten / * Over rear / * A l'arrière / * Sobre la parte trasera*
*** Mit Zusatzhubausrüstung / ** With additional lifting equipment / ** Avec équipement supplémentaire / ** Con equipo adicional*

Änderungen vorbehalten / Subject to change without prior notice / Cette documentation est modifiable sans préavis / Sujeto a cambios sin previo aviso

View thousands of Crane Specifications on FreeCraneSpecs.com
https://truckmanualshub.com/

TADANO

ATF 220G-5

Tragfähigkeiten
Lifting capacities
Capacités de levage
Capacidades de elevación

8.3 m | 360° | 12t | DIN / ISO / EN

m	13.2 m*	13.2 m	17.4 m	21.6 m	25.8 m	30.0 m	34.1 m	38.3 m	42.5 m	46.7 m	50.9 m	55.0 m	59.2 m	63.4 m	68.0 m
3.0	173.5**	159.5**	140.0**	140.0**	114.0**										
3.5	149.5**	142.5**	140.0**	140.0**	114.0**	90.5									
4.0	131.0**	128.5**	128.0**	127.0**	108.5	90.5									
4.5	116.0**	115.5**	115.5**	114.5**	103.5	90.5	70.0								
5.0	103.5	103.0	103.0	99.8	91.5	81.6	70.0	54.5							
6.0	84.8	84.7	82.8	73.8	69.1	65.5	59.8	54.5	43.5						
7.0	69.3	69.3	64.1	57.7	54.8	52.6	51.1	47.0	43.5	34.5					
8.0	51.8	51.8	51.2	46.7	46.2	47.9	45.2	41.9	37.6	34.5	28.5				
9.0	40.8	40.8	40.1	41.3	43.5	41.2	38.8	36.0	33.3	31.7	28.5	23.0			
10.0	33.2	33.2	35.4	37.3	37.6	35.8	33.7	31.3	31.0	27.4	26.4	23.0	18.8		
11.0			30.1	31.4	31.7	31.4	29.6	27.3	27.2	23.8	23.1	22.7	18.8	15.0	
12.0			25.6	26.9	27.2	26.9	26.1	24.0	24.1	22.8	22.0	20.0	18.8	15.0	13.8
14.0			18.9	20.1	20.6	20.1	19.8	19.3	20.2	20.4	18.9	17.2	15.9	15.0	13.8
16.0				15.7	16.6	16.1	17.4	17.3	17.2	16.9	16.2	15.2	14.2	13.1	12.5
18.0				12.5	13.4	13.8	14.1	14.0	13.9	13.6	13.4	12.7	11.8	10.8	10.5
20.0					11.0	11.3	11.6	11.5	11.4	11.1	10.9	10.4	9.9	9.0	8.7
22.0					9.2	9.4	9.7	9.6	9.5	9.2	9.0	8.5	8.0	7.4	7.2
24.0						7.9	8.2	8.1	7.9	7.7	7.5	7.0	6.5	5.9	5.9
26.0						6.7	6.9	6.8	6.7	6.4	6.2	5.8	5.3	4.7	4.6
28.0							5.9	5.8	5.7	5.4	5.2	4.7	4.3	3.7	3.6
30.0							5.1	4.9	4.8	4.5	4.3	3.9	3.4	2.8	2.8
32.0								4.2	4.1	3.8	3.6	3.1	2.7	2.1	2.0
34.0								3.6	3.4	3.2	2.9	2.5	2.0	1.4	1.4
36.0									2.9	2.6	2.4	1.9	1.5		
38.0									2.5	2.1	1.9	1.4	1.0		
40.0										1.7	1.4	1.0			
42.0										1.3	1.1				
44.0										1.1					

* Nach hinten / * Over rear / * A l'arrière / * Sobre la parte trasera
** Mit Zusatzhubausrüstung / ** With additional lifting equipment / ** Avec équipement supplémentaire / ** Con equipo adicional

8.3 m | 360° | 0t | DIN / ISO / EN

m	13.2 m*	13.2 m	17.4 m	21.6 m	25.8 m	30.0 m	34.1 m	38.3 m	42.5 m	46.7 m	50.9 m	55.0 m	59.2 m
3.0	163.5**	153.5**	140.0**	140.0**	114.0**								
3.5	141.0**	137.0**	136.5**	135.5**	114.0**	90.5							
4.0	122.5**	122.5**	122.0**	111.0**	98.1	84.5							
4.5	108.0	108.0	104.0	88.9	80.2	73.8	65.4						
5.0	96.4	96.4	85.0	73.5	67.4	62.9	58.0	53.4					
6.0	68.9	68.9	60.8	53.6	52.1	53.4	49.1	43.5	38.4				
7.0	52.1	52.1	46.5	46.6	46.2	43.0	39.6	35.7	32.2	30.0			
8.0	40.1	40.1	39.9	39.6	37.5	34.9	32.3	29.2	28.8	25.3	23.5		
9.0	30.9	30.9	33.1	32.5	31.1	29.1	27.0	26.0	25.1	23.8	21.6	19.3	
10.0	24.1	24.1	27.2	27.3	26.3	24.7	24.5	24.4	23.3	21.4	18.9	17.9	16.3
11.0			22.1	23.3	23.5	21.5	22.3	21.3	20.3	19.2	18.1	16.8	15.0
12.0			18.3	19.7	20.5	20.1	19.6	18.8	18.0	16.9	16.0	14.8	13.7
14.0			13.1	14.4	15.4	15.8	15.6	14.9	14.3	13.5	12.7	11.7	10.7
16.0				10.8	11.8	12.2	12.5	12.1	11.6	10.9	10.2	9.3	8.5
18.0				8.4	9.2	9.6	9.9	9.8	9.5	8.9	8.3	7.5	6.7
20.0					7.3	7.7	7.9	7.9	7.8	7.3	6.8	6.1	5.3
22.0					5.9	6.2	6.4	6.4	6.2	6.0	5.6	4.9	4.2
24.0						5.0	5.3	5.2	5.0	4.8	4.5	3.9	3.2
26.0						4.1	4.3	4.2	4.1	3.8	3.6	3.1	2.4
28.0							3.5	3.4	3.3	3.0	2.8	2.3	
30.0							2.9	2.7	2.6	2.3	2.1	1.6	
32.0								2.1	2.0	1.7	1.5		
34.0								1.7	1.5	1.2			
36.0									1.1				

* Nach hinten / * Over rear / * A l'arrière / * Sobre la parte trasera
** Mit Zusatzhubausrüstung / ** With additional lifting equipment / ** Avec équipement supplémentaire / ** Con equipo adicional

View thousands of Crane Specifications on FreeCraneSpecs.com
https://truckmanualshub.com/

TADANO

ATF 220G-5

HTLJ / Hubhöhen
HTLJ / Lifting heights
HTLJ / Hauteurs de levage
HTLJ / Alturas de elevación

8.3 m | 360° | 71 t | DIN / ISO / EN

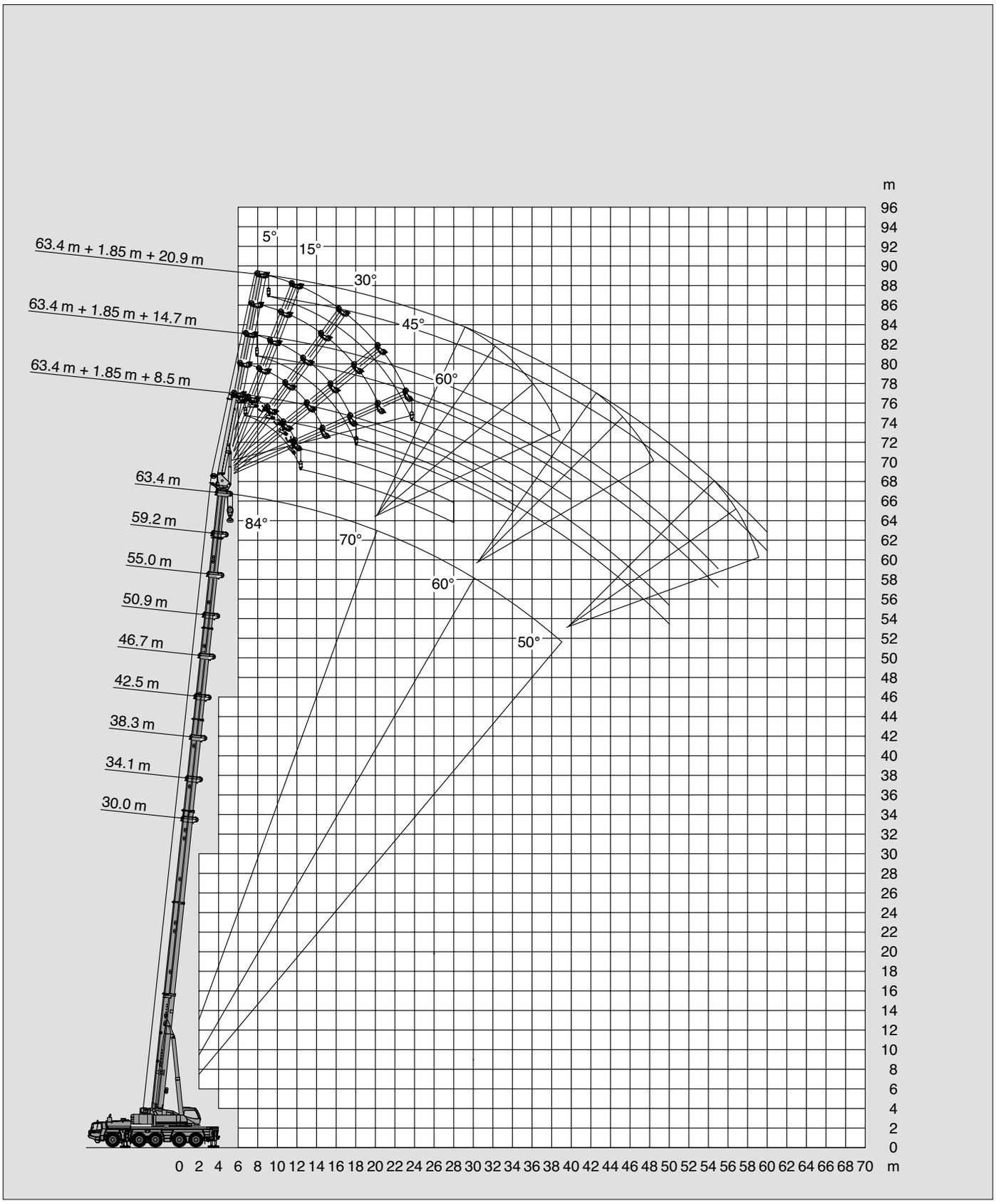

View thousands of Crane Specifications on FreeCraneSpecs.com
https://truckmanualshub.com/

TADANO

ATF 220G-5

Tragfähigkeiten
Lifting capacities
Capacités de levage
Capacidades de elevación

71t | DIN / ISO / EN

m	63.4 m + 1.85 m + 8.5 m					63.4 m + 1.85 m + 11.6 m					63.4 m + 1.85 m + 14.7 m					63.4 m + 1.85 m + 17.8 m					63.4 m + 1.85 m + 20.9 m				
	5°	15°	30°	45°	60°	5°	15°	30°	45°	60°	5°	15°	30°	45°	60°	5°	15°	30°	45°	60°	5°	15°	30°	45°	60°
14.0	7.0	7.0				6.1					5.4														
16.0	6.8	6.6	6.3			6.1	6.0				5.4					4.7									
18.0	6.3	6.1	5.9	5.7		5.9	5.7	5.3			5.4	5.2				4.7					4.2				
20.0	6.0	5.8	5.5	5.3	5.3	5.5	5.3	5.0	4.8		5.2	4.9				4.7	4.5				4.2				
22.0	5.6	5.4	5.1	5.0	5.0	5.2	5.0	4.7	4.5	4.5	4.8	4.6	4.3			4.6	4.3				4.2	4.0			
24.0	5.3	5.1	4.8	4.7	4.7	4.9	4.7	4.4	4.3	4.2	4.5	4.3	4.1	3.9		4.3	4.0	3.8			4.0	3.7			
26.0	4.9	4.8	4.6	4.4	4.4	4.6	4.4	4.2	4.1	4.0	4.3	4.1	3.9	3.7	3.7	4.0	3.8	3.6			3.8	3.5	3.3		
28.0	4.6	4.5	4.3	4.2	4.2	4.3	4.1	3.9	3.9	3.8	4.0	3.8	3.6	3.5	3.5	3.8	3.6	3.4	3.3	3.2	3.6	3.4	3.1		
30.0	4.3	4.2	4.1	4.0		4.1	3.9	3.7	3.6	3.6	3.8	3.6	3.5	3.3	3.3	3.6	3.4	3.2	3.1	3.1	3.3	3.2	3.0	2.9	
32.0	4.0	4.0	3.9	3.8		3.8	3.7	3.5	3.4		3.6	3.4	3.3	3.2	3.2	3.4	3.2	3.0	2.9	2.9	3.2	3.0	2.8	2.7	2.7
34.0	3.8	3.7	3.6	3.6		3.6	3.5	3.3	3.3		3.4	3.2	3.1	3.0	3.0	3.2	3.0	2.9	2.8	2.8	3.0	2.9	2.7	2.6	2.6
36.0	3.6	3.5	3.4	3.4		3.4	3.3	3.2	3.1		3.2	3.1	2.9	2.8		3.0	2.9	2.7	2.7	2.6	2.8	2.7	2.6	2.5	2.4
38.0	3.3	3.3	3.2	3.2		3.2	3.1	3.0	2.9		3.0	2.9	2.8	2.7		2.9	2.7	2.6	2.5		2.7	2.5	2.4	2.3	2.3
40.0	3.1	3.1	3.0	3.0		3.0	2.9	2.8	2.8		2.8	2.8	2.6	2.6		2.7	2.6	2.4	2.4		2.5	2.4	2.3	2.2	2.2
42.0	3.0	2.9	2.8			2.8	2.7	2.7	2.6		2.7	2.6	2.5	2.4		2.5	2.4	2.3	2.3		2.4	2.3	2.2	2.1	
44.0	2.8	2.7	2.7			2.6	2.6	2.5	2.5		2.5	2.4	2.4	2.3		2.4	2.3	2.2	2.1		2.3	2.2	2.0	2.0	
46.0	2.4	2.6	2.5			2.5	2.4	2.4			2.4	2.3	2.3	2.2		2.3	2.2	2.1	2.0		2.2	2.1	1.9	1.9	
48.0	2.3	2.3	2.2			2.2	2.3	2.2			2.2	2.2	2.1			2.1	2.1	2.0	2.0		2.0	2.0	1.8	1.8	
50.0	2.1	2.1	2.1			2.0	2.0	2.1			2.1	2.0	2.0			2.0	1.9	1.9	1.9		1.9	1.9	1.8	1.7	
55.0						1.3	1.5	1.7			1.6	1.6	1.6			1.6	1.7	1.6			1.6	1.6	1.6		
60.0																1.0	1.3	1.3			1.3	1.2	1.3		

71t | DIN / ISO / EN

m	34.1 m + 1.85 m + 8.5 m					34.1 m + 1.85 m + 11.6 m					34.1 m + 1.85 m + 14.7 m					34.1 m + 1.85 m + 17.8 m					34.1 m + 1.85 m + 20.9 m				
	5°	15°	30°	45°	60°	5°	15°	30°	45°	60°	5°	15°	30°	45°	60°	5°	15°	30°	45°	60°	5°	15°	30°	45°	60°
7.0	27.5	21.5				14.6																			
8.0	25.8	20.5				14.6					13.9					13.5									
9.0	24.2	19.7	16.0			14.6	14.6				13.9					13.2									
10.0	22.8	18.8	15.6			14.6	14.6				13.9	12.8				12.8									
11.0	21.6	18.1	15.2	13.4		14.6	14.6	11.9			13.9	12.2				12.4	10.5				5.6				
12.0	20.5	17.4	14.8	13.2	12.1	14.6	14.1	11.6			13.9	11.7				12.0	10.0				5.6				
14.0	18.5	16.2	14.1	12.8	11.9	14.6	13.0	11.0	9.7		12.8	10.7	8.9			11.0	9.2				5.6	5.6			
16.0	16.9	15.1	13.5	12.5	11.8	13.9	12.1	10.4	9.4	8.6	11.5	9.9	8.4	7.4		9.9	8.5	7.1			5.6	5.6			
18.0	15.6	14.2	12.9	12.2	11.7	12.6	11.3	10.0	9.1	8.4	10.4	9.2	8.0	7.2	6.5	9.0	7.8	6.7			5.6	5.6	5.6		
20.0	14.4	13.4	12.5	12.0	11.7	11.6	10.6	9.5	8.9	8.4	9.6	8.6	7.6	6.9	6.4	8.2	7.3	6.4	5.6		5.6	5.6	5.6		
22.0	13.4	12.7	12.0	11.8		10.7	9.9	9.2	8.7	8.3	8.8	8.1	7.3	6.7	6.3	7.5	6.8	6.1	5.5	4.9	5.6	5.6	5.4	4.6	
24.0	12.5	12.0	11.7	11.6		10.0	9.4	8.8	8.5		8.1	7.6	7.0	6.6	6.2	6.9	6.4	5.8	5.3	4.8	5.6	5.6	5.1	4.5	3.9
26.0	11.7	11.5	11.4	11.5		9.3	8.9	8.5	8.4		7.5	7.1	6.7	6.4	6.2	6.4	6.0	5.6	5.2	4.7	5.6	5.4	4.9	4.3	3.9
28.0	11.1	11.0	11.1	11.5		8.7	8.5	8.3	8.2		7.0	6.8	6.5	6.3		5.9	5.7	5.3	5.0	4.7	5.4	5.1	4.7	4.2	3.8
30.0	10.5	10.6	10.9			8.2	8.1	8.1	8.2		6.6	6.4	6.3	6.2		5.5	5.4	5.1	4.9		5.0	4.8	4.5	4.1	3.8
32.0	9.5	9.6	9.7			7.7	7.7	7.9			6.2	6.1	6.1	6.1		5.2	5.1	5.0	4.8		4.7	4.5	4.3	4.0	
34.0	8.1	8.3	8.5			7.3	7.4	7.7			5.8	5.8	5.9	6.1		4.9	4.8	4.8	4.8		4.4	4.3	4.1	3.9	
36.0	6.7	6.9				6.9	7.2	7.6			5.5	5.6	5.8			4.6	4.6	4.7	4.7		4.1	4.1	4.0	3.8	
38.0	5.5	5.6				6.6	6.8				5.2	5.4	5.7			4.3	4.4	4.5			3.8	3.9	3.9	3.8	
40.0	4.4					5.5	5.7				4.9	5.2	5.6			4.1	4.2	4.4			3.6	3.7	3.8	3.7	
42.0						4.5	4.6				4.7	5.0				3.9	4.1	4.4			3.4	3.5	3.7		
44.0						3.6					4.5	4.6				3.7	3.9	4.3			3.2	3.4	3.6		
46.0											3.6					3.5	3.8				3.0	3.2	3.5		
48.0																3.4	3.7				2.9	3.1			
50.0																2.9					2.8	3.0			

View thousands of Crane Specifications on FreeCraneSpecs.com
https://truckmanualshub.com/

TADANO

ATF 220G-5

Hubhöhen
Lifting heights
Hauteurs de levage
Alturas de elevación

HYDRO 8.3 m 360° 71 t DIN/ISO/EN

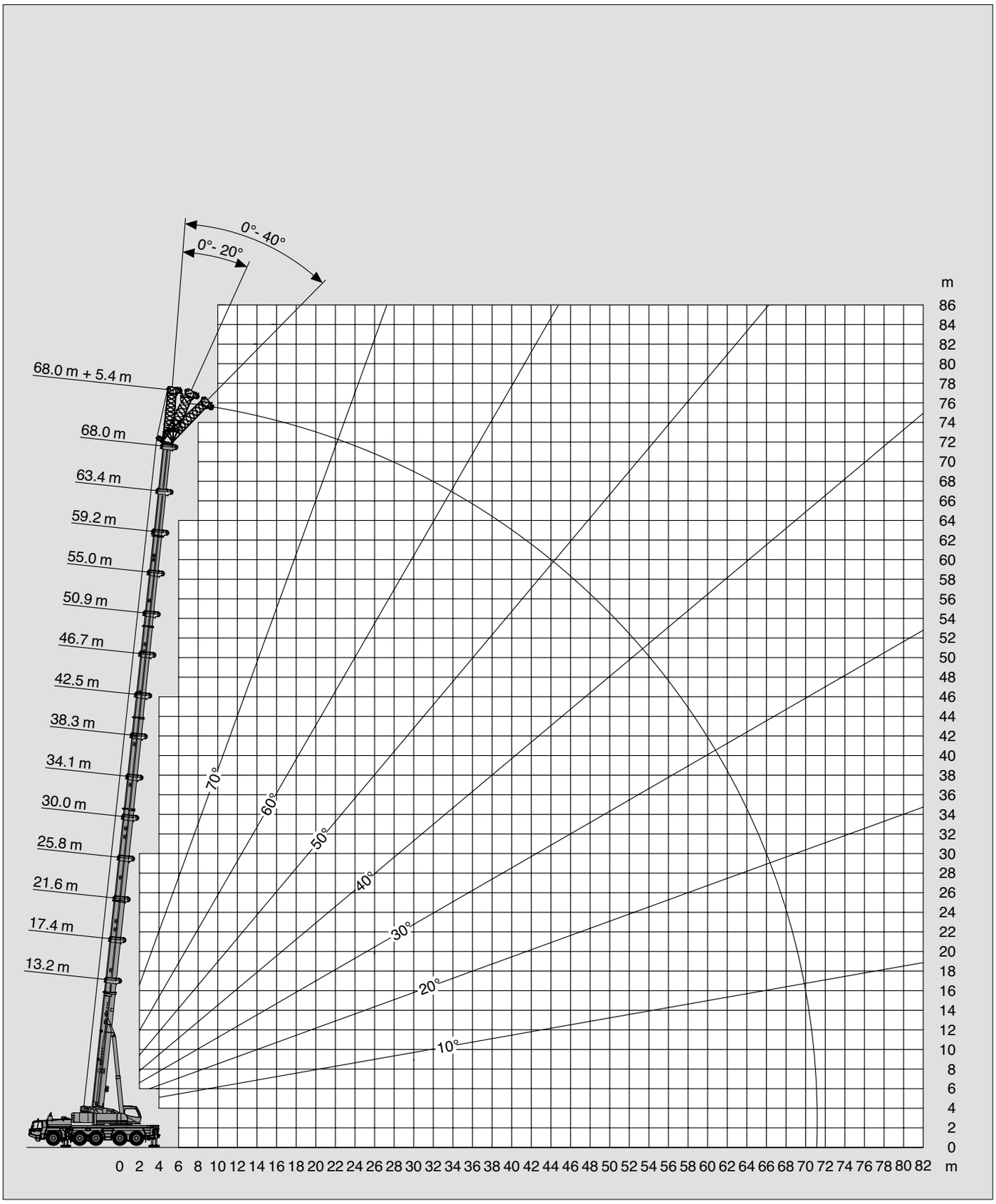

View thousands of Crane Specifications on FreeCraneSpecs.com
https://truckmanualshub.com/

TADANO

ATF 220G-5

Tragfähigkeiten
Lifting capacities
Capacités de levage
Capacidades de elevación

HYDRO | 8.3 m | 360° | 71 t | DIN / ISO / EN

m	13.2 m + 5.4 m			34.1 m + 5.4 m			63.4 m + 5.4 m			68.0 m + 5.4 m		
	0°	20°	40°	0°	20°	40°	0°	20°	40°	0°	20°	40°
3.0	47.5											
3.5	45.0	30.4										
4.0	42.6	29.4										
4.5	40.6	28.5										
5.0	38.7	27.6	22.2									
6.0	35.5	26.1	21.4	38.7								
7.0	32.8	24.8	20.7	38.7								
8.0	30.5	23.7	20.1	38.7	28.5							
9.0	28.5	22.7	19.6	38.7	27.7	21.5						
10.0	26.8	21.8	19.3	38.4	27.0	21.2						
11.0	25.2	21.1	18.7	36.4	26.3	20.9						
12.0	23.7	20.1	18.3	34.5	25.6	20.6						
14.0	20.7	18.5		31.2	24.5	20.1	10.9			10.0		
16.0	18.1			28.3	23.5	19.6	10.3	9.6	9.2	9.4	8.8	
18.0				25.9	22.6	19.2	9.8	9.1	8.8	8.9	8.4	8.1
20.0				23.8	21.8	18.9	9.3	8.7	8.4	8.5	8.0	7.7
22.0				22.0	21.1	18.5	8.9	8.3	8.1	8.1	7.7	7.4
24.0				20.4	20.1	18.1	8.5	8.0	7.7	7.8	7.4	7.1
26.0				18.0	18.5	17.9	8.1	7.7	7.4	7.5	7.1	6.9
28.0				15.8	16.2	16.3	7.8	7.5	7.2	7.2	6.9	6.7
30.0				13.9	14.2	14.3	7.5	7.2	7.0	6.9	6.6	6.5
32.0				12.3	12.5		7.2	7.0	6.8	6.6	6.4	6.3
34.0				10.9	11.1		7.0	6.7	6.6	6.4	6.2	6.1
36.0				9.7			6.7	6.5	6.4	6.2	6.0	5.9
38.0							6.5	6.3	6.2	6.0	5.8	5.7
40.0							6.3	6.1	6.0	5.8	5.6	5.5
44.0							6.0	5.8	5.7	5.5	5.3	5.2
48.0							5.4	5.4	5.4	5.2	5.1	5.0
52.0							4.9	4.9	4.9	4.7	4.7	4.7
56.0							4.3	4.4		4.3	4.3	4.3
60.0							3.6	3.6		3.6	3.6	
64.0							2.9			2.9	2.9	
68.0										2.3		

View thousands of Crane Specifications on FreeCraneSpecs.com
https://truckmanualshub.com/

TADANO

ATF 220G-5

Tragfähigkeiten
Lifting capacities
Capacités de levage
Capacidades de elevación

HYDRO | 8.3 m | 360° | 47t | DIN / ISO / EN

m	13.2 m + 5.4 m			34.1 m + 5.4 m			63.4 m + 5.4 m			68.0 m + 5.4 m		
	0°	20°	40°	0°	20°	40°	0°	20°	40°	0°	20°	40°
3.0	47.5											
3.5	45.0	30.4										
4.0	42.6	29.4										
4.5	40.6	28.5										
5.0	38.7	27.6	22.2									
6.0	35.5	26.1	21.4	38.7								
7.0	32.8	24.8	20.7	38.7								
8.0	30.5	23.7	20.1	38.7	28.5							
9.0	28.5	22.7	19.6	38.7	27.7	21.5						
10.0	26.8	21.8	19.3	38.4	27.0	21.2						
11.0	25.2	21.1	18.7	36.4	26.3	20.9						
12.0	23.7	20.1	18.3	34.5	25.6	20.6						
14.0	20.7	18.5		31.2	24.5	20.1	10.9			10.0		
16.0	18.1			28.3	23.5	19.6	10.3	9.6	9.2	9.4	8.8	
18.0				23.6	22.6	19.2	9.8	9.1	8.8	8.9	8.4	8.1
20.0				19.6	20.3	18.9	9.3	8.7	8.4	8.5	8.0	7.7
22.0				16.4	17.0	17.4	8.9	8.3	8.1	8.1	7.7	7.4
24.0				13.9	14.4	14.7	8.5	8.0	7.7	7.8	7.4	7.1
26.0				11.8	12.2	12.5	8.1	7.7	7.4	7.5	7.1	6.9
28.0				10.1	10.4	10.6	7.8	7.5	7.2	7.2	6.9	6.7
30.0				8.6	8.9	9.0	7.5	7.2	7.0	6.9	6.6	6.5
32.0				7.4	7.6		7.2	7.0	6.8	6.6	6.4	6.3
34.0				6.3	6.4		7.0	6.7	6.6	6.4	6.2	6.1
36.0				5.4			6.7	6.5	6.4	6.2	6.0	5.9
38.0							6.3	6.3	6.2	6.0	5.8	5.7
40.0							5.5	5.7	5.9	5.7	5.6	5.5
44.0							4.2	4.4	4.5	4.3	4.6	4.7
48.0							3.2	3.3	3.4	3.3	3.5	3.5
52.0							2.3	2.5	2.5	2.4	2.5	2.6
56.0							1.6	1.7		1.7	1.8	1.8

Änderungen vorbehalten / Subject to change without prior notice / Cette documentation est modifiable sans préavis / Sujeto a cambios sin previo aviso

View thousands of Crane Specifications on FreeCraneSpecs.com
https://truckmanualshub.com/

TADANO

ATF 220G-5

Tragfähigkeiten
Lifting capacities
Capacités de levage
Capacidades de elevación

HYDRO | 8.3 m | 360° | 35t | DIN / ISO / EN

m	13.2 m + 5.4 m			34.1 m + 5.4 m			63.4 m + 5.4 m			68.0 m + 5.4 m		
	0°	20°	40°	0°	20°	40°	0°	20°	40°	0°	20°	40°
3.0	47.5											
3.5	45.0	30.4										
4.0	42.6	29.4										
4.5	40.6	28.5										
5.0	38.7	27.6	22.2									
6.0	35.5	26.1	21.4	38.7								
7.0	32.8	24.8	20.7	38.7								
8.0	30.5	23.7	20.1	38.7	28.5							
9.0	28.5	22.7	19.6	38.7	27.7	21.5						
10.0	26.8	21.8	19.3	38.4	27.0	21.2						
11.0	25.2	21.1	18.7	36.4	26.3	20.9						
12.0	23.7	20.1	18.3	34.5	25.6	20.6						
14.0	20.7	18.5		29.2	24.5	20.1	10.9			10.0		
16.0	18.1			23.3	23.5	19.6	10.3	9.6	9.2	9.4	8.8	
18.0				18.8	19.6	19.2	9.8	9.1	8.8	8.9	8.4	8.1
20.0				15.3	16.1	16.6	9.3	8.7	8.4	8.5	8.0	7.7
22.0				12.6	13.3	13.6	8.9	8.3	8.1	8.1	7.7	7.4
24.0				10.5	11.0	11.3	8.5	8.0	7.7	7.8	7.4	7.1
26.0				8.7	9.1	9.4	8.1	7.7	7.4	7.5	7.1	6.9
28.0				7.2	7.6	7.7	7.8	7.5	7.2	7.2	6.9	6.7
30.0				6.0	6.3	6.4	7.5	7.2	7.0	6.9	6.6	6.5
32.0				4.9	5.1		6.8	7.0	6.8	6.6	6.4	6.3
34.0				4.0	4.1		5.8	6.1	6.4	6.0	6.2	6.1
36.0				3.2			5.0	5.3	5.5	5.1	5.4	5.6
38.0							4.2	4.5	4.7	4.4	4.6	4.8
40.0							3.6	3.8	3.9	3.7	4.0	4.1
44.0							2.4	2.6	2.8	2.6	2.8	2.9
48.0							1.5	1.7	1.8	1.7	1.8	1.9

View thousands of Crane Specifications on FreeCraneSpecs.com
https://truckmanualshub.com/

TADANO

ATF 220G-5

Tragfähigkeiten
Lifting capacities
Capacités de levage
Capacidades de elevación

HYDRO 8.3 m 360° 23.5t DIN/ISO/EN

m	13.2 m + 5.4 m			34.1 m + 5.4 m			63.4 m + 5.4 m			68.0 m + 5.4 m		
	0°	20°	40°	0°	20°	40°	0°	20°	40°	0°	20°	40°
3.0	47.5											
3.5	45.0	30.4										
4.0	42.6	29.4										
4.5	40.6	28.5										
5.0	38.7	27.6	22.2									
6.0	35.5	26.1	21.4	38.7								
7.0	32.8	24.8	20.7	38.7								
8.0	30.5	23.7	20.1	38.7	28.5							
9.0	28.5	22.7	19.6	38.7	27.7	21.5						
10.0	26.8	21.8	19.3	36.8	27.0	21.2						
11.0	25.2	21.1	18.7	32.3	26.3	20.9						
12.0	23.7	20.1	18.3	28.7	25.6	20.6						
14.0	20.7	18.5		22.9	24.1	20.1	10.9			10.0		
16.0	18.1			17.9	19.0	19.6	10.3	9.6	9.2	9.4	8.8	
18.0				14.1	15.0	15.6	9.8	9.1	8.8	8.9	8.4	8.1
20.0				11.1	11.8	12.3	9.3	8.7	8.4	8.5	8.0	7.7
22.0				8.8	9.4	9.8	8.9	8.3	8.1	8.1	7.7	7.4
24.0				6.9	7.4	7.8	8.5	8.0	7.7	7.8	7.4	7.1
26.0				5.4	5.9	6.1	7.5	7.7	7.4	7.5	7.1	6.9
28.0				4.2	4.5	4.7	6.2	6.6	6.9	6.4	6.8	6.7
30.0				3.1	3.4	3.5	5.1	5.5	5.7	5.3	5.7	6.0
32.0				2.2	2.5		4.2	4.5	4.7	4.3	4.7	4.9
34.0				1.5	1.6		3.4	3.7	3.9	3.5	3.8	4.1
36.0							2.7	2.9	3.1	2.8	3.1	3.3
38.0							2.0	2.3	2.5	2.2	2.5	2.7
40.0							1.5	1.7	1.9	1.6	1.9	2.1

Änderungen vorbehalten / Subject to change without prior notice / Cette documentation est modifiable sans préavis / Sujeto a cambios sin previo aviso

View thousands of Crane Specifications on FreeCraneSpecs.com
https://truckmanualshub.com/

Notizen
Notes
Notas

View thousands of Crane Specifications on FreeCraneSpecs.com
https://truckmanualshub.com/

TADANO

ATF 220G-5

Hubhöhen
Lifting heights
Hauteurs de levage
Alturas de elevación

HYDRO | 8.3 m | 360° | 71 t | DIN/ISO/EN

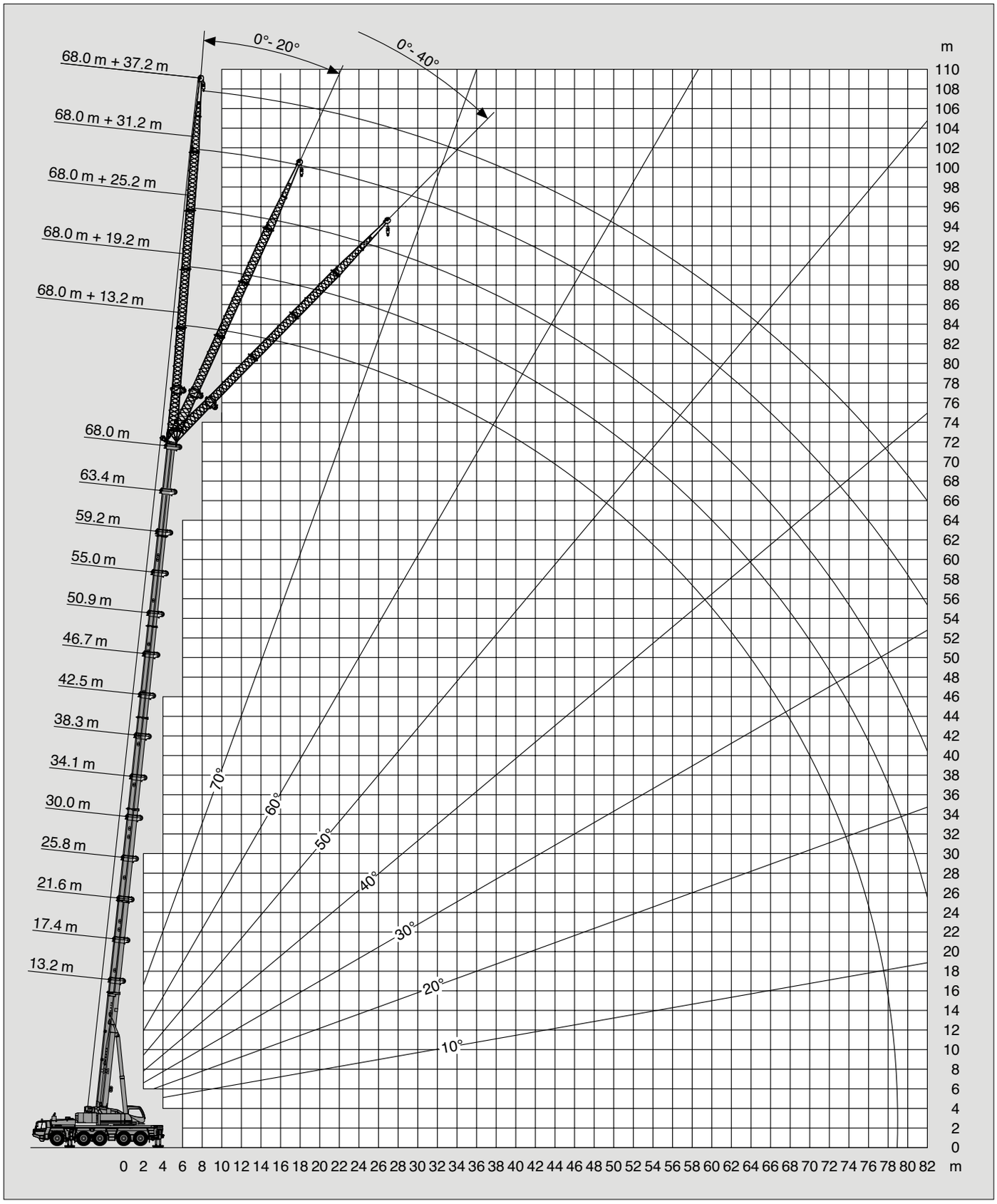

View thousands of Crane Specifications on FreeCraneSpecs.com
https://truckmanualshub.com/

TADANO

ATF 220G-5

Tragfähigkeiten
Lifting capacities
Capacités de levage
Capacidades de elevación

HYDRO | 8.3 m | 360° | 71 t | DIN / ISO / EN

m	68.0 m + 13.2 m			68.0 m + 19.2 m			68.0 m + 25.2 m			68.0 m + 31.2 m			68.0 m + 37.2 m		
	0°	20°	40°	0°	20°	40°	0°	20°	40°	0°	20°	40°	0°		
14.0	6.5														
16.0	6.5			4.6											
18.0	6.4			4.6											
20.0	6.3	5.9		4.6			3.6			2.8			2.3		
22.0	6.2	5.9		4.6			3.6			2.8			2.3		
24.0	6.1	5.8	5.4	4.6	4.6		3.6			2.8			2.3		
26.0	6.0	5.6	5.2	4.6	4.6		3.6			2.8			2.3		
28.0	5.9	5.4	5.0	4.6	4.4		3.6	3.6		2.8			2.3		
30.0	5.7	5.2	4.9	4.6	4.3	3.9	3.6	3.6		2.8			2.3		
32.0	5.5	5.0	4.7	4.6	4.1	3.8	3.6	3.4		2.8			2.3		
34.0	5.3	4.8	4.6	4.5	4.0	3.7	3.6	3.3		2.8	2.7		2.3		
36.0	5.2	4.7	4.5	4.3	3.9	3.6	3.6	3.2	3.0	2.8	2.6		2.3		
38.0	5.0	4.5	4.3	4.2	3.8	3.5	3.5	3.1	2.9	2.8	2.6		2.3		
40.0	4.8	4.4	4.2	4.0	3.6	3.4	3.4	3.0	2.8	2.8	2.5		2.3		
44.0	4.5	4.2	4.0	3.8	3.4	3.2	3.2	2.8	2.6	2.7	2.3	2.1	2.2		
48.0	4.3	4.0	3.8	3.6	3.2	3.1	3.0	2.7	2.5	2.5	2.2	2.0	2.1		
52.0	4.0	3.8	3.7	3.4	3.1	2.9	2.8	2.5	2.4	2.3	2.0	1.9	1.9		
56.0	3.8	3.6	3.5	3.2	2.9	2.8	2.6	2.4	2.3	2.1	1.9	1.8	1.8		
60.0	3.6	3.5	3.4	3.0	2.8	2.7	2.5	2.2	2.2	2.0	1.8	1.7	1.7		
64.0	3.2	3.3	3.3	2.9	2.7	2.6	2.4	2.1	2.1	1.9	1.7	1.6	1.5		
68.0	2.7	2.9		2.7	2.6	2.5	2.3	2.1	2.0	1.8	1.6	1.5	1.4		
72.0	2.2	2.3		2.4	2.5	2.5	2.1	2.0	1.9	1.7	1.5	1.4	1.3		
76.0	1.7	1.8		1.9	2.1		1.9	1.9	1.8	1.6	1.4	1.3			
80.0				1.5	1.6		1.5	1.8		1.4	1.3				
84.0								1.4							

HYDRO | 8.3 m | 360° | 71 t | DIN / ISO / EN

m	63.4 m + 13.2 m			63.4 m + 19.2 m			63.4 m + 25.2 m			63.4 m + 31.2 m			63.4 m + 37.2 m		
	0°	20°	40°	0°	20°	40°	0°	20°	40°	0°	20°	40°	0°	20°	
14.0	7.5			5.2											
16.0	7.3			5.2			4.0			3.2					
18.0	7.2			5.2			4.0			3.2			2.5		
20.0	7.0	6.7		5.2			4.0			3.2			2.5		
22.0	6.9	6.4		5.2	5.2		4.0			3.2			2.5		
24.0	6.8	6.2	5.7	5.2	5.1		4.0			3.2			2.5		
26.0	6.7	6.0	5.5	5.2	4.9		4.0	4.0		3.2			2.5		
28.0	6.4	5.8	5.4	5.2	4.7		4.0	3.9		3.2			2.5		
30.0	6.2	5.6	5.2	5.2	4.5	4.2	4.0	3.8		3.2	3.0		2.5		
32.0	5.9	5.4	5.0	5.0	4.4	4.1	4.0	3.6		3.2	3.0		2.5		
34.0	5.7	5.2	4.9	4.8	4.3	3.9	4.0	3.5	3.2	3.2	2.9		2.5	2.1	
36.0	5.5	5.0	4.8	4.6	4.1	3.8	3.9	3.4	3.1	3.2	2.8		2.5	2.1	
38.0	5.4	4.9	4.6	4.5	4.0	3.7	3.8	3.3	3.0	3.2	2.7		2.4	2.0	
40.0	5.2	4.7	4.5	4.3	3.9	3.6	3.7	3.2	3.0	3.1	2.6	2.4	2.4	2.0	
44.0	4.9	4.5	4.3	4.1	3.7	3.4	3.4	3.0	2.8	2.8	2.4	2.3	2.3	1.9	
48.0	4.6	4.3	4.1	3.8	3.5	3.3	3.2	2.8	2.7	2.7	2.3	2.1	2.2	1.8	
52.0	4.4	4.1	4.0	3.6	3.3	3.2	3.0	2.7	2.5	2.5	2.2	2.0	2.1	1.7	
56.0	4.0	3.9	3.9	3.5	3.1	3.0	2.8	2.6	2.4	2.3	2.0	1.9	1.9	1.6	
60.0	3.7	3.7	3.6	3.3	3.0	2.9	2.7	2.4	2.3	2.2	1.9	1.8	1.8	1.5	
64.0	3.4	3.4		3.0	2.9	2.8	2.6	2.3	2.2	2.0	1.8	1.7	1.7	1.4	
68.0	2.8	3.0		2.8	2.7	2.7	2.4	2.2	2.1	1.9	1.7	1.6	1.5	1.4	
72.0	2.3	2.4		2.4	2.5		2.2	2.1	2.0	1.8	1.6	1.5	1.4	1.3	
76.0				2.0	2.1		2.0	2.0		1.6	1.5	1.4	1.3		
80.0							1.7	1.9		1.5	1.4	1.3			
84.0							1.3	1.4		1.3	1.3				

View thousands of Crane Specifications on FreeCraneSpecs.com

TADANO

ATF 220G-5

Tragfähigkeiten
Lifting capacities
Capacités de levage
Capacidades de elevación

HYDRO | 8.3 m | 360° | 71t | DIN/ISO/EN

m	34.1 m + 13.2 m			34.1 m + 19.2 m			34.1 m + 25.2 m			34.1 m + 31.2 m			34.1 m + 37.2 m		
	0°	20°	40°	0°	20°	40°	0°	20°	40°	0°	20°	40°	0°	20°	40°
6.0	17.9														
7.0	17.2			13.1											
8.0	16.4			13.1			8.9								
9.0	15.8			13.1			8.9			5.7					
10.0	15.1			12.9			8.9			5.7			4.1		
11.0	14.5	10.4		12.6			8.9			5.7			4.1		
12.0	14.0	10.2		12.3			8.9			5.7			4.1		
14.0	13.0	9.6		11.6			8.8			5.7			4.1		
16.0	12.1	9.1	7.6	10.9	8.2		8.4			5.7			4.1		
18.0	11.4	8.7	7.3	10.3	7.8		7.9			5.7			4.1		
20.0	10.7	8.3	7.1	9.7	7.4	5.8	7.5	5.7		5.7			4.1		
22.0	10.1	8.0	6.9	9.1	7.1	5.6	7.1	5.4		5.4			4.1		
24.0	9.6	7.7	6.8	8.7	6.8	5.4	6.7	5.2		5.2	4.1		3.9		
26.0	9.1	7.5	6.6	8.2	6.5	5.2	6.3	5.0		5.0	3.9		3.8		
28.0	8.7	7.2	6.5	7.8	6.2	5.0	6.0	4.8	3.8	4.7	3.7		3.6		
30.0	8.3	7.0	6.4	7.5	5.9	4.9	5.7	4.6	3.7	4.5	3.6		3.4	2.8	
32.0	7.9	6.8	6.3	7.1	5.6	4.7	5.5	4.4	3.5	4.3	3.4	2.7	3.3	2.7	
34.0	7.6	6.7	6.3	6.8	5.4	4.6	5.2	4.2	3.4	4.1	3.3	2.6	3.2	2.6	
36.0	7.4	6.5	6.3	6.4	5.2	4.5	5.0	4.0	3.3	3.9	3.1	2.5	3.0	2.5	
38.0	7.1	6.4		6.0	4.9	4.4	4.8	3.8	3.2	3.8	2.9	2.4	2.9	2.4	1.8
40.0	6.9	6.3		5.7	4.8	4.3	4.5	3.6	3.1	3.6	2.8	2.3	2.8	2.2	1.8
44.0	6.7			5.1	4.5		4.0	3.4	3.0	3.2	2.6	2.2	2.6	2.0	1.6
48.0				4.6	4.3		3.6	3.1	2.9	2.8	2.4	2.1	2.3	1.8	1.5
52.0							3.2	2.9		2.5	2.2	2.0	2.0	1.7	1.4
56.0							2.9			2.3	2.0		1.8	1.5	1.4
60.0										2.0	1.9		1.6	1.4	1.3
64.0													1.5	1.3	
68.0													1.3		

HYDRO | 8.3 m | 360° | 71t | DIN/ISO/EN

m	13.2 m + 13.2 m			13.2 m + 19.2 m			13.2 m + 25.2 m			13.2 m + 31.2 m			13.2 m + 37.2 m		
	0°	20°	40°	0°	20°	40°	0°	20°	40°	0°	20°	40°	0°	20°	40°
3.0	18.0														
3.5	18.0			16.0											
4.0	18.0			15.7			10.4								
4.5	17.4			15.4			10.4								
5.0	16.7			15.0			10.4			6.4					
6.0	15.4			14.3			10.4			6.4			4.6		
7.0	14.4	11.5		13.6			10.4			6.4			4.6		
8.0	13.4	10.9		13.0			10.4			6.4			4.6		
9.0	12.6	10.3		12.4			10.0			6.4			4.6		
10.0	11.9	9.8		11.7			9.5			6.4			4.6		
11.0	11.2	9.4		11.1	9.0		9.0			6.4			4.6		
12.0	10.6	9.0	7.9	10.5	8.6		8.6			6.4			4.6		
14.0	9.6	8.3	7.4	9.5	7.9		7.8			6.3			4.6		
16.0	8.8	7.8	7.1	8.7	7.1	5.9	7.1	6.0		5.8			4.5		
18.0	8.1	7.3	6.8	7.8	6.5	5.5	6.5	5.6		5.4			4.2		
20.0	7.5	6.9	6.7	7.0	5.9	5.2	6.0	5.0		5.0			4.0		
22.0	7.1	6.7		6.3	5.5	4.9	5.5	4.6		4.6	3.9		3.7		
24.0				5.7	5.1	4.6	4.9	4.2		4.3	3.6		3.5	3.1	
26.0				5.2	4.7	4.4	4.5	3.9	3.5	3.8	3.3		3.3	2.9	
28.0				4.7	4.5		4.1	3.6	3.3	3.5	3.0		3.1	2.6	
30.0							3.7	3.4	3.1	3.2	2.8		2.8	2.4	
32.0							3.4	3.2	3.0	2.9	2.6	2.4	2.5	2.2	
34.0							3.2	3.0		2.7	2.4	2.2	2.3	2.1	
36.0							2.9			2.5	2.3	2.1	2.1	1.9	1.7
38.0										2.3	2.2	2.0	2.0	1.8	1.6
40.0										2.1	2.0		1.8	1.7	1.5
44.0													1.5	1.5	1.4
48.0													1.3	1.3	

Änderungen vorbehalten / Subject to change without prior notice / Cette documentation est modifiable sans préavis / Sujeto a cambios sin previo aviso

View thousands of Crane Specifications on FreeCraneSpecs.com
https://truckmanualshub.com/

TADANO

ATF 220G-5

Tragfähigkeiten
Lifting capacities
Capacités de levage
Capacidades de elevación

HYDRO | 8.3 m | 360° | 47t | DIN / ISO / EN

m	68.0 m + 13.2 m			68.0 m + 19.2 m			68.0 m + 25.2 m			68.0 m + 31.2 m			68.0 m + 37.2 m		
	0°	20°	40°	0°	20°	40°	0°	20°	40°	0°	20°	40°	0°		
14.0	6.5														
16.0	6.5			4.6											
18.0	6.4			4.6											
20.0	6.3	5.9		4.6			3.6			2.8			2.3		
22.0	6.2	5.9		4.6			3.6			2.8			2.3		
24.0	6.1	5.8	5.4	4.6	4.6		3.6			2.8			2.3		
26.0	6.0	5.6	5.2	4.6	4.6		3.6			2.8			2.3		
28.0	5.9	5.4	5.0	4.6	4.4		3.6	3.6		2.8			2.3		
30.0	5.7	5.2	4.9	4.6	4.3	3.9	3.6	3.6		2.8			2.3		
32.0	5.5	5.0	4.7	4.6	4.1	3.8	3.6	3.4		2.8			2.3		
34.0	5.3	4.8	4.6	4.5	4.0	3.7	3.6	3.3		2.8	2.7		2.3		
36.0	5.2	4.7	4.5	4.3	3.9	3.6	3.6	3.2	3.0	2.8	2.6		2.3		
38.0	5.0	4.5	4.3	4.2	3.8	3.5	3.5	3.1	2.9	2.8	2.6		2.3		
40.0	4.8	4.4	4.2	4.0	3.6	3.4	3.4	3.0	2.8	2.8	2.5		2.3		
44.0	4.5	4.2	4.0	3.8	3.4	3.2	3.2	2.8	2.6	2.7	2.3	2.1	2.2		
48.0	3.8	4.0	3.8	3.6	3.2	3.1	3.0	2.7	2.5	2.5	2.2	2.0	2.1		
52.0	2.9	3.3	3.6	3.2	3.1	2.9	2.8	2.5	2.4	2.3	2.0	1.9	1.9		
56.0	2.2	2.5	2.8	2.5	2.9	2.8	2.6	2.4	2.3	2.1	1.9	1.8	1.8		
60.0	1.5	1.8	2.0	1.8	2.3	2.6	1.9	2.2	2.2	1.9	1.8	1.7	1.7		
64.0		1.2	1.4	1.2	1.6	1.9	1.3	1.9	2.1	1.3	1.7	1.6	1.4		
68.0						1.3		1.3	1.7		1.5	1.5			
72.0												1.4			

HYDRO | 8.3 m | 360° | 47t | DIN / ISO / EN

m	63.4 m + 13.2 m			63.4 m + 19.2 m			63.4 m + 25.2 m			63.4 m + 31.2 m			63.4 m + 37.2 m		
	0°	20°	40°	0°	20°	40°	0°	20°	40°	0°	20°	40°	0°	20°	
14.0	7.5			5.2											
16.0	7.3			5.2			4.0			3.2					
18.0	7.2			5.2			4.0			3.2			2.5		
20.0	7.0	6.7		5.2			4.0			3.2			2.5		
22.0	6.9	6.4		5.2	5.2		4.0			3.2			2.5		
24.0	6.8	6.2	5.7	5.2	5.1		4.0			3.2			2.5		
26.0	6.7	6.0	5.5	5.2	4.9		4.0	4.0		3.2			2.5		
28.0	6.4	5.8	5.4	5.2	4.7		4.0	3.9		3.2			2.5		
30.0	6.2	5.6	5.2	5.2	4.5	4.2	4.0	3.8		3.2	3.0		2.5		
32.0	5.9	5.4	5.0	5.0	4.4	4.1	4.0	3.6		3.2	3.0		2.5		
34.0	5.7	5.2	4.9	4.8	4.3	3.9	4.0	3.5	3.2	3.2	2.9		2.5	2.1	
36.0	5.5	5.0	4.8	4.6	4.1	3.8	3.9	3.4	3.1	3.2	2.8		2.5	2.1	
38.0	5.4	4.9	4.6	4.5	4.0	3.7	3.8	3.3	3.0	3.2	2.7		2.4	2.0	
40.0	5.2	4.7	4.5	4.3	3.9	3.6	3.7	3.2	3.0	3.1	2.6	2.4	2.4	2.0	
44.0	4.9	4.5	4.3	4.1	3.7	3.4	3.4	3.0	2.8	2.8	2.4	2.3	2.3	1.9	
48.0	3.9	4.3	4.1	3.8	3.5	3.3	3.2	2.8	2.7	2.7	2.3	2.1	2.2	1.8	
52.0	3.0	3.4	3.7	3.2	3.3	3.2	3.0	2.7	2.5	2.5	2.2	2.0	2.1	1.7	
56.0	2.3	2.6	2.8	2.4	3.0	3.0	2.7	2.6	2.4	2.3	2.0	1.9	1.9	1.6	
60.0	1.6	1.9	2.1	1.8	2.2	2.5	2.0	2.4	2.3	2.1	1.9	1.8	1.8	1.5	
64.0		1.3		1.2	1.6	1.8	1.5	2.0	2.2	1.5	1.8	1.7	1.6	1.4	
68.0						1.2		1.4	1.7		1.6	1.6		1.4	
72.0												1.4		1.3	

View thousands of Crane Specifications on FreeCraneSpecs.com

TADANO

ATF 220G-5

Tragfähigkeiten
Lifting capacities
Capacités de levage
Capacidades de elevación

HYDRO | 8.3 m | 360° | 47t | DIN/ISO/EN

m	34.1 m + 13.2 m			34.1 m + 19.2 m			34.1 m + 25.2 m			34.1 m + 31.2 m			34.1 m + 37.2 m		
	0°	20°	40°	0°	20°	40°	0°	20°	40°	0°	20°	40°	0°	20°	40°
6.0	17.9														
7.0	17.2			13.1											
8.0	16.4			13.1			8.9								
9.0	15.8			13.1			8.9			5.7					
10.0	15.1			12.9			8.9			5.7			4.1		
11.0	14.5	10.4		12.6			8.9			5.7			4.1		
12.0	14.0	10.2		12.3			8.9			5.7			4.1		
14.0	13.0	9.6		11.6			8.8			5.7			4.1		
16.0	12.1	9.1	7.6	10.9	8.2		8.4			5.7			4.1		
18.0	11.4	8.7	7.3	10.3	7.8		7.9			5.7			4.1		
20.0	10.7	8.3	7.1	9.7	7.4	5.8	7.5	5.7		5.7			4.1		
22.0	10.1	8.0	6.9	9.1	7.1	5.6	7.1	5.4		5.4			4.1		
24.0	9.6	7.7	6.8	8.7	6.8	5.4	6.7	5.2		5.2	4.1		3.9		
26.0	9.1	7.5	6.6	8.2	6.5	5.2	6.3	5.0		5.0	3.9		3.8		
28.0	8.7	7.2	6.5	7.8	6.2	5.0	6.0	4.8	3.8	4.7	3.7		3.6		
30.0	8.3	7.0	6.4	7.5	5.9	4.9	5.7	4.6	3.7	4.5	3.6		3.4	2.8	
32.0	7.9	6.8	6.3	7.1	5.6	4.7	5.5	4.4	3.5	4.3	3.4	2.7	3.3	2.7	
34.0	7.6	6.7	6.3	6.8	5.4	4.6	5.2	4.2	3.4	4.1	3.3	2.6	3.2	2.6	
36.0	6.8	6.5	6.3	6.4	5.2	4.5	5.0	4.0	3.3	3.9	3.1	2.5	3.0	2.5	
38.0	5.9	6.4		6.0	4.9	4.4	4.8	3.8	3.2	3.8	2.9	2.4	2.9	2.4	1.8
40.0	5.2	5.6		5.7	4.8	4.3	4.5	3.6	3.1	3.6	2.8	2.3	2.8	2.2	1.8
44.0	3.9			4.5	4.5		4.0	3.4	3.0	3.2	2.6	2.2	2.6	2.0	1.6
48.0				3.5	3.8		3.6	3.1	2.9	2.8	2.4	2.1	2.3	1.8	1.5
52.0							3.1	2.9		2.5	2.2	2.0	2.0	1.7	1.4
56.0							2.3			2.3	2.0		1.8	1.5	1.4
60.0										2.0	1.9		1.6	1.4	1.3
64.0													1.5	1.3	
68.0													1.2		

HYDRO | 8.3 m | 360° | 47t | DIN/ISO/EN

m	13.2 m + 13.2 m			13.2 m + 19.2 m			13.2 m + 25.2 m			13.2 m + 31.2 m			13.2 m + 37.2 m		
	0°	20°	40°	0°	20°	40°	0°	20°	40°	0°	20°	40°	0°	20°	40°
3.0	18.0														
3.5	18.0			16.0											
4.0	18.0			15.7			10.4								
4.5	17.4			15.4			10.4								
5.0	16.7			15.0			10.4			6.4					
6.0	15.4			14.3			10.4			6.4			4.6		
7.0	14.4	11.5		13.6			10.4			6.4			4.6		
8.0	13.4	10.9		13.0			10.4			6.4			4.6		
9.0	12.6	10.3		12.4			10.0			6.4			4.6		
10.0	11.9	9.8		11.7			9.5			6.4			4.6		
11.0	11.2	9.4		11.1	9.0		9.0			6.4			4.6		
12.0	10.6	9.0	7.9	10.5	8.6		8.6			6.4			4.6		
14.0	9.6	8.3	7.4	9.5	7.9		7.8			6.3			4.6		
16.0	8.8	7.8	7.1	8.7	7.1	5.9	7.1	6.0		5.8			4.5		
18.0	8.1	7.3	6.8	7.8	6.5	5.5	6.5	5.6		5.4			4.2		
20.0	7.5	6.9	6.7	7.0	5.9	5.2	6.0	5.0		5.0			4.0		
22.0	7.1	6.7		6.3	5.5	4.9	5.5	4.6		4.6	3.9		3.7		
24.0				5.7	5.1	4.6	4.9	4.2		4.3	3.6		3.5	3.1	
26.0				5.2	4.7	4.4	4.5	3.9	3.5	3.8	3.3		3.3	2.9	
28.0				4.7	4.5		4.1	3.6	3.3	3.5	3.0		3.1	2.6	
30.0							3.7	3.4	3.1	3.2	2.8		2.8	2.4	
32.0							3.4	3.2	3.0	2.9	2.6	2.4	2.5	2.2	
34.0							3.2	3.0		2.7	2.4	2.2	2.3	2.1	
36.0							2.9			2.5	2.3	2.1	2.1	1.9	1.7
38.0										2.3	2.2	2.0	2.0	1.8	1.6
40.0										2.1	2.0		1.8	1.7	1.5
44.0													1.5	1.5	1.4
48.0													1.3	1.3	

Änderungen vorbehalten / Subject to change without prior notice / Cette documentation est modifiable sans préavis / Sujeto a cambios sin previo aviso

View thousands of Crane Specifications on FreeCraneSpecs.com
https://truckmanualshub.com/

TADANO

ATF 220G-5

Tragfähigkeiten
Lifting capacities
Capacités de levage
Capacidades de elevación

HYDRO | 8.3 m | 360° | 35t | DIN / ISO / EN

m	68.0 m + 13.2 m			68.0 m + 19.2 m			68.0 m + 25.2 m			68.0 m + 31.2 m			68.0 m + 37.2 m		
	0°	20°	40°	0°	20°	40°	0°	20°	40°	0°	20°	40°	0°		
14.0	6.5														
16.0	6.5			4.6											
18.0	6.4			4.6											
20.0	6.3	5.9		4.6			3.6			2.8			2.3		
22.0	6.2	5.9		4.6			3.6			2.8			2.3		
24.0	6.1	5.8	5.4	4.6	4.6		3.6			2.8			2.3		
26.0	6.0	5.6	5.2	4.6	4.6		3.6			2.8			2.3		
28.0	5.9	5.4	5.0	4.6	4.4		3.6	3.6		2.8			2.3		
30.0	5.7	5.2	4.9	4.6	4.3	3.9	3.6	3.6		2.8			2.3		
32.0	5.5	5.0	4.7	4.6	4.1	3.8	3.6	3.4		2.8			2.3		
34.0	5.3	4.8	4.6	4.5	4.0	3.7	3.6	3.3		2.8	2.7		2.3		
36.0	5.2	4.7	4.5	4.3	3.9	3.6	3.6	3.2	3.0	2.8	2.6		2.3		
38.0	4.9	4.5	4.3	4.2	3.8	3.5	3.5	3.1	2.9	2.8	2.6		2.3		
40.0	4.3	4.4	4.2	4.0	3.6	3.4	3.4	3.0	2.8	2.8	2.5		2.3		
44.0	3.1	3.7	4.0	3.5	3.4	3.2	3.2	2.8	2.6	2.7	2.3	2.1	2.2		
48.0	2.2	2.7	3.1	2.5	3.2	3.1	2.6	2.7	2.5	2.5	2.2	2.0	2.1		
52.0	1.4	1.9	2.2	1.7	2.4	2.9	1.8	2.5	2.4	1.9	2.0	1.9	1.9		
56.0			1.4		1.6	2.0	1.2	1.9	2.3	1.2	1.9	1.8	1.3		
60.0						1.3		1.3	1.8		1.5	1.7			
64.0												1.5			

HYDRO | 8.3 m | 360° | 35t | DIN / ISO / EN

m	63.4 m + 13.2 m			63.4 m + 19.2 m			63.4 m + 25.2 m			63.4 m + 31.2 m			63.4 m + 37.2 m		
	0°	20°	40°	0°	20°	40°	0°	20°	40°	0°	20°	40°	0°	20°	
14.0	7.5			5.2											
16.0	7.3			5.2			4.0			3.2					
18.0	7.2			5.2			4.0			3.2			2.5		
20.0	7.0	6.7		5.2			4.0			3.2			2.5		
22.0	6.9	6.4		5.2	5.2		4.0			3.2			2.5		
24.0	6.8	6.2	5.7	5.2	5.1		4.0			3.2			2.5		
26.0	6.7	6.0	5.5	5.2	4.9		4.0	4.0		3.2			2.5		
28.0	6.4	5.8	5.4	5.2	4.7		4.0	3.9		3.2			2.5		
30.0	6.2	5.6	5.2	5.2	4.5	4.2	4.0	3.8		3.2	3.0		2.5		
32.0	5.9	5.4	5.0	5.0	4.4	4.1	4.0	3.6		3.2	3.0		2.5		
34.0	5.7	5.2	4.9	4.8	4.3	3.9	4.0	3.5	3.2	3.2	2.9		2.5	2.1	
36.0	5.5	5.0	4.8	4.6	4.1	3.8	3.9	3.4	3.1	3.2	2.8		2.5	2.1	
38.0	5.1	4.9	4.6	4.5	4.0	3.7	3.8	3.3	3.0	3.2	2.7		2.4	2.0	
40.0	4.4	4.7	4.5	4.3	3.9	3.6	3.7	3.2	3.0	3.1	2.6	2.4	2.4	2.0	
44.0	3.2	3.8	4.2	3.4	3.7	3.4	3.4	3.0	2.8	2.8	2.4	2.3	2.3	1.9	
48.0	2.3	2.8	3.1	2.5	3.2	3.3	2.8	2.8	2.7	2.7	2.3	2.1	2.2	1.8	
52.0	1.5	1.9	2.2	1.7	2.3	2.8	2.0	2.7	2.5	2.0	2.2	2.0	2.1	1.7	
56.0		1.2	1.4		1.6	1.9	1.3	2.0	2.4	1.4	2.0	1.9	1.4	1.6	
60.0						1.2		1.4	1.8		1.6	1.8		1.5	
64.0									1.2			1.5		1.2	

View thousands of Crane Specifications on FreeCraneSpecs.com

TADANO

ATF 220G-5

Tragfähigkeiten
Lifting capacities
Capacités de levage
Capacidades de elevación

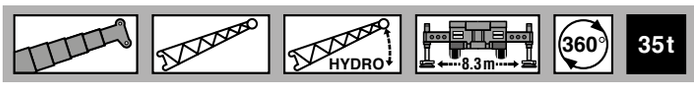

35t

DIN/ISO/EN

m	34.1 m + 13.2 m			34.1 m + 19.2 m			34.1 m + 25.2 m			34.1 m + 31.2 m			34.1 m + 37.2 m		
	0°	20°	40°	0°	20°	40°	0°	20°	40°	0°	20°	40°	0°	20°	40°
6.0	17.9														
7.0	17.2			13.1											
8.0	16.4			13.1			8.9								
9.0	15.8			13.1			8.9			5.7					
10.0	15.1			12.9			8.9			5.7			4.1		
11.0	14.5	10.4		12.6			8.9			5.7			4.1		
12.0	14.0	10.2		12.3			8.9			5.7			4.1		
14.0	13.0	9.6		11.6			8.8			5.7			4.1		
16.0	12.1	9.1	7.6	10.9	8.2		8.4			5.7			4.1		
18.0	11.4	8.7	7.3	10.3	7.8		7.9			5.7			4.1		
20.0	10.7	8.3	7.1	9.7	7.4	5.8	7.5	5.7		5.7			4.1		
22.0	10.1	8.0	6.9	9.1	7.1	5.6	7.1	5.4		5.4			4.1		
24.0	9.6	7.7	6.8	8.7	6.8	5.4	6.7	5.2		5.2	4.1		3.9		
26.0	9.1	7.5	6.6	8.2	6.5	5.2	6.3	5.0		5.0	3.9		3.8		
28.0	8.7	7.2	6.5	7.8	6.2	5.0	6.0	4.8	3.8	4.7	3.7		3.6		
30.0	7.5	7.0	6.4	7.5	5.9	4.9	5.7	4.6	3.7	4.5	3.6		3.4	2.8	
32.0	6.4	6.8	6.3	7.0	5.6	4.7	5.5	4.4	3.5	4.3	3.4	2.7	3.3	2.7	
34.0	5.4	6.1	6.3	6.1	5.4	4.6	5.2	4.2	3.4	4.1	3.3	2.6	3.2	2.6	
36.0	4.6	5.2	5.6	5.2	5.2	4.5	5.0	4.0	3.3	3.9	3.1	2.5	3.0	2.5	
38.0	3.8	4.4		4.5	4.9	4.4	4.8	3.8	3.2	3.8	2.9	2.4	2.9	2.4	1.8
40.0	3.2	3.6		3.8	4.6	4.3	4.4	3.6	3.1	3.6	2.8	2.3	2.8	2.2	1.8
44.0	2.1			2.7	3.3		3.3	3.4	3.0	3.2	2.6	2.2	2.6	2.0	1.6
48.0				1.8	2.2		2.4	3.0	2.9	2.7	2.4	2.1	2.3	1.8	1.5
52.0							1.6	2.0		1.9	2.2	2.0	2.0	1.7	1.4
56.0										1.2	1.8		1.5	1.5	1.4
60.0														1.4	1.3

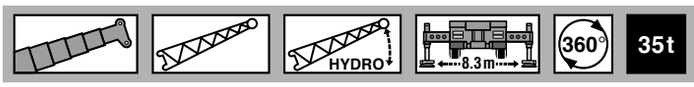

35t

DIN/ISO/EN

m	13.2 m + 13.2 m			13.2 m + 19.2 m			13.2 m + 25.2 m			13.2 m + 31.2 m			13.2 m + 37.2 m		
	0°	20°	40°	0°	20°	40°	0°	20°	40°	0°	20°	40°	0°	20°	40°
3.0	18.0														
3.5	18.0			16.0											
4.0	18.0			15.7			10.4								
4.5	17.4			15.4			10.4								
5.0	16.7			15.0			10.4			6.4					
6.0	15.4			14.3			10.4			6.4			4.6		
7.0	14.4	11.5		13.6			10.4			6.4			4.6		
8.0	13.4	10.9		13.0			10.4			6.4			4.6		
9.0	12.6	10.3		12.4			10.0			6.4			4.6		
10.0	11.9	9.8		11.7			9.5			6.4			4.6		
11.0	11.2	9.4		11.1	9.0		9.0			6.4			4.6		
12.0	10.6	9.0	7.9	10.5	8.6		8.6			6.4			4.6		
14.0	9.6	8.3	7.4	9.5	7.9		7.8			6.3			4.6		
16.0	8.8	7.8	7.1	8.7	7.1	5.9	7.1	6.0		5.8			4.5		
18.0	8.1	7.3	6.8	7.8	6.5	5.5	6.5	5.6		5.4			4.2		
20.0	7.5	6.9	6.7	7.0	5.9	5.2	6.0	5.0		5.0			4.0		
22.0	7.1	6.7		6.3	5.5	4.9	5.5	4.6		4.6	3.9		3.7		
24.0				5.7	5.1	4.6	4.9	4.2		4.3	3.6		3.5	3.1	
26.0				5.2	4.7	4.4	4.5	3.9	3.5	3.8	3.3		3.3	2.9	
28.0				4.7	4.5		4.1	3.6	3.3	3.5	3.0		3.1	2.6	
30.0							3.7	3.4	3.1	3.2	2.8		2.8	2.4	
32.0							3.4	3.2	3.0	2.9	2.6	2.4	2.5	2.2	
34.0							3.2	3.0		2.7	2.4	2.2	2.3	2.1	
36.0							2.9			2.5	2.3	2.1	2.1	1.9	1.7
38.0										2.3	2.2	2.0	2.0	1.8	1.6
40.0										2.1	2.0		1.8	1.7	1.5
44.0													1.5	1.5	1.4
48.0													1.3	1.3	

Änderungen vorbehalten / Subject to change without prior notice / Cette documentation est modifiable sans préavis / Sujeto a cambios sin previo aviso

View thousands of Crane Specifications on FreeCraneSpecs.com
https://truckmanualshub.com/

TADANO

ATF 220G-5

Tragfähigkeiten
Lifting capacities
Capacités de levage
Capacidades de elevación

HYDRO | 8.3 m | 360° | 23.5t | DIN / ISO / EN

m	68.0 m + 13.2 m			68.0 m + 19.2 m			68.0 m + 25.2 m			68.0 m + 31.2 m			68.0 m + 37.2 m		
	0°	20°	40°	0°	20°	40°	0°	20°	40°	0°			0°		
14.0	6.5														
16.0	6.5			4.6											
18.0	6.4			4.6											
20.0	6.3	5.9		4.6			3.6			2.8			2.3		
22.0	6.2	5.9		4.6			3.6			2.8			2.3		
24.0	6.1	5.8	5.4	4.6	4.6		3.6			2.8			2.3		
26.0	6.0	5.6	5.2	4.6	4.6		3.6			2.8			2.3		
28.0	5.9	5.4	5.0	4.6	4.4		3.6	3.6		2.8			2.3		
30.0	5.7	5.2	4.9	4.6	4.3	3.9	3.6	3.6		2.8			2.3		
32.0	4.9	5.0	4.7	4.6	4.1	3.8	3.6	3.4		2.8			2.3		
34.0	4.1	4.8	4.6	4.5	4.0	3.7	3.6	3.3		2.8			2.3		
36.0	3.4	4.2	4.5	3.8	3.9	3.6	3.6	3.2	3.0	2.8			2.3		
38.0	2.8	3.5	4.1	3.1	3.8	3.5	3.3	3.1	2.9	2.8			2.3		
40.0	2.2	2.9	3.4	2.6	3.5	3.4	2.7	3.0	2.8	2.7			2.3		
44.0	1.3	1.9	2.3	1.6	2.5	3.1	1.7	2.8	2.6	1.8			1.9		
48.0			1.4		1.6	2.1		1.9	2.5						
52.0						1.3		1.2	1.8						

HYDRO | 8.3 m | 360° | 23.5t | DIN / ISO / EN

m	63.4 m + 13.2 m			63.4 m + 19.2 m			63.4 m + 25.2 m			63.4 m + 31.2 m			63.4 m + 37.2 m		
	0°	20°	40°	0°	20°	40°	0°	20°	40°	0°	20°		0°		
14.0	7.5			5.2											
16.0	7.3			5.2			4.0			3.2					
18.0	7.2			5.2			4.0			3.2			2.5		
20.0	7.0	6.7		5.2			4.0			3.2			2.5		
22.0	6.9	6.4		5.2	5.2		4.0			3.2			2.5		
24.0	6.8	6.2	5.7	5.2	5.1		4.0			3.2			2.5		
26.0	6.7	6.0	5.5	5.2	4.9		4.0	4.0		3.2			2.5		
28.0	6.4	5.8	5.4	5.2	4.7		4.0	3.9		3.2			2.5		
30.0	6.0	5.6	5.2	5.2	4.5	4.2	4.0	3.8		3.2	3.0		2.5		
32.0	5.0	5.4	5.0	5.0	4.4	4.1	4.0	3.6		3.2	3.0		2.5		
34.0	4.2	5.0	4.9	4.4	4.3	3.9	4.0	3.5	3.2	3.2	2.9		2.5		
36.0	3.5	4.3	4.8	3.7	4.1	3.8	3.9	3.4	3.1	3.2	2.8		2.5		
38.0	2.9	3.6	4.1	3.1	4.0	3.7	3.4	3.3	3.0	3.2	2.7		2.4		
40.0	2.3	3.0	3.5	2.5	3.4	3.6	2.8	3.2	3.0	2.9	2.6		2.4		
44.0	1.4	1.9	2.4	1.6	2.4	3.0	1.9	2.9	2.8	1.9	2.4		2.0		
48.0			1.4		1.5	2.0		2.0	2.7		2.3		1.2		
52.0						1.2		1.3	1.9		1.5				
56.0									1.2						

View thousands of Crane Specifications on FreeCraneSpecs.com
https://truckmanualshub.com/

TADANO

ATF 220G-5

Tragfähigkeiten
Lifting capacities
Capacités de levage
Capacidades de elevación

HYDRO | 8.3 m | 360° | 23.5t | DIN/ISO/EN

m	34.1 m + 13.2 m			34.1 m + 19.2 m			34.1 m + 25.2 m			34.1 m + 31.2 m			34.1 m + 37.2 m		
	0°	20°	40°	0°	20°	40°	0°	20°	40°	0°	20°	40°	0°	20°	40°
6.0	17.9														
7.0	17.2			13.1											
8.0	16.4			13.1			8.9								
9.0	15.8			13.1			8.9			5.7					
10.0	15.1			12.9			8.9			5.7			4.1		
11.0	14.5	10.4		12.6			8.9			5.7			4.1		
12.0	14.0	10.2		12.3			8.9			5.7			4.1		
14.0	13.0	9.6		11.6			8.8			5.7			4.1		
16.0	12.1	9.1	7.6	10.9	8.2		8.4			5.7			4.1		
18.0	11.4	8.7	7.3	10.3	7.8		7.9			5.7			4.1		
20.0	10.7	8.3	7.1	9.7	7.4	5.8	7.5	5.7		5.7			4.1		
22.0	10.1	8.0	6.9	9.1	7.1	5.6	7.1	5.4		5.4			4.1		
24.0	8.5	7.7	6.8	8.7	6.8	5.4	6.7	5.2		5.2	4.1		3.9		
26.0	7.0	7.5	6.6	7.7	6.5	5.2	6.3	5.0		5.0	3.9		3.8		
28.0	5.7	6.8	6.5	6.4	6.2	5.0	6.0	4.8	3.8	4.7	3.7		3.6		
30.0	4.6	5.6	6.3	5.4	5.9	4.9	5.7	4.6	3.7	4.5	3.6		3.4	2.8	
32.0	3.7	4.6	5.2	4.4	5.6	4.7	5.1	4.4	3.5	4.3	3.4	2.7	3.3	2.7	
34.0	2.9	3.7	4.1	3.6	4.7	4.6	4.3	4.2	3.4	4.1	3.3	2.6	3.2	2.6	
36.0	2.3	2.9	3.2	2.9	3.9	4.5	3.6	4.0	3.3	3.9	3.1	2.5	3.0	2.5	
38.0	1.7	2.2		2.3	3.2	3.8	2.9	3.8	3.2	3.3	2.9	2.4	2.9	2.4	1.8
40.0		1.5		1.8	2.5	3.1	2.4	3.5	3.1	2.7	2.8	2.3	2.8	2.2	1.8
44.0					1.4		1.4	2.3	3.0	1.8	2.6	2.2	2.1	2.0	1.6
48.0								1.3	1.8		1.9	2.1	1.3	1.8	1.5
52.0												1.6		1.6	1.4
56.0															1.4

HYDRO | 8.3 m | 360° | 23.5t | DIN/ISO/EN

m	13.2 m + 13.2 m			13.2 m + 19.2 m			13.2 m + 25.2 m			13.2 m + 31.2 m			13.2 m + 37.2 m		
	0°	20°	40°	0°	20°	40°	0°	20°	40°	0°	20°	40°	0°	20°	40°
3.0	18.0														
3.5	18.0			16.0											
4.0	18.0			15.7			10.4								
4.5	17.4			15.4			10.4								
5.0	16.7			15.0			10.4			6.4					
6.0	15.4			14.3			10.4			6.4			4.6		
7.0	14.4	11.5		13.6			10.4			6.4			4.6		
8.0	13.4	10.9		13.0			10.4			6.4			4.6		
9.0	12.6	10.3		12.4			10.0			6.4			4.6		
10.0	11.9	9.8		11.7			9.5			6.4			4.6		
11.0	11.2	9.4		11.1	9.0		9.0			6.4			4.6		
12.0	10.6	9.0	7.9	10.5	8.6		8.6			6.4			4.6		
14.0	9.6	8.3	7.4	9.5	7.9		7.8			6.3			4.6		
16.0	8.8	7.8	7.1	8.7	7.1	5.9	7.1	6.0		5.8			4.5		
18.0	8.1	7.3	6.8	7.8	6.5	5.5	6.5	5.6		5.4			4.2		
20.0	7.5	6.9	6.7	7.0	5.9	5.2	6.0	5.0		5.0			4.0		
22.0	7.1	6.7		6.3	5.5	4.9	5.5	4.6		4.6	3.9		3.7		
24.0				5.7	5.1	4.6	4.9	4.2		4.3	3.6		3.5	3.1	
26.0				5.2	4.7	4.4	4.5	3.9	3.5	3.8	3.3		3.3	2.9	
28.0				4.7	4.5		4.1	3.6	3.3	3.5	3.0		3.1	2.6	
30.0							3.7	3.4	3.1	3.2	2.8		2.8	2.4	
32.0							3.4	3.2	3.0	2.9	2.6	2.4	2.5	2.2	
34.0							3.2	3.0		2.7	2.4	2.2	2.3	2.1	
36.0							2.9			2.5	2.3	2.1	2.1	1.9	1.7
38.0										2.3	2.2	2.0	2.0	1.8	1.6
40.0										2.1	2.0		1.8	1.7	1.5
44.0													1.5	1.5	1.4
48.0													1.3	1.3	

Änderungen vorbehalten / Subject to change without prior notice / Cette documentation est modifiable sans préavis / Sujeto a cambios sin previo aviso

View thousands of Crane Specifications on FreeCraneSpecs.com
https://truckmanualshub.com/

Notizen
Notes
Notas

View thousands of Crane Specifications on FreeCraneSpecs.com
https://truckmanualshub.com/

TADANO

ATF 220G-5

Anmerkungen zu den Traglasttabellen
Remarks relating to the rating charts
Remarques relatives aux tableaux des charges
Notas relativas a los graficos de carga

DIN / ISO / EN

Anmerkungen zu den Traglasttabellen

Die Tragfähigkeiten im Festigkeitsbereich basieren auf DIN 15018 Blatt 2 und Blatt 3 und F.E.M.

Die Tragfähigkeiten im Standsicherheitsbereich entsprechen DIN 15019 Teil 2 / ISO 4305 / EN 13000.

In Abhängigkeit der Auslegerlänge sind bei den Traglasttabellen Windgeschwindigkeiten von 7 m/s bis max. 10 m/s zulässig.

Die Tragfähigkeiten sind in metrischen Tonnen angegeben.

Das Gewicht des Lasthakens bzw. der Hakenflasche und weiterer Anschlagmittel ist von der Tragfähigkeit abzuziehen.

Die Tragfähigkeiten für den Teleskopausleger gelten nur bei demontierter Auslegerverlängerung.

Die Ausladung ist der horizontale Abstand von Mitte Drehkranz bis Mitte freihängender, nicht schwingender Last.

Tragfähigkeitsänderungen vorbehalten.

Obige Angaben dienen nur zur Information. Die Bedienungsanleitungen müssen zu Rate gezogen werden, bevor die Maschine in Betrieb genommen wird. Alle hier gemachten Angaben beziehen sich auf die Standard-Ausführung. Jegliche Ausrüstungsveränderungen können die angegebenen Werte beeinflussen.

Remarques relatives aux tableaux des charges

Les forces de levage sont conformes aux normes DIN 15018, p. 2 et 3, et F.E.M.

Les forces de levage dans la partie de stabilité au renversement sont conformes aux normes DIN 15019, chap. 2 / ISO 4305 / EN 13000.

Des vitesses de vent sont admissibles entre 7 m/s jusqu'à max 10 m/s en fonction de la longueur de flèche.

Les forces de levage sont données en tonnes métriques.

Le poids du crochet-moufle et de tous les accessoires d'élingage font partie de la charge et sont à déduire des charges indiquées.

Les forces de levage indiquées pour la flèche télescopique s'entendent flèchette déposée.

Comme portée, on entend la distance horizontale du centre de la couronne de rotation au centre de la charge librement suspendue et non oscillante.

Sauf modification de forces de levage.

Les données ci-dessus servent à titre d'information. Avant la mise en marche de la grue il est conseillé d'étudier les instructions de service. Toutes les données indiquées ci-dessus se réfèrent à la machine de base. Tout changement de l'équipement de la grue peut influencer ces valeurs.

Remarks relating to the rating charts

The lifting capacities in the structural area are based on DIN 15018 parts 2 and 3 and F.E.M.

The lifting capacities in the stability area are based on DIN 15019 part 2 / ISO 4305 / EN 13000.

Maximum admissible wind velocity for working with telescopic boom is 10 m/sec to 7 m/sec depending at boom length and for working with fly jib 7 m/sec.

The lifting capacities are shown in metric tons.

The weight of load handling devices such as hook blocks, slings, etc., must be considered as part of the load and must be deducted from the lifting capacities.

The lifting capacities for the telescopic boom apply to a crane with no boom extensions being stowed or mounted on the crane.

The working radius is the horizontal distance from the centre of rotation to the centre of the freely suspended non-oscillating load.

The lifting capacities are subject to change without prior notice.

The above remarks are for basic information only and the operator's manual must be consulted before operating this crane. All data and performances refer to the standard crane. The addition of optional and other equipment may affect the performance of the crane.

Notas relativas a los graficos de carga

En cuanto a los datos referentes a resistencia, las capacidades de carga están baseados sobre las normas DIN 15018, pág. 2 y 3, y F.E.M.

En cuanto a los datos referentes a estabilidad anti-vuelco, las capacidades de carga están baseados sobre las normas DIN 15019, Cap. 2 / ISO 4305 / EN 13000.

En independencia a la longitud de la pluma, están toleradas velocidades de viento de entre 7 m/s y 10 m/s.

Las capacidades de carga indicadas en las tablas corresponden a toneladas métricas.

Hay que deducir los pesos del gancho, eslingas y de otros dispositivos para fijación de cargas de los valores indicados en las tablas.

Las capacidades de carga referentes a la pluma telescópica valen solamente si el plumín está desmontada.

Como alcance se entiende la distancia horizontal desde el centro de la corona de giro hasta el centro de la carga suspendida libremente y no oscilante.

Salvo modificación de capacidades de carga, sin previo aviso.

Los datos arriba indicados sirven solamente para su información. Hay que leer las instrucciones para el uso antes de la puesta en servicio de la máquina. Todos los datos mencionados en las presentes tablas rigen para los modelos standard. Cualquier modificación del equipo montado puede dar lugar a modi-ficaciones de aquellos valores.

Änderungen vorbehalten / Subject to change without prior notice / Cette documentation est modifiable sans préavis / Sujeto a cambios sin previo aviso

View thousands of Crane Specifications on FreeCraneSpecs.com

TADANO

ATF 220G-5

Gegengewichtvarianten
Counterweight versions
Variations des contrepoids
Variaciónes de contrapeso

Gegengewicht / Counterweight Contrepoids / Contrapeso	①	②	③	④	⑤	⑥	⑦
(t)	12.0	12.0	12.0	11.5	11.5	10.0	2.0

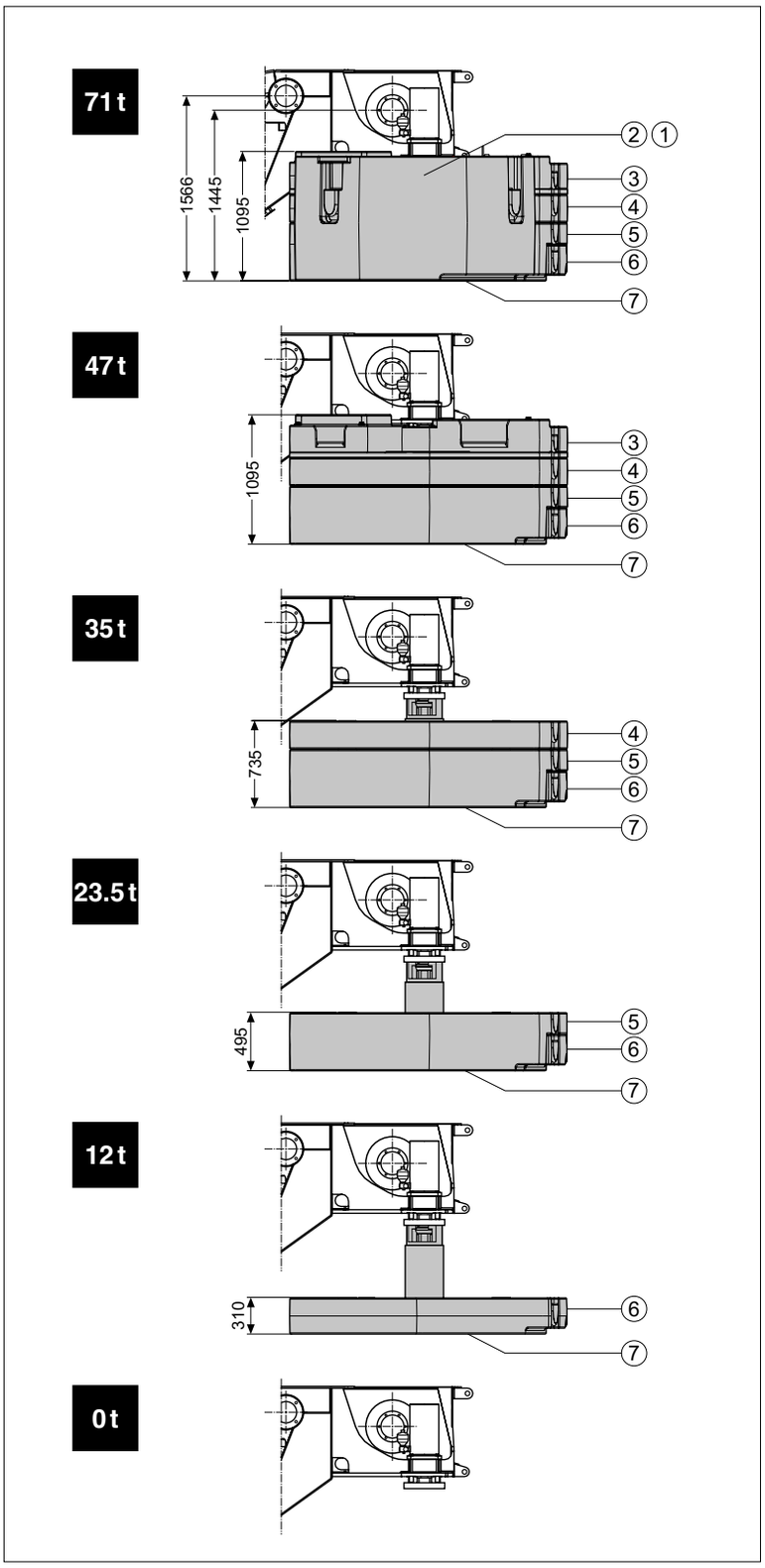

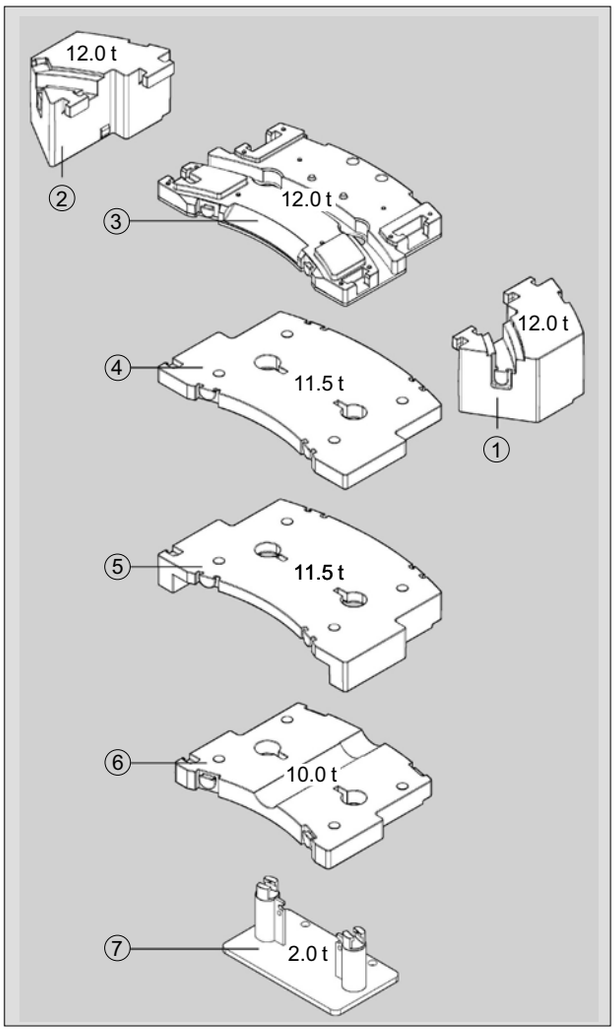

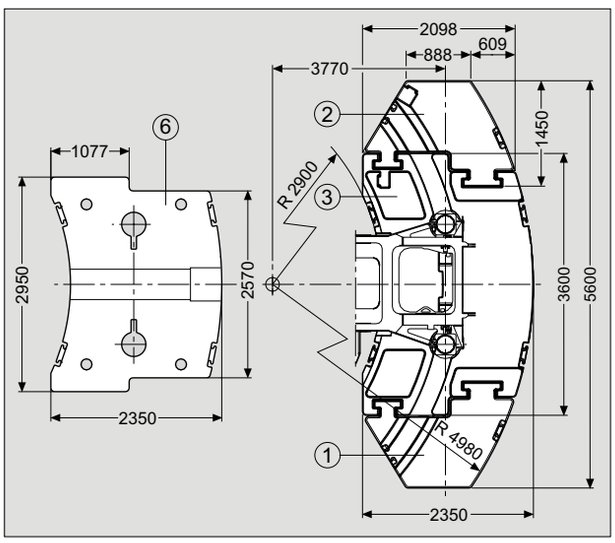

View thousands of Crane Specifications on FreeCraneSpecs.com
https://truckmanualshub.com/

TADANO

ATF 220G-5

Ausrüstung

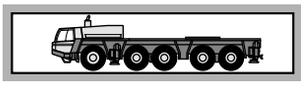

Rahmen Verwindungs- und biegesteife Schweißkonstruktion aus hochfestem Feinkornstahl. Zentralschmieranlage.

Abstützung 4-Punkt-Abstützung, hydraulisch, Bedienungsmöglichkeiten an beiden Seiten des Fahrgestelles und in der Oberwagenkabine.
Abstützbasis 8,3 m (und 5,6 m) x 9,01 m.

Motor Mercedes-Benz 8-Zylinder-Dieselmotor OM 502 LA (Euromot III B / EPA Tier 4i), wassergekühlt, Leistung 405 kW (551 PS) bei 1800 min^{-1}. Drehmoment 2600 Nm (265 kpm) bei 1300 min^{-1}. Motorleistung nach 80 / 1269 / EWG. Kraftstoffbehälter 540 l. AdBlue-Behälter 40 l.

Getriebe ZF-AS-Tronic 16 AS 2602 mechanisches Schaltgetriebe mit elektronisch-pneumatisch betätigter Trockenkupplung und vollautomatischer Schaltung mit 16 Vorwärts- und 2 Rückwärtsgängen.
Power / Economy Modus.

Verteilergetriebe 2-stufiges Verteilergetriebe.

Antrieb 10 x 8 (10 x 6 Optional*)

Achsen
1. Achse: gelenkt, angetrieben (*nicht angetrieben), Differentialsperre quer.
2. Achse: gelenkt, angetrieben, zuschaltbar, Differentialsperre quer.
3. Achse: gelenkt, nicht angetrieben.
4. Achse: gelenkt, angetrieben, Differentialsperre längs und quer.
5. Achse: gelenkt, angetrieben, Differentialsperre quer.

Achsaufhängung Hydropneumatische Federung mit Niveauregulierung.

Bremsen Druckluft-Zweikreis-Bremsanlage. Feststellbremse als Federspeicherbremse an der 2., 4. und 5. Achse wirkend. Intarder mit Bremsomat-Funktion und Konstantdrosselanlage mit Auspuffklappenbremse als Dauerbremse.

Räder 10-fach 385/95 R 25 (14.00 R 25).

Lenkung ZF-Servocom-Zweikreishydrolenkung mit Notlenkpumpe. Mechanische Lenkung der 1. und 2. Achse und Mitlenken der 3. und 4. Achse bis zu einer Geschwindigkeit von 25 km/h und der 5. Achse bis zu einer Fahrgeschwindigkeit von 50 km/h.

Unterwagenkabine Zwei-Mann-Frontfahrerhaus in Stahl-Kunststoff-Verbund-Konstruktion, Sicherheitsverglasung, luftgefederte Sitze (Fahrersitz mit Heizung) und motorabhängige Wasserheizung, Radio/CD-Player, Kontroll- und Bedienungselemente für den Fahrbetrieb, Tempomat- / Bremsomat-Funktion.

Elektrische Anlage 24 Volt-Gleichstrom, 2 Batterien, CAN-Bus System mit integriertem CSS-System zur Eigendiagnose, Abstützfeldbeleuchtung.
Die elektrische Anlage entspricht der EG-Norm.

Zusatzausrüstung (gegen Mehrpreis)
Anhängekupplung, motorunabhängige Zusatzheizung mit Motorvorwärmung, Klimaanlage, ABS, 445/95 R 25 (16.00 R 25), 525/80 R 25 (20.5 R 25) Bereifung, Reserverad, Sonderlackierung und Beschriftung.

Weitere Zusatzausrüstung auf Anfrage.

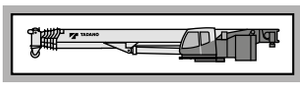

Rahmen Verwindungssteife Schweißkonstruktion mit einer außenverzahnten, einreihigen Kugeldrehverbindung, um 360° unbegrenzt drehbar. Zentralschmieranlage.

Motor Mercedes-Benz 4-Zylinder-Dieselmotor OM 924 LA (Euromot III B / EPA Tier 4i), wassergekühlt. Drehzahl ist über Fußpedal stufenlos regelbar, Leistung 143 kW (194 PS) bei 1800 min^{-1}. Drehmoment 800 Nm (82 kpm) bei 1200 - 1600 min^{-1}. Motorleistung nach 80 / 1269 / EWG. Kraftstoffbehälter 250 l. AdBlue-Behälter 8 l.

Hydraulik System Diesel-hydraulisch mit 3-Kreishydraulik, 1 Axialkolbendoppelpumpe, 1 Axialkolbenpumpe und 1 Zahnradpumpe, Ölkühler.

Steuerung Zwei 4-fach Kreuzsteuerhebel mit elektrischer Vorsteuerung.

Teleskopausleger Siebenteiliger Teleskopausleger aus hochfestem Feinkornstahl, bestehend aus einem Grundausleger und 6 Teleskopteilen, 1 Teleskopzylinder, hydraulisch unter Teillast teleskopierbar. 13,2 m - 68,0 m lang. Rollenkopf mit 7 Seilrollen.

Wippwerk Ein Differentialzylinder mit angebautem Senkbremssperrventil.

Hubwerk Axialkolben-Motor, Hubwerkstrommel mit eingebautem Planetengetriebe und federbelasteter Hydro-Lamellenbremse mit integriertem Freilauf beim Heben. Hubseil mit 'Super-Stop' Einrichtung.

Drehwerk Axialkolben-Motor, dreistufiges Planetengetriebe mit automatischer Betriebs- und Feststellbremse, geschlossener Hydraulikkreislauf mit Drehwerk-Freischaltung. Drehgeschwindigkeit stufenlos von 0 - 1,2 min^{-1}.

Gegengewicht Gesamtgewicht 71 t teilbar.
Die Bedienung erfolgt aus der Oberwagenkabine.

Oberwagenkabine Großräumige Krankabine in Stahl-Kunststoffausführung mit Sicherheitsverglasung und getönten Scheiben, kippbarem Arbeitsplatz mit verstellbarem, hydraulisch gedämpftem Fahrersitz mit Heizung, motorabhängige und motorunabhängige Wasserheizung (mit Motorvorwärmung), Klimaanlage, Radio/CD-Player, Kontroll- und Bedienungselemente sowie graphische LCD-Anzeige für Kranbetrieb.

Elektrische Anlage 24 Volt-Gleichstrom, 2 Batterien.

Sicherheitseinrichtungen 'Lift Adjuster', Lastmomentbegrenzung (LMB), Windmesser, Arbeitsbereichsbegrenzung, Hubendschalter, Windenendschalter, Seilwindendrehmelder, Sicherheitsventile gegen Rohr- und Schlauchbrüche. Sperrventile an Hydraulik-Zylindern.

Zusatzausrüstung (gegen Mehrpreis)
Auslegerverlängerungen von 13,2 m bis 37,2 m, wahlweise abwinkelbar 0°, 20° und 40° oder hydraulisch 0° - 40°, Schwerlastspitze 5,4 m, Auslegerverlängerung HTLJ 8,5 m bis 21 m (hydraulisch abwinkel- und teleskopierbar 0° - 60°), Gegengewichtvarianten 12 t / 23,5 t / 35 t / 47 t, Unterflaschen von 10 t bis 160 t, 2. Hubwerk (wie Hauptwinde), Sonderlackierung und Beschriftung, Stützkraftanzeige.

Weitere Zusatzausrüstung auf Anfrage.

Änderungen vorbehalten

View thousands of Crane Specifications on FreeCraneSpecs.com
https://truckmanualshub.com/

TADANO

ATF 220G-5

Equipment

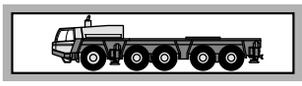

Frame Torsion-resistant, welded construction made from high strength, fine-grained steel. Central lubricating system.

Outriggers 4 point, double telescopic hydraulic outriggers with controls on both sides of carrier and in superstructure cab. Outrigger base 8.3 m (5.6 m mid extension) x 9.01 m.

Carrier engine Mercedes-Benz 8 cylinder model OM 502 LA (Euromot III B / EPA Tier 4i), water-cooled diesel engine. Rated at 405 kW (551 HP) at 1800 min^{-1}. Torque 2600 Nm (265 kpm) at 1300 min^{-1}. Engine rating according to 80 / 1269 / EWG. Fuel tank 540 l. AdBlue-tank 40 l.

Transmission ZF-AS-Tronic 16 AS 2602 mechanical transmission with electro-pneumatically operated dry-type clutch and automatic gear shifting with 16 forward gears and 2 reverse gears.
Power / Economy modes.

Transfer Case Two stage.

Drive 10 x 8 (10 x 6 optional*)

Axles
1st axle: steered, driven (*not driven).
2nd axle: steered, driven.
3rd axle: steered, not driven.
4th axle: steered, driven, with longitudinal differential lock.
5th axle: steered, driven.
All driven axles with transverse differential locks.

Suspension Hydro-pneumatic with levelling adjustment.

Brake system Service brakes: dual circuit compressed air system. Parking brake: spring loaded type acting on 2nd, 4th and 5th axles. Auxiliary brakes: intarder with brake control, engine exhaust brake and constant throttle engine brake system.

Tyres (10) 385/95 R 25 (14.00 R 25).

Steering system ZF-Servocom, dual circuit hydraulic steering with emergency steering pump, mechanical hydraulicallyassisted steering of front two axles and automatic steering of the 3rd and 4th axle up to a travel speed of 25 km/h and of the 5th axle up to 50 km/h.

Carrier cab Two man full width cab of composite (steel sheet metal and fibre-glass) structure, with safety glass, air-cushioned adjustable seats (driver seat with heater) and engine dependent water heater, radio/CD-player, complete controls and instrumentation for road travel. Cruise control with hill braking feature functions.

Electrical system 24 volt DC system, 2 batteries, CAN-Bus system with CSS integrated self-diagnosis system, outrigger area lighting. Electrical system conforms with EEC regulations.

Optional Equipment (at extra charge)
Towing attachment, engine independent additional heater with engine pre-heat, air conditioning, ABS, 445/95 R 25 (16.00 R 25), 525/80 R 25 (20.5 R 25) tyres, spare wheel and tyre, special painting and lettering.

Further optional equipment available upon request.

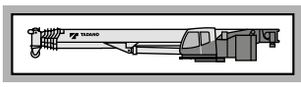

Frame Torsion-resistant, all-welded structure of high strength steel. Connected to carrier by single-row, ball-bearing slewing ring with external gearing for 360° continuous rotation. Central lubricating system.

Superstructure engine Mercedes-Benz 4 cylinder model OM 924 LA (Euromot III B / EPA Tier 4i), water cooled diesel engine. Rated at 143 kW (194 HP) at 1800 min^{-1}. Torque 800 Nm (82 kpm) at 1200 - 1600 min^{-1}. Engine rating according to 80 / 1269 / EWG. Fuel tank 250 l. AdBlue-tank 8 l.

Hydraulic system Three circuit diesel hydraulic system with 1 double axial piston pump, 1 axial piston pump and 1 gear pump, oil cooler.

Controls Electrical, 2 joy-stick levers for simultaneous operation of crane motions.

Telescopic boom 7 sections, made of high tensile, fine-grained steel, consisting of 1 base section and 6 telescoping sections extended by means of a single telescopic cylinder. All telescope sections extendable under partial load. 13.2 m to 68.0 m long. Boom head with 7 sheaves.

Derricking system 1 double acting hydraulic cylinder with integral brake and holding valve.

Main winch Axial piston motor, winch drum with integrated planetary reduction and hydraulically controlled spring-loaded multiple disc brake and integrated free rotation (no sagging of load when hoisting).
Hoist cable with 'Super-Stop' easy reeving system.

Slewing system Axial piston motor with three-stage planetary gear equipped with automatic service and a parking brake. Closed hydraulic circuit with free slewing function. Speed infinitely variable 0 - 1.2 min^{-1}.

Counterweight Total 71 t divisible, assembled and disassembled by hydraulic cylinders controlled from superstructure cab.

Superstructure cab Spacious panoramic cab of composite structure with safety (tinted) glass windows, tiltable cockpit with hydraulically cushioned adjustable seat with heater, engine dependent water heater engine independent water heater (with engine pre-heat), air conditioning, radio/CD-player. Complete controls and instrumentation plus LCD graphic display for crane operation.

Electrical system 24 volt DC system, 2 batteries.

Safety devices 'Lift Adjuster', load moment device (LMD), anemometer, working area limiter, hoist limit switch, lower limit switch and drum turn indicator, safety valves against pipe and hose rupture, holding valves on hydraulic cylinders.

Optional Equipment (at extra charge)
Boom extensions 13.2 m to 37.2 m, offsets 0°, 20° and 40° or hydraulically 0°- 40°, heavy duty jib 5.4 m, boom extensions HTLJ 8.5 m to 21 m (hydraulically offsets and telescopable 0° - 60°), counterweight variations 12 t / 23.5 t / 35 t / 47 t, selection of hook blocks 10 t - 160 t, auxiliary winch (same as main winch), special painting and lettering, outrigger load display.

Further optional equipment available upon request.

View thousands of Crane Specifications on FreeCraneSpecs.com
https://truckmanualshub.com/

TADANO

ATF 220G-5

Equipement

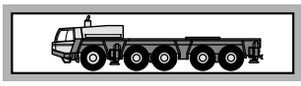

Châssis Construction mécanosoudé, en acier à grain fin très rigide, résistant aux fléxions et aux torsions.
Graissage centralisé.

Calage Dispositif de calage horizontal et vertical en 4 points, entièrement déployable hydrauliquement. Commande des mouvements sur les deux côtés du porteur et depuis la cabine de la superstructure. Calage 8,3 m (aussi 5,6 m) x 9,01 m.

Moteur Mercedes Benz diesel 8 cylindres, modèle OM 502 LA (Euromot III B / EPA Tier 4i), refroidi par eau, de 405 kW (551 CV) à 1800 min^{-1}. Couple: 2600 Nm (265 kpm) à 1300 min^{-1}. Puissance selon 80 / 1269 / EWG.
Capacité du réservoir 540 l. AdBlue-capacité du réservoir 40 l.

Boîte de vitesse Boîte mécanique ZF-AS-Tronic, modèle 16 AS 2602 avec embrayage électro-pneumatique reglé à commande et boîte automatique, 16 vitesses AV et 2 vitesses AR. Mode max. performence / économique.

Bôite de transfert À 2 gammes.

Entraînement 10 x 8 (10 x 6 optionnel*)

Essieux
1er essieu: directeur, entraîné, (*non entraîné) blocage de différentiel transversal.
2ième essieu: directeur, entraîné, netraîné sur commande, blocage de différentiel transversal.
3ième essieu: directeur, non entraîné.
4ième essieu: directeur, entraîné, blocage de différentiel longitudinal et transversal.
5ième essieu: directeur, entraîné, blocage de différentiel transversal.

Suspension Hydro-pneumatique, avec réglage de niveau.

Freins Système à air comprimé, à double circuit.
Frein de stationnement: avec accumulateurs à ressort agissant sur le 2ième, 4ième et 5ième essieu. Freins continus: frein moteur par clapet sur échappement. Ralentisseur hydrodynamique Intarder.

Pneus 10 x 385/95 R 25 (14.00 R 25).

Direction Servocom à double circuit, marque ZF avec pompe de direction auxiliaire. Direction mécanique du 1er et 2ième essieu, à assistance hydraulique, avec pompe de direction auxiliaire direction du 3ième et 4ième essieu jusqu'à une vitesse de 25 km/h et du 5ième essieu jusqu'à une vitesse de 50 km/h.

Cabine Cabine bi-place, construction en matière composite fibre de verre et acier. Vitrage en verre de sécurité, siège conducteur chauffant suspendu hydrauliquement. Chauffage à eau chaude relié au moteur, radio-CD/player. Organes de contrôle et de commande pour la conduite.
Régulateur de vitesse, système automatique de freinage.

Système électrique 24 V courant continu, 2 battéries, connexion circuit électrique avec CAN-Bus. Équipement avec prise diagnostic et avec interprétation de code erreur de système CSS, eclairage des points de calage.
Conforme aux normes CE.

Equipement supplémentaire (avec supplément de prix) Attache-remorque, chauffage auxiliaire indépendant du moteur avec préchauffage du moteur, climatisation, ABS, pneus 445/95 R 25 (16.00 R 25), 525/80 R 25 (20.5 R 25), roue de secours, peinture spéciale et inscription.

Autres équipements supplémentaires sur demande.

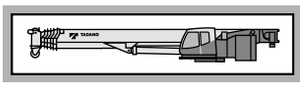

Plate forme Construction mécano-soudée résistante à la torsion. Couronne d'orientation à billes à une rangée, à denture extérieure, permettant une rotation illimitée sur 360°.
Graissage centralisé.

Moteur Mercedes Benz diesel 4 cylindres, modèle OM 924 LA (Euromot III B / EPA Tier 4i), refroidi par eau. Réglage du nombre de tours par pédale, de 143 kW (194 CV) à 1800 min^{-1}. Couple: 800 Nm (82 kpm) à 1200 - 1600 min^{-1}. Puissance selon 80 / 1269 / EWG.
Capacité du réservoir 250 l.
AdBlue-capacité du réservoir 8 l.

Système hydraulique Diesel-hydraulique à 3 circuits, 1 double pompe à pistons axiaux, 1 pompe à pistons axiaux et 1 pompe à engreages, refroidisseur d'huile.

Commande 2 manipulateurs à commande en croix (4 sens), assistés électriquement.

Flèche télescopique 1 flèche de base et 6 éléments télescopiques en acier fin, 1 vérin telescopique, hydrauliquement télescopable avec charge partielle.
Longueur de 13,2 m à 68,0 m.
Tête de flèche avec 7 poulies.

Mécanisme de relevage 1 vérin différentiel muni de clapet de freinage de descente.

Mécanisme de levage Moteur hydraulique, tambour de levage avec boîte planétaire incorporée, frein d'arrêt à disques multiples à ressort, libéré lors du levage. Câble de levage avec dispositif 'Super-Stop'.

Orientation Moteur hydraulique avec entraînement planétaire à 3 gammes avec frein de stationnement automatique, circuit fermé avec déconnexion de l'orientation.
Vitesse de rotation 0 à 1,2 min^{-1} en continu.

Contrepoids Poids total 71 t divisible, commandé depuis la cabine du grutier.

Cabine du grutier Cabine de grue spacieuse,construction en matière combinée acier / synthétique, avec vitrage de sécurité en verre teinté, siège chauffant, réglable et amorti hydrauliquement, inclinable avec instruments de commande, chauffage à eau chaude dépendant et indépendant du moteur (avec préchauffage du moteur), climatisation, radio/CD-player, éléments de commande et de contrôle avec affichage digital pour travaux.

Système électrique 24 V courant continu, 2 battéries.

Dispositifs de sécurité 'Lift Adjuster', limiteur de charge (CEC), anémomètre, limitation de zone de travail, interrupteur de fin de course de levage et de treuil , indicateur du nombre de tours, soupapes de sécurité contre ruptures des conduites et flexibles, clapets sur verins hydraulique.

Equipement supplémentaire (avec supplément de prix) Fléchette de 13,2 m à 37,2 m mau choix inclinable 0°, 20° et 40° ou hydrauliquement 0° à 40°, fléchette pour levage lourde 5,4 m, Fléchette HTLJ de 8,5 m à 21 m (hydrauliquement inclinable et télescopable 0° - 60°), combinaison différentes de contrepoids 12 t / 23,5 t / 35 t / 47 t, moufles de 10 t à 160 t, 2ième treuil de levage (identique au treuil principale), peinture spéciale et inscription, indicateur de pression sur les calages.

Autres équipements supplémentaires sur demande.

Cette documentation est modifiable sans préavis

View thousands of Crane Specifications on FreeCraneSpecs.com
https://truckmanualshub.com/

TADANO

ATF 220G-5

Equipo

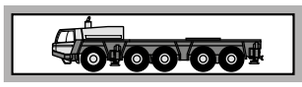

Chasis portante Construcción de acero de alta resistencia soldado, resistente a la torsión y a la flexión. Sistema de engrase central.

Estabilizadores Estabilizadores hidráulicos de 4 puntos. Posibilidad de manejo desde ambos lados del chasis portante y desde la cabina de la grúa. Extensión de los estabilizadores: 8,3 m (y 5,6 m) x 9,01 m.

Motor Mercedes Benz modelo OM 502 LA (Euromot III B / EPA Tier 4i), 8 cilindros, diesel, refrigerado por agua. Nominal 405 kW (551 CV) a 1800 min^{-1}.
Par 2600 Nm (265 kpm) a 1300 min^{-1}.
Potencia del motor según 80 / 1269 / EWG.
Depósito de combustible de 540 l. Depósito AdBlue 40 l.

Transmisión Transmisión mecánica tipo ZF-AS Tronic modelo 16 AS 2602 con accionamiento electro - neumático embrague en seco y cambio automático 16 marchas delanteras y 2 marchas traseras. Modo rendimiento máximo / económico.

Transmisión Caja de distribución (transfer) con 2 relaciones de velocidad.

Tracción 10 x 8 (10 x 6 como opción*)

Ejes
1º eje: de dirección, no accionado.
1º eje: de dirección, accionado (*no accionado), con bloqueo diferencial transversal.
2º eje: de dirección, accionado, conectar según necesidad, con bloqueo diferencial transversal.
3º eje: de dirección, no accionado.
4º eje: de dirección, accionado, con bloqueo diferencial longitudinal y transversal.
5º eje: de dirección, accionado, con bloqueo diferencial transversal.

Suspensión Suspensión hidroneumática con regulación de nivel.

Sistemas de frenos Accionamiento neumático de doble circuito. Freno de estacionamiento del tipo muelles cargados, liberados por aire, sobre los ejes 2º, 4º y 5º. Intarder / sistema automático de frenado y freno continuo: Sistema estrangulador y sobre el escape del motor diesel.

Neumáticos 10 x 385/95 R 25 (14.00 R 25).

Dirección Hidráulica ZF Servocom de doble circuito con bomba auxiliar de dirección. Dirección mecánica del 1º y 2º eje y direccionable del 3º y 4º eje hasta una velocidad de 25 km/h y del 5º eje hasta una velocidad de conducción de 50 km/h.

Cabina Cabina para dos personas, en construcción de acero y fibra de vidrio. Cristales de seguridad, asiento con suspensión neumática, asiento de conductor calefactado. Calefacción por agua caliente del motor, radio/CD-player. Elementos de control e instrumentos para circulación por carretera. Regulador de velocidad, sistema automático de frenado.

Sistema eléctrico Sistema de 24 V c.c. con dos baterias, conexiónes eléctricas integradas en el sistema CAN-Bus, sístema integrado de diagnóstico CSS. Faros de trabajo en los estabilizadores.
El sistema eléctrico cumple la normativa CEE.

Equipo adicional (con suplemento de precio)
Embrague de remolque, calefacción adicional con precalefacción del motor, climatización, ABS, neumáticos 445/95 R 25 (16.00 R 25), 525/80 R 25 (20.5 R 25), rueda de repuesto, pintura especial y rotulación.

Otros equipamientos sobre pedido.

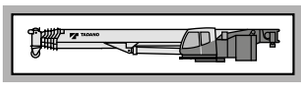

Superestructura Construida en aceros soldados, resistente a la torsión. Corona de giro con rodamiento de una fila de bolas con dientes externos para giro continuo a 360°. Sistema de engrase central.

Motor Mercedes Benz modelo OM 924 LA (Euromot III B / EPA Tier 4i), 4 cilindros, diesel, refrigerado por agua. Las revoluciones aumentan de forma gradual accionando el acelerador. Nominal 143 kW (194 CV) a 1800 min^{-1}.
Par 800 Nm (82 kpm) a 1200 - 1600 min^{-1}.
Potencia del motor según 80 / 1269 / EWG.
Depósito de combustible de 250 l. Depósito AdBlue 8 l.

Sistema hidráulico Sistema hidráulico de 3 circuitos, 1 bomba doble de pistones axiales, una bomba de pistones axiales y una bomba de ruedas dentadas, enfriador de aceite.

Mandos 2 palancas de control de tipo joy-stick para movimientos simultáneos de la grúa (4 direcciones), asistidos eléctricamente.

Pluma telescópica 7 secciones, un tramo base y 6 telescópicos de acero de alta resistenca soldado, 1 cilindro hidráulico, los tramos se pueden telescopar hidráulicamente bajo carga. Longitud de 13,2 m a 68,0 m.
Cabeza de pluma con 7 poleas.

Elevación de pluma Mediante un cilindro hidráulico de doble efecto con válvula de retención integrada.

Cabrestante principal Motor hidráulico de pistones axiales y caudal fijo. Tambor del cabrestante con reducción planetaria y frenos de disco múltiples accionado, con sistema libre de elevación. Cable de elevación con sistema fácil de guiado y 'Super-Stop'.

Sistema de giro Motor hidráulico de pistones axiales con reducción planetária de tres etapas. Con freno de giro automático de bloqueo. Circuito cerrado con mecanismo de giro libre con posibilidad de desconexión. Velocidad de giro gradual de 0 a 1,2 min^{-1}.

Contrapeso Peso total 71 t divisible, se acciona desde la cabina de la grúa.

Cabina de la grúa Cabina espaciosa y confortable, en construcción de acero y fibra de vidrio, con cristales tintados de seguridad. Asiento de operador regulable amortiguado hidráulicamente, inclinable junto con los instrumentos y mandos, asiento calefactado. Calefacción por agua caliente dependiente y independiente del motor (con precalefacción del motor), climatización, radio/CD-player. Controles, instrumentos y mandos de conducción como display digital LCD para la operación de la grúa.

Sistema eléctrico Sistema de 24 V c.c. con dos baterias.

Medidas de seguridad 'Lift Adjuster', limitación del momento de carga (LMC), anemómetro, limitación del área de trabajo, interruptor de final de elevación, interruptor de 3 últimas vueltas en cabrestante, indicador de bajada o subida del cable del cabrestante, válvulas de seguridad para rotura de tubos y latiguillos. Válvulas de retención en los cilindros hidráulicos.

Equipo adicional (con suplemento de precio)
Plumín de 13,2 m a 37,2 m regulable de 0°, 20° y 40° (o hidráulicamente 0° a 40°), plumín de carga pesada de 5,4 m, plumín HTLJ de 8,5 m a 21 m (hidráulicamente regulable y telescopable 0° 60°),variantes de contrapeso 12 t / 23,5 t / 35 t / 47 t, gancho de 10 a 160 to, 2º cabrestante (similar a cabrestante principal), pintura especial y rotulación, control carga (gatos de apoyo).

Otros equipamientos sobre pedido.

View thousands of Crane Specifications on FreeCraneSpecs.com

TADANO

ATF 220G-5

Symbolerklärung
Symbols
Glossaire des symboles
Glosario de simbolos

DIN/ISO/EN	Siehe Seite 42 As on Page 42 Voyez la page 42 Véase la pagina 42
385/95 R 25 (14.00 R 25)	Räder / Größe Tyres / Size Pneus / Largeur Neumáticos / Tamano de ruedas
	Achslast Axle load Charge à l'essieu Carga por eje
	Unterflasche / Hakengeschirr Hook block / Swivel hook Moufle / Elingues Gancho / Gancho de bola
V+	Geschwindigkeiten Unterwagen Carrier speeds Vitesses du châssis Velocidades del chasis
	Getriebe / Gang Transmission / Gear Boîte de vitesse / Rapport Transmisión / Marchas
	Steigfähigkeit Gradeability Abtitude en pente Superacion de pendientes
	Gelände Off road Tout-terrain Todo terreno
	Straße On road En route En carretera
V+	Geschwindigkeiten Oberwagen Superstructure speeds Vitesses du partie tournante Velocidades de la superestructura
1	Hubwerk Main winch Mécanisme de levage Cabrestante principal
2	2. Hubwerk Auxiliary winch 2ième treuil de levage 2º cabrestante
360°	Drehwerk Slewing system Orientation Sistema de giro

	Wippwerk Derricking system Mécanisme de relevage Elevación de pluma
	Teleskopieren Boom telescoping Télescopage de flèche Telescopaje de pluma
	Teleskopausleger Telescopic boom Flèche télescopique Pluma telescópica
8.3 m	Abstützung Outriggers Calage Estabilizadores
71 t	Gegengewicht Counterweight Contrepoids Contrapeso
m	Ausladung Radius Portée Radio
	Auslegerverlängerung HTLJ Boom extension HTLJ Fléchette HTLJ Plumín HTLJ
	Auslegerverlängerung Boom extension Fléchette Plumín
HYDRO	Auslegerverlängerung hydraulisch Boom extension hydraulically Fléchette hydrauliquement Plumín hidráulicamente
m	Ausladung Radius Portée Radio
	Gegengewichtvarianten Counterweight versions Variations des contrepoids Variaciónes de contrapeso
	Unterwagen Carrier Châssis Chasis
	Oberwagen Superstructure Partie tournante Superestructura

Änderungen vorbehalten / Subject to change without prior notice / Cette documentation est modifiable sans préavis / Sujeto a cambios sin previo aviso

View thousands of Crane Specifications on FreeCraneSpecs.com
https://truckmanualshub.com/

Notizen
Notes
Notas

View thousands of Crane Specifications on FreeCraneSpecs.com
https://truckmanualshub.com/

TADANO

Lifting your dreams

TADANO FAUN GmbH
Faunberg 2, 91207 Lauf a. d. Pegnitz, Germany
Phone: +49-9123-185-0 Fax: +49-9123-3085
http://www.tadanofaun.de E-mail: info@tadanofaun.de

TADANO LTD. (International Division)
4-12, Kamezawa 2-chome, Sumida-ku Tokyo 130-0014, Japan
Phone: 81-3-3621-7750 Fax: 81-3-3621-7785
http://www.tadano-global.com E-mail: tdnihq@tadano.co.jp

01/IV 2013/3.0/DS
Printed in Germany