https://truckmanualshub.com/

OPERATING MANUAL

SPACESAVER

S70XL, S80XL, S80XL BCS, S100XL,
S120XLS, S120XL (D004)
S135XL, S155XL, S155XLS, S135XL$_2$, S155XL$_2$
(B024, C024)

DO NOT REMOVE THIS MANUAL FROM THIS UNIT

Property of American Airlines

HYSTER

HYSTER COMPANY

PART NO. 897366

https://truckmanualshub.com/

LIFT TRUCK MODEL _____ **SERIAL NUMBER** _____

ENGINE MODEL _____ **SERIAL NUMBER** _____

TRANSMISSION TYPE _____ **SERIAL NUMBER** _____

MAST LIFT HEIGHT _____ **GROUP NUMBER** _____

CARRIAGE TYPE _____ **GROUP NUMBER** _____

DRIVE TIRE SIZE _____ **STEERING TIRE SIZE** _____

SPECIAL EQUIPMENT OR ATTACHMENTS

_____

_____

_____

Hyster®, HYSTER ® ,Vista®, MONOTROL® and Yardmaster® are registered trademarks of Hyster Company in certain countries. , Fortis™, Fortens™, Pacesetter VSM™, DuraMatch™, Spectrum™, TouchPoint™, TouchControl™, EZXchange™, HSM™, ReachStacker™, SitDrive™, StanDrive™, Multiquip™, and Unisource™ are trademarks of Hyster Company in the united States and/or in certain countries where rights in unregistered trademarks are recognized. Hyster Company products included in this document may be covered by U.S. Patenet No. 6,684,148 and other U.S. and foreign patents pending. ©Hyster Company 2005. All rights reserved.

Property of American Airlines

https://truckmanualshub.com/

FOREWORD

To OWNERS, USERS, and OPERATORS:

The safe and efficient operation of a lift truck requires skill and alertness on the part of the operator. To develop the skill required the operator must:

- receive training in the proper operation of THIS lift truck.
- understand the capabilities and limitations of the lift truck.
- become familiar with the construction of the lift truck and see that it is maintained in good condition.
- read and understand the warnings and operating procedures in this manual.

In addition a qualified person, experienced in lift truck operation, must guide a new operator through several driving and load handling operations before the new operator attempts to operate the lift truck alone.

It is the responsibility of the employer to make sure that the operator can see, hear, and has the physical and mental ability to operate the equipment safely.

Various laws and regulations require the employer to train lift truck operators. These laws and regulations include:

Occupational Safety and Health Act (USA)

Canada Material Handling Regulations

NOTE: A comprehensive operator training program is available from HYSTER COMPANY. For further details, contact your dealer for Hyster lift trucks.

This OPERATING MANUAL contains information necessary for the operation and maintenance of a basic fork lift truck. Optional equipment is sometimes installed that can change some operating characteristics described in this manual. Make sure the necessary instructions are available and understood before operating the lift truck.

Some of the components and systems described in this OPERATING MANUAL will NOT be installed on your unit. If you have a question about any item described, contact your dealer for Hyster lift trucks.

Property of American Airlines

https://truckmanualshub.com/

Additional information that describes the safe operation and use of lift trucks is available from the following sources:

- employment safety and health standards or regulations (Examples: “Occupational Safety and Health Standards (USA)”, “Canada Material Handling Regulations”.
- safety codes and standards (Example: Industrial Truck Standards Development Foundation, ITSDF B56.1, *Safety Standard For Low Lift And High Lift Trucks*.
- publications from government safety agencies, government insurers, private insurers and private organizations (Example: *Accident Prevention Manual For Industrial Operations,* from the National Safety Council).

NOTE: Hyster lift trucks are not intended for use on public roads.

NOTE: The following symbols and words indicate safety information in this manual:

WARNING

Indicates a condition that can cause injury!

CAUTION

Indicates a condition that can cause property damage!

Property of American Airlines

https://truckmanualshub.com/

CONTENTS

FOREWORD **1**
CONTENTS **3**
MODEL DESCRIPTION **7**
GENERAL 7
OPERATOR PROTECTION EQUIPMENT 8
NAMEPLATE 8
SAFETY LABELS 9
INSTRUMENTS AND CONTROLS 13
OPERATING PROCEDURES **23**
GENERAL 23
Know Your Lift Truck 23
Stability and Center Of Gravity 23
Capacity (Weight and Load Center) 25
INSPECTION BEFORE OPERATION 25
Checks With the Engine Stopped 25
Starting Procedures 26
Gasoline Or LPG Engine 26
Diesel Engine 27
Checks With the Engine Running 28
OPERATING TECHNIQUES 29
Basic Operating Procedures 29
Driving And Direction Changes 32
Operator Presence System 33
Inching 33
Steering (Turning) 34
Load Handling, General 36
Load Handling, Lifting, Lowering, And Tilting 38
Load Handling, How To Engage And Disengage A Load 40
Load Handling, Traveling 43
HIGHWAY TRUCKS, RAILROAD CARS AND DOCKS 47
ATTACHMENTS 49
STOPPING 49
PARKING 49
MAINTENANCE **51**
GENERAL 51
HOW TO MOVE A DISABLED LIFT TRUCK 52
How To Tow The Lift Truck 52
How To Put A Lift Truck On Blocks 53
How To Raise The Drive Tires 53
How To Raise The Steering Tires 53

Property of American Airlines

https://truckmanualshub.com/

CONTENTS

HYSTER

MAINTENANCE SCHEDULE 55
HOW TO MAKE THE CHECKS WITH THE ENGINE STOPPED 69
Hydraulic System Oil 69
Engine Oil 72
Drive Belts 72
Cooling System 72
Air Filter 74
Fuel System 74
Primary Fuel Filter, Diesel Engine 74
Battery 75
Tires And Wheels 76
Forks 77
Forks, Adjustment 77
Forks, Removal And Installation 77
Inspection Of Forks, Mast, and Lift Chains 80
Safety Labels 82
Operator Restraint System 83
Automatic Locking Retractor (ALR) 83
Emergency Locking Retractor (ELR) 83
Hood And Seat Latches 84
HOW TO MAKE THE CHECKS WITH THE ENGINE RUNNING 86
Gauges, Lights, Horn And Fuses 87
Oil Level, Powershift Transmission 90
Oil Level, Oil Clutch System 90
Control Levers and Pedals 91
Lift System Operation 92
Inching/Brake Pedal 92
Service Brakes 93
Parking Brake 93
Steering System 93
HOW TO ADD FUEL TO THE LIFT TRUCK 94
Liquified Petroleum Gas (LPG) 94
Gasoline Or Diesel Fuel 97
WHEELS AND TIRES 98
HOW TO CHANGE A SOLID RUBBER TIRE 98
INSTALL THE WHEELS 99
Steering Wheels 99
Drive Wheels 99
OPERATING PROCEDURES FOR A NEW OR REBUILT ENGINE 99

Property of American Airlines

https://truckmanualshub.com/

A **WARNING** label with this information must be on the lift truck.

⚠ WARNING

FAILURE to follow these instructions can cause SERIOUS INJURY or DEATH!

AUTHORIZED, TRAINED OPERATOR ONLY!

KNOW THE EQUIPMENT:
- KNOW operating, inspection and maintenance instructions, and warnings in MANUAL.
- DO NOT operate or repair truck unless trained and authorized.
- INSPECT truck before use. Do not operate if truck needs repair. Tag truck and remove key. Repair truck before use.
- USE attachments for intended purpose only.
- MAKE SURE truck is equipped with overhead guard and load backrest adequate for the load.

LOOK WHERE YOU ARE GOING:
- IF YOU CAN'T SEE, DON'T GO!
- TRAVEL in reverse if load blocks forward vision.
- MAKE SURE tailswing area is clear before turning.
- SOUND horn at intersections or where vision is blocked.
- WATCH clearances, especially overhead.

KNOW YOUR LOADS:
- HANDLE only stable loads within specified weight and load center. See plate on this truck.
- DO NOT handle loose loads higher than load backrest.
- SPACE forks as far apart as load allows and center load between forks. Keep load against load backrest.

USE COMMON SENSE:

Sitdown Rider Forklift Trucks 4/91

- NEVER transport people on any part of the truck.
- OBEY traffic rules. Yield right-of-way to pedestrians.
- BE in complete control at all times.
- ALLOW NO ONE under or near lift mechanism or load.
- OPERATE truck only from operator's seat.
- KEEP arms, legs, and head inside operator's compartment.
- DO NOT move truck if anyone is between truck and stationary object.
- DO NOT use truck to lift people unless no other practical option. Then use only securely attached special work platform. Follow instructions in manual.
- BEFORE DISMOUNTING, neutralize travel control, lower carriage, set brake. WHEN PARKING, also shut off power, close LPG fuel valve, block wheels on inclines.

KNOW THE AREA:
- NEVER enter a trailer or railroad car unless its wheels are blocked.
- CONFIRM floor strength.
- FILL fuel tank or charge battery only in designated area.
- **TURN OFF engine when fueling**
- AVOID sparks or open flame. Provide ventilation.
- DO NOT start truck if fuel is leaking.
- KEEP vent caps clear when charging battery.
- DISCONNECT battery during servicing.
- CHECK dockboard width, capacity and security.

PROTECT YOURSELF, FASTEN YOUR SEATBELT!
- AVOID bumps, holes, loose materials, and slippery areas.
- AVOID sudden movements. Operate all controls smoothly.
- NEVER turn on or angle across an incline. Travel slowly.
- TRAVEL on inclines with load uphill or unloaded with mast downhill.
- TILT mast slowly and smoothly. LIFT or LOWER with mast vertical or tilted slightly back. Use minimum tilt when stacking elevated loads.
- TRAVEL with carriage as low as possible and tilted back.
- SLOW DOWN before turning—especially without load.

FAILURE to follow these instructions can cause the truck to tip over!
DO NOT JUMP off if the truck tips! HOLD steering wheel firmly. BRACE your feet. LEAN FORWARD and AWAY from point of impact.

Property of American Lifts

https://truckmanualshub.com/

1. OVERHEAD GUARD
2. COUNTERWEIGHT
3. STEERING AXLE
4. DRIVE AXLE
5. MAST
6. FORKS
7. CARRIAGE
8. LOAD BACKREST EXTENSION
9. SEAT BELT AND HIP RESTRAINT BRACKET

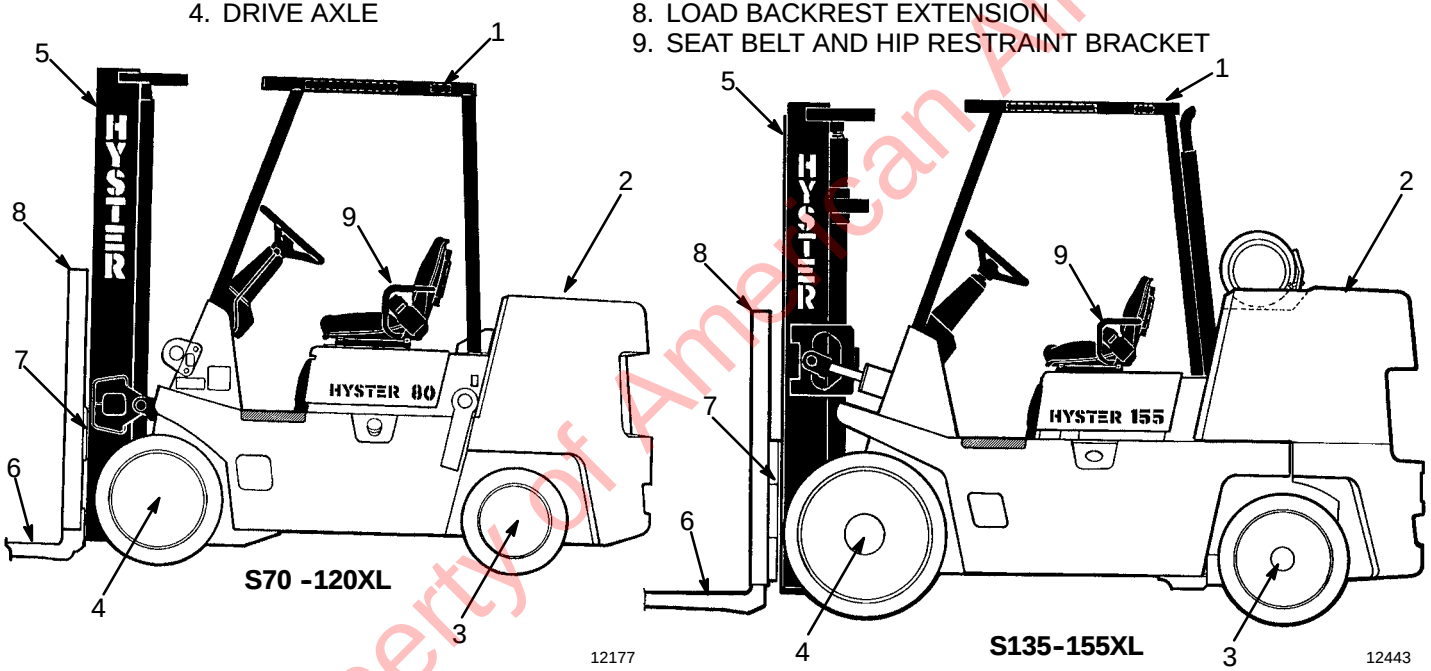

FIGURE 1. MODEL VIEW SHOWING MAJOR COMPONENTS

Property of American Airlines

https://truckmanualshub.com/

MODEL DESCRIPTION

GENERAL

This Operating Manual is for the following models of lift trucks:

- the **S70-120XL (D004) series** includes the S70XL, S80XL, S80XL BCS, S100XL, S120XLS, and S120XL
- the **S135-155XL (B024, C024) series** includes the S135XL, S135XL$_2$, S155XL, S155XL$_2$, and S155XLS.

The S70–120XL and the S135–155XL series of lift trucks are available with a gasoline engine, an LPG fuel engine, or a diesel engine.

The **S70-120XL series** of lift trucks has a single–speed powershift transmission. The lift trucks can be equipped with two kinds of controls:

- a MONOTROL® pedal that controls both the forward and reverse operation of the powershift transmission and the speed of the engine.
- a direction control lever near the left side of the steering wheel that controls the forward and reverse operation of the powershift transmission. A separate accelerator pedal controls the engine speed.

The **S135-155XL series** of lift trucks can have either a three–speed manual transmission with an oil clutch (B024 models only) or a two–speed powershift transmission.

Lift trucks with a three–speed manual transmission have two control levers on the left side of the steering wheel. One lever controls the forward and reverse direction of the lift truck and the other lever is used to select the speed range. These lift trucks have a clutch pedal and an accelerator pedal.

The two–speed powershift transmission has a range lever on the left side of the steering column to control the two speed ranges. The two–speed powershift transmission can be equipped with two kinds of controls for forward and reverse and engine speed control:

- a MONOTROL pedal that controls both the forward and reverse operation of the powershift transmission and the speed of the engine.
- a direction control lever near the left side of the steering wheel that controls the forward and reverse operation of the powershift transmission. A separate accelerator pedal controls the engine speed.

Property of American Airlines

https://truckmanualshub.com/

OPERATOR PROTECTION EQUIPMENT

The LOAD BACKREST EXTENSION is installed to keep loose parts of the load from falling back toward the operator. It must be high enough, with openings small enough to prevent the parts of the load from falling backwards. If a load backrest extension that is different from the one installed on your lift truck is required, contact your Hyster lift truck dealer.

The OVERHEAD GUARD is intended to offer reasonable protection to the operator from falling objects, but can not protect against every possible impact. Therefore, it must not be considered a substitute for good judgment and care when handling loads. Do not remove the overhead guard.

The SEAT BELT AND HIP RESTRAINT BRACKET provide additional means to help the operator keep the head and torso substantially within the confines of the lift truck frame and overhead guard if a tipover occurs. This restraint system is intended to reduce the risk of the head and torso being trapped between the lift truck and the ground, but it can not protect the operator against all possible injury in a tipover. The hip restraint bracket will help the operator resist side movement if the seat belt is not fastened. It is not a substitute for the seat belt. Always fasten the seat belt.

NAMEPLATE

⚠ WARNING

Any change to the lift truck, the tires or its equipment can change the lifting capacity. If the Nameplate does not show the maximum capacity, or if the lift truck equipment, including the battery for electric trucks, does not match that shown on the Nameplate, the lift truck must not be operated.

The capacity is specified in kilograms (kg) and pounds (lb). The capacity is the maximum load that the lift truck can handle for the load condition shown on the Nameplate.

The maximum capacity for the lift truck, at full load height, must be shown on the Nameplate. Special capacities with the load height reduced or with optional load centers, may also be shown on the Nameplate.

The lift truck serial number code is on the Nameplate. The serial number code is also stamped on the lift truck frame.

Property of American Airlines

https://truckmanualshub.com/

When a lift truck is shipped incomplete from the factory, the nameplate is covered by a label as shown in FIGURE 2. If your lift truck has this type of label, do not operate the lift truck. Contact your dealer for HYSTER lift trucks to obtain a complete nameplate.

SAFETY LABELS

Safety labels are installed on the lift truck to give information about possible hazards. It is important that all safety labels are installed on the lift truck and can be read. See FIGURE 3.

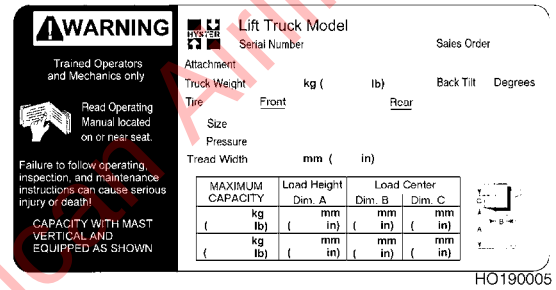

NAME PLATE

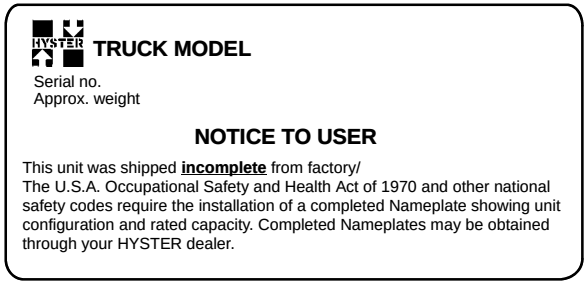

LABEL

FIGURE 2. NAMEPLATE AND LABEL

Property of American Airlines

https://truckmanualshub.com/

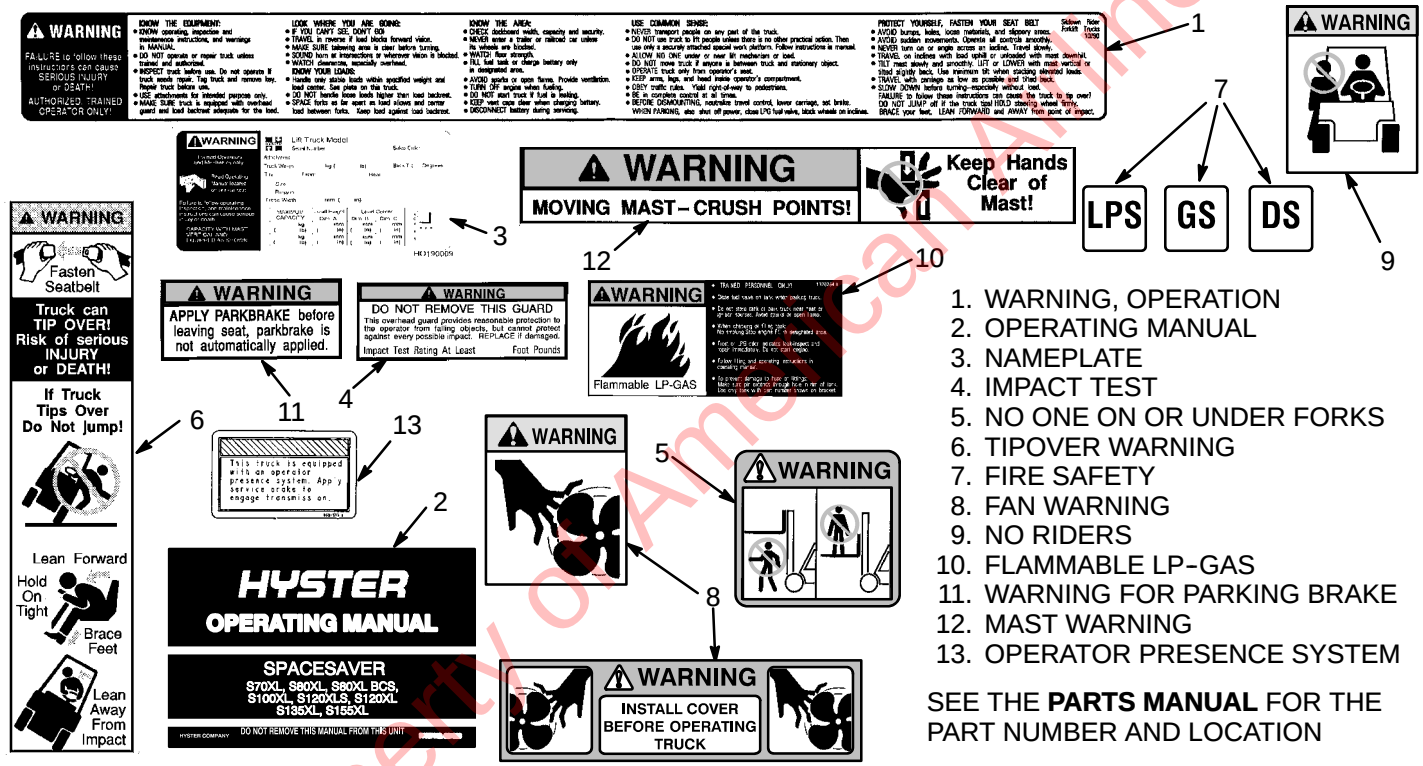

1. WARNING, OPERATION
2. OPERATING MANUAL
3. NAMEPLATE
4. IMPACT TEST
5. NO ONE ON OR UNDER FORKS
6. TIPOVER WARNING
7. FIRE SAFETY
8. FAN WARNING
9. NO RIDERS
10. FLAMMABLE LP-GAS
11. WARNING FOR PARKING BRAKE
12. MAST WARNING
13. OPERATOR PRESENCE SYSTEM

SEE THE **PARTS MANUAL** FOR THE PART NUMBER AND LOCATION

FIGURE 3. WARNING AND SAFETY LABELS

Property of American Airlines

https://truckmanualshub.com/

NOTE: THIRD–FUNCTION CONTROL LEVER (17a) IS AVAILABLE ON ALL UNITS

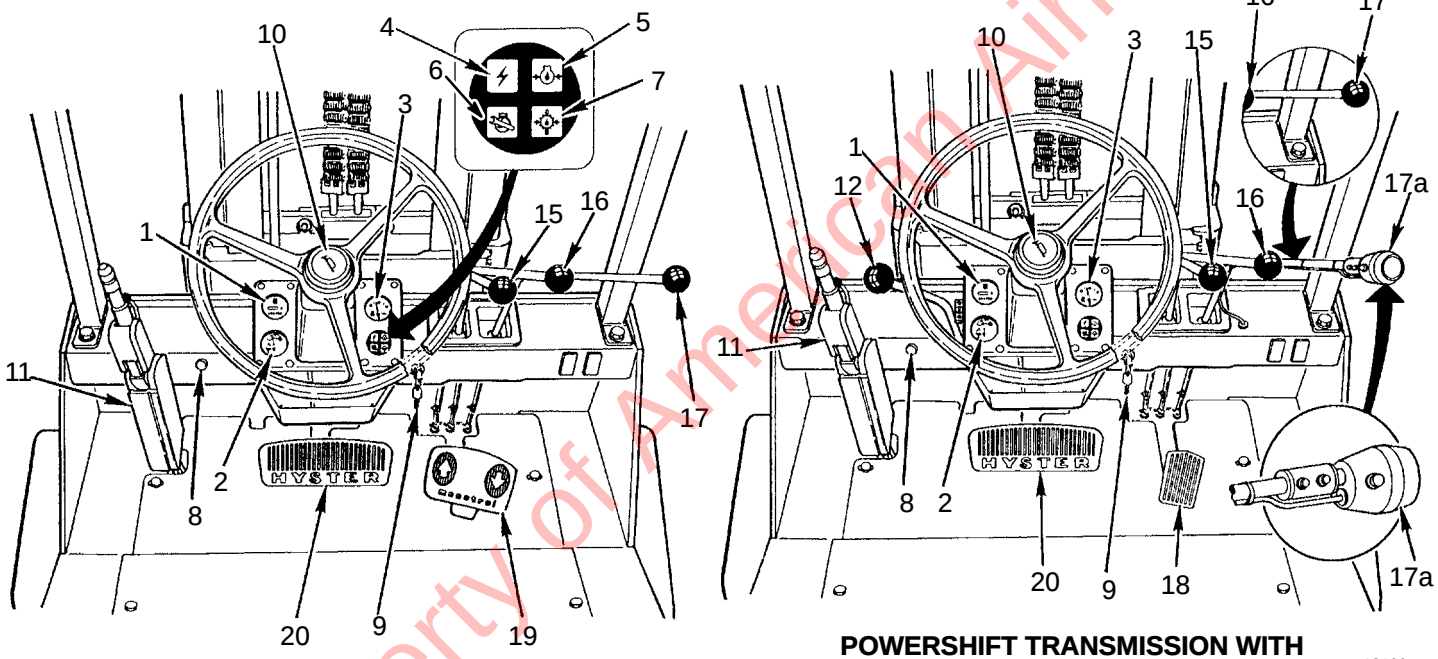

POWERSHIFT TRANSMISSION WITH MONOTROL PEDAL

POWERSHIFT TRANSMISSION WITH DIRECTION CONTROL LEVER

FIGURE 4. CONTROLS AND INSTRUMENTS, S70–120XL

Property of American Airlines

https://truckmanualshub.com/

NOTE: THIRD–FUNCTION CONTROL LEVER (17a) IS AVAILABLE ON ALL UNITS

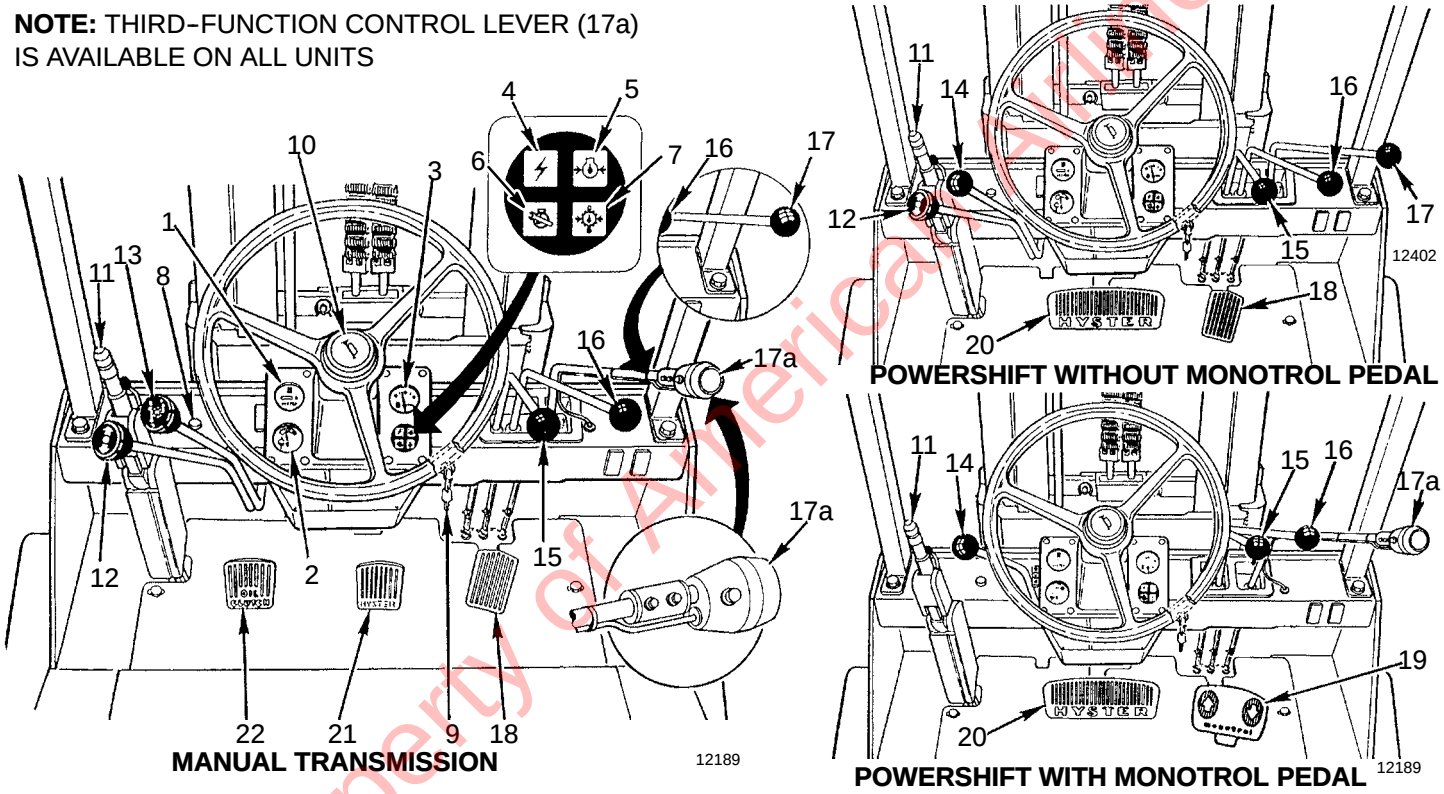

FIGURE 5. CONTROLS AND INSTRUMENTS, S135–155XL

Property of American Axles

https://truckmanualshub.com/

INSTRUMENTS AND CONTROLS
(See TABLE 1., TABLE 2., TABLE 3., FIGURE 4., and FIGURE 5.)

WARNING

If any of the instruments, levers, or pedals do not operate as described in the following tables, report the problem immediately. DO NOT operate the lift truck until the problem is corrected.

TABLE 1. INSTRUMENTS

ITEM NO.	ITEM	FUNCTION
1	Hour Meter	The hour meter operates when the key switch is in the **ON** position. Periodic Maintenance recommendations are based on these hours.
2	Coolant Temperature Gauge	Indicates engine coolant temperature when the key switch is in the **ON** position. During normal operation, the needle will indicate in the green zone of the gauge. **CAUTION** **Do not continue to operate the lift truck when the gauge indicates that the engine is too hot (needle in the red zone).**

Property of American Airlines

https://truckmanualshub.com/

ITEM NO.	ITEM	FUNCTION
3	Fuel Gauge	Indicates the amount of fuel in the gasoline or diesel fuel tank.
4	Warning Light, Alternator	The red light will be **ON** when the key switch is **ON** and the engine is not running. **CAUTION** **Do not continue to operate the lift truck if the red light is ON at engine speeds above idle.**
5	Warning Light, Engine Oil Pressure	The red light is **ON** when the key switch is in the **START** position. **CAUTION** **Stop the engine immediately if the light is ON when the engine is running.**
6	Warning Light, “Check Engine”	Lift trucks with electronic engine control (electronic spark timing and fuel injection). This light will be **ON** when the key switch is **ON** and the engine is not running. This light will illuminate when the ECM computer senses a fault in the operation of the engine. If the engine will start, the operation of the engine will not be correct until the fault is corrected. A trained service person must make repairs and adjustments if this light is **ON** when the engine is running.

Property of American Airlines

https://truckmanualshub.com/

ITEM NO.	ITEM	FUNCTION
7	Warning light, Powershift Transmission Oil Temperature **or** Oil Pressure for Clutch, Manual Transmission (S135–155XL)	**Powershift Transmission:** The red light is **ON** when the key switch is in the **START** position. **Manual Transmission:** The red light is **ON** when the oil pressure in the clutch system is too low for continued operation. The red light is **ON** when the key switch is **ON** and the engine is not running. **CAUTION** **Do not continue to operate the lift truck if the light is ON during operation.**

Property of American Airlines

https://truckmanualshub.com/

TABLE 2. CONTROLS		
ITEM NO.	**ITEM**	**FUNCTION**
8	Cold Start Aid	The cold start aid is used on lift trucks with a diesel engine. For S70–120XL lift trucks, the control button is to the left of the steering column. On S135XL, S155XL lift trucks, the control button is on the top of the instrument panel. The key switch must be in the **ON** position before the cold start aid can be energized.
9	Key Switch 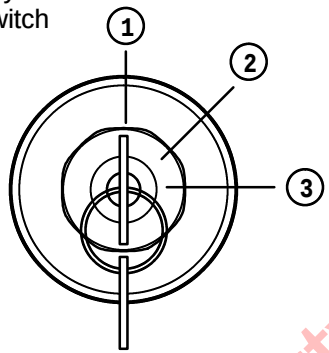	The key switch has three positions: No. 1 Position: **OFF** position. Deenergizes all electric circuits except for the horn and headlights. No. 2 Position: **ON** position. Energizes all electric circuits except the starter circuit. The key switch will be in this position during normal operation. No. 3 Position: **START** position. Energizes the starter motor for starting the engine. A spring returns the key to position No. 2 (**ON** position) when the key is released. **NOTE:** There is a mechanical lockout that prevents the key switch from being returned to the **START** position without first being returned to the **OFF** position.
10	Horn	The horn button controls the operation of the horn.

Property of American Airlines

https://truckmanualshub.com/

ITEM NO.	ITEM	FUNCTION
11	Parking Brake Lever	The lift truck is equipped with a lever to apply the parking brake. Pull the lever to the vertical position to apply the parking brake. **Lift trucks with a MONOTROL pedal:** when the parking brake is applied, a switch in the starting circuit is closed so that the engine can be started. The switch also puts the transmission in **NEUTRAL**. Use your finger to release the lock on the lever when the lever is moved to release the parking brake. **WARNING** **Correct adjustment is necessary to provide adequate braking and to keep the parking brake lever in the engaged position. See the Maintenance section for adjustment procedures.** **Always apply the parking brake when leaving the lift truck.**
12	Direction Control Lever 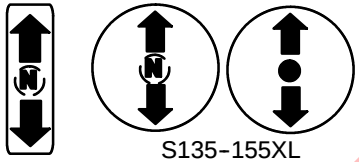 S70–120XL S135–155XL	The direction control for the transmission is to the left of the steering column. The direction control lever is used on lift trucks with a manual transmission and those lift trucks with a powershift transmission without a MONOTROL pedal. The direction control lever has three positions: **FORWARD**, **NEUTRAL (N)**, and **REVERSE**. Move the lever to one of the direction positions for travel. **NOTE:** The direction control lever must be in the **NEUTRAL (N)** position before the engine can be started.

Property of American Airlines

https://truckmanualshub.com/

ITEM NO.	ITEM	FUNCTION
13	Range Lever (Manual Transmission) (S135-155XL) 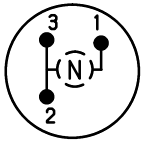	The range lever is located to the left of the steering column. This lever controls the three speed ranges of the S135-155XL manual transmission.
14	Range Lever (Powershift Transmission) (S135-155XL Only)	The range lever for the transmission is to the left of the steering column. The range lever controls the two speed ranges of the powershift transmission.
15	Lift/Lower Control Lever	The lift/lower control lever is the first lever to the right of the steering wheel. Pull backward on the control lever to raise the carriage and forks. Push the control lever forward to lower the carriage and forks.
16	Tilt Control Lever	The tilt control lever is on the right of the lift/lower control lever. Push the control lever forward to tilt the upright and forks forward. Pull backward on the control lever to tilt the upright and forks backward.

Property of American Airlines

https://truckmanualshub.com/

ITEM NO.	ITEM	FUNCTION
17	Control Lever for Auxiliary Hydraulic Functions See TABLE 3.	The control lever for auxiliary hydraulic functions is installed to the right of the tilt control lever. This control lever actuates a control spool in the control valve for a single function attachment and two control spools for a two-function attachment. **Single Function Operation:** The lever is spring-loaded to the left and must be pushed to the right before operating the auxiliary function. **Two Function Operation:** The lever is spring-loaded to the left and will operate one auxiliary function in this position. The lever must be pushed to the right before operating the other auxiliary function.

Property of American Airlines

https://truckmanualshub.com/

ITEM NO.	ITEM	FUNCTION
17a	Control Lever and Switch for Optional Auxiliary Hydraulic Functions See TABLE 3. 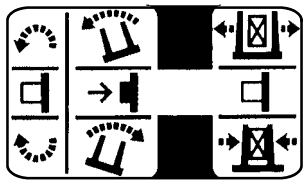	**Three-Function Operation:** The control lever will have a special knob with a button. The button permits the lever to control three functions of an attachment. The button operates a function only when the control lever is in the left position. When the button is pushed, the third auxiliary function will operate when the control lever is moved forward or backward. This option is often used with an attachment for moving paper rolls as described in the following example: Button not depressed: Push the control lever forward to rotate the attachment to the left. Pull the control lever backward to rotate the attachment to the right. Button depressed: Push the control lever forward to swing the attachment to the left. Pull the control lever backward to swing the attachment to the right. Push the control lever to the right and forward to open the clamp. Push the control lever to the right and pull backward to close the clamp.
18	Accelerator Pedal 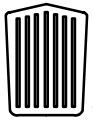	This pedal controls the engine speed and is operated by the operator's right foot. It is used on units that have a direction control lever.

Property of American Airlines

https://truckmanualshub.com/

ITEM NO.	ITEM	FUNCTION
19	MONOTROL Pedal (Powershift Transmission Only) 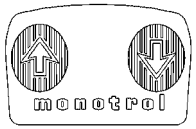	The MONOTROL pedal controls the speed and direction of the lift truck. Pushing on the right side of the pedal causes the lift truck to move in **REVERSE**. Pushing on the left side of the pedal causes the lift truck to move in **FORWARD**. The speed of the engine increases as the pedal is depressed.
20	Inching/Brake Pedal (Powershift Transmission)	By varying the position of the inching/brake pedal, the operator can move the lift truck slowly while a high engine speed is used for lifting loads. Completely depressing the pedal disengages the transmission and applies the service brakes. The engine can be started when the inching/brake pedal is fully depressed.
21	Brake Pedal (Manual Transmission) (S135–155XL Only) 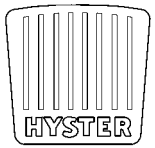	This pedal, controlled by the operator's right foot, controls the application of the service brakes.
22	Clutch Pedal (Manual Transmission) (S135–155XL Only)	The clutch pedal is located to the left of the brake pedal. This pedal, controlled by the operator's left foot, controls clutch engagement for the transmission and inching operations.

Property of American Airlines

https://truckmanualshub.com/

TABLE 3. AUXILIARY CONTROL LEVERS

FUNCTION The control levers will be arranged in the following order from left to right.		DIRECTION OF MOVEMENT	
		LOAD OR EQUIPMENT	CONTROL LEVER
1	REACH	Retract / Extend	Backward/Forward
2	SIDE SHIFT	Right / Left	Backward/Forward
3	PUSH - PULL	Backward / Forward	Backward/Forward
4	ROTATE	Clockwise / Counterclockwise	Backward/Forward
5	UPENDER	Up / Down	Backward/Forward
6	SCOOP	Up / Down	Backward/Forward
7	LOAD STABILIZER	Down (Clamp) / Up (Release)	Backward/Forward
8	SWING (FORKS)	Right / Left	Backward/Forward
9	SWING (CLAMP)	Right / Left	Backward/Forward
10	L.H. FORK POSITIONER	Together / Apart	Backward/Forward
11	R.H. FORK POSITIONER	Together / Apart	Backward/Forward
12	TURN FORK	Horizontal / Vertical	Backward/Forward
13	FORK SPREAD	Together / Apart	Backward/Forward
14	CLAMP	Clamp / Release	Backward/Forward

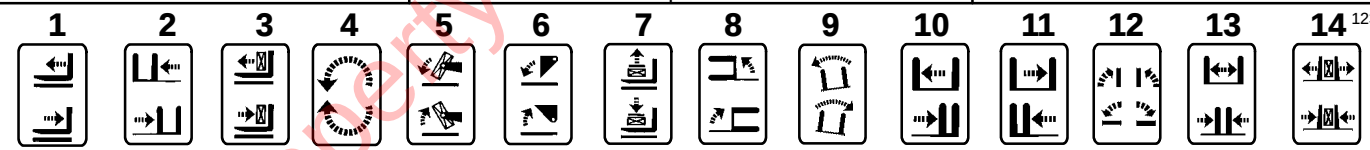

Property of American Airlines

https://truckmanualshub.com/

OPERATING PROCEDURES

GENERAL

Know Your Lift Truck

The fork lift truck is designed to pick up and move materials. The basic lift truck has a lift mechanism and forks on the front to engage the load. The lift mechanism lifts the load so that it can be moved and stacked.

In order to understand how the fork lift truck can pick up a load, you must first know some basic things about the lift truck.

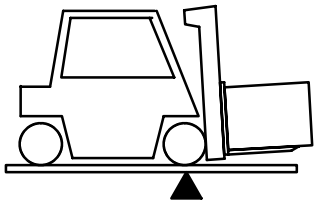

The lift truck is based on the principle of two weights balanced on opposite sides of a pivot (fulcrum). This is the same principle used for a see–saw. In order for this principle to work for a lift truck, the load on the forks must be balanced by the weight of the lift truck. The location of the center of gravity of both the truck and the load is also a factor.

This basic principle is used for picking up a load. The ability of the lift truck to handle a load is discussed in terms of center of gravity and both forward and side stability.

Stability and Center Of Gravity

The center of gravity (CG) of any object is the single point about which the object is balanced in all directions.

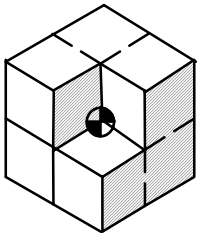

Every object has a CG. When the lift truck picks up a load, the truck and load have a new combined CG.

The stability of the lift truck is determined by the location of its CG, or if the truck is loaded, the combined CG.

Property of American Airlines

https://truckmanualshub.com/

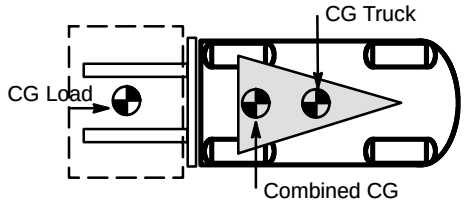

The lift truck has moving parts and therefore has a CG that moves. The CG moves forward and back as the mast is tilted forward and back. The CG moves up and down as the mast moves up and down.

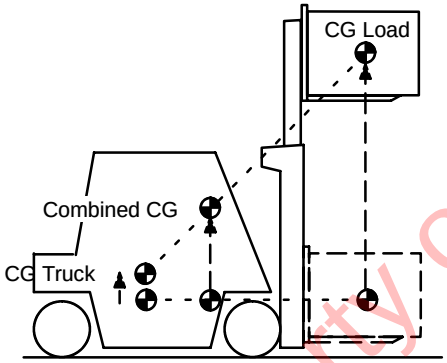

The center of gravity, and therefore the stability, of the loaded lift truck is affected by a number of factors, such as size, weight, shape, and position of the load; the height to which the load is raised; the amount of forward and backward tilt; tire pressure; and the dynamic forces created when the truck is moving. These dynamic forces are caused by things like acceleration, braking, turning, and operating on uneven surfaces or on an incline. These factors must be considered when traveling with an unloaded truck, as well, because **an unloaded truck will tip over to the side easier** than a loaded truck with its load in the lowered position.

In order for the lift truck to be stable (not tip over forward or to the side) the CG must stay within the area of the lift the truck represented by a triangle drawn between the drive wheels and the pivot of the steering axle.

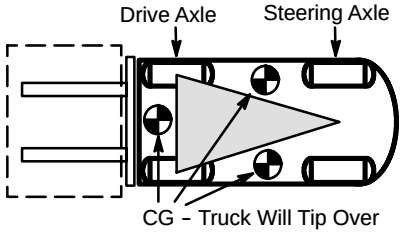

If the CG moves forward of the drive axle, the lift truck will tip forward. If the CG moves outside of the line represented by the lines drawn between the drive wheels and the steering axle pivot, the lift truck will tip to that side.

Property of American Airlines

https://truckmanualshub.com/

Capacity (Weight and Load Center)

The capacity of the lift truck is shown on the Nameplate. The capacity is listed in terms of weight and load center. The weight is specified in kilograms and pounds. The load center is specified in millimeters and inches. The capacity is the maximum load that the lift truck can handle for the load condition shown on the Nameplate.

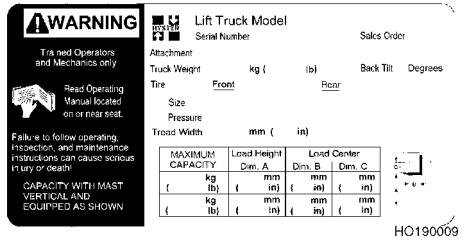

The load center of a load is determined by the location of its center of gravity. The load center is measured from the front face of the forks, or the load face of an attachment, to the center of gravity of the load. Both the vertical and horizontal load centers are specified on the Nameplate.

For carriages or attachments that can be sideshifted, the Nameplate specifies capacities in the “Centered” and “Sideshifted” conditions. Capacities listed under “Centered” on the Nameplate apply when transporting loads that are centered on the centerline of the lift truck. Capacities listed under “Sideshifted” on the Nameplate apply if loads are transported that are not centered on the centerline of the lift truck. Loads should be transported while centered on the centerline of the lift truck.

The operator must know whether or not a load is within the maximum capacity of the lift truck before the load is handled.

INSPECTION BEFORE OPERATION

Checks With the Engine Stopped

Inspect the lift truck before use and every eight hours or daily as described in the MAINTENANCE section of this **OPERATING MANUAL**.

Before using the lift truck, make the following checks:

- Fuel level (if the lift truck has a diesel engine, drain water from the primary filter).
- Electrolyte level of the battery (unless maintenance free).

Property of American Airlines

https://truckmanualshub.com/

- Oil level in the engine and hydraulic tank.
- Coolant level in the cooling system and condition of the drive belts.
- Condition of the radiator. Clean if necessary.
- Condition of forks, carriage, chains, mast, attachment and overhead guard.
- Leaks from the engine, transmission, hydraulic system and fuel system.
- Condition of wheels and tires.
- Seat belt latches properly.
- Seat is correctly fastened to its mounts. Hood is securely latched.

WARNING

Report damage or faulty operation immediately. Do not operate a damaged or defective lift truck. A lift truck will only do its job when it is in proper working order. If repairs are required, install a tag in the operator's area stating "DO NOT OPERATE" and remove the key from the key switch.

Starting Procedures

Do not start nor operate the lift truck, including any of its functions or attachments, from any place other than the designated operator's position.

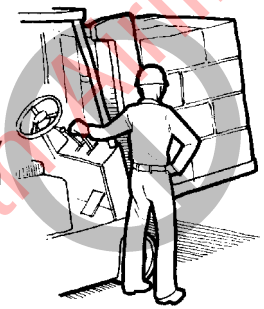

Gasoline Or LPG Engine

WARNING

LPG is very flammable. An odor of LPG fuel can indicate a leak in the fuel system. DO NOT start the engine until the fuel leak is repaired.

1. If the lift truck uses LPG fuel, open the fuel valve on the LPG tank.

2. Make sure the parking brake is applied or push on the inching/brake pedal.

Property of American Airlines

https://truckmanualshub.com/

3. If equipped, put the direction control lever for the transmission in the **NEUTRAL (N)** position.

CAUTION

Do not engage the starter for more than 30 seconds at a time. If the engine does not start, turn the key switch to OFF. Wait 60 seconds before engaging the starter again.

4. Turn the key to the **START** position to engage the starter.

5. If the engine does not start after four attempts, get help from authorized service personnel.

6. When the engine is running, check the gauges and indicator lights for the correct operation. See the Instruments And Controls section in this **OPERATING MANUAL** for a description of the correct operation.

Diesel Engine

1. Make sure the parking brake is applied or push on the inching/brake pedal.

2. If equipped, put the direction control lever for the transmission in the **NEUTRAL (N)** position.

3. Turn the key to **START** to engage the starter. If the outside temperature is 7°C (45°F) or below, crank the engine two revolutions to prime the fuel system. Turn the key to the **OFF** position. Push the **HEAT** button and hold it for 20 to 25 seconds, then engage the starter again for 10 seconds.

CAUTION

Use only approved starting aids. Use of non-approved starting aids can result in engine damage and void engine warranty.

4. If the engine does not start after four attempts, get help from authorized service personnel.

5. When the engine is running, check the gauges and indicator lights for the correct operation. See the INSTRUMENTS AND CONTROLS section for a description of the correct operation.

Property of American Airlines

https://truckmanualshub.com/

Checks With the Engine Running

WARNING

FASTEN YOUR SEAT BELT!

The seat belt is installed to help the operator stay on the truck if the lift truck tips over. IT CAN ONLY HELP IF IT IS FASTENED.

The operator must be aware that the lift truck can tip over. There is a great risk that the operator or someone else can be killed or injured if trapped or hit by the truck as it tips over. The risk of injury can be reduced if the operator stays on the truck. If the truck tips over do not jump off.

The SEAT BELT AND HIP RESTRAINT BRACKET provide a means to help the operator keep the head and torso substantially within the confines of the truck frame and overhead guard if a tipover occurs. This protection system is intended to reduce the risk of the head and torso being trapped between the truck and the ground, but it can not protect the operator against all possible injury in a tipover.

Make sure that the area around the lift truck is clear before starting the engine or making any operational checks. Be careful when making the checks. If the lift truck is stationary during a check, apply the parking brake and put the transmission in **NEUTRAL**. Proceed carefully.

Check the operation of the following functions as described in the MAINTENANCE section.

- Check the operation of the horn, gauges and indicator lights.
- Check the oil level in the transmission:

Property of American Airlines

https://truckmanualshub.com/

Powershift transmission when the direction control lever is in **NEUTRAL** and the engine is running at idle speed.

Oil clutch when the direction control lever is in **NEUTRAL** and the engine is running at idle speed.

- Operate the **LIFT**, **TILT**, and auxiliary functions to check for the correct operations.
- Check the operation of the transmission, MONOTROL pedal or the direction control lever and accelerator pedal.
- Check the operation of the service brakes and parking brake.
- Check the operation of the steering system.

OPERATING TECHNIQUES

⚠ WARNING

Before operating the lift truck FASTEN YOUR SEAT BELT.

There are a number of operations, if not performed carefully, that can cause the lift truck to tip. If you have not read the WARNING page in the front of this Operating Manual, do so NOW. As you study the following information about how to properly operate a lift truck, remember the WARNINGS.

NOTE: Lift trucks manufactured before November 1, 2005 are equipped with the Automatic Locking Retractor (ALR) type seat belts. The seat belt must fasten securely. Make sure the seat belt extends and retracts smoothly and is not frayed or torn. If the seat belt is damaged or does not operate properly, it must be replaced.

NOTE: Lift trucks manufactured after November 1, 2005 are equipped with the Emergency Locking Retractor (ELR) style seat belt. When the ELR seat belt is properly buckled across the operator, the belt will permit slight operator repositioning without activating the locking mechanism. If the truck tips, travels off a dock, or comes to a sudden stop, the locking mechanism will be activated and hold the operator's lower torso in the seat.

Basic Operating Procedures

Many people make the mistake of thinking that operating a lift truck is the same as driving an automobile. This is not true. It is true that some lift truck operating procedures are

Property of American Airlines

https://truckmanualshub.com/

as simple and obvious as driving the family automobile. (e.g. Look where you are going, start and stop smoothly, etc.) But a lift truck is a special machine designed to do a much different job than an automobile. Because of the close areas in which a lift truck operates and its other operating characteristics (like rear wheel steering and tail swing), every operator must receive additional training, even if they have a license to drive an automobile.

The following discussion lists basic procedures applicable to lift truck operation.

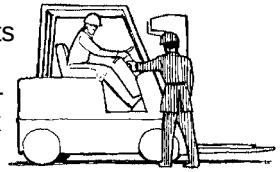

1. AUTHORIZED AND TRAINED OPERATOR ONLY. This means the operator must be trained to drive the lift truck and it means that the operator must thoroughly understand the procedures for lift truck operation. It also means that a qualified person experienced in lift truck operation must guide the operator through several driving and load handling operations before the operator attempts to operate the lift truck alone. A basic education in proper driving and load handling techniques is absolutely necessary to prepare the new operator for proper defensive driving and to expect the unexpected.

2. Operate the lift truck only in areas that have been approved for lift truck operation.

Certain areas contain hazardous flammable gases, liquid, dust, fibers or other materials. Lift trucks that are operated in these areas must have special fire safety approval.

These areas must be designated to show the type of lift truck approval required for operation in the area. Changes to special equipment or poor maintenance can make the lift truck lose its special approval.

3. NO RIDERS. A lift truck is built for only one person -- the operator. It is dangerous for anyone to ride on the forks or anywhere else on the lift truck.

Property of American Airlines

https://truckmanualshub.com/

WARNING

This lift truck is designed and intended for handling materials. A lift truck is not designed to lift people and may not meet the requirements of ANSI A92.6 for lifting people. Do not use a lift truck to lift people unless it has been determined that there is no other practical option (scaffolds, elevated work platforms, aerial baskets, etc.) to perform the needed work.

If a lift truck is used to elevate a worker, a safety platform must be attached to the forks and carriage. The platform must be specially built to meet or exceed the requirements of ANSI B56.1. It must have a solid floor with a surface to prevent the feet of the worker from slipping, hand rail, toe board and a screen or shield at least 2 metres (7 feet) high between the people on the platform and the lift mechanism.

Before anyone is allowed in the platform, lift and lower the mast slowly with the platform in place to make sure the mast functions properly. Apply the parking brake. Do not travel with people in the platform. The operator must remain at the controls. Watch for overhead obstructions.

4. Do not drive a lift truck into an elevator unless authorized to do so. Approach the elevator slowly. After the elevator is properly leveled, the lift truck must be centered so that the elevator is balanced.

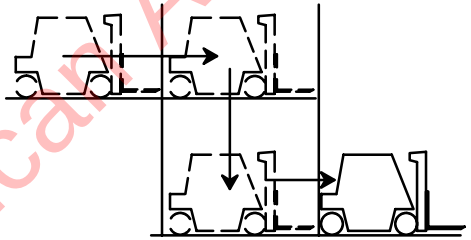

When the lift truck is in the proper position in the elevator, set the brakes, put the controls in **NEUTRAL** and shut off the power. It is advisable that all other personnel leave the elevator before the lift truck enters or leaves.

5. Drive carefully, observe traffic rules and be in full control of the lift truck at all times. Be completely familiar with all the driving and load handling techniques contained in this **OPERATING MANUAL**.

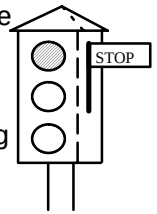

Property of American Airlines

https://truckmanualshub.com/

Driving And Direction Changes

The S70–120XL lift trucks have a single–speed powershift transmission. The S135–155XL lift trucks can have either a three–speed manual transmission and oil clutch or a two–speed powershift transmission. The following paragraphs describe how to operate the transmissions.

MANUAL TRANSMISSION

When the lift truck has a manual transmission, it will also have a clutch pedal and two control levers. One control lever is for direction control and the other control lever is for the speed range.

To move the lift truck, release the parking brake. Depress the clutch pedal and select the first or second gear (first gear if the load is heavy or the lift truck is on a grade). Select the **FORWARD** or **REVERSE** direction as required. Slowly release the clutch pedal while the engine speed is increased with the accelerator pedal. When the lift truck is moving easily, depress the clutch pedal and select the next higher gear. Again release the clutch pedal while slowly increasing the engine speed.

If the lift truck begins to slow down because of the load or a grade, select a lower gear. (Do not select first gear when the lift truck is moving.) When second gear is selected from third gear, increase the engine speed before changing to the lower gear. Also change to a lower gear before traveling down a steep grade.

To change directions, apply the brakes and depress the clutch pedal to stop the lift truck. Move the direction control lever to select the opposite direction. Select the first or second gear as necessary. Select a higher gear as necessary when traveling.

CAUTION

Stop the lift truck to change the direction of travel.

Stop the lift truck before selecting first gear. The transmission can be damaged if first gear is selected while the lift truck is moving.

POWERSHIFT TRANSMISSION

The transmission can have either a MONOTROL pedal or a direction control lever. If the lift truck has a MONOTROL pedal, push on the left side of the pedal to go **FORWARD** or the right side of the pedal to go in **REVERSE**. If the truck has a direction control lever, move the lever toward the front of the lift truck to go **FORWARD**. Move the lever toward the rear of the lift truck to go in **REVERSE**. To move the lift truck, push on the inching/brake pedal and release the parking brake. Then push down on the MONOTROL pedal

Property of American Airlines

https://truckmanualshub.com/

or the accelerator pedal while the inching/brake pedal is released.

CAUTION

The drive train can be damaged if the lift truck is traveling too fast when the controls are changed to the opposite direction.

The operator of a lift truck with a powershift transmission can select the opposite direction at slow travel speeds (less than a walking speed), but the mast must not be raised. If the lift truck is moving rapidly, slow to a walking speed before changing the direction of travel.

Operator Presence System

WARNING

Always make sure the parking brake is fully applied before leaving the lift truck. If the operator leaves the lift truck while in operation mode, a operator presence module will shift the transmission to neutral, and sound an alarm for 10 seconds. If the lift truck is left on a grade, without the parking brake fully applied, it can free-wheel down the grade, possibly causing injury or property damamge.

Lift trucks produced after November 1. 2005 are equipped with an Operator Presence System (OPS). The OPS feature has an electrical switch in the seat which senses the presence of the operator and a operator presence module which disengages the transmission. This allows the transmission in internal combustion engine trucks to be engaged only when the operator is in the seat. The OPS is designed with slight delay in the seat switch to allow the operator to reposition himself without disengaging the transmission. When the operator presence module disengages the transmission (neutral position), the operator must depress the service brake to re-engage the traction (travel mode).

The operators presence module will automatically shift the transmission to neutral within 1-2 seconds when the operator leaves the seat of the lift truck.

Inching

WARNING

Inching requires coordinated movement of the inching/brake pedal and the accelerator or the MONOTROL pedal. New operators must practice this procedure before attempting to handle loads.

Property of American Airlines

https://truckmanualshub.com/

Inching is the movement of a lift truck that allows a slow travel speed while keeping the engine speed high for fast operation of the lift mechanism.

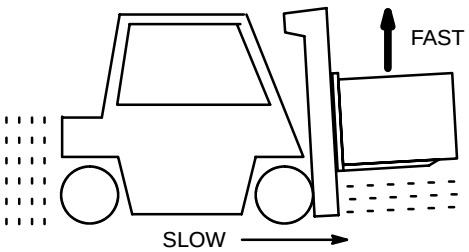

The inching/brake pedal is used to control the inching operation on a lift truck with a powershift transmission. When the inching/brake pedal is applied, the clutch in the transmission is partially disengaged and the movement of the truck is slow. When the inching/brake pedal is fully applied, the transmission is completely disengaged and the brakes are applied. Use the accelerator pedal or MONOTROL pedal to keep the engine speed high while inching.

If the lift truck is equipped with a manual transmission, the inching operation is done by not fully applying the clutch and using the accelerator pedal to keep the engine speed high.

Steering (Turning)

⚠ WARNING

TRAVEL SLOWLY WHEN TURNING. Lift trucks can tip over even at very slow speeds. The combination of speed and

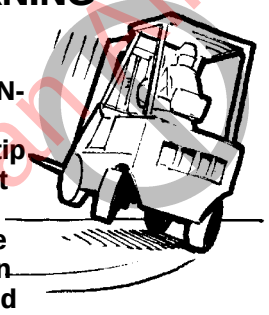

sharpness of a turn can cause a tipover. A lift truck is less stable when the forks are elevated, with or without a load. Most operators can understand the need to be careful when handling loads. But some operators do not realize that a tipover can occur with an empty lift truck because similar dynamic forces are present. In fact, the lift truck will actually tip over easier when empty, than when loaded with the load lowered. Rear-

Property of American Airlines

https://truckmanualshub.com/

ward tilt, off-center loads and uneven ground will aggravate these conditions.

WARNING

IF THE LIFT TRUCK TIPS OVER, DO NOT JUMP OFF! HOLD FIRMLY TO STEERING WHEEL, BRACE YOUR FEET, AND LEAN FORWARD AND AWAY FROM THE POINT OF IMPACT.

WARNING

Failure to observe the tail swing area when making a turn can injure or kill someone.

Because lift trucks are designed to work in a relatively small space, they can turn sharper than some other vehicles.

Most lift trucks are steered by the rear wheels and the rear of the lift truck can move to the side very fast during a turn. This movement is called “tail swing”. An operator must be aware of tail swing and always check to make sure the tail swing area is clear before turning.

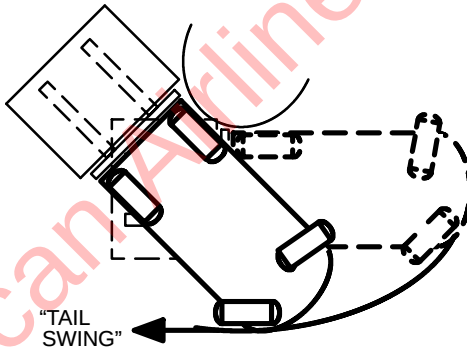

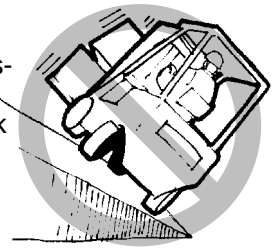

Do not turn on an incline. To reduce the possibility of a tip-over, a lift truck must not be driven across an incline.

When possible, keep both hands on the steering wheel. During most loading or unloading operations, the operator

Property of American Airlines

https://truckmanualshub.com/

steers with the left hand. The right hand is used to operate the lift, tilt, and attachment controls.

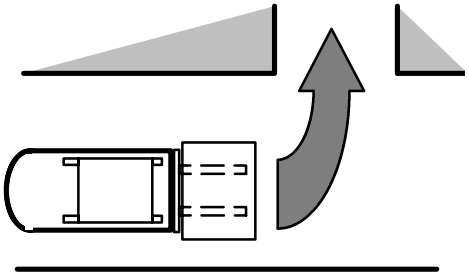

When turning the lift truck from a wide aisle into a narrow aisle, start the turn as close to the opposite stock pile as tail swing will permit. This action permits the lift truck to enter the narrow aisle going straight ahead.

Load Handling, General

1. The capacity is the maximum load that the lift truck can handle for the load condition shown on the Nameplate. The operator must know whether or not a load is within the maximum capacity of the lift truck before the load is handled.

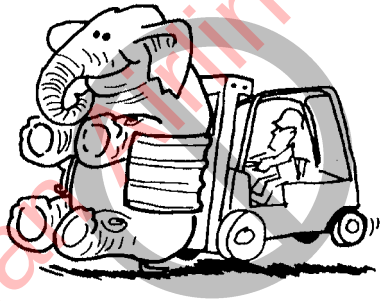

However, such factors as weak floors, uneven terrain, special load handling attachments or loads having a high center of gravity can mean that the safe working load is less than the rated capacity. When such conditions exist, the operator must reduce the load so that the lift truck will remain stable.

⚠ WARNING

Do not handle a load if any loose part of it is above the load backrest or any part of the load is likely to fall.

2. Handle only stable loads. A load can have unstable items that can easily shift and fall on someone.

Property of American Airlines

https://truckmanualshub.com/

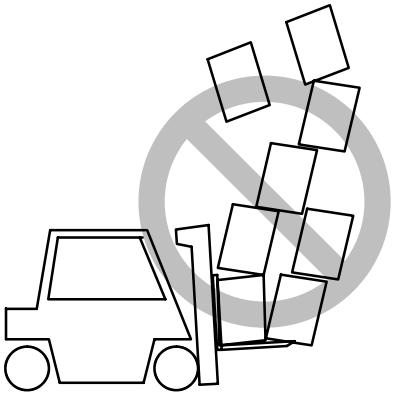

3. Position each fork the same distance from the center of the carriage. This action will help center the load on the carriage. Set the forks as far apart as possible for maximum support of the load. Center the weight of the load between the forks.

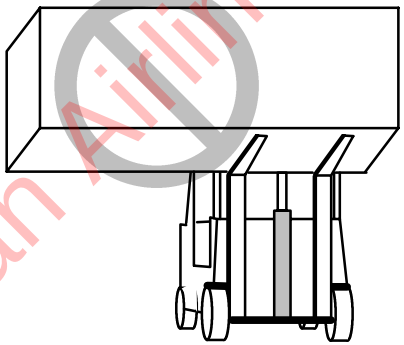

If the weight of the load is not centered between the forks, the load can fall from the forks when you turn a corner or hit a bump. An off-center load will increase the possibility of the truck tipping over to the side.

Make sure the pins that keep the forks in position are engaged so that the forks cannot move.

4. For carriages or attachments that can be sideshifted, the load should be centered on the centerline of the lift truck before the load is transported. Capacities listed under “Centered” on the Nameplate apply when transporting loads that are centered on the centerline of the lift truck. Capacities listed under “Sideshifted” on the Nameplate apply if loads

Property of American Airlines

https://truckmanualshub.com/

are transported that are not centered on the centerline of the lift truck.

5. Check the condition of the driving surface. Make sure the floor will support the weight of the lift truck and the load.

Load Handling, Lifting, Lowering, And Tilting

WARNING

Keep yourself and all others clear of the lift mechanism. Never allow anyone under or on the forks.

NEVER put hands, arms, head or legs through the mast or near the

carriage or lift chains. This warning applies not only to the operator but also a helper. A helper must not be near the load or lift mechanism while the operator is attempting to handle a load. The lift mechanism has moving parts with close clearances that can cause serious injury.

The **LIFT** and **TILT** functions are controlled by separate levers. See the **Instruments and Controls** section for the correct operation.

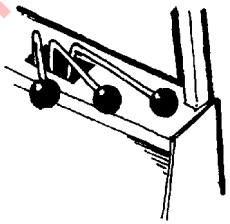

The speed of the hydraulic functions is controlled by the position of the control levers and the speed of the engine. The farther the hand lever is moved from the **NEUTRAL** position, the faster the speed of the hydraulic function.

Do not lift or hit anything that can fall on the operator or a bystander. Remember, a lift truck equipped with a HYSTER overhead guard and load backrest extension provides reasonable protection to the operator from falling objects, but can not protect against every possible impact.

Property of American Airlines

https://truckmanualshub.com/

A lift truck without an overhead guard provides no such protection and other personnel have no overhead protection. Avoid hitting objects such as stacked material that could become dislodged and fall.

The operator must exercise care while working near such objects. Whether the lift truck is loaded or empty, do not travel with the load or carriage in a raised position.

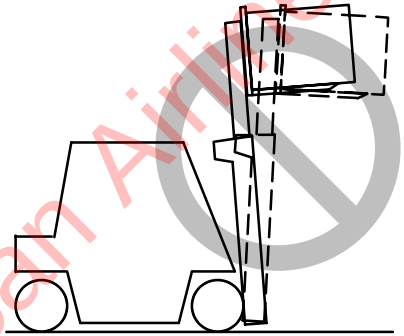

WARNING

The lift truck can tip over forward when the load is raised. Forward tipping is even more likely when tilting forward, braking when traveling forward or accelerating in reverse.

Lift and lower with the mast vertical or tilted slightly backward from vertical. Tilt elevated loads forward only when directly over the unloading place. If the lift mechanism is raised to pick up or deposit a load, keep the tilt angle in either direction to a minimum. Backward and forward tilt are helpful, but they affect side and forward stability. Do not tilt in either direction more than necessary when handling a

Property of American Airlines

https://truckmanualshub.com/

load that is raised. The lift truck can tip forward if the mast is tilted forward with a load in the raised position.

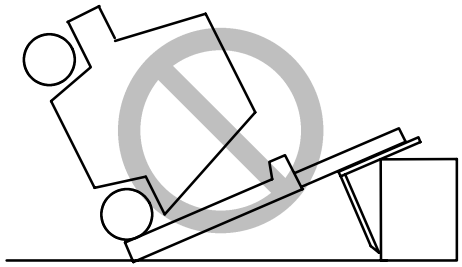

IF THE LIFT TRUCK TIPS OVER, DO NOT JUMP OFF! HOLD FIRMLY TO STEERING WHEEL, BRACE YOUR FEET, AND LEAN AWAY FROM POINT OF IMPACT.

Load Handling, How To Engage And Disengage A Load

1. Avoid fast starts. Sudden movement can cause the lift truck to tip. People can be hurt or killed and material can be damaged.

Approach the load carefully. Make sure that the truck is perpendicular to the load. Raise the forks to the proper height for engaging the load.

2. Move forward slowly until the forks are in position under the load. The forks must support at least two-thirds ($^2/_3$) of the length of the load.

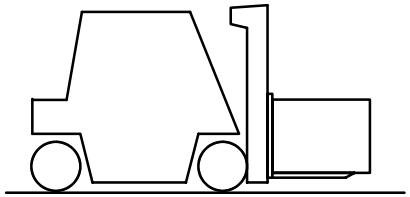

Make sure that the load is centered between the forks. Make sure that the forks do not extend past the load so that loads or equipment that are behind the load being lifted are

Property of American Airlines

https://truckmanualshub.com/

not damaged. Lift the load a small distance from the floor to make sure the lift truck has the capacity to lift the load.

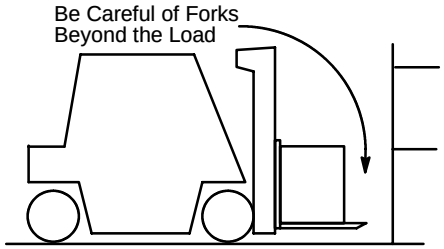

If the forks are longer than the load, move the forks under the load so that the tips of the forks do not extend beyond the load. Lift the load from the surface. Move backward a few inches, then lower the load onto the surface and inch forward to engage the load against the carriage. Tilt the mast backward just far enough to lift the load from the surface.

3. When a load is put on the floor, tilt the mast forward to a vertical position and lower the load. Tilt the mast forward to permit smooth removal of the forks. Carefully move the lift truck backward to remove the forks from under the load.

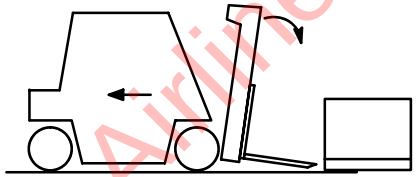

4. If the load is being removed from a stack, slowly move the lift truck away from the stack. When the load is clear of the stack, lower the load for traveling. Always travel with the load as low as possible and tilted backward. Lowering speed is controlled by the position of the control lever. Lower slowly and smoothly. Slowly return the control lever to the neutral position so that the load is not dropped or that the lift truck is not tipped over due to the rapid stop of the load.

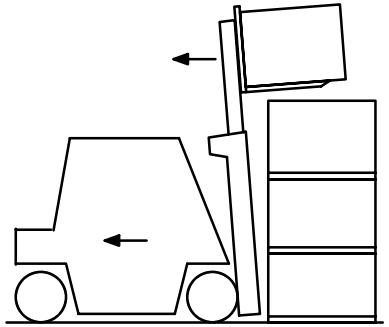

Property of American Airlines

https://truckmanualshub.com/

5. To put the load on a stack, align the lift truck with the stack. Lift the load to eye level and then tilt the load forward until it is level. Raise the load higher than the point where it will be placed. Do not raise the load to a point below where the load is to be placed and “jog” the load up into position. This operation uses added energy, particularly with an electric lift truck. Be careful not to damage or move adjacent loads.

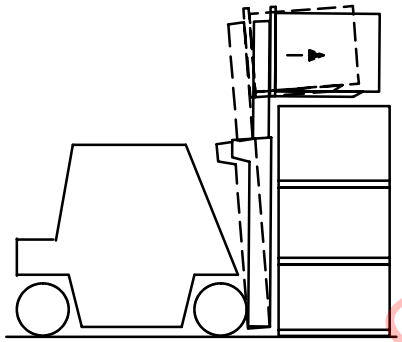

WARNING

Move carefully and smoothly when the load is raised over a stack. When the load is elevated the center of gravity of the lift truck and the load is much higher. The lift truck can tip over when the load is raised.

IF THE LIFT TRUCK TIPS OVER EITHER TO THE SIDE OR FORWARD, DO NOT JUMP OFF! HOLD FIRMLY TO STEERING WHEEL, BRACE YOUR FEET, AND LEAN FORWARD AND AWAY FROM THE POINT OF IMPACT.

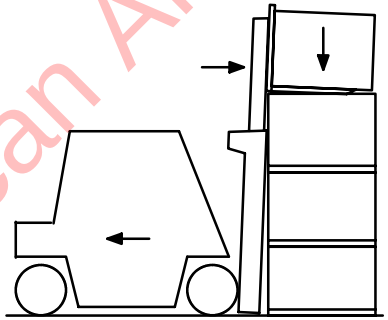

Move forward slowly. When the load is in position for lowering on a stack, tilt the mast to a vertical position and lower the load. Lower the forks just enough to remove them from under the load. Do not lower the forks so that they will drag on the surface under the load. Tilt the mast forward just enough to permit smooth removal of the forks from under the load. Carefully move the lift truck backward to remove the forks from under the load. Lower the forks when traveling.

6. When lifting round objects, use a block behind the object. Tilt the mast forward so that the forks can slide along the

Property of American Airlines

https://truckmanualshub.com/

floor under the object to be lifted. Tilt the mast fully backward to help keep the load on the forks.

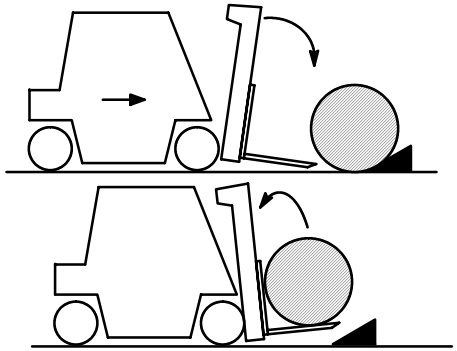

NOTE: Not every load can be lifted using only the forks of a lift truck. Some loads will require a special attachment.

Load Handling, Traveling

1. When traveling with the load lowered, keep the load against the carriage and the mast tilted fully backward. This will help keep the load on the forks and provide good forward and side stability.

2. Travel with the lift mechanism raised only enough to clear the ground or obstacles.

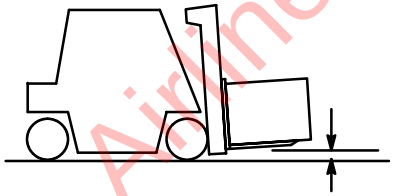

When the mast, carriage or load is in an elevated position the stability of the lift truck is reduced. This is also critical when the lift truck is not carrying a load. The ability of the lift truck to resist side tipping can be less on a lift truck without a load than it is on a lift truck with a load in the lowered (travel) position. Therefore, a lift truck without a load is more likely to tip sideways, especially in a turn, than a lift truck with a load carried in the lowered position.

⚠ WARNING

Some lift trucks have mirrors for viewing along the side to observe the tail swing area. These mirrors are an aid to the driver, but are NOT driving mirrors and must NOT be used as such when operating in reverse. Always look in the direction of travel to avoid damage to something or injury to someone.

3. For better visibility with large loads, travel with the load trailing, but always keep a proper lookout in the direction of travel. Normally, direction of travel is determined by the best

Property of American Airlines

https://truckmanualshub.com/

visibility available to the operator. If the lift truck must travel in a direction where visibility is obstructed, a lookout helper may be required.

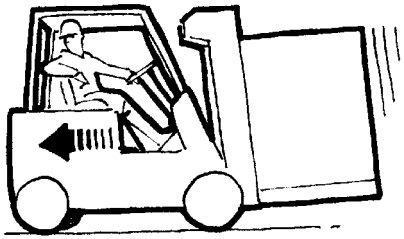

4. When traveling up or down a grade with a **heavily loaded** lift truck, keep the load upgrade to maintain control.

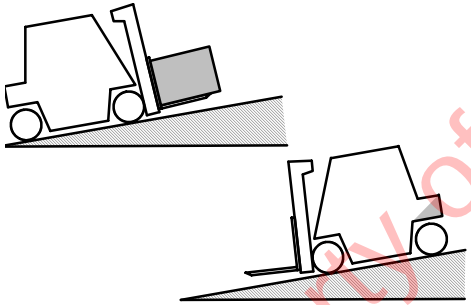

When operating an **unloaded** lift truck on a steep grade, keep the counterweight upgrade.

5. Watch out for pedestrians at all times. Do not drive up to anyone standing in front of an object.

Use extra care at cross – aisles, doorways and other locations where pedestrians can step into the path of travel of the lift truck. Slow down when approaching blind intersections or turns and sound the horn. This alarm is to warn pedestrians that there is a vehicle in the area and to be alert to possible danger.

Property of American Airlines

https://truckmanualshub.com/

6. Anytime the lift truck is moving keep arms, legs, etc., inside the operator's compartment. Arms and legs outside the machine can be injured when passing obstructions.

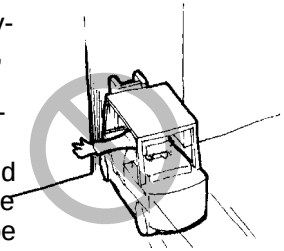

7. Avoid bumps, holes, slick spots and loose materials that may cause the lift truck to swerve or tip. If unavoidable, slow down.

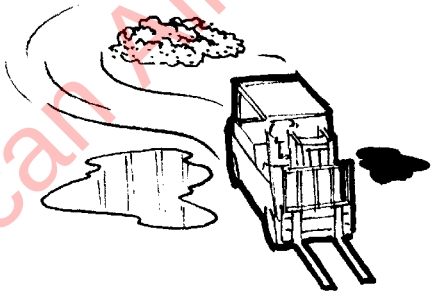

Different models of lift trucks are designed to operate under different conditions. Lift trucks with solid rubber tires are designed to operate on relatively smooth, firm surfaces. Lift trucks with pneumatic tires can adapt to more uneven ground. Always make sure you choose the smoothest route for your lift truck.

8. Watch clearances, especially forks, mast, overhead guard and tail swing. A lift truck is designed to perform a wide variety of functions within limited space. Make sure that the forks do not extend past the load so that loads or

Property of American Airlines

https://truckmanualshub.com/

equipment that are behind the load being lifted are not damaged.

Serious accidents can be caused by masts and overhead guards hitting pipes and beams near the ceiling.

9. Do not indulge in stunt driving or horseplay.

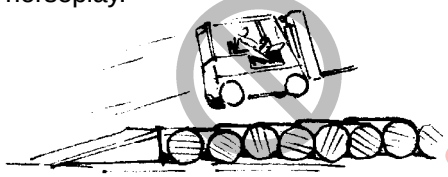

10. Do not pass another lift truck traveling in the same direction at intersections, blind spots or at other dangerous locations.

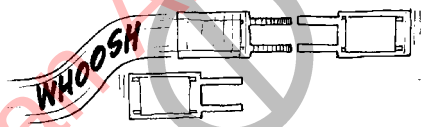

11. Stay away from the edge of the road. Keep the wheels of the lift truck, particularly the steer wheels, on the roadway. If the wheels are allowed to run off the edge of the travel surface onto soft ground, the lift truck can tip over.

Property of American Airlines

https://truckmanualshub.com/

12. Under all travel conditions, operate the lift truck at a speed that will permit it to be brought to a stop in a safe manner.

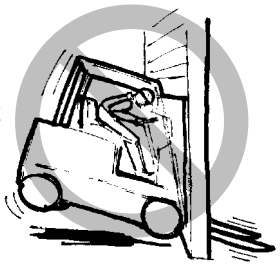

HIGHWAY TRUCKS, RAILROAD CARS AND DOCKS

WARNING

Maintain a safe distance from the edge of docks, ramps, platforms and other similar working surfaces. Watch the "tail swing".

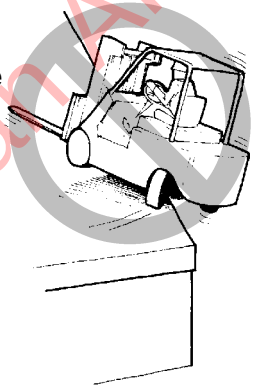

WARNING

IF THE LIFT TRUCK FALLS OFF THE DOCK, DO NOT JUMP OFF! HOLD FIRMLY TO STEERING WHEEL, BRACE YOUR FEET, AND LEAN FORWARD AND AWAY FROM THE POINT OF IMPACT.

Property of American Airlines

https://truckmanualshub.com/

Before operating in a highway truck or railroad car, observe the following:

DO NOT use a lift truck to move a railroad car.

DO NOT use a lift truck to open or close the door on a railroad car unless the lift truck has an attachment that is specifically designed for opening and closing railcar doors and the operator is trained in its use.

Check to make sure that the brakes on the highway truck are set and that wheel blocks have been placed on both sides of the rear wheels (unless a dock locking mechanism is engaged). Fixed jacks may be necessary to support the front and rear of a semi-trailer to prevent it from moving or tipping during loading or unloading.

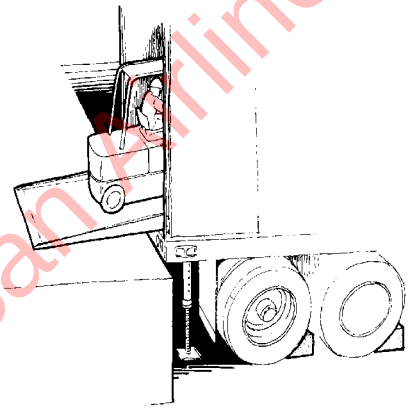

Make sure that the railroad car brakes are set and the wheels are blocked while loading or unloading. Do this so that the railroad car will not move due to the movement of the lift truck in and out of the railroad car.

Check the condition of the driving surface. Make sure the floor will support the weight of the lift truck and the load.

Make sure the dockboard is secured, in good condition and of the proper capacity.

Property of American Airlines

https://truckmanualshub.com/

When entering a railroad car the operator can enter at an angle (if the dock plate or bridge is wide enough). This will reduce the turning required after entering.

ATTACHMENTS

If an attachment is installed on the lift truck, make sure the operating

instructions are available and understood before operating the attachment. See TABLE 3. for the operation of attachment control levers.

WARNING

Make sure the Nameplate is correct if an attachment has been installed.

STOPPING

Stop the lift truck as gradually as possible. Hard braking and wheel sliding can cause the load to fall off of the forks and damage the load or hurt someone.

PARKING

The operator must never leave a lift truck in a condition so that it can cause damage and injury. When parking the lift truck, do the following operations:

1. Stop the lift truck and apply the parking brake.

2. Fully lower the forks or carriage. Tilt the mast forward until the tips of the forks touch the ground.

3. Put the direction control lever for the powershift transmission in **NEUTRAL**. If the lift truck has a manual transmission, leave the gears of the transmission engaged. DO NOT leave a manual transmission in **NEUTRAL**.

4.Turn the key switch to **OFF** to stop the engine.

5. If the lift truck must be left on an incline, put blocks on the down hill side of the wheels so that the lift truck can not move.

Property of American Airlines

https://truckmanualshub.com/

If the lift truck is equipped with an LPG fuel system and is parked more than momentarily, close the fuel valve at the tank. If the lift truck is going to be left over night or longer, the truck must be parked outside or the LPG tank must be removed and stored outside.

Do not park the lift truck so that it limits access to fire aisles, stairways, and fire equipment.

Property of American Airlines

https://truckmanualshub.com/

MAINTENANCE

GENERAL

WARNING

Do not make repairs or adjustments unless you have both authorization and training. Repairs and adjustments that are not correct can make a dangerous operating condition.

WARNING

Do not operate a lift truck that needs repairs. Report the need for repairs immediately. If repair is necessary, put a DO NOT OPERATE tag in the operator's area. Remove the key from the key switch.

This section contains a MAINTENANCE SCHEDULE and the instructions for maintenance and inspection.

The MAINTENANCE SCHEDULE has time intervals for inspection, lubrication and maintenance for your lift truck. The recommendation for the time intervals are for eight hours of operation per day. The time intervals must be decreased from the recommendations in the MAINTENANCE SCHEDULE for the following conditions:

1. If the lift truck is used more than eight hours per day.
2. If the lift truck must work in dirty operating conditions.

Your dealer for Hyster lift trucks has the equipment and trained service personnel to do a complete program of inspection, lubrication and maintenance. Regular inspection, lubrication, and maintenance will help your lift truck provide more efficient performance and operate for a longer period of time.

Some users have service personnel and equipment to do the inspection, lubrication, and maintenance shown in the MAINTENANCE SCHEDULE**.** Service Manuals are available from your dealer for Hyster lift trucks to help users who do their own maintenance.

Property of American Airlines

https://truckmanualshub.com/

HOW TO MOVE A DISABLED LIFT TRUCK

WARNING

Use extra caution when towing a lift truck if any of the following conditions exist:

1. **Brakes do not operate correctly.**
2. **Steering does not operate correctly.**
3. **Tires are damaged.**
4. **Traction conditions are bad.**
5. **The lift truck must be towed on a slope.**

If the engine cannot run, there is no power available for the hydraulic steering system and the service brakes. This condition can make the lift truck difficult to steer and stop. If the lift truck uses power from the engine to help apply the brakes, the application of the brakes will be more difficult. Poor traction can cause the disabled lift truck or towing vehicle to slide. A slope will also make the lift truck more difficult to stop.

Never lift and move a disabled lift truck unless the disabled lift truck MUST be moved and cannot be towed. A lift truck used to move a disabled lift truck MUST have a capacity rating equal to or greater than the weight of the disabled lift truck. The capacity of the lift truck used to move a disabled lift truck must have a load center equal to half the width of the disabled lift truck. See the Nameplate of the disabled lift truck for the approximate total weight. The forks must extend the full width of the disabled lift truck. Put the weight center of the disabled lift truck on load center of the forks. Be careful to not damage the under side of the lift truck.

How To Tow The Lift Truck

1. The towed lift truck must have an operator.

2. Tow the lift truck slowly.

3. Raise the carriage and forks approximately 30 cm (12 inches) from the surface. Install a chain to prevent the carriage and mast channels from moving.

4. If another lift truck is used to tow the disabled lift truck, that lift truck must have an equal or larger capacity than the disabled lift truck. Install approximately $^1/_2$ of a capacity load on the forks of the lift truck that is being used to tow the disabled lift truck. This $^1/_2$ capacity load will increase the traction of the lift truck. Keep the load as low as possible.

Property of American Airlines

https://truckmanualshub.com/

Use a towing link made of steel that attaches to the tow pins in the counterweights of both lift trucks.

How To Put A Lift Truck On Blocks

WARNING

The lift truck must be put on blocks for some types of maintenance and repair. The removal of the following assemblies will cause large changes in the center of gravity: mast, drive axle, engine and transmission, and the counterweight. When the lift truck is put on blocks, put additional blocks in the following positions to maintain stability:

1. **Before removing the mast and drive axle, put blocks under the counterweight so that the lift truck can not fall backward.**
2. **Before removing the counterweight, put blocks under the mast assembly so that the lift truck can not fall forward.**

The surface must be solid, even, and level when the lift truck is put on blocks. Make sure that any blocks used to support the lift truck are solid, one piece units.

NOTE: Some lift trucks have lifting eyes. These lift points can be used to raise the lift truck so that blocks can be installed.

How To Raise The Drive Tires (See FIGURE 6.)

1. Put blocks on each side (front and back) of the steering tires to prevent movement of the lift truck.

2. Put the mast in a vertical position. Put a block under each outer mast channel.

3. Tilt the mast fully forward until the drive tires are raised from the surface.

4. Put additional blocks under the frame behind the drive tires.

5. If the hydraulic system will not operate, use a hydraulic jack under the side of the frame near the front. Make sure that the jack has a capacity equal to at least half the weight of the lift truck. See the Nameplate.

How To Raise The Steering Tires (See FIGURE 6.)

1. Apply the parking brake. Put blocks on both sides (front and back) of the drive tires to prevent movement of the lift truck.

Property of American Airlines

https://truckmanualshub.com/

2. Use a hydraulic jack to raise the steering tires. Make sure that the jack has a capacity of at least 2/3 of the total weight of the lift truck as shown on the Nameplate.

3. Put the jack under the steering axle or frame to raise the lift truck. Put blocks under the frame to support the lift truck.

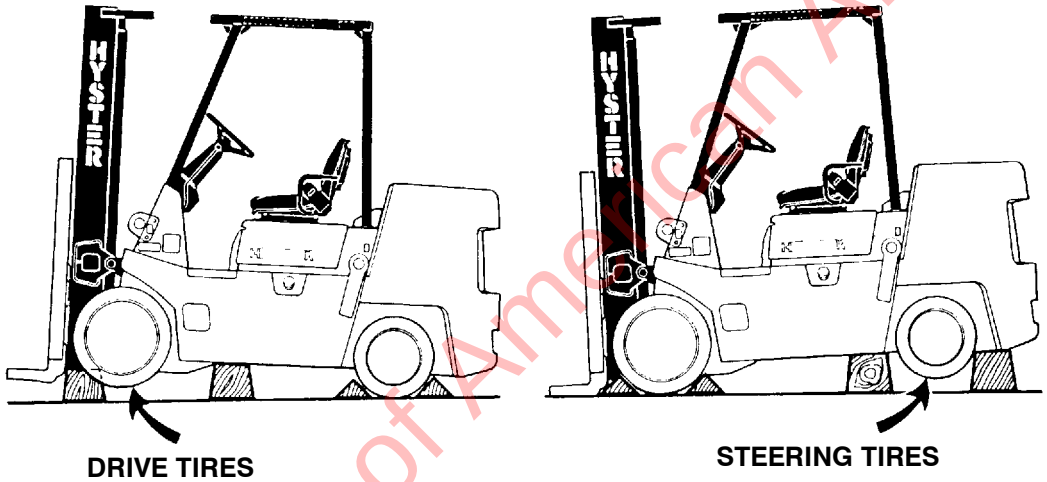

FIGURE 6. PUT THE LIFT TRUCK ON BLOCKS

Property of American Airlines

https://truckmanualshub.com/

MAINTENANCE SCHEDULE

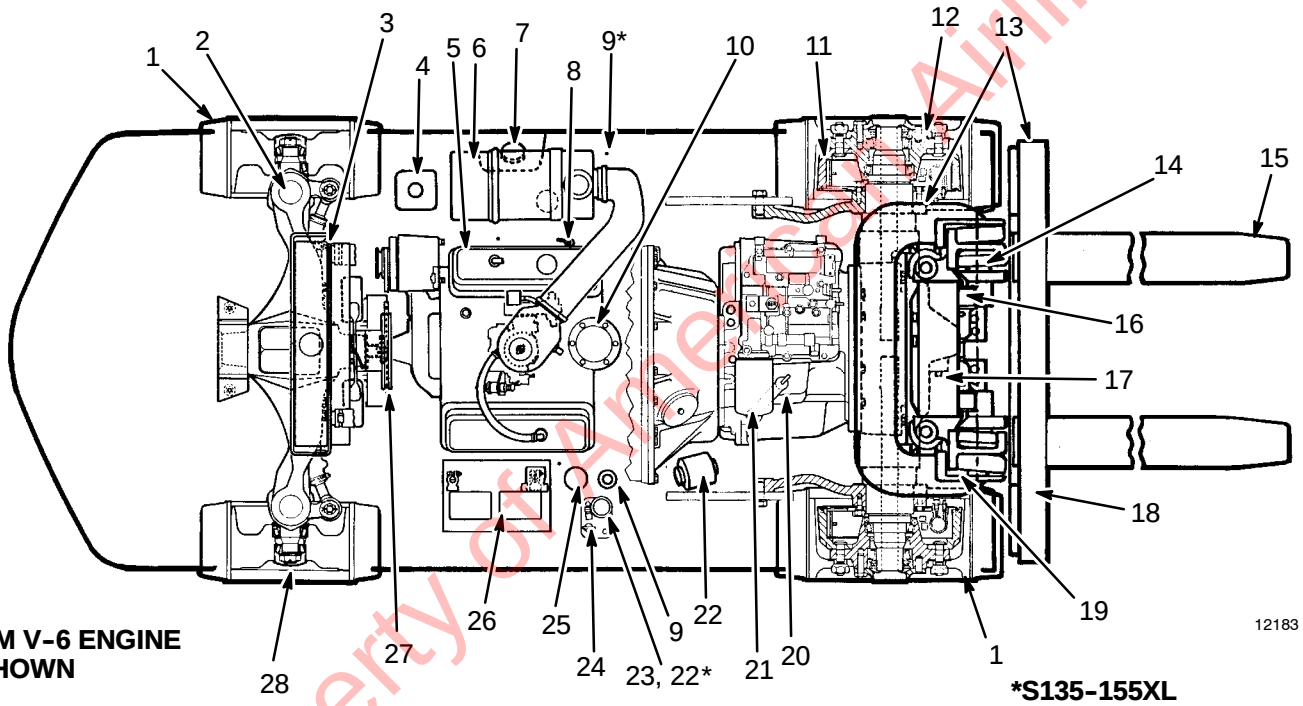

FIGURE 7. MAINTENANCE POINTS

Property of American Airlines

https://truckmanualshub.com/

ITEM NO.	ITEM	8 Hr./ Daily	250 Hr./ 6 wks.	350 Hr./ 2 mo.	500 Hr./ 3 mo	1000 Hr./ 6 mo.	2000 Hr./ 1 yr.	PROCEDURE OR QUANTITY	SPECIFICATION
1	TIRES	X						Check Condition	See Nameplate
2	STEERING AXLE SPINDLES			L				2 Fittings	Multipurpose Grease See NOTE 1
3	COOLANT HOSES	X						Check Condition	See Parts Manual
4	COOLING SYSTEM	X					C	15.1 litre (16.0 qt)	50% Water and 50% Ethylene Glycol Boron Free Anti-Freeze
4	COOLING SYSTEM GM V-6 EPA Compliant Engine	X				C		15.1 litre (16.0 qt)	50% Water and 50% Ethylene Glycol Boron Free Anti-Freeze
	CLEAN DEBRIS FROM RADIATOR CORE			X				Clean as Necessary	
5	VALVE ADJUSTMENT GM V-6					X			Not Adjustable
	VALVE ADJUSTMENT DIESEL, ALL UNITS Inlet Valves (Cold)					X		Adjust as Required	0.20 mm (0.008 in)

X=Check C=Change L=Lubricate

NOTE 1: Multipurpose grease with 2 to 4% Molybdenum Disulfide

Property of American Airlines

https://truckmanualshub.com/

ITEM NO.	ITEM	8 Hr./ Daily	250 Hr./ 6 wks.	350 Hr./ 2 mo.	500 Hr./ 3 mo	1000 Hr./ 6 mo.	2000 Hr./ 1 yr.	PROCEDURE OR QUANTITY	SPECIFICATION
	VALVE ADJUSTMENT DIESEL, ALL UNITS Exhaust Valves (Cold)					X		Adjust as Required	0.45 mm (0.018 in)
6	AIR FILTER			X				Clean or Replace See NOTE 2	See Parts Manual
6	AIR FILTER GM V-6 EPA Compliant Engine		X					Clean or Replace See NOTE 2	See Parts Manual
6	AIR FILTER ELEMENT GM V-6 EPA Compliant Engine						C	See NOTE 3	See Parts Manual
7	FUEL TANK S70-120XL	X						66.2 litre (17.5 gallon)	Gasoline [86 Octane (minimum)] Diesel No. 2 LPG — HD-5
7	FUEL TANK S135-155XL, XL_2 and S155XLS	X						66.2 litre (17.5 gallon)	Gasoline [86 Octane (minimum)] Diesel No. 2 LPG — HD-5

X=Check C=Change L=Lubricate

NOTE 2: Very dirty conditions require daily clean and check.

NOTE 3: In dirty or dusty environments, replace at 1000 hours

Property of American Airlines

https://truckmanualshub.com/

ITEM NO.	ITEM	8 Hr./ Daily	250 Hr./ 6 wks.	350 Hr./ 2 mo.	500 Hr./ 3 mo	1000 Hr./ 6 mo.	2000 Hr./ 1 yr.	PROCEDURE OR QUANTITY	SPECIFICATION
8	ENGINE OIL GM V-6	X	C					4.7 litre (5.0 qt)	-18° to 40°C (0° to 104° F) SAE 10W-30 API SL ILSAC GF-3 SAE 2362
	ENGINE OIL, DIESEL Perkins1004-42	X			C			8.0 litre (8.5 qt)	-15 to 40°C (5 to 104°F) SAE 10W-30 -10 to 50°C (14 to 122°F) SAE 15W-40 API CG4/CH4 ACEA E3/E5 MIL-PRF-2104G
	ENGINE OIL, DIESEL Perkins1104C-44 (RE)	X			C			8.0 litre (8.5 qt)	-15 to 40°C (5 to 104°F) SAE 10W-30 -10 to 50°C (14 to 122°F) SAE 15W-40 API CG4/CH4 ACEA E3/E5 MIL-PRF-2104G
	SEAT BELTS AND SEAT RAILS	X						Check Condition	
X=Check C=Change L=Lubricate									

Property of American Airlines

https://truckmanualshub.com/

ITEM NO.	ITEM	8 Hr./ Daily	250 Hr./ 6 wks.	350 Hr./ 2 mo.	500 Hr./ 3 mo	1000 Hr./ 6 mo.	2000 Hr./ 1 yr.	PROCEDURE OR QUANTITY	SPECIFICATION
	HOOD LATCH, SEAT	X						Check Condition	
	SAFETY LABELS	X						Replace as Necessary	See Parts Manual
	CHECK FOR LEAKS FUEL, OIL, WATER	X						Check for Leaks See NOTE 4	
	HORN, GAUGES, LIGHTS, ALARMS	X						Check Operation	
9	BRAKE FLUID			X				0.2 litre (0.4 pt)	SAE J-1703
10	TIMING GM V-6					X		Adjust as Required	0° BTDC @ 650 rpm
	TIMING DIESEL, ALL UNITS					X		Adjust as Required	16° BTDC Static
	ENGINE IDLE SPEED GM V-6			X				Adjust as Required	625 to 675 rpm
	ENGINE IDLE SPEED Diesel			X				Adjust as Required	725 to 775 rpm

X=Check C=Change L=Lubricate

NOTE 4: Check fuel system for leaks prior to any service or maintenance activity.

Property of American Airlines

https://truckmanualshub.com/

ITEM NO.	ITEM	8 Hr./ Daily	250 Hr./ 6 wks.	350 Hr./ 2 mo.	500 Hr./ 3 mo	1000 Hr./ 6 mo.	2000 Hr./ 1 yr.	PROCEDURE OR QUANTITY	SPECIFICATION
	ENGINE GOVERNED SPEED GM V-6			X				Adjust as Required	2400 to 2500 rpm
	ENGINE GOVERNED SPEED Diesel			X				Adjust as Required	2400 to 2500 rpm
11	SERVICE BRAKES	X					X	Check Operation	
11	PARKING BRAKES	X				L		Check Operation Check Condition	Engine Oil
	STEERING AND STEERING WHEEL POSITION LATCH	X						Check Operation	
	CLUTCH, BRAKE, AND INCHING/BRAKE PEDALS			X		L		Adjust as Required	Hyster Part No. 328388
12	WHEEL NUTS DRIVE WHEELS			X				Check Torque	All Wheel Nuts 610 to 680 Nm (450 to 500 lbf ft)
13	MAST, CARRIAGE, AND ATTACHMENTS	X		X				Check Condition and Operation	

X=Check C=Change L=Lubricate

Property of American Airlines

https://truckmanualshub.com/

ITEM NO.	ITEM	8 Hr./ Daily	250 Hr./ 6 wks.	350 Hr./ 2 mo.	500 Hr./ 3 mo	1000 Hr./ 6 mo.	2000 Hr./ 1 yr.	PROCEDURE OR QUANTITY	SPECIFICATION
13	MAST, SIDE-SHIFT CARRIAGE ROLLERS	X	L					4 Fittings	Multipurpose Grease See NOTE 1
14	MAST, SLIDING SURFACES AND LOAD ROLLER SURFACES		L					As Required	Multipurpose Grease See NOTE 1
18	MAST, FORK GUIDES		L					As Required	Multipurpose Grease See NOTE 1
19	MAST, PIVOTS		L					2 Fittings	Multipurpose Grease See NOTE 1
15	FORKS	X		X				Check Condition	
16	LIFT CHAINS	X	L	X				Check for Condition and Lubrication	Engine Oil
	PEDALS, LEVERS, LINKAGES, CABLES, HINGES, SEAT RAILS					L		As Required	Engine Oil

X=Check C=Change L=Lubricate

NOTE 1: Multipurpose grease with 2 to 4% Molybdenum Disulfide

Property of American Airlines

https://truckmanualshub.com/

ITEM NO.	ITEM	8 Hr./ Daily	250 Hr./ 6 wks.	350 Hr./ 2 mo.	500 Hr./ 3 mo	1000 Hr./ 6 mo.	2000 Hr./ 1 yr.	PROCEDURE OR QUANTITY	SPECIFICATION
17	SPEED REDUCER AND DIFFERENTIAL OIL, Single Speed Powershift S70-120XL					X	C	5.7 liter (6.0 qt) See NOTE 5	SAE 80W-90, 85W-140
17	SPEED REDUCER AND DIFFERENTIAL OIL, Two-Speed Powershift S135-155XL, XL_2 and S155XLS					X	C	14.2 liter (15.0 qt) See NOTE 5	SAE 80W-90, 85W-140
17	MANUAL TRANSMISSION, DIFFERENTIAL OIL S135-155XL (B024)					X	C	14.2 litre (15.0 qt) See NOTE 5	SAE 80W-90, 85W-140
20	POWERSHIFT TRANSMISSION OIL Single Speed Powershift S70-120XL	X					C	15.1 litre (16 qt) See NOTE 6	Hyster Part No. 336831 Change oil filter when transmission oil is changed.

X=Check C=Change L=Lubricate

NOTE 5: Check the thrust screw adjustment on the differential after the first 150 hours of operation. Adjustments after first 150 hours are normally not needed.

NOTE 6: Change filter on new lift trucks at the first 100 hours on the hourmeter.

Property of American Airlines

https://truckmanualshub.com/

ITEM NO.	ITEM	8 Hr./ Daily	250 Hr./ 6 wks.	350 Hr./ 2 mo.	500 Hr./ 3 mo	1000 Hr./ 6 mo.	2000 Hr./ 1 yr.	PROCEDURE OR QUANTITY	SPECIFICATION
20	POWERSHIFT TRANSMISSION OIL Two-Speed Powershift S135-155XL, XL_2 and S155XLS	X					C	15.1 litre (16 qt) See NOTE 6	Hyster Part No. 336831 Change oil filter when transmission oil is changed.
21	OIL CLUTCH SYSTEM, OIL LEVEL S135-155XL (B024)	X					C	9.4 liter (10 qt)	Hyster Part No. 336831 Change oil filter when clutch oil is changed.
	TRANSMISSION AND CLUTCH	X						Check Operation	
22	OIL FILTER, HYDRAULIC SYSTEM						C	1 See NOTE 6	See Parts Manual
23	HYDRAULIC TANK BREATHER			X				Clean or Replace	See Parts Manual
24	HYDRAULIC SYSTEM S70-120XL	X					C	37 litre (9.7 gallon)	-18°C (0°F) and Above SAE 10W API CC or CC/SE/SF/SG MIL-L-46152

X=Check C=Change L=Lubricate

NOTE 6: Change filter on new lift trucks at the first 100 hours on the hourmeter.

Property of American Airlines

https://truckmanualshub.com/

ITEM NO.	ITEM	8 Hr./ Daily	250 Hr./ 6 wks.	350 Hr./ 2 mo.	500 Hr./ 3 mo	1000 Hr./ 6 mo.	2000 Hr./ 1 yr.	PROCEDURE OR QUANTITY	SPECIFICATION
24	HYDRAULIC SYSTEM S135-155XL, XL_2 and S155XLS	X					C	42 litre (11 gallon)	-18°C (0°F) and Above SAE 10W API CC or CC/SE/SF/SG MIL-L-46152
25	CRANKCASE BREATHER GM V-6		X			C		1 See NOTE 7	See Parts Manual
	CRANKCASE BREATHER Perkins 1004-42 Perkins 1104C-44 (RE)				X	C		1 See NOTE 7	See Parts Manual
	PRIMARY FUEL FILTER, DIESEL	X				C		Drain Water	See Parts Manual
26	BATTERY ELECTROLYTE, BATTERY CASE AND CABLES	X		X				Check Level Clean	See Parts Manual
27	DRIVE BELTS	X		X				Check Condition	See Parts Manual
28	WHEEL NUTS STEER WHEELS			X				Check Torque	All Wheel Nuts 610 to 680 Nm (450 to 500 lbf ft)

X=Check C=Change L=Lubricate

NOTE 7: Check the crankcase breather after every engine oil change.

Property of American Airlines

https://truckmanualshub.com/

ITEM NO.	ITEM	8 Hr./ Daily	250 Hr./ 6 wks.	350 Hr./ 2 mo.	500 Hr./ 3 mo	1000 Hr./ 6 mo.	2000 Hr./ 1 yr.	PROCEDURE OR QUANTITY	SPECIFICATION
	DRIVE SHAFT AND UNIVERSAL JOINTS S135-155XL, XL_2 and S155XLS		L					2 Fittings	Multipurpose Grease See NOTE 1
	ENGINE OIL FILTER GM V-6		C					See NOTE 6	See Parts Manual
	ENGINE OIL FILTER Diesel (Perkins 1004-42)				C			See NOTE 6	See Parts Manual
	ENGINE OIL FILTER Diesel (Perkins 1104C-44 RE)				C			See NOTE 6	See Parts Manual
	FINAL FUEL FILTER, DIESEL					C		1	See Parts Manual
	SPARK PLUGS					C		6 Check Wires	See Parts Manual Gap, 1.6 mm (0.062 in)

X=Check C=Change L=Lubricate

NOTE 1: Multipurpose grease with 2 to 4% Molybdenum Disulfide

NOTE 6: Change filter on new lift trucks at the first 100 hours on the hourmeter.

Property of American Airlines

https://truckmanualshub.com/

ITEM NO.	ITEM	8 Hr./ Daily	250 Hr./ 6 wks.	350 Hr./ 2 mo.	500 Hr./ 3 mo	1000 Hr./ 6 mo.	2000 Hr./ 1 yr.	PROCEDURE OR QUANTITY	SPECIFICATION
	PCV VALVE GM V-6				X		C	1	See Parts Manual
	FUEL FILTER GASOLINE						C	1	See Parts Manual
	FUEL FILTER LPG						C	1	See Parts Manual
	FUEL FILTER, LPG GM V-6 EPA Compliant Engine					C		1	See Parts Manual
	INSPECT ENGINE ELECTRICAL SYSTEM, CONNECTORS AND FCVS CONNECTION					X			
	INSPECT ENGINE VACUUM AND FUEL LINES AND FITTINGS						X		
	INSPECT LOCK OFF FOR LEAKS AND ENSURE LOCK OFF CLOSING						X		

X=Check C=Change L=Lubricate

Property of American Airlines

https://truckmanualshub.com/

ITEM NO.	ITEM	8 Hr./ Daily	250 Hr./ 6 wks.	350 Hr./ 2 mo.	500 Hr./ 3 mo	1000 Hr./ 6 mo.	2000 Hr./ 1 yr.	PROCEDURE OR QUANTITY	SPECIFICATION
	TEST LPG/GAS REGULATOR PRESSURE						X		
	INSPECT LOW PRESSURE REGULATOR FOR OIL BUILDUP AND LEAKS						X	Drain Oil If Necessary	
	CHECK AIR INDUCTION SYSTEM FOR LEAKS						X		
	CHECK MANIFOLD FOR VACUUM LEAKS						X		
	CHECK THROTTLE SHAFT FOR STICKING						X		
	CHECK INJECTORS AND RAILS FOR LEAKS						X		
X=Check C=Change L=Lubricate									

Property of American Airlines

https://truckmanualshub.com/

ITEM NO.	ITEM	8 Hr./ Daily	250 Hr./ 6 wks.	350 Hr./ 2 mo.	500 Hr./ 3 mo	1000 Hr./ 6 mo.	2000 Hr./ 1 yr.	PROCEDURE OR QUANTITY	SPECIFICATION
	INSPECT EXHAUST MANIFOLD AND PIPING FOR LEAKS						X		
	INSPECT CATALYST INLET AND OUTLET						X		
	OXYGEN SENSOR GM V6 EPA Compliant Engine						X	Check Indicator Light	
X=Check C=Change L=Lubricate									

Property of American Airlines

https://truckmanualshub.com/

HOW TO MAKE THE CHECKS WITH THE ENGINE STOPPED

Put the lift truck on a level surface. Lower the carriage and forks, stop the engine and apply the parking brake. Open the hood and check for leaks and conditions that are not normal. Clean any oil or fuel spills. Make sure that lint, dust, paper and other materials are removed from the engine compartment.

Hydraulic System Oil (See FIGURE 8.)

WARNING

At operating temperature the hydraulic oil is HOT. Do not permit the oil to contact the skin and cause a burn.

CAUTION

Do not permit dirt to enter the hydraulic system when the oil level is checked or the filter is changed.

Never operate the pump without oil in the hydraulic system. The operation of the hydraulic pump without oil will damage the pump.

Check the hydraulic oil level when the oil is at operating temperature, the carriage is lowered and the engine is stopped. Add hydraulic oil only as needed. If more hydraulic oil is added than the FULL level, the hydraulic oil will leak from the breather during operation. The breather for the S135–155XL units is **under** the top of the frame near the filter.

Check the hydraulic system for leaks and damaged or loose components.

Property of American Airlines

https://truckmanualshub.com/

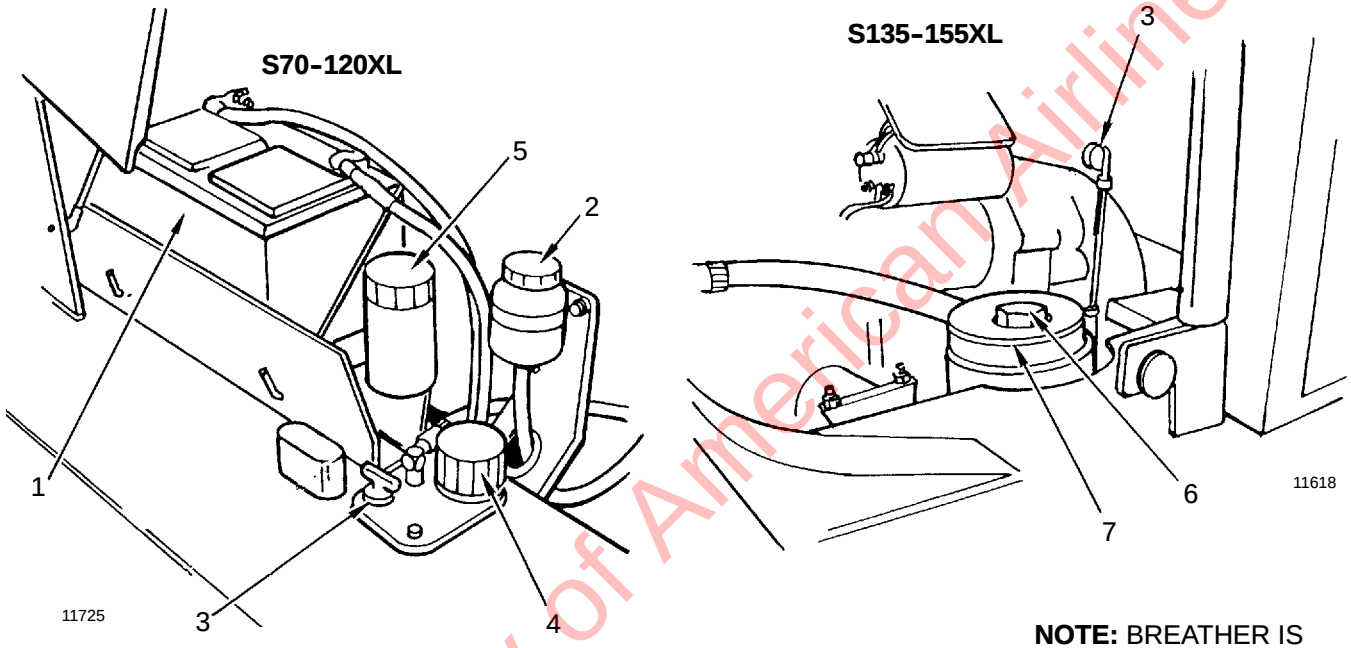

1. BATTERY
2. RESERVOIR, BRAKE FLUID
3. DIPSTICK, HYDRAULIC OIL
4. BREATHER, HYDRAULIC TANK
5. BREATHER, ENGINE
6. FILL CAP, HYDRAULIC OIL
7. FILTER HEAD

NOTE: BREATHER IS ON TOP OF HYDRAULIC TANK AND UNDER THE TOP OF THE FRAME.

FIGURE 8. MAINTENANCE POINTS

Property of American Airlines

https://truckmanualshub.com/

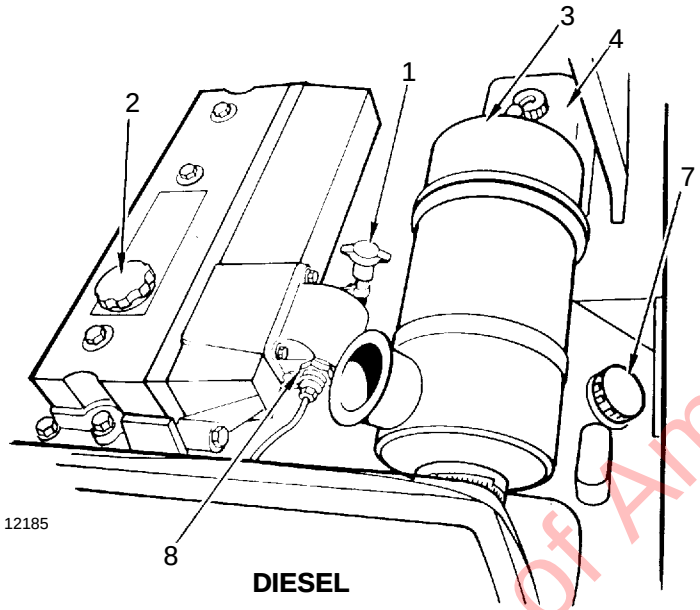

DIESEL

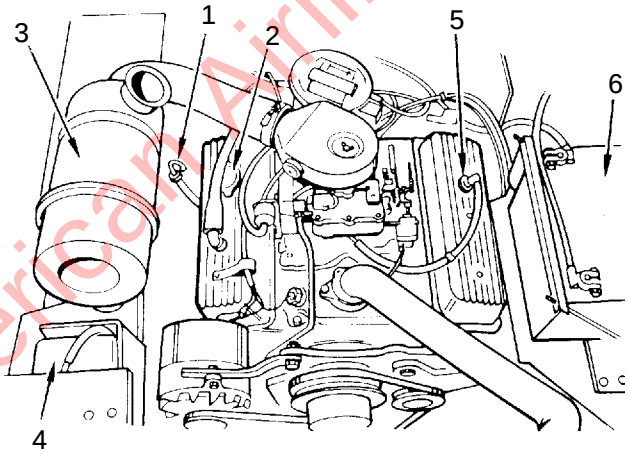

GASOLINE/LPG

1. DIPSTICK FOR ENGINE OIL
2. ENGINE OIL FILL CAP
3. AIR FILTER
4. AUXILIARY COOLANT RESERVOIR
5. PCV VALVE (GM V–6)
6. BATTERY
7. FILL CAP, FUEL
8. COLD START AID, DIESEL

FIGURE 9. ENGINE MAINTENANCE POINTS

Property of American Airlines

https://truckmanualshub.com/

Engine Oil (See FIGURE 9.)

After the engine has stopped, wait one minute before checking the oil level. Keep the oil at the correct level as indicated on the dipstick. Use the correct oil as shown in the MAINTENANCE SCHEDULE.

Drive Belts (See FIGURE 9.)

Check the drive belts for wear or damage.

Cooling System (See FIGURE 10.)

WARNING

DO NOT remove the radiator cap from the radiator when the engine is hot. When the radiator cap is removed, the pressure is released from the system. If the system is hot, the steam and boiling coolant can cause burns. DO NOT remove the cover for the radiator when the engine is running.

Make sure the coolant level is between the FULL and the ADD marks on the auxiliary coolant reservoir. The coolant will expand as it is heated and the level in the auxiliary coolant reservoir will increase. Add coolant to the auxiliary reservoir if additional coolant is needed.

WARNING

Compressed air can move particles so that they cause injury to the user or to other personnel. Make sure that the path of the compressed air is away from all personnel. Wear protective goggles or a face shield to prevent injury to the eyes.

Check the radiator fins. Clean the radiator with compressed air or water as needed.

Property of American Airlines

https://truckmanualshub.com/

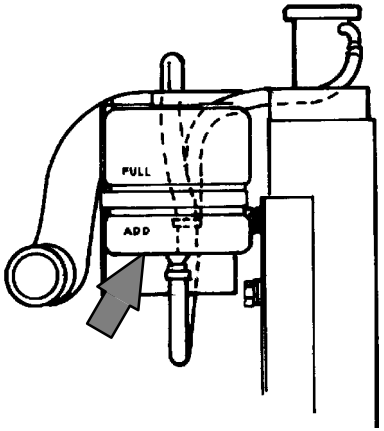

11619

FIGURE 10. AUXILIARY COOLANT RESERVOIR

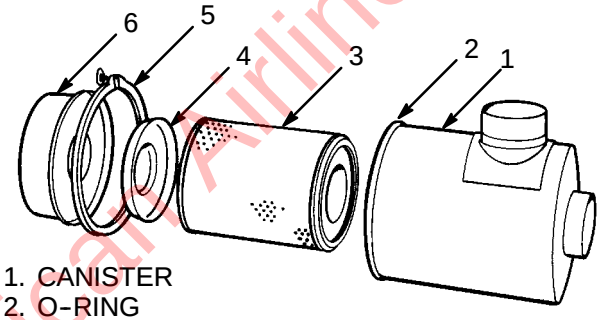

1. CANISTER
2. O-RING
3. FILTER ELEMENT
4. BAFFLE
5. CLAMP
6. END COVER

12205

FIGURE 11. AIR FILTER

Property of American Airlines

https://truckmanualshub.com/

Air Filter (See FIGURE 11.)

WARNING

Compressed air can move particles so that they cause injury to the user or to other personnel. Make sure that the path of the compressed air is away from all personnel. Wear protective goggles or a face shield to prevent injury to the eyes.

Clean or replace the air filter as necessary. Use compressed air to clean the filter element. Air pressure must be less than 210 kPa (30 psi). Apply the air from the inside to the outside of the element.

WARNING

Cleaning solvents can be flammable and toxic, and can cause skin irritation. When using cleaning solvents, always follow the recommendations of the manufacturer.

To inspect the element, put a bright light inside and look for holes or other damage. If the element is damaged, replace it with a new element. Use a cloth with solvent to clean the inside of the canister when the filter element is cleaned or replaced.

Fuel System

WARNING

All fuels are very flammable and can burn or cause an explosion. Do not use an open flame to check the fuel level or for leaks in the fuel system. If there is a leak in the fuel system, extra care must be used during the repair. Do not operate the lift truck until a leak is repaired.

Check the fuel system for leaks and the condition of parts. When fuel is added to the lift truck, see the section **How To Add Fuel To The Lift Truck** procedures in this **OPERATING MANUAL.**

Primary Fuel Filter, Diesel Engine (See FIGURE 12.)

Drain the water from the primary fuel filter.

1. Open the valve on the bottom of the filter canister. Drain some fuel (and any water) into a cup until clean fuel flows from the filter.

2. Close the valve.

Property of American Airlines

https://truckmanualshub.com/

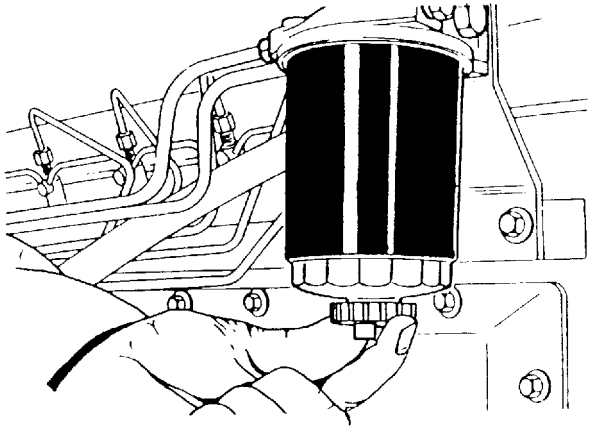

FIGURE 12. PRIMARY FUEL FILTER

Battery (See FIGURE 8.)

WARNING

The acid in the electrolyte can cause injury. If the electrolyte is spilled, use water to flush the area. Use a solution of sodium bicarbonate (soda) to make the acid neutral. Acid in the eyes must be flushed with water immediately.

Batteries generate explosive fumes. Keep the vents in the caps clean. Keep sparks or open flame away from the battery area. Do not make sparks from the battery connections. Disconnect the battery ground cable when doing maintenance.

Keep the battery and cable terminals clean. Check the electrolyte level (unless maintenance-free battery). Keep the electrolyte level above the separators and plates. Use distilled water. Do not fill the battery more than to the bottom of the internal filler neck.

If the battery becomes discharged and requires a booster battery to start the engine, follow these procedures carefully when connecting the jumper cables:

1. Always connect the positive boost cable to the positive terminal of the discharged battery and the negative to the negative.

2. Always connect the cable that is the ground cable last.

3. Always connect the boost cables to the discharged battery before connecting them to the boost battery.

Property of American Airlines

https://truckmanualshub.com/

Tires And Wheels (See FIGURE 13.)

Check the tires for damage. Check the tread and remove any objects that will cause damage. Check for bent or damaged rims. Check for loose or missing hardware. Remove any wire, strapping or other material that is wrapped around the axle.

Make sure the drive wheel nuts are tight. Tighten the wheel nuts in a cross pattern to the correct torque value shown in the MAINTENANCE SCHEDULE.

CAUTION

Check all wheel nuts after 2 to 5 hours of operation: when new lift trucks begin operation and on all lift trucks when the drive wheels have been removed and installed. Tighten the nuts in a cross pattern to the correct torque value shown in the MAINTENANCE SCHEDULE. When the nuts stay tight for eight hours, the interval for checking the torque can be extended to 350 hours.

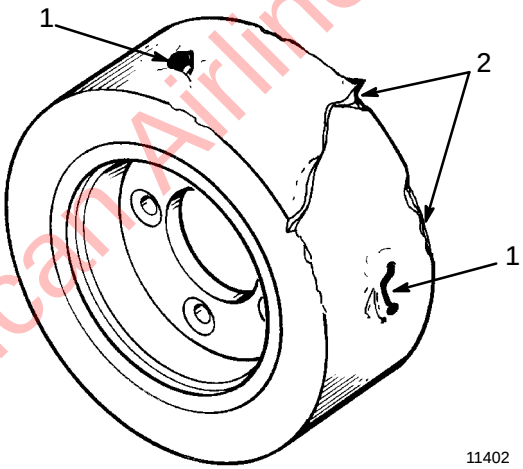

1. CHECK FOR DAMAGE (REMOVE NAILS, GLASS AND OTHER OBJECTS FROM THE TREAD)
2. MAKE SMOOTH EDGES

FIGURE 13. CHECK THE TIRES

Property of American Airlines

https://truckmanualshub.com/

Forks

The identification of a fork is determined by how the fork is connected to the carriage. The **S70-155XL** series of lift trucks normally have hook forks.

Forks, Adjustment

The forks are connected to the carriage by hooks and lock pins. The lock pins can be one of two types. See FIGURE 14. These lock pins are installed through the top fork hooks and fit into slots in the top carriage bar. Adjust the forks as far apart as possible for maximum support of the load. Slide hook forks along the carriage bars to adjust for the load to be carried. Raise the lock pin in each fork to slide the fork on the carriage bar. Make sure the lock pin is engaged in the carriage bar to lock the fork in position after the width adjustment is made.

Forks, Removal And Installation

A fork can be removed from the carriage for replacement of the fork or other maintenance.

WARNING

Do not try to remove a fork without a lifting device. Each hook fork for these lift trucks can weigh 66 kg to 183 kg (145 to 402 lb).

Hook Fork (Removal). Slide a hook fork to the fork removal notch on the carriage. See FIGURE 14. Lower the fork onto blocks so that the bottom hook of the fork moves through the fork removal notch. See FIGURE 15. and FIGURE 16. Lower the carriage further so that the top hook of the fork is disengaged from the top carriage bar. Move the lift truck and carriage away from the fork. If the fork must be moved from the blocks, use a lifting device to move the fork.

Property of American Airlines

https://truckmanualshub.com/

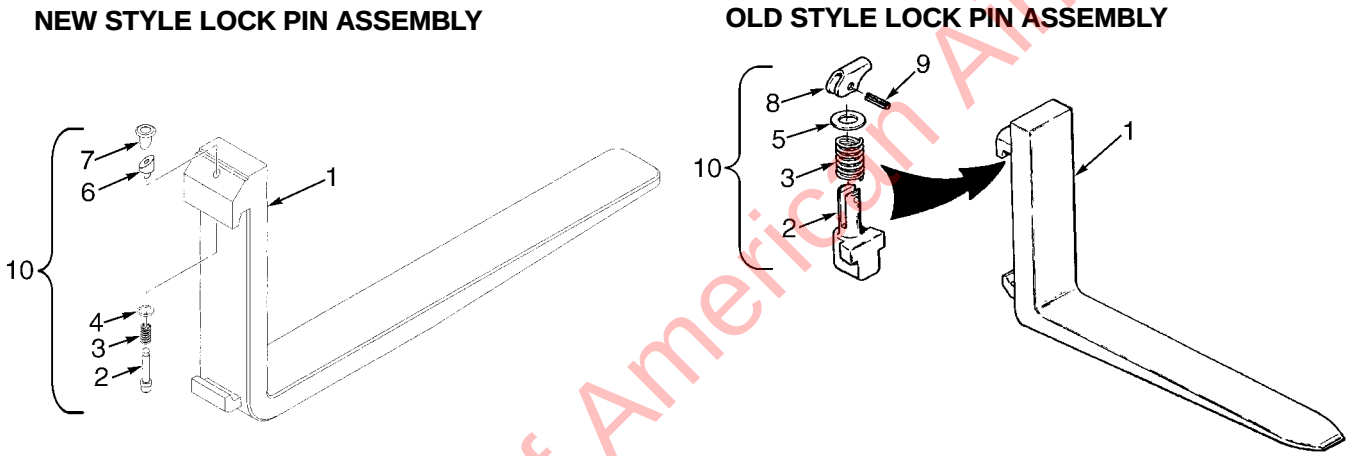

1. FORK
2. LOCK PIN
3. SPRING
4. WASHER
5. WASHER
6. WEDGE
7. KNOB
8. LEVER
9. COTTER PIN
10. LOCK PIN ASSEMBLY

HO190101

FIGURE 14. FORK LOCK PIN ASSEMBLY

Property of American Airlines

https://truckmanualshub.com/

WARNING

Do not try to install a fork without a lifting device. Each hook fork for these lift trucks can weigh 66 kg to 183 kg (145 to 402 lb).

Hook Fork (Installation). Move the fork and carriage so that the top hook on the fork can engage the upper carriage bar. Raise the carriage to move the lower hook through the fork removal notch. See FIGURE 16. Slide the fork toward its position on the side of the carriage so that both upper and lower hooks engage the carriage. Engage the lock pin with a notch in the upper carriage bar.

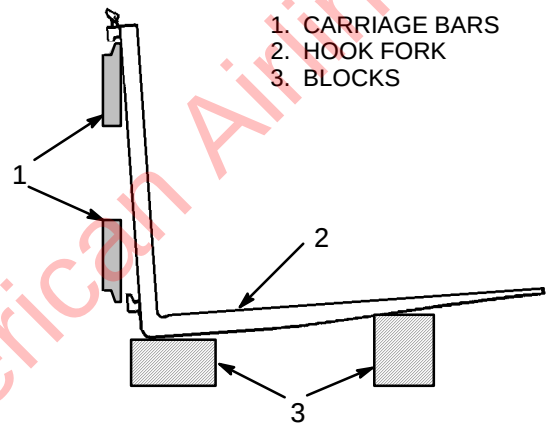

FIGURE 15. HOOK FORK REMOVAL

Property of American Airlines

https://truckmanualshub.com/

Inspection Of Forks, Mast, and Lift Chains (See FIGURE 16. and FIGURE 17.)

⚠ WARNING

Lower the lift mechanism completely. Never allow any person under a raised carriage. Do not put any part of your body in or through the lift mechanism unless all parts of the mast are completely lowered and the engine is stopped.

Do not try to correct fork tip alignment by bending the forks or adding shims. Replace damaged forks.

Never repair damaged forks by heating or welding. Forks are made of special steel using special procedures. Replace damaged forks.

1. Inspect the welds on the mast and carriage for cracks. Make sure that the capscrews and nuts are tight.

2. Inspect the channels for wear in the areas where the rollers travel. Inspect the rollers for wear or damage.

3. Inspect the load backrest extension for cracks and damage.

4. Inspect the forks for cracks and wear. Check that the fork tips are aligned within 13 mm (0.5 in) of each other. (See FIGURE 16.) Check that the bottom of the fork is not worn (Item 4).

5. Replace any damaged or broken parts that are used to keep the forks locked in position.

Property of American Airlines

https://truckmanualshub.com/

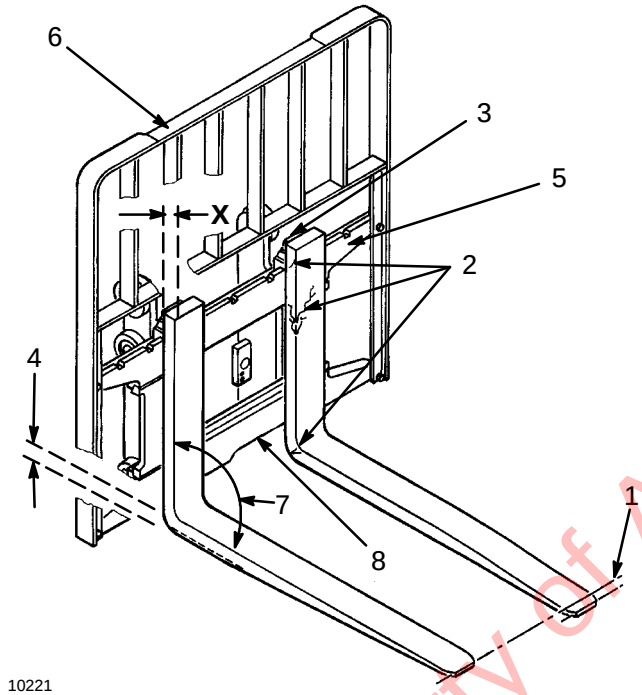

1. TIP ALIGNMENT (MUST BE WITHIN 3% OF FORK LENGTH)
2. CRACKS
3. LATCH DAMAGE
4. HEEL OF FORK (MUST BE 90% OF DIMENSION “X”)
5. CARRIAGE
6. LOAD BACKREST EXTENSION
7. MAXIMUM ANGLE 93°
8. FORK REMOVAL NOTCH

FORK TIP ALIGNMENT	
LENGTH OF FORKS	3% DIMENSION
915 mm (36 in)	27 mm (1.10 in)
1220 mm (48 in)	37 mm (1.45 in)
1830 mm (72 in)	55 mm (2.15 in)

FIGURE 16. CARRIAGE AND FORKS

Property of American Airlines

https://truckmanualshub.com/

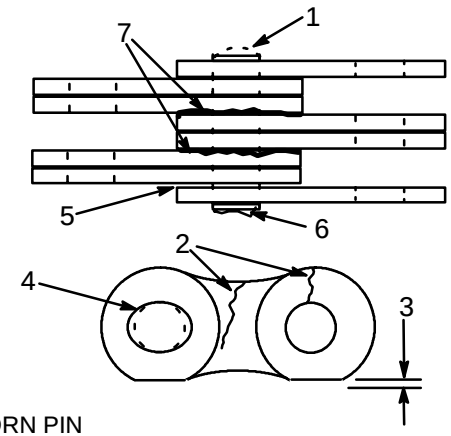

1. WORN PIN
2. CRACKS
3. EDGE WEAR
4. HOLE WEAR
5. LOOSE LEAVES
6. DAMAGED PIN
7. CORROSION

FIGURE 17. CHECK THE LIFT CHAINS

6. If the lift truck is equipped with a side–shift carriage or attachment, inspect the parts for cracks and wear. Make sure the parts that fasten the side–shift carriage or attachment to the carriage are in good condition.

7. Check that the lift chains are correctly lubricated. Use SAE 30 engine oil to lubricate the lift chains.

8. Inspect the lift chains for cracks or broken links and pins. (See FIGURE 17.)

9. Inspect the chain anchors and pins for cracks and damage.

10. Make sure the lift chains are adjusted so that they have equal tension. **Adjustment or replacement of the lift chains must be done by authorized personnel.**

Safety Labels

WARNING

Safety labels are installed on the lift truck to give information about operation and possible hazards. It is important that all safety labels are installed on the lift truck and can be read.

Check that all safety labels are installed in the correct locations on the lift truck. See the **PARTS MANUAL** for the correct location of the safety labels. The instructions to install the labels are also in the **PERIODIC MAINTENANCE** section.

Property of American Airlines

https://truckmanualshub.com/

Operator Restraint System (See FIGURE 19.)

The seat belt, hip restraint brackets, seat and mounting, hood, latches and floor plates are all part of the operator restraint system. Each item must be checked to make sure it is attached securely, functions correctly and is in good condition.

Automatic Locking Retractor (ALR)

NOTE: Lift trucks produced before November 1, 2005 are equipped with the ALR type seat belts. See FIGURE 18.

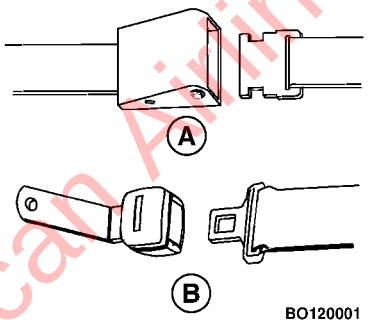

A. AUTOMATIC LOCKING RETRACTOR (ALR)
B. EMERGENCY LOCKING RETRACTOR (ELR)

FIGURE 18. SEAT BELTS

The seat belt must fasten securely. Make sure the seat belt extends and retracts smoothly and is not frayed or torn. If the seat belt is damaged or does not operate properly, it must be replaced.

Emergency Locking Retractor (ELR)

NOTE: Lift trucks produced after November 1, 2005 are equipped with the Emergency Locking Retractor (ELR) style seat belt. See FIGURE 18.

Property of American Airlines

https://truckmanualshub.com/

When the ELR style seat belt is properly buckled across the operator, the belt will permit slight operator repositioning without activating the locking mechanism. If the truck tips over, travels off a dock, or comes to a sudden stop, the locking mechanism will be activated and hold the operator's lower torso in the seat.

A seat belt that is damaged, worn, or does not operate properly will not provide protection when it is needed. The end of the belt must fasten correctly in the latch. The seat belt must be in good condition. Replace the seat belt if it is damaged or worn.

The following seat belt operation checks must be performed:

- With the hood closed and in the locked position, pull the seat belt slowly from the retractor assembly. Make sure the seat belt pulls out and retracts smoothly. If the seat belt cannot be pulled from the retractor assembly or the belt will not retract, replace the seat belt assembly.
- With the hood closed and in the locked position, pull the seat belt with a sudden jerk. Make sure the seat belt will not pull from the retractor assembly. If the seat belt can be pulled from the retractor when it is pulled with a sudden jerk, replace the seat belt assembly.
- With the hood in the open position, make sure the seat belt will not pull from the retractor assembly. If the seat belt can be pulled from the retractor, with the hood in the open position, replace the seat belt assembly.

Hood And Seat Latches

See FIGURE 19. Make sure the seat rails and latch striker are not loose. The seat rails must lock securely in position, but move freely when unlocked. The seat rails must be securely attached to the mounting surface. If the mounting surface is the hood, the hood must be latched to the floor plate. The floor plate must be bolted securely to the lift truck frame. Lift on the hood to make sure it is latched and will not move.

Property of American Airlines

https://truckmanualshub.com/

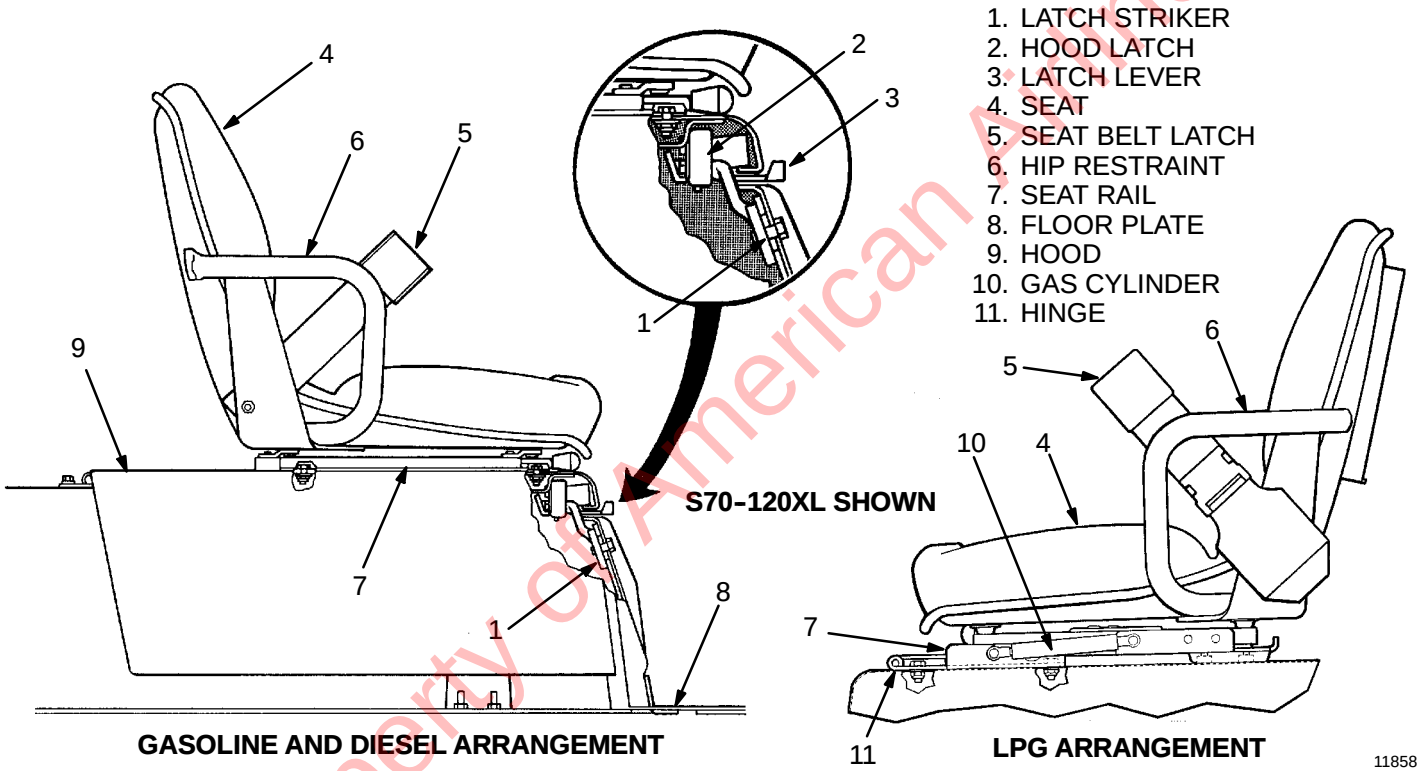

FIGURE 19. CHECK THE HOOD AND SEAT LATCHES

Property of American Airlines

https://truckmanualshub.com/

HOW TO MAKE THE CHECKS WITH THE ENGINE RUNNING

WARNING

Exhaust from internal combustion engines contains carbon monoxide and other harmful chemicals. Carbon monoxide is a colorless, odorless poison and can cause unconsciousness or death without warning. Long term exposure to exhaust or chemicals in the exhaust can cause cancer, birth defects and other reproductive harm. Avoid exposure to engine exhaust:

- **Do not use diesel engines indoors where soot can accumulate.**
- **If engines are operated in confined spaces maintain adequate ventilation or vent exhaust to the outside. Do not exceed applicable air contaminant limits.**
- **Follow the inspection and maintenance schedule and procedures in this manual. Do not alter exhaust, ignition or fuel systems.**

FASTEN YOUR SEAT BELT! The seat belt is installed to help the operator stay on the truck if the lift truck tips over. IT CAN ONLY HELP IF IT IS FASTENED.

Make sure that the area around the lift truck is clear before starting the engine or making any operational checks. Be careful when making the checks. If the lift truck is stationary during a check, apply the parking brake and put the transmission in **NEUTRAL**. Make the checks carefully.

Property of American Airlines

https://truckmanualshub.com/

Gauges, Lights, Horn And Fuses

Start the engine. Check the gauges and lights for correct operation as described in TABLE 1. Check the operation of the horn. If any of the lights or gauges do not operate correctly, check the fuses. The fuses are under the instrument panel on the right side of the cowl. See FIGURE 20. On S135–155XL, S135–155XL$_2$ and S135XLS (C024) lift truck models only, there are additional fuses and relays located in the engine compartment. See FIGURE 21. and FIGURE 22.

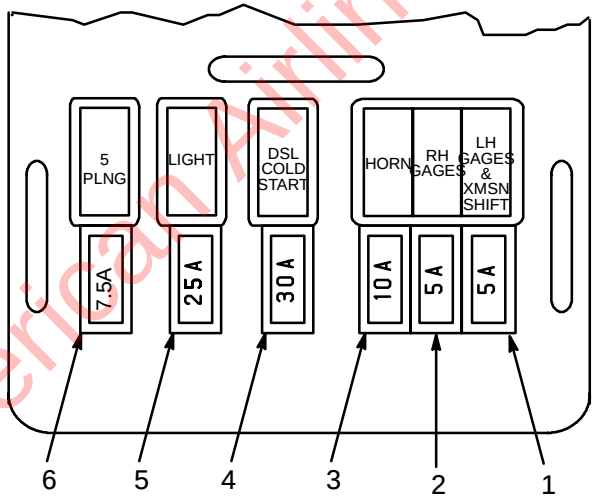

1. GAUGES
2. TRANSMISSION SOLENOIDS
3. HORN
4. COLD START AID (DIESEL)
5. LIGHTS
6. OTHER OPTIONS

12200

FIGURE 20. FUSES

Property of American Airlines

https://truckmanualshub.com/

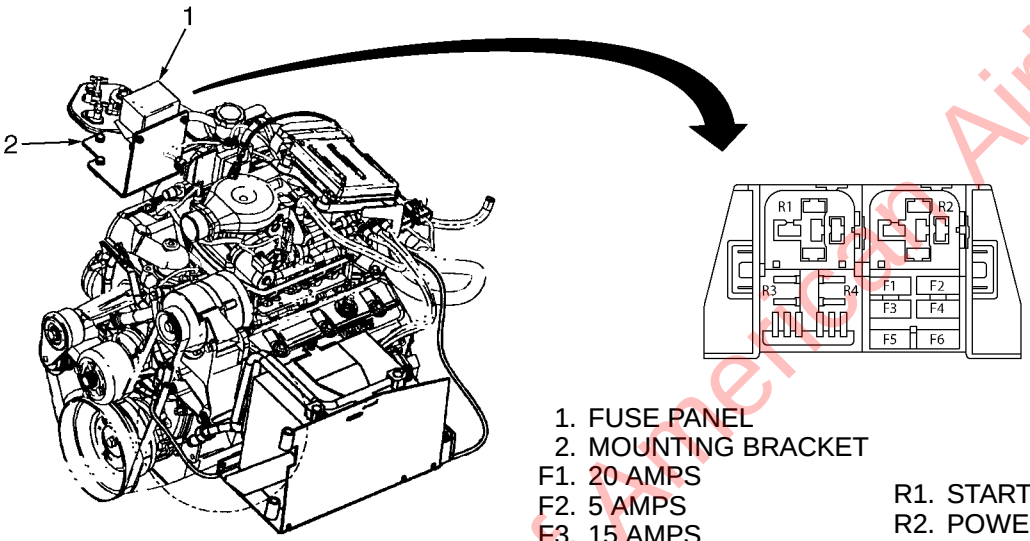

1. FUSE PANEL
2. MOUNTING BRACKET

F1. 20 AMPS
F2. 5 AMPS
F3. 15 AMPS
F4. 15 AMPS
F5. SPARE
F6. SPARE

R1. STARTER RELAY
R2. POWER RELAY
R3. FUEL PUMP RELAY
R4. SPARE

HO190288

FIGURE 21. ENGINE COMPARTMENT FUSES AND RELAYS, GM 4.3L ENGINE (S135-155XL, S135-155XL$_2$ AND S135XLS [C024] TRUCKS ONLY)

Property of American Airlines

https://truckmanualshub.com/

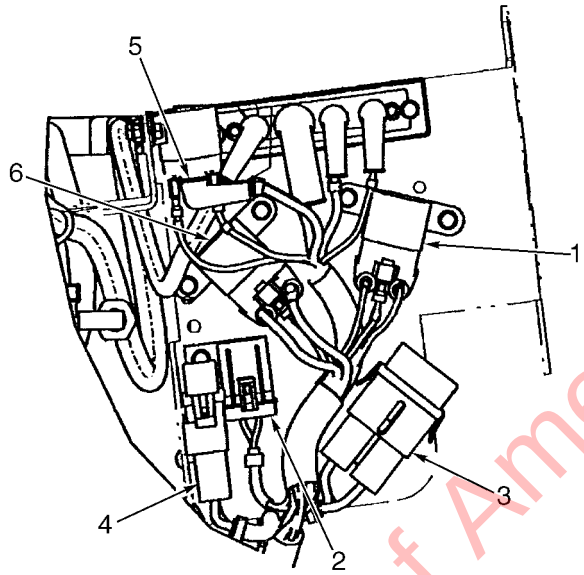

HO190289

1. LIFT PUMP RELAY
2. LIFT PUMP FUSE (10A)
3. ALTERNATOR FUSE (60A)
4. GLOW PLUG FUSE (60A)
5. STARTER RELAY
6. GLOW PLUG RELAY

FIGURE 22. ENGINE COMPARTMENT FUSES AND RELAYS, PERKINS 1104C–44 (RE) DIESEL ENGINE (S135–155XL, S135–155XL$_2$ AND S135XLS [C024] TRUCKS ONLY)

Property of American Airlines

https://truckmanualshub.com/

Oil Level, Powershift Transmission (See FIGURE 23.)

Apply the parking brake. Check the oil level in the powershift transmission when the oil is warm and the engine is running at idle speed. If the lift truck has a direction control lever, put the direction control lever in the **NEUTRAL (N)** position. Use the correct oil as shown in the MAINTENANCE SCHEDULE. Keep the oil level at the FULL mark on the dipstick. The most accurate check of the oil level is when the transmission is at operating temperature.

Oil Level, Oil Clutch System, S135-155XL (B024) (See FIGURE 23.)

Put the direction control lever in **the NEUTRAL (N)** position. Apply the parking brake. Check the oil level in the oil clutch system when the engine is running at idle speed. Make sure the oil is at operating temperature Use the correct oil as shown in the MAINTENANCE SCHEDULE. Keep the oil level at the FULL mark on the dipstick.

Property of American Airlines

https://truckmanualshub.com/

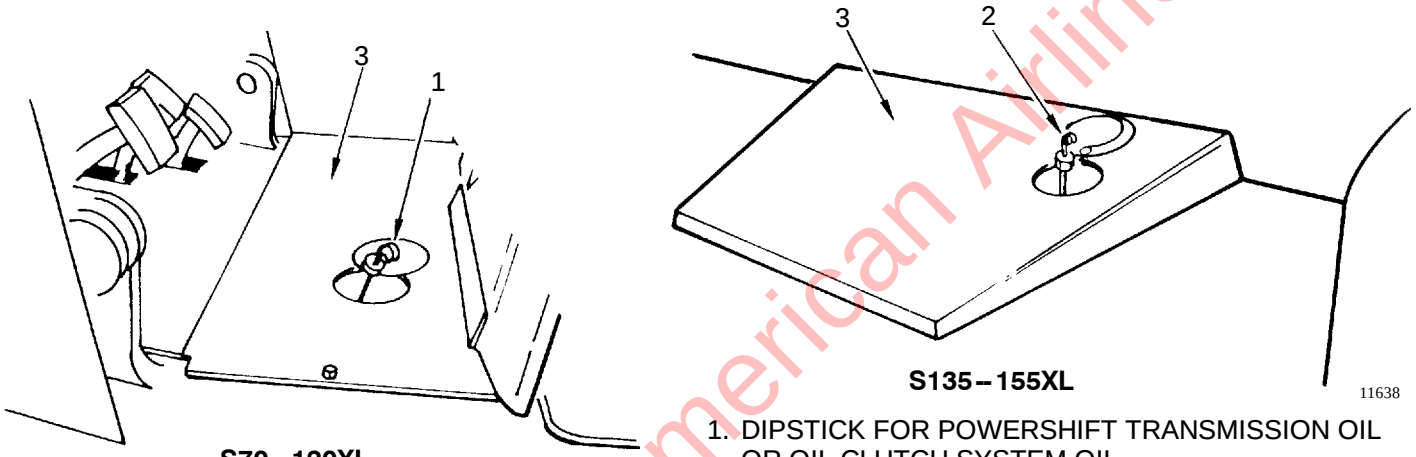

1. DIPSTICK FOR POWERSHIFT TRANSMISSION OIL OR OIL CLUTCH SYSTEM OIL
2. DIPSTICK FOR POWERSHIFT TRANSMISSION
3. FLOOR PLATE

FIGURE 23. TRANSMISSION DIPSTICK LOCATIONS

Control Levers and Pedals

Check that the control levers for the transmission, mast and attachment operate as described in TABLE 2. and TABLE 3. Check that the pedals operate as described in TABLE 2.

Property of American Airlines

https://truckmanualshub.com/

Lift System Operation

WARNING

Lower the lift mechanism completely. Never allow anyone under a raised carriage. Do not put any part of your body in or through the lift mechanism unless all parts of the mast are completely lowered and the engine is STOPPED.

Before making any repairs, use blocks and chains on the mast weldments and carriage so that they can not move. Make sure the moving parts are attached to a part that does not move.

Do not try to find hydraulic leaks by putting hands on pressurized hydraulic components. Hydraulic oil can be injected into the body by the pressure.

Do the following checks and inspections:

1. Check for leaks in the hydraulic system. Check the condition of the hydraulic hoses and tubes.

NOTE: Some parts of the mast move at different speeds during raising and lowering.

2. Slowly raise and lower the mast several times without a load. Raise the mast to its full extension height at least once. The mast components must raise and lower smoothly in the correct sequence.
3. The inner weldments and the carriage must lower completely.
4. Raise the mast one metre (three feet) with a capacity load. The inner weldments and the carriage must raise smoothly. Lower the mast. All moving components must lower smoothly.
5. Lower the load to approximately 0.3 metre (one foot). Tilt the mast forward and backward. The mast must tilt smoothly and both tilt cylinders must stop evenly.
6. Check that the controls for the attachment operate the functions of the attachment. (See symbols by each of the controls.) Make sure all of the hydraulic lines are connected correctly and do not leak.

Inching/Brake Pedal

Push on the inching/brake pedal. The service brakes must be applied before the inching/brake pedal reaches the floor plate. Full application of the inching/brake pedal applies the service brakes and puts the transmission in **NEUTRAL**. When the inching/brake pedal is fully applied, a

Property of American Airlines

https://truckmanualshub.com/

switch in the starting circuit is closed so that the engine can be started.

Service Brakes

Check the operation of the service brakes. Push on the inching/brake pedal (or the brake pedal for units with a manual transmission). The brakes must be applied before the pedal reaches the floor plate. The brake pedal must stop firmly and must not move slowly down after the brakes are applied. The brakes must apply equally to both drive wheels with no noticeable pull to either side. The service brakes are automatically adjusted as the brakes are applied when the lift truck changes direction.

WARNING

Loss of fluid from the brake fluid reservoir indicates a leak. Repair the brake system before using the lift truck. Replace the brake fluid in the system if there is dirt, water or oil in the system.

The lift truck has a brake booster that receives power from the hydraulic system. The brake pedal can be hard to push when the engine is not running and when the hydraulic system is not operating.

Parking Brake

Check the operation of the parking brake. The parking brake, when in good condition and correctly adjusted, will hold a lift truck with a capacity load on a 15% grade [1.5 metre rise in 10 metres (1.5 ft rise in 10 ft)]. Turn the knob on the end of the hand lever to adjust the parking brake. Do not tighten the adjustment so that the brake is applied when the hand lever is released. The lever for the parking brake has a lock. Use your finger to release the lock on the lever when the lever is moved to release the parking brake.

Lift trucks with a MONOTROL pedal: when the parking brake is applied, a switch in the starting circuit is closed so that the engine can be started. The switch also puts the transmission in **NEUTRAL**.

Steering System

WARNING

The lift truck has hydraulic power steering. The steering can be difficult if the engine is not running.

Make sure the steering system operates smoothly and provides good steering control.

Property of American Airlines

https://truckmanualshub.com/

HOW TO ADD FUEL TO THE LIFT TRUCK

WARNING

Stop the engine. Turn the key switch to OFF. The operator must be off of the lift truck while fuel is added.

No smoking.

All fuels for internal combustion engines are very flammable.

Fill the fuel tank only in a designated area with good ventilation. Have a fire extinguisher available.

Never fill the fuel tank near an open flame or near equipment that can create sparks. Never check fuel level or check for leaks with an open flame.

Breathing fuel vapor may cause nausea, unconsciousness or death. Long term exposure to gasoline vapors may cause liver or kidney damage and cancer. Avoid breathing vapor.

Liquified Petroleum Gas (LPG)

WARNING

Close the fuel valve on the tank when parking the lift truck more than momentarily.

Do not store LPG tanks near heat or open flame. Do not park the lift truck near heat or ignition sources. For complete instructions on the storage of LPG fuels, refer to ANSI/NFPA 58 & 505.

LPG is extremely flammable. When checking or filling an LPG tank: No smoking. Stop engine.

Frost or LPG odor indicates a leak. Inspect and repair a leak immediately. Do not start the engine.

Only trained and authorized personnel are permitted to operate filling equipment.

Fill LPG tanks outdoors. Stay at least 15 metres (50 feet) from buildings, motor vehicles, electrical equipment or other ignition sources. Stay at least 5 metres (15 feet) from LPG storage tanks.

Use the following procedure to remove the LPG tank:

1. Removable LPG tanks can be removed and replaced indoors only if the lift truck is at least 8 metres (25 feet) from any open flame or ignition source.

2. Move the lift truck to the area where tanks are changed.

Property of American Airlines

https://truckmanualshub.com/

3. See FIGURE 24. Turn the tank fuel valve clockwise until the valve is completely closed.
4. Run the engine until it stops, then turn the key switch to the **OFF** position.
5. Disconnect the quick disconnect fitting.
6. Release the LPG tank latch and remove the tank from the bracket.

WARNING

Do not use an LPG tank that is damaged. A damaged LPG tank must be removed from service. Frost on the surface of the tank, the valves or fittings indicates leakage. A strong odor of LPG fuel can indicate a leak.

Use the following procedure to install the LPG tank:

1. Before the LPG tank is installed on the lift truck, check the operation of the fuel gauge. Look at the fuel gauge and move the tank. If the gauge needle does not move, a new tank must be installed.
2. Put the tank in the tank bracket. Make sure that the tank is aligned with the alignment pin.
3. Close the latch.
4. See FIGURE 24. Connect the quick disconnect fitting to the fuel valve on the tank. Use your hand to tighten the fitting. Do not open the fuel valve until the quick disconnect fitting is completely tightened. Turn the fuel valve counterclockwise to open the fuel valve.
5. Inspect the fuel system for leaks when the fuel valve is open. Frost on the surface of the tank, valves or fittings or a strong odor indicates leakage.

Property of American Airlines

https://truckmanualshub.com/

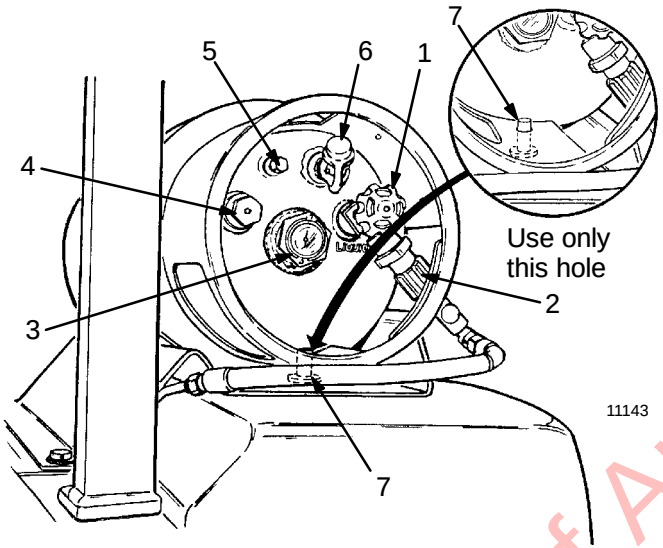

1. FUEL VALVE, TANK
2. QUICK DISCONNECT FITTING
3. FUEL GAUGE
4. PLUG
5. LIQUID LEVEL INDICATOR
6. RELIEF VALVE
7. ALIGNMENT PIN

NOTE: Some LPG tanks have an auxiliary fill fitting instead of a plug for Item 4.

FIGURE 24. LPG TANK

Use the following procedure to fill the LPG tank:

⚠ WARNING

Read and follow all the refueling precautions and instructions under Liquified Petroleum Gas (LPG).

NOTE: The following instructions are general procedures. There is a variation in equipment for filling LPG tanks. The local authorities that have jurisdiction have specific rules and regulations for filling LPG tanks. Make sure these rules and regulations are available and understood.

1. Check the LPG tank to make sure it needs filling. During the filling operation the LPG tank must be in a position so that the liquid level indicator will always be in the vapor space above the liquid level. See FIGURE 24.
2. Open the liquid outlet valve and by-pass return valve on the storage tank.
3. Start the pump.
4. Connect the supply hose to the quick disconnect fitting. If the LPG tank has an auxiliary fill fitting, connect the supply hose to this fitting. Make sure the correct adapter is used to connect the supply hose to the auxiliary fill fitting.

Property of American Airlines

https://truckmanualshub.com/

5. Open the vent valve on the liquid level indicator.
6. Open the tank fuel valve.
7. Open the valve on the end of the supply hose.
8. Watch for a discharge from the vent valve on the liquid level indicator. When a cloud of visible vapor appears, the tank is full. Do not fill the LPG tank more than the maximum level indicated by the liquid level indicator. Immediately close the valve at the end of the hose.
9. Close the vent valve.
10. Close the fuel valve on the tank.
11. Disconnect the supply hose.
12. Stop the pump.
13. Close liquid outlet valve and by-pass return valve on the storage tank.

Gasoline Or Diesel Fuel

WARNING

When fuel is added, keep the funnel or fuel nozzle in contact with the metal of the fuel tank to reduce the possibility of static electric sparks. Clean any spilled fuel.

1. Remove the fuel cap. Make sure the fuel tank is filled with the correct fuel for the type of engine in the lift truck. Clean the fuel cap.
2. Replace the fuel cap.

Property of American Airlines

https://truckmanualshub.com/

WHEELS AND TIRES

HOW TO CHANGE A SOLID RUBBER TIRE

When new solid rubber tires (press–on) must be installed, put the lift truck on blocks and remove the wheel. The correct tools, equipment and a press ring must be used for each size wheel. A press that has a capacity of approximately 36,000 kg (80,000 lb) for wheels on the S70–120XL lift trucks or 180,000 kg (200,000 lb) for wheels on the S135–155XL lift trucks is also required to press the wheel from the rim. Do not try to change the solid rubber tires on the wheels unless you have the correct tools, equipment and experience.

Make sure the tires are installed on the wheels according to the dimensions shown in FIGURE 25. Install the tires on both drive wheels at the same dimensions. Install the tires on both steering wheels at the same dimensions. Check the Nameplate on the lift truck for the correct tread width. The tread width is measured from the outside of one wheel to the inside of the other wheel.

UNIT	A	B
S70–80XL, S135–155XL	0	0
S100–120XL	25.4 mm (1.0 in)	0

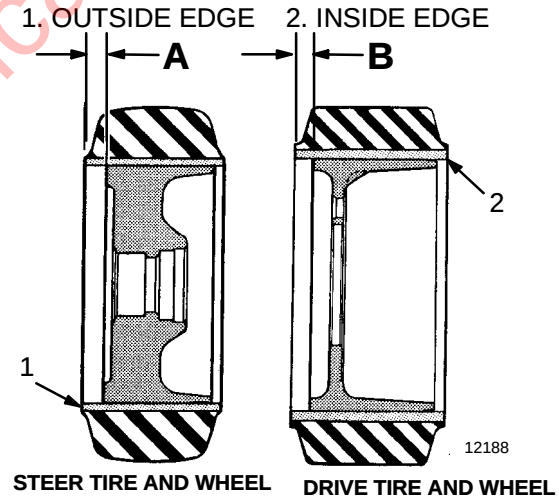

FIGURE 25. WHEELS AND TIRES

Property of American Airlines

https://truckmanualshub.com/

INSTALL THE WHEELS

CAUTION

Check all wheel nuts after 2 to 5 hours of operation: when new lift trucks begin operation and on all lift trucks when the drive wheels have been removed and installed. Tighten the nuts in a cross pattern to the correct torque value shown in the MAINTENANCE SCHEDULE. When the nuts stay tight for eight hours, the interval for checking the torque can be extended to 350 hours.

Steering Wheels

Lubricate the bearings with multipurpose grease and install the wheel and bearings on the spindle. Install the washer and nut on the spindle. Tighten the nut to 200 Nm (150 lbf ft) while rotating the wheel. Loosen the nut until the wheel rotates freely and the bearings are not loose. Tighten the nut to 35 Nm (25 lbf ft) and install the cotter pin at the closest slot in the nut. Install the cap for the bearings.

Drive Wheels

Install the wheel on the hub. Tighten the nuts in a cross pattern to the torque value in the **MAINTENANCE SCHEDULE** table.

OPERATING PROCEDURES FOR A NEW OR REBUILT ENGINE

A new or rebuilt engine must be operated under special conditions during the first 50 hours. These special conditions prevent damage to the engine until the new parts can wear and adjust to fit each other.

1. Make sure the fluid levels of oil and coolant are correct.

2. Start and run the engine at approximately one-half throttle for 30 minutes for the first operation. Check the gauges and indicators for the correct operation during this first operating period. Check for leaks.

3. If the work conditions are slow and the loads are less than 50% of the truck capacity, a simulated work condition must be used during the first four hours of operation. Operate the lift truck with a minimum load of 75% capacity. Operate the engine through cycles from idle to full throttle and back to idle. Avoid long periods of high engine speeds with a light load during the first 50 hours of operation. High engine speeds with a light load can cause damage to the cylinders in the engine.

Property of American Airlines

https://truckmanualshub.com/

NO MATTER HOW YOU SAY IT . . .

La Prudence Paye
La Seguridad Paga
Betriebssicherheit Macht Sich Bezahlt
Passaa Oll Huolellinen
Veiligheid Voor Alles
Säkerhet Först
Essere Sicuro Paga
Seguranca Paga
Sikkerhet Først
Pinter Be Awas

सावधान और जिन्दा रहो।

في التأني السلامة

安全第一

SAFETY PAYS!

WARNING

California Proposition 65 – This product contains and/or emits chemicals known to the State of California to cause cancer, birth defects, or other reproductive harm.

10-05 (12/03) (5/02) (8/00)(5/96)(6/94) (10/91) (10/90) (6/89) Printed In U.S.A.

Property of American Airlines