https://truckmanualshub.com/

TEREX

TR100
Mining Truck
Maintenance Manual

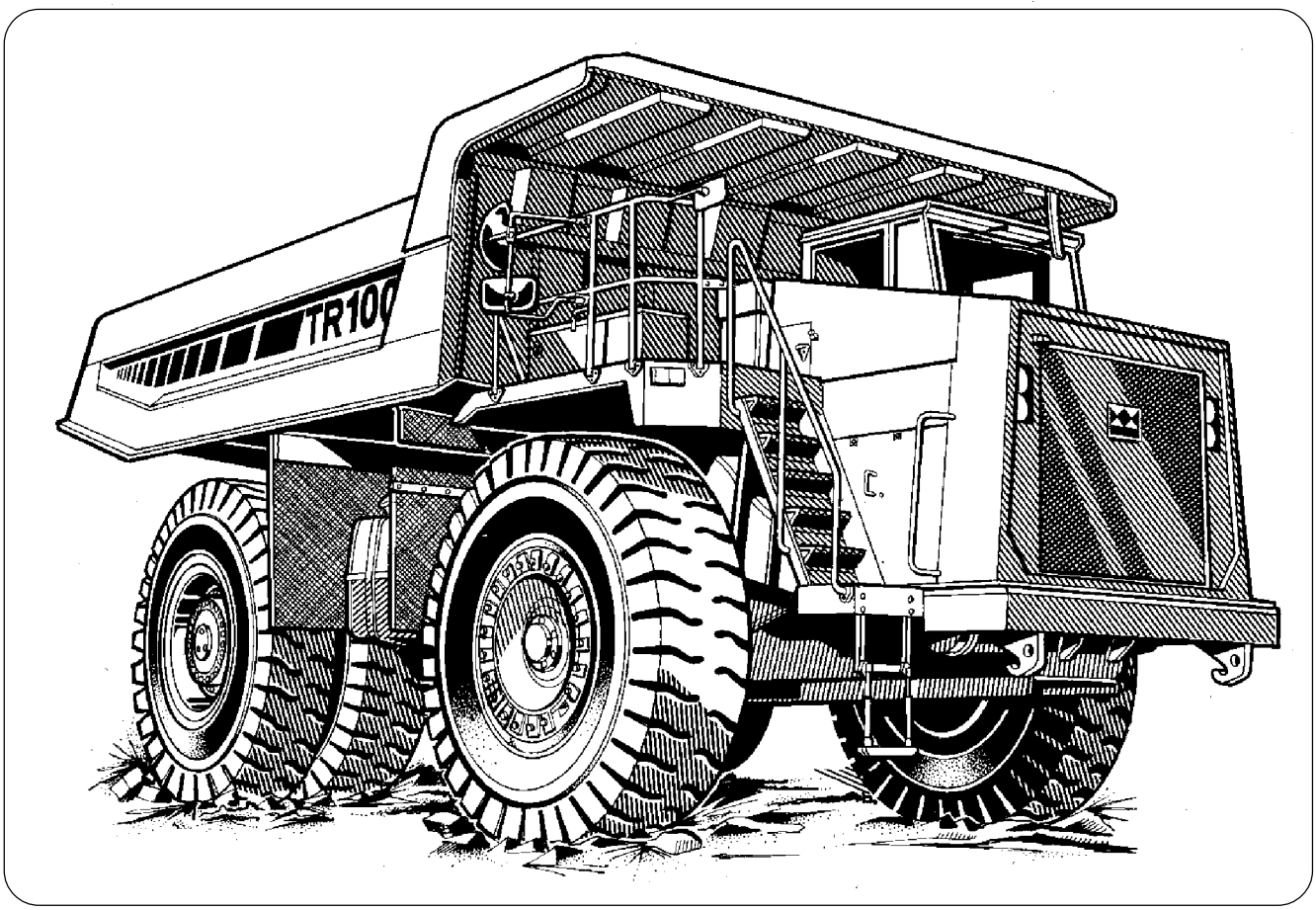

TECHNICAL PUBLICATIONS DEPARTMENT
TEREX EQUIPMENT LIMITED,
MOTHERWELL, SCOTLAND, ML1 5RY
REF. NO. SM755/783

SM 1616 Rev 1 11-00

https://truckmanualshub.com/

THIS PAGE IS INTENTIONALLY LEFT BLANK

Find manuals at http://best-manuals.com/

https://truckmanualshub.com/

TEREX

IMPORTANT SAFETY NOTICE

Proper service and repair is important to the safe, reliable operation of all motor vehicles. The service procedures recommended and described in this publication, are effective methods for performing service operations. Some of these service operations require the use of tools specially designed for the purpose. The special tools should be used when, and as recommended.

It is important to note that this publication contains various WARNINGS and NOTES which should be carefully read in order to minimize the risk of personal injury to personnel, or the possibility that improper service methods will be followed which may damage the vehicle or render it unsafe. It is also important to understand these WARNINGS and NOTES are not exhaustive. It is not possible to know, evaluate and advise the service trade of ALL conceivable ways in which service might be carried out, or, of the possible hazardous consequences of each way. Consequently, no such broad evaluation has been undertaken. Accordingly, anyone who uses a service procedure, or tool, which is not recommended, must first satisfy themselves thoroughly that neither their safety, nor vehicle safety, will be jeopardized by the service method he/she selects.

Two types of heading are used in this manual to attract your attention.

1. ⚠ **WARNING** - This symbol is used when an operating procedure, practice, etc., which, if not correctly followed could result in personal injury or loss of life. Look for this symbol to point out important safety precautions. It means - **ATTENTION! BECOME ALERT! YOUR SAFETY IS INVOLVED!**

2. **Note -** This is used when an operating procedure, practice, etc., which, if not strictly observed, could result in damage to or destruction of equipment.

⚠ **WARNING**
Never use parts which are altered, modified, or weakened in operation. This can seriously jeopardize the integrity of the machine and could result in property damage or serious personal injury.

Find manuals at http://best-manuals.com/

https://truckmanualshub.com/

THIS PAGE IS INTENTIONALLY LEFT BLANK

Find manuals at http://best-manuals.com/

https://truckmanualshub.com/

TEREX

The information contained within this Alert must not be made available to third parties not authorised to receive it.

Service Information Alert

DATE: April 1994 **B168**

MODEL: General

SUBJECT: VITON 'O' RINGS AND SEALS (FLUORO-ELASTOMERS) - SAFETY HAZARDS

PURPOSE:

To advise potentially hazardous condition.

DETAIL:

It has been brought to our attention that 'Viton' material used in manufacture of oil seals and 'O' rings, produces a highly corrosive acid (Hydrofluoric) when subjected to temperatures above 315° C.

The resulting contamination can have extreme consequences on human tissue since it is almost impossible to remove after contact.

We therefore recommend the following procedure when it is necessary to inspect any equipment that has been subjected to a high temperature i.e. fire.

a. Visually inspect for any gaskets or seals which have suffered from heat; they will appear black and sticky.

b. If this is affirmed - **Do Not Touch**

c. Make enquiries to ascertain the material composition. Any Fluoro-elastomer (Viton, Fluorel or Tecmoflon) should be considered dangerous but natural rubber and nitrile are non-hazardous.

d. If Fluoro-elastomer seals have been used, then the affected area MUST be decontaminated before undertaking further work.

e. Disposable Heavy Duty Gloves (Neoprene) MUST be worn and the affected area decontaminated by washing thoroughly with Limewater (Calcium Hydroxide solution).

f. Any cloths, residue and gloves used MUST be safely discarded after use.

Note: Burning of the discarded items is NOT RECOMMENDED, except in an approved incineration process where the gaseous products are treated by alkaline scrubbing.

TEREX SERVICE DEPARTMENT

TEREX Equipment Limited, Motherwell, Scotland ML1 5RY Tel. (0698) 732121 Tlx. 77141 Fax. (0698) 734046
TEREX Division, Tulsa, Oklahoma, 74107 USA Tel. (918) 446-5581 Fax. (918) 446-9752

TEREX

Find manuals at http://best-manuals.com/

https://truckmanualshub.com/

THIS PAGE IS INTENTIONALLY LEFT BLANK

Find manuals at http://best-manuals.com/

https://truckmanualshub.com/

TABLE OF CONTENTS

Section No.	Description	SM No.
000	**GENERAL INFORMATION**	
0000	TR100 Off-Highway Truck	1618 Rev 1
100	**CHASSIS**	
0010	Chassis, Hood and Fenders - Pre January 2000 Production	1622
0010	Chassis, Hood and Fenders - From January 2000 Production	1898
110	**ENGINE**	
0030	Engine and Mounting	1655 Rev 1
0050	Air Cleaner	1246
0130	Power Takeoff	1656
120	**TRANSMISSION**	
0010	Transmission and Mounting - Pre March 1999 Production	1623
0010	Transmission and Mounting - From March 1999 Production	1899
0070	Commercial Electronic Control (CEC) Shift System	1619 Rev 1
0090	Power Takeoff	1178
0100	Transmission Oil Filter	1624
130	**DRIVELINE**	
0010	Front Driveline	1657
0020	Rear Driveline	1658
140	**FRONT AXLE**	
0040	Wheel, Rim and Tyre	1625 Rev 1
160	**REAR AXLE**	
0020	Differential	1626 Rev 1
0020	Differential (Optional)	1907
0030	Axle Group	1627 Rev 1
0050	Wheel, Rim and Tyre	1628 Rev 1
165	**BRAKE PARTS**	
0020	Brake Parts - Front Axle	1629
0030	Brake Parts - Rear Axle	1630
180	**SUSPENSION SYSTEM**	
0030	Ride Cylinder - Front	1631
0050	Ride Cylinder - Rear	1632
190	**CIRCUIT DIAGRAMS**	
0000	Circuit Diagrams	1585
0270	Switches and Sensors - Pre March 2000 Production	1633 Rev 1
0270	Switches and Sensors - From March 2000 Production	2046
200	**FUEL SYSTEM**	
0010	Fuel Tank and Mounting	1634
210	**COOLING SYSTEM**	
0000	Cooling System	1263
0040	Radiator, Header Tank and Mounting - Pre September 1999 Production	1635
0040	Radiator, Header Tank and Mounting - From September 1999 Production	1900
0050	Disc Brake Oil Cooler	1636
0060	Transmission Oil Cooler	1637

Find manuals at http://best-manuals.com/

https://truckmanualshub.com/

TABLE OF CONTENTS

Section No.	Description	SM No.
220	**STEERING SYSTEM**	
0000	Steering System Schematic	1661
0040	Steering and Brake Control Tank	1638
0050	Steering Pump	1639
0080	Accumulator	1205
0090	Steering Valve	1640 Rev 1
0110	Double Relief Valve	1208
0120	Steering Cylinder and Linkage - Pre August 2000 Production	1641
0120	Steering Cylinder and Linkage - From August 2000 Production	2047
0130	Accumulator Valve	1642
0150	Steering Filter	1593
230	**BODY SYSTEM**	
0000	Body System Schematic	1646 Rev 1
0040	Body and Disc Brake Cooling Tank	1643
0050	Main Hydraulic Pump	1644
0060	Body Control Valve	1659 Rev 1
0081	Body Control Joystick	1277
0100	Manifold Relief Valve	1645
0121	Pilot Supply Valve	1599
0130	Body Cylinder	1279
250	**BRAKING SYSTEM**	
0000	Braking System Schematic	1660 Rev 1
0050	Brake Manifold Valve	1647
0055	Tandem Pump	1648
0060	Accumulator	1600
0070	Treadle Valve	1649
0090	Directional Control Valve	1226
0100	Monoblock Brake Valve	1227 Rev 2
0110	Pressure Reducing Valve	2045
0130	Retarder Control Valve	1650 Rev 1
0140	Shuttle Valve	1229
0151	Parking Brake Valve	1651
0152	Brake Dump Valve	1652
260	**OPERATORS COMPARTMENT**	
0010	Cab and Mounting	1602 Rev 1
0090	Driver Seat and Mounting	1901
0110	Passenger Seat and Mounting - Pre November 1999 Production	1603
0110	Passenger Seat and Mounting - From November 1999 Production	1902
0130	Air Conditioning	1903
270	**BODY**	
0010	Body and Mounting	1653 Rev 1
300	**MISCELLANEOUS**	
0020	Lubrication System	1654 Rev 1
0070	Service Tools	1662 Rev 1
0080	Standard Bolt and Nut Torque Specifications	1238
0090	Unit Storage	1239

* * * *

Find manuals at http://best-manuals.com/

https://truckmanualshub.com/

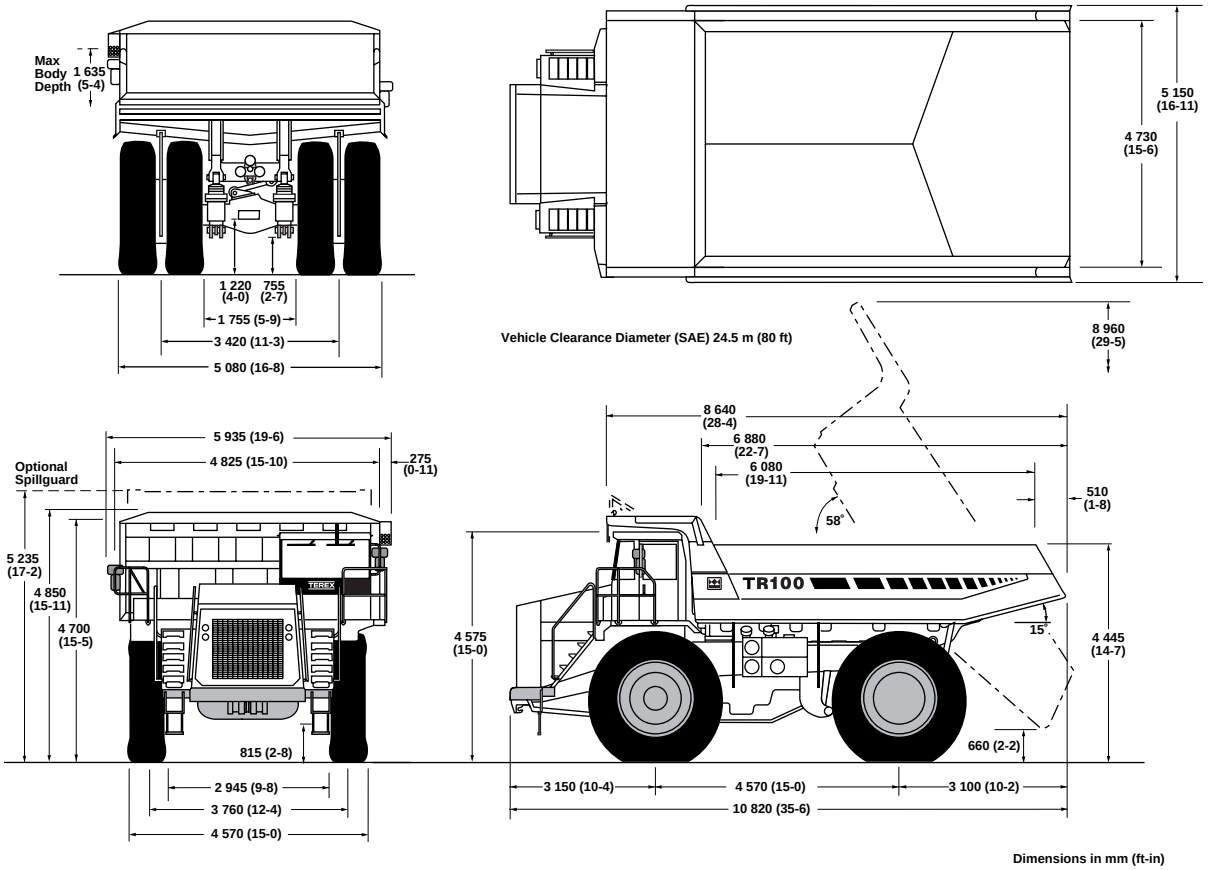

Fig. 1 - Machine Dimensions

ENGINE

Make/Model ..... Cummins KTA-38-C1050
Type ..... 4 Cycle, Turbocharged/Aftercooled
Gross Power
at 2 100 rev/min ..... 783 kW (1 050 hp, 1 094 PS)
Net Power at 2 100 rev/min ..... 727 kW (975 hp, 988 PS)

Note: Power ratings to SAE J1995 June 1990. Net Power is after deductions for fan and alternator. Engine requires no derating up to 3 050 m (10 000 ft) altitude.

Maximum Torque ..... 4 631 Nm (3 415 lbf ft) at 1 300 rev/min
Number of Cylinders/Configuration 12V
Bore x Stroke ..... 159 x 159 mm (6.25 x 6.25 in)
Total Displacement ..... 37.7 litres (2 300 in³)
Starting ..... Electric
Maximum Speed, Full Load ..... 2 100 rev/min
Maximum Speed, No Load ..... 2 400 rev/min
Idle Speed ..... 750 rev/min
Safe Operating Angle ..... 30°/60% Grade

TRANSMISSION

Make/Model ..... Allison DP-8963 CEC
Automatic electronic control with soft shift feature. Remote mounted in the frame with integral TC 890 torque converter and planetary gearing. Six speeds forward, one reverse. Automatic converter lockup action in all speed ranges. Downshift inhibitor. Hydraulic retarder.

Speeds With Standard Planetary						
Forward						
Gear	1	2	3	4	5	6
Ratio	4.24	2.32	1.69	1.31	1.00	0.73
km/h	8.2	15.0	20.6	26.5	34.8	47.6
mile/h	5.1	9.3	12.8	16.5	21.6	29.6
Reverse						
Ratio	5.75					
km/h	6.0					
mile/h	3.8					

Find manuals at http://best-manuals.com/

https://truckmanualshub.com/

DRIVE AXLE

Heavy duty axle with full floating axle shafts, single reduction spiral bevel gear differential and planetary reduction at each wheel.

Ratios:	Standard	Optional
Differential	2.16:1	2.16:1
Planetary	13.75:1	10.50:1
Total Reduction	29.70:1	22.68:1

SUSPENSION

Front: King pin strut type independent front wheel suspension by self-contained, variable rate, nitrogen/oil cylinders.

Rear: Variable rate nitrogen/oil cylinders with A-frame linkage and lateral stabilizer bar.

Maximum Strut Stroke
- Front ..... 235 mm (9.25 in)
- Rear ..... 175 mm (6.9 in)

Maximum Rear Axle Oscillation ..... ± 7.0 Degrees

WHEELS AND TYRES

Wheel Rim Width ..... 19.5 in
Tyres (Front & Rear)
- Standard ..... 27.00 R 49** Radial
- Optional ..... 27.00-49 (48 PR) E-4

Note: It is recommended that for tyres both listed and unlisted, the user should consult the tyre manufacturer and evaluate all job conditions in order to make the proper selection.

BRAKES

Service

All hydraulic brake system. Transmission mounted pressure compensating pump provides hydraulic pressure for brakes and steering. Independent circuits front and rear. Each circuit incorporates a nitrogen accumulator which stores energy to provide consistent braking response.

Front Brake Circuit Pressure ..... 159 bar (2 300 lbf/in²)
Rear Brake Circuit Pressure ..... 52 bar (750 lbf/in²)
Accumulators:
- Nitrogen Precharge Pressure ..... 55 bar (800 lbf/in²)

Front:
- Type ..... Dry Disc with 1 calliper per wheel
- Disc Diameter ..... 965 mm (38 in)
- Pad Area, Total ..... 2 015 cm² (320 in²)

Rear:
- Type ..... Oil cooled, multiple friction discs, completely sealed from dirt and water.
- Braking Surface, Total ..... 87 567 cm² (13 573 in²)

Parking

Application of rear brakes by springs in brake disc pack. Hydraulically released.
Hold-off Pressure ..... 83 bar (1 200 lbf/in²)

Retardation

Modulated lever control of rear disc pack.
Retarder Actuation Pressure ..... up to 33 bar (480 lbf/in²)

Emergency

Push button solenoid control applies service and parking brakes. Automatically applies when engine is switched off. Parking brake applies should system pressure fall below a predetermined level.

Brakes conform to ISO 3450, SAE J1473 OCT 90.

STEERING SYSTEM

Independent hydrostatic steering with closed-centre steering valve, accumulator and pressure compensating piston pump.

Accumulator provides uniform steering regardless of engine speed. In the event of loss of engine power it provides steering of approximately two lock-to-lock turns.
A low pressure indicator light warns of system pressure below 83 bar (1 200 lbf/in²). Steering conforms to ISO 5010, SAE J53.

System Pressure ..... 159 bar (2 300 lbf/in²)
Relief Pressure ..... 207 bar (3 000 lbf/in²)
Steering Cylinders ..... Double Acting, Single Stage
Accumulator:
- Oil Capacity ..... 16.4 litres (4.33 US gal)
- Nitrogen Precharge Pressure ..... 55 bar (800 lbf/in²)

Steering Angle (Left and Right) ..... 39°
Pump:
- Type ..... Piston
- Capacity at 2 100 rev/min ..... 2.0 litres/s (32 US gal/min)

BODY HYDRAULICS

Two body hoist cylinders are mounted between the frame rails. Cylinders are two-stage with power down in the second stage.

System Relief Pressure ..... 190 bar (2 750 lbf/in²)
Pump:
- Type ..... Gear
- Capacity at 2 100 rev/min ..... 6.1 litres/s (97 US gal/min)

Control Valve ..... Servo Controlled, Open Centre
Body Raise Time ..... 16.3 Seconds
Body Lower Time ..... 18 Seconds

ELECTRICAL

Type ..... 24 Volt, Negative Ground
Battery ..... Four, 12 Volt, 210 Ah each, Maintenance Free
Accessories ..... 24 Volt
Alternator ..... 70 Amp
Starter ..... Two, 8.9 kW

Find manuals at http://best-manuals.com/

https://truckmanualshub.com/

BODY

Longitudinal 'V' type floor with integral transverse box-section stiffeners. The body is exhaust heated and rests on resilient impact absorption pads.

Body wear surfaces are high hardness (360-440 BHN) abrasion resistant steel. Yield strength of plates 1 000 MPa (145 000 lbf/in²).

Plate Thicknesses:
- Floor ..... 19 mm (0.75 in)
- Side ..... 10 mm (0.39 in)
- Front, lower ..... 10 mm (0.39 in)

ROPS Cabguard SAE J1040 Feb 86. ISO 3471

Volumes:
- Struck (SAE) ..... 41.6 m³ (54.4 yd³)
- Heaped 2:1 (SAE) ..... 57.0 m³ (74.5 yd³)

TYPICAL NOISE LEVELS

OPERATOR EAR (ISO 6394) ..... 83 dbA

*EXTERIOR SOUND RATING
(SAE J88 JUN 86) ..... 93 dbA

*The above result is for the mode giving the highest exterior sound level when measured and operated as per the prescribed procedures of the standard. Results shown are for the unit in base configuration.

Note: Noise Level Exposure to the operator and bystander personnel may be higher depending upon proximity to buildings, rock piles, machinery etc.. The actual job site Noise Level Exposure must be measured and applicable regulations complied with in respect to Employee Hearing Protection.

SERVICE CAPACITIES

Engine Crankcase and Filters ..... 134 litres (35.4 US gal)
Transmission and Filters ..... 100 litres (26 US gal)
Cooling System ..... 304 litres (80.3 US gal)
Fuel Tank ..... 1 090 litres (288 US gal)
Steering Hydraulic Tank ..... 61 litres (16.1 US gal)
Steering System ..... 72 litres (19 US gal)
Body and Brake Cooling Tank ..... 297 litres (78.5 US gal)
Body and Brake Cooling System ..... 564 litres (149 US gal)
Planetaries (Total) ..... 57 litres (15.1 US gal)
Differential ..... 61 litres (16.1 US gal)
Front Ride Strut (Each) ..... 27 litres (7.1 US gal)
Rear Ride Strut (Each) ..... 18 litres (4.8 US gal)
Power Takeoff ..... 4 litres (1.1 US gal)
Air Conditioning Compressor ..... 0.135 litres (0.036 US gal)

VEHICLE WEIGHTS (MASS)		
	kg	lb
Chassis, with hoists Body, standard Net Weight	53 240 15 380 68 620	117 380 33 900 151 280
PAYLOAD, maximum	**90 720**	**200 000**
Maximum Gross Weight*	159 340	351 280
FOR UNIT EQUIPPED WITH OPTIONAL BODY LINER PLATES:		
Chassis, with hoists Body, with wear plates Net Weight	53 240 20 910 74 150	117 380 46 100 163 480
PAYLOAD, maximum	**85 190**	**187 800**
Maximum Gross Weight*	159 340	351 280
* Maximum permissible gross vehicle weight with options, attachments, full fuel tank and payload.		
WEIGHT DISTRIBUTION	Front Axle	Rear Axle
Empty %	49	51
Loaded %	34	66

* * * *

Find manuals at http://best-manuals.com/

https://truckmanualshub.com/

THIS PAGE IS INTENTIONALLY LEFT BLANK

Find manuals at http://best-manuals.com/

https://truckmanualshub.com/

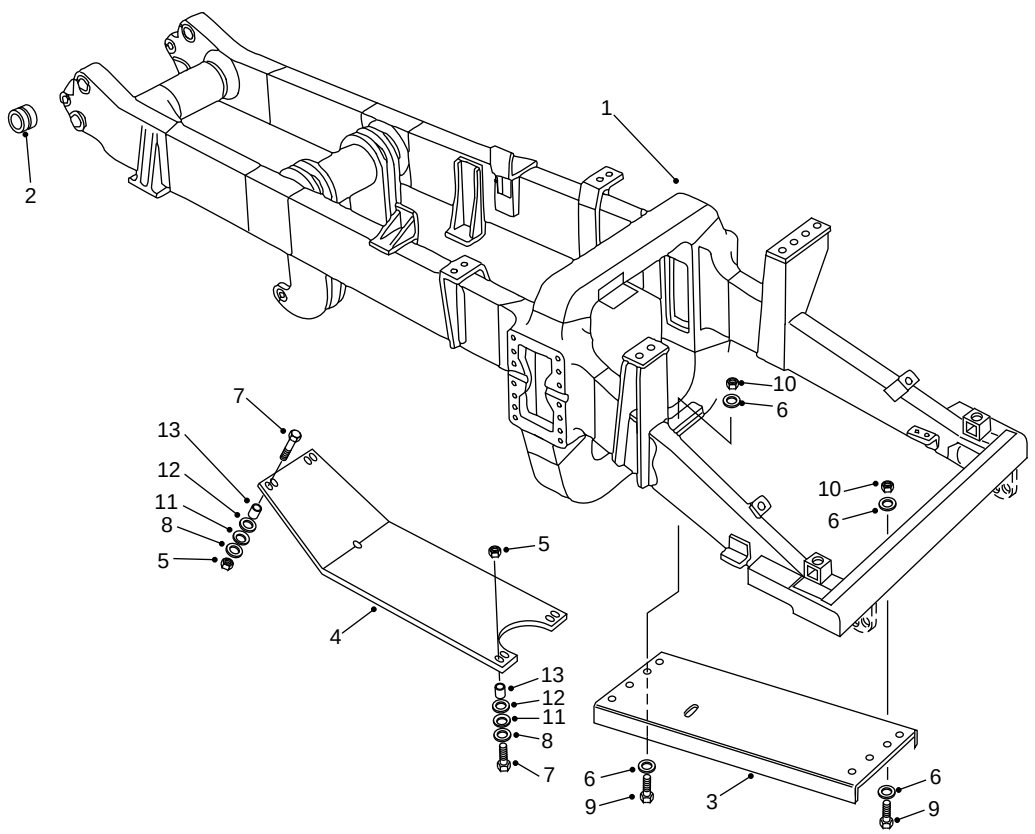

1 - Frame Assembly
2 - Bushing
3 - Engine Guard
4 - Transmission Guard
5 - Nut
6 - Hardened Washer
7 - Bolt
8 - Hardened Washer
9 - Bolt
10 - Nut
11 - Spring Disc
12 - Hardened Washer
13 - Hardened Spacer

Fig. 1 - Exploded View of Chassis and Guards

REMOVAL

WARNING
To prevent personal injury and property damage, be sure wheel chocks, blocking materials and lifting equipment are properly secured and of adequate capacity to do the job safely.

To remove any of the components shown in Figs. 1 through 6 (or similar components) the following procedures should be carried out.

1. Position the vehicle in a level work area, apply the parking brake and switch off the engine.

2. Turn steering wheel several times to relieve pressure in the steering circuit. Block all road wheels.

3. Attach a suitable lifting device to the component and remove mounting hardware. Remove the component from the vehicle.

INSTALLATION

Note: Tighten all fasteners to standard torques listed in Section 300-0080, STANDARD BOLT AND NUT TORQUE SPECIFICATIONS.

WARNING
To prevent personal injury and property damage, be sure wheel chocks, blocking materials and lifting equipment are properly secured and of adequate capacity to do the job safely.

Using a suitable lifting device, align the component to be installed in position on the chassis. Secure the component securely to the chassis with mounting hardware removed during removal.

Find manuals at http://best-manuals.com/

https://truckmanualshub.com/

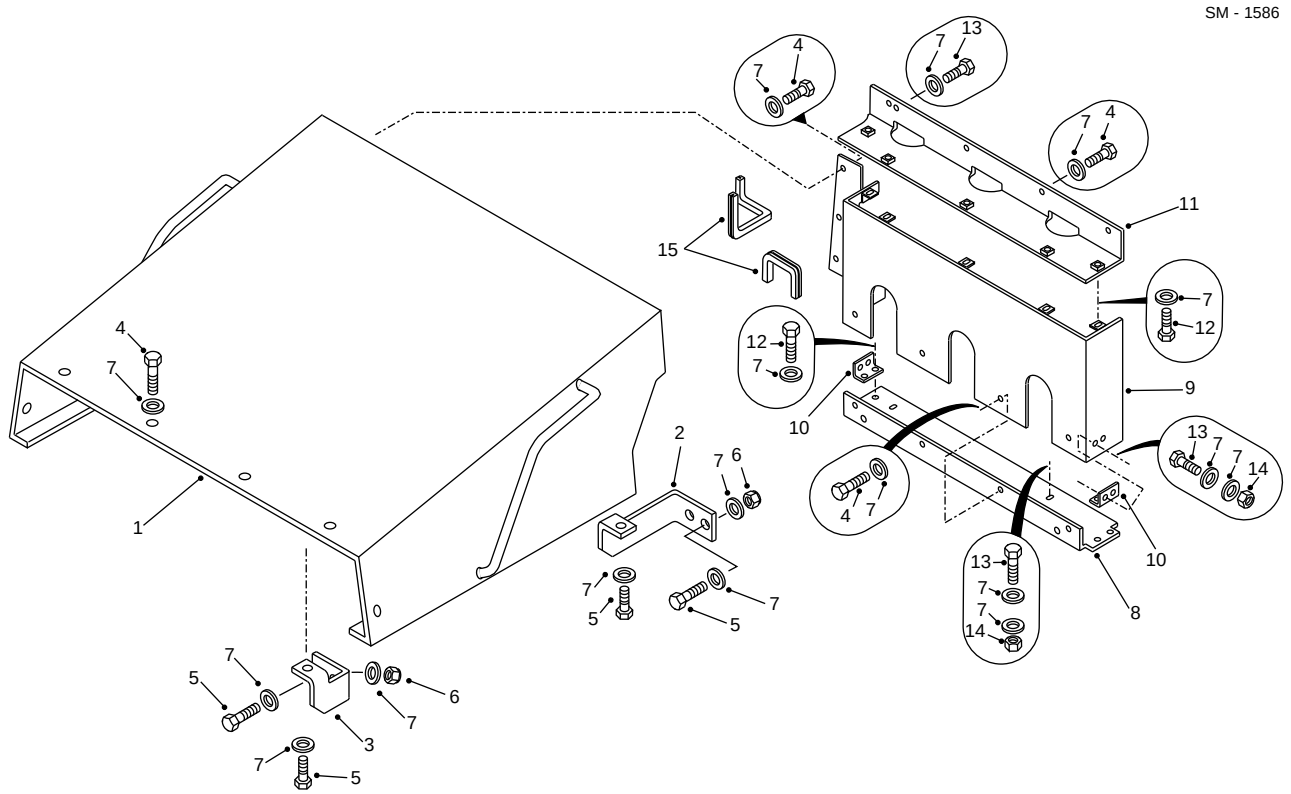

1 - Hood Assembly
2 - Bracket - LH
3 - Bracket - RH
4 - Bolt
5 - Bolt
6 - Locknut
7 - Hardened Washer
8 - Plate Assembly - Base
9 - Baffle Assembly
10 - Bracket
11 - Plate Assembly - Top
12 - Bolt
13 - Bolt
14 - Nut
15 - Beading

Fig. 2 - Exploded View of Hood and Mounting

MAINTENANCE

Inspection

Inspect the frame and attached parts at intervals not exceeding 250 hours for cracked or broken welds and bending/twisting of the frame. Any defects found should be repaired before they progress into major failures. Contact your dealer for recommended weld and repair instructions.

Welding

Note: It is important that the electrical connections are disconnected in the following order to prevent damage to the electrical components:

a. Disconnect battery equalizer ground cables.
b. Disconnect battery cables from terminal posts (ground cable first).
c. Disconnect battery equalizer positive cables.
d. Disconnect electrical connections at the ECU.

After welding, reconnect all of the above in the reverse order.

⚠ WARNING
Welding and flame cutting cadmium plated metals produce odourless fumes which are toxic. Recommended industrial hygiene practice for protection of the welding operator from the cadmium fumes and metallic oxides requires enclosure ventilation specifically designed for the welding process. A respiratory protective device such as the M.S.A. 'Gasfoe' respirator with G.M.A. cartridge will provide protection against cadmium, fumes and metallic oxides. The 'Gasfoe' respirator has been approved by the U.S. Bureau of Mines: Approval number 23B-10, and is designed to protect against gases, vapours, and/or metal fumes.

Electric arc welding is recommended for all chassis welding. Since the nature and extent of damage to the frame cannot be predetermined, no definite repair procedure can be established. As a general rule however, if parts are twisted, bent or pulled apart, or a frame is bent or twisted, no welding should be done

Find manuals at http://best-manuals.com/

https://truckmanualshub.com/

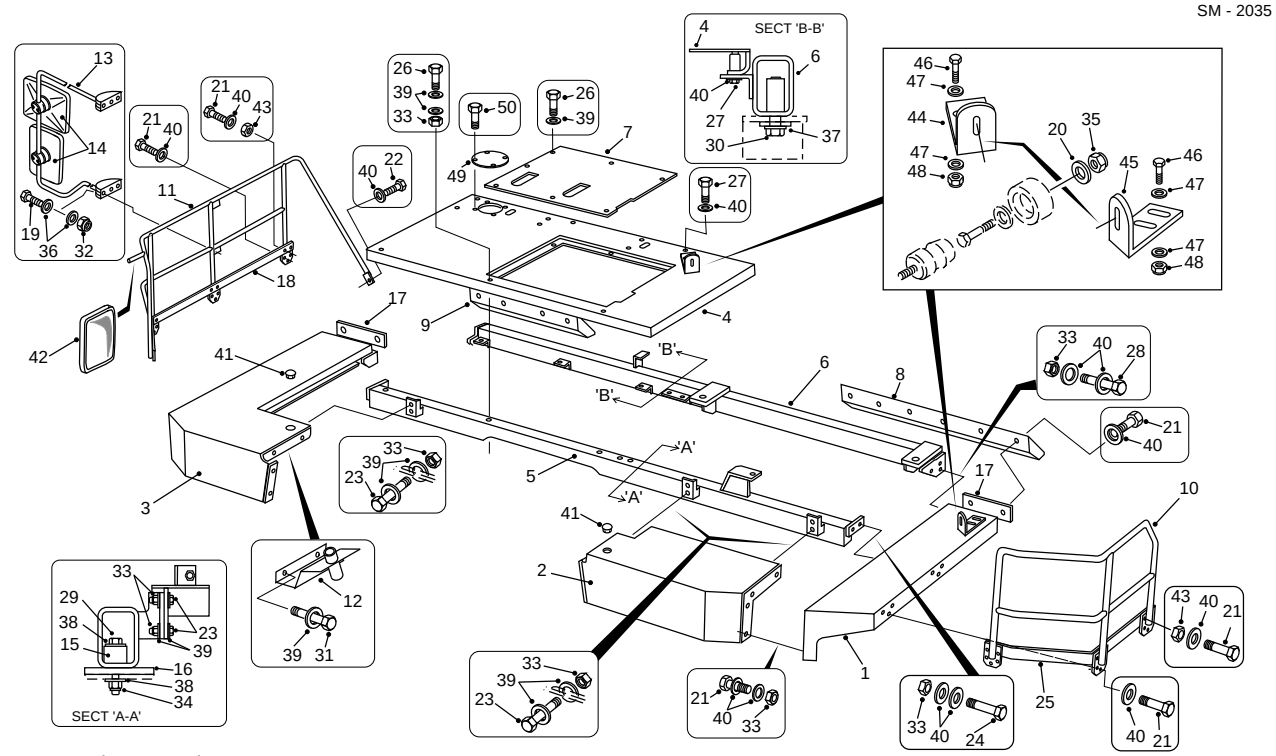

1 - Fender Extension
2 - Fender Assembly - LH
3 - Fender Assembly - RH
4 - Platform Assembly - RH
5 - Front Crossmember
6 - Rear Crossmember
7 - Cover Plate
8 - Mudguard
9 - Mudguard
10 - Handrail - LH
11 - Handrail - RH
12 - Plate Assembly
13 - Arm
14 - Mirror
15 - Block
16 - Spacer
17 - Spacer
18 - Spacer
19 - Bolt
20 - Hardened Washer
21 - Bolt
22 - Bolt
23 - Bolt
24 - Bolt
25 - Bolt
26 - Bolt
27 - Bolt
28 - Bolt
29 - Bolt
30 - Bolt
31 - Bolt
32 - Nut
33 - Locknut
34 - Nut
35 - Nut
36 - Washer
37 - Hardened Washer
38 - Hardened Washer
39 - Hardened Washer
40 - Hardened Washer
41 - Plug
42 - Mirror
43 - Nut
44 - Bracket
45 - Bracket
46 - Nut
47 - Washer
48 - Nut
49 - Plate Cover
50 - Bolt

Fig. 3 - Exploded View of Fenders and Mounting

until the parts are straightened or realigned.

Successfully welded repairs will depend to a great extent upon the use of the proper equipment, materials and the ability of the welder. The Service Department can be consulted regarding the feasibility of welding repairs.

Painting

A check of the condition of the paint should be made approximately twice a year and chassis repainted if necessary.

If painting of the actual frame of the unit is required, thoroughly clean the areas to be painted. Apply a primer coat of red oxide and then a finish coat of polyurethane enamel.

To keep rust and corrosion to a minimum, periodic painting of abrasions and other exposed metal areas on the frame is highly recommended.

SPECIAL TOOLS

There are no special tools required for procedures outlined in this section. Refer to Section 300-0070, SERVICE TOOLS for part numbers of general service tools required. These tools are available from your dealer.

Find manuals at http://best-manuals.com/

https://truckmanualshub.com/

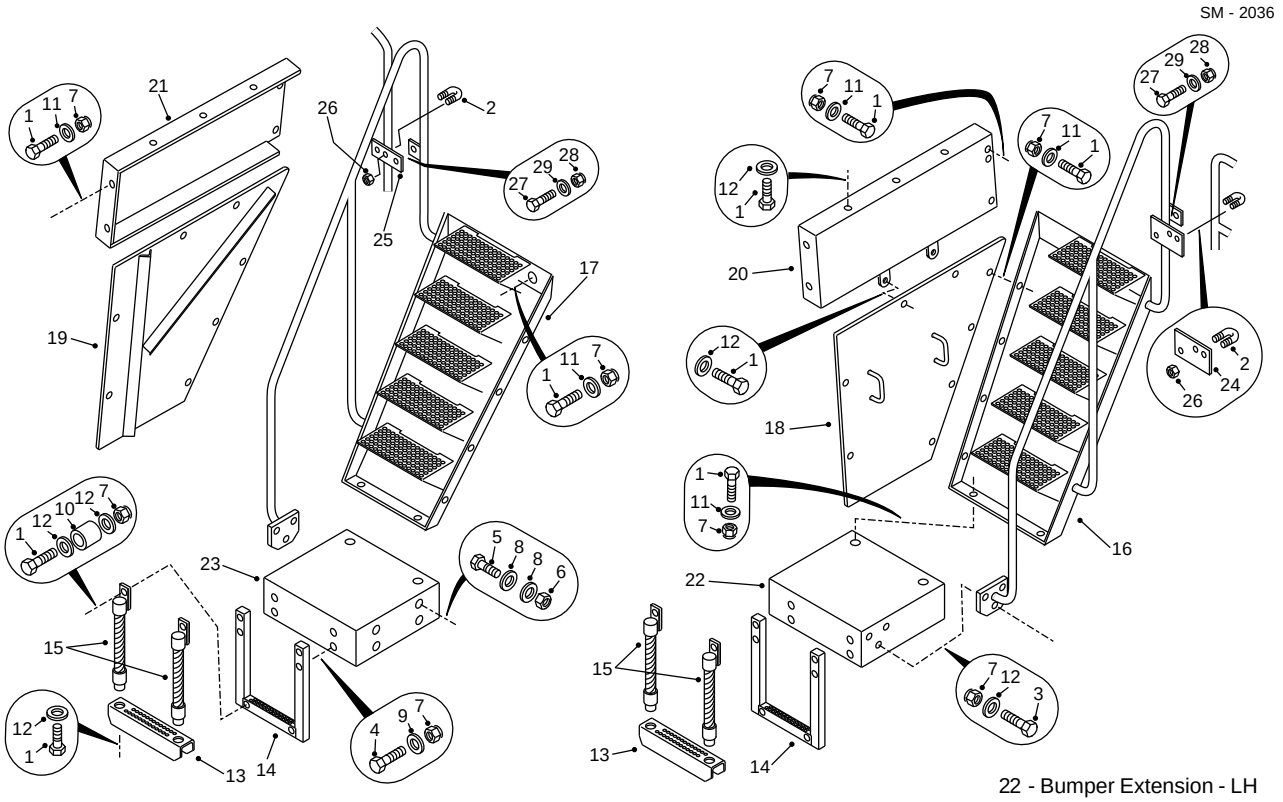

1 - Bolt
2 - 'U' Bolt
3 - Bolt
4 - Bolt
5 - Bolt
6 - Nut
7 - Locknut
8 - Hardened Washer
9 - Washer
10 - Spacer
11 - Hardened Washer
12 - Hardened Washer
13 - Rung
14 - Step Assembly
15 - Cable Assembly
16 - Step Assembly - LH
17 - Step Assembly - RH
18 - Hoodside - LH
19 - Hoodside - RH
20 - Panel Assembly - LH
21 - Panel Assembly - RH
22 - Bumper Extension - LH
23 - Bumper Assembly - RH
24 - Bracket
25 - Bracket
26 - Nut
27 - Bolt
28 - Nut
29 - Hardened Washer

Fig. 4 - Exploded View of Ladders and Handrails

Find manuals at http://best-manuals.com/

https://truckmanualshub.com/

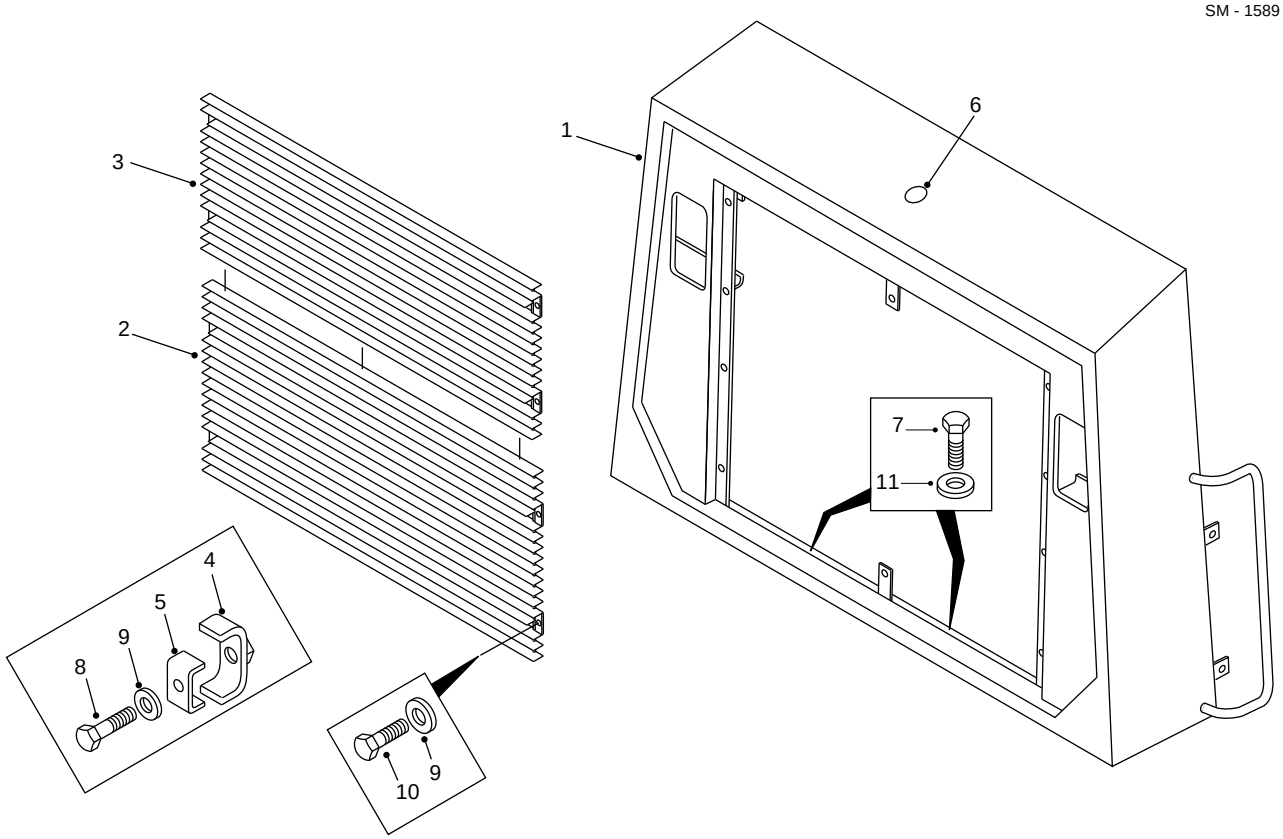

1 - Radiator Guard
2 - Grille - Bottom
3 - Grille - Top
4 - Clamp
5 - Clip
6 - Button Plug
7 - Bolt
8 - Bolt
9 - Hardened Washer
10 - Bolt
11 - Hardened Washer

Fig. 5 - Exploded View of Radiator Guard and Mounting

Find manuals at http://best-manuals.com/

https://truckmanualshub.com/

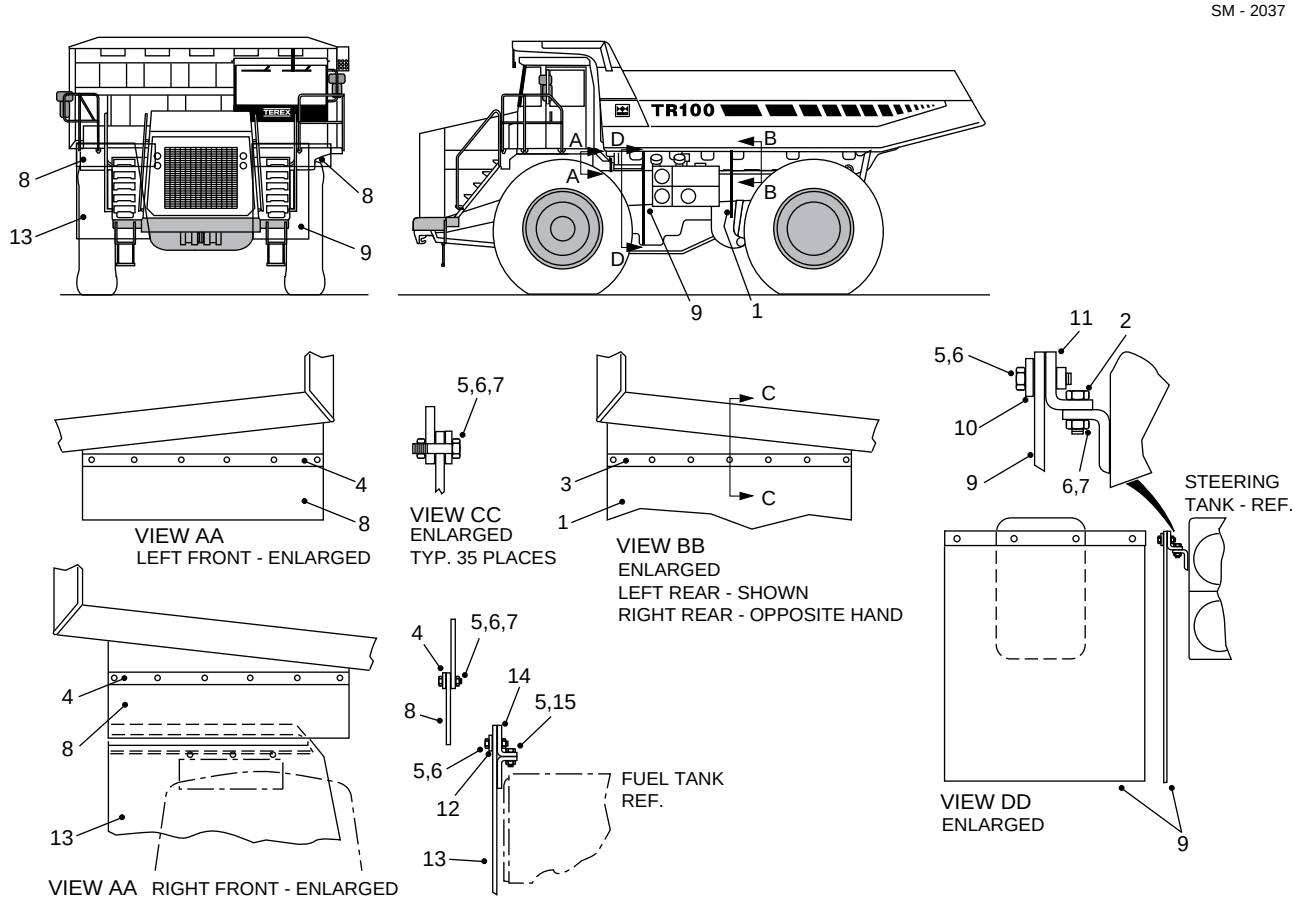

1 - Mudguard
2 - Bolt
3 - Bar
4 - Bar
5 - Bolt
6 - Lockwasher
7 - Nut
8 - Flap
9 - Mudflap - LH
10 - Support Bar
11 - Angle Support
12 - Bar
13 - Mudguard
14 - Bracket
15 - Hardened Washer

Fig. 6 - Mudguards

* * * *

Find manuals at http://best-manuals.com/

https://truckmanualshub.com/

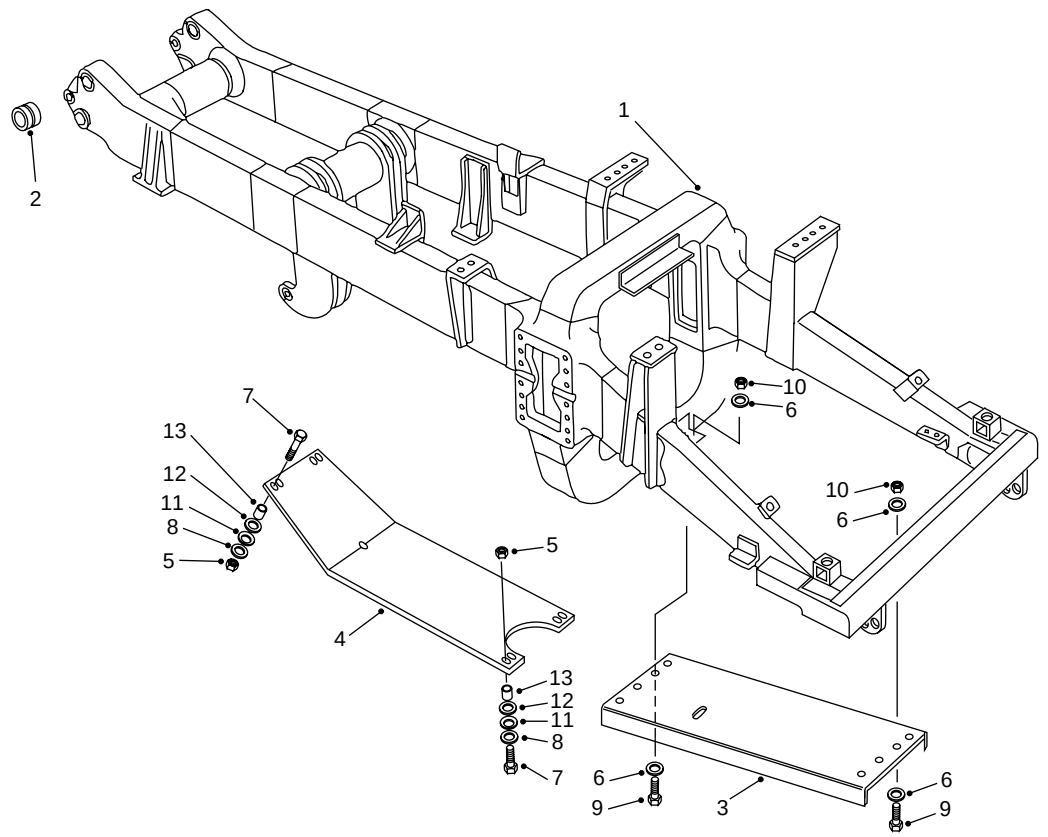

1 - Frame Assembly
2 - Bushing
3 - Engine Guard
4 - Transmission Guard
5 - Nut
6 - Hardened Washer
7 - Bolt
8 - Hardened Washer
9 - Bolt
10 - Nut
11 - Spring Disc
12 - Hardened Washer
13 - Hardened Spacer

Fig. 1 - Exploded View of Chassis and Guards

REMOVAL

WARNING
To prevent personal injury and property damage, be sure wheel chocks, blocking materials and lifting equipment are properly secured and of adequate capacity to do the job safely.

To remove any of the components shown in Figs. 1 through 6 (or similar components) the following procedures should be carried out.

1. Position the vehicle in a level work area, apply the parking brake and switch off the engine.

2. Turn steering wheel several times to relieve pressure in the steering circuit. Block all road wheels.

3. Attach a suitable lifting device to the component and remove mounting hardware. Remove the component from the vehicle.

INSTALLATION

Note: Tighten all fasteners to standard torques listed in Section 300-0080, STANDARD BOLT AND NUT TORQUE SPECIFICATIONS.

WARNING
To prevent personal injury and property damage, be sure wheel chocks, blocking materials and lifting equipment are properly secured and of adequate capacity to do the job safely.

Using a suitable lifting device, align the component to be installed in position on the chassis. Secure the component securely to the chassis with mounting hardware removed during removal.

Find manuals at http://best-manuals.com/

https://truckmanualshub.com/

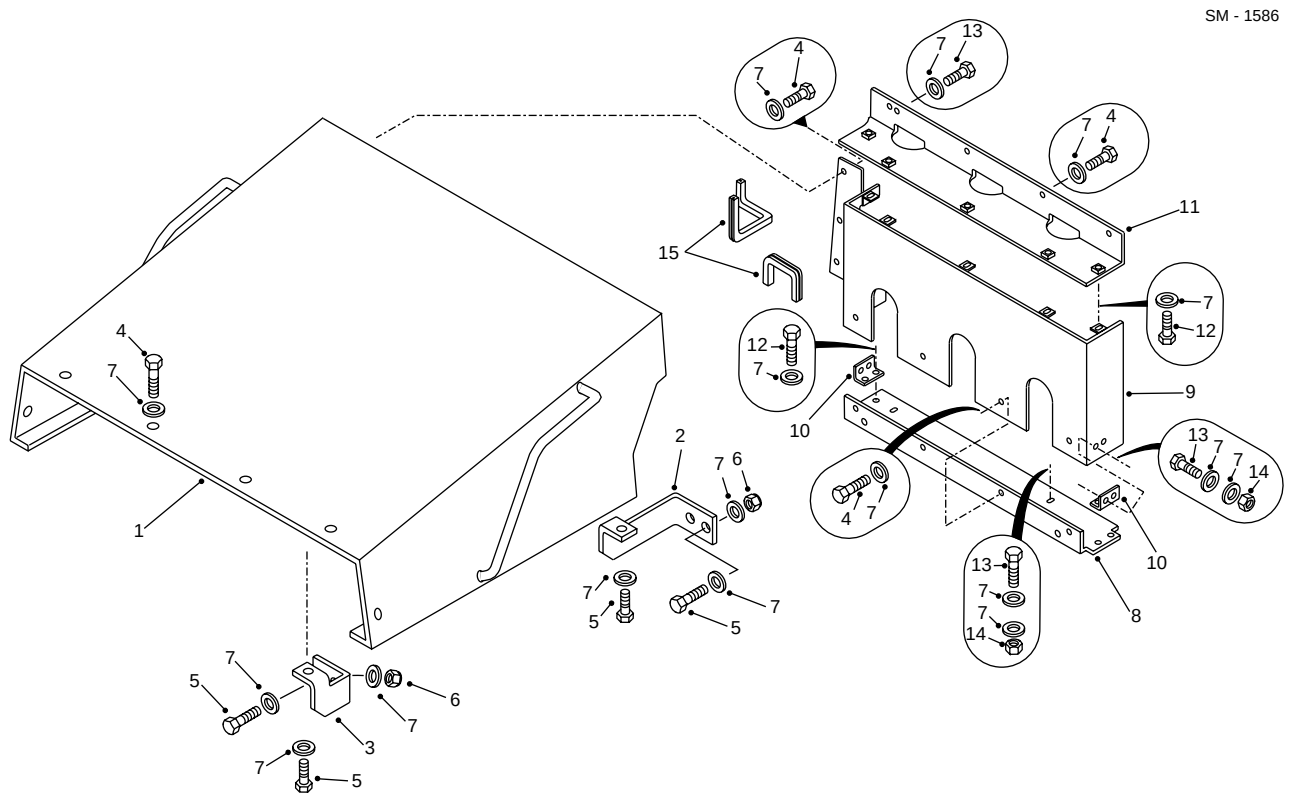

1 - Hood Assembly
2 - Bracket - LH
3 - Bracket - RH
4 - Bolt
5 - Bolt
6 - Locknut
7 - Hardened Washer
8 - Plate Assembly - Base
9 - Baffle Assembly
10 - Bracket
11 - Plate Assembly - Top
12 - Bolt
13 - Bolt
14 - Nut
15 - Beading

Fig. 2 - Exploded View of Hood and Mounting

MAINTENANCE

Inspection

Inspect the frame and attached parts at intervals not exceeding 250 hours for cracked or broken welds and bending/twisting of the frame. Any defects found should be repaired before they progress into major failures. Contact your dealer for recommended weld and repair instructions.

Welding

Note: It is important that the electrical connections are disconnected in the following order to prevent damage to the electrical components:

a. Disconnect battery equalizer ground cables.
b. Disconnect battery cables from terminal posts (ground cable first).
c. Disconnect battery equalizer positive cables.
d. Disconnect electrical connections at the ECU.

After welding, reconnect all of the above in the reverse order.

⚠ WARNING
Welding and flame cutting cadmium plated metals produce odourless fumes which are toxic. Recommended industrial hygiene practice for protection of the welding operator from the cadmium fumes and metallic oxides requires enclosure ventilation specifically designed for the welding process. A respiratory protective device such as the M.S.A. 'Gasfoe' respirator with G.M.A. cartridge will provide protection against cadmium, fumes and metallic oxides. The 'Gasfoe' respirator has been approved by the U.S. Bureau of Mines: Approval number 23B-10, and is designed to protect against gases, vapours, and/or metal fumes.

Electric arc welding is recommended for all chassis welding. Since the nature and extent of damage to the frame cannot be predetermined, no definite repair procedure can be established. As a general rule however, if parts are twisted, bent or pulled apart, or a frame is bent or twisted, no welding should be done

Find manuals at http://best-manuals.com/

https://truckmanualshub.com/

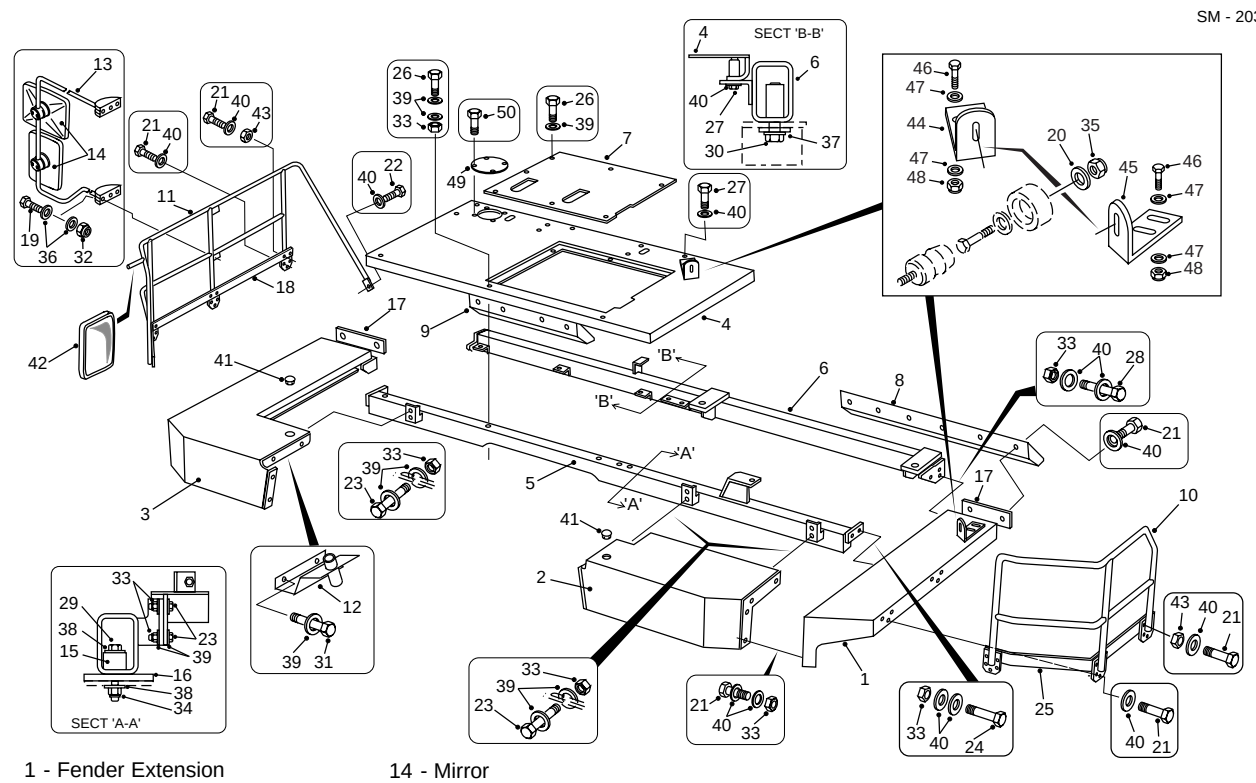

1 - Fender Extension
2 - Fender Assembly - LH
3 - Fender Assembly - RH
4 - Platform Assembly - RH
5 - Front Crossmember
6 - Rear Crossmember
7 - Cover Plate
8 - Mudguard
9 - Mudguard
10 - Handrail - LH
11 - Handrail - RH
12 - Plate Assembly
13 - Arm
14 - Mirror
15 - Block
16 - Spacer
17 - Spacer
18 - Spacer
19 - Bolt
20 - Hardened Washer
21 - Bolt
22 - Bolt
23 - Bolt
24 - Bolt
25 - Bolt
26 - Bolt
27 - Bolt
28 - Bolt
29 - Bolt
30 - Bolt
31 - Bolt
32 - Nut
33 - Locknut
34 - Nut
35 - Nut
36 - Washer
37 - Hardened Washer
38 - Hardened Washer
39 - Hardened Washer
40 - Hardened Washer
41 - Plug
42 - Mirror
43 - Nut
44 - Bracket
45 - Bracket
46 - Nut
47 - Washer
48 - Nut
49 - Plate Cover
50 - Bolt

Fig. 3 - Exploded View of Fenders and Mounting

until the parts are straightened or realigned.

Successfully welded repairs will depend to a great extent upon the use of the proper equipment, materials and the ability of the welder. The Service Department can be consulted regarding the feasibility of welding repairs.

Painting

A check of the condition of the paint should be made approximately twice a year and chassis repainted if necessary.

If painting of the actual frame of the unit is required, thoroughly clean the areas to be painted. Apply a primer coat of red oxide and then a finish coat of polyurethane enamel.

To keep rust and corrosion to a minimum, periodic painting of abrasions and other exposed metal areas on the frame is highly recommended.

SPECIAL TOOLS

There are no special tools required for procedures outlined in this section. Refer to Section 300-0070, SERVICE TOOLS for part numbers of general service tools required. These tools are available from your dealer.

Find manuals at http://best-manuals.com/

https://truckmanualshub.com/

Chassis - Chassis, Hood and Fenders

Section 100-00100

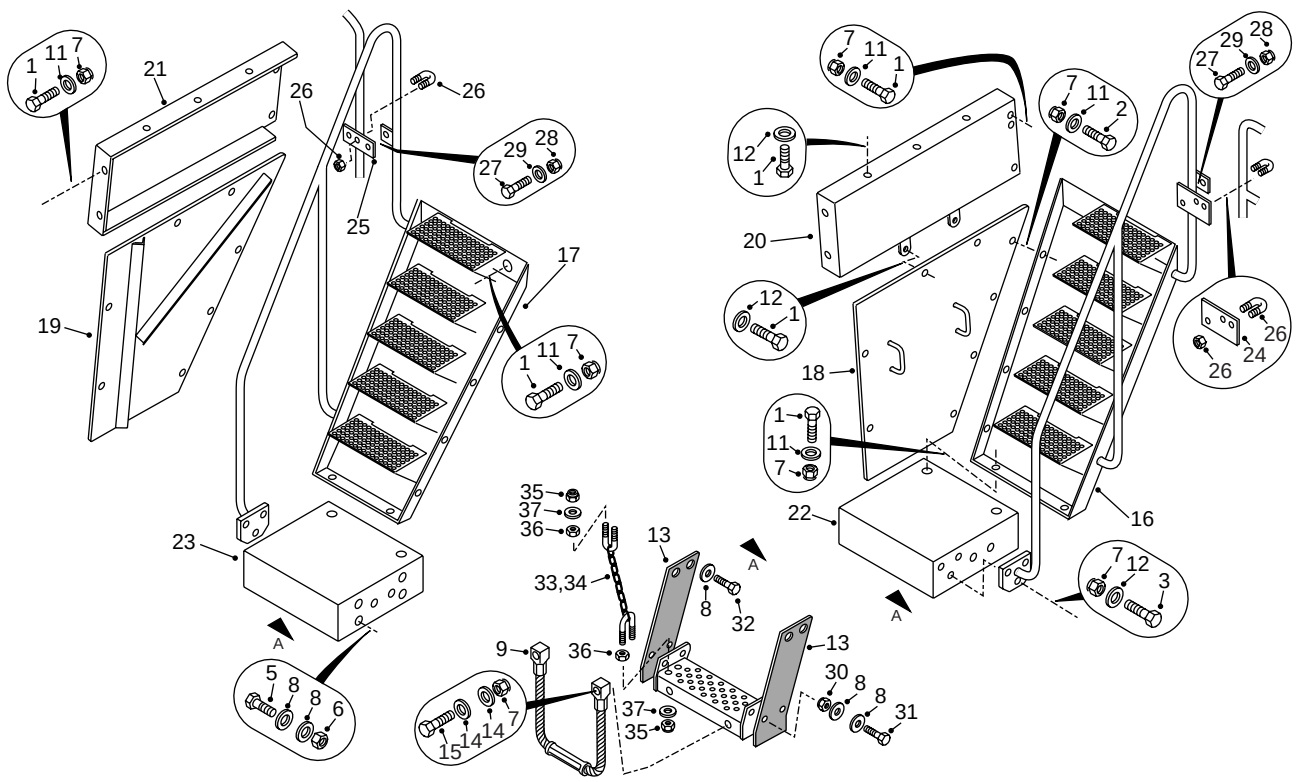

1 - Bolt
2 - Bolt
3 - Bolt
4 - Hardened Washer
5 - Bolt
6 - Nut
7 - Locknut
8 - Hardened Washer
9 - Step Assembly
10 - Rung
11 - Hardened Washer
12 - Hardened Washer
13 - Rubber Strip
14 - Hardened Washer
15 - Bolt
16 - Step Assembly - LH
17 - Step Assembly - RH
18 - Hoodside - LH
19 - Hoodside - RH
20 - Panel Assembly - LH
21 - Panel Assembly - RH
22 - Bumper Extension - LH
23 - Bumper Assembly - RH
24 - Bracket
25 - Bracket
26 - 'U' Bolt & Nut
27 - Bolt
28 - Nut
29 - Hardened Washer
30 - Locknut
31 - Bolt
32 - Bolt
33 - Chain Assembly
34 - 'U' Bolt
35 - Locknut
36 - Nut
37 - Hardened Washer

Fig. 4 - Exploded View of Ladders and Handrails

Find manuals at http://best-manuals.com/

https://truckmanualshub.com/

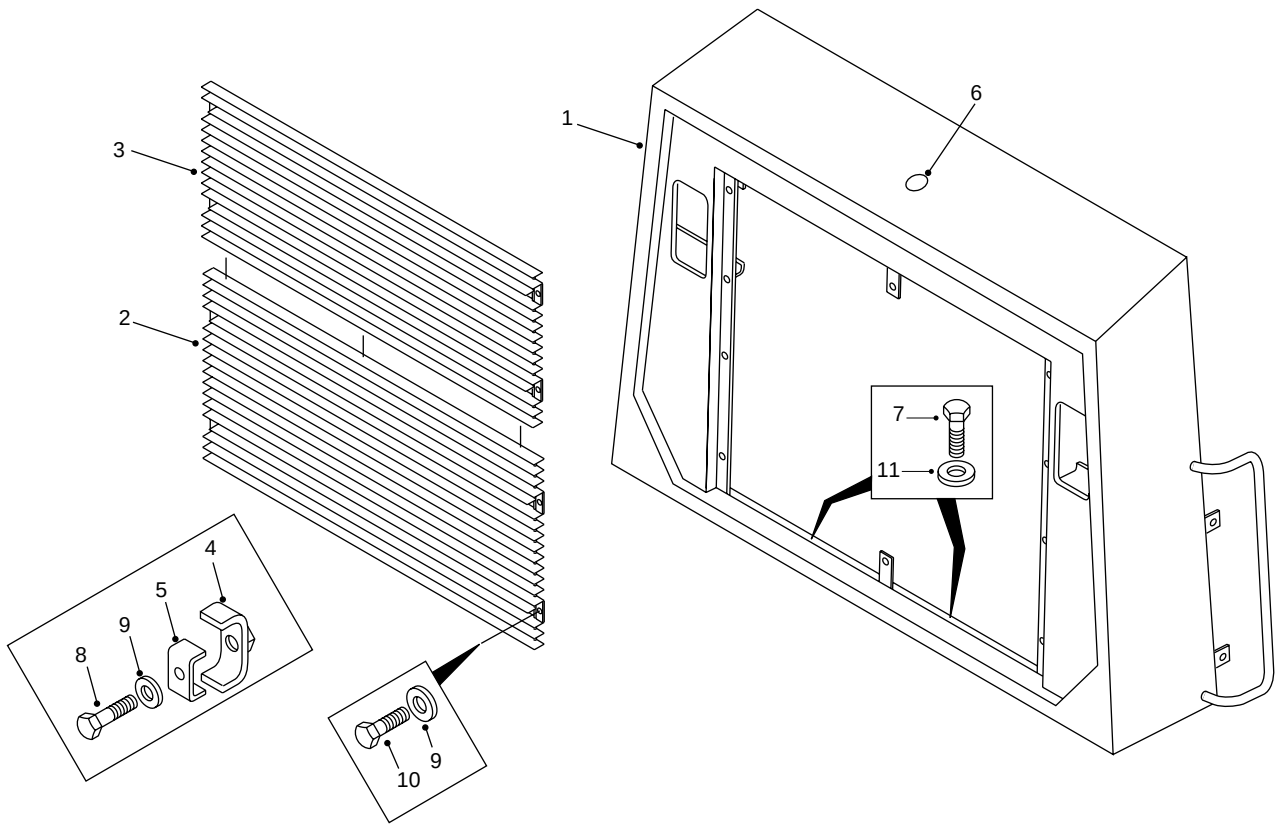

1 - Radiator Guard
2 - Grille - Bottom
3 - Grille - Top
4 - Clamp
5 - Clip
6 - Button Plug
7 - Bolt
8 - Bolt
9 - Hardened Washer
10 - Bolt
11 - Hardened Washer

Fig. 5 - Exploded View of Radiator Guard and Mounting

Find manuals at http://best-manuals.com/

https://truckmanualshub.com/

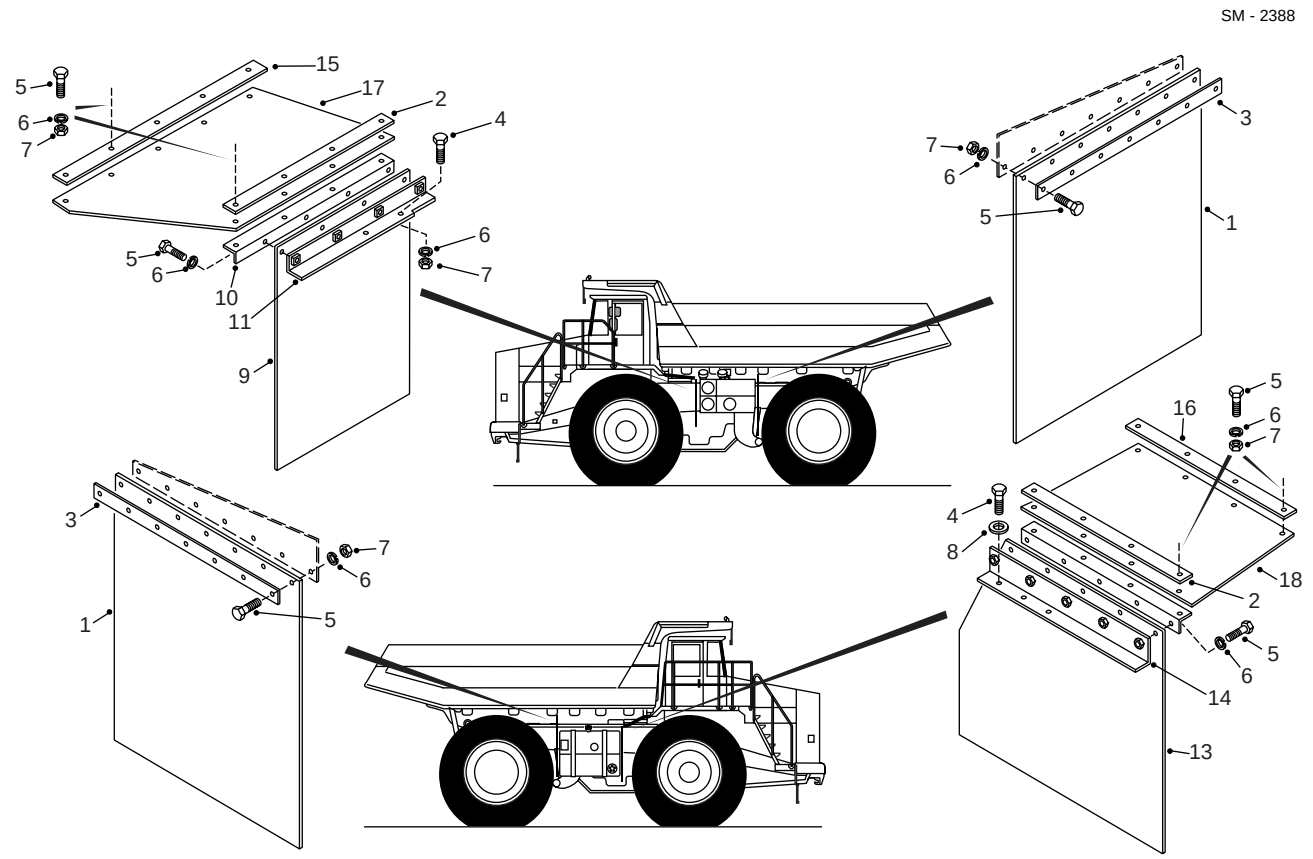

1 - Mudguard
2 - Bar
3 - Bar
4 - Bolt
5 - Bolt
6 - Lockwasher
7 - Nut
8 - Hardened Washer
9 - Mudflap - LH
10 - Angle Support
11 - Angle Support
12 - Angle Support
13 - Mudflap - RH
14 - Angle Support
15 - Bar
16 - Bar
17 - Flap
18 - Flap

Fig. 6 - Mudguards

* * * *

Find manuals at http://best-manuals.com/

https://truckmanualshub.com/

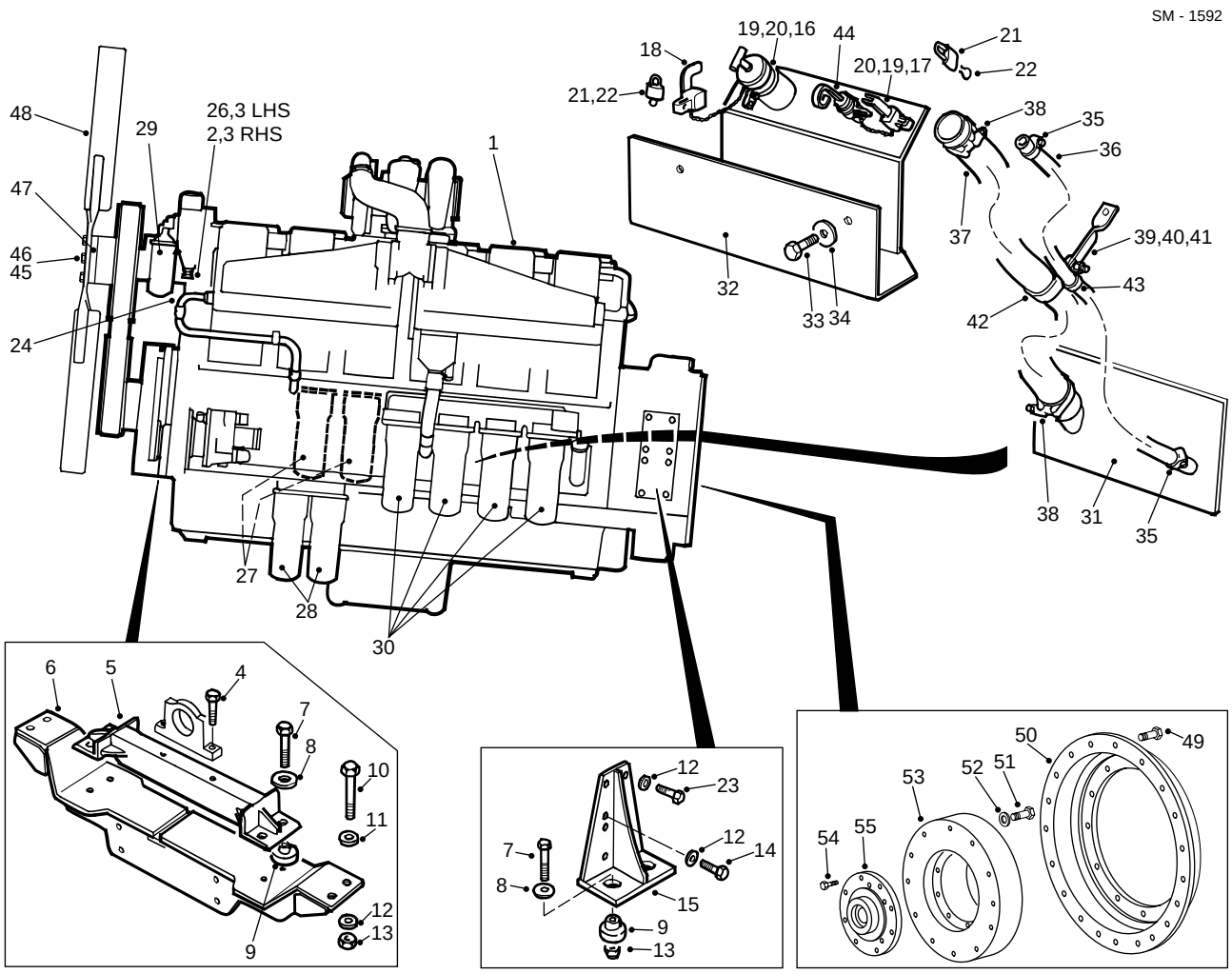

1 - Engine	15 - Rear Mount	29 - Coolant Filter	
2 - Reducer Bush	16 - Clamp	30 - Lube Oil Filter	43 - Clip
3 - Drain Cock	17 - Latch	31 - Hand Hole Cover	44 - Dipstick
4 - Bolt	18 - Latch	32 - Plate Assembly	45 - Bolt
5 - Support	19 - Bolt	33 - Bolt	46 - Lockwasher
6 - Crossmember	20 - Locknut	34 - Hardened Washer	47 - Spacer
7 - Bolt	21 - Lock	35 - Clamp	48 - Fan
8 - Hardened Washer	22 - Key	36 - Dipstick Hose	49 - Bolt
9 - Shock Mount	23 - Bolt	37 - Filler Hose	50 - Adaptor
10 - Bolt	24 - Tube Assembly	38 - T-bar Clamp	51 - Bolt
11 - Hardened Washer	25 - Tube Assembly	39 - Twisted Bracket	52 - Hardened Washer
12 - Hardened Washer	26 - Reducer Bushing	40 - Bolt	53 - Drive Coupling
13 - Locknut	27 - Lube Oil Bypass Filter	41 - Nut	54 - Bolt
14 - Bolt	28 - Fuel Filter	42 - Clip	55 - Flange Coupling

Fig. 1 - Exploded View of Engine Mounting

DESCRIPTION

Numbers in parentheses refer to Fig. 1.

For engine make, model and specification, refer to Section 000-0000, GENERAL INFORMATION. For detailed engine servicing and repair data refer to the engine manufacturers service manual.

There are four full flow lube oil filters (30), two lube oil bypass filters (27) two fuel filters (28) and four coolant filters (29) installed on engine (1). Mounted at the front left hand side of the engine is the fuel pump and at the front right hand side of the engine is the alternator. There are two starter motors mounted at the rear right hand side of the engine, one of which is a prelube starter motor.

Find manuals at http://best-manuals.com/

https://truckmanualshub.com/

REMOVAL

Numbers in parentheses refer to Fig. 1.

WARNINGS
To prevent personal injury and property damage, ensure wheel blocks, blocking materials and lifting equipment are properly secured and of adequate capacity to do the job safely.

High electrical current. Disconnect battery equalizer and battery cables at the batteries before removing engine attachments. High electrical current can cause sparks and personal injury from burns.

Note: Tag and identify all lines, hoses, cables and linkages disconnected to remove the engine.

1. Position the vehicle in a level work area, ensure the body is fully lowered, apply the parking brake and switch off the engine.

2. Turn steering wheel several times to relieve pressure in the steering circuit. Block all road wheels.

3. Disconnect electrical connections as follows:
   a. Disconnect battery equalizer ground cables.
   b. Disconnect battery cables from terminal posts (ground cable first).
   c. Disconnect battery equalizer positive cables.
   d. Disconnect electrical connections at the ECU.

4. Remove mounting hardware securing the hood and hoodsides on the vehicle. Remove hood and hood side assemblies from the vehicle. Refer to Section 100-0010, CHASSIS, HOOD AND FENDERS.

5. Disconnect electrical connections from the radiator guard and remove mounting hardware securing the radiator guard on the vehicle. Remove radiator guard from the vehicle. Refer to Section 100-0010, CHASSIS, HOOD AND FENDERS.

WARNING
Harmful gas. Before disconnecting any air conditioner lines refer to Section 260-0130, AIR CONDITIONING. Refrigerant will rapidly freeze all objects with which it comes into contact, and it can cause serious damage to the skin and eyes.

6. If the vehicle is equipped with an air conditioning system, evacuate refrigerant from the system and disconnect lines at the compressor. Refer to Section 260-0130, AIR CONDITIONING.

7. Place a suitable container under the engine drain port, remove drain plug and drain the oil. After draining, reinstall drain plug in the engine sump and tighten securely.

8. With suitable containers in position, open drain cocks and drain coolant from the radiator assembly and engine (1) assembly. Close all drain cocks after draining.

9. Identify all cooling lines for ease of installation and with suitable containers in position, disconnect all cooling lines from engine (1).

10. Using suitable lifting equipment, carefully remove the radiator, shroud and screen assemblies from the vehicle. Refer to Section 210-0040, RADIATOR, HEADER TANK AND MOUNTING.

11. Disconnect and remove air cleaner intake pipes from the engine turbochargers and air cleaner plenum chamber. Refer to Section 110-0050, AIR CLEANER.

12. Disconnect and remove exhaust tubes from the engine turbochargers.

13. Disconnect throttle control linkage from engine (1).

14. Identify heater lines for ease of installation and, with a suitable container in position, disconnect heater lines from engine (1).

15. Close fuel shutoff valve at filter head, identify fuel lines for ease of installation and, with a suitable container in position, disconnect fuel lines from engine (1).

16. Slacken T-bar clamp (38) and clamp (35) securing filler hose (37) and dipstick hose (36) respectively to hand hole cover (31) on left hand side of engine (1). Remove hose assemblies (36 & 37) from hand hole cover (31) and cover hose ends and fittings to prevent entry of dirt.

17. Remove bolt (40), nut (41) and clips (42 & 43) from twisted bracket (39). Tie hose assemblies (36 & 37) away from engine (1) to prevent fouling during engine removal.

Find manuals at http://best-manuals.com/

https://truckmanualshub.com/

18. Identify all electrical harnesses and cables attached to engine (1) assembly for ease of installation and disconnect from engine (1) assembly.

19. Disconnect front driveline from engine coupling and secure clear of engine (1). Refer to Section 130-0010, FRONT DRIVELINE.

20. Using suitable lifting equipment, remove tandem pump assembly from the left hand side of the engine power takeoff. Refer to Section 250-0055, TANDEM PUMP. The hydraulic lines can be left attached to the tandem pump.

21. Using suitable lifting equipment, remove main hydraulic pump assembly from theright hand side of the engine power takeoff. Refer to Section 230-0050, MAIN HYDRAULIC PUMP. The hydraulic lines can be left attached to the main hydraulic pump.

> ⚠ **WARNING**
> **Heavy assembly. To prevent personal injury and property damage, be sure lifting device is properly secured and of adequate capacity to do the job safely.**

22. Attach suitable lifting equipment to engine (1) lifting brackets and raise lifting equipment to take up the slack.

23. Remove bolts (7) and hardened washers (8) securing support (5) assembly to crossmember (6). Remove locknuts (13), bolts (7) and hardened washers (8) securing rear mounts (15) to the chassis.

24. Check to make certain that all necessary line and electrical disconnections have been made before lifting engine (1) assembly.

25. Carefully lift engine (1) assembly clear of the chassis and move to a clean work area. Securely mount engine (1) assembly to a work stand.

26. If necessary, remove shock mounts (9) from support (5) assembly and rear mounts (15). Rear mounts (15) can be removed from engine (1) by removing bolts (14 & 23) and hardened washers (12). Support (5) assembly can be removed by removing bolts (4).

27. If it is necessary to remove crossmember (6) from the chassis, remove disc brake oil cooler and transmission oil cooler from crossmember (6) first. Refer to Section 210-0050, DISC BRAKE OIL COOLER, and, Section 210-0060, TRANSMISSION OIL COOLER.

28. With oil coolers removed, remove locknuts (13), hardened washers (12), bolts (10) and hardened washers (11). Remove front crossmember (6) from chassis mounts.

29. If necessary, adaptor (50) can be removed from the flywheel housing after the power takeoff and yoke assembly is removed. Refer to Section 110-0130, POWER TAKEOFF.

30. With the power takeoff and yoke assembly removed, remove bolts (49) and adapter (50) from the flywheel housing.

31. Remove bolts (51), hardened washers (52) and drive coupling (53) assembly from the flywheel.

32. Remove bolts (54) securing flange coupling (55) in drive coupling (53) and remove flange coupling (55) from drive coupling (53).

33. If necessary, support fan (48) assembly with suitable lifting equipment and remove bolts (45) and lockwashers (46) securing fan (48) and spacer (47) on engine (1) fan hub. Remove fan (48) and spacer (47).

INSPECTION

Numbers in parentheses refer to Fig. 1.

1. Inspect shock mounts (9) for damage and replace if damaged.

2. Check all mounting components for cracks and excessive wear. Repair or replace as required.

3. Inspect drive coupling (53) and flange coupling (55) for wear or damage and replace if necessary.

4. Replace all filters (27, 28, 29 & 30). Check all drive belts for tension and wear, as described under 'Maintenance'.

5. Refer to the Engine Service Manual for additional engine disassembly/assembly, repair, adjustment and tune-up procedures.

Find manuals at http://best-manuals.com/

https://truckmanualshub.com/

INSTALLATION

Numbers in parentheses refer to Fig. 1.

Note: Tighten all fasteners without special torques specified to standard torques listed in Section 300-0080, STANDARD BOLT AND NUT TORQUE SPECIFICATIONS.

> ⚠ **WARNING**
> **To prevent personal injury and property damage, be sure lifting device is properly secured and of adequate capacity to do the job safely.**

1. Position spacer (47) and fan (48) on engine (1) fan hub and secure with bolts (45) and lockwashers (46).

2. Thoroughly clean and dry threads on bolts (54) and drive coupling (53) and apply Loctite Activator 'T' to the threads. Apply Loctite 638 to the threads of bolts (54) and drive coupling (53). Position flange coupling (55) to drive coupling (53) and secure with bolts (54).

Note: The flange coupling must be installed on the drive coupling side opposite the side that has the part number on it. See Fig. 2.

3. Thoroughly clean and dry threads on bolts (51) and engine flywheel and apply Loctite Activator 'T' to the threads. Apply Loctite 638 to the threads of bolts (51) and engine flywheel. Position drive coupling (53) assembly to engine flywheel and secure with bolts (51) and hardened washers (52). The part number must be facing out. See Fig. 2.

Note: Incorrect assembly of drive coupling (53) assembly to the engine flywheel can cause engine and/or power takeoff damage.

4. Position adaptor (50) to the engine flywheel housing and secure with bolts (49). Install the power takeoff and yoke assembly to adaptor (50). Refer to Section 110-0130, POWER TAKEOFF.

5. Install new shock mounts (9) in support (5) assembly and rear mounts (15). Lubricate shock mounts (9) with water and press in using a driver of same diameter as internal metal sleeve in the shock mount to protect the rubber from damage.

6. Secure support (5) assembly to engine (1) with bolts (4). Secure rear mounts (15) to engine (1) with bolts (14 & 23) and hardened washers (12).

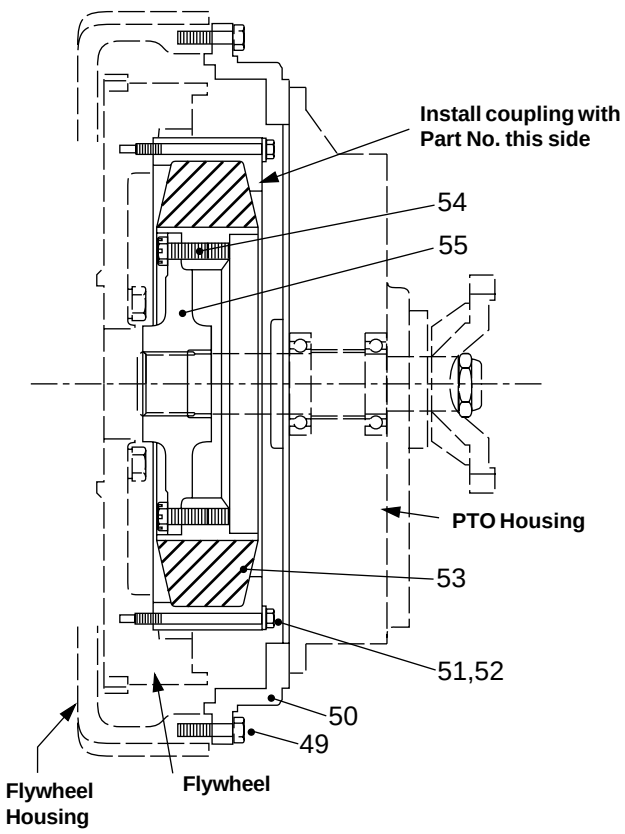

49 - Bolt
50 - Adaptor
51 - Bolt
52 - Hardened Washer
53 - Drive Coupling
54 - Bolt
55 - Flange Coupling

Fig. 2 - Sectional View of Engine Coupling Installation

7. Install front crossmember (6) on the chassis mounts and secure with bolts (10), hardened washers (11 & 12) and locknuts (13).

8. Install disc brake oil cooler and transmission oil cooler on front crossmember (6). Refer to Section 210-0050, DISC BRAKE OIL COOLER and, Section 210-0060, TRANSMISSION OIL COOLER.

> ⚠ **WARNING**
> **Heavy assembly. To prevent personal injury and property damage, be sure lifting device is properly secured and of adequate capacity to do the job safely.**

9. Attach suitable lifting equipment to engine (1) lifting brackets and carefully position engine (1) assembly in the frame.

Find manuals at http://best-manuals.com/

https://truckmanualshub.com/

10. Secure support (5) assembly to crossmember (6) with bolts (7) and hardened washers (8). Secure rear mounts (15) to chassis mounts with bolts (7), hardened washers (8) and locknuts (13).

11. Connect front driveline to power takeoff and yoke assembly. Refer to Section 130-0010, FRONT DRIVELINE.

12. Install tandem pump to the left hand side of the engine power takeoff assembly and secure with mounting hardware removed at removal. Refer to Section 250-0055, TANDEM PUMP.

13. Install main hydraulic pump to the right hand side of the engine power takeoff assembly and secure with mounting hardware removed at removal. Refer to Section 230-0050, MAIN HYDRAULIC PUMP.

14. Using suitable lifting equipment, install the radiator, shroud and screen assemblies and secure with mounting hardware removed at removal. Refer to Section 210-0040, RADIATOR, HEADER TANK AND MOUNTING.

15. Remove blanking caps from all cooling lines and connect lines to the radiator assembly and engine (1) assembly as identified at removal.

16. Remove caps from heater lines and connect heater lines to engine (1) as identified at removal.

17. Remove caps from fuel lines and connect fuel lines to engine (1) as identified at removal. Open fuel shutoff valve at filter head.

18. Remove covers and connect dipstick hose (36) and filler hose (37) to hand hole cover (31) fittings. Secure dipstick hose (36) with clamp (35) and filler hose (37) with T-bar clamp (38).

19. Secure hose assemblies (36 & 37) to twisted bracket (39) with bolt (40), clips (42 & 43) and nut (41).

20. Connect all electrical harnesses and cables to engine (1) assembly as identified at removal. Do not connect battery and battery equalizer connections at this time.

21. Install air cleaner intake pipes to the engine turbocharger and air cleaner plenum chamber. Tighten mounting clamps securely.

22. Install exhaust tubes on the engine turbochargers and tighten mounting clamps securely.

23. Connect throttle control linkage to engine (1) assembly.

24. If the vehicle is equipped with an air conditioning system, connect the lines at the compressor as identified at removal.

Note: On completion of engine installation the air conditioning system will require to be charged. Refer to Section 260-0130, AIR CONDITIONING.

25. Using suitable lifting equipment, install radiator guard assembly to the chassis and secure with mounting hardware removed at removal. Refer to Section 100-0010, CHASSIS, HOOD AND FENDERS. Connect electrical connections removed at removal.

26. Connect electrical connections as follows:
   a. Connect electrical connections at the ECU.
   b. Connect battery equalizer positive cables.
   c. Connect battery cables to terminal posts (ground cables last).
   d. Connect battery equalizer ground cables.

27. Check that all electrical connections and cables, all lines and components removed or disconnected at removal have been reinstalled correctly. Ensure all drain plugs and drain cocks are tightly secured.

28. Fill the cooling system with coolant specified in Section 300-0020, LUBRICATION SYSTEM. Check the coolant level as described in Section 210-0000, COOLING SYSTEM.

29. Fill engine (1) with lube oil specified in Section 300-0020, LUBRICATION SYSTEM. Check oil level as described under 'Maintenance'.

30. Start the engine and bring the engine oil to operating temperature. Check all lines and fittings for leaks and tighten as required. Switch off the engine.

31. Using suitable lifting equipment, install hood assembly into position on the vehicle. Secure hood assembly with mounting hardware removed at removal. Refer to Section 100-0010, CHASSIS, HOOD AND FENDERS.

32. Install hood side assemblies on the vehicle and secure with mounting hardware removed at removal. Refer to Section 100-0010, CHASSIS, HOOD AND FENDERS.

33. Ensure the parking brake is applied and remove wheel blocks from road wheels.

Find manuals at http://best-manuals.com/

https://truckmanualshub.com/

MAINTENANCE

Numbers in parentheses refer to Fig. 1, unless otherwise specified.

Every 10 Hours (Daily)

General - Visually check the engine for leaks, loose or damaged parts, worn or damaged belts or any change in engine appearance. Listen for any unusual engine noise which can indicate that a service is required.

Oil Level Check - Position the vehicle in a level work area, apply the parking brake, shut off the engine and wait at least five minutes (to allow oil to drain to the oil pan) before checking the oil level. Oil level should be between the low (L) and high (H) marks on dipstick (44). Add oil through filler hose (37) if low.

Note: Never operate the engine with oil level below the low (L) or above the high (H) mark on the dipstick.

Fuel Filter/Water Separators - Drain the water and sediment from the separators daily.

Position the vehicle in a level work area, apply the parking brake, shut off the engine and, with a suitable container below the drain valve to catch spillage, open the drain valve by hand. Turn the valve anticlockwise approximately 1.5 - 2 turns until draining occurs. Drain the filter sump until clear fuel is visible. Turn the valve clockwise approximately 1.5 - 2 turns to close the drain valve. Repeat for second separator.

Note: Do not overtighten the drain valves as overtightening can damage the threads.

Every 250 Hours or 6 Months

Fuel Filters (28) - Clean the area around the fuel filter head and replace the fuel filters.

Note: There is a fuel system shut off valve at the filter head. Closing this valve will prevent loss of fuel prime at time of filter replacement.

Position the vehicle on a level work area, apply the parking brake and switch off the engine. Close fuel system shut off valve and, using strap type filter wrench, remove and discard fuel filters (28).

Apply a thin film of clean engine oil to the gasket surface of new fuel filters (28) and fill fuel filters (28) with clean fuel specified in Section 300-0020, LUBRICATION SYSTEM.

Install new fuel filters (28) on the filter head and tighten by hand until the gasket contacts the filter head surface. Tighten fuel filters (28) per the filter manufacturer's instructions.

Note: Mechanical tightening of the filters is not recommended, and may result in seal and/or cartridge damage. Tighten filters by hand only.

Open the shut off valve, start the engine and check for leaks. If leaks are noted, have them corrected.

Engine Oil and Oil Filters (27 & 30) - Replace the lubricating oil and oil filters.

> ⚠ **WARNING**
> **Avoid direct contact of hot oil with your skin. Hot oil can cause serious personal injury.**

Operate the engine until the water temperature reaches 60° C (140° F). Shut off the engine. Position a suitable container under the engine oil drain plug and drain the oil immediately to make sure all the oil and suspended contaminants are removed from the engine.

Note: The external appearance of full flow lube oil filters (30) and lube oil bypass filters (27) are the same. However, the full flow filters have 1.5 x 16 in threads and the bypass filters have 1.375 x 16 in threads.

Position the vehicle on a level work area, apply the parking brake and switch off the engine. Using strap type filter wrench, remove lube oil bypass filters (27) and full flow lube oil filters (30). Discard the filters if they are not required for a failure analysis.

Note: Cut all the way around the top of lube oil filter (30) using a pipe cutter or hacksaw. Inspect the pleated paper element for debris. Metal debris in the filter can reveal impending engine failure. If debris is found, find the reason for the debris and make the necessary repairs.

Clean the area around the oil filter head and gasket sealing surface of the filter head.

Note: The 'O' ring can stick on the filter head. Make sure the 'O' ring is removed and discarded.

Note: Fill the filters with clean lubricating oil prior to installation. The lack of lubrication during the delay until the filters are pumped full of oil is harmful to the engine.

Find manuals at http://best-manuals.com/

https://truckmanualshub.com/

Apply a thin film of clean lubricating oil to the gasket surface of the new filters and fill the filters with clean lubricating oil specified in Section 300-0020, LUBRICATION SYSTEM.

Install the filters on the filter head as specified by the filter manufacturer. The tightening instructions are normally printed on the outside of the filter.

Note: Mechanical tightening of the filters is not recommended, and may result in seal and/or cartridge damage. Tighten filters by hand only.

Check and clean the engine oil drain plug threads and the seal surface. Install and tighten the drain plug to a torque of 100 Nm (75 lbf ft). Fill the engine with clean lubricating oil specified in Section 300-0020, LUBRICATION SYSTEM. The oil level should be between the low (L) and high (H) marks on dipstick (44).

Note: The engine is fitted with a prelube starter motor which will prelube the engine until the oil pressure reaches 0.34 - 0.48 bar (5 - 7 lbf/in^2), before the cranking procedure begins.

Start the engine and operate at idle speed to inspect for leaks at the filters and oil drain plug. Shut off the engine, wait approximately five minutes to let the oil drain back to the sump and check the oil level again. Add oil as necessary to bring the level to the high (H) mark on dipstick (44).

Crankcase Breather - Check and clean the crankcase breather hose. Remove the breather hose and check internally for obstructions or sludge buildup. Clean or replace breather hose as necessary, to prevent excess crankcase pressure buildup.

Cooling Fan (48) - Visually check fan (48) for cracks, loose rivets, and bent or loose blades. Check fan mounting bolts (45) and tighten if required. Replace fan (48) if damaged.

Note: The fan belt is maintained to the correct belt tension by a spring loaded idler arm, therefore, there is no need to check or adjust belt tension.

Alternator Drive Belt - Visually check alternator belt and replace if it is cracked or frayed. Adjust belt if it has a glazed or shiny surface which indicates belt slippage. A correctly installed and tensioned belt will show even pulley and belt wear. Check belt tension and adjust if necessary, as described in the engine manufacturers service manual.

SERVICE TOOLS

Refer to Section 300-0070, SERVICE TOOLS, for part numbers of tools referenced in this section, general service tools required, and service tools which should be used in conjunction with procedures outlined in the engine manufacturers service manual. These tools are available from your dealer.

* * * *

Find manuals at http://best-manuals.com/

https://truckmanualshub.com/

THIS PAGE IS INTENTIONALLY LEFT BLANK

Find manuals at http://best-manuals.com/

https://truckmanualshub.com/

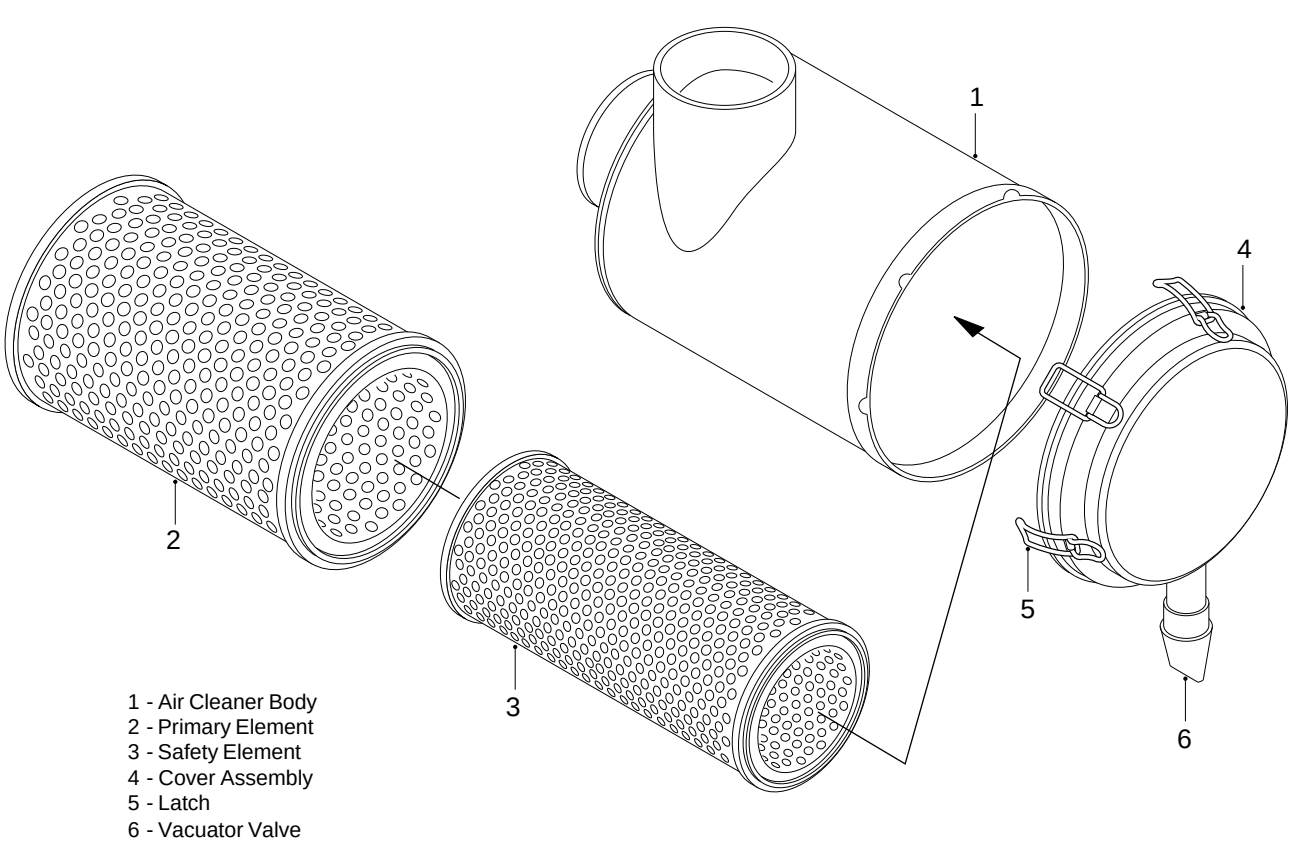

Fig. 1 - Exploded View of Air Cleaner

DESCRIPTION

Numbers in parentheses refer to Fig. 1, unless otherwise specified.

There are three, dual dry element type air cleaner assemblies mounted on the platform to the right hand side of the cab. Air cleaner assemblies prolong engine life by removing grit, dust and water from the air as it enters the engine. Grit and dust combined with engine oil, forms a highly abrasive compound which can destroy the engine in a comparatively short period of time.

A rubber vacuator valve (6) attached to cover assembly (4) in a downward position, ejects grit, dust and water while the engine is running. Vacuator valve (6) minimizes the need for daily servicing. Even though vacuator valve (6) is normally under a slight vacuum when the engine is running, pulsing of the vacuum opens and closes vacuator valve (6) expelling grit, dust and water as they collect. When the engine is stopped, vacuator valve (6) opens and expels any accumulated grit, dust or water.

An electrical air restriction gauge (18, Fig. 3) indicates when air restriction levels reach the maximum allowable limit. When air restriction levels are reached,

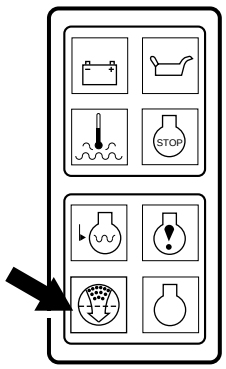

Fig. 2 - Air Cleaner Restriction Indicator Light

the circuit closes and a restriction indicator light located on the dash panel (Fig. 2) illuminates. This light shows at a glance when the system air flow is being restricted indicating that primary element (2) should be serviced. Air restriction gauge (18, Fig. 3) automatically resets after each air cleaner assembly is serviced.

While the indicator light indicates the need for servicing, it does not give as precise a measurement as a water manometer or vacuum gauge. Refer to

Find manuals at http://best-manuals.com/

https://truckmanualshub.com/

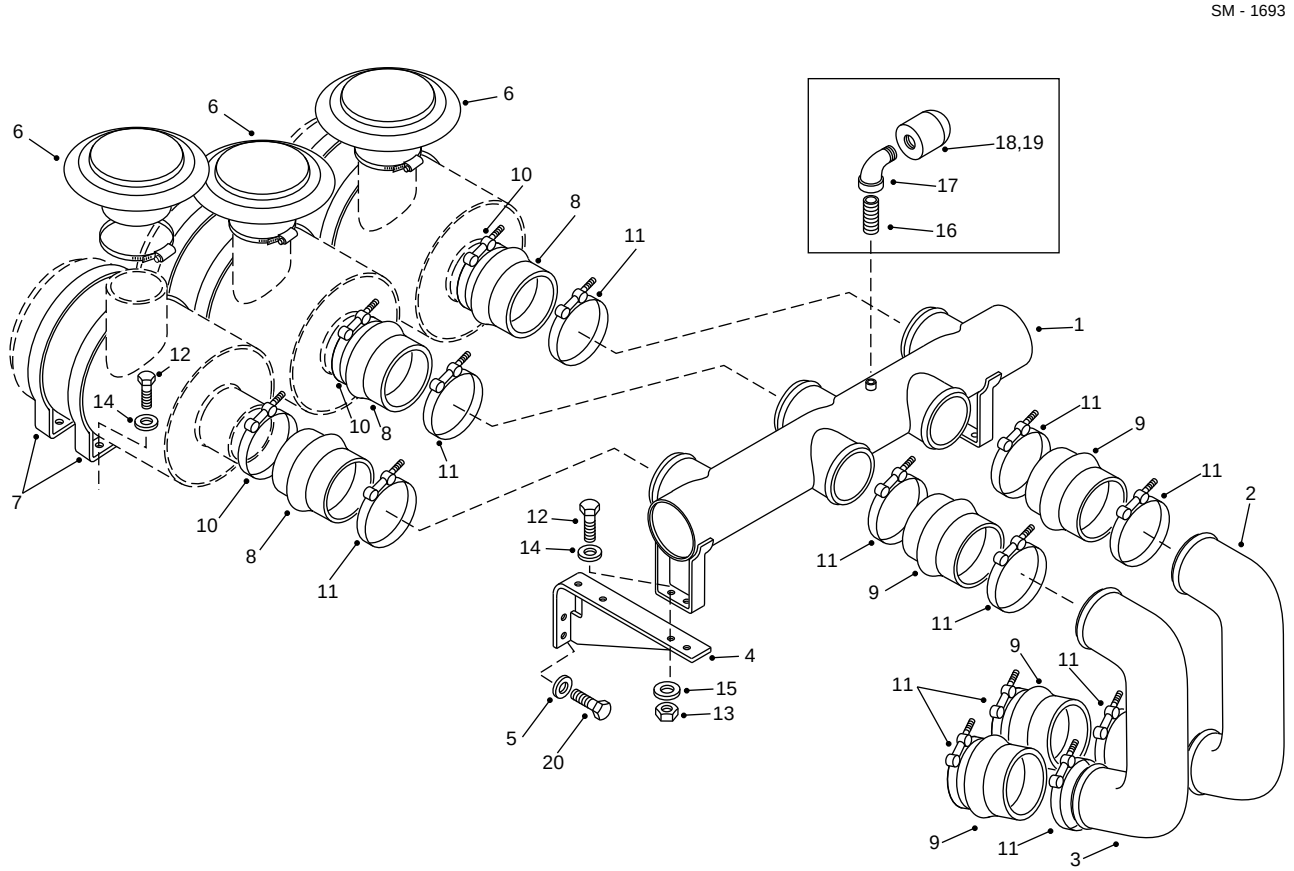

1 - Plenum Chamber
2 - LH Tube
3 - RH Tube
4 - Bracket
5 - Hardened Washer
6 - Cap Assembly
7 - Mounting Band
8 - Hump Hose
9 - Hump Hose
10 - Clamp
11 - Clamp
12 - Bolt
13 - Nut
14 - Washer
15 - Washer
16 - Nipple
17 - Elbow
18 - Air Restriction Gauge
19 - Protective Cap
20 - Bolt

Fig. 3 - Exploded View of Air Cleaner Mounting

'Measuring Air Restriction'.

Safety element (3) is installed in each air cleaner assembly inside of primary element (2). This element increases the reliability of the air cleaner's protection of the engine from airborne dirt. It protects the engine from dirt admitted by a damaged primary element (2), or dirt that might be dropped into the air cleaner assembly while servicing primary element (2).

MAINTENANCE

Numbers in parentheses refer to Fig. 1, unless otherwise specified.

⚠ WARNING
Always shutdown the engine before servicing air cleaner.

The air cleaner elements should be serviced only when the maximum allowable restriction has been reached, as indicated by air cleaner restriction indicator light. The elements should not be serviced on the basis of visual observation as this would lead to over service. When restriction readings finally indicate a change, remove primary element (2) carefully and clean/replace as required. Refer to 'Primary Element'.

Never attempt to clean safety element (3). Change safety element (3) after every third primary element (2) service.

Make sure vacuator valve (6) is not damaged or plugged and that the joint with cover assembly (4) is not broken. If vacuator valve (6) is lost or damaged, replace it to maintain pre-cleaner efficiency and normal filter element service life.

Find manuals at http://best-manuals.com/

https://truckmanualshub.com/

Check condition of clamps (10 & 11, Fig. 3), hump hoses (8 & 9, Fig. 3) and plenum chamber (1, Fig. 3). Tighten/replace as necessary.

Air Cleaner Assembly

Numbers in parentheses refer to Fig. 1, unless otherwise specified.

Note: Air cleaner body (1) should be thoroughly cleaned twice a year. Do not apply heat in any form to air cleaner body (1).

1. Release latches (5) on cover assembly (4) and remove cover assembly from air cleaner body (1).

2. Remove primary element (2) and safety element (3) from air cleaner body (1).

3. Slacken clamps (10 & 11, Fig. 3) and disconnect hump hose (8, Fig. 3) from air cleaner body (1).

4. Remove bolts (12, Fig. 3) and washers (14, Fig. 3) securing the air cleaner assembly to the platform.

5. Remove the air cleaner assembly from the platform for cleaning.

6. Open mounting bands (7) and remove from aircleaner body (1). Open clamp on cap assembly (6, Fig. 3) and remove cap assembly from air cleaner body (1).

7. Blank off air cleaner body (1) outlets with tape or cardboard. Reach inside body with a compressed air nozzle or brush and remove dust from the body.

8. Remove all loose dust from air cleaner body (1) and remove tape or cardboard from body outlets.

Note: Assembly and installation of the air cleaner assembly is the reverse of disassembly and removal.

Primary Element

Numbers in parentheses refer to Fig. 1.

Although a paper primary element (2) is used, it is possible to clean it so that it can be reused. The number of times one element can be reused depends on the type of dirt on the element and the care exercised in cleaning.

The life of a properly cleaned element will be approximately as long as that of a new element for the first one or two cleanings. After that, the life of the element will gradually decrease with each cleaning; however, it should perform satisfactorily through approximately six cleanings, providing it does not rupture.

Visually determine the condition of primary element (2) and choose either the compressed air or washing method.

1. Release latches (5) on cover assembly (4) and remove cover assembly from air cleaner body (1).

2. Remove primary element (2) from air cleaner body (1).

3. Using a damp cloth and a suitable solvent, wipe out all excess dust from air cleaner body (1) and allow to dry.

4. If the major contaminant on primary element (2) is light dust, direct a jet of compressed air, not exceeding 6.9 bar (100 lbf/in^2), against the pleats of the element. The air jet should be directed in the opposite direction of normal operating air flow. Move the air jet up and down the pleats, holding the air nozzle 25 mm (1.0 in) away from the pleats, to prevent rupturing the element with either the nozzle or air jet.

5. In cases where the dust cake on primary element (2) contains oil or carbon, air will not clean effectively. Using manufacturers recommended solution and warm water, not exceeding 48° C (120° F), soak primary element (2) for fifteen minutes. Element should be gently agitated to assist cleaning process.

Note: It is possible to modify an old agitator type washing machine for primary element (2) cleaning. Do not soak or agitate primary element (2) in the solution for more than fifteen minutes. Prolonged exposure softens vertical seams in the element.

6. Rinse washed element thoroughly with a low pressure stream of water, not exceeding 0.7 bar (10 lbf/in^2), opposite from the normal air flow, until rinse water runs clear.

7. Air dry primary element (2) thoroughly before returning it to service. Drying is a slow process which may be hastened by exposing element to slowly circulating heated air. Heated air temperature should not exceed 46°C (115°F). Drying time can be reduced to about three hours with heated air. DO NOT use a light bulb for drying. DO NOT use compressed air on a wet element.

Note: Replace paper elements after six cleanings or two years in service, whichever comes first. Mark each cleaned element to show total cleanings to date.

Find manuals at http://best-manuals.com/

https://truckmanualshub.com/

8. After primary element (2) is thoroughly dried, inspect for damage or ruptures, especially close to the end caps. To detect paper ruptures, place a bright light bulb inside the element and rotate element slowly. Inspection of element on the outside will disclose any holes where concentrated light shines through. Even the smallest hole will pass dust to the engine and may result in costly engine repairs.

9. Install primary element (2) in air cleaner body (1).

10. Install cover assembly (4) on air cleaner body (1) and secure with latches (5).

Secondary Element

Numbers in parentheses refer to Fig. 1.

Since safety element (3) is protected from contamination by primary element (2), it needs no periodic cleaning and should be replaced only after every third primary element (2) service.

1. With primary element (2) removed from air cleaner body (1), remove safety element (3).

2. Remove any dust dislodged into air cleaner body (1) outlet and, using a damp cloth and a suitable solvent, wipe out all excess dust from air cleaner body (1) and allow to dry.

3. Install new safety element (3) followed by primary element (2) in air cleaner body (1)

4. Install cover assembly (4) on air cleaner body (1) and secure with latches (5).

Recommendations

Numbers in parentheses refer to Fig. 3.

1. Under no condition should the vehicle be operated without both filter elements in each air cleaner assembly.

2. It is very important that hump hoses (8), tube assembly (12) and elbow (11) from the air cleaner assembly to the engine be airtight or the purpose of the air cleaner will be completely defeated. All clamps (9 & 10) should be checked frequently and tightened to prevent leaks.

3. Keep new or cleaned filter elements on hand for replacement to prevent unnecessary downtime of the vehicle.

MEASURING AIR RESTRICTION

Numbers in parentheses refer to Fig. 3.

As a dry air cleaner element becomes loaded with dust, the vacuum on the engine side of the air cleaner (air cleaner outlet) increases. This vacuum is generally measured as 'restriction in mm (inches) of water'.

The recommended maximum allowable intake restrictions at rated speed and load are as follows:
a. 380 mm-H_2O (15 in-H_2O) with clean filter elements.
b. 635 mm-H_2O (25 in-H_2O) with dirty filter elements.

While the air restriction gauge sends a signal to indicate the need for servicing, it does not give as precise a measurement as a water manometer or vacuum gauge.

Water Manometer
a. Remove protective cap (19) and disconnect harness at air restriction gauge (18). Remove air restriction gauge (18) from elbow (17).

b. Hold water manometer vertically and fill both legs approximately half full of water. Connect one of the upper ends to elbow (17) by means of a flexible hose.

c. With the manometer held vertically and the engine drawing maximum air, the difference in height of the water columns in the two legs is measured as the air cleaner restriction.

d. If the restriction exceeds the levels indicated, engine performance will be affected. Primary filter element should be cleaned or replaced.

Vacuum Gauge
a. Remove protective cap (19) and disconnect harness at air restriction gauge (18). Remove air restriction gauge (18) from elbow (17).

b. Connect the hose from the vacuum gauge to elbow (17) and, with the engine drawing maximum air, take a note of the reading on the gauge.

c. If the restriction exceeds the levels indicated, engine performance will be affected. Primary filter element should be cleaned or replaced.

SERVICE TOOLS

Refer to Section 300-0070, SERVICE TOOLS for part numbers of service tools referenced in this section and general service tools required. These tools are available from your dealer.

* * * *

Find manuals at http://best-manuals.com/

https://truckmanualshub.com/

DESCRIPTION AND OPERATION

Numbers in parentheses refer to Fig. 1.

The function of the power takeoff (PTO), as the name implies, is to provide the means of mounting and driving auxiliary components.

The tandem gear pump for the disc brake cooling system is mounted on the left hand side of the PTO cover (6) and its input shaft is meshed with the internal splines in the hub of driven gear (12). Refer to Section 250-0055, TANDEM PUMP.

The main hydraulic pump for the body hoist system is mounted on the right hand side of the PTO cover (6) and its input shaft is meshed with the internal splines in the hub of driven gear (17). Refer to Section 230-0050, MAIN HYDRAULIC PUMP.

The major components of the PTO assembly are; flywheel cover case (1), PTO cover (6), driveshaft (15), drive gear (14) and driven gear (12).

As driveshaft (15) is driven by the engine crankcase, drive gear (14) turns to drive driven gears (12 & 17). The main hydraulic pump and tandem pump driveshafts, meshed in the hub of driven gears (12 & 17), turn with driven gears (12 & 17) to operate the main hydraulic pump and tandem pump which, in turn, supplies hydraulic oil to the body hoist system and steering system and disc brake assemblies. Refer to Section 230-0050, MAIN HYDRAULIC PUMP and Section 250-0055, TANDEM PUMP.

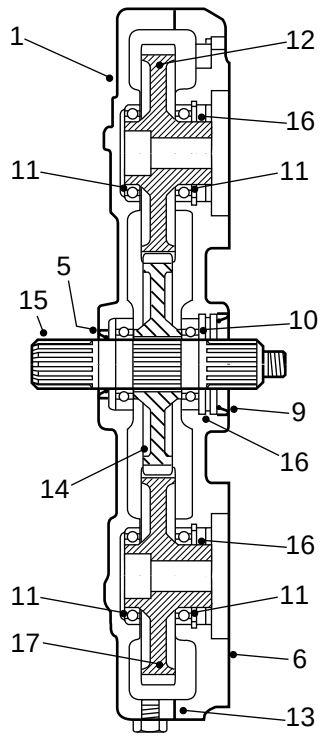

1 - Flywheel Cover Case
5 - Oil Seal
6 - PTO Cover
9 - Oil Seal
10 - Bearing
11 - Bearing
12 - Driven Gear
13 - Gasket
14 - Drive Gear
15 - Driveshaft
16 - Snap Ring
17 - Driven Gear

Fig. 1 - Cutaway View of Power Takeoff Assembly

REMOVAL

Numbers in parentheses refer to Fig. 2, unless otherwise specified.

> ⚠ **WARNING**
> **To prevent personal injury and property damage, be sure wheel blocks, blocking materials and lifting equipment are properly secured and of adequate capacity to do the job safely.**

1. Position the vehicle in a level work area, apply the parking brake and switch off the engine.

2. Turn steering wheel in both directions several times to relieve pressure in accumulator and steering system. Block all road wheels.

3. Disconnect driveline from yoke (5) at PTO assembly (1). Refer to Section 130-0010, FRONT DRIVELINE.

4. Drain oil from power takeoff housing by removing drain plug (14) from flywheel cover case (1, Fig. 1). Reinstall drain plug (14) securely.

5. Match mark main hydraulic pump mounting flange and PTO cover (6, Fig. 1) so that the pump can be installed in the same position at installation.

6. With suitable blocking or lifting equipment, support the main hydraulic pump before loosening attaching nuts. Remove nuts and lockwashers from main hydraulic pump mounting studs and secure pump clear of PTO assembly (1).

7. Match mark tandem pump mounting flange and PTO cover (6, Fig. 1) so that the pump can be installed in the same position at installation.

8. With suitable blocking or lifting equipment, support the tandem pump before loosening attaching nuts.

Find manuals at http://best-manuals.com/

https://truckmanualshub.com/

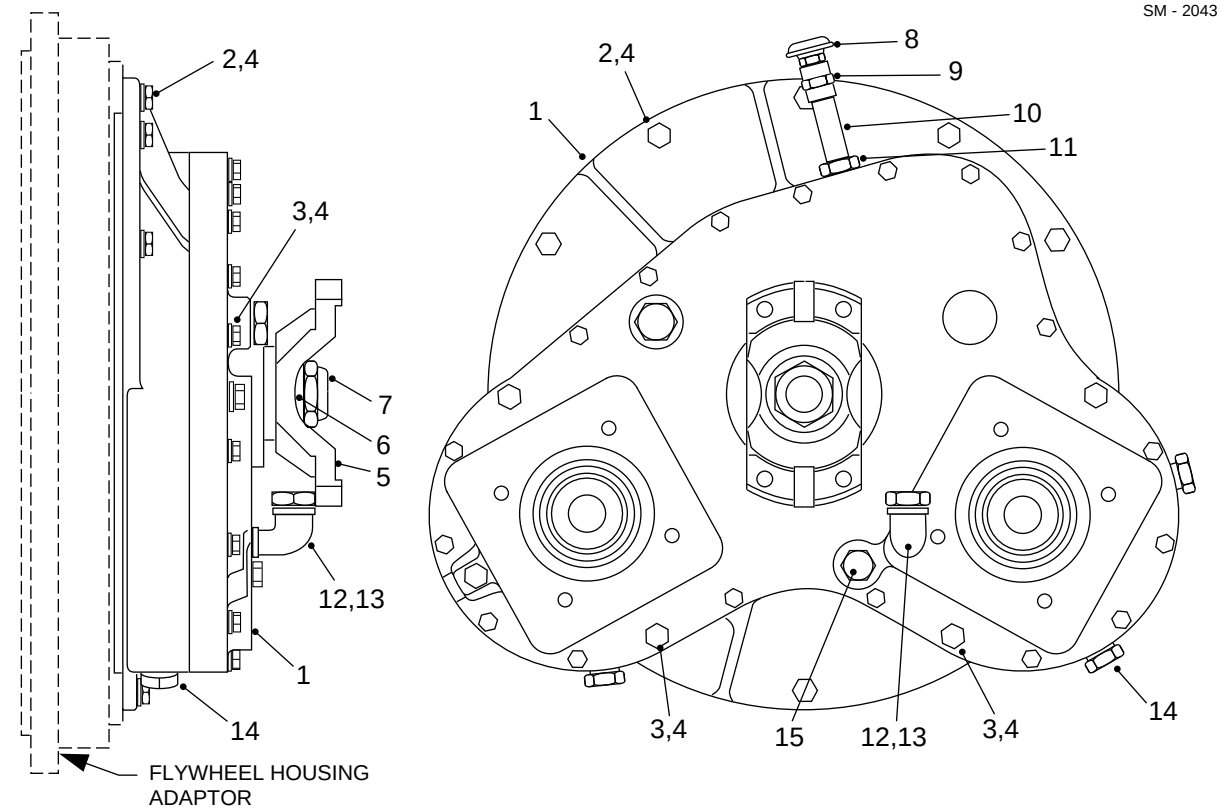

1 - PTO Assembly
2 - Bolt
3 - Bolt
4 - Lockwasher
5 - Yoke
6 - Hardened Washer
7 - Locknut
8 - Breather Cap
9 - Pipe Coupling
10 - Breather Assembly
11 - Reducer Bush
12 - Elbow
13 - Plug
14 - Plug
15 - Plug

Fig. 2 - Power Takeoff Installation

Remove nuts and lockwashers from tandem pump mounting studs and secure pump clear of PTO assembly (1).

9. Match mark engine flywheel housing and flywheel cover case (1, Fig. 1) so that PTO assembly (1) can be installed in the same position at installation.

10. Attach a suitable lifting device to PTO assembly (1) and remove bolts (2 & 3) and lockwashers (4) securing PTO assembly (1) to the engine flywheel housing. Carefully lower PTO assembly (1) from the flywheel housing and move to a clean work area for disassembly.

DISASSEMBLY

Numbers in parentheses refer to Fig. 3, unless otherwise specified.

1. Remove locknut (7, Fig. 2) and hardened washer (6, Fig. 2) from driveshaft (15). Pull yoke (5, Fig. 2) from driveshaft (15).

2. Remove bolts (3 & 7) and lockwashers (4 & 8) from PTO cover (6). Pull PTO cover (6) and gasket (13) from flywheel cover case (1). Discard gasket (13).

3. Place PTO cover (6) yoke side up on a work bench. Pry oil seal (9) from PTO cover (6) and discard.

4. Remove snap rings (16) from pump and driveshaft bores. Drive bearings (10 & 11) from PTO cover (6) with a sleeve or soft steel drift. Drive on the outer race of bearings (10 & 11) taking care not to damage the bearings.

5. Slide drive gear (14) from driveshaft (15) and pull driven gears (12 & 17) from flywheel cover case (1).

6. Pull driveshaft (15) from flywheel cover case (1). Pry oil seal (5) from flywheel cover case (1) and discard.

7. Pull bearings (10 & 11) from flywheel cover case (1) with a suitable bearing puller.

8. If required, note locations and remove dowel pins (2) from flywheel cover case (1).

Find manuals at http://best-manuals.com/

https://truckmanualshub.com/

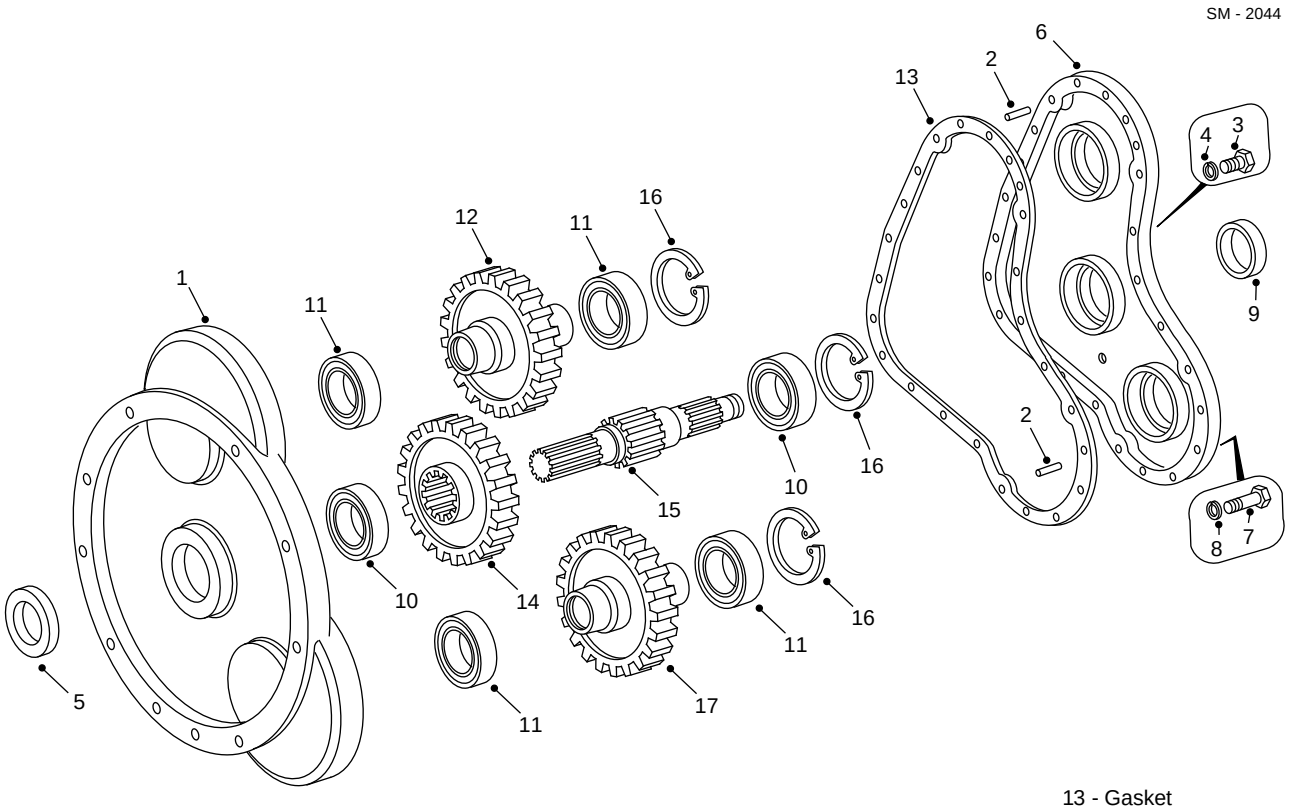

1 - Flywheel Cover Case
2 - Dowel Pin
3 - Bolt
4 - Lockwasher
5 - Oil Seal
6 - PTO Cover
7 - Bolt
8 - Lockwasher
9 - Oil Seal
10 - Bearing
11 - Bearing
12 - Driven Gear
13 - Gasket
14 - Drive Gear
15 - Driveshaft
16 - Snap Ring
17 - Driven Gear

Fig. 3 - Exploded View of Power Takeoff Assembly

9. If required, remove breather assembly (10, Fig. 2) from PTO cover (6).

INSPECTION

Numbers in parentheses refer to Fig. 3, unless otherwise specified.

1. Wash all parts thoroughly in a suitable solvent and dry all but bearings (10 & 11) with compressed air. Dry bearings (10 & 11) with a clean lint free cloth.

2. Check the condition of splines and teeth on gears (12, 14 & 17), driveshaft (15) and yoke (5, Fig. 2) for burrs or signs of wear.

3. Lubricate bearings (10 & 11) with oil and check operation by spinning bearings by hand. DO NOT spin bearings with compressed air. Inspect bearing bores for out of roundness. Replace bearings, if required.

4. Inspect flywheel cover case (1) and PTO cover (6) for cracks. If either flywheel cover case (1) or PTO cover (6) are damaged, both parts must be replaced as an assembly.

5. Visually check oil seal lip contact surfaces on driveshaft (15) and yoke (5, Fig. 2) for nicks, dents, scratches, wear, or corrosion. Replace as necessary.

ASSEMBLY

Numbers in parentheses refer to Figs. 3, unless otherwise specified.

Note: Prior to assembly, lubricate all seal lips and surfaces with lubricant specified in Section 300-0020, LUBRICATION SYSTEM.

Note: Tighten all fasteners without special torques specified to standard torques listed in Section 300-0080, STANDARD BOLT AND NUT TORQUE SPECIFICATIONS.

⚠ WARNING
To prevent personal injury and property damage, be sure lifting device is properly secured and of adequate capacity to do the job safely.

Find manuals at http://best-manuals.com/

https://truckmanualshub.com/

1. If removed, install dowel pins (2) in flywheel cover case (1), as noted at disassembly.

2. If removed, install breather assembly (10, Fig. 2) in PTO cover (6).

3. Install new oil seal (5) in centre bore of flywheel cover case (1) so that it is flush with flywheel cover case (1) face. See Fig. 1.

Note: When installing new oil seals, install them with the oil lip (larger of the two lips with the spring behind it) facing inward. Care should be taken to prevent damage to seal lips during assembly.

4. Press bearings (10 & 11) into their bores in flywheel cover case (1).

5. Press bearings (10 & 11) into their respective bores in PTO cover (6). Turn PTO cover (6) over and install snap rings (16).

6. Install new oil seal (9) into centre bore in PTO cover (6) so that it is flush with PTO cover (6) face. See Fig. 1.

7. Install driven gears (12 & 17) and driveshaft (15) into flywheel cover case (1). Slide drive gear (14) over driveshaft (15) to its proper location.

8. Install new gasket (13) on PTO cover (6) and assemble PTO cover (6) to flywheel cover case (1). Secure PTO cover (6) to flywheel cover case (1) with bolts (3 & 7) and lockwashers (4 & 8).

9. Install yoke (5, Fig. 2) on driveshaft (15) end and secure with hardened washer (6, Fig. 2) and locknut (7, Fig. 2). Tighten locknut (7, Fig. 2) to a torque of 950 - 1 085 Nm (700 - 800 lbf ft).

INSTALLATION

Numbers in parentheses refer to Fig. 2, unless otherwise specified.

Note: When reassembling PTO assembly (1) to the engine flywheel housing, and main hydraulic and tandem pumps to PTO assembly (1), be sure to align match marks inscribed during disassembly.

Note: Tighten all fasteners to standard torques listed in Section 300-0080, STANDARD BOLT AND NUT TORQUE SPECIFICATIONS.

1. Using suitable lifting equipment, position PTO assembly (1) on engine flywheel housing. Secure PTO assembly (1) to the engine flywheel housing with bolts (2 & 3) and lockwashers (4).

2. Using suitable lifting equipment, position main hydraulic pump over its mounting studs and secure with nuts and lockwashers removed during removal.

3. Using suitable lifting equipment, position tandem pump over its mounting studs and secure with nuts and lockwashers removed during removal.

4. Reconnect driveline to yoke (5). Refer to Section 130-0010, FRONT DRIVELINE.

5. Remove oil level plug (13) from elbow (12) in the front of PTO cover (6, Fig. 1). Fill PTO assembly (1) with lubricant specified in Section 300-0020, LUBRICATION SYSTEM, until oil flows from the oil level port. Install oil level plug (13) in elbow (12) and tighten securely.

6. Start the engine and bring oil to correct operating temperature. Check for leaks and correct as necessary.

7. Remove wheel blocks from all road wheels.

MAINTENANCE

Numbers in parentheses refer to Fig. 2, unless otherwise specified.

Note: Refer to Section 300-0020, LUBRICATION SYSTEM for recommended check and drain intervals and lubricant specifications.

Oil Level Check

Remove oil level plug (13) from elbow (12) and, if oil is not showing in elbow (12), add lubricant until oil is to the level of elbow (12). Reinstall oil level plug (13) and tighten securely.

Drain and Refill

To drain: Remove drain plug (14) from flywheel cover case (1, Fig. 1) and drain oil into a suitable container. Reinstall drain plug (14) securely when draining is complete.

Find manuals at http://best-manuals.com/

https://truckmanualshub.com/

This as a preview PDF file from **best-manuals.com**

Best Manuals

Download full PDF manual at **best-manuals.com**