https://truckmanualshub.com/

PREFACE

1. This Parts Catalog carries Yanmar crawler back-hoe B08-3 for U.S.A. & Australia.

2. Parts catalog history

	Parts catalog NO.	Published	Remarks
1st edition	000Y00S4170	JAN., 2002	Disuse old edition
1st revised	000Y00S4171	June., 2004	

3. Model name

SECTION	Column	Model name	M/#	Manufactured
Ⅰ(Vehicle)	(A)	B08-3(US)	00501～	2001/2～
	(B)	B08-3(AS)		
Ⅱ(Engine)	(A)	2TNE68-EBVA	20007～	2001/1～

(Note) C:Cabin spec. P:Canopy spec.

4. Your understanding is asking that this parts catalog is not a technical data manual setting forth as servicing procedures, This parts catalog is using simplified illustration.
   Be sure to use Yanmar Genuine Parts in your maintenance servicing of Yanmar products.
   Be careful not to use the simple parts available in the market, otherwise their use in repairing causes such as an early breakage, for instance.

https://truckmanualshub.com/

How to read this Parts Catalog.

1.Parts mentioned in Parts Catalog may not necessarily be standard equipping parts
2.Parts change may be made without prior notice.
3.Form of this Parts Catalog.

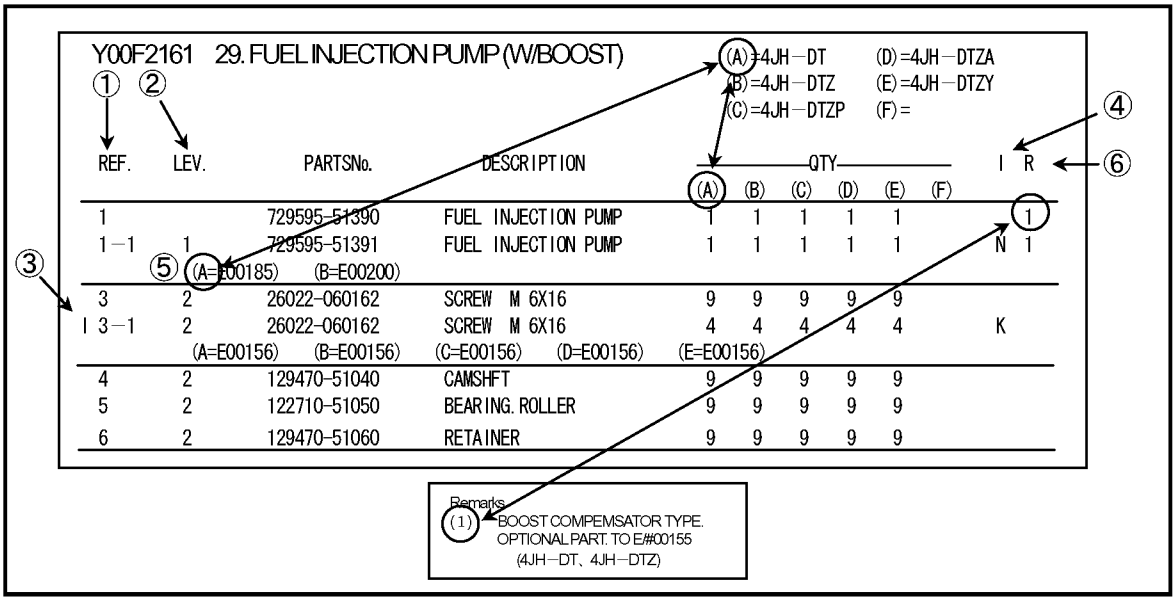

①Ref. No,

The Ref. No, in the list may not be in accordance with the Ref. No, on illustration.

(Ex.) illustration No, List heed No,

1 1 (Before change) → 1 − 1 (After change)

When interchangeable symbol N, and k, illustrations for the new parts are sometimes omitted.

②Lev. (Level)

Indication and Meaning of Level

Level Hereunder is given the relation among the number of number (1,2,3) the level and the nominal parent-child relationship.

1 ----- Parent parts (Assembly parts)
2 ----- Child parts included in " 1 " (Semi-Assembly parts, component parts of Assembly parts.)
3 ----- Child parts included in " 2 ", Grand-child parts in terms of " 1 ".
(Component parts of Semi-Assembly parts.)

Note) A parts of non-sale parts are illustrated but not listed.

③Change Mark

Change Mark " I " is given to the part for which a design change was made at this time.
The design change was not shown in the last published Parts Catalog.

④Interchangeability Mark

In the case where a part change took place, one of the following interchangeability marks is indicated for that part

Symbol	Interchangeability	Contents note
N	Old ⇐ ○ × ⇒ New	New Part is interchangeable for Old Part but not interchangeable conversely.
Q	Old ⇐ × ○ ⇒ New	New Part is not interchangeable for Old Part but interchangeable conversely.
R	Old ⇐ ○ ○ ⇒ New	New Part is interchangeable for Old Part and vice versa.
S	Old ⇐ × × ⇒ New	New Part is not interchangeable for Old Part and vice versa.
W		Part newly added.
Z		Part discontinued.
F		Not interchangeable single part but interchangeable by set of the related parts.
K		Changed only in quantity used.

⑤Effective Machine No,

When a part is changed, Effective Machine No, of a Model for which the part is applicable is indication
In each column of (A)-(F).

Product Symbol	Product No,	Product Symbol	Product No,
C	Clutch No, Compressor No,	M	Machine No,
D	Drive No,	T	Tractor No,
E	Engine No,	Note 1)※	Date

Note 1) Date may follow the symbol in some cases.(Ex.) ※1996.01
Note 2) As far as engine models shown by " XXX " are concerned, the modification of the parts could not be Predicted or the engine models themselves could not be identified.
Note 3) (A=E/#00185) means that the design change on the part has been effective for the model at the, column (A) (in the case, for 4JH-DT) on and from E/#(Engine Serial Number) 00185

⑥Remarks Mark

Figures or alphabets (Symbols) are entered in the remark column.
The comments (remarks) on the pertinent parts are indicated in the lower part of the list by the same symbols a those stated above.

https://truckmanualshub.com/

VEHICLE PAINTED COLOR

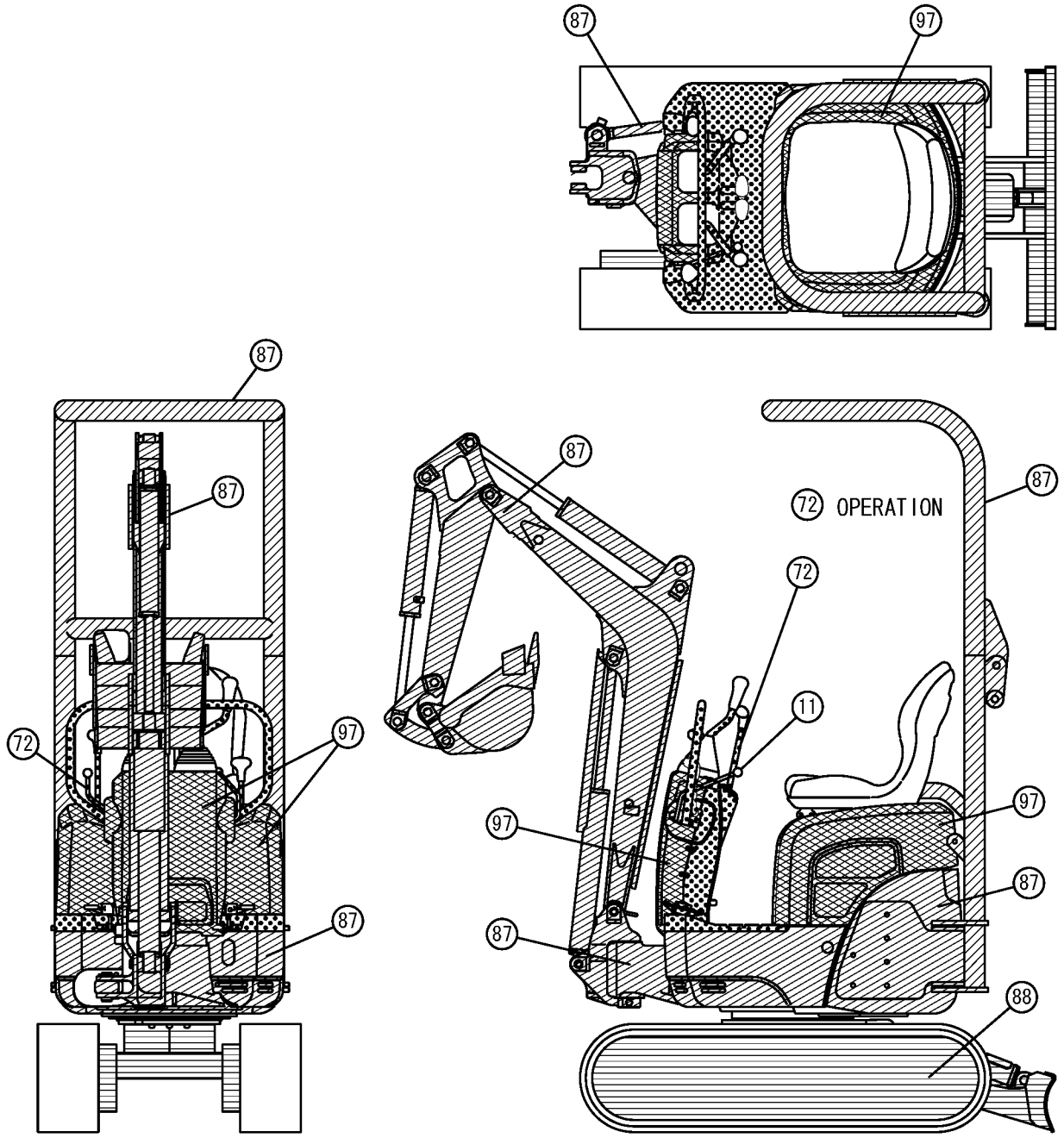

Color Code	Desc-ription	Painted Color	Munsel No.	Paint Part No.		
				16L Can	4L Can	SPRAY
87		YANMAR New Permanent Yellow	5.2Y8.5/11	981101-09519	977620-40870	977620-30871
97		YANMAR Peacock Green	3.85BG5.31/9.15	981101-09597	977620-40970	977620-30971
88		YANMAR New Deep Green	0.6B22.2/4.2	981101-09588	977620-40880	977620-30881
72		YANMAR Dark Olive Gray	5.39Y2.92/0.78	-------	977620-40720	TOR-90460003
11		YANMAR Red	7.5R4/14	-------	977620-40010	TOR-90000003

https://truckmanualshub.com/

WIRING DIAGRAM

Y	Yellow	L	Blue	R	Red	GW	Green White	Gr	Gray
YB	Yellow Black	LW	Blue White	RY	Red Yellow	GR	Green Red	Or	Orange
YR	Yellow Red	LR	Blue Red	RW	Red White	B	Black	Br	Brown
YL	Yellow Blue	LB	Blue Black	RB	Red Black	BR	Black Red		
W	White	LG	Blue Green	RG	Red Green	BW	Black White		
WB	White Black	Lg	Young Leaves	G	Green	LgR	Young Leaves Red		

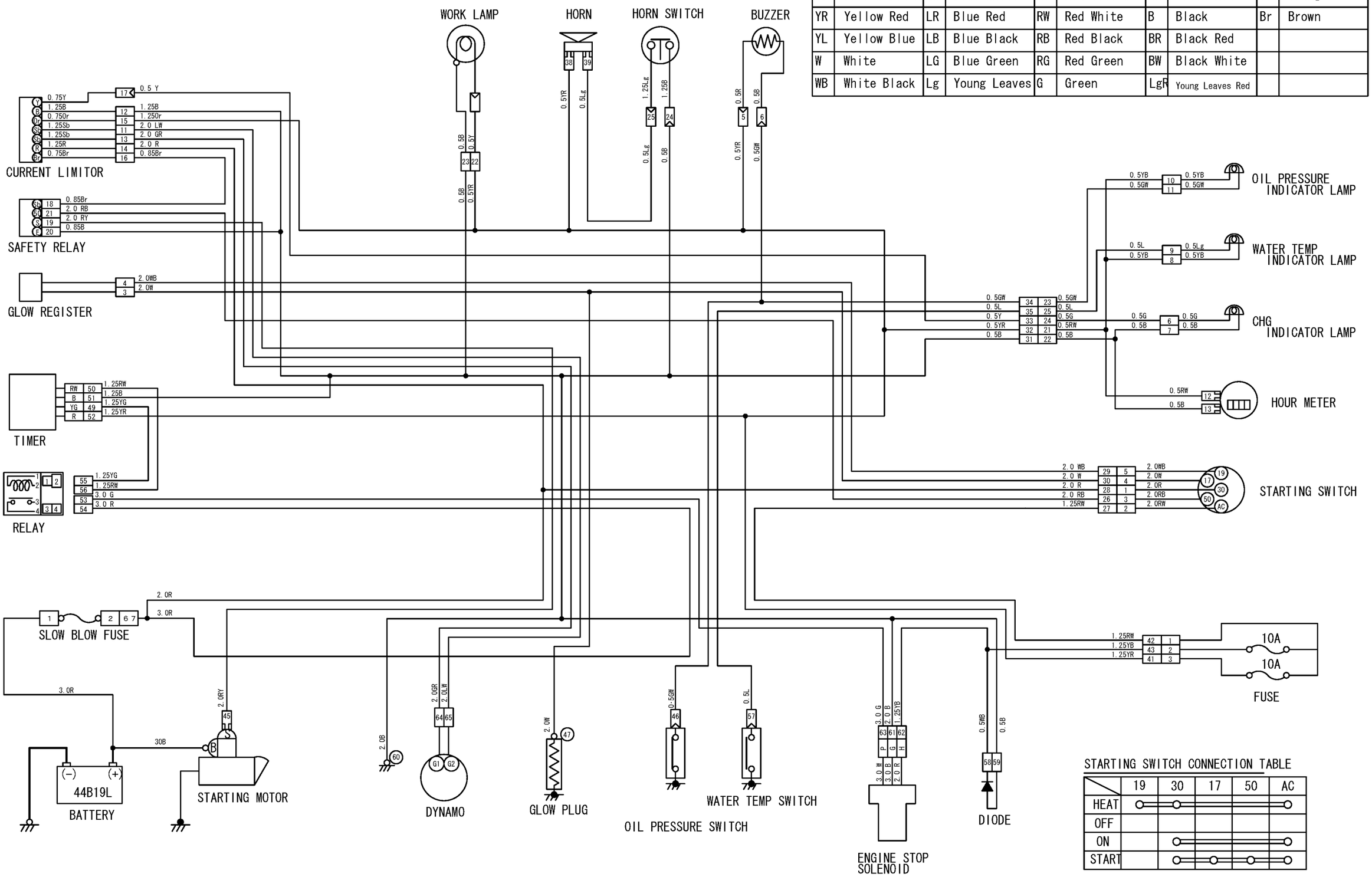

STARTING SWITCH CONNECTION TABLE

	19	30	17	50	AC
HEAT	○	○			○
OFF					
ON		○			○
START		○	○	○	○

https://truckmanualshub.com/

PICTURESQUE INDEX(1) ・・・MAIN PARTS

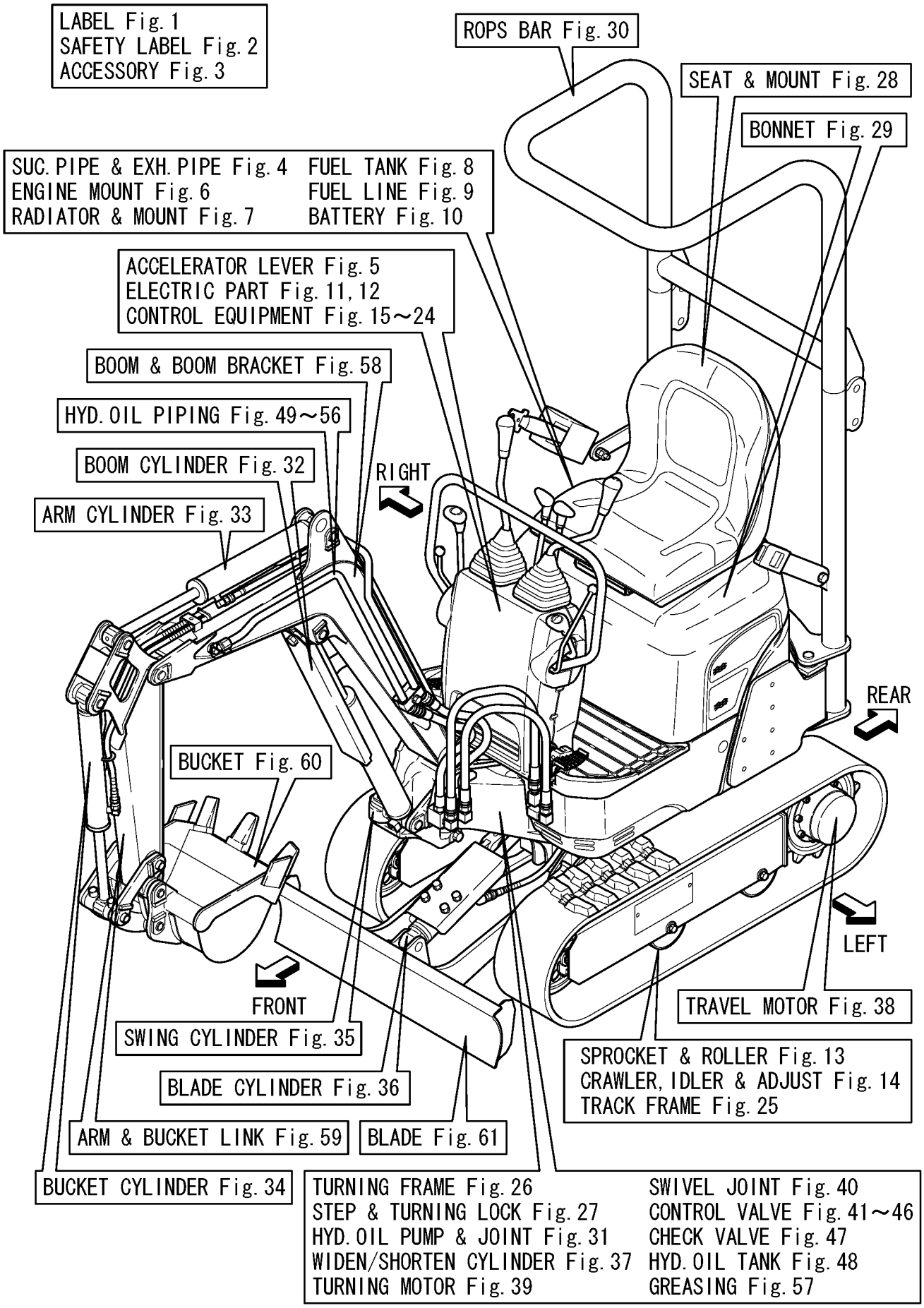

https://truckmanualshub.com/

PICTURESQUE INDEX(2) ・・・HYDRAULIC SECTION

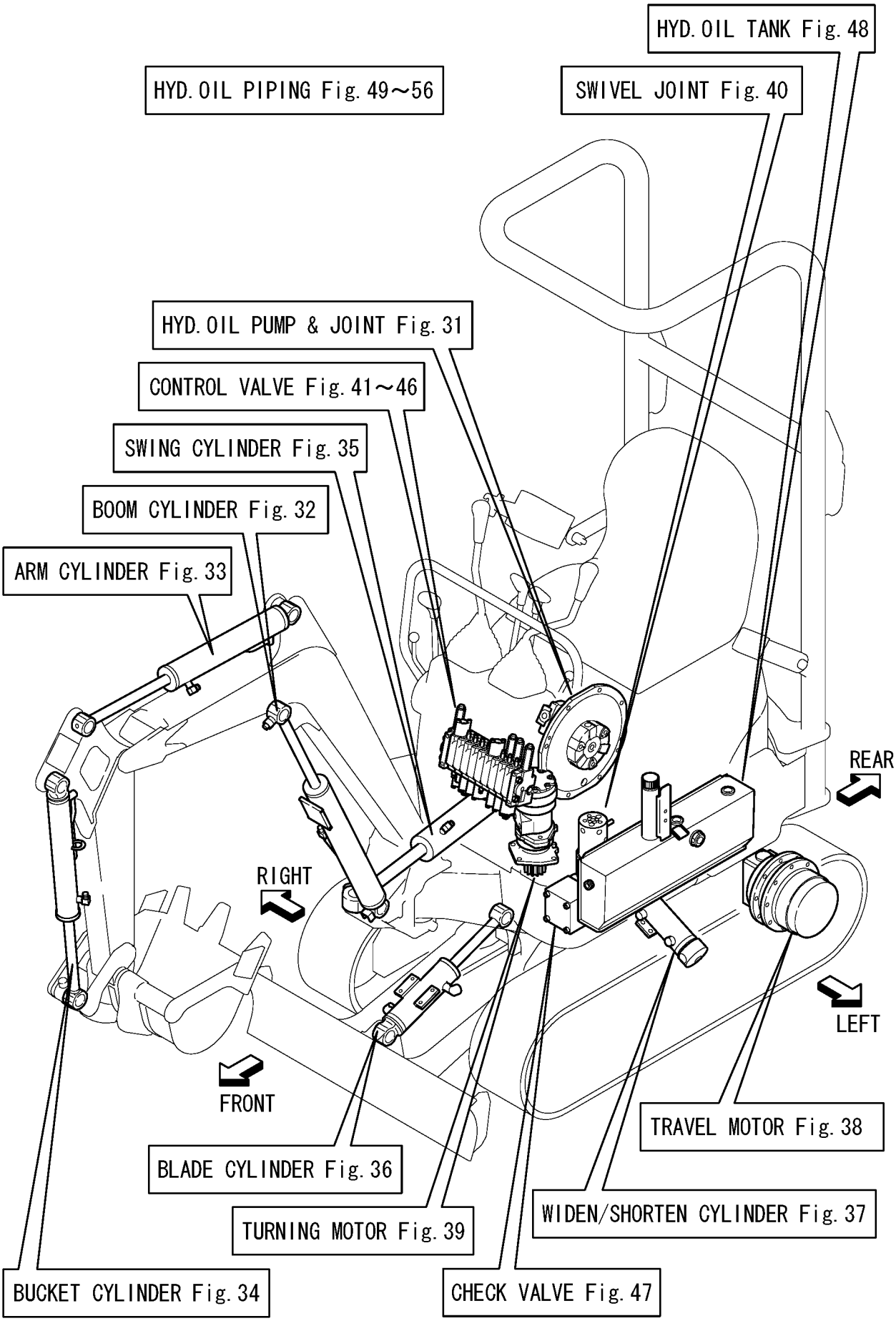

https://truckmanualshub.com/

PICTURESQUE INDEX(3) ・・・FIGURE

Fig. 1 LABEL

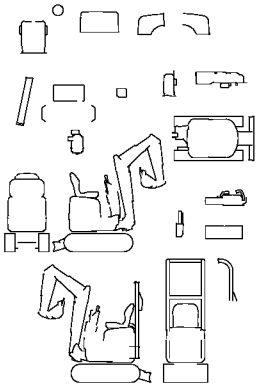

Fig. 2 SAFETY LABEL

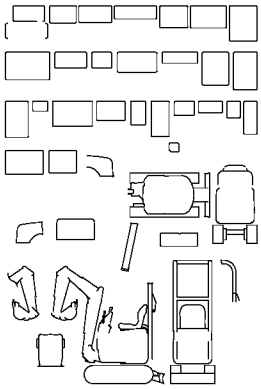

Fig. 3 ACCESSORY

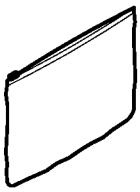

Fig. 4 SUC. PIPE & EXH. PIPE

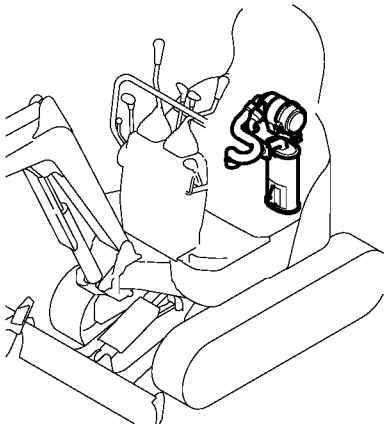

Fig. 5 ACCELERATOR LEVER

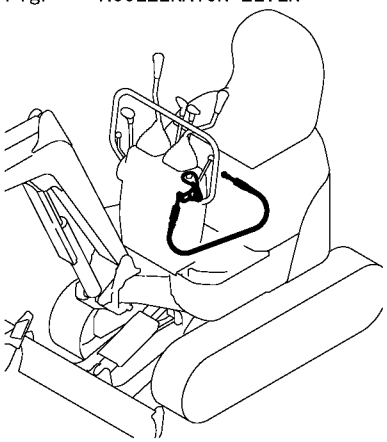

Fig. 6 ENGINE MOUNT

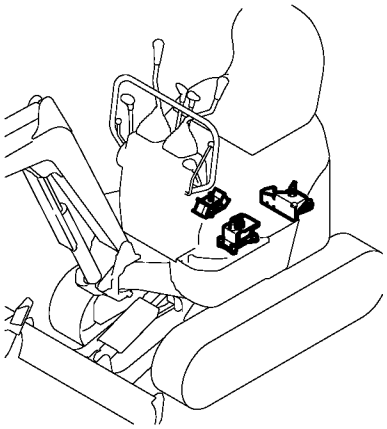

Fig. 7 RADIATOR & MOUNT

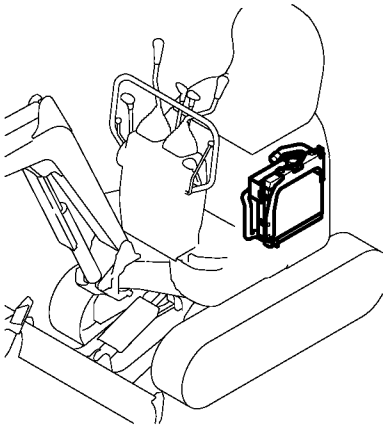

Fig. 8 FUEL TANK

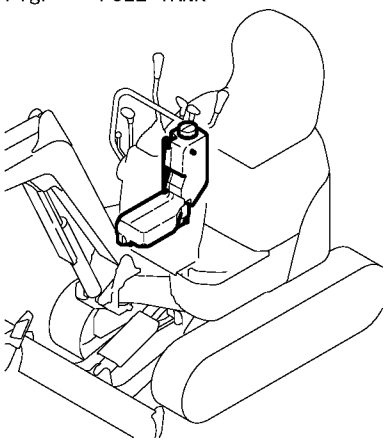

Fig. 9 FUEL LINE

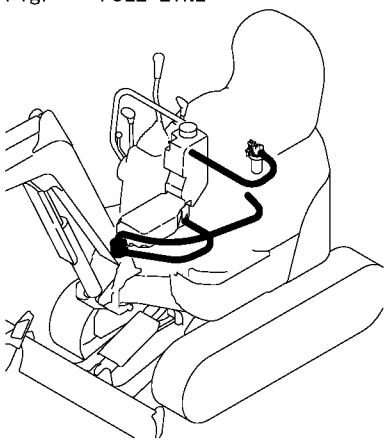

Fig. 10 BATTERY

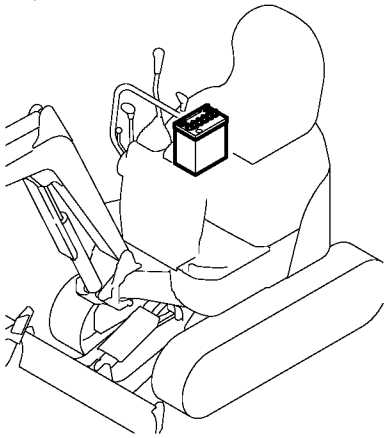

Fig. 11 ELECTRIC PART(WIRING)

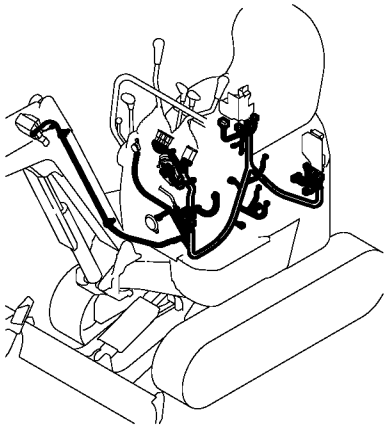

Fig. 12 ELECTRIC PART(EQUIPMENT)

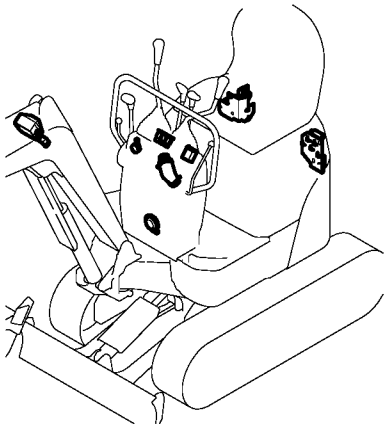

PICTURESQUE INDEX(3) ・・・FIGURE

Fig. 13 SPROCKET & ROLLER

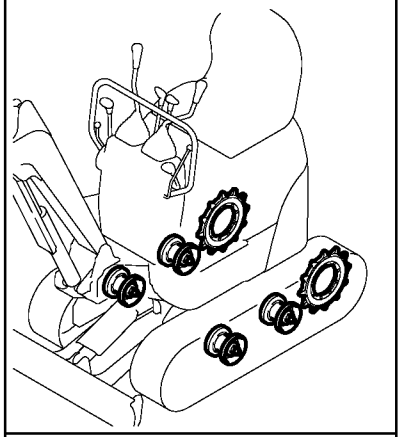

Fig. 14 CRAWLER, IDLER & ADJUST

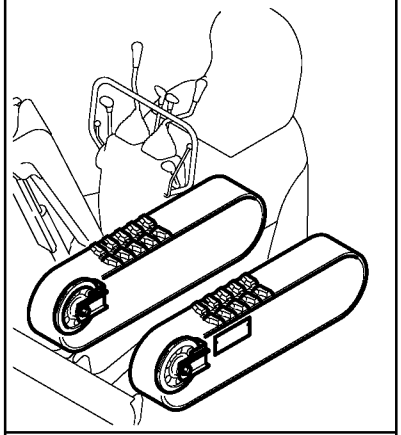

Fig. 15 CONTROL EQUIPMENT (LINK STAND)

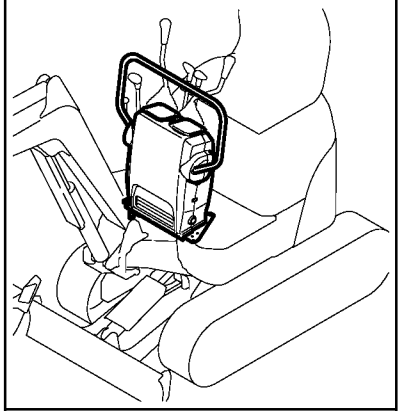

Fig. 16 CONTROL EQUIPMENT (STOPPER LEVER)

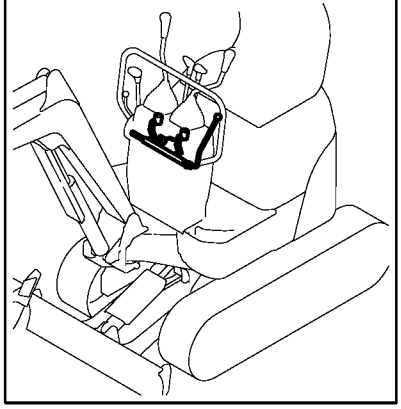

Fig. 17 CONTROL EQUIPMENT (OPERATE LEVER:R) (STD. PATTERN)

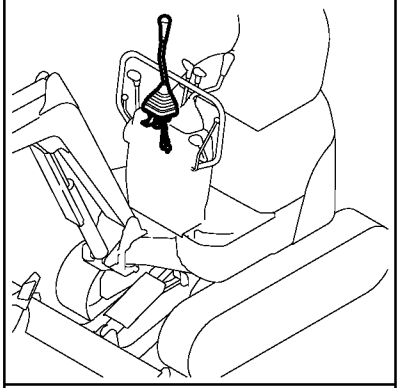

Fig. 18 CONTROL EQUIPMENT (OPERATE LEVER:R) (JD PATTERN)

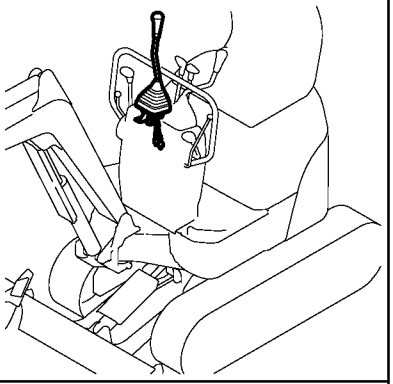

Fig. 19 CONTROL EQUIPMENT (OPERATE LEVER:L) (STD. PATTERN)

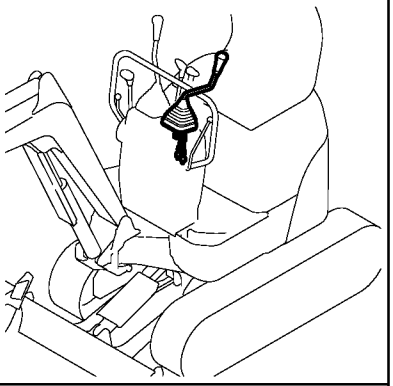

Fig. 20 CONTROL EQUIPMENT (OPERATE LEVER:L) (JD PATTERN)

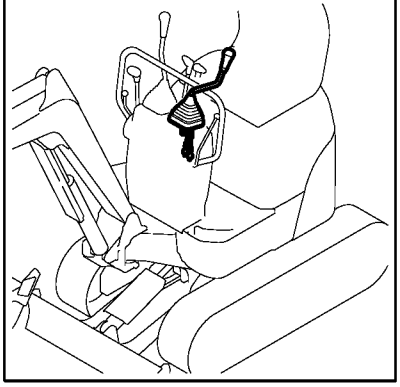

Fig. 21 CONTROL EQUIPMENT (TRAVEL & BLADE LEVER)

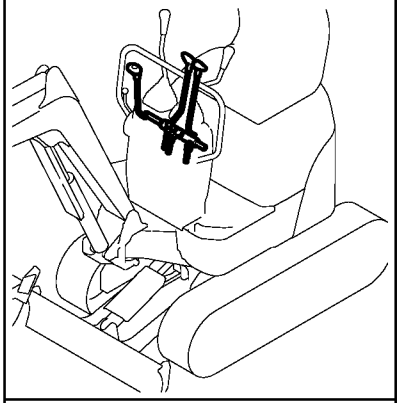

Fig. 22 CONTROL EQUIPMENT (SWING PEDAL)

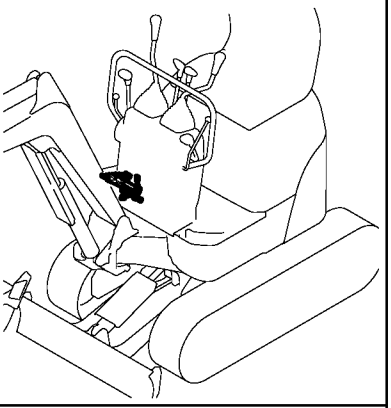

Fig. 23 CONTROL EQUIPMENT (P.T.O. PEDAL)

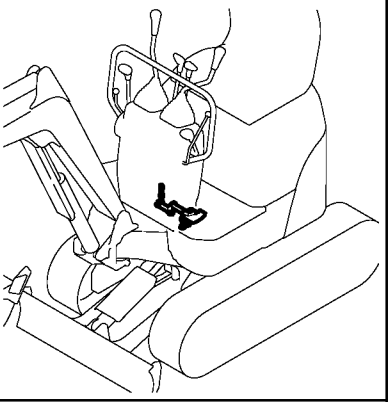

Fig. 24 CONTROL EQUIPMENT (VARIABLE LEG OPRATE)

https://truckmanualshub.com/

PICTURESQUE INDEX(3) ・・・FIGURE

Fig. 25 TRACK FRAME

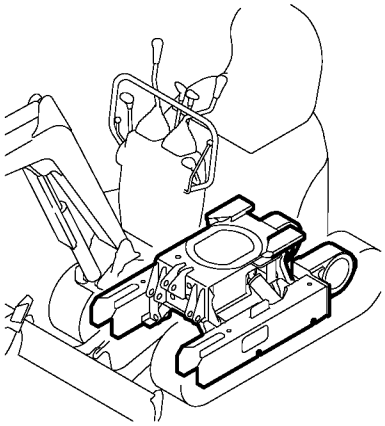

Fig. 26 TURNING FRAME

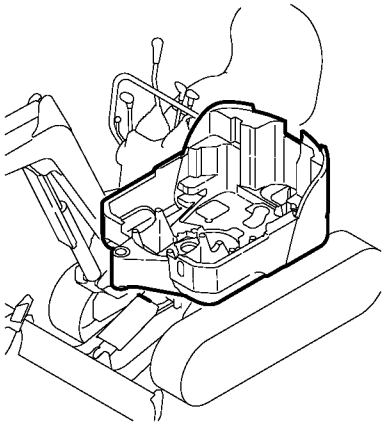

Fig. 27 STEP & TURNING LOCK

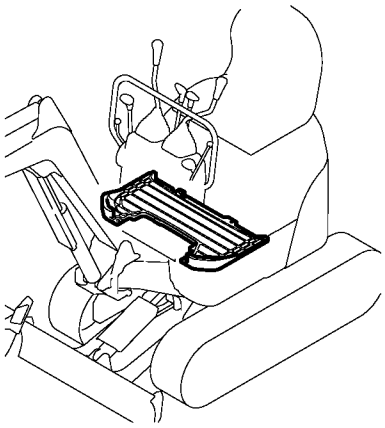

Fig. 28 SEAT & MOUNT

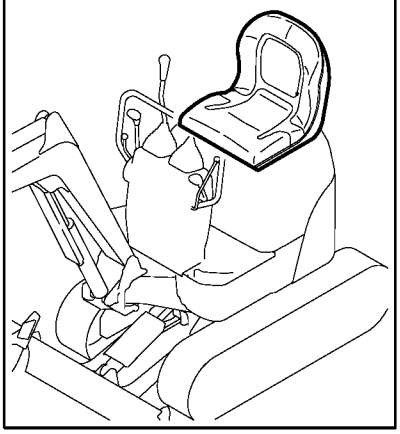

Fig. 29 BONNET

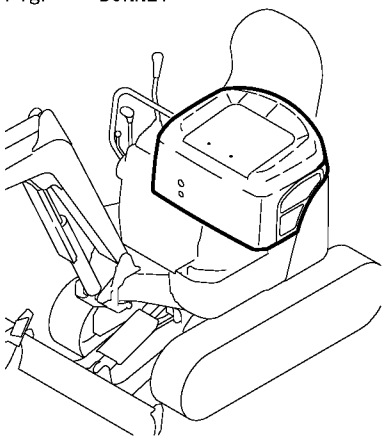

Fig. 30 ROPS BAR

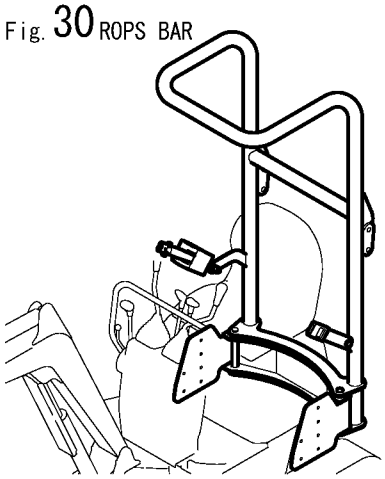

Fig. 31 HYD.OIL PUMP & JOINT

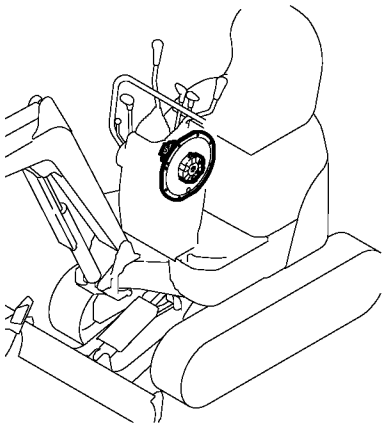

Fig. 32 BOOM CYLINDER

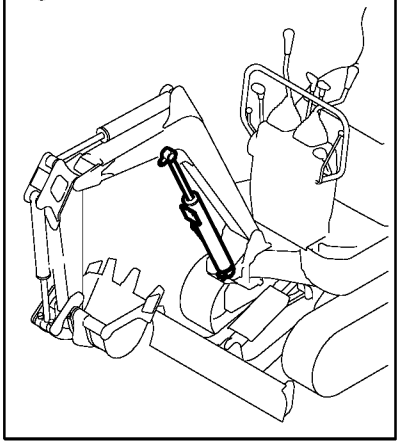

Fig. 33 ARM CYLINDER

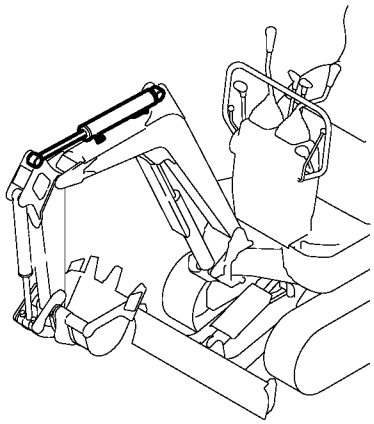

Fig. 34 BUCKET CYLINDER

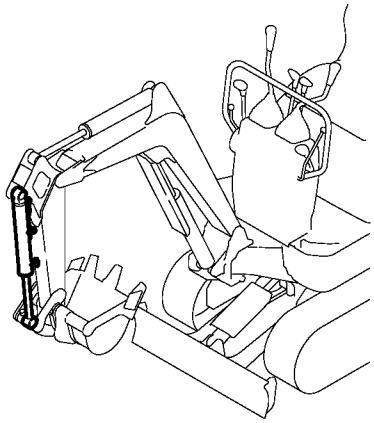

Fig. 35 SWING CYLINDER

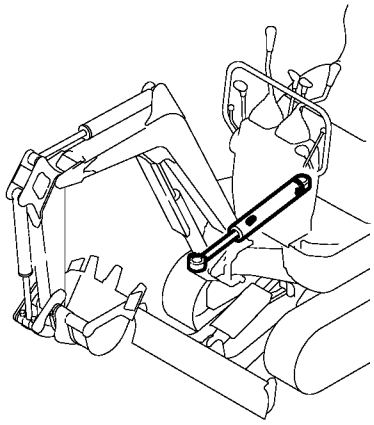

Fig. 36 BLADE CYLINDER

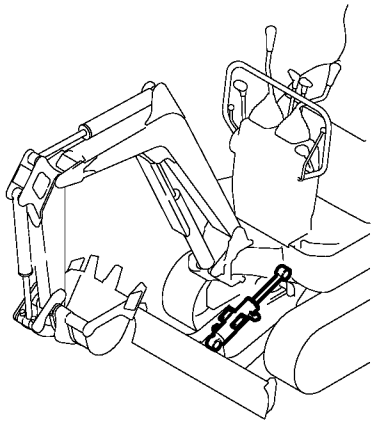

https://truckmanualshub.com/

PICTURESQUE INDEX(3) ・・・FIGURE

Fig. 37 VARIABLE LEG WIDEN/ SHORTEN CYLINDER

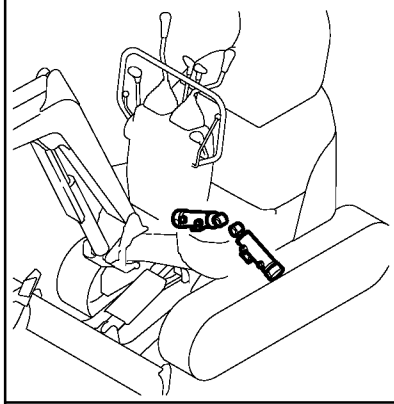

Fig. 38 TRAVEL MOTOR

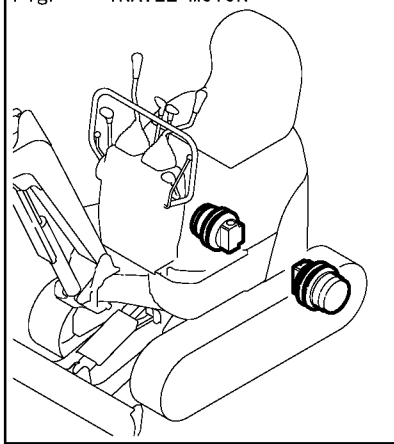

Fig. 39 TURNING MOTOR

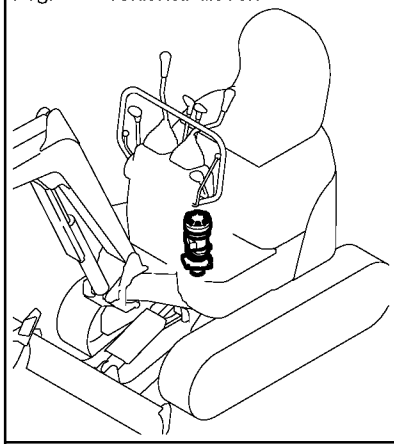

Fig. 40 SWIVEL JOINT

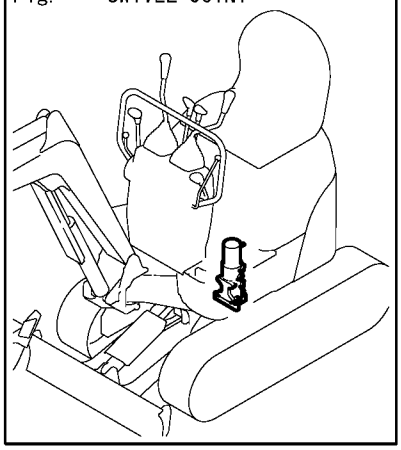

Fig. 41 CONTROL VALVE(1/6)

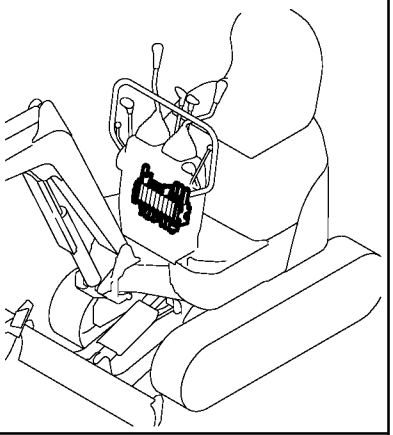

Fig. 42 CONTROL VALVE(2/6)

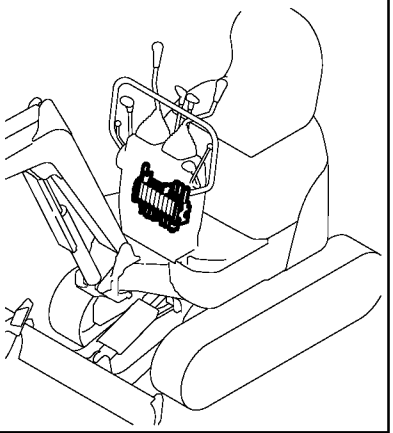

Fig. 43 CONTROL VALVE(3/6)

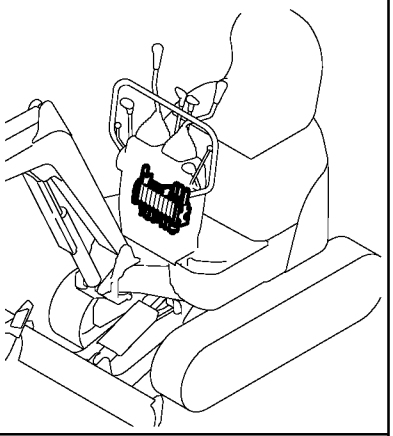

Fig. 44 CONTROL VALVE(4/6)

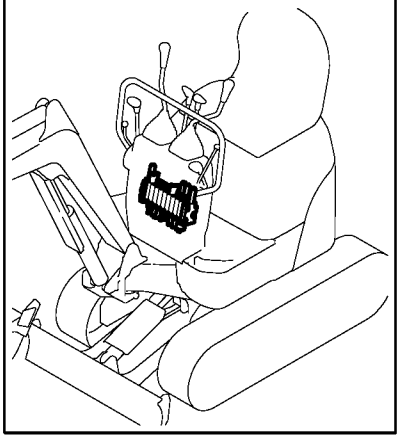

Fig. 45 CONTROL VALVE(5/6)

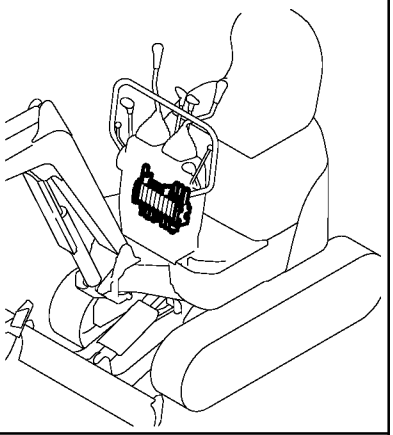

Fig. 46 CONTROL VALVE(6/6)

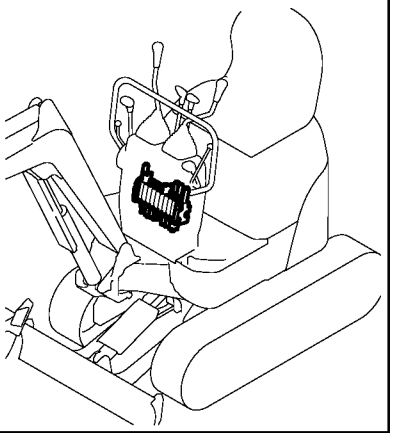

Fig. 47 CHECK VALVE

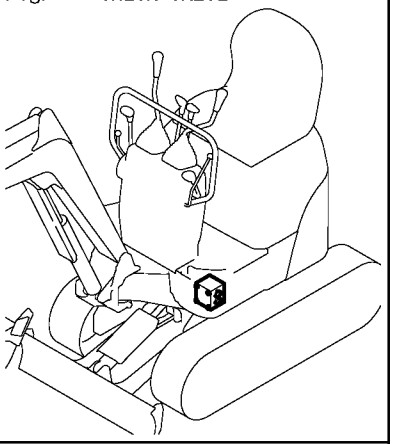

Fig. 48 HYD. OIL TANK

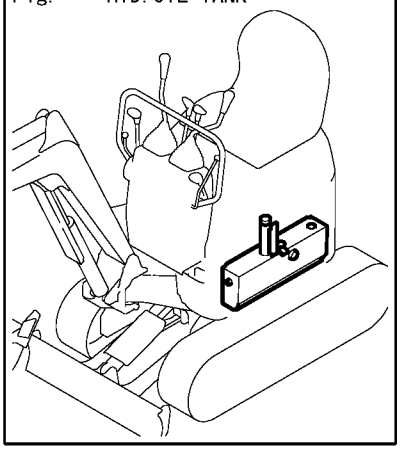

https://truckmanualshub.com/

PICTURESQUE INDEX(3) ・・・FIGURE

Fig. 49 HYD. OIL PIPING (TANK～PUMP～CONTROL V.)

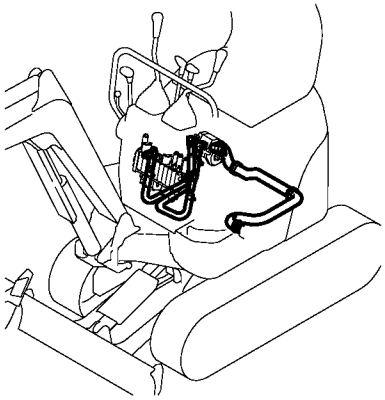

Fig. 50 HYD. OIL PIPING (CONTROL V. ～TURNING MT, SWING CYL.)

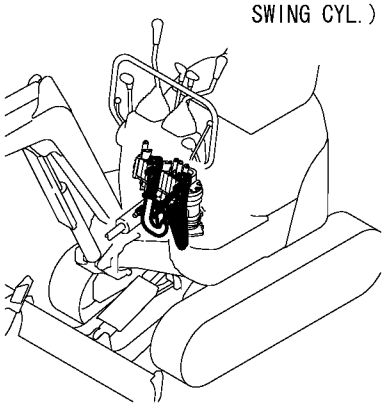

Fig. 51 HYD. OIL PIPING (CONTROL V. ～SWIVEL)

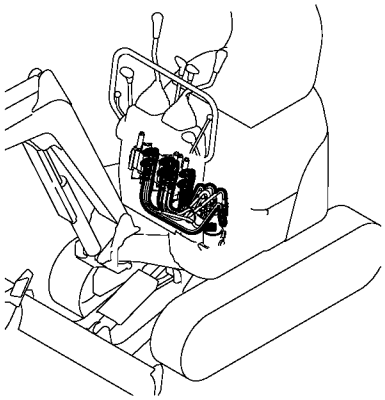

Fig. 52 HYD. OIL PIPING (RETURN)

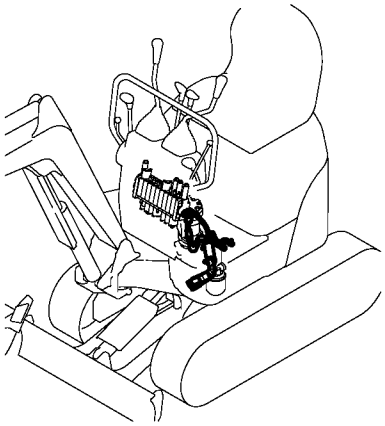

Fig. 53 HYD. OIL PIPING (P. T. O. :FRAME END)

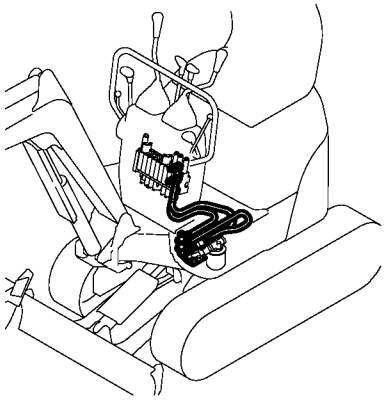

Fig. 54 HYD. OIL PIPING (TRACK FRAME)

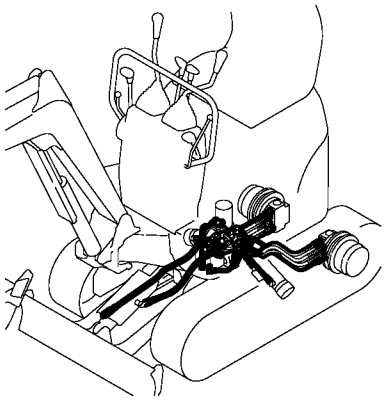

Fig. 55 HYD. OIL PIPING (BOOM)

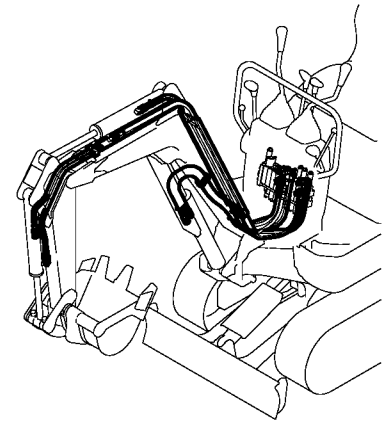

Fig. 56 HYD. OIL PIPING (P. T. O. :BOOM END)

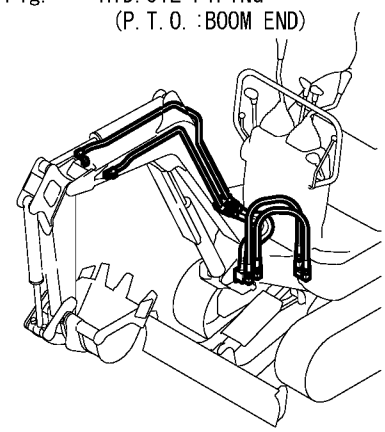

Fig. 57 GREASING

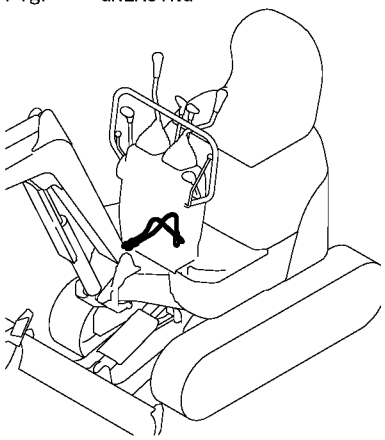

Fig. 58 BOOM & BOOM BRACKET

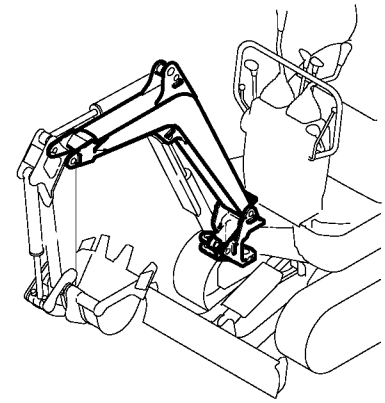

Fig. 59 ARM & BUCKET LINK

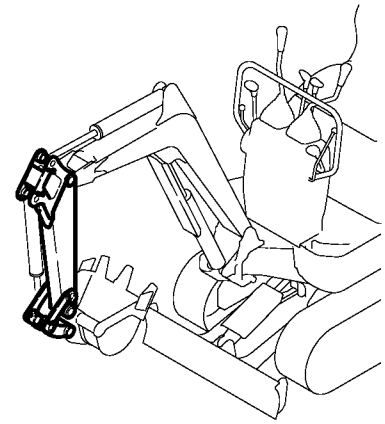

Fig. 60 BUCKET

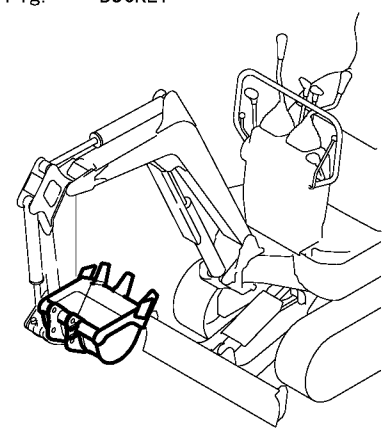

https://truckmanualshub.com/

PICTURESQUE INDEX(3) ・・・FIGURE

Fig. 61 BLADE

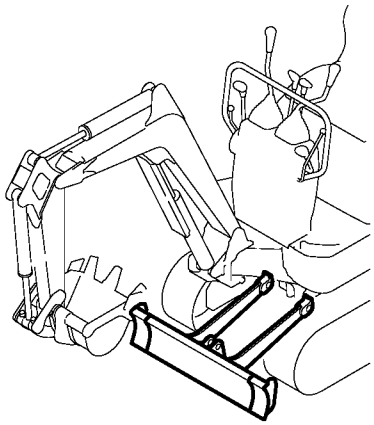

```
1,1,,772446-03180,,"LABEL SET,B08-3US,AS",1,1,,,,,,,,,,,,,,,,
2,2,,172446-03440,,"LABEL,PATTERN EP",1,1,,,,,,,,,,,,,,,,
3,2,,172446-03160,,LABEL,1,1,,,,,,,,,,,,,,,,
4,2,,172157-03170,,"LABEL, KEY SWITCH",1,1,,,,,,,,,,,,,,,,
5,2,,172446-03170,,LABEL,1,1,,,,,,,,,,,,,,,,
6,2,,172186-03200,,"LABEL,BRAND",2,2,,,,,,,,,,,,,,,,
7,2,,172446-03240,,LABEL,1,1,,,,,,,,,,,,,,,,
8,2,,172437-03250,,"TAG,SERVICING ASSY",1,1,,,,,,,,,,,,,,,,
9,2,,172462-03260,,"LABEL,GREASE US",1,1,,,,,,,,,,,,,,,,
10,2,,172183-03280,,"LABEL,LOCK",1,1,,,,,,,,,,,,,,,,
11,2,,172463-03290,,"LABEL,HYD.OIL US",1,1,,,,,,,,,,,,,,,,
12,2,,172137-03300,,"LABEL, TURNING LOCK",1,1,,,,,,,,,,,,,,,,
13,2,,172446-03760,,"LABEL,MANUAL",1,1,,,,,,,,,,,,,,,,
14,2,,172437-03310,,"LABEL,SLOPE",1,1,,,,,,,,,,,,,,,,
15,2,,172437-03320,,"LABEL,HYD.OIL TANK",1,,,,,,,,,,,,,,,,,,
15-1,2,,172437-03321,,"LABEL,HYD.OIL
TANK",1,1,,,,,R,,72652008,M/#01331,,,,,,,,,,I
16,2,,172462-03320,,LABEL,1,1,,,,,,,,,,,,,,,,
17,2,,172437-03340,,"LABEL,TRANSPORT",1,,,,,,,,,,,,,,,,,,
17-1,2,,172437-03341,,"LABEL,TRANSPORT",1,1,,,,,R,,72652008,M/#01331,,,,,,,,,,,I
18,2,,172437-03360,,"LABEL,BATTERY",1,1,,,,,,,,,,,,,,,,
19,2,,172437-03371,,LABEL,1,1,,,,,,,,,,,,,,,,
20,2,,172437-03380,,"LABEL,SWING AREA",1,1,,,,,,,,,,,,,,,,
21,2,,172437-03390,,"LABEL,RADIATOR",1,1,,,,,,,,,,,,,,,,
22,2,,172437-03400,,"LABEL,ENG.HOOD",1,,,,,,,,,,,,,,,,,,
22-1,2,,172437-03401,,"LABEL (ENG COVER
US",1,1,,,,,R,,72652008,M/#01331,,,,,,,,,,I
23,2,,172437-03410,,"LABEL,ENG.ROOM",1,,,,,,,,,,,,,,,,,,
23-1,2,,172437-03411,,"LABEL (ENG ROOM
US",1,1,,,,,R,,72652008,M/#01331,,,,,,,,,,I
24,2,,172437-03421,,"LABEL,MUFFLER",1,1,,,,,,,,,,,,,,,,
25,2,,172437-03460,,"LABEL, BOOM",2,2,,,,,,,,,,,,,,,,
26,2,,172437-03500,,"LABEL,FUEL",1,1,,,,,,,,,,,,,,,,
27,2,,172437-03510,,"LABEL,HOOK",3,3,,,,,,,,,,,,,,,,
28,2,,172446-03510,,LABEL,1,1,,,,,,,,,,,,,,,,
29,2,,172446-03520,,LABEL,1,1,,,,,,,,,,,,,,,,
30,2,,172446-03630,,"LABEL,FUSE E",1,,,,,,,,,,,,,,,,,,
30-1,2,,172446-03631,,LABEL,1,1,,,,,N,,72480074,M/#01243,,,,,,,,,,I
31,2,,172446-03640,,"LABEL,GREASE E",1,1,,,,,,,,,,,,,,,,
32,2,,172446-03651,,"LABEL,VARIABLE US",1,1,,,,,,,,,,,,,,,,
33,2,,172446-03700,,"LABEL,SPEC.US",1,,,,,,,,,,,,,,,,,,
33-1,2,,172446-
03701,,"LABEL,SPECIFICATION",1,1,,,,,N,,72457041,M/#01243,,,,,,,,,,I
34,2,,172446-03710,,"LABEL,LIFT US",1,1,,,,,,,,,,,,,,,,
35,2,,172446-03720,,"LABEL,OIL&WATER US",1,,,,,,,,,,,,,,,,,,
36,2,,172125-03950,,"LABEL, AIR CLEANER",1,,,,,,,,,,,,,,,,,,
37,2,,124764-44810,,"LABEL, RESERVE TANK",1,,,,,,,,,,,,,,,,,,
38,2,,124764-44920,,"LABEL, ANTI-FREEZING",1,,,,,,,,,,,,,,,,,,
39,2,,172446-03730,,"LABEL,LIFT US",1,,,,,,,,,,,,,,,,,,
40,2,,172446-03740,,"LABEL,PINCH",2,,,,,,,,,,,,,,,,,,
41,2,,172446-03750,,"LABEL,FOLDING",1,,,,,,,,,,,,,,,,,,
41-1,2,,172446-03751,,"LABEL, FOLDING",1,,,,,,R,,72652008,M/#01331,,,,,,,,,,I
42,2,,172433-03250,,LABEL,1,,,,,,,,,,,,,,,,,,
43,2,,172433-03270,,LABEL,1,,,,,,,,,,,,,,,,,,
44,2,,172437-03530,,"LABEL,RE-START",1,,,,,,,,,,,,,,,,,,
45,2,,172437-03440,,"LABEL,ROPS",1,,,,,,,,,,,,,,,,,,
46,2,,172437-03450,,"LABEL,SEAT BELT",1,,,,,,,,,,,,,,,,,,
47,2,,172446-03770,,"LABEL,SUPPORT US",1,,,,,,,,,,,,,,,,,,
48,2,,172437-03431,,"LABEL,STEERING",1,1,,,,,,,,,,,,,,,,
49,2,,172446-03780,,"LABEL,BONNET",1,1,,,,,,,,,,,,,,,,
50,1,,172446-03280,,LABEL,1,,,,,,W,1,724460153,M/#01944,,,,,,,,,,I
51,1,,172446-03800,,LABEL,1,,,,,,W,1,724460153,M/#01944,,,,,,,,,,I
```

https://truckmanualshub.com/

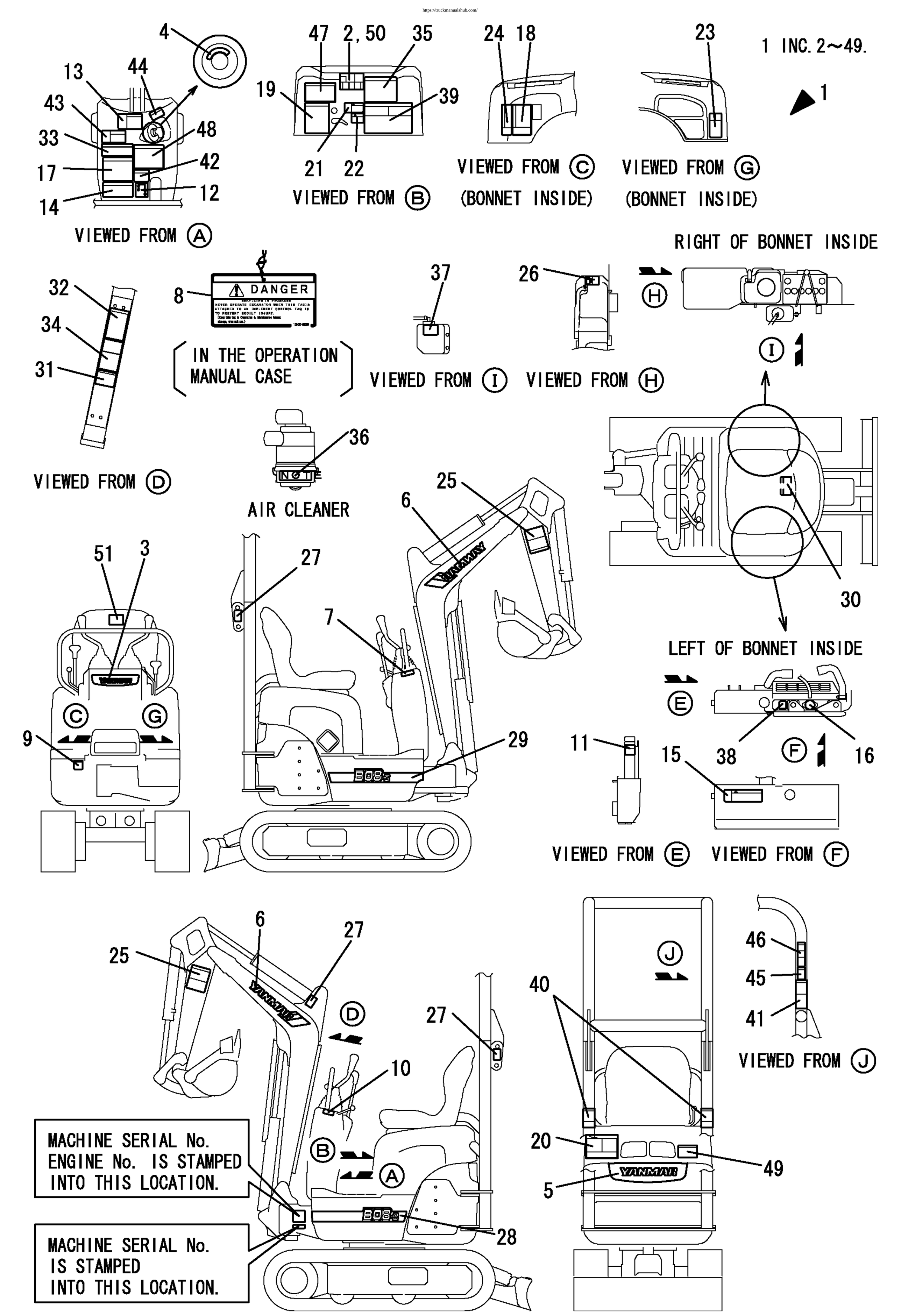

https://truckmanualshub.com/

```
1,1,,172437-03250,,"TAG,SERVICING ASSY",1,1,,,,,,,,,,,,,,,,
2,1,,172446-03760,,"LABEL,MANUAL",1,1,,,,,,,,,,,,,,,,
3,1,,172437-03310,,"LABEL,SLOPE",1,1,,,,,,,,,,,,,,,,
4,1,,172437-03320,,"LABEL,HYD.OIL TANK",1,,,,,,,,,,,,,,,,,,
4-1,1,,172437-03321,,"LABEL,HYD.OIL
TANK",1,1,,,,,R,,72652008,M/#01331,,,,,,,,,,I
5,1,,172437-03340,,"LABEL,TRANSPORT",1,,,,,,,,,,,,,,,,,,
5-1,1,,172437-03341,,"LABEL,TRANSPORT",1,1,,,,,R,,72652008,M/#01331,,,,,,,,,,I
6,1,,172437-03360,,"LABEL,BATTERY",1,1,,,,,,,,,,,,,,,,
7,1,,172437-03371,,LABEL,1,1,,,,,,,,,,,,,,,,
8,1,,172437-03380,,"LABEL,SWING AREA",1,1,,,,,,,,,,,,,,,,
9,1,,172437-03390,,"LABEL,RADIATOR",1,1,,,,,,,,,,,,,,,,
10,1,,172437-03400,,"LABEL,ENG.HOOD",1,,,,,,,,,,,,,,,,,,
10-1,1,,172437-03401,,"LABEL (ENG COVER
US",1,1,,,,,R,,72652008,M/#01331,,,,,,,,,,I
11,1,,172437-03410,,"LABEL,ENG.ROOM",1,,,,,,,,,,,,,,,,,,
11-1,1,,172437-03411,,"LABEL (ENG ROOM
US",1,1,,,,,R,,72652008,M/#01331,,,,,,,,,,I
12,1,,172437-03421,,"LABEL,MUFFLER",1,1,,,,,,,,,,,,,,,,
13,1,,172437-03460,,"LABEL, BOOM",2,2,,,,,,,,,,,,,,,,
14,1,,172446-03651,,"LABEL,VARIABLE US",1,1,,,,,,,,,,,,,,,,,,
15,1,,172446-03710,,"LABEL,LIFT US",1,1,,,,,,,,,,,,,,,,
16,1,,124764-44810,,"LABEL, RESERVE TANK",1,1,,,,,,,,,,,,,,,,,,
17,1,,172446-03730,,"LABEL,LIFT US",1,1,,,,,,,,,,,,,,,,
18,1,,172446-03440,,"LABEL,PATTERN EP",1,1,,,,,,,,,,,,,,,,,
19,1,,172446-03740,,"LABEL,PINCH",2,2,,,,,,,,,,,,,,,,
20,1,,172446-03750,,"LABEL,FOLDING",1,,,,,,,,,,,,,,,,,,
20-1,1,,172446-03751,,"LABEL, FOLDING",1,1,,,,,R,,72652008,M/#01331,,,,,,,,,,I
21,1,,172433-03250,,LABEL,1,1,,,,,,,,,,,,,,,,
22,1,,172433-03270,,LABEL,1,1,,,,,,,,,,,,,,,,
23,1,,172437-03440,,"LABEL,ROPS",1,1,,,,,,,,,,,,,,,,
24,1,,172437-03450,,"LABEL,SEAT BELT",1,1,,,,,,,,,,,,,,,,
25,1,,172446-03770,,"LABEL,SUPPORT US",1,1,,,,,,,,,,,,,,,,,,
26,1,,172437-03431,,"LABEL,STEERING",1,1,,,,,,,,,,,,,,,,
27,1,,172446-03280,,LABEL,1,,,,,,W,1,724460153,M/#01944,,,,,,,,,,I
```

https://truckmanualshub.com/

1

IN THE OPERATION MANUAL CASE

2

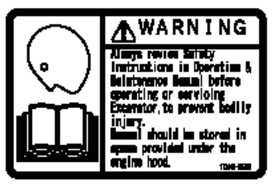

3

4

5

6

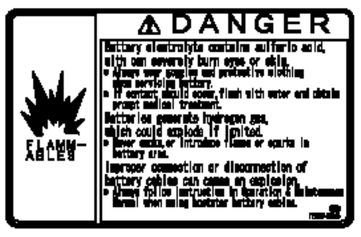

7

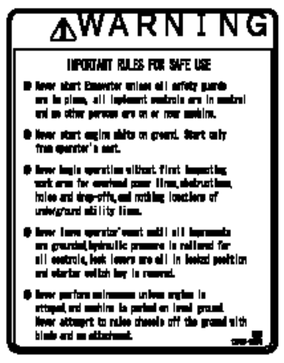

8

9

10

11

12

13

14

15

16

17

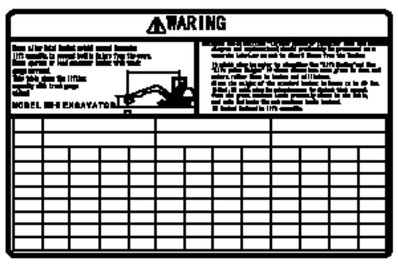

18

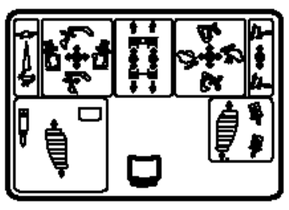

19

20

21

22

23

24

25

26

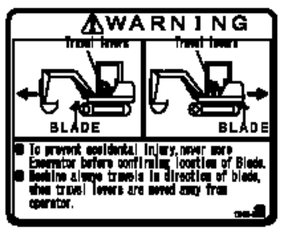

27

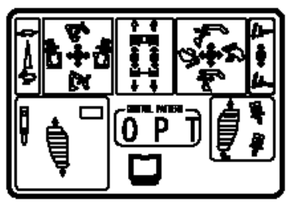

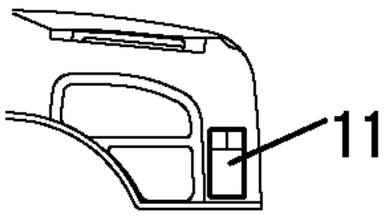

VIEWED FROM Ⓔ
(BONNET INSIDE)

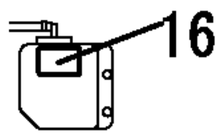

SUB-TANK ASSY

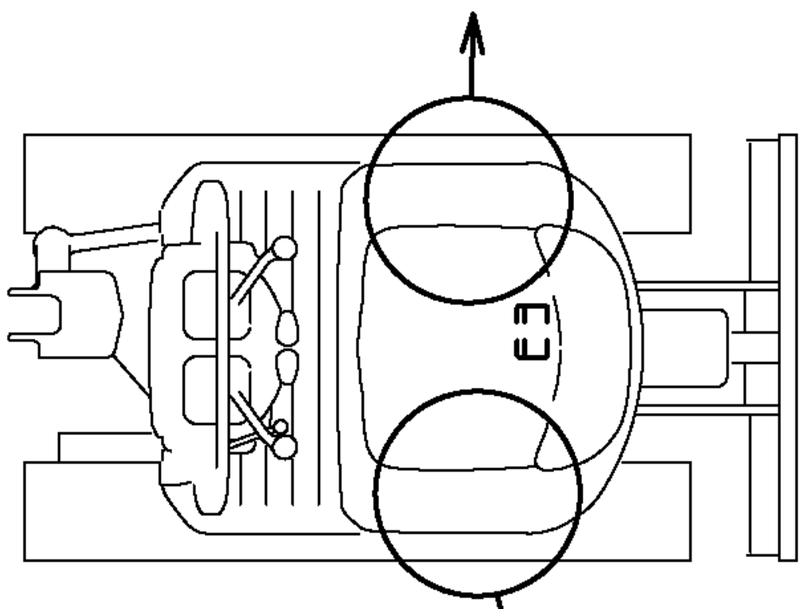

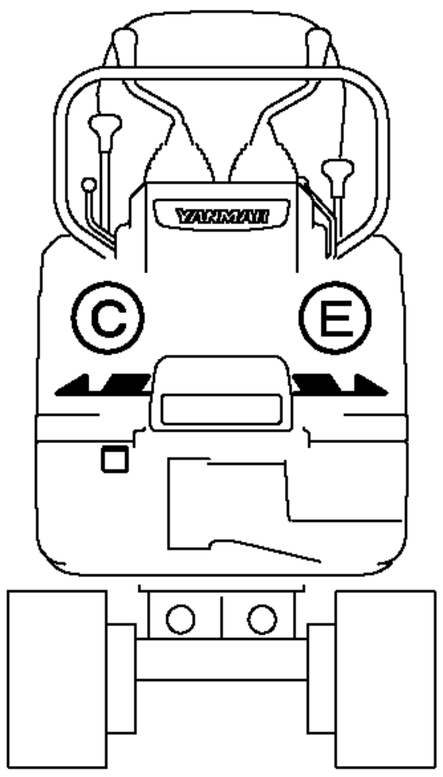

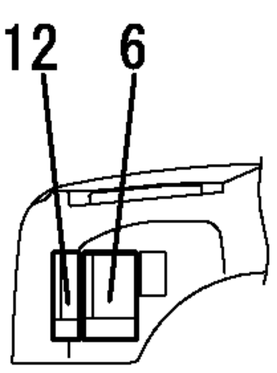

VIEWED FROM Ⓒ
(BONNET INSIDE)

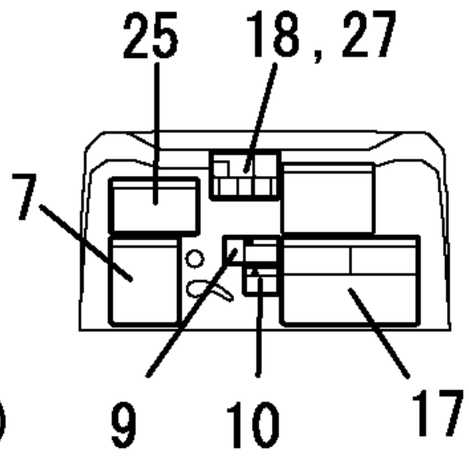

VIEWED FROM Ⓑ

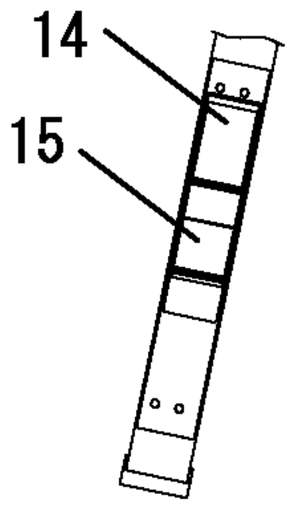

VIEWED FROM Ⓓ

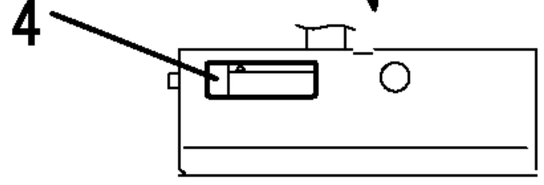

RESERVER ASSY

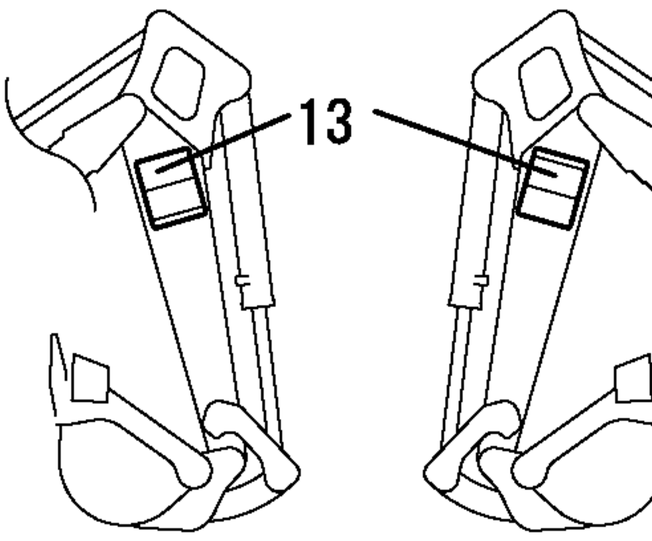

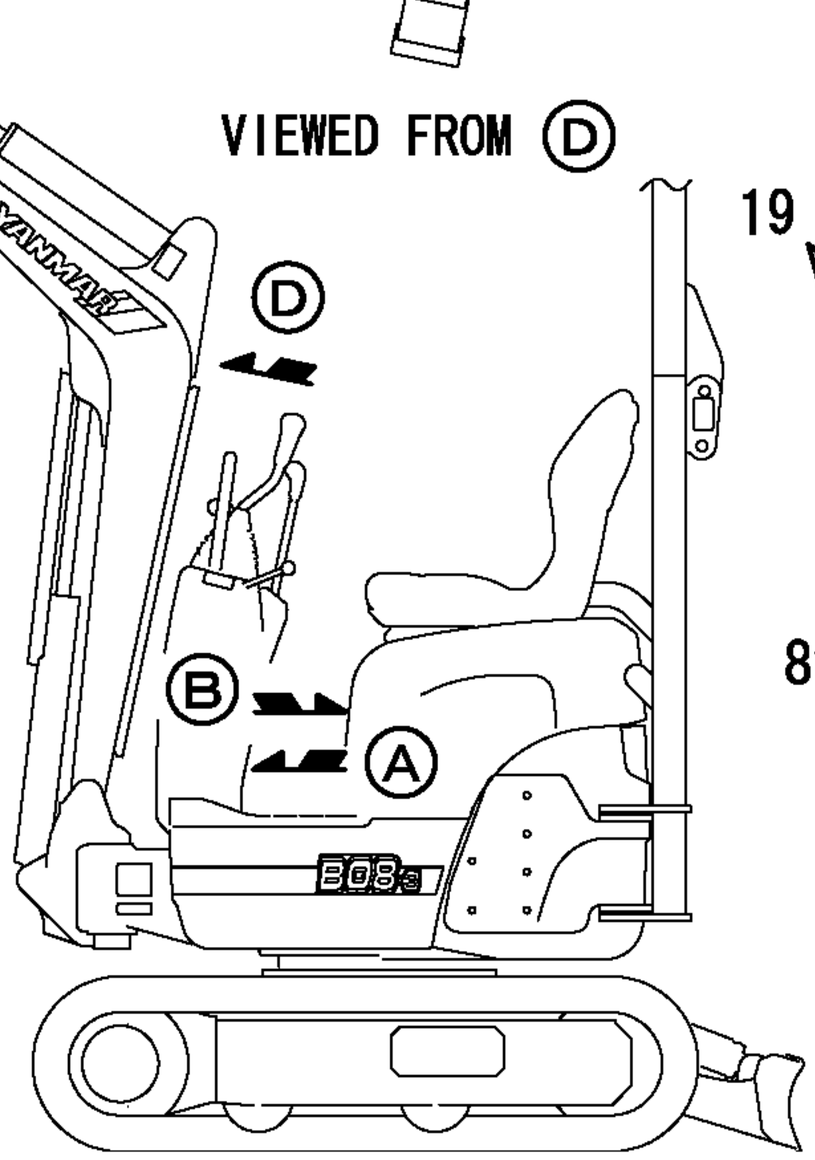

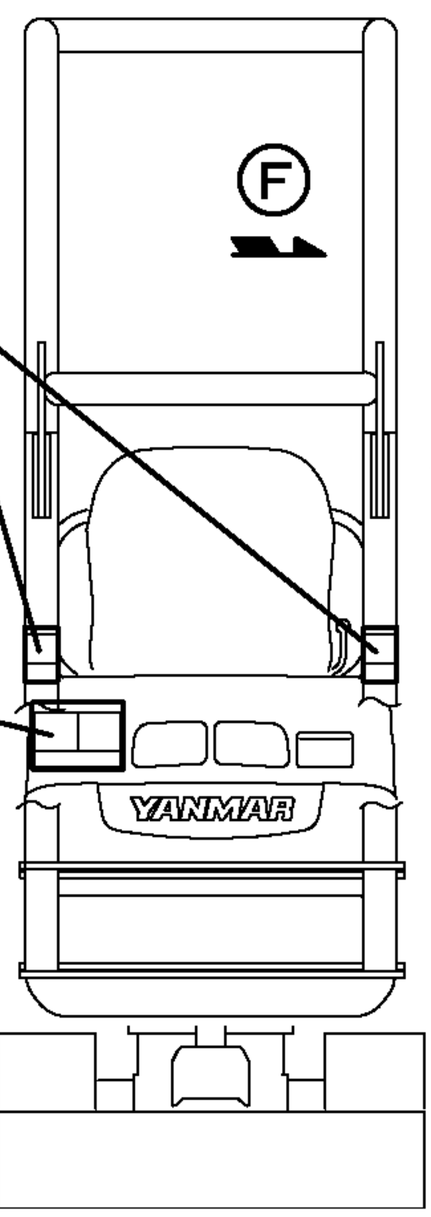

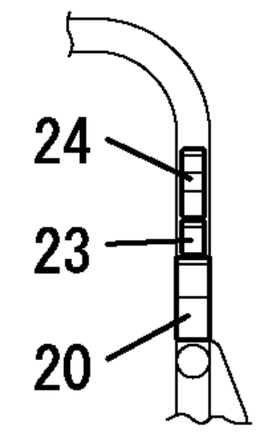

VIEWED FROM Ⓕ

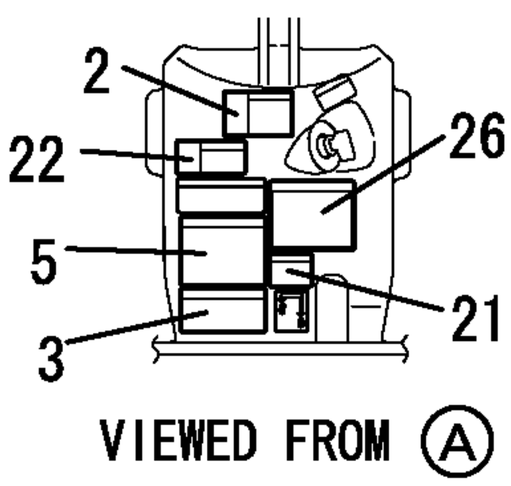

VIEWED FROM Ⓐ

https://truckmanualshub.com/

1,1,,172176-07330,,"BAG, MANUAL",1,1,,,,,,,,,,,,,,,,,

https://truckmanualshub.com/

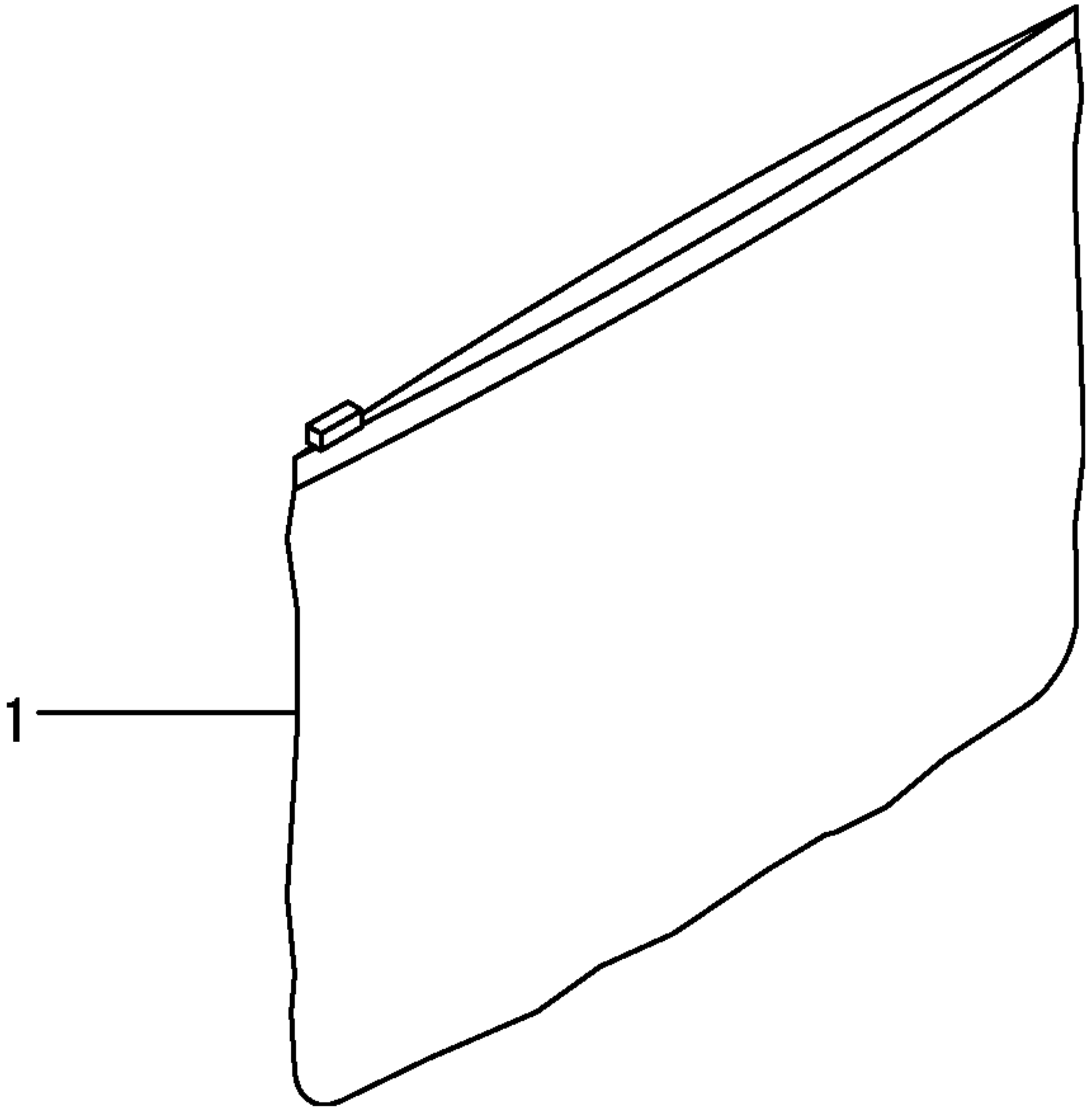

https://truckmanualshub.com/

```
1,1,,124701-11911,,"GASKET, (NON-ASB.)",1,1,,,,,,,,,,,,,,,,,
2,1,,119325-13530,,SILENCER,1,1,,,,,,,,,,,,,,,,,
3,1,,22217-080000,,"SPRING WASHER  8",4,4,,,,,,,,,,,,,,,,,
4,1,,26013-100252,,"BOLT W/WASHER M10X25",2,2,,,,,,,,,,,,,,,,,,
5,1,,26716-080002,,"NUT M 8",4,4,,,,,,,,,,,,,,,,,
6,1,,172446-11500,,"HOSE-A,AIR CLEANER",1,1,,,,,,,,,,,,,,,,,,
7,1,,172446-11510,,"HOSE-B,AIR CLEANER",1,1,,,,,,,,,,,,,,,,,,
8,1,,119325-12530,,"AIR CLEANER",1,1,,,,,,,,,,,,,,,,,
9,2,,105027-12550,,"BODY,AIR CLEANER",1,1,,,,,,,,,,,,,,,,,,
10,2,,119655-12560,,ELEMENT,1,1,,,,,,,,,,,,,,,,,
11,2,,119655-12570,,"COVER ASSY",1,1,,,,,,,,,,,,,,,,,
12,2,,119808-12540,,"VALVE, UNLOADER",1,1,,,,,,,,,,,,,,,,,
14,1,,23000-060000,,"CLAMP 60",3,3,,,,,,,,,,,,,,,,,
15,1,,26013-080162,,"BOLT W/WASHER M8X16",2,2,,,,,,,,,,,,,,,,,,
```

https://truckmanualshub.com/

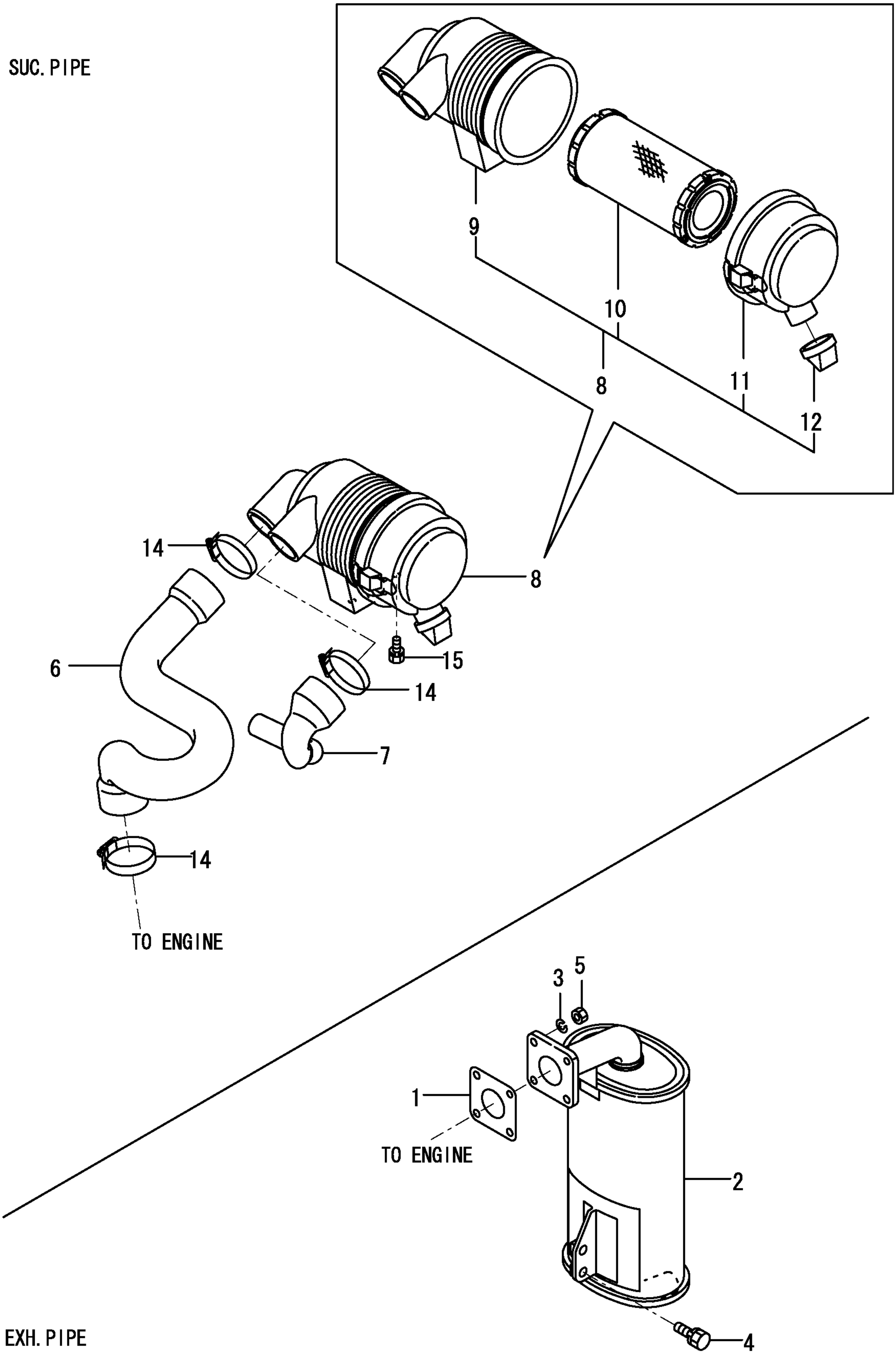

https://truckmanualshub.com/

```
1,1,,172446-12100,,"LEVER,ACCEL.(GRAY:72",1,1,,,,,,,,,,,,,,,,,
2,1,,172446-12130,,"ARM,ACCELERATOR",1,1,,,,,,,,,,,,,,,,,
3,1,,172146-12150,,"GRIP,ACCELERATOR",1,1,,,,,,,,,,,,,,,,,
4,1,,172446-12150,,"PLATE ASSY, ACCEL.",1,1,,,,,,,,,,,,,,,,,
5,1,,172446-12200,,"CABLE, ACCEL",1,,,,,,,,,,,,,,,,,,
5-1,1,,172446-12201,,"CABLE, ACCEL",1,1,,,,,N,,724460146,M/#01870,,,,,,,,,,,I
6,1,,172113-12522,,PIN,1,1,,,,,,,,,,,,,,,,,
7,1,,1C6281-52310,,"PIN 6,COME-OFF SNAP",1,1,,,,,,,,,,,,,,,,,
8,1,,172156-61320,,COLLAR,1,1,,,,,,,,,,,,,,,,,
9,1,,22137-060000,,"WASHER 6, POLISHED",2,2,,,,,,,,,,,,,,,,,
10,1,,22217-080000,,"SPRING WASHER  8",2,2,,,,,,,,,,,,,,,,,
11,1,,22417-200160,,"COTTER PIN 2.0X16",1,1,,,,,,,,,,,,,,,,,
12,1,,26116-080202,,"BOLT M 8X 20 PLATED",2,2,,,,,,,,,,,,,,,,,,
13,1,,26116-080254,,"BOLT M 8X 25 PLATED",1,1,,,,,,,,,,,,,,,,,,
14,1,,26756-080002,,"LOCK NUT M 8 PLATED",1,1,,,,,,,,,,,,,,,,,,
15,1,,26756-120002,,"LOCK NUT 12",2,2,,,,,,,,,,,,,,,,,
16,1,,933170-01490,,"SPRING 12",2,2,,,,,,,,,,,,,,,,,
17,1,,1A1686-57850,,"LAMP, 80",1,1,,,,,W,,724460143,M/#01712,,,,,,,,,,,I
```

https://truckmanualshub.com/

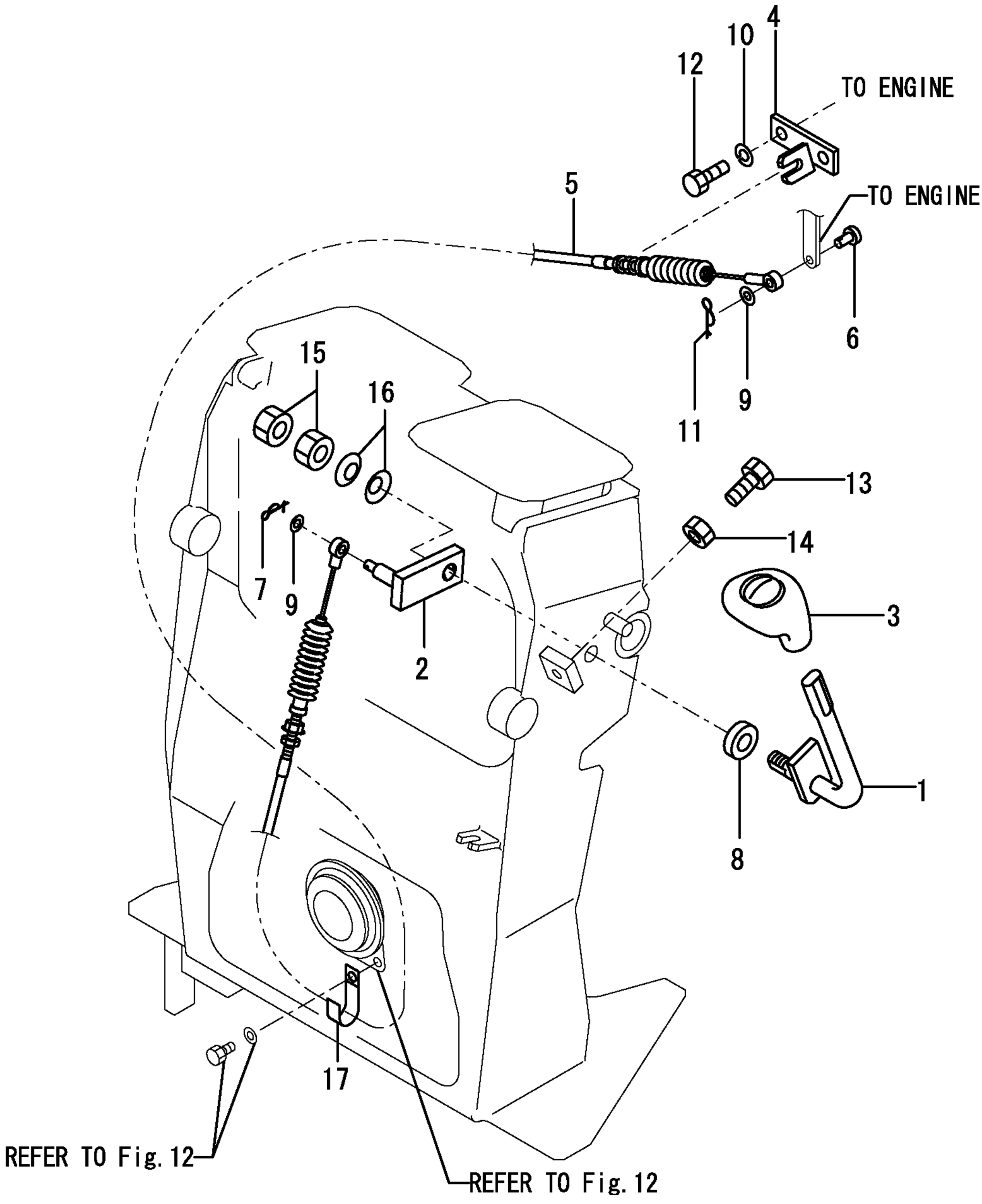

https://truckmanualshub.com/

```
1,1,,172446-13100,,"MOUNT FL,ENG.",1,1,,,,,,,,,,,,,,,,
2,1,,172446-13110,,"MOUNT FR,ENG.",1,1,,,,,,,,,,,,,,,,
3,1,,172446-13120,,"STAY FL,ENG.",1,1,,,,,,,,,,,,,,,,
4,1,,172446-13130,,"STAY FR,ENG.",1,1,,,,,,,,,,,,,,,,
5,1,,172446-13200,,"ABSORBER,SHOCK",2,2,,,,,,,,,,,,,,,,
6,1,,172446-13250,,STOPPER-FL,1,1,,,,,,,,,,,,,,,,
7,1,,172446-13260,,STOPPER-FR,1,1,,,,,,,,,,,,,,,,
8,1,,172447-13260,,"ABSOBER,SHOCK 290K",1,1,,,,,,,,,,,,,,,,
9,1,,22217-120000,,"SPRING WASHER 12",4,4,,,,,,,,,,,,,,,,
10,1,,22217-140000,,"SPRING WASHER 14",2,2,,,,,,,,,,,,,,,,
11,1,,26013-100252,,"BOLT W/WASHER M10X25",3,3,,,,,,,,,,,,,,,,
12,1,,26013-100252,,"BOLT W/WASHER M10X25",3,3,,,,,,,,,,,,,,,,
13,1,,26013-100252,,"BOLT W/WASHER M10X25",1,1,,,,,,,,,,,,,,,,
14,1,,26013-100352,,"BOLT M10X 35",2,2,,,,,,,,,,,,,,,,
15,1,,26013-100352,,"BOLT M10X 35",2,2,,,,,,,,,,,,,,,,
16,1,,26716-120002,,"NUT 12",4,4,,,,,,,,,,,,,,,,
17,1,,26736-140002,,"NUT M14",2,2,,,,,,,,,,,,,,,,
18,1,,172446-13150,,WASHER,6,6,,,,,W,,72446129,M/#01095,,,,,,,,,,I
```

https://truckmanualshub.com/

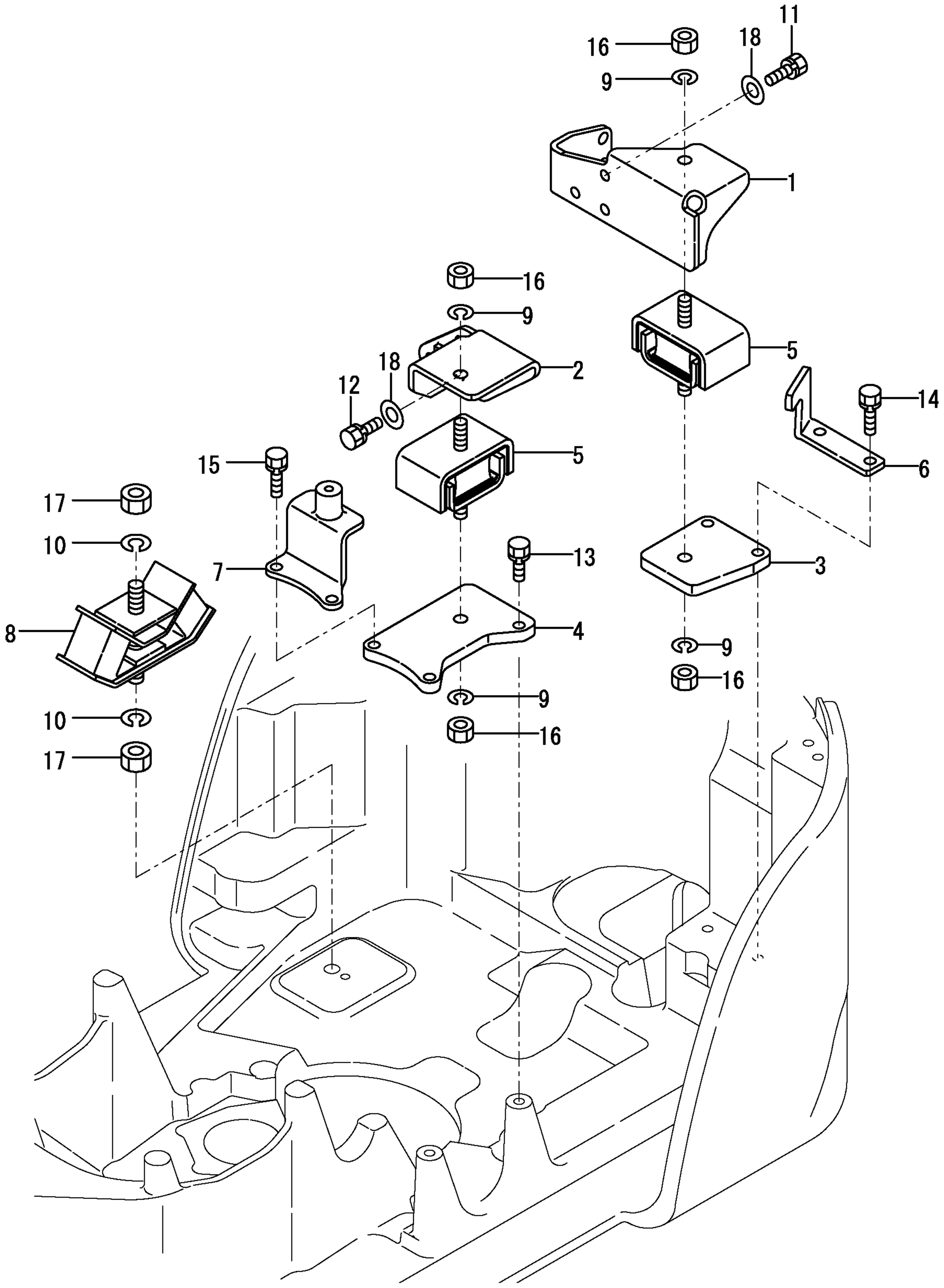

https://truckmanualshub.com/

```
1,1,,172446-13290,,"RADIATOR MOUNT",1,1,,,,,,,,,,,,,,,
3,2,,172446-13520,,"SEAL A",1,1,,,,,,,,,,,,,,,
4,1,,172446-13330,,"ABSOBER,SHOCK",4,4,,,,,,,,,,,,,,,
5,1,,172446-13350,,"FAN-GUARD  (GRAY:72)",1,1,,,,,,,,,,,,,,,,
6,1,,172446-13420,,RADIATOR,1,1,,,,,,,,,,,,,,,
9,3,,172446-13450,,CSP,1,1,,,,,,,,,,,,,,,
10,3,,172446-13460,,SHURAUD,1,1,,,,,,,,,,,,,,,
11,3,,172446-13470,,"BOLT ASSY",4,4,,,,,,,,,,,,,,,
12,3,,172446-13480,,"HOSE,RUBBER",1,1,,,,,,,,,,,,,,,,
13,3,,172446-13490,,CLIP,2,2,,,,,,,,,,,,,,,
14,3,,172446-13500,,COCK,1,1,,,,,,,,,,,,,,,
15,2,,172446-13540,,"SEAL C",1,1,,,,,,,,,,,,,,,,,,I
16,2,,172446-13550,,"SEAL D",1,1,,,,,,,,,,,,,,,,,,I
17,2,,172446-13560,,"SEAL E",1,1,,,,,,,,,,,,,,,,,,I
18,2,,172446-13570,,"SEAL F",1,1,,,,,,,,,,,,,,,,,,I
19,2,,172446-13580,,"SEAL, G RADIATOR",2,2,,,,,,,,,,,,,,,,,,,I
20,1,,172447-13600,,"HOSE-A,RADIATOR",1,1,,,,,,,,,,,,,,,
21,1,,172447-13610,,"HOSE-B,RADIATOR",1,1,,,,,,,,,,,,,,,
22,1,,121468-44510,,"SUB-TANK ASSY",1,1,,,,,,1,,,,,,,,,,
24,2,,121450-44531,,CAP,1,1,,,,,,,,,,,,,,,
25,2,,121468-44540,,"PLUG, SUB-TANK",1,1,,,,,,,,,,,,,,,
26,2,,124450-44560,,CLAMP,1,1,,,,,,,,,,,,,,,
27,2,,121470-44581,,GASKET,1,1,,,,,,,,,,,,,,,
28,2,,23065-070130,,"PIPE  7X 130",1,1,,,,,,,,,,,,,,,
29,1,,172455-61720,,"BOLT M 10X20",2,2,,,,,,,,,,,,,,,
30,1,,22137-060000,,"WASHER 6, POLISHED",2,2,,,,,,,,,,,,,,,
31,1,,22137-100000,,"WASHER 10,POLISHED",4,4,,,,,,,,,,,,,,,
32,1,,22217-100000,,"SPRING WASHER 10",2,2,,,,,,,,,,,,,,,
33,1,,23000-025000,,"CLAMP 25",2,,,,,,,,,,,,,,,,,
33-1,1,,23001-025000,,"HOSE CLAMP  25",2,2,,,,N,,72446124,M/#01095,,,,,,,,,,I
34,1,,23010-038000,,"CLAMP 38",2,2,,,,,,,,,,,,,,,
35,1,,26013-060122,,"BOLT M 6X 12",2,2,,,,,,,,,,,,,,,
36,1,,26013-080162,,"BOLT W/WASHER M8X16",2,2,,,,,,,,,,,,,,,
37,1,,26013-100202,,"BOLT W/WASHER M10X20",2,2,,,,,,,,,,,,,,,,
38,1,,933152-09280,,"BAND 170",1,1,,,,,,,,,,,,,,,
39,1,,933168-55770,,"BAND 146",1,1,,,,,,,,,,,,,,,
40A,1,,124764-44810,,"LABEL, RESERVE TANK",1,1,,,,,2,,,,,,,,,,
```

https://truckmanualshub.com/

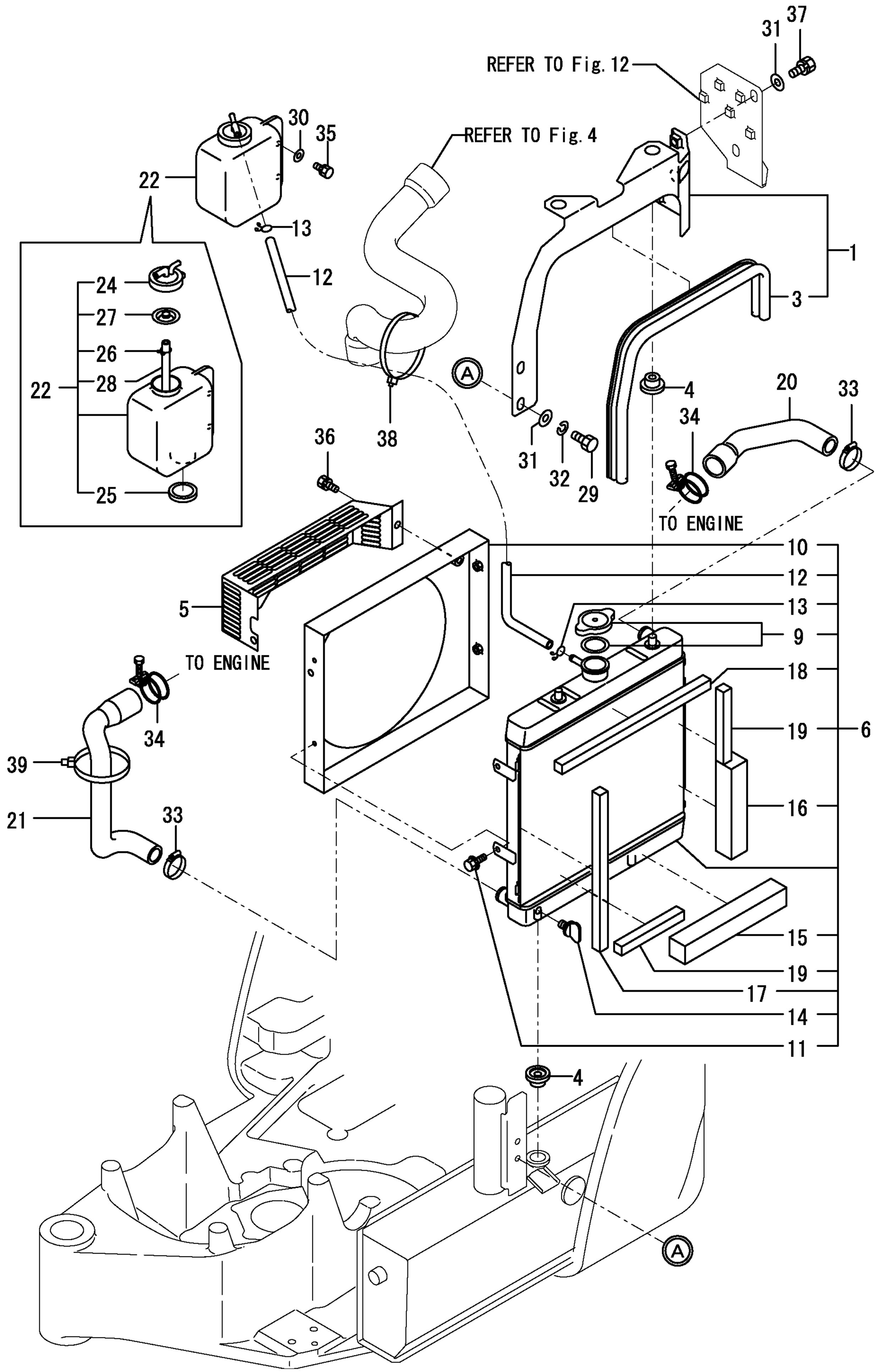

https://truckmanualshub.com/

```
1,1,,172446-14100,,"TANK ASSY,FUEL OIL",1,1,,,,,,,,,,,,,,,,
2,2,,194151-04141,,"STRAINER, FUEL",1,1,,,,,,,,,,,,,,,,
3,2,,194151-04150,,GASKET,1,1,,,,,,,,,,,,,,,,
4,2,,194250-04301,,"CAP, TANK",1,1,,,,,,,,,,,,,,,,
6,3,,194250-04321,,"VALVE, VENT",1,1,,,,,,,,,,,,,,,,
8,2,,172446-14150,,HOSE,1,1,,,,,,,,,,,,,,,,
9,2,,172447-14160,,FLOAT,1,1,,,,,,,,,,,,,,,,
10,2,,172446-14250,,"RUBBER PLATE",1,1,,,,,,,,,,,,,,,,
11,2,,172446-14260,,"RUBBER PLATE",1,1,,,,,,,,,,,,,,,,
12,2,,172447-14300,,"PLUG M12,DRAIN",1,,,,,,,,,,,,,,,,,,
12-1,2,,23491-080002,,"PLUG 8",1,1,,,,,S,,72447138,*2002.04,,,,,,,,,,I
13,2,,23010-014000,,"CLAMP 14",2,2,,,,,,,,,,,,,,,,
14,2,,24311-350220,,"O-RING 1A P-22A",1,,,,,,,,,,,,,,,,,,
14-1,2,,24311-000090,,"O-RING 1A P-9.0",1,1,,,,,S,,72447138,*2002.04,,,,,,,,,,I
15,2,,172447-14310,,"BLOCK,DRAIN",1,1,,,,,W,,72447138,*2002.04,,,,,,,,,,I
16,2,,24311-000160,,"O-RING 1A P-16.0",1,1,,,,,W,,72447138,*2002.04,,,,,,,,,,I
17,2,,26450-060102,,"BOLT M 6X 10",2,2,,,,,W,,72447138,*2002.04,,,,,,,,,,I
18,1,,172446-14200,,CLMP,1,1,,,,,,,,,,,,,,,,
20,2,,172447-14240,,"RUBBER,FUEL CLAMP",1,1,,,,,,,,,,,,,,,,
21,1,,26367-100002,,"NUT 10",2,2,,,,,,,,,,,,,,,,
```

https://truckmanualshub.com/

1 INC. 2~17.

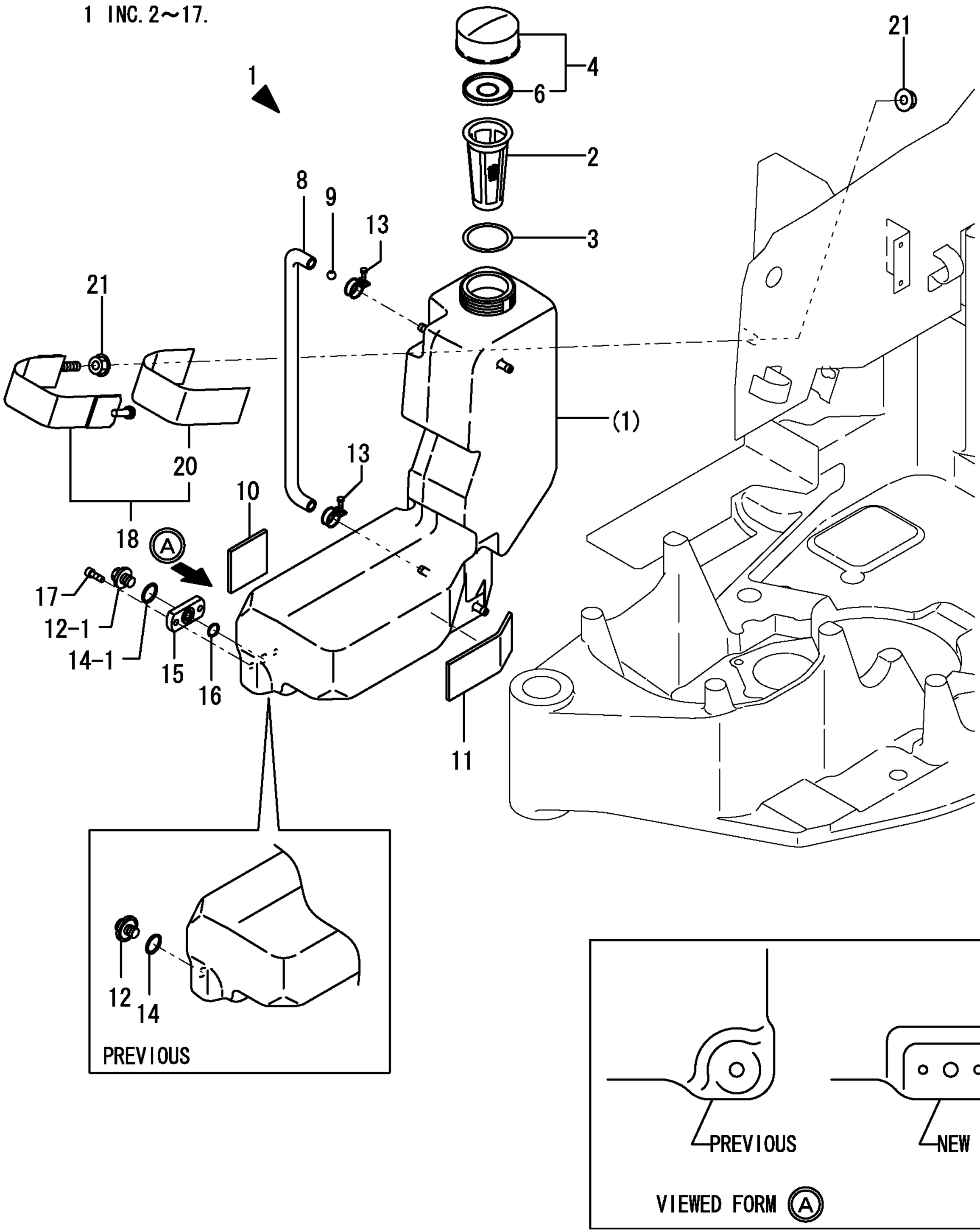

https://truckmanualshub.com/

```
1,1,,198072-04320,,CLAMP,1,1,,,,,,,,,,,,,,,,,
2,1,,172446-14160,,"HOSE, FUEL",1,1,,,,,,,,,,,,,,,,,,
3,1,,172446-14160,,"HOSE, FUEL",1,1,,,,,,,,,,,,,,,,,,
4,1,,172171-14300,,W-CLAMP,2,2,,,,,,,,,,,,,,,,,,,
5,1,,172183-14640,,HOSE,1,1,,,,,,,,,,,,,,,,,,,
6,1,,1A1380-55310,,"CLAMP, WIRE",1,1,,,,,,,,,,,,,,,,,,,
7,1,,129052-55630,,"STRAINER,FUEL OIL(IN",1,1,,,,,,,,,,,,,,,,,,,,
8,1,,124766-59050,,"CLAMP 12",6,6,,,,,,,,,,,,,,,,,,,
9,1,,172122-79930,,"CLAMP B",1,1,,,,,,,,,,,,,,,,,,,
10,1,,22217-080000,,"SPRING WASHER  8",1,1,,,,,,,,,,,,,,,,,,,
11,1,,26116-080122,,"BOLT M 8X 12 PLATED",1,1,,,,,,,,,,,,,,,,,,,
```

https://truckmanualshub.com/

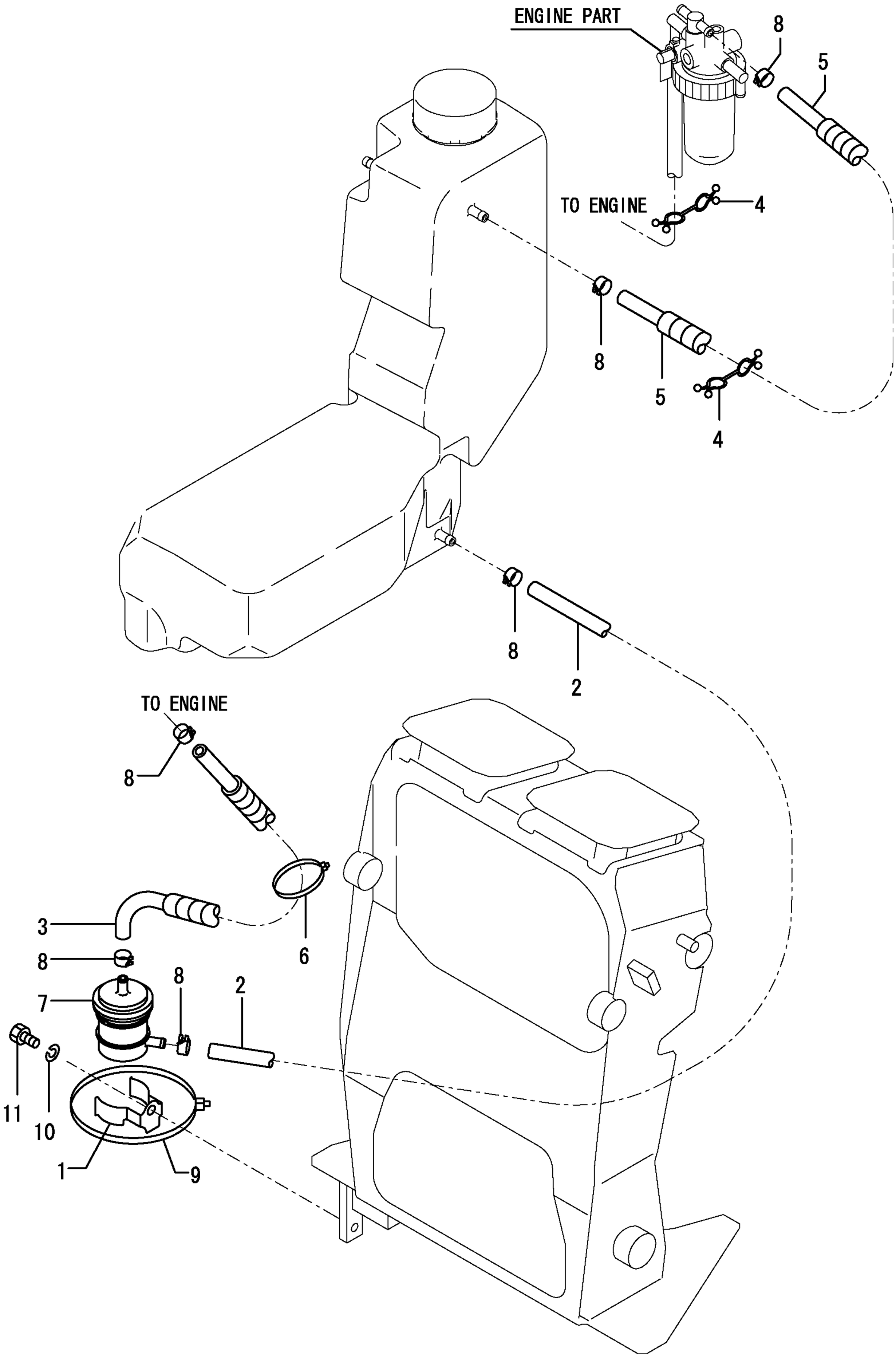

https://truckmanualshub.com/

```
1,1,,172446-16100,,BATTERY,1,1,,,,,,,,,,,,,,,,
2,1,,172446-16110,,"CORD,BATTERY PLUS",1,1,,,,,,,,,,,,,,,,
3,1,,172446-16120,,"CORD,BATTERY",1,1,,,,,,,,,,,,,,,,
4,1,,172112-16650,,CLAMP(B),1,1,,,,,,,,,,,,,,,,
5,1,,22137-080000,,"WASHER 8, POLISHED",1,1,,,,,,,,,,,,,,,,
6,1,,22217-080000,,"SPRING WASHER  8",1,1,,,,,,,,,,,,,,,,
7,1,,26116-080162,,"BOLT 8X16",1,1,,,,,,,,,,,,,,,,
8,1,,26716-080002,,"NUT M 8",1,1,,,,,,,,,,,,,,,,
9,1,,172446-16300,,"MOUNT,BATTERY",1,1,,,,,,,,,,,,,,,,
10,1,,172446-16320,,"CLAMP,BATTERY   (72)",1,1,,,,,,,,,,,,,,,,
11,1,,172164-16370,,ROD,1,1,,,,,,,,,,,,,,,,
12,1,,22137-080000,,"WASHER 8, POLISHED",1,1,,,,,,,,,,,,,,,,
13,1,,26013-080162,,"BOLT W/WASHER M8X16",2,2,,,,,,,,,,,,,,,,
14,1,,26716-080002,,"NUT M 8",2,2,,,,,,,,,,,,,,,,
```

https://truckmanualshub.com/

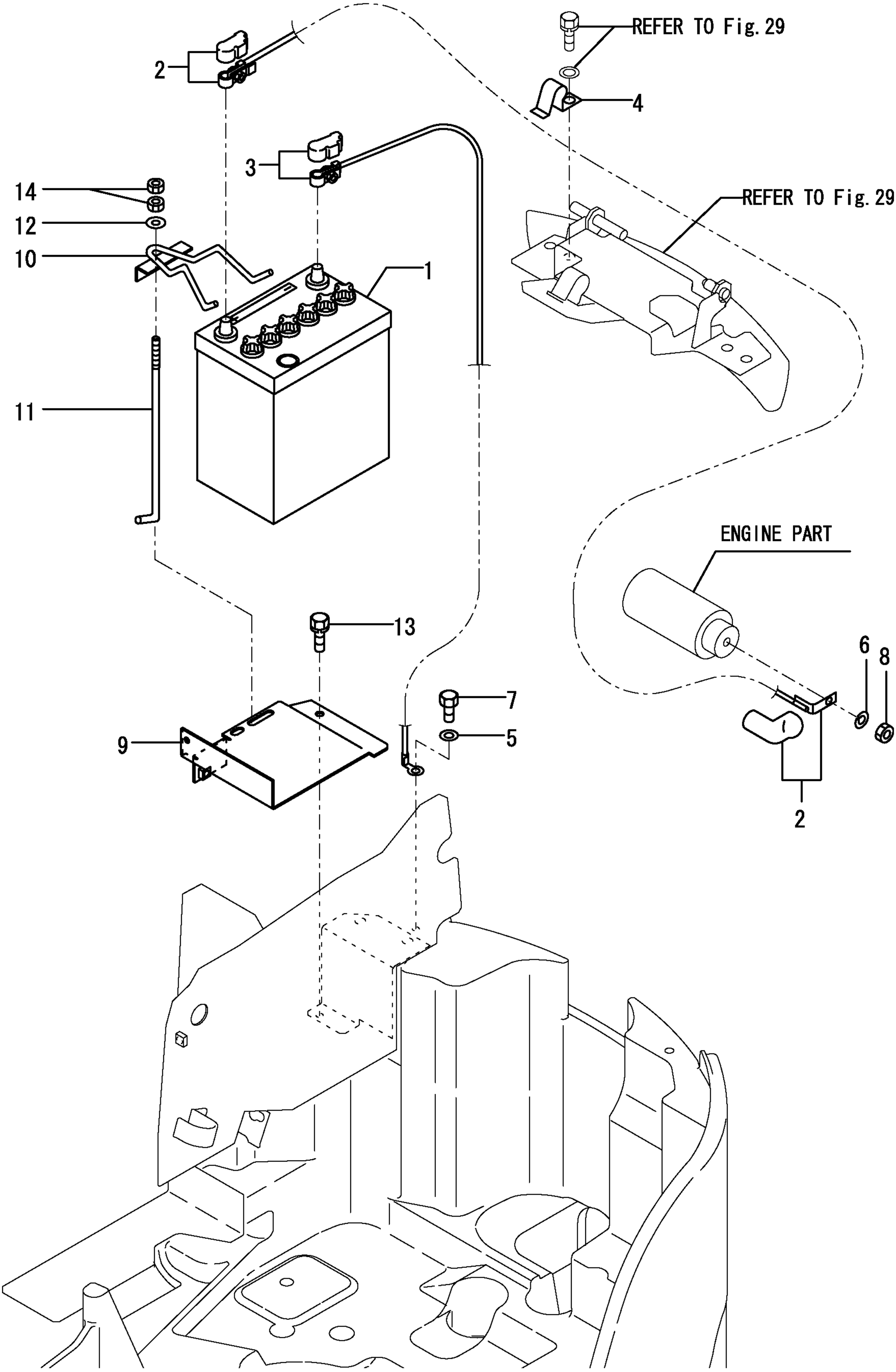

https://truckmanualshub.com/

```
1,1,,172446-16500,,"WIRE,HARNESS(A)",1,,,,,,,,,,,,,,,,,,
1-1,1,,172446-16501,,"HARNESS (A),
WIRE",1,1,,,,,N,,72447139,M/#00969,,,,,,,,,,I
2,2,,172648-16600,,DIODE,1,1,,,,,,,,,,,,,,,,,,
3,1,,172446-16510,,"HARNESS,STAND",1,1,,,,,,,,,,,,,,,,,,
4,1,,172186-16541,,"HARNESS, WORK LAMP",1,1,,,,,,,,,,,,,,,,,,
5,1,,172446-16550,,CLAMP,1,1,,,,,,,,,,,,,,,,,,
6,1,,172137-16560,,BAND,1,1,,,,,,,,,,,,,,,,,,
7,1,,172137-16560,,BAND,1,1,,,,,,,,,,,,,,,,,,
8,1,,172446-16560,,CLAMP,1,1,,,,,,,,,,,,,,,,,,
9,1,,172112-16650,,CLAMP(B),1,1,,,,,,,,,,,,,,,,,,
10,1,,194250-51660,,"BAND  250",1,,,,,,,,,,,,,,,,,,
10-1,1,,172122-79930,,"CLAMP B",1,1,,,,,R,,72445340,M/#00860,,,,,,,,,,I
11,1,,1A1380-55310,,"CLAMP, WIRE",2,2,,,,,,,,,,,,,,,,,,
12,1,,1A1380-55310,,"CLAMP, WIRE",1,1,,,,,,,,,,,,,,,,,,
13,1,,1A1380-55310,,"CLAMP, WIRE",1,1,,,,,,,,,,,,,,,,,,
14,1,,1A1380-55310,,"CLAMP, WIRE",1,1,,,,,,,,,,,,,,,,,,
15,1,,1A1380-59480,,"CLAMP A,SM.&DYN.CORD",1,1,,,,,,,,,,,,,,,,,,
16,1,,194940-61790,,"SCRFW 5X16",1,1,,,,,,,,,,,,,,,,,,
17,1,,172122-79920,,CLAMP,1,1,,,,,,,,,,,,,,,,,,
18,1,,172122-79920,,CLAMP,1,1,,,,,,,,,,,,,,,,,,
19,1,,22137-100000,,"WASHER 10,POLISHED",2,2,,,,,,,,,,,,,,,,,,
20,1,,22217-100000,,"SPRING WASHER 10",2,2,,,,,,,,,,,,,,,,,,
21,1,,22857-400120,,"SCREW 4X12",1,1,,,,,,,,,,,,,,,,,,
22,1,,26013-100162,,"BOLT M10X 16",1,1,,,,,,,,,,,,,,,,,,
23,1,,26116-100162,,"BOLT M10X 16 PLATED",2,2,,,,,,,,,,,,,,,,,,
24,1,,933171-15801,,"WIRE, EARTH",1,1,,,,,,,,,,,,,,,,,,
```

https://truckmanualshub.com/

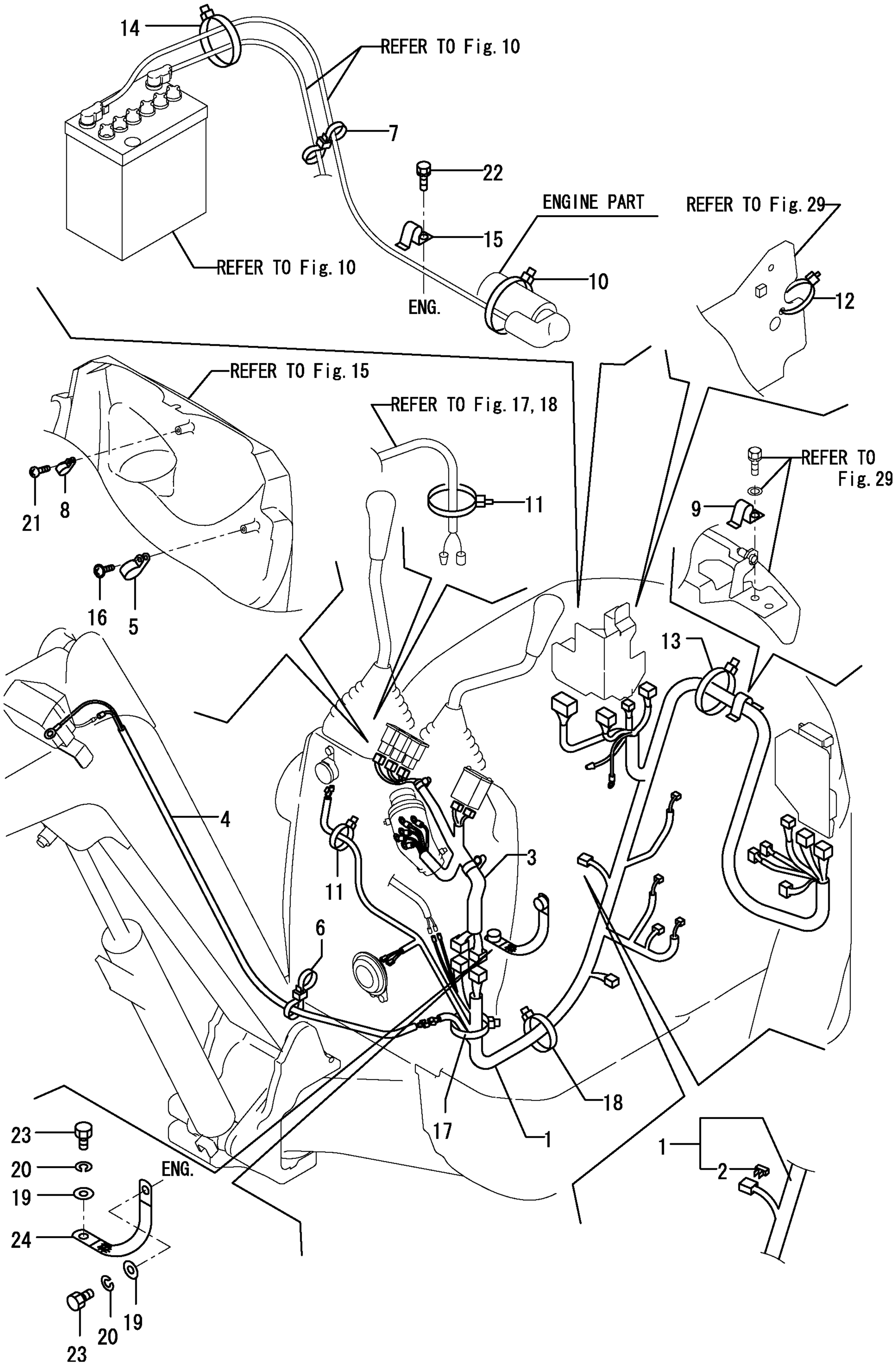

```
1,1,,172183-16550,,"BRACKET,FUSE",1,1,,,,,,,,,,,,,,,
2,1,,172524-17010,,"SWITCH ASSY, STARTER",1,1,,,,,,,,,,,,,,,
3,2,,172524-17330,,"KEY ASSY",1,1,,,,,,,,,,,,,,,
5,1,,172186-17100,,"METER, HOUR",1,1,,,,,,,,,,,,,,,
6,1,,172446-17111,,COVER,1,1,,,,,,,,,,,,,,,
7,1,,172447-17110,,"FUSE CMP,4P",1,1,,,,,,,,,,,,,,,
9,2,,172183-16590,,COVER,1,1,,,,,,,,,,,,,,,
10,2,,29420-100000,,HUSE,3,3,,,,,,,,,,,,,,,
11,1,,172149-17120,,LAMP,1,1,,,,,,,,,,,,,,,
12,2,,172149-17140,,BULB(12V-3.4W,1,1,,,,,,,,,,,,,,,
13,1,,172447-17120,,"FUSE 40A",1,1,,,,,,,,,,,,,,,
16,2,,172447-17150,,"FUSE 40A",1,1,,,,,,,,,,,,,,,
17,1,,172149-17130,,LAMP,1,1,,,,,,,,,,,,,,,
18,2,,172149-17140,,BULB(12V-3.4W,1,1,,,,,,,,,,,,,,,
19,1,,172141-17150,,BUZZER,1,1,,,,,,,,,,,,,,,
20,1,,172446-17150,,"BRACKET A,ELE",1,1,,,,,,,,,,,,,,,
21,1,,172446-17180,,"BRACKET B,ELE",1,1,,,,,,,,,,,,,,,
22,1,,172156-17401,,"LAMP, WORK",1,1,,,,,,,,,,,,,,,
23,2,,172156-17420,,"VALVE,12V27W",1,1,,,,,,,,,,,,,,,
24,1,,172186-17430-1,,"STAY,LAMP(YELLOW:87)",1,,,,,,,,,,,,,,,,,
24-1,1,,172156-17430-
1,,"STAY,LAMP(YELLOW:87)",1,1,,,,,N,,724980013,M/#01870,,,,,,,,,,I
25,1,,194151-57100,,HORN,1,1,,,,,,,,,,,,,,,
26,1,,119247-77100,,"RELAY, SAFETY",1,1,,,,,,,,,,,,,,,
27,1,,119230-77711,,"LIMITTER, CURRENT",1,1,,,,,,,,,,,,,,,
28,1,,129155-77810,,RESISTOR,1,1,,,,,,,,,,,,,,,
29,1,,119650-77910,,"RELAY, GROW",1,1,,,,,,,,,,,,,,,
30,1,,119632-77922,,TIMER,1,,,,,,,,,,,,,,,,,
30-1,1,,129211-77920,,TIMER,1,1,,,,,R,,72444407,M/#01331,,,,,,,,,,I
31,1,,172122-79930,,"CLAMP B",2,2,,,,,,,,,,,,,,,
32,1,,22137-060000,,"WASHER 6, POLISHED",2,2,,,,,,,,,,,,,,,
33,1,,22137-060000,,"WASHER 6, POLISHED",2,2,,,,,,,,,,,,,,,
34,1,,22137-060000,,"WASHER 6, POLISHED",2,2,,,,,,,,,,,,,,,
35,1,,22217-080000,,"SPRING WASHER  8",1,1,,,,,,,,,,,,,,,
36,1,,22217-080000,,"SPRING WASHER  8",2,2,,,,,,,,,,,,,,,
37,1,,22217-100000,,"SPRING WASHER 10",1,1,,,,,,,,,,,,,,,
38,1,,22217-100000,,"SPRING WASHER 10",2,2,,,,,,,,,,,,,,,
39,1,,26016-060122,,"BOLT M 6X 12",1,,,,,,,,,,,,,,,,,
39-1,1,,26013-060122,,"BOLT M 6X 12",1,1,,,,R,,A6400023,M/#00693,,,,,,,,,,I
40,1,,26016-060122,,"BOLT M 6X 12",1,,,,,,,,,,,,,,,,,
40-1,1,,26013-060122,,"BOLT M 6X 12",1,1,,,,R,,A6400023,M/#00693,,,,,,,,,,I
41,1,,26016-060122,,"BOLT M 6X 12",2,,,,,,,,,,,,,,,,,
41-1,1,,26013-060122,,"BOLT M 6X 12",2,2,,,,R,,A6400023,M/#00693,,,,,,,,,,I
42,1,,26016-060122,,"BOLT M 6X 12",2,,,,,,,,,,,,,,,,,
42-1,1,,26013-060122,,"BOLT M 6X 12",2,2,,,,R,,A6400023,M/#00693,,,,,,,,,,I
43,1,,26016-060122,,"BOLT M 6X 12",2,,,,,,,,,,,,,,,,,
43-1,1,,26013-060122,,"BOLT M 6X 12",2,2,,,,R,,A6400023,M/#00693,,,,,,,,,,I
44,1,,26018-060122,,"BOLT M 6X 12",1,,,,,,,,,,,,,,,,,
44-1,1,,26014-060122,,"BOLT M 6X 12",1,1,,,,R,,A6400023,M/#00693,,,,,,,,,,I
45,1,,26018-060162,,"BOLT M6X16",1,,,,,,,,,,,,,,,,,
45-1,1,,26014-060162,,"BOLT M 6X 16",1,1,,,,R,,A6400023,M/#00693,,,,,,,,,,I
46,1,,26051-060002,,"NUT M 6",2,2,,,,,,,,,,,,,,,
47,1,,26116-060162,,"BOLT 6X16",2,2,,,,,,,,,,,,,,,
48,1,,26116-080162,,"BOLT 8X16",1,1,,,,,,,,,,,,,,,
49,1,,26116-080162,,"BOLT 8X16",2,2,,,,,,,,,,,,,,,
50,1,,26116-100202,,"BOLT M10X 20 PLATED",1,1,,,,,,,,,,,,,,,
51,1,,26116-100202,,"BOLT M10X 20 PLATED",2,2,,,,,,,,,,,,,,,
52,1,,26716-080002,,"NUT M 8",1,1,,,,,,,,,,,,,,,
53,1,,933113-05190,,"LAMP, OIL",1,1,,,,,,,,,,,,,,,
54,2,,933113-05180,,"BULB 12V 3W",1,1,,,,,,,,,,,,,,,
55,1,,933113-15900,,"COVER, SWITCH TERMI.",1,1,,,,,,,,,,,,,,,
```

https://truckmanualshub.com/

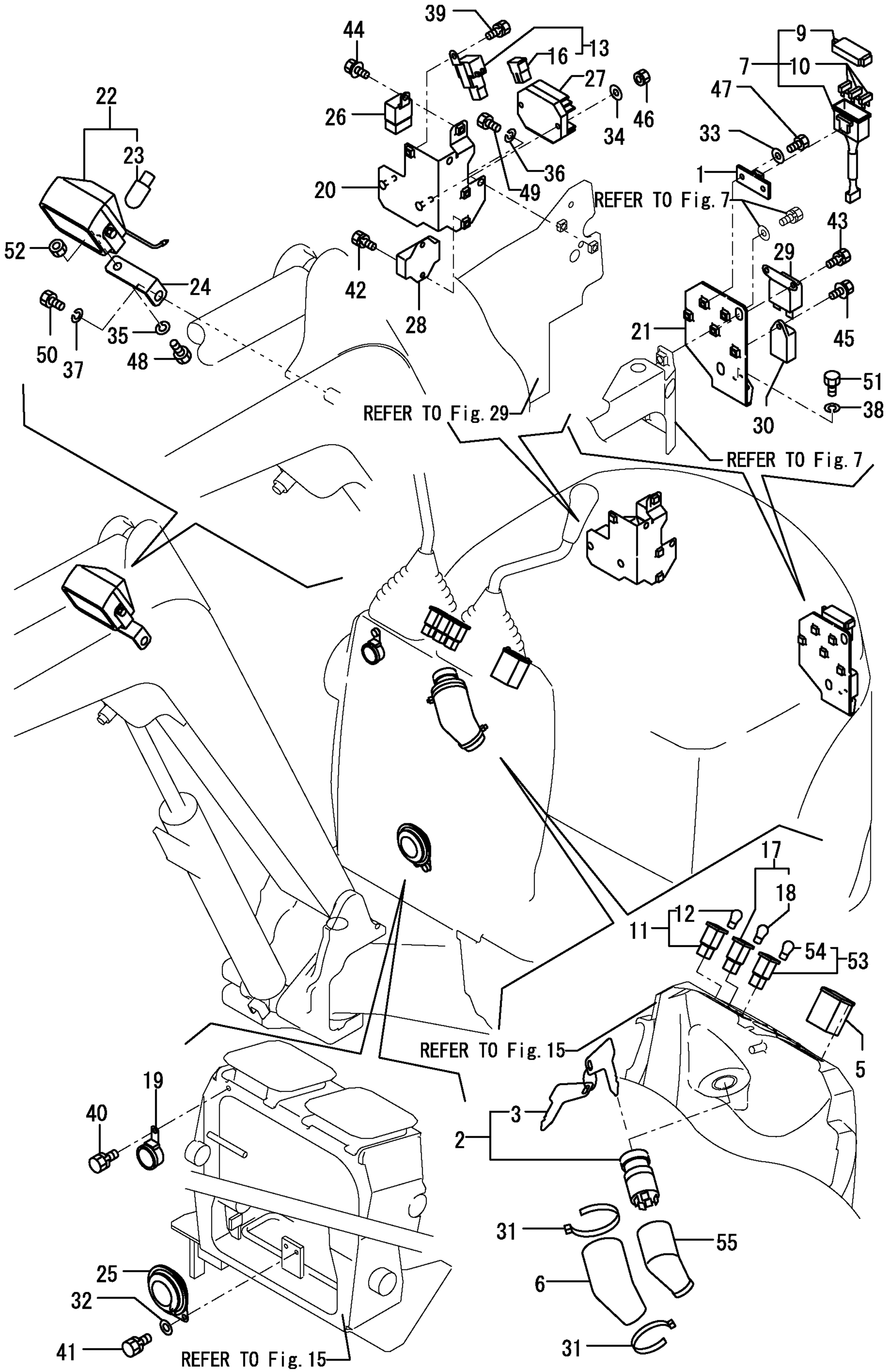

https://truckmanualshub.com/

```
1,1,,172446-29100,,SPROCKET(GREEN:88),2,,,,,,,,,,,,,,,,,,
1-1,1,,172446-29101,,"SPROCKET
(GREEN:88)",2,2,,,,,N,,72446128,M/#01095,,,,,,,,,,I
2,1,,26450-100252,,"BOLT M10X 25",18,18,,,,,,,,,,,,,,,,,,
3,1,,772446-37300,,"TRACK ROLLER(GREEN88",4,4,,,,,,,,,,,,,,,,,,
5,2,,172155-37310,,"SHAFT, ROLLER",4,4,,,,,,,,,,,,,,,,,,
6,2,,172137-37360,,SEAL,8,8,,,,,,,,,,,,,,,,,,
7,2,,22242-000250,,"CIRCLIP 25S",8,8,,,,,,,,,,,,,,,,,,
8,2,,22252-000470,,"CIRCLIP 47(H)",8,8,,,,,,,,,,,,,,,,,,
9,2,,24101-060054,,"BALL BEARING 6005",8,8,,,,,,,,,,,,,,,,,,
10,2,,26013-120252,,"BOLT M12X 25",8,8,,,,,,,,,,,,,,,,,,
11,2,,933152-03700,,"WASHER, SIDE CLUTCH",8,8,,,,,,,,,,,,,,,,,,
```

https://truckmanualshub.com/

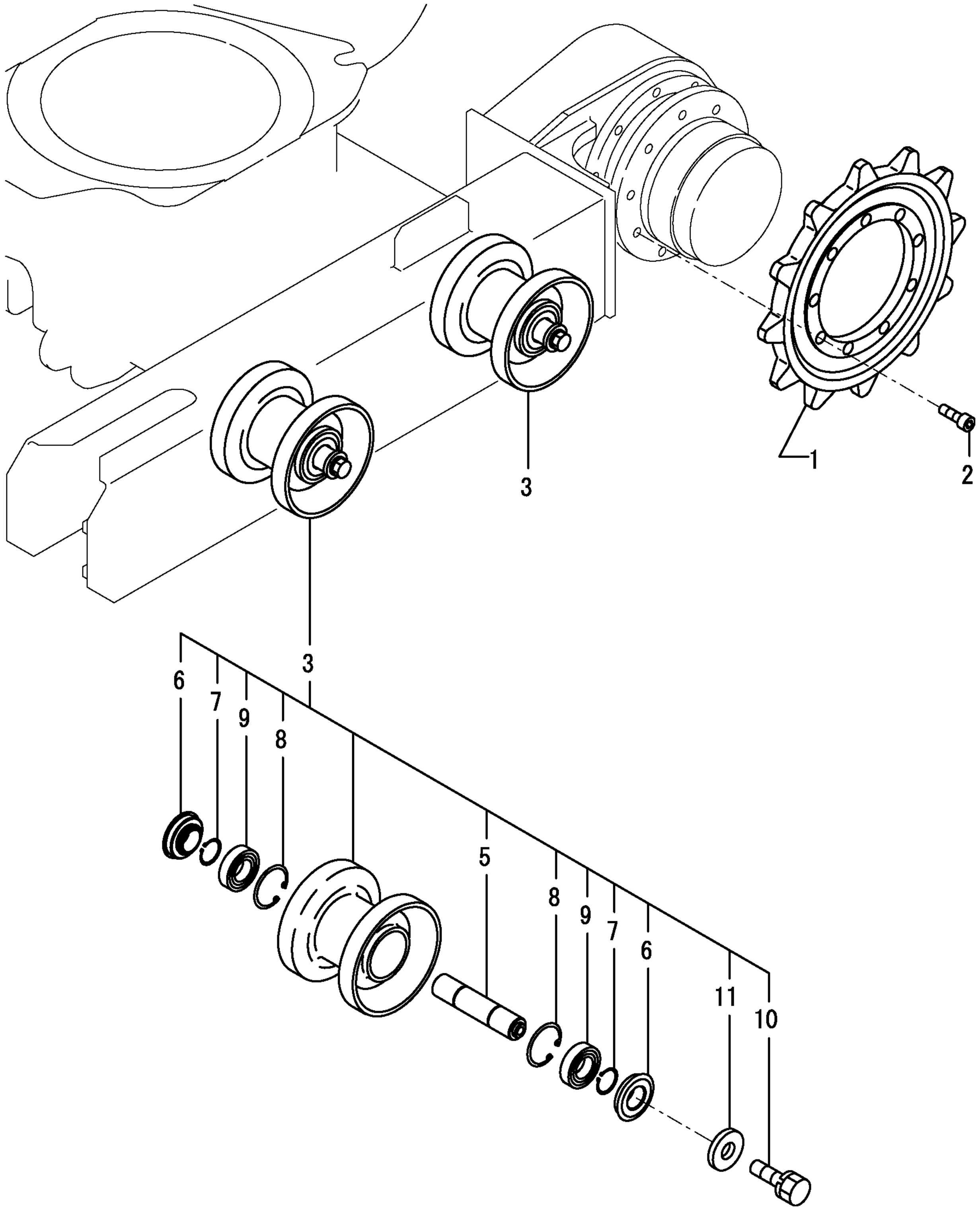

https://truckmanualshub.com/

```
1,1,,772446-37100,,"IDLER,250 (GREEN:88)",2,2,,,,,,,,,,,,,,,,,
3,2,,172449-37110,,SHAFT,2,2,,,,,,,,,,,,,,,,,
4,2,,1A1060-48300,,"SEAL QLN306213.2,OIL",4,4,,,,,,,,,,,,,,,,,
5,2,,22217-120000,,"SPRING WASHER 12",4,4,,,,,,,,,,,,,,,,,
6,2,,22242-000300,,"CIRCLIP   30",2,2,,,,,,,,,,,,,,,,,
7,2,,22252-000620,,"CIRCLIP 62(H)",4,4,,,,,,,,,,,,,,,,,
8,2,,24101-062064,,"BALL BEARING 6206",4,4,,,,,,,,,,,,,,,,,
9,2,,26116-120252,,"BOLT M12X 25 PLATED",4,4,,,,,,,,,,,,,,,,,
10,2,,933152-03700,,"WASHER, SIDE CLUTCH",4,4,,,,,,,,,,,,,,,,,
11,1,,172446-37110,,SLIDER,2,2,,,,,,,,,,,,,,,,,
12,1,,172446-37710,,"BOLT,ADJUST",2,2,,,,,,,,,,,,,,,,,
13,1,,172446-37720,,"COVER     (GREEN:88)",2,2,,,,,,,,,,,,,,,,,
14,1,,26013-080162,,"BOLT W/WASHER M8X16",4,4,,,,,,,,,,,,,,,,,
15,1,,26716-200002,,"NUT M20",2,2,,,,,,,,,,,,,,,,,
16,1,,172446-38600,,"CRAWLER, RUBBER",2,2,,,,,,,,,,,,,,,,,
```

https://truckmanualshub.com/

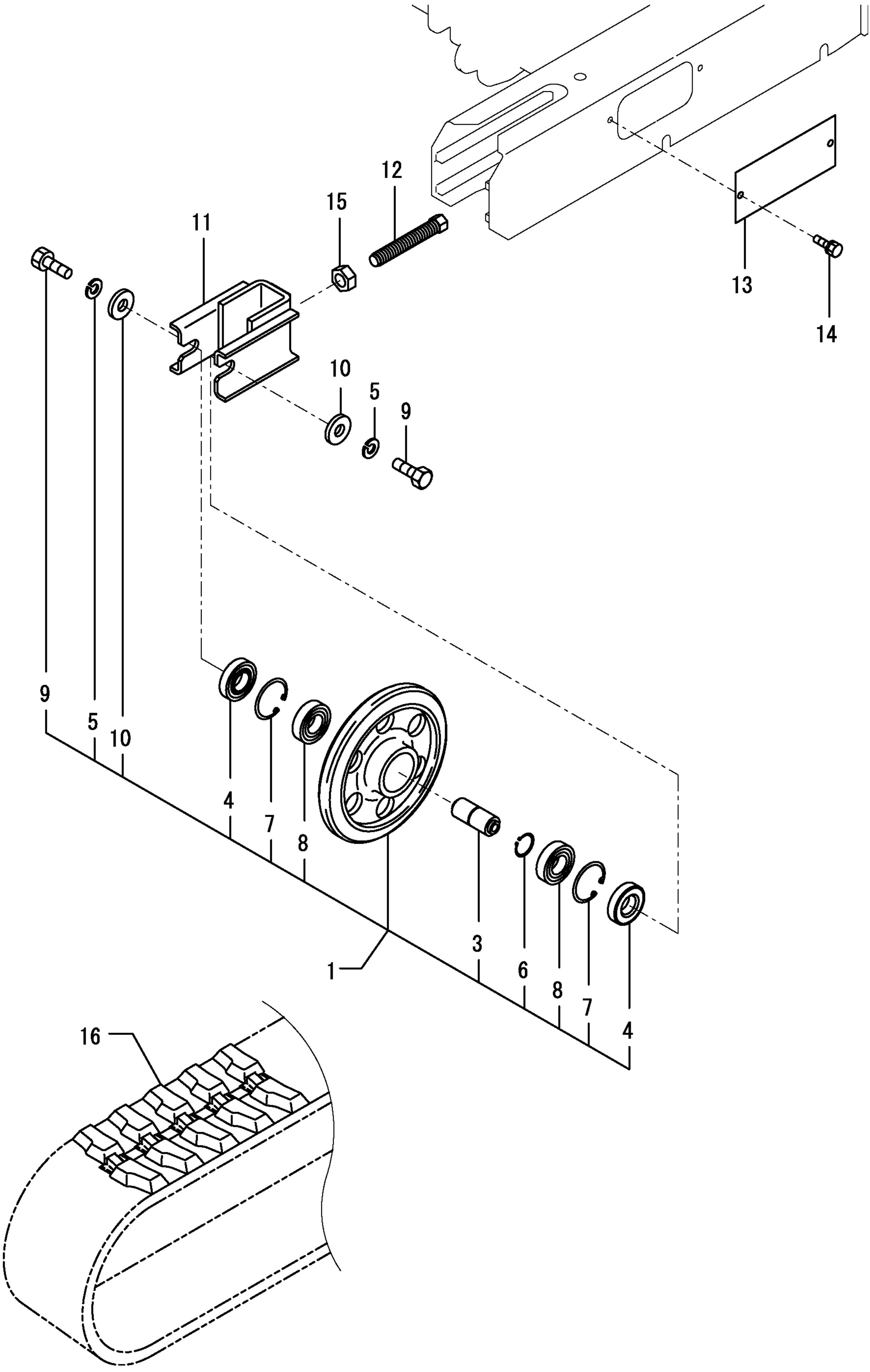

https://truckmanualshub.com/

```
1,1,,1A6260-27270,,"GROMMET 35",1,1,,,,,,,,,,,,,,,,
2,1,,172446-45400,,"SUPPORT ASSY",1,1,,,,,,,,,,,,,,,,
3,2,,172141-41360,,"BUSH 1415",2,2,,,,,,,,,,,,,,,,
4,2,,172141-41370,,"BUSH 2015",2,2,,,,,,,,,,,,,,,,
5,2,,172141-41370,,"BUSH 2015",4,4,,,,,,,,,,,,,,,,
7,2,,172446-49280,,SEAL,2,2,,,,,,,,,,,,,,,,
8,1,,172446-49100,,"COVER F,STAND",1,1,,,,,,,,,,,,,,,,
11,1,,172446-49180,,GROMMET,2,2,,,,,,,,,,,,,,,,
12,1,,172446-49200,,"BAR        (GRAY:72)",1,1,,,,,,,,,,,,,,,,
13,1,,172446-49250,,"COVER R,STAND",1,1,,,,,,1,,,,,,,,,,
18,1,,172446-49350,,"WASHER 6.3X15X1",10,10,,,,,,,,,,,,,,,,
19,1,,172151-53430,,GROMMET,1,,,,,,,,,,,,,,,,
19-1,1,,172456-53700,,"GROMMET 30",1,1,,,,,N,,72456276,M/#01324,,,,,,,,,,I
20,1,,24761-050000,,"NIPPLE C,GREASE",2,2,,,,,,,,,,,,,,,,
21,1,,26013-100202,,"BOLT W/WASHER M10X20",4,4,,,,,,,,,,,,,,,,
22,1,,26013-100202,,"BOLT W/WASHER M10X20",4,4,,,,,,,,,,,,,,,,
23,1,,26589-060162,,"SCREW M6,BINDING",10,10,,,,,,,,,,,,,,,,
24A,1,,172446-03760,,"LABEL,MANUAL",1,1,,,,,2,,,,,,,,,,
24B,1,,172437-03310,,"LABEL,SLOPE",1,1,,,,,2,,,,,,,,,,
24C,1,,172437-03340,,"LABEL,TRANSPORT",1,1,,,,,2,,,,,,,,,,
24D,1,,172433-03250,,LABEL,1,1,,,,,2,,,,,,,,,,
24E,1,,172433-03270,,LABEL,1,1,,,,,2,,,,,,,,,,
24F,1,,172437-03431,,"LABEL,STEERING",1,1,,,,,2,,,,,,,,,,
```

https://truckmanualshub.com/

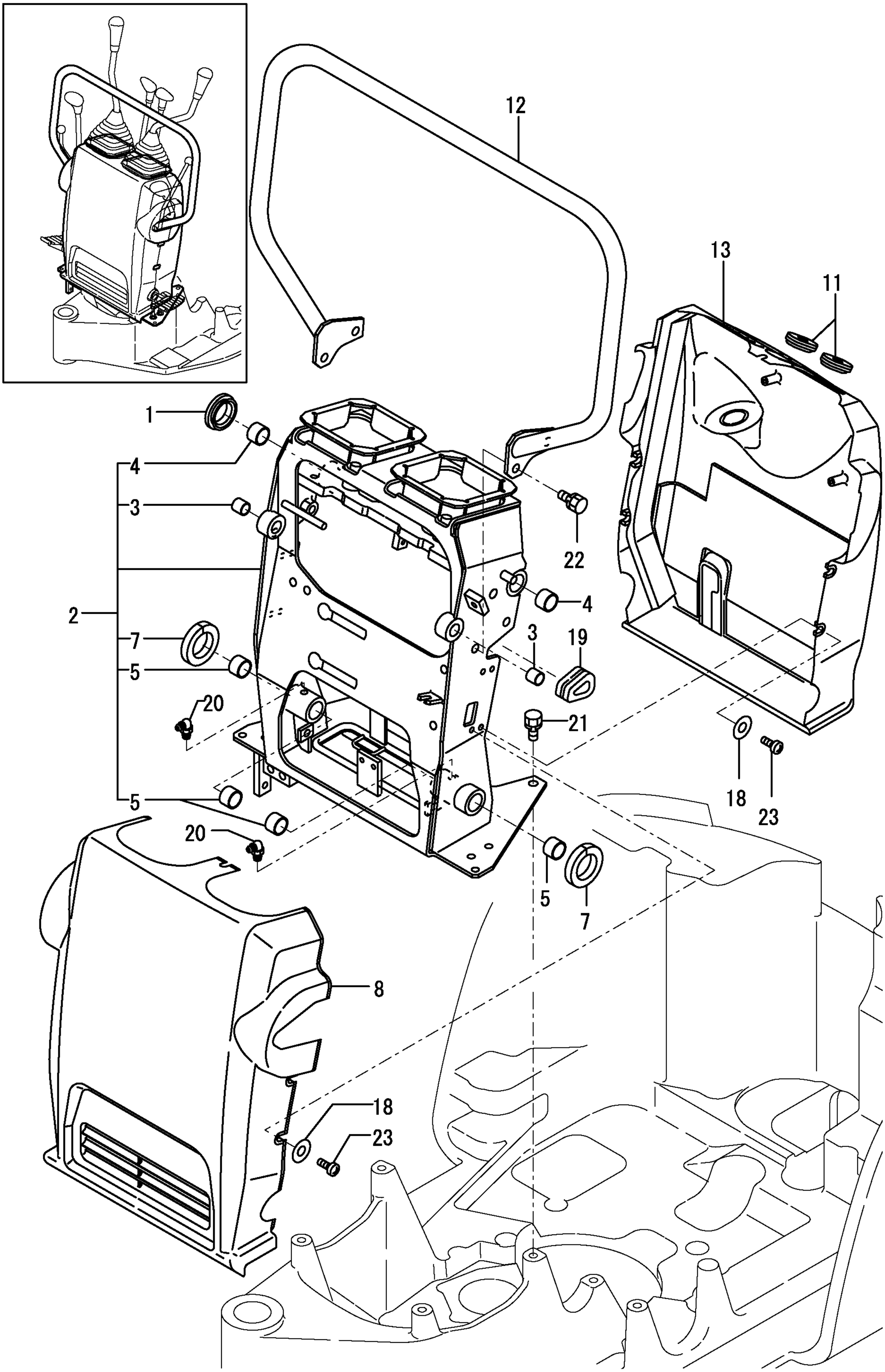

https://truckmanualshub.com/

```
1,1,,172447-45230,,"KNOB,LOCK LEVER",1,1,,,,,,,,,,,,,,,,
2,1,,172446-45250,,"LEBER,LOCK  (RED:11)",1,1,,,,,,,,,,,,,,,,,,
3,1,,172446-45290,,"LINK,LOCK",1,1,,,,,,,,,,,,,,,,
4,1,,172446-45320,,"PIRE,LOCK",2,2,,,,,,,,,,,,,,,,
5,1,,172446-45340,,"LINK,LOCK",4,4,,,,,,,,,,,,,,,,
6,1,,172165-45970,,SPRING,1,1,,,,,,,,,,,,,,,,
7,1,,1C6281-52310,,"PIN 6,COME-OFF SNAP",4,4,,,,,,,,,,,,,,,,,
8,1,,22351-030025,,"SPRING PIN 3X25",1,1,,,,,,,,,,,,,,,,
9,1,,22351-050025,,"SPRING PIN 5X25",1,1,,,,,,,,,,,,,,,,
10,1,,933110-54100,,"PIN 4.75X14",4,4,,,,,,,,,,,,,,,,
```

https://truckmanualshub.com/

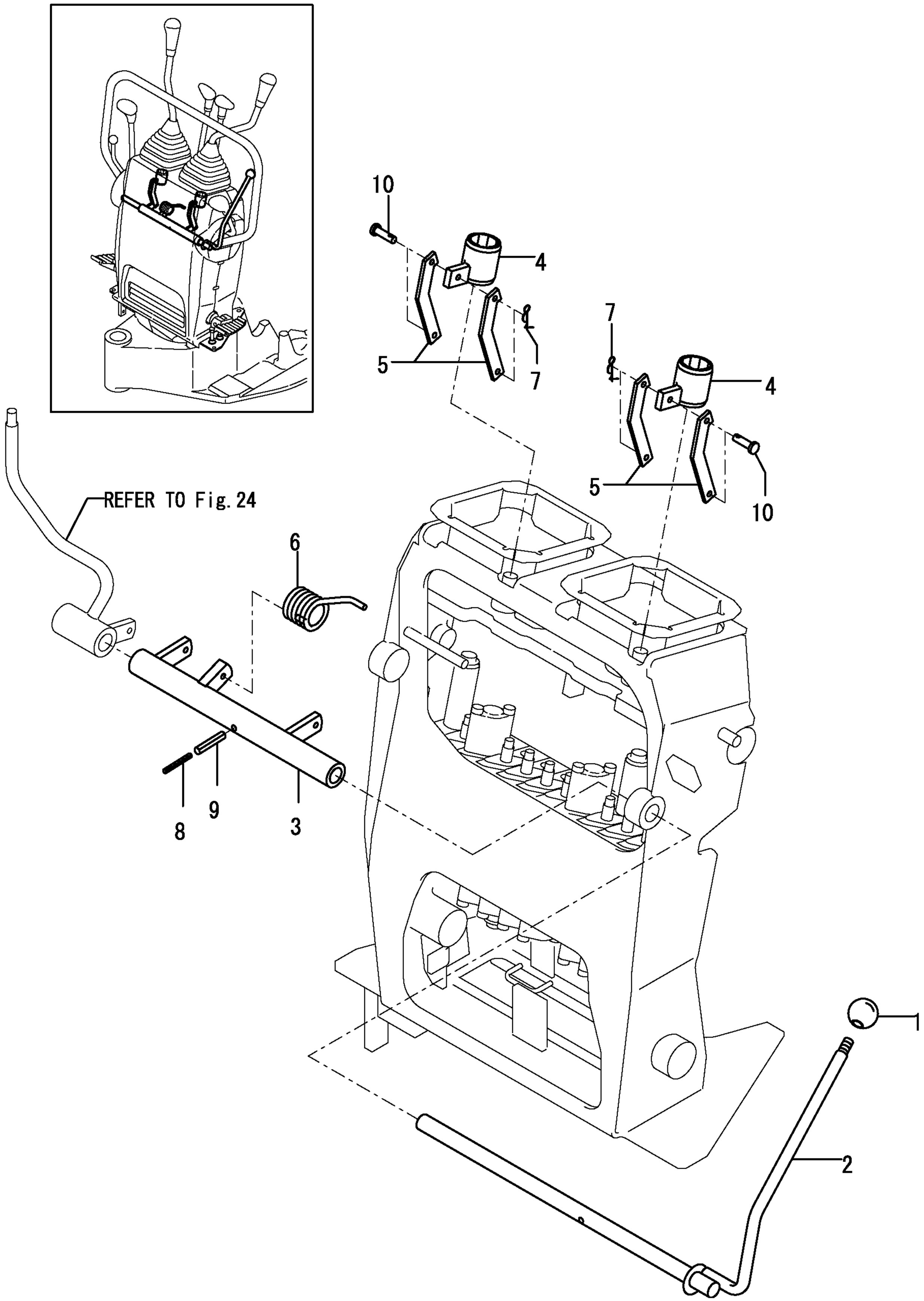

https://truckmanualshub.com/

```
1,1,,172141-42750,,"BOLT, STOPPER",4,4,,,,,,,,,,,,,,,,
2,1,,172151-45010,,"BOOT P,LEVER",1,1,,,,,,,,,,,,,,,,
3,1,,172165-45081,,"KNOB R COMPL.",1,,,,,,,,,,,,,,,,,,
3-1,1,,172165-47871,,"KNOB (A) ASSY",1,1,,,,Q,,72480060,M/#01243,,,,,,,,,,I
4,1,,172446-45170,,"LEBER R    (GRAY:72)",1,1,,,,,,,,,,,,,,,,
5,1,,172446-45800,,"JOINT NC-12",1,1,,,,,,,,,,,,,,,,
6,1,,172446-45850,,BACE,1,1,,,,,,,,,,,,,,,,
7,1,,172446-45890,,ARM,1,1,,,,,,,,,,,,,,,,
8,1,,172446-45900,,"WASHER,THRUST",2,2,,,,,,,,,,,,,,,,
9,1,,172183-46430,,SPRING,1,1,,,,,,,,,,,,,,,,
10,1,,22137-200000,,"WASHER 20,POLISHED",1,1,,,,,,,,,,,,,,,,
11,1,,22157-100000,,"WASHER 10",1,1,,,,,,,,,,,,,,,,
12,1,,26013-080202,,"BOLT W/WASHER M8X20",2,2,,,,,,,,,,,,,,,,
13,1,,26013-100202,,"BOLT W/WASHER M10X20",1,1,,,,,,,,,,,,,,,,
14,1,,26587-040062,,"SCREW M 4X  6",1,1,,,,,,,,,,,,,,,,
15,1,,26756-080002,,"LOCK NUT M 8 PLATED",4,4,,,,,,,,,,,,,,,,
16,1,,172157-45630,,"BALL 6, LINK",2,2,,,,,,,,,,,,,,,,
17,1,,172446-45750,,"ROD 110",2,2,,,,,,,,,,,,,,,,
18,1,,172122-46590,,"ELBALL 8",2,2,,,,,,,,,,,,,,,,
19,1,,22117-060000,,"WASHER  6",2,2,,,,,,,,,,,,,,,,
20,1,,22117-080000,,"WASHER  8",2,2,,,,,,,,,,,,,,,,
21,1,,26051-060002,,"NUT M 6",2,2,,,,,,,,,,,,,,,,
22,1,,26051-080002,,"NUT M 8",2,2,,,,,,,,,,,,,,,,
23,1,,26051-080002,,"NUT M 8",2,2,,,,,,,,,,,,,,,,
```

https://truckmanualshub.com/

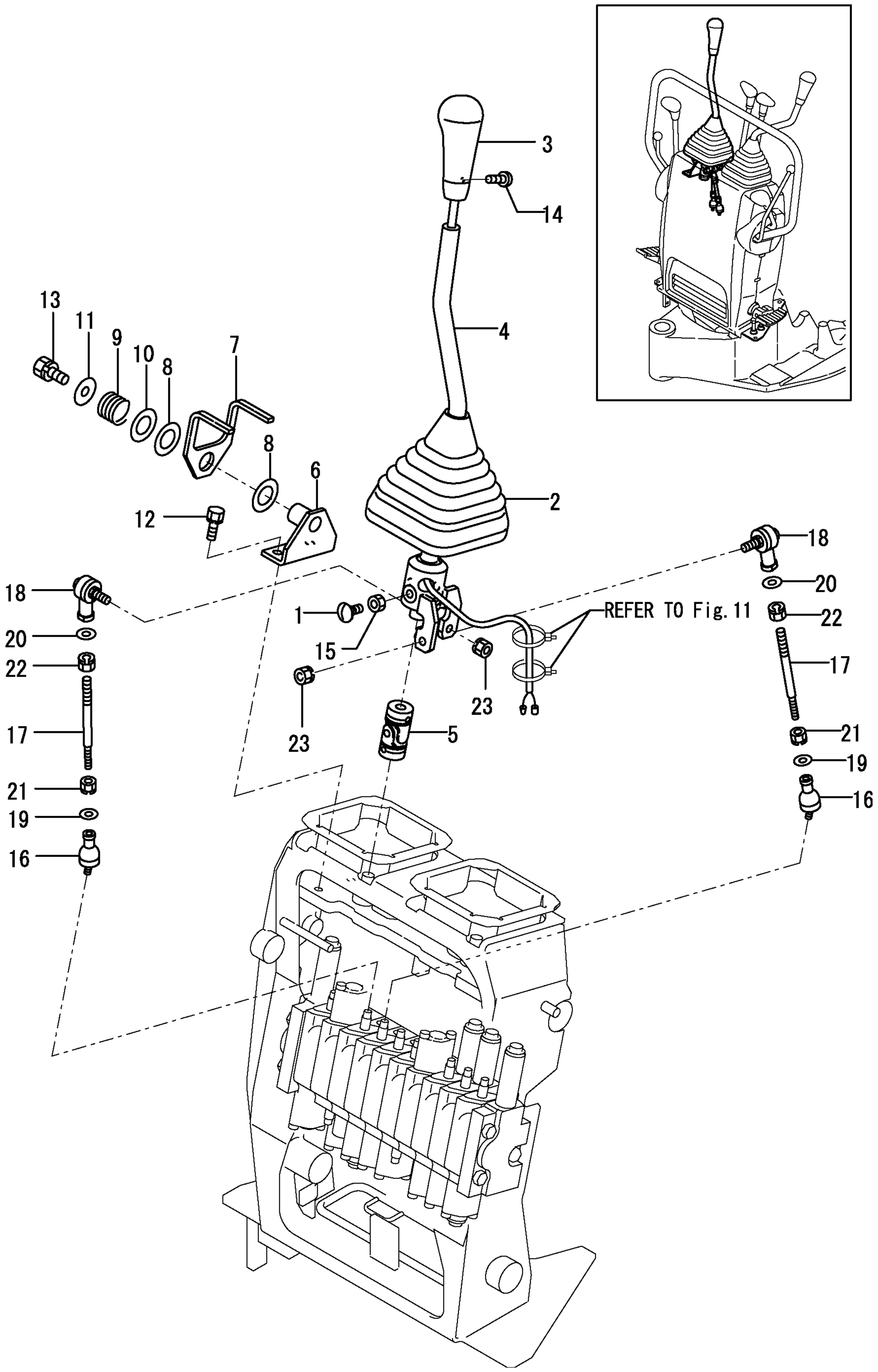

https://truckmanualshub.com/

```
1,1,,172141-42750,,"BOLT, STOPPER",4,,,,,,,,,,,,,,,,,,,,I
2,1,,172151-45010,,"BOOT P,LEVER",1,,,,,,,,,,,,,,,,,,,,I
3,1,,172446-45170,,"LEBER R    (GRAY:72)",1,,,,,,,,,,,,,,,,,,,,I
4,1,,172446-45800,,"JOINT NC-12",1,,,,,,,,,,,,,,,,,,,,I
5,1,,172446-45850,,BACE,1,,,,,,,,,,,,,,,,,,,,I
6,1,,172446-45890,,ARM,1,,,,,,,,,,,,,,,,,,,,I
7,1,,172446-45900,,"WASHER,THRUST",2,,,,,,,,,,,,,,,,,,,,I
8,1,,172183-46430,,SPRING,1,,,,,,,,,,,,,,,,,,,,I
9,1,,172165-47871,,"KNOB (A) ASSY",1,,,,,,,,,,,,,,,,,,,,I
10,1,,22137-200000,,"WASHER 20,POLISHED",1,,,,,,,,,,,,,,,,,,,,I
11,1,,22157-100000,,"WASHER 10",1,,,,,,,,,,,,,,,,,,,,I
12,1,,26013-080202,,"BOLT W/WASHER M8X20",2,,,,,,,,,,,,,,,,,,,,I
13,1,,26013-100202,,"BOLT W/WASHER M10X20",1,,,,,,,,,,,,,,,,,,,,I
14,1,,26587-040062,,"SCREW M 4X  6",1,,,,,,,,,,,,,,,,,,,,I
15,1,,26756-080002,,"LOCK NUT M 8 PLATED",4,,,,,,,,,,,,,,,,,,,,I
16,1,,172446-46100,,"BRACKET ASSY",1,,,,,,,,,,,,,,,,,,,,I
17,1,,172446-46130,,"SHAFT ASSY",1,,,,,,,,,,,,,,,,,,,,I
18,1,,172446-46160,,"LINK A ASSY",1,,,,,,,,,,,,,,,,,,,,I
19,2,,172141-41360,,"BUSH 1415",2,,,,,,,,,,,,,,,,,,,,I
21,1,,172446-46180,,"LINK B ASSY",1,,,,,,,,,,,,,,,,,,,,I
22,2,,172141-41360,,"BUSH 1415",2,,,,,,,,,,,,,,,,,,,,I
24,1,,24311-000210,,"O-RING 1A P-21.0",3,,,,,,,,,,,,,,,,,,,,I
25,1,,24761-020000,,"NIPPLE PT1/8,GREASE",2,,,,,,,,,,,,,,,,,,,,I
26,1,,26013-100202,,"BOLT W/WASHER M10X20",2,,,,,,,,,,,,,,,,,,,,I
27,1,,194200-37780,,"LS-NUT 8",1,,,,,,,,,,,,,,,,,,,,I
28,1,,172734-41300,,"LINK BALL 8L",1,,,,,,,,,,,,,,,,,,,,I
29,1,,172732-42450,,ROD,1,,,,,,,,,,,,,,,,,,,,I
30,1,,172157-45630,,"BALL 6, LINK",1,,,,,,,,,,,,,,,,,,,,I
31,1,,172446-45750,,"ROD 110",1,,,,,,,,,,,,,,,,,,,,I
32,1,,172446-46220,,JOINT,1,,,,,,,,,,,,,,,,,,,,I
33,1,,172122-46590,,"ELBALL 8",2,,,,,,,,,,,,,,,,,,,,I
34,1,,22117-060000,,"WASHER  6",1,,,,,,,,,,,,,,,,,,,,I
35,1,,22117-080000,,"WASHER  8",3,,,,,,,,,,,,,,,,,,,,I
36,1,,22417-160160,,"COTTER PIN 1.6X16",1,,,,,,,,,,,,,,,,,,,,I
37,1,,26051-060002,,"NUT M 6",1,,,,,,,,,,,,,,,,,,,,I
38,1,,26051-080002,,"NUT M 8",1,,,,,,,,,,,,,,,,,,,,I
39,1,,26051-080002,,"NUT M 8",2,,,,,,,,,,,,,,,,,,,,I
40,1,,26051-080002,,"NUT M 8",2,,,,,,,,,,,,,,,,,,,,I
41,1,,933110-54100,,"PIN 4.75X14",1,,,,,,,,,,,,,,,,,,,,I
```

https://truckmanualshub.com/

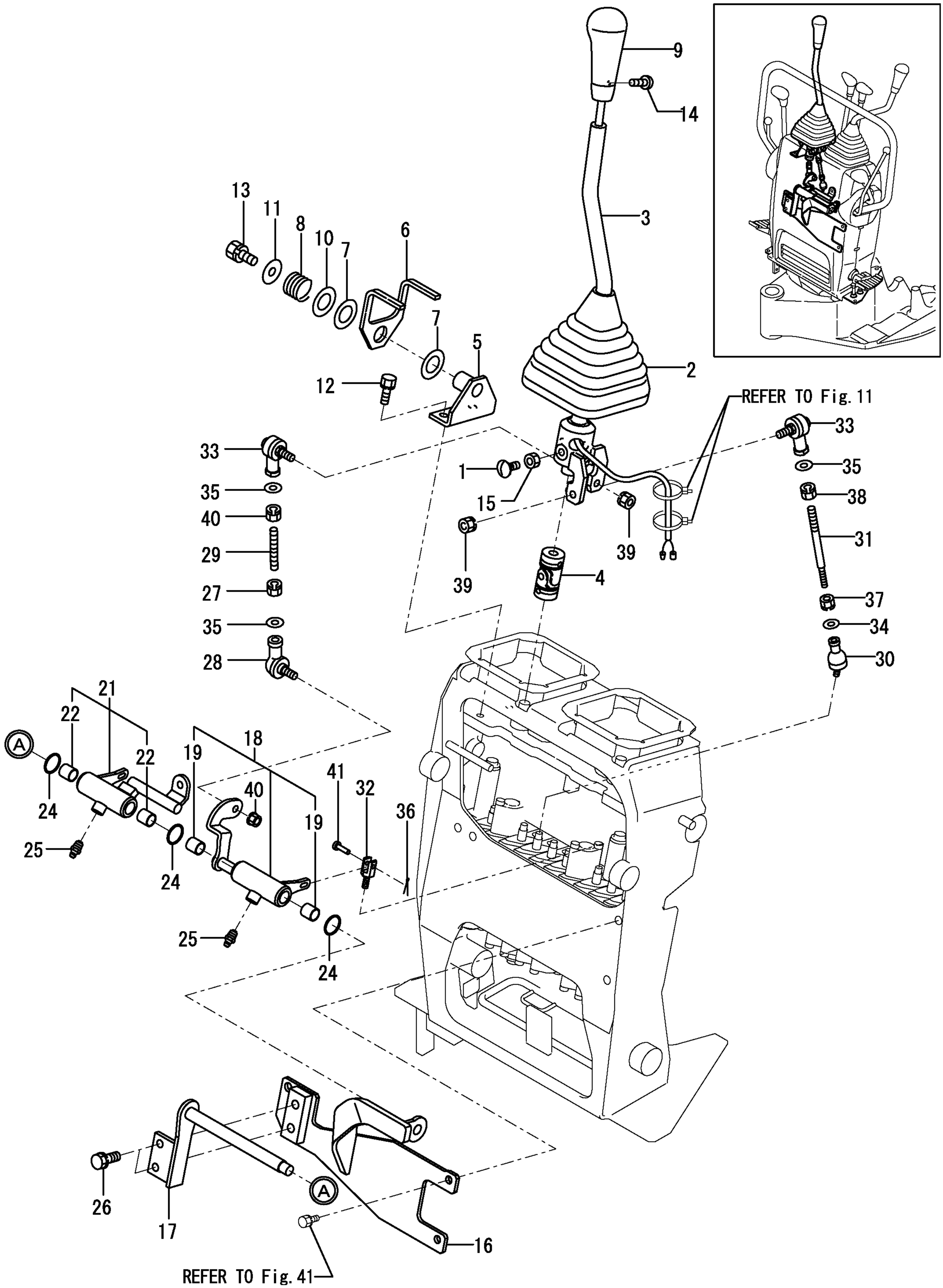

https://truckmanualshub.com/

```
1,1,,172141-42750,,"BOLT, STOPPER",4,4,,,,,,,,,,,,,,,,
2,1,,172151-45010,,"BOOT P,LEVER",1,1,,,,,,,,,,,,,,,,
3,1,,172165-45071,,"KNOB (L) ASSY",1,1,,,,,,,,,,,,,,,,
4,1,,172446-45110,,"LEBER L    (GRAY:72)",1,1,,,,,,,,,,,,,,,,,,
5,1,,172446-45140,,"LINK L",1,1,,,,,,,,,,,,,,,,
6,1,,172446-45800,,"JOINT NC-12",1,1,,,,,,,,,,,,,,,,
7,1,,24311-000140,,"O-RING 1A P-14.0",1,1,,,,,,,,,,,,,,,,,
8,1,,26587-040062,,"SCREW M 4X  6",1,1,,,,,,,,,,,,,,,,
9,1,,26756-080002,,"LOCK NUT M 8 PLATED",1,1,,,,,,,,,,,,,,,,,
10,1,,26756-080002,,"LOCK NUT M 8 PLATED",4,4,,,,,,,,,,,,,,,,,
11,1,,26979-080252,,"SCREW  8* 25",1,1,,,,,,,,,,,,,,,,
12,1,,172157-45630,,"BALL 6, LINK",2,2,,,,,,,,,,,,,,,,
13,1,,172446-45750,,"ROD 110",2,2,,,,,,,,,,,,,,,,
14,1,,172122-46590,,"ELBALL 8",2,2,,,,,,,,,,,,,,,,
15,1,,22117-060000,,"WASHER  6",2,2,,,,,,,,,,,,,,,,
16,1,,22117-080000,,"WASHER  8",2,2,,,,,,,,,,,,,,,,
17,1,,26051-060002,,"NUT M 6",2,2,,,,,,,,,,,,,,,,
18,1,,26051-080002,,"NUT M 8",2,2,,,,,,,,,,,,,,,,
19,1,,26051-080002,,"NUT M 8",2,2,,,,,,,,,,,,,,,,
```

https://truckmanualshub.com/

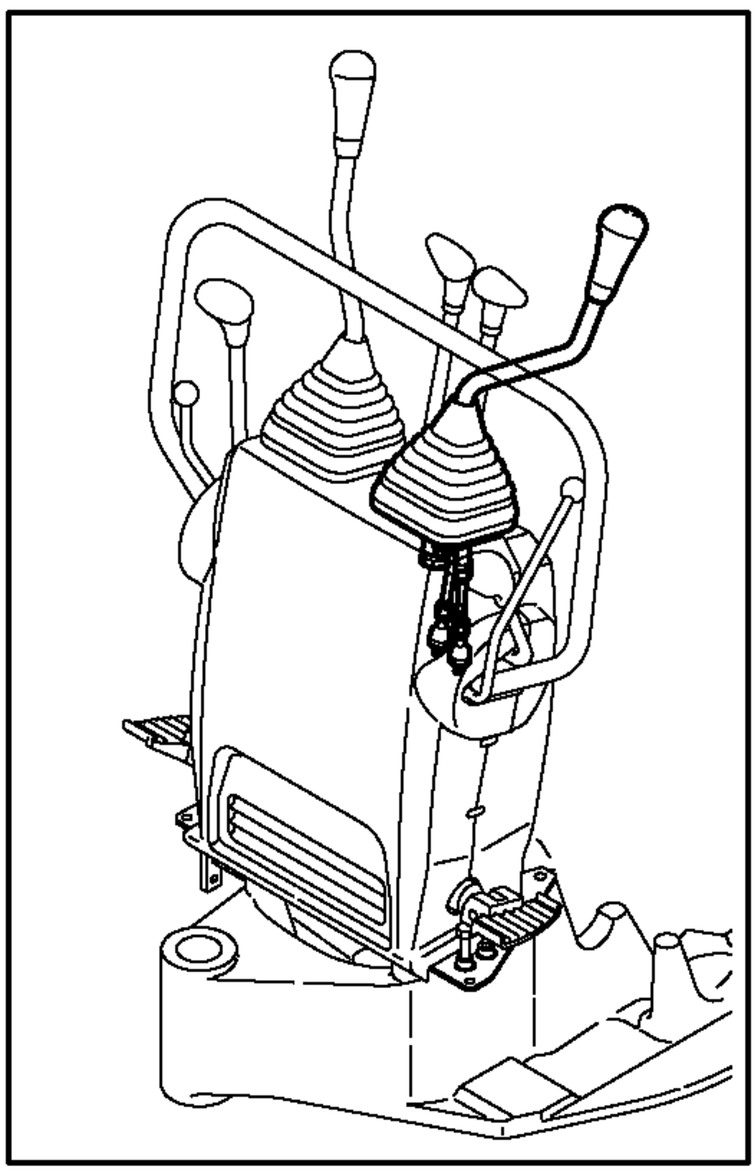

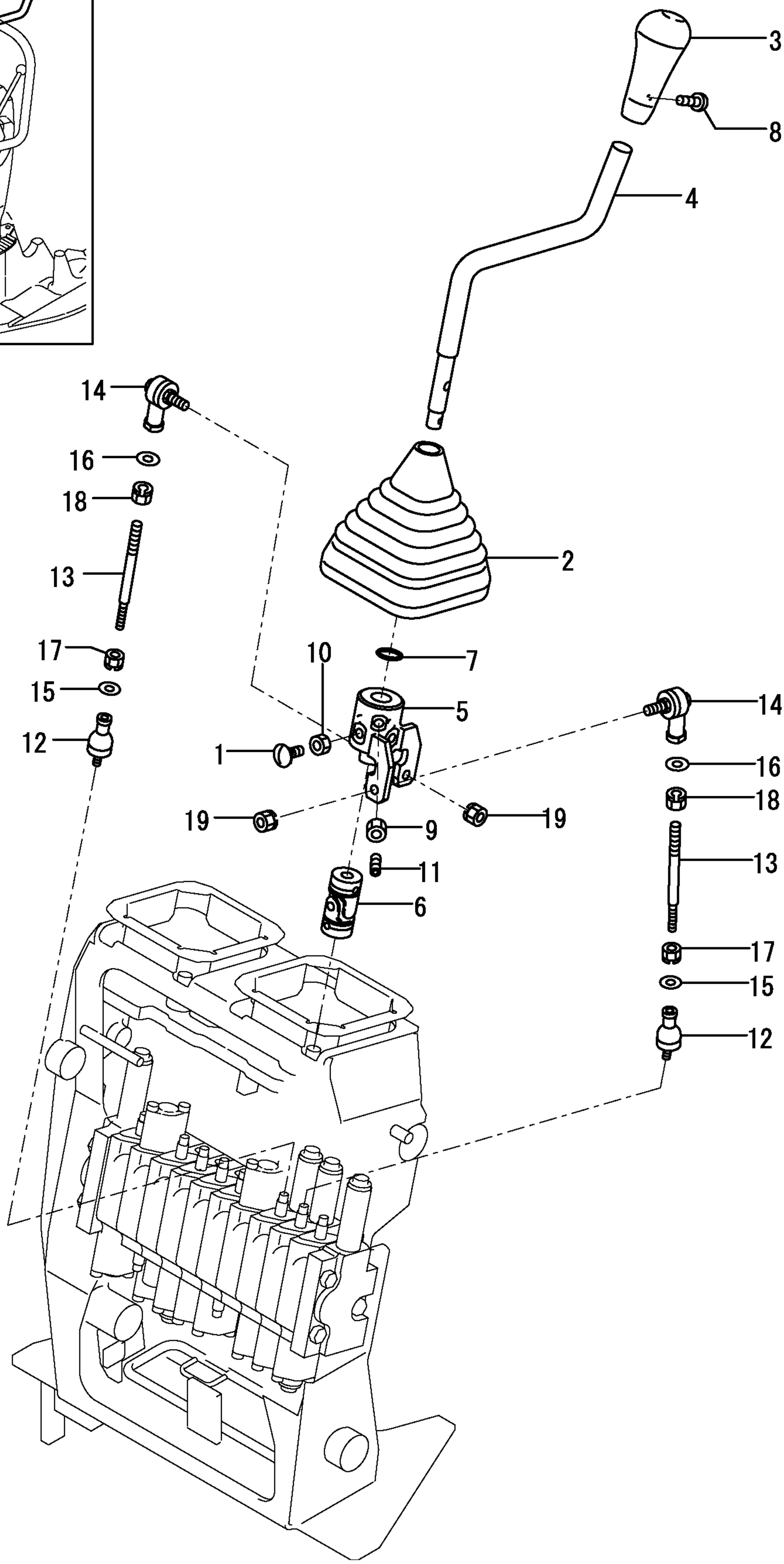

https://truckmanualshub.com/

```
1,1,,172141-42750,,"BOLT, STOPPER",4,,,,,,,,,,,,,,,,,,,,I
2,1,,172151-45010,,"BOOT P,LEVER",1,,,,,,,,,,,,,,,,,,,,I
3,1,,172165-45071,,"KNOB (L) ASSY",1,,,,,,,,,,,,,,,,,,,,I
4,1,,172446-45110,,"LEBER L    (GRAY:72)",1,,,,,,,,,,,,,,,,,,,,I
5,1,,172446-45140,,"LINK L",1,,,,,,,,,,,,,,,,,,,,I
6,1,,172446-45800,,"JOINT NC-12",1,,,,,,,,,,,,,,,,,,,,I
7,1,,24311-000140,,"O-RING 1A P-14.0",1,,,,,,,,,,,,,,,,,,,,I
8,1,,26587-040062,,"SCREW M 4X  6",1,,,,,,,,,,,,,,,,,,,,I
9,1,,26756-080002,,"LOCK NUT M 8 PLATED",1,,,,,,,,,,,,,,,,,,,,I
10,1,,26756-080002,,"LOCK NUT M 8 PLATED",4,,,,,,,,,,,,,,,,,,,,I
11,1,,26979-080252,,"SCREW,  8 X 25",1,,,,,,,,,,,,,,,,,,,,I
12,1,,194200-37780,,"LS-NUT 8",1,,,,,,,,,,,,,,,,,,,,I
13,1,,172734-41300,,"LINK BALL 8L",1,,,,,,,,,,,,,,,,,,,,I
14,1,,172732-42450,,ROD,1,,,,,,,,,,,,,,,,,,,,I
15,1,,172157-45630,,"BALL 6, LINK",1,,,,,,,,,,,,,,,,,,,,I
16,1,,172446-45750,,"ROD 110",1,,,,,,,,,,,,,,,,,,,,I
17,1,,172446-46220,,JOINT,1,,,,,,,,,,,,,,,,,,,,I
18,1,,172122-46590,,"ELBALL 8",2,,,,,,,,,,,,,,,,,,,,I
19,1,,22117-060000,,"WASHER  6",1,,,,,,,,,,,,,,,,,,,,I
20,1,,22117-080000,,"WASHER  8",3,,,,,,,,,,,,,,,,,,,,I
21,1,,22417-160160,,"COTTER PIN 1.6X16",1,,,,,,,,,,,,,,,,,,,,I
22,1,,26051-060002,,"NUT M 6",1,,,,,,,,,,,,,,,,,,,,I
23,1,,26051-080002,,"NUT M 8",1,,,,,,,,,,,,,,,,,,,,I
24,1,,26051-080002,,"NUT M 8",2,,,,,,,,,,,,,,,,,,,,I
25,1,,26051-080002,,"NUT M 8",2,,,,,,,,,,,,,,,,,,,,I
26,1,,933110-54100,,"PIN 4.75X14",1,,,,,,,,,,,,,,,,,,,,I
```

https://truckmanualshub.com/

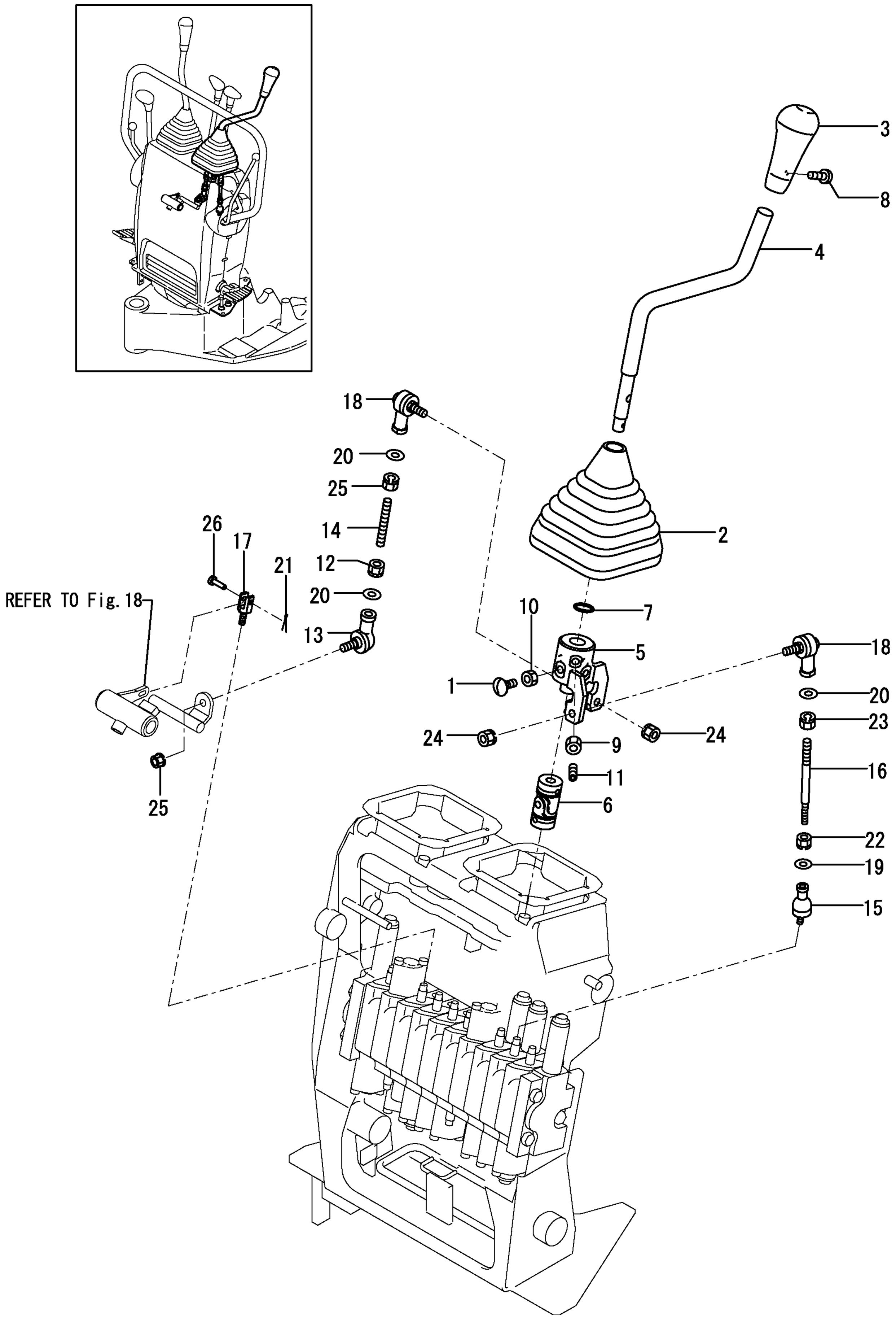

https://truckmanualshub.com/

```
1,1,,172446-45010,,"LEBER L,TRACK(GRAY72",1,,,,,,,,,,,,,,,,,,
1-1,1,,172446-45011,,"LEVER L, TRACK
(72)",1,1,,,,,F,1,724460140,*2003.06,,,,,,,,,,I
2,2,,172141-41370,,"BUSH 2015",2,2,,,,,,,,,,,,,,,,
4,1,,172446-45060,,"LEBER R,TRACK(GRAY72",1,1,,,,,,,,,,,,,,,,
5,2,,172141-41370,,"BUSH 2015",2,2,,,,,,,,,,,,,,,,
7,1,,172447-45100,,"LINK,BLADE CMP",1,1,,,,,,,,,,,,,,,,
8,1,,172446-45210,,"LEBER,BLADE(GRAY:72)",1,1,,,,,,,,,,,,,,,,
9,1,,172164-45951,,"GRIP L, DRIV.",1,1,,,,,,,,,,,,,,,,
10,1,,172164-45961,,"GRIP R, DRIV.",1,1,,,,,,,,,,,,,,,,
11,1,,172164-45970,,"GRIP, BLADE",1,1,,,,,,,,,,,,,,,,
12,1,,172124-46200,,"O-RING 27X5.7",4,4,,,,,,,,,,,,,,,,
13,1,,22217-080000,,"SPRING WASHER  8",1,1,,,,,,,,,,,,,,,,
14,1,,24761-020000,,"NIPPLE PT1/8,GREASE",2,2,,,,,,,,,,,,,,,,
15,1,,26116-080454,,"BOLT M 8X 45 PLATED",1,1,,,,,,,,,,,,,,,,
16,1,,26346-080002,,"U-NUT M 8 PLATED",1,1,,,,,,,,,,,,,,,,
17,1,,26756-100002,,"LOCK NUT M10 PLATED",2,2,,,,,,,,,,,,,,,,
18,1,,172447-45120,,"ROD C,SPOOL",1,,,,,,,,,,,,,,,,,,
18-1,1,,172157-45650,,"ROD A, SPOOL",1,1,,,,,S,,724460140,*2003.06,,,,,,,,,,I
19,1,,172447-45120,,"ROD C,SPOOL",1,1,,,,,,,,,,,,,,,,
20,1,,172157-45650,,"ROD A, SPOOL",1,1,,,,,,,,,,,,,,,,
21,1,,172122-47250,,"BALL 8, LINK",2,2,,,,,,,,,,,,,,,,
22,1,,172122-47250,,"BALL 8, LINK",1,1,,,,,,,,,,,,,,,,
23,1,,22117-080000,,"WASHER  8",2,2,,,,,,,,,,,,,,,,
24,1,,22117-080000,,"WASHER  8",1,1,,,,,,,,,,,,,,,,
25,1,,22417-160160,,"COTTER PIN 1.6X16",2,2,,,,,,,,,,,,,,,,
26,1,,22417-160160,,"COTTER PIN 1.6X16",1,1,,,,,,,,,,,,,,,,
27,1,,26051-080002,,"NUT M 8",3,3,,,,,,,,,,,,,,,,
28,1,,26051-080002,,"NUT M 8",2,2,,,,,,,,,,,,,,,,
29,1,,26051-080002,,"NUT M 8",1,1,,,,,,,,,,,,,,,,
30,1,,933110-54100,,"PIN 4.75X14",2,2,,,,,,,,,,,,,,,,
31,1,,933110-54100,,"PIN 4.75X14",1,1,,,,,,,,,,,,,,,,
```

https://truckmanualshub.com/

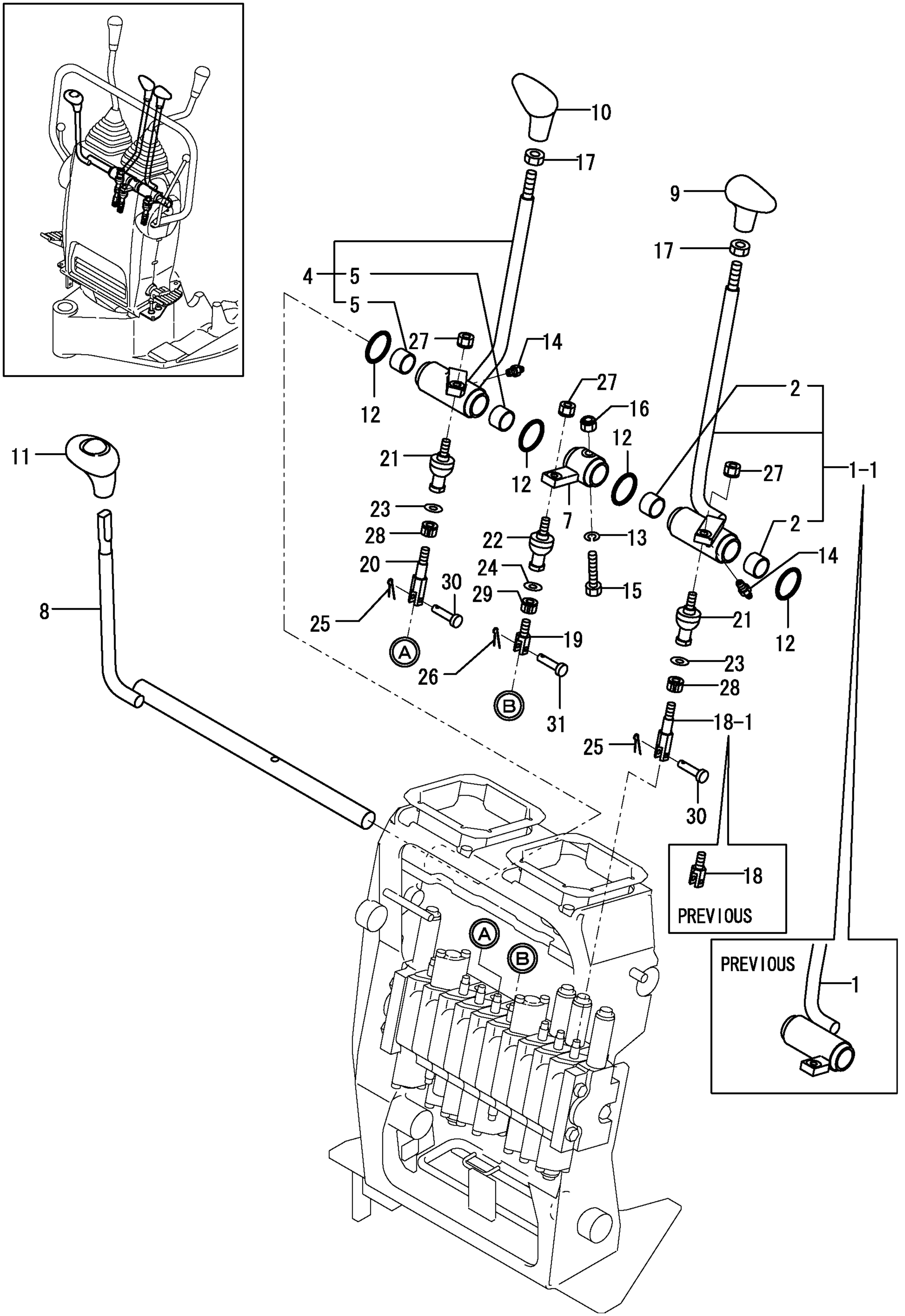

https://truckmanualshub.com/

```
1,1,,172446-45650,,"SHAFT,SWING",1,1,,,,,,,,,,,,,,,,
2,1,,172446-45710,,"PEDAL,SWING(GRAY:72)",1,1,,,,,,,,,,,,,,,,,,
3,1,,172157-46270,,SPRING,1,1,,,,,,,,,,,,,,,,,,
4,1,,22417-160160,,"COTTER PIN 1.6X16",1,1,,,,,,,,,,,,,,,,,,
5,1,,22486-100500,,PIN,1,1,,,,,,,,,,,,,,,,,,
6,1,,26116-080354,,"BOLT M 8X 35 PLATED",1,1,,,,,,,,,,,,,,,,,,
7,1,,26116-080504,,"BOLT M 8X 50 PLATED",1,1,,,,,,,,,,,,,,,,,,
8,1,,26116-080604,,"BOLT M8X 60",1,1,,,,,,,,,,,,,,,,,,
9,1,,26366-080002,,"NUT M 8",2,2,,,,,,,,,,,,,,,,,,
10,1,,26716-080002,,"NUT M 8",2,2,,,,,,,,,,,,,,,,,,
11,1,,172446-45760,,"ROD,SPOOL",1,1,,,,,,,,,,,,,,,,,,
12,1,,172446-45820,,"LINK BALL 6",1,1,,,,,,,,,,,,,,,,,,
13,1,,22117-060000,,"WASHER  6",1,1,,,,,,,,,,,,,,,,,,
14,1,,22417-160160,,"COTTER PIN 1.6X16",1,1,,,,,,,,,,,,,,,,,,
15,1,,26051-060002,,"NUT M 6",1,1,,,,,,,,,,,,,,,,,,
16,1,,26051-060002,,"NUT M 6",1,1,,,,,,,,,,,,,,,,,,
17,1,,933110-54100,,"PIN 4.75X14",1,1,,,,,,,,,,,,,,,,,,
```

https://truckmanualshub.com/

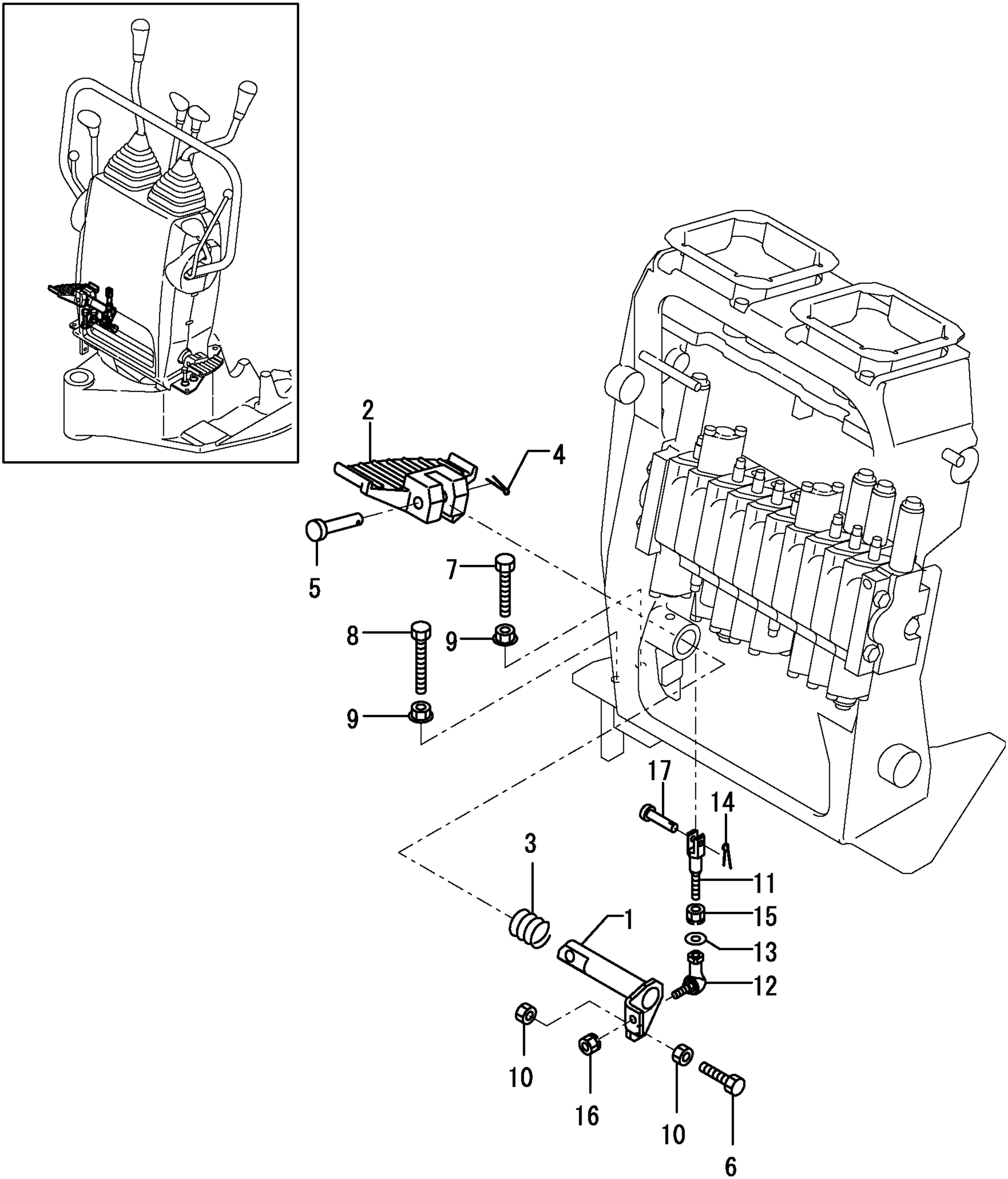

https://truckmanualshub.com/

```
1,1,,172446-45680,,SHAFT,1,1,,,,,,,,,,,,,,,,,
2,1,,172446-45700,,"PEDAL,P.T.O.(GRAY:72",1,1,,,,,,,,,,,,,,,,,,
3,1,,172157-46270,,SPRING,1,1,,,,,,,,,,,,,,,,,
4,1,,22417-160160,,"COTTER PIN 1.6X16",1,1,,,,,,,,,,,,,,,,,
5,1,,22486-100500,,PIN,1,1,,,,,,,,,,,,,,,,,
6,1,,26116-080354,,"BOLT M 8X 35 PLATED",1,1,,,,,,,,,,,,,,,,,
7,1,,26116-080504,,"BOLT M 8X 50 PLATED",1,1,,,,,,,,,,,,,,,,,
8,1,,26116-080604,,"BOLT M8X 60",1,1,,,,,,,,,,,,,,,,,
9,1,,26366-080002,,"NUT M 8",2,2,,,,,,,,,,,,,,,,,
10,1,,26716-080002,,"NUT M 8",2,2,,,,,,,,,,,,,,,,,
11,1,,172446-45760,,"ROD,SPOOL",1,1,,,,,,,,,,,,,,,,,
12,1,,172446-45820,,"LINK BALL 6",1,1,,,,,,,,,,,,,,,,,
13,1,,22117-060000,,"WASHER  6",1,1,,,,,,,,,,,,,,,,,
14,1,,22417-160160,,"COTTER PIN 1.6X16",1,1,,,,,,,,,,,,,,,,,,
15,1,,26051-060002,,"NUT M 6",1,1,,,,,,,,,,,,,,,,,
16,1,,26051-060002,,"NUT M 6",1,1,,,,,,,,,,,,,,,,,
17,1,,933110-54100,,"PIN 4.75X14",1,1,,,,,,,,,,,,,,,,,
18,1,,172068-28490,,"SPRING  8",2,2,,,,,,,,,,,,,,,,,
19,1,,172446-45910,,"LOCK ,P.T.O.(RED:11)",1,1,,,,,,,,,,,,,,,,,,
20,1,,22137-080000,,"WASHER 8, POLISHED",3,3,,,,,,,,,,,,,,,,,
21,1,,26757-080002,,"NUT  8",4,4,,,,,,,,,,,,,,,,,
```

https://truckmanualshub.com/

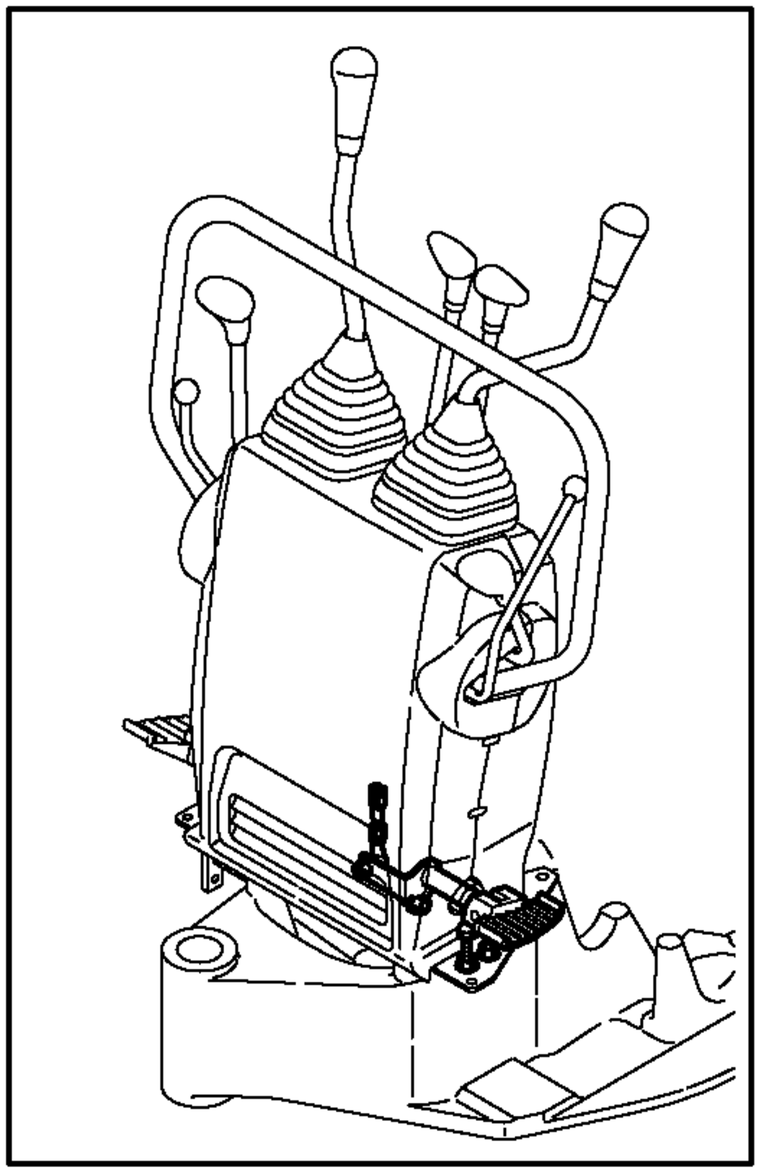

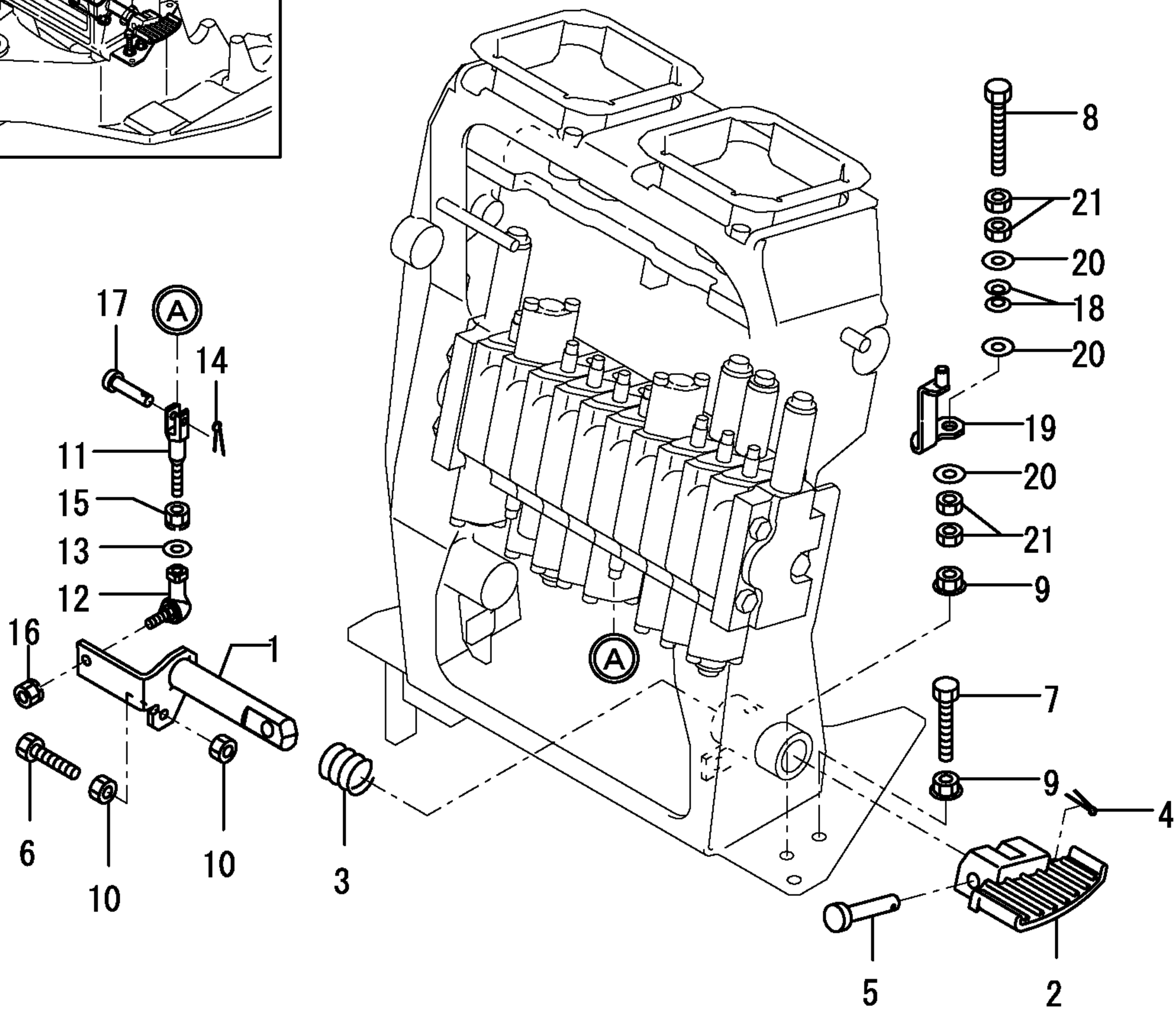

https://truckmanualshub.com/

```
1,1,,172446-45350,,"LEVER      (GRAY:72)",1,1,,,,,,,,,,,,,,,,,
2,2,,172141-41360,,"BUSH 1415",2,2,,,,,,,,,,,,,,,,,
4,1,,172446-45390,,LINK,2,2,,,,,,,,,,,,,,,,,
5,1,,172446-45950,,"KNOB,LEVER",1,1,,,,,,,,,,,,,,,,,
6,1,,1C6281-52310,,"PIN 6,COME-OFF SNAP",2,2,,,,,,,,,,,,,,,,,,
7,1,,24761-050000,,"NIPPLE C,GREASE",1,1,,,,,,,,,,,,,,,,,
8,1,,933110-54100,,"PIN 4.75X14",2,2,,,,,,,,,,,,,,,,,
```

https://truckmanualshub.com/

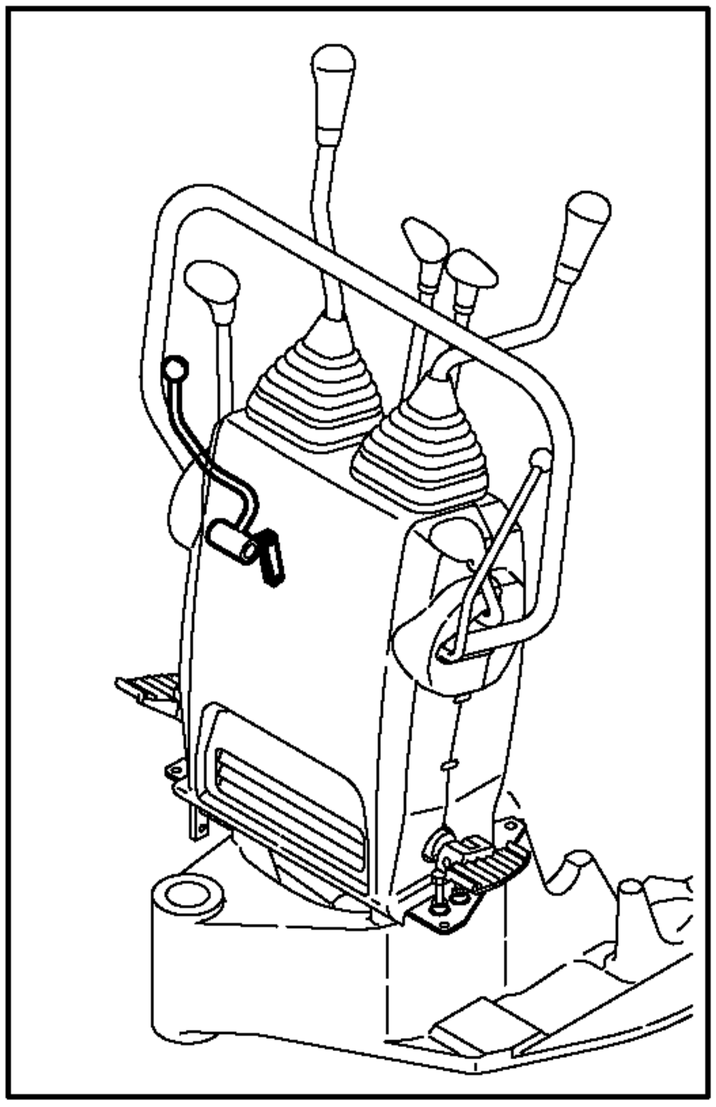

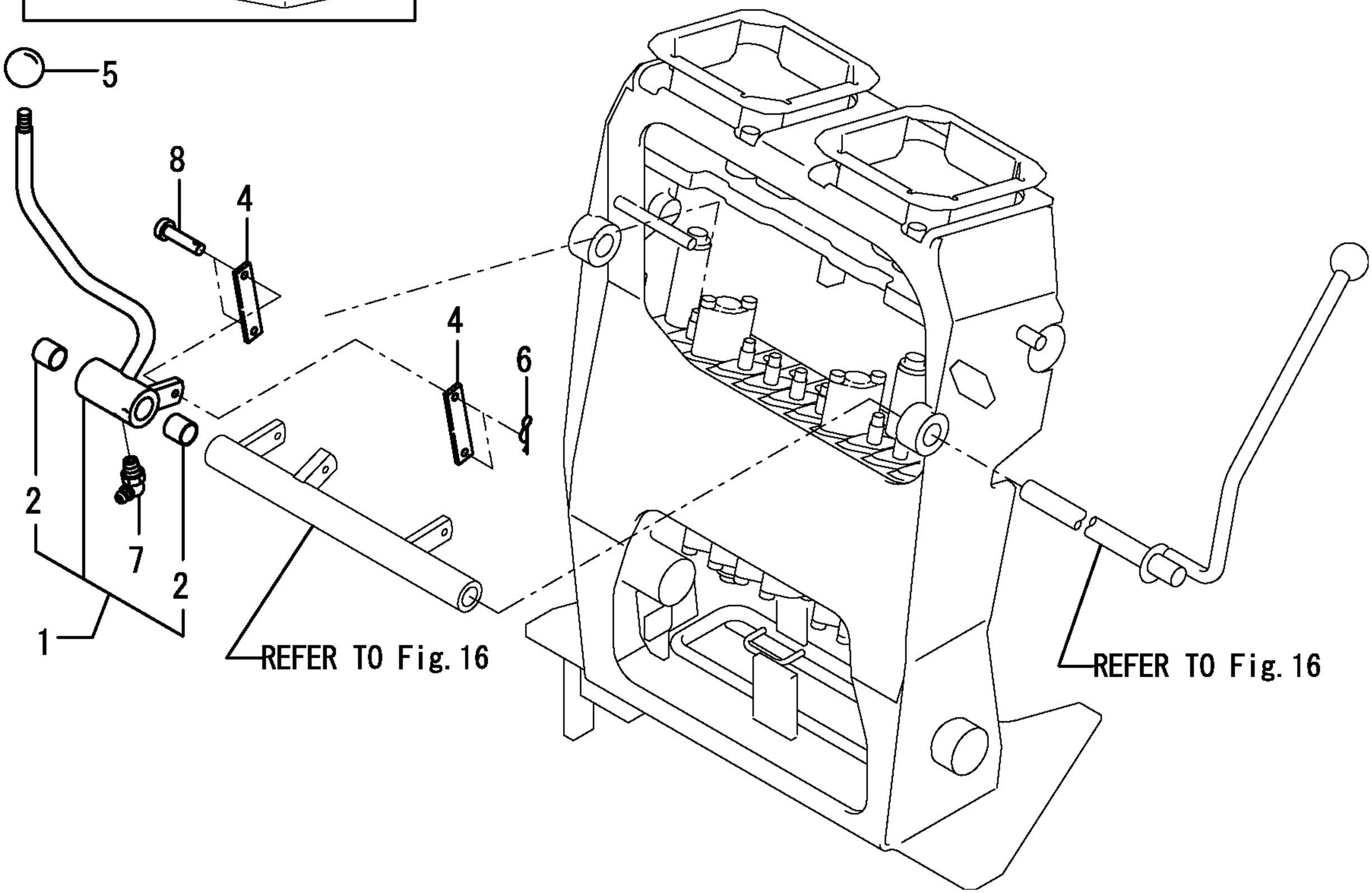

```
1,1,,172122-17190,,CLIP,2,2,,,,,,,,,,,,,,,,
2,1,,172446-50500,,"FRAME,CENTER(GREEN88",1,1,,,,,,,,,,,,,,,,
3,1,,172446-50700,,"FRAME,CRAWLER-L (88)",1,,,,,,,,,,,,,,,,,,
3-1,1,,172446-50701,,"FRAME,CRAWLER L
(88)",1,1,,,,,N,,724460141,M/#01606,,,,,,,,,,I
4,1,,172446-50710,,"FRAME,CRAWLER-R (88)",1,,,,,,,,,,,,,,,,,,
4-1,1,,172446-50711,,"FRAME,CRAWLER R
(88)",1,1,,,,,N,,724460141,M/#01606,,,,,,,,,,I
5,1,,172446-50900,,"BRACKET L,CYL.  (88)",1,1,,,,,,,,,,,,,,,,
6,1,,172446-50910,,"BRACKET R,CYL.  (88)",1,1,,,,,,,,,,,,,,,,
7,1,,172446-50960,,"LINK A    (GREEN:88)",4,4,,,,,,,,,,,,,,,,
8,1,,172446-50970,,"LINK B    (GREEN:88)",4,4,,,,,,,,,,,,,,,,
9,1,,172446-51000,,"PIN 25-197",2,,,,,,,,,,,,,,,,,,
9-1,1,,172446-51001,,"PIN,  25-197",2,2,,,,,N,,724460145,M/#01870,,,,,,,,,,I
10,1,,172446-51040,,"PIN 25-80",6,,,,,,,,,,,,,,,,,,
10-1,1,,172446-51041,,"PIN, 25X80",6,6,,,,,N,,724460145,M/#01870,,,,,,,,,,I
11,1,,172446-51050,,"PIN 25-68",8,,,,,,,,,,,,,,,,,,
11-1,1,,172446-51051,,"PIN, 25X68",8,8,,,,,N,,724460145,M/#01870,,,,,,,,,,I
12,1,,172446-51060,,"PIN 25-100",2,2,,,,,,,,,,,,,,,,
13,1,,172446-51080,,"PLATE,LOCK(GREEN:88)",8,,,,,,,,,,,,,,,,,,
13-1,1,,172446-
51081,,"PLATE,LOCK(GREEN:88)",8,8,,,,,N,,724460145,M/#01870,,,,,,,,,,I
14,1,,172155-81390,,"COTTER PIN 6X 35",2,2,,,,,,,,,,,,,,,,
15,1,,24761-020000,,"NIPPLE PT1/8,GREASE",12,12,,,,,,,,,,,,,,,,
16,1,,24761-040000,,"NIPPLE B,GREASE",4,4,,,,,,,,,,,,,,,,
17,1,,26013-100162,,"BOLT M10X 16",16,,,,,,,,,,,,,,,,,,
17-1,1,,26013-100202,,"BOLT W/WASHER
M10X20",16,16,,,,,N,,724460145,M/#01870,,,,,,,,,,I
18,1,,26013-100252,,"BOLT W/WASHER M10X25",8,8,,,,,,,,,,,,,,,,
19,1,,172446-61500,,"COVER,MOTOR(GREEN:88",2,2,,,,,,,,,,,,,,,,
20,1,,172446-61531,,"COVER,UNDER(GREEN:88",1,1,,,,,,,,,,,,,,,,
21,1,,22217-100000,,"SPRING WASHER 10",6,6,,,,,,,,,,,,,,,,
22,1,,22217-100000,,"SPRING WASHER 10",4,4,,,,,,,,,,,,,,,,
23,1,,26116-100202,,"BOLT M10X 20 PLATED",6,6,,,,,,,,,,,,,,,,
24,1,,26116-100202,,"BOLT M10X 20 PLATED",4,4,,,,,,,,,,,,,,,,
```

https://truckmanualshub.com/

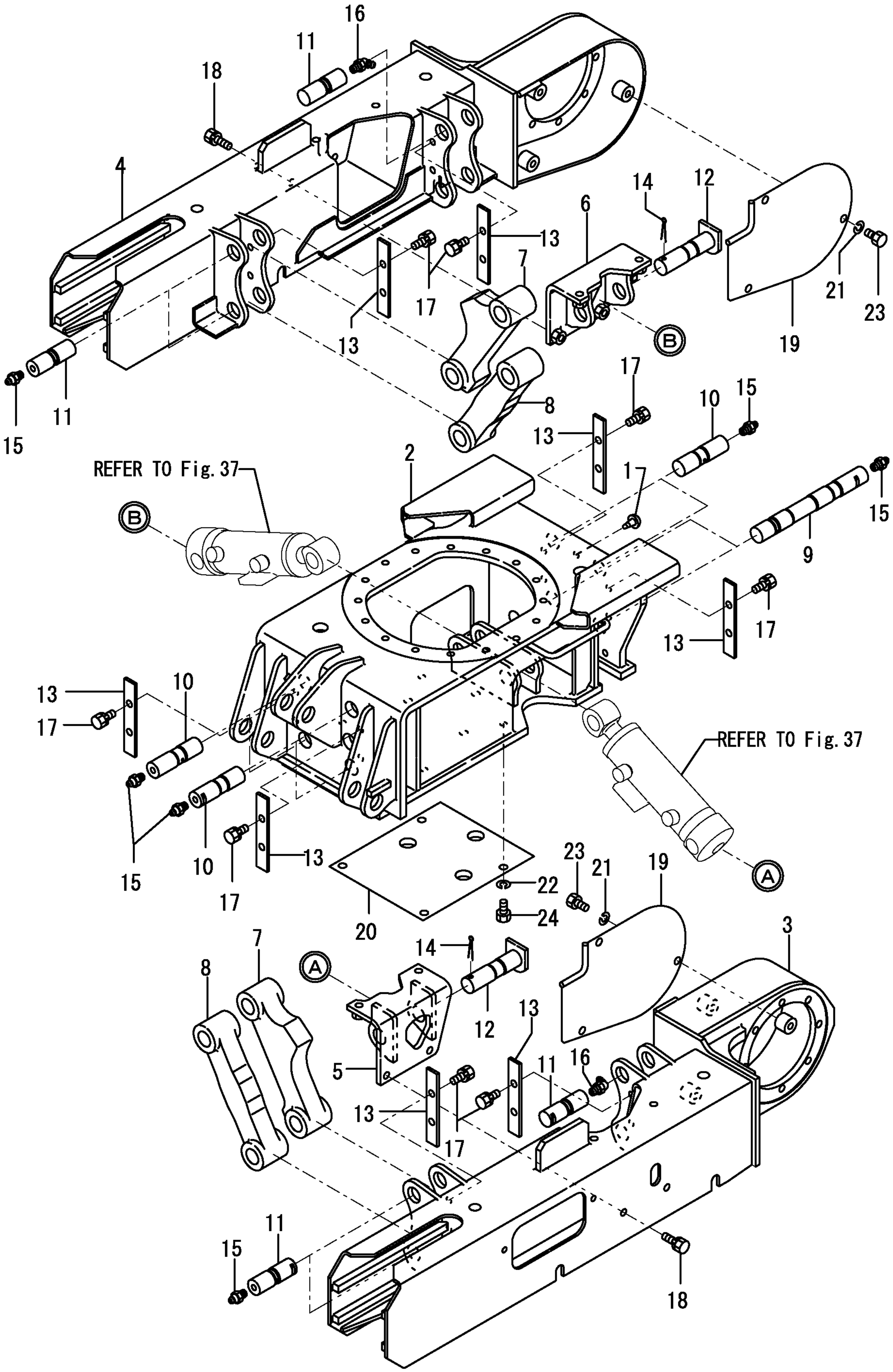

https://truckmanualshub.com/

```
1,1,,172157-45840,,"WASHER 8X18X4",1,1,,,,,,,,,,,,,,,,
2,1,,172446-54260,,"SIDE R,FRAME    (87)",1,1,,,,,,,,,,,,,,,,
3,1,,172446-54300,,"COVER L,PTO ASSY(87)",1,1,,,,,,,,,,,,,,,,
4,2,,172446-13530,,"SEAL B,RADIATOR",1,1,,,,,,,,,,,,,,,,
6,1,,172446-54500,,"FRAME,T/F EP    (87)",1,,,,,,,,,,,,,,,,,,
6-1,1,,172446-54490,,"FRAME ASSY, T/F
EP",1,1,,,,,N,,72446117,M/#00893,,,,,,,,,,I
7,2,,172157-54800,,"BUSH 35X45",2,2,,,,,,,,,,,,,,,,
8,1,,1A1380-62160,,WASHER,4,4,,,,,,,,,,,,,,,,
9,1,,172458-64600,,"CLIP 11",12,12,,,,,,1,,,,,,,,,,
10,1,,22137-080000,,"WASHER 8, POLISHED",2,2,,,,,,,,,,,,,,,,
11,1,,26013-080162,,"BOLT W/WASHER M8X16",1,1,,,,,,,,,,,,,,,,
12,1,,26013-080252,,"BOLT M 8X 25",1,1,,,,,,,,,,,,,,,,
13,1,,26116-080162,,"BOLT 8X16",4,4,,,,,,,,,,,,,,,,
14,1,,194940-24350,,"PIN 10X28,STRAIGHT",2,2,,,,,,,,,,,,,,,,
15,1,,172157-57600,,"BEARING,TURNING (88)",1,1,,,,,,,,,,,,,,,,,
16,2,,172157-57610,,"SEAL KIT",1,1,,,,,,,,,,,,,,,,
17,3,,172157-57620,,"SEAL,UPPER",1,1,,,,,,,,,,,,,,,,
18,3,,172157-57630,,"SEAL,LOWER",1,1,,,,,,,,,,,,,,,,
19,1,,172155-57610,,"BOLT M10X45",16,16,,,,,,,,,,,,,,,,
20,1,,22217-100000,,"SPRING WASHER 10",15,15,,,,,,,,,,,,,,,,
21,1,,26072-100352,,"BOLT 10* 35",11,11,,,,,,,,,,,,,,,,
22,1,,26072-100552,,"BOLT 10* 55",4,4,,,,,,,,,,,,,,,,
```

https://truckmanualshub.com/

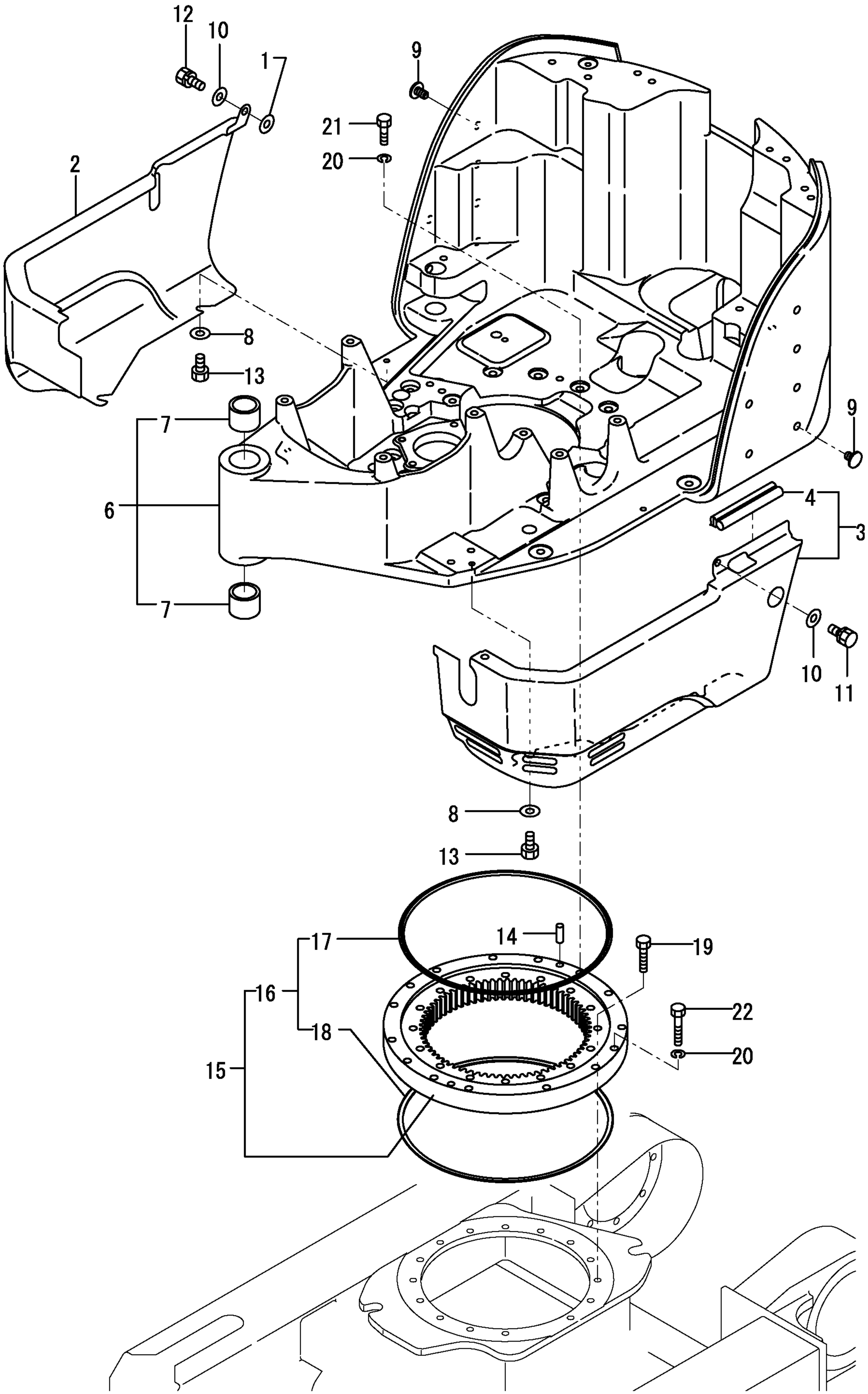

https://truckmanualshub.com/

```
1,1,,172446-58800,,"PIN,LOCK",1,1,,,,,,,,,,,,,,,,
2,1,,172157-58830,,"KNOB 6.5X18X35",1,1,,,,,,,,,,,,,,,,
3,1,,172446-62150,,"MOUNT,STEP",1,1,,,,,,,,,,,,,,,,
4,1,,172446-62200,,STEP,1,1,,,,,,,,,,,,,,,,
10,1,,26013-100252,,"BOLT W/WASHER M10X25",2,2,,,,,,,,,,,,,,,,
11,1,,26106-080202,,"BOLT M 8X 20 PLATED",4,,,,,,,,,,,,,,,,,,
11-1,1,,26116-080252,,"BOLT M 8X 25
PLATED",4,4,,,,,N,,72480076,M/#01143,,,,,,,,,,,I
12,1,,1A1380-62160,,WASHER,4,4,,,,,W,,72480076,M/#01143,,,,,,,,,,,I
```

https://truckmanualshub.com/

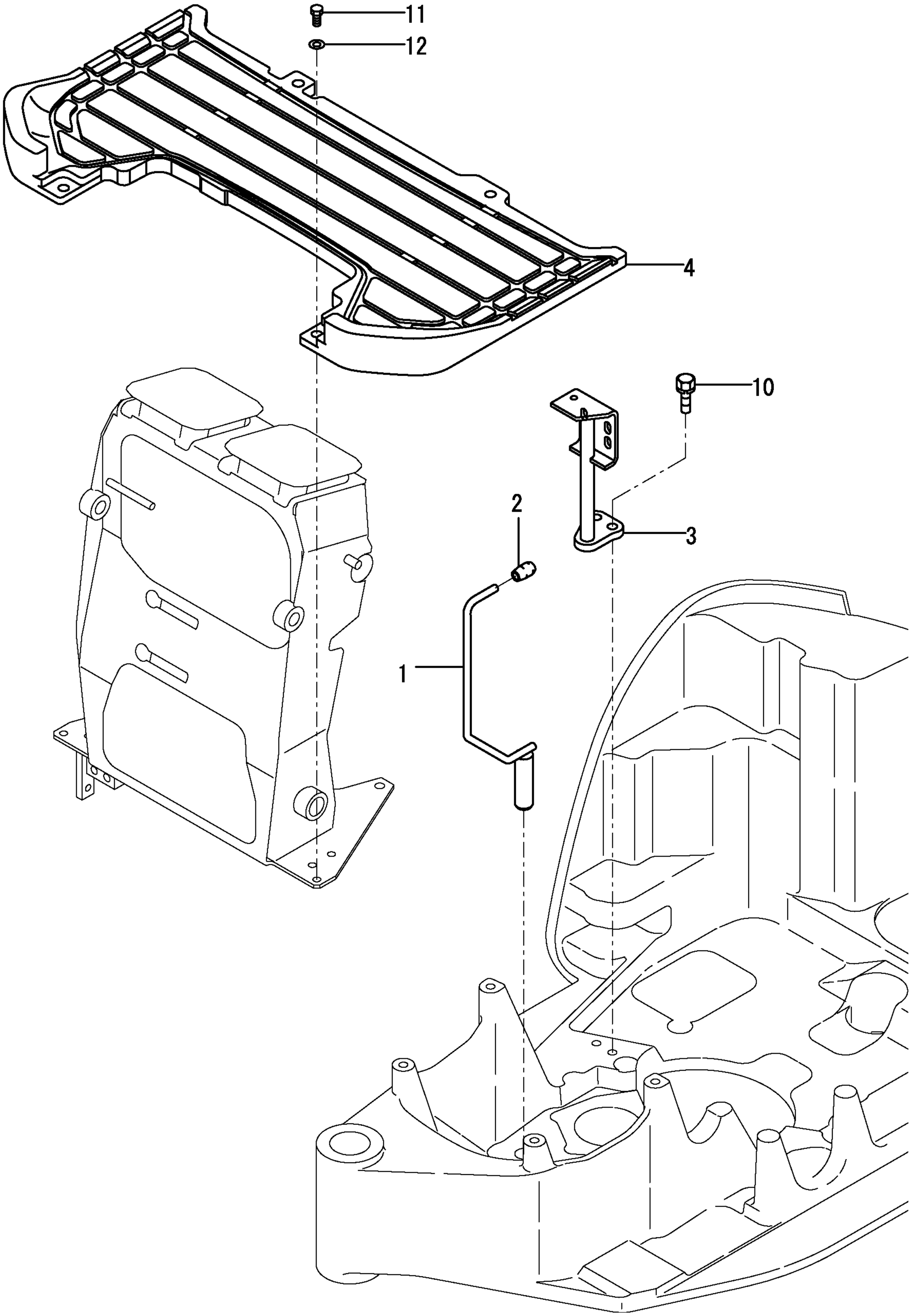

https://truckmanualshub.com/

```
1,1,,172649-64101,,"SEAT ASSY",1,1,,,,,,,,,,,,,,,,
2,1,,172446-64200,,"BRACKET,SEAT(GREEN97",1,1,,,,,,,,,,,,,,,,,,
3,1,,172141-64370,,"CUSHION, SEAT",2,2,,,,,,,,,,,,,,,,,
4,1,,172156-64420,,PIN,1,1,,,,,,,,,,,,,,,,,
5,1,,22372-080000,,"SNAP PIN (JASO 8)",2,2,,,,,,,,,,,,,,,,,
6,1,,26013-080162,,"BOLT W/WASHER M8X16",2,2,,,,,,,,,,,,,,,,,,
```

https://truckmanualshub.com/

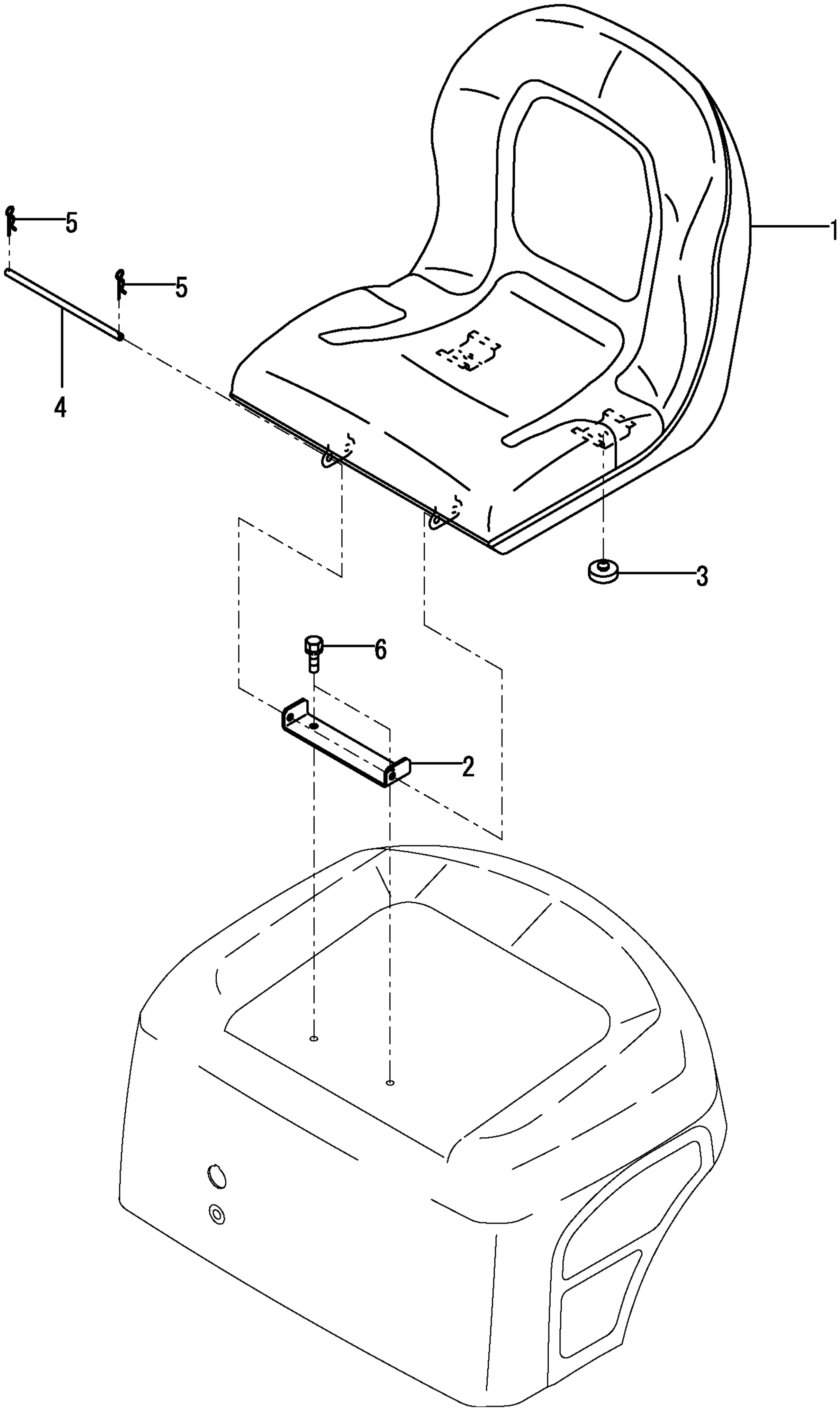

https://truckmanualshub.com/

```
1,1,,172164-19130,,"BOLT M10X 25",4,4,,,,,,,,,,,,,,,
2,1,,172446-62800,,PLATE,1,,,,,,,,,,,,,,,,
2-1,1,,172446-62801,,"PLATE,
PARTITION",1,1,,,,N,,726520074,M/#02002,,,,,,,,,,I
4,2,,172446-62910,,"RUBBER PLATE",1,1,,,,,,,,,,,,,,,
5,2,,172446-62920,,"RUBBER PLATE",1,1,,,,,,,,,,,,,,,
6,2,,172446-62930,,RUBBER,1,1,,,,,,,,,,,,,,,
7,1,,172446-65100,,"BONNET    (GREEN:97)",1,1,,,,,,1,,,,,,,,,,
9,2,,172446-65190,,TRIM(2300,1,1,,,,,,,,,,,,,,,
18,1,,172446-65300,,ARM,1,1,,,,,,,,,,,,,,,
19,1,,172446-65350,,"LEVER CMP",1,,,,,,,,,,,,,,,,
19-1,1,,172480-65450,,"LEVER ASSY",1,1,,,,,F,3,724460149,M/#01913,,,,,,,,,,I
20,1,,172446-65370,,PLATE,1,,,,,,,,,,,,,,,,
20-1,1,,172446-65371,,PLATE,1,1,,,,,N,,724460149,M/#01913,,,,,,,,,,I
21,1,,172446-65380,,PLATE,1,1,,,,,,,,,,,,,,,
22,1,,172446-65400,,"MOUNT,BONNET",1,1,,,,,,,,,,,,,,,
23,1,,172446-65470,,WASHER,4,4,,,,,,,,,,,,,,,
24,1,,172446-65500,,LINK,1,1,,,,,,,,,,,,,,,
25,1,,172446-65540,,HOOK,1,1,,,,,,,,,,,,,,,
26,1,,172156-65690,,"TORSION SPRING,STOPR",1,1,,,,,,,,,,,,,,,
27,1,,172164-66170,,"KEY ASSY, CYLINDER",1,1,,,,,,,,,,,,,,,
32,1,,22137-080000,,"WASHER 8, POLISHED",1,1,,,,,,,,,,,,,,,
33,1,,22137-080000,,"WASHER 8, POLISHED",3,3,,,,,,,,,,,,,,,
34,1,,22137-100000,,"WASHER 10,POLISHED",4,4,,,,,,,,,,,,,,,
35,1,,22157-080000,,"WASHER  8",2,2,,,,,,,,,,,,,,,
36,1,,22217-080000,,"SPRING WASHER  8",1,1,,,,,,,,,,,,,,,
37,1,,22360-120000,,"SNAP PIN 12",2,2,,,,,,,,,,,,,,,
38,1,,22372-080000,,"SNAP PIN (JASO 8)",1,1,,,,,,,,,,,,,,,
39,1,,22417-200200,,"COTTER PIN 2.0X20",1,1,,,,,,,,,,,,,,,
40,1,,26013-080202,,"BOLT W/WASHER M8X20",3,3,,,,,,,,,,,,,,,
41,1,,26013-100202,,"BOLT W/WASHER M10X20",4,4,,,,,,,,,,,,,,,
42,1,,26051-100002,,"NUT M10",4,4,,,,,,,,,,,,,,,
43,1,,26347-100002,,"U-NUT 10",1,1,,,,,,,,,,,,,,,
44,1,,26716-080002,,"NUT M 8",1,1,,,,,,,,,,,,,,,
45,1,,172524-17330,,"KEY ASSY",1,1,,,,,,,,,,,,,,,
46,1,,172116-46630,,"KNOB, LOCK LEVER",1,1,,,,,W,,724460149,M/#01913,,,,,,,,,,I
47A,1,,172446-03440,,"LABEL,PATTERN EP",1,1,,,,,,2,,,,,,,,,,
47B,1,,172437-03360,,"LABEL,BATTERY",1,1,,,,,,2,,,,,,,,,,
47C,1,,172437-03371,,LABEL,1,1,,,,,,2,,,,,,,,,,
47D,1,,172437-03380,,"LABEL,SWING AREA",1,1,,,,,,2,,,,,,,,,,
47E,1,,172437-03390,,"LABEL,RADIATOR",1,1,,,,,,2,,,,,,,,,,
47F,1,,172437-03400,,"LABEL,ENG.HOOD",1,1,,,,,,2,,,,,,,,,,
47G,1,,172437-03410,,"LABEL,ENG.ROOM",1,1,,,,,,2,,,,,,,,,,
47H,1,,172437-03421,,"LABEL,MUFFLER",1,1,,,,,,2,,,,,,,,,,
47I,1,,172446-03730,,"LABEL,LIFT US",1,1,,,,,,2,,,,,,,,,,
47J,1,,172446-03770,,"LABEL,SUPPORT US",1,1,,,,,,2,,,,,,,,,,
```

https://truckmanualshub.com/

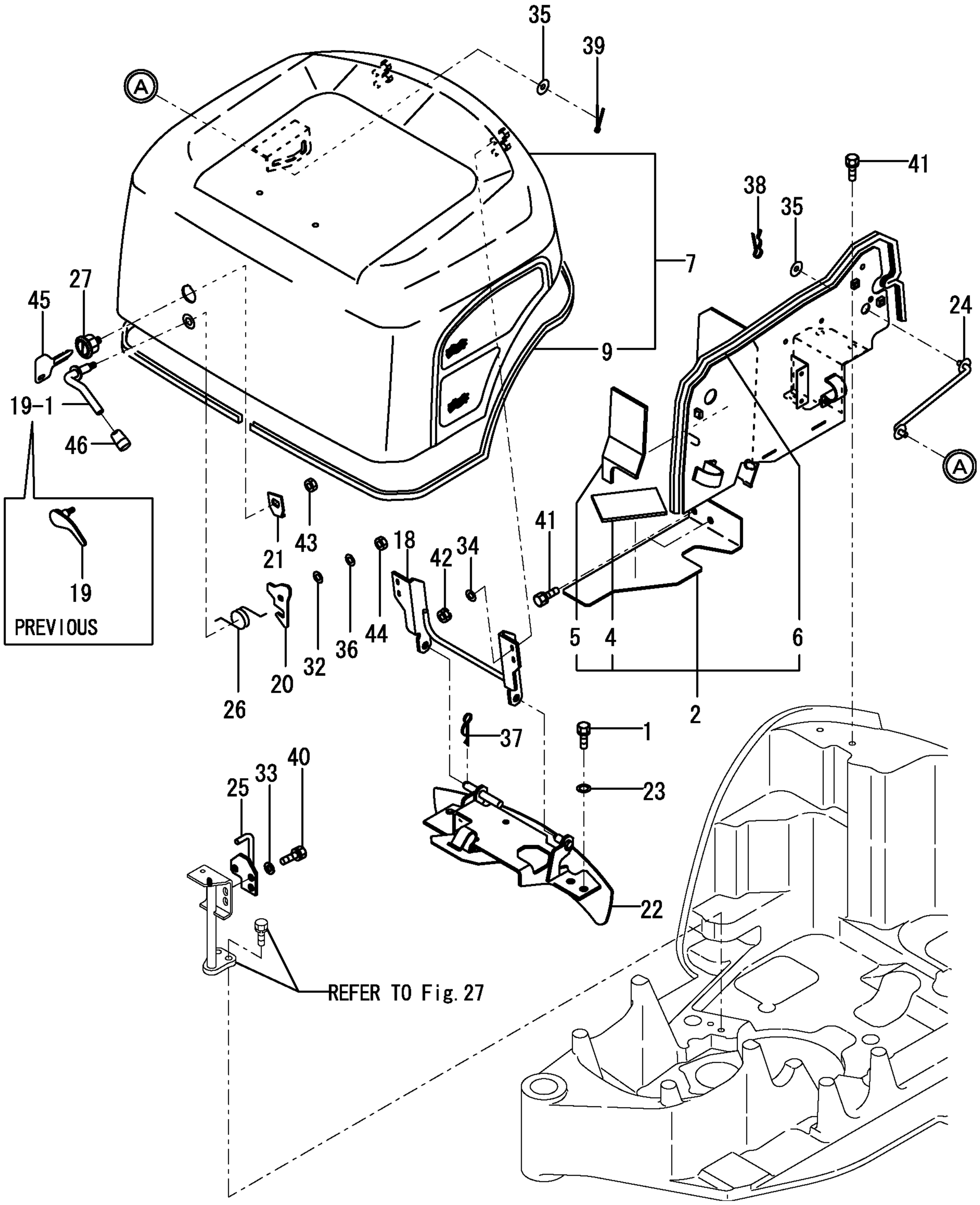

https://truckmanualshub.com/

```
1,1,,XR0167F001,,"ROLLBAR ASSEMBLY-TOP",1,,,,,,1,,,,,,,,,,
1-1,1,,172446-68600,,"ROLLBAR ASSY,T
(87)",1,,,,,S,,724460150,M/#02008,,,,,,,,,,I
2,1,,XR0167F002,,"ROLLBAR ASS'Y-BOTTOM",1,,,,,,2,,,,,,,,,,
2-1,1,,172446-68510,,"ROLL BAR ASSY
(B(87)",1,,,,,S,,724460155,M/#02008,,,,,,,,,,I
3,1,,XR0167F003,,"BRACKET ASSEMBLY",1,,,,,,,,,,,,,,,,,
3-1,1,,172446-68710,,"BRACKET
ASSY,ROPS(87",1,,,,,S,,724460150,M/#02008,,,,,,,,,,I
4,1,,XR0167F004,,"PIVOT PIN",2,,,,,,,,,,,,,,,,,
4-1,1,,172480-68741,,"PIN,ROPS",2,,,,,S,,724460150,M/#02008,,,,,,,,,,I
5,1,,XR0167F005,,"M8X40 HEX HED BOLT",2,,,,,,,,,,,,,,,,,
5-1,1,,26116-060352,,"BOLT M 6X 35
PLATED",2,,,,,S,,724460150,M/#02008,,,,,,,,,,I
6,1,,XR0167F006,,"LOCKING PIN CMP",2,,,,,Z,,724460150,M/#02008,,,,,,,,,,I
7,1,,XR0167F007,,"VERTICAL HINGE PIN",1,,,,,,,,,,,,,,,,,
7-1,1,,172446-68810,,"PIN ASSY,ROPS",1,,,,,S,,724460150,M/#02008,,,,,,,,,,I
8,1,,XR0167F008,,"VERTICAL HINGE PIN",1,,,,,,,,,,,,,,,,,
8-1,1,,172446-68820,,"PIN,ROPS",1,,,,,S,4,724460150,M/#02008,,,,,,,,,,I
8A,1,,172446-68830,,"PIN, ROPS 25.4",1,,,,,W,4,724460161,M/#02008,,,,,,,,,,I
9,1,,XR0167F009,,"M12X35 HEX HED BOLT",12,,,,,,,,,,,,,,,,,
9-1,1,,26076-120352,,"BOLT M12X 35",12,,,,,S,,724460150,M/#02008,,,,,,,,,,I
10,1,,XR0167F010,,"M12 WASHER",12,,,,,Z,,724460150,M/#02008,,,,,,,,,,I
11,1,,XR0167F011,,"M12 SPRING WASHER",12,,,,,,,,,,,,,,,,,
11-1,1,,22217-120000,,"SPRING WASHER
12",12,,,,,S,,724460150,M/#02008,,,,,,,,,,I
12,1,,XR0167F012,,"SEAT BELT ASSEMBLY",1,,,,,,,,,,,,,,,,,
12-1,1,,172446-64220,,"SEAT BELT
ASSEMBLY",1,,,,,S,,724460150,M/#02008,,,,,,,,,,I
12-2,1,,172A23-64770,,"SEAT BELT ASSY",1,,,,,N,,72A230009,M/#02008,,,,,,,,,,I
13,1,,XR0167F013,,"7/16X38 UNF HEX BOLT",2,,,,,,,,,,,,,,,,,
13-1,1,,172448-68182,,"BOLT 7/16-20X50
UNF",2,,,,,S,,72A230009,M/#02008,,,,,,,,,,I
14,1,,XR0167F014,,"7/16 UNF NUT",4,,,,,,,,,,,,,,,,,
14-1,1,,172187-64831,,"NUT 7/16-20-UNF",4,,,,,S,,724460150,M/#02008,,,,,,,,,,I
15,1,,XR0167F015,,"7/16 STAR WASHER",2,,,,,,,,,,,,,,,,,
15-1,1,,933170-01490,,"SPRING 12",4,,,,,S,,724460150,M/#02008,,,,,,,,,,I
15-2,1,,172652-64220,,"SPRING 12",4,,,,,N,,726520072,*2004.06,,,,,,,,,,I
16,1,,XR0167F016,,"19X11.5X6.5 SPACER",2,,,,,Z,,724460150,M/#02008,,,,,,,,,,I
17,1,,XR0167F017,,"M8X55 HEX HED BOLT",1,,,,,,,,,,,,,,,,,
17-1,1,,26116-060452,,"BOLT M 6X 45
PLATED",1,,,,,S,,724460150,M/#02008,,,,,,,,,,I
18,1,,XR0167F018,,"M8 NUT",2,,,,,,,,,,,,,,,,,
18-1,1,,26716-060002,,"NUT 6",2,,,,,S,,724460150,M/#02008,,,,,,,,,,I
19,1,,XR0167F018,,"M8 NUT",4,,,,,,,,,,,,,,,,,
19-1,1,,26716-060002,,"NUT 6",4,,,,,S,,724460150,M/#02008,,,,,,,,,,I
20,1,,XR0167F019,,SHIM,4,,,,,Z,,724460150,M/#02008,,,,,,,,,,I
21,1,,22137-120000,,"WASHER
12,POLISHED",2,,,,,W,,724460150,M/#02008,,,,,,,,,,I
22A,1,,172446-03750,,"LABEL,FOLDING",1,,,,,,3,,,,,,,,,,
22B,1,,172437-03440,,"LABEL,ROPS",1,,,,,,3,,,,,,,,,,
22C,1,,172437-03450,,"LABEL,SEAT BELT",1,,,,,,3,,,,,,,,,,
23A,1,,172446-03740,,"LABEL,PINCH",2,,,,,,3,,,,,,,,,,
```

https://truckmanualshub.com/

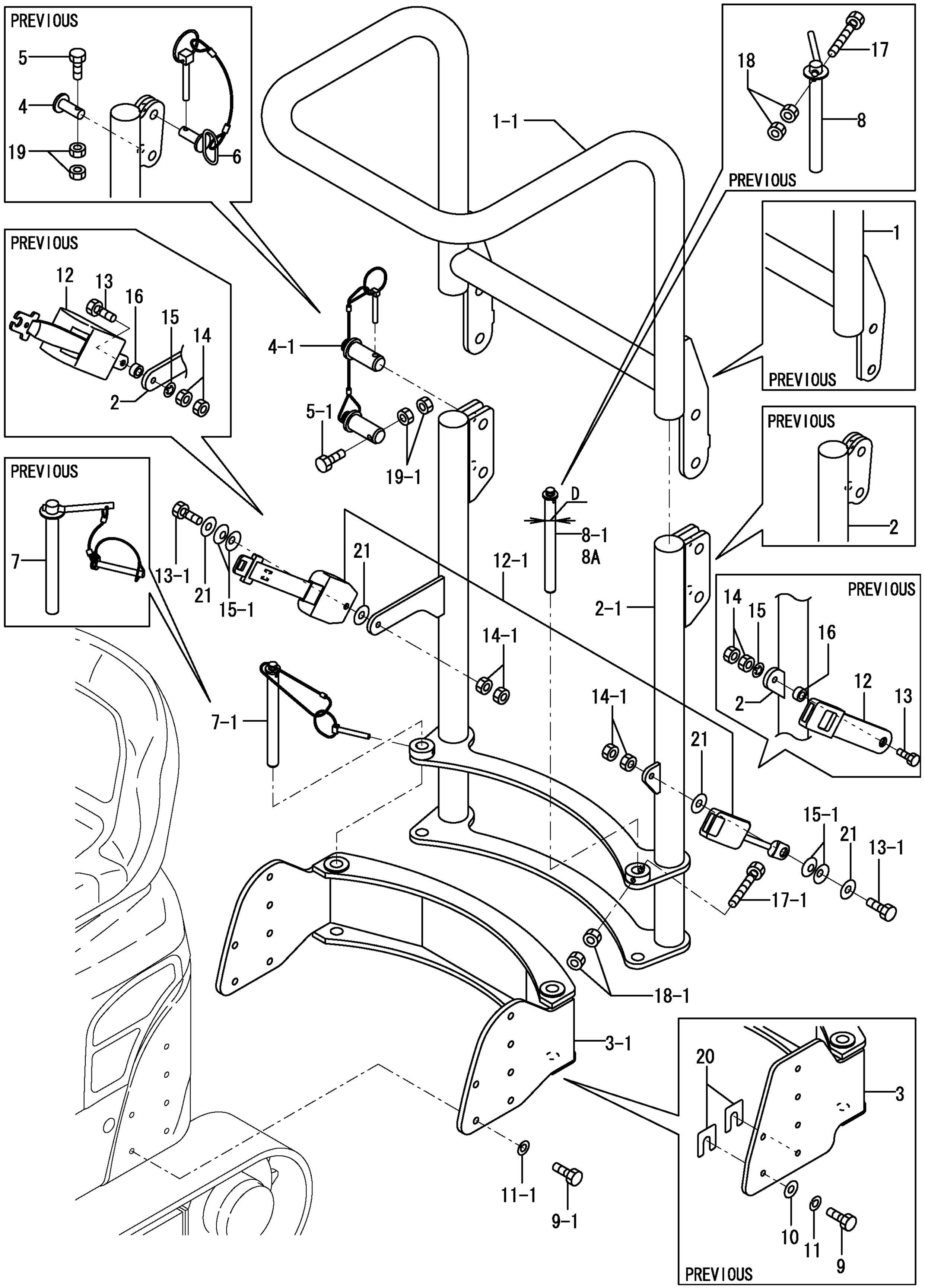

https://truckmanualshub.com/

```
1,1,,172446-71100,,"MOUNT,HYD.PUMP",1,1,,,,,,,,,,,,,,,
2,1,,22312-080200,,"PARALLEL PIN 8X20",2,2,,,,,,,,,,,,,,,
3,1,,26013-100252,,"BOLT W/WASHER M10X25",8,8,,,,,,,,,,,,,,,,
4,1,,172157-71210,,"BEARING HOLDER ASY",1,1,,,,,,,,,,,,,,,
5,2,,172157-71201,,JOINT,1,1,,,,,,,,,,,,,,,,,,I
6,2,,172137-71220,,COUPLING,1,1,,,,,,,,,,,,,,,,,,I
7,2,,22351-040008,,"SPRING PIN 4X 8",3,3,,,,,,,,,,,,,,,,,,I
8,2,,26450-100302,,"BOLT M10X 30",6,6,,,,,,,,,,,,,,,,,,I
9,1,,172446-73100,,PUMP,1,1,,,,,,,,,,,,,,,
10,2,,172446-73120,,"SEAL KIT",1,1,,,,,,,,,,,,,,,
11,2,,172446-73130,,"STEEL BALL",4,4,,,,,,,,,,,,,,,,,,I
12,2,,172446-73140,,"BOLT M10",4,4,,,,,,,,,,,,,,,,,,I
13,2,,172446-73150,,WASHER,4,4,,,,,,,,,,,,,,,,,,I
14,1,,22137-100000,,"WASHER 10,POLISHED",2,2,,,,,,,,,,,,,,,
15,1,,26013-100252,,"BOLT W/WASHER M10X25",2,2,,,,,,,,,,,,,,,,
```

https://truckmanualshub.com/

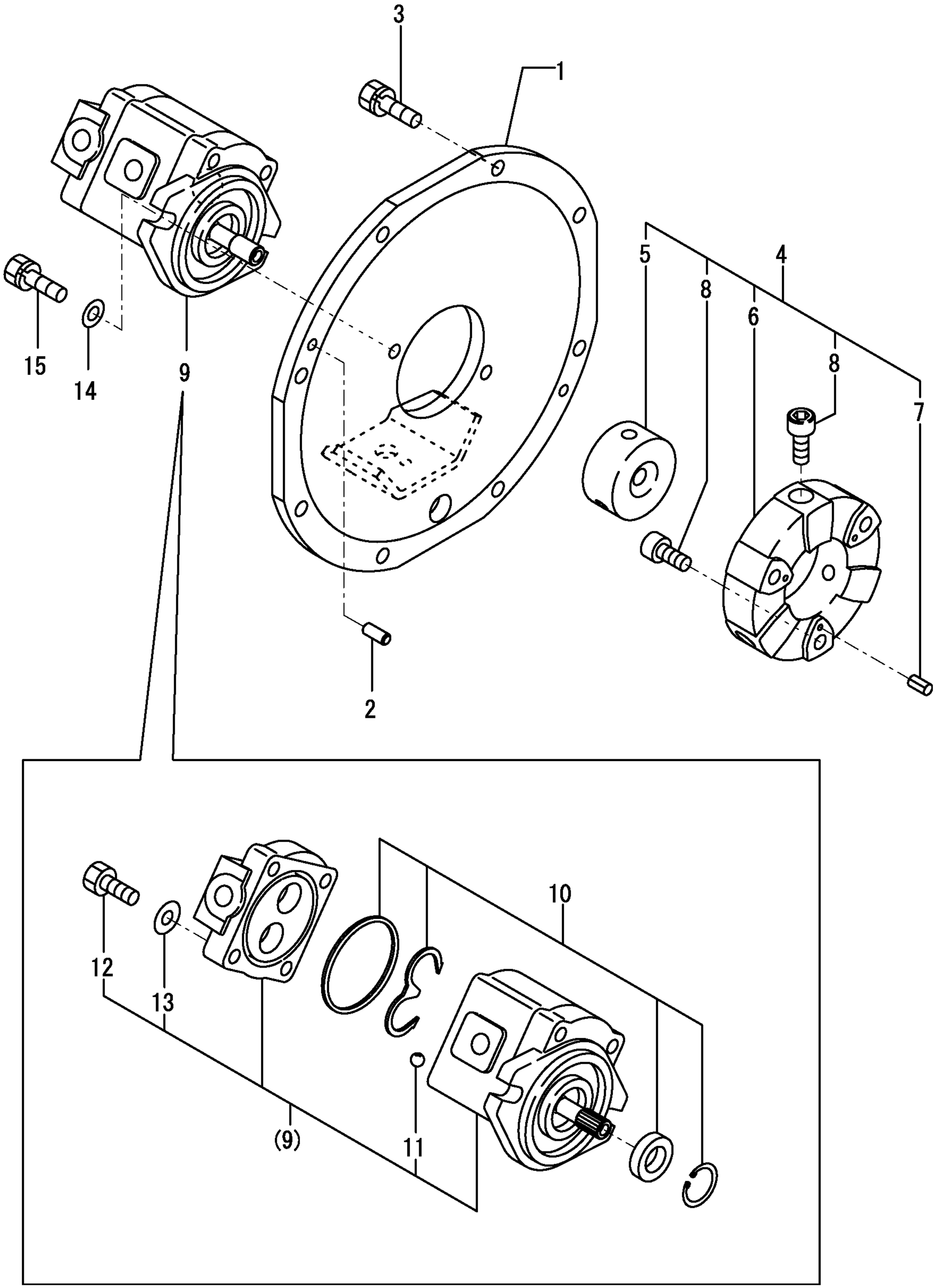

https://truckmanualshub.com/

```
1,1,,172446-72100,,"CYLINDER,BOOM   (87)",1,1,,,,,,,,,,,,,,,,,
2,2,,172446-72110,,"HEAD 50-25",1,1,,,,,,,,,,,,,,,,,
4,3,,933111-01700,,"BUSH 25 25, ROD",1,,,,,,,,,,,,,,,,,,,
4-1,3,,24550-025250,,"BUSH 25X25",1,1,,,,,R,,A1686116,M/#00860,,,,,,,,,,I
5,2,,172446-72150,,"TUBE,BOOM(YELLOW:87)",1,1,,,,,,,,,,,,,,,,,
6,3,,172156-72770,,"BUSH, PIN 25 35 B",1,1,,,,,,,,,,,,,,,,,
7,2,,172446-72270,,"LOP,BOOM",1,1,,,,,,,,,,,,,,,,,
8,3,,172156-72770,,"BUSH, PIN 25 35 B",1,1,,,,,,,,,,,,,,,,,
9,2,,172447-72320,,"GASKET RGU 50",1,,,,,,,,,,,,,,,,,,,
9-1,2,,172447-72321,,"GASKET RGU50
ASSY",1,1,,,,,N,,72448155,M/#01143,,,,,,,,,,I
10,2,,172446-72370,,COLLER,1,1,,,,,,,,,,,,,,,,,
11,2,,172447-72380,,"RING 36",1,1,,,,,,,,,,,,,,,,,
12,2,,172447-72530,,"PISTON 50 18X28",1,,,,,,,,,,,,,,,,,,,
12-1,2,,172447-72531,,"PISTON 50 18X28",1,1,,,,,N,,72448155,M/#01143,,,,,,,,,,I
13,2,,172157-72730,,"U-NUT M18",1,1,,,,,,,,,,,,,,,,,
14,2,,172157-72010,,"SEAL SET 50A, HEAD",1,1,,,,,,,,,,,,,,,,,
20,2,,24761-020000,,"NIPPLE PT1/8,GREASE",1,1,,,,,,,,,,,,,,,,,
21,2,,24761-040000,,"NIPPLE B,GREASE",1,1,,,,,,,,,,,,,,,,,
22,1,,172446-72350,,"COVER, SLIDE",1,1,,,,,,,,,,,,,,,,,
23,1,,172186-72480,,"GUIDE,SLIDE",2,2,,,,,,,,,,,,,,,,,
24,1,,22217-100000,,"SPRING WASHER 10",1,1,,,,,,,,,,,,,,,,,
25,1,,26116-100162,,"BOLT M10X 16 PLATED",1,1,,,,,,,,,,,,,,,,,
26,1,,933147-03400,,"WASHER, BRAKE ARM",1,1,,,,,,,,,,,,,,,,,
27,1,,933168-14170,,"SPRING 16",2,2,,,,,,,,,,,,,,,,,
```

https://truckmanualshub.com/

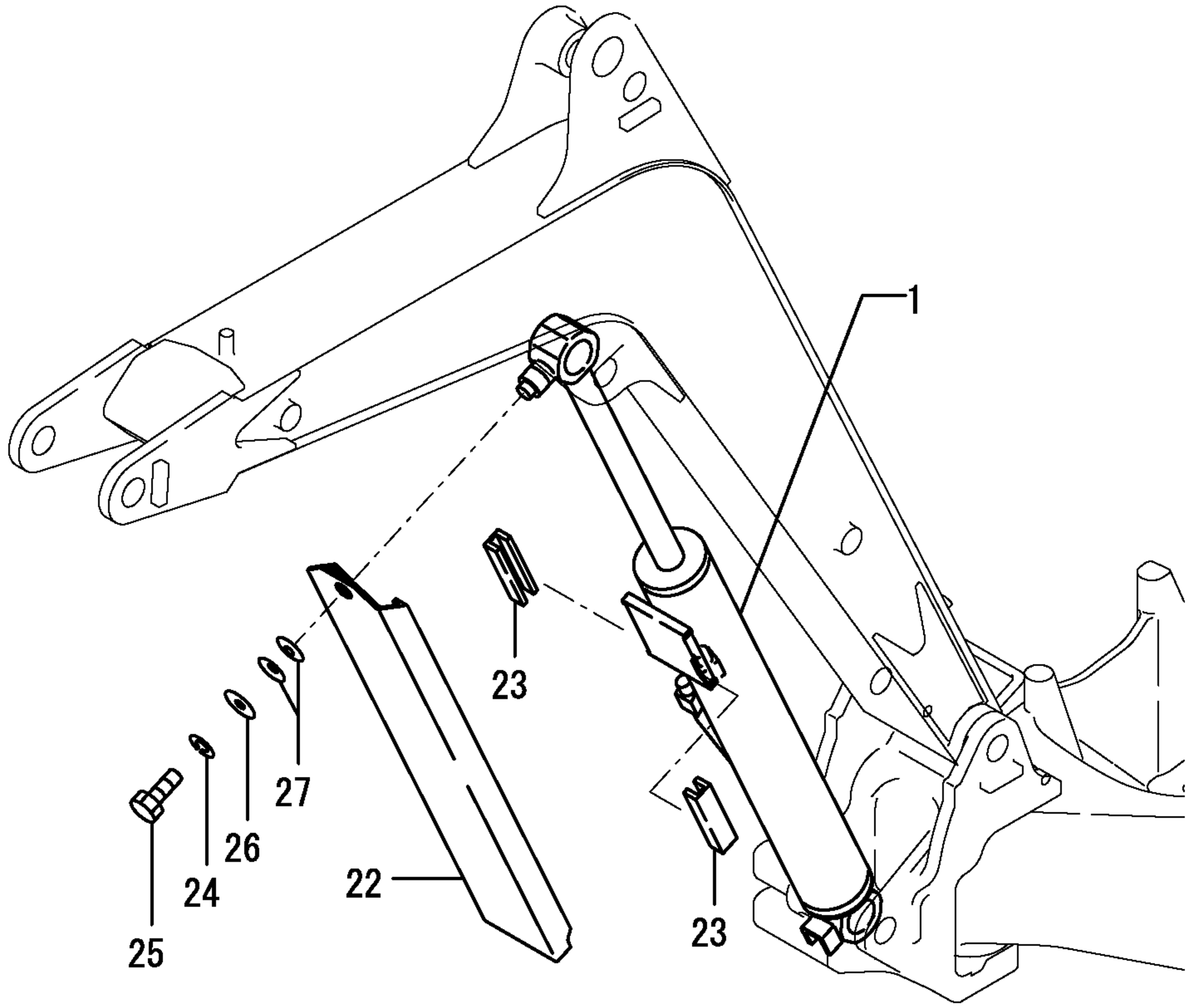

1 INC. 2～21.

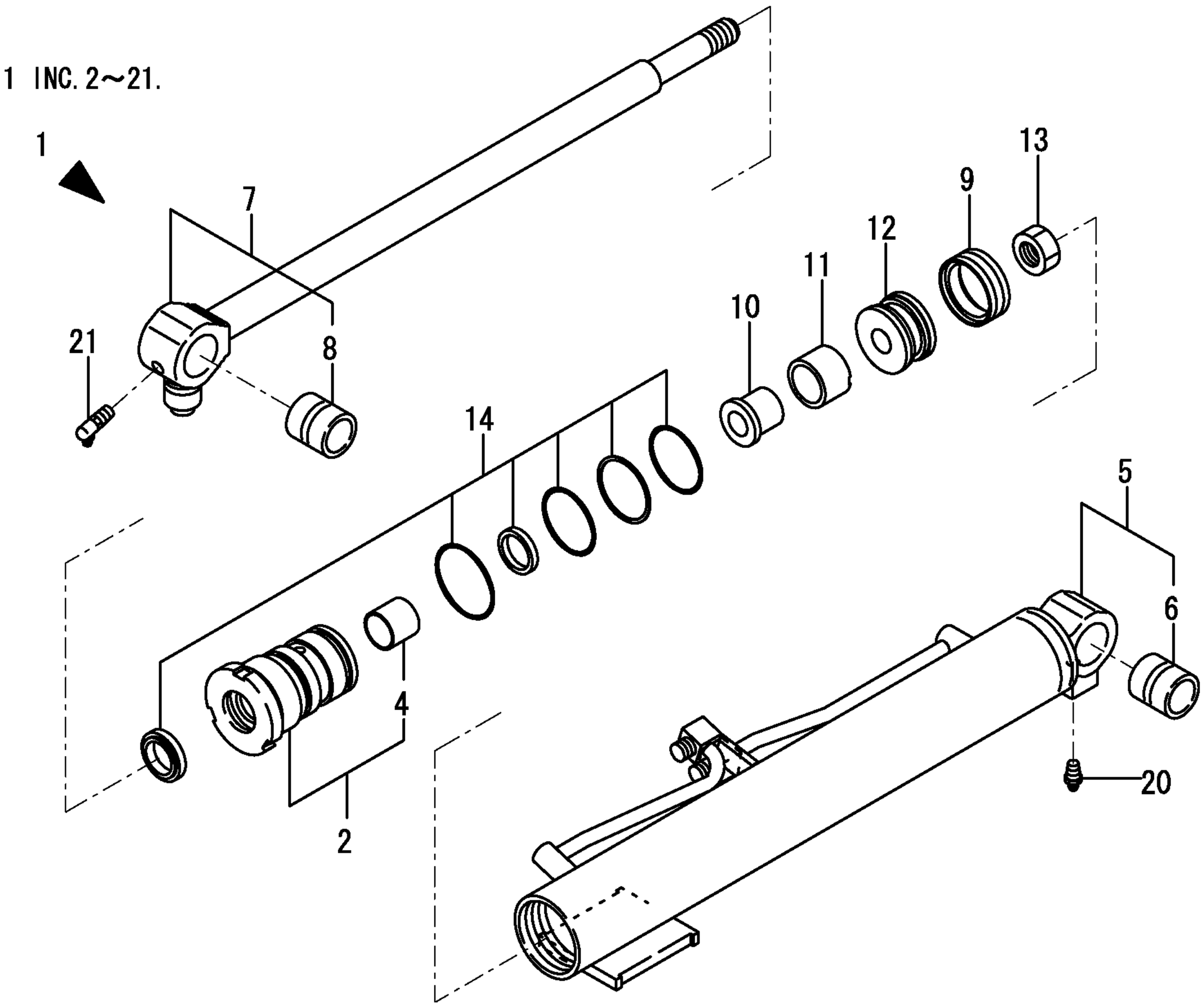

https://truckmanualshub.com/

```
1,1,,172446-72400,,"CYLINDER,ARM    (88)",1,1,,,,,,,,,,,,,,,,,
2,2,,172447-72320,,"GASKET RGU 50",1,,,,,,,,,,,,,,,,,,
2-1,2,,172447-72321,,"GASKET RGU50
ASSY",1,1,,,,,N,,72448155,M/#01143,,,,,,,,,,I
3,2,,172446-72430,,"TUBE,ARM (YELLOW:88)",1,1,,,,,,,,,,,,,,,,,
4,3,,172156-72770,,"BUSH, PIN 25 35 B",1,1,,,,,,,,,,,,,,,,,
5,2,,172446-72500,,"ROD,ARM",1,1,,,,,,,,,,,,,,,,,
6,3,,172156-72770,,"BUSH, PIN 25 35 B",1,1,,,,,,,,,,,,,,,,,
7,2,,172447-72530,,"PISTON 50 18X28",1,,,,,,,,,,,,,,,,,,
7-1,2,,172447-72531,,"PISTON 50 18X28",1,1,,,,,N,,72448155,M/#01143,,,,,,,,,,I
8,2,,172157-72620,,"HEAD 5025 B W/BUSH",1,1,,,,,,,,,,,,,,,,,
10,3,,933111-01700,,"BUSH 25 25, ROD",1,,,,,,,,,,,,,,,,,,
10-1,3,,24550-025250,,"BUSH 25X25",1,1,,,,,R,,A1686116,M/#00860,,,,,,,,,,I
11,2,,172157-72730,,"U-NUT M18",1,1,,,,,,,,,,,,,,,,,
12,2,,172157-72020,,"SEAL SET 50B, HEAD",1,1,,,,,,,,,,,,,,,,,
17,2,,24761-020000,,"NIPPLE PT1/8,GREASE",2,2,,,,,,,,,,,,,,,,,
```

https://truckmanualshub.com/

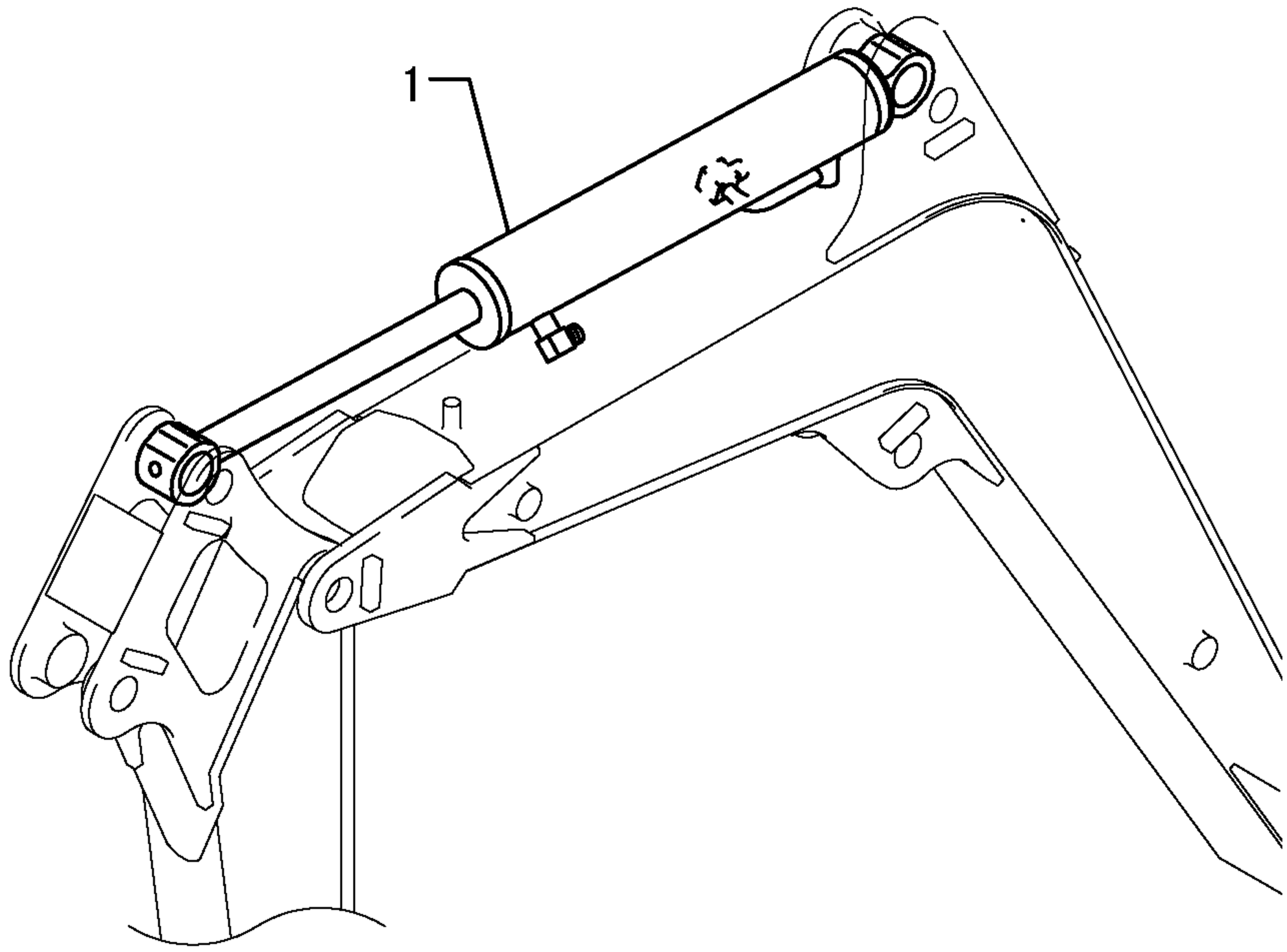

1 INC. 2～17.

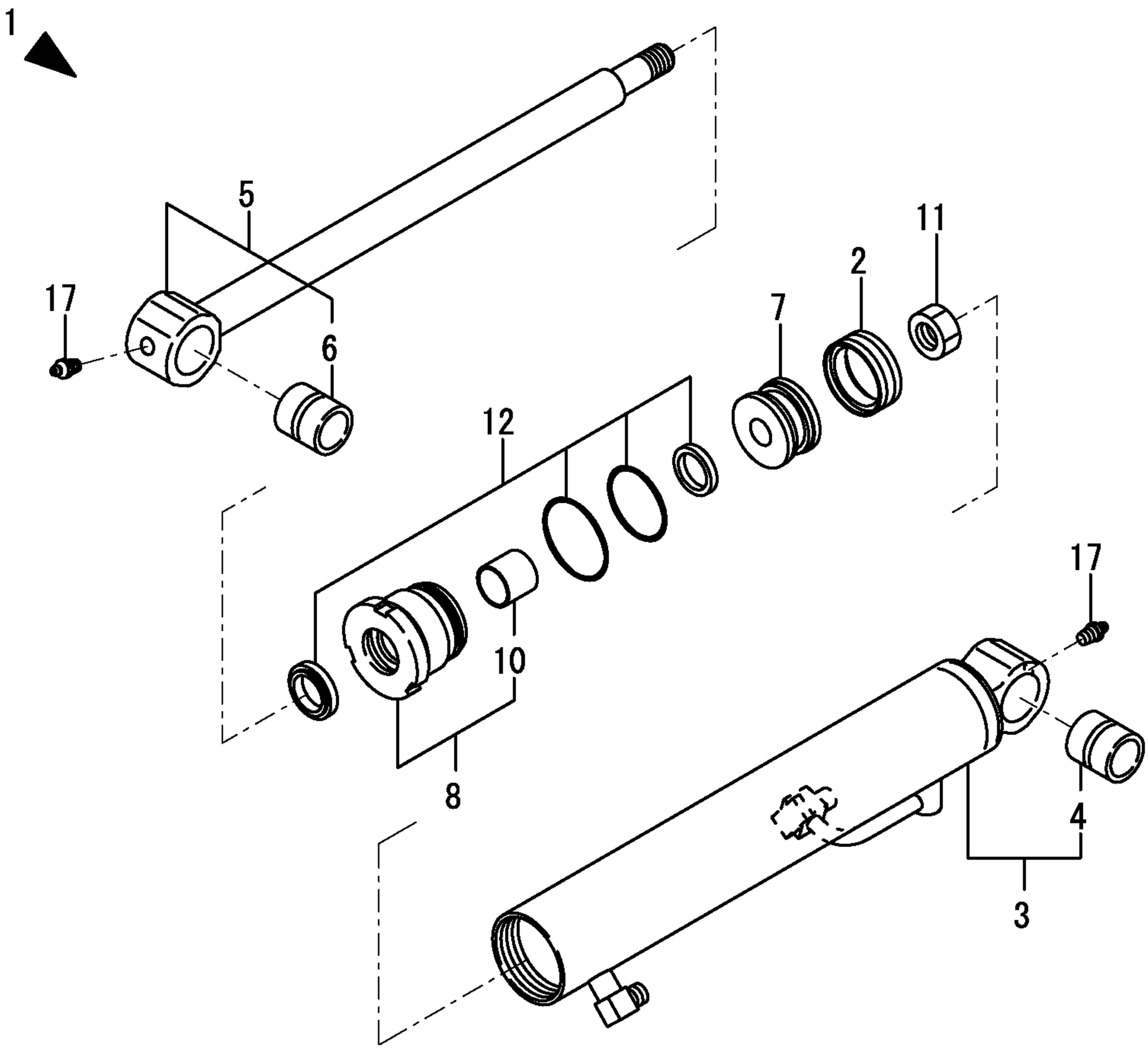

https://truckmanualshub.com/

```
1,1,,172446-72550,,"CYLINDER,BUCKET (87)",1,1,,,,,,,,,,,,,,,,
2,2,,172446-72580,,"TUBE,BUCKET(YELLOW87",1,1,,,,,,,,,,,,,,,,
3,3,,172156-72770,,"BUSH, PIN 25 35 B",1,1,,,,,,,,,,,,,,,,
4,2,,172186-72630,,HEAD,1,1,,,,,,,,,,,,,,,,
6,3,,933111-01700,,"BUSH 25 25, ROD",1,,,,,,,,,,,,,,,,,,
6-1,3,,24550-025250,,"BUSH 25X25",1,1,,,,,R,,A1686116,M/#00860,,,,,,,,,,I
7,2,,172446-72650,,"ROD,BUCKET",1,1,,,,,,,,,,,,,,,,
8,3,,172156-72410,,"PIN BUSH 25 35 A",1,1,,,,,,,,,,,,,,,,
9,2,,172446-72680,,"PISTON 45",1,,,,,,,,,,,,,,,,,,
9-1,2,,172446-72681,,"PISTON 45",1,1,,,,,N,,72448155,M/#01143,,,,,,,,,,I
10,2,,172186-72690,,GASKET,1,1,,,,,,,,,,,,,,,,
11,2,,172157-72730,,"U-NUT M18",1,1,,,,,,,,,,,,,,,,
12,2,,172186-72590,,"SEAL SET, HEAD",1,1,,,,,,,,,,,,,,,,
17,2,,24761-040000,,"NIPPLE B,GREASE",1,1,,,,,,,,,,,,,,,,,
```

https://truckmanualshub.com/

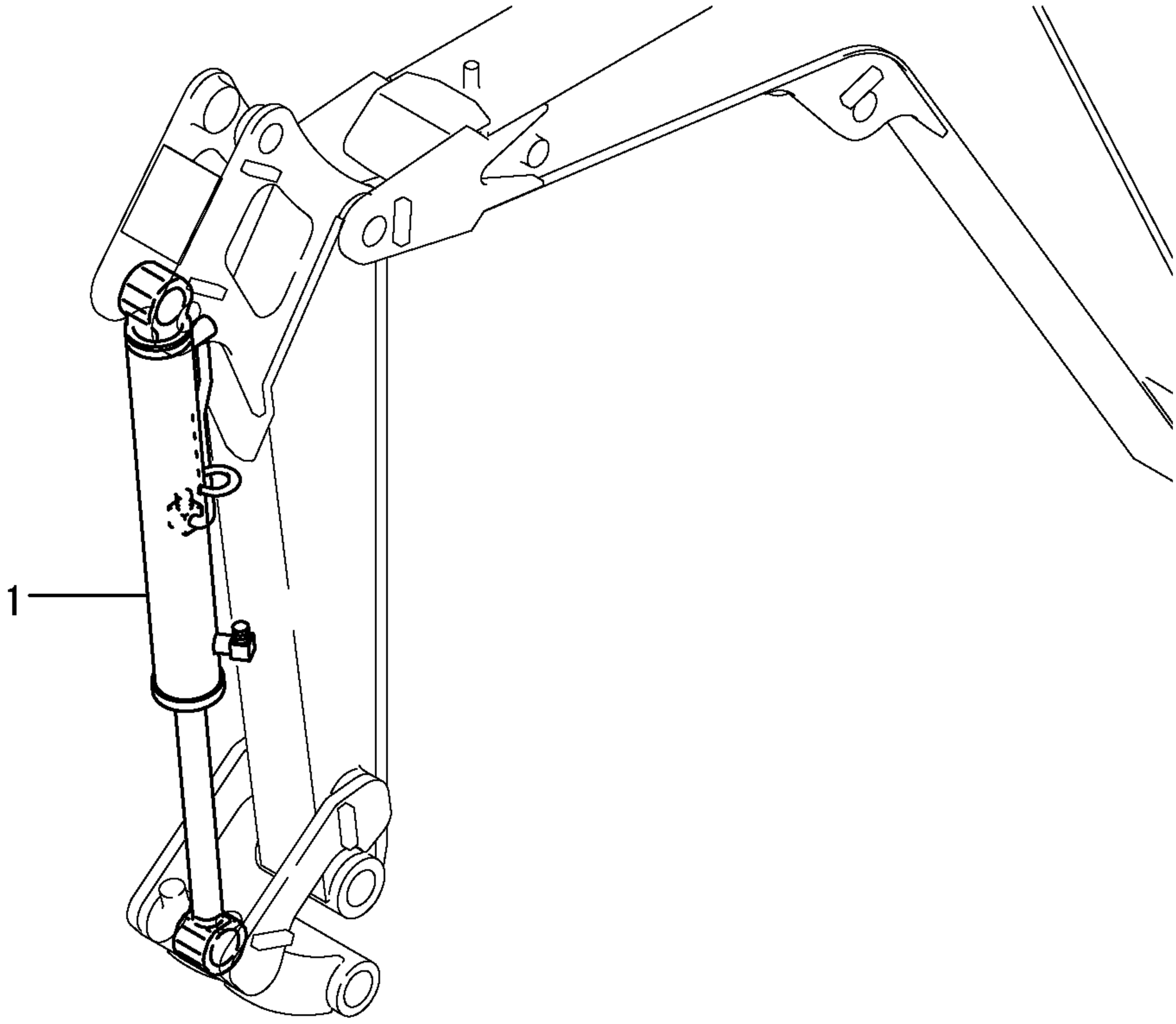

1 INC.2～17.

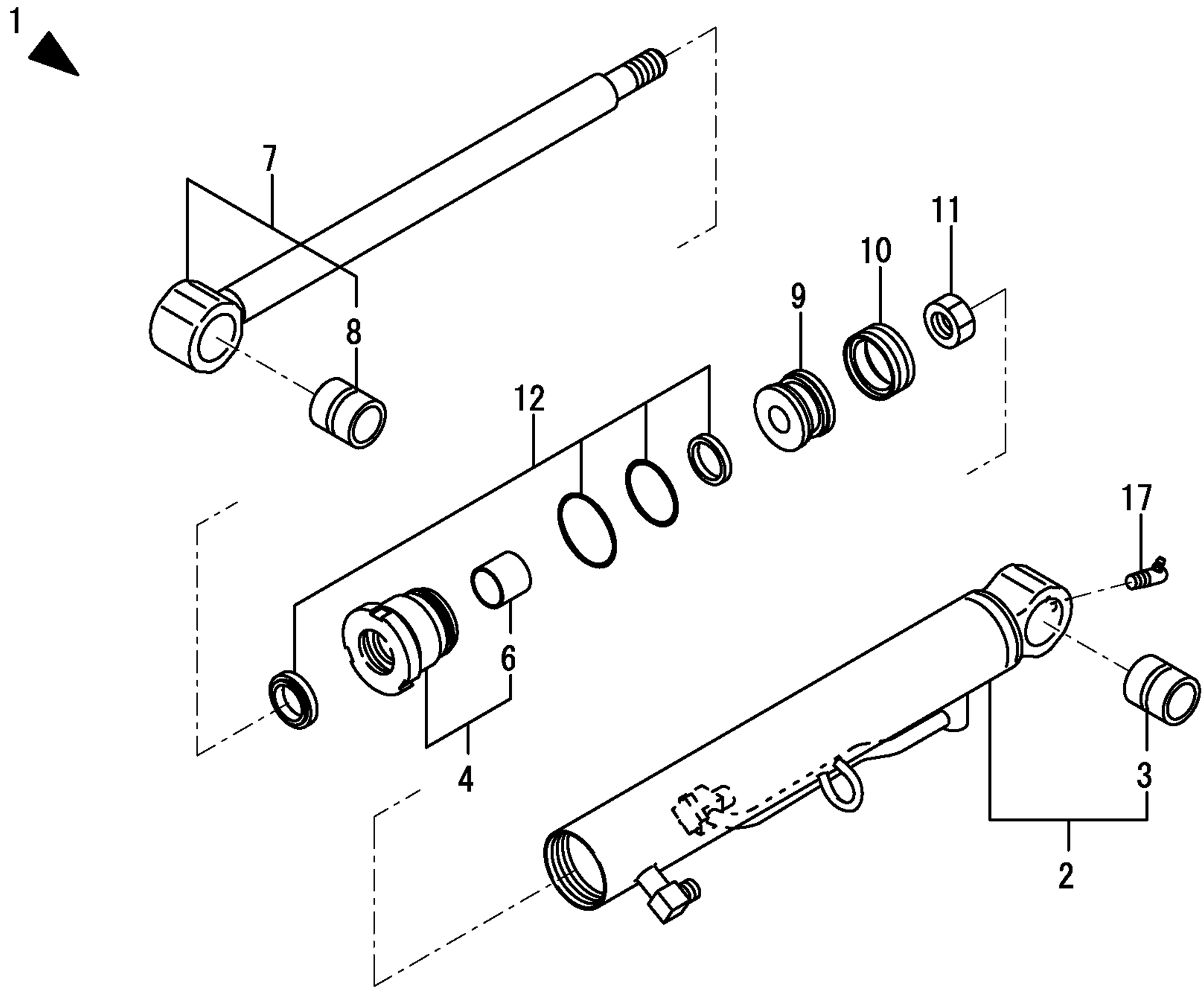

```
1,1,,172446-72800,,"CYLINDER,SWING  (87)",1,,,,,,,,,,,,,,,,,,
1-1,1,,172446-72801,,"CYLINDER,SWING
(87)",1,1,,,,,N,,724460160,*2004.06,,,,,,,,,,I
2,2,,172449-72030,,"SEAL SET,HEAD(55-30",1,1,,,,,,,,,,,,,,,,,
7,2,,172449-72320,,"GASKET RGU 55",1,,,,,,,,,,,,,,,,,,
7-1,2,,172449-72321,,"GASKET RGU55
ASSSY",1,1,,,,,N,,72448155,M/#01143,,,,,,,,,,I
8,2,,172173-72550,,"ROCK WASHER 55",1,1,,,,,,,,,,,,,,,,,
9,2,,172449-72560,,"HEAD CMP 55 30",1,1,,,,,,,,,,,,,,,,,
11,3,,933111-01800,,"BUSH 30 30",1,,,,,,,,,,,,,,,,,,
11-1,3,,24550-030300,,"BUSH 30X30",1,1,,,,,R,,A1686116,M/#00860,,,,,,,,,,I
12,2,,172141-72580,,"NUT M20",1,1,,,,,,,,,,,,,,,,,
13,2,,172449-72680,,"PISTON 55(20-28",1,,,,,,,,,,,,,,,,,,
13-1,2,,172449-72681,,"PISTON 55(20-28",1,1,,,,,N,,72448155,M/#01143,,,,,,,,,,I
14,2,,172446-72830,,"TUBE,SWING(YELLOW:87",1,1,,,,,,,,,,,,,,,,,
15,3,,172186-72910,,BUSH,1,1,,,,,,,,,,,,,,,,,
16,2,,172446-72870,,"ROD,SWING",1,,,,,,,,,,,,,,,,,,
16-1,2,,172446-72871,,"ROD ASSY,
SWING",1,1,,,,,N,,724460160,*2004.06,,,,,,,,,,I
17,3,,933125-05300,,"BUSHING 30 34.5B",1,1,,,,,,,,,,,,,,,,,
18,2,,24761-020000,,"NIPPLE PT1/8,GREASE",1,1,,,,,,,,,,,,,,,,,
```

https://truckmanualshub.com/

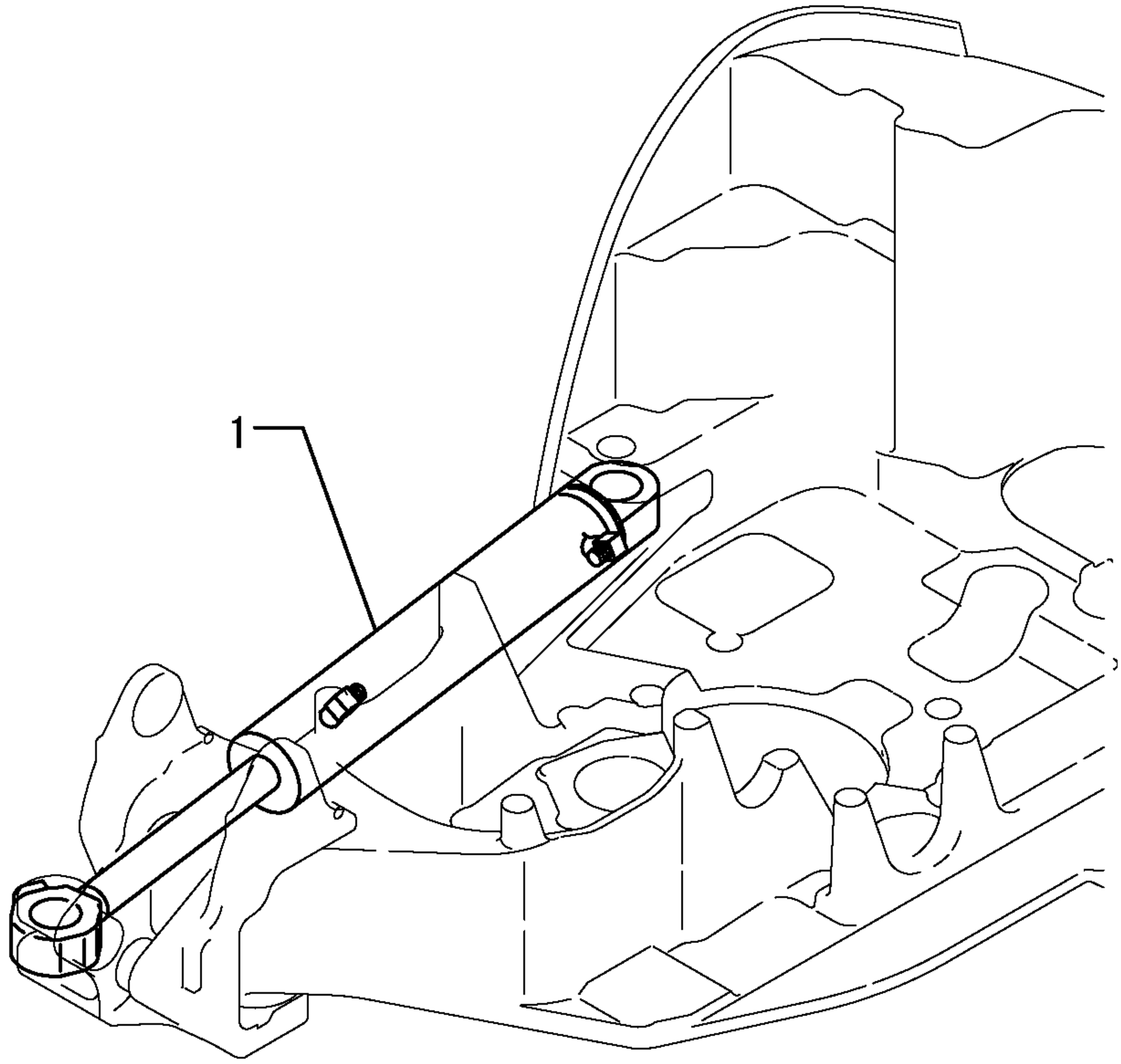

1 INC. 2～18.

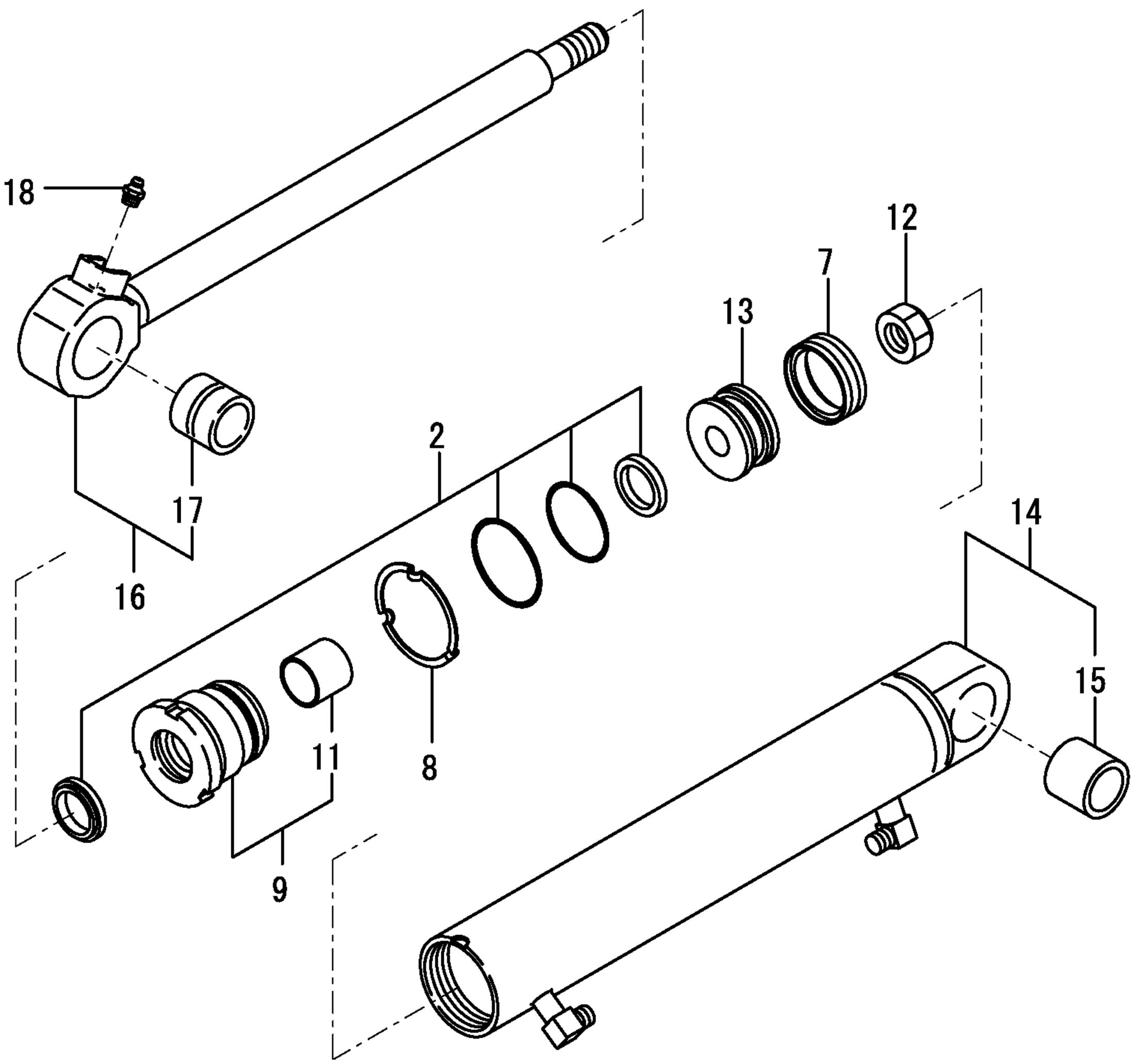

https://truckmanualshub.com/

```
1,1,,172446-72700,,"CYLINDER,BLADE  (88)",1,1,,,,,,,,,,,,,,,,
2,2,,172447-72320,,"GASKET RGU 50",1,,,,,,,,,,,,,,,,,,
2-1,2,,172447-72321,,"GASKET RGU50
ASSY",1,1,,,,,N,,72448155,M/#01143,,,,,,,,,,I
3,2,,172447-72530,,"PISTON 50 18X28",1,,,,,,,,,,,,,,,,,,
3-1,2,,172447-72531,,"PISTON 50 18X28",1,1,,,,,N,,72448155,M/#00143,,,,,,,,,,I
4,2,,172157-72620,,"HEAD 5025 B W/BUSH",1,1,,,,,,,,,,,,,,,,
6,3,,933111-01700,,"BUSH 25 25, ROD",1,,,,,,,,,,,,,,,,,,
6-1,3,,24550-025250,,"BUSH 25X25",1,1,,,,,R,,A1686116,M/#00860,,,,,,,,,,I
7,2,,172157-72730,,"U-NUT M18",1,1,,,,,,,,,,,,,,,,
8,2,,172446-72730,,"TUBE,BLADE(GREEN:88)",1,1,,,,,,,,,,,,,,,,
9,3,,172156-72410,,"PIN BUSH 25 35 A",1,1,,,,,,,,,,,,,,,,
10,2,,172157-72020,,"SEAL SET 50B, HEAD",1,1,,,,,,,,,,,,,,,,
15,2,,172446-72770,,"ROD,BLADE",1,1,,,,,,,,,,,,,,,,
16,3,,172156-72410,,"PIN BUSH 25 35 A",1,1,,,,,,,,,,,,,,,,
17,1,,172447-72790-2,,"PROTECTER (GREEN:88)",1,1,,,,,,,,,,,,,,,,
18,1,,26013-080162,,"BOLT W/WASHER M8X16",4,4,,,,,,,,,,,,,,,,
```

https://truckmanualshub.com/

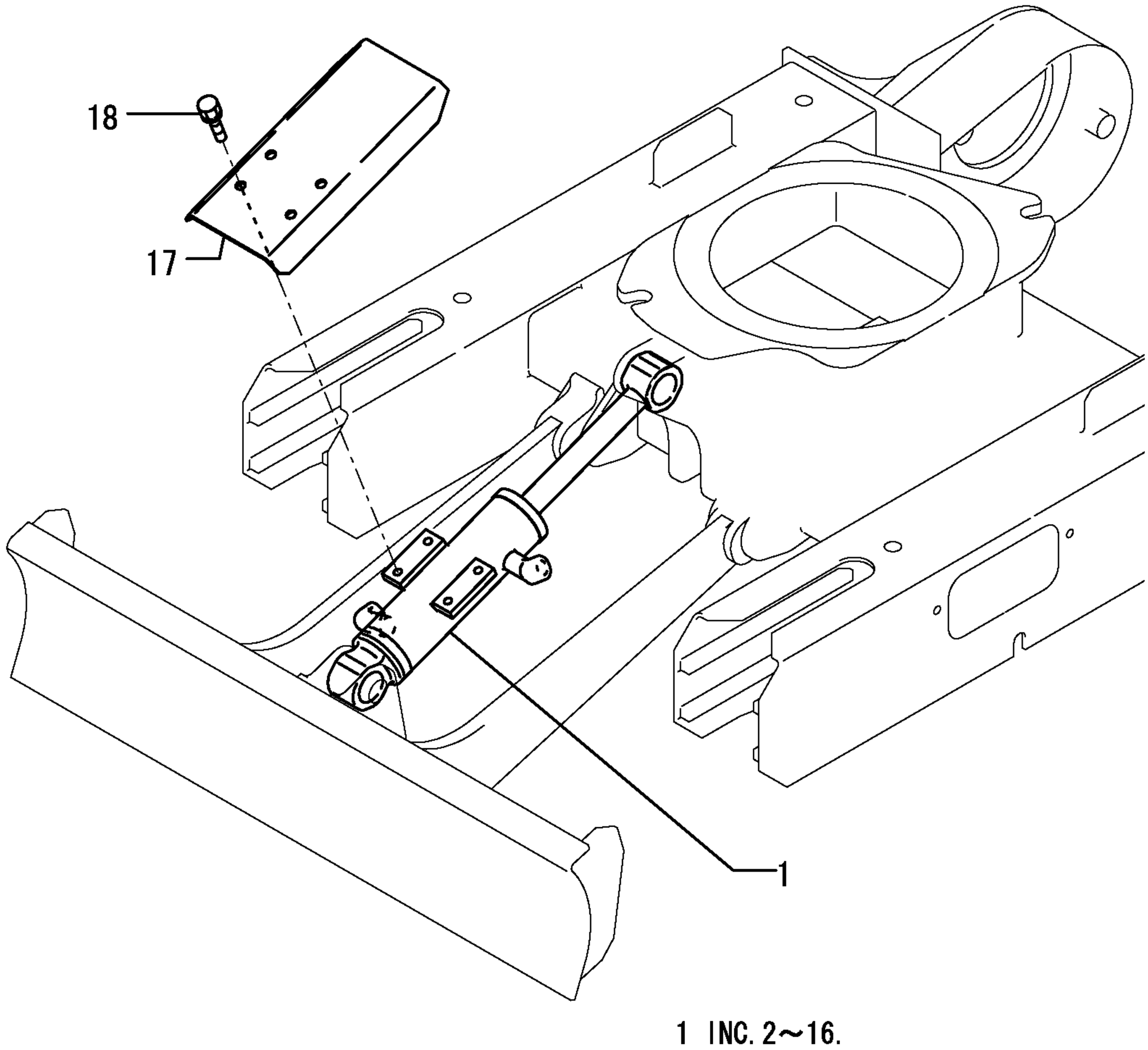

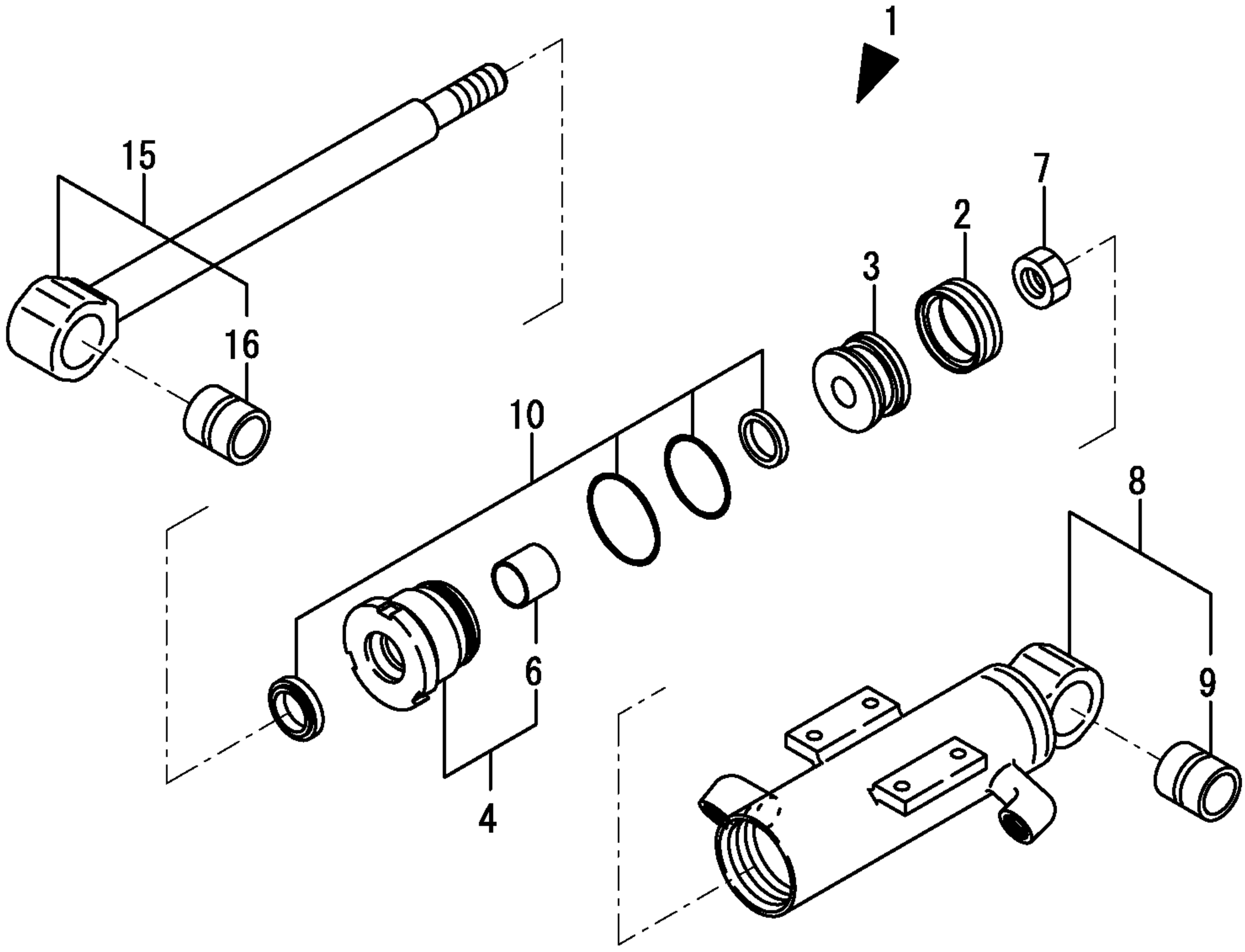

https://truckmanualshub.com/

```
1,1,,172446-72900,,"CYLINDER L,W/S  (88)",1,1,,,,,,,,,,,,,,,,
2,2,,172447-72320,,"GASKET RGU 50",1,,,,,,,,,,,,,,,,,,
2-1,2,,172447-72321,,"GASKET RGU50
ASSY",1,1,,,,,N,,72448155,M/#01143,,,,,,,,,,I
3,2,,172447-72530,,"PISTON 50 18X28",1,,,,,,,,,,,,,,,,,,
3-1,2,,172447-72531,,"PISTON 50 18X28",1,1,,,,,N,,72448155,M/#01143,,,,,,,,,,I
4,2,,172157-72620,,"HEAD 5025 B W/BUSH",1,1,,,,,,,,,,,,,,,,
6,3,,933111-01700,,"BUSH 25 25, ROD",1,,,,,,,,,,,,,,,,,,
6-1,3,,24550-025250,,"BUSH 25X25",1,1,,,,,R,,A1686116,M/#00860,,,,,,,,,,I
7,2,,172157-72730,,"U-NUT M18",1,1,,,,,,,,,,,,,,,,
8,2,,172157-72020,,"SEAL SET 50B, HEAD",1,1,,,,,,,,,,,,,,,,
13,2,,172446-72910,,"TUBE L,W/S(GREEN:88)",1,1,,,,,,,,,,,,,,,,
14,2,,172446-72970,,ROD,1,1,,,,,,,,,,,,,,,,
15,2,,24761-020000,,"NIPPLE PT1/8,GREASE",1,1,,,,,,,,,,,,,,,,
16,1,,172446-72940,,"CYLINDER R,W/S  (88)",1,1,,,,,,,,,,,,,,,,
17,2,,172447-72320,,"GASKET RGU 50",1,,,,,,,,,,,,,,,,,,
17-1,2,,172447-72321,,"GASKET RGU50
ASSY",1,1,,,,,N,,72448155,M/#01143,,,,,,,,,,I
18,2,,172447-72530,,"PISTON 50 18X28",1,,,,,,,,,,,,,,,,,,
18-1,2,,172447-72531,,"PISTON 50 18X28",1,1,,,,,N,,72448155,M/#01143,,,,,,,,,,I
19,2,,172157-72620,,"HEAD 5025 B W/BUSH",1,1,,,,,,,,,,,,,,,,
21,3,,933111-01700,,"BUSH 25 25, ROD",1,,,,,,,,,,,,,,,,,,
21-1,3,,24550-025250,,"BUSH 25X25",1,1,,,,,R,,A1686116,M/#00860,,,,,,,,,,I
22,2,,172157-72730,,"U-NUT M18",1,1,,,,,,,,,,,,,,,,
23,2,,172157-72020,,"SEAL SET 50B, HEAD",1,1,,,,,,,,,,,,,,,,
28,2,,172446-72950,,"TUBE R,W/S(GREEN:88)",1,1,,,,,,,,,,,,,,,,
29,2,,172446-72970,,ROD,1,1,,,,,,,,,,,,,,,,
30,2,,24761-020000,,"NIPPLE PT1/8,GREASE",1,1,,,,,,,,,,,,,,,,
31,1,,172446-73010-2,,"COVER L   (GREEN:88)",1,1,,,,,,,,,,,,,,,,
32,1,,172446-73030-2,,"COVER R   (GREEN:88)",1,1,,,,,,,,,,,,,,,,
33,1,,26013-100162,,"BOLT M10X 16",4,4,,,,,,,,,,,,,,,,
```

https://truckmanualshub.com/

16 INC. 17～30.

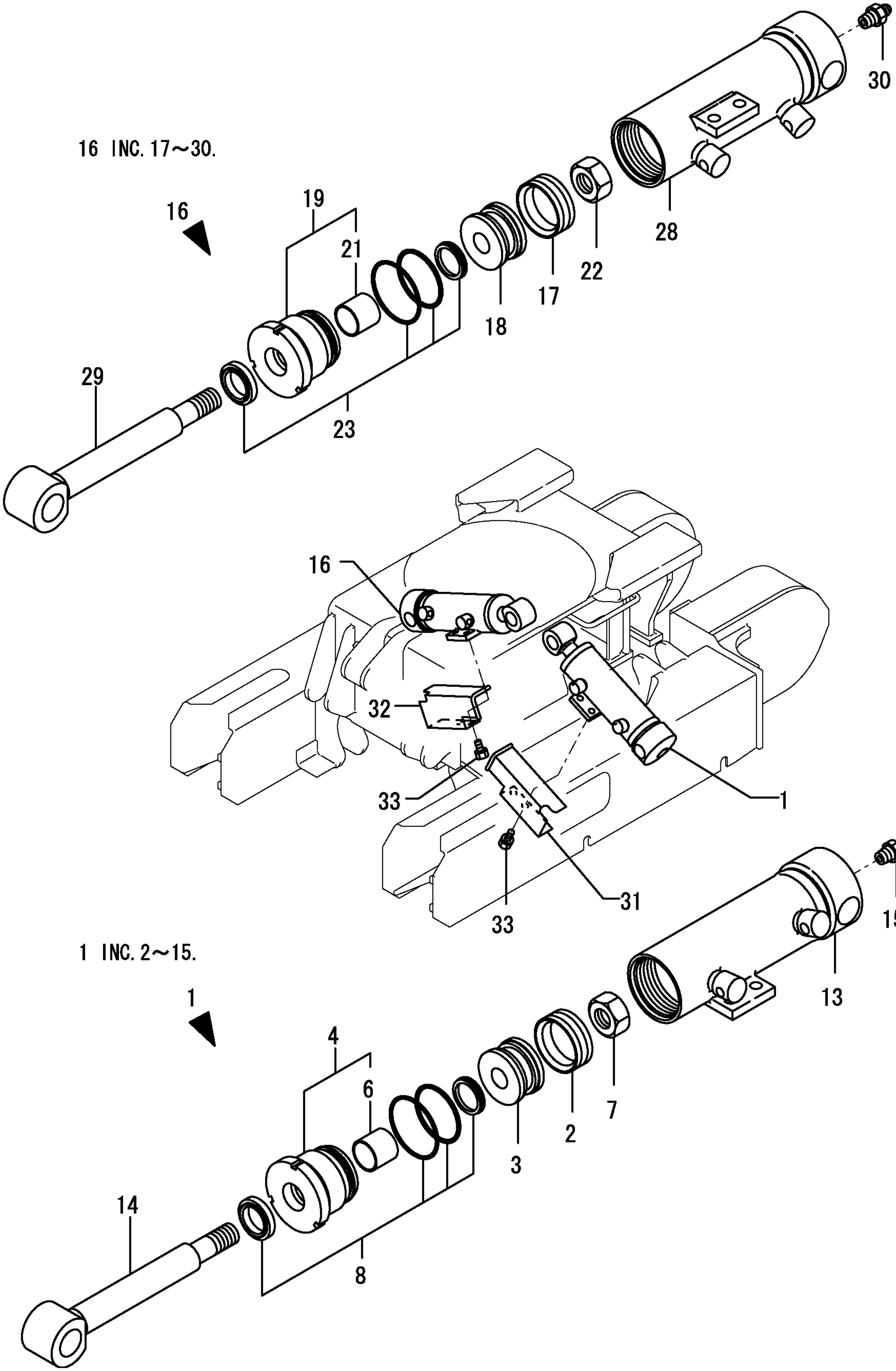

1 INC. 2～15.

https://truckmanualshub.com/

```
1,1,,172447-73300,,"MOTOR CMP,TRAVEL",2,2,,,,,,,,,,,,,,,,
2,2,,172447-53560,,"PLATE ASSY,BASE",2,2,,,,,,,,,,,,,,,,
3,3,,172157-70450,,RING,4,4,,,,,,,,,,,,,,,,,,,I
7,3,,172186-73160,,PLUG,4,4,,,,,,,,,,,,,,,,,,,I
12,3,,172447-73440,,"SPRING,V2",4,4,,,,,,,,,,,,,,,,,,,I
13,3,,172447-73450,,"SPRING,V3",2,2,,,,,,,,,,,,,,,,,,,I
16,3,,172447-73480,,NEEDLE,4,4,,,,,,,,,,,,,,,,,,,I
18,3,,172422-73550,,PLUG,4,4,,,,,,,,,,,,,,,,,,,I
19,3,,172422-73550,,PLUG,8,8,,,,,,,,,,,,,,,,,,,I
20,3,,172422-73650,,PLUG,4,4,,,,,,,,,,,,,,,,,,,I
21,3,,172187-73670,,PLUG,4,4,,,,,,,,,,,,,,,,,,,I
22,3,,22351-050012,,"PIN 5X12,SPRING",2,2,,,,,,,,,,,,,,,,,,,I
23,3,,24101-060020,,"BALL BEARING",2,2,,,,,,,,,,,,,,,,,,,I
24,3,,24311-000100,,"O-RING 1A P-10.0",4,4,,,,,,,,,,,,,,,,,,,I
25,3,,24315-000140,,"O-RING 1B P-14.0",4,4,,,,,,,,,,,,,,,,,,,I
26,3,,24315-000180,,"O-RING 1B P-18.0",4,4,,,,,,,,,,,,,,,,,,,I
27,2,,172157-70090,,"SNAP RING",2,2,,,,,,,,,,,,,,,,,,,I
28,2,,172447-73100,,PLATE,2,2,,,,,,,,,,,,,,,,,,,I
29,2,,172447-73120,,"GEAR .1",8,8,,,,,,,,,,,,,,,,,,,I
30,2,,172447-73140,,"GEAR .2",2,2,,,,,,,,,,,,,,,,,,,I
31,2,,172447-73150,,"RING,SEAL",2,2,,,,,,,,,,,,,,,,,,,I
32,2,,172447-73160,,"PLATE,THRUST",2,2,,,,,,,,,,,,,,,,,,,I
33,2,,172447-73170,,SEAL,2,2,,,,,,,,,,,,,,,,
34,2,,172447-73180,,"RING,SNAP",2,2,,,,,,,,,,,,,,,,,,,I
35,2,,172447-73190,,RING,6,6,,,,,,,,,,,,,,,,,,,I
37,2,,172186-73240,,"BOLT,HEX SOCKET",14,14,,,,,,,,,,,,,,,,,,,I
38,2,,172447-73250,,"SLANT PLATE",2,2,,,,,,,,,,,,,,,,,,,I
39,2,,172447-73280,,BALL,4,4,,,,,,,,,,,,,,,,,,,I
40,2,,172126-73400,,"SNAP RING",2,2,,,,,,,,,,,,,,,,,,,I
41,2,,172186-73410,,NEEDLE,90,90,,,,,,,,,,,,,,,,,,,I
42,2,,172447-73510,,"WASHER,THRUST",6,6,,,,,,,,,,,,,,,,,,,I
43,2,,172425-73540,,PIN,2,2,,,,,,,,,,,,,,,,,,,I
44,2,,172447-73550,,"CARRIER KIT",2,2,,,,,,,,,,,,,,,,,,,I
46,3,,172157-70240,,"SNAP RING",12,12,,,,,,,,,,,,,,,,,,,I
52,3,,172186-73450,,"RING,SNAP",2,2,,,,,,,,,,,,,,,,,,,I
53,3,,22242-000150,,"CIRCLIP   15",2,2,,,,,,,,,,,,,,,,,,,I
54,3,,22351-030012,,"SPRING PIN 3X12",6,6,,,,,,,,,,,,,,,,,,,I
55,2,,172187-73570,,PLUG,4,4,,,,,,,,,,,,,,,,,,,I
56,2,,172447-73570,,"KIT,SLANT PLATE",2,2,,,,,,,,,,,,,,,,,,,I
58,3,,172186-73230,,"OIL SEAL",2,2,,,,,,,,,,,,,,,,,,,I
61,2,,172447-73580,,"CYLINDER BARREL ASSY",2,2,,,,,,,,,,,,,,,,
71,2,,172447-73590,,"ORING KIT",2,2,,,,,,,,,,,,,,,,
72,3,,172186-73230,,"OIL SEAL",2,2,,,,,,,,,,,,,,,,
73,3,,172447-73500,,O-RING,2,2,,,,,,,,,,,,,,,,
74,3,,24315-000060,,"O-RING 1B P-6.0",2,2,,,,,,,,,,,,,,,,
75,3,,24315-000110,,"O-RING 1B P-11.0",4,4,,,,,,,,,,,,,,,,
76,3,,24315-000140,,"O-RING 1B P-14.0",4,4,,,,,,,,,,,,,,,,
77,3,,24315-000140,,"O-RING 1B P-14.0",4,4,,,,,,,,,,,,,,,,
78,3,,24315-000180,,"O-RING 1B P-18.0",4,4,,,,,,,,,,,,,,,,
79,3,,24321-001300,,"O-RING 1A G-130.0",2,2,,,,,,,,,,,,,,,,
80,3,,24325-001050,,"PACKING  G105",2,2,,,,,,,,,,,,,,,,
81,2,,172187-73600,,PLUG,4,4,,,,,,,,,,,,,,,,,,,I
82,2,,172186-73710,,SHAFT,2,2,,,,,,,,,,,,,,,,,,,I
83,2,,24101-060044,,"BALL BEARING #6004",2,2,,,,,,,,,,,,,,,,,,,I
84,1,,26450-100252,,"BOLT M10X 25",16,16,,,,,,,,,,,,,,,,
```

https://truckmanualshub.com/

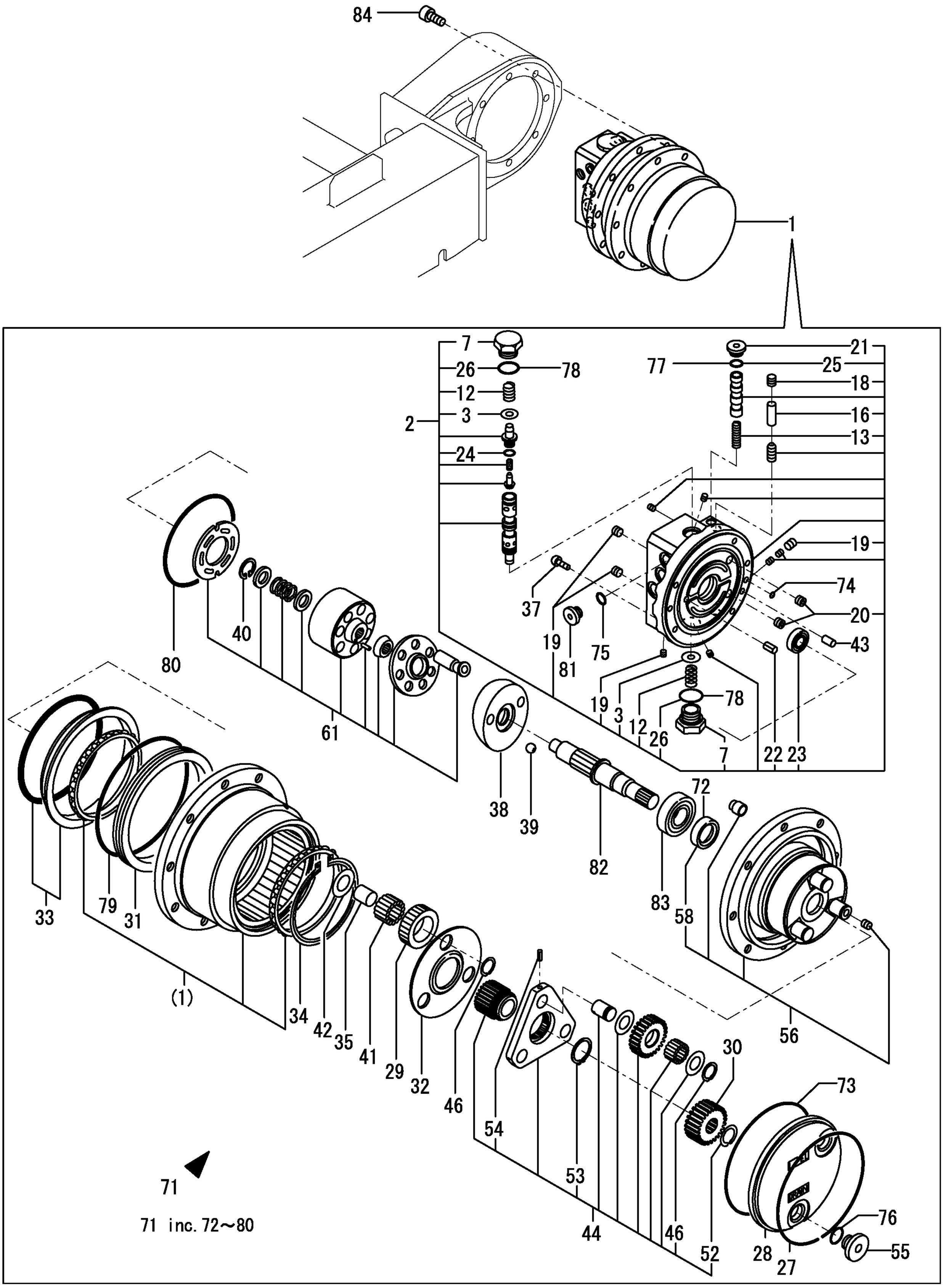

https://truckmanualshub.com/

```
1,1,,172446-57300,,"BEARING RETAINER(88)",1,1,,,,,,,,,,,,,,,,
2,1,,172157-57310,,"PINION 13T",1,1,,,,,,,,,,,,,,,,
3,1,,172157-57360,,"NEEDLE BEARING",1,1,,,,,,,,,,,,,,,,
4,1,,22242-000350,,"CIRCLIP   35",1,1,,,,,,,,,,,,,,,,
5,1,,22252-000260,,"CIRCLIP   26",1,1,,,,,,,,,,,,,,,,
6,1,,22252-000720,,"CIRCLIP   72",1,1,,,,,,,,,,,,,,,,
7,1,,24101-062074,,"BALL BEARING",1,1,,,,,,,,,,,,,,,,
8,1,,24163-405300,,"BEARING, INNER",1,1,,,,,,,,,,,,,,,,
9,1,,26013-100252,,"BOLT W/WASHER M10X25",4,4,,,,,,,,,,,,,,,,
10,1,,27260-260000,,"PLUG 26,BORE",1,1,,,,,,,,,,,,,,,,
11,1,,172446-73310,,"MOTOR CMP,TURNING",1,1,,,,,,,,,,,,,,,,
12,2,,172446-73320,,ROLLER,1,1,,,,,,,,,,,,,,,,,,,I
13,2,,172131-73360,,BOLT,7,7,,,,,,,,,,,,,,,,,,,I
14,2,,172131-73381,,DRIVE,1,1,,,,,,,,,,,,,,,,,,,I
15,2,,172131-73410,,"END CAP",1,1,,,,,,,,,,,,,,,,,,,I
16,2,,172131-73420,,"PLATE,SPACER",1,1,,,,,,,,,,,,,,,,,,,I
17,2,,172131-73440,,"PLUG,HOUSING",2,2,,,,,,,,,,,,,,,,,,,I
18,2,,172131-73450,,HOUSING,1,1,,,,,,,,,,,,,,,,,,,I
19,2,,172131-73460,,"SHAFT,OUT PUT",1,1,,,,,,,,,,,,,,,,,,,I
20,2,,172131-73470,,"BEARING,THRUST RACE",1,1,,,,,,,,,,,,,,,,,,,I
21,2,,172131-73480,,"BEARING, NEEDLE",1,1,,,,,,,,,,,,,,,,,,,I
22,2,,172131-73490,,"BOLT,BROACH",4,4,,,,,,,,,,,,,,,,,,,I
23,2,,172131-73551,,"SEAL KIT, MOTOR",1,1,,,,,,,,,,,,,,,,
24,3,,172131-73501,,"SEAL, OIL",1,1,,,,,,,,,,,,,,,,
25,3,,172131-73510,,"SEAL,DUST",1,1,,,,,,,,,,,,,,,,
26,3,,172131-73520,,O-RING,1,1,,,,,,,,,,,,,,,,
27,3,,172131-73530,,O-RING,3,3,,,,,,,,,,,,,,,,
28,3,,172131-73540,,O-RING,4,4,,,,,,,,,,,,,,,,
29,2,,172131-73931,,FLANGE,1,1,,,,,,,,,,,,,,,,
30,3,,172131-73431,,FLANGE,1,1,,,,,,,,,,,,,,,,,,,I
31,3,,172131-73501,,"SEAL, OIL",1,1,,,,,,,,,,,,,,,,
32,3,,172131-73510,,"SEAL,DUST",1,1,,,,,,,,,,,,,,,,
33,3,,172131-73520,,O-RING,1,1,,,,,,,,,,,,,,,,
34,3,,172131-73760,,"WASHER, BACK UP",1,1,,,,,,,,,,,,,,,,,,,I
35,1,,26013-120352,,"BOLT M12X 35",2,2,,,,,,,,,,,,,,,,
```

https://truckmanualshub.com/

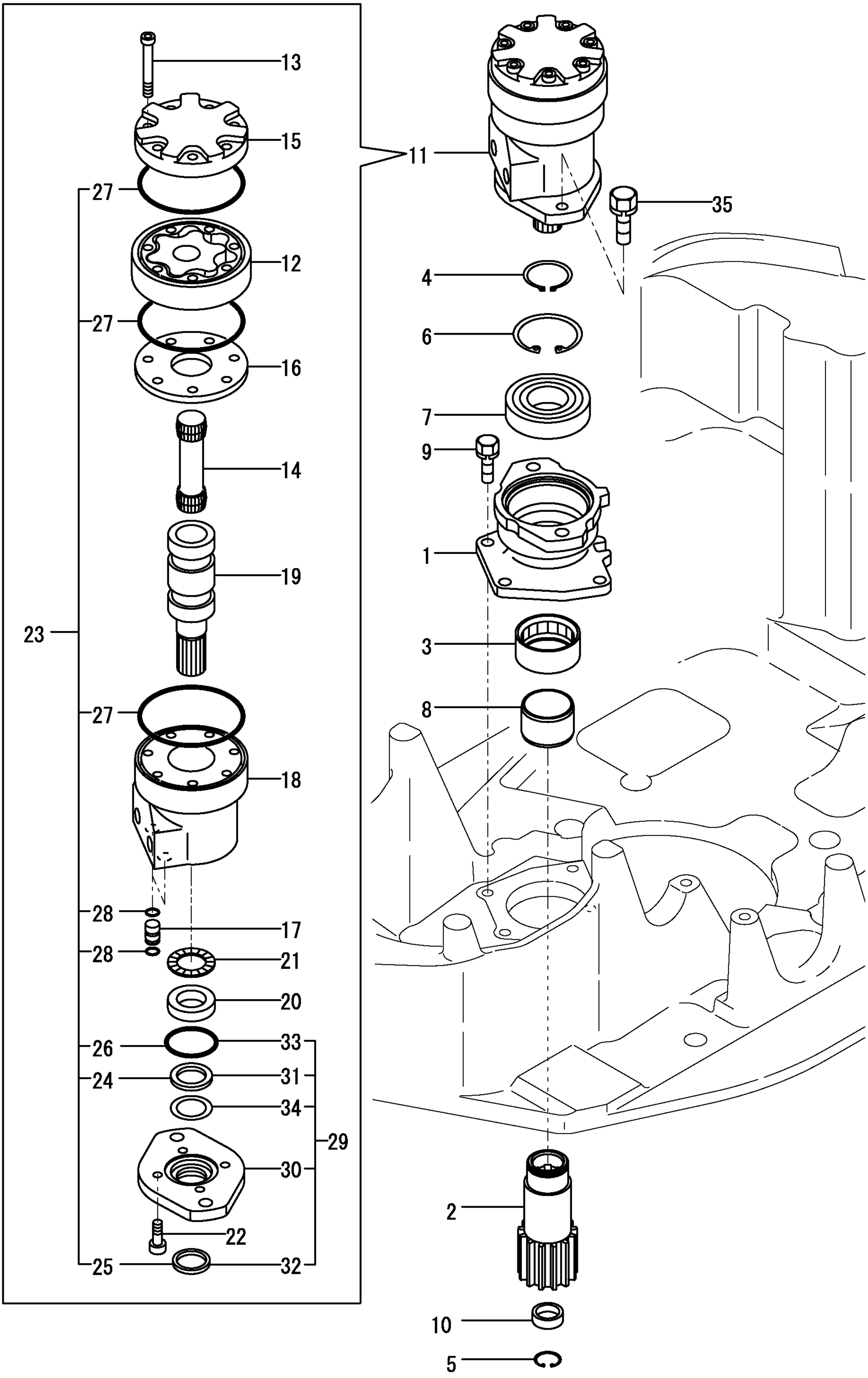

https://truckmanualshub.com/

```
1,1,,172446-73850,,SWIVEL,1,1,,,,,,,,,,,,,,,,,
2,2,,172446-73860,,"HUB,SWIVEL",1,1,,,,,,,,,,,,,,,,,
3,2,,172446-73870,,"SHAFT,SWIVEL",1,1,,,,,,,,,,,,,,,,,
6,2,,172446-73890,,"FLANGE,SWIVEL",1,1,,,,,,,,,,,,,,,,,
7,2,,172157-73910,,"SPACER, SWIVEL",1,1,,,,,,,,,,,,,,,,,
8,2,,22242-000401,,"CIRCLIP 40-S",1,1,,,,,,,,,,,,,,,,,
9,2,,23871-010000,,"PLUG PT1/8,SCREW",8,8,,,,,,,,,,,,,,,,,
10,2,,26013-080352,,"BOLT M 8X 35",3,3,,,,,,,,,,,,,,,,,
11,2,,172446-73900,,"SEAL SET,SWIVEL",1,1,,,,,,,,,,,,,,,,,
12,3,,172142-73800,,"O-RING 55.76X5.7",2,2,,,,,,,,,,,,,,,,,
13,3,,172458-73820,,"SEAL, SWIVEL",9,9,,,,,,,,,,,,,,,,,
14,3,,172148-73870,,"LING EL, BUCK UP",1,1,,,,,,,,,,,,,,,,,
15,3,,24321-000700,,"O-RING 1A G70.0,NBR",1,1,,,,,,,,,,,,,,,,,
16,1,,22217-100000,,"SPRING WASHER 10",3,3,,,,,,,,,,,,,,,,,
17,1,,26072-100302,,"BOLT 10* 30",3,3,,,,,,,,,,,,,,,,,
```

https://truckmanualshub.com/

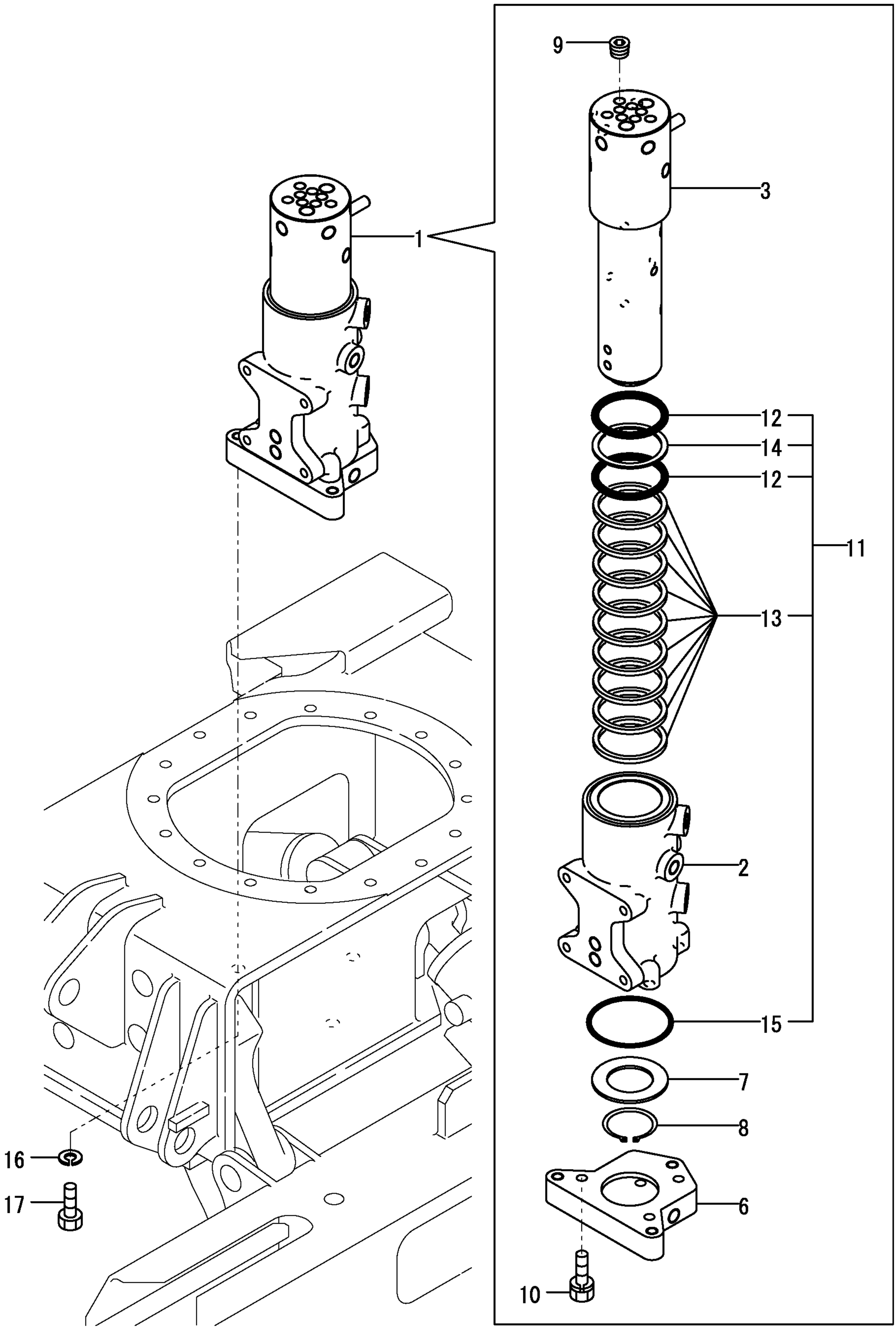

https://truckmanualshub.com/

```
1,1,,172446-74210,,"CONTROL VALVE(EP",1,1,,,,,,,,,,,,,,,,
2,2,,172157-70710,,O-RING,2,2,,,,,,,,,,,,,,,,
3,2,,172446-74120,,"P1 SECTION ASSY",1,1,,,,,,,,,,,,,,,,
4,3,,172157-70720,,"PLUG PF3/8",1,1,,,,,,,,,,,,,,,,
5,3,,172447-74250,,"P1 SECTION",1,1,,,,,,,,,,,,,,,,,,,I
6,3,,172183-74350,,"PLUG PF1/4",1,1,,,,,,,,,,,,,,,,
7,3,,24315-000110,,"O-RING 1B P-11.0",1,1,,,,,,,,,,,,,,,,
8,3,,24315-000140,,"O-RING 1B P-14.0",1,1,,,,,,,,,,,,,,,,
9,2,,172446-74220,,"MAIN RELIEF VALVE",1,1,,,,,,,,,,,,,,,,
10,2,,172446-74550,,"OPTION SECTION",1,1,,,,,,,,,,,,,,,,
11,3,,172157-70630,,"BAC UP RING",1,1,,,,,,,,,,,,,,,,
12,3,,172157-70640,,"PLATE, O-RING",1,1,,,,,,,,,,,,,,,,,,,I
13,3,,172157-70700,,"SEAT, SPRING",1,1,,,,,,,,,,,,,,,,
14,3,,172157-70820,,"CAP,RETURN SPRING",1,1,,,,,,,,,,,,,,,,,,,I
15,3,,172446-74580,,"OPTION SECTION SUB",1,1,,,,,,,,,,,,,,,,,,,I
18,3,,24311-240100,,"O-RING 1A P-10A",1,1,,,,,,,,,,,,,,,,
19,3,,24315-000110,,"O-RING 1B P-11.0",1,1,,,,,,,,,,,,,,,,
20,3,,26450-050452,,"BOLT M 5X 45",2,2,,,,,,,,,,,,,,,,,,,I
21,3,,26557-050102,,"SCREW M 5X 10",2,2,,,,,,,,,,,,,,,,,,,I
22,2,,172446-74560,,BOLT,3,3,,,,,,,,,,,,,,,,
23,2,,24315-000100,,"O-RING 1B P-10.0",4,4,,,,,,,,,,,,,,,,
24,2,,26716-080002,,"NUT M 8",6,6,,,,,,,,,,,,,,,,
25,1,,26013-080162,,"BOLT W/WASHER M8X16",3,3,,,,,,,,,,,,,,,,
26,1,,26013-080202,,"BOLT W/WASHER M8X20",3,,,,,,,1,,,,,,,,,,,,,I
```

https://truckmanualshub.com/

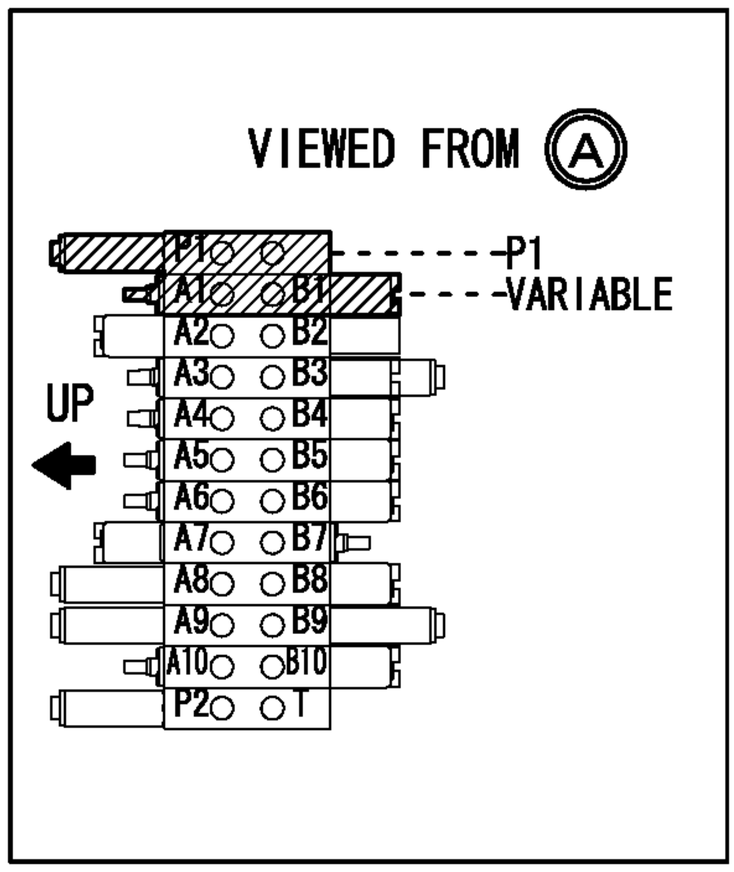

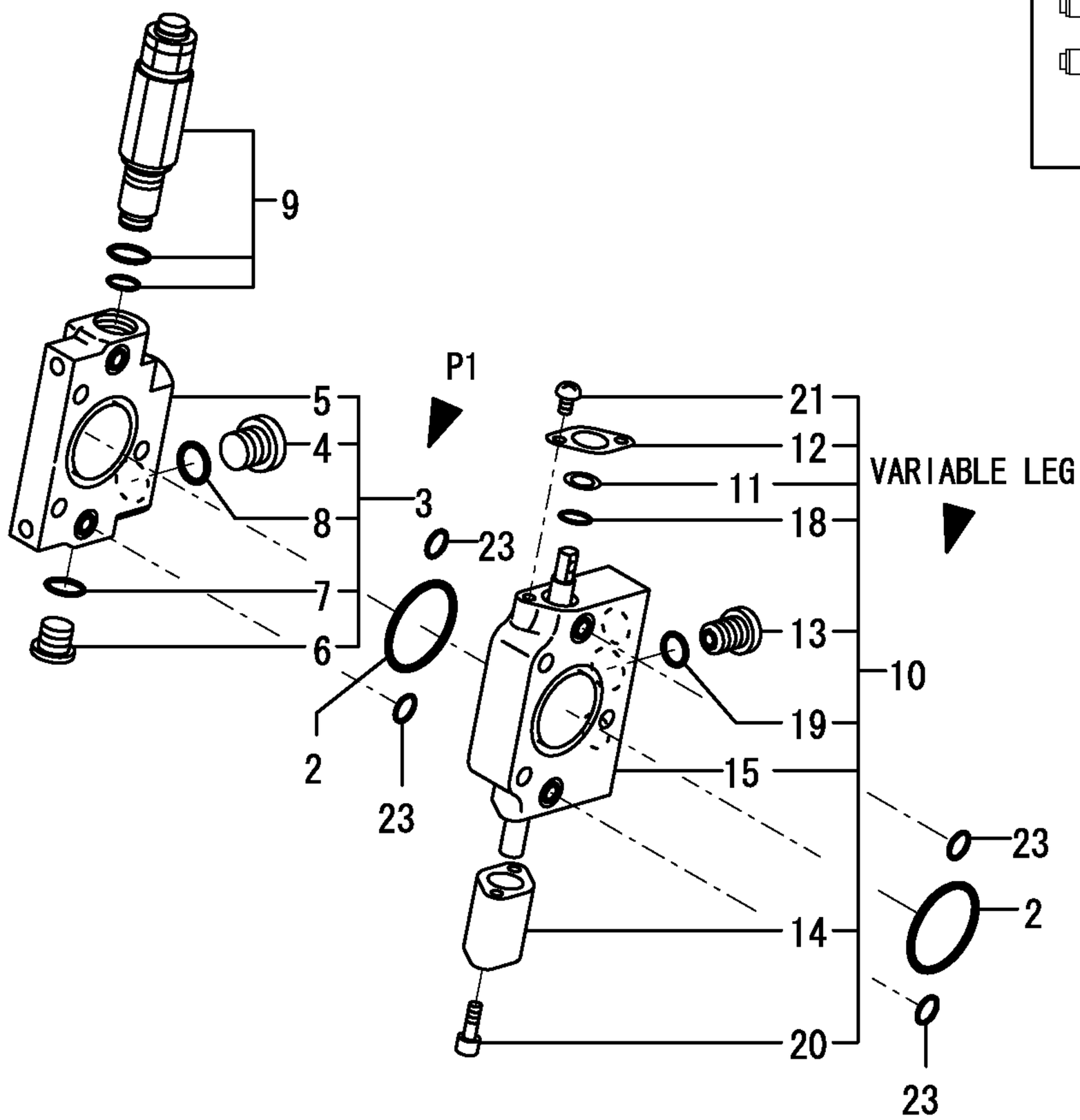

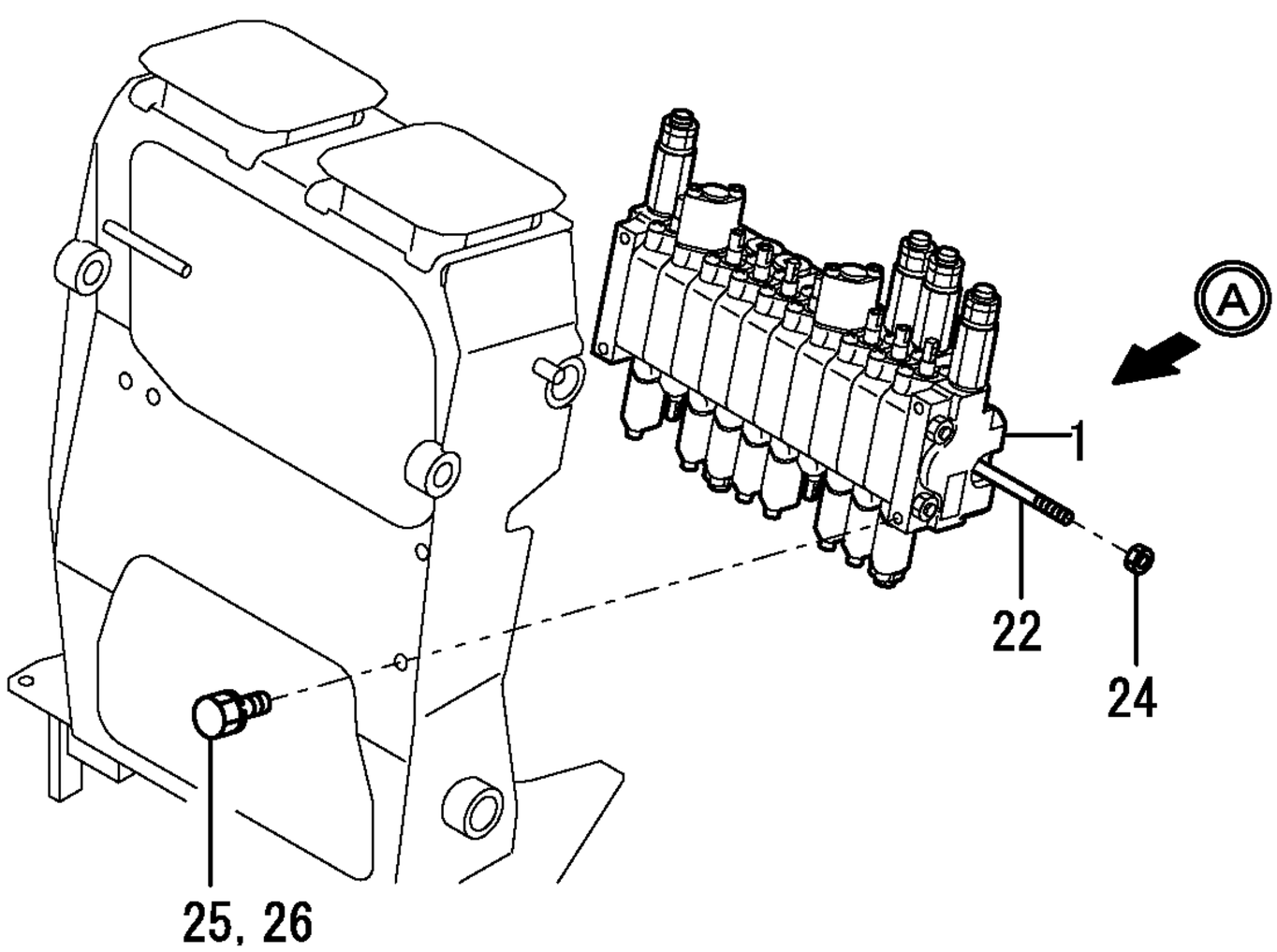

CONTROL VALVE ASSY
172446-74210
Fig. 41 Ref. NO. 1
INC Fig. 41 Ref. NO. 2～24.
Fig. 42 Ref. NO. 1～36.
Fig. 43 Ref. NO. 1～32.
Fig. 44 Ref. NO. 1～31.
Fig. 45 Ref. NO. 1～34.
Fig. 46 Ref. NO. 1～19.

https://truckmanualshub.com/

```
1,2,,172157-70710,,O-RING,2,2,,,,,,,,,,,,,,,,,,,I
2,2,,172446-74130,,"SWING SECTION ASSY",1,1,,,,,,,,,,,,,,,,
3,3,,172157-70630,,"BAC UP RING",1,1,,,,,,,,,,,,,,,,
4,3,,172157-70640,,"PLATE, O-RING",1,1,,,,,,,,,,,,,,,,,,,,I
5,3,,172157-70690,,SPRING,1,1,,,,,,,,,,,,,,,,,,,I
6,3,,172157-70700,,"SEAT, SPRING",1,1,,,,,,,,,,,,,,,,
7,3,,172157-70720,,"PLUG PF3/8",1,1,,,,,,,,,,,,,,,,
8,3,,172157-70820,,"CAP,RETURN SPRING",1,1,,,,,,,,,,,,,,,,,,,,I
9,3,,172446-74410,,"SECTION,SWING ASSY",1,1,,,,,,,,,,,,,,,,,,,,I
13,3,,24311-240100,,"O-RING 1A P-10A",1,1,,,,,,,,,,,,,,,,
14,3,,24315-000110,,"O-RING 1B P-11.0",1,1,,,,,,,,,,,,,,,,
15,3,,24315-000140,,"O-RING 1B P-14.0",1,1,,,,,,,,,,,,,,,,
16,3,,26450-050452,,"BOLT M 5X 45",2,2,,,,,,,,,,,,,,,,,,,,I
17,3,,26557-050102,,"SCREW M 5X 10",2,2,,,,,,,,,,,,,,,,,,,,I
18,2,,172446-74140,,"BOOM SECTION ASSY",1,1,,,,,,,,,,,,,,,,
19,3,,172157-70630,,"BAC UP RING",1,1,,,,,,,,,,,,,,,,
20,3,,172157-70640,,"PLATE, O-RING",1,1,,,,,,,,,,,,,,,,,,,,I
21,3,,172157-70690,,SPRING,1,1,,,,,,,,,,,,,,,,,,,I
22,3,,172157-70700,,"SEAT, SPRING",1,1,,,,,,,,,,,,,,,,
23,3,,172157-70720,,"PLUG PF3/8",1,1,,,,,,,,,,,,,,,,
24,3,,172157-70820,,"CAP,RETURN SPRING",1,1,,,,,,,,,,,,,,,,,,,,I
25,3,,172446-74420,,"BOOM SECTION SUB",1,1,,,,,,,,,,,,,,,,,,,I
28,3,,172137-74520,,"VALVE, CHECK",1,1,,,,,,,,,,,,,,,,,,,I
29,3,,24311-240100,,"O-RING 1A P-10A",1,1,,,,,,,,,,,,,,,,
30,3,,24315-000110,,"O-RING 1B P-11.0",1,1,,,,,,,,,,,,,,,,
31,3,,24315-000140,,"O-RING 1B P-14.0",1,1,,,,,,,,,,,,,,,,
32,3,,26450-050452,,"BOLT M 5X 45",2,2,,,,,,,,,,,,,,,,,,,,I
33,3,,26557-050102,,"SCREW M 5X 10",2,2,,,,,,,,,,,,,,,,,,,,I
34,2,,172446-74230,,"OVERLOAD, 230",1,1,,,,,,,,,,,,,,,,
35,2,,172447-74230,,ANTI-CAVITATION,1,1,,,,,,,,,,,,,,,,
36,2,,24315-000100,,"O-RING 1B P-10.0",4,4,,,,,,,,,,,,,,,,
```

https://truckmanualshub.com/

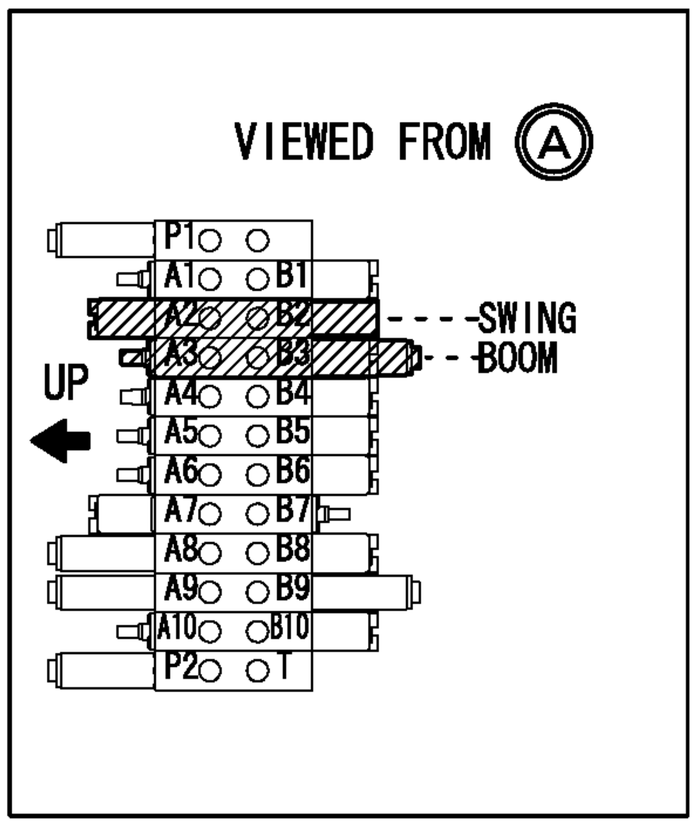

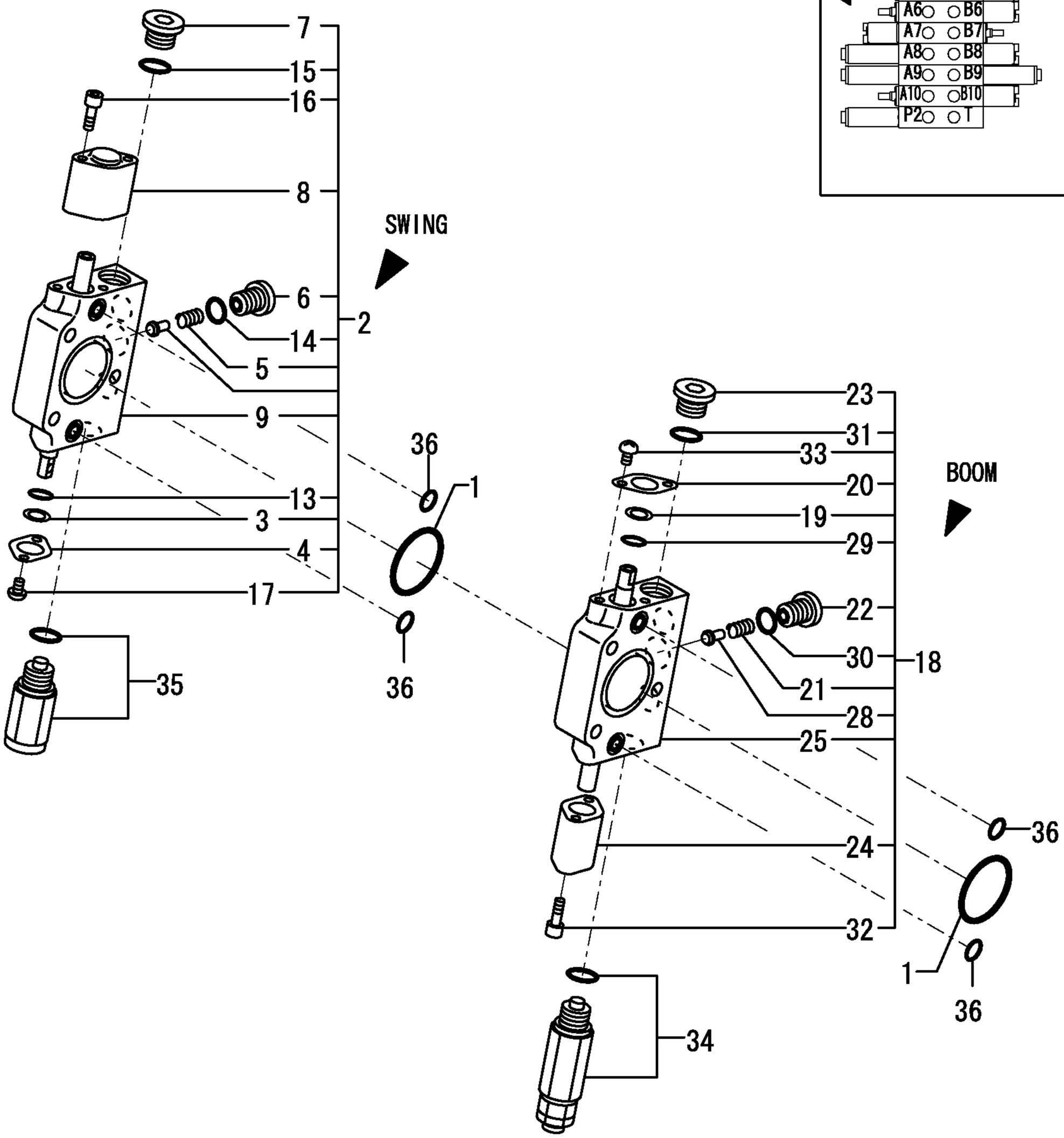

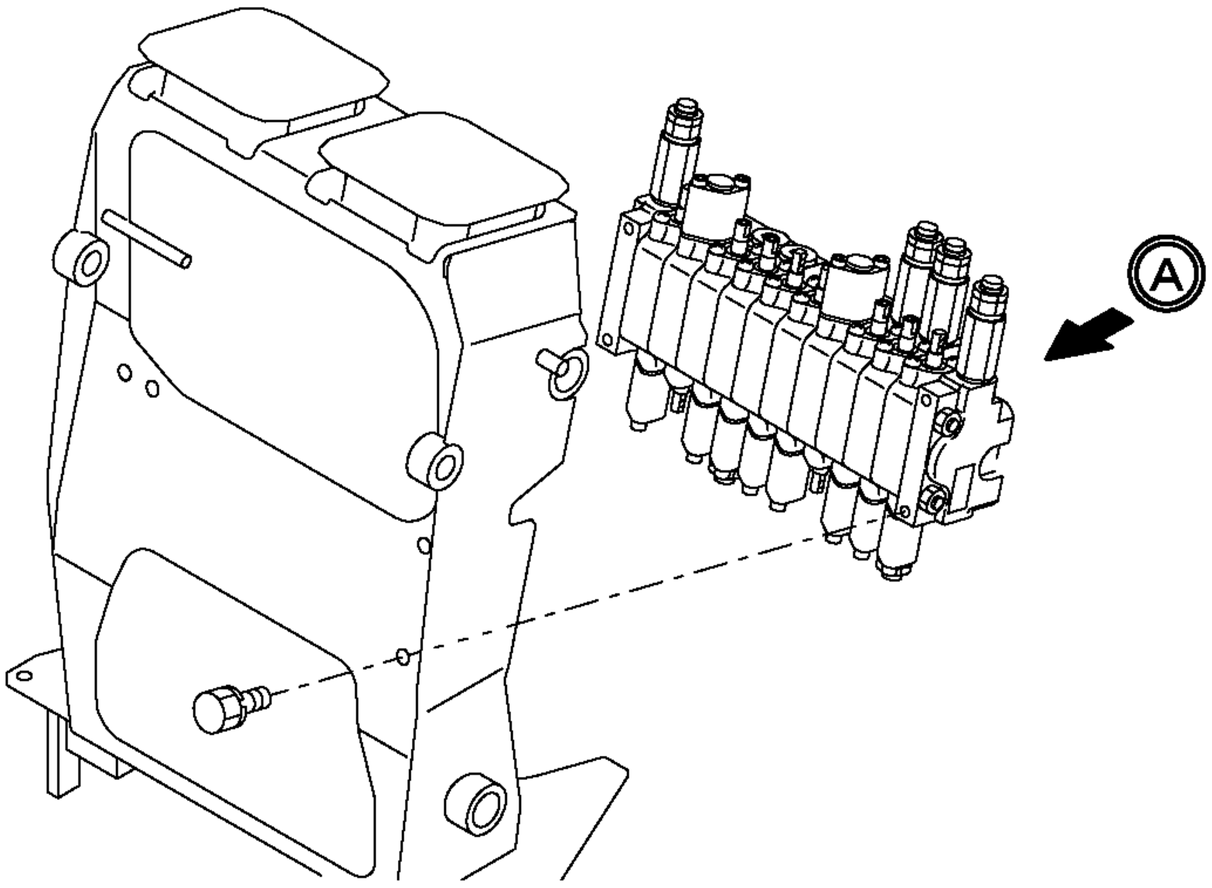

CONTROL VALVE ASSY
172446-74210
Fig.41 Ref.NO.1
INC Fig.41 Ref.NO.2～24.
Fig.42 Ref.NO.1～36.
Fig.43 Ref.NO.1～32.
Fig.44 Ref.NO.1～31.
Fig.45 Ref.NO.1～34.
Fig.46 Ref.NO.1～19.

https://truckmanualshub.com/

```
1,2,,172157-70710,,O-RING,2,2,,,,,,,,,,,,,,,,
2,2,,172446-74150,,"BUCKET SECTION ASSY",1,1,,,,,,,,,,,,,,,,
3,3,,172157-70630,,"BAC UP RING",1,1,,,,,,,,,,,,,,,,
4,3,,172157-70640,,"PLATE, O-RING",1,1,,,,,,,,,,,,,,,,,,,,I
5,3,,172157-70690,,SPRING,1,1,,,,,,,,,,,,,,,,,,,,I
6,3,,172157-70700,,"SEAT, SPRING",1,1,,,,,,,,,,,,,,,,
7,3,,172157-70720,,"PLUG PF3/8",2,2,,,,,,,,,,,,,,,,
8,3,,172157-70820,,"CAP,RETURN SPRING",1,1,,,,,,,,,,,,,,,,,,,,I
9,3,,172447-74300,,"SPRING, CHECK VALVE",1,1,,,,,,,,,,,,,,,,,,,,I
10,3,,172447-74310,,"VALVE, CHECK",1,1,,,,,,,,,,,,,,,,,,,,I
11,3,,172446-74430,,"BUCKET SECTION",1,1,,,,,,,,,,,,,,,,,,,,I
14,3,,172137-74520,,"VALVE, CHECK",1,1,,,,,,,,,,,,,,,,,,,,I
15,3,,24311-240100,,"O-RING 1A P-10A",1,1,,,,,,,,,,,,,,,,
16,3,,24315-000110,,"O-RING 1B P-11.0",1,1,,,,,,,,,,,,,,,,
17,3,,24315-000140,,"O-RING 1B P-14.0",2,2,,,,,,,,,,,,,,,,
18,3,,26450-050452,,"BOLT M 5X 45",2,2,,,,,,,,,,,,,,,,,,,,I
19,3,,26557-050102,,"SCREW M 5X 10",2,2,,,,,,,,,,,,,,,,,,,,I
20,2,,172446-74160,,"DRIVE SECTION ASSY",1,1,,,,,,,,,,,,,,,,
21,3,,172157-70630,,"BAC UP RING",1,1,,,,,,,,,,,,,,,,
22,3,,172157-70640,,"PLATE, O-RING",1,1,,,,,,,,,,,,,,,,,,,,I
23,3,,172157-70700,,"SEAT, SPRING",1,1,,,,,,,,,,,,,,,,
24,3,,172157-70820,,"CAP,RETURN SPRING",1,1,,,,,,,,,,,,,,,,,,,,I
25,3,,172446-74440,,"SECTION ASSY,TRAVEL",1,1,,,,,,,,,,,,,,,,,,,,I
28,3,,24311-240100,,"O-RING 1A P-10A",1,1,,,,,,,,,,,,,,,,
29,3,,24315-000110,,"O-RING 1B P-11.0",1,1,,,,,,,,,,,,,,,,
30,3,,26450-050452,,"BOLT M 5X 45",2,2,,,,,,,,,,,,,,,,,,,,I
31,3,,26557-050102,,"SCREW M 5X 10",2,2,,,,,,,,,,,,,,,,,,,,I
32,2,,24315-000100,,"O-RING 1B P-10.0",4,4,,,,,,,,,,,,,,,,
```

https://truckmanualshub.com/

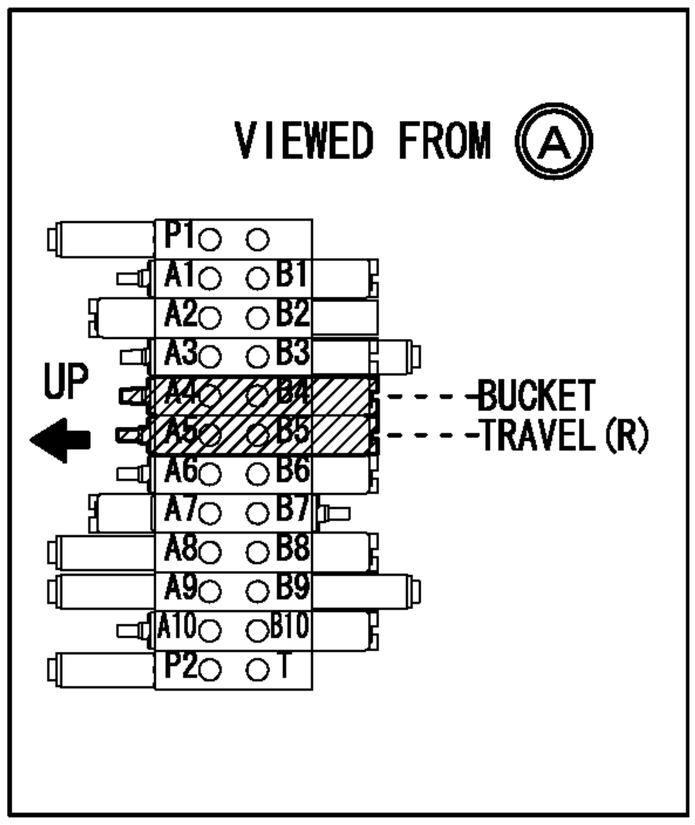

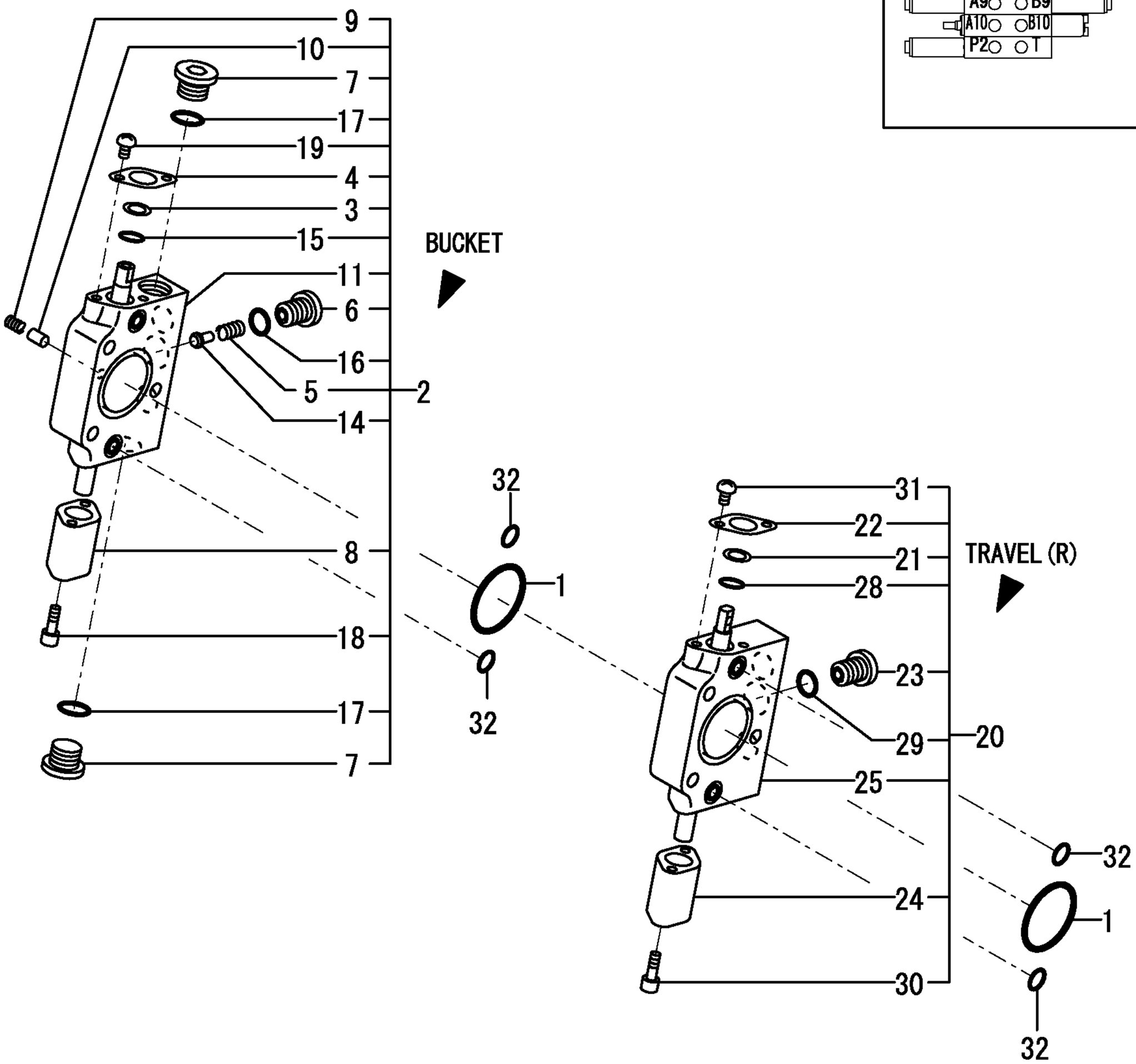

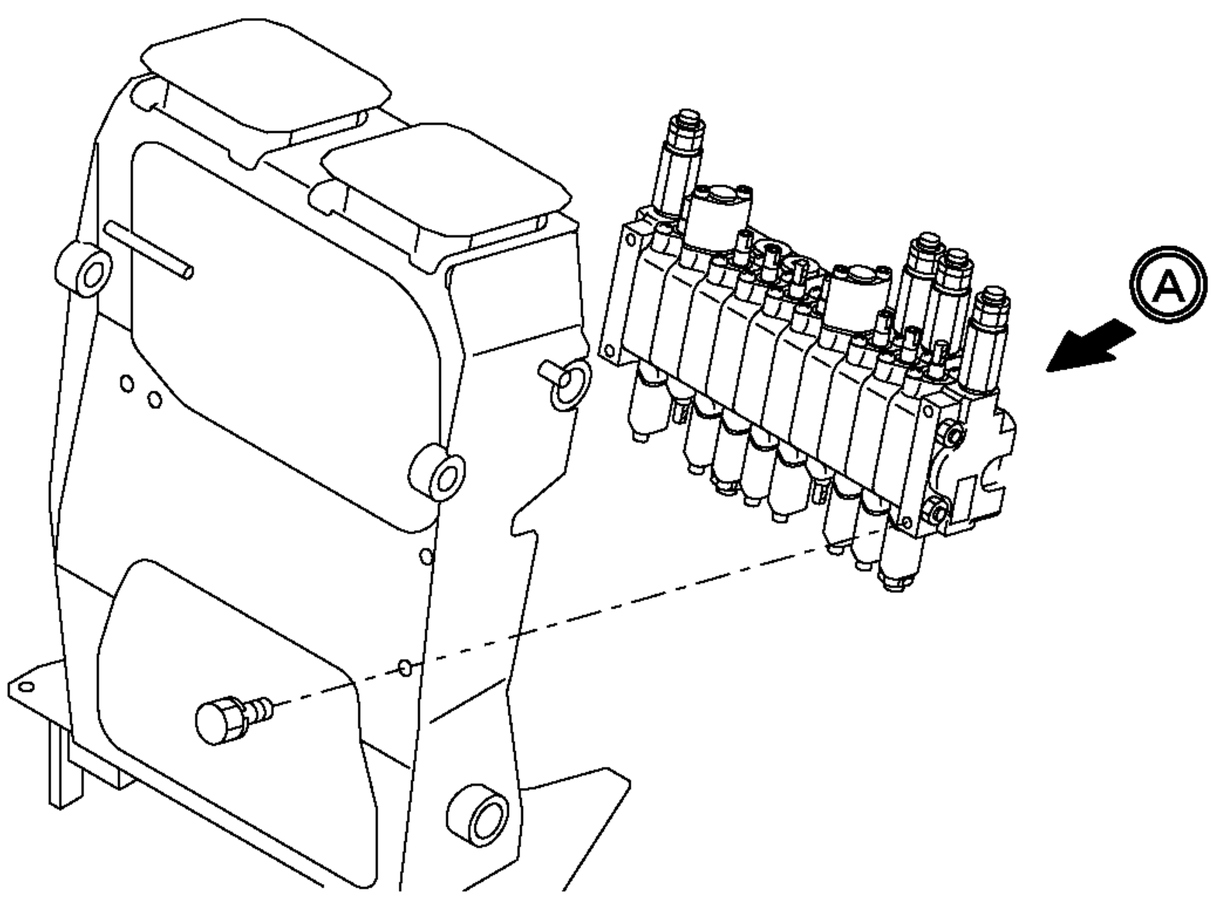

CONTROL VALVE ASSY
172446-74210
Fig.41 Ref.NO.1
INC Fig.41 Ref.NO.2～24.
Fig.42 Ref.NO.1～36.
Fig.43 Ref.NO.1～32.
Fig.44 Ref.NO.1～31.
Fig.45 Ref.NO.1～34.
Fig.46 Ref.NO.1～19.

https://truckmanualshub.com/

```
1,2,,172157-70710,,O-RING,2,2,,,,,,,,,,,,,,,,
2,2,,172446-74170,,"BLADE SECTION ASSY",1,1,,,,,,,,,,,,,,,,
3,3,,172157-70630,,"BAC UP RING",1,1,,,,,,,,,,,,,,,,
4,3,,172157-70640,,"PLATE, O-RING",1,1,,,,,,,,,,,,,,,,,,,,I
5,3,,172157-70690,,SPRING,1,1,,,,,,,,,,,,,,,,,,,,I
6,3,,172157-70700,,"SEAT, SPRING",1,1,,,,,,,,,,,,,,,,
7,3,,172157-70820,,"CAP,RETURN SPRING",1,1,,,,,,,,,,,,,,,,,,,,I
8,3,,172446-74450,,"BLADE SECTION SUB",1,1,,,,,,,,,,,,,,,,,,,,I
11,3,,172137-74520,,"VALVE, CHECK",1,1,,,,,,,,,,,,,,,,,,,,I
12,3,,24311-240100,,"O-RING 1A P-10A",1,1,,,,,,,,,,,,,,,,
13,3,,24315-000110,,"O-RING 1B P-11.0",1,1,,,,,,,,,,,,,,,,
14,3,,26450-050452,,"BOLT M 5X 45",2,2,,,,,,,,,,,,,,,,,,,,I
15,3,,26557-050102,,"SCREW M 5X 10",2,2,,,,,,,,,,,,,,,,,,,,I
16,2,,172446-74600,,"PTO SECTION ASSY",1,1,,,,,,,,,,,,,,,,
17,3,,172157-70630,,"BAC UP RING",1,1,,,,,,,,,,,,,,,,
18,3,,172157-70640,,"PLATE, O-RING",1,1,,,,,,,,,,,,,,,,,,,,I
19,3,,172157-70690,,SPRING,1,1,,,,,,,,,,,,,,,,,,,,I
20,3,,172157-70700,,"SEAT, SPRING",1,1,,,,,,,,,,,,,,,,
21,3,,172157-70820,,"CAP,RETURN SPRING",1,1,,,,,,,,,,,,,,,,,,,,I
22,3,,172137-74520,,"VALVE, CHECK",1,1,,,,,,,,,,,,,,,,,,,,I
23,3,,172446-74630,,"PTO SECTION ASSY",1,1,,,,,,,,,,,,,,,,,,,,I
26,3,,24311-240100,,"O-RING 1A P-10A",1,1,,,,,,,,,,,,,,,,
27,3,,24315-000110,,"O-RING 1B P-11.0",1,1,,,,,,,,,,,,,,,,
28,3,,26450-050452,,"BOLT M 5X 45",2,2,,,,,,,,,,,,,,,,,,,,I
29,3,,26557-050102,,"SCREW M 5X 10",2,2,,,,,,,,,,,,,,,,,,,,I
30,2,,24315-000040,,"O-RING 1A-P4",1,1,,,,,,,,,,,,,,,,
31,2,,24315-000100,,"O-RING 1B P-10.0",4,4,,,,,,,,,,,,,,,,
```

https://truckmanualshub.com/

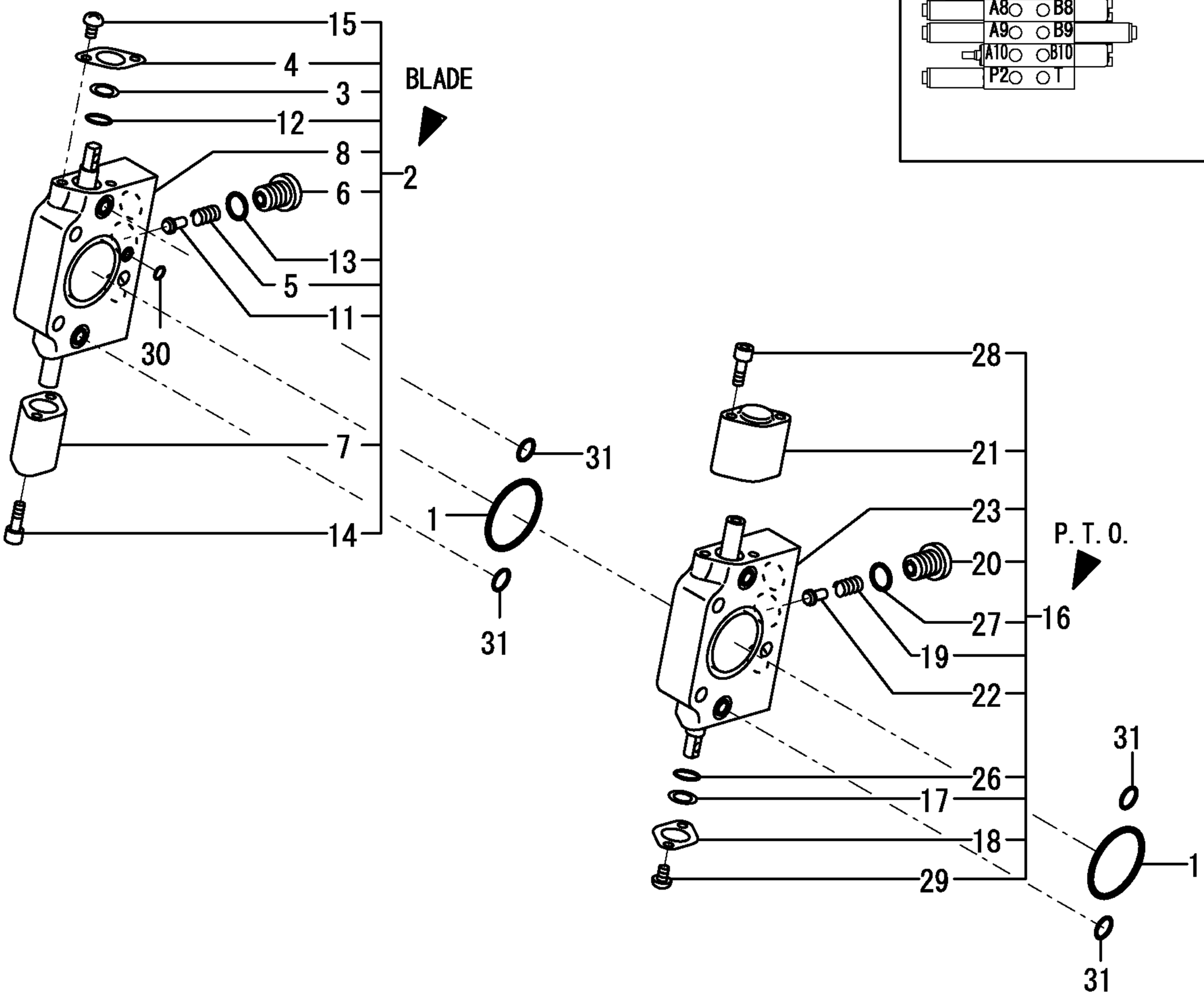

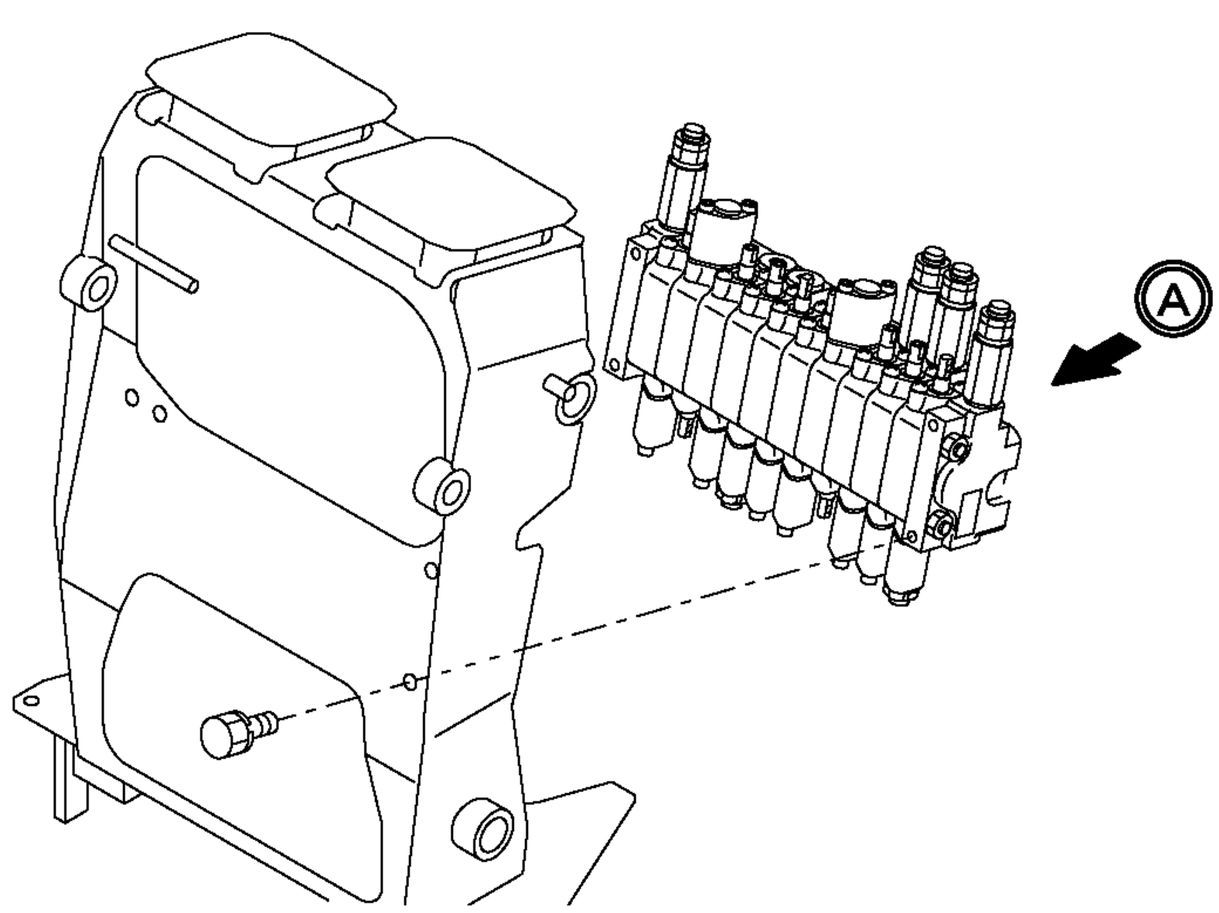

CONTROL VALVE ASSY
172446-74210
Fig. 41 Ref. NO. 1
INC Fig. 41 Ref. NO. 2～24.
Fig. 42 Ref. NO. 1～36.
Fig. 43 Ref. NO. 1～32.
Fig. 44 Ref. NO. 1～31.
Fig. 45 Ref. NO. 1～34.
Fig. 46 Ref. NO. 1～19.

https://truckmanualshub.com/

```
1,2,,172157-70710,,O-RING,2,2,,,,,,,,,,,,,,,,
2,2,,172446-74190,,"ARM SECTION ASSY",1,1,,,,,,,,,,,,,,,,
3,3,,172157-70630,,"BAC UP RING",1,1,,,,,,,,,,,,,,,,
4,3,,172157-70640,,"PLATE, O-RING",1,1,,,,,,,,,,,,,,,,,,,,I
5,3,,172157-70690,,SPRING,1,1,,,,,,,,,,,,,,,,,,,,I
6,3,,172157-70700,,"SEAT, SPRING",1,1,,,,,,,,,,,,,,,,
7,3,,172157-70720,,"PLUG PF3/8",1,1,,,,,,,,,,,,,,,,
8,3,,172157-70820,,"CAP,RETURN SPRING",1,1,,,,,,,,,,,,,,,,,,,,I
9,3,,172446-74470,,"ARM SECTION SUB",1,1,,,,,,,,,,,,,,,,,,,,I
12,3,,172137-74520,,"VALVE, CHECK",1,1,,,,,,,,,,,,,,,,,,,,I
13,3,,24311-240100,,"O-RING 1A P-10A",1,1,,,,,,,,,,,,,,,,
14,3,,24315-000110,,"O-RING 1B P-11.0",1,1,,,,,,,,,,,,,,,,
15,3,,24315-000140,,"O-RING 1B P-14.0",1,1,,,,,,,,,,,,,,,,
16,3,,26450-050452,,"BOLT M 5X 45",2,2,,,,,,,,,,,,,,,,,,,,I
17,3,,26557-050102,,"SCREW M 5X 10",2,2,,,,,,,,,,,,,,,,,,,,I
18,2,,172446-74200,,"TURNING SECTION ASSY",1,1,,,,,,,,,,,,,,,,
19,3,,172157-70630,,"BAC UP RING",1,1,,,,,,,,,,,,,,,,
20,3,,172157-70640,,"PLATE, O-RING",1,1,,,,,,,,,,,,,,,,,,,,I
21,3,,172157-70690,,SPRING,1,1,,,,,,,,,,,,,,,,,,,,I
22,3,,172157-70700,,"SEAT, SPRING",1,1,,,,,,,,,,,,,,,,
23,3,,172157-70820,,"CAP,RETURN SPRING",1,1,,,,,,,,,,,,,,,,,,,,I
24,3,,172446-74480,,"TURNING SECTION SUB",1,1,,,,,,,,,,,,,,,,,,,,I
27,3,,172137-74520,,"VALVE, CHECK",1,1,,,,,,,,,,,,,,,,,,,,I
28,3,,24311-240100,,"O-RING 1A P-10A",1,1,,,,,,,,,,,,,,,,
29,3,,24315-000110,,"O-RING 1B P-11.0",1,1,,,,,,,,,,,,,,,,
30,3,,26450-050452,,"BOLT M 5X 45",2,2,,,,,,,,,,,,,,,,,,,,I
31,3,,26557-050102,,"SCREW M 5X 10",2,2,,,,,,,,,,,,,,,,,,,,I
32,2,,172446-74230,,"OVERLOAD, 230",1,1,,,,,,,,,,,,,,,,
33,2,,172446-74240,,"CVERLOAD, 70",2,2,,,,,,,,,,,,,,,,
34,2,,24315-000100,,"O-RING 1B P-10.0",4,4,,,,,,,,,,,,,,,,
```

https://truckmanualshub.com/

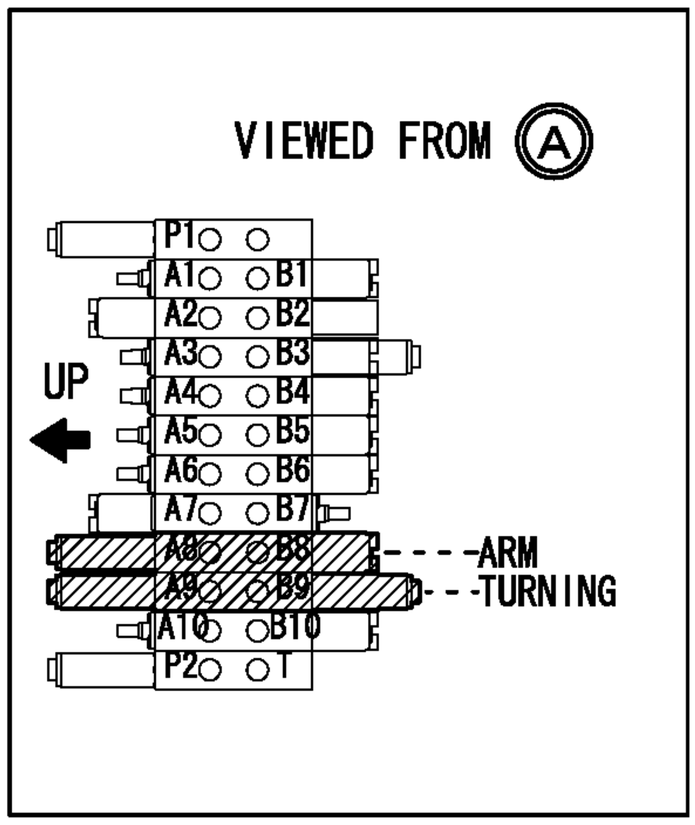

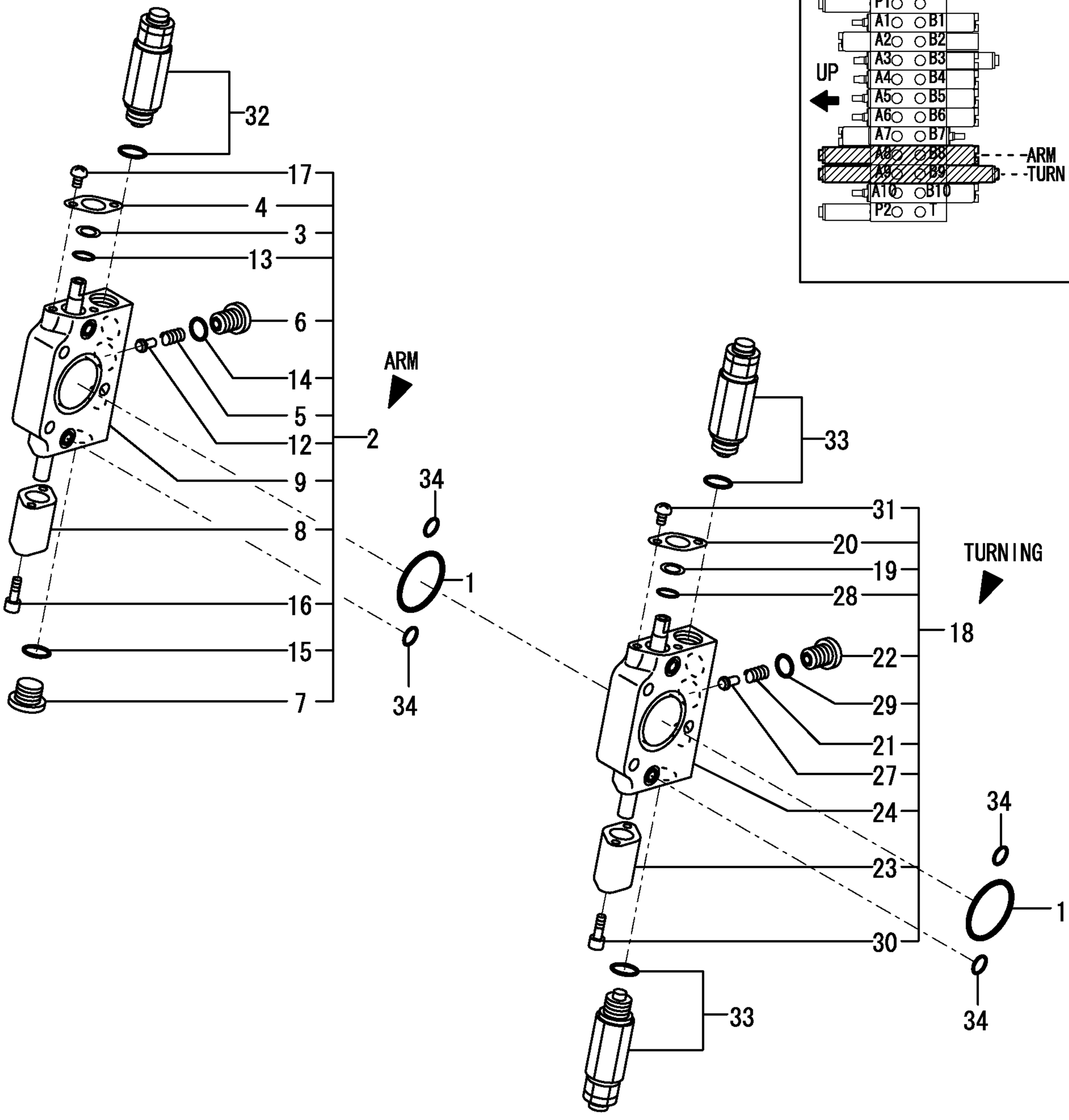

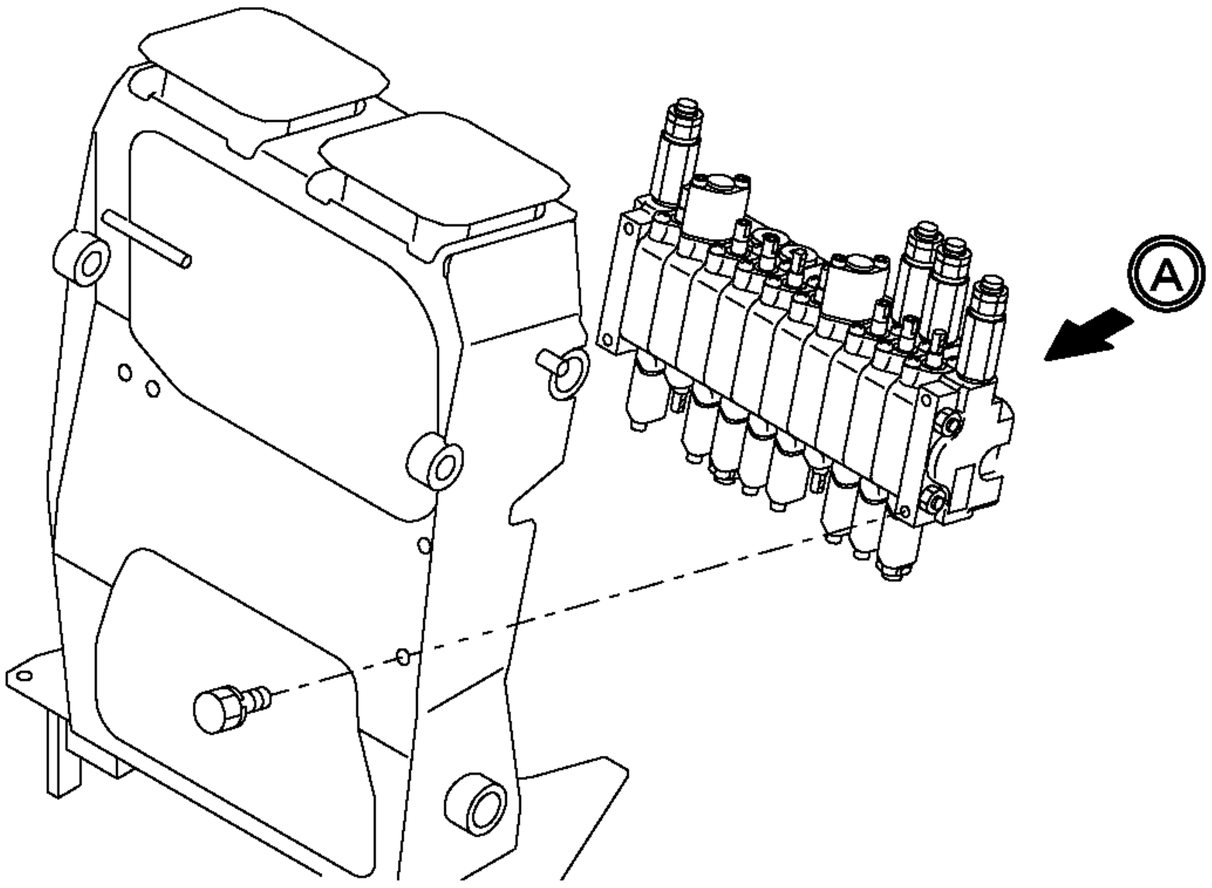

CONTROL VALVE ASSY
172446-74210
Fig.41 Ref.NO.1
INC Fig.41 Ref.NO.2～24.
Fig.42 Ref.NO.1～36.
Fig.43 Ref.NO.1～32.
Fig.44 Ref.NO.1～31.
Fig.45 Ref.NO.1～34.
Fig.46 Ref.NO.1～19.

https://truckmanualshub.com/

```
1,2,,172157-70710,,O-RING,1,1,,,,,,,,,,,,,,,,,
2,2,,172446-74160,,"DRIVE SECTION ASSY",1,1,,,,,,,,,,,,,,,,,
3,3,,172157-70630,,"BAC UP RING",1,1,,,,,,,,,,,,,,,,,
4,3,,172157-70640,,"PLATE, O-RING",1,1,,,,,,,,,,,,,,,,,,,,,I
5,3,,172157-70700,,"SEAT, SPRING",1,1,,,,,,,,,,,,,,,,,
6,3,,172157-70820,,"CAP,RETURN SPRING",1,1,,,,,,,,,,,,,,,,,,,,,I
7,3,,172446-74440,,"SECTION ASSY,TRAVEL",1,1,,,,,,,,,,,,,,,,,,,,,,I
10,3,,24311-240100,,"O-RING 1A P-10A",1,1,,,,,,,,,,,,,,,,,
11,3,,24315-000110,,"O-RING 1B P-11.0",1,1,,,,,,,,,,,,,,,,,
12,3,,26450-050452,,"BOLT M 5X 45",2,2,,,,,,,,,,,,,,,,,,,,,I
13,3,,26557-050102,,"SCREW M 5X 10",2,2,,,,,,,,,,,,,,,,,,,,,I
14,2,,172447-74200,,"P2 SECTION",1,1,,,,,,,,,,,,,,,,,
15,3,,172183-74350,,"PLUG PF1/4",1,1,,,,,,,,,,,,,,,,,
16,3,,172447-74380,,"P2 SECTION",1,1,,,,,,,,,,,,,,,,,,,,,I
17,3,,24315-000110,,"O-RING 1B P-11.0",1,1,,,,,,,,,,,,,,,,,
18,2,,172446-74220,,"MAIN RELIEF VALVE",1,1,,,,,,,,,,,,,,,,,,
19,2,,24315-000100,,"O-RING 1B P-10.0",2,2,,,,,,,,,,,,,,,,,
```

https://truckmanualshub.com/

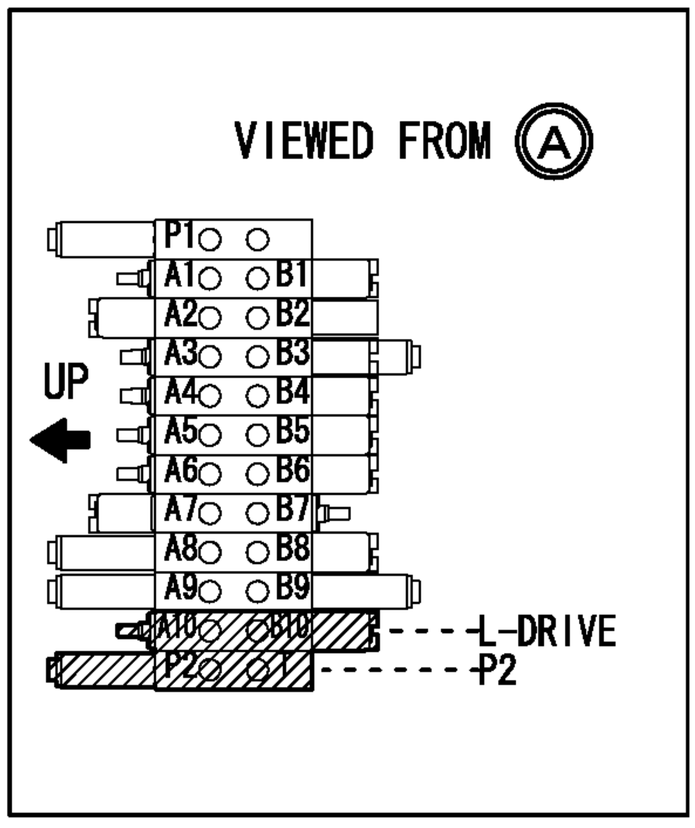

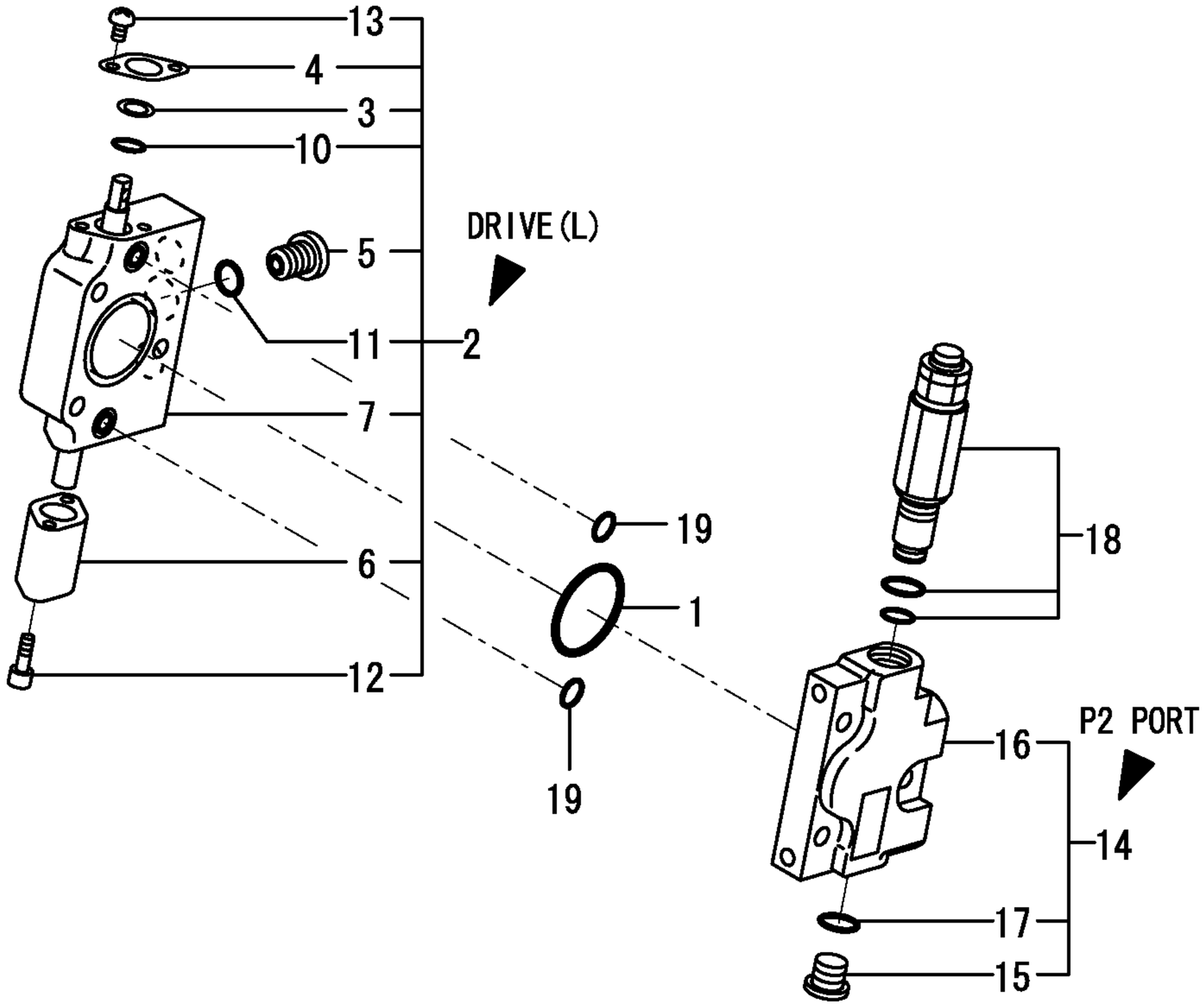

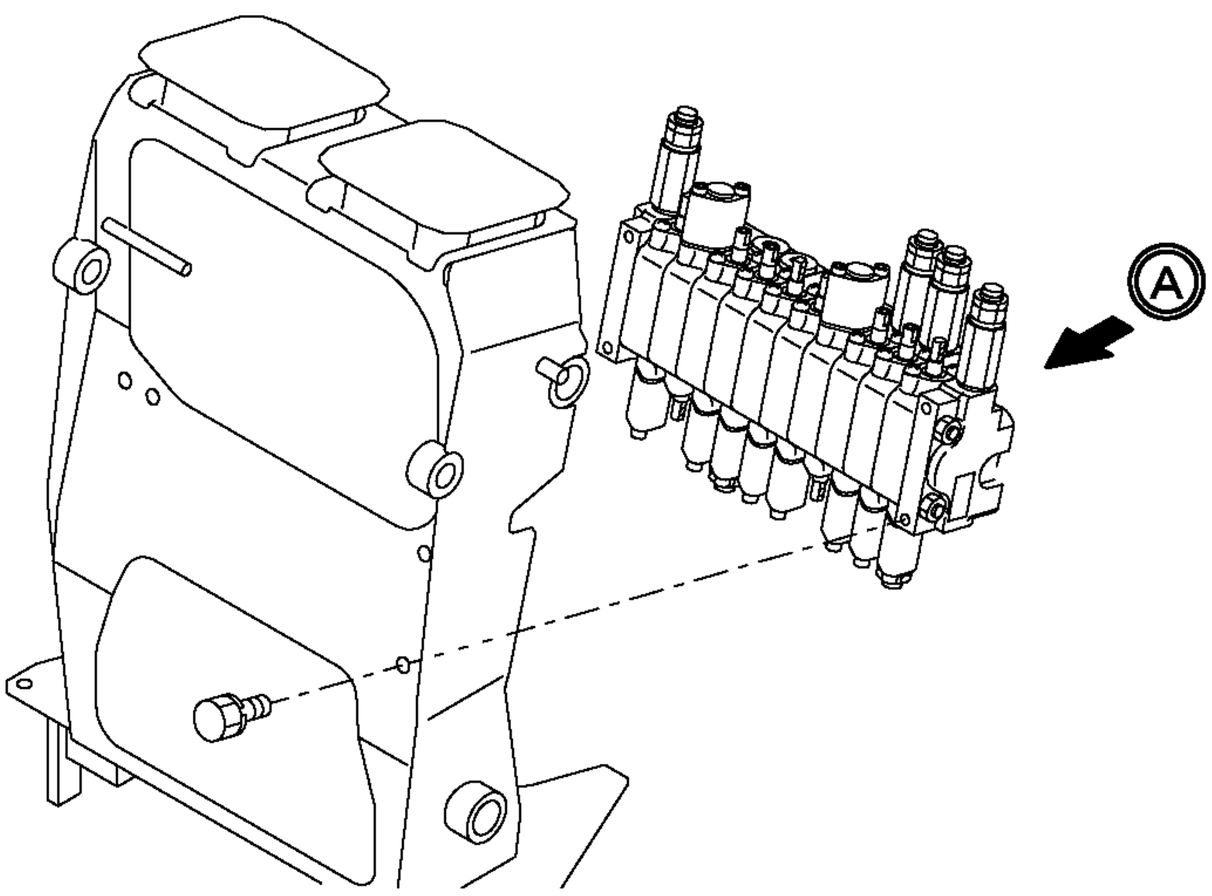

CONTROL VALVE ASSY
172446-74210
Fig.41 Ref.NO.1
INC Fig.41 Ref.NO.2～24.
Fig.42 Ref.NO.1～36.
Fig.43 Ref.NO.1～32.
Fig.44 Ref.NO.1～31.
Fig.45 Ref.NO.1～34.
Fig.46 Ref.NO.1～19.

https://truckmanualshub.com/

```
1,1,,172446-74500,,"VALVE,CHECK",1,1,,,,,,,,,,,,,,,,
2,2,,172179-73540,,O-RING,2,2,,,,,,,,,,,,,,,,
3,2,,172446-74510,,PISTON,2,2,,,,,,,,,,,,,,,,
4,2,,172446-74520,,"CHECK VALVE ASSY",4,4,,,,,,,,,,,,,,,,
5,2,,26450-080802,,"BOLT M 8X 80",4,4,,,,,,,,,,,,,,,,
```

https://truckmanualshub.com/

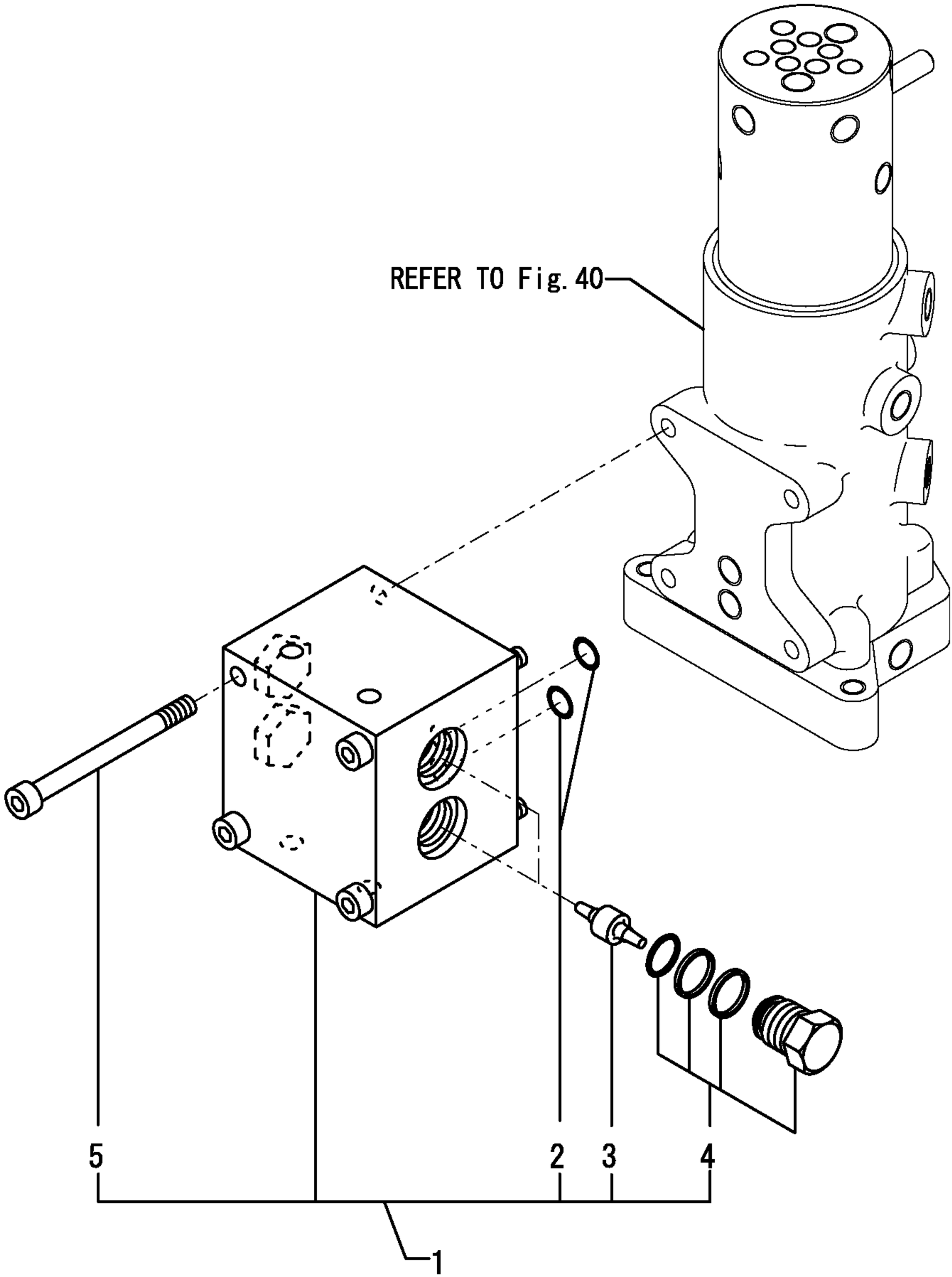

https://truckmanualshub.com/

```
1,1,,172156-73700,,"STRAINER, RETURN",1,1,,,,,,,,,,,,,,,,
3,2,,172156-73710,,ELEMENT,1,1,,,,,,,,,,,,,,,,
4,1,,172446-73700,,"FILTER,SUCTION",1,,,,,,,,,,,,,,,,,,
4-1,1,,172480-73700,,"FILTER,SUCTION",1,1,,,,,S,3,72480001,M/#01143,,,,,,,,,,,I
5,1,,772446-75100,,"RESERVER ASSY",1,,,,,,,1,,,,,,,,,,
5-1,1,,772446-75101,,"RESERVOIR ASSY",1,1,,,,,S,1,72480001,M/#01143,,,,,,,,,,,I
7,2,,172446-75250,,CAP,1,1,,,,,,,,,,,,,,,,
8,2,,172446-75260,,GAUGE,1,,,,,,,,,,,,,,,,,,
8-1,2,,172480-75350,,"GAUGE
ASSY,RESERVOIR",1,1,,,,,S,,72480001,M/#01143,,,,,,,,,,,I
8A,3,,24316-000200,,"O-RING 4D P-20.0",1,,,,,,,,,,,,,,,,,,,,I
8A-1,3,,24311-350220,,"O-RING 1A P-22A",1,1,,,,,N,,72480001,M/#01143,,,,,,,,,,,I
9,2,,23491-140002,,"PLUG 14",1,1,,,,,,,,,,,,,,,,
10,2,,24311-000160,,"O-RING 1A P-16.0",1,1,,,,,,,,,,,,,,,,
11,1,,26013-100252,,"BOLT W/WASHER M10X25",3,3,,,,,,,,,,,,,,,,
12,1,,24315-000440,,"O-RING 1B P 44.0",1,1,,,,,W,,72446133,M/#01095,,,,,,,,,,,I
13A,1,,172437-03320,,"LABEL,HYD.OIL TANK",1,1,,,,,,2,,,,,,,,,,,,I
```

https://truckmanualshub.com/

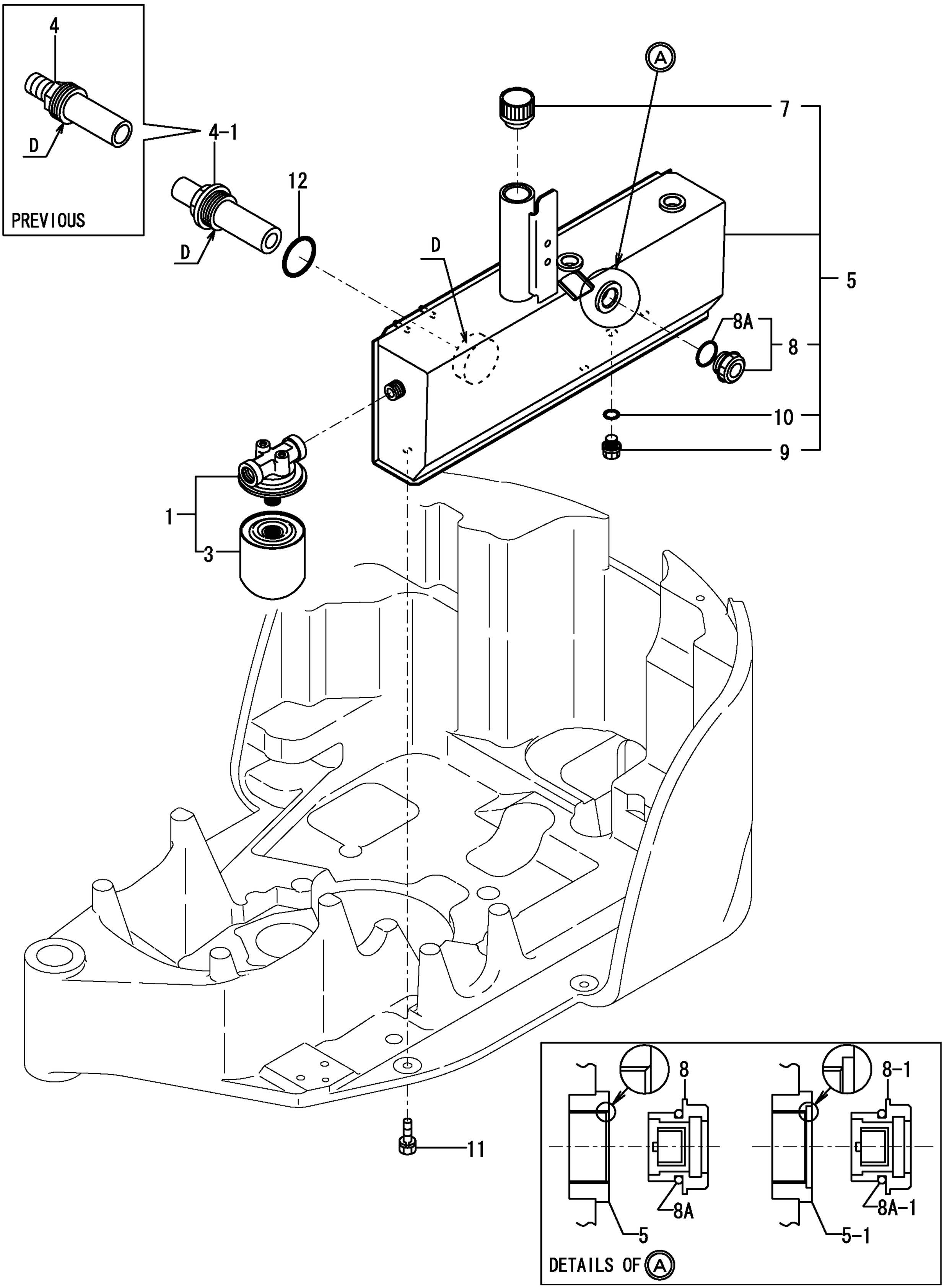

https://truckmanualshub.com/

```
1,1,,172142-76100,,CONNECTOR,1,1,,,,,,,,,,,,,,,,
2,1,,172142-76180,,JOINT,2,,,,,,,,,,,,,,,,,,
2-1,1,,172142-76181,,"JOINT 90-3/8
ASSY",2,2,,,,,R,,724580580,M/#01904,,,,,,,,,,I
3,2,,24315-000140,,"O-RING 1B P-14.0",2,2,,,,,,,,,,,,,,,,
4,1,,172186-76410,,"ADAPTER, MALE/MALE",2,2,,,,,,,,,,,,,,,,,,
5,1,,24315-000140,,"O-RING 1B P-14.0",2,2,,,,,,,,,,,,,,,,
6,1,,24315-000240,,"O-RING 1B P-24.0",1,1,,,,,,,,,,,,,,,,,,
7,1,,172446-78080,,"HOSE,SUCTION",1,1,,,,,,,,,,,,,,,,
10,1,,172446-78110,,"HOSE G206BV080K",1,1,,,,,,,,,,,,,,,,,,
11,1,,172446-78121,,HOSE,1,1,,,,,,,,,,,,,,,,
12,1,,23000-041000,,"CLAMP 41",4,,,,,,,,,,,,,,,,,,
12-1,1,,23001-041000,,"CLIP 41,HOSE",4,4,,,,,N,,72446124,M/#01095,,,,,,,,,,I
```

https://truckmanualshub.com/

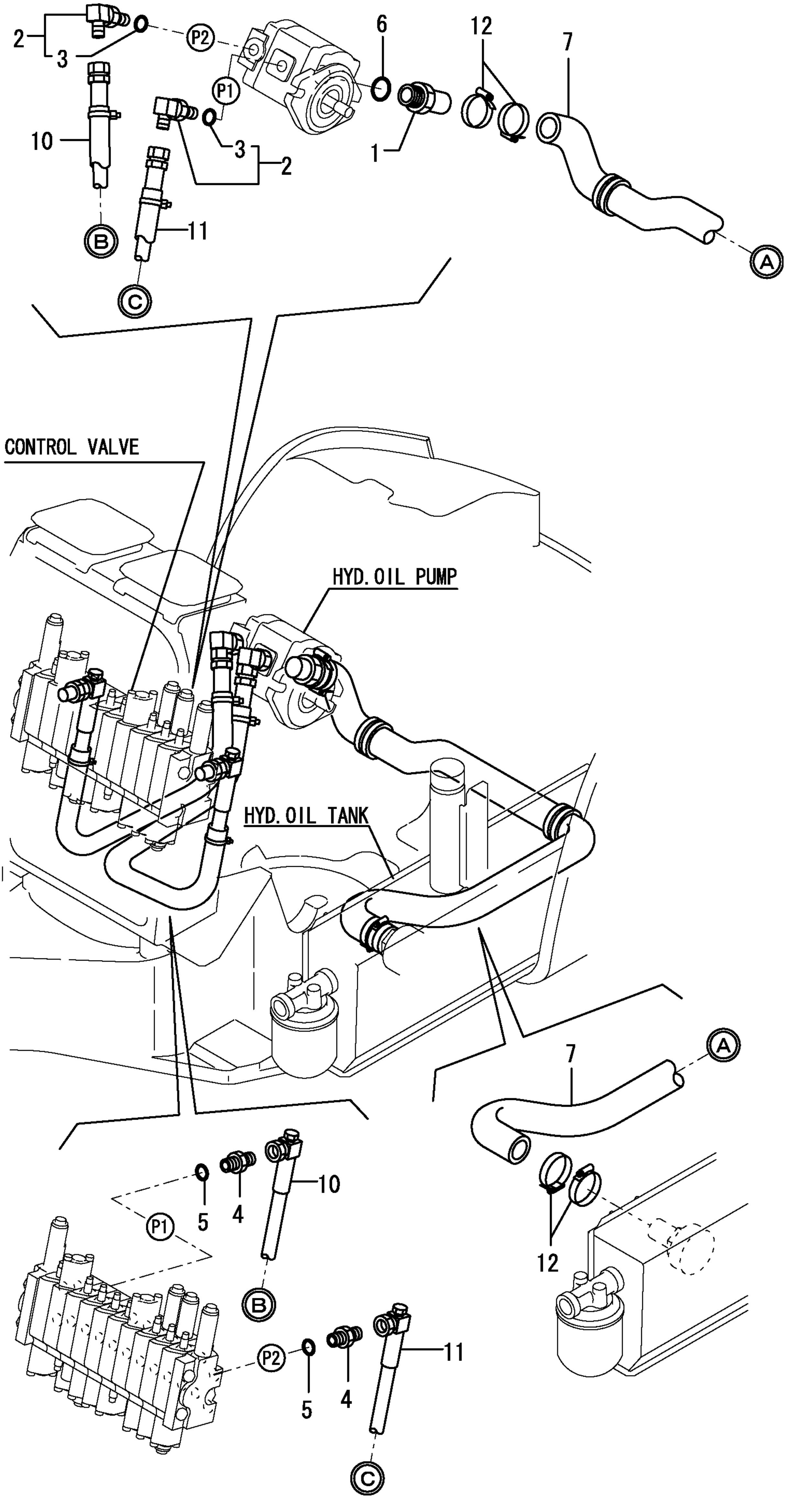

https://truckmanualshub.com/

```
1,1,,172137-76100,,"ELBOW PF1/4",2,2,,,,,,,,,,,,,,,,,
2,2,,24315-000110,,"O-RING 1B P-11.0",2,2,,,,,,,,,,,,,,,,,
3,1,,172123-76120,,"JOINT PF1/4",2,,,,,,,,,,,,,,,,,,,
3-1,1,,172123-76121,,"JOINT PF1/4",2,2,,,,,R,,724580580,M/#01904,,,,,,,,,,,I
4,1,,172423-76120,,CONNECTOR,2,2,,,,,,,,,,,,,,,,,,
5,1,,23391-020000,,"JOINT RGI1/4",2,2,,,,,,,,,,,,,,,,,,
6,1,,24315-000110,,"O-RING 1B P-11.0",2,2,,,,,,,,,,,,,,,,,,
7,1,,24315-000180,,"O-RING 1B P-18.0",2,2,,,,,,,,,,,,,,,,,,
8,1,,1A1380-55310,,"CLAMP, WIRE",2,2,,,,,,,,,,,,,,,,,,
9,1,,194202-56460,,BAND,1,1,,,,,,,,,,,,,,,,,,
10,1,,172446-78140,,"HOSE P204BC078",1,1,,,,,,,,,,,,,,,,,,
11,1,,172446-78150,,"HOSE P204BB067",1,1,,,,,,,,,,,,,,,,,,
12,1,,172446-78290,,"HOSE P204CC060",1,1,,,,,,,,,,,,,,,,,,
13,1,,172157-78640,,"COVER 20X500,HOSE",1,1,,,,,,,,,,,,,,,,,,,
14,1,,172462-78800,,"HOSE P204BC049",1,1,,,,,,,,,,,,,,,,,,,
```

https://truckmanualshub.com/

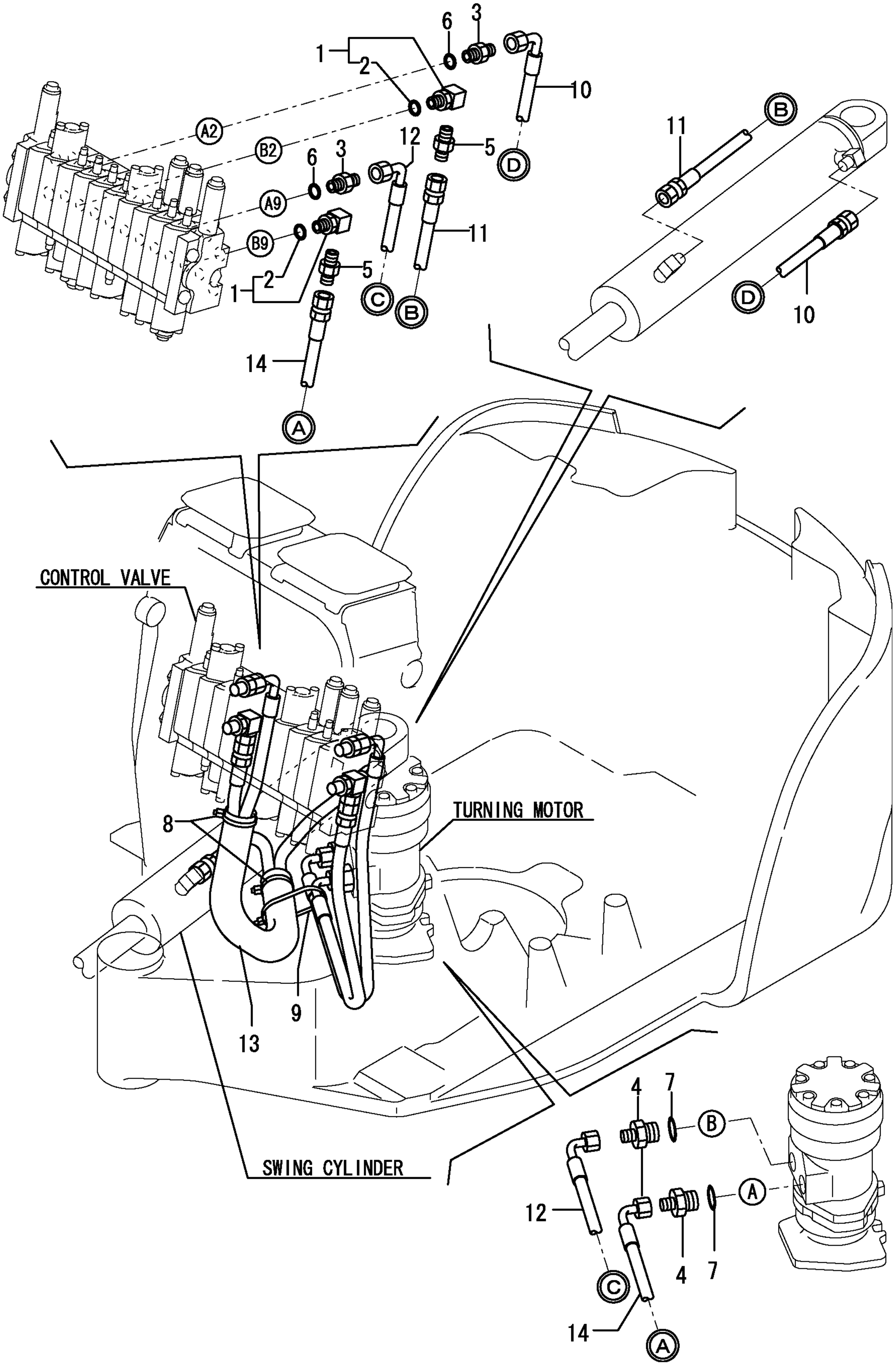

https://truckmanualshub.com/

```
1,1,,172137-76100,,"ELBOW PF1/4",4,4,,,,,,,,,,,,,,,,
2,2,,24315-000110,,"O-RING 1B P-11.0",4,4,,,,,,,,,,,,,,,,,
3,1,,172123-76120,,"JOINT PF1/4",4,,,,,,,,,,,,,,,,,,
3-1,1,,172123-76121,,"JOINT PF1/4",4,4,,,,,R,,724580580,M/#01904,,,,,,,,,,,I
4,1,,23391-020000,,"JOINT RGI1/4",4,4,,,,,,,,,,,,,,,,,
5,1,,23393-020000,,"JOINT 90RGI1/4",4,4,,,,,,,,,,,,,,,,,
6,1,,23394-020000,,"JOINT 45RGI1/4",4,4,,,,,,,,,,,,,,,,,
7,1,,24315-000110,,"O-RING 1B P-11.0",4,4,,,,,,,,,,,,,,,,,,
8,1,,194202-56460,,BAND,1,1,,,,,,,,,,,,,,,,,
9,1,,172137-78130,,"PIPE P204BC072",1,1,,,,,,,,,,,,,,,,,
10,1,,172446-78210,,"HOSE P204BC059",1,1,,,,,,,,,,,,,,,,,
11,1,,172446-78220,,"HOSE P204BC065",1,1,,,,,,,,,,,,,,,,,
12,1,,172446-78440,,"HOSE P204BB056",1,1,,,,,,,,,,,,,,,,,
13,1,,172446-78450,,"HOSE P204BB063",1,1,,,,,,,,,,,,,,,,,
14,1,,172446-78460,,"HOSE P204BD070",1,1,,,,,,,,,,,,,,,,,
15,1,,172446-78470,,"HOSE P204BC073",1,1,,,,,,,,,,,,,,,,,
16,1,,172446-78540,,"HOSE P204BD060",1,1,,,,,,,,,,,,,,,,,
```

https://truckmanualshub.com/

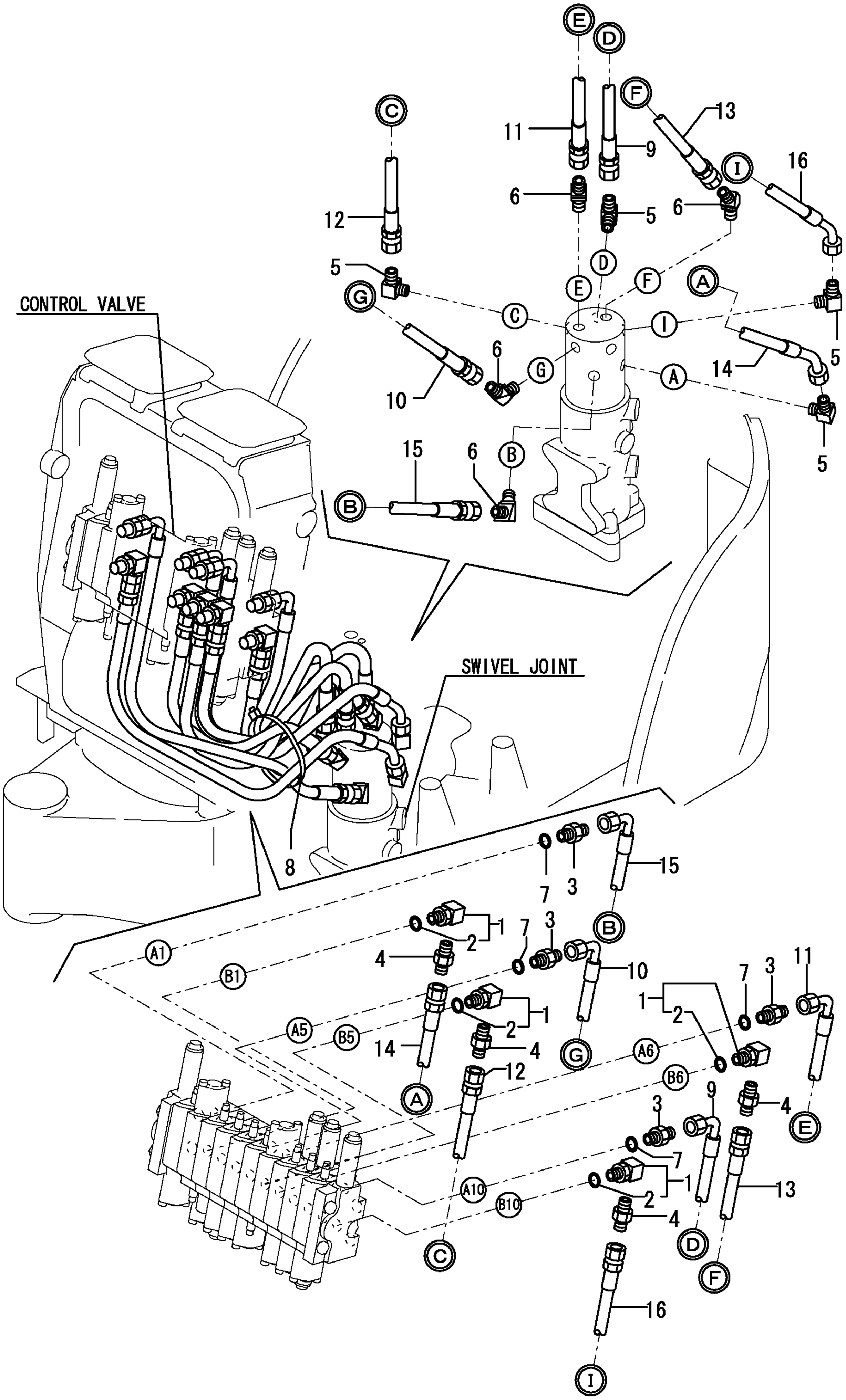

https://truckmanualshub.com/

```
1,1,,772446-76120,,"ELBOW PT,PF1/4",1,1,,,,,,,,,,,,,,,,
7,2,,24315-000180,,"O-RING 1B P-18.0",1,1,,,,,,,,,,,,,,,,
8,1,,172446-76140,,ELBOW(90RGIX1/8),1,1,,,,,,,,,,,,,,,,
9,1,,172312-76240,,"NIPPLE 1/4-3/8",1,1,,,,,,,,,,,,,,,,
10,1,,172186-76370,,"CONNECTOR 3/8-1/4",1,1,,,,,,,,,,,,,,,,
11,2,,24315-000140,,"O-RING 1B P-14.0",1,1,,,,,,,,,,,,,,,,
12,1,,172186-76390,,NIPPLE,1,1,,,,,,,,,,,,,,,,
13,1,,172112-77660,,"L-JOINT 1/8",1,1,,,,,,,,,,,,,,,,
14,1,,23393-020000,,"JOINT 90RGI1/4",1,1,,,,,,,,,,,,,,,,
15,1,,1A1380-55310,,"CLAMP, WIRE",2,2,,,,,,,,,,,,,,,,
16,1,,172446-78130,,"HOSE G206BD063",1,1,,,,,,,,,,,,,,,,
17,1,,172446-78240,,"HOSE P202AB048",1,1,,,,,,,,,,,,,,,,
18,1,,172446-78340,,"HOSE G604YY032",1,1,,,,,,,,,,,,,,,,
19,1,,172446-78690,,"COVER,HOSE",1,1,,,,,,,,,,,,,,,,
20,1,,172446-78930,,"HOSE H604BY045",1,1,,,,,,,,,,,,,,,,
21,1,,23000-013000,,"CLAMP 13",3,3,,,,,,,,,,,,,,,,
```

https://truckmanualshub.com/

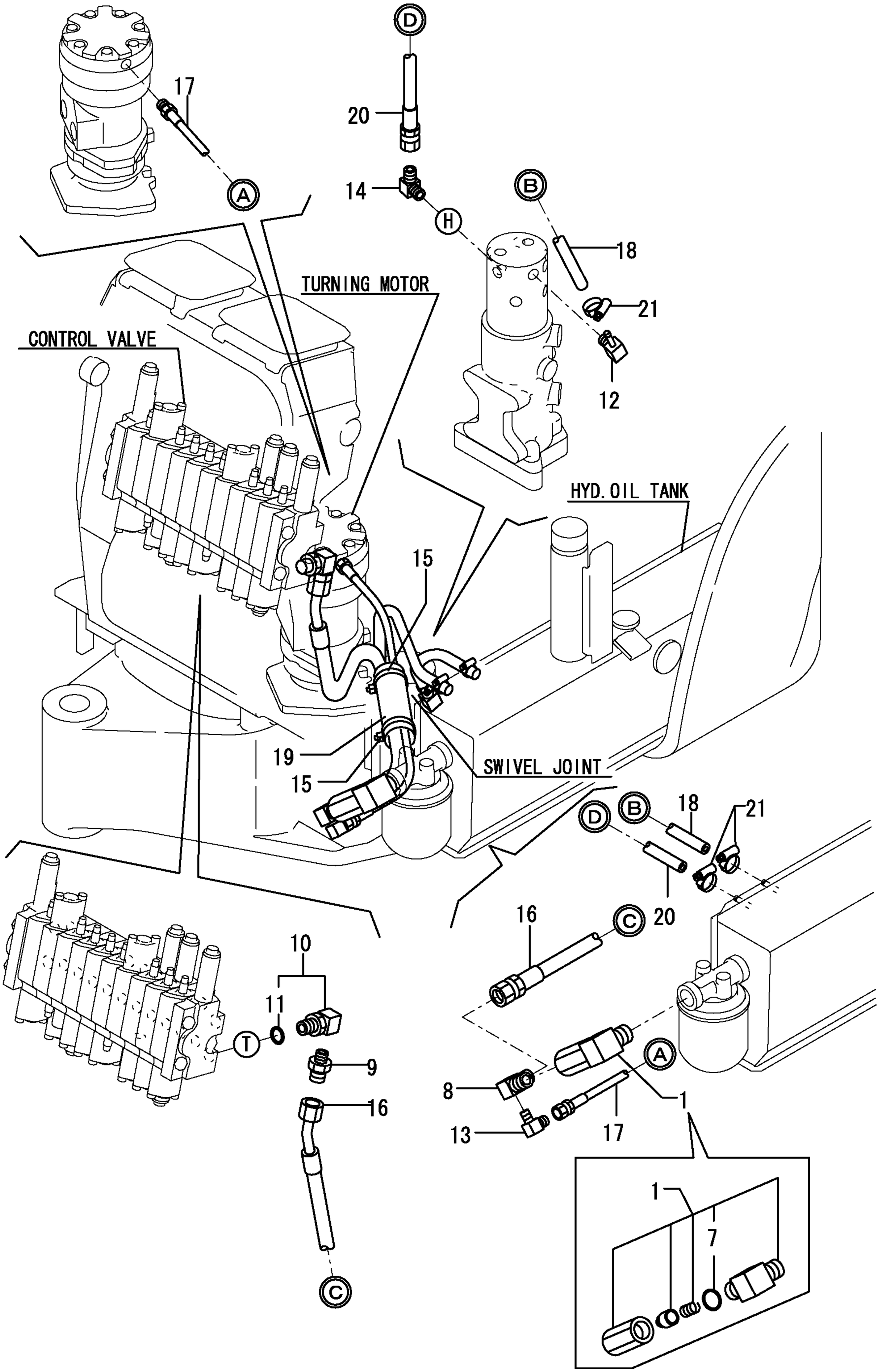

https://truckmanualshub.com/

```
1,1,,172137-76100,,"ELBOW PF1/4",1,1,,,,,,,,,,,,,,,,,,
2,2,,24315-000110,,"O-RING 1B P-11.0",1,1,,,,,,,,,,,,,,,,,,,,
3,1,,172145-76180,,"JOINT 3/8",2,2,,,,,,,,,,,,,,,,,,
6,1,,172638-76190,,"CONNECTOR PF1/4",1,1,,,,,,,,,,,,,,,,,,,,
7,1,,172446-76200,,"CONNECTOR CMP",1,1,,,,,,,,,,,,,,,,,,
8,1,,172312-76240,,"NIPPLE 1/4-3/8",1,1,,,,,,,,,,,,,,,,,,,,
9,1,,172446-76300,,"BRACKET, P.T.O.",1,1,,,,,,,,,,,,,,,,,,,,
10,1,,172141-76990,,"BUSH 38-55, PIN",1,1,,,,,,,,,,,,,,,,,,,,
11,1,,22217-180000,,"SPRING WASHER 18",2,2,,,,,,,,,,,,,,,,,,,,,,
12,1,,24315-000110,,"O-RING 1B P-11.0",1,1,,,,,,,,,,,,,,,,,,,,,,
13,1,,26013-100162,,"BOLT M10X 16",2,2,,,,,,,,,,,,,,,,,,
14,1,,172446-78250,,"HOSE G206BV077K",1,1,,,,,,,,,,,,,,,,,,,,
15,1,,172446-78650,,"HOSE G608BB047K",1,1,,,,,,,,,,,,,,,,,,,,
16,1,,172446-78920,,"HOSE G206BV068K",1,1,,,,,,,,,,,,,,,,,,,,
```

https://truckmanualshub.com/

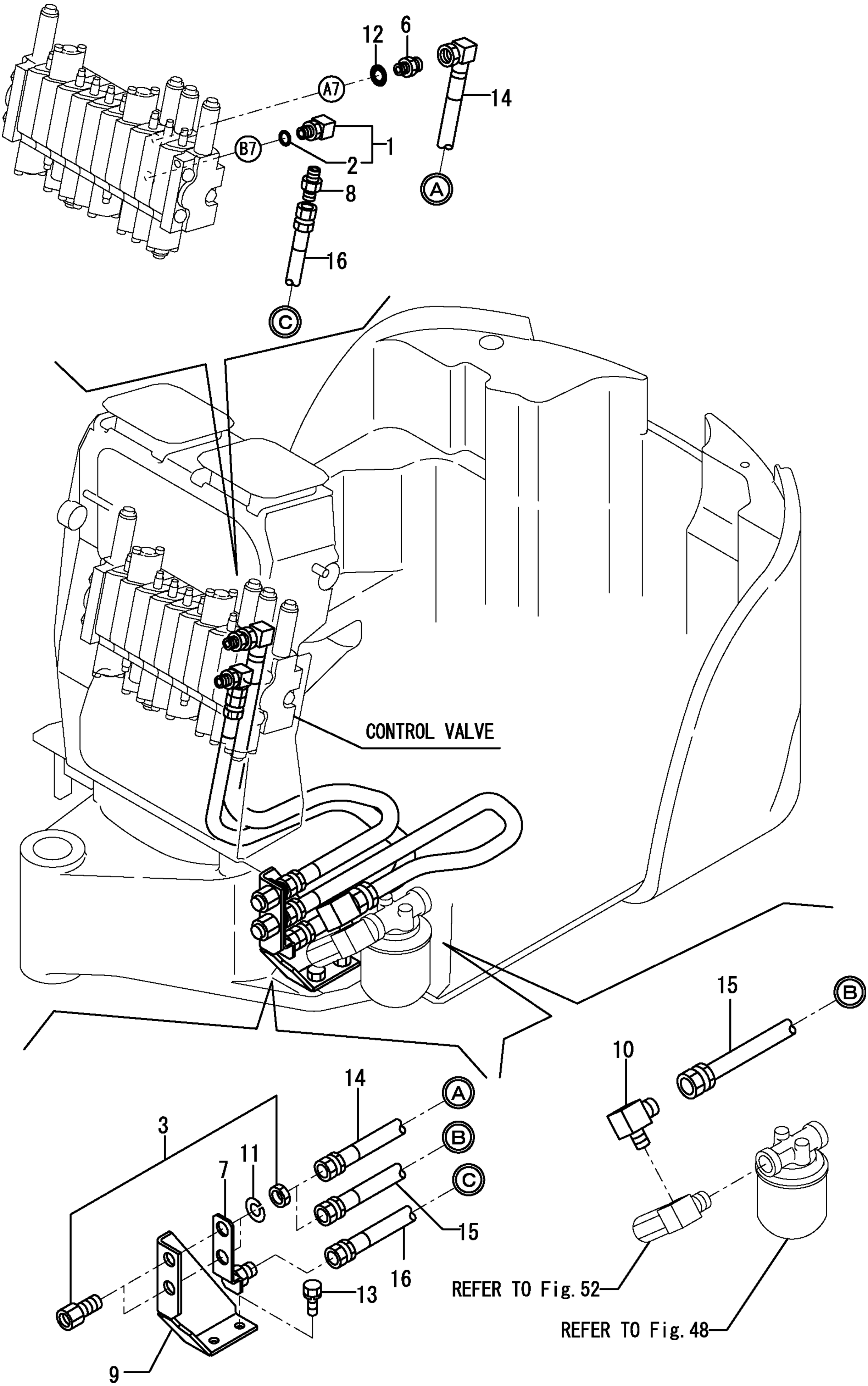

https://truckmanualshub.com/

```
1,1,,172157-76150,,"CONNECTOR 3/8-1/4",4,4,,,,,,,,,,,,,,,,
2,1,,172447-76210,,"JOINT G1/8-G1/4",2,2,,,,,,,,,,,,,,,,
3,1,,172157-76290,,"NIPPLE PT,PF1/8",2,2,,,,,,,,,,,,,,,,
4,1,,172162-76320,,"CONNECTOR 3-1/4",1,1,,,,,,,,,,,,,,,,
5,1,,172447-76520,,"JOINT 90RGI-1/4",2,2,,,,,,,,,,,,,,,,
6,1,,172447-76700,,"JOINT G1/4-G1/8",2,2,,,,,,,,,,,,,,,,
7,1,,172112-77580,,"JOINT 1/8",2,2,,,,,,,,,,,,,,,,
8,1,,172112-77660,,"L-JOINT 1/8",4,4,,,,,,,,,,,,,,,,
9,1,,23391-020000,,"JOINT RGI1/4",2,2,,,,,,,,,,,,,,,,
10,1,,23391-020000,,"JOINT RGI1/4",1,1,,,,,,,,,,,,,,,,
11,1,,23393-020000,,"JOINT 90RGI1/4",3,3,,,,,,,,,,,,,,,,
12,1,,23394-020000,,"JOINT 45RGI1/4",2,2,,,,,,,,,,,,,,,,
13,1,,24315-000080,,"O-RING 1B P-8.0",2,2,,,,,,,,,,,,,,,,
14,1,,24315-000110,,"O-RING 1B P-11.0",2,2,,,,,,,,,,,,,,,,
15,1,,24315-000140,,"O-RING 1B P-14.0",4,4,,,,,,,,,,,,,,,,
16,1,,172446-78550,,"HOSE P204BD082W",1,1,,,,,,,,,,,,,,,,
17,1,,172446-78570,,"HOSE P204BC070W",1,1,,,,,,,,,,,,,,,,
18,1,,172446-78580,,"HOSE P204BC076W",1,1,,,,,,,,,,,,,,,,
19,1,,172446-78590,,"HOSE P204BB077W",1,1,,,,,,,,,,,,,,,,
20,1,,172446-78600,,"HOES P202BB080W",1,1,,,,,,,,,,,,,,,,
21,1,,172446-78610,,"HOSE P202BB090W",1,1,,,,,,,,,,,,,,,,
22,1,,172446-78620,,"HOSE P202FF055W",1,1,,,,,,,,,,,,,,,,
23,1,,172446-78630,,"HOSE P202FF050W",1,1,,,,,,,,,,,,,,,,
24,1,,172446-78640,,"HOSE P202FF045W",1,1,,,,,,,,,,,,,,,,
25,1,,172446-78640,,"HOSE P202FF045W",1,1,,,,,,,,,,,,,,,,
26,1,,172446-78660,,"HOSE P204BD058W",1,1,,,,,,,,,,,,,,,,
27,1,,172446-78670,,"HOSE P204BD070W",1,1,,,,,,,,,,,,,,,,
28,1,,172446-78700,,"HOSE P204BB077W",1,1,,,,,,,,,,,,,,,,
29,1,,172171-78850,,"HOSE P204BB085W",1,1,,,,,,,,,,,,,,,,
```

https://truckmanualshub.com/

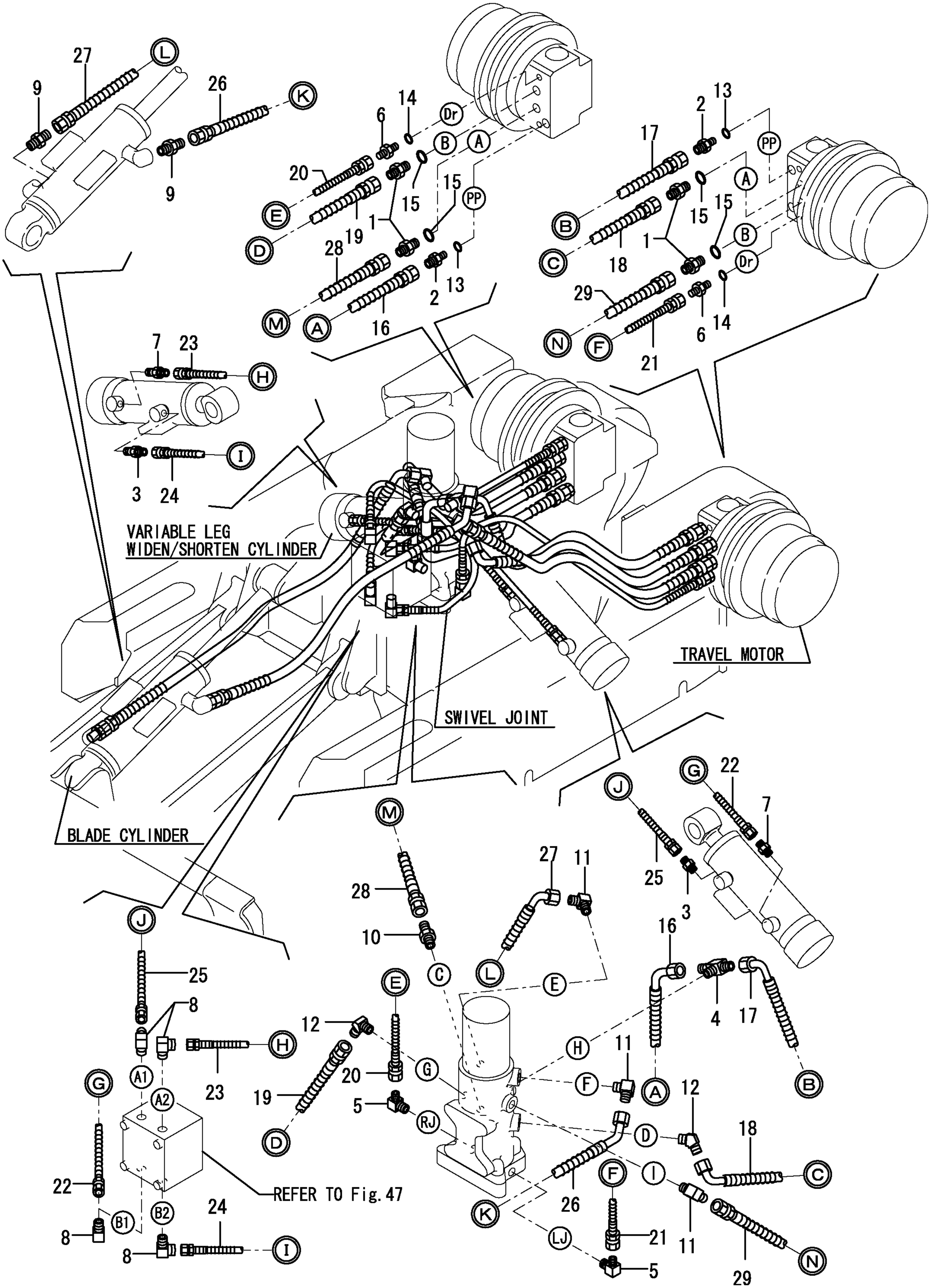

https://truckmanualshub.com/

```
1,1,,172137-76100,,"ELBOW PF1/4",3,3,,,,,,,,,,,,,,,
2,2,,24315-000110,,"O-RING 1B P-11.0",3,3,,,,,,,,,,,,,,,,
3,1,,172123-76120,,"JOINT PF1/4",3,,,,,,,,,,,,,,,,,,
3-1,1,,172123-76121,,"JOINT PF1/4",3,3,,,,,R,,724580580,M/#01904,,,,,,,,,,,I
4,1,,23391-020000,,"JOINT RGI1/4",3,3,,,,,,,,,,,,,,,,
5,1,,24315-000110,,"O-RING 1B P-11.0",3,3,,,,,,,,,,,,,,,,
6,1,,194202-56460,,BAND,3,3,,,,,,,,,,,,,,,,
7,1,,172446-78161,,HOSE,1,1,,,,,,,,,,,,,,,,
8,1,,172446-78171,,HOSE,1,1,,,,,,,,,,,,,,,,
9,1,,172446-78190,,"HOSE P204BC246W",1,1,,,,,,,,,,,,,,,,
10,1,,172446-78200,,"HOSE P204BB250W",1,1,,,,,,,,,,,,,,,,
11,1,,172446-78270,,"HOSE P204BC169K",1,1,,,,,,,,,,,,,,,,
12,1,,172446-78280,,"HOSE P204BB187K",1,1,,,,,,,,,,,,,,,,
13,1,,172156-78490,,"PLATE, RUBBER (B",1,1,,,,,,,,,,,,,,,,
14,1,,172156-78520,,"SUPPORT, HOSE (B",2,2,,,,,,,,,,,,,,,,
15,1,,172156-78540,,"COLLAR 9X 18",1,1,,,,,,,,,,,,,,,,
16,1,,172157-78640,,"COVER 20X500,HOSE",2,2,,,,,,,,,,,,,,,,
17,1,,172446-78680,,"COVER 20X1150,HOSE",1,1,,,,,,,,,,,,,,,,
18,1,,172446-78710,,"COVER,HOSE(YELLOW:87",1,1,,,,,,1,,,,,,,,,,,
19,2,,172156-78510,,"SUPPORT, HOSE (A",2,2,,,,,,,,,,,,,,,,
21,1,,172446-78750,,"CLAMP,HOSE(YELLOW:87",2,2,,,,,,,,,,,,,,,,,
22,1,,172175-78760,,"HOSE COVER 20-650",1,1,,,,,,,,,,,,,,,,
23,1,,172446-78760,,"RUBBER PLATE A",2,2,,,,,,,,,,,,,,,,
24,1,,172446-78770,,"RUBBER PLATE B",1,1,,,,,,,,,,,,,,,,
25,1,,22117-080000,,"WASHER  8",4,4,,,,,,,,,,,,,,,,
26,1,,22157-080000,,"WASHER  8",4,4,,,,,,,,,,,,,,,,
27,1,,22217-080000,,"SPRING WASHER  8",4,4,,,,,,,,,,,,,,,,
28,1,,22217-080000,,"SPRING WASHER  8",1,1,,,,,,,,,,,,,,,,
29,1,,22217-080000,,"SPRING WASHER  8",1,1,,,,,,,,,,,,,,,,
30,1,,26116-080162,,"BOLT 8X16",4,4,,,,,,,,,,,,,,,,
31,1,,26116-080162,,"BOLT 8X16",1,1,,,,,,,,,,,,,,,,
32,1,,26116-080302,,"BOLT 8X30",1,1,,,,,,,,,,,,,,,,
33,1,,933168-55770,,"BAND 146",5,5,,,,,,,,,,,,,,,,
34,1,,933168-55770,,"BAND 146",1,1,,,,,,,,,,,,,,,,
35A,1,,172446-03710,,"LABEL,LIFT US",1,1,,,,,2,,,,,,,,,,
35B,1,,172446-03651,,"LABEL,VARIABLE US",1,1,,,,,2,,,,,,,,,,
```

https://truckmanualshub.com/

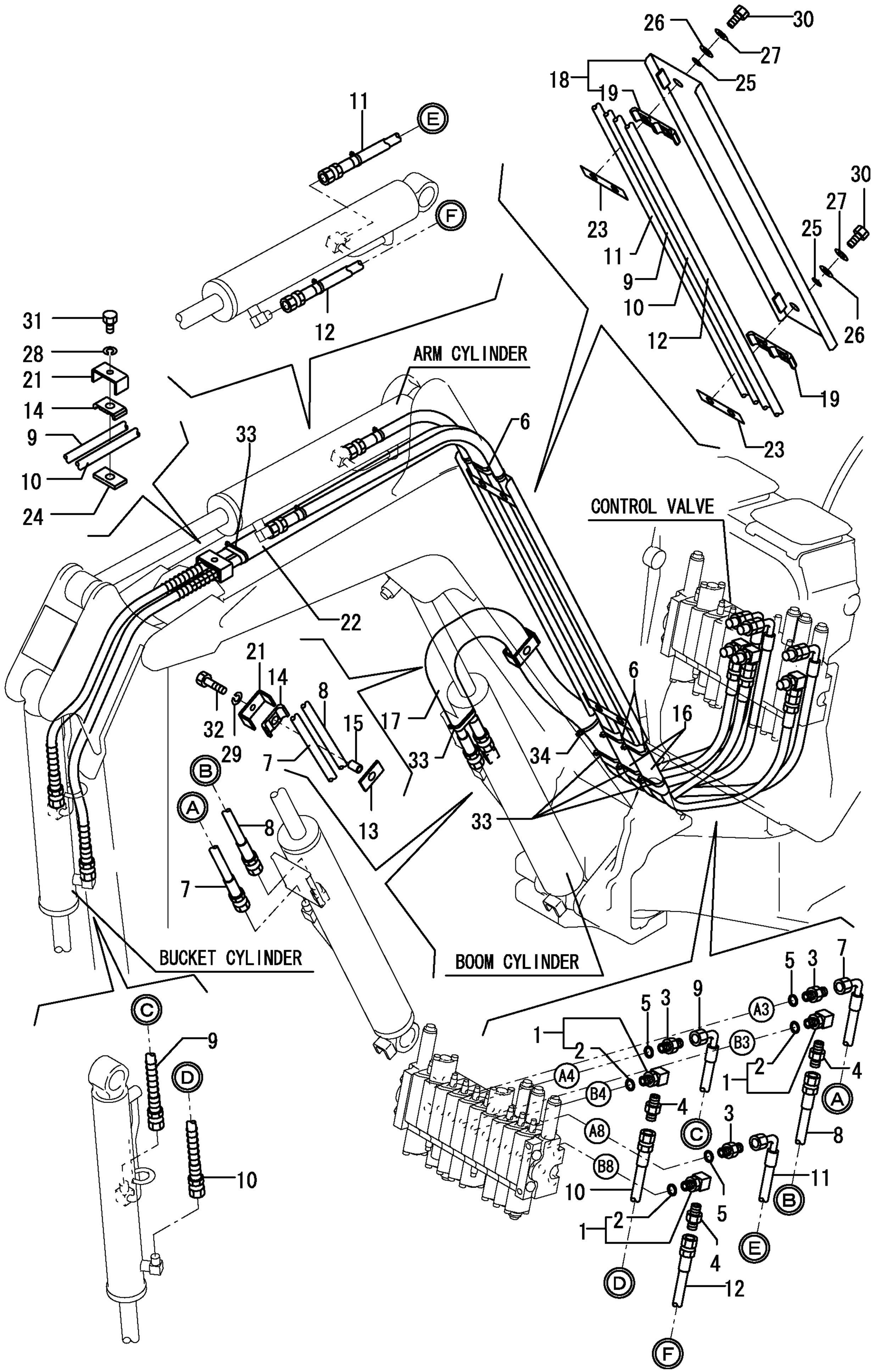

https://truckmanualshub.com/

```
1,1,,172446-76350,,"JOINT 1/2",1,1,,,,,,,,,,,,,,,
2,1,,172141-76940,,"ADAPTOR 1/2-3/8",1,1,,,,,,,,,,,,,,,
3,1,,172141-76990,,"BUSH 38-55, PIN",1,1,,,,,,,,,,,,,,,
4,1,,23393-040000,,"JOINT 90RGI 1/2",2,2,,,,,,,,,,,,,,,
5,1,,23871-030000,,"PLUG PT3/8,SCREW",2,2,,,,,,,,,,,,,,,
6,1,,26013-100202,,"BOLT W/WASHER M10X20",2,2,,,,,,,,,,,,,,,
7,1,,933166-24240,,"ELBOW, SWIVEL JOINT",2,2,,,,,,,,,,,,,,,
8,1,,172112-76300-3,,"RETAINER A,BOOM PIPE",1,1,,,,,,,,,,,,,,,
9,1,,172446-76500,,"TUBE L,P.T.O.   (87)",1,1,,,,,,,,,,,,,,,
10,1,,172446-76520,,"TUBE R,P.T.O.   (87)",1,1,,,,,,,,,,,,,,,
11,1,,172175-76590-5,,"PLATE,SPACER    (87)",1,1,,,,,,,,,,,,,,,
12,1,,26013-100202,,"BOLT W/WASHER M10X20",2,2,,,,,,,,,,,,,,,
13,1,,26013-100552,,"BOLT M10X 55",1,1,,,,,,,,,,,,,,,
14,1,,172446-78800,,"HOSE H206AB039K",2,2,,,,,,,,,,,,,,,
15,1,,172446-78810,,"HOSE H206BB075K",2,2,,,,,,,,,,,,,,,
```

https://truckmanualshub.com/

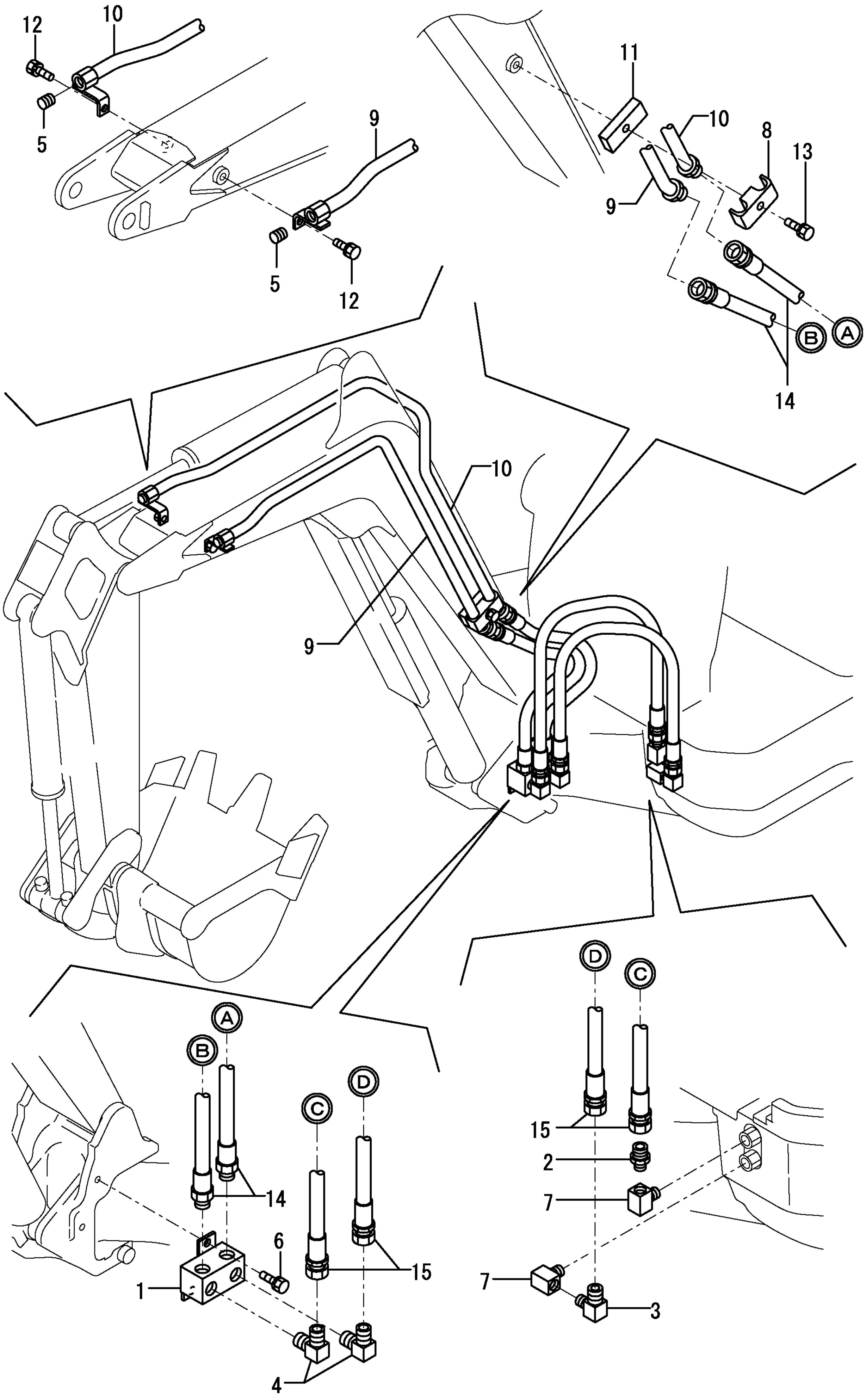

https://truckmanualshub.com/

```
1,1,,172446-77100,,"HOSE P602YY043",2,2,,,,,,,,,,,,,,,,
2,1,,172141-77800,,"JOINT, GREASE",4,4,,,,,,,,,,,,,,,,
3,1,,172147-77800,,"CONNECTOR PT 1/8",1,1,,,,,,,,,,,,,,,,
4,1,,24761-020000,,"NIPPLE PT1/8,GREASE",2,2,,,,,,,,,,,,,,,,
```

https://truckmanualshub.com/

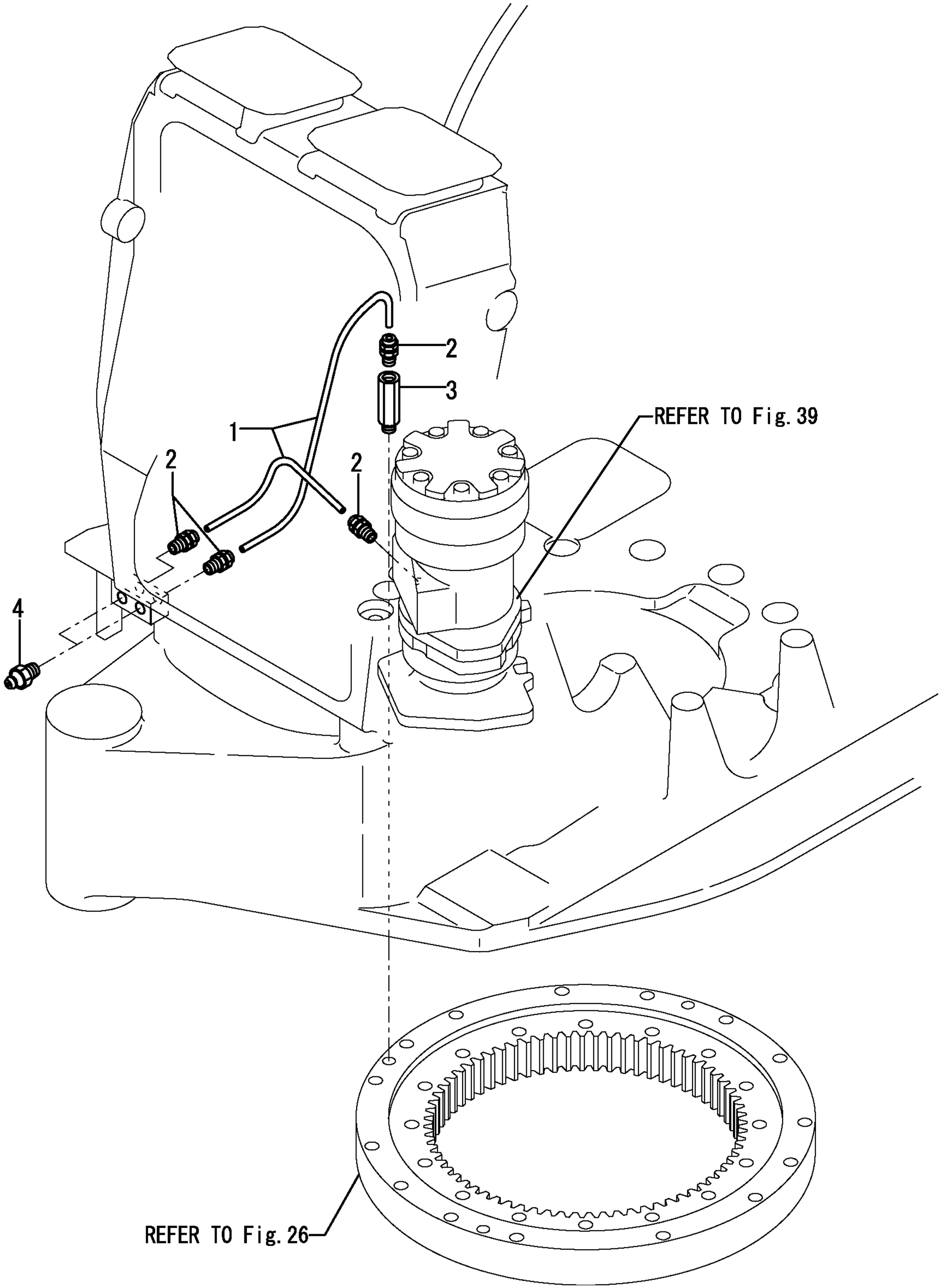

https://truckmanualshub.com/

```
1,1,,172446-81100,,"BOOM     (YELLOW:87)",1,1,,,,,,,,,,,,,,,,
2,2,,172156-72410,,"PIN BUSH 25 35 A",2,2,,,,,,,,,,,,,,,,
3,1,,172155-81390,,"COTTER PIN 6X 35",3,3,,,,,,,,,,,,,,,,
4,1,,172156-81400,,"SHIM 25-45",1,1,,,,,,,,,,,,,,,,
8,1,,172156-81400,,"SHIM 25-45",1,1,,,,,,,,,,,,,,,,
12,1,,172156-81400,,"SHIM 25-45",1,1,,,,,,,,,,,,,,,,
16,1,,172446-81400,,"PIN 25X106",1,1,,,,,,,,,,,,,,,,
17,1,,172446-81400,,"PIN 25X106",1,1,,,,,,,,,,,,,,,,
18,1,,172446-81420,,"PIN 25X124",1,1,,,,,,,,,,,,,,,,
19,1,,24761-040000,,"NIPPLE B,GREASE",1,,,,,,,,,,,,,,,,,,
19-1,1,,24761-050000,,"NIPPLE C,GREASE",1,1,,,,,R,,72480084,M/#01243,,,,,,,,,,,I
20,1,,172122-17190,,CLIP,5,5,,,,,,,,,,,,,,,,
21,1,,172155-81390,,"COTTER PIN 6X 35",3,3,,,,,,,,,,,,,,,,
22,1,,172156-81400,,"SHIM 25-45",1,1,,,,,,,,,,,,,,,,
26,1,,172156-81400,,"SHIM 25-45",1,1,,,,,,,,,,,,,,,,
30,1,,172446-82300,,"BRACKET,BOOM    (87)",1,1,,,,,,,,,,,,,,,,
31,1,,172157-82340,,"BOLT 12X 95",1,1,,,,,,,,,,,,,,,,
32,1,,172446-82350,,"PIN 35X233",1,1,,,,,,,,,,,,,,,,
33,1,,172446-82370,,"PIN 30X67",1,1,,,,,,,,,,,,,,,,
34,1,,172446-82400,,"PIN 30X93",1,1,,,,,,,,,,,,,,,,
35,1,,172446-82450,,"PIN 25X161",1,1,,,,,,,,,,,,,,,,
36,1,,172446-82480,,"PIN 25X98",1,1,,,,,,,,,,,,,,,,
37,1,,172141-84630,,"SHIM, 35X60X0.5",1,1,,,,,,,,,,,,,,,,
38,1,,22217-100000,,"SPRING WASHER 10",1,1,,,,,,,,,,,,,,,,
39,1,,22242-000350,,"CIRCLIP   35",1,1,,,,,,,,,,,,,,,,
40,1,,24761-040000,,"NIPPLE B,GREASE",1,,,,,,,,,,,,,,,,,,
40-1,1,,24761-050000,,"NIPPLE C,GREASE",1,1,,,,,N,,72446125,M/#01095,,,,,,,,,,,I
41,1,,26116-100202,,"BOLT M10X 20 PLATED",1,1,,,,,,,,,,,,,,,,
42,1,,26756-120002,,"LOCK NUT 12",2,2,,,,,,,,,,,,,,,,
43,1,,933160-06711,,"SHIM 30, PIN ADJUST",1,1,,,,,,,,,,,,,,,,
47,1,,933160-06711,,"SHIM 30, PIN ADJUST",1,1,,,,,,,,,,,,,,,,
```

https://truckmanualshub.com/

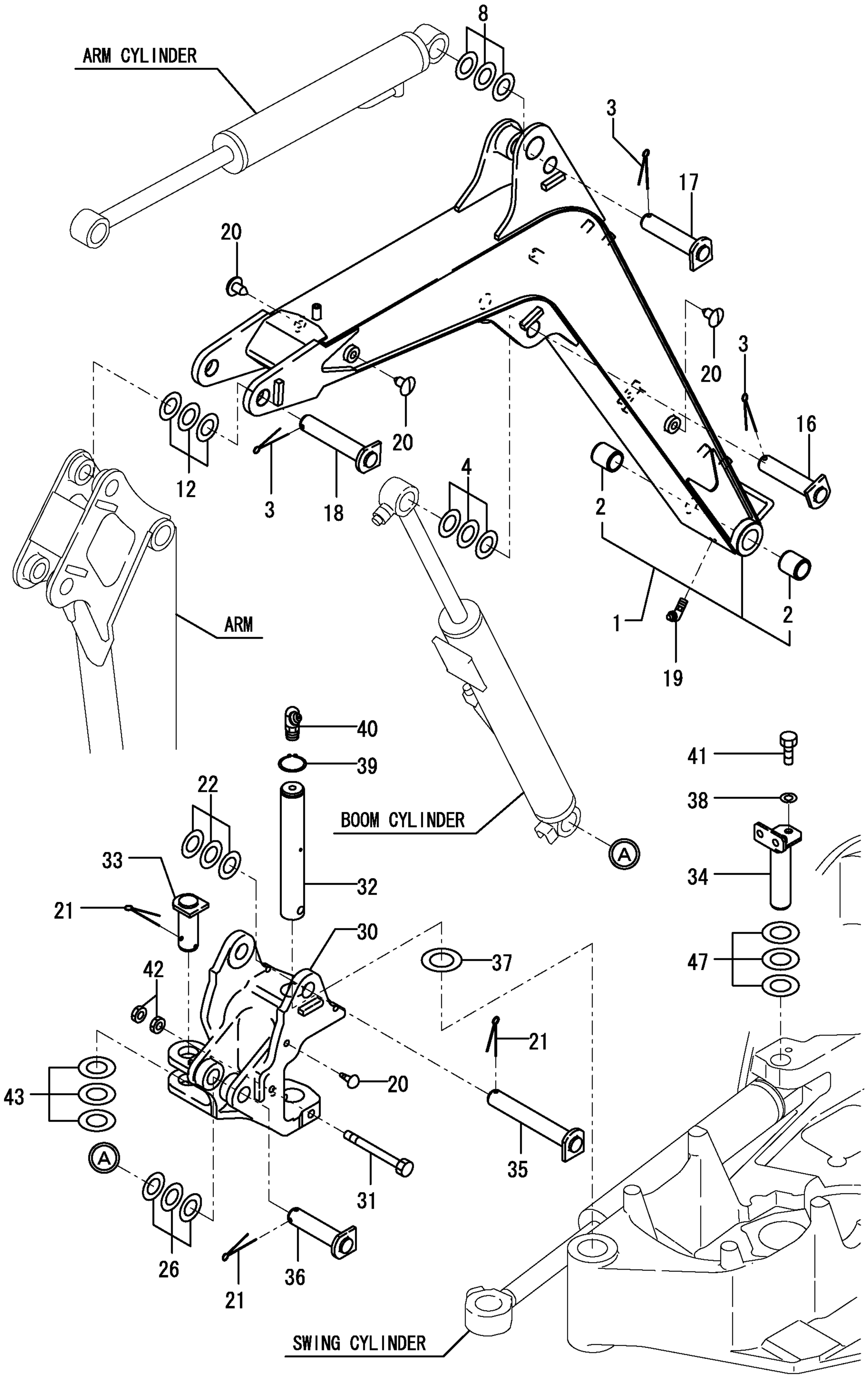

https://truckmanualshub.com/

```
1,1,,172155-81390,,"COTTER PIN 6X 35",2,2,,,,,,,,,,,,,,,,
2,1,,172156-81400,,"SHIM 25-45",1,1,,,,,,,,,,,,,,,,
6,1,,172156-81400,,"SHIM 25-45",1,1,,,,,,,,,,,,,,,,
10,1,,172446-81500,,"ARM,670  (YELLOW:87)",1,1,,,,,1,,,,,,,,,,
11,2,,172157-81360,,"BUSH 25 35 A, PIN",6,6,,,,,,,,,,,,,,,,
12,1,,172446-81620,,"PIN 25X83",1,1,,,,,,,,,,,,,,,,
13,1,,172446-81620,,"PIN 25X83",1,1,,,,,,,,,,,,,,,,
14,1,,24761-050000,,"NIPPLE C,GREASE",1,1,,,,,,,,,,,,,,,,
15,1,,172157-81301-2,,"LINK, BUCKECT   (87)",1,,,,,,,,,,,,,,,,,,
15-1,1,,172157-81302-2,,"LINK
ASSY,BUCKET(87)",1,1,,,,,N,,72480019,M/#01195,,,,,,,,,,I
16,2,,172157-81360,,"BUSH 25 35 A, PIN",2,2,,,,,,,,,,,,,,,,
17,2,,172157-81370,,"BUSH 25 35, PIN",2,2,,,,,,,,,,,,,,,,
18,1,,172157-81341-2,,"ARM L,BUCKET    (87)",1,1,,,,,,,,,,,,,,,,,
19,1,,172157-81351-2,,"ARM,BUCKET(YELLOR:87",1,1,,,,,,,,,,,,,,,,,
20,1,,172155-81390,,"COTTER PIN 6X 35",2,2,,,,,,,,,,,,,,,,
21,1,,172156-81400,,"SHIM 25-45",1,1,,,,,,,,,,,,,,,,
25,1,,172156-81400,,"SHIM 25-45",1,1,,,,,,,,,,,,,,,,
29,1,,172446-81800,,"PIN 25X125",1,1,,,,,,,,,,,,,,,,
30,1,,172446-81800,,"PIN 25X125",1,1,,,,,,,,,,,,,,,,
31,1,,24761-020000,,"NIPPLE PT1/8,GREASE",4,4,,,,,,,,,,,,,,,,
32A,1,,172437-03460,,"LABEL, BOOM",2,2,,,,,2,,,,,,,,,,
```

https://truckmanualshub.com/

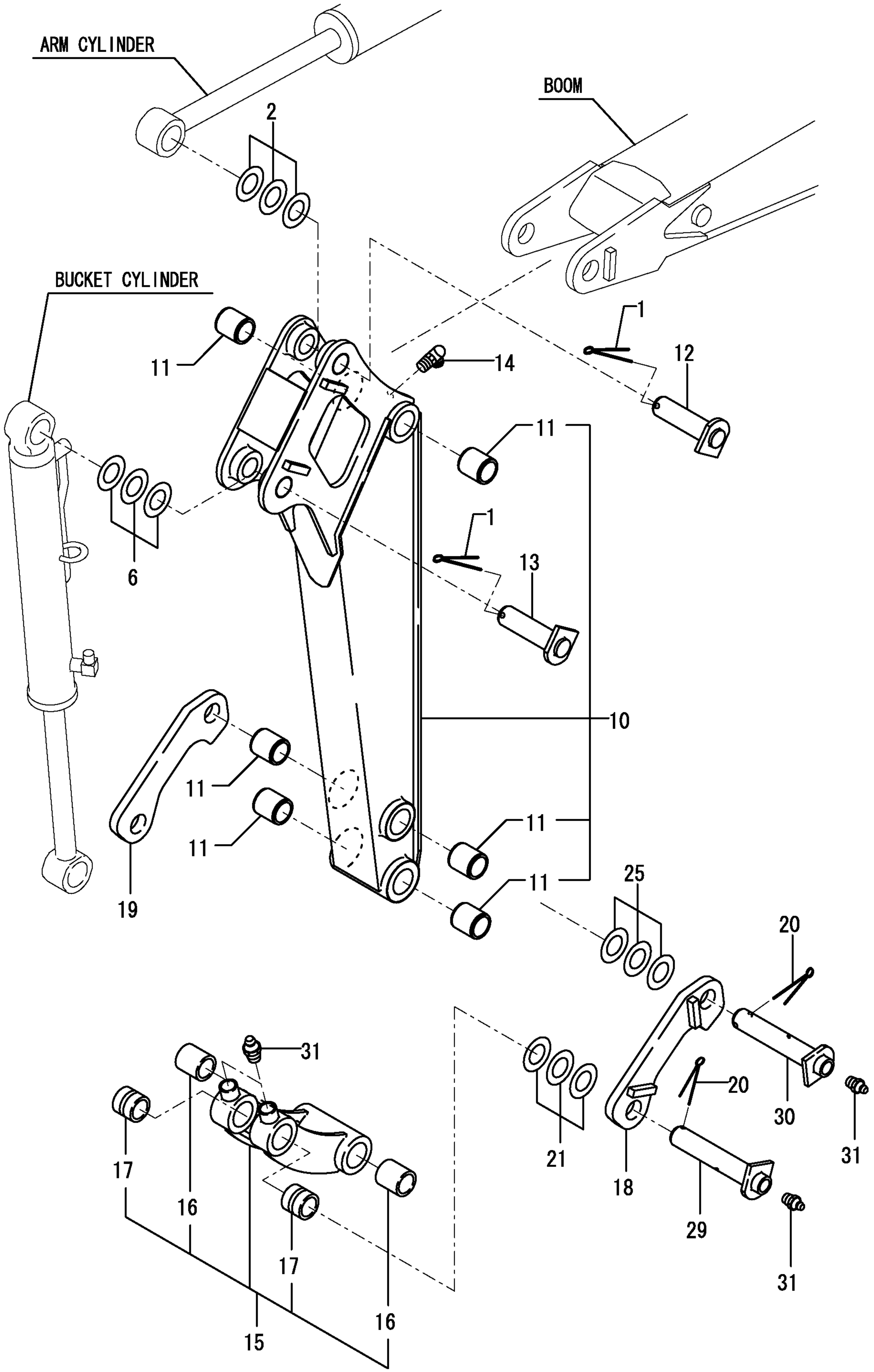

https://truckmanualshub.com/

```
1,1,,172446-81860,,"PIN KIT,BUCKET",2,2,,,,,,,,,,,,,,,,
2,2,,172155-81390,,"COTTER PIN 6X 35",2,2,,,,,,,,,,,,,,,,,
3,2,,172156-81400,,"SHIM 25-45",1,1,,,,,,,,,,,,,,,,,
7,2,,172156-81400,,"SHIM 25-45",1,1,,,,,,,,,,,,,,,,,
11,2,,172446-81800,,"PIN 25X125",1,1,,,,,,,,,,,,,,,,,
12,2,,172446-81800,,"PIN 25X125",1,1,,,,,,,,,,,,,,,,,
13,2,,24761-020000,,"NIPPLE PT1/8,GREASE",2,2,,,,,,,,,,,,,,,,,
14,1,,172157-81400-2,,"BUCKET 350(YELLOR:87",1,,,,,,,1,,,,,,,,,,,
15,2,,172137-86240-2,,"TEETH, SIDE(YELLOR87",2,,,,,,,1,,,,,,,,,,,
16,2,,172110-89130,,TEETH,3,,,,,,,1,,,,,,,,,,,
```

https://truckmanualshub.com/

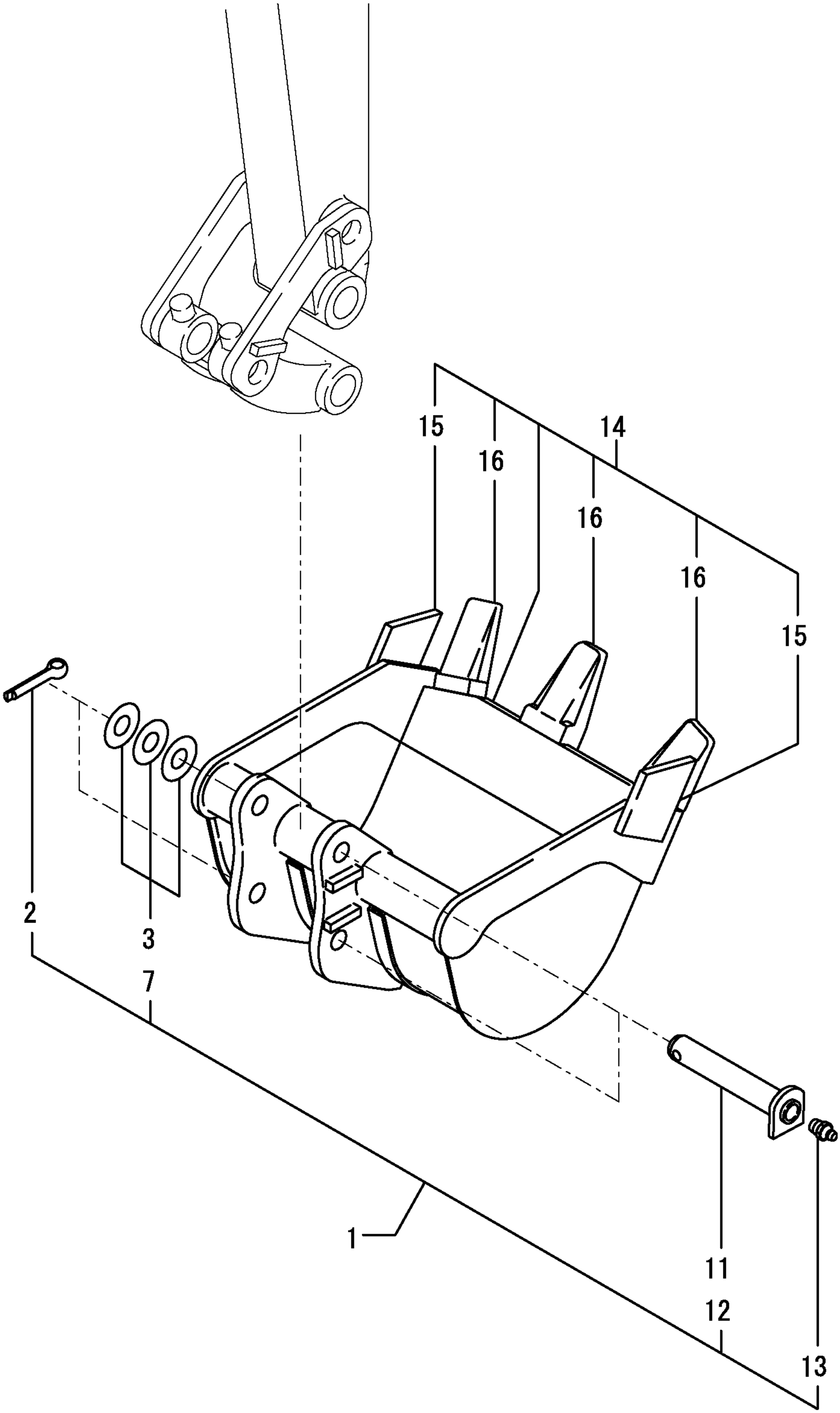

https://truckmanualshub.com/

```
1,1,,172155-81390,,"COTTER PIN 6X 35",4,4,,,,,,,,,,,,,,,,
2,1,,172156-81400,,"SHIM 25-45",4,4,,,,,,,,,,,,,,,,
6,1,,172446-94200,,"PIN 25X59",2,2,,,,,,,,,,,,,,,,
7,1,,172446-94220,,"PIN 25X59 B",2,2,,,,,,,,,,,,,,,,
8,1,,172446-94500,,"BLADE     (GREEN:88)",1,1,,,,,,,,,,,,,,,,
9,1,,172446-94600,,"BLADE L   (GREEN:88)",1,1,,,,,,,,,,,,,,,,
10,1,,172446-94610,,"BLADE R   (GREEN:88)",1,1,,,,,,,,,,,,,,,,
11,1,,172446-94700,,"PIN 20X107",2,2,,,,,,,,,,,,,,,,
12,1,,172446-94710,,"PIN 20",2,2,,,,,,,,,,,,,,,,
13,1,,22417-400350,,"COTTER PIN 4.0X35",2,2,,,,,,,,,,,,,,,,
14,1,,24761-020000,,"NIPPLE PT1/8,GREASE",2,2,,,,,,,,,,,,,,,,
15,1,,24761-040000,,"NIPPLE B,GREASE",2,2,,,,,,,,,,,,,,,,
```

https://truckmanualshub.com/

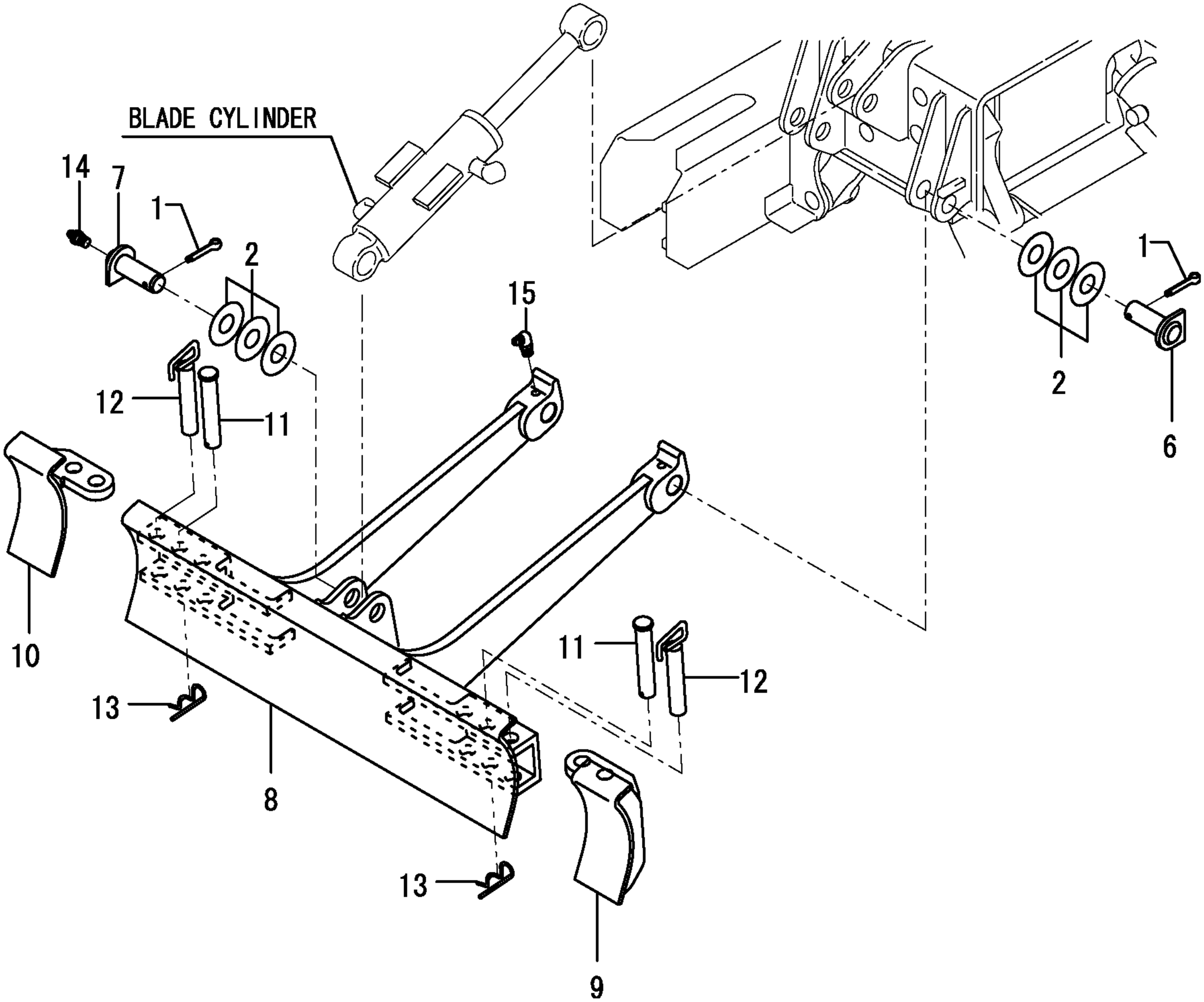

https://truckmanualshub.com/

```
[Info]
PcNo=Y00S4171
PcName=B08-3(US,AS)
JpnUse=0
JpnSec1=Œš‹@
JpnSec2=ƒoƒbƒNƒz[
JpnSec3=B
JpnPreface=0
EngUse=1
EngSec1=CONSTRUCTION (US,AS)
EngSec2=EXCAVATOR (B)
EngSec3=B
EngPreface=1
```