https://truckmanualshub.com/

CLARK

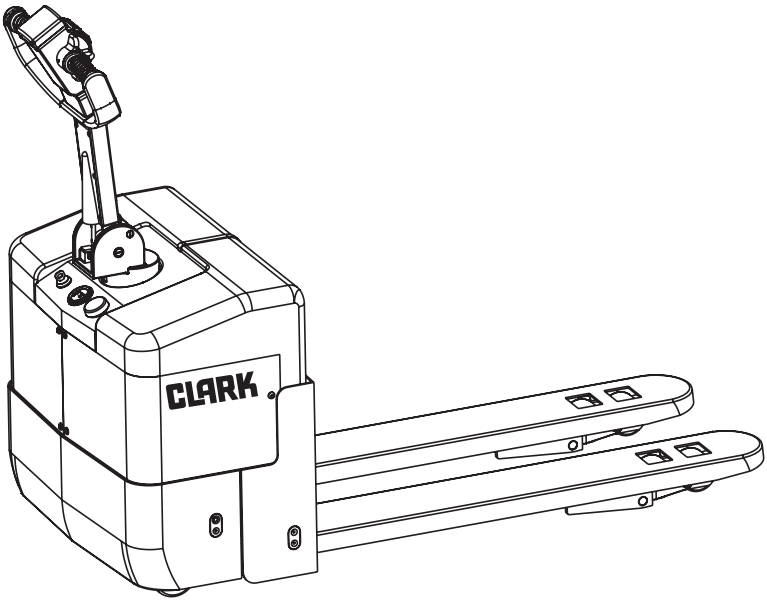

Operator's Manual

EWP30

Book No. 2827193
OM-722

Do not remove this manual
from the truck.

https://truckmanualshub.com/

Record the following information pertaining to your truck.

Model No. _____

Serial No._____

Customer Truck Identification No. _____

Truck Weight, Empty _____

Truck Rated Capacity _____

Truck Gross Weight_____

Truck Gross Weight, Loaded w/ Rated Load_____

Special Equipment or Attachments _____

IMPORTANT
Do not expose this manual to hot water or steam.

© 2007 Clark Material Handling Company

Welcome to the growing group of professionals who own, operate, and maintain CLARK lift trucks. We take pride in the long tradition of quality products and superior value that the CLARK name represents. This manual will familiarize you with the safety, operation, and maintenance aspects of your lift truck.

Contents

The general topics covered in this manual are shown below. Detailed tables of contents are given at the beginning of each Section.

Before You Operate Your Lift Truck ii

About this Manual v

Safety Signs and Safety Messages vii

Truck Application viii

Section 1. General Safety Rules 1.1

Section 2. Operating Hazards 2.1

Section 3. Know Your Truck 3.1

Section 4. Operating Procedures 4.1

Section 5. Daily Inspection 5.1

Section 6. Planned Maintenance 6.1

Section 7. Towing 7.1

Section 8. Specifications 8.1

Index Index.1

https://truckmanualshub.com/

Before You Operate Your Lift Truck...

You must be trained and authorized to operate a lift truck.

LEARN TO PREVENT ACCIDENTS

First: Learn safe operating rules and your company rules.

Next: Read your Operator's Manual. If you do not understand it, ask your supervisor for help.

Learn about the unit you operate.

KNOW YOUR TRUCK

Then: Practice operating your truck safely.

And: Keep your truck in safe operating condition with correct and timely maintenance.

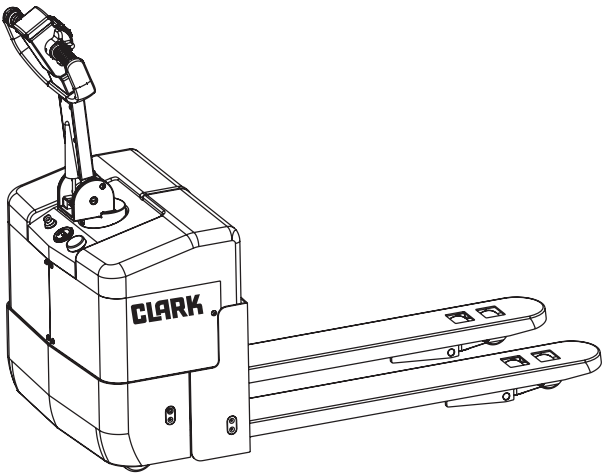

Breaking these rules will cause serious or fatal injury to yourself and others.

https://truckmanualshub.com/

...Be Prepared

Lift trucks are specialized machines with unique operating characteristics. They require specific instructions and rules for safe operation and maintenance. CLARK lift trucks are built to take hard work, but not abuse. They are built to be dependable, but they are only as safe and efficient as the operator and the persons responsible for maintaining them.

Safety Standards

Your CLARK lift truck is designed and built to be as safe and efficient as today's technology can make it. As manufactured, it meets all the applicable mandatory requirements of ANSI B56.1 Safety Standard for Powered Industrial Trucks. Each truck is also furnished with certain safety devices—horn, for example—as standard equipment.

ANSI B56.1, the standard for lift truck operation, includes rules about operation, selection, training, supervision, and maintenance. We suggest that owners, operators, and supervisors read this standard. See "Safety Standards" in Section 6 for more information.

Safe Operation

Safe operation of lift trucks is of primary importance to CLARK. Our experience with lift truck accidents has shown that when accidents happen and people are killed or injured, the causes are:

- **Operator is not properly trained**
- **Operator is not experienced with lift truck operation**
- **Basic safety rules are not followed**
- **Lift truck is not maintained in safe operating condition.**

For these reasons, CLARK wants you to know about the safe operation and correct maintenance of your lift truck. Clark provides this *Operator's Manual* to help.

This manual is not a training manual, however. It is a guide to help trained and authorized operators safely operate their lift trucks. It emphasizes and illustrates the correct procedures, but it cannot cover every possible situation which may result in an accident. You must watch for all hazards in your work areas and avoid or correct them. While it is important that you know and understand the information in this manual, you must also know and follow your company safety

https://truckmanualshub.com/

rules! Be sure that your equipment is maintained in a safe condition. Do not operate a damaged truck. Practice safe operation every time you use your lift truck.

Remember, before you start operating this lift truck, be sure that you understand all operating procedures. It is your responsibility, and it is important to you and your family, to operate your lift truck safely and efficiently. Be aware that the Federal Occupational Safety and Health Act (OSHA) and state laws require that operators be completely trained in the safe operation of lift trucks. If you think you need training, ask your supervisor.

Safety and Planned Maintenance

Regular maintenance and care of your lift truck is essential for your safety. A faulty lift truck is a potential source of danger to the operator, and to other personnel working near it. Proper maintenance is also important for economy and utilization. As with all quality equipment, keep your lift truck in good operating condition by following the recommended schedule of maintenance.

A lift truck should be examined by the user on a daily basis to be sure it is safe to operate. Do not make any repairs to this truck unless you have been trained in safe lift truck repair procedures and are authorized by your employer.

In addition to the daily user inspection, CLARK recommends that a planned maintenance and safety inspection program (PM) be performed by trained and authorized personnel. Inspections, adjustments, and repairs done during the PM increase the life of components and reduce unscheduled downtime. The PM can be scheduled to meet your particular application and lift truck usage.

Your CLARK dealer is prepared to help you implement a PM program with trained service personnel who know your lift truck and can keep it operating safely and efficiently.

https://truckmanualshub.com/

About this Manual

To operate a truck safely and productively, the operator must know and understand the appropriate safety practices, including safe operating and load handling techniques. To develop the skill required, the operator must become familiar with the construction and features of the lift truck. The operator must also understand the capabilities and limitations of the lift truck and see that it is kept in a safe condition.

This manual is a digest of essential information on the above subjects. The information is provided in eight Sections:

Section 1, General Safety Rules, reviews and illustrates accepted practices for safe operation of a lift truck.

Section 2, **Operating Hazards,** warns of conditions that could cause damage to the truck or injury to the operator or other personnel.

Section 3, Know Your Truck, describes the major operating components, systems, controls, and other features of your truck.

Section 4, Operating Procedures, presents specific instructions on the safe, efficient operation of your lift truck.

Section 5, Daily Inspection, explains how to perform the operator's daily safety inspection.

Section 6, **Planned Maintenance,** serves as reference for trained service personnel performing planned maintenance and battery maintenance.

Section 7, **Towing,** presents procedures for towing.

Section 8, Specifications, provides reference information on features, components, and maintenance items.

Also, the **Index** helps you locate information about various topics.

https://truckmanualshub.com/

NOTICE

The descriptions and specifications in this manual were in effect at the time of printing. CLARK Material Handling reserves the right to make improvements and changes in specifications or design, without notice and without incurring obligation. Check with your authorized CLARK dealer for information on possible updates or revisions.

We urge you to carefully read this manual from cover to cover. Take time to understand the information on general safety rules, operating hazards, and operating procedures. Understand how all gauges, indicator lights, and controls function.

This manual is permanently attached to your lift truck to serve as a reference for anyone who may operate or service it. If the truck is not equipped with this manual, ask your supervisor to obtain one and have it attached to the truck. And remember, your CLARK dealer is pleased to answer questions about the operation and maintenance of your lift truck and will provide you with additional information should you require it.

For detailed service information, refer to the *Service Manual.*

https://truckmanualshub.com/

Safety Signs and Safety Messages

Improper operation can cause accidents. Don't take chances with incorrect or damaged equipment. **Read** and **understand** the procedures for safe driving and maintenance outlined in this manual. Don't hesitate to ask for help. **Stay alert!** Follow safety rules, regulations, and procedures. Avoid accidents by recognizing dangerous procedures or situations before they occur. **Drive and work safely** and follow the safety signs and their messages on the truck and in this manual.

Safety signs and messages are placed in this manual and on the truck to provide instructions and identify specific areas where potential hazards exist and special precautions should be taken. Know and understand the meaning of these instructions, signs, and messages. Damage to the truck, death, or serious injury to you or other persons may result if these messages are not followed. If warning decals are damaged, they must be replaced. Contact your CLARK dealer for replacements.

NOTICE

This message is used when special information, instructions or identification is required relating to procedures, equipment, tools, pressures, capacities and other special data.

IMPORTANT

This message is used when special precautions should be taken to ensure a correct action or to avoid damage to or malfunction of the truck or a component.

CAUTION

This message is a reminder of safety practices that can result in personal injury if proper precautions are not taken.

WARNING

This message indicates a hazard exists that can result in injury or death if proper precautions are not taken.

DANGER

This message is used when an extreme hazard exists.

https://truckmanualshub.com/

Truck Application

Each model is designed for a specific set of work tasks and conditions. Be sure you are using the right truck for the job.

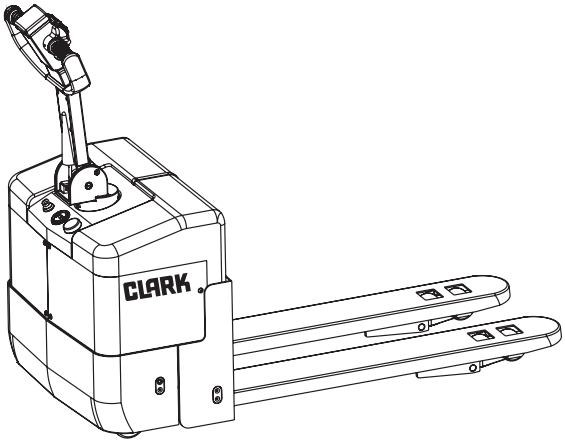

EWP30 model lift trucks are designed for moving loads short distances. No riding is allowed on EWP30 model trucks.

https://truckmanualshub.com/

General Safety Rules

Contents

Do's and Don'ts....1.2
No Riders....1.3
Pedestrians....1.4
Grades....1.5
Travel....1.6
Pinch points....1.7
Parking....1.8

Do's and Don'ts

OM0001

Don't mix drugs or alcohol with your job.

Do watch for pedestrians.

OM0002

OM0003

Don’t block safety, or emergency equipment.

Do wear required safety equipment.

OM0004

OM0005

Don't smoke in "NO SMOKING" areas or when recharging.

https://truckmanualshub.com/

No Riders

Always walk with EWP30 model trucks. Never attempt to ride.

Pedestrians

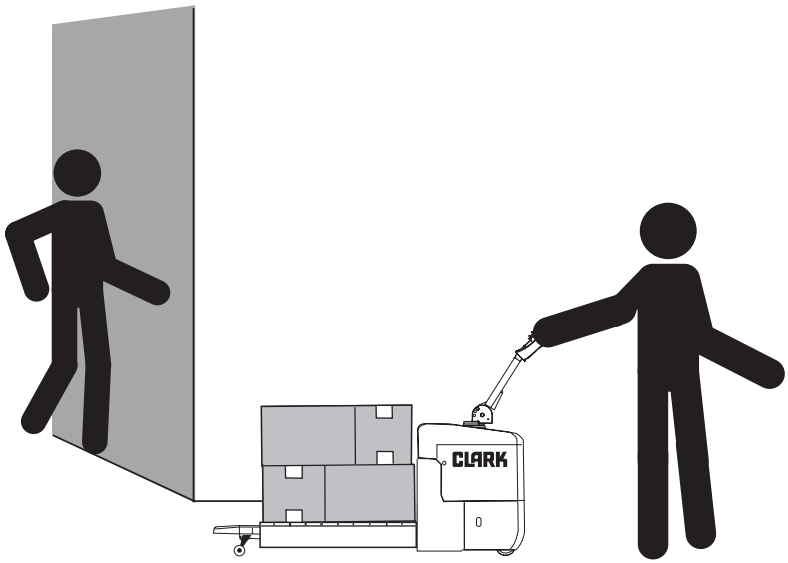

Watch where you are going. Pedestrians may use the same roadway you do. Sound your horn at all intersections.

Watch for people in your work area. They may not watch for you.

https://truckmanualshub.com/

Grades

Always keep forks downgrade with or without a load and in the raised position when working on a grade. Trucks are designed to travel up a 5% maximum grade with load.

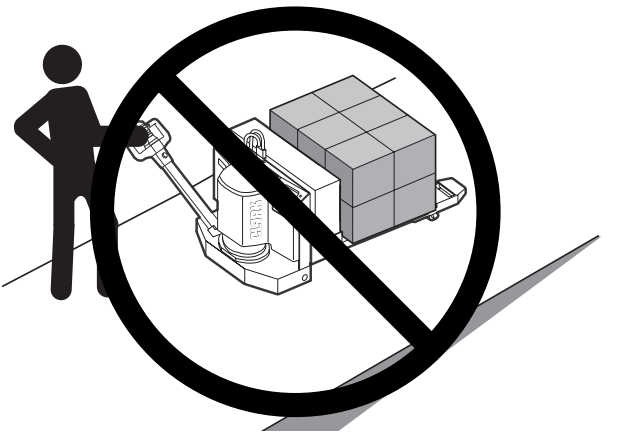

WARNING

Never turn on a grade, either loaded or unloaded.

Travel

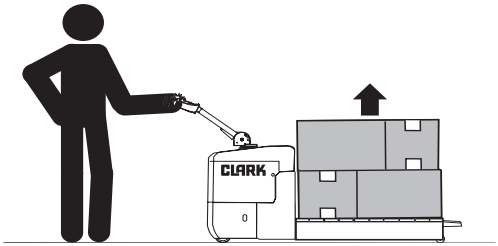

Always carry loads in the raised position.

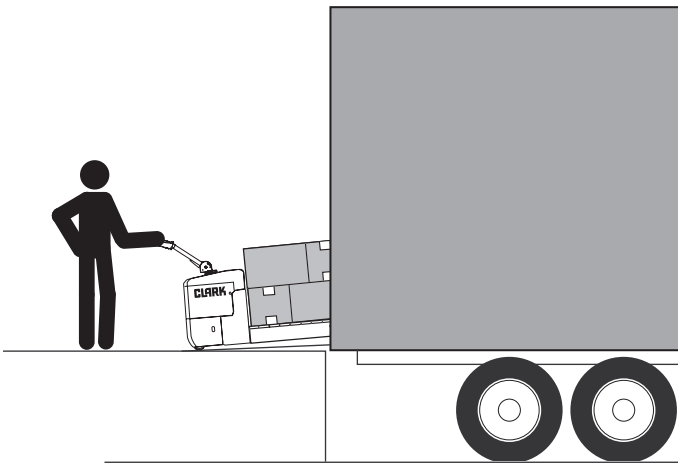

Enter confined areas such as semi-trailers, trucks, boxcars or elevators with load end of your truck first. This will minimize the maneuvering necessary to exit. If load blocks your view while traveling in reverse, make sure path is clear of personnel and obstructions.

CAUTION

Always take extra care in any confined places. Think ahead of your moves. When moving in and out of confined space allow enough room for yourself between the truck and walls, racks, pallets etc.

https://truckmanualshub.com/

Pinch Points

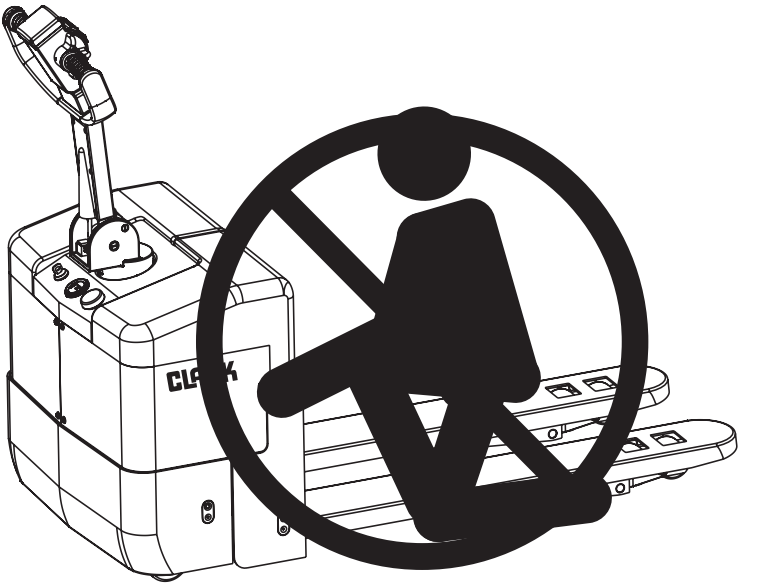

WARNING

Never allow anyone to reach under or around the edge of the truck. Be especially careful not to put any portion of your body under the load forks. Keep your feet clear of the truck when traveling.

WARNING

When operating close to stationary objects do not attempt to stop the truck with your feet, or fend off with your feet. The truck and load may weigh more than an automobile and can not be guided by the operators feet.

Parking

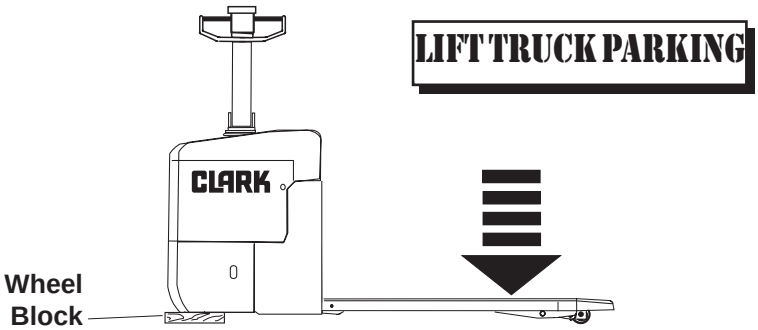

Park trucks in designated parking areas only. Do not obstruct traffic lanes or aisles. Lower forks to floor. Place control handle in full turn and raise handle to "up" position to apply brake. Turn key switch off and remove key. Depress the battery disconnect button. Block drive wheel to prevent accidental roll. Turn key in to proper authority.

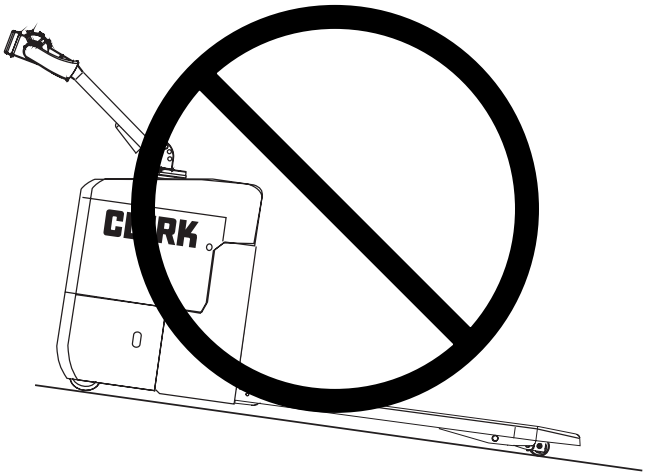

WARNING
Never park on a grade.

https://truckmanualshub.com/

Operating Hazards

Contents

Fast Turns 2.2
Corner Cutting 2.2
Loose Loads 2.3
Long and Wide Loads 2.3
Dock or Trailer Drop-Offs 2.4
Trailer Creep 2.4
Debris on Floor 2.5
Damaged Pallets and Skids 2.6

IMPORTANT

The operation of lift trucks involves many hazardous situations. This section describes some of the more common ones. Your place of work may have hazards not described. Be alert to those situations that can result in injury and possibly death.

Fast Turns

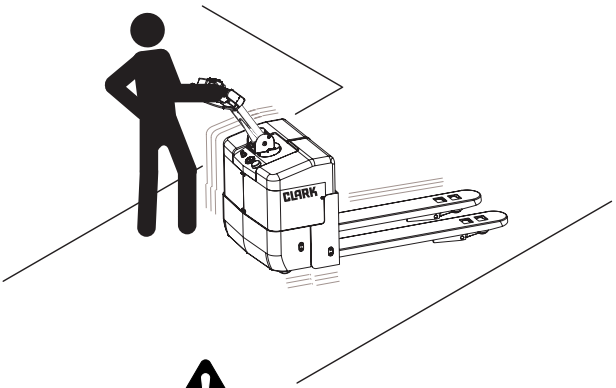

WARNING

Slow down on turns. An empty truck can tip over easier than a loaded truck.

Corner-Cutting

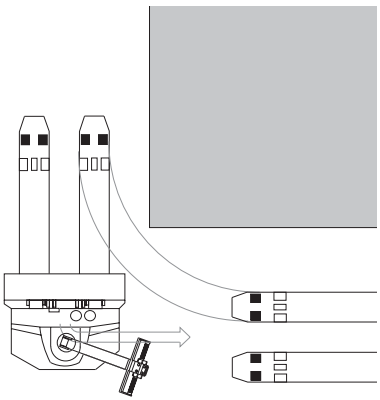

WARNING

Always use caution when making a turn into an aisle. The load wheels do not follow the turn path of the drive wheel and will tend to "cut" the corner.

https://truckmanualshub.com/

Loose Loads

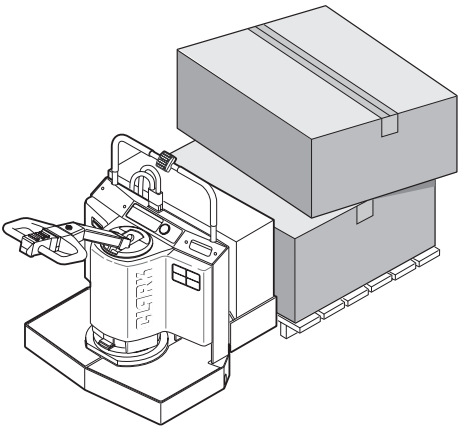

WARNING

Falling loads can seriously injure yourself or others. Never carry uneven material. Stack loose material evenly.

Long or Wide Loads

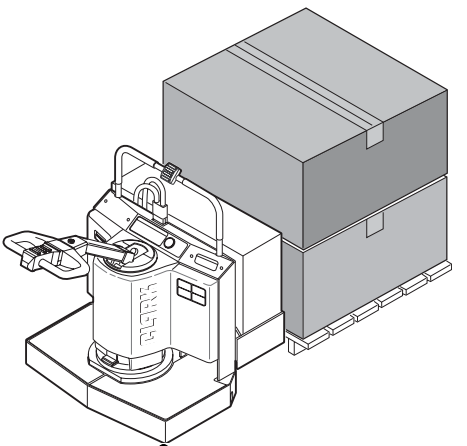

WARNING

Long or wide loads are less stable and may strike objects or persons in their path. Watch load clearance, move slowly and turn carefully.

Dock or Trailer Drop-Offs, Trailer Creep

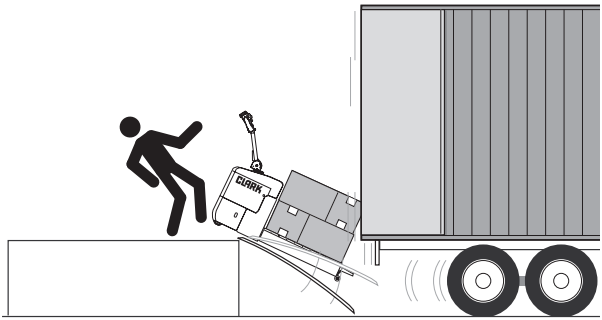

WARNING

Talk to the truck driver yourself and make sure he does not move the trailer until you are done! Make sure the driver applies the trailer brakes and chocks trailer wheels. The impact of moving in and out of a trailer may cause the trailer to move.

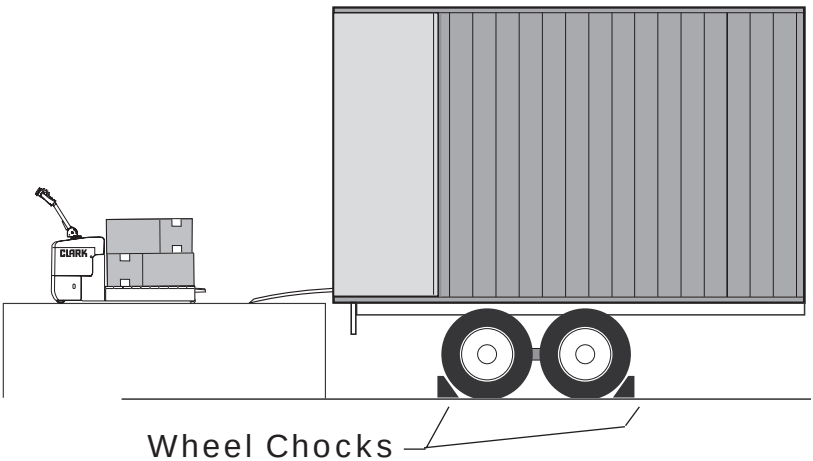

IMPORTANT

Use wheel chocks. Use trailer-to-dock locking systems, if available.

https://truckmanualshub.com/

Debris on Floor

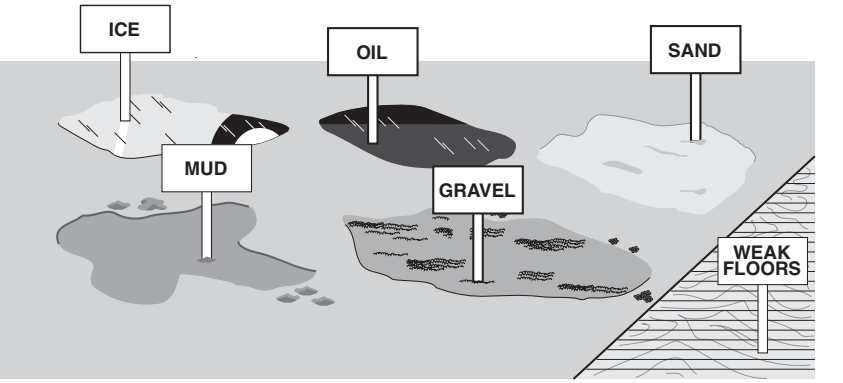

WARNING

Oil, water, sand, mud, wood, gravel and other materials will make the floor slippery, uneven and dangerous. Be careful when crossing these areas.

WARNING

Know the weight of your truck and load. Especially when using elevators. Know the capacity of the elevator you intend to use. Do not overload.

https://truckmanualshub.com/

Damaged Pallets and Skids

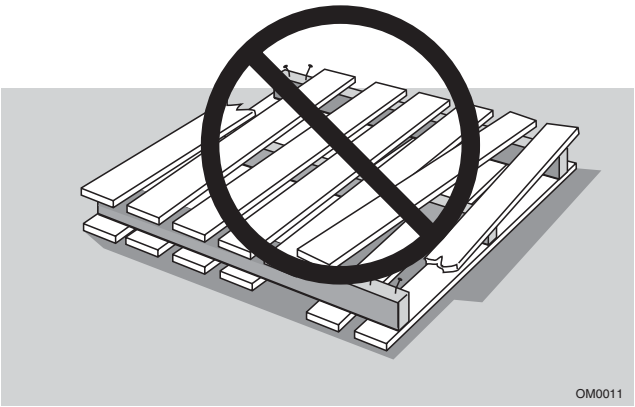

WARNING

Do not move or store materials on damaged or poorly maintained pallets and skids. Items can fall through or off them causing severe injury or death.

Know Your Truck

Contents

Component Location **3.2**

Operator's Controls **3.3**

Maintenance Component Location **3.4**

System Description **3.5**

Nameplate Description **3.7**

Warning Decals **3.8**

Component Location

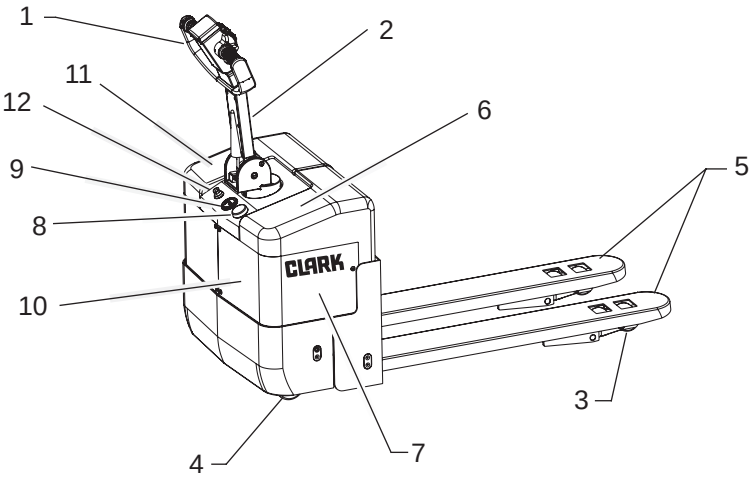

1. Steering and Brake Control Handle
2. Truck Data Plate
3. Load Wheels
4. Drive Wheel
5. Load Forks
6. Cover
7. Batteries
8. Battery Disconnect
9. Hour Meter / BDI
10. Operator's Manual
11. Warning Decals
12. Key Switch

Operator's Controls

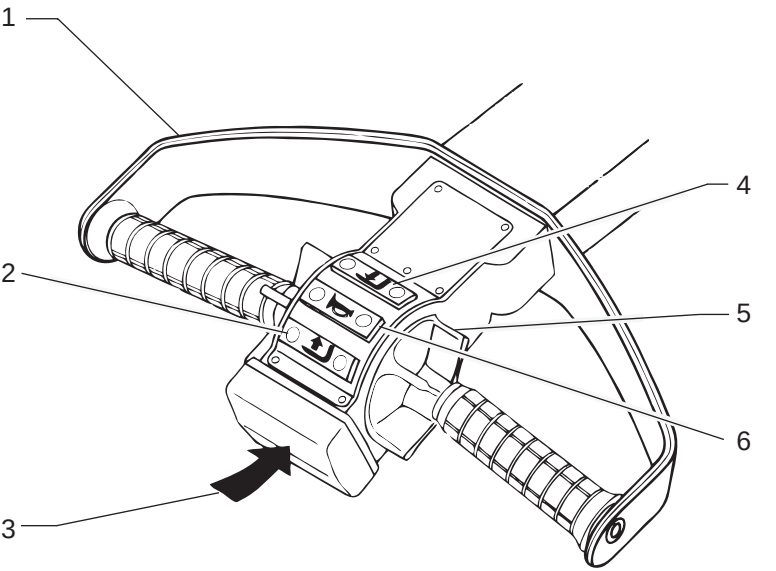

1. Steering and Brake Control Handle
2. Lift Control Button
3. Emergency Reversal Switch
4. Lower Control Button
5. Forward/Reverse Control *(Butterfly)*
6. Horn Button

Maintenance Component Location

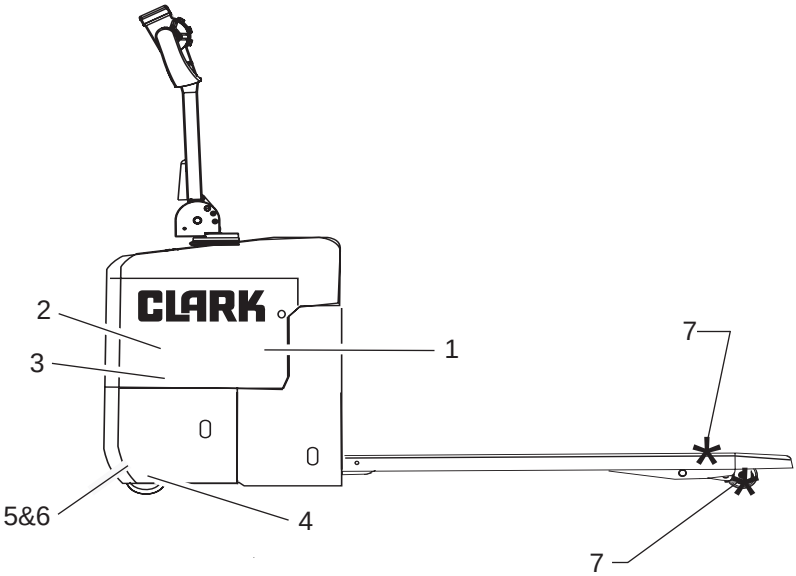

1. Batteries
2. Traction Control Panel
3. Hydraulic Unit
4. Brake
5. Drive Motor
6. Drive Unit
7. Lubrication Fittings

System Description

Control Handle

- Controls travel direction and speed, lift and lower, horn, braking and steering.
- Butterfly type speed control for left or right hand operation.
- Up or down brake application.
- Safety reversing switch on end of control handle.
- 180° rotation for maneuverability.

Drive Unit

- Double reduction gears
- Totally enclosed with grease lubrication
- Horizontal mount drive motor

Brake

- The EWP30 is equipped with auto regenerative braking to aggressively stop the truck when the directional control is returned to neutral and plug braking when the speed control is rotated into the opposite direction.
- In addition, the truck is equipped with a spring applied, magnetic release disc brake unit mounted on the rear of the drive motor for emergency braking and as a parking brake.
- Easy service accessibility.

Electrical

- 24 volt electrical system
- Solid state Separately Excited Transistor control features cool and quiet operation, cold switching for increased contactor tip life, and infinitely variable travel speed control.

Hydraulic system

- Integral motor - pump - reservoir assembly features a control valve and pressure relief valve for controlled lowering and system overload protection.

https://truckmanualshub.com/

Frame and Forks

- Formed steel plate.
- Square section solid steel pull rods.
- Lift linkage provides 4.7" of lift.
- Standard stability casters

Standard Equipment

Standard features include: Curtis 1243 Control System, battery discharge indicator, full 4.7" lift height, horn, key switch, 24 volt electrical system, poly drive tire, poly load wheels, SB-175 amp red connector connection for charging batteries, high visibility Clark green and black finish.

Optional Equipment

Optional equipment includes: Portable Battery Charger (110/120 VAC - 15 Amp outlet)

Nameplate Description

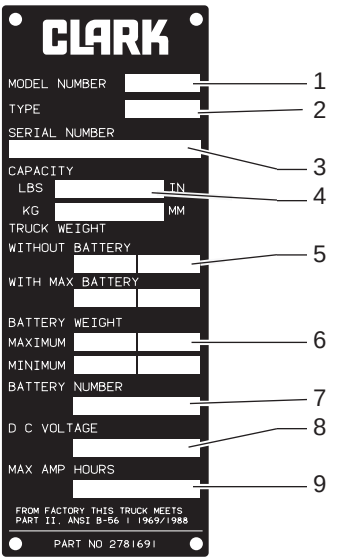

Know The Data On The Nameplate

1. Truck registered name.
2. Type of construction. The code number signifies the UL type of protection, if applicable. Check with proper authority before entering areas where flammable or explosive material may be present.

NOTE: The EWP30 is not UL rated!

3. Truck serial number.
4. Capacity, data.
5. Truck weight, less battery.
6. Battery weight.
7. Battery identification number.
8. System voltage.
9. Battery ampere-hour rating.

IMPORTANT

If the truck is modified, the capacity of the truck may be affected. Contact your authorized Clark dealer for a new nameplate showing the revised capacity.

https://truckmanualshub.com/

Warning Decals

Here are examples of decals which give important information about operation and safety. OSHA and ANSI require you to replace them if they are missing or unreadable. Get familiar with them and follow the instructions. If you don't understand them, ask your supervisor for help.

Operator Safety Warning Decal

The operator's warning decal describes basic instructions for safe operation of a lift truck. Read and understand these instructions and the other safety messages in this manual and on the lift truck.

- Do not operate this motorized hand truck unless you are trained and authorized. Read and understand the operator's manual before starting truck.
- Do not operate damaged or faulty truck. Do not attempt repairs unless you are trained and authorized.
- Keep hands on designated grip and feet away from truck. Do not operate truck with wet or greasy hands or shoes.
- Enter confined areas with load and first. Be very careful when operating in confined area to avoid being pinned.
- Avoid uneven or slippery surfaces and loose materials.
- Travel slowly and with caution on slopes and do not turn. Always travel with load down grade.
- Do not load truck over capacity on nameplate. Do not handle shaky loads, be very careful when handling long, high and wide loads.
- Do not exceed floor weight limits.

Warning Decals

No Riding Decal

This safety decal is placed on the top cover to warn of the danger of injury by attempting to ride EWP model trucks. Always walk with EWP model truck.

Battery Warning Decal

This decal is located next to the battery disconnect switch to give warning to disconnect the battery before servicing and to maintain correct battery polarity.

Battery Specification Decal

This decal is located on the top cover to give warning to read the battery information for proper specifications and restraining information. It also warns not to use solvent of steam to clean electrical components.

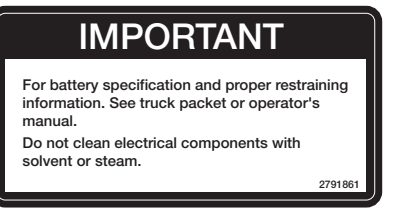

Operating Procedures

Contents

Beginning Truck Operation **4.2**
Travel Control **4.2**
Emergency Reversal Switch **4.3**
Lift, Lower & Horn Control **4.3**
Braking **4.4**
Plugging **4.4**
Load Handling **4.5**
Parking **4.6**

https://truckmanualshub.com/

Beginning Truck Operation

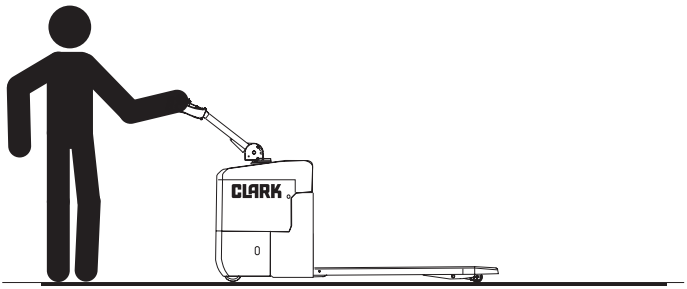

Remove chocks from drive wheel. Pull battery disconnect switch up. Insert key and turn clockwise to "On" position. Lower control handle to comfortable operating position and swing handle in line with intended path of forward or reverse travel. Check to make sure your path of travel is clear of people or obstructions.

Travel Control

Travel Control

Rotate the direction/speed control as shown to travel forward. Rotate the direction/speed in the opposite direction to travel in reverse ("Reverse" is defined as traveling with the forks leading). Truck speed increases the further you rotate the direction/speed control. When you release the control, it rotates back to the "neutral" position and the control goes into Auto Plug mode to slow the truck.

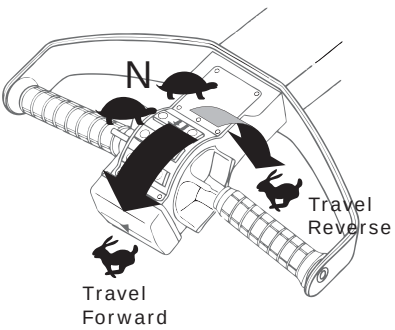

https://truckmanualshub.com/

Emergency Reversal Switch

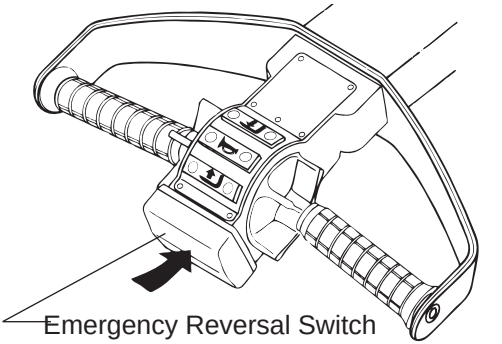

When the emergency reversal switch strikes an object or a person, or is held in by the operator, the truck automatically propels itself in the "reverse" direction ("Reverse" is defined as traveling with the forks leading). When the switch no longer contacts the person or object, the switch pops up and the truck resumes normal control. Emergency reversal is disabled when the brake is "On".

CAUTION

Be careful not to activate Emergency Reversal Switch when pulling down the handle from the parked position.

Lift, Lower and Horn Control

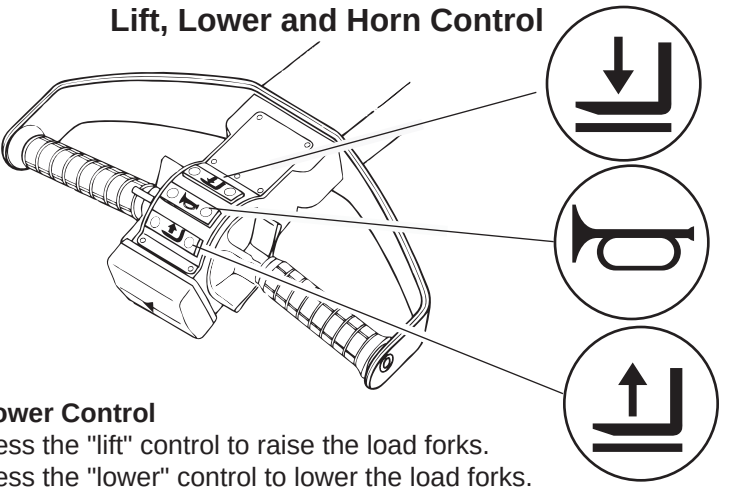

Lift /Lower Control

- Press the "lift" control to raise the load forks.
- Press the "lower" control to lower the load forks.
- Press Horn button to sound horn

Braking

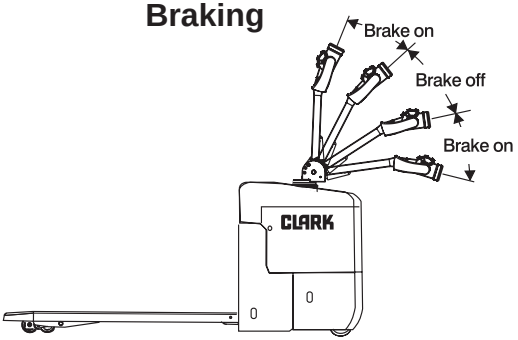

Lowering the control handle to the operating position disengages the brake. Pushing the control handle to the "up" position or pulling the control handle to the "down" position applies the brake and shuts off the drive motor.

When the direction/speed control is released to Neutral, the control will automatically apply the plugging function to slow the truck to a stop. This is the preferred method of stopping the truck.

In an emergency, the truck can be stopped by releasing the forward/reverse control and applying the brake by pushing the control handle to the "up" position to bring the truck to a stop.

Plugging (braking)

You can change direction and stop the truck without braking, by "plugging." As you are traveling, move the travel control towards neutral or into the opposite direction. The truck should slow to a smooth, controlled stop and then accelerate in the opposite direction.

You can control the plugging distance with the travel control (direction/speed): The farther the direction speed control is rotated in the opposite direction, the shorter the reversal distance. Plugging is the recommended method for stopping the truck and will reduce wear on the Electromagnetic brake.

CAUTION

Be careful when plugging. Any sudden change in direction can cause the load to move or fall off forks.

https://truckmanualshub.com/

Load Handling

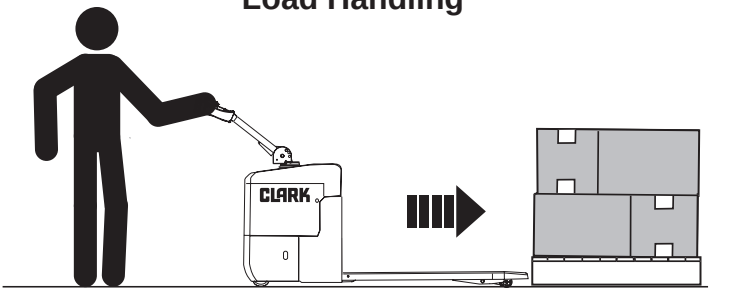

- Lower forks completely before entering load.
- Center forks with load as you approach.
- Enter load as far as possible.

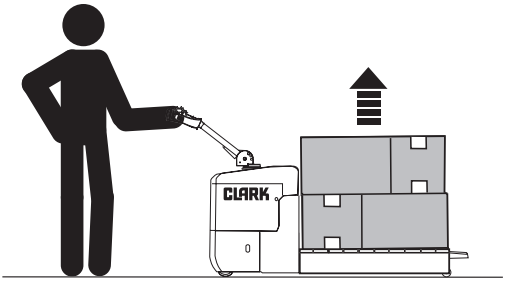

- Make sure the lifting area is clear before lifting load.
- Raise forks completely before moving truck.
- Avoid operating hazards and observe general safety rules while moving load.

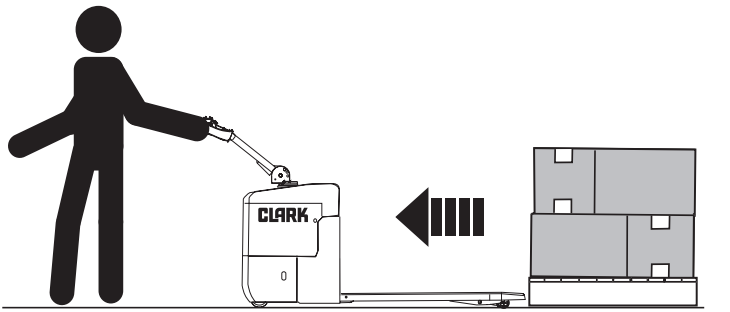

- Always approach load deposit areas squarely and cautiously.
- Be especially careful when placing loads near water pipes, electrical wiring or outlets, steam pipes, heaters, and other dangerous or fragile equipment.
- After placing load in position, lower the forks completely.
- Withdraw the forks squarely from the load.

Parking

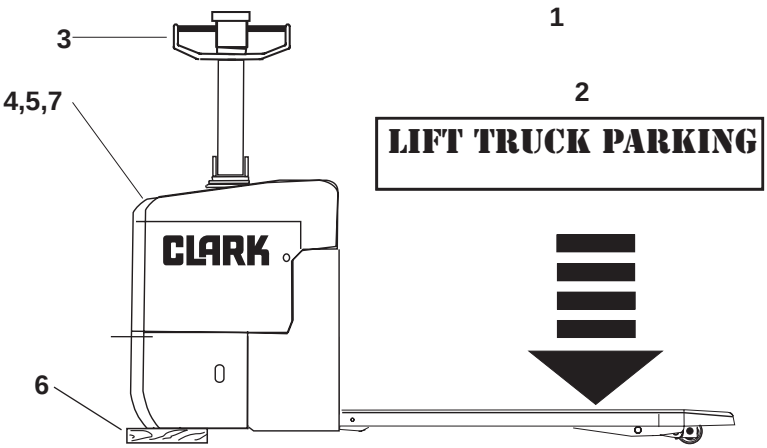

1. Park truck in designated parking area.
2. Lower forks to floor.
3. Place control handle in full turn and raise handle to "up" position to apply brake.
4. Turn key switch to "Off" position and remove key.
5. Press the battery disconnect switch.
6. Block drive wheel to prevent accidental roll.
7. Turn key in to proper authority.

https://truckmanualshub.com/

Daily Inspection

Contents

Daily Inspection Sheet 5.2

Operator Repairs 5.2

Horn 5.3

Emergency Reversal Switch 5.3

Travel Control 5.4

Lift and Lower Controls 5.4

Brake 5.5

Wheels and Tires 5.5

Maintenance Problems 5.6

OSHA requires inspection before starting each shift to keep lift trucks in safe operating condition. The following information points out important areas to check during these inspections.

Daily Inspection Sheet

CLARK Material Handling Company

OPERATORS' DAILY CHECKLIST
Check Each Item Before Start Of Each Shift

Date: _____

Check one: ☐ Gas/LPG/Diesel Truck ☐ Electric Sit-down ☐ Electric Stand-up ☐ Electric Pallet

Truck Serial Number: _____ Operator: _____ Supervisor's OK: _____

Hour meter reading: _____

Check each of the following items before the start of each shift. Let your supervisor and/or maintenance department know of any problem.
DO NOT OPERATE A FAULTY TRUCK. Your safety is at risk.
After checking, mark each item accordingly. Explain below as necessary.

Check boxes as follows: √ OK X NG, needs attention, or repair. Circle problem and explain below

OK	NG	VISUAL CHECKS
		Tires/Wheels: wear, damage, nuts tight
		Head/Tail/Working Lights: damage, mounting, operation
		Gauges/Instruments: damage, operation
		Operator Restraint: damage, mounting, operation, oily, dirty
		Warning Decals/Operators' Manual: missing, not readable
		Data Plate: not readable, missing
		Overhead Guard: bent, cracked, loose, missing
		Load Back Rest: bent, cracked, loose, missing
		Forks: bent, worn, stops OK
		Engine Oil: level, dirty, leaks
		Hydraulic Oil: level, dirty, leaks
		Radiator: fluid level, dirty, leaks
		Fuel: level, leaks
		Battery: connections loose, charge, electrolyte low
		Covers/Sheetmetal: damaged, missing
		Brakes: linkage, reservoir fluid level, leaks, debris on floor

OK	NG	OPERATIONAL CHECKS
		Engine: runs rough, noisy, leaks
		Steering: loose/binding, leaks, operation
		Service Brake: linkage loose/binding, stops OK, grab
		Parking Brake: loose/binding, operational, adjustment
		Seat Brake (if equipped): loose/binding, operational, adjustment
		Horn: operation
		Backup Alarm (if equipped): mounting, operation
		Warning Lights (if equipped): mounting, operation
		Lift/Lower: loose/binding, excessive drift, leaks
		Tilt: loose/binding, excessive drift, "chatters," leaks
		Attachments: mounting, damaged, operation, leaks
		Battery Test (electric trucks only): indicator in green while holding full forward tilt
		Control Levers: loose/binding, freely return to neutral
		Directional Control: loose/binding, find neutral OK

Explanation of problems marked above:

As an aid in carrying out this inspection, Clark has prepared a form called "Driver's Daily Check List." Copies of this form may be obtained from your Clark dealer. We recommend that you use this form to make a daily record of your inspection and truck condition.

Operator Repairs

Do not make repairs yourself. Lift truck mechanics are trained professionals. They know how to make repairs safely.

⚠ WARNING

OPERATIONAL CHECKS: Perform the following checks in a safe area away from people, walls, or equipment. Do not operate the truck if you find a maintenance problem. Instead, remove the truck from service, tag the truck with an "Out of Service Tag," and report the problem.

Horn

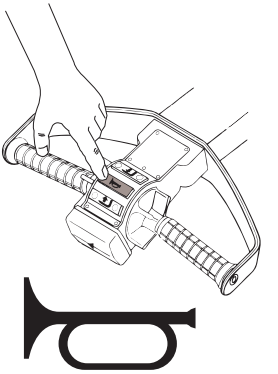

Check the horn. Make sure the horn works properly when depressing the horn button.

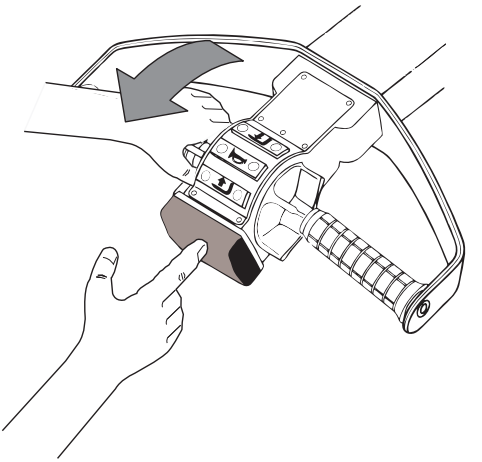

Check the emergency reversal switch. It should depress easily and pop back out on its own. Position the control handle to release the brake. Then, with the truck in "neutral" or "forward," depress the emergency reversal switch. The truck should move away from you until you take your hand off the switch or apply the brake.

Travel Control

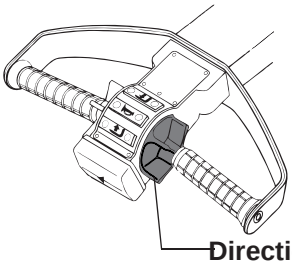

Check travel control. Operate truck in both forward and reverse directions. The direction/speed control must return to neutral position when released.

Lift and Lower Controls

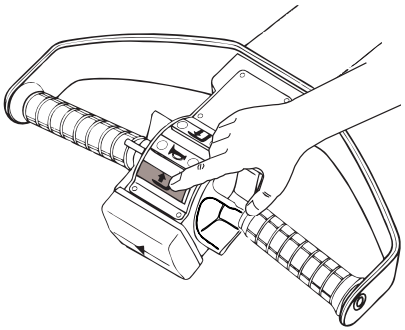

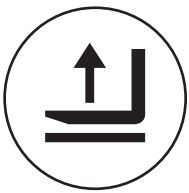

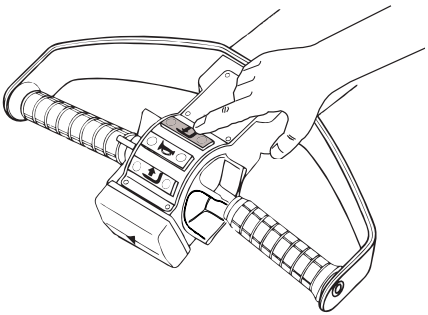

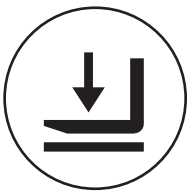

Brake

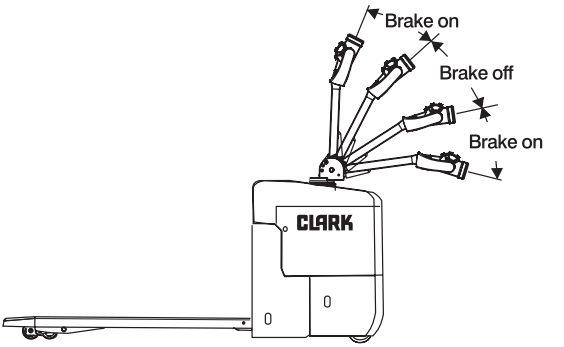

Check the brake. The brake should be applied with the control handle in the fully raised and fully lowered positions. The drive motor should stop when the brake is applied.

Wheels and Tires

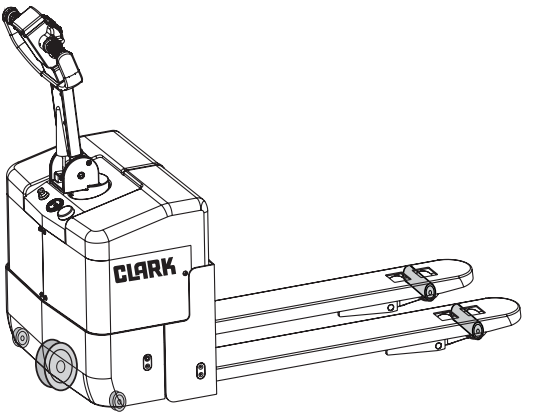

Check condition of wheels and tires. Remove any embedded objects. Report excessive wear, breaks, "chunking out", or bond failure. Check lug nut for proper torque. Watch for loose wheel bearings.

https://truckmanualshub.com/

Maintenance Problems

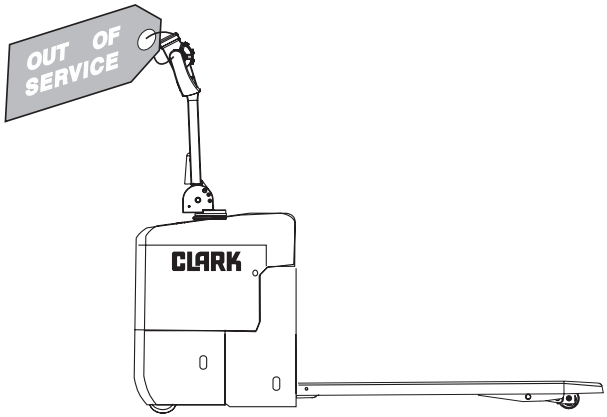

Do not operate a truck that has a maintenance problem. Park the truck properly and remove the key. Put an "Out of Service" tag on the truck. Report the truck problem to the proper authority.

https://forkliftmanuals.info/

Planned Maintenance and Lubrication

Contents

Daily Inspection Points 6.2

Typical Operating Conditions 6.2

Maintenance and Lubrication Schedule 6.3

Safe Maintenance Practices 6.4

Safety Standards 6.7

Battery Maintenance 6.8

Batteries 6.8

Battery Charging 6.9

Battery Removal 6.10

Battery Cleaning and Care 6.11

Battery Life 6.12

NOTICE

THIS SECTION IS FOR TRAINED SERVICE PERSONNEL to use as a reference for Planned Maintenance procedures. Complete maintenance information is in the Service Manual.

https://truckmanualshub.com/

Daily Inspection Points

The following should be done every 8-10 hours:

- Check truck for obvious damage and leaks.
- Check capacity plate, warning plates & decals.
- Check condition of tires and wheels and remove embedded objects.
- Check drive wheel fasteners.
- Check hour meter and battery discharge indicator.
- Check brake operation.
- Check horn operation.
- Check emergency reversal switch operation.
- Check directional and speed control operation.
- Check lift and lower operation.

Typical Operating Conditions

Time intervals between maintenance are largely determined by operating conditions. The intervals specified in the following table are for normal operation. For more severe operation, the maintenance intervals should be shortened accordingly. Contact you CLARK dealer for recommendations.

Normal Operation:
Basically, eight hours per day material handling in clean buildings with smooth level floors and clean, open air.

Severe Operation:
Prolonged operating hours or constant usage, with ramps and/or bumpy floors.

Extreme Operation:
- Sandy or dusty locations.
- High temperature locations.
- Sudden temperature changes such as refrigeration facilities.

Maintenance and Lubrication Schedule

Recommended Planned Maintenance Intervals:

A = 8-10 hours daily
B = 50-250 hours or every month
C = 450 - 500 hours or every 3 months
D = 900 - 1000 hours or every 6 months
E = 2000 hours or every year

PERIODIC CHECKS and PLANNED MAINTENANCE (PM)	A	B	C	D	E
Check truck visually and inspect components.	X	X			
Test drive truck/check functional performance.	X	X			
Air clean truck. (including all motors)		X			
Check torque on critical fasteners.		X			
Lubricate truck.		X			
Clean / Check battery terminals, electrolyte level.		X			
Check battery cables / truck receptacle.		X			
Perform battery load test.		X			
Check drive motor brushes.		X			
Check lift motor brushes.		X			
Test for shorts and grounds.		X			
Clean drive motor air vent.		X			
Check hydraulic fluid level.		X			
Drain and replace hydraulic fluid					X
Check parking brake for proper holding power.		X			

https://truckmanualshub.com/

SAFE MAINTENANCE PRACTICES

The following instructions have been prepared from current industry and government safety standards applicable to industrial truck operations and maintenance. They are listed here for the reference and safety of all workers during inspection / maintenance operations. When in doubt of any inspection / maintenance procedures, please contact your local CLARK dealer.

1. Powered industrial trucks can become hazardous if maintenance is neglected. Therefore, suitable maintenance facilities, trained personnel and procedures shall be provided.

2. Maintenance and inspection of all powered industrial trucks shall be done in conformance with the manufacturer's recommendations.

3. A scheduled planned maintenance, lubrication and inspection system shall be followed.

4. Only trained and authorized personnel shall be permitted to maintain, repair, adjust and inspect industrial trucks and in accordance with the manufacturer's specifications.

5. Properly ventilate work area, vent exhaust fumes, keep shop clean and floor dry.

6. Avoid fire hazards and have fire protection equipment present in the work area. Do not use an open flame to check electrolyte level. Do not use open pans of fuel or flammable cleaning fluids for cleaning parts.

7. Before Starting To Work On Truck:
   a) Raise drive wheel free of floor or disconnect power source and use blocks or other positive truck positioning devices.
   b) Put blocks under the load-engaging means, or chassis before working on them.
   c) Disconnect battery before working on the electrical system.
   d) When working on hydraulic system, be sure the battery is disconnected.

8. Operation of the truck to check performance must be conducted in an authorized, safe, clear area.

9. Before Starting to Drive the Truck:
   a) Remove drive wheel chocks.
   b) Pull the battery disconnect switch to the "ON" position
   c) Insert key and turn to "On" position.
   d) Lower and turn control handle to operating position.
   e) Make sure path of travel is clear.
   f) Check function of controls and emergency reversal switch.
   g) Check function of brakes.

10. Before Leaving the Truck:
   a) Park truck in designated area.
   b) Fully lower forks.
   c) Raise and turn control handle.
   d) Turn off key switch and remove key.
   e) Press the battery disconnect switch.
   f) Block drive wheel.

11. Brakes, steering mechanisms, control mechanisms, warning devices, lights, guards and safety devices, lift mechanisms, and frame members must be carefully and regularly inspected and maintained in a safe operating condition.

12. Special trucks or devices designed and approved for hazardous area operation must receive special attention to ensure that maintenance preserves the original, approved safe operating features.

13. All hydraulic systems must be regularly inspected and maintained in conformance with good practices. Lift cylinders, valves and other similar parts must be checked to assure that “drift” or leakage has not developed to the extent that it would create a hazard.

14. When working on hydraulic system, be sure the battery is disconnected and forks are in the fully lowered position, and hydraulic pressure relieved in hoses and tubing.

15. The truck manufacturer’s capacity, operation and maintenance instruction plates, tags or decals must be maintained in legible condition.

https://truckmanualshub.com/

16. Batteries, motors, controllers, limit switches, protective devices, electrical conductors and connections must be inspected and maintained in conformance with good practices. Special attention must be paid to the condition of electrical insulation.

17. To avoid injury to personnel or damage to the equipment, consult the manufacturer's procedures in replacing contacts on any battery.

18. Industrial trucks must be kept in a clean condition to minimize fire hazards and help in the detection of loose or defective parts.

19. Modifications and additions that affect capacity and safe truck operation must not be done without the manufacturer's prior written approval. Capacity, operation and maintenance instruction plates, tags or decals must be changed accordingly.

20. Care must be taken to assure that all replacement parts, including tires, are interchangeable with the original parts and of a quality at least equal to that provided in the original equipment. Parts, including tires, are to be installed per the manufacturer's procedures. Always use genuine CLARK or CLARK - approved parts.

21. Use special care when removing heavy components from the truck, such as counterweight, upright, etc. The truck can become unstable and should be blocked. Be sure that lifting and handling equipment is of the correct capacity and in good condition.

IMPORTANT

Your new CLARK lift truck has been built to meet all applicable mandatory requirements of ANSI B56.1 Safety Standard for Powered Industrial Trucks. Each truck also includes certain safety devices-such as horn and overhead guard-as standard equipment. No additions, omissions, or modifications should be made that affect compliance to above requirements or in any way minimize the effectiveness of the safety devices.

Safety Standards

NOTICE

You should also be familiar with additional operating and maintenance safety instructions contained in the following publications:

ANSI / ITSDF B56.1: Safety Standard for Low Lift and High Lift Trucks (Safety Code For Powered Industrial Trucks). Published by: Industrial Truck Standards Development Foundation. 1750 K Street NW, Suite 460, Washington DC 20009, www.itsdf.org.

NFPA 505: Fire Safety Standard for Powered Industrial Trucks: Type Designations, Areas of Use, Maintenance and Operation. Available from: National Fire Protection Assoc., Inc., Batterymarch Park, Quincy, MA 02269.

General Industry Standards, OSHA 2206: OSHA Safety and Health Standards (29 CFR 1910), Subpart N - Materials Handling and Storage, Section 1910.178 Powered Industrial Trucks. For sale by: Superintendent of Documents, U.S. Government Printing Office, Washington, D.C. 20402 or contact your CLARK dealer.

Electric Truck Battery Maintenance

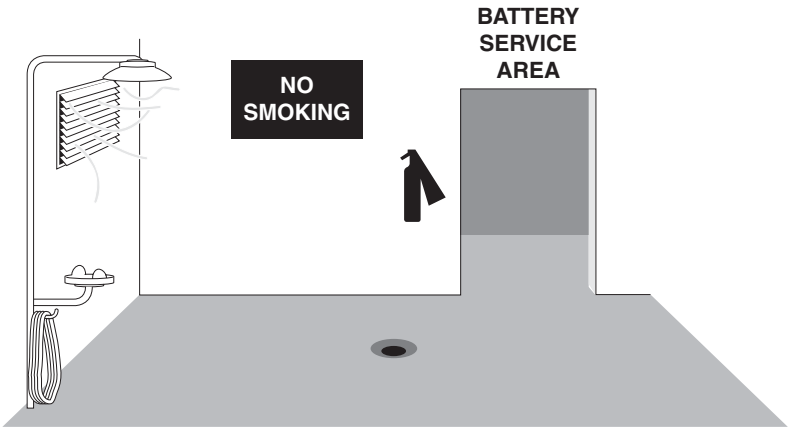

Battery charging installations must be located in areas designated for that purpose. These areas must be kept free of all nonessential combustible materials.

Facilities must be provided for:

- Flushing spilled electrolyte.
- Fire protection.
- Protecting charging apparatus from damage by trucks.
- Adequate ventilation for dispersal of fumes from gassing batteries.

When handling acid concentrates greater than 50% acid (above 1.400 specific gravity), an eye wash fountain must be provided.

Batteries

The EWP30 truck is equipped with two 12 Volt high cycle batteries mounted on the frame under the sheet metal covers.

It is not necessary to remove the covers from the truck to charge the batteries. A charger receptacle is provided in the top cover for ease of connecting the proper charger to the truck batteries.

1. Change (remove) or service storage batteries only in an area designated for this purpose.

https://truckmanualshub.com/

2. Be sure this area has provisions to flush and neutralize spillage, to ventilate fumes from gassing batteries, and for fire protection.

3. Keep all tools and other metallic objects away from terminals.

Battery Charging

1. Persons maintaining storage batteries must wear protective clothing such as face shield, long sleeves, and gloves.
2. Hydrogen emissions from charging batteries are explosive. No smoking is allowed in the charging area. Do not check the electrolyte level with an open flame. Do not allow open flame, sparks, or electric arcs in battery charging area.

WARNING

SULFURIC ACID: The battery contains corrosive acid that can cause injury. If acid contacts your eyes or skin, flush immediately with water and get medical assistance.

WARNING

EXPLOSIVE GASES: Do not smoke or have open flames or sparks on battery charging areas or near batteries. An explosion can cause injury or death.

3. When charging batteries, the vent caps must be kept in place to avoid electrolyte spray. Care must be taken to assure that vent caps are open (clean) and functioning.

IMPORTANT

If batteries discharge rapidly during normal operation or do not charge to the correct specifications, contact a qualified battery service technician to check the battery for you. Do not add electrolyte or attempt to service the battery.

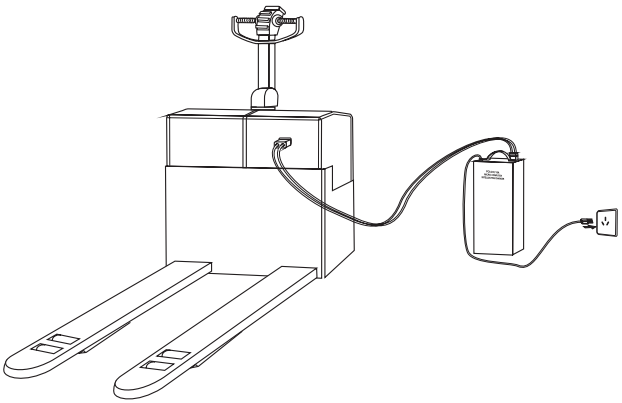

4. With the truck properly parked and the battery disconnect switch pressed, connect the proper charger to the battery charging receptacle in the front cover.
5. See charger instructions for proper charger usage.

Battery Removal from Truck

1. Check the designated service and charging area for fire protection, and be sure all sources of ignition are cleared from the area. **Do not smoke**. Be sure all previous noted equipment is in the area, in good repair, and working properly. If the battery is to be serviced, be sure there are provisions to flush and neutralize spillage and to disperse (ventilate) fumes from gassing batteries on charge. And, be sure there are provisions for handling electrolyte.
2. Before attempting to remove or charge a storage battery, the truck should be positioned in the designated battery service area and the parking brake applied so the truck cannot move.
3. Press the battery disconnect switch.
4. Remove the top covers
5. Remove the battery and move it to a safe storage location. Store batteries either on an approved battery rack or on a wooden pallet.

https://truckmanualshub.com/

Battery Cleaning and Care

Never wash the battery when it is in the truck. The easiest and most satisfactory method of cleaning a battery is to wash it occasionally with a low-pressure cold-water spray. The top can also be washed off with a solution of baking soda and water (add a box of baking soda to a pail of water and stir until dissolved) and rinsed with clean water. It is good practice to have this solution in a battery room at all times.

IMPORTANT

During cleaning, the battery vent caps must be tightly in place.

Refer to the battery manufacturer or supplier for their recommended battery maintenance and care procedures.

BATTERY SAVER and CLEANER, CLARK Part No. 886398, may be used to clean and protect the truck battery.

New Truck Batteries: Apply a light coat of BATTERY SAVER and CLEANER to entire surface of battery. Allow to set for approximately 30 seconds, then wipe thoroughly with a wiping cloth or rag. Chemical action will dissolve rust and corrosion. After cleaning, apply a second coating for protection. This will prevent the start and growth of corrosion on battery terminals and cable connections.

https://truckmanualshub.com/

How to Get Maximum Battery Life

1. Follow normal battery maintenance procedures, re-charging before 80% discharged and with periodic equalizing charges.
2. Don't add acid to a battery. Only a person trained and qualified to do battery maintenance should determine if this is necessary.
3. Keep open flames, tools, and metal objects away from the top of battery to prevent short circuits and explosions.
4. Do not overcharge.
5. Periodically check the battery electrolyte level **after** each charging. Add water if the top of the separator or plates are visible. **Do not overfill!**
6. **Keep the battery clean and dry**. Wash down as needed.
7. Keep battery service records.

Battery Installation

1. Use only a lead-acid battery with the voltage and ampere-hour rating specified for the truck. Use only the type of battery as indicated on the truck nameplate.
2. Install the battery correctly in the truck and secure it in position with battery stops.

NOTICE

Some trucks are equipped with battery stops or blocks. Others do not require them. If the truck being serviced has battery stops or blocks, be sure none are missing or damaged. Replace them as necessary. If they are an adjustable type, be sure they are correctly adjusted and tightened.

https://truckmanualshub.com/

Towing

IMPORTANT

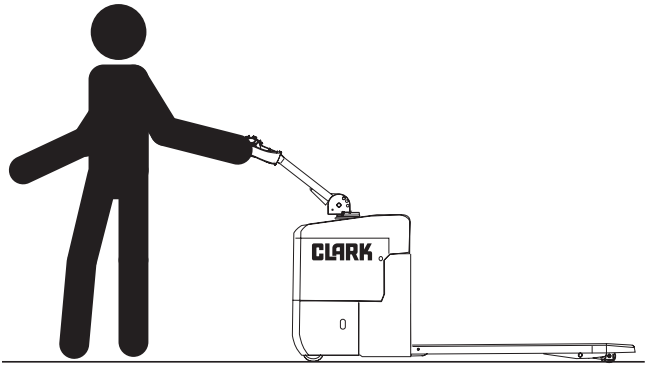

Pull a disabled truck by hand to a service area.

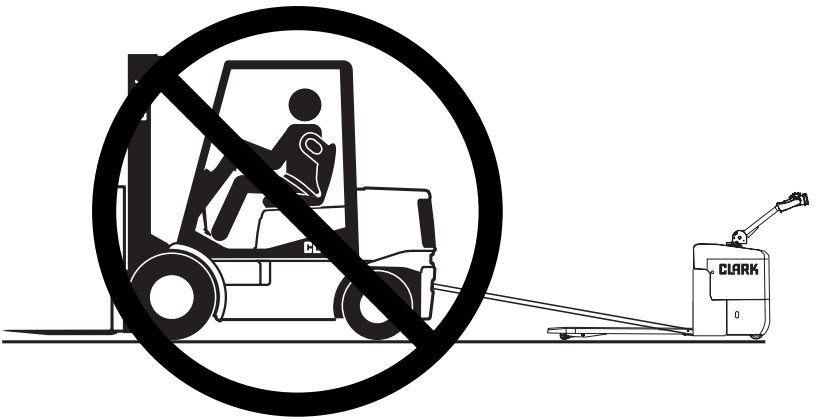

CAUTION

Do not tow or push the truck with another vehicle.

https://truckmanualshub.com/

Specifications

Model Designation — Rated Load Capacity
EWP30 3,000 lbs [1,300 kg]

Service Weight w/o batteries

Model	*Service Wgt. w/o Batteries*
EWP30	538 lbs [244 kg]

Battery
2 - 12 Volt Lead Acid, AGM Maintenance Free Deep Cycle Batteries.
70.5 Ah

Battery Charger Connection
Anderson SB-175 Red

Recommended Battery Charger
CLARK Part Number 2827194

NOTE:

Battery charger "rate of charge" and charge profile should be matched to the type of batteries used.

Fluid Recommendations

Hydraulic Unit	MS-68 Hydraulic Fluid CLARK Part Number 1800236 (1 qt.)
Drive Unit	CLARK Specification MS-107C, Use grade NLGI #2 per MS-107C

Fluid Capacities

Hydraulic Unit	2.1 qts (2 liters)
Drive Unit	20 oz. (0.6 KG)

General Purpose Grease
CLARK Specification MS-107C,
Use grade NLGI #2 per MS-107C

https://truckmanualshub.com/

Index

A
Application viii

B
Battery
Charging..... 6.9
Cleaning and care 6.11
Installation 6.12
Maximum battery life 6.12
Removal from truck 6.10
Battery Charging..... 6.9
Battery Cleaning and Care ..6.11
Battery Installation..... 6.12
Battery Removal from Truck6.10
Battery Warning Decal..... 3.9
Brake 3.5, 4.4, 5.5

C
Component Location 3.2
Control Handle..... 3.5

D
Daily Inspection 5.1
Daily Inspection Points 6.2
Daily Inspection Sheet..... 5.2
Do's and Don'ts 1.2
Damaged Pallets and Skids . 2.6
Debris on Floor 2.5
Dock or Trailer Drop-Offs,.....
Trailer Creep..... 2.4
Drive Unit..... 3.5

E
Electric Truck Battery
Maintenance 6.8
Electrical 3.5
Emergency Reversal Switch 5.3
Extreme Operation 6.2

F
Fast Turns..... 2.2
Fluid Capacities..... 8.1
Fluid Recommendations..... 8.1
Frame and Forks 3.6

G
General Purpose Grease..... 8.1
Grades..... 1.5

H
Horn..... 5.3
How to Get Maximum Battery
Life..... 6.12
Hydraulic system 3.5

K
Know Your Truck..... 3.1

L
Lift and Lower Control 5.4
Long or Wide Loads 2.3
Loose Loads..... 2.3

M
Maintenance Component Location..... 3.4
Maintenance/Lubrication
Schedule 6.3
Maintenance Problems 5.6
Model Designation..... 8.1

N
Nameplate Description 3.7
No Riders..... 1.3
Normal Operation 6.2

O
Operator's Manual.....v
Operator Repairs..... 5.2

https://truckmanualshub.com/

P
Parking 1.8
Pedestrians..... 1.4
Pinch Points..... 1.7
Planned Maintenance and
Lubrication 6.1
Publications, related Service ...vi

R
Rated Load Capacity..... 8.1

S
Safe Maintenance Practices. 6.4
Safety iii
Safety messages.....vii
Safety signs.....vii
Safety Standards..... 6.7
Severe Operation 6.2
Service Manual.....vi
Service Weight 8.1
Specifications 8.1

T
Towing 7.1
Travel..... 1.6
Travel Control 5.4
Typical Operating Conditions 6.2

W
Wheels and Tires..... 5.5

Serial Numbers

Truck:_____

Control Panel: _____

Drive Motor:_____

Hydraulic Unit: _____

https://truckmanualshub.com/

Additional copies of this manual may be purchased from
YOUR AUTHORIZED CLARK DEALER

CLARK

CLARK Material Handling Company

Lexington, KY. 40510
Printed in USA