https://truckmanualshub.com/

DYNAPAC
Part of the Atlas Copco Group

Instruction manual

ICC1200C-1EN3.pdf
Operation & Maintenance

Vibratory roller
CC1200C

Engine
Kubota D1703

Serial number
10000333x0A000001 -

Translation of original instructions

Subject to changes
Printed in Sweden

https://truckmanualshub.com/

https://truckmanualshub.com/

Table of Contents

Introduction 1
Warning symbols 1
The machine 1
Intended use 1
Safety information 1
General 2
CE marking and Declaration of conformity 3
Safety - General instructions 5
Safety - when operating 7
Driving near edges 7
Slopes 8
Special instructions 9
Standard lubricants and other recommended oils and fluids 9
Higher ambient temperatures, above +40°C (104°F) 9
Lower ambient temperature - Freeze risk 9
Temperatures 9
High pressure cleaning 9
Fire fighting 10
Roll Over Protective Structure (ROPS) 10
Battery handling 10
Jump starting 11
Technical specifications 13
Vibrations - Operator station 13
Noise level 13
Dimensions, top view 14
Dimensions, side view 15
Weights and volumes 16
Working capacity 16
General 16
Tightening torque 18

https://truckmanualshub.com/

ROPS - bolts 19
Hydraulic system 19
Machine description 21
Identification 21
Product identification number on the frame 21
Explanation of 17PIN serial number 21
Machine plate 22
Engine plates 22
Location - decals 24
Safety decals 25
Info decals 26
Instruments/Controls 28
Locations - Instruments and controls 28
Locations - Control panel and controls 29
Function description 30
Electrical system 33
Fuses 33
Operation 35
Before starting 35
Master switch - Switching on 35
Driver seat (Std) - Adjustment 35
Driver seat (Option) - Adjustment 36
Instruments and lamps - Checking 36
Interlock 37
Operator position 37
Parking brake - Check 38
Starting 39
Starting the engine 39
Driving 41
Operating the roller 41

https://truckmanualshub.com/

Interlock/Emergency stop/Parking brake - Check 42
Vibration 42
Manual/Automatic vibration 42
Braking 43
Normal braking 43
Emergency braking 43
Switching off 44
Parking 44
Chocking the wheels/drum 44
Battery disconnector 45
Long-term parking 47
Engine 47
Battery 47
Air cleaner, exhaust pipe 47
Fuel tank 47
Hydraulic reservoir 47
Water tank 47
Steering cylinder, hinges, etc. 48
Hoods, tarpaulin 48
Miscellaneous 49
Lifting 49
Locking the articulation 49
Lifting the roller 49
Unlocking the articulation 50
Towing/Recovering 51
Release the brakes 51
Releasing the brake, wheel motors (Optional) 52
Towing the roller 53
Retractable ROPS (Optional) 54
Roller prepared for transport 55

https://truckmanualshub.com/

Operating instructions - Summary 57
Preventive maintenance 59
Acceptance and delivery inspection 59
Warranty 59
Maintenance - Lubricants and symbols 61
Maintenance symbols 62
Maintenance - Maintenance schedule 63
General 63
Service and maintenance points 63
Every 10 hours of operation (Daily) 64
After the FIRST 50 hours of operation 64
Every 50 hours of operation (Weekly) 65
Every 250 hours of operation (Monthly) 65
Every 500 hours of operation (Every three months) 65
Every 1000 hours of operation (Every six months) 66
Every 2000 hours of operation (Yearly) 66
Maintenance, 10h 67
Check - Coolant system 67
Hydraulic reservoir, Level check - Filling 68
Lowering of engine hood 69
Air circulation - Check 69
Fuel tank - Filling 70
Sprinkler system/Drum
Checking - Cleaning 70
Sprinkler system / Wheels
Check - Cleaning 71
Water tank - Filling 72
Scrapers, fixed
Checking - Setting 72
Scrapers, spring-action (Optional)
Checking - Adjustment 72

https://truckmanualshub.com/

Scrapers
Check - Adjustment 73

Brakes - Check 73

Pump system / Tire
Check - Cleaning 74

Maintenance - 50h 75

Air cleaner indicator 75

Air cleaner
Check - Replacement of main filter 75

Air filter indicator - Resetting 76

Backup filter - Change 76

Air cleaner
- Cleaning 77

Steering cylinder and steering joint - Lubrication 77

Tires - Tire pressure 78

Maintenance - 250h 79

Coolers
Checking - Cleaning 79

Battery
- Check condition 80

Engine oil and oil filter - Change 81

Maintenance - 500h 83

Drum - oil level
Inspection - filling 83

Rubber elements and attachment screws
Check 84

Hydraulic reservoir cap - Check 84

Controls - Lubrication 84

Check - Coolant system 85

Maintenance - 1000h 87

Replacing the hydraulic oil filter 87

Hydraulic fluid reservoir - Draining 89

Replacing the fuel filter 89

https://truckmanualshub.com/

Replacing the pre-filter 90
Maintenance - 2000h 91
Hydraulic tank - Changing the fluid 91
Drum - Oil change 92
Water tank - Draining 92
Water pump - Draining 93
Water tank - Cleaning 93
Emulsion tank - Draining 94
Fuel tank - Cleaning 94
Steering joint - Check 95

https://truckmanualshub.com/

Introduction

Warning symbols

The machine

Dynapac CC1200C is a self-propelled vibratory combi roller in 2,5 metric tonnes class featuring a 1200 mm (47 in) wide drum and 1180 mm (46 in.) wide wheels. The machine is equipped with drive and brakes both front and rear and vibrations on front drum.

Intended use

The CC1200C is a small combi roller as are used for compacting of thin layers and soft asphalt compounds. The roller is mainly intended for smaller construction works, such as compacting asphalt on minor roads, sidewalks, cycle ways and garage driveways. The four rubber wheels on the CC1200C gives the asphalt a different surface structure, as sometimes aim at in comparison with a vibrating tandem roller.

WARNING ! Marks a danger or a hazardous procedure that can result in life threatening or serious injury if the warning is ignored.

CAUTION ! Marks a danger or hazardous procedure that can result in damage to the machine or property if the warning is ignored.

Safety information

It is recommended to at least train operators in handling and daily maintenance of the machine in accordance with the instruction manual. Passengers are not allowed on the machine, and you must sit in the seat when operating the machine.

The safety manual supplied with the machine must be read by all roller operators. Always follow the safety instructions. Do not remove the manual from the machine.

We recommend that the operator reads the safety instructions in this manual carefully. Always follow the safety instructions. Ensure that this manual is always easily accessible.

https://truckmanualshub.com/

Read the entire manual before starting the machine and before carrying out any maintenance.

Replace immediately the instruction manuals if lost, damaged or unreadable.

Ensure good ventilation (extraction of air by fan) where the engine is run indoors.

CALIFORNIA

Proposition 65 Warning

Diesel engine exhaust and some of its constituents are known to the State of California to cause cancer, birth defects, and other reproductive harm.

General

This manual contains instructions for machine operation and maintenance.

The machine must be correctly maintained for maximal performance.

The machine should be kept clean so that any leakages, loose bolts and loose connections are discovered at as early a point in time as possible.

Do not spray with high-pressure cleaner directly onto gaskets and bearing spacings in steering hitch and drum.

Inspect the machine every day, before starting. Inspect the entire machine so that any leakages or other faults are detected.

Check the ground under the machine. Leakages are more easily detected on the ground than on the machine itself.

THINK ENVIRONMENT ! Do not release oil, fuel and other environmentally hazardous substances into the environment. Always send used filters, drain oil and fuel remnants to environmentally correct disposal.

This manual contains instructions for periodic maintenance normally carried out by the operator.

https://truckmanualshub.com/

Additional instructions for the engine can be found in the manufactuer's engine manual.

CE marking and Declaration of conformity

(Applies to machines marketed in EU/EEC)

This machine is CE marked. This shows that on delivery it complies with the basic health and safety directives applicable for the machine in accordance with machinery directive 2006/42/EC and that it also complies with other directives applicable for this machine.

A "Declaration of conformity" is supplied with this machine, which specifies the applicable directives and supplements, as well as the harmonized standards and other regulations that are applied.

https://truckmanualshub.com/

https://truckmanualshub.com/

Safety - General instructions

(Also read the safety manual)

1. **The operator must be familiar with the contents of the OPERATION section before starting the roller.**

2. **Ensure that all instructions in the MAINTENANCE section are followed.**

3. **Only trained and/or experienced operators are to operate the roller. Passengers are not permitted on the roller. Remain seated at all times when operating the roller.**

4. **Never use the roller if it is in need of adjustment or repair.**

5. **Only mount and dismount the roller when it is stationary. Use the intended grips and rails. Always use the three-point grip (both feet and one hand, or one foot and both hands) when mounting or dismounting the machine. Never jump down from the machine.**

6. **The ROPS (Roll Over Protective Structure) should always be used when the machine is operated on unsafe ground.**

7. **Drive slowly in sharp bends.**

8. **Avoid driving across slopes. Drive straight up or straight down the slope.**

9. **When driving close to edges, ditches or holes, make sure that at least 2/3 of the drum width is on previously compacted material (solid surface).**

10. **Make sure that there are no obstacles in the direction of travel, on the ground, in front of or behind the roller, or overhead.**

11. **Drive particularly carefully on uneven ground.**

12. **Use the safety equipment provided. The seat belt must be worn on machines fitted with ROPS/ROPS-cab.**

13. **Keep the roller clean. Clean any dirt or grease that accumulates on the operator platform immediately. Keep all signs and decals clean and legible.**

14. **Safety measures before refueling:**
    - Stop the engine
    - Do not smoke.
    - No naked flames in the vicinity of the roller.
    - Earth the filling equipment nozzle to the tank opening to avoid sparks.

15. **Before repairs or service:**
    - Chock the drums/wheels and under the strike-off blade.
    - Lock the articulation if necessary

https://truckmanualshub.com/

16. **Hearing protection is recommended if the noise level exceeds 85 dB(A). The noise level can vary depending on the equipment on the machine and the surface the machine is being used on.**

17. **Do not make any changes or modifications to the roller that could affect safety. Changes are only to be made after written approval has been given by Dynapac.**

18. **Avoid using the roller before the hydraulic fluid has reached its normal working temperature. Braking distances can be longer than normal when the fluid is cold. See instructions in the STOP section.**

19. **For your own protection always wear:**
    - helmet
    - working boots with steel toecaps
    - ear protectors
    - reflecting clothing/high visibility jacket
    - working gloves

https://truckmanualshub.com/

Safety - when operating

Prevent persons from entering or remaining in the danger area, i.e. a distance of at least 7 m (23 ft) in all directions from operating machines. The operator may allow a person to remain in the danger area, but should then observe caution and operate the machine only when the person is visible or has given clear indications of where he or she is.

Driving near edges

When driving near an edge, minimum 2/3 of the drum width must be on solid ground.

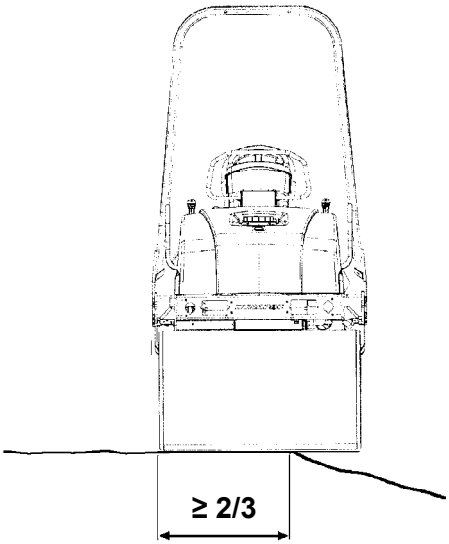

Fig. Position of drum when driving near an edge

Keep in mind that the machine's center of gravity moves outwards when steering. For example, the center of gravity moves to the right when you steer to the left.

Where possible, avoid driving across slopes. Drive instead straight up and down sloping ground.

https://truckmanualshub.com/

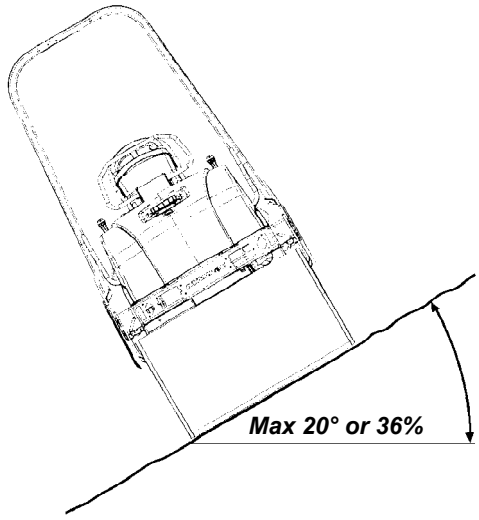

Fig. Operating on slopes

Slopes

This angle has been measured on a hard, flat surface with the machine stationary.

The steering angle was zero, the vibration was switched OFF and all tanks were full.

Always take into consideration that loose ground, steering the machine, vibration on, machine speed across the ground and raising the center of gravity can all cause the machine to topple at smaller slope angles than those specified here.

It is recommended that ROPS (Roll Over Protective Structure) or a ROPS approved cab, is always used when driving on slopes or unsafe ground.

https://truckmanualshub.com/

Special instructions

Standard lubricants and other recommended oils and fluids

Before leaving the factory, the systems and components are filled with the oils and fluids specified in the lubricant specification. These are suitable for ambient temperatures in the range -15°C to +40°C (5°F - 105°F).

The maximum temperature for biological hydraulic fluid is +35°C (95°F).

Higher ambient temperatures, above +40°C (104°F)

For operation of the machine at higher ambient temperatures, however maximum +50°C (122°F), the following recommendations apply:

The diesel engine can be run at this temperature using normal oil. However, the following fluids must be used for other components:

Hydraulic system - mineral oil Shell Tellus T100 or similar.

Lower ambient temperature - Freeze risk

Make sure that the watering system is empty/drained of water (sprinkler, hoses, tank/s) or that anti-freeze has been added, to prevent the system freezing.

Temperatures

The temperature limits apply to standard versions of rollers.

Rollers equipped with additional equipment, such as noise suppression, may need to be more carefully monitored in the higher temperature ranges.

High pressure cleaning

Do not spray water directly onto electrical components or the instrument panels.

Place a plastic bag over the fuel filler cap and secure with a rubber band. This is to avoid high pressure water entering the vent hole in the filler cap. This could cause malfunctions, such as the blocking of filters.

Do not spray with high-pressure cleaner directly onto gaskets and bearing spacings in steering hitch and drum.

https://truckmanualshub.com/

Never aim the water jet directly at the fuel tank cap. This is particularly important when using a high-pressure cleaner.

Fire fighting

If the machine catches fire, use an ABC-class powder fire extinguisher.

A BE-class carbon dioxide fire extinguisher can also be used.

Roll Over Protective Structure (ROPS)

If the machine is fitted with a Roll Over Protective Structure (ROPS) never carry out any welding or drilling in the structure or cab.

Never attempt to repair a damaged ROPS structure or cab. These must be replaced with new ROPS structure or cabs.

Battery handling

When removing batteries, always disconnect the negative cable first.

When fitting batteries, always connect the positive cable first.

Dispose of old batteries in an environmentally friendly way. Batteries contain toxic lead.

Do not use a quick-charger for charging the battery. This may shorten battery life.

https://truckmanualshub.com/

Jump starting

Do not connect the negative cable to the negative terminal on the dead battery. A spark can ignite the oxy-hydrogen gas formed around the battery.

Check that the battery used for jump starting has the same voltage as the dead battery.

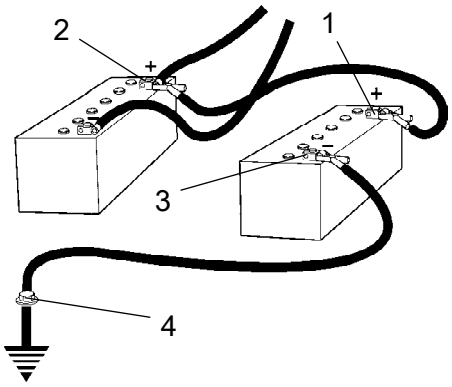

Fig. Jump starting

Turn the ignition and all power consuming equipment off. Switch off the engine on the machine which is providing jump start power.

First connect the jump start battery's positive terminal (1) to the flat battery's positive terminal (2).Then connect the jump start battery's negative terminal (3) to, for example, a bolt (4) or the lifting eye on the machine with the flat battery.

Start the engine on the power providing machine. Let it run for a while. Now try to start the other machine. Disconnect the cables in the reverse order.

https://truckmanualshub.com/

https://truckmanualshub.com/

Technical specifications

Vibrations - Operator station

(ISO 2631)

The vibration levels are measured in accordance with the operational cycle described in EU directive 2000/14/EC on machines equipped for the EU market, with vibration switched on, on soft polymer material and with the operator's seat in the transport position.
Measured whole-body vibrations are below the action value of 0.5 m/s² as specified in Directive 2002/44/EC. (Limit is 1.15 m/s²)
Measured hand/arm vibrations also were below the action level of 2.5 m/s² specified in the same directive. (Limit is 5 m/s²)

Noise level

The noise level is measured in accordance with the operational cycle described in EU directive 2000/14/EC on machines equipped for the EU market, with the vibration switched on, on soft polymer material and with the operator's seat in the transport position.

Guaranteed sound power level, L_{wA}	104	dB (A)
Sound pressure level at the operator's ear (platform), L_{pA}	85 ±3	dB (A)

During operation the above values may differ because of the actual operational conditions.

https://truckmanualshub.com/

Dimensions, top view

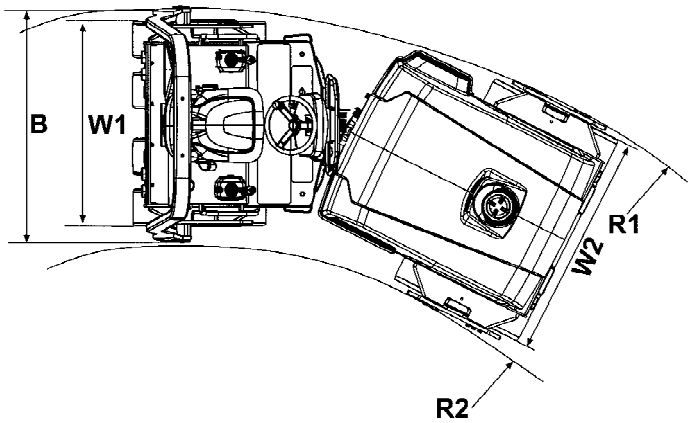

Dimensions	mm	in
B	1310	51
B (without ROPS)	1280	50
R_1	3800	150
R_2	2600	102
W_1	1200	47
W_2	1180	46

https://truckmanualshub.com/

Dimensions, side view

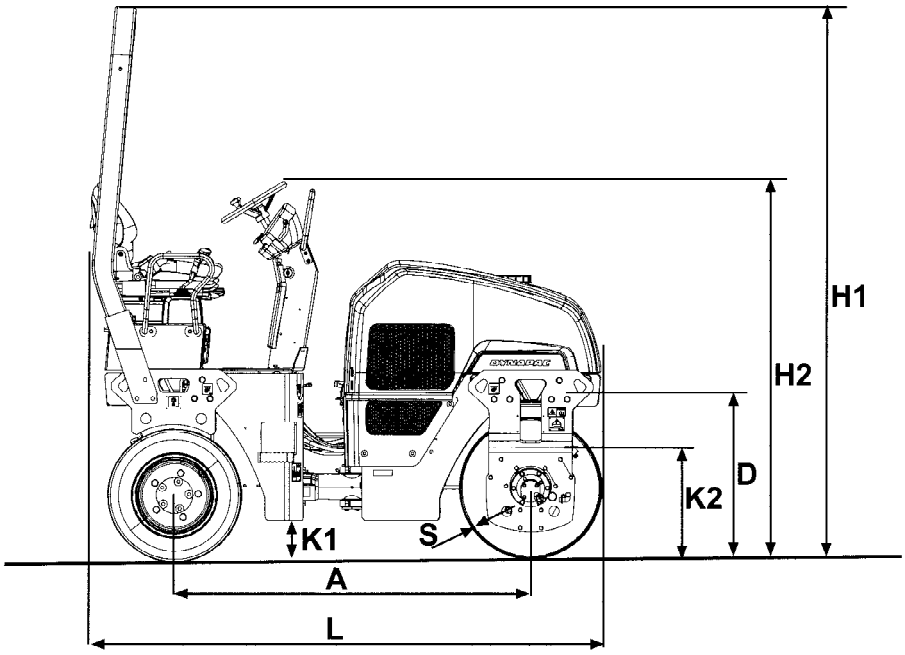

Dimensions	mm	in
A	1715	67
D	682	27
H_1	2640	104
H_2	1810	71
K_1	175	7
K_2	550	22
L	2395	94
S	13	0.5

https://truckmanualshub.com/

Weights and volumes

Weights

Weight CECE, Standard equipped roller	2450 kg	5,400 lbs

Fluid volumes

Fuel tank	50 liters	52.8 qts
Emulsions tank	30 liters	31.7 qts
Water tank	200 liters	211.4 qts

Working capacity

Compaction data

Static linear load	10,5 kg/cm	58.8 pli
Amplitude	0,5 mm	0.019 in
Vibration frequency	58 Hz	3,480 vpm
Centrifugal force	27 kN	6,075 lb

Note: The frequency is measured at high revs. The amplitude is measured as the real value and not the nominal.

Propulsion

Speed range	0-9,5	km/h	0-5.9	mph
Climbing capacity (theoretical)	60	%		

General

Engine

Manufacturer/Model	Kubota D1703	
Power (SAE J1995)	26.1 kW	35 hp
Engine speed	2800*/2400 rpm	
	*) in US only.	

Tires

Tire dimensions	640x240-15	
Air pressure (kPa)	100	14.5 psi

https://truckmanualshub.com/

Electrical system

Battery	12V 74Ah
Alternator	12V 60A
Fuses	See the Electrical system section - fuses

https://truckmanualshub.com/

Tightening torque

Tightening torque in Nm (lbf.ft) for oiled or dry bolts tightened with a torque wrench.

Metric coarse screw thread, bright galvanized (fzb):

STRENGTH CLASS:

M - thread	8.8, Oiled	8.8, Dry	10.9, Oiled	10.9, Dry	12.9, Oiled	12.9, Dry
M6	8,4	9,4	12	13,4	14,6	16,3
M8	21	23	28	32	34	38
M10	40	45	56	62	68	76
M12	70	78	98	110	117	131
M14	110	123	156	174	187	208
M16	169	190	240	270	290	320
M20	330	370	470	520	560	620
M22	446	497	626	699	752	839
M24	570	640	800	900	960	1080
M30	1130	1260	1580	1770	1900	2100

Metric coarse thread, zinc-treated (Dacromet/GEOMET):

STRENGTH CLASS:

M - thread	10.9, Oiled	10.9, Dry	12.9, Oiled	12.9, Dry
M6	12,0	15,0	14,6	18,3
M8	28	36	34	43
M10	56	70	68	86
M12	98	124	117	147
M14	156	196	187	234
M16	240	304	290	360
M20	470	585	560	698
M22	626	786	752	944
M24	800	1010	960	1215
M30	1580	1990	1900	2360

https://truckmanualshub.com/

ROPS-bolts which are to be torque tightened must be dry.

ROPS - bolts

Bolt dimensions :	M16 (PN 902889)
Strength class :	10.9
Tightening torque :	192 Nm, torque class 2 (Dacromet treated)

Hydraulic system

Opening pressure	**MPa**
Drive system	35,0
Supply system	2,5
Vibration system	20,0
Control systems	17,0
Brake release	1,5

https://truckmanualshub.com/

https://truckmanualshub.com/

Machine description

Identification

Product identification number on the frame

The machine PIN (product identification number) (1) is punched on the right edge of the front frame.

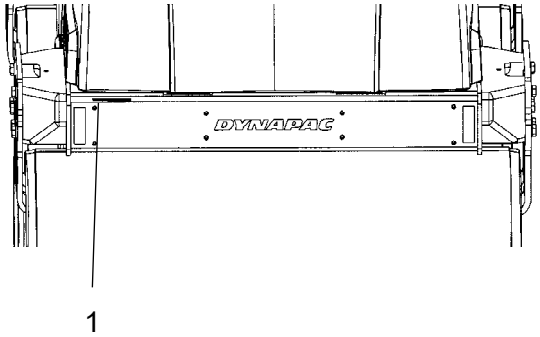

Fig. PIN Front frame
1. Serial number

Explanation of 17PIN serial number

100	00123	V	0	A	123456
A	B	C	D	E	F

A= Manufacturer

B= Family/Model

C= Check letter

D= No coding

E= Production unit

F= Serial number

https://truckmanualshub.com/

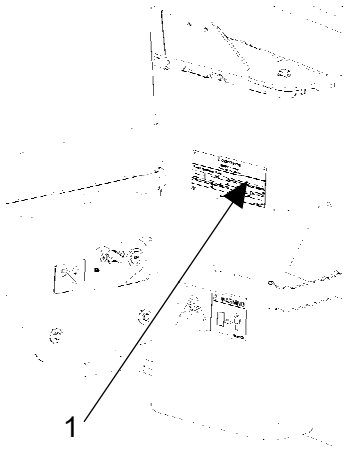

Fig. Operator platform
1. Machine plate

Machine plate

The machine type plate (1) is affixed on the left front edge of the operator's platform.

The plate specifies the manufacturer's name and address, the type of machine, the PIN number (serial number), service weight, engine power and year of manufacture. If the machine is delivered outside of the EU, the plate may not have a CE marking and the year of manufacture.

Please state the machine's PIN (serial number) when ordering parts.

Engine plates

The engine's type plate (1) is located on top of the cylinder head cover.

The plate specifies the type of engine, its serial number and the engine specification.

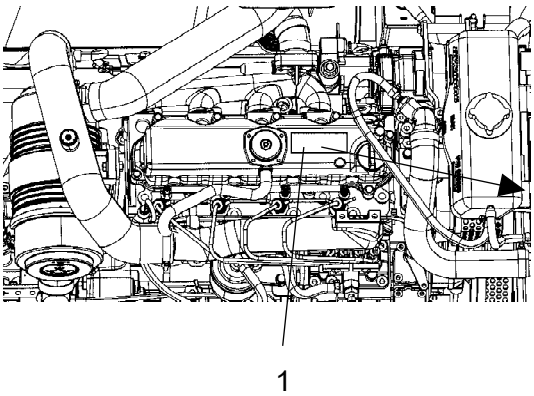

Fig. Engine
1. Type plate

Please specify the engine serial number when ordering spares. Refer also to the engine manual.

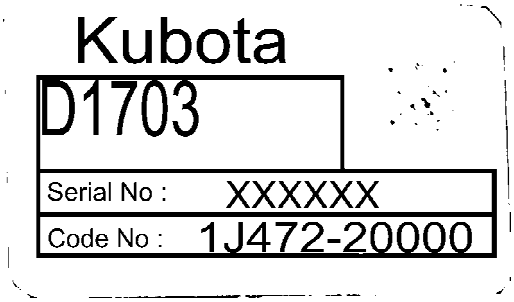

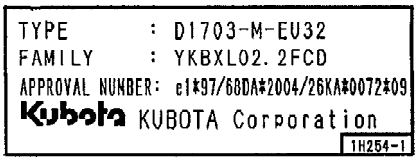

https://truckmanualshub.com/

EMISSION CONTROL INFORMATION

THIS ENGINE MEETS 2008 Int. Tier4 EMISSION REGULATIONS
FOR U. S. EPA AND CALIFORNIA NONROAD CI ENGINES.

Kubota KUBOTA Corporation

MODEL : D1703-M-ET01 ENGINE DISP. : 1. 7L
FAMILY : 8KBXL02. 2FCD ECS: EM
POWER : 26. 1kW/2800rpm CATEGORY:19-37kW
VALVE CLEARANCE(COLD) :IN 0. 20mm EX 0. 20mm
INJ. TIMING: 17. 25 DEG BTDC
LOW SULFUR DIESEL OR ULTRA LOW SULFUR DIESEL FUEL ONLY
CONTACT KUBOTA FOR FUEL SETTING. 1H239-2

https://truckmanualshub.com/

Location - decals

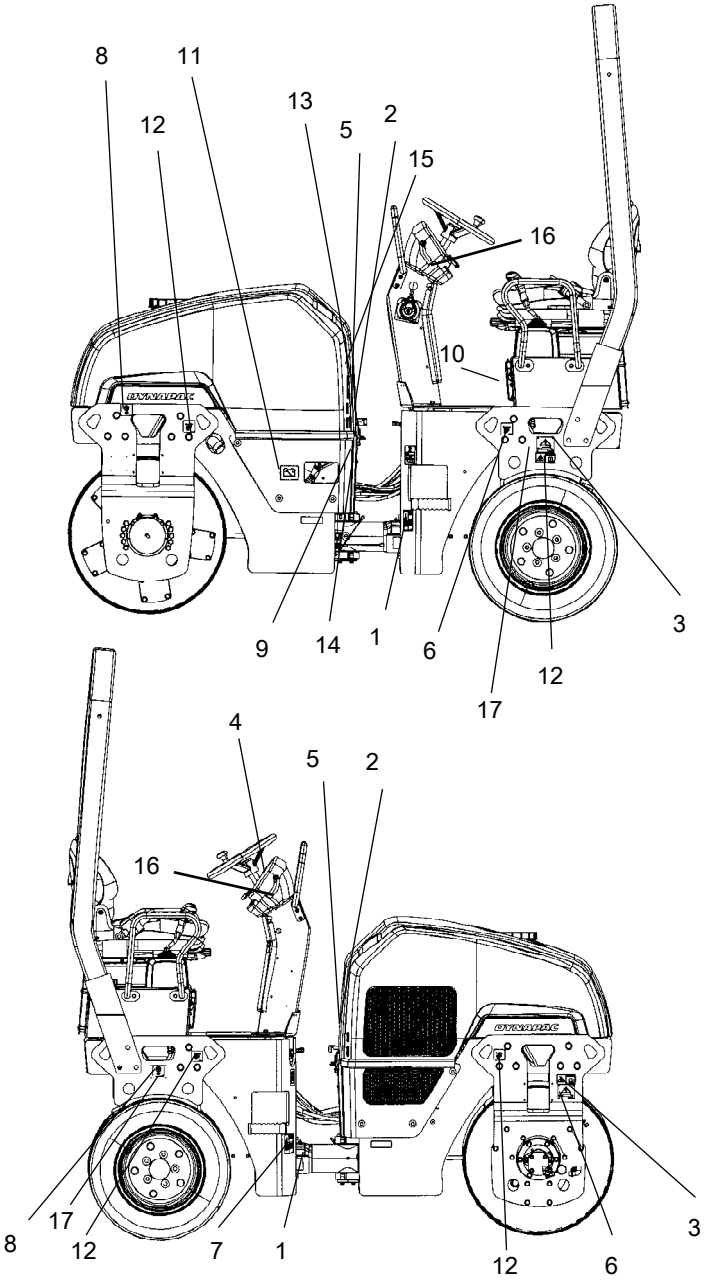

Fig. Location, decals and signs

1.	Warning, Crush zone	4700903422	10.	Manual compartment	4700903425
2.	Warning, Rotating engine components	4700903423	11.	Battery disconnector	4700904835
3.	Warning, Locking	4700908229	12.	Fixing point	4700382751
4.	Warning, Instruction manual	4700903459	13.	Sound power level	4700791292
5.	Warning, Hot surfaces	4700903424	14.	Hydraulic fluid level	4700272373
6.	Lifting plate	4700904870	15.	Warning, Starting gas	4700791642
7.	Diesel fuel	4700991658	16.	Starting instructions	4812115918
8.	Lifting point	4700357587	17.	Tire pressure	4812116992
9.	Hydraulic fluid	4700272372			

https://truckmanualshub.com/

Safety decals

Always make sure that all safety decals are completely legible, and remove dirt or order new decals if they have become illegible. Use the part number specified on each decal.

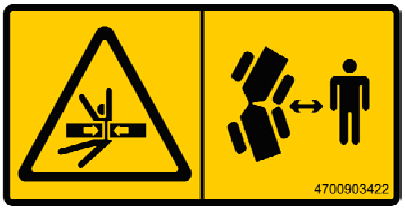

4700903422
Warning - Crush zone, articulation/drum.

Maintain a safe distance from the crush zone.
(Two crush zones on machines fitted with pivotal steering)

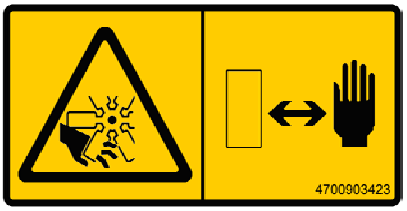

4700903423
Warning - Rotating engine components.

Keep your hands at a safe distance from the danger zone.

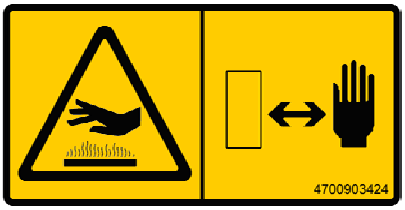

4700903424
Warning - Hot surfaces in the engine compartment.

Keep your hands at a safe distance from the danger zone.

4700903459
Warning - Instruction manual

The operator must read the safety, operation and maintenance instructions before operating the machine.

4700908229
Warning - Risk of crushing

The articulation must be locked when lifting.

Read the instruction manual.

https://truckmanualshub.com/

4700791642
Warning - Starting gas

Starting gas is not to be used.

Info decals

Noise power level

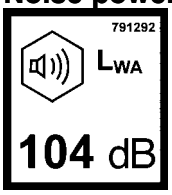

Diesel fuel

Lifting point

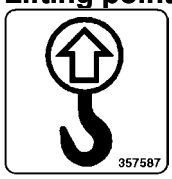

Hoisting plate

Handbook compartment

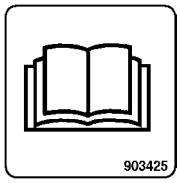

Master switch

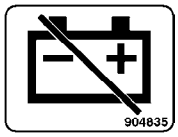

Hydraulic fluid

Hydraulic fluid level

Securing point

Biological hydraulic fluid, PANOLIN

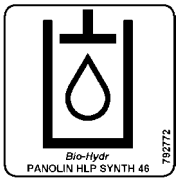

Water

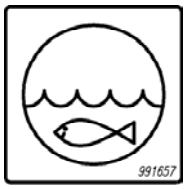

Tire pressure

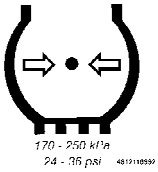

Starting instructions

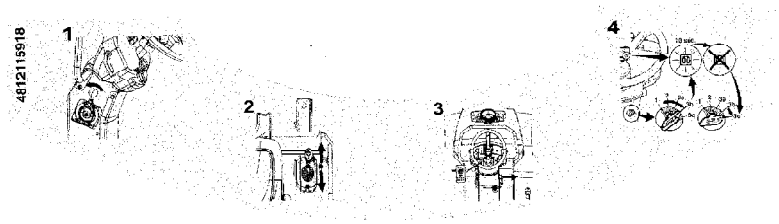

https://truckmanualshub.com/

https://truckmanualshub.com/

Instruments/Controls

Locations - Instruments and controls

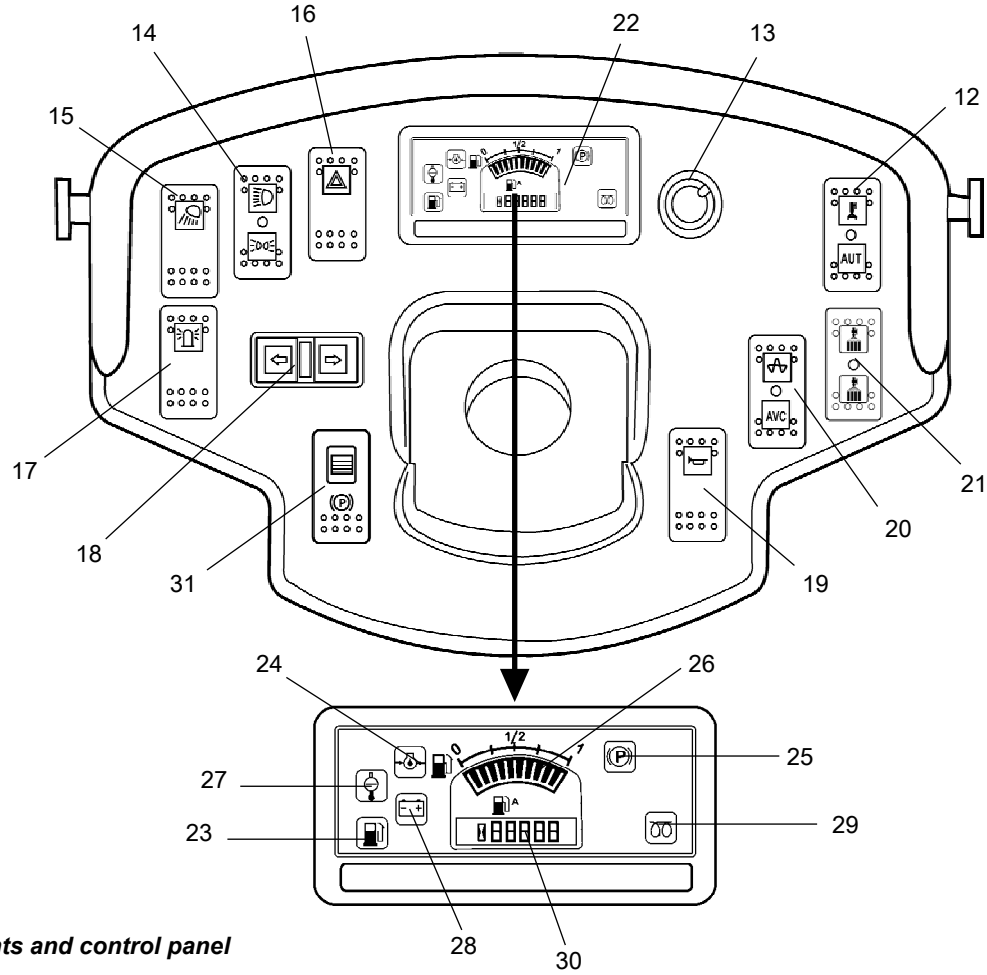

Fig. Instruments and control panel

12.		Manual/automatic sprinkler	23.	Low fuel level
13.	*	Sprinkler timer	24.	Oil pressure, engine
14.	*	Driving lights	25.	Parking brake lamp
15.	*	Working lights	26.	Fuel level
16.	*	Hazard warning lights	27.	Water temperature, engine
17.	*	Hazard beacon	28.	Battery/charging
18.	*	Direction indicators	29.	Glow plug
19.		Horn	30.	Hourmeter
20.		Vibration manual/automatic	31.	Parking brake On/Off
21.		Sprinkler system, wheels		
22.		Control panel		

* = Option

https://truckmanualshub.com/

Locations - Control panel and controls

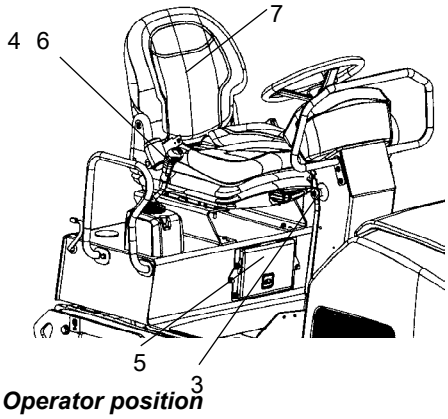

Fig. Operator position

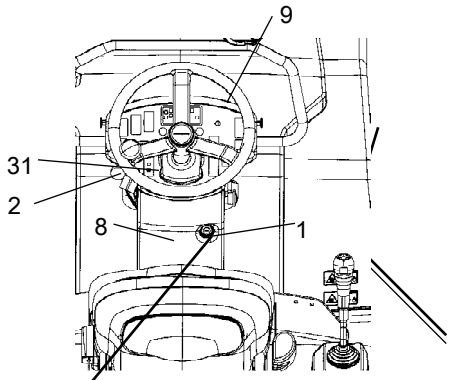

Fig. Operator's station

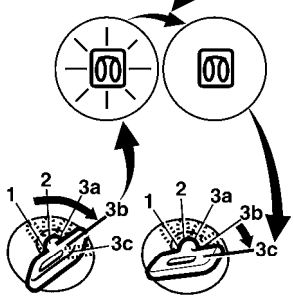

1	Starter switch
2	Throttle control
3	Emergency stop
4	Vibration On/Off
5	Handbook compartment
6	Forward/reverse lever
7	Seat switch
8	Fuse box
9	Instrument cover

https://truckmanualshub.com/

Function description

No	Designation	Symbol	Function
1.	Starter switch		Positions 1-2: Shut off position, key can be removed. Position 3a: All instruments and electric controls are supplied with power.
			Position 3b: Glowing. Hold the starter switch in this position until the lamp goes out. The starter motor is activated in the next position.
			Position 3c: Starter motor activation.
2.	Throttle control		In forward position, the engine idles. In backward position, the engine runs at full speed.
3.	Emergency stop		When pressed, the emergency stop is activated. The engine switches off and the brakes are activated. Brace yourself for a sudden stop.
4.	Vibration On/Off. Switch		Press once and release to switch vibration on. Press again to switch the vibration off.
5.	Handbook compartment		Pull up and open the top of the compartment for access to handbooks.
6.	Forward/Reverse lever		The engine can only be started when the lever is in neutral. The engine will not start if the forward/reverse lever is not in the neutral position. Direction of travel and speed of the roller is regulated with the forward/reverse lever. Move the lever forward to drive the roller forwards, etc. The speed of the roller is proportional to the distance of the lever from the neutral position. The further the lever is from the neutral position, the higher the speed.
7.	Seat switch		Remain seated at all times when operating the roller. If the operator stands up during operation, a buzzer sounds. After 4 seconds the brakes are activated and the engine stops.
8.	Fuse box (on control column)		Contains fuses for the electrical system. See under the heading 'Electrical system' for a description of fuse functions.
9.	Instrument cover		Lowered over the instrument plate to protect the instruments from the weather and sabotage. Lockable
12.	Sprinkler, switch		Upper position = switching on of flow of water to drum. Intermediate position = Sprinkling switched off Lower position = switching on of water to drum via forward/reverse lever. The flow of water can be controlled by means of the sprinkler timer (13).
13.	Sprinkler timer (Optional)		Variable adjustment of water flow from 0-100%. Only works when AUTO (12) is pressed in.

https://truckmanualshub.com/

No	Designation	Symbol	Function
14.	Driving lights, switch (Optional)	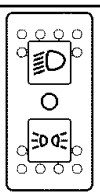	Upper position = Traffic lighting goes on Intermediate position = Lighting switched off Lower position = Parking light goes on
15.	Working lights, switch (Optional)		When depressed, the working lights are on
16.	Hazard warning lights, switch (Optional)		Where depressed, the hazard warning lights are on
17.	Hazard beacon, switch		Where depressed, the hazard beacon is on
18.	Direction indicators, switch (Optional)	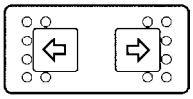	When depressed to the left, the left direction indicators are on etc. In the middle position the function is shut off.
19.	Horn, switch	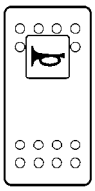	Press to sound the horn.
20.	Vibration MAN/AUTO, switch	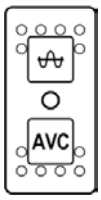	In the upper position, the vibration is switched on/off with the switch on the forward/reverse lever. The function is activated with the switch. In the intermediate position the vibration system is completely switched off. In the lower position the vibration is switched on or off automatically via the forward/reverse lever.
21.	Sprinkler system tires, switch	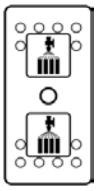	Regulates water flow to the tires. Upper position = Intermittent operation Lower position = Continuous operation
22.	Control panel		
23.	Warning lamp, low fuel level		The lamp comes on when the fuel level in the tank is low.

https://truckmanualshub.com/

No	Designation	Symbol	Function
24.	Warning lamp, oil pressure		This lamp lights if the lubricating pressure in the engine is too low. Stop the engine immediately and locate the fault.
25.	Warning lamp, parking brake		The lamp lights when the parking brake is activated.
26.	Fuel level		Shows the fuel level in the diesel tank.
27.	Warning lamp, water temperature		The light comes on if the water temperature is too high.
28.	Warning lamp, battery charging		If the lamp lights while the engine is running the alternator is not charging. Stop the engine and locate the fault.
29.	Warning lamp, glow plug		The lamp must go out before the starter switch is moved to position 3c for activation of the starter motor.
30.	Hourmeter		Shows the number of hours the engine has run.
31.	Parking brake On/Off, switch		Push in to activate the parking brake, the machine stops with the engine running. **Always use the parking brake when the machine is stationary on a sloping surface.**

https://truckmanualshub.com/

Electrical system

Fuses

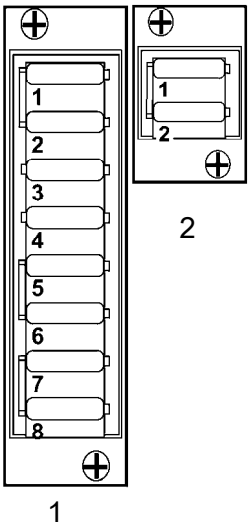

Fig. Fuse boxes
1. Upper
2. Lower

The figure shows the position of the fuses.

The table below gives fuse amperage and function. All fuses are flat pin fuses.

	Fuse box, Upper			Fuse box, Lower	
1.	ECU, Interlock, Instrument panel, Sprinkler front, Vibration	10A	1.	Reserve	
2.	Alternator, Horn, Fuel pump	10A	2.	Flow divider, Sprinkler combi wheel	10A
3.	Indicators left	5A			
4.	Indicators right	5A			
5.	Hazard beacon	10A			
6.	Indicator relay, Power socket 12V	10A			
7.	Position lights, Working lights front	15A			
8.	Traffic lights, Working lights rear	15A			

https://truckmanualshub.com/

https://truckmanualshub.com/

Operation

Before starting

Master switch - Switching on

Remember to carry out daily maintenance. See the maintenance instructions.

The battery disconnector is on the left side in the engine compartment.
Turn the key (1) to switched on position. The roller is now supplied with power.

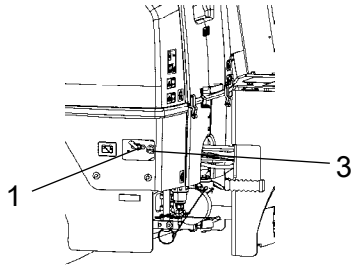

Fig. Engine compartment
1. Battery disconnector
3. Power socket, 12 V

The engine hood must be unlocked during operation, unless the battery disconnector is freely accessible from the outside, so that the battery voltage can be quickly disconnected if necessary.

Driver seat (Std) - Adjustment

Adjust the operator's seat so that the position is comfortable and so that the controls are within easy reach.

The seat can be adjusted as follows.

- Length adjustment (1)
- Backrest adjustment (2)
- Weight adjustment (3)

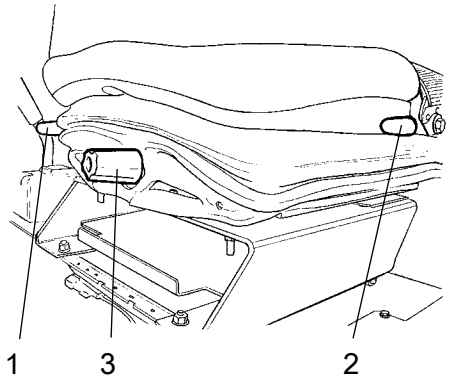

Fig. Driver seat
1. Handle - Length adjustment
2. Handle - Backrest angle
3. Handle - Weight adjustment

Always check that the seat is in locked position before starting.

https://truckmanualshub.com/

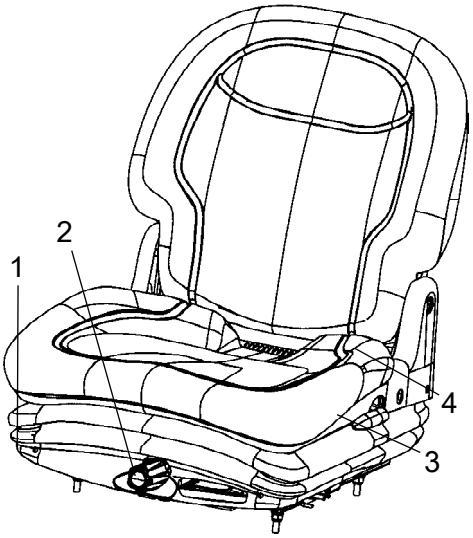

Fig. Driver seat
1. Lock lever - Length adjustment
2. Weight adjustment
3. Back support angle
4. Seat belt

Driver seat (Option) - Adjustment

Adjust the operator's seat so that the position is comfortable and so that the controls are within easy reach.

The seat can be adjusted as follows.

- Length adjustment (1)
- Weight adjustment (2)
- Back support angle (3)

Always make sure that the seat is secure before beginning operation.

Do not forget to use the seat belt (4).

Instruments and lamps - Checking

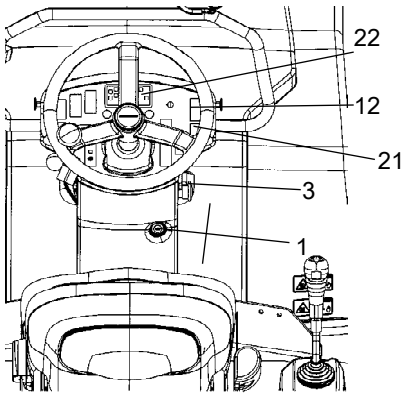

Figure. Instrument panel
1. Starter switch
3. Emergency stop
12. Switch, watering
21. Switch, watering wheels
22. Warning panel

Make sure that the emegency stop button is pulled out and the parking brake is activated. When the forward/reverse lever is in neutral, the automatic brake function is engaged.

Turn the switch (1) to position 3a.

Check that the warning lamps in the warning panel (22) come on.

Set the sprinkler switches (12) and (21) to the operating position and check that the system is functioning.

https://truckmanualshub.com/

Interlock

The roller is equipped with Interlock.

The diesel engine with switch off after 4 seconds if the operator gets off the seat when going forwards/backwards.

If the control is in neutral when the operator stands up a buzzer will go on until the parking brake button is activated.

The engine does not stop if the parking brake is activated.

The diesel engine will switch off immediately if for any reason the forward/reverse lever is moved out of neutral when the operator is not sitting down and the parking brake button has not been activated.

Sit down for all operations!

Operator position

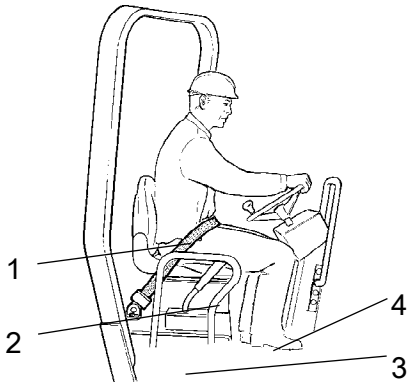

Fig. Driver seat
1. Seat belt
2. Safety rails
3. Rubber element
4. Anti-slip

If an ROPS (Roll Over Protective Structure) is fitted to the roller, always wear the seat belt (1) and wear a protective helmet.

Always replace the seat belt (1) if it shows signs of wear or has been subjected to excessive strain.

Check that the platform's rubber elements (3) are in good condition. If the elements are worn this will have a negative effect on comfort.

Ensure that the anti-slip (4) on the platform is in good condition. Replace where anti-slip friction is poor.

https://truckmanualshub.com/

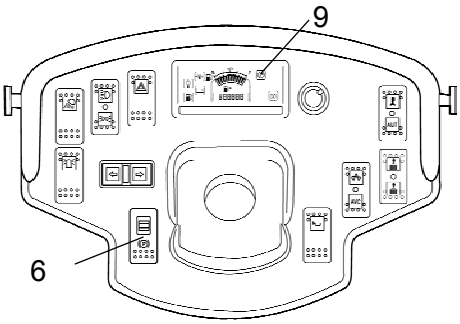

Fig. Instrument panel
6. Parking brake
9. Brake warning lamp

Parking brake - Check

Make sure that the parking brake (6) is activated. The roller can start to roll when the engine is started on sloping ground, if the parking brake is not applied.

https://truckmanualshub.com/

Starting

Starting the engine

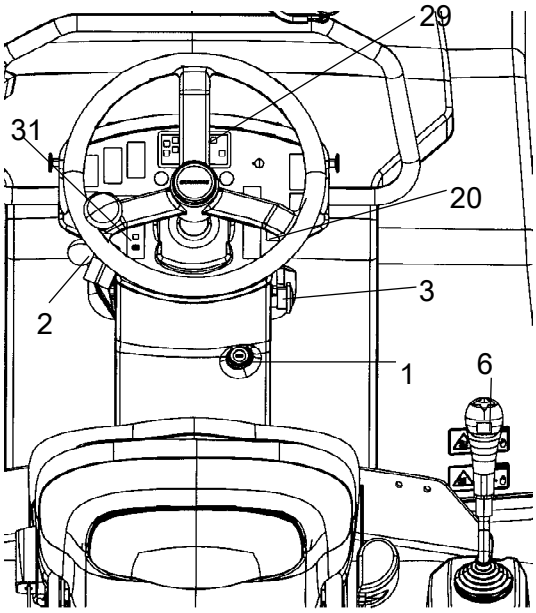

Figure. Control panel
1. Starter switch
2. Throttle control
3. Emergency stop
6. Forward/Reverse lever
20. Vibration switch man/auto
29. Glow lamp
31. Parking brake

The operator must remain seated when starting.

Make sure that the emegency stop button (3) is pulled out and the parking brake (31) is activated.

Set the forward/reverse lever (6) in neutral. The engine can only be started when the lever is in neutral.

Set the vibration switch (20) for manual/automatic vibration in (position O).

Do not run the starter motor for too long. If the engine does not start, wait a minute or so before trying again.

At high ambient temperatures, set the throttle control (2) to the position just over idling.

Set the throttle control (2) to full speed when starting a cold engine. Preheating: Turn key to position II. When the glow lamp (29) goes off: Turn the starter switch (1) to the right. As soon as the engine starts, release the starter switch and reduce the engine speed to just over idling (because high revs can damage a cold engine). As soon as the engine is running smoothly, reduce the revs down to idling.

Warm up the engine at idling speed for a few minutes, although longer if ambient temperature is below +10°C (50°F).

https://truckmanualshub.com/

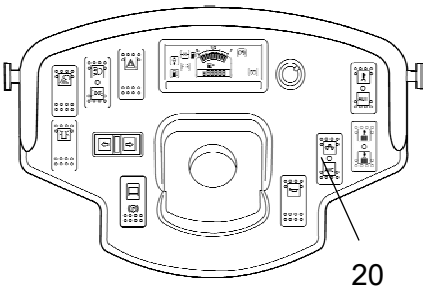

Fig. Instrument panel
20. Vibration switch

Check while warming the engine that the warning lamps for the oil pressure (24) and charging (28) go out.

The parking brake lamp (25) will remain on for as long as the parking brake switch is activated.

When starting and driving a machine that is cold, remember that the hydraulic fluid is also cold and that braking distances can be longer than normal until the machine reaches the working temperature.

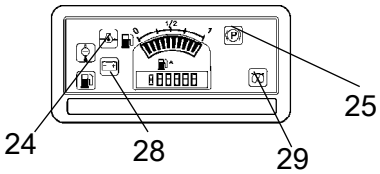

Fig. Control panel
24. Oil pressure lamp
25. Brake lamp
28. Charging lamp
29. Glow lamp

Ensure that there is good ventilation (air extraction) if the engine is run indoors. Risk of carbon monoxide poisoning.

https://truckmanualshub.com/

Driving

Operating the roller

Under no circumstances is the machine to be operated from the ground. The operator must be seated inside the machine during all operation.

Make sure that the area in front of and behind the roller is clear.

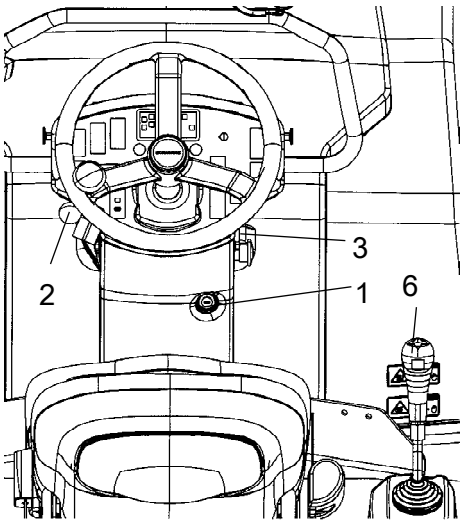

Figure. Instrument panel
1. Starter switch
2. Throttle control
3. Emergency stop
6. Forward/reverse lever

Release the parking brake and check that the parking brake lamp goes off.

Turn the throttle control (2) in backward position.

Check that the steering is working correctly by turning the steering wheel once to the right and once to the left while the roller is stationary.

When compacting asphalt, remember to turn on the sprinkler system (12).

https://truckmanualshub.com/

Interlock/Emergency stop/Parking brake - Check

The interlock, emergency stop and parking brake must be checked daily before operating. A function check of the interlock and emergency stop requires a restart.

The interlock function is checked by the operator standing up from the seat when the roller is moving very slowly forwards/backwards. (Check in both directions). Hold the steering wheel firmly and brace yourself for a sudden stop. A buzzer goes on and after 4 seconds the engine switches off and the brakes are activated.

Check the function of the emergency stop by pressing the emergency stop button when the roller is moving slowly forwards/backwards. (Check in both directions). Hold the steering wheel firmly and brace yourself for a sudden stop. The engine switches off and the brakes are activated.

Check the function of the parking brake by activating the parking brake when the roller is moving very slowly forwards/backwards. (Check in both directions). Hold the steering wheel and brace yourself for a sudden stop when the brakes are activated. The engine does not switch off.

Vibration

Manual/Automatic vibration

Manual or automatic vibration activation/deactivation is selected using switch (20).

In the manual position, the operator must activate the vibration using the switch on underside of the forward/reverse lever grip.

In the automatic position, vibration is activated when the pre-set speed is reached. Vibration is automatically deactivated when the lowest pre-set speed is reached.

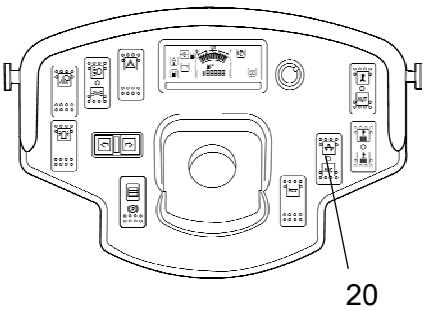

Fig. Instrument panel
20. Man/Auto switch

https://truckmanualshub.com/

Braking

Normal braking

Press the switch (4) to switch off the vibration.

Move the forward/reverse lever (6) to the neutral position to stop the roller.

When starting and driving a machine that is cold, remember that the hydraulic fluid is also cold and that braking distances can be longer than normal until the machine reaches the working temperature.

Never leave the operator platform without activating the parking brake (31).

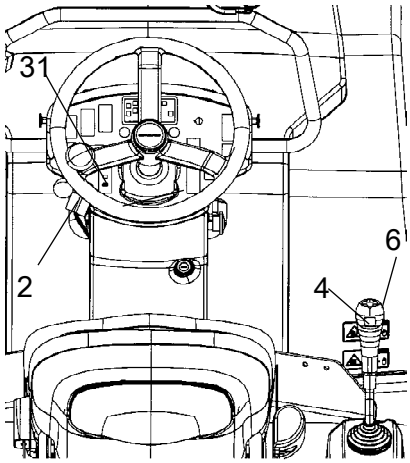

Figure. Control panel
2. Throttle control
4. Vibration On/off
6. Forward/reverse lever
31. Parking brake

Emergency braking

Braking is normally activated using the forward/reverse lever (6). The hydrostatic transmission brakes the roller when the lever is moved to the neutral position.

There is a brake in each drum motor that acts as an emergency brake during operation.

To brake in an emergency situation, push in the emergency stop knob (3), hold the steering wheel firmly and be prepared for a sudden stop. The diesel engine stops.

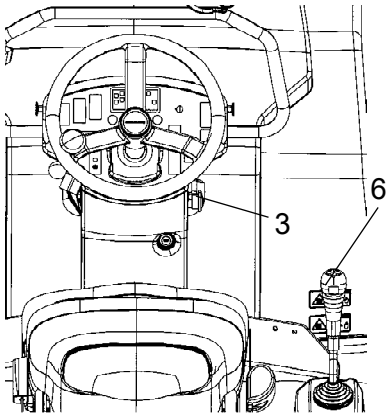

Fig. Control panel
3. Emergency stop
6. Forward/Reverse lever

After emergency braking, reset the forward/reverse lever (6) to neutral position, pull out the emergency stop button and activate the parking brake. Restart the engine.

https://truckmanualshub.com/

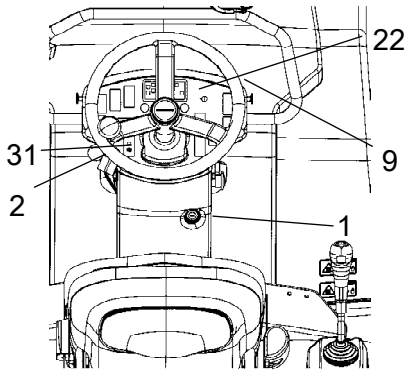

Figure. Instrument panel
1. Starter switch
2. Throttle control
9. Instrument cover
22. Panel for warning lamps
31. Parking brake

Switching off

Turn the throttle control (2) back to idling. Allow the engine to idle for a few minutes to cool.

Activate the parking brake (31).

Check instruments and warning lamps to see if any faults are indicated. Switch off all lights and other electrical functions.

Turn the starter switch (1) to the left to the switched off position. At the end of the shift, fold over the instrument cover (9) and lock.

Parking

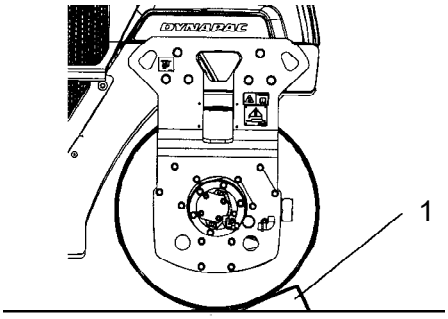

Fig. Drum part
1. Chocks

Chocking the wheels/drum

Never disembark from the machine when the is engine running, unless the parking brake is activated.

Make sure that the roller is parked in a safe place with respect to other road users. Chock the drums and rubber wheels if the roller is parked on sloping ground.

Remember that there is a risk of freezing during the winter. Empty the water tank. Fill antifreeze in the engine's cooling system. See also maintenance instructions.

https://truckmanualshub.com/

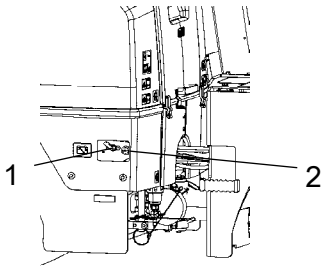

Fig. Battery bay
1. Battery disconnector
2. Power socket, 12 V

Battery disconnector

Before leaving the roller at the end of the shift, switch off the battery disconnector (1) and remove the key.

This will prevent battery discharging and will also make it difficult for unauthorized persons to start and operate the machine. Lock also the engine cover.

https://truckmanualshub.com/

https://truckmanualshub.com/

Long-term parking

The following instructions should be followed when long term parking (more than one month).

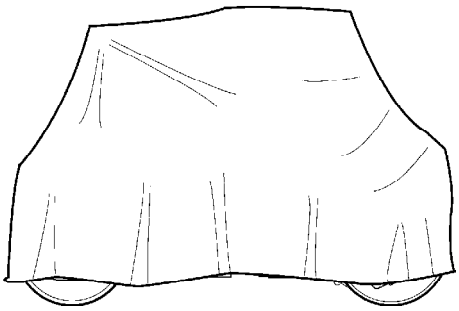

Fig. Roller weather protection

These measures apply when parking for a period of up to 6 months.

Before re-commissioning the roller, the points marked with an asterisk * must be returned to the pre-storage state.

Wash the machine and touch up the paint finish to avoid rusting.

Treat exposed parts with anti-rust agent, lubricate the machine thoroughly and apply grease to unpainted surfaces.

Engine

* Refer to the manufacturer’s instructions in the engine manual that is supplied with the roller.

Battery

* Remove the battery/battteries from the machine, clean the outside and trickle charge once a month.

Air cleaner, exhaust pipe

* Cover the air cleaner (see under the heading 'Every 50 hours of operation' or 'Every 1000 hours of operation') or its opening with plastic or tape. Also cover the exhaust pipe opening. This is to avoid moisture entering the engine.

Fuel tank

Fill the fuel tank completely full to prevent condensation.

Hydraulic reservoir

Fill the hydraulic reservoir to the uppermost level mark (see under the heading ‘Every 10 hours of operation.’)

Water tank

Empty the water tank completely to avoid fouling.

https://truckmanualshub.com/

Steering cylinder, hinges, etc.

Lubricate the steering joint bearings and both bearings on the steering cylinder with grease (see under the heading 'Every 50 hours of operation').

Grease the steering cylinder piston with conservation grease.

Grease the hinges on the doors to the engine compartment and the cab. Grease both ends of the forward/reverse control (bright parts) (see under the heading 'Every 500 hours of operation').

Hoods, tarpaulin

* Lower the instrument cover over the instrument panel.

* Cover the entire roller with a tarpaulin. A gap must be left between the tarpaulin and the ground.

* If possible, store the roller indoors and ideally in a building where the temperature is constant.

https://truckmanualshub.com/

Miscellaneous

Lifting

Locking the articulation

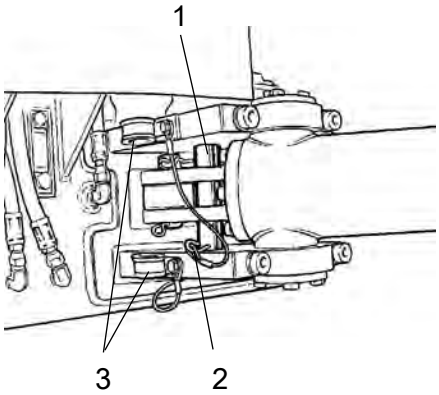

Fig. Left side of steering joint
1. Lock bar
2. Lock pin
3. Holder

Before lifting the roller the steering joint must be locked to prevent it turning.

Turn the steering wheel to the straight ahead position.

Switch off the machine and activate the parking brake.

Pull down the galvanized lock bar (1) from its holder (3), and place it from underneath in the hole on the lower steering joint bracket. Press the bar through until the upper end is visible in the hole on the upper steering joint bracket.

Secure the bar with the lock pin (2).

Weight: refer to the hoisting plate on the roller

Lifting the roller

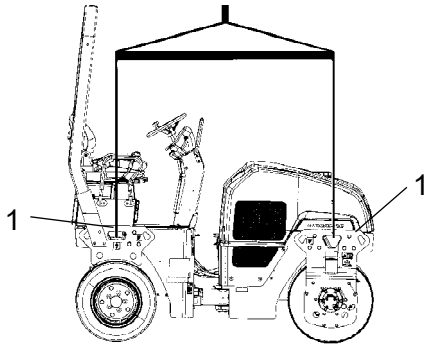

Fig. Lifting the roller
1. Lifting plate

The weight of the machine is shown on the lifting plate (1). See also Technical specifications.

Lifting equipment such as chains, steel wires, straps and lifting hooks must be dimensioned in accordance with the relevant safety regulations for the lifting equipment.

Stand well clear of the hoisted machine! Make sure that the lifting hooks are properly secured.

https://truckmanualshub.com/

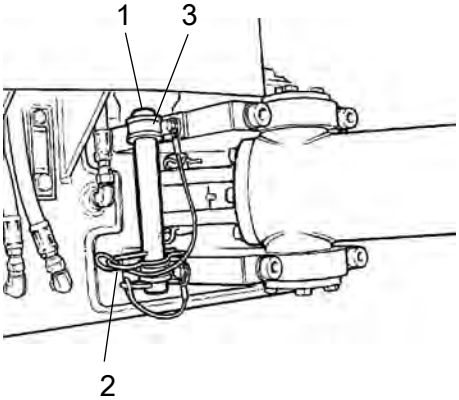

Fig. Left side of steering joint
1. Lock bar
2. Lock pin
3. Holder

Unlocking the articulation

Remember to refit the lock bar (1) in its holder after operation.

https://truckmanualshub.com/

Towing/Recovering

The roller can be moved up to 300 meters (1,000 ft) using the instructions below.

Release the brakes

Activate the parking brake, and stop the engine. Block the drum with a chock to prevent movement; the roller can start rolling when the brakes are released.

The disc brake in each drive motor must be disengaged mechanically, according to below following instructions, before the roller can be towed.

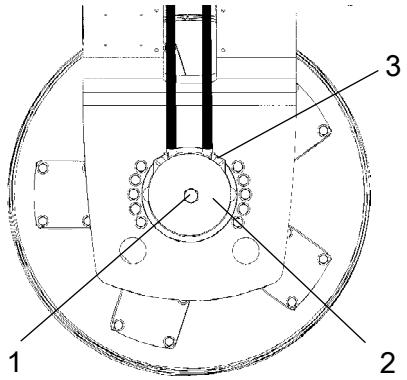

Fig. Left side of drum
1. Brake tool
2. Fastening screw
3. Disengagement nut

Remove the center plug (4) using a screwdriver.

Screw off the brake tool (1) from its threaded fixing hole. Then fix the brake tool (1) in the center hole by tightening the screw (2) until it bottoms in the hole. Tighten the nut (3) against the brake tool until it stops, indicating that the brakes is now disengaged.

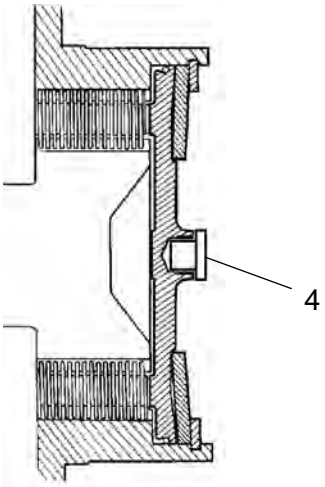

Fig. Brake housing
4. Center plug

Disengaging the brakes

Screw out the nut again after towing. This returns the brakes to their normal mode. Screw off the brake tool and fit it back into its fixing holes. Refit the center plug (4) to counteract the information of rust inside the threaded hole.

https://truckmanualshub.com/

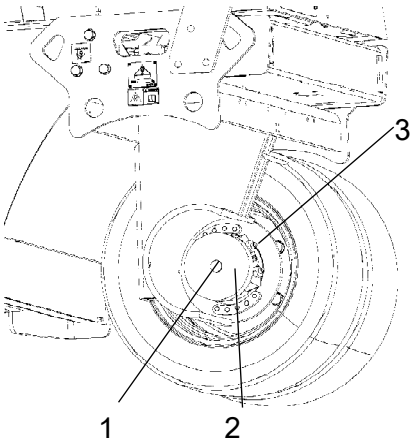

Fig. Left drum side
1. Release screw
2. Brake housing
3. Drive motor

Releasing the brake, wheel motors (Optional)

Activate the parking brake, and stop the engine. Block the drum with a chock to prevent movement; the roller can start rolling when the brakes are released.

The disc brakes in each drive motor must be released mechanically as shown below before the towing the roller.

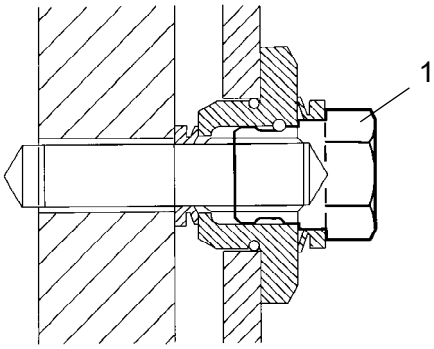

Fig. Brake housing
1. Release screw

Use a key with an 18 mm socket.

Turn the release screw (1) a 1 1/2 turn clockwise to release the brake.

Release the brakes on both drums.

Turn the same screws a 1 1/2 turn anticlockwise to activate the brakes again after towing.

https://truckmanualshub.com/

Towing the roller

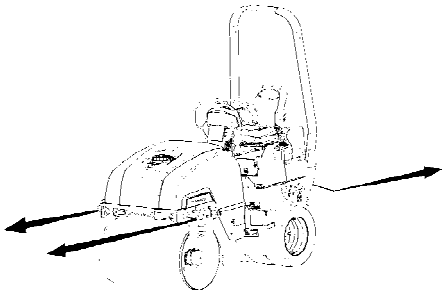

Fig. Towing

The roller must be counter-braked during towing/recovery. Always use a towbar. There is no braking capacity on the roller now.

The roller must be towed slowly, max. 3 kph (2 mph) and only towed short distances, max. 300 m (1000 ft).

When towing/retrieving a machine, the towing device must be connected to both lifting holes. The pulling force shall act longitudinally on the machine as shown in the figure. Maximum total pulling force 130 kN (29225 lbf).

Reverse the towing preparations.

https://truckmanualshub.com/

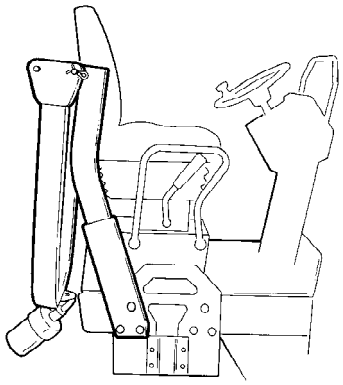

Fig.

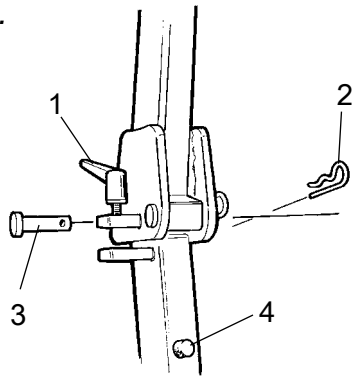

Fig. ROPS locking device
1. Tensioning screw
2. Pin
3. Stud
4. Rubber buffer

Retractable ROPS (Optional)

The machine can be equipped with retractable ROPS.

Risk of crush injury when raising and lowering ROPS.

If the roller is equipped with a retractable ROPS, the machine must only be operated when it is lifted up and locked.

To retract the ROPS, release the tensioning screw (1), and pull out the pin (2) and stud (3). Do the same on both sides. Lower the ROPS backwards if there is space.

Remember to dismantle the rotating warning light before lowering the ROPS.

After lowering the ROPS, replace the pin and stud.

To lift the ROPS proceed in the reserve order.

Always make sure the ROPS is locked in raised position before operation.

Grease the tensioning screw (1) and stud (3) periodically.

https://truckmanualshub.com/

Roller prepared for transport

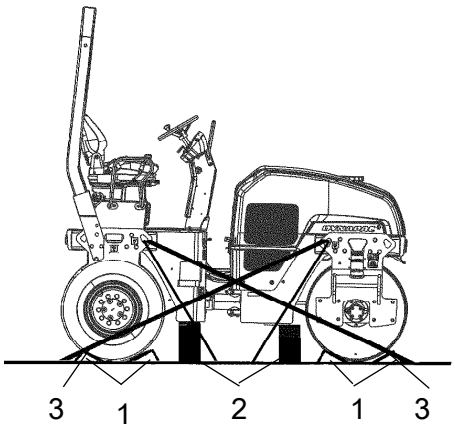

Fig. Arrangement
1. Chocks
2. Wooden blocks
3. Lashing straps

Lock the articulation before lifting and transporting. Follow the instructions under the relevant heading.

Activate the parking brake.

Make sure that the machine is in a neutral position, i.e. that the drums are in line.

Chock the drum and rubber wheels and secure the chocks (1) to the transport vehicle. The drum and rubber wheels should be chocked both forwards and backwards.

Block up under the drum frame (2), to avoid overloading the rubber suspension when lashing. Block up the machine as shown in figure.

Secure down the roller with lashing straps (3) at all four corners. The attachment points are shown on the decals. Place the chains in symmetrical pairs crossing each other.

Make sure that the chains, blocks and attachments in the transport vehicle are approved and have the requisite breaking strain. Check at regular intervals that the chains are not slack.

Remember to reset the steering joint lock to its open position before starting the roller again.

https://truckmanualshub.com/

https://truckmanualshub.com/

Operating instructions - Summary

1. **Follow the SAFETY INSTRUCTIONS specified in the Safety Manual.**

2. Make sure that all instructions in the MAINTENANCE section are followed.

3. Turn the master switch to the ON position.

4. Move the forward/reverse lever to the NEUTRAL position.

5. Set the switch for Manual/Automatic vibration to the 0 position.

6. Set the throttle control to more than half.

7. Set the emergency stop brake button in the pulled out position.

8. Start the engine and allow it to warm up.

9. Set the throttle control to the operating position.

10. **Drive the roller. Operate the forward/reverse lever with care.**

11. **Check the brakes, drive slowly. Remember that the braking distance will be longer if the roller is cold.**

12. Use vibration only when the roller is in motion.

13. Check that the drum and wheels are thoroughly watered when watering is required.

14. **IN AN EMERGENCY:**
    - Press the EMERGENCY STOP BUTTON
    - Hold the steering wheel firmly.
    - Brace yourself for a sudden stop. The engine stops.

15. Parking: - Stop the engine,chock the drum and wheels.

16. When lifting: - Refer to the relevant section in the Instruction Manual.

17. When towing: - Refer to the relevant section in the Instruction Manual.

18. When transporting: - Refer to the relevant section in the Instruction Manual.

19. When recovering - Refer to the relevant section in the Instruction Manual.

https://truckmanualshub.com/

https://truckmanualshub.com/

Preventive maintenance

Complete maintenance is necessary for the machine to function satisfactorily and at the lowest possible cost.

The Maintenance section includes the periodic maintenance that must be carried out on the machine.

The recommended maintenance intervals assume that the machine is used in a normal environment and working conditions.

Acceptance and delivery inspection

The machine is tested and adjusted before it leaves the factory.

On arrival, before delivery to the customer, delivery inspection must be conducted as per the check list in the warranty document.

Any transport damage must be immediately reported to the transport company.

Warranty

The warranty is only valid if the stiplulated delivery inspection and the separate service inspection have been completed as per the warranty document, and when the machine has been registered for starting under the warranty.

The warranty is not valid if damage has been caused by inadequate service, incorrect use of the machine, the use of lubricants and hydraulic fluids other than those specified in the manual, or if any other adjustments have been made without the requisite authorisation.

https://truckmanualshub.com/

https://truckmanualshub.com/

Maintenance - Lubricants and symbols

Fluid volumes

Hydraulic tank	45 liters	47.5 qts
Diesel engine	7 liters	7.4 qts
Drum	4 liters	4.2 qts
Coolant	5,5 liters	5.8 qts

Always use high-quality lubricants and the amounts recommended. Too much grease or oil can cause overheating, resulting in rapid wear.

			DYNAPAC
ENGINE OIL	Air temperature -15°C - +50°C (5°F-122°F)	Shell Rimula R4 L 15W-40, API CH-4 or equivalent.	
HYDRAULIC FLUID	Air temperature -15°C - +50°C (5°F-104°F)	Shell Tellus S2 V68 or equivalent.	
	Air temperature over +50°C (104°F)	Shell Tellus S2 V100 or equivalent.	
Bio-Hydr. BIOLOGICAL HYDRAULIC FLUID, PANOLIN	When it leaves the factory, the machine may be filled with biologically degradable fluid. The same type of fluid must be used when changing or topping up.	PANOLIN HLP Synth 46 (www.panolin.com)	
DRUM OIL	Air temp. -15°C - +40°C (5°F-104°F)	Shell Spirax S3 AX 80W/90, API GL-5	**Dynapac Gear Oil 300**, P/N 4812030756 (5 liter)
	Air temperature 0°C - over +40°C (32°F- over 104°F)	Shell Spirax AX 85W/140, API GL-5	
GREASE		Shell Retinax LX2 or equivalent.	**Dynapac Roller Grease** (0.4kg), P/N 4812030096
FUEL	See engine manual.	-	-
COOLANT	Anti-freeze protection down to about -37°C (-34.6°F)	GlycoShell/Carcoolant 774C or equivalent, (mixed 50/50 with water)	

Other fuel and lubricants are required when operating in areas with extremely high or extremely low ambient temperatures. See the 'Special instructions' chapter, or consult Dynapac.

https://truckmanualshub.com/

Maintenance symbols

	Engine, oil level		Air filter
	Engine, oil filter		Battery
	Hydraulic reservoir, level		Sprinkler
	Hydraulic fluid, filter		Sprinkler water
	Drum, oil level		Recycling
	Lubricating oil		Fuel filter

https://truckmanualshub.com/

Maintenance - Maintenance schedule

General

Periodic maintenance should be carried out after the number of hours specified. Use the daily, weekly etc. periods where number of hours cannot be used.

Service and maintenance points

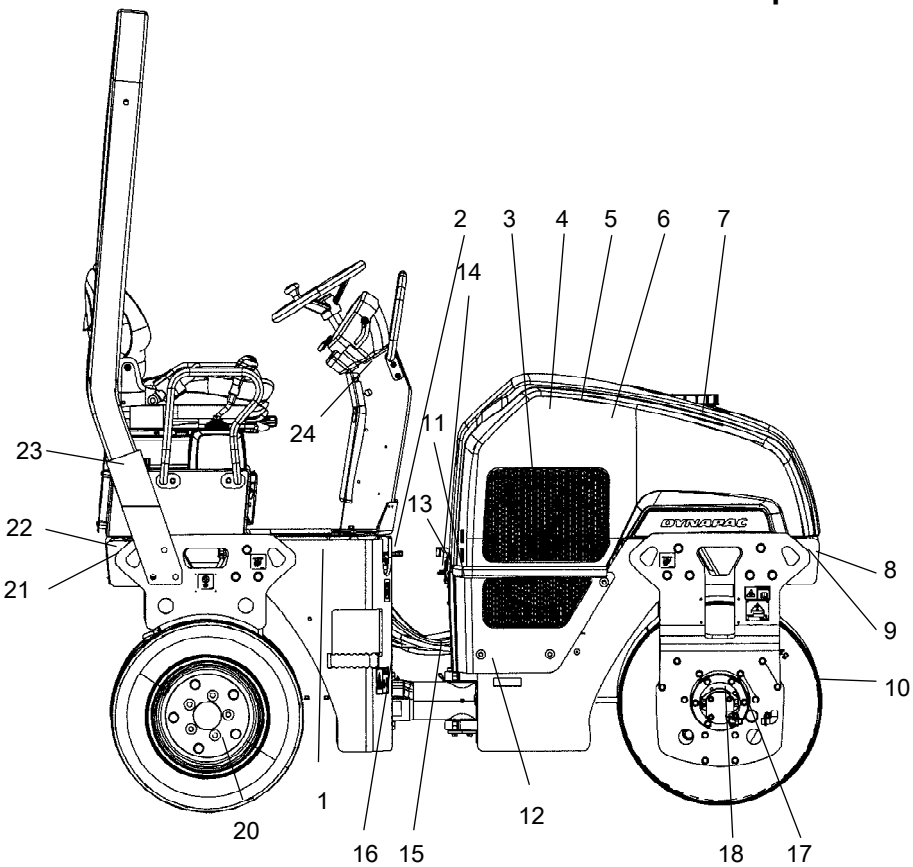

Fig. Service and maintenance points

1. Fuel tank
2. Refueling
3. Cooler
4. Air cleaner
5. Battery
6. Diesel engine
7. Water tank
8. Sprinkler system/Drum
9. Scrapers
10. Shock absorbers and attachment screws
11. Hydraulic fluid refilling
12. Hydraulic fluid tank
13. Hydraulic fluid filter
14. Hydraulic fluid level glass
15. Steering joint
16. Steering cylinder bracket
17. Filler plugs/Drum
18. Oil level in drum
20. Tires/air pressure
21. Sprinkler system/Wheels
22. Scrapers/Wheels
23. Emulsion tank
24. Emergency stop

https://truckmanualshub.com/

Remove all dirt before filling, when checking oils and fuel and when lubricating using oil or grease.

The manufacturer's instructions found in the engine manual also apply.

Every 10 hours of operation (Daily)

Refer to the contents to find the page number of the sections referred to !

Pos. in fig	Action	Comment
	Before starting up for the first time on that day	
6	Check the engine oil level	Refer to the engine manual
14	Check the hydraulic reservoir level	
3	Check for free circulation of cooling air	
1	Fill the fuel tank	
7	Fill the water tank	
8	Check the sprinkler system/Drum	
9	Check the scraper setting/Drum	
22	Check the spring loaded scrapers	Optional
21	Check the sprinkler system - tires	
22	Check the scraper setting - tires	
19	Test the brakes	

After the FIRST 50 hours of operation

See Contents to find the page number of the sections referred to!

Pos. in fig	Action	Comment
6	Change the engine oil and oil filter	Refer to the engine manual
6	Change the fuel filter	Refer to the engine manual
13	Change the hydraulic fluid filter	
10	Check bolted joints	

https://truckmanualshub.com/

Every 50 hours of operation (Weekly)

See Contents to find the page numbers of the sections referred to!

Pos. in fig	Action	Comment
4	Check indicator for air cleaner Check that the air hoses are in good condition and that the connections are tight	Optional
15	Grease the steering joint	
16	Grease the steering cylinder brackets	
20	Check the tire pressure	

Every 250 hours of operation (Monthly)

See Contents to find the page number of the sections referred to!

Pos. in fig	Action	Comment
3	Clean the outside of the radiator core	In duty environments, as necessary
5	Check the battery condition	
6	Change the engine oil and oil filter	Refer to the engine manual

Every 500 hours of operation (Every three months)

See Contents to find the page number of the sections referred to!

Pos. in fig	Action	Comment
18	Check the oil level in the drum	
10	Check rubber elements and bolted joints	
11	Check the hydraulic reservoir cover/breather	
6	Lubricate hinges and controls	
6	Check engine's V-belt	Refer to the engine manual
3	Check coolant freezing point. Change the coolant every other year	

https://truckmanualshub.com/

Every 1000 hours of operation (Every six months)

See Contents to find the page number of the sections referred to!

Pos. in fig	Action	Comment
13	Change the hydraulic fluid filter	
12	Drain condensate from hydraulic tank	
6	Change the engine's fuel filter	
6	Change the engine's pre-filter	
6	Check the engine's toothed belt	Refer to the engine manual
6	Check engine's valve clearances	Refer to the engine manual

Every 2000 hours of operation (Yearly)

See Contents to find the page numbers of the sections referred to!

Pos. in fig	Action	Comment
12	Change the hydraulic fluid	
18	Change the oil in the drum	
7	Drain and clean the water tank	
23	Drain and clean the emulsions tank	
1	Drain and clean the fuel tank	
	Check the condition of the articulation	

https://truckmanualshub.com/

Maintenance, 10h

Park the roller on a level surface.
The engine must be switched off and the parking brake activated when checking or adjusting the roller, unless otherwise specified.

Ensue that there is good ventilation (air extraction) if the engine is run indoors. Risk of carbon monoxide poisoning.

Check - Coolant system

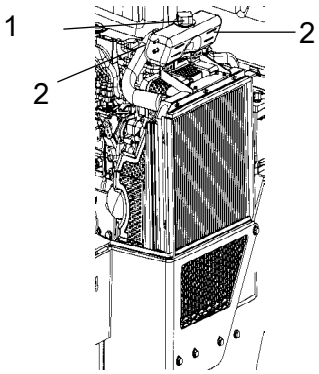

Figure. Cooling water container
1. Filler cap
2. Level marking

Check that all hoses/hose connectors are intact and tight. Fill with coolant as specified in the lubricants specification.

Take great care when opening the radiator cap while the engine is hot. Wear protective gloves and goggles.

Also check the freezing point. Change the coolant every other year.

https://truckmanualshub.com/

Hydraulic reservoir, Level check - Filling

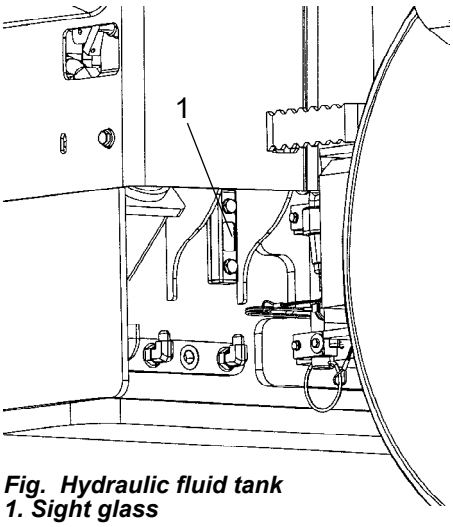

Fig. Hydraulic fluid tank
1. Sight glass

Check that the level is between the min and max markings. Top up with hydraulic fluid as per lubricant specifications if level is too low.

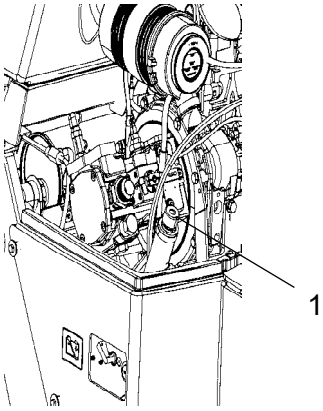

Fig. Engine compartment
1. Hydraulic fluid refilling

Open the engine hood and unscrew the filler cap, top up with hydraulic fluid (as per lubricant specification) if the level is too low.

https://truckmanualshub.com/

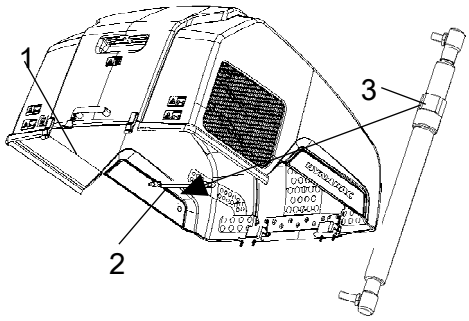

Fig. Engine compartment
1. Engine hood
2. Gas spring
3. Button

Lowering of engine hood

Stand on the **left** side of the engine hood. Press in the red button (3) and carefully lower the engine hood until the gas spring (2) goes into the slot. Release the red button (3) and then lower down the engine hood completely.

Air circulation - Check

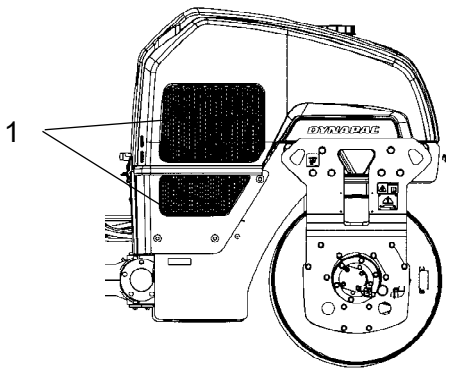

Fig. Right drum side
1. Cooling air grille

Check that the engine has free circulation of cooling air through the grille (1) in the engine compartment.

https://truckmanualshub.com/

Fuel tank - Filling

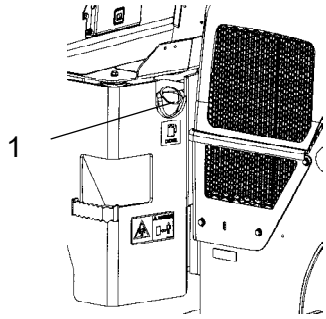

Fig. Fuel tank
1. Filler cap

Refuel every day before starting to work. Screw off the lockable tank cap (1) and fill diesel fuel to the lower edge of the filler pipe.

Stop the diesel engine. Short-circuit (press) the filler gun against a non-insulated part of the roller before refuelling, and against the filler pipe while refuelling.

Never refuel while the engine is running. Do not smoke and avoid spilling fuel.

The fuel tank holds 50 liters.

Sprinkler system/Drum Checking - Cleaning

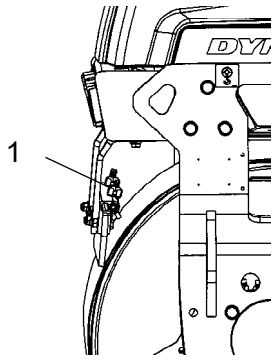

Fig. Drum
1. Nozzle

Start the sprinkler system and make sure that no nozzles (1) are clogged. If necessary, clean clogged nozzles and the coarse filter located by the water pump; see figures below.

The sprinkler system should be drained if there is a risk of freezing.

https://truckmanualshub.com/

Sprinkler system / Wheels
Check - Cleaning

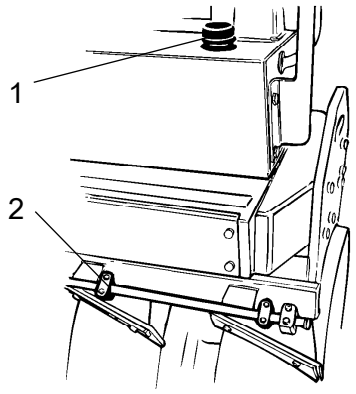

Fig. Wheel rack
1. Filler cap
2. Nozzle (one for each tire)

Fill the rear tank with emulsion fluid; for example, water mixed with 2% cutting fluid. Make sure that the sprinkler nozzles (2) are not clogged. Clean them and the filter if necessary. See under Sprinkler system/Drum; Check - Cleaning, for detailed instructions.

Check the tire treads now and then to see if any asphalt compound has stuck. This can occur before the tires are sufficiently warm.

Fluids that are flammable or detrimental to the environment must not be used in the emulsion tank.

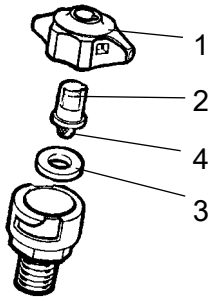

Fig. Nozzle
1. Sleeve
2. Nozzle
3. Gasket
4. Strainer

Dismantle the blocked nozzle by hand. Blow the nozzle (2) and fine filter (4) clean with compressed air, or install replacement parts and clean the clogged parts later.

Wear protective goggles when working with compressed air.

https://truckmanualshub.com/

Water tank - Filling

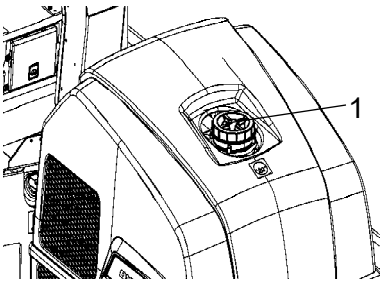

Fig. Water tank
1. Tank cap

Unscrew the tank cap (1) and fill with clean water. Do not remove the strainer. See technical specifications for the tank volume.

Only additive: A small amount of environment-friendly antifreeze.

Scrapers, fixed
Checking - Setting

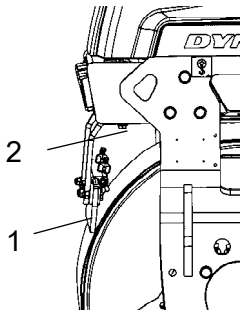

Fig. Drum
1. Scraper blade
2. Adjusting screws

Make sure that the scrapers are undamaged. Adjust the scrapers so that they are 1-2 mm from the drum. For special asphalt compounds, it may be better if the scraper blades (1) lie lightly against the drums.

Asphalt remnants can accumulate on the scraper and affect the contact force. Clean as required.

Loosen the screws (2) to adjust the contact pressure of the scraper blade against the drum.

Remember to tighten all the screws after any adjustment.

Scrapers, spring-action (Optional)
Checking - Adjustment

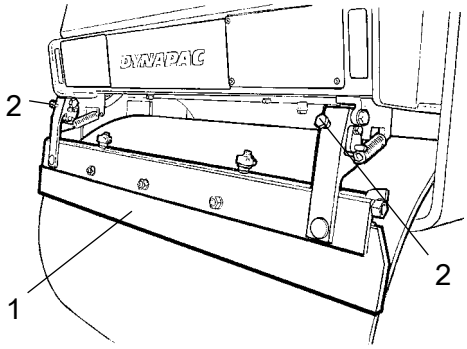

Fig. Spring-action scrapers
1. Scraper blade
2. Adjusting screws

The scrapers must be lifted from the drum during transport.

https://truckmanualshub.com/

Scrapers
Check - Adjustment

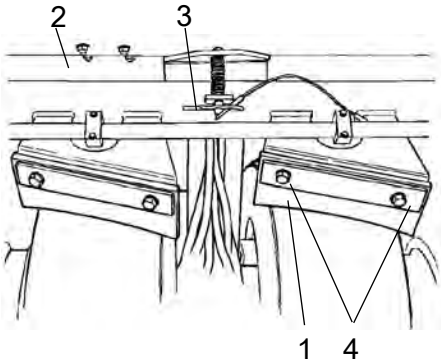

Fig. Wheel scrapers
1. Scraper
2. Scraper blade
3. Lock pin
4. Adjusting screw

Make sure that the scraper (1) is flush with the tire when compacting asphalt.

The scrapers must hang clear of the tires during transport. Lift up the scraper beam (2) by moving up the cotter (3) to the uppermost hole.

The angle of the scraper to the tire can be adjusted by releasing the screws (4) to adjust the scraper, and then tightening the screws.

Brakes - Check

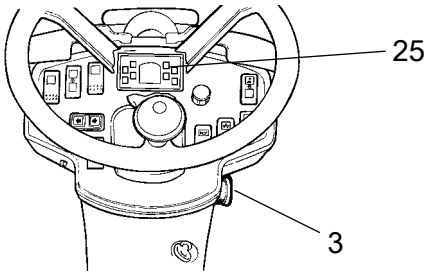

Figure. Instrument panel
3. Emergency stop
25. Parking brake lamp

Check operation of the brakes as follows:

Run the roller very slowly forward. Hold the steering wheel firmly and brace yourself for a sudden stop.

Press in the emergency stop button (3). The roller will stop abruptly and the engine will switch off.

After testing the brakes, set the forward/reverse lever in neutral.

Pull out the emergency stop button (3). Start the engine.

The roller is now ready for operation.

Refer also to the section in the manual on operation.

https://truckmanualshub.com/

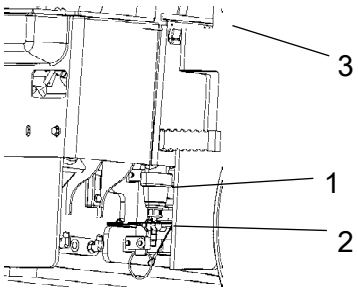

Fig. Pump system
1. Water filter
2. Stop cock
3. Water pump

When cleaning the coarse filter (1), open the cock (2) and loosen the filter housing.

Clean the filter and filter housing. Check that the rubber gasket in the filter housing is intact.

After inspecting and carrying out any necessary cleaning, start the system and check that it works.

A drain cock is placed on the left side of the pump system area. This can be used to drain the tank and the pump system.

Pump system / Tire Check - Cleaning

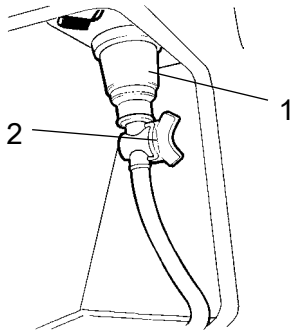

Fig. Left footstep
1. Filter housing
2. Cock

When cleaning, close the stop cock (2) and undo the filter house (1). Clean the filter and filter housing. Listen to or put your hand on the water pump to check that it is working.

https://truckmanualshub.com/

Maintenance - 50h

Park the roller on a level surface.
The engine must be switched off and the parking brake activated when checking or adjusting the roller, unless otherwise specified.

Ensue that there is good ventilation (air extraction) if the engine is run indoors. Risk of carbon monoxide poisoning.

Air cleaner indicator

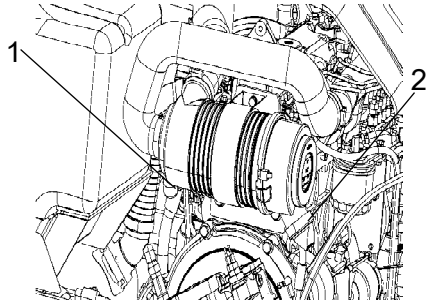

Fig. Air cleaner
1. Indicator
2. Main filter

If the indicator (1) on the air cleaner turns red, replace the main filter (2) on the air cleaner. The dust pouch is emptied by pressing the rubber bellows with your fingers. Check also that the air hoses are in good condition.

Clean the air cleaner when operated in extremely dusty environments.

Air cleaner
Check - Replacement of main filter

Replace the air cleaner's main filter when the indicator shows red. The indicator is mounted on the air cleaner's connecting pipe.

https://truckmanualshub.com/

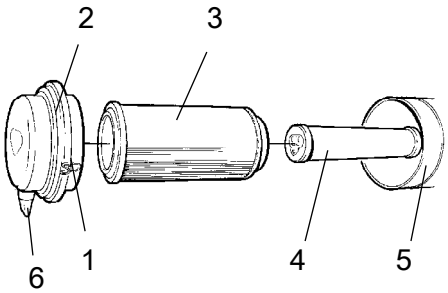

Fig. Air cleaner
1. Clips
2. Cover
3. Main filter
4. Backup filter
5. Filter housing
6. Dust valve

Release the clips (1), pull off the cover (2), and pull out the main filter (3).

Do not remove the backup filter (4).

Clean the air cleaner if necessary, see section Air cleaner - Cleaning.

When replacing the main filter (3), insert a new filter and refit the air cleaner in the reverse order.

Check the condition of the dust valve (6); replace if necessary.

When refitting the cover, make sure that the dust valve is positioned downwards.

Air filter indicator - Resetting

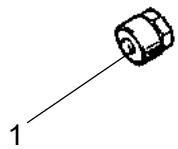

Fig. Indicator
1. Button

The air filter indicator is located on the filter, or in its immediate vicinity.

The air filter indicator must be reset after replacing the air filter.

Press the "button" (1) on the top of the indicator to reset.

Backup filter - Change

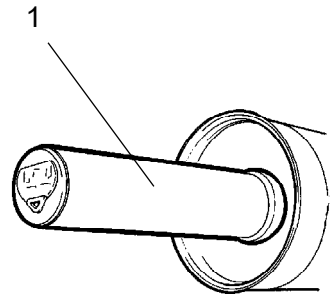

Fig. Air filter
1. Backup filter

Change the backup filter with a new filter after every third replacement of the main filter.

To change the backup filter (1), pull the old filter out of its holder, insert a new filter and reassemble the air cleaner in the reverse order.

Clean the air cleaner if necessary, see section Air cleaner - Cleaning.

https://truckmanualshub.com/

Air cleaner
- Cleaning

Wipe clean the inside of the cover (2) and the filter housing (5). See the previous illustration.

Wipe clean on both sides of the outlet pipe.

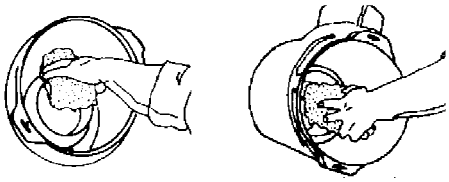

Inner edge of outlet pipe.

Outer edge of outlet pipe.

Wipe also both surfaces for the outlet pipe; see adjacent figure.

Check that the hose clamps between the filter housing and the suction hose are tight and that the hoses are intact. Inspect the entire hose system, all the way to the engine.

Steering cylinder and steering joint - Lubrication

Do not allow anyone to remain in the vicinity of the steering joint when the engine is running. Danger of crush injury when the steering is operated. Activate the parking brake before lubricating.

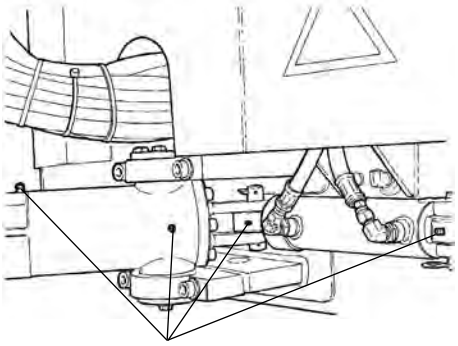

Fig. Main filter
1. Grease nipples

Turn the steering wheel fully to the left. All four grease nipples (1) can now be accessed from the right side of the machine.

Wipe the grease nipples (1). Grease each nipple with five strokes of the hand-operated grease gun. Make sure that grease penetrates into the bearing. If grease does not penetrate the bearings, it may be necessary to relieve the articulation joint with a jack while repeating the greasing process.

https://truckmanualshub.com/

Tires - Tire pressure

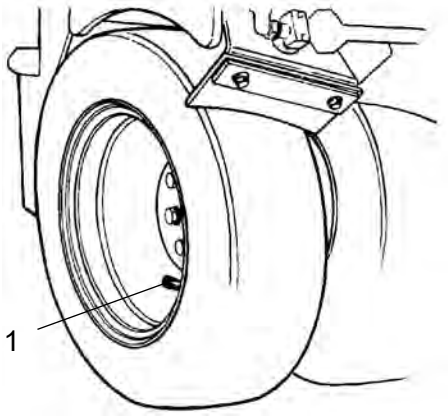

Fig. Tire
1. Air valve

Check the air pressure with a pressure gauge.

Make sure that the tires have the same pressure.

Recommended pressure: See Technical Specifications.

https://truckmanualshub.com/

Maintenance - 250h

Park the roller on a level surface.
The engine must be switched off and the parking brake activated when checking or adjusting the roller, unless otherwise specified.

Ensue that there is good ventilation (air extraction) if the engine is run indoors. Risk of carbon monoxide poisoning.

Coolers
Checking - Cleaning

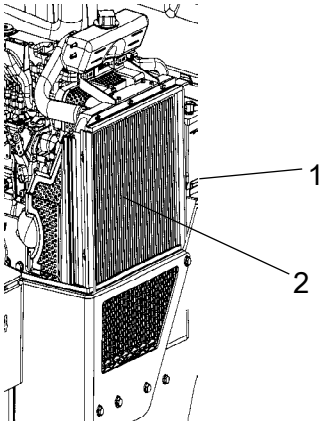

Fig. Engine compartment
1. Water cooler
2. Hydraulic fluid cooler

Make sure that the air flow through the coolers (1) and (2) is unobstructed. Dirty coolers are blown clean with compressed air or washed clean using a high-pressure water cleaner.

Blow air or direct water through the cooler in the opposite direction to that of the cooling air.

Take care when using a high-pressure water jet. Do not hold the nozzle too near the cooler.

Wear protective goggles when working with compressed air or high-pressure water jets.

https://truckmanualshub.com/

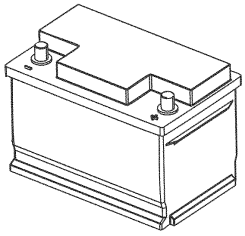

Fig. Battery

Battery
- Check condition

The battery is sealed and maintenance-free.

Make sure there is no open flame in the vicinity when checking the electrolyte level. Explosive gas is formed when the alternator charges the battery.

When disconnecting the battery, always disconnect the negative cable first. When connecting the battery, always connect the positive cable first.

The cable shoes should be clean and well-tightened. Corroded cable shoes should be cleaned and greased with acid-free Vaseline.

Wipe the top of the battery.

https://truckmanualshub.com/

Engine oil and oil filter - Change

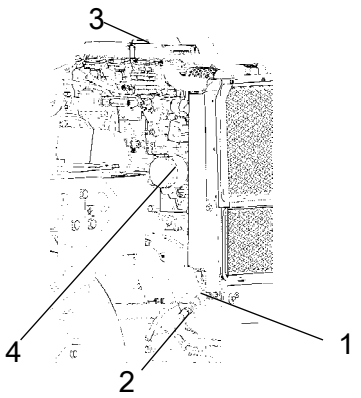

Fig. Engine compartment right side
1. Drain hose
2. Drain plug
3. Filler cap
4. Oil filter

Run the engine until it is warm before draining the oil .

Switch off the engine and push in the emergency brake button.

Take great care when draining fluids and oils. Wear protective gloves and goggles.

Set a container which can hold at least 8 liters (2 gal) under the drain plug (2).

Undo the oil filler cap (3), and undo the drain plug (2) in the end of the drain hose (1). Let all the engine oil flow out.

Deliver the drained oil to special waste handling.

Refer to the engine manual for detailed instructions when changing oil and filters.

Remove the oil filter (4) and fit a new filter.

Collect any spillage.

Fit the drain plug (2) to the end of the hose.

Fill with fresh engine oil. See under the heading lubricants, for the correct oil grade. Fit the filler cap (3) and check that the oil level is correct using the dipstick.

Start the engine and allow it to idle for a few minutes. During this time, check around the oil filter and drain plug for leaks.

Switch off the engine, wait for a minute or so and then check the oil level. Top up with more oil if necessary.

https://truckmanualshub.com/

https://truckmanualshub.com/

Maintenance - 500h

Park the roller on a level surface.
The engine must be switched off and the parking brake activated when checking or adjusting the roller, unless otherwise specified.

Ensue that there is good ventilation (air extraction) if the engine is run indoors. Risk of carbon monoxide poisoning.

Drum - oil level
Inspection - filling

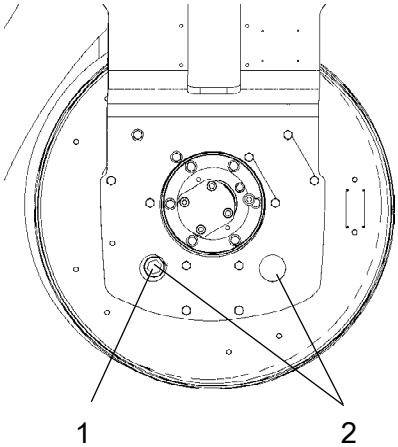

Fig. Drum, vibration side
1. Oil plug
2. Inspection hole

Run the roller slowly until the oil plug (1) is opposite one of the inspection holes (2).

Unscrew the plug and check that the oil level reaches up to the bottom of the hole. Top up with new oil if necessary. Use oil as per the lubricant specification.

Clean the magnetic oil plug (1) from any metallic residue, and refit the plug.

https://truckmanualshub.com/

Rubber elements and attachment screws Check

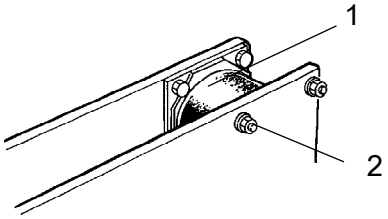

Fig. Drum, vibration side
1. Rubber element
2. Attachment screws

Check all rubber elements (1). Replace all elements where more than 25% of the elements on one side of the drum have cracks deeper than 10-15 mm (0.4-0.6 in).

Check using a knife blade or pointed object.

Check also that the attachment screws (2) are tightened.

Hydraulic reservoir cap - Check

Screw off the tank cap and check that it is not clogged. Air must have unobstructed passage through the cap in both directions.

If clogged in either direction, clean with a little diesel oil and blow with compressed air until free passage is assured or replace the cap with a new one.

Wear protective goggles when working with compressed air.

Controls - Lubrication

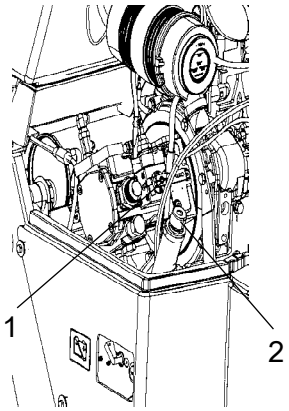

Fig. Engine compartment
1. Forward/Reverse lever
2. Hydraulic reservoir cap

Lubricate the forward/reverse lever in the engine compartment with a few drops of oil.

If the lever gets stiff after a prolonged period of use, remove the cover and lever and lubricate.

https://truckmanualshub.com/

Controls - Lubrication

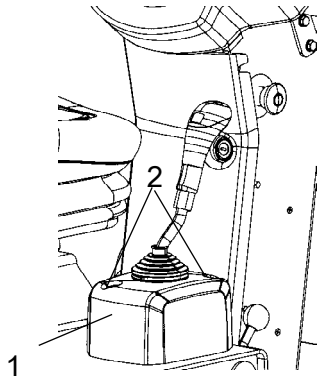

Fig. Driver seat
1. Forward/Reverse lever
2. Attachment screws

Lubricate the forward/reverse lever mechanism.

Remove the cover (1) by loosening the screws (2) on the top, and lubricate the mechanism under the cover with oil.

Check - Coolant system

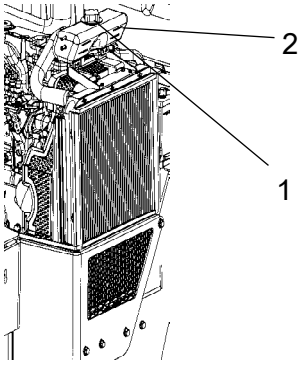

Figure. Cooling water container
1. Filler cap
2. Level marking

Check that all hoses/hose connectors are intact and tight. Fill with coolant as specified in the lubricants specification.

Take great care when opening the radiator cap while the engine is hot. Wear protective gloves and goggles.

Also check the freezing point. Change the coolant every other year.

https://truckmanualshub.com/

https://truckmanualshub.com/

Maintenance - 1000h

Park the roller on a level surface.
The engine must be switched off and the parking brake activated when checking or adjusting the roller, unless otherwise specified.

Ensue that there is good ventilation (air extraction) if the engine is run indoors. Risk of carbon monoxide poisoning.

Replacing the hydraulic oil filter

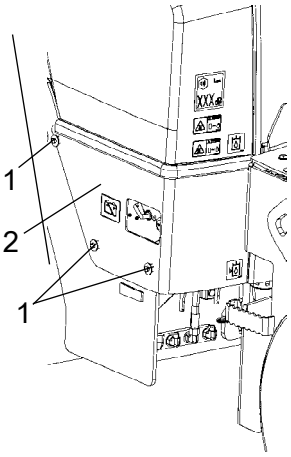

Fig. Engine compartment
1. Retaining screws
2. Protective cover

Unscrew the retaining screws (1) on each side of the roller.

Remove the protective cover (2).

https://truckmanualshub.com/

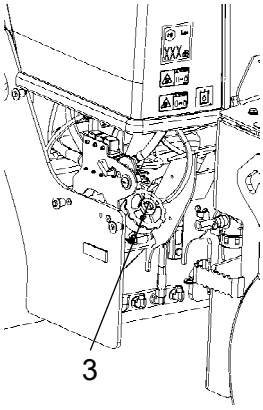

Fig. Hydraulic oil filter
3. Cap

Loosen the red cap (3) and pull up the filter insert (4).

Refit the red cap temporarily to prevent dust and dirt getting into the tank.

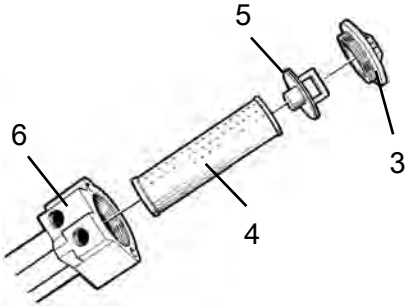

Fig. Hydraulic oil filter
3. Cap
4. Filter insert
5. Handle
6. Filter holder

Release the filter insert (4) from the handle (5).

Remove the filter (4) and hand in to an environment-friendly waste disposal station. This is a disposable filter and cannot be cleaned.

Mount the new insert on the handle, refit the unit into the filter holder (6), and refit the red cover.

Start the engine and allow it to run at full revs for 30 seconds. Check that the filter cap (3) is tight.

https://truckmanualshub.com/

Hydraulic fluid reservoir - Draining

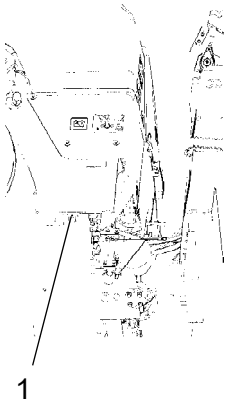

Fig. Left frame side
1. Drain plug

Condensate in the hydraulic tank is drained via the plug (1). This should be done when the roller has stood still for some time, e.g. during the night.

Be very careful during draining. Do not drop the plug or else all the hydraulic fluid will flow out.

Drain as follows:

Place a container under the plug (1). Loosen and allow any condensate to run out. Tighten the plug.

Replacing the fuel filter

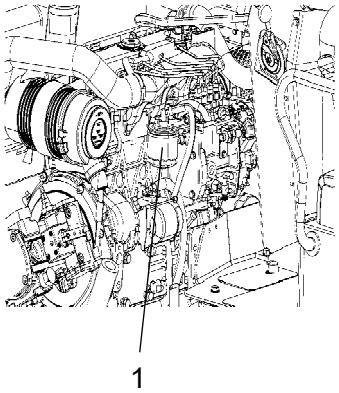

Fig. Engine compartment
1. Fuel filter

Place a container underneath to collect fuel that runs out when the filter is released.

Screw off the fuel filter (1). The filter is of the disposable type and cannot be cleaned. Han in to environment-friendly station.

Refer to the engine manual for detailed instructions when replacing the fuel filter.

Start the engine and check that the fuel filter is tight.

Ensure good ventilation (air extraction) if the diesel engine is run indoors. Risk of carbon monoxide poisoning.

https://truckmanualshub.com/

Replacing the pre-filter

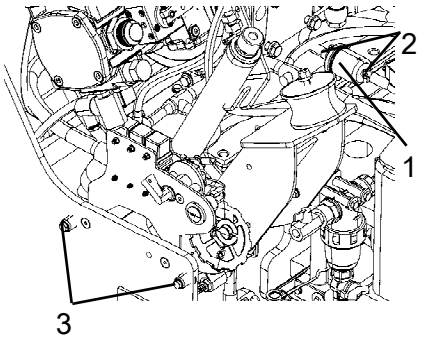

Fig. Engine compartment
1. Pre-filter
2. Hose clamps
3. Bolts

Activate the parking brake.
Switch off the engine and remove the plate on the left side of the frame (at battery disconnector) by releasing the three bolts (3).
Release the hose clamps (2) with a screwdriver.

Place a container underneath to collect fuel that runs out when the filter is released.

Remove the pre-filter (1) and hand in to environment-friendly station. This is a disposable filter and cannot be cleaned.

Fit a new pre-filter and tighten the hose clamps.

Start the engine and check that the pre-filter is tight.

Ensure good ventilation (air extraction) if the diesel engine is run indoors. Risk of carbon monoxide poisoning.

https://truckmanualshub.com/

Maintenance - 2000h

Park the roller on a level surface.
The engine must be switched off and the parking brake activated when checking or adjusting the roller, unless otherwise specified.

Ensue that there is good ventilation (air extraction) if the engine is run indoors. Risk of carbon monoxide poisoning.

Hydraulic tank - Changing the fluid

Risk of burn injuries when draining hot oil. Protect your hands.

Place a container under the plug. It should hold at least 50 liters. Save the oil and dispose of it in an approved manner.

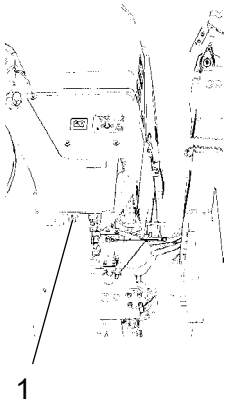

Fig. Left frame side
1. Drain plug

Unscrew the drain plug (1) and allow all the oil to run out. Wipe and replace the drain plug.

Fill with fresh hydraulic fluid of the grade indicated in the Lubricant specification.

Replace the hydraulic fluid filter. See under the heading 'Every 1000 hours of operation'.

Start the diesel engine and run the various hydraulic functions. Check the fluid level in the tank, and top up if necessary.

https://truckmanualshub.com/

Drum - Oil change

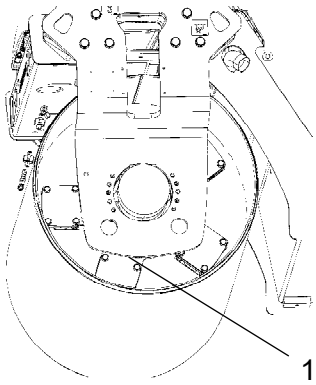

Fig. Drum, vibration side
1. Drain plug

Take great care when draining the fluid. Wear protective gloves and goggles.

Place the roller on a level surface and drive it slowly until the drain plug (1) is straight down.

Switch off the engine and activate the parking brake.

Place a receptacle that will hold at least 7 liters (7.4 quarts) under the plug. Collect the oil and dispose of it properly.

Remove the plug and allow all the oil to run out. See under the heading 'Every 500 hours of operation' for filling oil.

Water tank - Draining

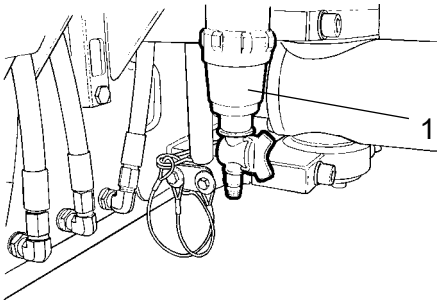

Fig. Pump system
1. Water filter

Remember that there is a risk of freezing during the winter. Empty the tank, pump and lines.

The easiest way to empty the water tank is to open the drain cock on the water filter (1). (There is also a drain plug under the water tank).

https://truckmanualshub.com/

Water pump - Draining

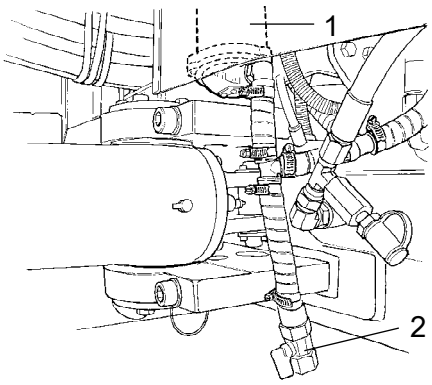

Fig. Pump system
1. Water pump
2. Drain cock

The water pump (1) is emptied by opening the drain cock (2).

Water tank - Cleaning

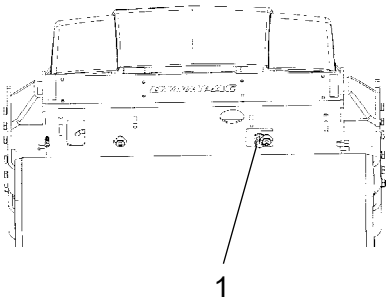

Fig. Water tank
1. Drain plug

Clean the tanks with water and a suitable detergent for plastic surfaces.

Refit the filter housing or the drain plug (1). Fill with water and check for leaks.

The water tanks are made of plastic (polyethylene) and are recyclable.

https://truckmanualshub.com/

Emulsion tank - Draining

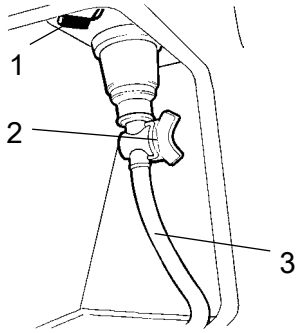

Fig. Pump system
1. Stop cock
2. Drain cock
3. Drain hose

Open the cock (1) and the drain cock (2), which is located in the left step. The hose (3) facilitates draining the emulsion fluid into a suitable receptacle.

When cleaning the tank, see Water tank - Cleaning.

The Emulsions tank is made of plastic (polyethylene), and is recyclable.

Fuel tank - Cleaning

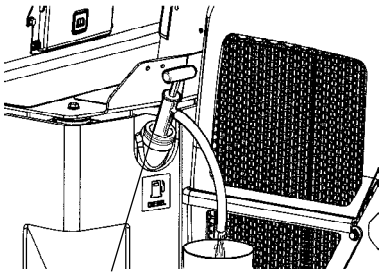

Fig. Fuel tank
1. Fuel tank

It is easiest to clean the tank when it is almost empty.

Pump out any bottom sediment using a suitable pump, such as an oil drain pump. Save the oil in a container and dispose of it in an approved manner.

Keep in mind fire risk when handling fuel.

The fuel tank is made of plastic (polyethylene) and is recyclable.

https://truckmanualshub.com/

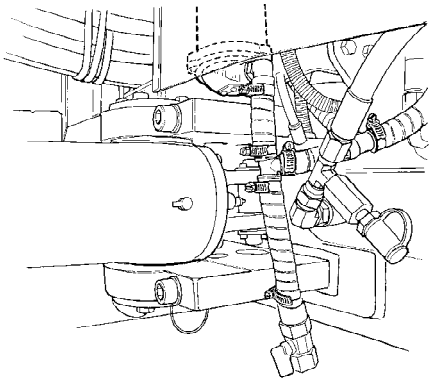

Fig. Steering joint

Steering joint - Check

Check the steering joint for any damage or cracks.

Check and tighten any loose bolts.

Check also for any stiffness and play.

https://truckmanualshub.com/

DYNAPAC

Part of the Atlas Copco Group

Dynapac Compaction Equipment AB
Box 504, SE-371 23 Karlskrona, Sweden

https://truckmanualshub.com/

DYNAPAC

Part of the Atlas Copco Group

Dynapac Compaction Equipment AB
Box 504, SE-371 23 Karlskrona, Sweden